State of Utah

JON M. HUNTSMAN, JR.
Governor

GARY R. HERBERT
Lieutenant Governor

Department of Administrative Services
KIMBERLY K. HOOD
Executive Director

Division of Facilities Construction and Management
DAVID G. BUXTON
Director

ADDENDUM NO. 2

Date: May 27, 2009

To: Contractors

From: Darrell Hunting – Project Manager

Reference: Vernal Game Farm New Shop and House Renovation
Division of Wildlife Resources – Vernal, Utah
DFCM Project # 07319520

Subject: **Addendum No. 2**

Pages	Addendum	1 page
	Revised Bid Form	2 pages
	Architects Addendum	19 pages
	Total	22 pages

Note: This Addendum shall be included as part of the Contract Documents. Items in this Addendum apply to all drawings and specification sections whether referenced or not involving the portion of the work added, deleted, modified, or otherwise addressed in the Addendum. Acknowledge receipt of this Addendum in the space provided on the Bid Form. Failure to do so may subject the Bidder to Disqualification.

While we contend that SB220 should only be potentially applicable to a contract issued after the effective date of said bill, this is to clarify that for purposes of this contract, regardless of the execution or effective dates of this contract, the status of Utah Law and remedies available to the State of Utah and DFCM, as it relates to any matter referred to or affected by said SB220, shall be the Utah law in effect at the time of the issuance of this Addendum.

2.1 SCHEDULE CHANGES: No schedule changes

2.2 GENERAL ITEMS: P+A Architects Addendum and Drawings.

1- Contactor may use existing power, DWR will pay the power bill. Contractor will be responsible to provide their own breakers in panel and sub panel if needed for project needs.

2- DFCM will pay connection fees for utilities, contractor will be responsible for installation of items beyond what is covered with connection fees.

3- If contractor finds any asbestos or other hazardous material they should inform DFCM ASAP and DFCM will have it removed from the project site.

4- See Second revised bid form and attached architects addendum 1.

REVISED BID FORM

NAME OF BIDDER _____ DATE _____

To the Division of Facilities Construction and Management
4110 State Office Building
Salt Lake City, Utah 84114

The undersigned, responsive to the "Notice to Contractors" and in accordance with the "Instructions to Bidders", in compliance with your invitation for bids for the **Vernal Game Farm – New Shop and House Renovation – Division of Wildlife Resources – Vernal, Utah – DFCM Project No. 07319520** and having examined the Contract Documents and the site of the proposed Work and being familiar with all of the conditions surrounding the construction of the proposed Project, including the availability of labor, hereby proposes to furnish all labor, materials and supplies as required for the Work in accordance with the Contract Documents as specified and within the time set forth and at the price stated below. This price is to cover all expenses incurred in performing the Work required under the Contract Documents of which this bid is a part:

I/We acknowledge receipt of the following Addenda: _____

For all work shown on the Drawings and described in the Specifications and Contract Documents, I/we agree to perform for the sum of:

BASE BID: (All work associated with new shop, including all utility stubs to back of house)

_____ DOLLARS ($_____)
(In case of discrepancy, written amount shall govern)

ADDITIVE ALTERNATE No.1: (Overhead Door – see page 01030-2)

_____ DOLLARS ($_____)
(In case of discrepancy, written amount shall govern)

ADDITIVE ALTERNATE No.2: (All work associated with the existing house, including connection to utilities)

_____ DOLLARS ($_____)
(In case of discrepancy, written amount shall govern)

I/We guarantee that the Work will be Substantially Complete by October 30, 2009, should I/we be the successful bidder, and agree to pay liquidated damages in the amount of **$500.00** per day for each day after expiration of the Contract Time as stated in Article 3 of the Contractor's Agreement.

This bid shall be good for 45 days after bid opening.

Enclosed is a 5% bid bond, as required, in the sum of _____

The undersigned Contractor's License Number for Utah is _____.

Upon receipt of notice of award of this bid, the undersigned agrees to execute the contract within ten (10) days, unless a shorter time is specified in the Contract Documents, and deliver acceptable Performance and Payment bonds in the prescribed form in the amount of 100% of the Contract Sum for faithful performance of the contract.

The Bid Bond attached, in the amount not less than five percent (5%) of the above bid sum, shall become the property of the Division of Facilities Construction and Management as liquidated damages for delay and additional expense caused thereby in the event that the contract is not executed and/or acceptable l00% Performance and Payment bonds are not delivered within the time set forth.

Type of Organization:

_____
(Corporation, Partnership, Individual, etc.)

Any request and information related to Utah Preference Laws:

_____

Respectfully submitted,

_____
Name of Bidder

ADDRESS:

_____

_____

_____
Authorized Signature

ADDENDUM NO. 1
Date: May 26th, 2009

PROJECT:

Vernal Division of Wildlife Resources
New Shop Building, Office Remodel and Site Improvements
Vernal, Utah

ARCHITECT:

P+A ARCHITECTS
821 EAST KENSINGTON AVENUE
SALT LAKE CITY, UT 84105

The original Contract Documents issued for the above noted project are amended as noted in this Addendum. It shall be the sole responsibility of the bidder to appropriately disseminate this information to all concerned prior to the assigned bid time and date, and to coordinate the Addendum with the Contract Documents.

This Addendum consists of a total of Eight (8) 8 ½"x11" documents, including this document and Eleven (11) 24"x36" construction documents

If there are still unresolved questions after examining this addendum, please submit those questions via telephone or facsimile as soon as possible so that an addendum can be issued to clarify those issues in a timely manner.

Add Alternate #2:

1. See civil engineering drawing C101attached with this addenda. Note, all items associated with the house remodel to be bid as add alternate #2. All new utilities to the existing house shall be stubbed as close to the house as possible and marked as part of the base bid.

Architectural:

1. See revised drawings A-WS400. Note bubbled area with additional reference notes.

2. See revised drawings A-FP100, A-BS300, A-WS401. Note changes to floor plan and new stair configuration. The ships ladder as per the original plans will not be provided.

Structural:

1. See attached Structural addenda Items. Note: items on the structural addenda by Vector Engineering will have a significant impact on the cost of this project. These items include the increased depth of the footings and foundation walls as noted 3'-6" to be below the finish grade, the required over excavation of footing as necessary for new 24" deep 4'-0" wide at bottom and 2'-0" wide at top structural fill placed over 12" of reworked native soil and new concrete slabs placed over 4" of compacted gravel base over 12" of reworked native soil.

Mechanical:

1. See attached Mechanical addenda items.

Electrical:

1. See drawing EL-101 for new shop area. Provide one additional light fixture type F-2 to be located in Hall 103 as per the new architectural floor plan (see drawing A-FP100 per this addenda) provide all necessary conduit and wiring required for installation.

2. See attached electrical addenda items

Civil:

1. See revised civil engineering drawings indicating additional scope of work.

End of Addendum 1

VECTOR ENGINEERS

UTAH OFFICES
Sandy
Layton
St. George

Project Number: U1044.004.081

May 26, 2009

Prior & Associate Architects
821 Kensington Ave.
Salt Lake City, UT 84105

ATTENTION: **Scott Prior**

REFERENCE: **DWR New Shop Building**

Dear Mr. Prior,

The following is a written addenda for the plans submitted on March 27th, 2009 due to responses to the plans check letter and recommendations in the soils report.

- Details 1 & 2, shall be revised to show the minimum depth of the footing to be 3'-6".
- Detail 3 shall be revised to show the minimum depth of the footing to be 18".
- Detail 9 shall be revised to call out (6) Simpson SDS ¼" x 6" lag screws at ea. stud and (2) @ ea. block.
- All footings shall be constructed over 24" of structural fill, (4 feet wide at the bottom, sloping to 2 feet wide at the top) placed over 12" of reworked native soil, per the geotechnical report.
- The concrete slab shall be placed over a layer of 4" of gravel base placed over 12" of reworked native soil, per the geotechnical report.
- Special inspection shall be required at placement of structural fill below footings.

We hope this meets your needs. If you have any questions or require additional information, please contact us at your convenience.

Sincerely,
VECTOR STRUCTURAL ENGINEERS

Jacob S. Proctor, S.E.
Project Engineer

JSP/jsp

Vernal DWR Shop and Office
Mechanical Addendum #1
May 26, 2009

Drawings

Sheet P-PP100

Item 1: Reference service sink P-3

"Provide and install an additional faucet similar to that serving P-3 on the wall as directed by the owner in the field. Provide ¾" domestic hot and cold water supplies from previously indicated mains and connect."

PRIOR APPROVALS

The following manufacturers have been found in compliance with the requirements of Division 01000 and 15000 and are approved to provide equipment for the project based on the manufacturers and divisions listed below.

Section 15440

Toilet Seat (P-1 – Shop & Office)	Comfort Seats
Faucet (P-2 – Shop & Office)	Symmons Zurn
Faucet (P-3 – Shop)	Chicago Zurn
Faucet (P-4 – Office, P-5 – Shop)	Chicago Zurn
Water Cooler (P-4 – Shop, P-6 – Office)	Acorn
Trench Drain (TD-1 & CB-1)	JR Smith
Water Closets	Zurn

Section 15620

Electric Unit Heaters	Qmark
Furnaces	York American Standard

Section 15650

Condensing Units	York American Standard

Section 15790

Cooling Coil	York American Standard

Section 15910

Backdraft Dampers	Cesco

Section 15940

Registers, Grilles & Ceiling Diffusers	Carnes
Louvers	Cesco

ELECTRICAL ADDENDUM NO. 1

PROJECT: DWR Wildlife Resources Vernal Office
DFCM No: 08286520

PROJECT ENGINEER: Thomas & Kolkman Engineering Co. Inc.
64 West 1700 South
Salt Lake City, Utah 84115
Phone (801) 484-8161
Fax (801) 484-3538

DATE: May 26, 2009

NUMBER OF PAGES: 1
Attachments: none

Incorporate the following clarifications and revisions in the specifications, drawings, and other contract documents of the above named project. Unless described otherwise, all labor and materials for the work described herein shall be in accordance with the requirements of the original contract documents.

This addendum becomes a part of the Contract Documents and the cost of all items herein shall be included in the Contractor's Proposal. Contractors are instructed to acknowledge receipt of this addendum on the appropriate place of the Proposal Form.

ITEM EAD1-1: SUBMITTALS FOR PRIOR APPROVAL

A. Listing herein of the following equipment submitted for prior approval indicates that the brand name and general characteristics are acceptable, but does not relieve the Contractor of the responsibility of providing equipment and accessories as specified in the Contract Documents unless specific mention of the departure was made in the submittal and acknowledged in writing by the Architect and/or Engineer.

ITEM	MANUFACTURER	CAT. NO.
Fixture F-1	Columbia Lighting	SM24-232-FSA12125-EPU- 1 X 1L BALLAST + 1 X 2L BALLAST
	HE Williams	12-4-332-SA12125-EP8P1/21-UNV
	Lithonia	2VRS 3 32 VL MVOLT (2)GEB10RS
Fixture F-2	Columbia Lighting	SM22-217-FSA-12125-EPU
	HE Williams	12-2-217-SA1212-EB8P2-UNV
	Lithonia	2VRS 2 17 VL MVOLT GEB10RS
Fixture F-3	Columbia Lighting	WC4-232-EPU
	HE Williams	17-4-232-A-EB8P2-UNV
	Lithonia	LB 2 32 MVOLT BEB10RS
Fixture F-4	Columbia Lighting	RO4-132-EPU
	HE Williams	20-4-132-A-EB8P1-UNV
	Lithonia	CB 1 32 MVOLT GEB10RS

Fixture F-5	Capri	CFRIC6V18QU-PSH16P
	HE Williams	ICPVSL60-118Q-G24q-2-BH-UNV
	Intense Lighting LLC	IF6AIC18E 1CFS2PW
	Lithonia	LI6F 18DTT MVOLT 6LD3 (LSMC)
Fixture F-6	Capri	CFR1I6V2632U-RMA100CLR
	HE Williams	ICPV60-126T-EB-GX24q-3-B-UNV
	Intense Lighting LLC	IF6AIC26E ICR9C
	Lithoinia	LI6F 26TRT MVOLT 602A (TRW,LSMC)
Fixture F-7	Chloride Systems	XL30L1RW2H
Fixture F-8	Chloride Systems	S-H106-W-G
	Extronix	VR-V2H-W-D
	Isolite	VRH-H10W
Fixture F-9	Invue	ENT-39MP-MT-MB-3SG-BZ-LG
	Kenall	FS812TD 2TBV PIA BR 50M 1 120

END OF ELECTRICAL ADDENDUM NO. 1

ELECTRICAL ADDENDUM NO. 1

PROJECT: DWR Wildlife Resources Vernal Shop
DFCM No: 07319520

PROJECT ENGINEER: Thomas & Kolkman Engineering Co. Inc.
64 West 1700 South
Salt Lake City, Utah 84115
Phone (801) 484-8161
Fax (801) 484-3538

DATE: May 26, 2009

NUMBER OF PAGES: 2
Attachments: none

Incorporate the following clarifications and revisions in the specifications, drawings, and other contract documents of the above named project. Unless described otherwise, all labor and materials for the work described herein shall be in accordance with the requirements of the original contract documents.

This addendum becomes a part of the Contract Documents and the cost of all items herein shall be included in the Contractor's Proposal. Contractors are instructed to acknowledge receipt of this addendum on the appropriate place of the Proposal Form.

ITEM EAD1-1: SUBMITTALS FOR PRIOR APPROVAL

A. Listing herein of the following equipment submitted for prior approval indicates that the brand name and general characteristics are acceptable, but does not relieve the Contractor of the responsibility of providing equipment and accessories as specified in the Contract Documents unless specific mention of the departure was made in the submittal and acknowledged in writing by the Architect and/or Engineer.

ITEM	MANUFACTURER	CAT. NO.
Fixture F-1	Columbia Lighting	KL8-332-U-24EPU- INBOARD / OUTBOARD SWITCHED
	HE Williams	82-8-332-EB8P4/2-UNV
	Lithonia	TAF10 3 32 MVOLT 1/4&1/2 GEB10RS
Fixture F-2	Columbia Lighting	WC4-232-EPU
	HE Williams	17-4-232-A-EB8P2-UNV
	Lithonia	LB 2 32 MVOLT GEB10RS
Fixture F-3	Columbia Lighting	WC4-432-EPU TWO BALLASTS
	HE Williams	18-4-432-A-EB8P2/2-UNV
	Lithonia	LB 4 32 MVOLT 2/2 GEB10RS
Fixture F-4	Columbia Lighting	CS4-232-EPU
	HE Williams	76-4-232-EB8P2-UNV
	Lithonia	Z 2 32 MVOLT GEB10RS

Fixture F-5	Capri	CFRIC6V18QU-PSH16P
	HE Williams	ICPVSL60-118Q-G24q-2-BH-UNV
	Lithonia	LI6F 18DTT MVOLT 6LD3 (LSMC)
	Intense Lighting LLC	IF6AIC18E 1CFS2PW
Fixture F-6	Chloride	XL30L1RW2H
Fixture F-7	Chloride	S-H106-W-G
	Exitronix	VR-V2H-W-D
	Isolite	VRH-H10W
Fixture F-8	DECO Lighting	D444-100-M-MT-SCBA
	Evergreen	3100-150M-MT
	Nulite	EJL 100MH PG
	Tracelite	TL110-MH-100-MT
Fixture F-9	DECO Lighting	D420-250-M-MT-SCBA
	Evergreen	3200-250M-MT
	Nulite	EJL 250MH PG
	Tracelite	TL110EX-MH-250-MT

END OF ELECTRICAL ADDENDUM NO. 1

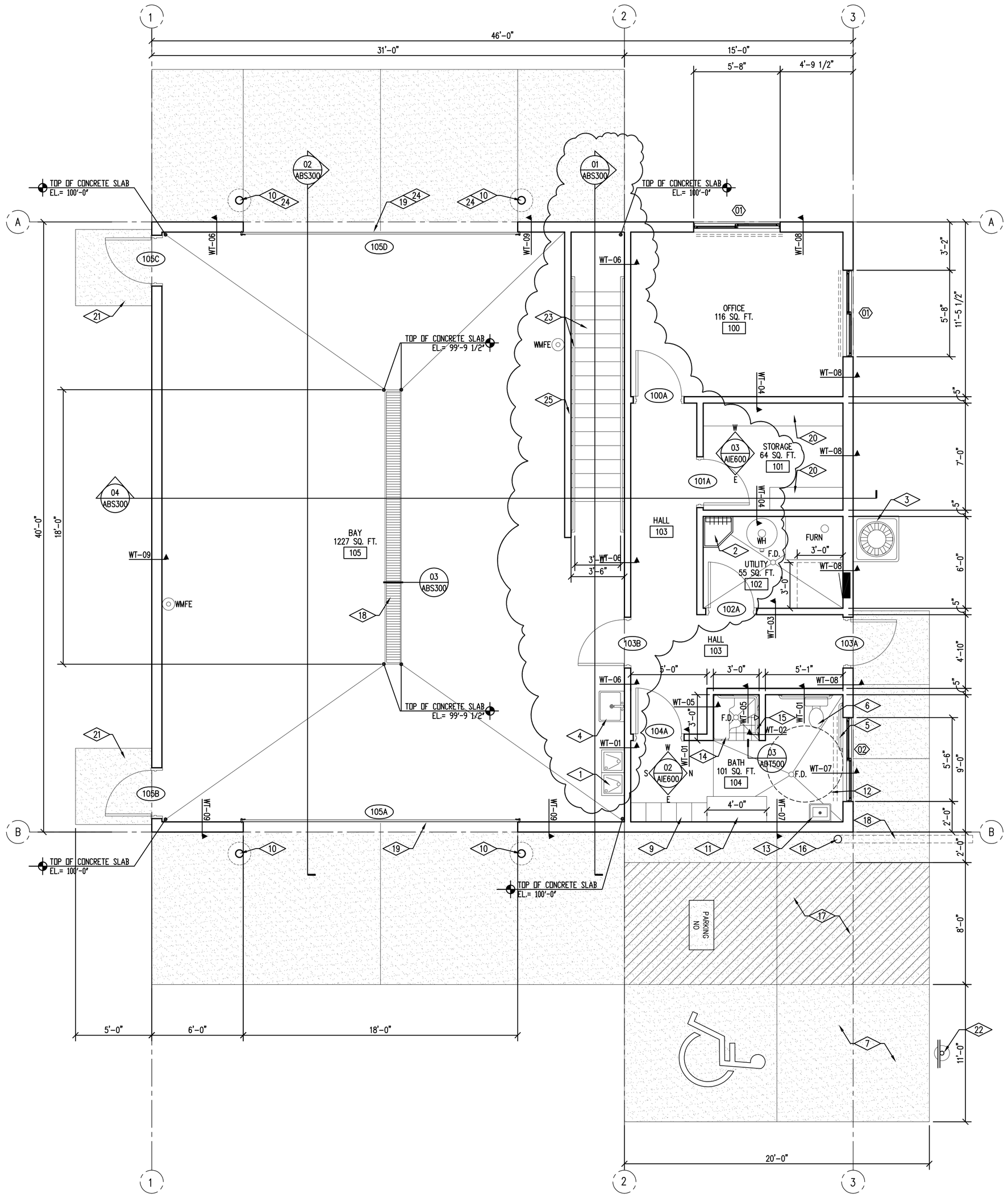

FLOOR PLAN

02 AFP100 SCALE 1/4" = 1'-0"

PLAN NORTH

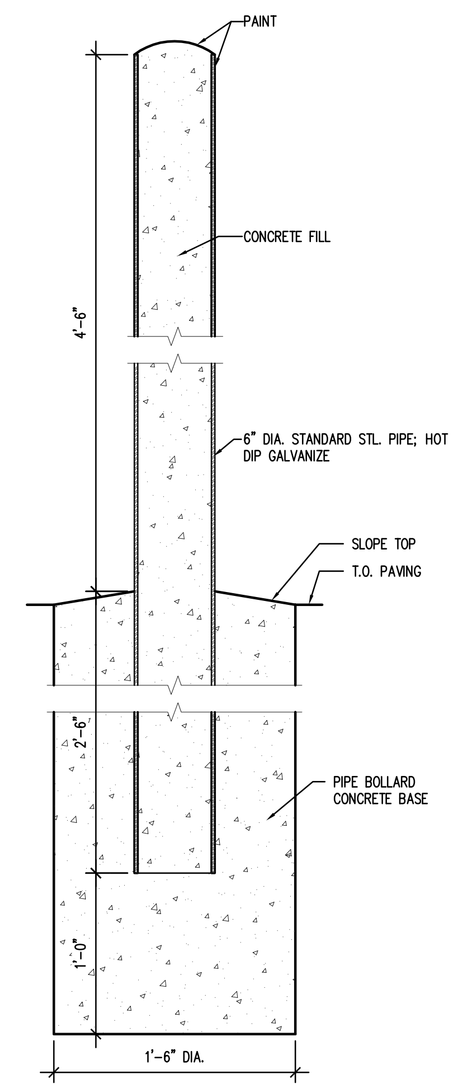

BOLLARD DETAIL

03 AFP100 SCALE 1 1/2" = 1'-0"

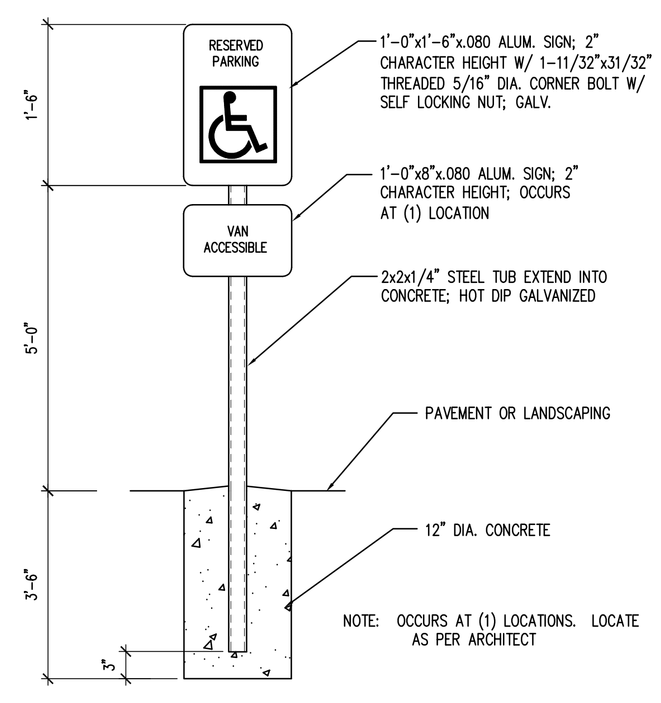

ADA PARKING STALL SIGN

01 AFP100 SCALE 1" = 1'-0"

REFERENCE NOTES

1. HIGH/LOW DRINKING FOUNTAINS, SEE PLUMBING DRAWINGS
2. MOP SINK WITH SHELF, SEE SPECIFICATION
3. A/C CONDENSING UNIT SET ON 4" THICK CAST-IN-PLACE CONCRETE BASE OVER 4" COMPACTED GRAVEL BASE
4. SHOP WASH BASIN, SEE PLUMBING DRAWINGS
5. ADA GRAB BARS, SEE INTERIOR ELEVATIONS
6. ADA WATER CLOSET, SEE PLUMING DRAWINGS
7. ADA VAN PARKING STALL
8. 6" BURRIED PVC PIPE TO RUN UNDER CONCRETE SLAB, GENERAL CONTRACTOR SHALL EXTEND BURRED PIPE 30'-0" FROM EDGE OF CONCRETE SIDE WALK
9. PREFINISHED METAL LOCKERS, SEE SPECIFICATION AND INTERIOR ELEVATIONS
10. 6" DIA CONCRETE FILLED STEEL PAINTED PIPE BOLLARD, SEE DETAIL 03/AFP100
11. BUILT IN PLACE ADA BENCH, SEE SECTION 05/AIE500
12. 5'-0" DIA ADA TURNING CIRCLE
13. LAVATORY, SEE PLUMBING DRAWINGS
14. ADA SHOWER BENCH, SEE SPECIFICATION AND SECTION
15. ADA SHOWER GRAB BAR, SEE SPECIFICATION
16. PROVIDE 6" DIA PVC ELBOW AT TOP OF CONCRETE SLAB EXTENDED 6" PVC PIPING TO 8" ABOVE TOP OF CONCRETE SLAB
17. PAINTED WITH TRAFFIC WHITE PAINT, "NO PARKING" AND STRIPING
18. TRENCH DRAIN, SEE DETAIL
19. INSULATED SECTIONAL OVERHEAD DOOR, SEE SPECIFICATION
20. PLASTIC LAMINATE SHELVING, SEE INTERIOR ELEVATIONS
21. 5'-0"X5'-0" 4" THICK CONCRETE STOOP OVER 4" GRAVEL BASE. CONCRETE STOOP TO SLOPE AWAY FROM DOOR
22. ADA VAN PARKING SIGN, SEE DETAIL 01/AFP100
23. NEW WOOD FRAMED STAIR WITH METAL HANDRAILING, SEE SECTIONS AND DETAILS
24. PART OF ADD ALT NUMBER 1
25. STAIR WALL TO BE 2"x4" FRAMING AT 16" O.C. WITH 5/8" PRIMED AND PAINTED, APA RATED, SANDED ONE SIDE PLYWOOD AT EXPOSED SURFACES.

GENERAL NOTES

1. REFER TO FINISH SCHEDULE FOR ADDITIONAL FINISH NOTES.
2. MOST DIMENSION ARE FROM FACE OF SHEATHING OR GYPSUM BOARD.

FLOOR PLAN LEGEND

- RM. NAME / 100 — ROOM TAG
- H.B. — HOSE BIB
- 02 — WINDOW TAG
- 100A — DOOR TAG
- F.D. — FLOOR DRAIN
- WT-01 — WALL TYPE, SEE WALL TYPES SHEET ASC300
- WH — WATER HEATER, SEE PLUMBING DRAWINGS
- FURN — FURNACE, SEE MECHANICAL DRAWINGS
- DASH LINES AT WINDOW LOCATIONS INDICATE HEW WINDOW COVERINGS AS PER SPECIFICATION
- WMFE — WALL MOUNTED FIRE EXTINGUISHER, SEE SPECIFICATION
- HATCH PATTERN INDICATE EXTERIOR AREA OF CONCRETE SLAB. CONCRETE STOOPS AND SIDEWALKS TO BE 5" THICK OVER 4" COMPACTED GRAVEL BASE AND CONCRETE DRIVE APPROACH AND PARKING TO BE 6" THICK OVER 4" COMPACTED GRAVEL BASE

ADD ALT. NO. 1

1. ADD ALT NUMBER 1 IS TO PROVIDE SECTIONAL OVERHEAD DOOR, PIPE BOLLARDS AND 6" CONCRETE APRON AT LOCATION SHOWN. BASE BID SHALL INCLUDE WALL BEING FINISHED AT DOOR 105D. GENERAL CONTRACTOR SHALL PROVIDE THE FRAMING FOR SECTIONAL OVERHEAD DOOR THAT WILL BE INSTALLED FOR FUTURE OVERHEAD DOOR INSTALLATION AS PART OF BASE BID.

State of Utah
Department of Administrative Services
Division of Facilities Construction & Management
4110 State Office Building
Salt Lake City, Utah 84114
Phone: (801) 538 - 3018
Fax: (801) 538 - 3267
Internet: http://www.dfcm.state.ut.us

CREATED BY: P+A architects

P+A architects
821 East Kensington Ave.
Salt Lake City, Utah 84105
P: 801.484.1161
F: 801.485.4640
e-mail parchitects@comcast.net

STATE OF UTAH — 261110 — LICENSED ARCHITECT

architecture planning design

CONSULTANT: xyz engineering

PROJECT TITLE:

DIVISION OF WILDLIFE RESOURCES

NEW SHOP BUILDING

VERNAL, UTAH

MARK	DATE	DESCRIPTION

ISSUE TYPE: CONSTRUCTION DOCUMENTS

ISSUE DATE: 27th March, 2009

DFCM PROJECT NO: 07319520
CAD PROJECT NO:
CAD DWG FILE:
DRAWN BY: BRIAN AND SCOTT
CHK'D BY: SCOTT

COPYRIGHT: STATE OF UTAH

SHEET TITLE

FLOOR PLAN

SHEET NUMBER

A-FP100

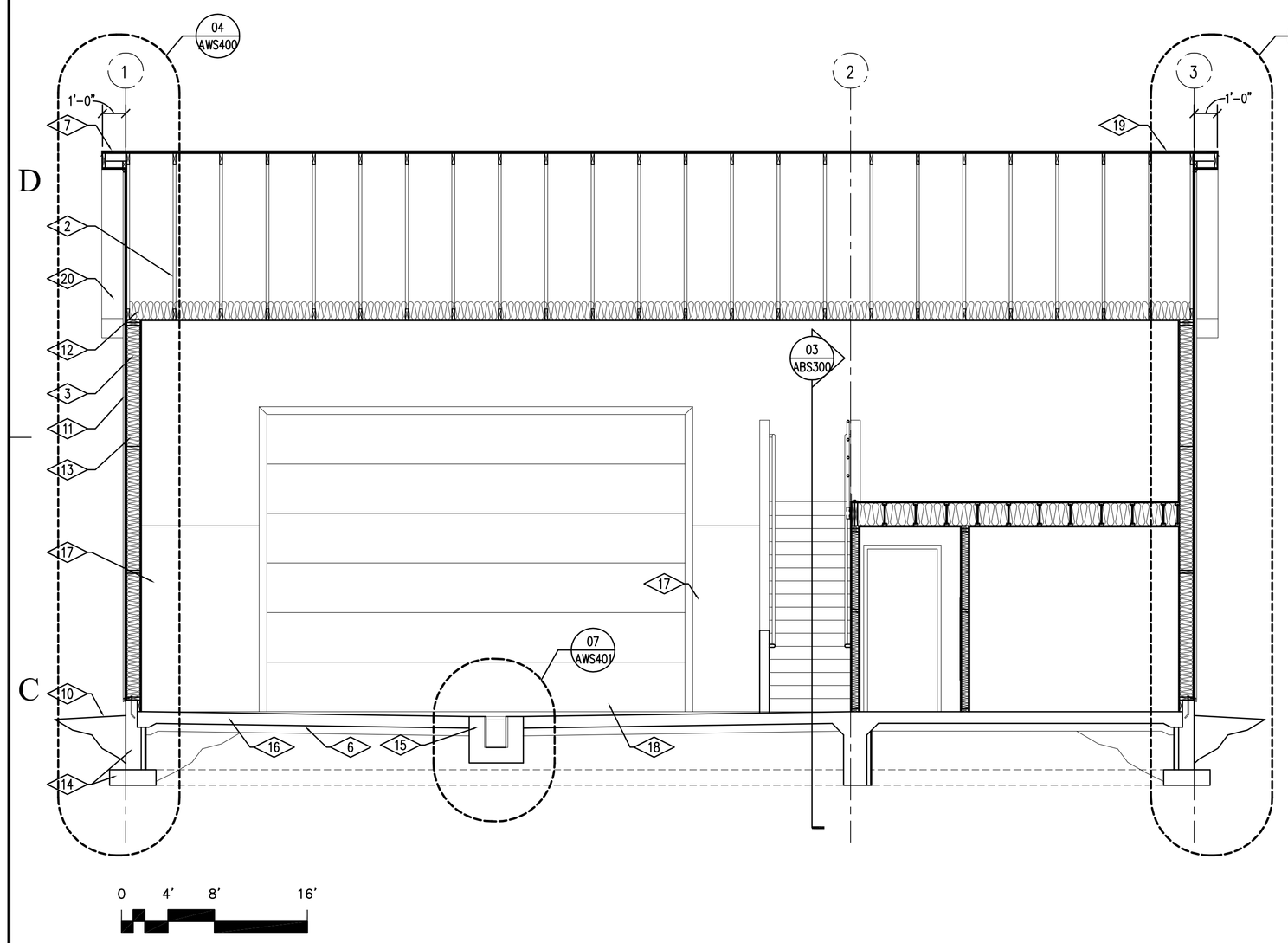

04 ABS300 BUILDING SECTION
SCALE 1/4" = 1'-0"

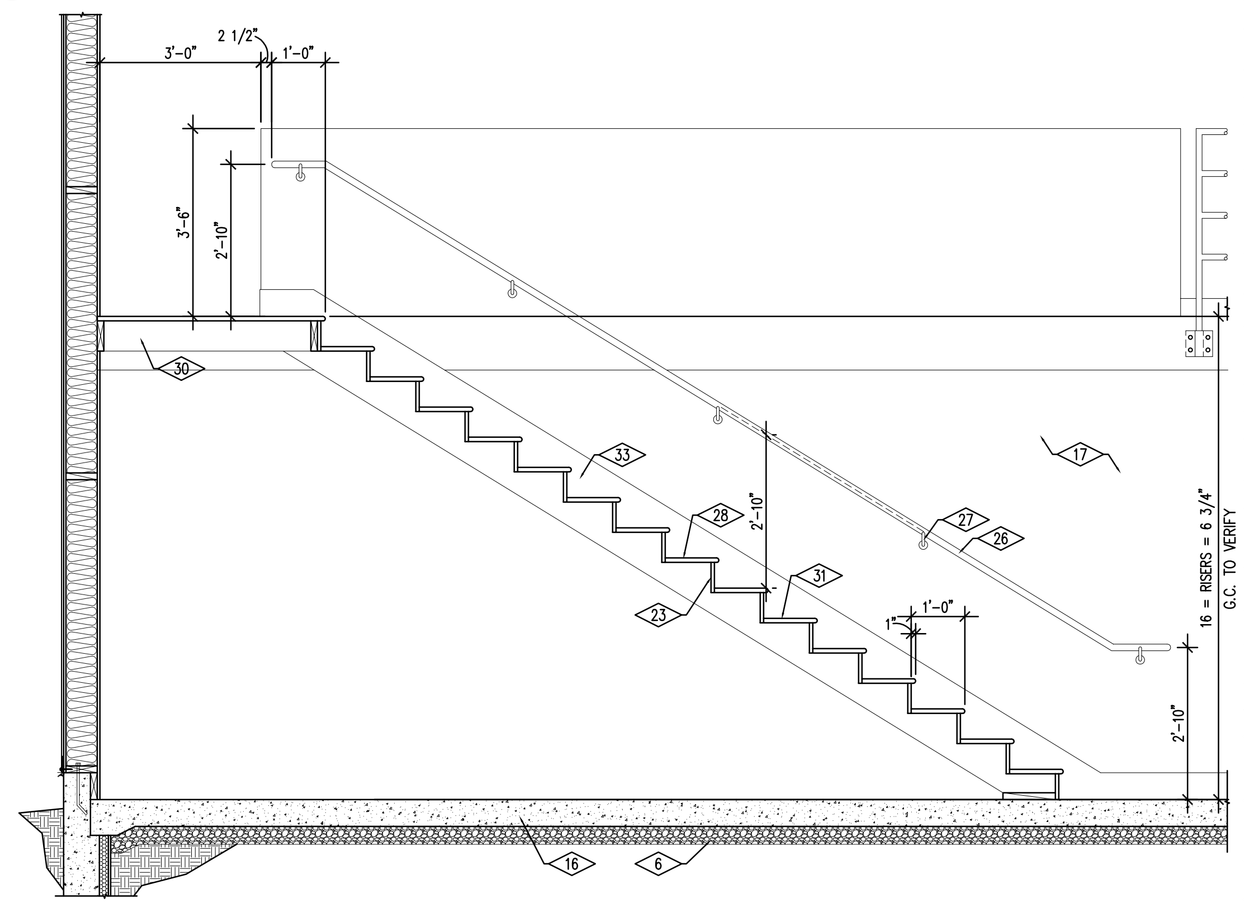

9-11deg 03 ABS300 STAIR SECTION
SCALE 1/2" = 1'-0"

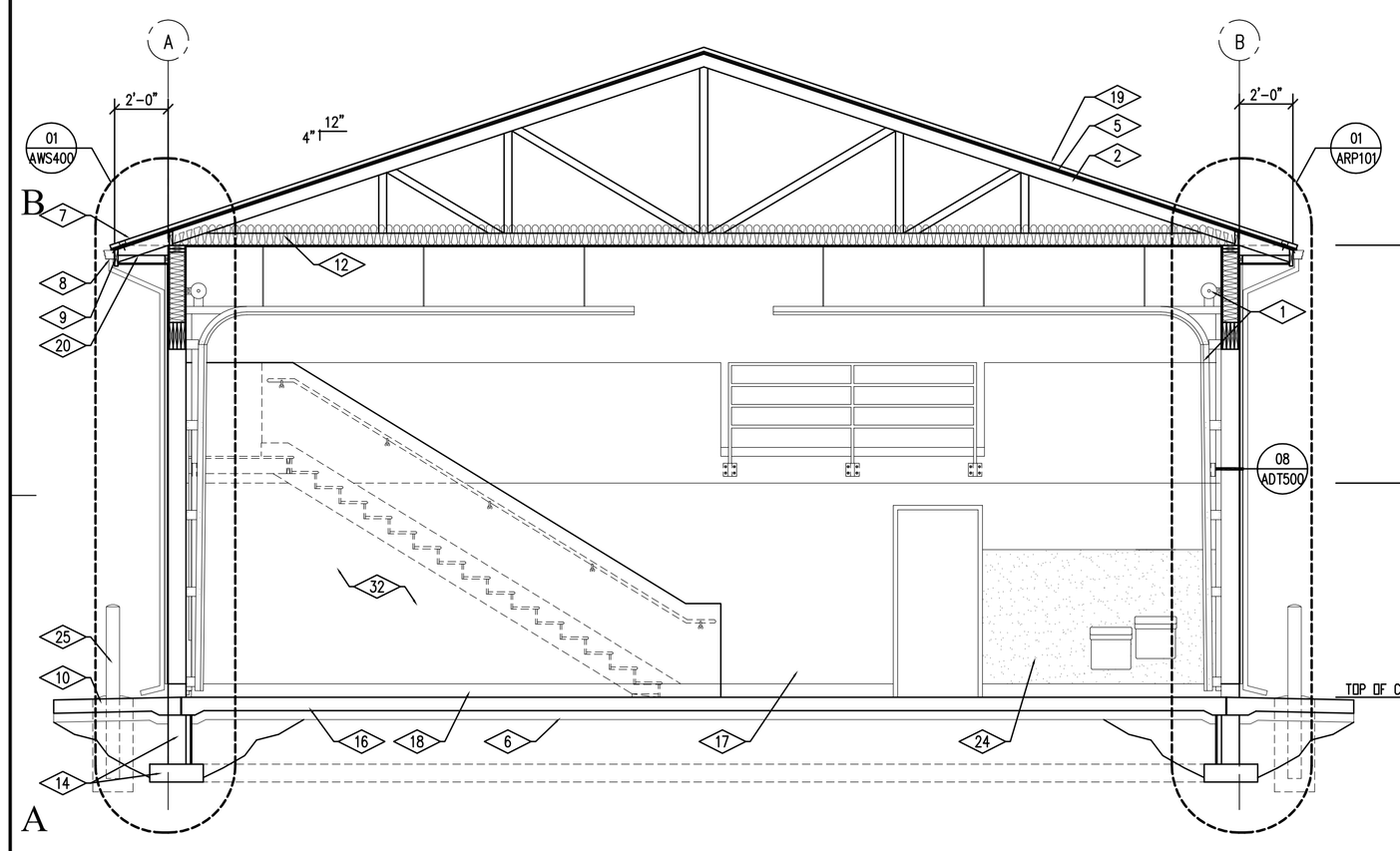

02 ABS300 BUILDING SECTION
SCALE 1/4" = 1'-0"

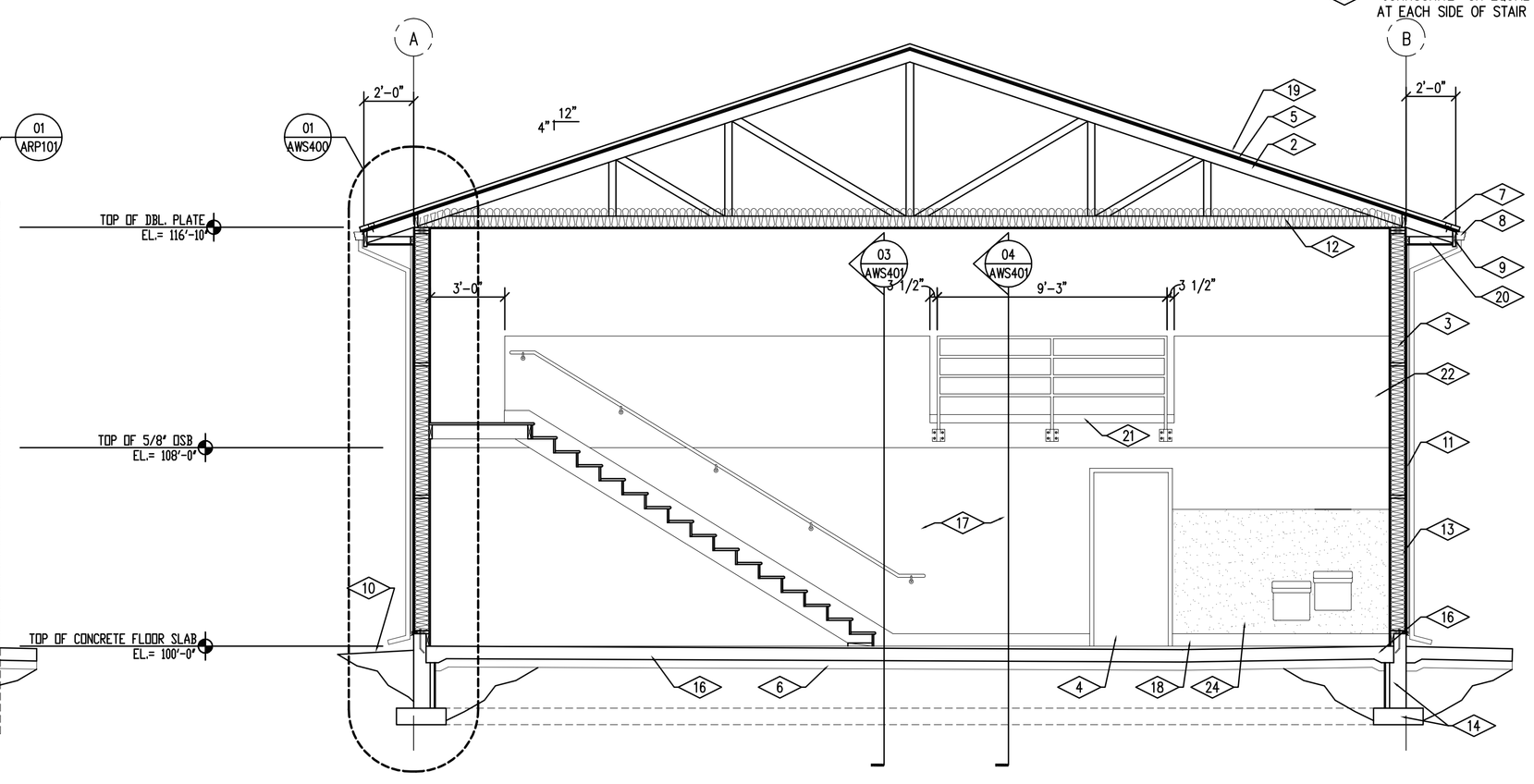

01 ABS300 BUILDING SECTION
SCALE 1/4" = 1'-0"

REFERENCE NOTES

1. MOTORIZED SECTIONAL OVERHEAD DOOR AND TRACK SYSTEM, SEE SPECIFICATIONS
2. WOOD TRUSS SYSTEM, SEE STRUCTURAL DRAWINGS
3. 2"X8 WOOD STUD FRAMING
4. HOLLOW METAL DOOR & FRAME BEYOND, SEE SCHEDULE AND SPECIFICATION
5. ROOF SHEATHING, SEE STRUCTURAL
6. 4" COMPACTED GRAVEL BASE
7. PROVIDE ICE AND WATER SHIELD AT PERIMETER OF ROOF, SEE ROOF PLAN
8. BAKED ENAMEL SEAMLESS RAINGUTTERS WITH DOWN SPOUTS. EXTEND RAIN GUTTER 1'-8" FROM BASE OF STRUCTURE. PROVIDE A PRECAST CONCRETE SPLASH AT DOWN SPOUT LOCATIONS.
9. PREFINISHED METAL FASCIA & SOFFIT, SEE DETAIL & SPECIFICATION
10. FINISH GRADE, SEE SITE PLAN
11. PREFINISHED BAKED ENAMEL METAL WALL PANEL SYSTEM, WITH EXPOSED FASTENERS WITH NEOPRENE WASHERS, SEE SPECIFICATION
12. R-38 BATT INSULATION IN CEILING
13. R-25 WALL BALL INSULATION
14. CONCRETE FOOTING AND FOUNDATION, SEE STRUCTURAL DRAWINGS
15. FLOOR TRENCH DRAIN, SEE DETAIL
16. CONCRETE FLOOR SLAB, SEE STRUCTURAL. CONCRETE FLOOR SLAB IN SHOP AREA TO SLOPE TOWARDS TRENCH DRAIN
17. ⅝" PRIMED AND PAINTED, APA RATED, SANDED ONE SIDE PLYWOOD AT SHOP WALLS TO 8'-0" A.F.F.
18. BASE, AS SCHEDULED
19. 30 YEAR ASPHALT SHINGLES OVER 15 LB. ASPHALT IMPREGNATED ROOFING FELT
20. PREFINISHED VENTED ALUMINUM SOFFIT
21. 4"X4" X ¼" STEEL ANGLE, SEE SECTION
22. PRIMED AND PAINTED GYPSUM BOARD WALLS. SEE FINISH SCHEDULE
23. 1" SOLID WOOD STAIR RISER, PRIMED AND PAINTED
24. PROVIDE 5'-0" HIGH FRP PANEL BEHIND NEW WATER FOUNDATION AND WASH BASIN. PROVIDED ALL REQUIRED TRIM AT FRP PANEL
25. 6" DIA, GALVANIZED STEEL CONCRETE FILLED PIPE BOLLARD, SEE DETAIL
26. 1.666" DIA. PAINTED STEEL HANDRAILING
27. PAINTED STEEL HAND RAILING BRACKET. PROVIDE WOOD BACKING FOR BRACKET ATTACHMENT, SEE DETAIL 08/AWS401
28. 1" PREMANUFUACTURED STAIR TREAD WITH BULLNOSE
29. CUT 2x STRINGER
30. 2"x8" FRAMING AT STAIR LANDING
31. PAINTED STAIR TREAD AND RISER. PROVIDE SELF-ADHESIVE GRIP TAPE AT STAIR NOSING, 4" WIDE STRIP
32. STAIR WALL TO BE 2"x4" FRAMING AT 16" O.C. WITH ⅝" PRIMED AND PAINTED, APA RATED, SANDED ONE SIDE PLYWOOD AT EXPOSED SURFACES.
33. "JOHNSONITE" OR EQUAL RUBBER STAIR STRINGER AT EACH SIDE OF STAIR

State of Utah
Department of Administrative Services
Division of Facilities Construction & Management
4110 State Office Building
Salt Lake City, Utah 84114
Phone: (801) 538 - 3018
Fax: (801) 538 - 3267
Internet: http://www.dfcm.state.ut.us

CREATED BY: P+A architects

P+A architects
821 East Kensington Ave.
Salt Lake City, Utah 84105
P: 801.484.1161
F: 801.485.4640
e-mail parchitects@comcast.net

STATE OF UTAH SCOTT A. PETERSON 261110 LICENSED ARCHITECT

architecture planning design

CONSULTANT: xyz engineering

PROJECT TITLE:

DIVISION OF WILDLIFE RESOURCES

NEW SHOP BUILDING

VERNAL, UTAH

MARK	DATE	DESCRIPTION

ISSUE TYPE: CONSTRUCTION DOCUMENTS

ISSUE DATE: 27th March, 2009

DFCM PROJECT NO: 07319520
CAD PROJECT NO:
CAD DWG FILE:
DRAWN BY: BRIAN AND SCOTT
CHK'D BY: SCOTT

COPYRIGHT: STATE OF UTAH

SHEET TITLE

BUILDING SECTIONS

SHEET NUMBER

A-BS300

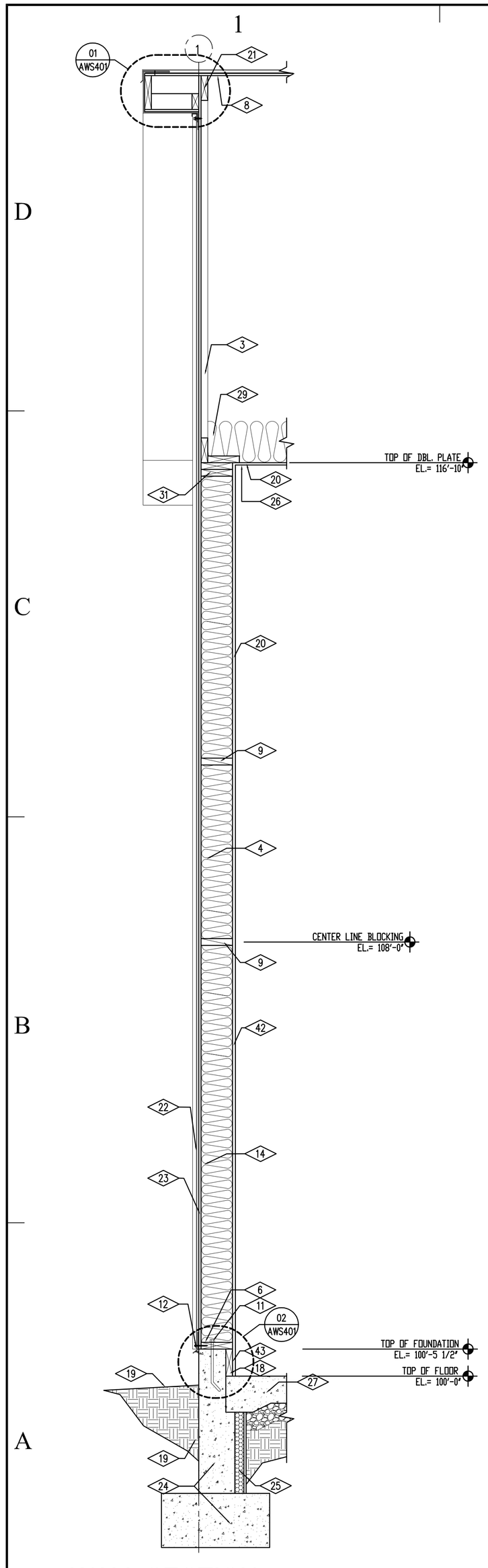

04 AWS400 WALL SECTION
SCALE 3/4" = 1'-0"

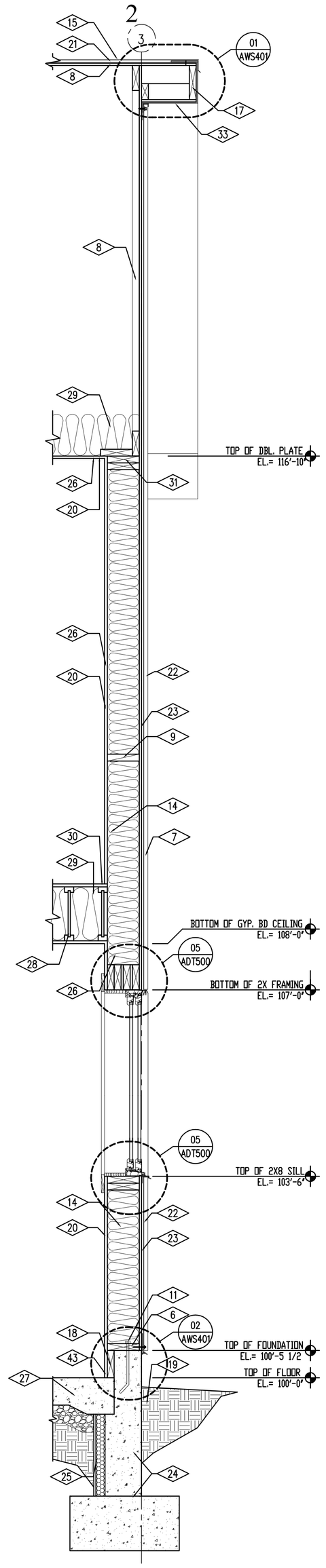

03 AWS400 WALL SECTION
SCALE 3/4" = 1'-0"

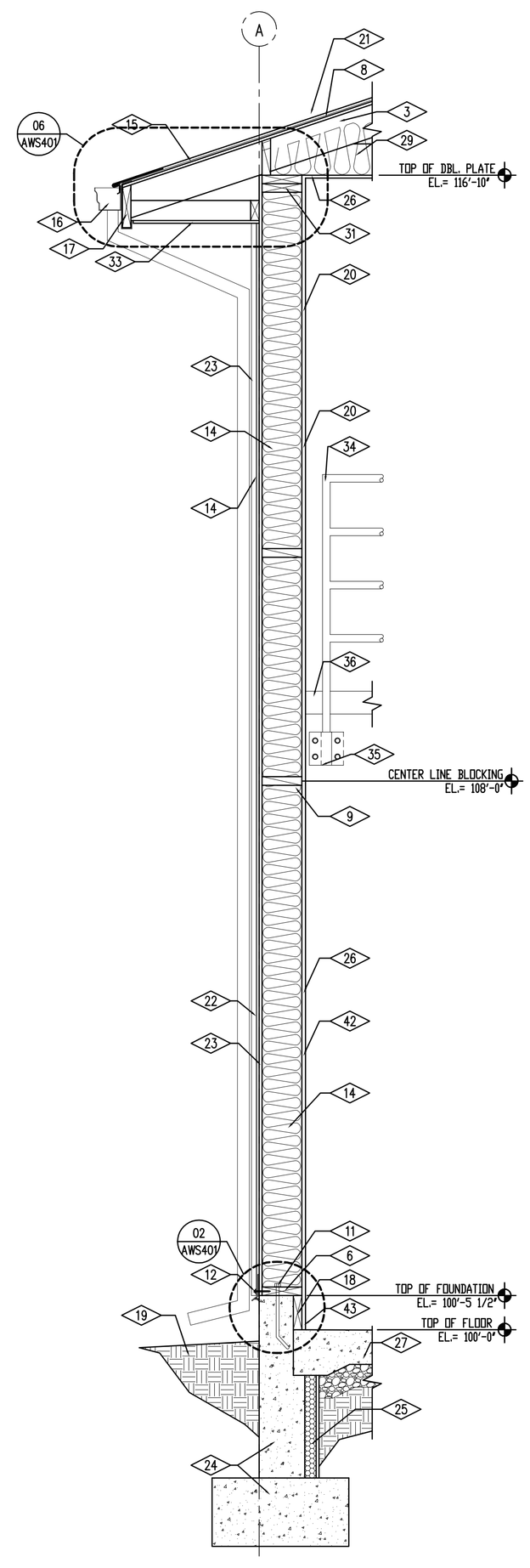

02 AWS400 WALL SECTION
SCALE 3/4" = 1'-0"

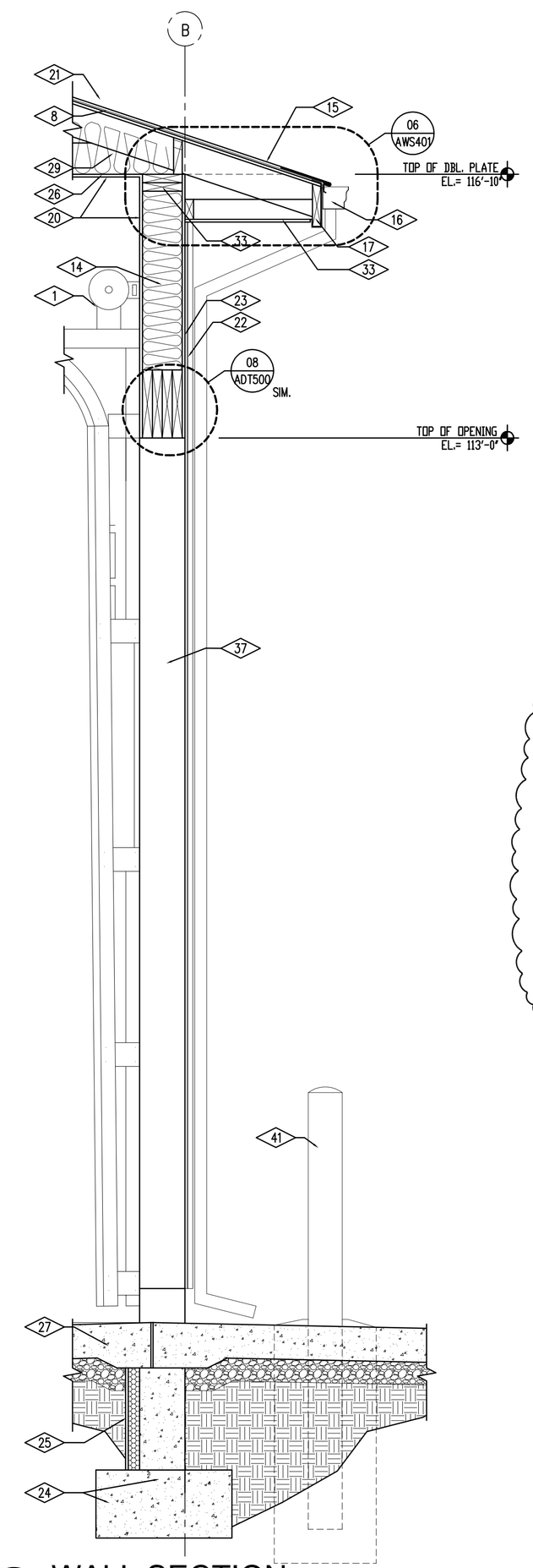

01 AWS400 WALL SECTION
SCALE 3/4" = 1'-0"

REFERENCE NOTES

1. MOTORIZED SECTIONAL OVERHEAD DOOR AND TRACK SYSTEM, SEE SPECIFICATIONS
2. NOT USED
3. WOOD TRUSS SYSTEM SEE STRUCTURAL DRAWINGS
4. 2"X8" WOOD STUD FRAMING, SEE STRUCTURAL
5. HOLLOW METAL DOOR & FRAME BEYOND, SEE SPECIFICATION
6. 2"X8" TREATED SILL PLATE W/ SILL GASKET, SEE SPECIFICATION
7. 15LB. ASPHALT IMPREGNATED BUILDING PAPER
8. ROOF SHEATHING, SEE STRUCTURAL
9. FIRE BLOCKING, SEE DETAIL
10. 4" COMPACTED GRAVEL BASE
11. ANCHOR BOLT, SEE STRUCTURAL
12. PROVIDE BASE FLASHING AT BOTTOM OF METAL WALL PANEL AS PER METAL WALL PANEL MANUFACTURER REQUIREMENTS, SEE DETAIL
13. 15LB. ROOFING FELT OVER ROOF SHEATHING, SEE SPECIFICATION.
14. R-25 BATT INSULATION
15. PROVIDE ICE AND WATER SHIELD AT PERIMETER OF ROOF, SEE ROOF PLAN
16. BAKED ENAMEL SEAMLESS RAINGUTTERS WITH DOWN SPOUTS. EXTEND RAIN GUTTER 1'-8" FROM BASE OF STRUCTURE. PROVIDE A PRECAST CONCRETE SPLASH AT DOWN SPOUT LOCATIONS.
17. PREFINISHED METAL FASCIA & SOFFIT, SEE DETAIL & SPECIFICATION
18. TREATED 2"X6" ANCHORED TO CONCRETE ROUNDED WALL WITH RECESSED ½" EXPANSION ANCHOR BOLTS AT 24" O.C.
19. FINISH GRADE, SEE SITE PLAN
20. ⅝" TYPE "X" GYPSUM BOARD, PRIMED AND PAINTED
21. 30 YEAR ASPHALT SHINGLE OVER 15 LB. ASPHALT IMPREGNATED ROOFING FELT
22. PREFINISHED BAKED ENAMEL METAL WALL PANEL SYSTEM, WITH EXPOSED FASTENERS AND NEOPRENE WASHERS, SEE SPECIFICATION
23. WALL SHEATHING, SEE STRUCTURAL DRAWINGS
24. CONCRETE FOOTING & FOUNDATION, SEE STRUCTUAL
25. 2" FOUNDATION PERIMETER INSULATION WITH ½" PROTECTION BOARD
26. 6 MIL VAPOR BARRIER
27. 6" CONCRETE FLOOR SLAB, SEE STUCTRUCTUAL
28. MEZZINE FLOOR FRAMING, SEE STRUCTUAL
29. R-38 BATT INSULATION
30. FLOOR SHEATHING, SEE STRUCTUAL
31. DBL. 2X TOP PLATE
32. NOT USED
33. PRE FINISHED, VENTED METAL, SOFFIT SYSTEM, SEE SPECIFICATOIN
34. PRIMED AND PAINTED REMOVABLE GUARDRAILING SYSTEM, SEE DETAILS
35. REMOVABLE GUARDRAILING SYSTEM BRACKET, SEE DETAILS
36. PRIMED AND PAINTED STEEL ANGLE, SEE GUARD RAILING SECTION
37. PRE-FINISHED SECTIONAL OVERHEAD DOOR METAL CLOSURE AT PERIMETER OF DOOR OPENING, SEE DETAIL
38. NOT USED
39. NOT USED
40. NOT USED
41. 6" DIA CONCRETE FILLED PAINTED STEEL PIPE BOLLARD, SEE DETAIL SHEET A-FP100
42. ⅝" PRIMED AND PAINTED, APA RATED, SANDED ONE SIDE PLYWOOD AT SHOP WALLS TO 8'-0" A.F.F.
43. BASE AS SCHEDULED

State of Utah
Department of Administrative Services
Division of Facilities Construction & Management
4110 State Office Building
Salt Lake City, Utah 84114
Phone: (801) 538 - 3018
Fax: (801) 538 - 3267
Internet: http://www.dfcm.state.ut.us

CREATED BY: P+A architects

P+A architects
821 East Kensington Ave.
Salt Lake City, Utah 84105
P: 801.484.1161
F: 801.485.4640
e-mail parchitects@comcast.net

STATE OF UTAH BRIAN & SCOTT PARKER 261110 LICENSED ARCHITECT

architecture planning design

CONSULTANT: xyz engineering

PROJECT TITLE:

DIVISION OF WILDLIFE RESOURCES

NEW SHOP BUILDING

VERNAL, UTAH

MARK	DATE	DESCRIPTION

ISSUE TYPE: CONSTRUCTION DOCUMENTS

ISSUE DATE: 27th March, 2009

DFCM PROJECT NO: 07319520
CAD PROJECT NO:
CAD DWG FILE:
DRAWN BY: BRIAN AND SCOTT
CHK'D BY: SCOTT

COPYRIGHT: STATE OF UTAH

SHEET TITLE

WALL SECTIONS

SHEET NUMBER

A-WS400

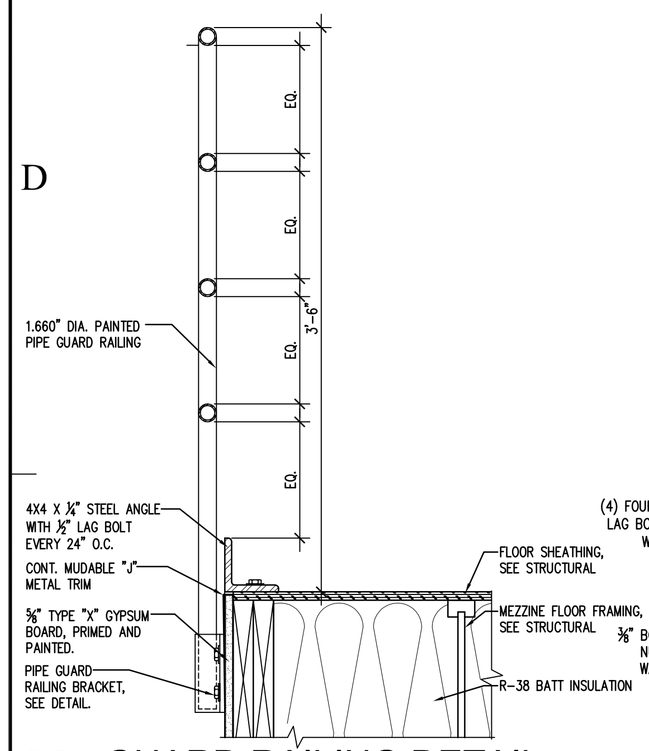

GUARD RAILING DETAIL

10 AWS401 SCALE 1-1/2" = 1'-0"

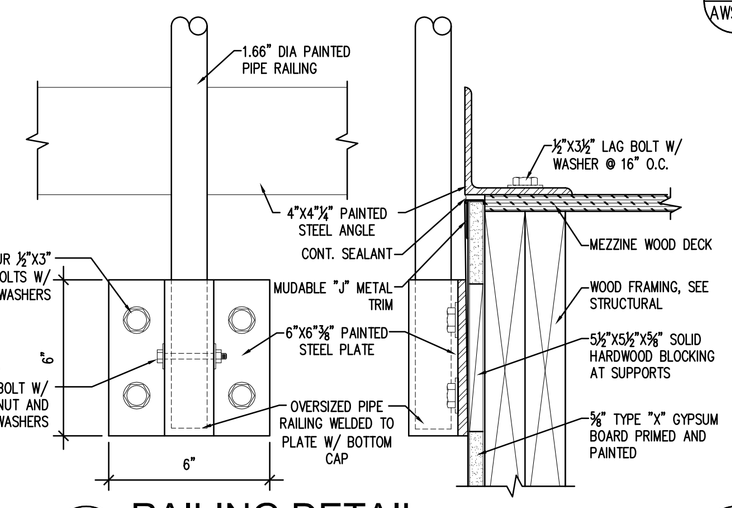

RAILING DETAIL

09 AWS401 SCALE 3" = 1'-0"

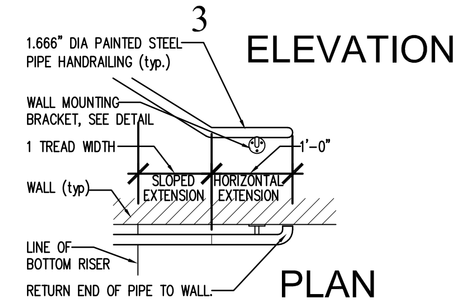

HANDRAIL DETAIL

11 AWS401 SCALE N.T.S.

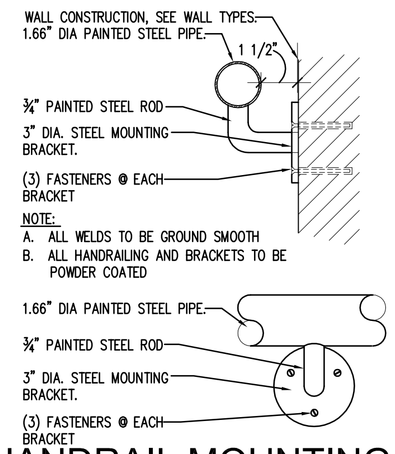

HANDRAIL MOUNTING DET.

08 AWS401 SCALE 3" = 1'-0"

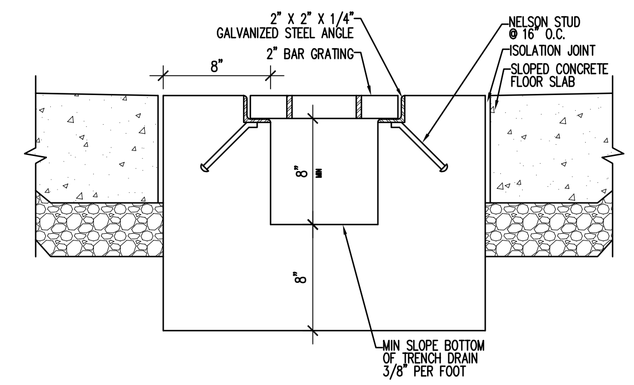

TRENCH DRAIN SECTION

07 AWS401 SCALE 1 1/2" = 1'-0"

REFERENCE NOTES

1. 2"X4" WOOD STUD FRAMING @ 16" O.C.
2. BLOCKING, SEE DETAIL
3. ANCHOR BOLT, SEE STRUCTURAL
4. ⅝" TYPE "X" GYPSUM BOARD, PRIMED AND PAINTED
5. 2" FOUNDATION PERIMETER INSULATION WITH ½" PROTECTION BOARD
6. 6 MIL VAPOR BARRIER
7. MEZZINE FLOOR FRAMING, SEE STRUCTUAL DRAWINGS
8. R-38 BATT INSULATION
9. FLOOR SHEATHING, SEE STRUCTUAL
10. DBL. 2X TOP PLATE
11. PIPE GUARD RAILING, SEE DETAILS
12. PIPE GUARD RAILING BRACKET, SEE DETAILS
13. PAINTED STEEL ANGLE AT MEZZINE, SEE DETAILS
14. TREATED 2"X4" SILL PLATE
15. R-13 BATT INSULATION
16. NEW STEEL SHIPS LADDER, SEE DETAILS
17. 1.66" DIA. PAINTED PIPE RAILING CONT. WELDED TO STEEL STRINGER
18. ⅝" PRIMED AND PAINTED, APA RATED, SANDED ONE SIDE PLYWOOD AT SHOP WALLS TO 8'-0" A.F.F.
19. 2"x6"x⅜" STEEL STRINGER, PRIMED AND PAINTED.
20. 4"x⅜" STEEL MOUNTING BRACKET CONT. WELDED TO STEEL STRINGER, PRIMED AND PAINTED,
21. 1.666" DIA. PAINTED STEEL HANDRAILING
22. PAINTED STEEL HAND RAILING BRACKET. PROVIDE WOOD BACKING FOR BRACKET ATTACHMENT, SEE DETAIL 08/AWS401
23. 1" PREMANUFUACTURED STAIR TREAD WITH BULLNOSE
24. PAINTED STAIR TREAD AND RISER. PROVIDE SELF-ADHESIVE GRIP TAPE AT STAIR NOSING, 4" WIDE STRIP
25. STAIR WALL TO BE 2"x4" FRAMING AT 16" O.C. WITH ⅝" PRIMED AND PAINTED, APA RATED, SANDED ONE SIDE PLYWOOD AT EXPOSED SURFACES.
26. "JOHNSONITE" OR EQUAL RUBBER STAIR STRINGER AT EACH SIDE OF STAIR

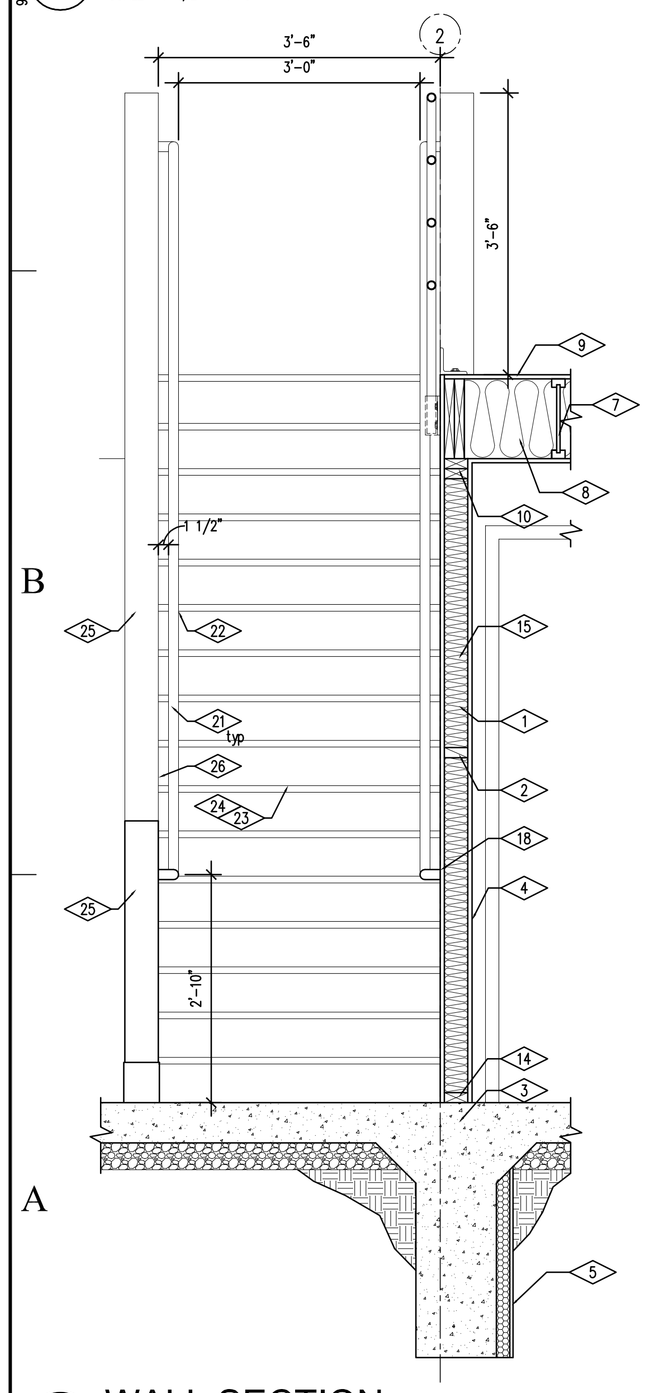

WALL SECTION

05 AWS401 SCALE 3/4" = 1'-0"

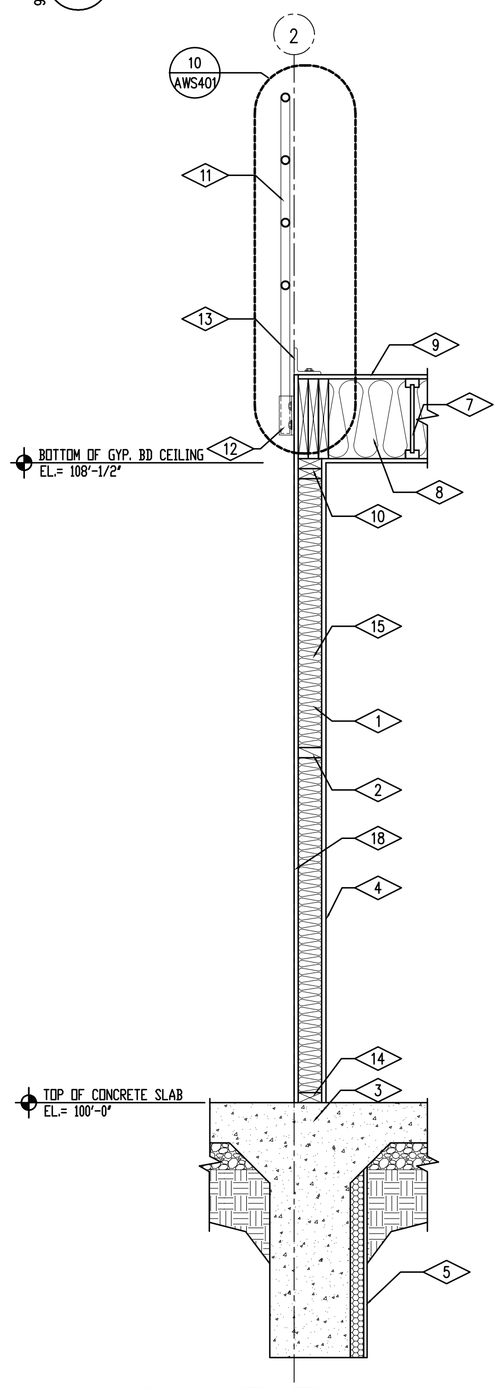

WALL SECTION

04 AWS401 SCALE 3/4" = 1'-0"

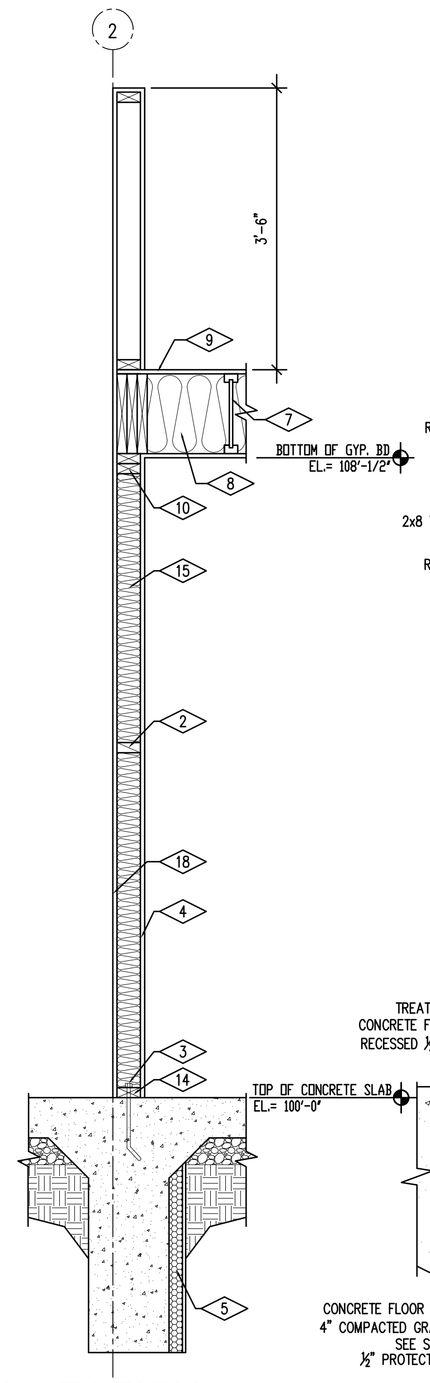

WALL SECTION

03 AWS401 SCALE 3/4" = 1'-0"

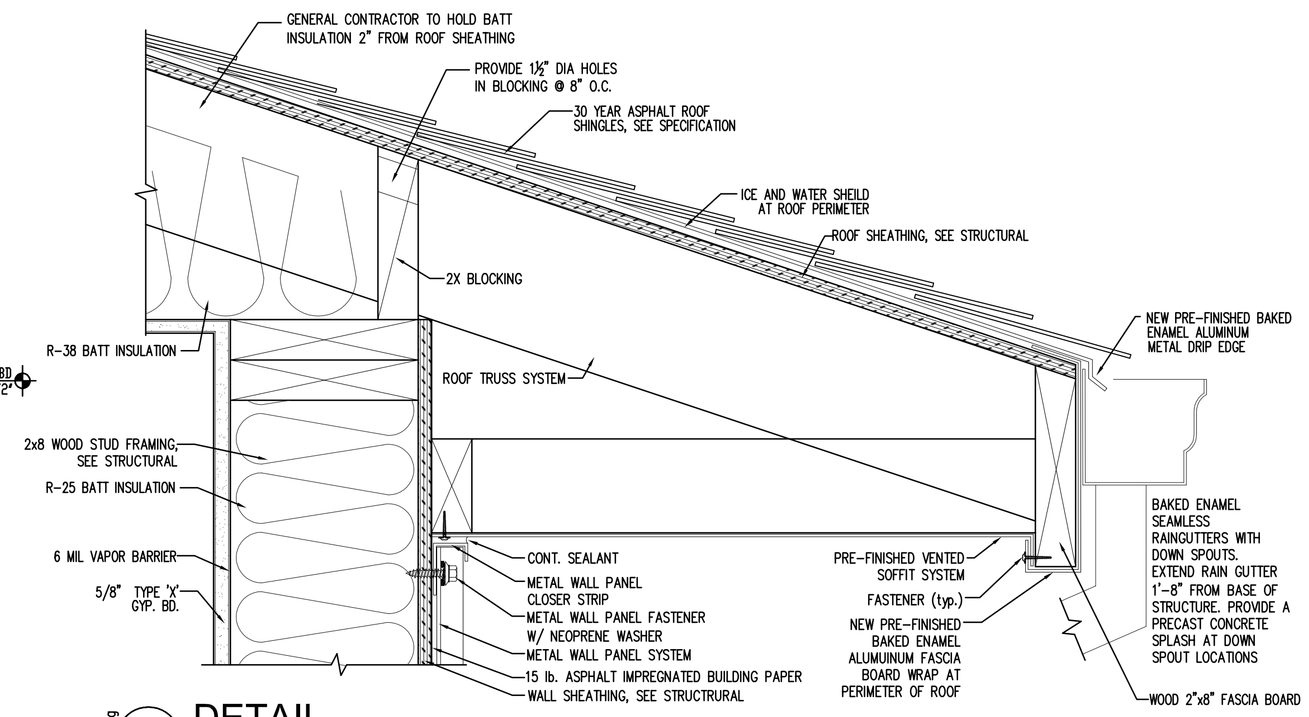

DETAIL

06 AWS401 SCALE 3" = 1'-0"

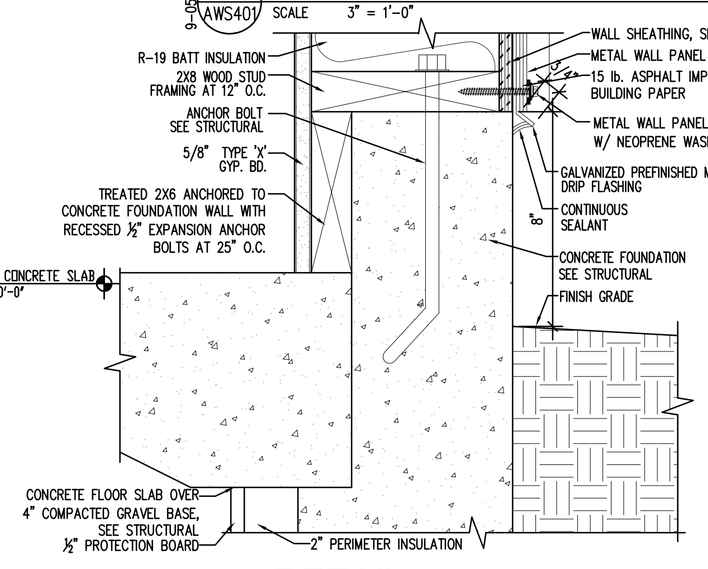

DETAIL

02 AWS401 SCALE 3" = 1'-0"

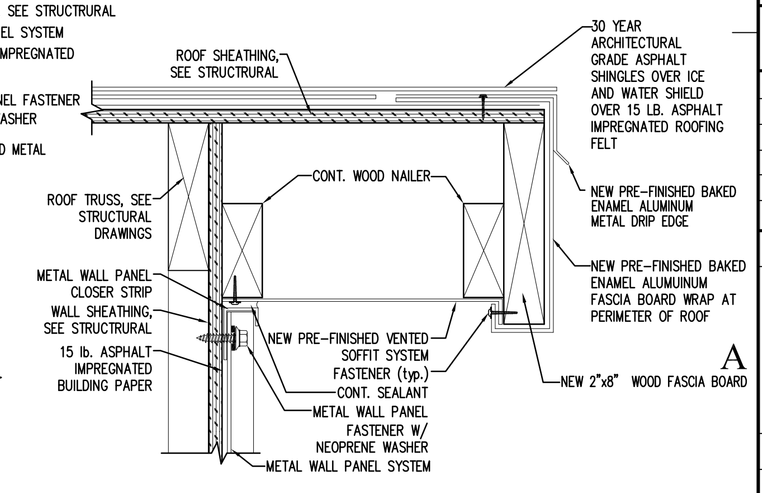

DETAIL

01 AWS401 SCALE 3" = 1'-0"

State of Utah
Department of Administrative Services
Division of Facilities Construction & Management
4110 State Office Building
Salt Lake City, Utah 84114
Phone: (801) 538 - 3018
Fax: (801) 538 - 3267
Internet: http://www.dfcm.state.ut.us

CREATED BY: P+A architects

P+A architects
821 East Kensington Ave.
Salt Lake City, Utah 84105
P: 801.484.1161
F: 801.485.4640
e-mail parchitects@comcast.net

STATE OF UTAH BRIAN & SCOTT 261110 LICENSED ARCHITECT

architecture planning design

CONSULTANT: xyz engineering

PROJECT TITLE:

DIVISION OF WILDLIFE RESOURCES

NEW SHOP BUILDING

VERNAL, UTAH

MARK	DATE	DESCRIPTION

ISSUE TYPE: CONSTRUCTION DOCUMENTS

ISSUE DATE: 27th March, 2009

DFCM PROJECT NO: 07319520
CAD PROJECT NO:
CAD DWG FILE:
DRAWN BY: BRIAN AND SCOTT
CHK'D BY: SCOTT

COPYRIGHT: STATE OF UTAH

SHEET TITLE

WALL SECTIONS

SHEET NUMBER

A-WS401

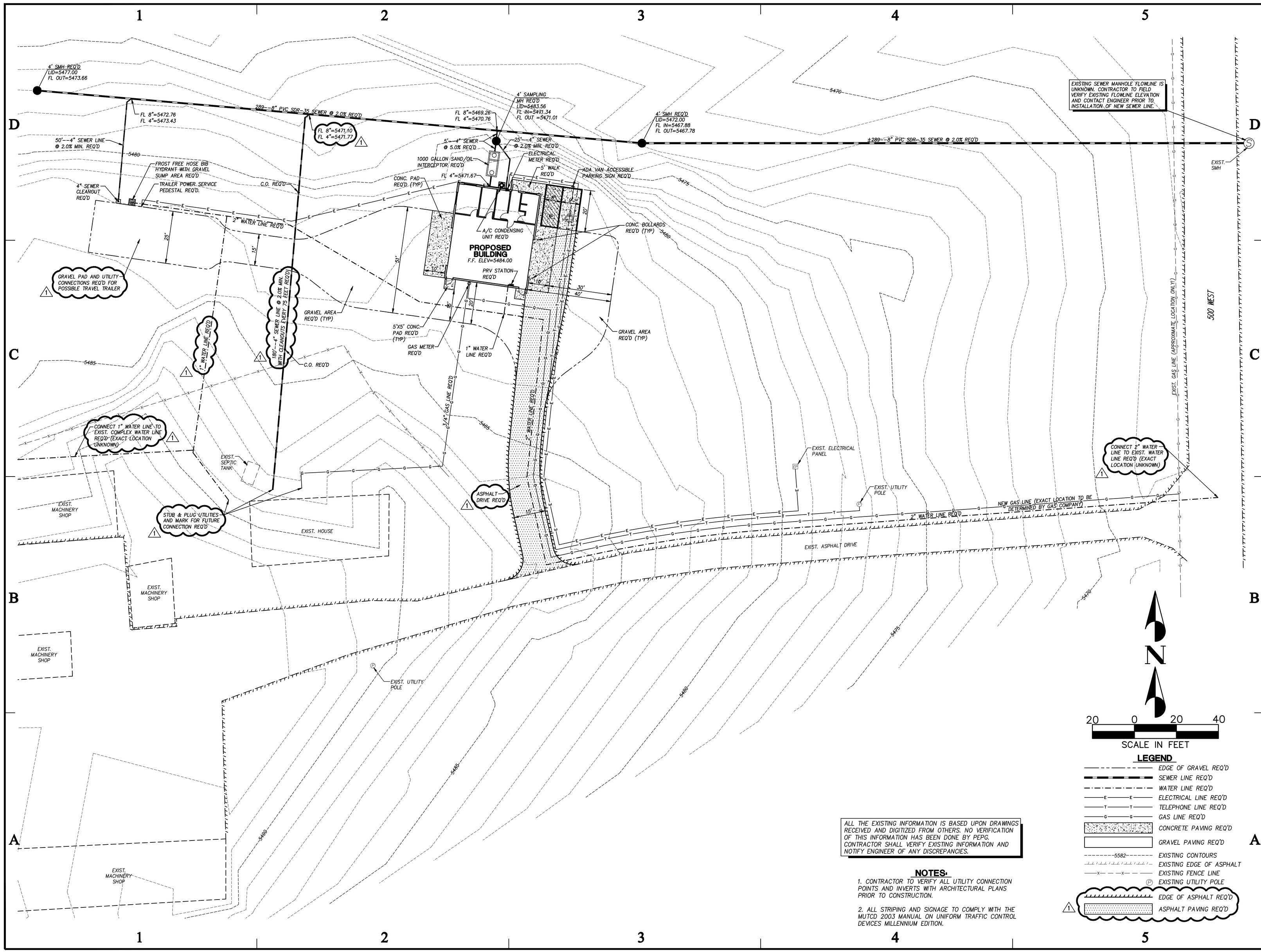

ALL THE EXISTING INFORMATION IS BASED UPON DRAWINGS RECEIVED AND DIGITIZED FROM OTHERS. NO VERIFICATION OF THIS INFORMATION HAS BEEN DONE BY PEPG. CONTRACTOR SHALL VERIFY EXISTING INFORMATION AND NOTIFY ENGINEER OF ANY DISCREPANCIES.

NOTES:

1. CONTRACTOR TO VERIFY ALL UTILITY CONNECTION POINTS AND INVERTS WITH ARCHITECTURAL PLANS PRIOR TO CONSTRUCTION.

2. ALL STRIPING AND SIGNAGE TO COMPLY WITH THE MUTCD 2003 MANUAL ON UNIFORM TRAFFIC CONTROL DEVICES MILLENNIUM EDITION.

LEGEND

- EDGE OF GRAVEL REQ'D
- SEWER LINE REQ'D
- WATER LINE REQ'D
- ELECTRICAL LINE REQ'D
- TELEPHONE LINE REQ'D
- GAS LINE REQ'D
- CONCRETE PAVING REQ'D
- GRAVEL PAVING REQ'D
- 5582 EXISTING CONTOURS
- EXISTING EDGE OF ASPHALT
- EXISTING FENCE LINE
- EXISTING UTILITY POLE
- EDGE OF ASPHALT REQ'D
- ASPHALT PAVING REQ'D

State of Utah
Department of Administrative Services
Division of Facilities Construction & Management
4110 State Office Building
Salt Lake City, Utah 84114
Phone: (801) 538 - 3018
Fax: (801) 538 - 3267
Internet: http://www.dfcm.state.ut.us

CREATED BY: P+A architects

P+A architects
821 East Kensington Ave.
Salt Lake City, Utah 84105
P: 801.484.1161
F: 801.485.4640
e-mail parchitects@comcast.net

architecture planning design

CONSULTANT:
PEPG ENGINEERING, L.L.C.
8825 S. SANDY PARKWAY • SANDY, UT 84070
PHONE: (801) 562-2521 • FAX: (801) 562-2551

PROJECT TITLE:
DIVISION OF WILDLIFE RESOURCES
NEW SHOP
VERNAL, UTAH

MARK	DATE	DESCRIPTION
1	5-09	ADDENDUM NO. 1

ISSUE TYPE: CONSTRUCTION DOCUMENTS

ISSUE DATE: MAY, 2009

DFCM PROJECT NO: 07319520
CAD PROJECT NO: 6822.0910
CAD DWG FILE: SPLAN-01
DRAWN BY: BCB/DRS
CHK'D BY: DRS
COPYRIGHT: STATE OF UTAH

SHEET TITLE
SITE & UTILITY PLAN (BASE BID)

SHEET NUMBER
C100

SHEET OF

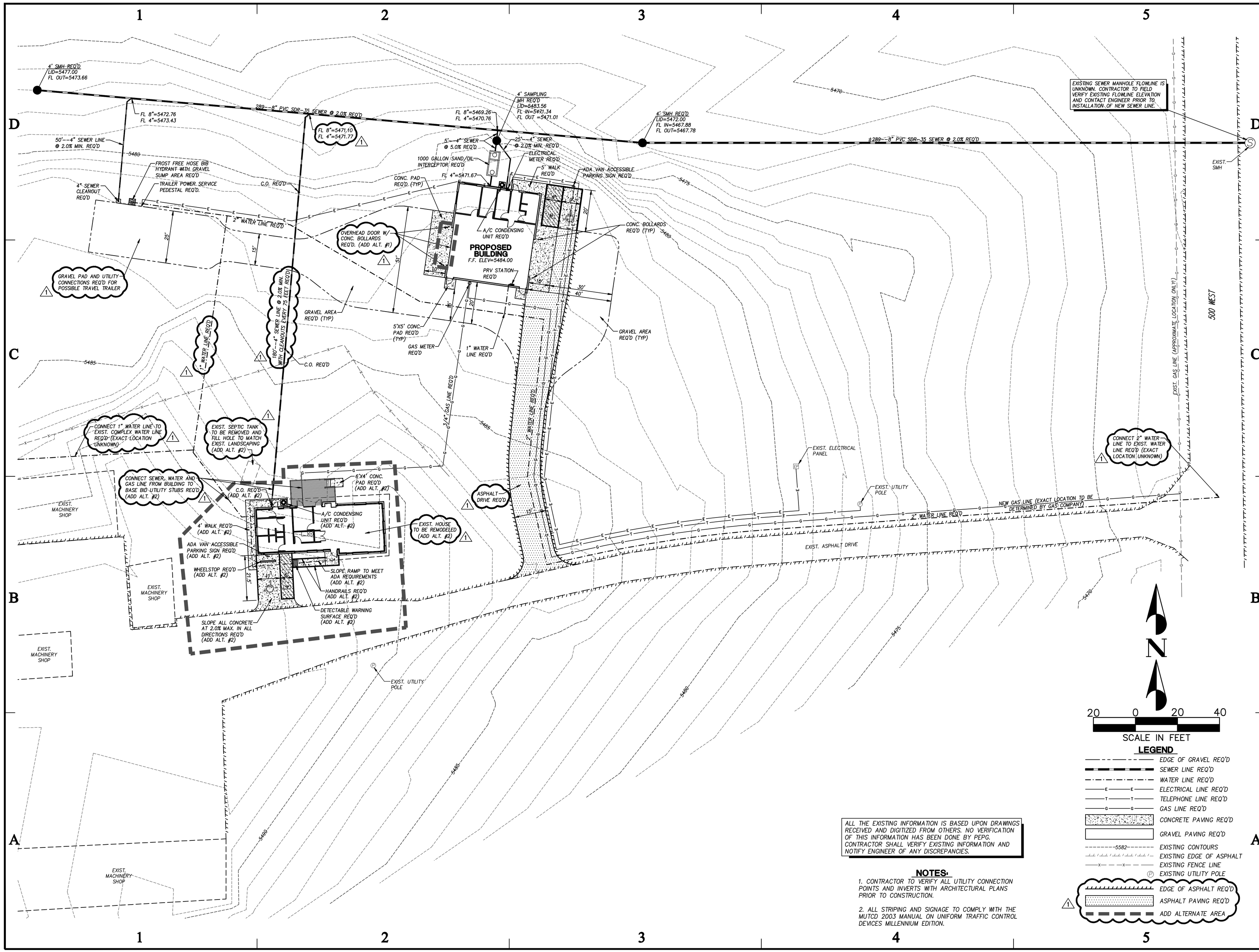

ALL THE EXISTING INFORMATION IS BASED UPON DRAWINGS RECEIVED AND DIGITIZED FROM OTHERS. NO VERIFICATION OF THIS INFORMATION HAS BEEN DONE BY PEPG. CONTRACTOR SHALL VERIFY EXISTING INFORMATION AND NOTIFY ENGINEER OF ANY DISCREPANCIES.

NOTES:

1. CONTRACTOR TO VERIFY ALL UTILITY CONNECTION POINTS AND INVERTS WITH ARCHITECTURAL PLANS PRIOR TO CONSTRUCTION.

2. ALL STRIPING AND SIGNAGE TO COMPLY WITH THE MUTCD 2003 MANUAL ON UNIFORM TRAFFIC CONTROL DEVICES MILLENNIUM EDITION.

State of Utah
Department of Administrative Services
Division of Facilities Construction & Management
4110 State Office Building
Salt Lake City, Utah 84114
Phone: (801) 538 - 3018
Fax: (801) 538 - 3267
Internet: http://www.dfcm.state.ut.us

CREATED BY: P+A architects

P+A architects
821 East Kensington Ave.
Salt Lake City, Utah 84105
P: 801.484.1161
F: 801.485.4640
e-mail parchitects@comcast.net

architecture planning design

CONSULTANT:
PEPG ENGINEERING, L.L.C.
8825 S. SANDY PARKWAY • SANDY, UT 84070
PHONE: (801) 562-2521 • FAX: (801) 562-2551

PROJECT TITLE:
DIVISION OF WILDLIFE RESOURCES

NEW SHOP

VERNAL, UTAH

MARK	DATE	DESCRIPTION
1	5-09	ADDENDUM NO. 1

ISSUE TYPE: CONSTRUCTION DOCUMENTS

ISSUE DATE: MAY, 2009

DFCM PROJECT NO: 07319520
CAD PROJECT NO: 6822.0910
CAD DWG FILE: SPLAN-01
DRAWN BY: BCB/DRS
CHK'D BY: DRS
COPYRIGHT: STATE OF UTAH

SHEET TITLE
SITE & UTILITY PLAN (ADD ALTERNATES)

SHEET NUMBER
C101

SHEET OF

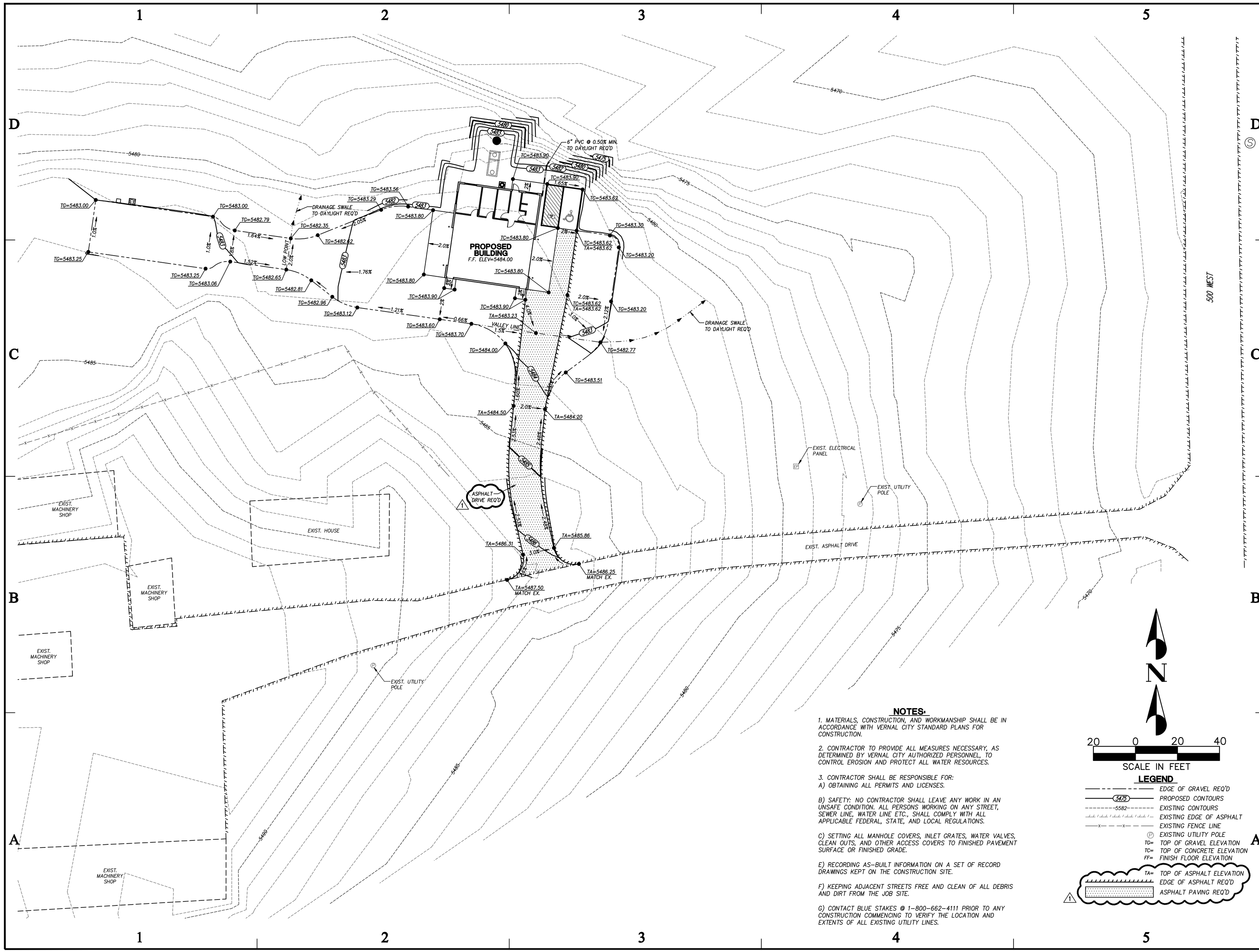

NOTES:

1. MATERIALS, CONSTRUCTION, AND WORKMANSHIP SHALL BE IN ACCORDANCE WITH VERNAL CITY STANDARD PLANS FOR CONSTRUCTION.

2. CONTRACTOR TO PROVIDE ALL MEASURES NECESSARY, AS DETERMINED BY VERNAL CITY AUTHORIZED PERSONNEL, TO CONTROL EROSION AND PROTECT ALL WATER RESOURCES.

3. CONTRACTOR SHALL BE RESPONSIBLE FOR:
A) OBTAINING ALL PERMITS AND LICENSES.

B) SAFETY: NO CONTRACTOR SHALL LEAVE ANY WORK IN AN UNSAFE CONDITION. ALL PERSONS WORKING ON ANY STREET, SEWER LINE, WATER LINE ETC., SHALL COMPLY WITH ALL APPLICABLE FEDERAL, STATE, AND LOCAL REGULATIONS.

C) SETTING ALL MANHOLE COVERS, INLET GRATES, WATER VALVES, CLEAN OUTS, AND OTHER ACCESS COVERS TO FINISHED PAVEMENT SURFACE OR FINISHED GRADE.

E) RECORDING AS-BUILT INFORMATION ON A SET OF RECORD DRAWINGS KEPT ON THE CONSTRUCTION SITE.

F) KEEPING ADJACENT STREETS FREE AND CLEAN OF ALL DEBRIS AND DIRT FROM THE JOB SITE.

G) CONTACT BLUE STAKES @ 1-800-662-4111 PRIOR TO ANY CONSTRUCTION COMMENCING TO VERIFY THE LOCATION AND EXTENTS OF ALL EXISTING UTILITY LINES.

LEGEND

- EDGE OF GRAVEL REQ'D
- 5475 PROPOSED CONTOURS
- 5582 EXISTING CONTOURS
- EXISTING EDGE OF ASPHALT
- EXISTING FENCE LINE
- EXISTING UTILITY POLE
- TG= TOP OF GRAVEL ELEVATION
- TC= TOP OF CONCRETE ELEVATION
- FF= FINISH FLOOR ELEVATION
- TA= TOP OF ASPHALT ELEVATION
- EDGE OF ASPHALT REQ'D
- ASPHALT PAVING REQ'D

State of Utah
Department of Administrative Services
Division of Facilities Construction & Management
4110 State Office Building
Salt Lake City, Utah 84114
Phone: (801) 538 - 3018
Fax: (801) 538 - 3267
Internet: http://www.dfcm.state.ut.us

CREATED BY: P+A architects

P+A architects
821 East Kensington Ave.
Salt Lake City, Utah 84105
P: 801.484.1161
F: 801.485.4640
e-mail parchitects@comcast.net

☐ architecture ☐ planning ☐ design

CONSULTANT:
PEPG ENGINEERING, L.L.C.
8825 S. SANDY PARKWAY • SANDY, UT 84070
PHONE: (801) 562-2521 • FAX: (801) 562-2551

PROJECT TITLE:
DIVISION OF WILDLIFE RESOURCES

NEW SHOP

VERNAL, UTAH

MARK	DATE	DESCRIPTION
1	5-09	ADDENDUM NO. 1

ISSUE TYPE: CONSTRUCTION DOCUMENTS

ISSUE DATE: MAY, 2009

DFCM PROJECT NO: 07319520
CAD PROJECT NO: 6822.0910
CAD DWG FILE: SPLAN-01
DRAWN BY: BCB/DRS
CHK'D BY: DRS
COPYRIGHT: STATE OF UTAH

SHEET TITLE
GRADING & DRAINAGE PLAN (BASE BID)

SHEET NUMBER
C200

SHEET OF

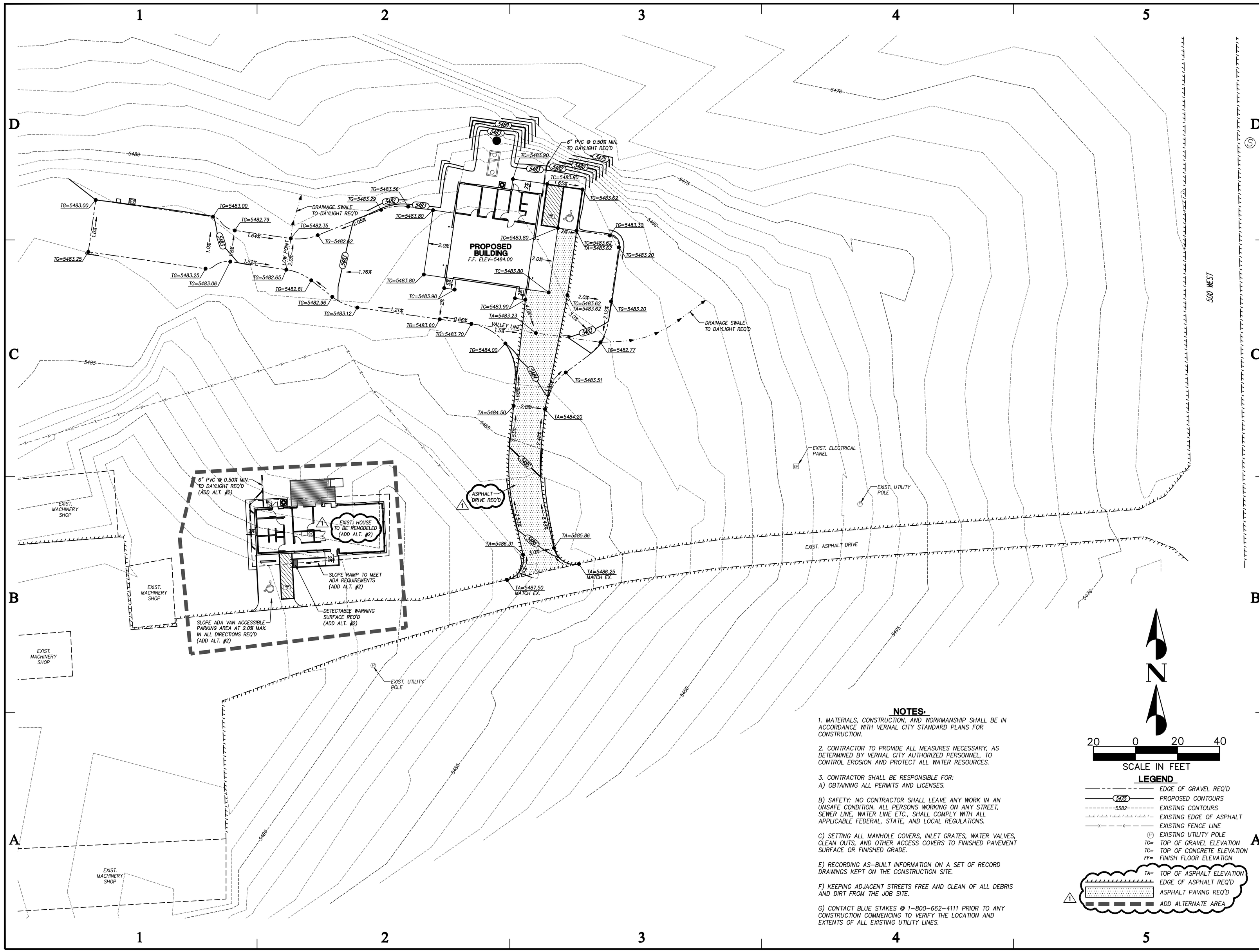

NOTES:

1. MATERIALS, CONSTRUCTION, AND WORKMANSHIP SHALL BE IN ACCORDANCE WITH VERNAL CITY STANDARD PLANS FOR CONSTRUCTION.

2. CONTRACTOR TO PROVIDE ALL MEASURES NECESSARY, AS DETERMINED BY VERNAL CITY AUTHORIZED PERSONNEL, TO CONTROL EROSION AND PROTECT ALL WATER RESOURCES.

3. CONTRACTOR SHALL BE RESPONSIBLE FOR:
A) OBTAINING ALL PERMITS AND LICENSES.

B) SAFETY: NO CONTRACTOR SHALL LEAVE ANY WORK IN AN UNSAFE CONDITION. ALL PERSONS WORKING ON ANY STREET, SEWER LINE, WATER LINE ETC., SHALL COMPLY WITH ALL APPLICABLE FEDERAL, STATE, AND LOCAL REGULATIONS.

C) SETTING ALL MANHOLE COVERS, INLET GRATES, WATER VALVES, CLEAN OUTS, AND OTHER ACCESS COVERS TO FINISHED PAVEMENT SURFACE OR FINISHED GRADE.

E) RECORDING AS-BUILT INFORMATION ON A SET OF RECORD DRAWINGS KEPT ON THE CONSTRUCTION SITE.

F) KEEPING ADJACENT STREETS FREE AND CLEAN OF ALL DEBRIS AND DIRT FROM THE JOB SITE.

G) CONTACT BLUE STAKES @ 1-800-662-4111 PRIOR TO ANY CONSTRUCTION COMMENCING TO VERIFY THE LOCATION AND EXTENTS OF ALL EXISTING UTILITY LINES.

N

20 0 20 40
SCALE IN FEET

LEGEND

- EDGE OF GRAVEL REQ'D
- 5475 PROPOSED CONTOURS
- 5582 EXISTING CONTOURS
- EXISTING EDGE OF ASPHALT
- EXISTING FENCE LINE
- EXISTING UTILITY POLE
- TG= TOP OF GRAVEL ELEVATION
- TC= TOP OF CONCRETE ELEVATION
- FF= FINISH FLOOR ELEVATION
- TA= TOP OF ASPHALT ELEVATION
- EDGE OF ASPHALT REQ'D
- ASPHALT PAVING REQ'D
- 1 ADD ALTERNATE AREA

State of Utah
Department of Administrative Services
Division of Facilities Construction & Management
4110 State Office Building
Salt Lake City, Utah 84114
Phone: (801) 538 - 3018
Fax: (801) 538 - 3267
Internet: http://www.dfcm.state.ut.us

CREATED BY: P+A architects

P+A architects
821 East Kensington Ave.
Salt Lake City, Utah 84105
P: 801.484.1161
F: 801.485.4640
e-mail parchitects@comcast.net

architecture planning design

CONSULTANT:
PEPG ENGINEERING, L.L.C.
8825 S. SANDY PARKWAY • SANDY, UT 84070
PHONE: (801) 562-2521 • FAX: (801) 562-2551

PROJECT TITLE:
DIVISION OF WILDLIFE RESOURCES

NEW SHOP

VERNAL, UTAH

MARK	DATE	DESCRIPTION
1	5-09	ADDENDUM NO. 1

ISSUE TYPE: CONSTRUCTION DOCUMENTS

ISSUE DATE: MAY, 2009

DFCM PROJECT NO: 07319520
CAD PROJECT NO: 6822.0910
CAD DWG FILE: SPLAN-01
DRAWN BY: BCB/DRS
CHK'D BY: DRS
COPYRIGHT: STATE OF UTAH

SHEET TITLE
GRADING & DRAINAGE PLAN (ADD ALTERNATES)

SHEET NUMBER
C201

SHEET OF

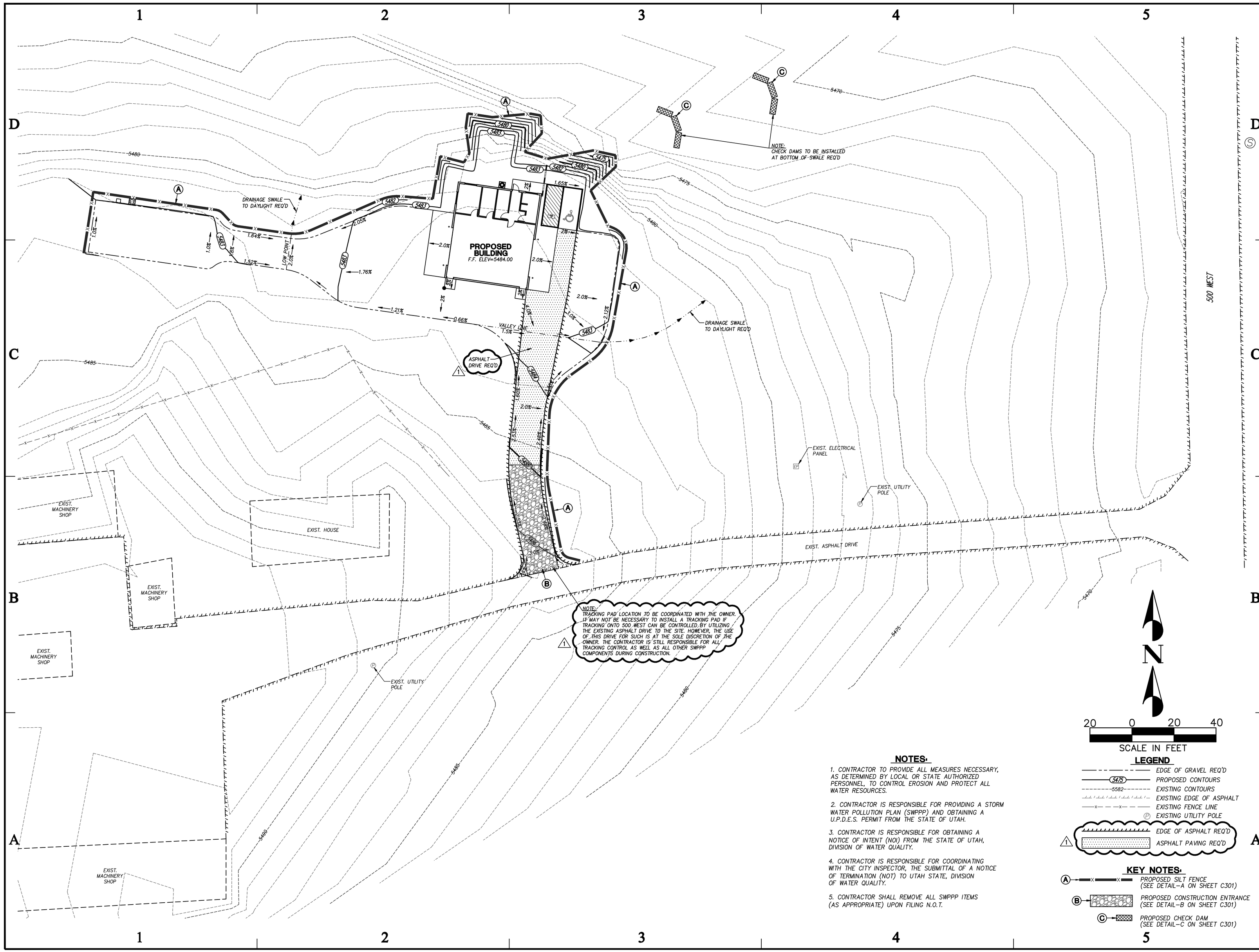

NOTES:

1. CONTRACTOR TO PROVIDE ALL MEASURES NECESSARY, AS DETERMINED BY LOCAL OR STATE AUTHORIZED PERSONNEL, TO CONTROL EROSION AND PROTECT ALL WATER RESOURCES.
2. CONTRACTOR IS RESPONSIBLE FOR PROVIDING A STORM WATER POLLUTION PLAN (SWPPP) AND OBTAINING A U.P.D.E.S. PERMIT FROM THE STATE OF UTAH.
3. CONTRACTOR IS RESPONSIBLE FOR OBTAINING A NOTICE OF INTENT (NOI) FROM THE STATE OF UTAH, DIVISION OF WATER QUALITY.
4. CONTRACTOR IS RESPONSIBLE FOR COORDINATING WITH THE CITY INSPECTOR, THE SUBMITTAL OF A NOTICE OF TERMINATION (NOT) TO UTAH STATE, DIVISION OF WATER QUALITY.
5. CONTRACTOR SHALL REMOVE ALL SWPPP ITEMS (AS APPROPRIATE) UPON FILING N.O.T.

LEGEND

- EDGE OF GRAVEL REQ'D
- 5475 PROPOSED CONTOURS
- 5582 EXISTING CONTOURS
- EXISTING EDGE OF ASPHALT
- EXISTING FENCE LINE
- EXISTING UTILITY POLE
- EDGE OF ASPHALT REQ'D
- ASPHALT PAVING REQ'D

KEY NOTES:

- (A) PROPOSED SILT FENCE (SEE DETAIL–A ON SHEET C301)
- (B) PROPOSED CONSTRUCTION ENTRANCE (SEE DETAIL–B ON SHEET C301)
- (C) PROPOSED CHECK DAM (SEE DETAIL–C ON SHEET C301)

State of Utah
Department of Administrative Services
Division of Facilities Construction & Management
4110 State Office Building
Salt Lake City, Utah 84114
Phone: (801) 538 - 3018
Fax: (801) 538 - 3267
Internet: http://www.dfcm.state.ut.us

CREATED BY: P+A architects

P+A architects
821 East Kensington Ave.
Salt Lake City, Utah 84105
P: 801.484.1161
F: 801.485.4640
e-mail parchitects@comcast.net

☐ architecture ☐ planning ☐ design

CONSULTANT:
PEPG ENGINEERING, L.L.C.
8825 S. SANDY PARKWAY • SANDY, UT 84070
PHONE: (801) 562-2521 • FAX: (801) 562-2551

PROJECT TITLE:
DIVISION OF WILDLIFE RESOURCES

NEW SHOP

VERNAL, UTAH

MARK	DATE	DESCRIPTION
1	5-09	ADDENDUM NO. 1

ISSUE TYPE: CONSTRUCTION DOCUMENTS

ISSUE DATE: MAY, 2009

DFCM PROJECT NO: 07319520
CAD PROJECT NO: 6822.0910
CAD DWG FILE: SPLAN-01
DRAWN BY: BCB/DRS
CHK'D BY: DRS
COPYRIGHT: STATE OF UTAH

SHEET TITLE
EROSION CONTROL PLAN

SHEET NUMBER
C300

SHEET OF

SILT FENCE

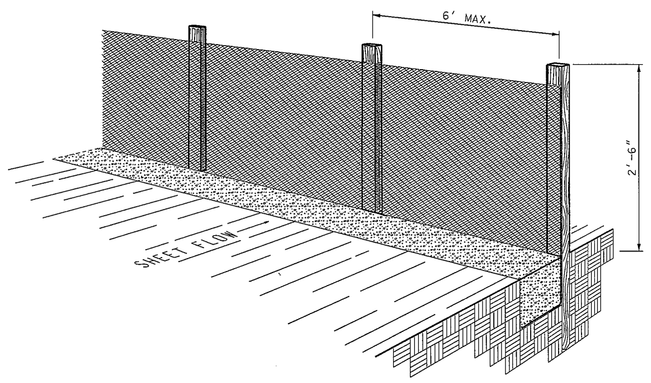

PERSPECTIVE VIEW

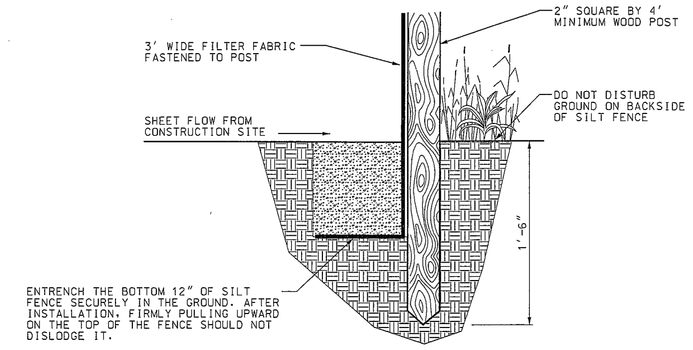

SECTION

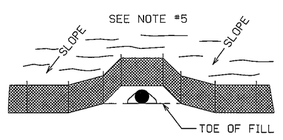

AROUND A PIPE OUTLET

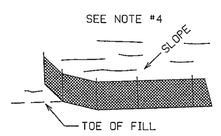

AT END OF SILT FENCE

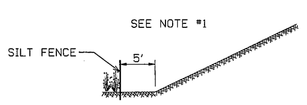

AT TOE OF FILL SLOPE

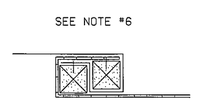

SPLICES (TOP VIEW)

SILT FENCE INSTALLATIONS

NOTES FOR SILT FENCE:

1. WHERE PERMITTED, POSITION THE SILT FENCE 5' BEYOND THE TOE OF SLOPE.
2. TO AVOID CREATING LOW POINTS ALONG THE SILT FENCE, ALIGN THE FENCE ALONG THE CONTOUR AS MUCH AS POSSIBLE. WHERE EXCESSIVE RUNOFF WILL ACCUMULATE AT A LOW POINT, PROVIDE AN OPENING IN THE FENCE AND INSTALL A SEDIMENT TRAP.
3. WHEN EXCAVATING THE TRENCH, USE MACHINERY THAT WILL MINIMIZE DISTURBANCE.
4. TO PREVENT RUNOFF FROM FLOWING AROUND THE ENDS OF THE SILT FENCE, RUN THE ENDS OF THE FENCE UP SLOPE.
5. DO NOT PLACE SILT FENCE ACROSS POTENTIAL CONCENTRATED FLOWS (e.g., PIPE OUTLETS, DRAINAGE CHANNELS, CUT DITCHES).
6. AVOID USING SPLICES ALONG THE FENCE AS MUCH AS POSSIBLE. IF A SPLICE IS NECESSARY, BEFORE POUNDING IN THE END POSTS, OVERLAP THE END POSTS AND TWIST 180 DEGREES.
7. MAINTAIN A PROPERLY FUNCTIONING SILT FENCE THROUGHOUT THE DURATION OF THE PROJECT OR UNTIL DISTURBED AREAS HAVE BEEN VEGETATED.
8. WHEN A STORM EVENT DEPOSITS SEDIMENT BEHIND THE FENCE, REMOVE THE SEDIMENT AND PLACE IT IN A STABLE AREA APPROVED BY THE ENGINEER.
9. IN AREAS THAT HAVE BEEN SEEDED AND MULCHED, REMOVE SILT FENCE UNLESS THEY ARE PROTECTING A WETLAND OR WATER BODY.

DETAIL-A
TEMPORARY EROSION CONTROL (SILT FENCE)
NOT TO SCALE

STABILIZED CONSTRUCTION ENTRANCE

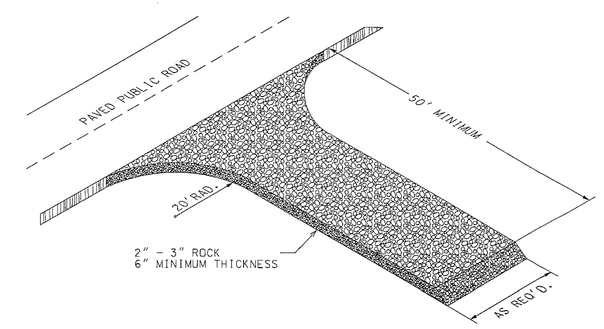

NOTES FOR STABILIZED CONSTRUCTION ENTRANCE:

1. PLACE STABILIZED CONSTRUCTION ENTRANCES AT LOCATIONS SHOWN ON THE PLANS OR AS DIRECTED BY THE ENGINEER.
2. MAINTAIN A PROPERLY FUNCTIONING CONSTRUCTION ENTRANCE THROUGHOUT CONSTRUCTION OR UNTIL DISTURBED AREAS HAVE BEEN PAVED.
3. DO NOT ALLOW VEHICLES LEAVING THE CONSTRUCTION SITE TO TRACK MUD ONTO PAVED ROADS.

DETAIL-B
TEMPORARY EROSION CONTROL
(STABILIZED CONSTRUCTION ENTRANCE)
NOT TO SCALE

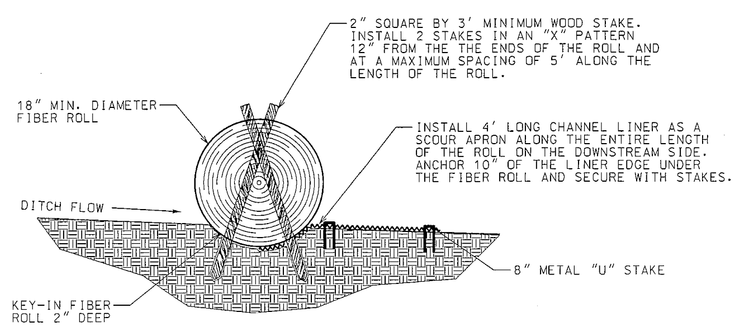

SECTION Y – Y

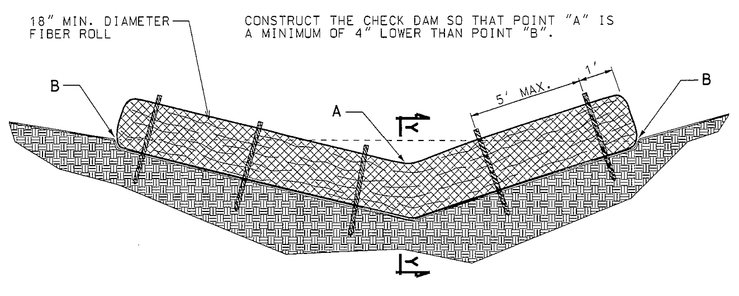

FIBER ROLL CHECK DAM

MATERIAL QUANTITY CHART		
DITCH SIDE SLOPE	LENGTH OF FIBER ROLL REQUIRED FOR HALF OF DITCH	CUBIC YARDS OF STONE REQUIRED FOR HALF OF DITCH
2:1	4.5'	0.25
3:1	5'	0.35
4:1	8'	0.5
6:1	11.5'	0.7
8:1	15'	1.0
10:1	18.5'	1.2
12:1	22.5'	1.4

EXAMPLE: A CUT DITCH WITH A 6:1 FORE SLOPE AND A 2:1 BACK SLOPE WOULD REQUIRE A 16' MIN. FIBER ROLL OR 0.95 CUBIC YARDS MIN. OF STONE.

DETAIL-C
TEMPORARY EROSION CONTROL (CHECK DAMS)
NOT TO SCALE

State of Utah
Department of Administrative Services
Division of Facilities Construction & Management
4110 State Office Building
Salt Lake City, Utah 84114
Phone: (801) 538 - 3018
Fax: (801) 538 - 3267
Internet: http://www.dfcm.state.ut.us

CREATED BY: P+A architects

P+A architects
821 East Kensington Ave.
Salt Lake City, Utah 84105
P: 801.484.1161
F: 801.485.4640
e-mail parchitects@comcast.net

☐ architecture ☐ planning ☐ design

CONSULTANT:

PEPG ENGINEERING, L.L.C.
8825 S. SANDY PARKWAY • SANDY, UT 84070
PHONE: (801) 562-2521 • FAX: (801) 562-2551

PROJECT TITLE:

DIVISION OF WILDLIFE RESOURCES

NEW SHOP

VERNAL, UTAH

MARK	DATE	DESCRIPTION

ISSUE TYPE: CONSTRUCTION DOCUMENTS

ISSUE DATE: 27th March, 2009

DFCM PROJECT NO: 07319520
CAD PROJECT NO: 6822.0910
CAD DWG FILE: SPLAN-01
DRAWN BY: BCB/DRS
CHK'D BY: DRS
COPYRIGHT: STATE OF UTAH

SHEET TITLE

EROSION CONTROL DETAILS

SHEET NUMBER

C301

SHEET **OF**

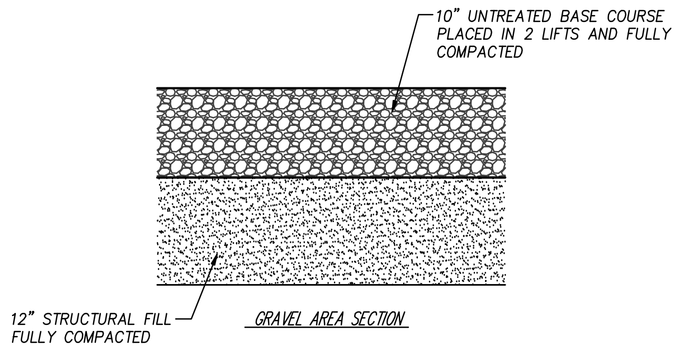

NOTE:
1. PAVEMENT DESIGN IS BASED ON THE GEOTECHNICAL EVALUATION REPORT PREPARED BY PEPG ENGINEERING, LLC.

DETAIL-A
GRAVEL PAVING SECTION
(NOT TO SCALE)

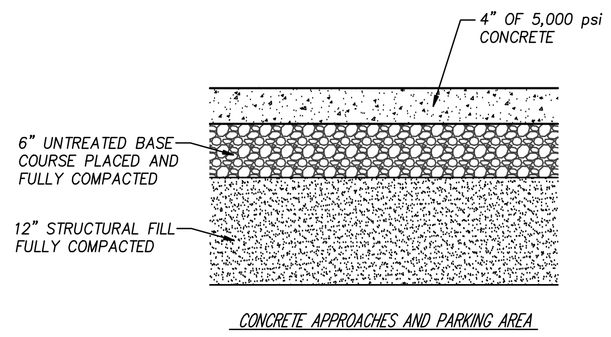

NOTE:
1. PAVEMENT DESIGN IS BASED ON THE GEOTECHNICAL EVALUATION REPORT PREPARED BY PEPG ENGINEERING, LLC.

DETAIL-B
EXTERIOR CONCRETE PAVING SECTION
(NOT TO SCALE)

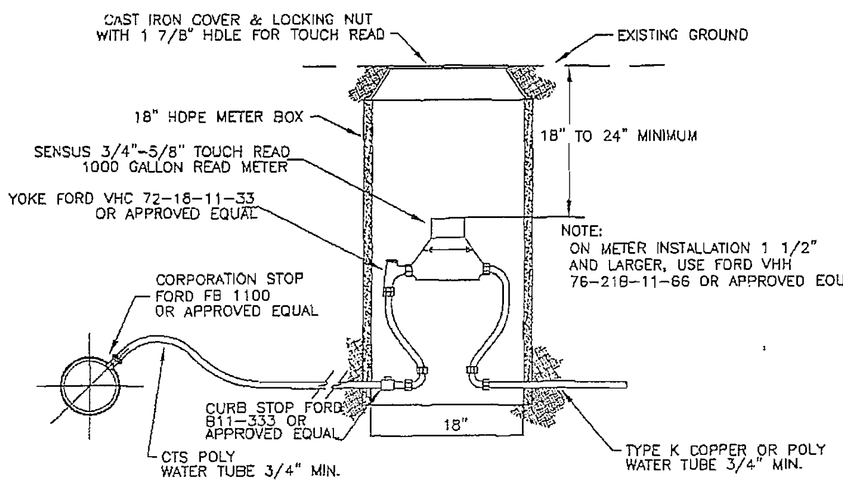

DETAIL-C
TYPICAL WATER SERVICE
VERNAL CITY STD DRAWING SHEET 18
(NOT TO SCALE)

TYPICAL NOTES

1. ALL NEWLY INSTALLED WATER PIPE SHALL PASS A CHLORINE RESIDUAL TEST, IN ACCORDANCE WITH AWWA C651 AS LATEST REVISED
2. ALL WATER PIPE SHALL BE CLASS 200 PVC, CONFORM TO AWWA STANDARDS, AND BEAR THE "NSF-pw" LOGO
3. ALL NEW VALVES SHALL BE RESILIENT-SEATED GATE VALVES, CONFORM TO AWWA C509-01 STANDARDS, AND BE EPOXY COATED
4. ALL VALVES, ELBOWS, TEES, CROSSES, OR ANY OTHER FITTING AS DIRECTED BY THE VERNAL CITY SHALL HAVE RESTRAINING MECHANICAL JOINTS
5. ALL CAST OR DUCTILE IRON FITTINGS AND VALVES SHALL HAVE A POLYETHYLENE WRAP ENCASEMENT IN ACCORDANCE WITH AWWA C-105
6. TRENCH, PIPE INSTALLATION, AND THRUST BLOCKS SHALL BE IN ACCORDANCE WITH TYPICAL DETAILS
7. WATER PIPE SHALL BE INSTALLED A MINIMUM 10' HORIZONTALLY AND 18" VERTICALLY FROM ALL SEWER LINES
8. ALL SERVICE LATERALS SHALL HAVE A MINIMUM OF 36" OF COVER OR AS DIRECTED BY VERNAL CITY
9. TRAFFIC CONTROL SHALL BE IN ACCORDANCE WITH THE LATEST EDITION OF THE MANUAL OF UNIFORM TRAFFIC CONTROL OR AS OTHERWISE REQUIRED BY FEDERAL, STATE, OR LOCAL AUTHORITIES
10. CONTRACTOR SHALL OBTAIN ALL FEDERAL, STATE, AND LOCAL PERMITS
11. ALL NEW VALVES SHALL HAVE MUD PLUGS INSTALLED IN THE VALVE BOX IMMEDIATELY UNDER THE LID

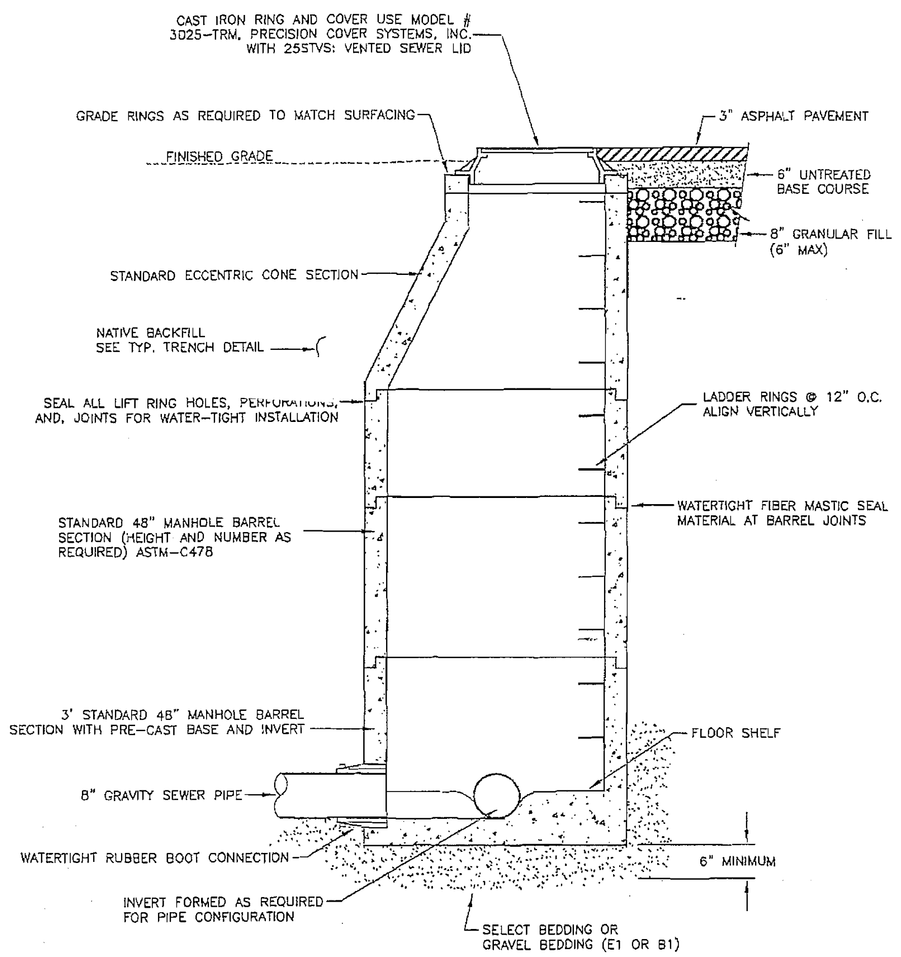

DETAIL-D
TYPICAL SEWER MANHOLE
VERNAL CITY STD DRAWING SHEET 22
(NOT TO SCALE)

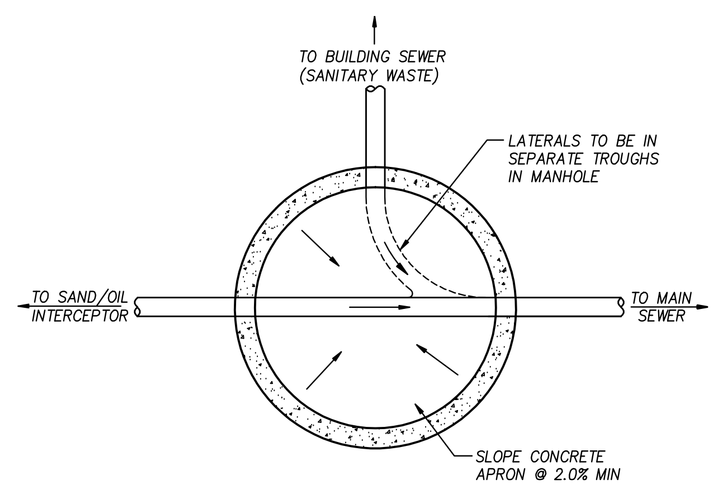

NOTE:
SAMPLE MANHOLE MAY BE CORRUGATED METAL PIPE WITH A POURED BASE WHEN LOCATED IN A NON-TRAFFIC AREA. IF LOCATED IN A TRAFFIC AREA, IT MUST BE CONCRETE WITH A POURED BASE.

DETAIL-E
SAMPLING MANHOLE BASE
(NOT TO SCALE)

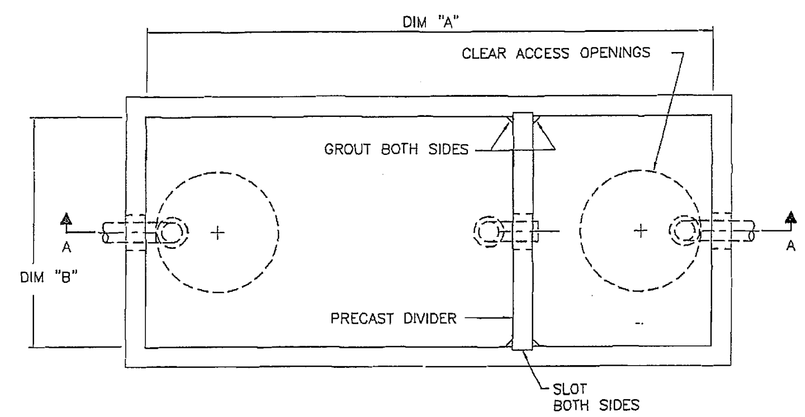

PLAN VIEW

NOTES:
1. CONCRETE: 28 DAY COMPRESSIVE STRENGTH f'c=4500 psi
2. REBAR: ASTM A-615 GRADE 60
3. MESH: ASTM A-185 GRADE 65
4. DESIGN: ACI-318-83 BUILDING CODE ASTM C-857 "MINIMUM STRUCTURAL DESIGN LOADING FOR UNDERGROUND PRECAST CONCRETE UTILITY STRUCTURES"
5. LOADS: H-20 TRUCK WHEEL w/ 30% IMPACT PER AASHTO
6. FILL w/ CLEAN WATER PRIOR TO START-UP OF SYSTEM
7. CONTRACTOR TO SUPPLY & INSTALL ALL PIPING & SAMPLING TEES
8. GRAY WATER ONLY, BLACK WATER SHALL BE CARRIED BY SEPARATE SIDE SEWER.

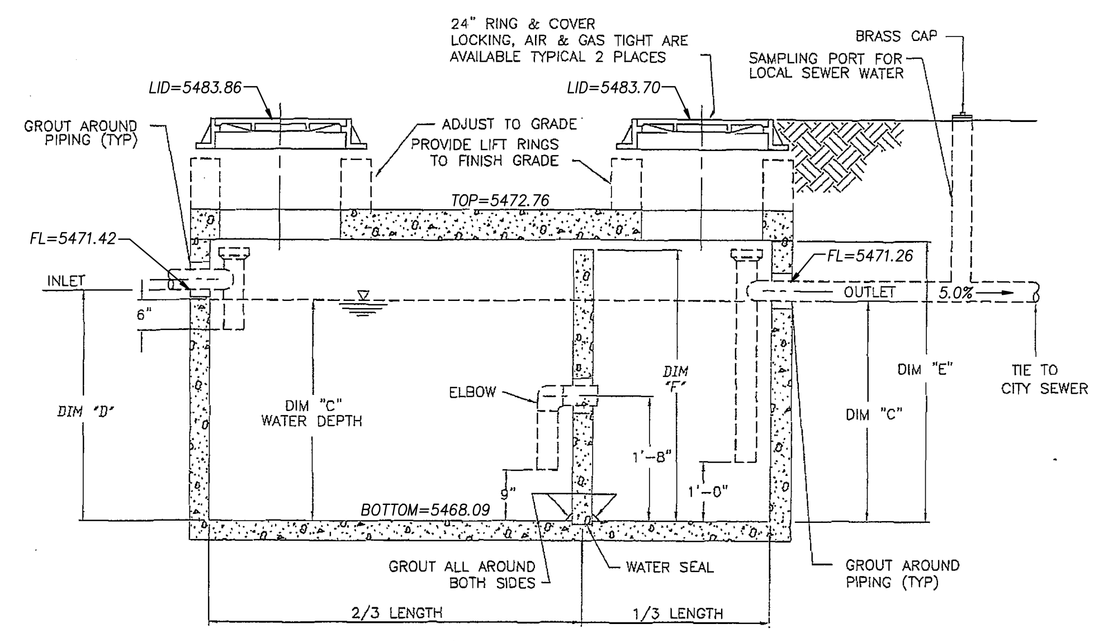

SECTION VIEW AA

GALLON CAPACITY		330	510	750	1000	1500	1800	2500	3000	3500	5000
MODEL No.		463-GI	464-GI	4113-GI	4114-GI	4116-GI	4117-GI	6126-GI	6127-GI	6157-GI	6187-GI
	DIM "A"	6'-0"	6'-0"	11'-0"	11'-0"	11'-0"	11'-0"	12'-0"	12'-0"	15'-0"	18'-0"
	DIM "B"	4'-0"	4'-0"	4'-0"	4'-0"	4'-0"	4'-0"	6'-0"	6'-0"	6'-0"	6'-0"
WATER DEPTH	DIM "C"	2'-0"	3'-0"	3'-2"	3'-2"	4'-7"	5'-6"	4'-6"	5'-6"	5'-4"	6'-2"
	DIM "D"	2'-2"	3'-2"	3'-4"	3'-4"	4'-9"	5'-8"	4'-8"	5'-8"	5'- 6"	6'-4"
	DIM "E"	3'-0"	4'-0"	3'-0"	4'-0"	6'-0"	7'-0"	6'-0"	7'-0"	7'-0"	7'-0"
	DIM "F"	2'-10"	3'-10"	2'-10"	3'-10"	5'-10"	6'-10"	5'-10"	6'-10"	6'-10"	6'-10"
	WEIGHT	10,200	11,850	19,575	22,500	26,100	27,300	33,025	34,450	42,700	63,822

DETAIL-G
TYPICAL 1000 GALLON GREASE INTERCEPTOR
VERNAL CITY STD DRAWING SHEET 23
(NOT TO SCALE)

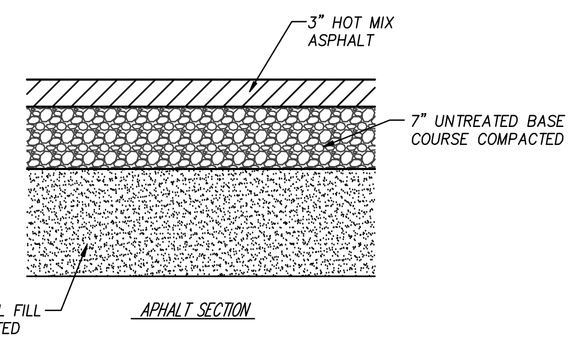

NOTE:
1. PAVEMENT DESIGN IS BASED ON THE GEOTECHNICAL EVALUATION REPORT PREPARED BY PEPG ENGINEERING, LLC.

DETAIL-F
ASPHALT PAVING SECTION
(NOT TO SCALE)

State of Utah
Department of Administrative Services
Division of Facilities Construction & Management
4110 State Office Building
Salt Lake City, Utah 84114
Phone: (801) 538 - 3018
Fax: (801) 538 - 3267
Internet: http://www.dfcm.state.ut.us

CREATED BY: P+A architects

P+A architects
821 East Kensington Ave.
Salt Lake City, Utah 84105
P: 801.484.1161
F: 801.485.4640
e-mail parchitects@comcast.net

☐ architecture ☐ planning ☐ design

CONSULTANT:

PEPG ENGINEERING, L.L.C.
8905 S. SANDY PARKWAY • SANDY, UT 84070
PHONE: (801) 562-2521 • FAX: (801) 562-2551

PROJECT TITLE:

DIVISION OF WILDLIFE RESOURCES

NEW SHOP

VERNAL, UTAH

MARK	DATE	DESCRIPTION
1	5-09	ADDENDUM NO. 1

ISSUE TYPE: CONSTRUCTION DOCUMENTS

ISSUE DATE: MAY, 2009

DFCM PROJECT NO: 07319520
CAD PROJECT NO: 6822.0910
CAD DWG FILE: TYPIC-01
DRAWN BY: BCB/DRS
CHK'D BY: DRS
COPYRIGHT: STATE OF UTAH

SHEET TITLE

TYPICAL SECTIONS & DETAILS

SHEET NUMBER

C400

SHEET OF