CODE ANALYSIS

APPLICABLE CODES

International Building Code	2006	National Electrical Code	2006
International Mechanical Code	2006	Uniform Code for Building Conservation	
International Plumbing Code	2006	ADA Accessibility Guildelines	ICC/ANSI 117.1 2003
International Fire Code	2006		
International Energy Conservation Code	2006		

A. Occupancy and Group: B

Change in Use: Yes ____ No ✓ Mixed Occupancy: Yes ____ No ✓
Special Use and Occupancy (e.g. High Rise, Covered Mall): ____

B. Seismic Design Category: N/A Design Wind Speed: N/A mph

C. Type of Construction (circle one):

I/A I/B II/A II/B III/A III/B IV/HT V/A (V/B)

D. Fire Resistance Rating Requirements for the Exterior Walls based on the fire separation distance (in hours):

North: N/A South: N/A East: N/A West: N/A

E. Mixed Occupancies: NO Nonseparated Uses: NO

F: Sprinklers:

Required: ____ Provided: ✓ Type of Sprinkler System: Wet Pipe

G: Number of Stories: 1 Building Height: 16'

H: Actual Area per Floor (square feet): 7,150 SQ. FT.

I: Tabular Area: 9,000

J: Area Modifications: NA

a) $A_a = A_t + \left[\frac{A_t\ I_f}{100}\right] + \left[\frac{A_t\ I_s}{100}\right]$ $\quad I_f = 100\left[\frac{F}{P} - 0.25\right]\frac{W}{30}$

If= [(587/587) - 0.25] x .973 = .73

Aa= 9,000 + [9,000 x .73] + [9,000 x 3] = 9,000 + 6570 + 27,000 = 42,570 SF

b) Sum of the Ratio Calculations for Mixed Occupancies:

$\frac{\text{Actual Area}}{\text{Allowable Area}} \leq 1$ NA

c) Total Allowable Area for:
1) One Story: 42,570
2) Two Story: $A_a(2)$____
3) Three Story: $A_a(3)$____

d) Unlimited Area Building: Yes ____ No ✓ Code Section: Table 503

K. Fire Resistance Rating Requirements for Building Elements (hours).

Element	Hours	Assembly		Hours	Assembly
Exterior Bearing Walls	0	Existing	Floors - Ceiling/Floor	0	Existing
Interior Bearing Walls	0	Existing	Roofs - Ceiling/Roof	0	Existing
Exterior Non-Bearing Walls	0	Existing	Exterior Doors and Windows	0	Existing
Structural Frame	0	Existing	Shaft Enclosures	0	Existing
Partitions - Permanent	0	Existing	Fire Walls	0	N/A
Fire Barriers	Ø	N/A	Fire Partitions	0	N/A
			Smoke Partitions	0	N/A

L. Design Occupant Load, Floor 1: 72 (Egress Level)
Design Occupant Load, Floor 2: N/A (Below Egress Level)
Design Occupant Load, Floor 3: N/A (Above Egress Level)

Floor 1: Exit Width Required: 72 x .15 = 10.80" Exit Width Provided: 96"
Floor 2: Exit Width Required: N/A Exit Width Provided: N/A
Floor 3: Exit Width Required: N/A Exit Width Provided: N/A

M. Minimum Number of Required Plumbing Facilities:

a) Water Closets - Required (m) 1.5 (f) 1.5 Provided (m) 1 (f) 1 + 1 Uni-sex
b) Lavatories - Required (m) 1 (f) 1 Provided (m) 1 (f) 1 + 1 Uni-sex
c) Bath Tubs or Showers: 0 Prov. 0
d) Drinking Fountains: 1 Prov. 1 Service Sinks: 1 Prov. 1

FOOTNOTES:

1) In case of conflict with the U.S. Department of Justice Federal Registers Parts I through V - ADA Guidelines and specific reference to the International Building Code Accessibility Chapters, the more restrictive requirement shall govern.
2) Additional Code Information shall be provided at the discretion of the Building Official for Complex Buildings. Including, but not limited to:
   a) High Rise Requirements.
   b) Atriums.
   c) Performance Based Criteria.
   d) Means or Egress Analysis.
   e) Fire Assembly Locator Sheet.
   f) Exterior and Interior Accessibility Route.
   g) Fire Stopping, Including Tested Design Number.

PROJECT TEAM

OWNER:
DFCM
Mike Ambre
Project Manager
4110 State Office Bldg.
Salt Lake City, Utah 84114
phone (801) 538-3174

USER:
UTAH STATE FAIRPARK
Andrew Carlino
phone (801)538-8472

ARCHITECT:
AXIS ARCHITECTS
Pierre O. Langue AIA
352 South Denver St, Suite 205
Salt Lake City, Utah 84112
phone (801)355-3003
fax (801)355-8578

MECHANICAL:
Spectrum Engineers
Jonathan Jensen
175 South Main Street
Salt Lake City, Utah 84111
phone (801)328-5151

ELECTRICAL:
BNA Consulting
Joshua Oakeson
635 S. State Street
Salt Lake City, Utah 84111
phone (801) 532-2196
fax(801) 532-2305

ALTERNATES

ALT. 1 - PAINT IN ROOMS - 108 (ENTERTAINMENT OFFICE), 107 (PARKING CONTROL ROOM), 106 (SETTLEMENT ROOM), AND 109 (FUTURE OFFICE). VCT TILE IN ROOMS - 108 (ENTERTAINMENT OFFICE), 107 (PARKING CONTROL ROOM), AND 106 (SETTLEMENT ROOM).

ALT. 2 - EXTERIOR ELECTRICAL EQUIPMENT AREA SCREENING

ALT. 3 - EXTERIOR ENTRY CANOPY W/ SIGNAGE

VINCINITY MAP

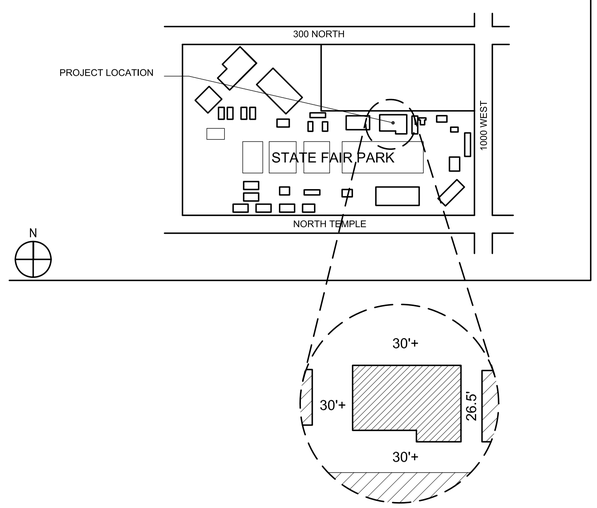

SYMBOL LEGEND

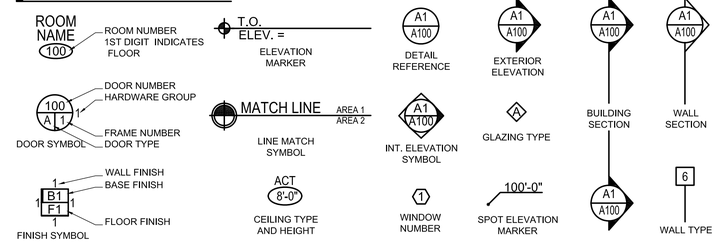

GRAPHIC SYMBOLS

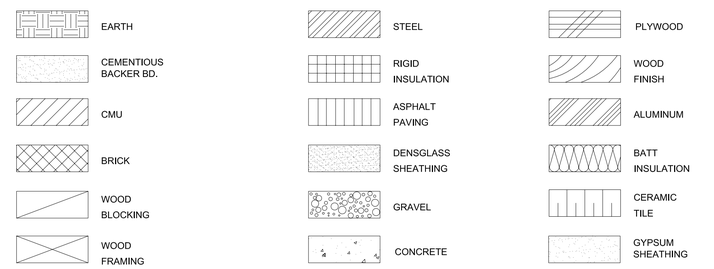

DRAWING INDEX

GENERAL
GI101 GENERAL INFORMATION

ARCHITECTURAL
AD101 DEMOLITION FLOOR PLAN
AE101 FLOOR PLAN
AE111 REFLECTED CEILING PLAN
AE401 INTERIOR ELEVATIONS

STRUCTURAL
SEE DETAIL BOOK IN PROJECT MANAUL
S-01 HEADER BEARING SCHEDULE
S-02 HEADER BEARING PLAN

MECHANICAL
ME001 MECHANICAL SYMBOLS AND GENERAL NOTES
ME501 MECHANICAL DETAILS AND SCHEDULES
MD101 MECHANICAL DEMOLITION FLOOR PLAN
MH101 MECHANICAL FLOOR PLAN
PE001 PLUMBING SYMBOLS AND GENERAL NOTES
PE501 PLUMBING DETAILS & SCHEDULES
PL101 PLUMBING FLOOR PLAN

ELECTRICAL
E001 SYMBOLS SCHEDULES AND NOTES
E101 ELECTRICAL DEMOLITION PLAN
E201 LIGHTING PLAN
E301 POWER PLAN
E501 ELECTRICAL DIAGRAMS
E502 ELECTRICAL DIAGRAMS

NOTE: THE SHEETS LISTED ABOVE REPRESENT A FULL SET OF CONSTRUCTION DOCUMENTS AND INCLUDE A DETAIL BOOK AND A PROJECT MANUAL AND SHALL NOT BE SEPERATED. ANY CONTRACTOR, SUBCONTRACTOR, VENDOR OR ANY OTHER PERSON PARTICIPATING IN OR BIDDING ON THIS PROJECT SHALL BE RESPONSIBLE FOR REVIEWING ALL THE CONSTRUCTION DOCUMENTS INCLUDING BUT NOT LIMITED TO DRAWINGS, DETAILS, PROJECT MANUAL, SPECIFICATIONS AND ANY AND ALL ADDENDA ISSUED.

FAIRPARK OFFICE REMODEL
STATE FAIR PARK
DFCM PROJECT # 07343370
155 N. 1000 West Salt Lake City, Utah 84116

CONSTRUCTION DOCUMENTS

State of Utah
Department of Administrative Services
Division of Facilities
Construction & Management
4110 State Office Building
Salt Lake City, Utah 84114
Phone: (801) 538 - 3018
Fax: (801) 538 - 3267

APPROVALS

Prime Agency ____ Date ____
DFCM ____ Date ____
APPROVAL DOES NOT RELIEVE A/E OF DESIGN LIABILITY

Axis Architects
352 S. DENVER ST. SUITE 205 – SALT LAKE CITY – UTAH 84111 – P. 355-3003 – F 355-0113

FAIRPARK OFFICE REMODEL
Fairpark Conference Center - 155 N.1000 West
Salt Lake City, Utah 84116

Revision # Date

Axis Job # 0737
Owner # DFCM # 07343370
Date 4-21-2008
Drawn -
Checked -

GENERAL INFORMATION SHEET

GI101

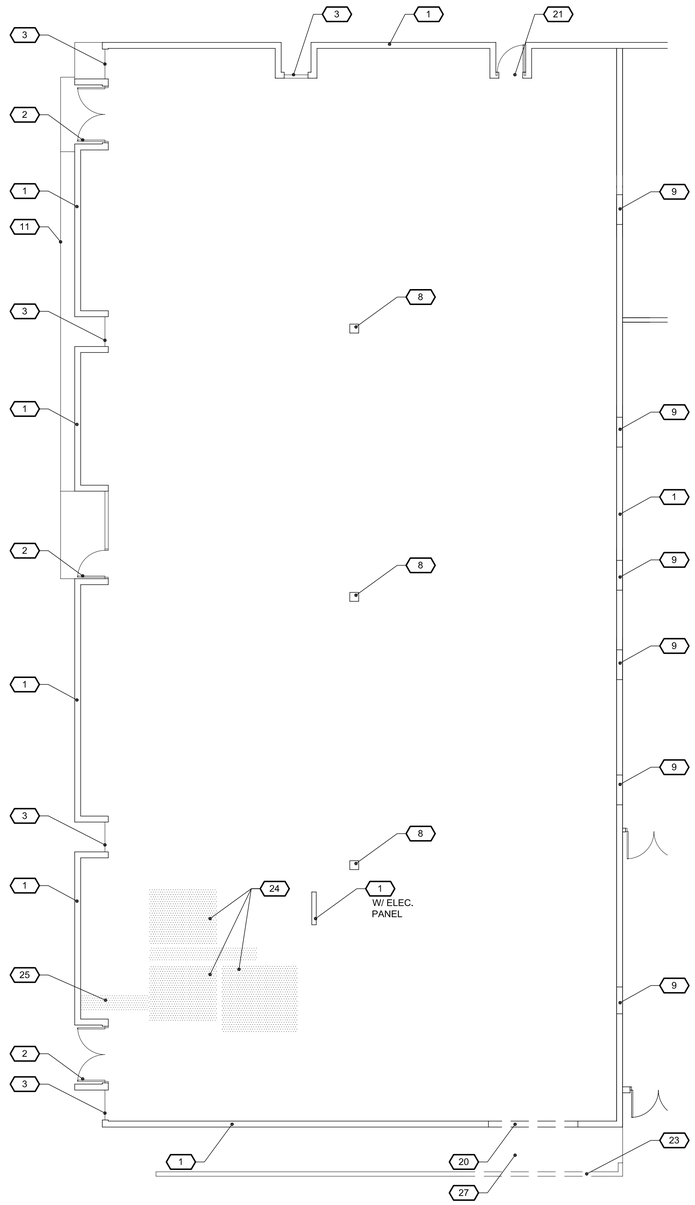

DEMOLITION KEYNOTE LEGEND

1 EXISTING WALL TO REMAIN
2 EXISTING DOOR AND FRAME TO REMAIN
3 EXISTING WINDOW TO REMAIN
4 EXISTING PARTITION TO REMAIN
5 EXISTING PLUMBING FIXTURE TO REMAIN
6 EXISTING WALL TILE TO REMAIN
7 EXISTING TO REMAIN
8 EXISTING COLUMN TO REMAIN
9 EXISTING OPENING TO BE FILLED DURING CONSTRUCTION (FIELD VERIFY LOCATION)
10 REMOVE AND SALVAGE LIGHT FIXTURES. PROTECT AND STORE UNTIL TURNED OVER TO OWNER'S REPRESENTATIVE
11 ASPHALT CURB TO BE REMOVED BY OTHERS

20 REMOVE WALL (BRACE STRUCTURE AS NEEDED)- COORD. WITH DIM. PLAN - AE101
21 REMOVE DOOR AND FRAME AND SALVAGE TO OWNER
22 DRILL FOUNDATION FOR DRAIN LINE - SEE PLUMBING
23 SAW CUT AND REMOVE CONCRETE CURB FOR NEW SLAB
24 CUT AND REMOVE CONCRETE SLAB - REMOVE UNUSED - COORD. WITH DIM. PLAN - AE101 PLUMBING TYP. AT HATCHED AREA.
25 CUT & REMOVE CONCRETE AS REQ'D FOR PLUMBING REQUIREMENTS
26 REMOVE CEILING TILE OR OTHER CEILING
27 REMOVE, CAP,AND / OR RE-DIRECT SPRINKLER LINES (SEE OWNER)

NOTES

1. COORDINATE TO ENSURE THAT EVERYTHING NECESSARY FOR THE ACCOMPLISHMENT OF NEW / FINISH WORK AS INDICATED IN THE ENTIRE CONTRACT DOCUMENTS IS ACCOMPLISHED.
2. COORDINATE ALL DEMOLITION WITH MECH., ELEC.., AND PLUMBING DRAWINGS AND SPECIFICATIONS.
3. ALL REQUIRED CONSTRUCTION WARNING SIGNS MUST BE POSTED DURING CONSTRUCTION TO IDENTIFY CONSTRUCTION ZONE.
4. CONFIRM ALL SALVAGE MATERIALS AND DEMO WITH OWNER.
5. PROTECT ALL EXISTING FINISHES FROM DAMAGE DUE TO CONTRACTOR OPERATIONS.
6. ALL DEBRIS TO BE REMOVED IN CLOSED BAGS OR SEALED CONTAINERS.
7. FILL AND COMPACT ALL DISTURBED SOIL.

KEY PLAN

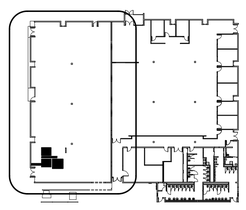

B3 DEMOLITION PLAN

SCALE: 1/8"=1'-0"

NORTH

Axis Architects
352 S. DENVER ST. SUITE 205 – SALT LAKE CITY – UTAH 84111 – P. 355-3003 – F 355-0113

FAIRPARK OFFICE REMODEL

Fairpark Conference Center - 155 N.1000 West

Salt Lake City. Utah 84116

Revision # Date

Axis Job # 0737
Owner # DFCM # 07343370
Date 4-21-2008
Drawn PL
Checked PL

DEMOLITION

FLOOR PLAN

AD101

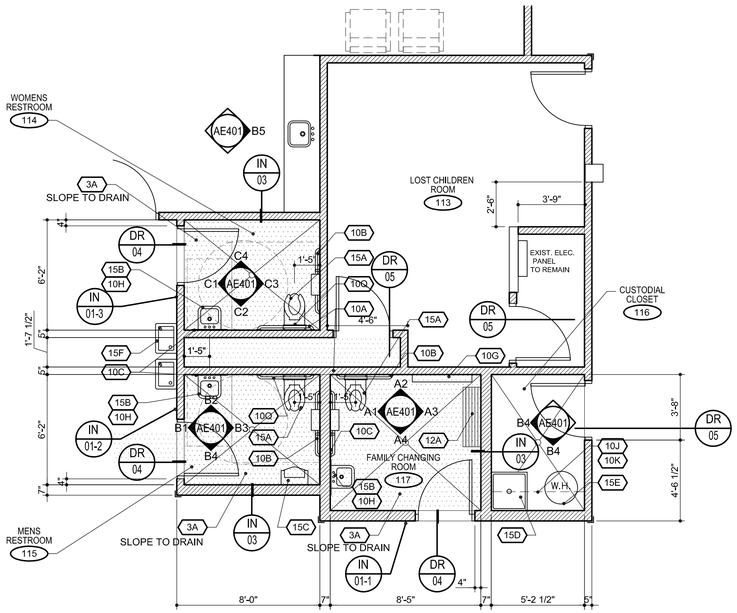

C1 ENLARGED REST ROOM PLAN

SCALE: 1/4"=1'-0"

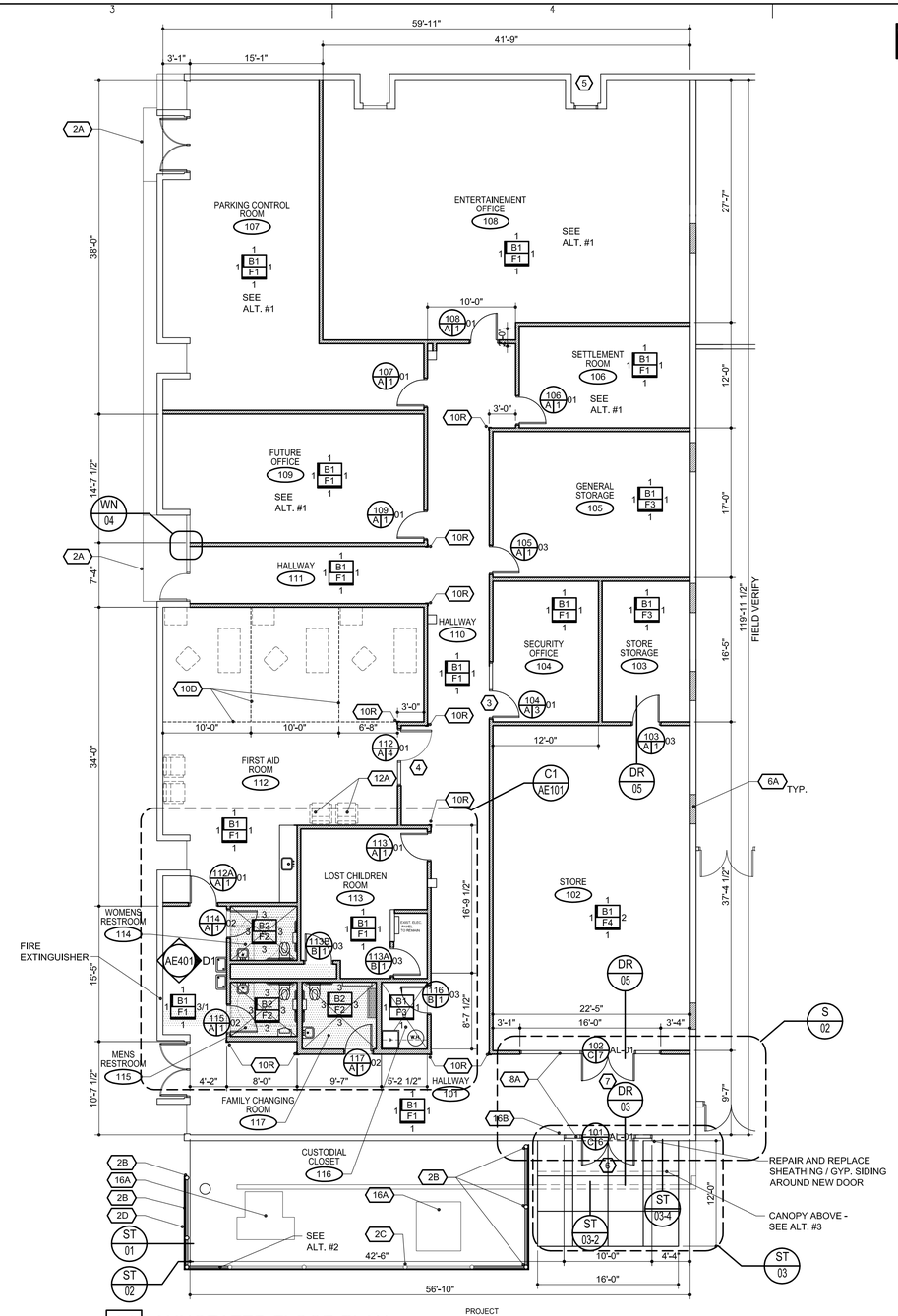

A4 ANNOTATED FLOOR PLAN

SCALE: 1/8"=1'-0"

PROJECT NORTH

KEYNOTE LEGEND

2 - SITE:

- 2A DRIVE BY OTHERS - ELEVATION TO BE FLUSH WITH LANDING OF FIRST STEP
- 2B NEW BALLARDS TO MATCH EXISTING (TO BE PAINTED) SEE ALT #2
- 2C EXISTING BOLLARD TO REMAIN (TO BE PAINTED)
- 2D NEW SCREEN WALL ATTACHED TO BALLARDS - SEE ALT #2

3 - CONCRETE:

- 3A NEW CONCRETE SLAB ON GRADE
- 3B COMPACT AND FILL SOIL BEFORE NEW SLAB
- 3C DRILL HOLE FOR NEW DRAIN LINE - SEE PLUMBING
- 3D CUT AND REMOVE CONCRETE FOR NEW SLABS
- 3E NEW 4" CONCRETE SLAB ON COMPACTED FILL - SAW-CUT CONTROL JOINTS AT 4' O.C. - SEE DETAIL BOOK ST - 03 #2

6 - WOODS AND PLASTICS:

- 6A FILL IN EXISTING DOOR OPENINGS AND SHEETROCK FLUSH WITH EXISTING WALL

8 - DOORS AND WINDOWS:

- 8A NEW DOOR AND FRAME
- 8B EXISTING DOOR AND FRAME TO REMAIN

9 - FINISHES:

- 9A 4 X 4 CERAMIC TILE
- 9B PAINTED G.W.B.

10 - SPECIALTIES:

- 10A 36" GRAB BAR
- 10B 42" GRAB BAR W/ 18" VERTICAL GRAB BAR
- 10C MIRROR
- 10D SLIDING CURTAIN
- 10E NOT USED
- 10F NOT USED
- 10G FOLDING BABY TABLE
- 10H ADA PIPE PROTECTION KIT
- 10J 12" SHELVES
- 10K MOP RACK
- 10L SOAP DISPENSER
- 10M PAPER TOWEL DISPENSER (PROVIDED BY OWNER)
- 10N TOILET PAPER DISPENSER (PROVIDED BY OWNER)
- 10P NOT USED
- 10Q PAPER TOILET SEAT COVER DISPENSER
- 10R FLOOR TO CEILING CORNER GUARDS (PAINTED TO MATCH WALL COLOR)

12- FURNITURE:

- 12A FURNITURE, NOT IN CONTRACT.

15 - MECHANICAL:

- 15A NEW ADA TOILET - TYP. - SEE MECH / PLUMBING
- 15B NEW SINK - TYP. - SEE MECH / PLUMBING
- 15C NEW URINAL - TYP. - SEE MECH / PLUMBING
- 15D NEW MOP SINK - SEE MECH / PLUMBING
- 15E NEW WATER HEATER - SEE MECH / PLUMBING
- 15F NEW WATER COOLER - MEET ADA REQUIREMENTS - SEE MECH / PLUMBING

16 - ELECTRICAL:

- 16A EXISTING ELECTRICAL EQUIPMENT TO REMAIN
- 16B ADA POWER OPERATED DOOR OPENER

FINISH LEGEND

PAINT B1 F1 ABOVE — NORTH WALL FINISH, BASE FINISH, FLOOR FINISH, SOUTH WALL FINISH

WALL: 1. PAINTED GYP. BOARD
2. PAINTED GYP. BOARD ACCENT COLOR#1
3. 4 X 4 CERAMIC TILE FULL HEIGHT

FLOOR: F1 12 X 12 VCT TILE
F2 8 X 8 PORCELAIN TILE
F3 SEALED CONCRETE
F4 STAINED CONCRETE

BASE: B1 RUBBER BASE
B2 COVED TILE BASE

1. MATERIALS IN SIMILAR LOCATIONS ARE NOT KEYNOTED AT EVERY OCCURRENCE.
2. PROVIDE CONCRETE MOISTURE SEALER ALL AREAS TO RECEIVE A FLOORING FINISH MATERIAL.

DOOR TYPES

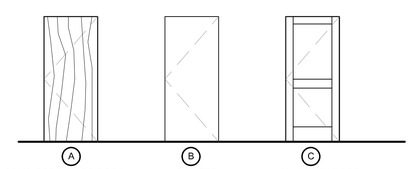

A SOLID CORE WOOD DOOR — B PAINTED STEEL DOOR — C ALUMINUM DOOR

ALL EXISTING DOORS & FRAMES TO BE PREPPED, HOLES REPAIRED, AND PAINTED
ADD NEW WEATHERSTRIP TO ALL EXISTING EXTERIOR DOORS

DOOR FRAME TYPES

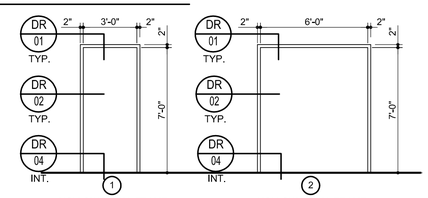

FOR WINDOW AND ALUMINUM FRAME TYPES, SEE AE401

WALL TYPES

EXISTING WALL TO REMAIN

2x4 STUD WALL EXTEND TO STRUCTURE. WALL WITH GYP. BOARD ON BOTH SIDES WITH SCHEDULED FINISH. EXTEND 6" ABOVE CEILING - NO GYP. BOARD IN CHASES

NOTE:
1. ALSO SEE NOTES ON FLOOR PLANS
2. ADD INSULATION IN OFFICE AND RESTROOM PERIMETER WALLS.

NOTES

1. CONTRACTOR TO FIELD VERIFY ALL EXISTING CONDITIONS PRIOR TO FABRICATION
2. SEE DETAILS IN-SERIES IN DETAIL BOOK
3. FILL AND COMPACT ALL DISTURBED SOIL.\
4. PATCH, REPAIR, PREP. AND PAINT ALL INTERIOR SURFACES OF EXISTING WALLS.
5. REMOVE GLUE FROM EXISTING CONCRETE FLOOR AND PATCH, PREP. AS NECESSARY FOR INSTALLATION OF NEW VCT.

KEY PLAN

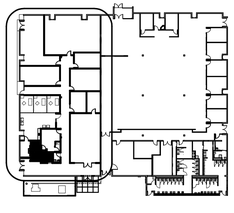

Axis Architects
352 S. DENVER ST. SUITE 205 – SALT LAKE CITY – UTAH 84111 – P. 355-3003 – F 355-0113

FAIRPARK OFFICE REMODEL

Fairpark Conference Center - 155 N.1000 West
Salt Lake City, Utah 84116

Revision #	Date
.	
.	
.	
.	

Axis Job # 0737
Owner # DFCM # 07343370
Date 4-21-2008
Drawn PL
Checked PL

ANNOTATED FLOOR PLAN

AE101

P:\2007\0737-CFC\AF-fairpark Office Remodel\CD\AE101.dwg, 4/29/2008 8:52:51 AM, AXIS Architects AXIS Architects, AXIS Architects, 1:1

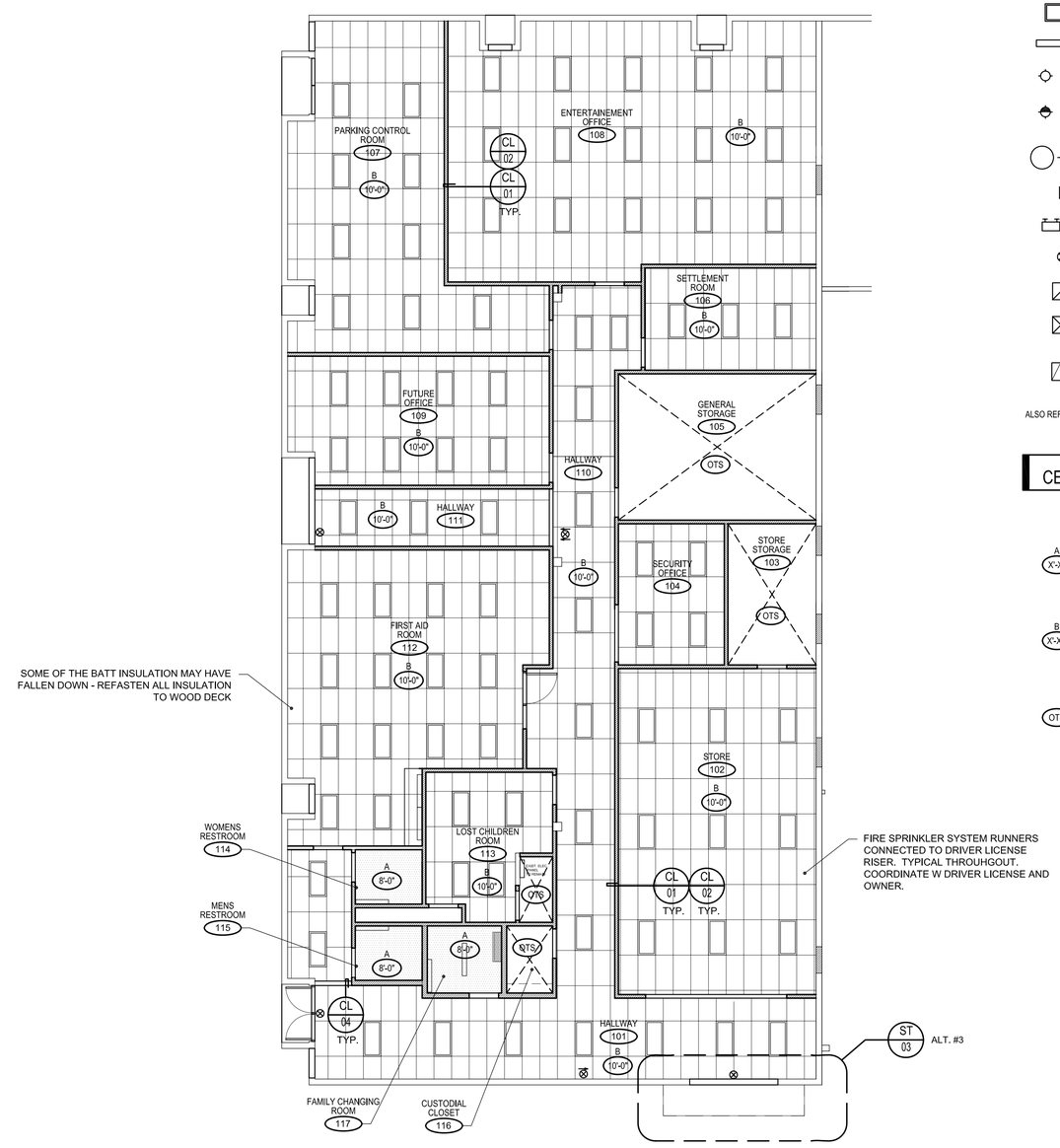

SOME OF THE BATT INSULATION MAY HAVE FALLEN DOWN - REFASTEN ALL INSULATION TO WOOD DECK

FIRE SPRINKLER SYSTEM RUNNERS CONNECTED TO DRIVER LICENSE RISER. TYPICAL THROUHGOUT. COORDINATE W DRIVER LICENSE AND OWNER.

PROJECT NORTH

B3 REFLECTED CEILING PLAN

SCALE: 1/4"=1'-0"

CEILING SYMBOL LEGEND

- 2 X 2 FLUORESCENT LIGHT FIXTURE, REFER TO ELECTRICAL DRAWINGS.
- 2 X 4 FLUORESCENT LIGHT FIXTURE, REFER TO ELECTRICAL DRAWINGS.
- 1 X 4 FLUORESCENT LIGHT FIXTURE, REFER TO ELECTRICAL DRAWINGS
- RECESSED DOWNLIGHT FIXTURE, REFER TO ELECTRICAL DRAWINGS.
- WALL-WASHED LUMINAIRE REFER TO ELECTRICAL DRAWINGS.
- PENDANT FIXTURE
- WALL SCONCE
- WALL MOUNTED FIXTURE
- EMERGENCY EXIT LIGHTING
- RETURN AIR REGISTER, REFER TO ELECTRICAL DRAWINGS.
- SUPPLY AIR DIFFUSER, REFER TO ELECTRICAL DRAWINGS.
- ACCESS PANEL-SEE MECH. FOR FINAL SIZE AND LOCATION NOTE: ADDITIONAL ACCESS PANELS MAY BE REQUIRED-COOR'D. WITH MECH. AND ELECT.

ALSO REFER TO ELECTRICAL AND MECHANICAL DRAWINGS

CEILING SCHEDULE

A — MATERIAL
8'-0" — ELEVATION ABOVE F.F.

- A X'-X" — NEW PAINTED GYP. BOARD CEILING LINE UP WITH EXISTING HEIGHT
- B X'-X" — 2' X 4' ACOUSTIC PANEL CEILING
- OTS — OPEN TO STRUCTURE - EXISTING TO REMAIN

NOTES

1. SEE DETAILS CL-SERIES IN DETAIL BOOK.
   - SEE CL-01 & CL-02 FOR TYPICAL BRACING DETAILS @ ALL SUSPENDED CEILINGS.
   - SEE CL-04 FOR TYPICAL SUSPENDED LAY-IN CEILING EDGE DETAIL.
   - SEE CL-03 FOR TYPICAL CEILING TO WALL TRANSITION @ GYPSUM BOARD CEILINGS.
2. REPAIR CEILINGS AS NEEDED FOR NEW WORK.

3. SOME OF THE BATT INSULATION MAY HAVE FALLEN DOWN - REFASTEN TO WOOD DECK - CONTRACTOR TO VERIFY QUANTITY (IN ALL SPACES)

4. FIRE SPRINKLER SYSTEM RUNNERS CONNECTED TO DRIVERS LICENSE RISER. COORDINATE W DRIVERS LICENSE AND OWNER. RECONFIGURE FIRE SPRINKLERS IN FAIRPARK OFFICE AS REQ'D.

Axis Architects
352 S. DENVER ST. SUITE 205 – SALT LAKE CITY – UTAH 84111 – P. 355-3003 – F. 355-0113

FAIRPARK OFFICE REMODEL

Fairpark Conference Center - 155 N.1000 West

Salt Lake City. Utah 84116

Revision #	Date
.	
.	
.	
.	
.	

Axis Job #	0737
Owner #	DFCM # 07343370
Date	4-21-2008
Drawn	PL
Checked	PL

REFLECTED CEILING PLAN

AE111

303. CHANGES IN LEVEL

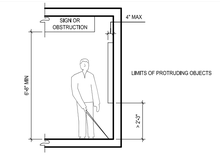

307. PROTRUDING OBJECTS

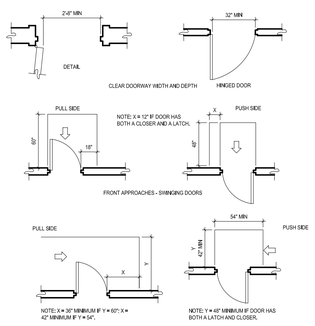

404. DOORS AND DOORWAYS

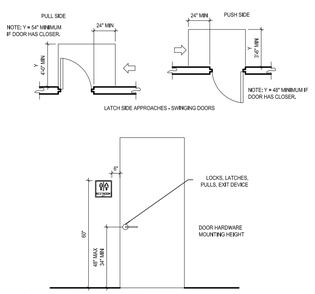

404. DOORS AND DOORWAYS

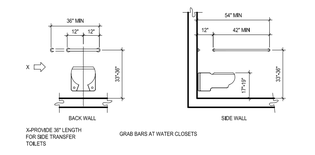

604. TOILETS AND TOILET COMPARTMENTS

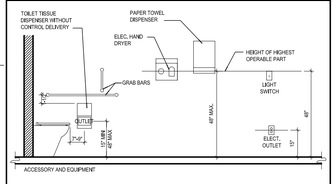

604.7 ACCESSORIES AND EQUIPMENT - MOUNTING HEIGHT

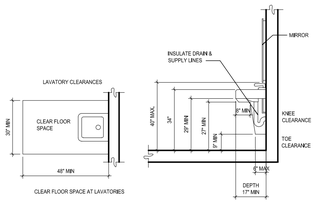

606. LAVATORIES AND SINKS

ADA REQUIREMENTS

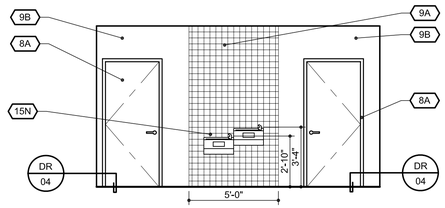

D1 WATER FOUNTAIN ELEVATION
SCALE: 1/4"=1'-0"

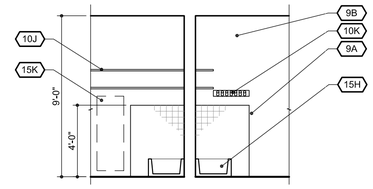

B4 JANITOR CLOSET 116 SIM.
SCALE: 1/4"=1'-0"

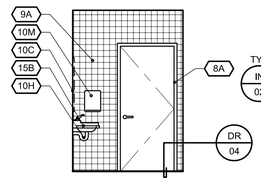

C1 WOMEN'S RESTROOM 114
SCALE: 1/4"=1'-0"

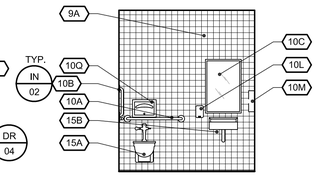

C2 WOMEN'S RESTROOM 114
SCALE: 1/4"=1'-0"

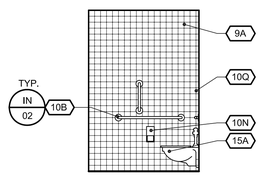

C3 WOMEN'S RESTROOM 114
SCALE: 1/4"=1'-0"

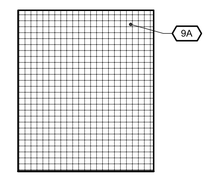

C4 WOMEN'S RESTROOM 114
SCALE: 1/4"=1'-0"

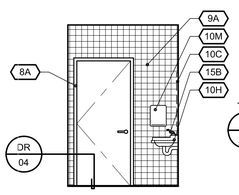

B1 MEN'S RESTROOM 115
SCALE: 1/4"=1'-0"

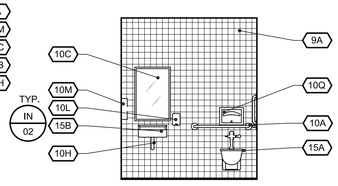

B2 MEN'S RESTROOM 115
SCALE: 1/4"=1'-0"

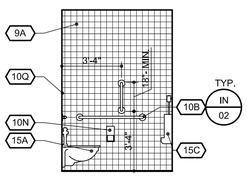

B3 MEN'S RESTROOM 115
SCALE: 1/4"=1'-0"

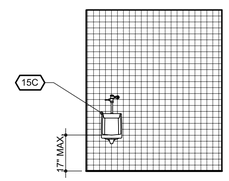

B4 MEN'S RESTROOM 115
SCALE: 1/4"=1'-0"

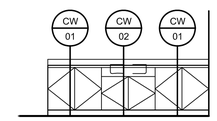

B5 FIRST AID ROOM MILLWORK
SCALE: 1/4"=1'-0"

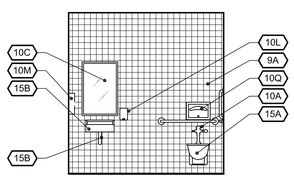

A1 FAMILY CHANGING RM. 117
SCALE: 1/4"=1'-0"

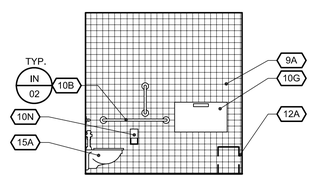

A2 FAMILY CHANGING RM. 117
SCALE: 1/4"=1'-0"

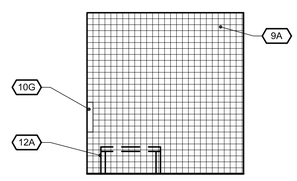

A3 FAMILY CHANGING RM. 117
SCALE: 1/4"=1'-0"

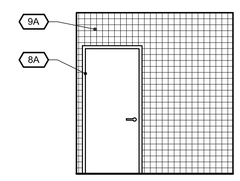

A4 FAMILY CHANGING RM. 117
SCALE: 1/4"=1'-0"

WINDOW TYPES - H. METAL

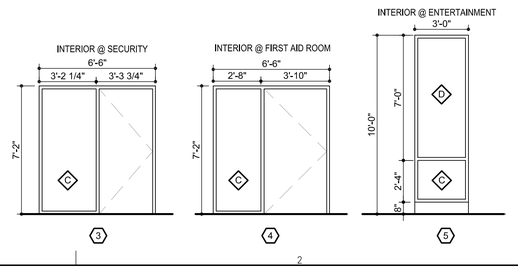

WINDOW TYPES - ALUMINUM STOREFRONT

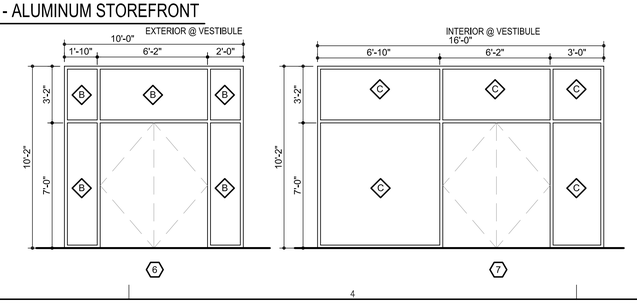

KEYNOTE LEGEND

8 - DOORS AND WINDOWS:

- 8A NEW DOOR AND FRAME

9 - FINISHES:

- 9A 4 X 4 CERAMIC TILE
- 9B PAINTED G.W.B.

10 - SPECIALTIES:

- 10A 36" GRAB BAR
- 10B 42" GRAB BAR W/ 18" VERTICAL GRAB BAR
- 10C MIRROR
- 10D NOT USED
- 10E NOT USED
- 10F NOT USED.
- 10G FOLDING BABY TABLE
- 10H ADA PIPE PROTECTION KIT
- 10J 12" SHELVES
- 10K MOP RACK
- 10L SOAP DISPENSER
- 10M PAPER TOWEL DISPENSER
- 10N TOILET PAPER DISPENSER
- 10P NOT USED
- 10Q PAPER TOILET SEAT COVER DISPENSER

12- FURNITURE:

- 12A FURNITURE, NOT IN CONTRACT.

15 - MECHANICAL:

- 15A NEW ADA TOILET - TYP. - SEE MECH / PLUMBING
- 15B NEW SINK - TYP. - SEE MECH / PLUMBING
- 15C NEW URINAL - TYP. - SEE MECH / PLUMBING
- 15D NEW MOP SINK - SEE MECH / PLUMBING
- 15E NEW WATER HEATER - SEE MECH / PLUMBING
- 15F NEW WATER COOLER MEET ADA REQUIREMENTS - SEE MECH / PLUMBING
- 15G NOT USED
- 15H NEW MOP SINK
- 15J NOT USED
- 15K WATER HEATER
- 15L NOT USED
- 15M NOT USED
- 15N NEW WATER COOLER - MEET ADA REQUIREMENTS

NOTES

1. CONTRACTOR TO FIELD VERIFY ALL EXISTING CONDITIONS PRIOR TO FABRICATION
2. SEE DETAILS IN-SERIE FOR SIGNAGE
3. MATERIALS IN SIMILAR LOCATIONS ARE NOT KEYNOTED AT EVERY OCCURRENCE.
4. ALL EXISTING DOORS & FRAMES TO BE PREPPED, HOLES REPAIRED, AND PAINTED
5. REFER TO ADA REQUIREMENTS FOR MOUNTING HEIGHTS , ETC. FOR FIXTURES - COORD. W/ MECH. AND ELECTRICAL.

GLAZING SCHEDULE

A. 1" INSULATED LOW-E GLASS
B. 1" INSULATED LOW-E TEMPERED GLASS
C. 1/4" TEMPERED GLASS
D. 1/4" FLOAT GLASS

Axis Architects
352 S. DENVER ST. SUITE 205 – SALT LAKE CITY – UTAH 84111 – P. 355-3003 – F. 355-0113

FAIRPARK OFFICE REMODEL

Fairpark Conference Center - 155 N.1000 West
Salt Lake City, Utah 84116

Revision #	Date
.	
.	
.	
.	

Axis Job #	0737
Owner #	DFCM # 07343370
Date	4-21-2008
Drawn	PL
Checked	PL

INTERIOR ELEVATIONS

AE401

SYMBOL LEGEND

SYMBOL	DESCRIPTION
REFERENCE AND LINE SYMBOLS	
# / SHEET	DETAIL INDICATOR: # INDICATES DETAIL NUMBER, SHEET INDICATES DRAWING SHEET WHERE DETAIL IS SHOWN.
# / SHEET	ELEVATION OR SECTION INDICATOR, EXTERIOR: # INDICATES ELEVATION OR SECTION NUMBER, SHEET INDICATES DRAWING SHEET WHERE ELEVATION OR SECTION IS SHOWN.
# / SHEET	ELEVATION OR SECTION INDICATOR, INTERIOR: # INDICATES ELEVATION OR SECTION NUMBER, SHEET INDICATES DRAWING SHEET WHERE ELEVATION OR SECTION IS SHOWN.
100	ROOM OR SPACE NUMBER.
1	KEYNOTE INDICATOR.
	REVISION INDICATOR.
CU-1	EQUIPMENT INDICATOR.
TYPE / CFM / SIZE	DIFFUSER/GRILLE INDICATOR.
TYPE / SIZE	DIFFUSER/GRILLE INDICATOR.
	BREAK, STRAIGHT.
	BREAK, ROUND.
MATCH LINE / SEE XX/X-XXX	MATCH LINE INDICATOR.
--------	HIDDEN FEATURES LINE: HIDDEN, THIN LINE.
—·—·—	CONTRACT LIMIT LINE: DASHDOT, WIDE LINE.
	NEW CONNECTION POINT TO EXISTING.
HVAC SYMBOLS	
T	THERMOSTAT
S	TEMPERATURE SENSOR
H	HUMIDISTAT
VFD VFC	VARIABLE FREQUENCY MOTOR CONTROLER

SYMBOL LEGEND

SYMBOL	DESCRIPTION
DUCTWORK	
SINGLE LINE / DOUBLE LINE	DESCRIPTION
	RECTANGULAR SUPPLY DUCT UP
	RECTANGULAR SUPPLY DUCT DOWN
	RECTANGULAR RETURN DUCT UP
	RECTANGULAR RETURN DUCT DOWN
	RECTANGULAR EXHAUST DUCT UP
	RECTANGULAR EXHAUST DUCT DOWN
	ROUND DUCT UP
	ROUND DUCT DOWN
	ACOUSTICALLY LINED RECTANGULAR DUCT
	90° RECTANGULAR ELBOW WITH TURNING VANES
	90° RADIUS ELBOW R=1.5
	DUCT SIZE OR SHAPE TRANSITION
	OPPOSED BLADE BALANCING DAMPER (O.B.D.) IN RECT DUCT
	BUTTERFLY BALANCING DAMPER IN ROUND DUCTS
	COMBINATION TEE
	SPLITTER DAMPER
	SQUARE OR RECTANGULAR CEILING DIFFUSER
	ROUND CEILING DIFFUSER
	SIDEWALL REGISTER SUPPLY OR RETURN
	ROUND FLEXIBLE DUCT
	RETURN GRILLE
	EXHAUST GRILLE
FSD / FSD	FIRE/SMOKE DAMPER
	FIRE DAMPER
SD / SD	SMOKE DAMPER
FC / FC	FLEXIBLE CONNECTION
	EXISTING DUCT
	DUCT TO BE REMOVED

DEFINITIONS

NOTE: ALL DEFINITIONS MAY NOT BE USED.

INDICATED: THE TERM "INDICATED" REFERS TO GRAPHIC REPRESENTATIONS, NOTES, OR SCHEDULES ON THE DRAWINGS, OTHER PARAGRAPHS OR SCHEDULES IN THE SPECIFICATIONS, AND SIMILAR REQUIREMENTS IN THE CONTRACT DOCUMENTS. WHERE TERMS SUCH AS "SHOWN", "NOTED", "SCHEDULED", AND "SPECIFIED" ARE USED, IT IS TO HELP THE READER LOCATE THE REFERENCE, NO LIMITATION ON LOCATION IS INTENDED.

DIRECTED: TERMS SUCH AS "DIRECTED", "REQUESTED", AUTHORIZED", "SELECTED", "APPROVED", "REQUIRED", AND "PERMITTED" MEAN "DIRECTED BY THE ENGINEER", "REQUESTED BY THE ENGINEER", AND SIMILAR PHRASES.

APPROVE: THE TERM "APPROVED", WHERE USED IN CONJUNCTION WITH THE ENGINEER'S ACTION ON THE CONTRACTOR'S SUBMITTALS, APPLICATIONS, AND REQUESTS, IS LIMITED TO THE ENGINEER'S DUTIES AND RESPONSIBILITIES AS STATED IN GENERAL AND SUPPLEMENTARY CONDITIONS.

FURNISH: THE TERM "FURNISH" IS USED TO MEAN "SUPPLY AND DELIVER TO THE PROJECT SITE, READY FOR UNLOADING, UNPACKING, ASSEMBLY, INSTALLATION, AND SIMILAR OPERATIONS."

INSTALL: THE TERM "INSTALL" IS USED TO DESCRIBE OPERATIONS AT PROJECT SITE INCLUDING THE ACTUAL "UNLOADING, UNPACKING, ASSEMBLY, ERECTION, PLACING, ANCHORING, APPLYING, WORKING TO DIMENSION, FINISHING, CURING, PROTECTING, CLEANING, AND SIMILAR OPERATIONS TO MAKE THE ITEM FULLY OPERATIONAL."

PROVIDE: THE TERM "PROVIDE" MEANS "TO FURNISH AND INSTALL, COMPLETE AND READY FOR THE INTENDED USE."

INSTALLER: AN "INSTALLER" IS THE CONTRACTOR OR AN ENTITY ENGAGED BY THE CONTRACTOR, EITHER AS AN EMPLOYEE, SUBCONTRACTOR, OR SUB-SUBCONTRACTOR, FOR PERFORMANCE OF A PARTICULAR CONSTRUCTION ACTIVITY, INCLUDING INSTALLATION, ERECTION, APPLICATION, AND SIMILAR OPERATIONS. INSTALLERS ARE REQUIRED TO BE EXPERIENCED IN THE OPERATIONS THEY ARE ENGAGED TO PERFORM.

ABBREVIATIONS

NOTE: ALL ABBREVIATIONS MAY NOT BE USED

AD	ACCESS DOOR	MCA	MINIMUM CIRCUIT AMPS
AIR	AIR CONDITION(-ING,-ED)	MFR	MANUFACTURER
COND		MIN	MINIMUM
APD	AIR PRESSURE DROP	N/A	NOT APPLICABLE
BD	BALANCING DAMPER	NC	NORMALLY CLOSED
BHP	BRAKE HORSE POWER	NC	NOISE CRITERIA
BTU	BRITISH THERMAL UNIT	NIC	NOT IN CONTRACT
BTUH	BTU/HOUR	NO	NORMALLY OPEN
CFH	CUBIC FEET PER HOUR	NPSH	NET POSITIVE SUCTION HEAD
CFM	CUBIC FEET PER MINUTE		
CLG	COOLING	NTS	NOT TO SCALE
COMP	COMPONENT	OA	OUTSIDE AIR
COND	CONDENS(-ER, -ING, -ATION)	OD	OUTSIDE DIAMETER
		OZ	OUNCE
CV	CONTROL VALVE	PD	PRESSURE DROP OR DIFFERENCE
CW	COLD WATER		
DIA	DIAMETER	PG	PROPYLENE GLYCOL
DISCH	DISCHARGE	PH	PHASE
DP	DEPTH OR DEEP	PPM	PARTS PER MILLION
DB	DRY BULB TEMPERATURE	PRESS	PRESSURE
(E)	EXISTING	PSF	POUNDS PER SQUARE FOOT
EER	ENERGY EFFICIENCY RATIO		
EFF	EFFICIENCY	PSI	POUNDS PER SQUARE INCH
EG	ETHYLENE GLYCOL		
ELEC	ELECTRIC	PSIA	PSI ABSOLUTE
ELEV	ELEVATION	PSIG	PSI GAUGE
ENT	ENTERING	R	THERMAL RESISTANCE
EVAP	EVAPORAT(-E, -ING, -ED, -OR)	RA	RETURN AIR
		RECIRC	RECIRCULATE
EWT	ENTERING WATER TEMPERATURE	REFR	REFRIGERATION
		REQD	REQUIRED
EXT	EXTERNAL	RLA	RATED --- AMPS
(F)	FUTURE	RPM	REVOLUTIONS PER MINUTE
F	FAHRENHEIT	RW	RAINWATER
FC	FLEXIBLE CONNECT(-OR, -ION)	SA	SUPPLY AIR
		SC	SHADING COEFFICIENT
FD	FIRE DAMPER	SCFM	STANDARD CUBIC FEET PER MINUTE
FLA	FULL LOAD AMPS		
FPI	FINS PER INCH	SCW	SOFT COLD WATER
FPM	FEET PER MINUTE	SF	SAFETY FACTOR
FPS	FEET PER SECOND	SH	SENSIBLE HEAT
FSD	FIRE SMOKE DAMPER	SL	SEA LEVEL
FT	FEET	SP	STATIC PRESSURE
GAL	GALLON(S)	SPECS(S)	SPECIFICATION(S)
GPH	GALLONS PER HOUR	SQ	SQUARE
GPM	GALLONS PER MINUTE	STD	STANDARD
HD	HEAD	STM	STEAM
HG	MERCURY	TEMP	TEMPERATURE
HR	HOUR	TD	TEMP. DROP OR DIFF.
HT	HEIGHT	THERM	THERMAL
HTG	HEATING	TOT	TOTAL
HP	HORSE POWER	TSTAT	THERMOSTAT
HW	HOT WATER	V	VOLT
HZ	HERTZ(FREQUENCY)	VAC	VACUUM
ID	INSIDE DIAMETER	VAV	VARIABLE AIR VOLUME
IN	INCH	VEL	VELOCITY
KW	KILOWATT	VENT	VENT, VENTILATION
LAT	LEAVING AIR TEMPERATURE	VERT	VERTICAL
		VFC/VFD	VARIABLE FREQUENCY MOTOR CONTROLLER
LBS	POUNDS		
LG	LENGTH	VOL	VOLUME
LH	LATENT HEAT	WC	WATER COLUMN
LRA	LOCKED ROTOR AMPS	WG	WATER GAUGE
LVG	LEAVING	WPD	WATER PRESSURE DROP
LWT	LEAVING WATER TEMPERATURE	WTR	WATER
		WT	WEIGHT
MAX	MAXIMUM	WB	WET BULB TEMP
MBH	THOUSAND BTU PER HOUR	YR	YEAR

GENERAL MECHANICAL NOTES (CONT.)

25. PROVIDE CEILING ACCESS PANELS AS REQUIRED WHERE MECHANICAL EQUIPMENT, VALVES, VAV BOXES, FIRE DAMPERS, ETC. ARE LOCATED ABOVE INACCESSIBLE CEILINGS.

26. ENCLOSE ALL DUCT AND FLUE PENETRATIONS THROUGH 1 HOUR ROOF ASSEMBLIES WITH 2 SHEET ROCK LAYERS FROM SHEET ROCK CEILING AT BOTTOM OF ROOF TRUSSES TO ROOF DECK.

27. DO NOT USE STEEL ROOF DECK TO SUPPORT LOADS FROM PIPING, DUCTWORK OR EQUIPMENT. HANGER LOADS LESS THAN 50 LBS. MAY BE HUNG FROM THE STEEL ROOF DECK IN CASES WHERE HANGING FROM THE STEEL ROOF DECK CANNOT BE AVOIDED. THE ATTACHMENT METHOD MUST DISTRIBUTE THE LOAD ACROSS THE DECK AS APPROVED BY THE STRUCTURAL ENGINEER.

28. PROPERLY LUBRICATE ALL PIECES OF EQUIPMENT BEFORE TURNING THE SYSTEM OVER TO THE OWNER.

29. PREPARE 6 COPIES OF SUBMITTALS IN AN INDEXED, LABELED FOLDER CONTAINING FULL PERFORMANCE, MATERIAL AND INSTALLATION INFORMATION ABOUT ALL EQUIPMENT, PIPING, COMPONENTS AND ACCESSORIES TO BE USED. SUBMITTALS WILL BE CHECKED AT MOST TWICE. TIME SPENT ON SUBSEQUENT SUBMITTALS WILL BE BILLED TO THE CONTRACTOR BY THE ENGINEER AT ITS CURRENT HOURLY RATES.

30. TWO OPERATING AND MAINTENANCE MANUALS SHALL BE PROVIDED IN HARD BACK LOOSE LEAF BINDERS. MANUALS SHALL CONTAIN PRODUCT CUT SHEETS AND OPERATING AND MAINTENANCE INSTRUCTIONS ON ALL EQUIPMENT, ACCESSORIES, FIXTURES, VALVES, ETC., PROVIDED FOR THE PROJECT.

31. UPON COMPLETION OF THE WORK, REMOVE ALL SURPLUS MATERIALS AND RUBBISH. MAKE ALL REQUIRED PATCHING AND REPAIRS OF OTHER TRADES' WORK DAMAGED BY THE DIVISION 15 CONTRACTOR, AND LEAVE THE PREMISES IN A CLEAN, ORDERLY CONDITION.

32. THE DIVISION 15 CONTRACTOR SHALL OPERATE THE SYSTEM AND DEMONSTRATE ALL ASPECTS TO THE ENGINEER AND/OR OWNER, TO PROVE ITS OPERATION. ALL FILTERS USED DURING CONSTRUCTION SHALL BE REPLACED PRIOR TO THE TEST RUN PERIOD.

33. THE DIVISION 15 CONTRACTOR SHALL GUARANTEE THE HVAC SYSTEM FOR A PERIOD OF ONE YEAR FROM THE DATE OF SUBSTANTIAL COMPLETION.

34. THE DIVISION 15 CONTRACTOR SHALL, DURING CONSTRUCTION, MAINTAIN A SET OF AS-BUILT REDLINED RECORD DRAWINGS AT THE PROJECT SITE. ALL CHANGES IN LAYOUT, ROUTING, EQUIPMENT, COMPONENTS, AND ACCESSORIES SHALL BE RECORDED. THESE REDLINES SHALL BE GIVEN TO THE ARCHITECT/ENGINEER AFTER THE FINAL INSPECTION

35. ALL CEILING DIFFUSERS SHOWN AS SUCH ARE CD-1, CFM AS NOTED, UNLESS OTHERWISE NOTED. REFER TO DETAIL A2/ME501. (CFM)

36. ALL CEILING EXHAUST GRILLES SHOWN AS SUCH ARE EG-1, CFM AS NOTED, UNLESS OTHERWISE NOTED. (CFM)

37. DO NOT ROUTE DUCTS AND PIPES ABOVE ELECTRICAL PANELS. ALL ELECTRICAL PANELS MUST HAVE CLEAR ACCESS SPACE IN FRONT OF PANEL 4'-0" DEEP AND 6'-6" HIGH. DO NOT ROUTE DUCTS AND PIPES IN ELECTRICAL ROOMS, EXCEPT DUCTS AND PIPES SERVING THE ROOM.

38. COORDINATE EXACT LOCATIONS OF CEILING DIFFUSERS AND GRILLES WITH ARCHITECTURAL REFLECTED CEILING PLAN.

39. ALL DUCT DIMENSIONS ARE INSIDE FREE AREA DIMENSIONS. ADJUST SHEET METAL DIMENSION FOR LINED DUCT.

40. IF CONTRACTOR ENCOUNTERS MATERIAL WHICH MAY CONTAIN ASBESTOS, IMMEDIATELY STOP WORK IN THIS AREA AND NOTIFY THE OWNER.

41. PROVIDE CEILING ACCESS PANELS AS REQUIRED WHERE MECHANICAL EQUIPMENT, VALVES, VAV BOXES, FIRE DAMPERS, ETC ARE LOCATED ABOVE INACCESSIBLE CEILINGS.

42. ALL DUCT AND FLUE PENETRATIONS THRU 1 HOUR ROOF ASSEMBLY TO BE ENCLOSED WITH 2 SHEET ROCK LAYERS FROM SHEET ROCK AT BOTTOM OF ROOF TRUSSES TO ROOF DECK.

43. STEEL ROOF DECK SHALL NOT BE USED TO SUPPORT LOADS FROM PIPING, DUCTWORK OR EQUIPMENT, UNLESS NOTED OTHERWISE. HANGER LOADS LESS THAN 50 LBS MAY BE HUNG FROM THE STEEL ROOF DECK IN CASES WHEN HANGING FROM THE STEEL ROOF DECK CANNOT BE AVOIDED. THE ATTACHMENT METHOD MUST DISTRIBUTE THE LOAD ACROSS THE DECK AS APPROVED BY THE STRUCTURAL ENGINEER.

44. THE EQUIPMENT INSTALLER IS TO APPLY AND SIGN A CERTIFICATION LABEL TO EACH GAS-FIRED APPLIANCE, STATING THE APPLIANCE HAS BEEN ADJUSTED OR MODIFIED PER MANUFACTURER'S REQUIREMENTS FOR OPERATION AT THE PROJECT ALTITUDE AND WITH THE BTU-CONTENT OF THE AVAILABLE FUEL-GAS.

MECHANICAL SHEET INDEX

SHEET NO	SHEET TITLE
ME001	MECHANICAL SYMBOLS AND GENERAL NOTES
ME501	MECHANICAL DETAILS AND SCHEDULES
MD101	MECHANICAL DEMOLITION PLAN
MH101	MECHANICAL PLAN

GENERAL MECHANICAL NOTES

1. PROVIDE ALL LABOR, MATERIALS, AND EQUIPMENT NECESSARY TO CONSTRUCT A COMPLETE, OPERATIONAL HVAC SYSTEM FOR THE ENTIRE PROJECT AS SHOWN ON THESE DRAWINGS, INCLUDING ALL NECESSARY FEES AND PERMITS.

2. THE ENTIRE INSTALLATION SHALL CONFORM TO THE REQUIREMENTS OF THE MOST RECENTLY ADOPTED BUILDING CODE, MECHANICAL CODE, PLUMBING CODE, ELECTRICAL CODE, AND ALL OTHER APPLICABLE CITY, COUNTY, SCHOOL DISTRICT, STATE, AND FEDERAL CODES AND REGULATIONS IN EFFECT AT THE DATE OF THE BID. CONFORM TO ANY CODES, RULES, REGULATIONS AND REQUIREMENTS THAT THE PROJECT OWNER HAS.

3. PRIOR TO FABRICATION AND INSTALLATION, COORDINATE THE INSTALLATION OF ALL HVAC PIPING, DUCTWORK, AND EQUIPMENT WITH PLUMBING PIPING, PLUMBING EQUIPMENT, REFRIGERATION TRENCHES AND PIPING, FIRE PROTECTION PIPING AND ALL OTHER TRADES INCLUDING BUT NOT LIMITED TO: THE MECHANICAL CONTRACTOR, REFRIGERATION CONTRACTOR, ELECTRICAL CONTRACTOR, FIRE PROTECTION CONTRACTOR, GENERAL CONTRACTOR, AND ANY CONTRACTOR HIRED DIRECTLY BY THE OWNER. WHERE CONFLICTS MAY OCCUR, THEY SHALL BE RESOLVED PRIOR TO INSTALLATION.

4. THE DRAWINGS SHOW THE GENERAL DESIGN, ARRANGEMENTS AND THE EXTENT OF THE SYSTEM. IT SHALL BE THE WORK OF THE CONTRACTOR TO MAKE SUCH SLIGHT ALTERATIONS AS MAY BE NECESSARY TO MAKE THE SYSTEM COMPLETE AND OPERATIONAL IN ACCORDANCE WITH THE DESIGN INTENT. MAJOR DEVIATIONS SUCH AS CHANGES IN COMPONENT SIZES, WEIGHTS, QUANTITIES, OR MATERIAL REQUIRE PRIOR APPROVAL BY THE CONSULTING ENGINEER.

5. ALL HVAC INFORMATION IS NOT SHOWN ON THE HVAC DRAWINGS. THE CONTRACTOR SHALL BE RESPONSIBLE FOR COORDINATING INFORMATION ON ALL OTHER CONSTRUCTION DOCUMENTS INCLUDING ARCHITECTURAL, STRUCTURAL, MECHANICAL, ELECTRICAL AND REFRIGERATION DRAWINGS.

6. THE WORKING DRAWINGS ARE DIAGRAMMATIC. BECAUSE OF THE SMALL SCALE OF THE DRAWINGS, THEY DO NOT SHOW EVERY OFFSET, BEND OR ELBOW NECESSARY FOR THE COMPLETE INSTALLATION IN THE SPACE PROVIDED. ALL LOCATIONS FOR HVAC EQUIPMENT AND PIPING SHALL BE CHECKED AND COORDINATED WITH THE ARCHITECTURAL, MECHANICAL, STRUCTURAL AND ELECTRICAL DRAWINGS.

7. SPACE ABOVE ALL CEILINGS IS LIMITED. CAREFUL COORDINATION IS REQUIRED WITH ALL TRADES BEFORE ANY PIPE, DUCT, OR EQUIPMENT IS ORDERED AND/OR INSTALLED. ANY CONFLICTS AND/OR CHANGES FOUND DURING INSTALLATION THAT RESULT FROM LACK OF COORDINATION BY THE CONTRACTORS DURING THE SHOP DRAWING PROCESS ARE THE RESPONSIBILITY OF THE CONTRACTOR.

8. 1/8" SCALE SHOP DRAWINGS (SUBMITTED FOR APPROVAL) ARE REQUIRED FOR ALL DUCTWORK AND PIPING SYSTEMS.

9. THE DRAWINGS AND SPECIFICATIONS HAVE BEEN PREPARED TO SUPPLEMENT EACH OTHER AND THEY SHALL BE INTERPRETED AS AN INTEGRAL UNIT WITH THE ITEMS SHOWN ON ONE AND NOT THE OTHER BEING FURNISHED AND INSTALLED AS THOUGH SHOWN AND CALLED OUT IN BOTH.

10. DETAILS: THE CONTRACTOR IS RESPONSIBLE TO REVIEW AND USE WHERE APPROPRIATE ALL OF THE MECHANICAL DETAILS SHOWN ON THE DRAWINGS. DETAILS MAY OR MAY NOT BE CALLED OUT ON THE DRAWINGS WITH SYMBOLS OR KEYED NOTES. ANY CHANGES RESULTING FROM FAILURE TO INSTALL THE MECHANICAL SYSTEM WITHOUT USING THE INCLUDED DETAILS IS THE RESPONSIBILITY OF THE CONTRACTOR.

11. PIPING SCHEMATICS: THE CONTRACTOR IS RESPONSIBLE TO REVIEW THE PIPING SCHEMATICS INCLUDED WITH THE DRAWINGS FOR PIPING CONNECTIONS TO ALL MECHANICAL EQUIPMENT. THE PIPING SCHEMATICS SHOW DETAILED CONNECTIONS INCLUDING NECESSARY VALVES, FITTINGS, PRESSURE AND TEMPERATURE GAUGES, ETC., THAT ARE NOT SHOWN ON THE PIPING PLANS. ANY CHANGES RESULTING FROM FAILURE TO INSTALL THE MECHANICAL SYSTEM WITHOUT USING THE INCLUDED PIPING SCHEMATICS IS THE RESPONSIBILITY OF THE CONTRACTOR.

12. THE STRUCTURE SHOWN ON ALL DETAILS MAY OR MAY NOT PERTAIN TO A PORTION OR ANY PORTION OF THE BUILDING. COORDINATE MOUNTING REQUIREMENTS WITH ARCHITECTURAL AND STRUCTURAL DRAWINGS.

13. ANY PART OF THIS INSTALLATION THAT FAILS, IS UNFIT, OR BECOMES DAMAGED DURING CONSTRUCTION SHALL BE REPAIRED OR REPLACED BY THE CONTRACTOR AT NO ADDITIONAL COST TO THE OWNER.

14. COORDINATE THE RETURN OF ALL MECHANICAL EQUIPMENT REMOVED DURING DEMOLITION WITH THE OWNER'S REPRESENTATIVE.

15. ALL EQUIPMENT SHALL PROVIDE THE SCHEDULED PERFORMANCE AT THE SITE ALTITUDE.

16. EQUIPMENT MODEL NUMBERS IN SCHEDULES ARE SHOWN TO ESTABLISH THE TYPE OF PRODUCT THAT HAS TO BE USED. THE SELECTED PRODUCT MUST MEET THE SCHEDULED PERFORMANCE DATA. THIS MAY REQUIRE A DIFFERENT MODEL NUMBER TO THAT SCHEDULED.

17. ALL EQUIPMENT SHALL BE INSTALLED IN STRICT ACCORDANCE WITH THE EQUIPMENT MANUFACTURER'S RECOMMENDATIONS. PROVIDE ALL FITTINGS, TRANSITIONS, VALVES, DAMPERS, AND OTHER DEVICES AND ACCESSORIES REQUIRED FOR A COMPLETE, WORKABLE INSTALLATION.

18. THE DIVISION 15 CONTRACTOR SHALL FURNISH ALL REQUIRED MOTORS. ALL MOTOR STARTING EQUIPMENT, WHEN NOT A PART OF THE EQUIPMENT, WILL BE FURNISHED BY THE ELECTRICAL CONTRACTOR.

19. EXISTING INTERIOR PIPING, EQUIPMENT, AND DUCTWORK HAS BEEN LOCATED IN AN APPROXIMATE WAY ONLY. THE CONTRACTOR SHALL VERIFY LOCATIONS AND POINTS OF CONNECTION AND PIPE ROUTING THROUGH EXISTING CONDITIONS PRIOR TO COMMENCING WORK. THE CONTRACTOR SHALL PERFORM THE WORK IN A MANNER THAT WILL CAUSE A MINIMUM DISRUPTION TO BUILDING TENANT USE AND SHALL COORDINATE THE WORK WITH THE BUILDING OWNER'S REPRESENTATIVE.

20. THE CONTRACTOR IS RESPONSIBLE FOR HVAC EQUIPMENT CHECK-IN, SAFEKEEPING, AND DAMAGE.

21. DO NOT ROUTE DUCTS AND PIPES ABOVE ELECTRICAL PANELS. ALL ELECTRICAL PANELS MUST HAVE CLEAR ACCESS SPACE IN FRONT OF PANEL 4'-0" DEEP AND 6'-6" HIGH DO NOT ROUTE DUCT AND PIPES IN ELECTRICAL ROOMS, EXCEPT DUCTS AND PIPES SERVING THE ROOM.

22. COORDINATE EXACT LOCATIONS OF CEILING DIFFUSERS AND GRILLES WITH ARCHITECTURAL REFLECTED CEILING PLAN.

23. ALL FIRE DAMPERS SHOWN ARE 1-1/2 HOUR UNLESS OTHERWISE NOTED.

24. IF CONTRACTOR ENCOUNTERS MATERIAL WHICH MAY CONTAIN ASBESTOS, IMMEDIATELY STOP WORK IN THIS AREA AND NOTIFY THE OWNER.

Axis Architects
352 S. DENVER ST. SUITE 205 - SALT LAKE CITY - UTAH 84111 - P 355-3003 - F 355-0113

FAIRPARK OFFICE REMODEL

Fairpark Conference Center - 155 N.1000 West

Salt Lake City, Utah 84116

Revision #	Date
.	
.	
.	
.	

Axis Job #	0737
Owner #	DFCM # 07343370
Date	4-21-2008
Drawn	ARA
Checked	JTJ

MECHANICAL SYMBOLS AND GENERAL NOTES

ME001

File Name: P:\2008\20080212\1Drawings\Sheet\12ME001.dwg Last Plotted: 2008/04/22 @ 4:34 PM By: ara

ROOFTOP UNIT SCHEDULE

SYMBOL	MANUFACTURER	MODEL NO.	LOCATION	NOMINAL TONS COOLING	TOTAL CFM	MIN O.A. CFM	ESP (IN WG)	COOLING TOTAL CAPACITY (MBH)	COOLING SENSIBLE CAPACITY (MBH)	COOLING EDB (F)	COOLING EWB (F)	COOLING O.A. (F)	HEATING INPUT (MBH)	HEATING OUTPUT (1) (MBH)	ELECTRICAL VOLT	ELECTRICAL PHASE	ELECTRICAL Hz.	ELECTRICAL MCA	SIZE (IN) L	SIZE (IN) W	SIZE (IN) H	OPERATING WEIGHT (LBS)	COMMENTS
RTU–1	CARRIER	48PGDC08	WEST EXTERIOR	7.5	3000	381	1.0	81.76	64.49	78.7	63.8	97.0	226.00	154	208	3	60	47.3	102.6	63.2	52.1	1217	(2) (3) (4) (5) (6) (7)
RTU–2	CARRIER	48PGDC08	INTERIOR	7.5	3200	353	1.0	82.76	64.75	78.3	63.8	97.0	158.20	108	208	3	60	47.3	102.6	63.2	52.1	1217	(2) (3) (4) (5) (6) (7)

(1) MBH OUTPUT AT 4300 FT ELEVATION
(2) 100% OUTSIDE AIR ECONOMIZER AND 100% CENTRIFUGAL POWER EXHAUST
(3) PROVIDE WITH FACTORY STANDARD ROOF CURB
(4) PROVIDE WITH FACTORY INSTALLED FUSED DISCONNECT SWITCH
(5) PROVIDE WITH DUCT MOUNTED SMOKE DETECTORS (120V) & CONTROL RELAY FOR FAN SHUTDOWN.
(6) ROOFTOP UNIT MUST MEET ROCKY MOUNTAIN POWER FINANSWER EXPRESS REQUIREMENTS
(7) CONNECT TO EXISTING GAS SUPPLY.

EXHAUST FAN SCHEDULE

SYM	MANUFACTURER	MODEL NO.	CFM	STATIC PRESSURE IN WG.	WATTS OR H.P.	RPM	VOLTS/ PHASE/ CYCLE	AREA SERVED	CONTROL METHOD	COMMENTS
EF–1	LOREN–COOK	70 ACEB	280	0.38	0.167	1719	120/1/60	RESTROOMS	A	(1) (2)

(1) ALL CAPACITIES AT 4500 FT. ELEVATION.
(2) ROOF MOUNTED EXHAUST FAN. COMPLETE WITH PRE–FAB CURB, MOTORIZED BACKDRAFT DAMPER BIRD SCREEN, INTEGRAL THERMAL OVERLOAD PROTECTION AND SERVICE DISCONNECT.
(A) CONTROL: ATC.

GRILLES, REGISTERS AND DIFFUSERS

SYM	MANUF	MODEL	SIZE	MAX CFM	MAX NC	DESCRIPTION
CD–1	EH PRICE	SCDA	6 x 6 9 x 9 12 x 12 15 x 15 18 x 18	125 250 425 625 900	30	LOUVER FACE (4–CONE) CEILING DIFFUSERS. ADJUSTABLE AIR PATTERN, C.W./O.B.D. FRAME SHALL BE FOR SURFACE OR LAY–IN MOUNTING AS REQUIRED BY CEILING TYPE. LAY–IN FRAMES SHALL BE 24" x 24", 24" x 12" OR 12" x 12" AS REQUIRED TO FIT CEILING TILE SPACE AVAILABLE. PROVIDE ROUND NECK ADAPTER.
RG–1	EH PRICE	PDDR	10 x 10 12 x 12 14 x 14 15 x 15	350 500 680 780	20	PERFORATED FACE EXHAUST AIR UNIT, REMOVABLE FACE & CORE. FRAME SHALL BE FOR SURFACE OR LAY–IN MOUNTING AS REQUIRED BY CEILING TYPE. LAY–IN FRAMES SHALL BE 24" x 24", 24" x 12", 48" x 24" OR 12" x 12" AS REQUIRED TO FIT CEILING TILE SPACE AVAILABLE.
EG–1	EH PRICE	PDDR	10 x 10 12 x 12 14 x 14 15 x 15 48 x24	350 500 680 780 1200	20	PERFORATED FACE EXHAUST AIR UNIT, REMOVABLE FACE & CORE. FRAME SHALL BE FOR SURFACE OR LAY–IN MOUNTING AS REQUIRED BY CEILING TYPE. LAY–IN FRAMES SHALL BE 24" x 24", 24" x 12" OR 12" x 12" AS REQUIRED TO FIT CEILING TILE SPACE AVAILABLE.

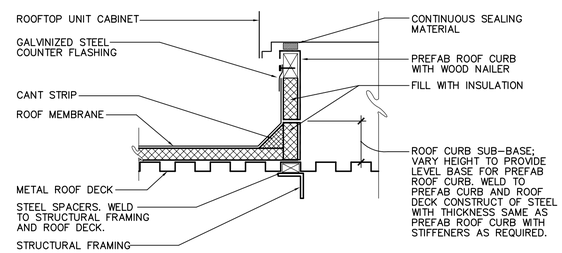

NOTE: ANCHOR ROOFTOP UNIT TO PREFAB ROOF CURB PER SEISMIC RESTRAINT REQUIREMENTS.

B2 ROOFTOP UNIT CURB DETAIL
SCALE: NOT TO SCALE

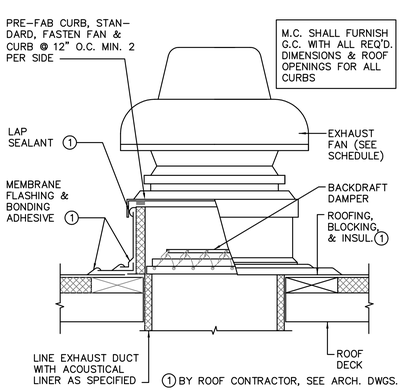

A1 ROOF FAN
NOT TO SCALE

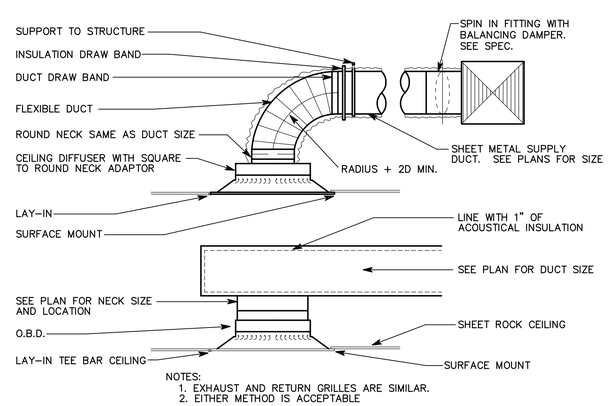

NOTES:
1. EXHAUST AND RETURN GRILLES ARE SIMILAR.
2. EITHER METHOD IS ACCEPTABLE

A2 CEILING DIFFUSER DETAIL
SCALE: NOT TO SCALE

Axis Architects
352 S. DENVER ST. SUITE 205 – SALT LAKE CITY – UTAH 84111 – P. 355–3003 – F 355–0113

FAIRPARK OFFICE REMODEL
Fairpark Conference Center - 155 N.1000 West
Salt Lake City, Utah 84116

Revision # Date

Axis Job # 0737
Owner # DFCM # 07343370
Date 4-21-2008
Drawn ARA
Checked JTJ

MECHANICAL DETAILS AND SCHEDULES

ME501

File Name: P:\2008\20080212\1Drawings\Sheet\12ME501.dwg Last Plotted: 2008/04/22 @ 4:34 PM By: ara

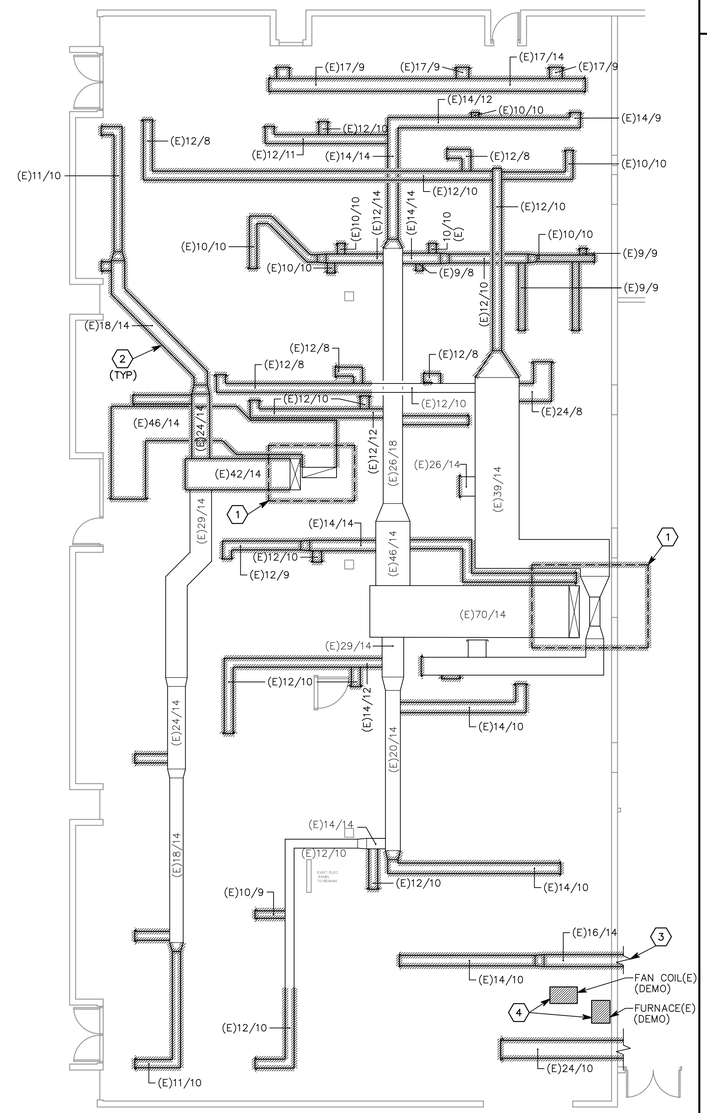

A4 MECHANICAL DEMOLITION FLOOR PLAN

SCALE: 1/8"=1'-0"

PROJECT NORTH

GENERAL SHEET NOTES

1. REMOVE ALL EXISTING DIFFUSERS AND RETURN AIR GRILLES.

SHEET KEYNOTES

1. REMOVE EXISTING ROOFTOP UNIT. LEAVE GAS LINE AND CONNECTION CAPPED FOR NEW ROOFTOP UNIT.
2. REMOVE ALL DUCT INDICATED FOR REMOVAL.
3. CAP AND SEAL DUCT.
4. REMOVE EQUIPMENT AND ASSOCIATED UTILITIES.

Axis Architects
352 S. DENVER ST. SUITE 205 – SALT LAKE CITY – UTAH 84111 – P. 355-3003 – F 355-0113

FAIRPARK OFFICE REMODEL

Fairpark Conference Center - 155 N.1000 West

Salt Lake City, Utah 84116

Revision # Date

Axis Job # 0737
Owner # DFCM # 07343370
Date 4-21-2008
Drawn ARA
Checked JTJ

MECHANICAL DEMOLITION FLOOR PLAN

MD101

File Name: P:\2008\20080212\1Drawings\Sheet\12MD101.dwg Last Plotted: 2008/04/22 @ 4:34 PM By: ara

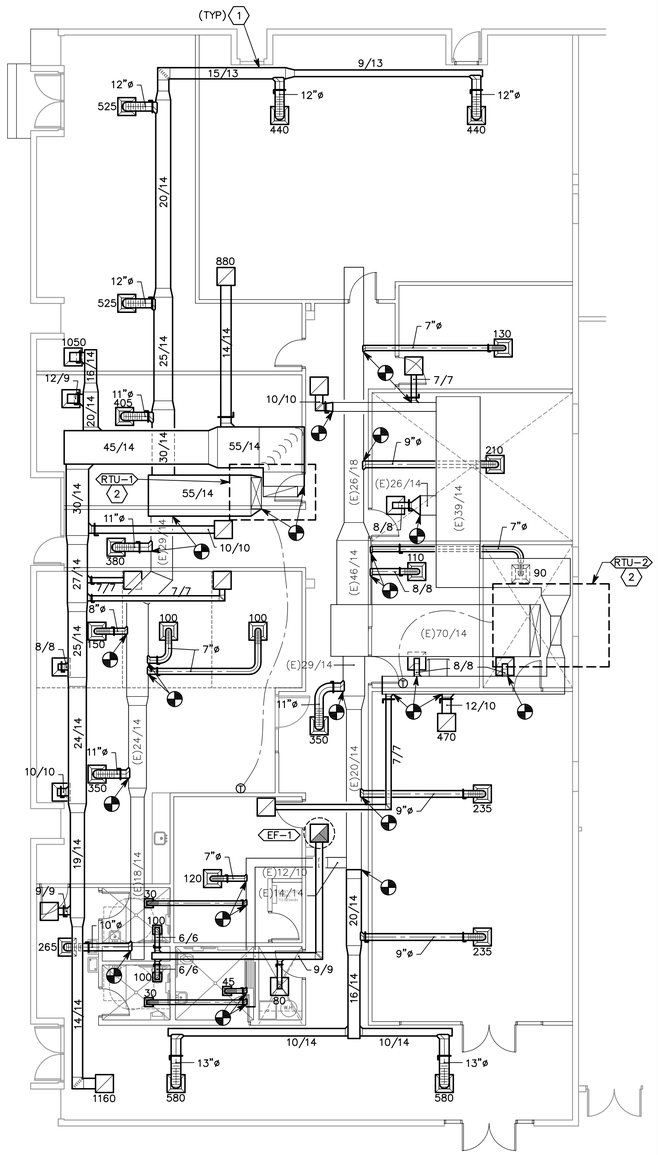

A4 MECHANICAL FLOOR PLAN

SCALE: 1/8"=1'-0"

PROJECT NORTH

SHEET KEYNOTES

1. PROVIDE NEW DUCT AS INDICATED.
2. PROVIDE NEW ROOFTOP UNITS AS INDICATED. COORDINATE NEW UNITS WITH EXISTING ROOF CURB. RUN AND RECONNECT EXISTING GAS LINE AND CONNECTION AS REQUIRED.

Axis Architects
352 S. DENVER ST. SUITE 205 – SALT LAKE CITY – UTAH 84111 – P. 355-3003 – F 355-0113

FAIRPARK OFFICE REMODEL

Fairpark Conference Center - 155 N.1000 West

Salt Lake City, Utah 84116

Revision #	Date
.	
.	
.	
.	
.	

Axis Job #	0737
Owner #	DFCM # 07343370
Date	4-21-2008
Drawn	ARA
Checked	JTJ

MECHANICAL FLOOR PLAN

MH101

File Name: P:\2008\20080212\1Drawings\Sheet\12MH101.dwg Last Plotted: 2008/04/22 @ 4:33 PM By: ara

SYMBOL LEGEND

SYMBOL	DESCRIPTION
REFERENCE AND LINE SYMBOLS	
# / SHEET	DETAIL INDICATOR: # INDICATES DETAIL NUMBER, SHEET INDICATES DRAWING SHEET WHERE DETAIL IS SHOWN.
# / SHEET	ELEVATION OR SECTION INDICATOR, EXTERIOR: # INDICATES ELEVATION OR SECTION NUMBER, SHEET INDICATES DRAWING SHEET WHERE ELEVATION OR SECTION IS SHOWN.
# / SHEET	ELEVATION OR SECTION INDICATOR, INTERIOR: # INDICATES ELEVATION OR SECTION NUMBER, SHEET INDICATES DRAWING SHEET WHERE ELEVATION OR SECTION IS SHOWN.
100	ROOM OR SPACE NUMBER.
1	KEYNOTE INDICATOR.
	REVISION INDICATOR.
CU-1	EQUIPMENT INDICATOR.
TYPE / CFM / SIZE	DIFFUSER/GRILLE INDICATOR.
TYPE / SIZE	DIFFUSER/GRILLE INDICATOR.
	BREAK, STRAIGHT.
	BREAK, ROUND.
MATCH LINE / SEE XX/X-XXX	MATCH LINE INDICATOR.
--------	HIDDEN FEATURES LINE: HIDDEN, THIN LINE.
—·—·—	CONTRACT LIMIT LINE: DASHDOT, WIDE LINE.
	NEW CONNECTION POINT TO EXISTING.
VALVES, METERS, AND GAUGES	
	SHUT OFF VALVE
	GATE VALVE
	CHECK VALVE
	AUTO 2-WAY VALVE
	AUTO 3-WAY VALVE
	GLOBE VALVE
	BALL VALVE
	RELIEF VALVE
	CHAIN OPERATED GATE VALVE
	PRESSURE REDUCING VALVE
	BUTTERFLY VALVE
	SOLENOID VALVE
	ANGLE VALVE
	VENTURI
	BALANCING OR PLUG COCK
	FLOW SETTER
	EXPANSION VALVE (REFRIG.)
	GAS COCK
MAV	MANUAL AIR VENT
	STRAINER
	GAUGE COCK
	FLEXIBLE CONNECTION
	PRESSURE GAUGE
	THERMOMETER
	REDUCER CONCENTRIC
	REDUCER ECCENTRIC
	90° ELBOW UP
	90° ELBOW DOWN
	90° TEE UP
	90° TEE DOWN
	UNION
	CAPPED PIPE
	ANCHOR

SYMBOL LEGEND

SYMBOL	DESCRIPTION
PLUMBING PIPING	
—CWV—	COMBINATION WASTE AND VENT
	SOIL, WASTE – ABOVE GRADE
	SOIL, WASTE – BELOW GRADE
—GW—	GREASE WASTE – ABOVE GRADE
—GW—	GREASE WASTE – BELOW GRADE
	VENT
—AV—	ACID VENT
—AW—	ACID WASTE – ABOVE GRADE
—AW—	ACID WASTE – BELOW GRADE
	COLD WATER
	HOT WATER
	HOT WATER CIRCULATE
—180—	180°F HOT WATER
—180R—	180° HOT WATER RETURN
—160—	160° HOT WATER
—160R—	160° HOT WATER RETURN
—RW—	RAINWATER – ABOVE GRADE
—RW—	RAINWATER – BELOW GRADE
—ORW—	OVERFLOW RAINWATER ABOVE GRADE
—ORW—	OVERFLOW RAINWATER BELOW GRADE
—SD—	STORM DRAIN
VTR	VENT THRU ROOF
	NON POTABLE WATER
(E)	EXISTING PIPE
(E)	EXISTING PIPE TO BE REMOVED
—IW—	IRRIGATION WATER
—SS—	SANITARY SEWER
—W—	WATER
—PWS—	PURE WATER SUPPLY
—PWR—	PURE WATER RETURN
—G—	GAS
—LPG—	PROPANE
—VAC—	VACUUM
—A—	COMPRESSED AIR
—MA—	MEDICAL AIR
—O—	OXYGEN
—NO—	NITROUS OXIDE
—N—	NITROGEN
—CO2—	CARBON DIOXIDE
—EVAC—	EVACUATION
PLUMBING SYMBOLS	
C.B.	CATCH BASIN
M.H.	MANHOLE
W.H.	WALL HYDRANT
H.B.	HOSE BIBB
	CLEANOUT TO GRADE
	FLOOR CLEANOUT
	WALL CLEANOUT
	1/2 GRATE
	3/4 GRATE
	FULL GRATE

DEFINITIONS

NOTE: ALL DEFINITIONS MAY NOT BE USED.

INDICATED: THE TERM "INDICATED" REFERS TO GRAPHIC REPRESENTATIONS, NOTES, OR SCHEDULES ON THE DRAWINGS, OTHER PARAGRAPHS OR SCHEDULES IN THE SPECIFICATIONS, AND SIMILAR REQUIREMENTS IN THE CONTRACT DOCUMENTS. WHERE TERMS SUCH AS "SHOWN", "NOTED", "SCHEDULED", AND "SPECIFIED" ARE USED, IT IS TO HELP THE READER LOCATE THE REFERENCE, NO LIMITATION ON LOCATION IS INTENDED.

DIRECTED: TERMS SUCH AS "DIRECTED", "REQUESTED", AUTHORIZED", "SELECTED", "APPROVED", "REQUIRED", AND "PERMITTED" MEAN "DIRECTED BY THE ENGINEER", "REQUESTED BY THE ENGINEER", AND SIMILAR PHRASES.

APPROVE: THE TERM "APPROVED", WHERE USED IN CONJUNCTION WITH THE ENGINEER'S ACTION ON THE CONTRACTOR'S SUBMITTALS, APPLICATIONS, AND REQUESTS, IS LIMITED TO THE ENGINEER'S DUTIES AND RESPONSIBILITIES AS STATED IN GENERAL AND SUPPLEMENTARY CONDITIONS.

FURNISH: THE TERM "FURNISH" IS USED TO MEAN "SUPPLY AND DELIVER TO THE PROJECT SITE, READY FOR UNLOADING, UNPACKING, ASSEMBLY, INSTALLATION, AND SIMILAR OPERATIONS."

INSTALL: THE TERM "INSTALL" IS USED TO DESCRIBE OPERATIONS AT PROJECT SITE INCLUDING THE ACTUAL "UNLOADING, UNPACKING, ASSEMBLY, ERECTION, PLACING, ANCHORING, APPLYING, WORKING TO DIMENSION, FINISHING, CURING, PROTECTING, CLEANING, AND SIMILAR OPERATIONS TO MAKE THE ITEM FULLY OPERATIONAL."

PROVIDE: THE TERM "PROVIDE" MEANS "TO FURNISH AND INSTALL, COMPLETE AND READY FOR THE INTENDED USE."

INSTALLER: AN "INSTALLER" IS THE CONTRACTOR OR AN ENTITY ENGAGED BY THE CONTRACTOR, EITHER AS AN EMPLOYEE, SUBCONTRACTOR, OR SUB-SUBCONTRACTOR, FOR PERFORMANCE OF A PARTICULAR CONSTRUCTION ACTIVITY, INCLUDING INSTALLATION, ERECTION, APPLICATION, AND SIMILAR OPERATIONS. INSTALLERS ARE REQUIRED TO BE EXPERIENCED IN THE OPERATIONS THEY ARE ENGAGED TO PERFORM.

ABBREVIATIONS

NOTE: ALL ABBREVIATIONS MAY NOT BE USED

AD	ACCESS DOOR	MCA	MINIMUM CIRCUIT AMPS
AIR	AIR CONDITION(-ING,-ED)	MFR	MANUFACTURER
COND		MIN	MINIMUM
APD	AIR PRESSURE DROP	N/A	NOT APPLICABLE
BD	BALANCING DAMPER	NC	NORMALLY CLOSED
BHP	BRAKE HORSE POWER	NC	NOISE CRITERIA
BTU	BRITISH THERMAL UNIT	NIC	NOT IN CONTRACT
BTUH	BTU/HOUR	NO	NORMALLY OPEN
CFH	CUBIC FEET PER HOUR	NPSH	NET POSITIVE SUCTION HEAD
CFM	CUBIC FEET PER MINUTE		
CLG	COOLING	NTS	NOT TO SCALE
COMP	COMPONENT	OA	OUTSIDE AIR
COND	CONDENS(-ER, -ING, -ATION)	OD	OUTSIDE DIAMETER
		OZ	OUNCE
CV	CONTROL VALVE	PD	PRESSURE DROP OR DIFFERENCE
CW	COLD WATER		
DIA	DIAMETER	PG	PROPYLENE GLYCOL
DISCH	DISCHARGE	PH	PHASE
DP	DEPTH OR DEEP	PPM	PARTS PER MILLION
DB	DRY BULB TEMPERATURE	PRESS	PRESSURE
(E)	EXISTING	PSF	POUNDS PER SQUARE FOOT
EER	ENERGY EFFICIENCY RATIO		
EFF	EFFICIENCY	PSI	POUNDS PER SQUARE INCH
EG	ETHYLENE GLYCOL		
ELEC	ELECTRIC	PSIA	PSI ABSOLUTE
ELEV	ELEVATION	PSIG	PSI GAUGE
ENT	ENTERING	R	THERMAL RESISTANCE
EVAP	EVAPORAT(-E, -ING, -ED, -OR)	RA	RETURN AIR
		RECIRC	RECIRCULATE
EWT	ENTERING WATER TEMPERATURE	REFR	REFRIGERATION
		REQD	REQUIRED
EXT	EXTERNAL	RLA	RATED --- AMPS
(F)	FUTURE	RPM	REVOLUTIONS PER MINUTE
F	FAHRENHEIT	RW	RAINWATER
FC	FLEXIBLE CONNECT(-OR, -ION)	SA	SUPPLY AIR
		SC	SHADING COEFFICIENT
FD	FIRE DAMPER	SCFM	STANDARD CUBIC FEET PER MINUTE
FLA	FULL LOAD AMPS		
FPI	FINS PER INCH	SCW	SOFT COLD WATER
FPM	FEET PER MINUTE	SF	SAFETY FACTOR
FPS	FEET PER SECOND	SH	SENSIBLE HEAT
FSD	FIRE SMOKE DAMPER	SL	SEA LEVEL
FT	FEET	SP	STATIC PRESSURE
GAL	GALLON(S)	SPECS(S)	SPECIFICATION(S)
GPH	GALLONS PER HOUR	SQ	SQUARE
GPM	GALLONS PER MINUTE	STD	STANDARD
HD	HEAD	STM	STEAM
HG	MERCURY	TEMP	TEMPERATURE
HR	HOUR	TD	TEMP. DROP OR DIFF.
HT	HEIGHT	THERM	THERMAL
HTG	HEATING	TOT	TOTAL
HP	HORSE POWER	TSTAT	THERMOSTAT
HW	HOT WATER	V	VOLT
HZ	HERTZ(FREQUENCY)	VAC	VACUUM
ID	INSIDE DIAMETER	VAV	VARIABLE AIR VOLUME
IN	INCH	VEL	VELOCITY
KW	KILOWATT	VENT	VENT, VENTILATION
LAT	LEAVING AIR TEMPERATURE	VERT	VERTICAL
		VFC/VFD	VARIABLE FREQUENCY MOTOR CONTROLLER
LBS	POUNDS		
LG	LENGTH	VOL	VOLUME
LH	LATENT HEAT	WC	WATER COLUMN
LRA	LOCKED ROTOR AMPS	WG	WATER GAUGE
LVG	LEAVING	WPD	WATER PRESSURE DROP
LWT	LEAVING WATER TEMPERATURE	WTR	WATER
		WT	WEIGHT
MAX	MAXIMUM	WB	WET BULB TEMP
MBH	THOUSAND BTU PER HOUR	YR	YEAR

GENERAL PLUMBING NOTES (CONT)

26. LOCATE ALL PLUMBING VENTS AT LEAST 3 FEET ABOVE OR 10 FEET AWAY FROM ALL OUTSIDE AIR INTAKES INTO THE BUILDING. FOR HEALTHCARE APPLICATION, VENTS SHALL BE 25 FT AWAY FROM AIR INTAKES.
27. SEE "PLUMBING FIXTURE SCHEDULE" FOR FIXTURE MAKE AND TYPE, AND SIZE OF INDIVIDUAL WASTE, VENT, AND DOMESTIC WATER PIPING TO FIXTURES.
28. ALL PLUMBING EQUIPMENT SHALL BE LISTED AND LABELED BY AN APPROVED TESTING AGENCY.
29. EQUIPMENT AND INSTALLATION SHALL MEET NATIONAL SANITATION FOUNDATION (NSF) STANDARDS, OR EQUIVALENT.
30. PROVIDE PROPER PROVISIONS FOR EXPANSION OR MOVEMENT OF ALL PIPING.
31. ALL PIPE SHALL BE SECURED BY DOUBLE NUTTING AT THE HANGER ROD ATTACHMENT TO THE STRUCTURE, AND AT THE PIPE HANGER.
32. PROVIDE WATER HAMMER ARRESTORS (SHOCK ABSORBERS) AT ALL PIPE LOCATIONS WHERE VALVE CLOSURES (SUCH AS FLUSH VALVES) MAY CAUSE WATER HAMMER OR RESULT IN EXCESSIVE PIPE VIBRATION OR MOVEMENT.
33. PROPERLY LUBRICATE ALL PIECES OF EQUIPMENT BEFORE TURNING THE SYSTEM OVER TO THE OWNER.
34. PREPARE 6 COPIES OF SUBMITTALS IN AN INDEXED, LABELED FOLDER CONTAINING FULL PERFORMANCE, MATERIAL AND INSTALLATION INFORMATION ABOUT ALL EQUIPMENT, PIPING, COMPONENTS AND ACCESSORIES TO BE USED. SUBMITTALS WILL BE CHECKED AT MOST TWICE. TIME SPENT ON SUBSEQUENT SUBMITTALS WILL BE BILLED TO THE CONTRACTOR BY THE ENGINEER AT ITS CURRENT HOURLY RATES.
35. TWO OPERATING AND MAINTENANCE MANUALS SHALL BE PROVIDED IN HARD BACK LOOSE LEAF BINDERS. MANUALS SHALL CONTAIN PRODUCT CUT SHEETS AND OPERATING AND MAINTENANCE INSTRUCTIONS ON ALL EQUIPMENT, ACCESSORIES, FIXTURES, VALVES, ETC., PROVIDED FOR THE PROJECT.
36. UPON COMPLETION OF THE WORK, REMOVE ALL SURPLUS MATERIALS AND RUBBISH. MAKE ALL REQUIRED PATCHING AND REPAIRS OF OTHER TRADES' WORK DAMAGED BY THE PLUMBING CONTRACTOR, AND LEAVE THE PREMISES IN A CLEAN, ORDERLY CONDITION.
37. THE PLUMBING CONTRACTOR SHALL OPERATE THE SYSTEM AND DEMONSTRATE ALL ASPECTS TO THE ENGINEER AND/OR OWNER, TO PROVE IT'S OPERATION.
38. THE PLUMBING CONTRACTOR SHALL GUARANTEE THE PLUMBING SYSTEM FOR A PERIOD OF ONE YEAR FROM THE DATE OF SUBSTANTIAL COMPLETION.
39. THE PLUMBING CONTRACTOR SHALL, DURING CONSTRUCTION, MAINTAIN A SET OF AS-BUILT REDLINED RECORD DRAWINGS AT THE PROJECT SITE. ALL CHANGES IN LAYOUT, ROUTING, EQUIPMENT, COMPONENTS, AND ACCESSORIES SHALL BE RECORDED. THESE REDLINES SHALL BE GIVEN TO THE ARCHITECT/ENGINEER AFTER THE FINAL INSPECTION.
40. DO NOT ROUTE DUCTS AND PIPES ABOVE ELECTRICAL PANELS. ALL ELECTRICAL PANELS MUST HAVE CLEAR ACCESS SPACE IN FRONT OF PANEL 4'-0" DEEP AND 6'-6" HIGH. DO NOT ROUTE DUCTS AND PIPES IN ELECTRICAL ROOMS, EXCEPT DUCTS AND PIPES SERVING THE ROOM.
41. IF CONTRACTOR ENCOUNTERS MATERIAL WHICH MAY CONTAIN ASBESTOS, IMMEDIATELY STOP WORK IN THIS AREA AND NOTIFY THE OWNER.
42. PROVIDE CEILING ACCESS PANELS AS REQUIRED WHERE MECHANICAL EQUIPMENT, VALVES, VAV BOXES, FIRE DAMPERS, ETC ARE LOCATED ABOVE INACCESSIBLE CEILINGS.
43. ALL DUCT AND FLUE PENETRATIONS THRU 1 HOUR ROOF ASSEMBLY TO BE ENCLOSED WITH 2 SHEET ROCK LAYERS FROM SHEET ROCK AT BOTTOM OF ROOF TRUSSES TO ROOF DECK.
44. STEEL ROOF DECK SHALL NOT BE USED TO SUPPORT LOADS FROM PIPING, DUCTWORK OR EQUIPMENT, UNLESS NOTED OTHERWISE. HANGER LOADS LESS THAN 50 LBS MAY BE HUNG FROM THE STEEL ROOF DECK IN CASES WHEN HANGING FROM THE STEEL ROOF DECK CANNOT BE AVOIDED. THE ATTACHMENT METHOD MUST DISTRIBUTE THE LOAD ACROSS THE DECK AS APPROVED BY THE STRUCTURAL ENGINEER.
45. THE EQUIPMENT INSTALLER IS TO APPLY AND SIGN A CERTIFICATION LABEL TO EACH GAS-FIRED APPLIANCE, STATING THE APPLIANCE HAS BEEN ADJUSTED OR MODIFIED PER MANUFACTURER'S REQUIREMENTS FOR OPERATION AT THE PROJECT ALTITUDE AND WITH THE BTU-CONTENT OF THE AVAILABLE FUEL-GAS.

PLUMBING SHEET INDEX

SHEET NO	SHEET TITLE
PE001	PLUMBING SYMBOLS AND GENERAL NOTES
PE501	PLUMBING DETAILS AND SCHEDULES
PL101	PLUMBING PLANS

GENERAL PLUMBING NOTES

1. PROVIDE ALL LABOR, MATERIALS, AND EQUIPMENT NECESSARY TO CONSTRUCT A COMPLETE, OPERATIONAL PLUMBING SYSTEM FOR THE ENTIRE PROJECT AS SHOWN ON THESE DRAWINGS, INCLUDING ALL NECESSARY FEES AND PERMITS.
2. THE ENTIRE INSTALLATION SHALL CONFORM TO THE REQUIREMENTS OF THE MOST RECENTLY ADOPTED BUILDING CODE, MECHANICAL CODE, PLUMBING CODE, ELECTRICAL CODE, AND ALL OTHER APPLICABLE CITY, COUNTY, SCHOOL DISTRICT, STATE, AND FEDERAL CODES AND REGULATIONS IN EFFECT AT THE DATE OF THE BID. CONFORM TO ANY CODES, RULES, REGULATIONS AND REQUIREMENTS THAT THE PROJECT OWNER HAS.
3. PRIOR TO FABRICATION AND INSTALLATION, THE CONTRACTOR SHALL COORDINATE THE INSTALLATION OF ALL PLUMBING WORK WITH ALL OTHER TRADES, INCLUDING BUT NOT LIMITED TO: THE MECHANICAL CONTRACTOR, ELECTRICAL CONTRACTOR, GENERAL CONTRACTOR, AND ANY CONTRACTOR HIRED DIRECTLY BY THE OWNER. WHERE CONFLICTS MAY OCCUR, THEY SHALL BE RESOLVED PRIOR TO INSTALLATION.
4. THE DRAWINGS SHOW THE GENERAL DESIGN, ARRANGEMENTS AND THE EXTENT OF THE SYSTEM. IT SHALL BE THE WORK OF THE CONTRACTOR TO MAKE SUCH SLIGHT ALTERATIONS AS MAY BE NECESSARY TO MAKE THE SYSTEM COMPLETE AND OPERATIONAL IN ACCORDANCE WITH THE DESIGN INTENT. MAJOR DEVIATIONS SUCH AS CHANGES IN COMPONENT SIZES, WEIGHTS, QUANTITIES, OR MATERIAL REQUIRE PRIOR APPROVAL BY THE CONSULTING ENGINEER.
5. ALL PLUMBING INFORMATION IS NOT SHOWN ON THE PLUMBING DRAWINGS. THE CONTRACTOR SHALL BE RESPONSIBLE FOR COORDINATING INFORMATION ON ALL OTHER CONSTRUCTION DOCUMENTS INCLUDING ARCHITECTURAL, STRUCTURAL, MECHANICAL AND ELECTRICAL DRAWINGS.
6. THE WORKING DRAWINGS ARE DIAGRAMMATIC. BECAUSE OF THE SMALL SCALE OF THE DRAWINGS, THEY DO NOT SHOW EVERY OFFSET, BEND OR ELBOW NECESSARY FOR THE COMPLETE INSTALLATION IN THE SPACE PROVIDED. ALL LOCATIONS FOR PLUMBING EQUIPMENT AND PIPING SHALL BE CHECKED AND COORDINATED WITH THE ARCHITECTURAL, MECHANICAL, STRUCTURAL AND ELECTRICAL DRAWINGS.
7. EXACT ROUTING OF WASTE, GAS, AND WATER SERVICE IS DEPENDENT ON LOCAL SITE CONDITIONS AND MODIFICATIONS IN EQUIPMENT CONNECTIONS. EXACT LOCATION OF EQUIPMENT MAY VARY DEPENDING ON LOCAL CODE, HEALTH DEPARTMENT AND CITY REQUIREMENTS.
8. DETAILS: THE CONTRACTOR IS RESPONSIBLE TO REVIEW AND USE WHERE APPROPRIATE ALL OF THE PLUMBING DETAILS SHOWN ON THE DRAWINGS. DETAILS MAY OR MAY NOT BE CALLED OUT ON THE DRAWINGS WITH SYMBOLS OR KEYED NOTES. ANY CHANGES RESULTING FROM FAILURE TO INSTALL THE PLUMBING SYSTEM WITHOUT USING THE INCLUDED DETAILS IS THE RESPONSIBILITY OF THE CONTRACTOR.
9. PIPING SCHEMATICS: THE CONTRACTOR IS RESPONSIBLE TO REVIEW THE PIPING SCHEMATICS INCLUDED WITH THE DRAWINGS FOR PIPING CONNECTIONS TO ALL PLUMBING EQUIPMENT. THE PIPING SCHEMATICS SHOW DETAILED CONNECTIONS INCLUDING NECESSARY VALVES, FITTINGS, PRESSURE AND TEMPERATURE GAUGES, ETC., THAT ARE NOT SHOWN ON THE PIPING PLANS. ANY CHANGES RESULTING FROM FAILURE TO INSTALL THE PLUMBING SYSTEM WITHOUT USING THE INCLUDED PIPING SCHEMATICS IS THE RESPONSIBILITY OF THE CONTRACTOR.
10. THE DRAWINGS AND SPECIFICATIONS HAVE BEEN PREPARED TO SUPPLEMENT EACH OTHER AND THEY SHALL BE INTERPRETED AS AN INTEGRAL UNIT WITH THE ITEMS SHOWN ON ONE AND NOT THE OTHER BEING FURNISHED AND INSTALLED AS THOUGH SHOWN AND CALLED OUT IN BOTH.
11. THE STRUCTURE SHOWN ON ALL DETAILS MAY OR MAY NOT PERTAIN TO A PORTION OR ANY PORTION OF THE BUILDING. COORDINATE MOUNTING REQUIREMENTS WITH ARCHITECTURAL AND STRUCTURAL DRAWINGS.
12. ANY PART OF THIS INSTALLATION THAT FAILS, IS UNFIT, OR BECOMES DAMAGED DURING CONSTRUCTION SHALL BE REPAIRED OR REPLACED BY THE CONTRACTOR AT NO ADDITIONAL COST TO THE OWNER.
13. COORDINATE THE RETURN OF ALL PLUMBING ITEMS REMOVED DURING DEMOLITION, WITH THE OWNER'S REPRESENTATIVE.
14. ALL EQUIPMENT SHALL PROVIDE THE SCHEDULED PERFORMANCE AT THE SITE ALTITUDE.
15. EQUIPMENT MODEL NUMBERS IN SCHEDULES ARE SHOWN TO ESTABLISH THE TYPE OF PRODUCT THAT HAS TO BE USED. THE SELECTED PRODUCT MUST MEET THE SCHEDULED PERFORMANCE DATA. THIS MAY REQUIRE A DIFFERENT MODEL NUMBER TO THAT SCHEDULED.
16. ALL EQUIPMENT SHALL BE INSTALLED IN STRICT ACCORDANCE WITH THE EQUIPMENT MANUFACTURER'S RECOMMENDATIONS. PROVIDE ALL FITTINGS, TRANSITIONS, VALVES, AND OTHER DEVICES AND ACCESSORIES REQUIRED FOR A COMPLETE, WORKABLE INSTALLATION.
17. THE DIVISION 15 CONTRACTOR SHALL PROVIDE ALL REQUIRED MOTORS. ALL MOTOR STARTING EQUIPMENT, WHEN NOT A PART OF THE PLUMBING EQUIPMENT, WILL BE PROVIDED BY THE ELECTRICAL CONTRACTOR.
18. EXISTING INTERIOR PIPING AND EQUIPMENT HAS BEEN LOCATED IN AN APPROXIMATE WAY ONLY. THE CONTRACTOR SHALL VERIFY LOCATIONS AND POINTS OF CONNECTION AND PIPE ROUTING THROUGH EXISTING CONDITIONS PRIOR TO COMMENCING WORK.
19. THE CONTRACTOR SHALL PERFORM THE WORK IN A MANNER THAT WILL CAUSE A MINIMUM DISRUPTION TO BUILDING TENANT USE AND SHALL COORDINATE THE WORK WITH THE BUILDING OWNER'S REPRESENTATIVE.
20. THE PLUMBING CONTRACTOR IS RESPONSIBLE FOR PLUMBING EQUIPMENT CHECK-IN, SAFEKEEPING, AND DAMAGE.
21. INVERTS SHOWN ON PLUMBING DRAWINGS MAY BE REFERENCED FROM THE FINISHED FLOOR ELEVATION. COORDINATE ALL INVERTS WITH BOTH CIVIL AND ARCHITECTURAL DRAWINGS PRIOR TO INSTALLATION.
22. PROVIDE WALL CLEANOUTS IN ALL VENTS FOR COMBINATION WASTE AND VENT SYSTEMS AS REQUIRED BY LOCAL AND NATIONAL CODES.
23. ALL VENT FITTINGS FOR WASTE SYSTEMS BELOW OVERFLOWS OF FIXTURES SHALL BE DRAINAGE TYPE.
24. CONTRACTOR TO COMPLY WITH THE LATEST ADOPTED PLUMBING CODES WHEN SIZING TRAP ARMS ON COMBINATION WASTE AND VENT SYSTEMS. THE DRAWINGS INDICATE THE WASTE LINE SIZE AND THE SIZE OF THE TRAP REQUIRED.
25. PROVIDE CLEANOUTS IN ACCORDANCE WITH THE REQUIREMENTS OF APPLICABLE CODES. FLOOR CLEANOUTS SHALL BE LOCATED OUT OF TRAFFIC AREAS.

Axis Architects
352 S. DENVER ST. SUITE 205 – SALT LAKE CITY – UTAH 84111 – P 355-3003 – F 355-0113

FAIRPARK OFFICE REMODEL

Fairpark Conference Center - 155 N.1000 West

Salt Lake City, Utah 84116

Revision #	Date
.	
.	
.	
.	

Axis Job #	0737
Owner #	DFCM # 07343370
Date	4-21-2008
Drawn	ARA
Checked	JTJ

PLUMBING SYMBOLS AND GENERAL NOTES

PE001

File Name: P:\2008\20080212\1Drawings\Sheet\12PE001.dwg Last Plotted: 2008/04/22 @ 4:33 PM By: ara

PLUMBING FIXTURE SCHEDULE

FIX NO.	FIXTURE	WASTE	TRAP	VENT	HW	CW	COMMENTS
WC	WATER CLOSET	4"	–	2"	–	1"	
WC–A	ACCESSIBLE WATER CLOSET	4"	–	2"	–	1"	
UR	ACCESSIBLE URINAL	2"	–	1–1/2"	–	3/4"	
L	ACCESSIBLE LAVATORY	1–1/2"	1–1/4"	1–1/2"	1/2"	1/2"	
BS	BREAKROOM SINK	2"	1–1/2"	1–1/2"	1/2"	1/2"	
IMB	ICE MAKER BOX	–	–	–	–	1/2"	
MS	MOP SINK	3"	1–1/2"	1–1/2"	1/2"	3/4"	
EWC	WATER COOLER	1–1/2"	1–1/4"	1–1/2"	–	1/2"	
D	FLOOR DRAIN	2"	1–1/2"	1–1/2"	–	–	

DOMESTIC HOT WATER EXPANSION TANK

SYMBOL	MANUFACTURER	MODEL NO.	MINIMUM ACCEPTANCE FACTOR	GALLONS TOTAL VOLUME	INITIAL FILL PRESSURE	COMMENTS
DET	AMTROL	ST–5	0.45	2	45 PSIG	

ELECTRIC DOMESTIC HOT WATER HEATER

SYMBOL	MANUFACTURER	MODEL NO.	TANK CAPACITY GALLONS	INPUT KW	VOLTS/ PHASE/ CYCLE	RECOVERY RATE GPH	WATER TEMP IN/OUT	COMMENTS
WH	AOSMITH	DEL–20	20	4	208/3/60	20	40/120	

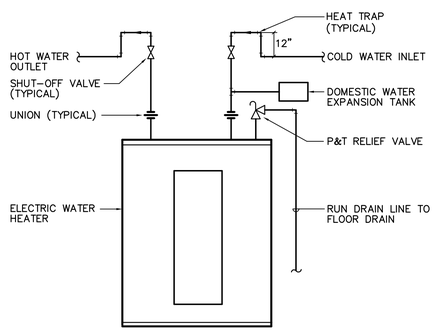

A5 WATER HEATER DETAIL
SCALE: NOT TO SCALE

Axis Architects
352 S. DENVER ST. SUITE 205 – SALT LAKE CITY – UTAH 84111 – P. 355–3003 – F 355–0113

FAIRPARK OFFICE REMODEL

Fairpark Conference Center - 155 N.1000 West

Salt Lake City, Utah 84116

Revision #	Date
.	
.	
.	
.	
.	

Axis Job # 0737
Owner # DFCM # 07343370
Date 4-21-2008
Drawn ARA
Checked JTJ

PLUMBING DETAILS AND SCHEDULES

PE501

File Name: P:\2008\20080212\1Drawings\Sheet\12PE501.dwg Last Plotted: 2008/04/22 @ 4:32 PM By: ara

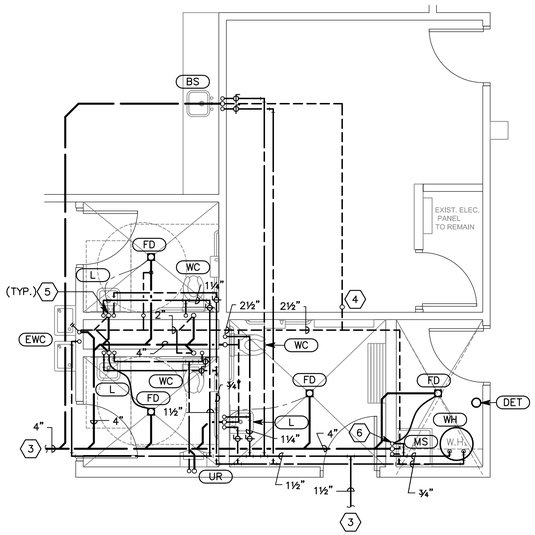

C1 ENLARGED PLUMBING PLAN

SCALE: 1/4"=1'-0"

PROJECT NORTH

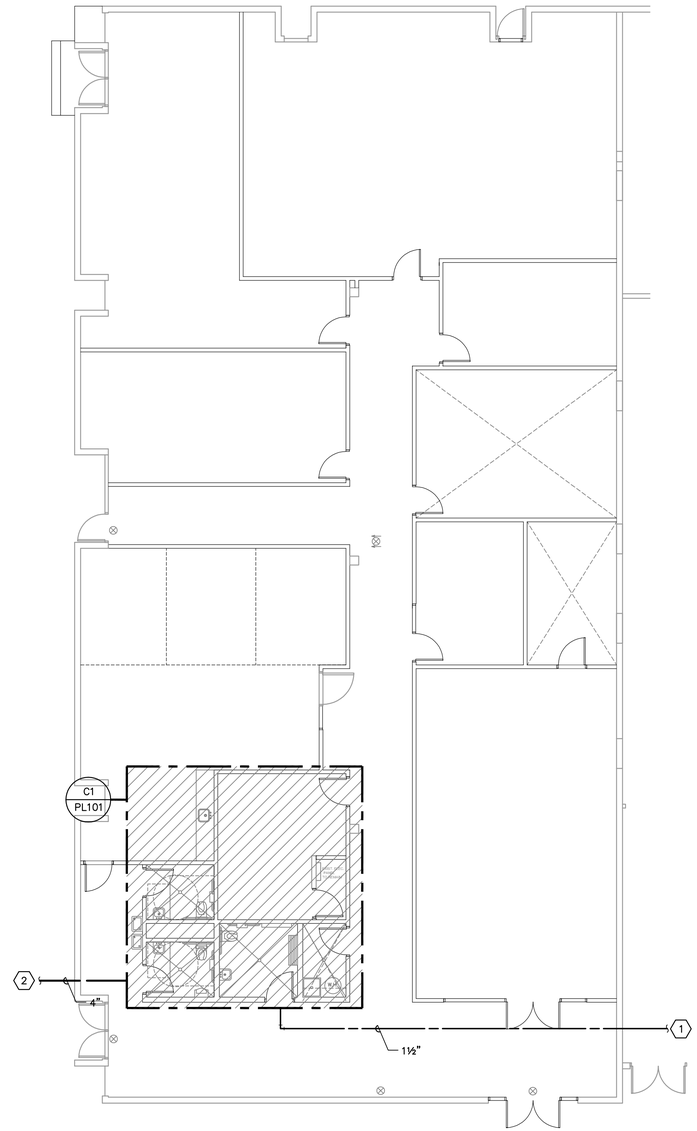

A4 PLUMBING FLOOR PLAN

SCALE: 1/8"=1'-0"

PROJECT NORTH

SHEET KEYNOTES

1. RUN AND CONNECT TO EXISTING COLD WATER.
2. RUN AND CONNECT TO LOCAL UTILITY.
3. SEE PLUMBING FLOOR PLAN FOR CONTINUATION.
4. 3" VTR.
5. PROVIDE JR SMITH FIGURE 2698 TRAP PRIMER UNDER LAVATORY. RUN AND CONNECT TO FLOOR DRAIN.
6. PROVIDE JR SMITH FIGURE 2699 TRAP PRIMER ON COLD WATER SUPPLY. RUN AND CONNECT TO FLOOR DRAIN.

Axis Architects
352 S. DENVER ST. SUITE 205 – SALT LAKE CITY – UTAH 84111 – P. 355-3003 – F 355-0113

FAIRPARK OFFICE REMODEL

Fairpark Conference Center - 155 N.1000 West

Salt Lake City, Utah 84116

Revision # Date

Axis Job # 0737
Owner # DFCM # 07343370
Date 4-21-2008
Drawn ARA
Checked JTJ

PLUMBING FLOOR PLAN

PL101

File Name: P:\2008\20080212\1Drawings\Sheet\12PL101.dwg Last Plotted: 2008/04/22 @ 4:35 PM By: ara

CONTROL RELAY SCHEDULE

Panel Name: RA
Location: ELECTRICAL / COM ROOM
Transformer Voltage: 120V-24V
Control Circuit: A-37

PREVIOUS INSTALLATION (NIC) (relays 1–13)

Relay #	Description	Panel & Circuit	Load
1*	ENTRANCE LIGHTING	A-1	100
2*	OPEN PUBLIC AREA LIGHTING 1	A-5	1344
3*	OPEN PUBLIC AREA LIGHTING 2	A-7	1344
4*	OPEN PUBLIC AREA LIGHTING 3	A-9	960
5*	OPEN PUBLIC AREA LIGHTING 4	A-11	1344
6*	OPEN PUBLIC AREA LIGHTING 5	A-13	1152
7*	EGRESS/NIGHT LIGHT	E-3	1500
8*	CORRIDOR LIGHTING	A-10	768
9*	SPARE [20A]		
10*	SPARE [20A]		
11*	SPARE [20A]		
12*	SPARE [20A]		
13	SPACE ONLY		
14	SPACE ONLY		
15	SPACE ONLY		
16	SPACE ONLY		
17	FIRST AID ROOM	A-16	1024
18	PARKING CTRL ROOM	A-18	1440
19	ENTERTAINMENT OFFICE	A-20	864
20	FUTURE OFFICE	A-20	512
21	LOST CHILDREN ROOM	A-22	256
22	STORE	A-22	864
23	HALL	A-24	704
24	EGRESS/NIGHT LIGHT	A-24	512

* EXISTING RELAY

GENERAL NOTES

1. CONSULT ARCHITECTURAL REFLECTED CEILING PLANS FOR EXACT LOCATION OF ALL LIGHTING FIXTURES.
2. VERIFY ALL EQUIPMENT DIMENSIONS AND LOCATIONS BEFORE BEGINNING ROUGH IN. CONSULT ALL APPLICABLE CONTRACT DRAWINGS AND SHOP DRAWINGS TO INSURE NEC CODE CLEARANCES REQUIRED AROUND ALL ELECTRICAL EQUIPMENT.
3. CONTRACTOR SHALL VERIFY ALL ELECTRICAL LOADS (VOLTAGE, PHASE, CONNECTION REQUIREMENTS, ETC.) OF EQUIPMENT FURNISHED UNDER DIVISION 15 WITH APPROVED MECHANICAL SHOP DRAWINGS BEFORE BEGINNING ROUGH IN.
4. SEE SECTION 16510 OF THE SPECIFICATION REQUIRED COORDINATION MEETINGS WITH MECHANICAL AND CEILING CONTRACTORS.
5. SEE APPLICABLE SHOP DRAWINGS FOR ROUGH IN LOCATION OF ALL EQUIPMENT, WIRING DEVICES, ETC. WHERE APPLICABLE MOUNT ALL WIRING DEVICES ABOVE BACK SPLASH EXCEPT THOSE SERVING UNDER COUNTER EQUIPMENT.
6. SEE SPECIFICATION FOR ENERGY SAVING LAMP AND BALLAST REQUIREMENTS.
7. FINISHES OF ALL LIGHT FIXTURES SHALL BE AS SELECTED BY ARCHITECT.
8. THE ELECTRICAL CONTRACTOR SHALL NOTIFY AND COOPERATE WITH THE MECHANICAL CONTRACTOR SUCH THAT NO PIPING, DUCTS, OR EQUIPMENT FOREIGN TO THE OPERATION OF THE ELECTRICAL EQUIPMENT SHALL BE PERMITTED TO BE INSTALLED IN, ENTER OR PASS THRU ELECTRICAL ROOMS OR SPACES, OR ABOVE OR BELOW ELECTRICAL EQUIPMENT IN OTHER AREAS.
9. ELECTRICAL BOXES SHALL NOT BE LOCATED IN MASONRY COLUMNS IN BRICK WALLS OR IN GROUTED CELLS ADJACENT TO OPENINGS. COORDINATE LOCATION OF BOXES WITH MASONRY CONTRACTOR.
10. ALL PENETRATIONS OF FIRE RATED FLOORS, WALLS, AND CEILINGS SHALL BE SEALED WITH APPROVED MATERIAL TO MAINTAIN FIRE RATING OF SURFACE PENETRATED.
11. CIRCUITS EXTENDING OVER 70' FOR 120 VOLT AND 165' FOR 277 VOLT 20 AMP CIRCUITS SHALL BE RUN WITH MINIMUM #10 CONDUCTORS.

PANELBOARD SCHEDULE

PANEL: A (EXISTING PANEL) — TYPE: NQOD — 120/208 VOLTS — 3 PH — 4 W
MOUNTING: FLUSH; X SURFACE — DIMENSIONS: 20 W; 5.75 D (in.); H
LOCATION: EXISTING ELEC/COMM ROOM — AMP: 125
MAINS: X LUGS; BREAKER; SUBFEED LUGS; ISO GROUND; 200% NEUTRAL

BRANCH BREAKERS

ITEM	AMPS	POLE	WIRE SIZE	CIR. NO.	LEFT PHASE LOAD A	B	C	RIGHT PHASE LOAD A	B	C	CIR. NO.	AMPS	POLE	WIRE SIZE	ITEM
PUBLIC AREA LIGHTING	20*	1	12	1	100			XX			2	20*	1		EXISTING EQUIPMENT
PUBLIC AREA LIGHTING	20*	1	10	3		384			XX		4	20*	1		EXISTING EQUIPMENT
PUBLIC AREA LIGHTING	20*	1	10	5			1344			XX	6	20*	1		EXISTING EQUIPMENT
PUBLIC AREA LIGHTING	20*	1	10	7	1344			640			8	20	1	10	BREAK RM/STORAGE LTG
PUBLIC AREA LIGHTING	20*	1	10	9		960			768		10	20	1	10	HALLWAY LIGHTING
PUBLIC AREA LIGHTING	20*	1	10	11			1344			500	12	20	1	12	RESTROOM LIGHTING
PUBLIC AREA LIGHTING	20*	1	10	13	1152			1280			14	20	1	10	WEST STORAGE RMS LTG
EAST OFFICE LIGHTING	20*	1	10	15		1152			1024		16	20	1	10	FIRST AID ROOM
EXISTING EQUIPMENT	20*	1		17			XX			1440	18	20	1	10	PARKING CTRL ROOM
EXISTING EQUIPMENT	20*	1		19	XX			1376			20	20	1	10	ENTER OFFICE/FUTURE
EXISTING EQUIPMENT	20*	1		21		XX			1120		22	20	1	10	STORE/LOST CHILDREN
EXISTING EQUIPMENT	20*	1		23			XX			1216	24	20	1	10	CORRIDOR LTG
EXISTING EQUIPMENT	20*	1		25	XX						26	20*	1		SPARE
EXISTING EQUIPMENT	20*	1		27		XX					28	20*	1		SPARE
EXISTING EQUIPMENT	20*	1		29			XX				30				SPACE ONLY
EXISTING EQUIPMENT	20*	1		31	XX						32				SPACE ONLY
EXISTING EQUIPMENT	20*	1		33		XX					34				SPACE ONLY
EXISTING EQUIPMENT	20*	1		35			XX				36				SPACE ONLY
RELAY PANEL 'RA' CTRL	20*	1	12	37	500						38				SPACE ONLY
ACCENT LTG	20*	1	12	39		200			XX		40	50*	2		EXISTING EQUIPMENT
SPACE ONLY				41						XX	42	-	-	-	-
					3096	2696	2688	3296	2912	3156					
					6392	5608	5844	TOTAL							
					53.27	46.73	48.70	AMPS/PHASE							

CONNECTED LOAD TOTAL: 17844 VA
EQUIP RATING: 10,000 AMPS RMS SYM.

* EXISTING EQUIPMENT

PANELBOARD SCHEDULE

PANEL: H (EXISTING PANEL) — TYPE: NQOD — 120/208 VOLTS — 3 PH — 4 W
MOUNTING: FLUSH; X SURFACE — DIMENSIONS: 20 W; 6 D (in.); H
LOCATION: CORRIDOR — AMP: 100
MAINS: X LUGS; BREAKER; SUBFEED LUGS; ISO GROUND; 200% NEUTRAL

BRANCH BREAKERS

ITEM	AMPS	POLE	WIRE SIZE	CIR. NO.	LEFT PHASE LOAD A	B	C	RIGHT PHASE LOAD A	B	C	CIR. NO.	AMPS	POLE	WIRE SIZE	ITEM
RECEPT - FIRST AID	20	1	12	1	540			720			2	20	1	12	RECEPT -PARKING CTRL
RECEPT - FIRST AID	20	1	12	3		540			720		4	20	1	12	RECEPT -PARKING CTRL
RECEPT - FIRST AID	20	1	12	5			540			540	6	20	1	12	RECEPT -PARKING CTRL
RECEPT - FIRST AID	20	1	12	7	540			360			8	20	1	12	RECEPT - ENTER OFFICE
RECEPT - LOST CHILD	20	1	12	9		900			540		10	20	1	12	RECEPT - ENTER OFFICE
SPARE	20	1		11						720	12	20	1	12	RECEPT - FUTURE OFFICE
RECEPT - RESTROOM	20	1	12	13	540			720			14	20	1	12	RECEPT - SETTLEMENT
RECEPT - RESTROOM	20	1	12	15		540			720		16	20	1	12	RECEPT - SECUR OFFICE
WATER COOLER	20	1	12	17			1500			540	18	20	1	12	RECEPT - SECUR OFFICE
WATER HEATER	30	3	10	19	2000			540			20	20	1	12	RECEPT - STORE
-	-	-	-	21		2000			360		22	20	1	12	RECEPT - STORE
-	-	-	-	23						540	24	20	1	12	RECEPT - STORE
ROOF RECEPT	20	1	12	25	360						26	20	1		EF-1, EXHAUST FAN
SPARE	20	1		27							28	20	1		SPARE
AUTODOOR MAIN ENTR.	20	1	12	29			1500				30	20	1		SPARE
					3980	3980	3540	2340	2340	2340					
					6320	6320	5880	TOTAL							
					53	53	49	AMPS/PHASE							

CONNECTED LOAD TOTAL: 18520 VA
EQUIP RATING: 10,000 AMPS RMS SYM.

* ALL 20A/1P CIRCUIT BREAKERS ARE EXISTING.

FIXTURE SCHEDULE

TYPE	DESCRIPTION	CATALOG NUMBER	VOLTS	LAMPS
B	4' STRIP FLUORESCENT WITH WIRE GUARD	METALLUX: SS 232 UNV GL ER81 WG/SS-4FT	120	(2) F32 T8 835K
G1	2X4 RECESSED ACRYLIC LENS TROFFER GRID MOUNT, 3-LAMP, ELECTRONIC BALLAST	METALLUX: 2GC8 332A125 UNV GL ER81	120	(3) F32 T8 835K
G1E	SAME AS G1 WITH BATTERY PACK	METALLUX: 2GC8 332A125 UNV GL ER81/I-320	120	(3) F32 T8 835K
G2	2X4 RECESSED ACRYLIC LENS TROFFER GRID MOUNT, 2-LAMP, ELECTRONIC BALLAST	METALLUX: 2GC8 232A125 UNV GL ER81	120	(2) F32 T8 835K
G2E	SAME AS G2 WITH BATTERY PACK	METALLUX: 2GC8 232A125 UNV GL ER81/I-320	120	(2) F32 T8 835K
W1	CEILING MOUNTED 4' LINEAR FLUORESCENT 2-LAMP, ELECTRONIC BALLAST CONTINUOUS MOUNT AS SHOWN PER DRAWINGS	FOCAL POINT: FY8S OW 2T8 1C 120 S SM TS 4 FU	120	(2) F32 T8 835K
X1	DIECAST LED EXIT LIGHT, SINGLE FACE WHITE FACE, GREEN LETTERS	COOPER: CX-71-70-G-W	120	INCLUDED
X2	DIECAST LED EXIT LIGHT, DOUBLE FACE WHITE FACE, GREEN LETTERS	COOPER: CX-72-70-G-W	120	INCLUDED

EQUIPMENT SCHEDULE

UNIT #	FUNCTION	LOAD	VOLT	PHASE	FULL LOAD AMPS	CONDUIT SIZE	WIRES: NO. SETS	NO.	SIZE	EQUIP. GND (1)	OCPD: TYPE	AMPS	REF. NOTES: STARTER	DISCONNECT	OTHER	REMARKS
EF-1	EXHAUST FAN	250 VA	120	1	2.08	3/4"	1	2	12	12	CB	15			11A	
RTU-1	ROOF TOP UNIT	47.3 MCA	208	3	37.84	3/4"	1	3	6	8	CB	80			11A	
RTU-2	ROOF TOP UNIT	47.3 MCA	208	3	37.84	3/4"	1	3	6	8	CB	80			11A	
WH-1	ELECTRIC WATER HEATER	4 KVA	208	3	11.10	3/4"	1	3	12	12	CB	20			1A	

NOTES:
1. NON-FUSED DISCONNECT SWITCH
2. FUSED DISCONNECT SWITCH
3. BREAKER IN ENCLOSURE
4. MANUAL STARTER W/THERMAL OVERLOAD
5. MAGNETIC STARTER
6. MAGNETIC STARTER/NON-FUSED DISCONNECT COMBINATION
7. MAGNETIC STARTER/FUSED DISCONNECT COMBINATION
8. MAGNETIC STARTER/BREAKER COMBINATION
9. VARIABLE FREQUENCY DRIVE
10. REDUCED VOLTAGE STARTER
11. DIRECT CONNECTION
12. RECEPTACLE/SPECIAL PURPOSE OUTLET/ETC.
13. TWO-SPEED STARTER, COORDINATE W/MOTOR TYPE

A. FURNISHED, INSTALLED, AND CONNECTED UNDER DIVISION 16
B. FURNISHED AND INSTALLED UNDER ANOTHER DIVISION REQUIRING CONNECTION UNDER DIVISION 16.
C. FURNISHED UNDER ANOTHER DIVISION BUT INSTALLED AND CONNECTED UNDER DIVISION 16.
D. FURNISHED, INSTALLED AND CONNECTED UNDER ANOTHER DIVISION.

CB = CIRCUIT BREAKER - THERMAL MAGNETIC
CKW = CHILLER KILOWATTS

NOTE 1: PER 250.122(A), EQUIPMENT GROUND IS NOT REQUIRED TO BE LARGER THAN PHASE CONDUCTOR.

ELECTRICAL SYMBOL SCHEDULE

1. SEE FIXTURE SCHEDULE FOR TYPE, MOUNTING AND WATTAGE.
2. HEIGHT MEASURED TO CENTER LINE OF THE BOX FROM THE FINISH FLOOR.
3. REFER TO DRAWINGS FOR DIRECTIONAL ARROWS.
4. SUBSCRIPT KEYS SWITCH TO FIXTURES CONTROLLED.
5. NEMA TYPE 'ND' NON-FUSED UNLESS NOTED 'F' (FUSED). USE 'HD' 480 V.
6. HEIGHT TO BE THE LOWER OF EITHER 80" A.F.F. OR 6" BELOW CEILING.
7. PROVIDE H.O.A. AND S.S. PUSHBUTTONS AS REQUIRED.
8. DOUBLE ARROWS DENOTE A DOUBLE FACE UNIT.
9. COORDINATE WITH MILLWORK SHOP DRAWINGS AND ELEVATIONS FOR HEIGHT.
10. SUBSCRIPT DENOTES NEMA CONFIGURATION.
11. HEIGHT MEASURED TO BOTTOM OF THE BOX FROM FINISH FLOOR.

* TYPICAL SYMBOL SCHEDULE. SOME SYMBOLS MAY NOT BE USED IN THIS SET OF DRAWINGS.

STANDARD MOUNTING HEIGHT UNLESS OTHERWISE NOTED ON PLANS

SYMBOL	DESCRIPTION	MOUNTING HEIGHT	NOTES
	ONE CIRCUIT, TWO WIRE HOME RUN TO PANEL		
	2 CIRCUIT, 3 WIRE, COMMON NEUTRAL HOME RUN		
	3 CIRCUIT, 4 WIRE, COMMON NEUTRAL HOME RUN		
	CONDUIT RUN CONCEALED IN WALL OR CEILING		
	CONDUIT RUN CONCEALED IN FLOOR OR GROUND		
	CONDUIT UP		
	CONDUIT DOWN		
	CONDUIT STUB LOCATION	CAP CONDUIT	
	CABLE TRAY	AS NOTED	
	CEILING LIGHT FIXTURE	CEILING	1.
	WALL LIGHT FIXTURE	AS NOTED	1.
	RECESSED DOWNLIGHT FIXTURE	CEILING	1.
	FLUORESCENT LIGHT FIXTURE	AS NOTED	1
	FLUORESCENT EGRESS LIGHT FIXTURE	AS NOTED	UNSWITCHED
	AREA LIGHT POLE AND FIXTURE	CONCRETE BASE	SEE DIAGRAM
	FLOOD OR TRACK FIXTURE	AS NOTED	
	CEILING MOUNTED EXIT LIGHT	CEILING	1.3.8.
	WALL MOUNTED EXIT LIGHT	AS NOTED	1.3.8.
$	SINGLE POLE SWITCH	+4'–0"	2.
$ᵃ	SINGLE POLE SWITCH	+4'–0"	4. 2.
$3	THREE–WAY SWITCH	+4'–0"	2.
$4	FOUR–WAY SWITCH	+4'–0"	2.
$K	KEY OPERATED SWITCH	+4'–0"	2.
$P	SWITCH WITH PILOT LIGHT	+4'–0"	2.
$D	VARIABLE INTENSITY SWITCH	+4'–0"	2.
$TM	TIMER SWITCH	+4'–0"	2.
$	MOMENTARY CONTACT SWITCH, CENTER POSITION OFF	+4'–0"	2.
	OCCUPANCY SENSOR	CEILING	
	OCCUPANCY SENSOR	+4'–0"	2.
PP	POWER PACK	CEILING	SEE DIAGRAM, SPEC.
A	AUTOMATIC RELAY PACK	CEILING	SEE DIAGRAM. SPEC.
T	LOW VOLTAGE TRANSFORMER		
	DUPLEX RECEPTACLE — UPPER OUTLET SWITCH CONTROLLED	+16" OR AS NOTED	9. 11.
	SIMPLEX RECEPTACLE	+16" OR AS NOTED	9. 11.
	DUPLEX RECEPTACLE	+16" OR AS NOTED	9. 11.
A	DUPLEX RECEPTACLE		9.
W	ELECTRIC WATER COOLER RECEPTACLE		SEE DIAGRAM
WP	WEATHERPROOF RECEPTACLE	+24" OR AS NOTED	2. 9.
IG	ISOLATED GROUND RECEPTACLE	+16" OR AS NOTED	9. 11.
	GROUND FAULT INTERRUPTER DUPLEX RECEPTACLE	+16" OR AS NOTED	9. 11.
	DUPLEX RECEPTACLE EMERGENCY POWER (RED)	+16" OR AS NOTED	9. 11.
	FOURPLEX RECEPTACLE	+16" OR AS NOTED	9. 11.
	FOURPLEX RECEPTACLE EMERGENCY POWER (RED)	+16" OR AS NOTED	9. 11.
	FLOOR OUTLET WITH 20A DEVICE	FLOOR	
	MULTIPLE SERVICE FLOOR BOX	FLOOR	
	SPECIAL PURPOSE OUTLET	+16" OR AS NOTED	10. WITH CAP. 11.
	CORD DROP		SEE DIAGRAM
	PLUGMOLD	+46" OR AS NOTED	
	TELEVISION OUTLET	+16" OR AS NOTED	11.
	DATA OUTLET	+16" OR AS NOTED	9. 11.
	TELEPHONE OUTLET	+16" OR AS NOTED	9. 11.
	TELEPHONE/DATA OUTLET	+16" OR AS NOTED	9. 11.
	TELEPHONE OUTLET	FLOOR	
	CALL SWITCH	+4'–0"	2.
C	CLOCK OUTLET	+7'–6"	8.
C	CLOCK/SPEAKER COMBINATION	+7'–6"	

STANDARD MOUNTING HEIGHT UNLESS OTHERWISE NOTED ON PLANS

SYMBOL	DESCRIPTION	MOUNTING HEIGHT	NOTES
J	JUNCTION BOX ('F' IN FLOOR)	AS NOTED	
	MOTOR OUTLET	TO SUIT EQUIP.	
P	PHOTO–ELECTRIC CONTROL	AS NOTED	TORK 2000A
TC	TIME CLOCK	+5'–0"	2.
	PUSHBUTTON	+4'–0"	2.
	NON–FUSED DISCONNECT SWITCH	+5'–0"	5.
F	FUSED DISCONNECT SWITCH	+5'–0"	5.
$T	MANUAL STARTER THERMAL OVERLOAD SWITCH WITH PILOT LIGHT	+4'–0"	2.
	MAGNETIC STARTER	+5'–0"	7.
	MAGNETIC STARTER / DISCONNECT COMBINATION	+5'–0"	
VFD	VARIABLE FREQUENCY DRIVE	+6'–6"	
	PANEL BOARD	TOP AT +6'–0"	
	MAIN DISTRIBUTION PANEL		
	TELEPHONE TERMINAL BOARD		
	BELL	+7'–6"	
	CHIME	+7'–6"	
F	FIRE ALARM MANUAL STATION	+4'–0"	2.
H	FIRE ALARM SIGNAL HORN/STROBE PROJECTORS	+6'–8"	6.
H	FIRE ALARM SIGNAL HORN/STROBE	+6'–8"	6.
E	FIRE ALARM SIGNAL SPEAKER/STROBE	+6'–8"	6.
S	SMOKE DETECTOR	CEILING	
D	DUCT SMOKE DETECTOR		MTD. IN DUCT
H	HEAT DETECTOR	CEILING	
D	FIRE/SMOKE DAMPER		
	DOOR HOLDER	AS NOTED	
FS	FLOW SWITCH		
TS	TAMPER SWITCH		
WF	WATER FLOOD INDICATOR		
	O.S. & Y. VALVE		SEE DIAGRAM
R	FIRE ALARM RELAY		
CM	FIRE ALARM CONTROL MODULE		
MM	FIRE ALARM MONITOR MODULE		
S	FIRE ALARM STROBE	+6'–8"	6.
D	DURESS PUSHBUTTON	+4'–0"	
D	SECURITY SYSTEM OVERHEAD DOOR SWITCH	CEILING	MOUNT AS PER. MAN
ML	MAGNETIC SHEAR LOCK		
A	SECURITY SYSTEM KEYED ACCESS SWITCH	+4'–0"	2.
I	INFRARED SENSOR	AS NOTED	
M	SECURITY MOTION DETECTOR		MOUNT AS PER. MAN
G	GLASS BREAK DETECTOR	CEILING	
ES	ELECTRIC DOOR STRIKE		
CR	ACCESS CONTROL CARD READER	+4'–0"	2.
	CLOSED CIRCUIT TELEVISION CAMERA	AS NOTED	
	DOOR POSITION INDICATING SWITCH		
#	SOUND SYSTEM SPEAKER	+8'–0" OR AS NOTED	
IC	INTERCOM SPEAKER	AS NOTED	
V	VOLUME CONTROL	+4'–0"	2.
M	MICROPHONE OUTLET	+16"	11.
M	MICROPHONE FLOOR OUTLET	FLOOR	
M	MICROPHONE CEILING OUTLET	CEILING	
	SOUND EQUIPMENT CABINET		CIRCUIT TO 120V
842	ARCHITECTURAL ROOM NUMBER		
A	LIGHT FIXTURE (LETTER DESIGNATES TYPE)		
EQ 34	EQUIPMENT NUMBER		

INDEX OF ELECTRICAL DRAWINGS

E0.1 SYMBOLS, SCHEDULES AND NOTES
E1.1 DEMOLITION PLAN
E2.1 LIGHTING PLAN
E3.1 POWER PLAN
E5.1 ELECTRICAL DIAGRAMS
E5.2 ELECTRICAL DIAGRAMS

Axis Architects
352 S. DENVER ST. SUITE 205 – SALT LAKE CITY – UTAH 84111 – P 355-3003 – F 355-0113

BNA CONSULTING
SALT LAKE ST. GEORGE

FAIRPARK OFFICE REMODEL

Fairpark Conference Center - 155 N.1000 West
Salt Lake City, Utah 84116

Revision # Date

Axis Job # 0737
Owner # DFCM# 07343370
BNA Job # 08096A
Date 4-21-2008
Drawn BNA
Checked GM

SYMBOLS, SCHEDULES AND NOTES

E0.1

GENERAL SHEET NOTES

1. REMOVE ALL ELECTRICAL EQUIPMENT, CONDUIT, WIRING AND ANY UNUSED ELECTRICAL DEVICES IN SHADED AREA. UNLESS OTHERWISE NOTED.
2. SOME EQUIPMENT TO BE REUSED WHERE POSSIBLE. COORDINATE ALL REMOVAL AND DISPOSAL OF EQUIPMENT WITH ARCHITECT/OWNER.
3. CONUIT AND WIRE PROVIDING POWER TO EXTERIOR LIGHT FIXTURES TO REMAIN.
4. DO NOT REMOVE CONDUIT AND WIRE PROVIDING POWER TO ROOF TOP UNITS AS THIS CONDUIT AND WIRE WILL BE REUSED.

SHEET KEYNOTES

1. PANEL AND CONDUIT/CONDUCTOR FEEDING PANEL TO REMAIN AND TO BE REUSED.

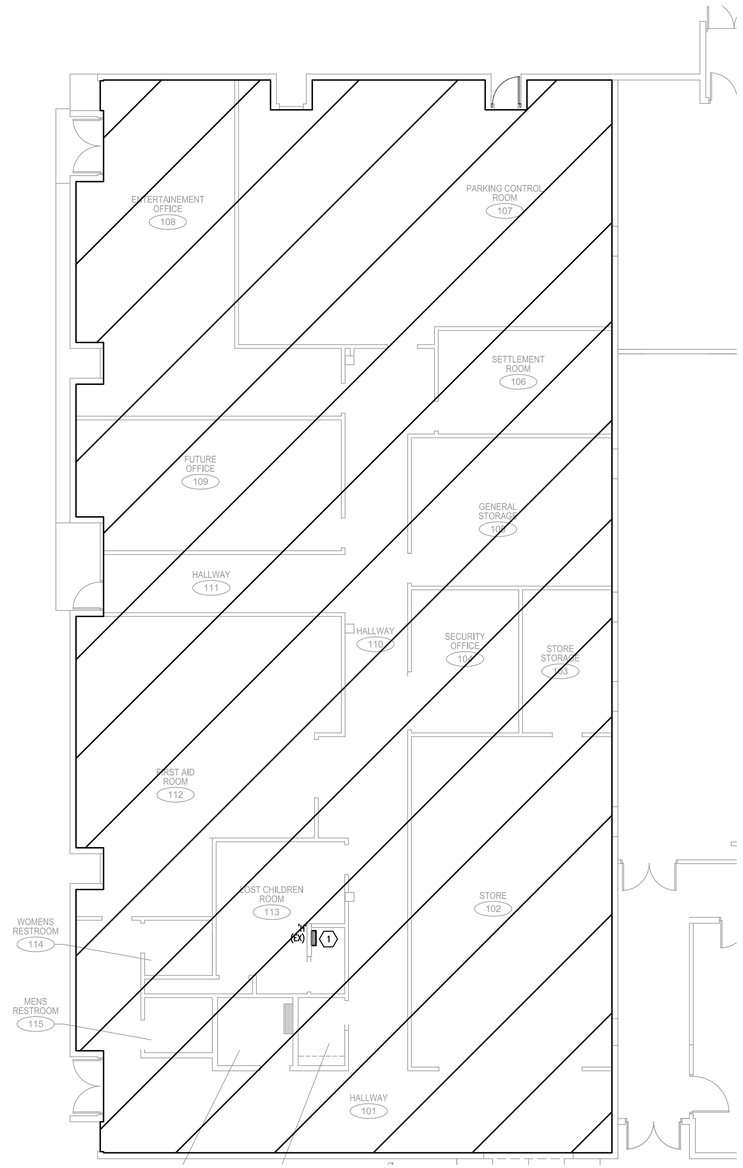

PLAN NORTH

DEMOLITION PLAN
1/8" = 1'-0"

0 4' 8' 16'

KEY PLAN

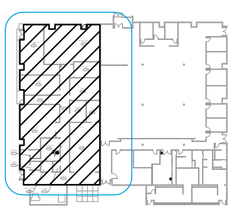

BNA CONSULTING
635 South State Street
Salt Lake City, UT 84111
P 801.532.2196
F 801.322.2305
www.bnaconsulting.com

© 2007 BNA CONSULTING

Axis Architects
352 S. DENVER ST. SUITE 205 – SALT LAKE CITY – UTAH 84111 – P. 355-3003 – F. 355-0113

DFCM

FAIRPARK OFFICE REMODEL

Fairpark Conference Center - 155 N.1000 West

Salt Lake City, Utah 84116

Revision #	Date
.	
.	
.	
.	
.	

Axis Job #	0737
Owner #	DFCM# 07343370
BNA Job #	08096A
Date	4-21-2008
Drawn	BNA
Checked	GM

DEMOLITION PLAN

E1.1

SHEET KEYNOTES

1. PROVIDE UNSWITCHED HOT CONDUCTOR TO BATTERY PACK.
2. PROVIDE UNSWITCHED HOT CONDUCTOR TO EXIT SIGN.
2. EXISTING EQUIPMENT.

LIGHTING PLAN
1/8" = 1'-0"

0 4' 8' 16'

KEY PLAN

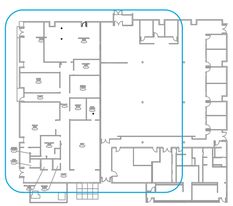

BNA CONSULTING
SALT LAKE ST.GEORGE
635 South State Street
Salt Lake City, UT 84111
P 801.322.2111
F 801.322.2194
www.bnaconsulting.com

© 2007 BNA CONSULTING

Axis Architects
352 S. DENVER ST. SUITE 205 – SALT LAKE CITY – UTAH 84111 – P. 355-3003 – F. 355-0113

FAIRPARK OFFICE REMODEL

Fairpark Conference Center - 155 N.1000 West
Salt Lake City, Utah 84116

Revision #	Date
.	
.	
.	
.	
.	

Axis Job #	0737
Owner #	DFCM# 07343370
BNA Job #	08096A
Date	4-21-2008
Drawn	BNA
Checked	GM

LIGHTING PLAN

E2.1

By: jverhoeb; Apr 18, 2008 – 2:02pm
F:\2008\096A\DRAW\096A-E21.dwg

SHEET KEYNOTES

1. ALL EQUIPMENT IN MAIN ELECTRICAL ROOM IS EXISTING.
2. PROVIDE 3/4" CONDUIT TO CABLE TRAY.
3. EXTEND EXISTING CABLE TRAY.
4. AUTOMATIC DOORS. PROVIDE POWER AND CONTROL WIRING TO ENSURE A COMPLETE OPERATING DOOR SYSTEM.
5. PROVIDE POWER TO NEW ROOF TOP UNITS. REUSE EXISTING CONDUIT AND WIRE.
6. PROVIDE CONNECTION OF MONITOR MODULE TO MONITOR DUCT DETECTOR STATUS AT MAIN FIRE PANEL. PROVIDE 120V POWER TO DUCT DETECTOR. DETECTOR PROVIDED BY DIV. 15 CONTRACTOR.

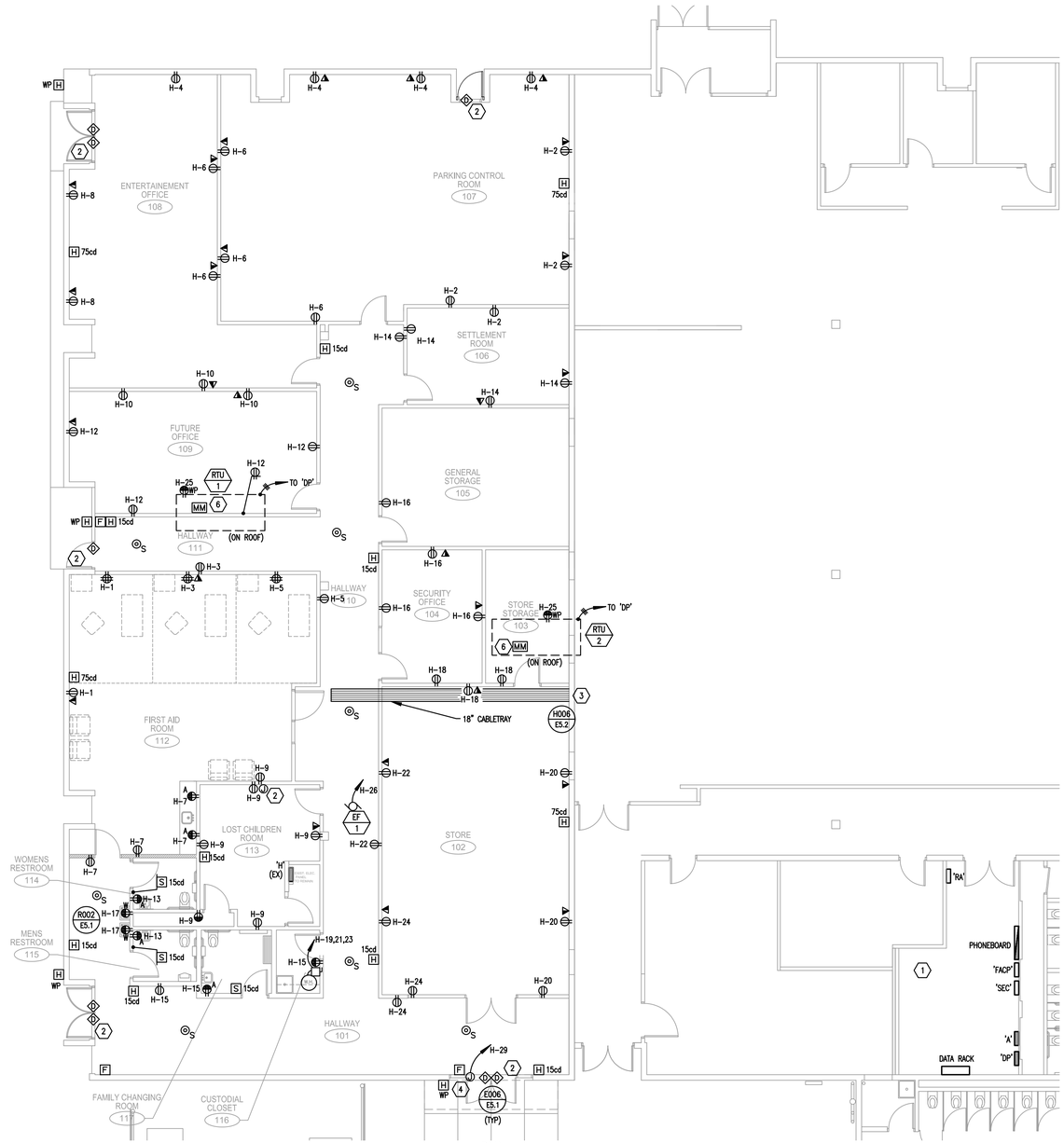

PLAN NORTH

POWER PLAN

1/8" = 1'-0"

0 4' 8' 16'

KEY PLAN

BNA CONSULTING
635 South State Street
Salt Lake City, UT 84111
P 801.532.2196
F 801.532.2305
www.bnaconsulting.com
SALT LAKE ST.GEORGE

© 2007 BNA

Axis Architects
352 S. DENVER ST. SUITE 205 – SALT LAKE CITY – UTAH 84111 – P. 355-3003 – F. 355-0113

FAIRPARK OFFICE REMODEL

Fairpark Conference Center - 155 N.1000 West

Salt Lake City, Utah 84116

Revision #	Date
.	
.	
.	
.	

Axis Job #	0737
Owner #	DFCM# 07343370
BNA Job #	08096A
Date	4-21-2008
Drawn	BNA
Checked	GM

POWER PLAN

E3.1

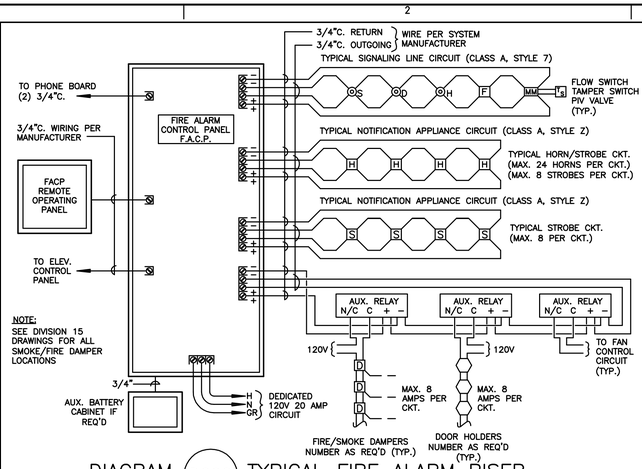

DIAGRAM D002 TYPICAL FIRE ALARM RISER
NTS

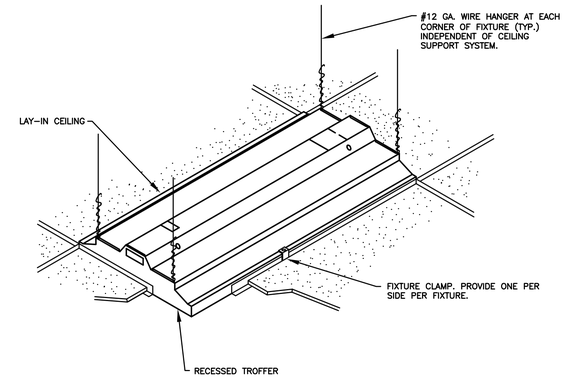

DIAGRAM A001 TYP. RECESSED FIXTURE MOUNTING
NTS

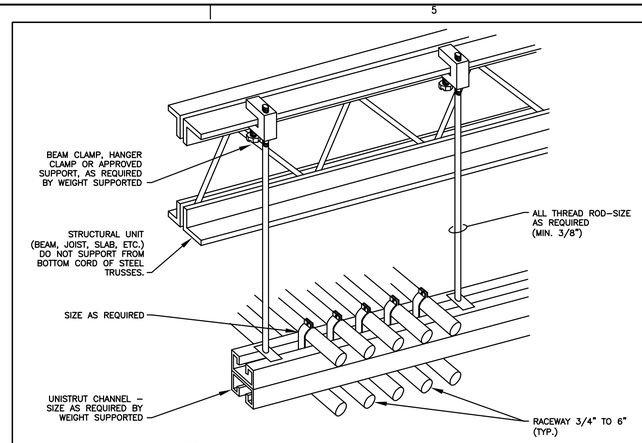

DIAGRAM H001 TYPICAL TRAPEZE CONDUIT RACK
NTS

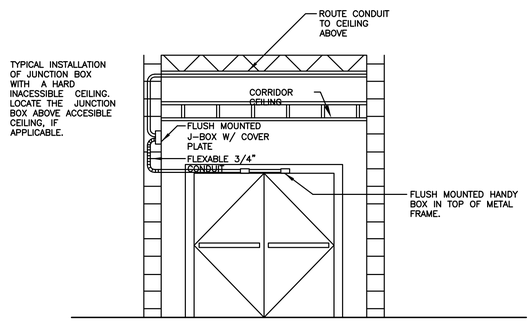

DIAGRAM E006 SECURITY SYSTEM DOUBLE DOOR SWITCH

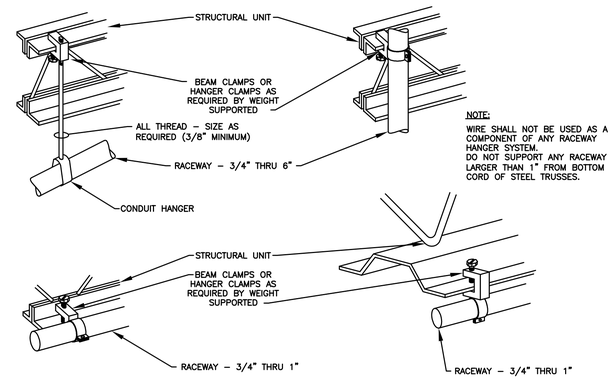

DIAGRAM H003 TYPICAL RACEWAY SUPPORT METHODS
NTS

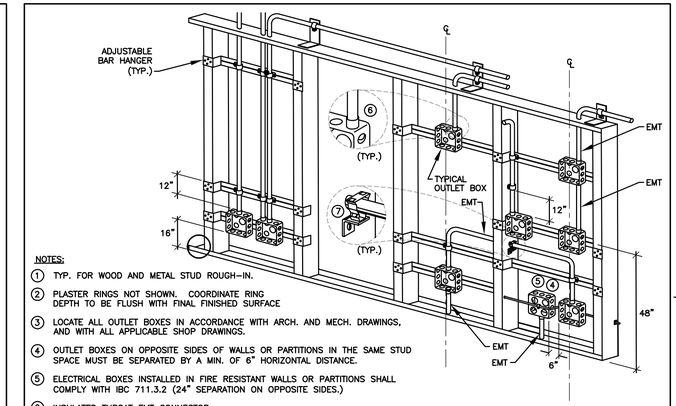

DIAGRAM H004 TYPICAL ROUGH IN REQUIREMENTS
NTS

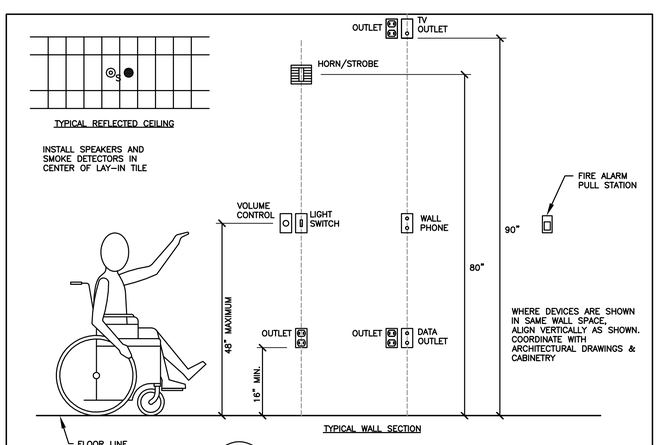

DIAGRAM R001 DEVICE MOUNTING HEIGHTS
NTS

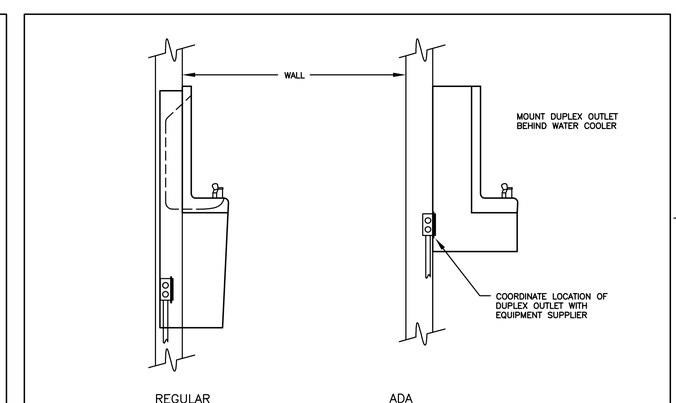

DIAGRAM R002 ELECTRIC WATER COOLER (EWC)
NTS

BNA CONSULTING
435 South State Street
Salt Lake City, UT 84111
P 801.322.2111
F 801.322.2305
www.bnaconsulting.com
SALT LAKE ST.GEORGE

© 2007 BNA (DFCM 07343370)

Axis Architects
352 S. DENVER ST. SUITE 205 – SALT LAKE CITY – UTAH 84111 – P. 355-3003 – F. 355-0113

FAIRPARK OFFICE REMODEL

Fairpark Conference Center - 155 N.1000 West
Salt Lake City, Utah 84116

Revision #	Date
.	
.	
.	
.	
.	

Axis Job #	0737
Owner #	DFCM# 07343370
BNA Job #	08096A
Date	4-21-2008
Drawn	BNA
Checked	GM

ELECTRICAL DIAGRAMS

E5.1

By: jverhoot; Apr 18, 2008 – 2:02pm
F:\2008\0896A\DRAW\0896A-E51.dwg

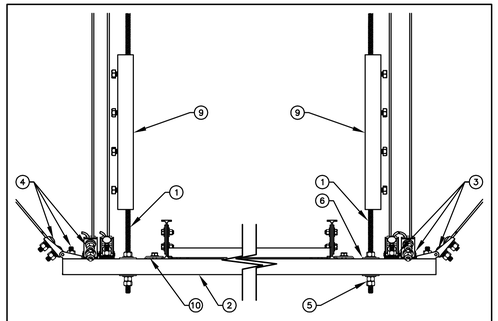

SECTION A–A

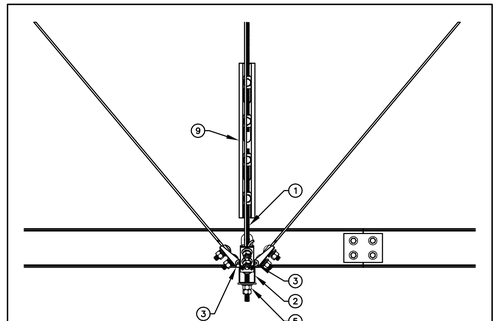

SECTION B–B

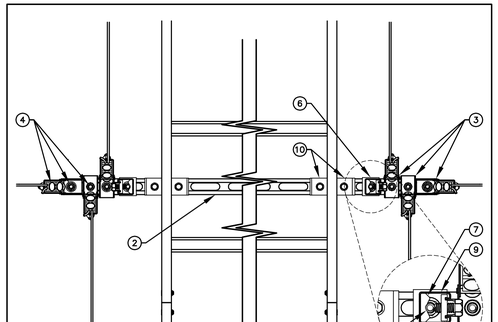

SECTION C–C

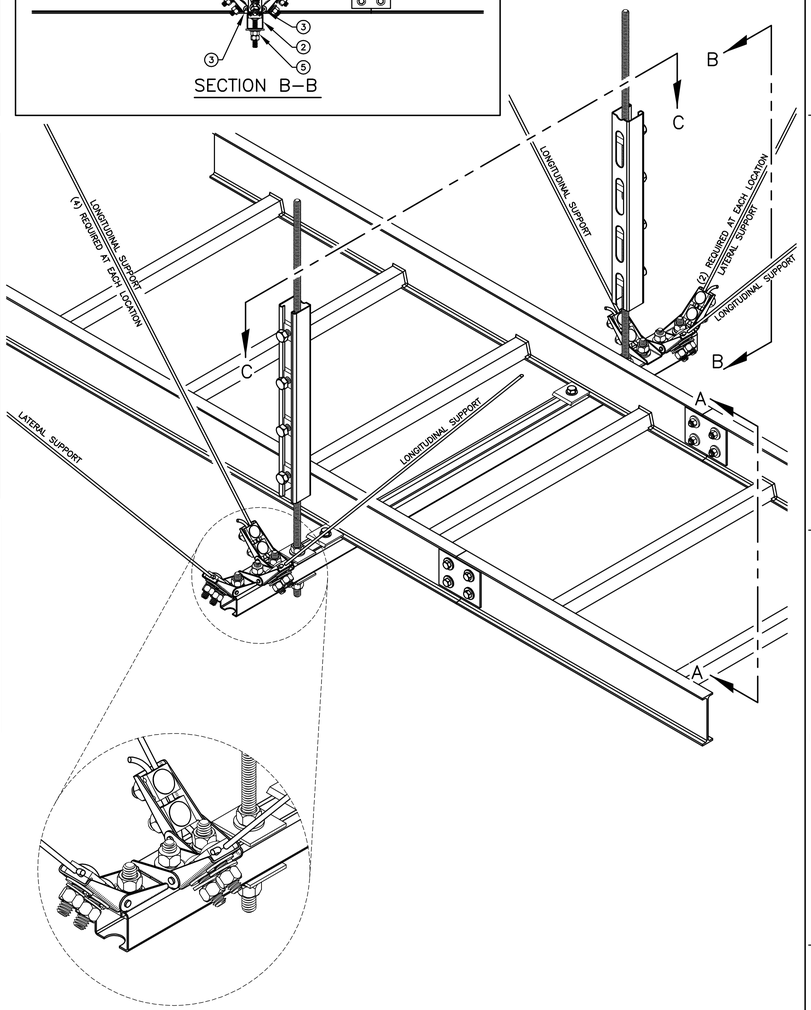

PARTS LIST

ITEM No.	DESCRIPTION	SIZE	CATALOG No. UNISTRUT
1	THREADED ROD (MIN. MODULUS OF OF ELASTICITY = 29×10^6 LBS/IN)	SEE SCHEDULE FOR DIAMETER	–
2	METAL FRAMING CHANNEL	1–5/8"x1–5/8"	P1000
3	CABLE BRACE SWIVEL ANCHOR	SEE TABLE	MASON IND. SCB–X
4	HEX HEAD CAP SCREW WITH SPRING NUT	1/2"–13"	HHCS/P1010
5	FLAT WASHER WITH HEX NUT	3/8"	–
6	FLAT PLATE FITTING WITH HEX NUT	3/8" OR 1/2" AS REQ'D	P1063 OR P1064
7	CRADLE	–	P2485
8	HEX HEAD CAP SCREW WITH NUT	3/8"x1"	HHCS/P2008
9	SLOTTED METAL FRAMING CHANNEL	1–5/8"x1–5/8"	P1000T
10	CABLE TRAY ATTACHMENT CLIP W/CAP SCREW & NUT	–	–

NOTES:

1. PROVIDE LONGITUDINAL AND LATERAL SUPPORT SPACING IN ACCORDANCE WITH THE FOLLOWING:

MAX CABLE TRAY PLUS CABLE WT.	VERTICAL SUPPORT SPACING	LATERAL SUPPORT SPACING	LONGITUDINAL SUPPORT SPACING	ROD DIAMETER	CABLE BRACE SWIVEL ANCHOR & CABLE
POUNDS/FOOT	FEET	FEET	FEET	INCHES	
25	10	10	20	.375	SCB2
50	10	10	20	.500	SCB3

2. PROVIDE METAL FRAMING CHANNEL ON ALL VERTICAL SUPPORTS WHEN ROD LENGTH EXCEEDS 14". STIFFENER CLIP SPACING SHALL BE 12".
3. SEE SPECIFICATIONS FOR APPROVED FITTINGS FOR ATTACHMENT TO STRUCTURE.

GENERAL NOTES

1. COORDINATE ROUTING OF CABLE TRAYS AND SUPPORT SYSTEMS WITH DIVISION 15.
2. DO NOT SUPPORT FROM BOTTOM CORD OF STEEL TRUSSES.

DIAGRAM H006 SEISMIC BRACING FOR CABLE TRAY/CABLES
(EXPOSED STRUCTURE OR ABOVE CEILING ONLY)

BNA CONSULTING
SALT LAKE ST.GEORGE
635 South State Street
Salt Lake City, UT 84111
P 801.532.2194
F 801.532.2305
www.bnaconsulting.com

© 2000 BNA

Axis Architects
352 S. DENVER ST. SUITE 205 – SALT LAKE CITY – UTAH 84111 – P 355–3003 – F 355–0113

FAIRPARK OFFICE REMODEL

Fairpark Conference Center - 155 N.1000 West

Salt Lake City, Utah 84116

Revision #	Date
.	
.	
.	
.	
.	

Axis Job # 0737
Owner # DFCM# 07343370
BNA Job # 08096A
Date 4-21-2008
Drawn BNA
Checked GM

ELECTRICAL DIAGRAMS

E5.2

By: jverhoot; Apr 18, 2008 – 2:03pm
F:\2008\096A\096A–E52.dwg