C:\Documents and Settings\All Users\Documents\Projects\Yuba Water Line\DWG\Yuba Water Line Title Sheet.DWG, 2/13/2008 11:24:37 AM, DMF

STATE OF UTAH
DIVISION OF FACILITIES CONSTRUCTION AND MANAGEMENT

PROJECT NO.	SHEET NO.
DFCM #07344510	1

ISSUE DATE 10-29-2007

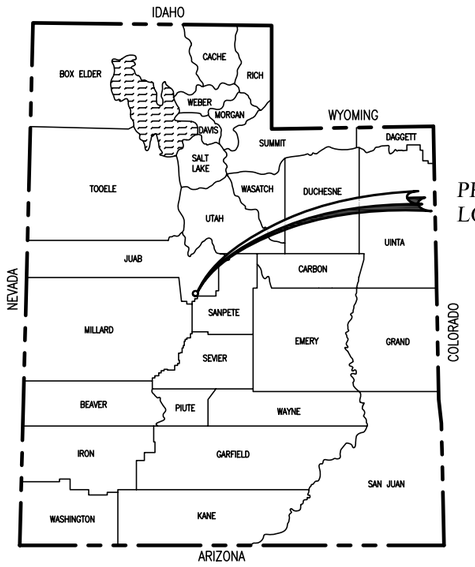

YUBA STATE PARK
WATER LINE REPLACEMENT
DFCM PROJECT NO. 07344510
2008

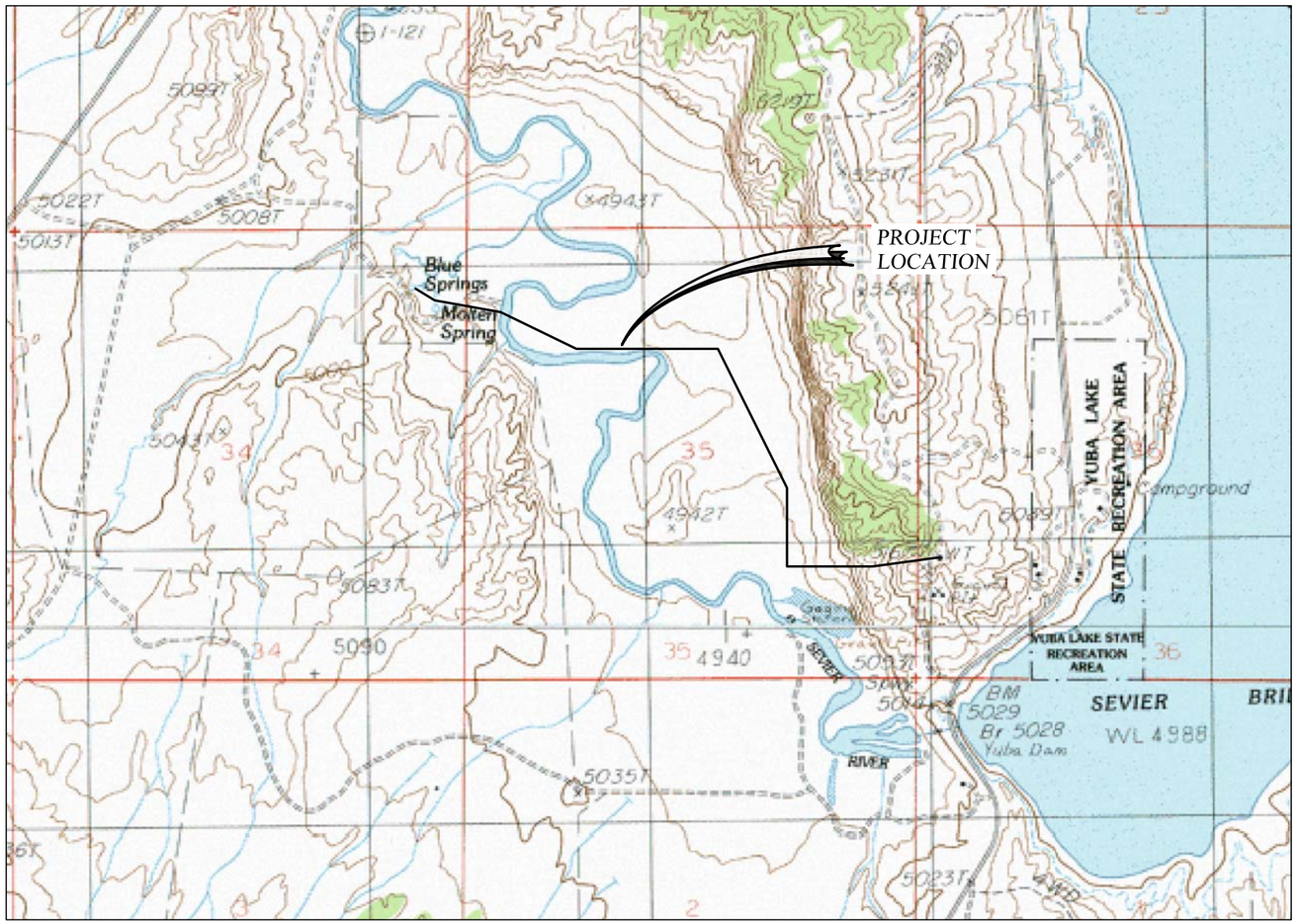

N

THE GREAT SEAL OF THE STATE OF UTAH
INDUSTRY
1847
1896

RECOMMENDED FOR APPROVAL:

LICENSED PROFESSIONAL ENGINEER
No. 146602
CRAIG E. JOHANSEN
STATE OF UTAH

PROJECT ENGINEER — DATE 02-11-08

APPROVALS:

STATE OF UTAH — DATE
DIVISION OF FACILITIES CONSTRUCTION
AND MANAGEMENT

UTAH STATE PARKS — DATE
YUBA LAKE STATE PARK MANAGER

johansen & tuttle ENGINEERING INC.
BOX 487, CASTLE DALE, UTAH 84513 (435) 381-2523
FAX (435) 381-2522 email jt@etv.net

YUBA STATE PARK, UTAH

C:\Documents and Settings\All Users\Documents\Projects\Yuba Water Line\DWG\Yuba Waterline summary.dwg, 2/13/2008 11:26:34 AM, DMF

INDEX TO SHEETS

SHEET	DESCRIPTION
1	TITLE SHEET
2	INDEX TO SHEETS AND SUMMARY OF ITEMS
DT 01	PIPELINE DETAIL
DT 02	PIPELINE DETAIL
PP01 –PP09	PLAN AND PROFILE SHEETS

SUMMARY OF ITEMS

SECTION	ITEM	DESCRIPTION	UNIT	QUANTITY
8	1	MOBILIZATION	LUMP	1
47	2	6-INCH HDPE PIPE (DR7)	LIN. FT.	8724
72	4	1-INCH COMBINATION AIR RELEASE VALVE	EACH	8
72	5	6-INCH GATE VALVE	EACH	2
93	8	RIVER CROSSING	LIN. FT.	225
96	9	CLEANUP	LUMP	1

VALVE SUMMARY

STATION	6" GATE VALVE	AIR RELEASE VALVE
0+50		1
4+63		1
10+50		1
11+00	1	
23+54		1
36+90		1
53+06		1
58+21		1
86+80		1
86+82	1	
USE TOTAL	2	8

THIS DRAWING IS TO BE USED FOR THIS PROJECT AND THIS PROJECT ONLY UNLESS AUTHORIZED BY THE PROJECT ENGINEER OF JOHANSEN & TUTTLE ENGINEERS INC.

REV	DESCRIPTION	BY	DATE
-	-	-	-/-/-

DESIGNED	HRT	6-07	CHECKED	CEJ 6-07
DRAWN	DMF	8-07	CHECKED	CEJ 6-07
SURVEYED	BHT	5-06	CHECKED	LMS 5-06
R.O.W.	LMS	5-06	CHECKED	CEJ 5-06

Johansen & Tuttle ENGINEERING INC.
BOX 487, CASTLE DALE, UTAH 84513 (435) 381-2523
FAX (435) 381-2522 EMAIL jt@etv.net

UTAH STATE DFCM
YUBA STATE PARK WATERLINE
REPLACEMENT PROJECT
DFCM #07302510

INDEX TO SHEETS AND SUMMARY OF ITEMS

ISSUE DATE
9/10/07

SHEET NO.
2

1" COMBINATION AIR RELEASE / VACUUM VALVE EQUIPMENT SCHEDULE	
ITEM	DESCRIPTION
1	THREADED SERVICE SADDLE/TAPPING SLEEVE
2	1"ø CORP STOP
3	1"ø HDPE PIPE
4	1"ø VALVE
5	1"ø COMBINATION AIR RELEASE / VACUUM VALVE
6	1"ø GALVANIZED PIPE
7	VENT w/ SCREEN

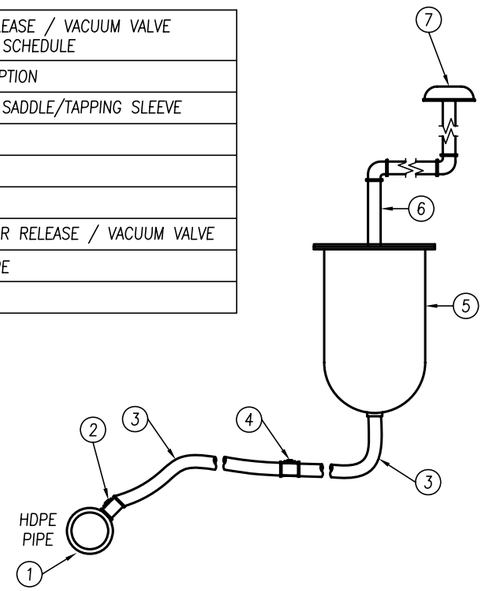

TYPICAL AIR RELEASE / VACUUM VALVE

THRUST BLOCK CONSTRUCTION NOTES:
1. ALL THRUST BLOCK FACES SHALL BE POURED AGAINST UNDISTURBED SOIL OR COMPACTED BACKFILL
2. CONCRETE SHALL BE READY MIX.
3. IN UNSTABLE SOILS A SPECIAL DESIGN IS REQ'D.
4. MIN. SIZE OF THRUST BLOCK SHALL BE 9 CU. FT.
5. DO NOT POUR OVER THE TOP OF FITTINGS
6. ALL FITTINGS ARE TO BE COVERED WITH PLASTIC SHEETING BEFORE POURING CONCRETE THRUST BLOCKS
7. ALL BEND FITTINGS SHALL RECEIVE A THRUST BLOCK. (GREATER THAN 22.5°)
8. ALL THRUST BLOCKS SHALL BE ADEQUATELY CURED PRIOR TO PRESSURIZING THE PIPELINE

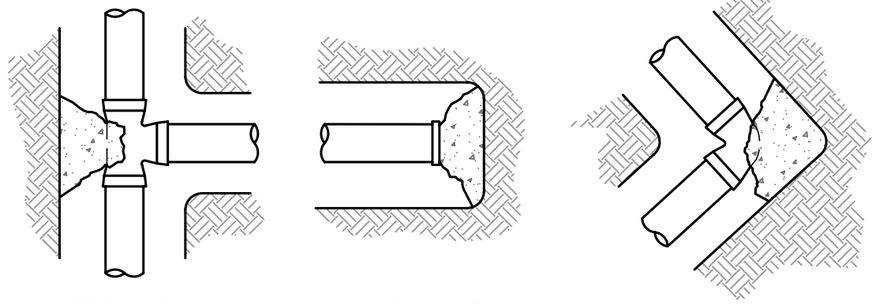

TEE PLAN VIEW | PLUG OR CAP PLAN VIEW | ELBOW PLAN VIEW

TEE ELEV. VIEW | PLUG OR CAP ELEV. VIEW | ELBOW ELEV. VIEW

TYPICAL THRUST BLOCK DETAILS

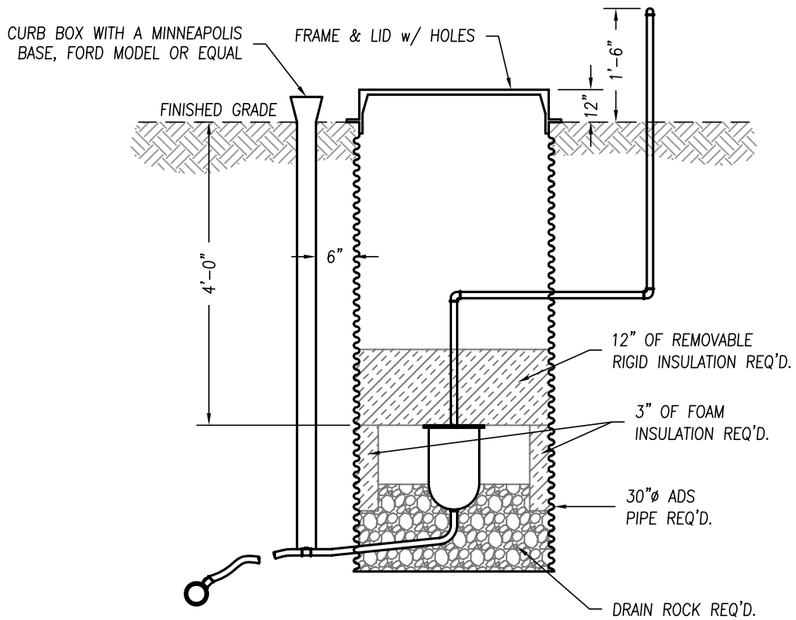

TYPICAL AIR RELEASE / VACUUM VALVE
LONGITUDINAL SECTION

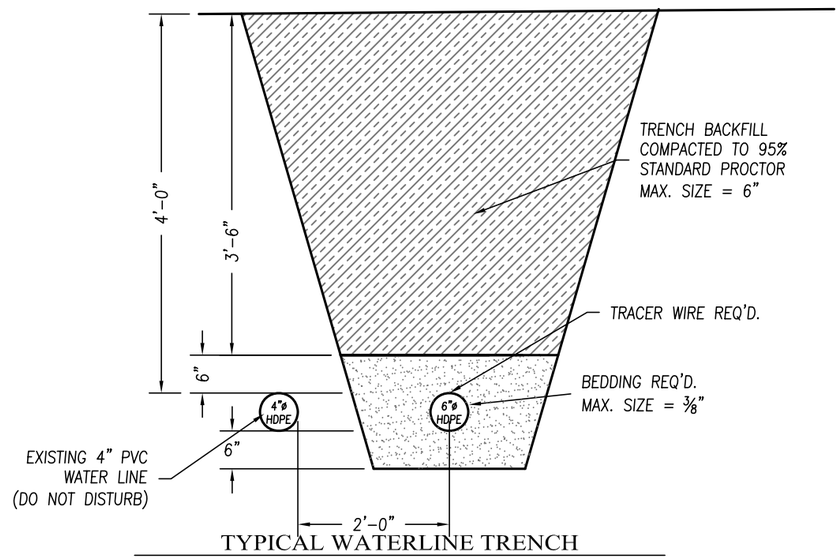

TYPICAL WATERLINE TRENCH

REV.	DESCRIPTION	BY	DATE
-			-/-/-

THIS DRAWING IS TO BE USED FOR THIS PROJECT AND THIS PROJECT ONLY UNLESS AUTHORIZED BY THE PROJECT ENGINEER AT JOHANSEN & TUTTLE ENGINEERS INC.

	DESIGNED	HRT	6-07	CHECKED	CEJ	6-07
	DRAWN	DMF	8-07	CHECKED	CEJ	6-07
	SURVEYED	BHT	5-06	CHECKED	LMS	5-06
	R.O.W.	LMS	5-06	CHECKED	CEJ	5-06

Johansen & Tuttle ENGINEERING INC.
BOX 487, CASTLE DALE, UTAH 84513 (435) 381-2523
FAX (435) 381-2522 EMAIL jt@etv.net

UTAH STATE DFCM
YUBA STATE PARK WATERLINE
REPLACEMENT PROJECT
DFCM #07302510

DETAIL SHEET

ISSUE DATE
9/10/07

SHEET NO.
DT 01

C:\Documents and Settings\All Users\Documents\Projects\Yuba Water Line\DWG\Yuba Water line Water Details.dwg, 2/13/2008 11:25:51 AM, DMF

C:\Documents and Settings\All Users\Documents\Projects\Yuba Water Line\DWG\Yuba Water line Water Details.dwg, 2/13/2008 11:26:11 AM, DMF

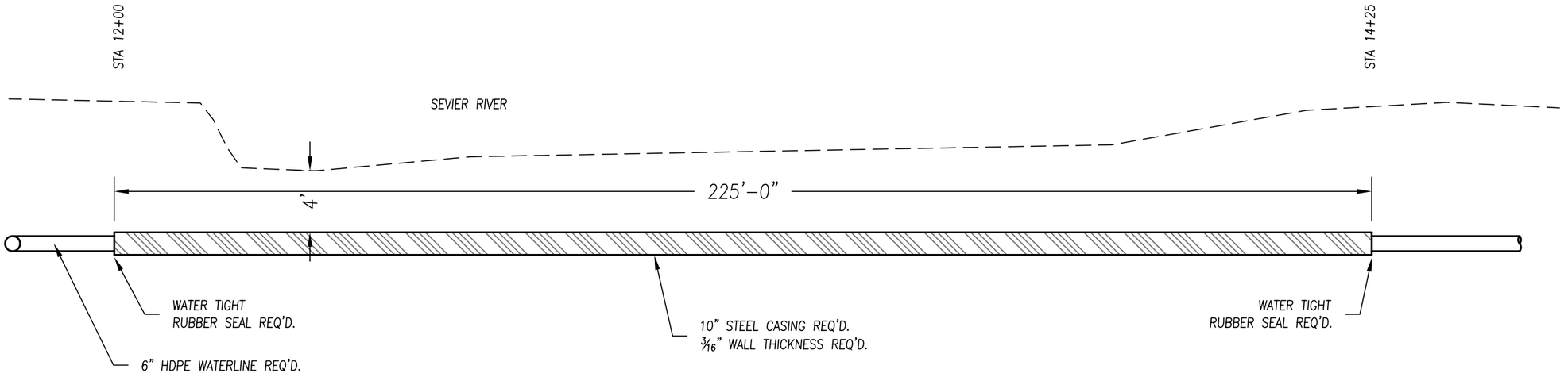

SEVIER RIVER CROSSING

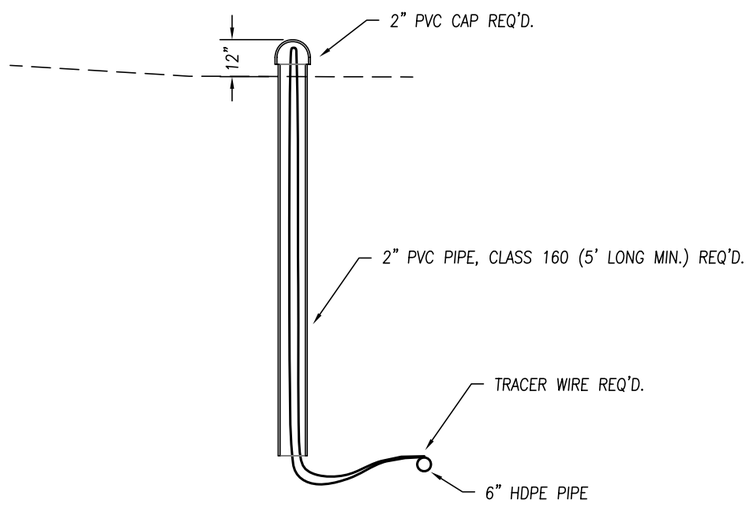

TRACER WIRE BOX DETAIL
600' MAXIMUM SPACING

THIS DRAWING IS TO BE USED FOR THIS PROJECT AND THIS PROJECT ONLY UNLESS AUTHORIZED BY THE PROJECT ENGINEER AT JOHNSEN & TUTTLE ENGINEERS INC.

	DESIGNED	HRT	6-07	CHECKED	CEJ	6-07
	DRAWN	DMF	8-07	CHECKED	CEJ	6-07
	SURVEYED	BHT	5-06	CHECKED	LMS	5-06
	R.O.W.	LMS	5-06	CHECKED	CEJ	5-06

REV.	DESCRIPTION	BY	DATE
-	-	-	-/-/-

Johnsen & Tuttle ENGINEERING INC.
BOX 487, CASTLE DALE, UTAH 84513 (435) 381-2523
FAX (435) 381-2522 EMAIL jt@etv.net

UTAH STATE DFCM
YUBA STATE PARK WATERLINE
REPLACEMENT PROJECT
DFCM #07302510

DETAIL SHEET

ISSUE DATE
9/10/07

SHEET NO.
DT 02

C:\Documents and Settings\All Users\Documents\Projects\Yuba Water Line\EaglePointRCp01001.dwg, 2/13/2008 11:28:00 AM, DMF

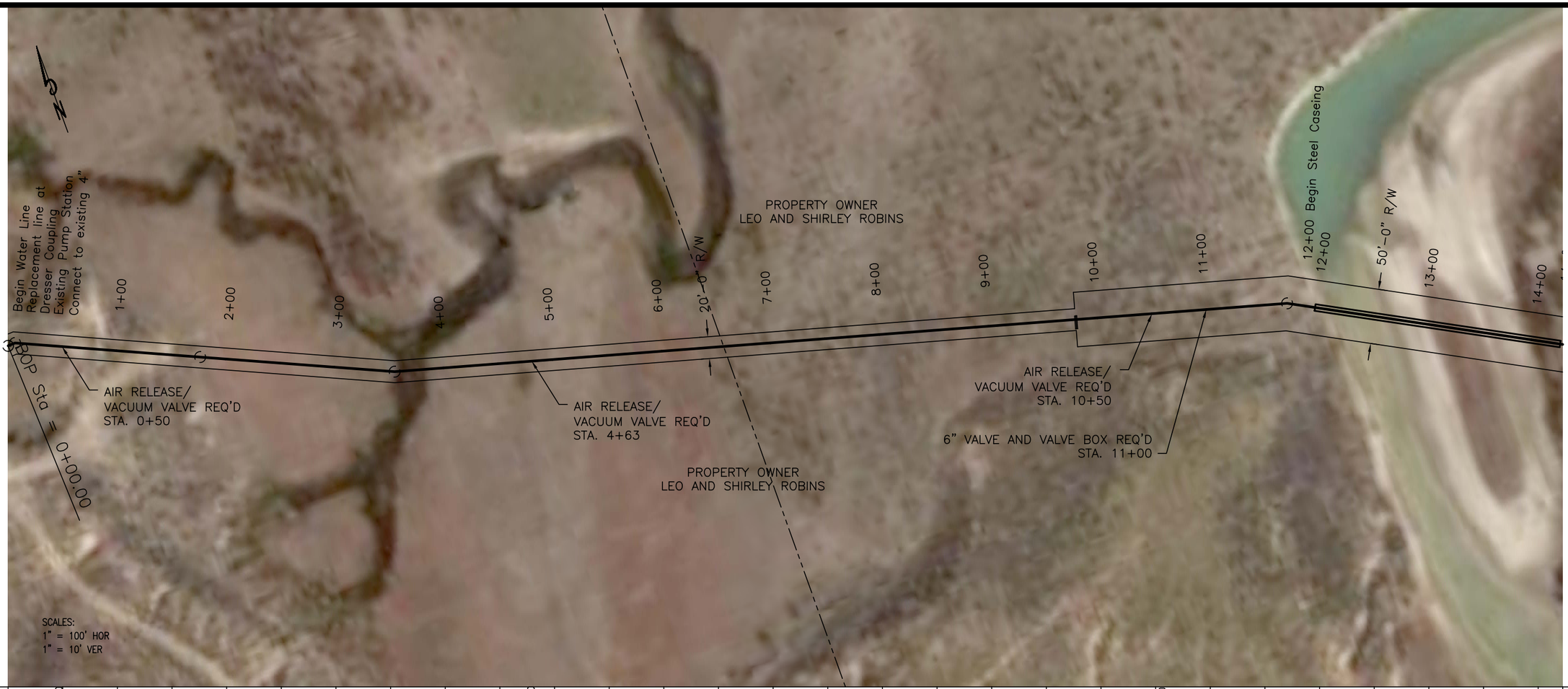

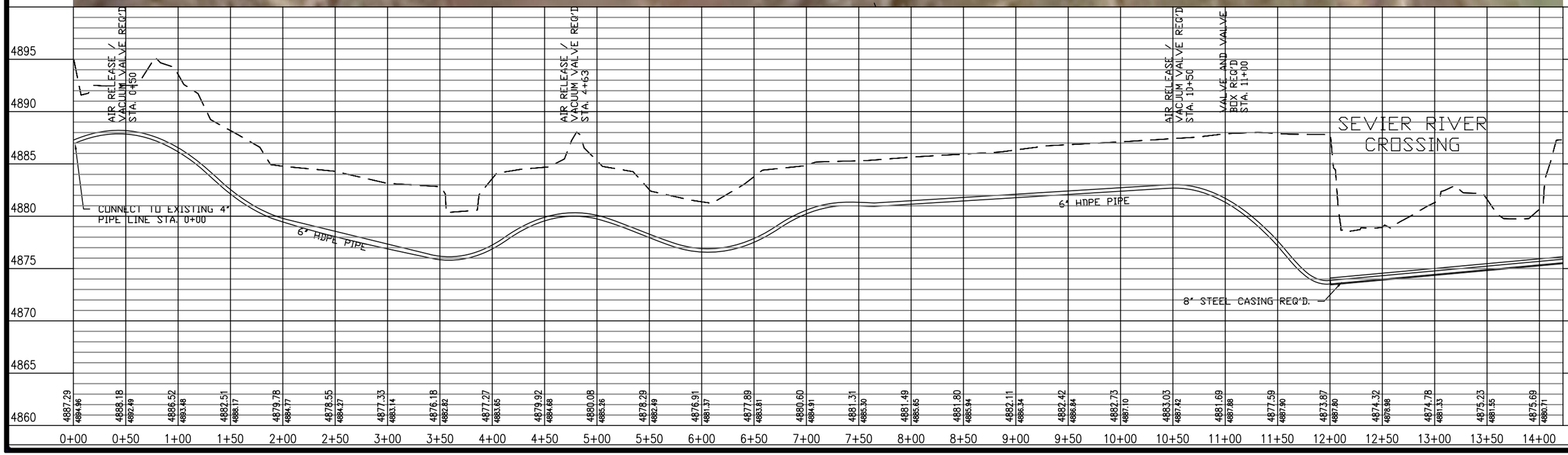

THIS DRAWING IS TO BE USED FOR THIS PROJECT AND THIS PROJECT ONLY UNLESS AUTHORIZED BY THE PROJECT ENGINEER AT JOHANSEN & TUTTLE ENGINEERS INC.

REV.	DESCRIPTION	BY:	DATE
-	_____	-_-	-_-_-

DESIGNED	HRT	6-07	CHECKED CEJ 6-07
DRAWN	DMF	8-07	CHECKED CEJ 6-07
SURVEYED	BHT	5-06	CHECKED LMS 5-06
R.O.W.	LMS	5-06	CHECKED CEJ 5-06

Johansen & Tuttle ENGINEERING INC.
BOX 487, CASTLE DALE, UTAH 84513 (435) 381-2523
FAX (435) 381-2522 EMAIL jt@etv.net

UTAH STATE DFCM
YUBA STATE PARK WATERLINE
REPLACEMENT PROJECT
DFCM #07344510

PLAN AND PROFILE

ISSUE DATE
1/31/08

SHEET NO.
PP 01

C:\Documents and Settings\All Users\Documents\Projects\Yuba Water Line\EaglePointRCp02001.dwg, 2/13/2008 11:28:26 AM, DMF

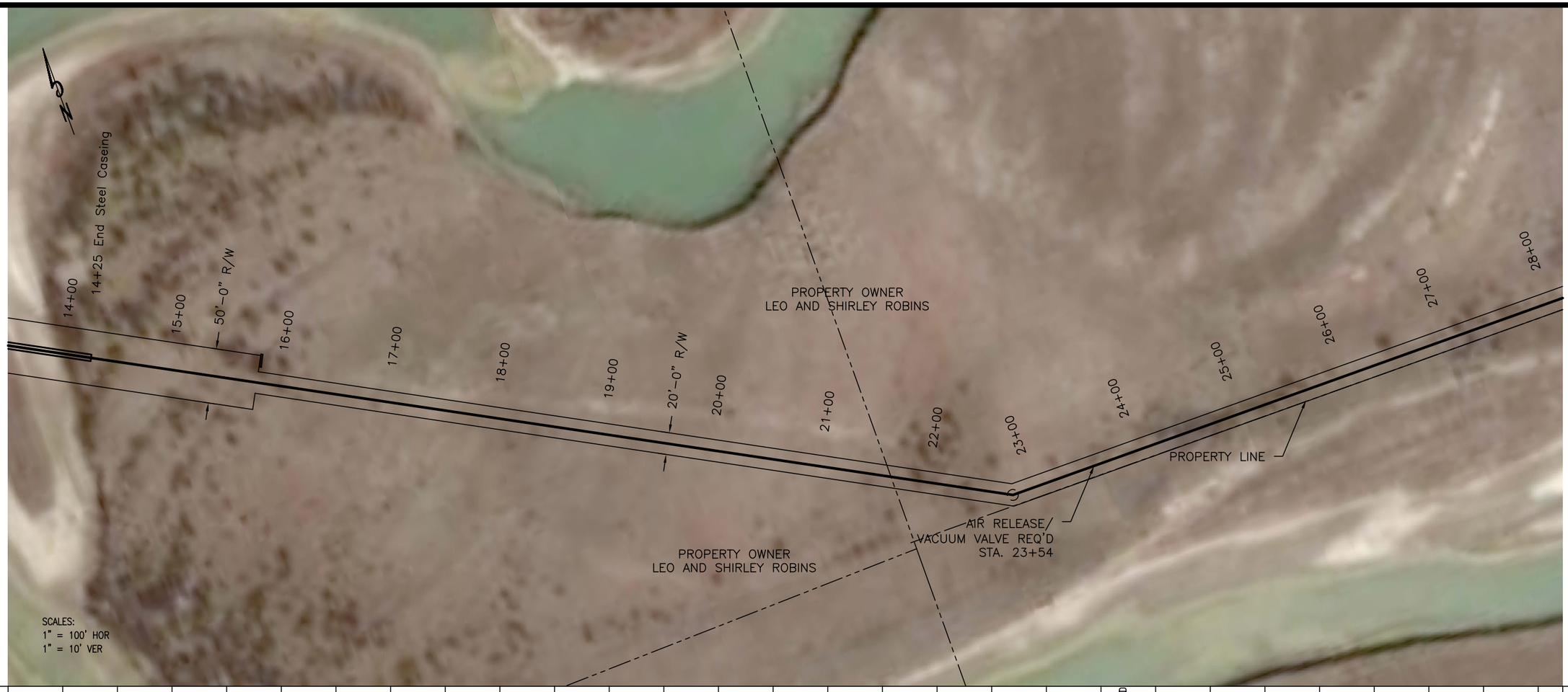

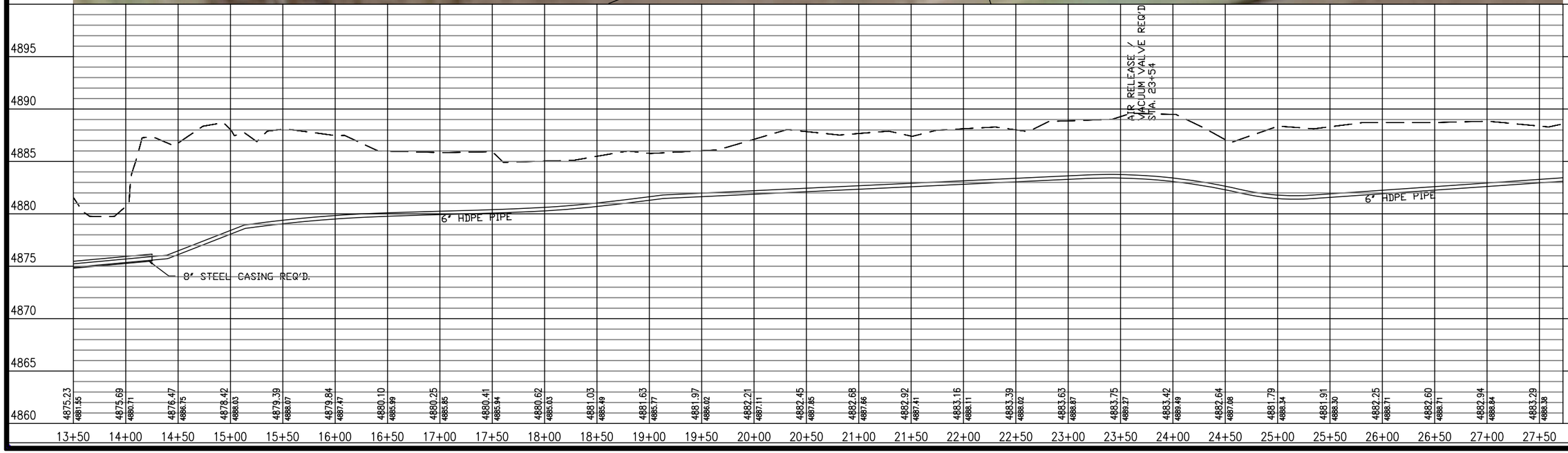

THIS DRAWING IS TO BE USED FOR THIS PROJECT AND THIS PROJECT ONLY UNLESS AUTHORIZED BY THE PROJECT ENGINEER AT JOHANSEN & TUTTLE ENGINEERS INC.

REV.	DESCRIPTION	BY:	DATE
-	_____	_____	_-_-_

DESIGNED	HRT	6-07	CHECKED CEJ 6-07
DRAWN	DMF	8-07	CHECKED CEJ 6-07
SURVEYED	BHT	5-06	CHECKED LMS 5-06
R.O.W.	LMS	5-06	CHECKED CEJ 5-06

Johansen & Tuttle ENGINEERING INC.
BOX 487, CASTLE DALE, UTAH 84513 (435) 381-2523
FAX (435) 381-2522 EMAIL jt@etv.net

UTAH STATE DFCM
YUBA STATE PARK WATERLINE
REPLACEMENT PROJECT
DFCM #07344510

PLAN AND PROFILE

ISSUE DATE
1/31/08

SHEET NO.
PP 02

C:\Documents and Settings\All Users\Documents\Projects\Yuba Water Line\EaglePointRCp03001.dwg, 2/13/2008 11:28:52 AM, DMF

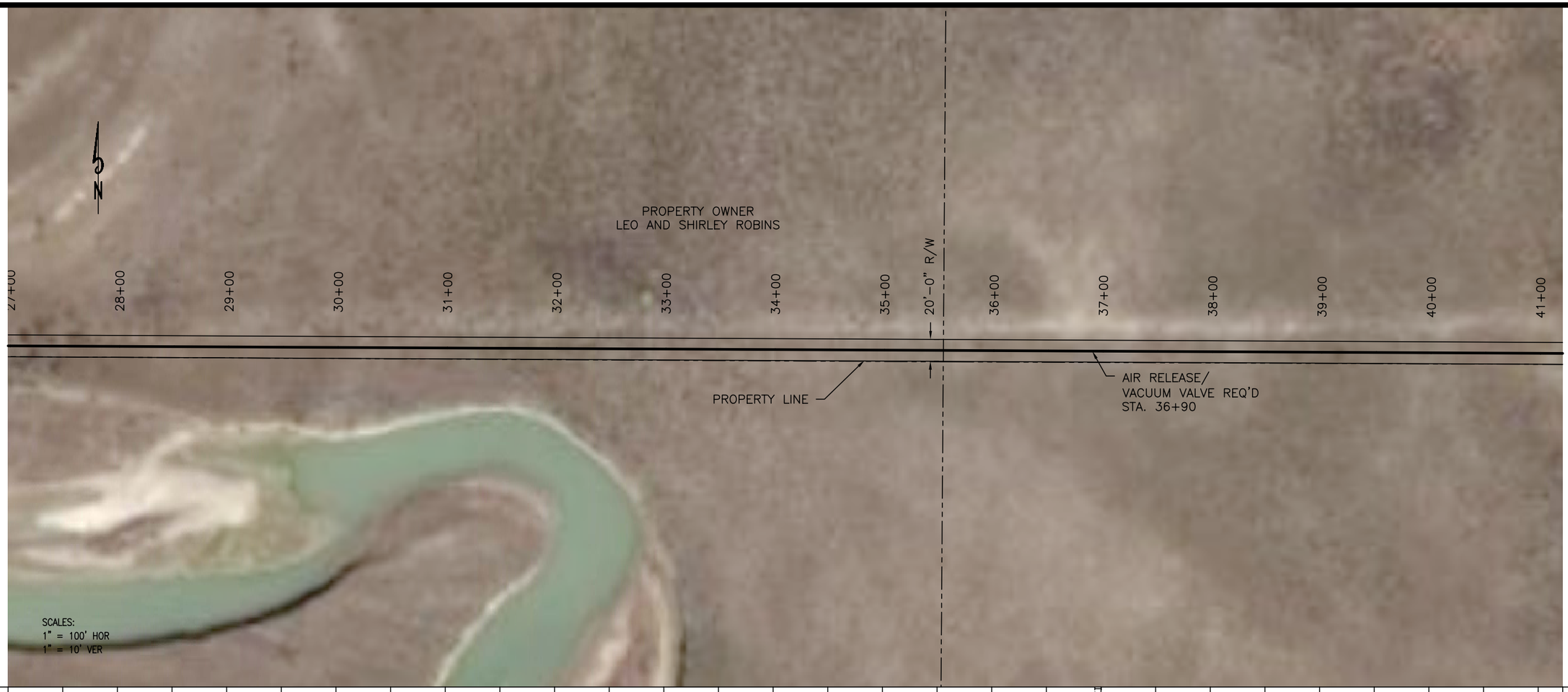

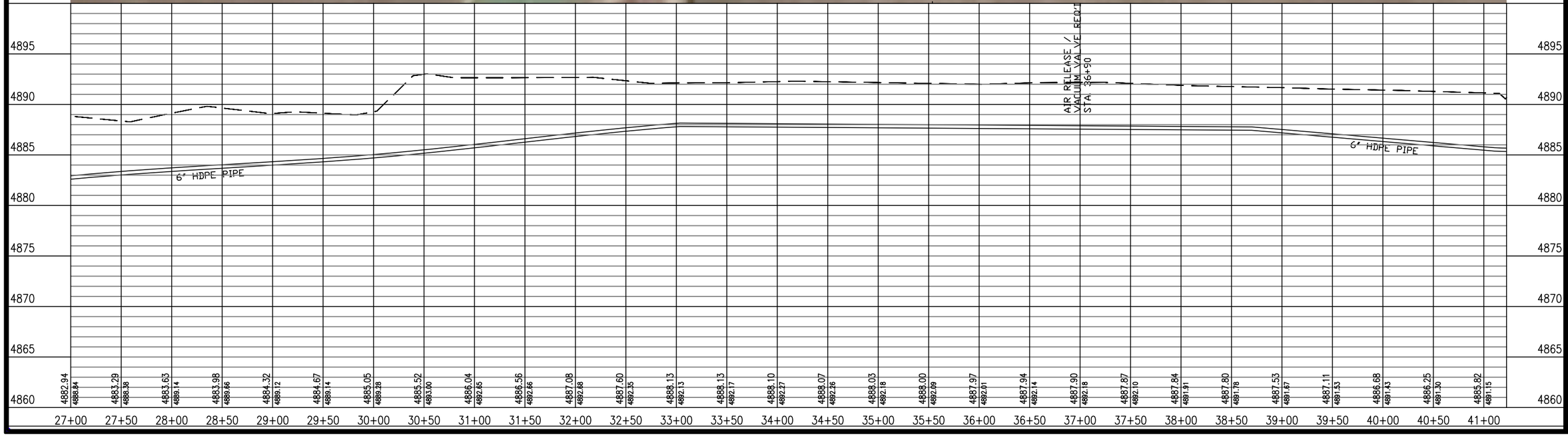

THIS DRAWING IS TO BE USED FOR THIS PROJECT AND THIS PROJECT ONLY UNLESS AUTHORIZED BY THE PROJECT ENGINEER AT CHANSEN & TUTTLE ENGINEERS INC.

REV.	DESCRIPTION	BY	DATE
-	----------	---	--/--/--

DESIGNED	HRT	6-07	CHECKED CEJ 6-07
DRAWN	DMF	8-07	CHECKED CEJ 6-07
SURVEYED	BHT	5-06	CHECKED LMS 5-06
R.O.W.	LMS	5-06	CHECKED CEJ 5-06

Chansen & Tuttle ENGINEERING INC.
BOX 497, CASTLE DALE, UTAH 84513 (435) 381-2523
FAX (435) 381-2522 EMAIL jt@etv.net

UTAH STATE DFCM
YUBA STATE PARK WATERLINE
REPLACEMENT PROJECT
DFCM #07344510

PLAN AND PROFILE

ISSUE DATE
1/31/08

SHEET NO.
PP 03

C:\Documents and Settings\All Users\Documents\Projects\Yuba Water Line\EaglePointRCp04001.dwg, 2/13/2008 11:29:24 AM, DMF

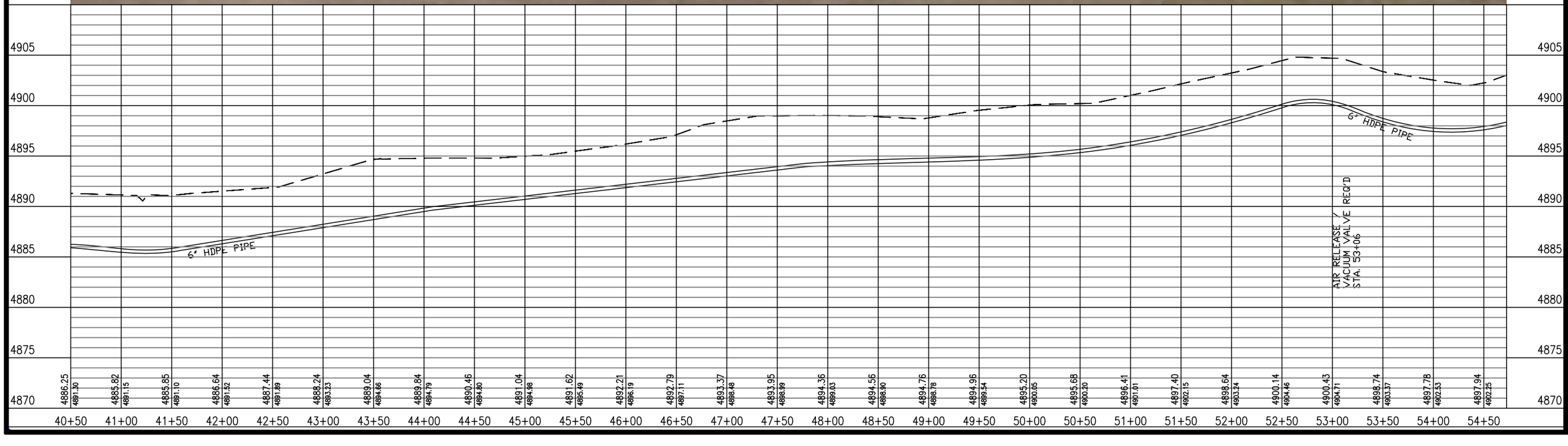

THIS DRAWING IS TO BE USED FOR THIS PROJECT AND THIS PROJECT ONLY UNLESS AUTHORIZED BY THE PROJECT ENGINEER AT CHANSEN & TUTTLE ENGINEERS INC.

REV.	DESCRIPTION	BY:	DATE
-	-	-	-/-/-

DESIGNED	HRT	6-07	CHECKED CEJ 6-07
DRAWN	DMF	8-07	CHECKED CEJ 6-07
SURVEYED	BHT	5-06	CHECKED LMS 5-06
R.O.W.	LMS	5-06	CHECKED CEJ 5-06

Chansen & Tuttle ENGINEERING INC.
BOX 497, CASTLE DALE, UTAH 84513 (435) 381-2523
FAX (435) 381-2522 EMAIL jt@etv.net

UTAH STATE DFCM
YUBA STATE PARK WATERLINE
REPLACEMENT PROJECT
DFCM #07344510

PLAN AND PROFILE

ISSUE DATE
9/10/07

SHEET NO.
PP 04

C:\Documents and Settings\All Users\Documents\Projects\Yuba Water Line\EaglePointRCp05001.dwg, 2/13/2008 11:29:59 AM, DMF

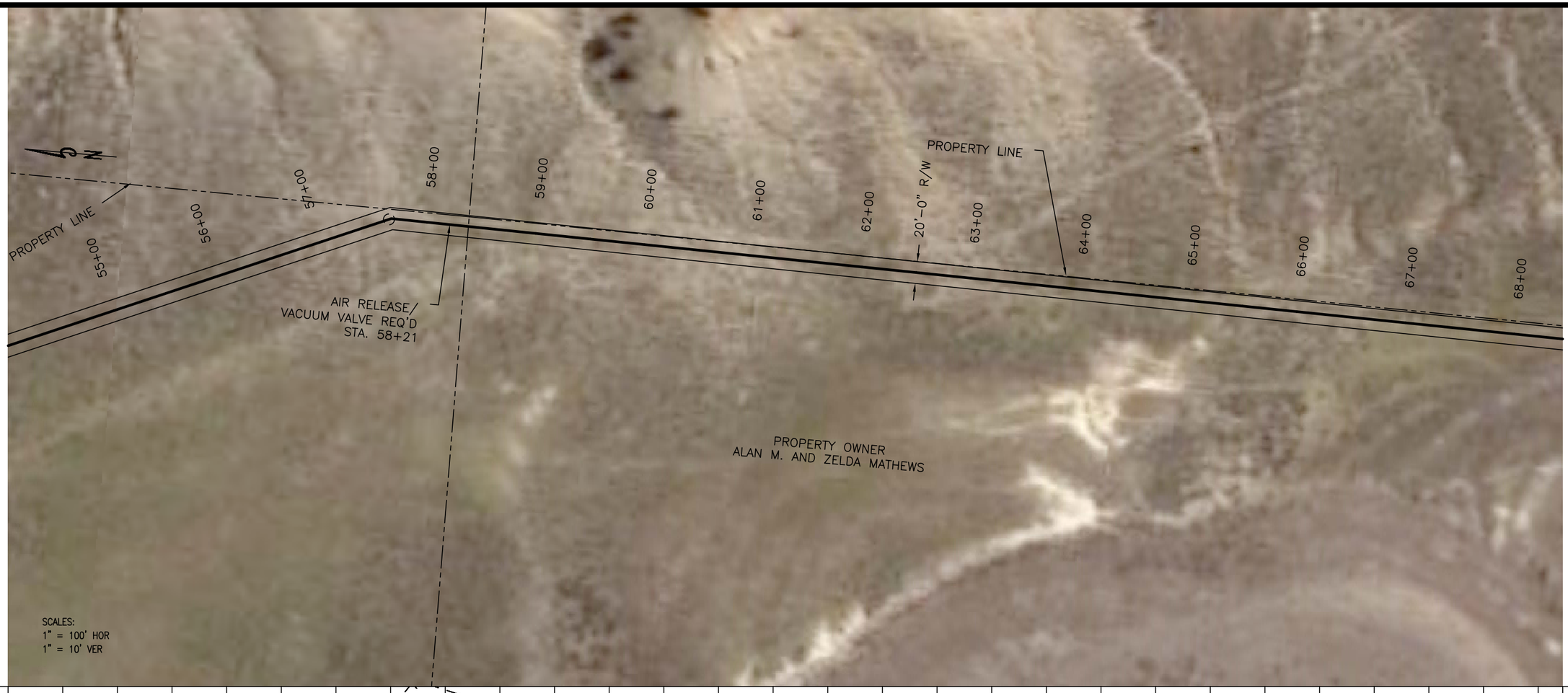

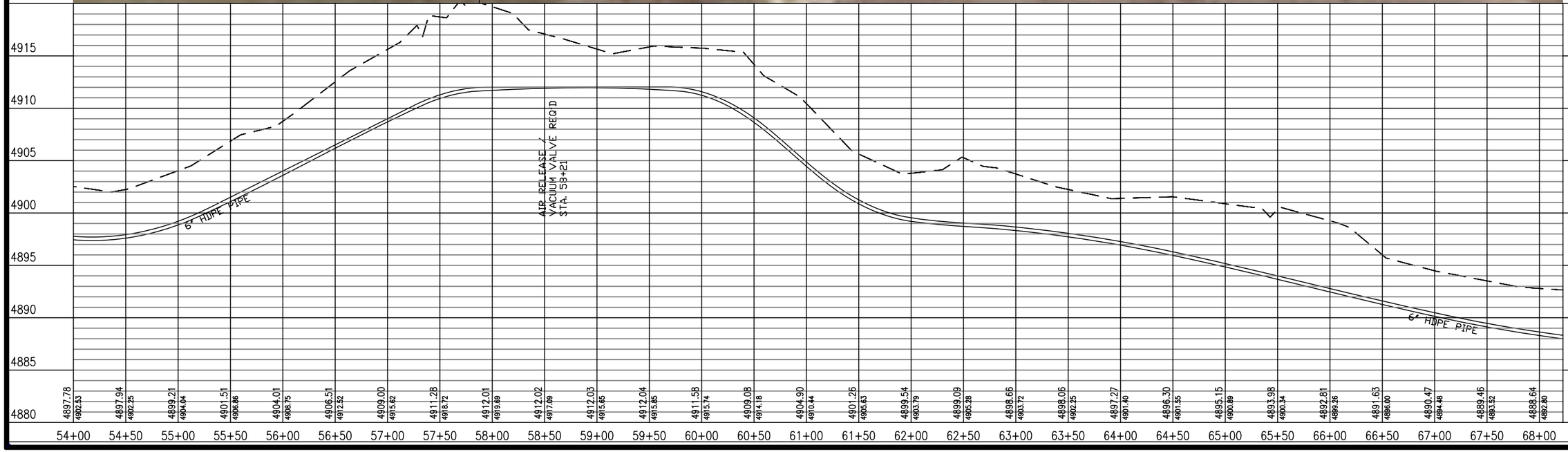

DESIGNED	HRT	6-07	CHECKED	CEJ	6-07
DRAWN	DMF	8-07	CHECKED	CEJ	6-07
SURVEYED	BHT	5-06	CHECKED	LMS	5-06
R.O.W.	LMS	5-06	CHECKED	CEJ	5-06

REV.	DESCRIPTION	BY	DATE
-		--	--

THIS DRAWING IS TO BE USED FOR THIS PROJECT AND THIS PROJECT ONLY UNLESS AUTHORIZED BY THE PROJECT ENGINEER AT JOHNSEN & TUTTLE ENGINEERS INC.

Johnsen & Tuttle ENGINEERING INC.
BOX 497, CASTLE DALE, UTAH 84513 (435) 381-2523
FAX (435) 381-2522 EMAIL jt@etv.net

UTAH STATE DFCM
YUBA STATE PARK WATERLINE
REPLACEMENT PROJECT
DFCM #07344510

PLAN AND PROFILE

ISSUE DATE
9/10/07

SHEET NO.
PP 05

C:\Documents and Settings\All Users\Documents\Projects\Yuba Water Line\EaglePoint\RCp06001.dwg, 2/13/2008 11:30:22 AM, DMF

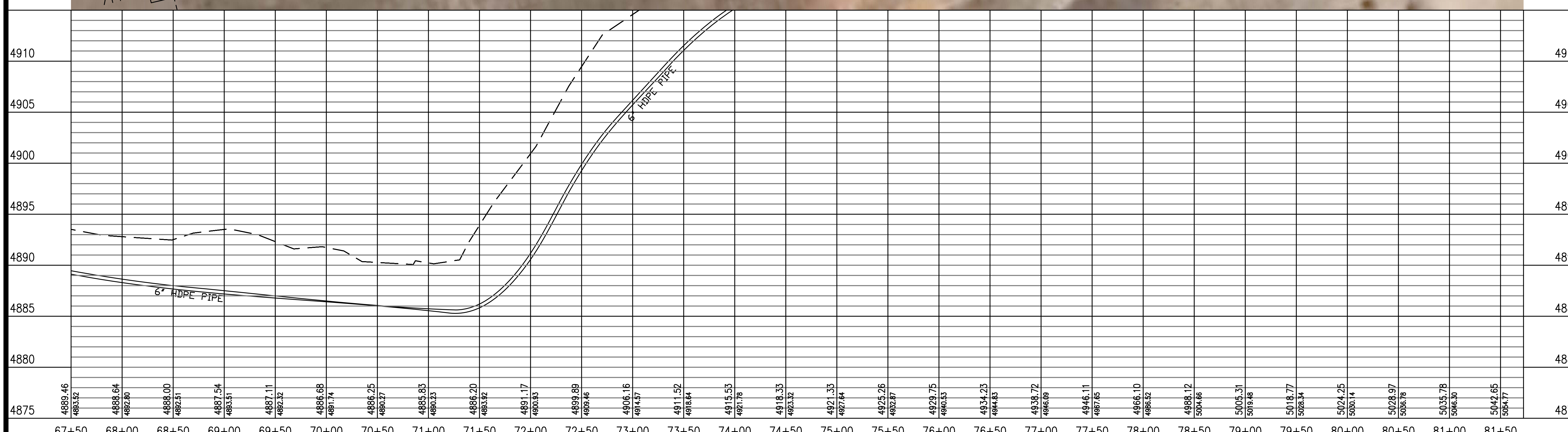

Station		
67+50	4889.46	4893.52
68+00	4888.64	4892.80
68+50	4888.00	4892.51
69+00	4887.54	4893.51
69+50	4887.11	4892.32
70+00	4886.68	4891.74
70+50	4886.25	4890.27
71+00	4885.83	4890.23
71+50	4886.20	4893.92
72+00	4891.17	4900.93
72+50	4899.89	4909.46
73+00	4906.16	4914.57
73+50	4911.52	4918.64
74+00	4915.53	4921.78
74+50	4918.33	4923.32
75+00	4921.33	4927.64
75+50	4925.26	4932.87
76+00	4929.75	4940.53
76+50	4934.23	4944.83
77+00	4938.72	4946.09
77+50	4946.11	4967.65
78+00	4966.10	4986.52
78+50	4988.12	5004.66
79+00	5005.31	5019.48
79+50	5018.77	5028.34
80+00	5024.25	5030.14
80+50	5028.97	5036.78
81+00	5035.78	5046.30
81+50	5042.65	5054.77

DESIGNED	HRT	6-07	CHECKED CEJ	6-07
DRAWN	DMF	8-07	CHECKED CEJ	6-07
SURVEYED	BHT	5-06	CHECKED LMS	5-06
R.O.W.	LMS	5-06	CHECKED CEJ	5-06

THIS DRAWING IS TO BE USED FOR THIS PROJECT AND THIS PROJECT ONLY UNLESS AUTHORIZED BY THE PROJECT ENGINEER AT JOHANSEN & TUTTLE ENGINEERS INC.

REV.	DESCRIPTION	BY.	DATE
-	—	—	-.-.-

johansen & tuttle ENGINEERING INC.
BOX 487, CASTLE DALE, UTAH 84513 (435) 381-2523
FAX (435) 381-2522 EMAIL jt@etv.net

UTAH STATE DFCM
YUBA STATE PARK WATERLINE
REPLACEMENT PROJECT
DFCM #07344510

PLAN AND PROFILE

ISSUE DATE
9/10/07

SHEET NO.
PP 06

C:\Documents and Settings\All Users\Documents\Projects\Yuba Water Line\EaglePointRCp08001.dwg, 2/13/2008 11:37:59 AM, DMF

6" HDPE PIPE

6" HDPE PIPE

72+00	72+50	73+00	73+50	74+00	74+50	75+00	75+50	76+00	76+50	77+00	77+50	78+00	78+50	79+00	79+50	80+00	80+50	81+00	81+50	82+00	82+50	83+00	83+50	84+00	84+50	85+00	85+50	86+00
4891.17	4899.89	4906.16	4911.52	4915.55	4918.33	4921.33	4925.26	4929.75	4934.23	4938.72	4946.11	4966.10	4988.12	5005.31	5018.77	5024.25	5028.97	5035.78	5042.65	5051.96	5065.02	5079.42	5092.71	5099.77	5101.06	5101.91	5105.71	5109.55
4900.93	4903.46	4914.57	4918.64	4921.78	4923.32	4927.64	4932.87	4940.53	4944.83	4946.09	4967.65	4986.52	5004.66	5019.48	5028.34	5030.14	5036.78	5046.30	5054.77	5061.08	5078.62	5084.92	5104.21	5104.78	5110.58	5106.86	5113.66	5114.62

5010	5005	5000	4995	4990	4985	4980	4975	4970	4965	4960	4955	4950	4945	4940	4935	4930	4925	4920	4915	4910

REV.	DESCRIPTION	BY:	DATE
-	-	-	-/-/-

DESIGNED	HRT	6-07	CHECKED CEJ 6-07
DRAWN	DMF	8-07	CHECKED CEJ 6-07
SURVEYED	BHT	5-06	CHECKED LMS 5-06
R.O.W.	LMS	5-06	CHECKED CEJ 5-06

THIS DRAWING IS TO BE USED FOR THIS PROJECT AND THIS PROJECT ONLY UNLESS AUTHORIZED BY THE PROJECT ENGINEER AT JOHANSEN & TUTTLE ENGINEERS INC.

Johansen & Tuttle ENGINEERING INC.
BOX 487, CASTLE DALE, UTAH 84513 (435) 381-2523
FAX (435) 381-2522 EMAIL jt@etv.net

UTAH STATE DFCM
YUBA STATE PARK WATERLINE
REPLACEMENT PROJECT
DFCM #07344510

PROFILE SHEET

ISSUE DATE
9/10/07

SHEET NO.
PP 07

C:\Documents and Settings\All Users\Documents\Projects\Yuba Water Line\EaglePointRCp090001.dwg, 2/13/2008 11:31:26 AM, DMF

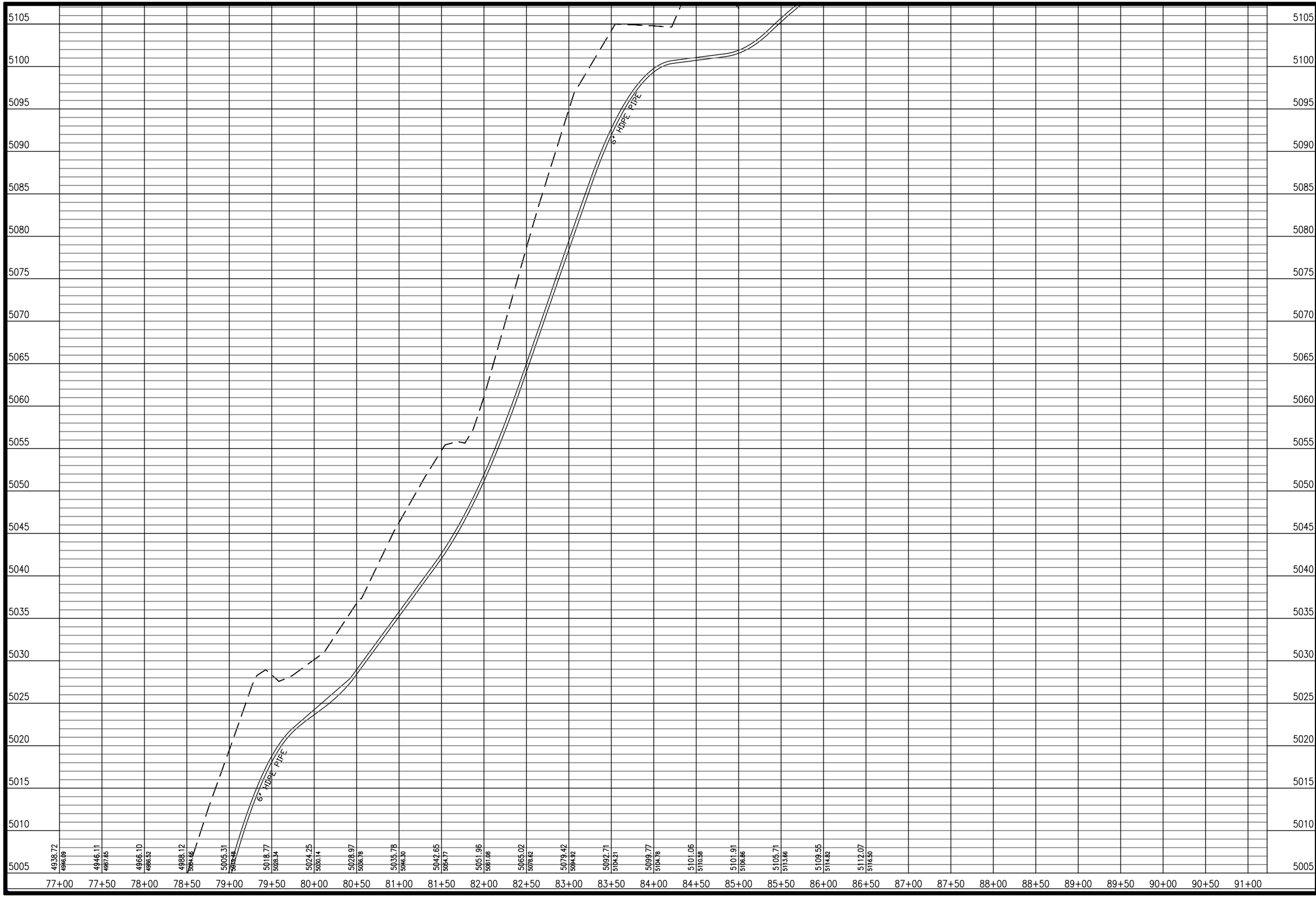

DESIGNED	HRT	6-07	CHECKED CEJ 6-07
DRAWN	DMF	8-07	CHECKED CEJ 6-07
SURVEYED	BHT	5-06	CHECKED LMS 5-06
R.O.W.	LMS	5-06	CHECKED CEJ 5-06

THIS DRAWING IS TO BE USED FOR THIS PROJECT AND THIS PROJECT ONLY UNLESS AUTHORIZED BY THE PROJECT ENGINEER AT JOHANSEN & TUTTLE ENGINEERS INC.

REV.	DESCRIPTION	BY:	DATE
-	-	-	-/-/-

Johansen & Tuttle ENGINEERING INC.
BOX 487, CASTLE DALE, UTAH 84513 (435) 381-2523
FAX (435) 381-2522 EMAIL jt@etv.net

UTAH STATE DFCM
YUBA STATE PARK WATERLINE
REPLACEMENT PROJECT
DFCM #07344510

PROFILE SHEET

ISSUE DATE
9/10/07

SHEET NO.
PP 08

C:\Documents and Settings\All Users\Documents\Projects\Yuba Water Line\EaglePointRCp07001.dwg, 2/13/2008 11:30:45 AM, DMF

THIS DRAWING IS TO BE USED FOR THIS PROJECT AND THIS PROJECT ONLY UNLESS AUTHORIZED BY THE PROJECT ENGINEER AT JOHANSEN & TUTTLE ENGINEERS INC.

REV.	DESCRIPTION	BY:	DATE
-	_____	_____	-_-_-

DESIGNED	HRT	6-07	CHECKED CEJ 6-07
DRAWN	DMF	8-07	CHECKED CEJ 6-07
SURVEYED	BHT	5-06	CHECKED LMS 5-06
R.O.W.	LMS	5-06	CHECKED CEJ 5-06

Johansen & Tuttle ENGINEERING INC.
BOX 487, CASTLE DALE, UTAH 84513 (435) 381-2523
FAX (435) 381-2522 EMAIL jt@etv.net

UTAH STATE DFCM
YUBA STATE PARK WATERLINE
REPLACEMENT PROJECT
DFCM #07344510

PLAN AND PROFILE

ISSUE DATE
9/10/07

SHEET NO.
PP 09