PROJECT NO.	SHEET NO.
07350510	1

ISSUE DATE 3-6-2008

STATE OF UTAH
DIVISION OF FACILITIES AND CONSTRUCTION MANAGEMENT

SAND HOLLOW STATE PARK
WATER CRAFT RAMP
PROJECT NO. 07350510
2008

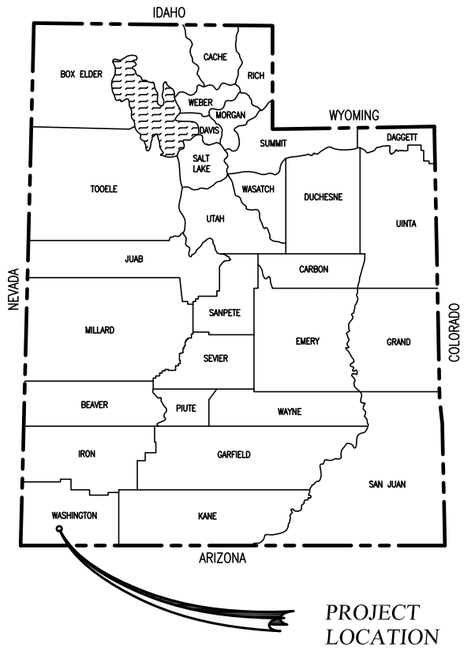

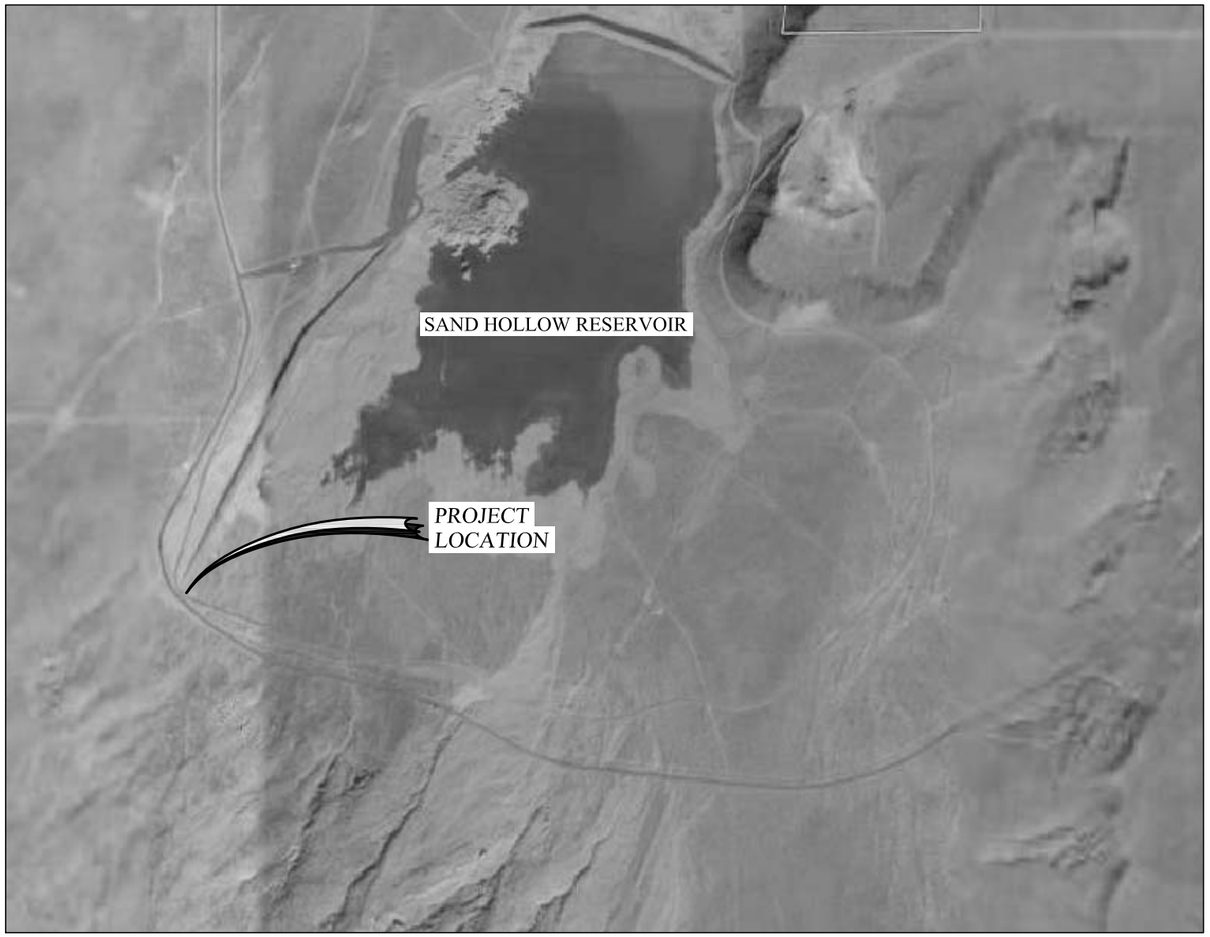

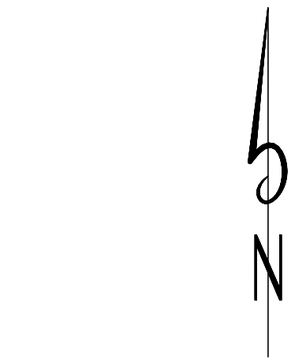

THE GREAT SEAL OF THE STATE OF UTAH
INDUSTRY
1847
1896

RECOMMENDED FOR APPROVAL:

LICENSED PROFESSIONAL ENGINEER
No. 146602
CRAIG E. JOHANSEN
STATE OF UTAH

PROJECT ENGINEER — 3-17-08 DATE

APPROVALS:

STATE OF UTAH DFCM — 3-17-08 DATE

UTAH STATE DIVISION OF PARKS AND RECREATION — 3-17-08 DATE

johansen & tuttle ENGINEERING INC.
BOX 487, CASTLE DALE, UTAH 84513 (435) 381-2523
FAX (435) 381-2522 email jt@etv.net

INDEX TO SHEETS

SHEETS	DESCRIPTION
1	TITLE SHEET
1A	SUMMARY SHEET
SP 01–02	SITE PLAN
PP 01	PLAN AND PROFILE
TS 01	TYPICAL SECTIONS
DT 01	DETAIL SHEET
CS 01–02	CROSS SECTION

SUMMARY OF ITEMS

ITEM	SPEC. SECTION	DESCRIPTION	UNIT	QUANTITY USE
1	8	MOBILIZATION	LUMP	1
2	10	HOT MIX ASPHALT, (PG58–22) 1/2–INCH MAX	SQ. FT.	58120
3	10	ASPHALT CONCRETE PAVEMENT SAWING	LIN. FT.	235
4	21	EXCAVATION	CU. Y.D.	2370
5	23	UNTREATED BASE COURSE (1–INCH MAX.)	CU. Y.D.	1275
6	23	GRANULAR BARROW	CU. Y.D.	4366
7	24	SUMP DRAIN FIELD	LUMP	1
8	32	CONCRETE WATERCRAFT RAMP	CU. Y.D.	345
9	32	DROP INLET BOX	EACH	1
10	32	24" CONCRETE CURB AND GUTTER	LIN. FT.	1320
11	32	PEDESTRIAN ACCESS	EACH	1
12	61	RIP RAP	CU. Y.D.	955
13	93	TRAFFIC STRIPING PAINT	LUMP	1
14	94	TRAFFIC SIGN	EACH	2

THIS DRAWING IS TO BE USED FOR THIS PROJECT AND THIS PROJECT ONLY UNLESS AUTHORIZED BY THE PROJECT ENGINEER AT JOHNSEN & TUTTLE ENGINEERS INC.

REV.	DESCRIPTION	BY	DATE
-	_____	_____	-_-_-

DESIGNED	HRT	6–07	CHECKED	CEJ 6–07
DRAWN	DMF	8–07	CHECKED	CEJ 6–07
SURVEYED	BHT	5–06	CHECKED	LMS 5–06
R.O.W.	LMS	5–06	CHECKED	CEJ 5–06

Johnsen & Tuttle ENGINEERING INC.
BOX 487, CASTLE DALE, UTAH 84513 (435) 381–2523
FAX (435) 381–2522 EMAIL jt@etv.net

STATE of UTAH DFCM
SAND HOLLOW STATE PARK
WATER CRAFT RAMP
PROJECT NO. 07350510

INDEX SHEET AND SUMMARY OF ITEMS

PROJECT NO. 07350510

SHEET NO. 1A

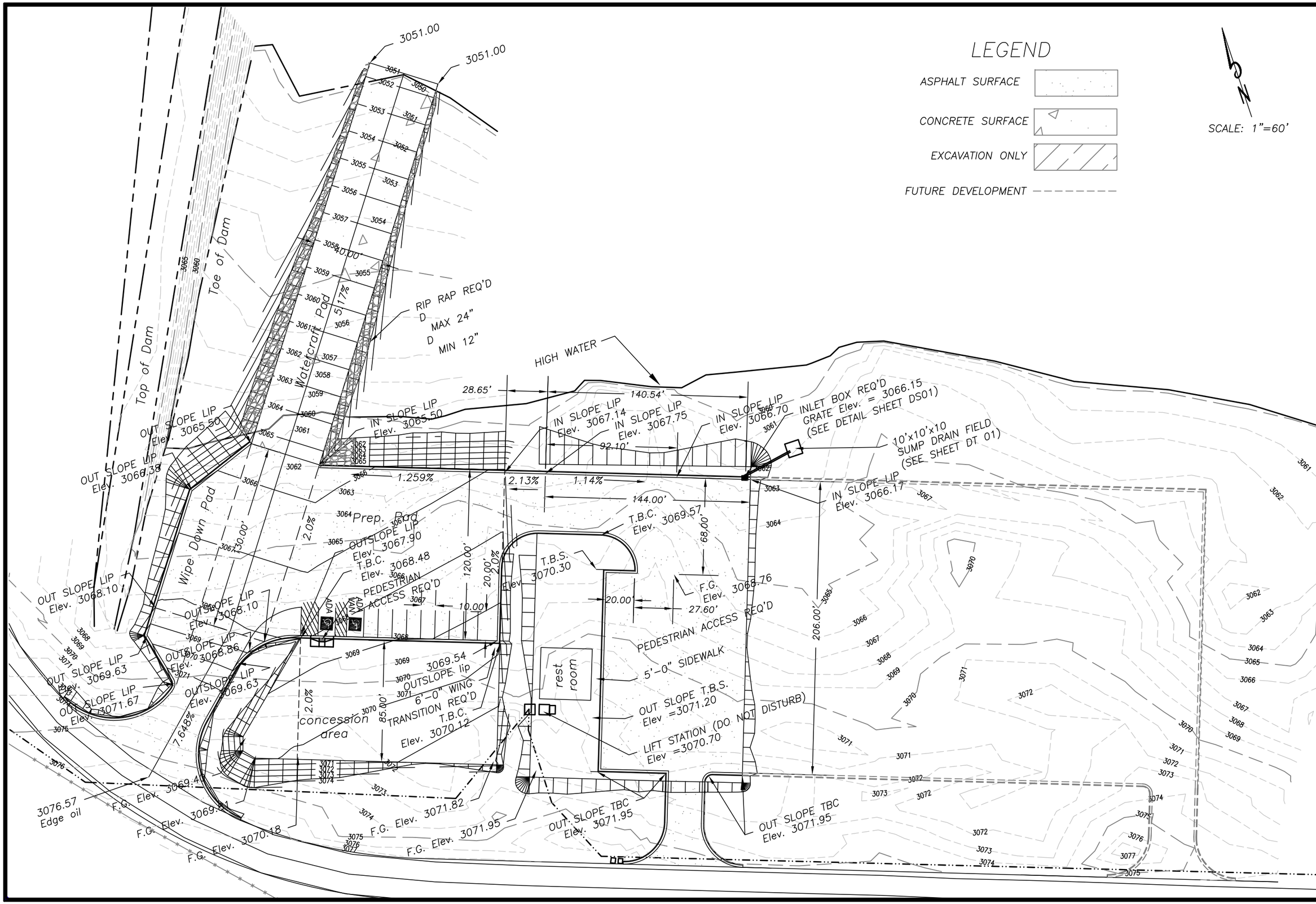

DESIGNED	HRT	6-07	CHECKED	CEJ	6-07
DRAWN	DMF	8-07	CHECKED	CEJ	6-07
SURVEYED	BHT	5-06	CHECKED	LMS	5-06
R.O.W.	LMS	5-06	CHECKED	CEJ	5-06

THIS DRAWING IS TO BE USED FOR THIS PROJECT AND THIS PROJECT ONLY UNLESS AUTHORIZED BY THE PROJECT ENGINEER AT JOHANSEN & TUTTLE ENGINEERS INC.

REV.	DESCRIPTION	BY.	DATE
-			-

johansen & tuttle ENGINEERING INC.
BOX 487, CASTLE DALE, UTAH 84513 (435) 381-2523
FAX (435) 381-2522 EMAIL jt@etv.net

STATE of UTAH DFCM
SAND HOLLOW STATE PARK
WATER CRAFT RAMP
PROJECT NO. 07350510

WATERCRAFT RAMP
AND PARKING
PLAN VIEW

PROJECT NO.
07350510

SHEET NO.
SP 01

LEGEND

ASPHALT SURFACE

CONCRETE SURFACE

EXCAVATION ONLY

FUTURE DEVELOPMENT ---------

SCALE: 1"=60'

EOP Sta = 14+10.11

10'x10'x10 SUMP DRAIN FIELD (SEE SHEET DT 01)

BOP Sta = 10+00.10

EOP Sta = 13+58.60

BOP Sta = 8+82.84

ADA VAN

ADA

9+00 10+00 11+00 12+00 13+00 14+00

THIS DRAWING IS TO BE USED FOR THIS PROJECT AND THIS PROJECT ONLY UNLESS AUTHORIZED BY THE PROJECT ENGINEER AT JOHANSEN & TUTTLE ENGINEERING INC.

REV.	DESCRIPTION	BY:	DATE

DESIGNED	HRT	6-07	CHECKED CEJ 6-07
DRAWN	DMF	8-07	CHECKED CEJ 6-07
SURVEYED	BHT	5-06	CHECKED LMS 5-06
R.O.W.	LMS	5-06	CHECKED CEJ 5-06

Johansen & Tuttle ENGINEERING INC.
BOX 487, CASTLE DALE, UTAH 84513 (435) 381-2523
FAX (435) 381-2522 EMAIL jt@etv.net

STATE of UTAH DFCM
SAND HOLLOW STATE PARK
WATER CRAFT RAMP
PROJECT NO. 07350510

WATERCRAFT RAMP AND PARKING SITE PLAN

PROJECT NO. 07350510

SHEET NO. SP 02

SCALE 1" = 50'

PI Sta = 10+00.10
N = 17689.30
E = 16793.72
Δ = 11°48'59"

BOP = 8+82.81
N = 17610.09
E = 16707.22

N 47°31'03" E
117.29 FT

BOP Sta = 8+82.81

EOP = 14+10.11
N = 18022.26
E = 17206.98

N 35°42'04" E
410.91 FT

EOP Sta = 14+10.11

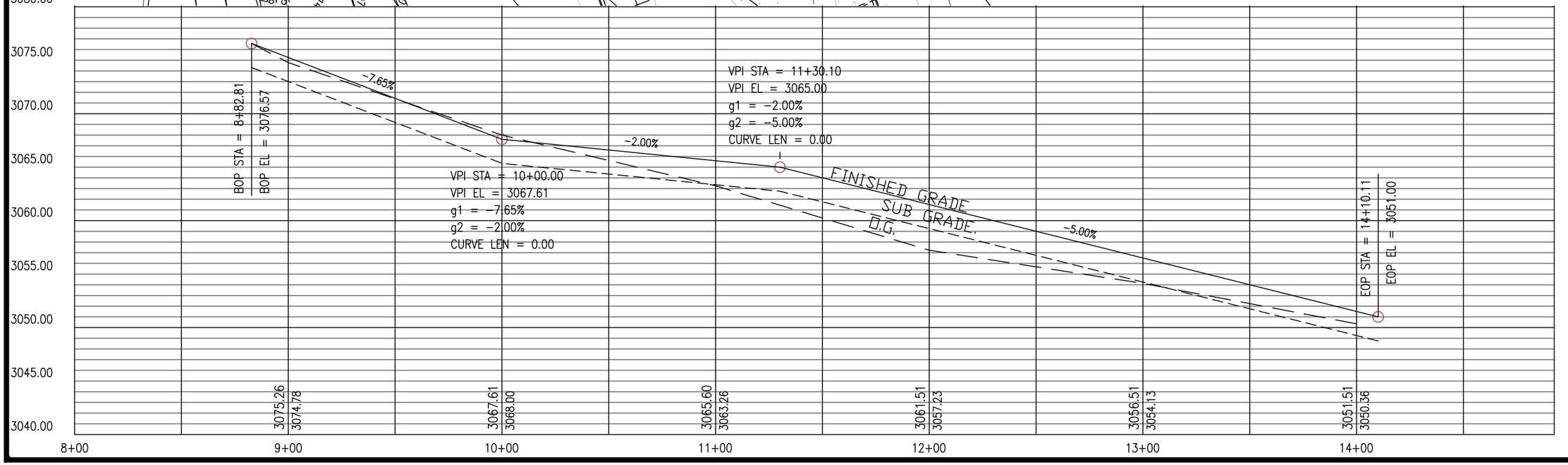

DESIGNED	HRT	6-07	CHECKED	CEJ	6-07
DRAWN	DMF	8-07	CHECKED	CEJ	6-07
SURVEYED	BHT	5-06	CHECKED	LMS	5-06
R.O.W.	LMS	5-06	CHECKED	CEJ	5-06

REV.	DESCRIPTION	BY.	DATE
-	-	-	-/-/-

THIS DRAWING IS TO BE USED FOR THIS PROJECT AND THIS PROJECT ONLY UNLESS AUTHORIZED BY THE PROJECT ENGINEER AT JOHANSEN & TUTTLE ENGINEERS INC.

Johansen & Tuttle ENGINEERING INC.
BOX 487, CASTLE DALE, UTAH 84513 (435) 381-2523
FAX (435) 381-2522 EMAIL jt@etv.net

STATE of UTAH DFCM
SAND HOLLOW STATE PARK
WATER CRAFT RAMP
PROJECT NO. 07350510

WATERCRAFT RAMP
PLAN AND PROFILE

PROJECT NO.
07350510

SHEET NO.
PP 01

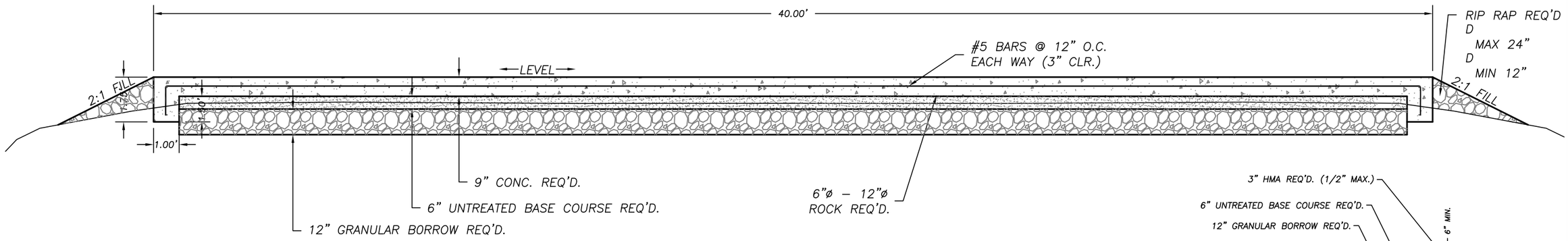

TYPICALWATER CRAFT RAMP SECTION

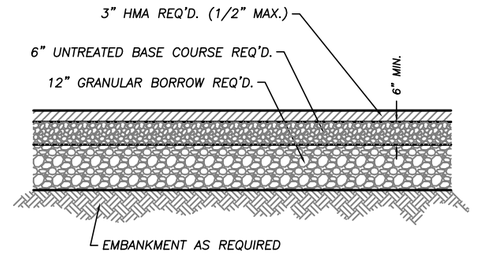

PAVEMENT DETAIL

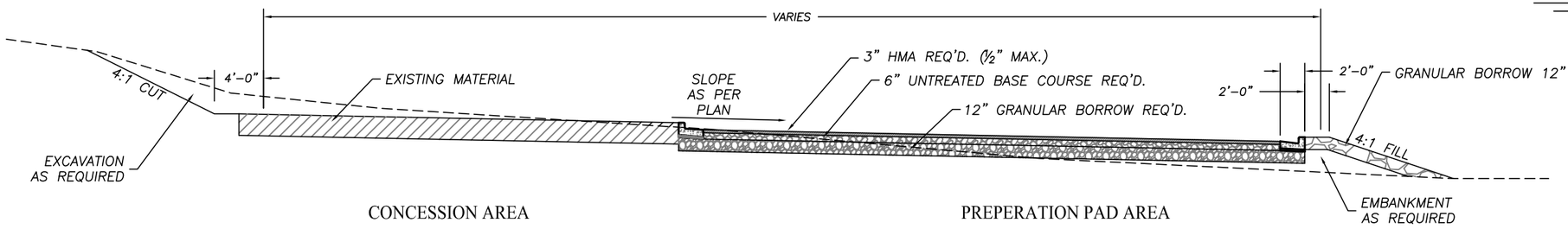

TYPICAL PREP PAD/ CONCESSION SECTION

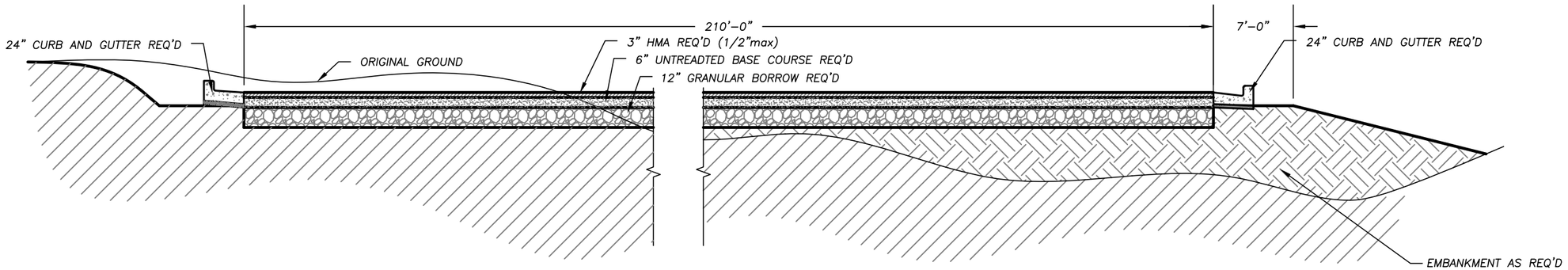

TYPICAL PARKING LOT SECTION

THIS DRAWING IS TO BE USED FOR THIS PROJECT AND THIS PROJECT ONLY UNLESS AUTHORIZED BY THE PROJECT ENGINEER AT JOHANSEN & TUTTLE ENGINEERS, INC.

REV.	DESCRIPTION	BY	DATE
–			–/–/–

DESIGNED	HRT	6–07	CHECKED CEJ 6–07
DRAWN	DMF	8–07	CHECKED CEJ 6–07
SURVEYED	BHT	5–06	CHECKED LMS 5–06
R.O.W.	LMS	5–06	CHECKED CEJ 5–06

Johansen & Tuttle ENGINEERING INC.
BOX 487, CASTLE DALE, UTAH 84513 (435) 381-2523
FAX (435) 381-2522 EMAIL jt@etv.net

STATE of UTAH DFCM
SAND HOLLOW STATE PARK
WATER CRAFT RAMP
PROJECT NO. 07350510

TYPICAL SECTION

PROJECT NO.
07350510

SHEET NO.
TS 01

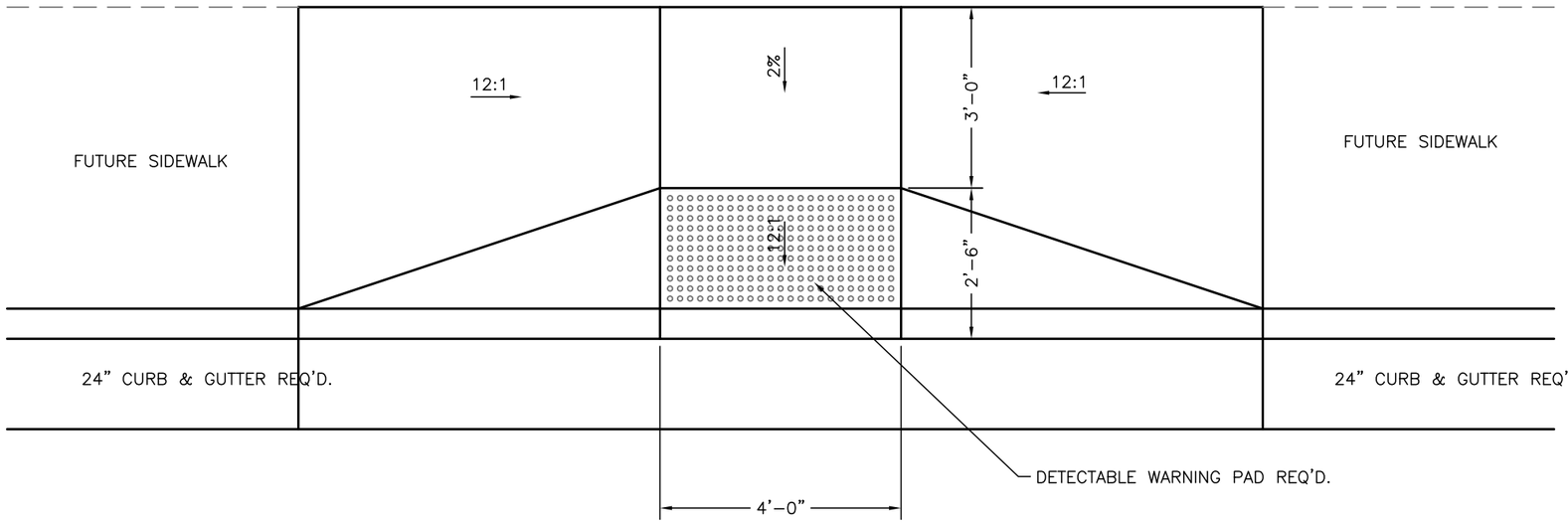

PLAN VIEW

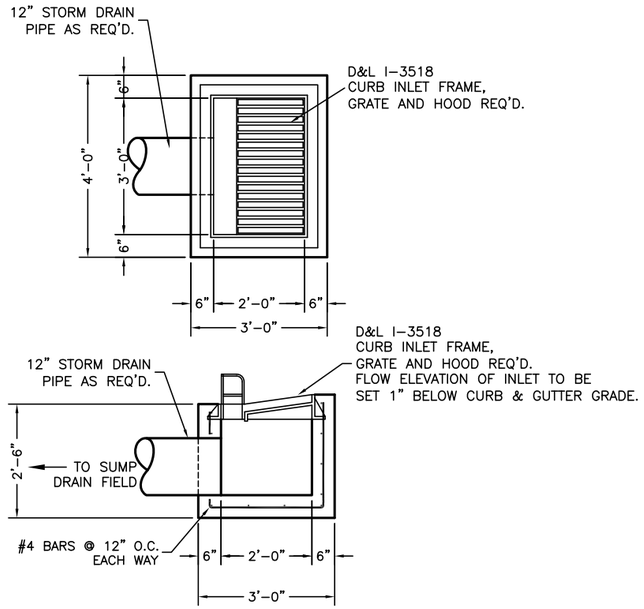

INLET BOX DETAIL

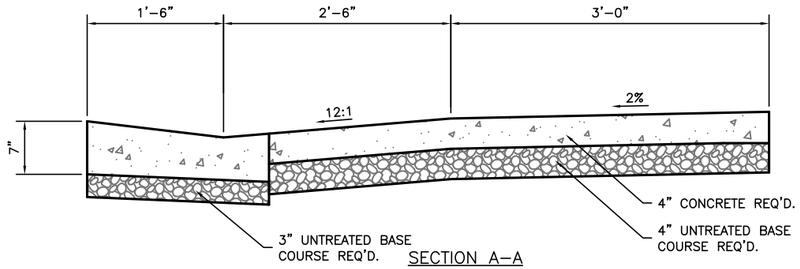

PEDESTRIAN ACCESS DETAIL

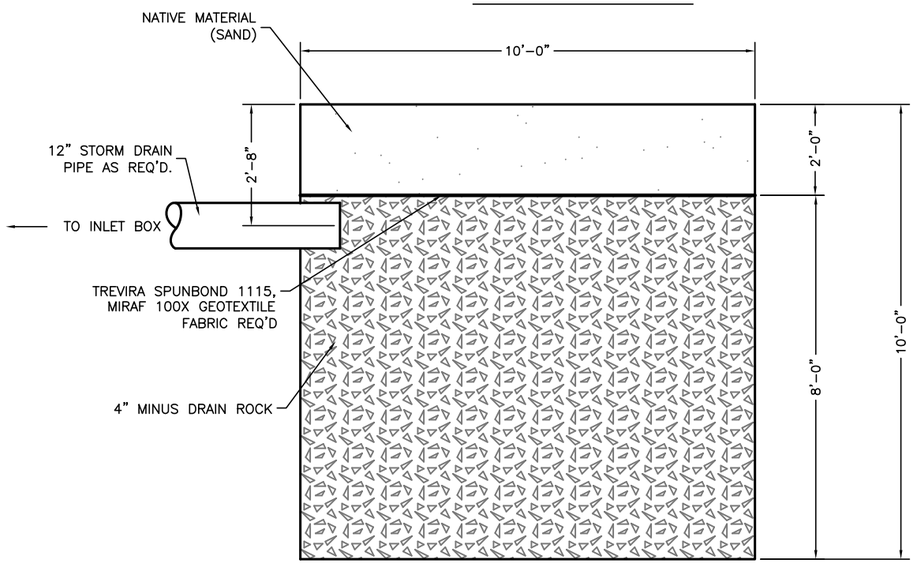

SUMP DRAIN FIELD

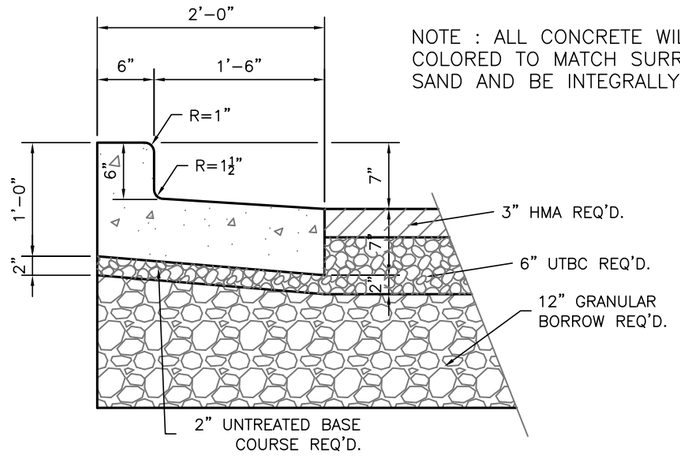

OUT SLOPE CURB DETAIL

NOTE : ALL CONCRETE WILL BE COLORED TO MATCH SURROUNDING SAND AND BE INTEGRALLY MIXED

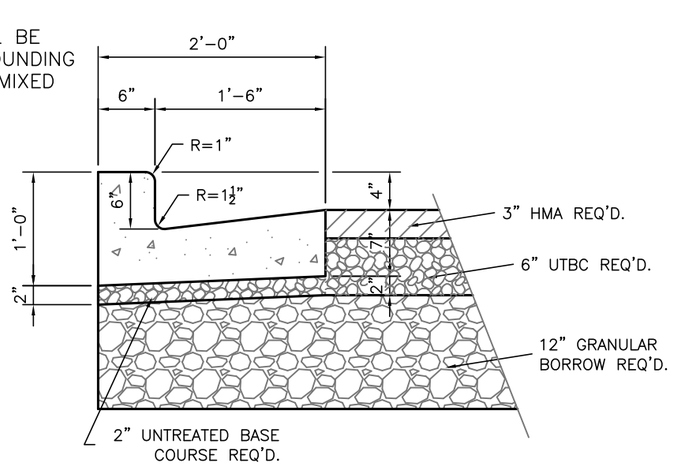

IN SLOPE CURB DETAIL

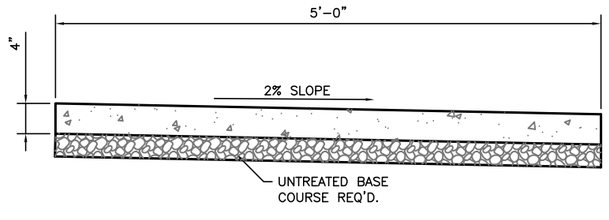

5'-0" SIDEWALK DETAIL

REV:	DESCRIPTION	BY:	DATE
-	-	-	-/-/-

THIS DRAWING IS TO BE USED FOR THIS PROJECT AND THIS PROJECT ONLY UNLESS AUTHORIZED BY THE PROJECT ENGINEER AT JOHANSEN & TUTTLE ENGINEERS INC.

	DESIGNED	DRAWN	SURVEYED	R.O.W.
	HRT	DMF	BHT	LMS
	6-07	8-07	5-06	5-06
	CHECKED	CHECKED	CHECKED	CHECKED
	CEJ	CEJ	LMS	CEJ
	6-07	6-07	5-06	5-06

Johansen & Tuttle ENGINEERING INC.
BOX 487, CASTLE DALE, UTAH 84513 (435) 381-2523
FAX (435) 381-2522 EMAIL jt@etv.net

STATE of UTAH DFCM
SAND HOLLOW STATE PARK
WATER CRAFT RAMP
PROJECT NO. 07350510

DETAIL SHEET

PROJECT NO. 07350510

SHEET NO. DT 01

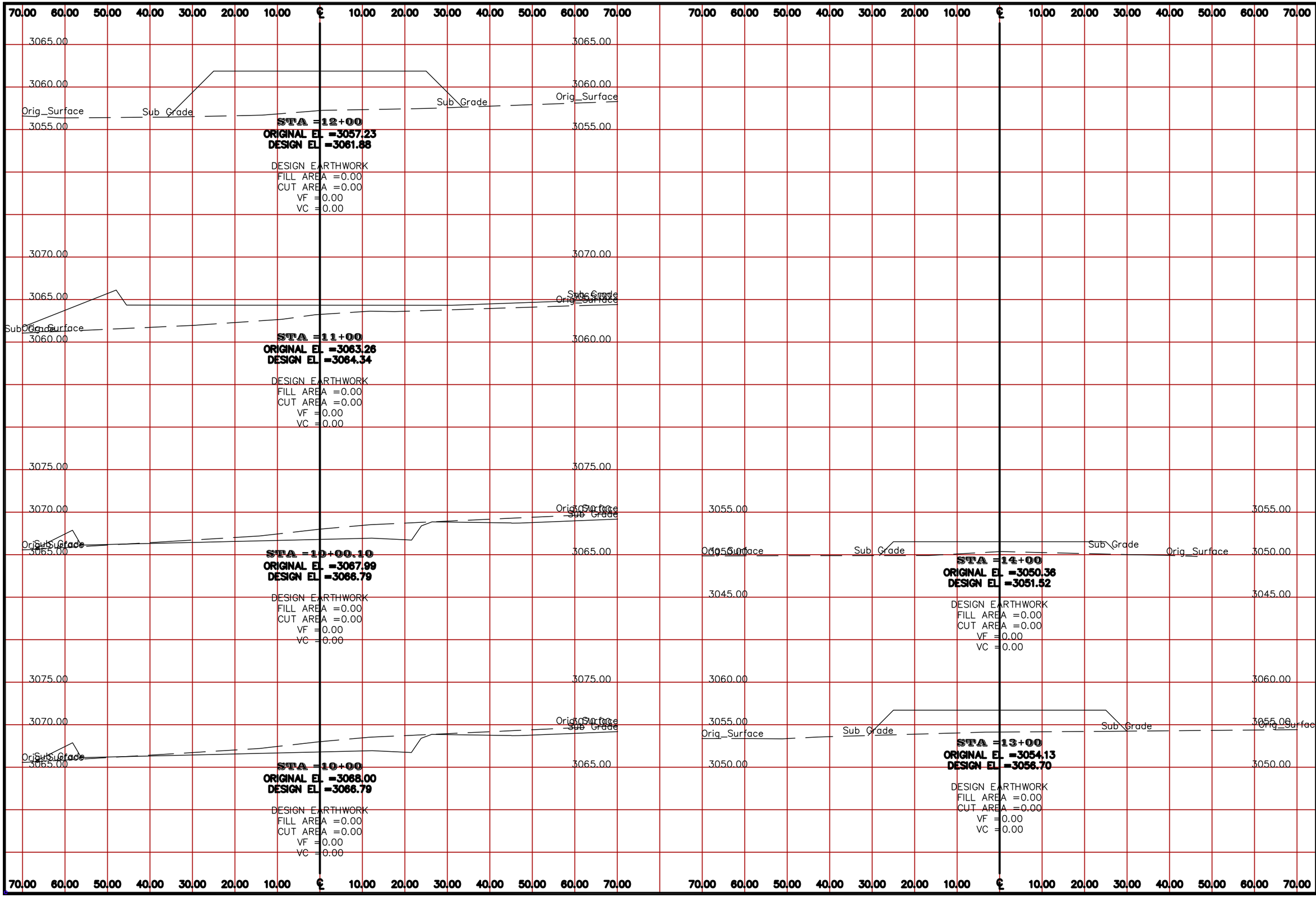

DESIGNED	HRT	6-07	CHECKED	CEJ 6-07
DRAWN	DMF	8-07	CHECKED	CEJ 6-07
SURVEYED	BHT	5-06	CHECKED	LMS 5-06
R.O.W.	LMS	5-06	CHECKED	CEJ 5-06

THIS DRAWING IS TO BE USED FOR THIS PROJECT AND THIS PROJECT ONLY UNLESS AUTHORIZED BY THE PROJECT ENGINEER AT JOHANSEN & TUTTLE ENGINEERS INC.

REV.	DESCRIPTION	BY:	DATE
-	-	-	-

Johansen & Tuttle ENGINEERING INC.
BOX 487, CASTLE DALE, UTAH 84513 (435) 381-2523
FAX (435) 381-2522 EMAIL jt@etv.net

STATE of UTAH DFCM
SAND HOLLOW STATE PARK
WATER CRAFT RAMP
PROJECT NO. 07350510

WATERCRAFT RAMP
CROSS SECTION

PROJECT NO.
07350510

SHEET NO.
CS 01

150.00 140.00 130.00 120.00 110.00 100.00 90.00 80.00 70.00 60.00 50.00 40.00 30.00 20.00 10.00 ℄ 10.00 20.00 30.00 40.00 50.00 60.00 70.00 80.00 90.00 100.00 110.00 120.00 130.00 140.00 150.00

3070.00
3065.00
3060.00

West Parking Sub
Orig_Surface

STA =13+58.60
ORIGINAL EL =3066.66
DESIGN EL =3067.05

DESIGN EARTHWORK
FILL AREA =196.78
CUT AREA =1282.04
VF =260.45
VC =1550.05

3075.00
3070.00
3065.00
3060.00

West Parking Sub
Orig_Surface

STA =13+00
ORIGINAL EL =3068.39
DESIGN EL =3067.82

DESIGN EARTHWORK
FILL AREA =43.22
CUT AREA =238.47
VF =160.07
VC =883.22

3075.00
3070.00
3065.00
3060.00

West Parking Sub
Orig_Surface

STA =11+00
ORIGINAL EL =3067.77
DESIGN EL =3066.50

DESIGN EARTHWORK
FILL AREA =0.00
CUT AREA =0.00
VF =0.00
VC =0.00

150.00 140.00 130.00 120.00 110.00 100.00 90.00 80.00 70.00 60.00 50.00 40.00 30.00 20.00 10.00 ℄ 10.00 20.00 30.00 40.00 50.00 60.00 70.00 80.00 90.00 100.00 110.00 120.00 130.00 140.00 150.00

DESIGNED	HRT	6-07
DRAWN	DMF	8-07
SURVEYED	BHT	5-06
R.O.W.	LMS	5-06

CHECKED	CEJ	6-07
CHECKED	CEJ	6-07
CHECKED	LMS	5-06
CHECKED	CEJ	5-06

THIS DRAWING IS TO BE USED FOR THIS PROJECT AND THIS PROJECT ONLY UNLESS AUTHORIZED BY THE PROFESSIONAL ENGINEER AT JOHANSEN & TUTTLE ENGINEERS INC.

REV.	DESCRIPTION	BY:	DATE
-	-	-	-

Johansen & Tuttle ENGINEERING INC.
BOX 487, CASTLE DALE, UTAH 84513 (435) 381-2522 EMAIL jt@etv.net
FAX (435) 381-2522

STATE of UTAH DFCM
SAND HOLLOW STATE PARK
WATER CRAFT RAMP
PROJECT NO. 07350510

WEST PARKING
CROSS SECTION

PROJECT NO.
07350510

SHEET NO.
CS 02