State of Utah

JON M. HUNTSMAN, JR.
Governor

GARY R. HERBERT
Lieutenant Governor

Department of Administrative Services
KIMBERLY K. HOOD
Executive Director

Division of Facilities Construction and Management
DAVID G. BUXTON
Director

ADDENDUM #2

Date:	21 February 2008		
To:	Interested Parties		
From:	Dave McKay, Project Manager		
Reference:	Utah State University Early Childhood Education Research Center– CM/GC DFCM Project No. 08008770		
Subject:	**Addendum No. 2**		
Pages	Addendum	2	pages
	FFKR Architects – Program Draft	209	pages
	USU Utilities Map	1	page
	Total	**212**	**pages**

Note: This Addendum shall be included as part of the Contract Documents. Items in this Addendum apply to all drawings and specification sections whether referenced or not involving the portion of the work added, deleted, modified, or otherwise addressed in the Addendum.

2.1 SCHEDULE CHANGES – There are changes to the project schedule per this addendum.
See attached Revised Project Schedule dates February 21, 2008. Changes are as follows:

1. Cost Proposals, Management Plans, References, Statement of Qualifications and Termination/Debarment Certifications Due: **Thursday, February 28, 2008, by 12 Noon at DFCM 4110 State Office Building, Salt Lake City, Utah.**
2. Interviews: **Tuesday, March 18, 2008, All Day, at the Facilities Conference Room, 1250 East 750 North, Logan, Utah.**
3. Announcement: **Wednesday, March 19, 2007, DFCM Web site (http://dfcm.utah.gov)**

2.2 Program Draft & Utilities Map
PDF's of the most recent draft program fro the project by FFKR Architects and a USU Utilities map are attached as part of this addendum.

2.3 Questions & Answers

The following questions have been asked; answers follow:

Q: Will any of all of the existing soccer playfield be available for construction parking and/or staging?

A: No, regrettably none can be made available.

Q: Will the existing parking lot at the northeast corner of the Emma Eccles Education Building be required to remain accessible and open during the Project's term of construction?

A: Yes, it must remain accessible.

Q: Will any of the existing "Spectrum" parking lot on the north side of the new building site be available for construction parking?

A: No. Other than the limited on site parking, construction parking can be arranged at the Romney Stadium parking lot.

USU regrets that it cannot be more accommodating, USU expects that the group of five tennis courts immediately north of the Education Building can be used by the Project CM/GC ten replaced following completion of the Project.

2.4 Selection Committee

DFCM has invited Allan Cardon of Tracy Bailey Construction to join Dave McKay and Darrell Hart on the Selection Committee.

End of Addendum #2

	STATE OF UTAH - DEPARTMENT OF ADMINISTRATIVE SERVICES **Division of Facilities Construction and Management**	DFCM

PROJECT SCHEDULE – REVISED
PER ADDENDUM NO. 2 ISSUED FEBRUARY 21, 2008

PROJECT NAME: **EARLY CHILDHOOD EDUCATION RESEARCH CENTER**
UTAH STATE UNIVERSITY – LOGAN, UTAH
DFCM PROJECT NO. **08008770** **CM/GC**

Event	Day	Date	Time	Place
Request for Proposals Available	Monday	February 4, 2008	12:00 NOON	DFCM 4110 State Office Bldg SLC, UT and DFCM web site*
Mandatory Pre-Proposal Site Meeting	Thursday	February 14, 2008	1:30 PM	Conference Room Facilities Building Utah State University 1250 East 750 North Logan, UT
Last Day to Submit Questions	Monday	February 18, 2008	4:00 PM	Dave McKay – DFCM E-mail mckay@utah.gov Fax (801)538-3267
Addendum Deadline (exception for proposal delays)	Thursday	February 21, 2008	2:00 PM	DFCM web site *
Cost Proposals, Management Plans, References, Statements of Qualifications, and Termination/Debarment Certifications Due	**Thursday**	**February 28, 2008**	**12:00 NOON**	**DFCM** **4110 State Office Bldg, SLC, UT**
Short Listing by Selection Committee, if applicable.	Tuesday	March 4, 2008	1:00 PM to 5:00 PM	To be determined
Interviews	**Tuesday**	**March 18, 2008**	**ALL DAY**	**Conference Room** **Facilities Building** **Utah State University** **1250 East 750 North** **Logan, UT**
Announcement	**Wednesday**	**March 19, 2008**		**DFCM web site ***
Requested Substantial Completion Date	Thursday	July 1, 2010		

* **DFCM's web site address is http://dfcm.utah.gov**

FFKR
Architects

Emma Eccles Jones
Early Childhood Education and Research Center
Utah State University

Bogue Building
730 Pacific Avenue
Salt Lake City
UT 84104

p 801.521.6186
f 801.539.1916

Facility Program
Draft #2 February 2008

The following Program is being submitted for the

Emma Eccles Jones
Early Childhood Research Center
Utah State University

June 2007

By the Architectural Firm of

FFKR Architects
730 Pacific Avenue
Salt Lake City, UT
84104

Draft

Approved:_____
Carol Strong, Dean, College of Education

Approved:_____
Stanley Kane, Director, Facilities Planning

Approved:_____
Dave McKay, Project Manager, DFCM

PARTICIPANTS

The following is a list of individuals that provided insight and informed the program for the Early Childhood Research Center.

Steering Committee

Carol Strong, Dean, College of Education and Human Services
LuAnn Parkinson, Asst. to the Dean, College of Education and Human Services
Stanley Kane, Director, Facilities Planning
Jordy Guth, Planner, Facilities Planning

Education Department Review Committee

Ray Reutzel, Director, Early Childhood Education
Dave Forbush, Director, Language and Literacy
Karl White, Director, National Center for Hearing Assessment and Management
Beth Foley, Prof., Communicative Disorders and Deaf Education
Ron Gillam, Prof., Communicative Disorders and Deaf Education
Carrie Stott, Program Administrator, Childcare Resource and Referral

Children's House

Linda Gilgen, Director, Children's House
Shelly Lindaur, Director, Child Development Lab

Program Architects and Consultants

<u>Architecture</u>

Rick Frerichs, AIA	FFKR Architects
Eric Thompson, AIA	FFKR Architects

<u>Structural</u>

Jeff Miller	Reaveley Engineers and Associates

<u>Civil/Mechanical</u>

Neil Spensor	Van Boerum & Frank Associates Inc.

<u>Electrical</u>

Carol Feldman	Becherer Neilson Associates

<u>Cost Estimating</u>

Ken Ament	Construction Control Corporation
Kris Larson	Construction Control Corporation

TABLE OF CONTENTS

1.0 EXECUTIVE SUMMARY

1.1 EARLY CHILDHOOD CENTER MISSION Section 1 Page 1
1.2 SUMMARY OF EXISTING AND NEW FACILITIES Section 1 Page 1
1.3 PROJECT DESCRIPTION Section 1 Page 2
1.4 SPACE SUMMARY Section 1 Page 3
1.5 COST SUMMARY Section 1 Page 4
1.6 SCHEDULE Section 1 Page 5

2.0 SITE ANALYSIS

2.1 GENERAL DESCRIPTION Section 2 Page 2
2.2 SITE LOCATION Section 2 Page 3
2.2.1 CAMPUS MAP Section 2 Page 3
2.2.2 AERIAL PHOTO Section 2 Page 4
2.3 SITE CIRCULATION AND PARKING Section 2 Page 5
2.4 TRAFFIC ANALYSIS SUMMARY Section 2 Page 6
2.5 SITE ANALYSES
2.5.1 SCHEME A
2.5.2 SCHEME B
2.5.3 SCHEME C
2.5.4 SCHEME D
2.5.5 SCHEME E
2.5.6 SCHEME F
2.5.7 SCHEME G
2.6 PHYSICAL CHARACTERISTICS Section 2 Page 17
2.6.1 Climate Section 2 Page 17
2.6.2 Geo-technical Report Section 2 Page 17
2.6.3 Site Photos and Views Section 2 Page 18
2.7 EDUCATION PRECINCT MASTER PLAN Section 2 Page 21
2.8 SITE PLANNING PRINCIPALS Section 2 Page 22

3.0 ARCHITECTURAL ISSUES

3.1 SITE CONSIDERATIONS Section 3 Page 2
3.2 QUALITY AND IMAGE Section 3 Page 2
3.3 BUILDING FORM AND MASSING Section 3 Page 3
3.4 INTERNAL CIRCULATION Section 3 Page 4
3.5 INTERNAL RELATIONSHIPS Section 3 Page 5
3.4.1 Level 1 Section 3 Page 5
3.4.2 Level 2 Section 3 Page 6
3.4.3 Level 3 Section 3 Page 7
3.6 BUILDING CODE ANALYSIS Section 3 Page 8

4.0 SPACE USE PROGRAM

4.1 INDIVIDUAL SPACE SUMMARY Section 5 Page 2
4.2 ROOM DATA SHEETS

5.0 BUILDING SYSTEMS PERFORMANCE CRITERIA

5.1 STRUCTURAL Section 5 Page 2
5.2 MECHANICAL, PLUMBING, AND FIRE PROTECTION Section 5 Page 7
5.3 ELECTRICAL Section 5 Page 11

6.0 COST ANALYSIS

6.1 CAPITOL BUDGET ESTIMATE Section 6 Page 2
6.2 PROJECT ESTIMATE Section 6 Page 7
6.3 FURNISHINGS ESTIMATE Section 6 Page 17

1.0 EXECUTIVE SUMMARY

1.1 EARLY CHILDHOOD CENTER MISSION

The proposed new Early Childhood Center will provide for new space to bring together and house early childhood collaborators at USU. The College of Education and Human Services currently has many units and departments involved with research and services related to early childhood education, including early childhood education, psychology, communicative disorders, deaf education, and community outreach. The goal and mission of this new building is five-fold.

- To Forge new cross-disciplinary partnerships among the existing college teacher preparation units and the Edith Bowen Laboratory School to include cutting-edge teaching practices and also allow the ability to broadcast clinical teaching work to other locations.
- To create a Language Development and Literacy Clinic that addresses the needs of children from backgrounds of poverty and from non-English speaking families.
- To provide parents and families with increased access to effective, action-oriented resources and training for home-based and university-based educational and clinical services.
- To extend research, dissemination, and professional development to classrooms and childcare facilities in Utah and beyond through close collaboration with school districts, professional groups, consortiums, and agencies at state and federal levels.
- To increase advocacy and scholarly activity to expand the influence of the EEJ Center at national and international levels, through publication of reports, articles, books, and other research tools in referred venues.

1.2 SUMMARY OF EXISTING AND NEW FACILITIES

In 2004 The Emma Eccles Jones Center for Early Childhood Education opened in new space created as part of the Edith Bowen Laboratory School project. Since opening, it has become clear that there was a need for considerably more space to house early childhood collaborators currently spread out around campus.

The new building will become the new home for the Early Childhood Education (ECE) Faculty as well as the National Center for Hearing Assessment and Management (NCHAM), the new Language and Literacy Learning Laboratory (LLLL), Child Language Disorders Clinic (CLDC), the Academic Interventions Clinic (AIC), Augmentative and Alternative Communication (AAC), and Child Care Resource & Referral (CCRR).. In addition to these College of Education collaborators, the new building will also include a Preschool for the Deaf, and a new Center for Early Care and Education.

The Center for Early Care and Education is a separately programmed and funded facility that is being combined with this building. The new facility will replace the existing Children's House located at 862 East , 900 North in what was formerly a detached, single story residence. The inclusion of the Center for Early Care and Education in this new building also allows some of the program to be shared with the Preschool for the Deaf, including indoor and outdoor play areas, kitchen and restroom facilities, nursery, storage, conference area and laundry facilities. That program document is provided under separate cover.

1.3 PROJECT DESCRIPTION

This program proposes a three story building that will house office space for teachers, researchers, and graduate students; one-way observation booths and the capacity for satellite or internet broadcast; rooms for screening children's hearing and vision; a testing/curriculum library and lending libraries for parents and professionals. The building will contain conference/work rooms and distance-delivery equipped classrooms for teacher preparation and for in-service and outreach training sponsored by the center staff or its invited collaborators. It will also include childcare and deaf preschool facilities with a shared outdoor play area. A main mechanical penthouse is proposed on the roof allowing for a minimum building footprint, outdoor open space, and visitor parking.

1.4 SPACE SUMMARY

Administrative Summary

Private Offices	29	3,390
Open Office	68	3,600
totals		**6,990**

Common Space Summary

9,598

Departmental Summary

ECE - Early Childhood Education	2,360
NCHAM - Nat. Cntr. for Hearing Assessment and Mgmt.	5,820
LLL - Language and Literacy Learning Laboratory	1,093
CLDC- Child Language Disorders Clinic	160
AAC - Augmentative and Alternative Communication	220
Preschool for the Deaf	6,020
Center for Early Care and Education	8,145
totals	**23,818**

Floor Area Summary

	NSF	GSF	
Subtotal level 1	15,455	20,000	
Subtotal level 2	9,193	16,000	
Subtotal level 3	9,354	16,000	
Mechanical Penthouse		4,000	
			net/gross
totals	**34,002**	**56,000**	61%

1.5 COST SUMMARY: Note cost summary as presented is based on 61,000 sf. 56,000 sf is updated 2/6/08

Project Name:	Early Childhood Education Center
Agency/Institution:	USU
Project Manager:	Dave McKay

Cost Summary	**$ Amount**	**Cost Per SF**	**Notes**
Facility Cost	$ 12,956,400	$212.40	
Additional Construction Cost	$ -	$0.00	
Site Cost	$ -	$0.00	
Total Construction Cost	**$ 12,956,400**	**$212.40**	
Soft Costs:			
Hazardous Materials	$ -		
Pre-Design/Planning	$ 100,000		
Design	$ 910,000		
Property Acquisition	$ -		
Furnishings & Equipment	$ 1,615,830		
Information Technology:	$ 195,000		
Utah Art (1% of Construction Budget)	$ -		
Testing & Inspection	$ 130,000		
Contingency	$ 583,038		
Moving/Occupancy	$ 20,000		
Builder's Risk Insurance (0.15% of Construction Budget)	$ 19,435		
Legal Services (0.2% of Construction Budget)	$ 25,913		
DFCM Management	$ -		
User Fees	$ 300,000		
Commissioning	$ 130,000		
CAD Services (0.07% of Construction Budget)	$ 9,069		
Other Costs	$ -		
Total Soft Costs	**$ 4,038,285**	**$66.20**	
TOTAL PROJECT COST	**$ 16,994,685**	**$278.60**	
Previous Funding	**$ -**		
Other Funding Sources (Identify in note)	$ 17,000,000		
REQUEST FOR STATE FUNDING	**$ (5,315)**		

Project Information

Gross Square Feet	61,000	Base Cost Date	Jan. 2007
Net Square Feet	39,276	Estimated Bid Date	Feb. 2008
Net/Gross Ratio	64%	Est. Completion Date	Aug. 2009
		Last Modified Date	24-Jan-07
		Print Date	1/26/2007

1.6 SCHEDULE

Design	April 2008- January 2009
Notice to Proceed	Feb 2009
Substantial Completion	July 2010
Occupancy	August 2010

2.0 SITE ANALYSIS

2.1	GENERAL DESCRIPTION	Section 2 Page 2
2.2	SITE LOCATION	Section 2 Page 3
	2.2.1 CAMPUS MAP	Section 2 Page 3
	2.2.2 AERIAL PHOTO	Section 2 Page 4
2.3	SITE CIRCULATION AND PARKING	Section 2 Page 5
2.4	TRAFFIC ANALYSIS SUMMARY	Section 2 Page 6
2.5	SITE ANALYSES	
	2.5.1 SCHEME A	
	2.5.2 SCHEME B	
	2.5.3 SCHEME C	
	2.5.4 SCHEME D	
	2.5.5 SCHEME E	
	2.5.6 SCHEME F	
	2.2.7 SCHEME G	
2.6	PHYSICAL CHARACTERISTICS	Section 2 Page 17
	2.6.1 Climate	Section 2 Page 17
	2.6.2 Geo-technical Report	Section 2 Page 17
	2.6.3 Site E Photos and Views	Section 2 Page 18
2.7	EDUCATION PRECINCT MASTER PLAN	Section 2 Page 21
2.8	SITE PLANNING PRINCIPALS	Section 2 Page 22

2.1 GENERAL DESCRIPTION

The proposed location for the new Research Center is in the Northeast area of the Education Precinct on the USU campus. The education precinct is roughly defined as the area between 800 and 1200 East and between 700 North and the City Cemetery. (See Campus Map)

The new building is meant to help bring many of the disparate departments together by allowing a synergy to occur through the forging of cross-disciplinary partnerships in a shared facility. It will also facilitate an outreach aspect for the Education Department to extend itself and connect to the community. Relating these ideas to the site planning process will be critical in allowing this building to function in its ultimate capacity.

The Education Precinct Master Plan has defined certain goals related to maintaining open space, developing an image for the Education Precinct, and maintaining connections, literally and figuratively with the campus as a whole. The master plan for this part of campus has been used as a guide for weighing the site options for this building and developing the vehicular and pedestrian circulation related to the new building. The location of this new building will affect the planning and future growth of the Education Precinct and may have a major influence on the traffic patterns in the precinct in the future. A traffic study of the related area was completed in May of 2007 and is available under separate cover.

USU Campus Planning had proposed locating the building at the intersection of 850 North and 1200 East. Most of this area currently consists of surface parking lots for students and faculty. The schemes explored examined this site as well as nearby options. This section of the program will describe the other options and then indicate which location was finally chosen.. Each option has benefits and disadvantages which will be reflected through analysis. The Green space immediately north of the Education Building is considered valuable as a central quad as well as a playing field for the Health, Physical Education, and Recreation Department. And therefore was not being considered as a viable site option for this building.

2.2 SITE LOCATION

2.2.1 CAMPUS MAP

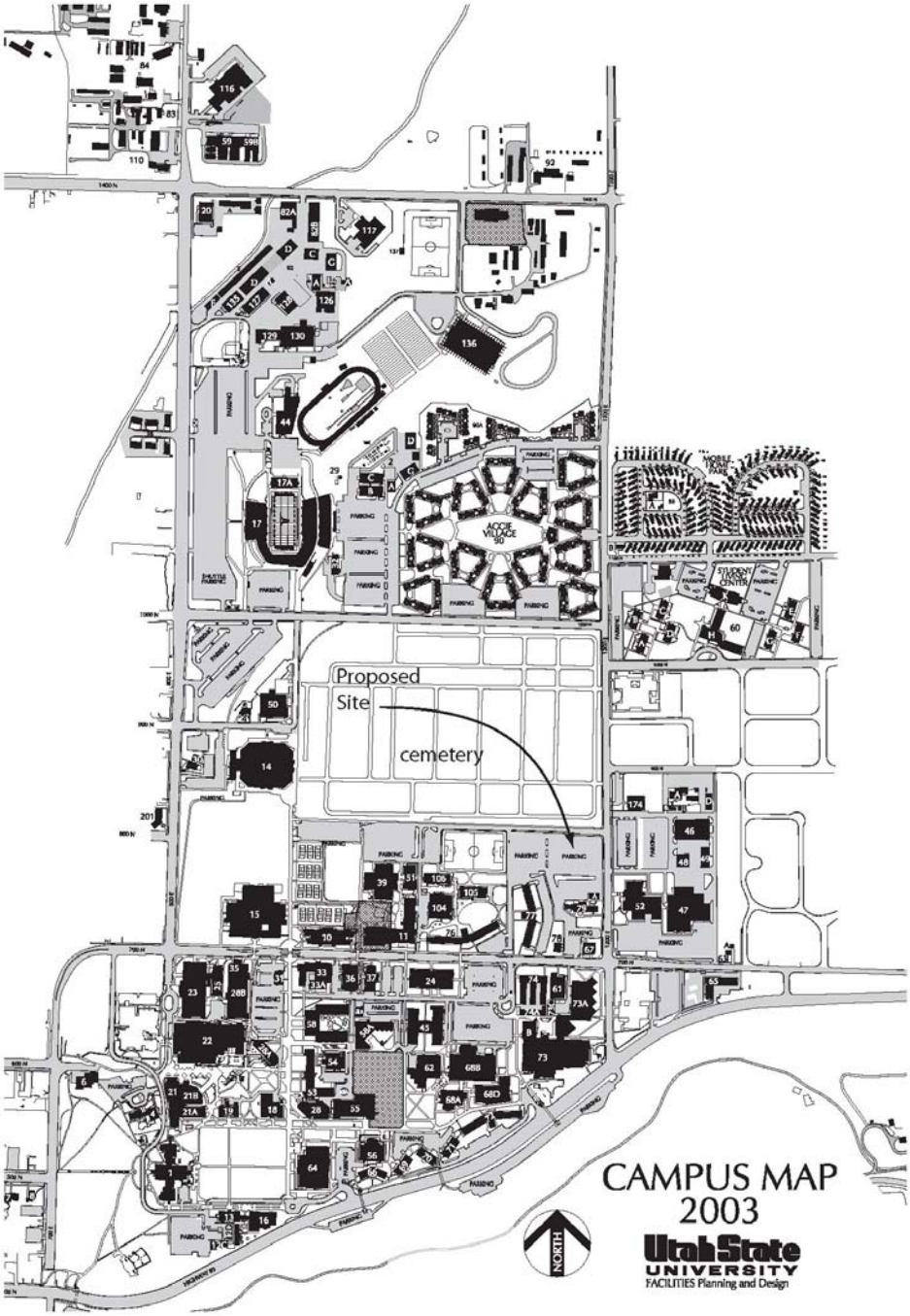

2.2.2 AERIAL PHOTO

2.3 SITE CIRCULATION AND PARKING

All vehicular traffic to the Education Precinct enters either 800 North or 850 North from 1200 East/SR288. 850 North is the main access and entrance road is currently used by those who park in the existing heavily used surface parking lots in the north part of the Precinct as well as those dropping off students of the Edith Bowen School or the Center for Persons with Disabilities. See Wilbur-Smith traffic analysis for in-depth review of these patterns.

The current drop-off route for these facilities forms a loop around the parking lot north of the CPD. Cars must cue here while dropping off or picking up students. There is a drive and parking lot that exists immediately east of the EBLS that is now used as a drop-off for the school. Otherwise it is used by service vehicles and deliveries to the Junction Food Service.

Major north-south campus pedestrian circulation exists immediately west of the CPD and also immediately west of the tennis courts. Important secondary circulation exist's between the CPD and HSRC. This sidewalk serves as the main student path between the parking lot and the EBLS.

New construction in this area will need to accommodate and maintain the drop off and traffic circulation through this area. The existing north-south pedestrian pathways should also be strengthened by the siting and orientation of the new building. This program and the traffic study anticipate that the access points at 800 North and 850 North will remain as circulation points to and from 1200 East.

The building will be visited all through the day and evening by parents and children who have come to utilize the outreach programs being offered. To facilitate public access to these programs, both short term and long term parking should be made available directly adjacent to the building. Some parents will be dropping children off at the daycare facility and others to the preschool or one of the research outreach programs. In both cases the availability of adequate parking will allow the parent to park and walk the children into the building.

2.4 TRAFFIC ANALYSIS SUMMARY

Due to concerns regarding existing traffic and the impact that the new facility in this area would have on traffic flow in and out of the education precinct, USU commissioned a traffic impact study using site scheme E as the basis. The traffic study conducted by Wilbur Smith Associates examined the impact on 850 North and SR-288 (1200 East) from two planned site access points, Driveway #1 (existing) and Driveway #2(proposed).

Wilbur Smith Associates has concluded that the new building will increase local traffic on SR-288 by approximately 4%. The added traffic volume will not significantly affect the level of service of SR-288 and the study intersections are projected to operate at acceptable levels of service in the near term.

2.5 SITE ANALYSES

Of the following 7 site planning schemes, Scheme G has been chosen as the preferred site for the project. The site north of the existing education building provides easy access to the education building directly to the south, it takes no parking spaces in an area where parking is at a premium, and it is close to steam and chilled water mains allowing easy utility connections.

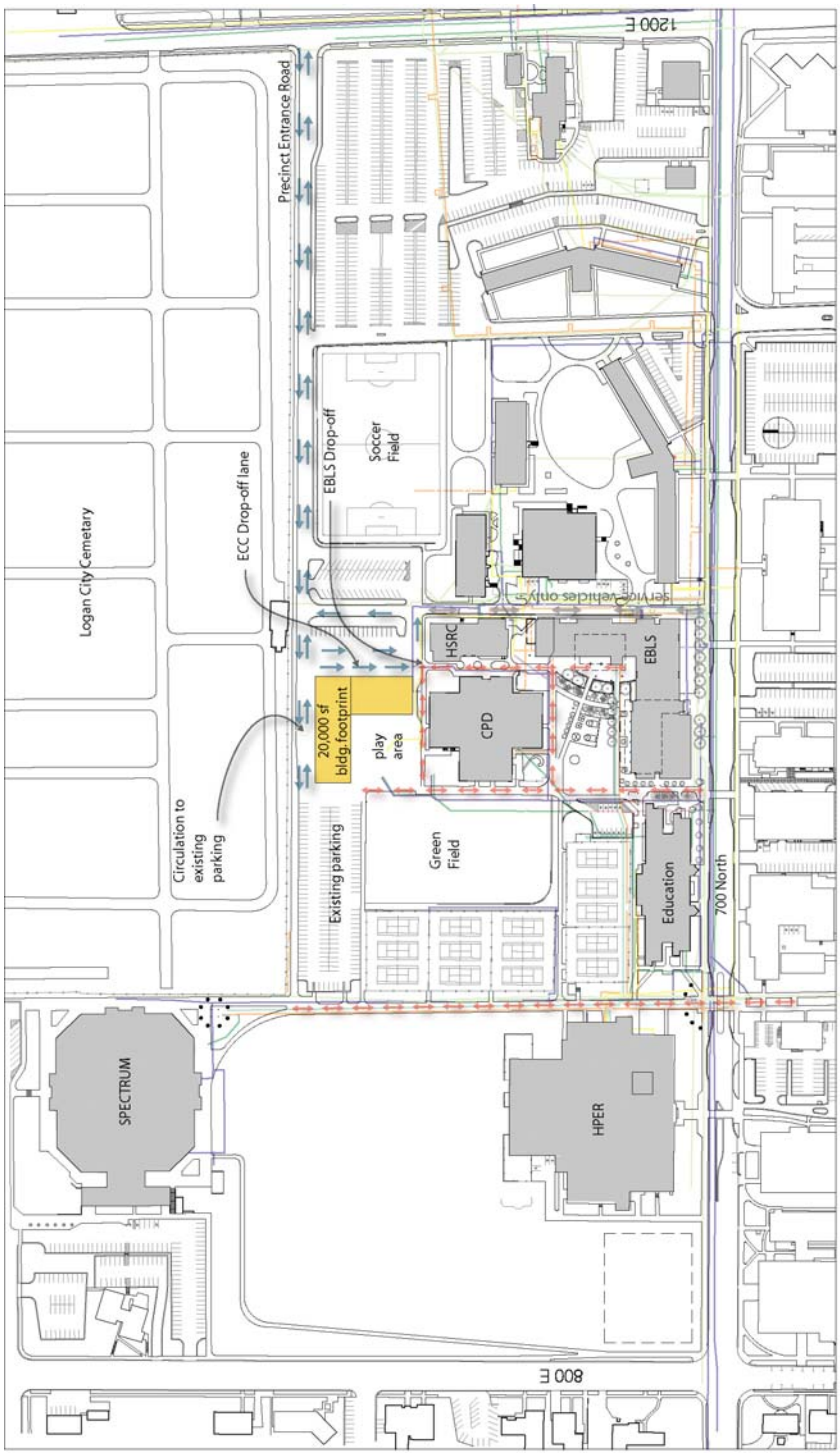

Site Analysis Scheme A

155 Parking spaces lost
Small south facing play area.
Open space connection with major quad/green field.
Vehicular traffic on three sides of building.
Increases congestion for EBLS drop-off.

Steam
Sewer
Water
Gas
Comm

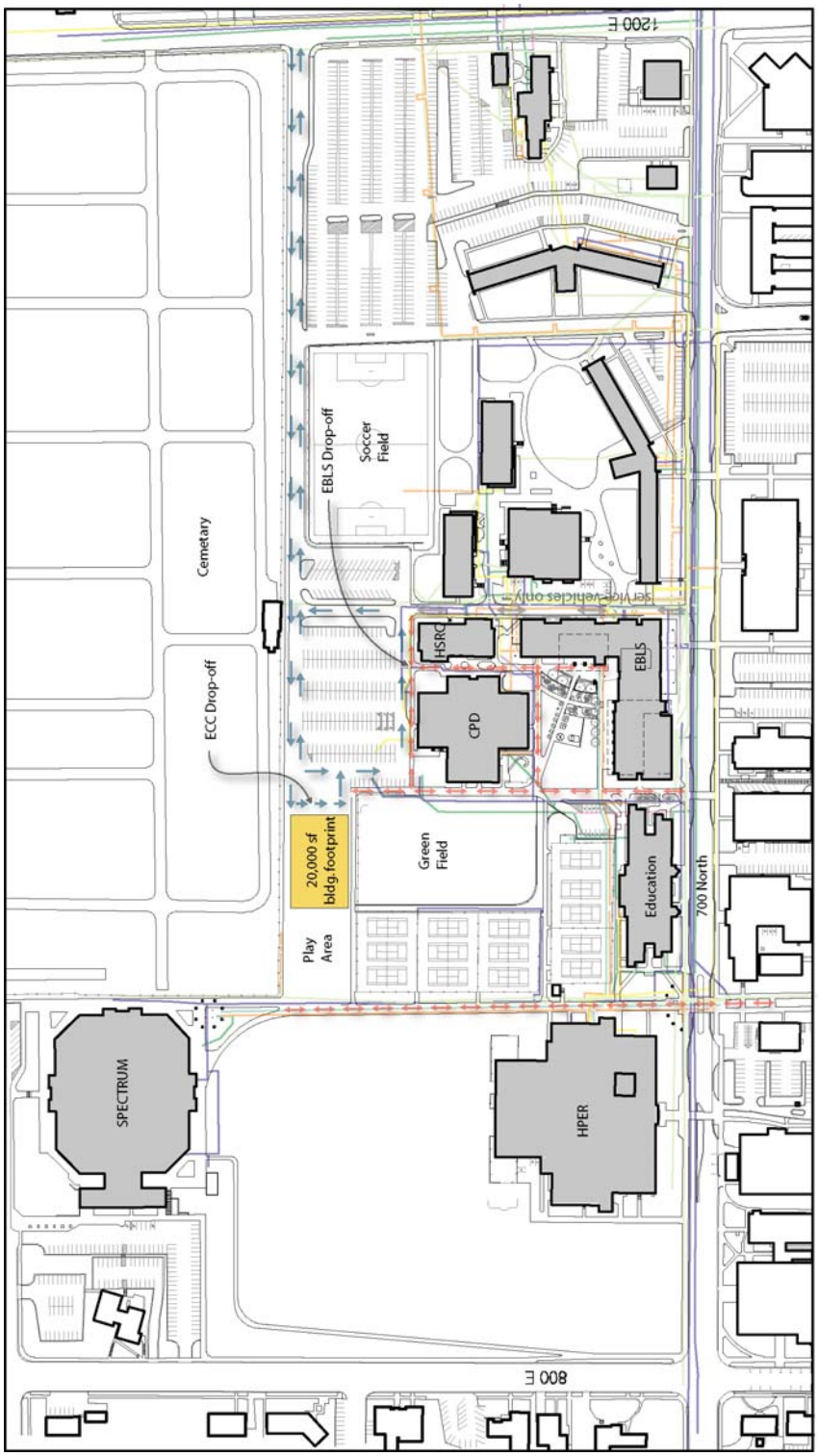

Site Analysis Scheme B

- Steam
- Sewer
- Water
- Gas
- Comm

120 Parking spaces lost
West facing play area.
Defines endpoint for vehicular traffic into Education Precinct.
EBLS and ECC drop-offs have plenty of separation.
Separated from precinct by tennis courts and green field.
Distant from sanitary sewer.

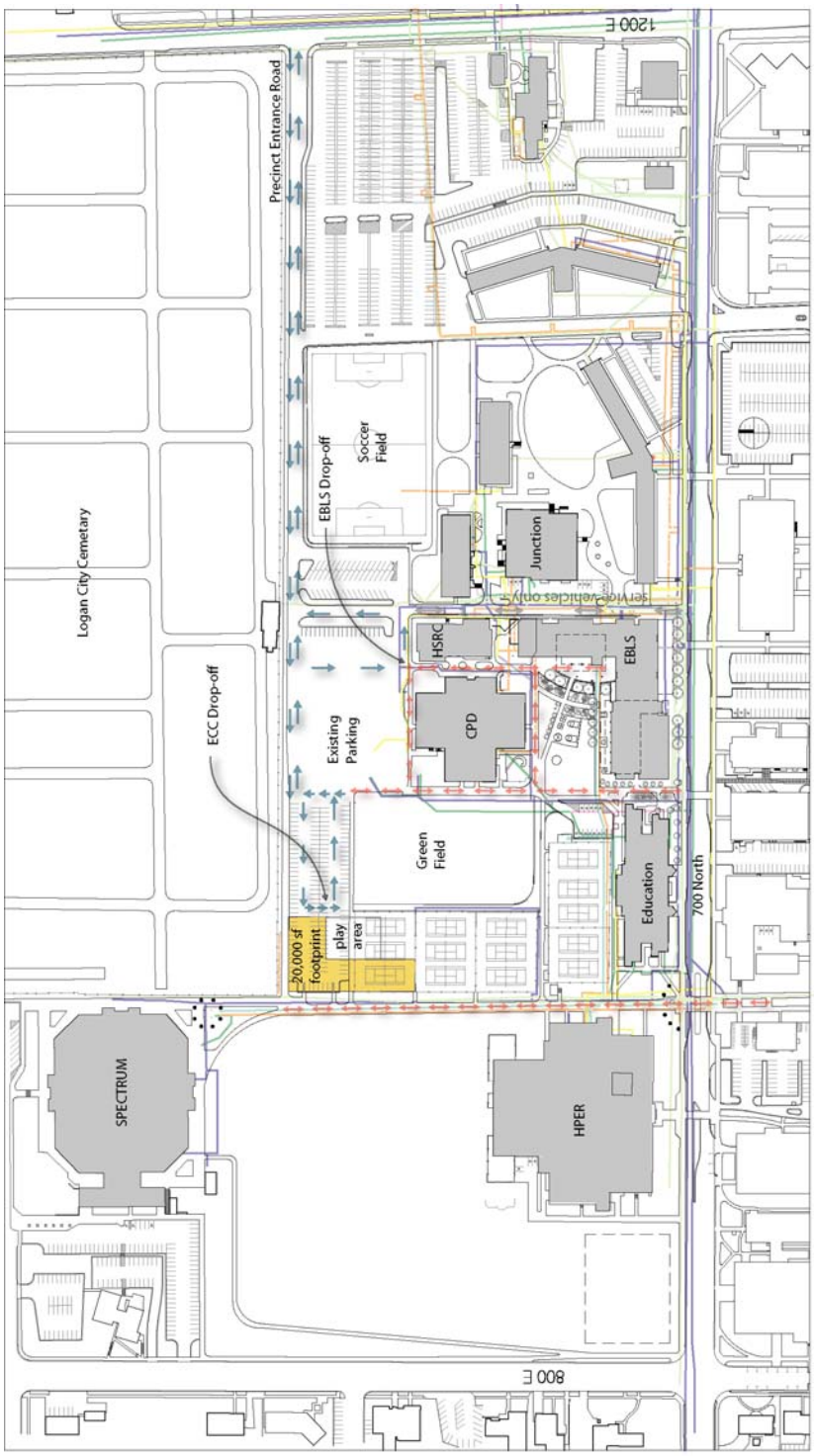

Site Analysis Scheme C

80 Parking spaces lost
Small south-east facing play area.
Open space connection with major quad/green field.
Provides enclosure for Education major quad.
Eliminates 3 tennis courts
Far from street entrance. Requires the most vehicular circulation into the Precinct.
Precludes future building in required traffic pattern.
Close to campus steam and chilled water.
Distant from sanitary sewer.

Steam
Sewer
Water
Gas
Comm

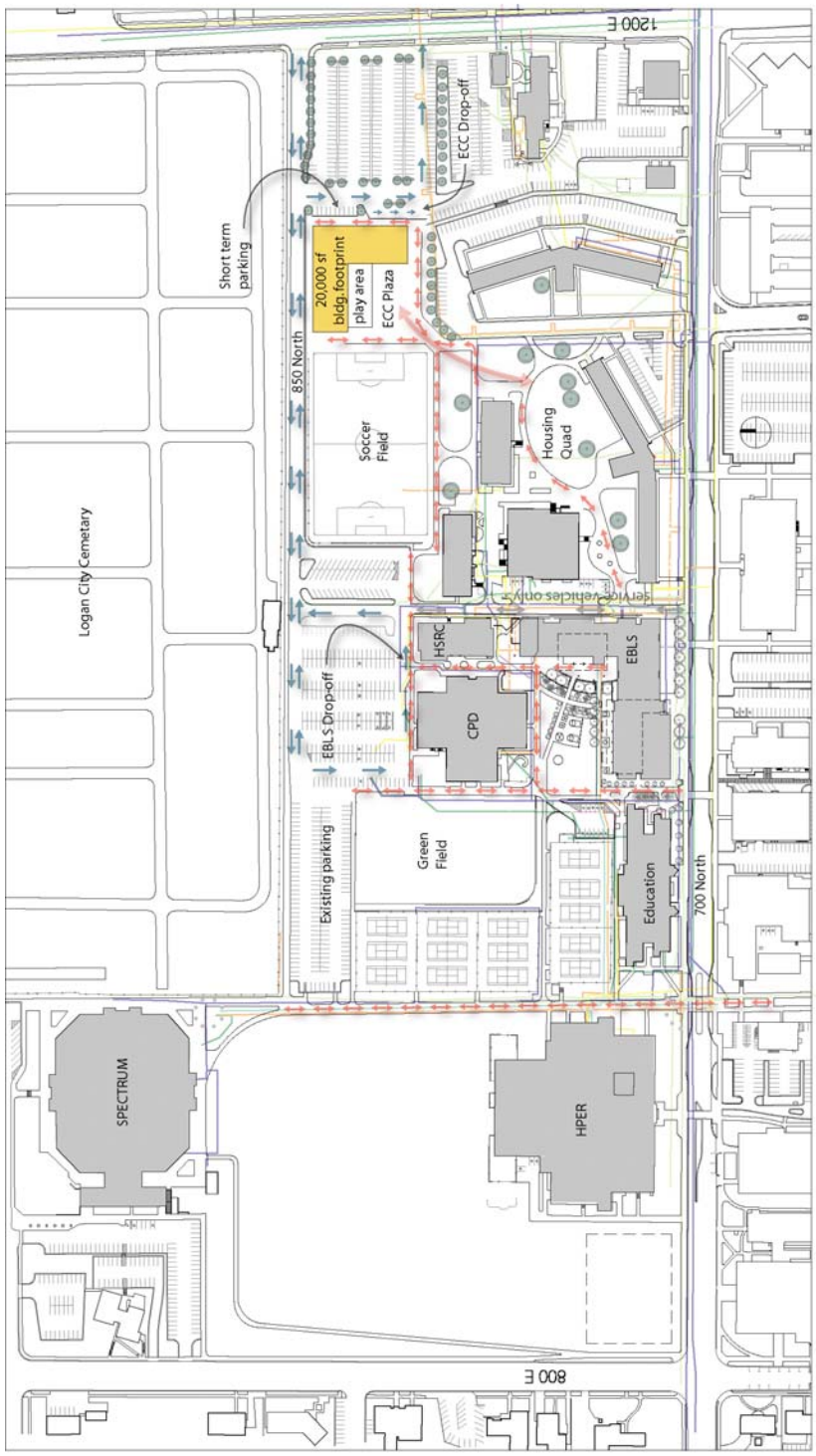

Site Analysis Scheme D

Advantages:

- South facing play area and Plaza.
- Very nice open space connection with housing Quad.
- Near to street entrance facilitating better connection with community and reducing interior traffic concerns.
- More Visibility for outreach aspect of facility
- Strengthens arrival aspect of 850 North as the entrance to the Education Precinct.
- Close to existing steam line.

Disadvantages:

- Slightly removed from majority of Education Buildings.
- 180 Parking spaces displaced.

Steam
Sewer
Water
Gas
Comm

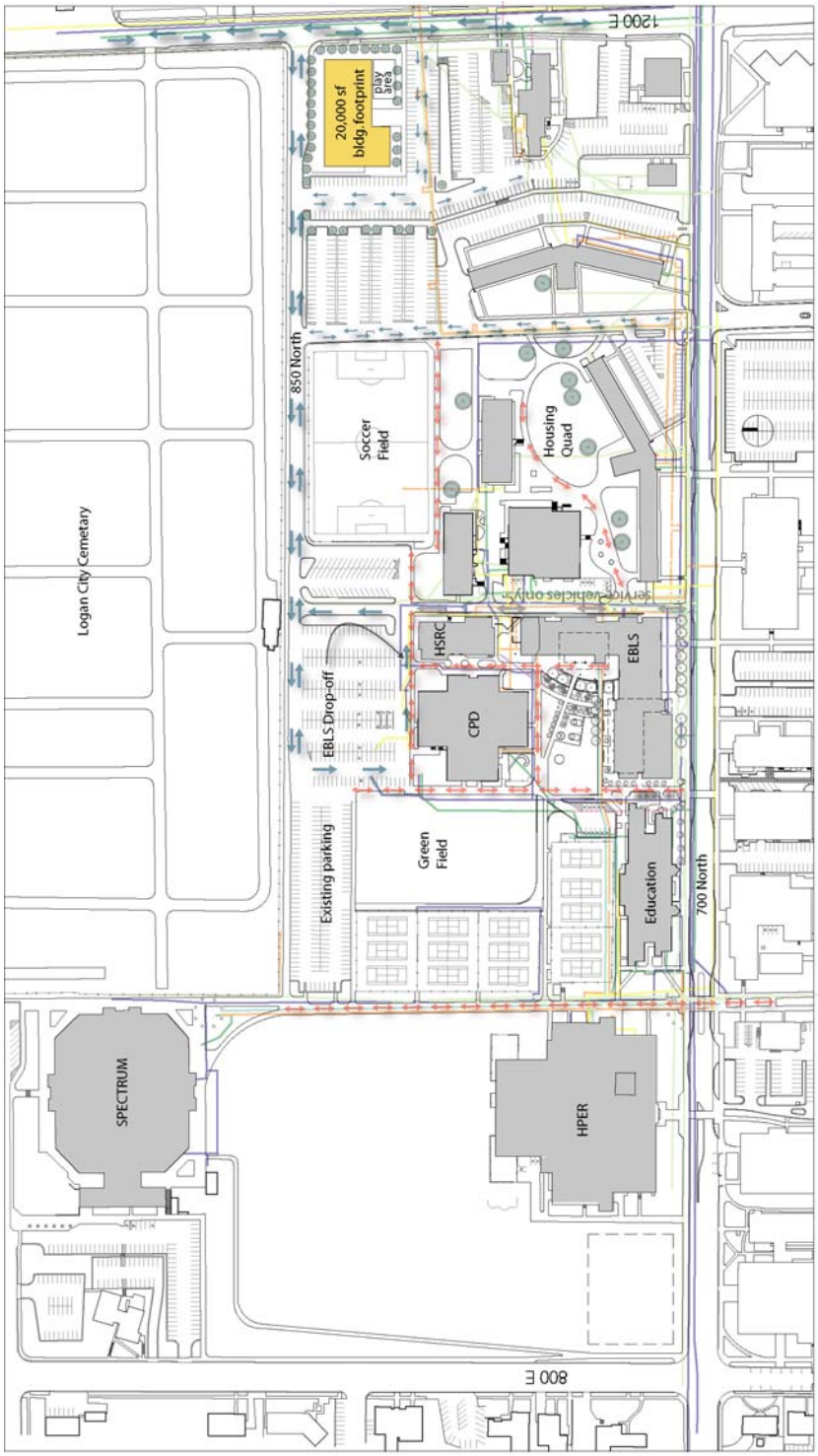

Site Analysis Scheme E

Site Utilites

- Steam
- Sewer
- Water
- Gas
- Comm

Site Circulation

LEGEND

- VEHICULAR CIRCULATION
- PEDESTRIAN CIRCULATION

Advantages:

South facing play area and Plaza.
Near to street entrance facilitating better connection with community and reducing interior traffic concerns.
More Visibility for outreach aspect of facility
Strengthens arrival aspect of 850 North as the entrance to the Education Precinct.

Disadvantages:

Close to existing steam line.

Slightly removed from majority of Education Buildings.
140 Net parking spaces displaced.
No greenspace connection ie. surrounded by vehicular traffic.

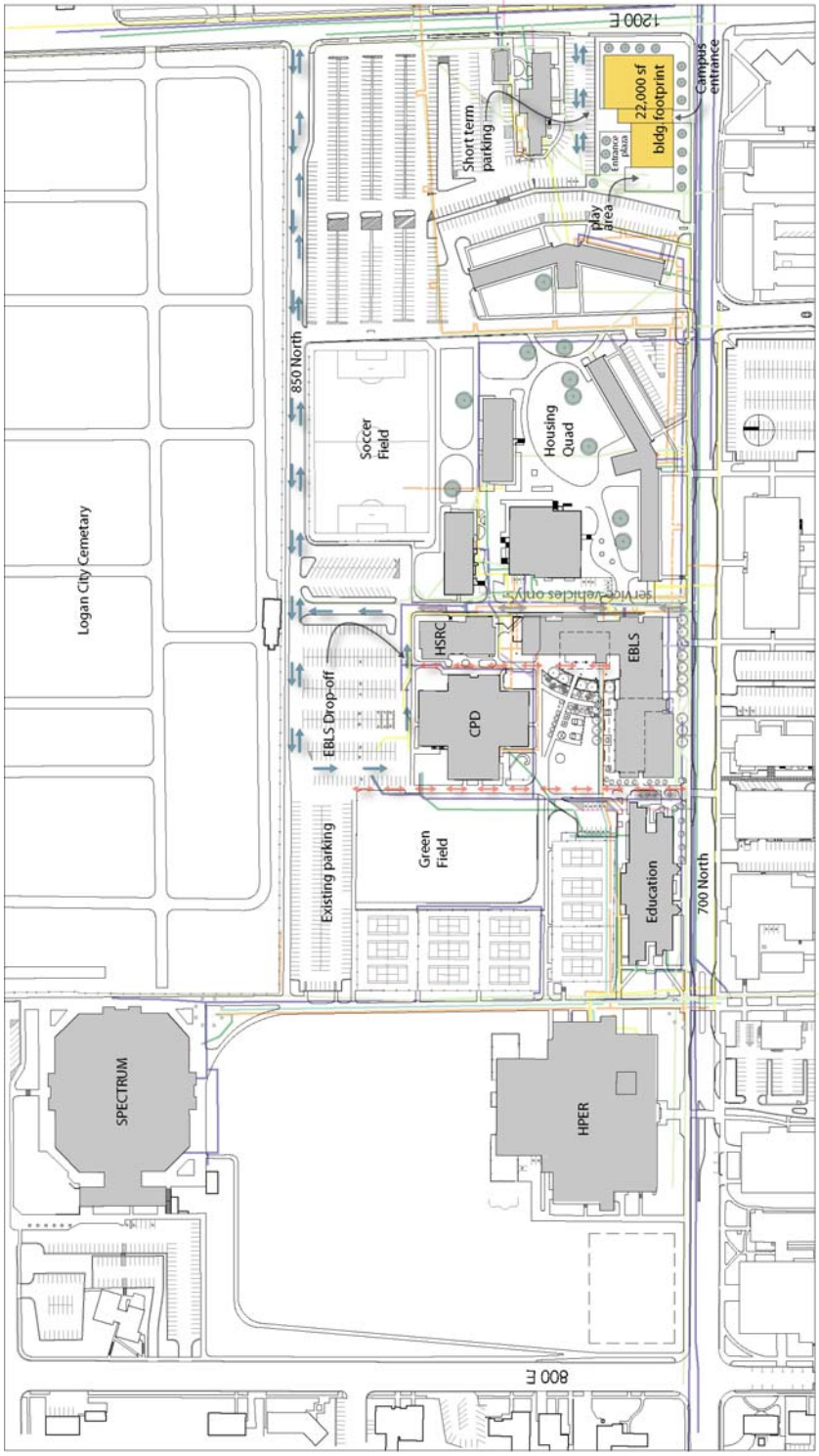

Site Analysis Scheme F

Advantages:

- Only 27 Net parking spaces displaced.
- Very visible corner location.
- Removed from 850 North traffic concerns.

Disadvantages:

- Requires the demolition of two existing buildings.
- Slightly removed from majority of Education Buildings.
- North facing public entrance.
- No greenspace connection i.e. surrounded by vehicular circulation.

Steam
Sewer
Water
Gas
Comm

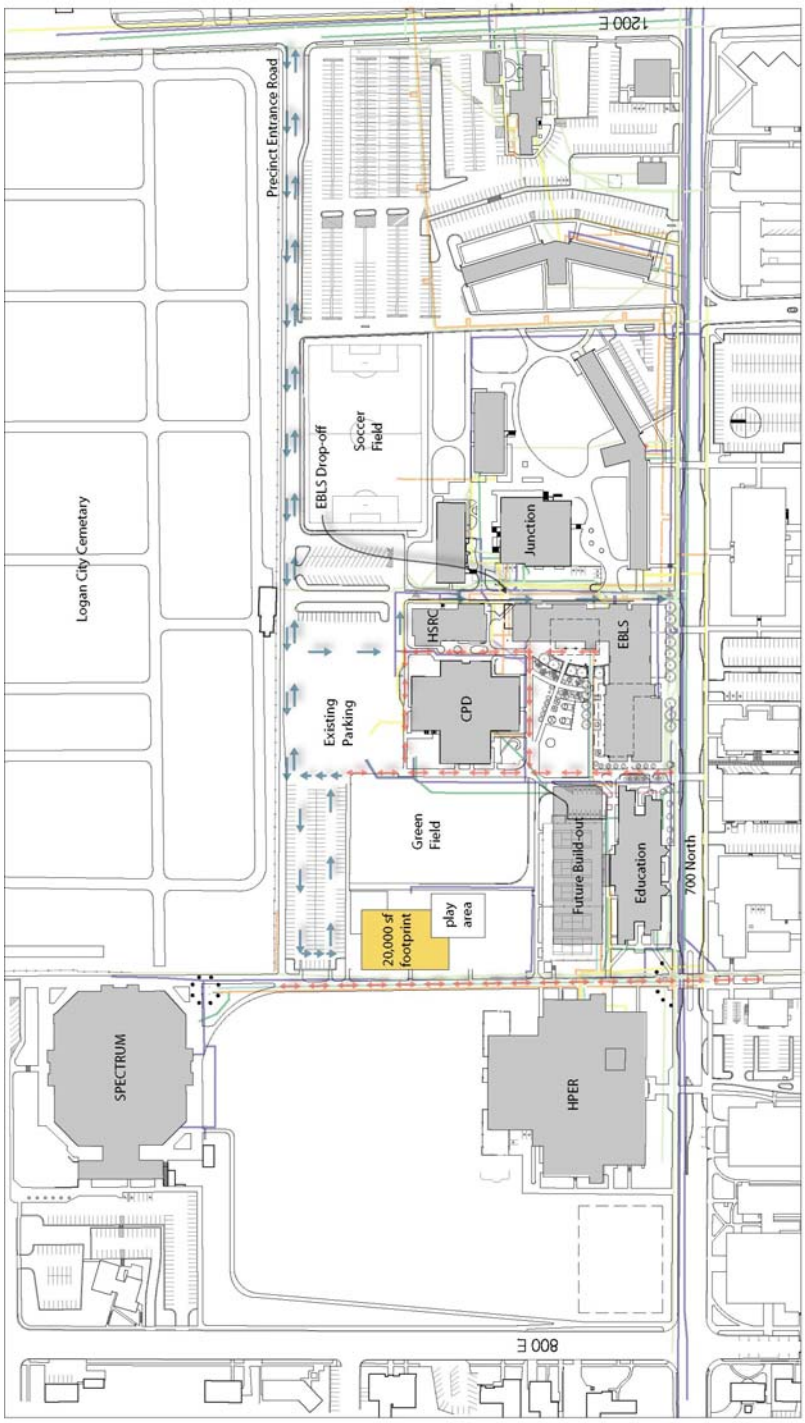

Emma Eccles Jones Early Childhood Education and Research Center

Site Analysis Scheme G

Zero Parking spaces lost
Small south-east facing play area.
Open space connection with major quad/green field.
Provides enclosure for Education major quad.
Eliminates tennis courts
Far from street entrance. Requires the most vehicular circulation into the Precinct.
Precludes future building in required traffic pattern.
Close to campus steam and chilled water.
Distant from sanitary sewer.

Steam
Sewer
Water
Gas
Comm

FFKR Architects

2.6 PHYSICAL CHARACTERISTICS

2.6.1 Climate

The Climate at Utah State University ranges from average lows of 16 degrees in January to average highs of 87° in July. Average monthly snowfalls reach 12-14 inches in December and January with an average annual total of 58 inches. Together with the cold temperatures seen in the winter months ice will develop on paved surfaces in shaded areas. Snow removal is a major site planning principal on the USU campus. From mid-March to mid-October Logan sees low levels of humidity and precipitation with annual average precip just below 18 inches. Average winds range from 8-10 mph throughout the year.

2.6.2 Geo-technical Report

A geo-technical report has not been commissioned for this site at the programming stage. A report will need to be compiled before the design phase can progress. The Geotechnical firm responsible for this work should include information to guide the design team on the following design criteria.

Soil bearing capacity
Structural fill requirements
Potential differential settlements
Potential for expansion of collapse of soils due to moisture changes
Liquefaction potential
Groundwater characteristics and restrictions
Seismic considerations, coefficients, fault traces, etc.
Lateral bearing pressures
Alternate foundation systems
Pavement sections and sub-drainage

2.6.3 Site Photos and Views at scheme E

View 1

View 2

View 3

View 4

View 5

View 6

2.7 EDUCATION PRECINCT MASTER PLAN

The Education Precinct Master Plan defines 5 main principles that should be used to inform future development in this area of campus.

The Precinct must have its own identifiable sense of place, while being an integral part of the larger civic fabric of the USU campus.

The Playing field North of the education building and the secondary quad created by the Edith Bowen School are spaces which help to strengthen and reinforce connections between the buildings in this precinct. Further development should respect the pedestrian circulation paths and provide opportunity for more of these secondary open spaces.

The Precinct must provide a clear, elegant sense of arrival for the several public constituencies destined for the College's facilities on a regular basis.

850 North at the north edge of the precinct and south of the cemetery currently serves all of the vehicular traffic to and from the Precinct. This road is used by parents to drop-off and pick-up 300 students per day at the Edith Bowen School as well as the visitors attending continuing education and outreach functions offered by the college. Safety for pedestrians, especially at the drop-off point between CPD and HSRC, is a major concern in studying the traffic patterns for this area.

Future buildings should be located and positioned (in relation to existing buildings) so as to frame the quads and courtyards that will unify the Precinct.

Building location and orientation should continue to enhance the existing pedestrian circulation patterns existing on campus and should strive to develop opportunities for new open spaces within this framework.

A goal of the College is to consolidate in one area or building a number of units that have community-oriented clinical functions.

The outreach role of the college's clinical functions should be enhanced by this building and its siting and orientation should provide a welcoming presence to the community who travels to campus to utilize those functions.

Future expansion of HPER should be executed in a way that revitalizes its presence on 700 North as both an academic and community facility, while maintaining the integrity of the adjacent playing fields to the north.

The playing fields associated with this building are integral to its function and are also considered iconic green spaces for the Precinct. The Master Plan indicates that these spaces should remain unbuilt.

2.8 SITE PLANNING PRINCIPALS

Outdoor Spaces
Considering the climactic factors is extremely important on the USU campus. Although winters are long and harsh in Logan, outdoor gathering space is still desired for promoting campus social vitality and enhancing pedestrian circulation. The usefulness of these outdoor spaces can be extended if they can be located on the south sides of buildings. In addition to allowing these spaces to remain in the sunshine, this type of site planning usually also allows interior gathering spaces to be located near the outdoor spaces and therefore take advantage of the benefits of daylighting and implied connection to the outdoors.

Views
The mountains to the east and the valley to the west of campus offer spectacular views. These potential views should be considered, especially when designing spaces on upper floors.

Identity
The new Early Childhood Center will, in essence, become the main access point connecting the education department with the community. This facility will be the center of outreach for many of the specific fields within the department. In this way, the building will act as the gateway to the department. This concept should affect the siting, orientation, and the architecture such that the building presents a welcoming presence to those visitors arriving from the community while maintaining the identity of the education precinct as a whole.

Building Access
Due to the nature of the users of this building access to the building should be limited and secure. A clearly visible main entrance via a covered drop-off has been suggested as a much desired entrance concept. Secure access must also be provided for the connected Childcare Center. Service and delivery access should be kept separate from those areas where children are present. Safety and security will be the driving factors guiding pedestrian circulation.

Future Campus Circulation
The Precinct master plan offers massing projections for future build-out of this area of campus. Building location should consider possible buildable area and allow for future access.

3.1 SITE CONSIDERATIONS

The location chosen for the building is currently an asphalt parking lot without determined pedestrian circulation paths. There is a major pedestrian circulation corridor through the center of the housing quad to the southwest. The southwest corner of the parking lot where the current sidewalks meet will be the focus of campus foot traffic to and from the building. The student/faculty entrance/circulation scheme for the building should recognize and address this campus circulation path.

The parents and children coming to the Preschool for the Deaf and the Daycare Center comprise a separate user group which will arriving via vehicles. Temporary parking for parents and circulation to and from the Daycare and Preschool should be optimized so that entrances are south facing and near to parking areas.

3.2 QUALITY AND IMAGE

The exterior building materials should be compatible with existing facilities. Materials exterior and interior should be low maintenance and durable. Emergency generator, transformers, dumpsters and other utility equipment should be either located underground or screened from view. Screens and enclosures should be an integral part of the facility design.

3.3 BUILDING FORM AND MASSING

The image below was developed as a programmatic massing exercise. It represents a possible building footprint of approximately 20,000 square feet at 3 stories oriented with a south exposure on the site.

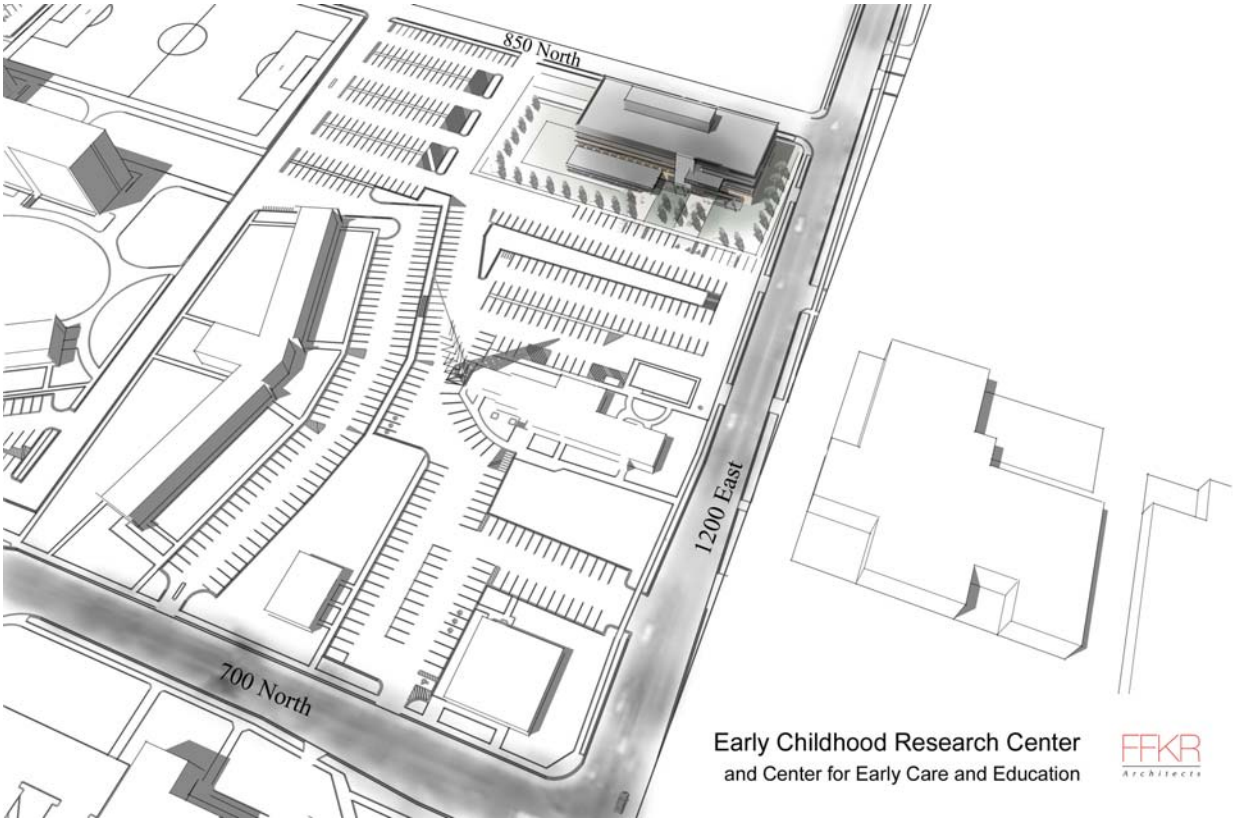

3.4 INTERNAL CIRCULATION

Level 1

It has been decided that the building should provide two main public entrances on Level 1, as follows.

One entrance will serve the two preschool facilities. This entrance must have a vestibule, with the interior doors of the vestibule provided with electronic access control so that only authorized staff and parents may enter. The building should be organized so that preschool users encounter the combined office facility immediately upon entering through the secured doors. Building circulation should then be organized with direct access to the zone of the Preschool for the Deaf or the Center for Early Care and Education. Regarding the Preschool for the Deaf, organization should be such that the Auditory Screening Suite is near the entrance.

One entrance will serve as the public entrance to the Emma Eccles Jones Early Childhood Research Center located on Levels 2 and 3. An elevator serving the upper levels must be provided at this entrance. This entrance must be configured so that authorized staff from the Center for Early Childhood Research can access the preschools through a door with electronic security, or through the preschool office. This is necessary because preschool students may, with parental approval, and parental and / or staff supervision, participate in early childhood research studies on level 2 of the facility.

Circulation on Level 1 must also allow for convenient, secured access to the secure playground facility without having to traverse unsecured areas of the building or grounds. In addition, it is desirable that the students of the Center for Early Childhood Education be able to access the secured playground without traveling though the zone of the Preschool for the Deaf.

3.5 INTERNAL RELATIONSHIPS

Level 1

Level 1 of the proposed facility will house the Center for Early Care and Education and the Preschool for the Deaf. Both of these facilities will provide care and instruction for children from ages 6 weeks to 5 years. The two facilities will function with separate staffs of teachers and care givers. At the same time the two preschools will share the use of food service, dining, administration and work space, lobbies, and playgrounds.

The students in the Preschool for the Deaf will require special environments to optimize their educational opportunities, as discussed elsewhere in this program. At the same time, one of the goals of the Preschool for the Deaf is for their students to begin the process of main streaming with normal hearing children as part of their preschool education. The goal of the design of the Level 1 space should be to create separate zones for the classroom and diagnostic functions of the two schools, while at the same time utilizing the common spaces to allow co-mingling of the students.

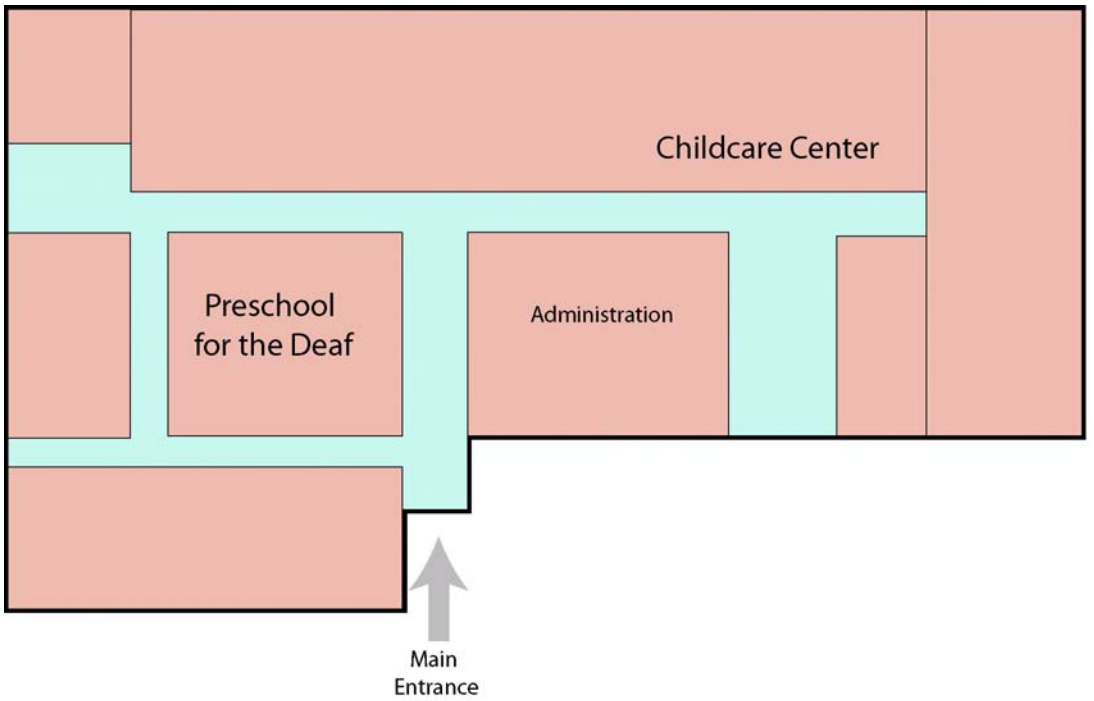

First Floor

Level 2

Level 2 of the proposed facility will house those functions of the Center for Early Childhood Research which interface directly with the public, and with College of Education students. Public population visiting the floor will range from parents attending special training classes or seeking parent resource materials, to preschool and elementary school students and their parents who are receiving tutoring, or participating in research projects. College of Education students will be on the floor to observe teaching or tutoring sessions as part of their curriculum, or attending sessions in the outreach classroom facilities. They may also may be working as paid teaching assistants in numerous Center functions.

The facilities of Level 2 must be divided to the greatest extent possible into separate zones for the following functions:
1. functions for preschool and elementary school children,
2. functions for adults and College of Education students who are using the faiclity without children.
3. Auxillary areas which support the activities of the floor.

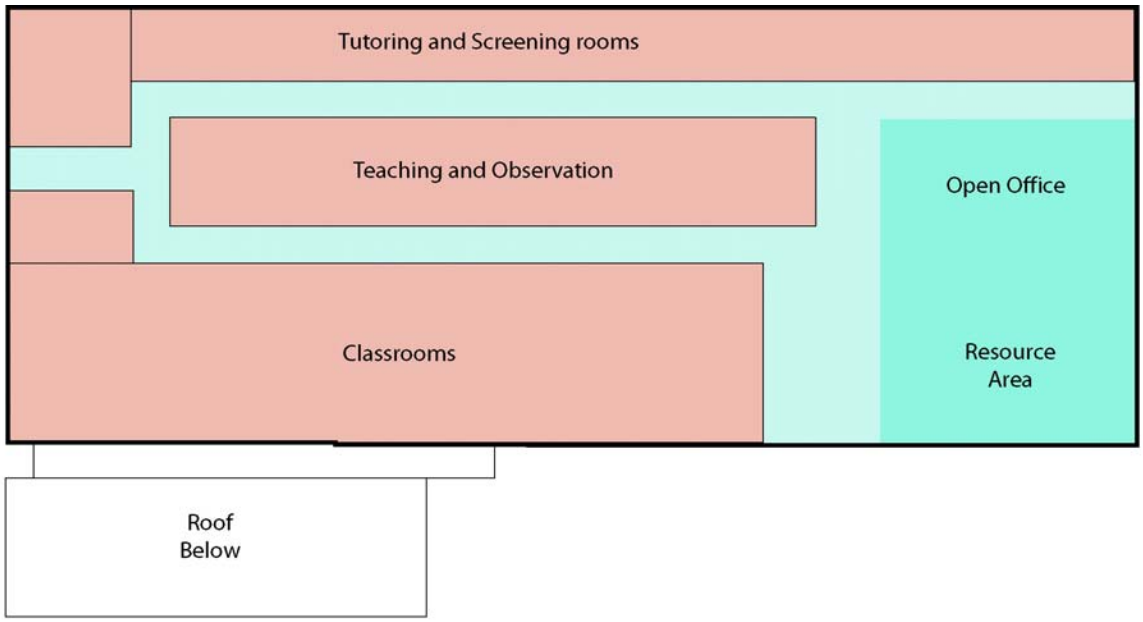

Second Floor

Level 3

The majority of the Level Three floor plate is open office space. It is suggested that perimeter offices be grouped along the north and south walls leaving the southeast corner of the building open to shared views to the mountains.

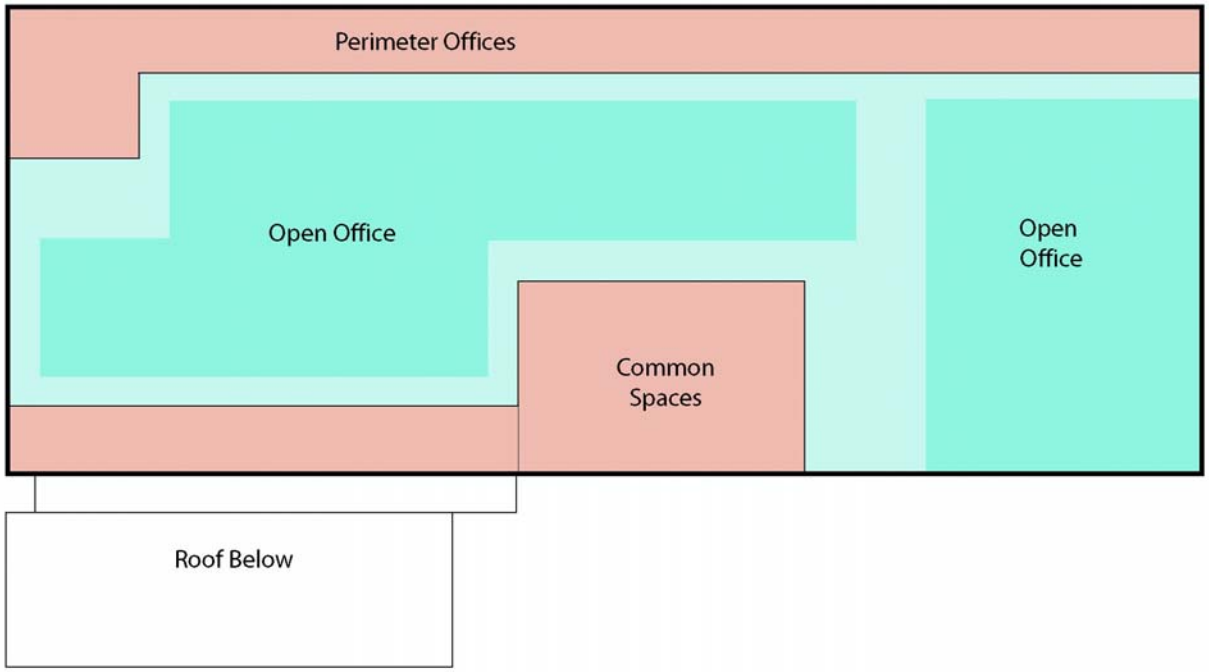

Third Floor

3.6 BUILDING CODE ANALYSIS

This analysis is based on the assumptions made in the program including the Site plan, Individual Space Summary and Stacking diagrams. Given the space allocations and intended uses, it represents the most efficient approach to fire protection and life safety.

APPLICABLE CODES, STANDARDS, AND GUIDELINES

2006 International Building Code
Rule R156-56 Utah Uniform Building Standards Act Rules
2006 International Fire Code
2006 International Plumbing Code
2006 International Mechanical Code
2006 International Energy Conservation Code
2003 National Electrical Code
ICC/ANSI A117.1-2003
ASHRAE 90.1
USU Design Guidelines
State of Utah DFCM design standards

USE AND OCCUPANCY CLASSIFICATION

Level One	Groups B and E
Level Two	Groups B and E
Level Three	Group B

Level One Multi-purpose space is an assembly area that is an accessory to the Group E and not considered to be a separate occupancy according to ***508.3.1 Accessory occupancies***

The administrative suite on level one including reception, offices, and conference areas is classified Group B as per IBC 304.1.

The Preschool for the Deaf facilities and Daycare shall be classified Group E, according to IBC ***305.1 Education Group E***.

"Educational Group E occupancy Includes, among others the use of a building or structure, or a portion thereof, by six or more persons at any time for educational purposes through the 12th grade.

And according to R156-56-704. Statewide Amendments to the IBC ***Section 305.2 DayCare.***

"The building or structure, or portion thereof, for educational, supervision, child day care centers, or personal care services of more than four children shall be classified as a Group E occupancy. See Section 421 for special requirements for Group E child care centers."

Section 421 as added by Utah amendment R156-56 dictates special requirements for group E daycare centers as follows:

"Section 421 Group E Child Day Care Centers. Group E child day care centers shall comply with Section 421.

421.1 Location at grade. Group E child day care centers shall be located at the level of exit discharge.

Exception: Child day care spaces for children over the age of 24 months may be located on the second floor of buildings equipped with automatic fire protection throughout and an automatic fire alarm system.

421.2 Egress. All Group E child day care spaces with an occupant load of more than 10 shall have a second means of egress. If the second means of egress is not an exit door leading directly to the exterior, the room shall have an emergency escape and rescue window complying with Section 1026."

These requirements apply to the Daycare facilities of Level One and indicate special limitations and requirements to the Drop-in Daycare if located on Level Two.

ALLOWABLE BUILDING HEIGHTS AND AREAS

Occupancy	Construction Type IIA
Group B	5 stories, 37,500 sf per flr
Group E	3 stories, 26,500 sf per flr.

Table 508.3.3 indicates required separation of occupancies B and E to be 1 Hour, 508.3 Nonseparated occupancies allows those occupancies to remain nonseparated assuming the most restrictive provisons of Section 403 and Chapter 9 are applied to the entire building.

The more restrictive E occupancy allows for planned floor area and height without increases.

TYPES OF CONSTRUCTION

TABLE 601 FIRE-RESISTANCE RATING REQUIREMENTS FOR BUILDING ELEMENTS

	TYPE IIA
Structural Frame	1hr
Exterior Bearing walls	1hr
Interior Bearing walls	1hr
Exterior Nonbearing walls and partitions	0hr (Table 602)
(assuming 30'min separation from property lines)	
Interior Nonbearing walls and partitions	0hr
Floor Construction	1hr
Roof Construction	1hr

Note e applies to Type IIA so sprinklers should be substituted for 1-hour fire-resistance rated construction.

EGRESS

The following occupant load factors shall be used:

USE	Flr Area/Occupant
Accessory storage areas, mechanical equipment room	300 gross
Business Areas	100 gross
Daycare	35 net
Educational Classroom Area	20 net
Kitchens, commercial	200 gross

5.1 STRUCTURAL

Structural

The structural design for this project should provide a building system which will integrate with the program requirements for space layout, as well as with the architectural and building service needs, while meeting current code standards for vertical and horizontal load carrying capacity. User needs in terms of current flexibility of the spaces and future adaptability of use should be considered. The level of user comfort as determined by the acoustic and vibration sensitivity of the structure also should be addressed.

Structural / Service Coordination

Layout of the structural grid will need to respect the classroom and office planning module established for the various building functions. During the design phase, a completely integrated approach to building systems is recommended. Distribution of HVAC, plumbing and electrical services must be carefully coordinated with the structural elements, particularly at framing intersections and major crossover points. This close coordination must be achieved in order to avoid conflicts and limit penetrations of major structural members.

Codes and Standards

The building structure shall be designed in accordance with the 2006 Edition of the International Building Code.

Codes and standards that apply to the design of this building are:

- 2006 International Building Code
- Utah Uniform Building Standard Act Rules R156-56, March 27, 2007
- DFCM Design Manual, March 15, 2006
- Utah State University Design Standards, latest edition
- American Institute of Steel Construction (AISC) Manual of Steel Construction with Commentary
- ACI 318 Building Code Requirements for Reinforced Concrete
- American Iron and Steel Institute (AISI) Specifications for the design of Cold-Formed Steel Structural Members
- American Welding Society (ANSI/AWS) D1.1 Structural Welding Code
- Steel Joist Institute (SJI) for open web joists and girders
- Steel Deck Institute (SDI) for metal floor and roof decks

Geotechnical Criteria

The geotechnical report for this project is not complete at this time. As a result, specific information or data regarding the geotechnical conditions and constraints at the site are not presently known. Based on the geotechnical findings at the nearby Edith Bowen Lab School, the building can probably be founded on reinforced concrete spread footings.

Once the final building size, configuration, structural system, and column loads have been defined in more detail, the project geotechnical consultant shall provide guidance on the following design criteria as well as any other criteria deemed by the geotechnical consultant to be important.

I. Soil bearing capacity
II. Structural fill requirements
III. Potential differential settlements
IV. Potential for expansion or collapse of soils due to moisture changes
V. Liquefaction potential
VI. Groundwater characteristics and restrictions
VII. Seismic considerations, coefficients, fault traces, etc.
VIII. Lateral soil pressures – active and passive
IX. Alternate foundation systems
X. Pavement sections

Basis of Design

Loading Criteria:

The structural systems in the facility shall be designed to meet the requirements of the 2006 International Building Code (IBC) and the DFCM Design Manual adopted by the Utah State Building Board. Copies of the Design Manual can be obtained from the Division of Facilities Construction Management (DFCM) web site. The following minimum requirements should be anticipated:

! Wind Velocity: 90 mph, Exposure "B" or "C", for the building structure, as appropriate to the site. Use exposure C for design of cladding and building elements.
! Seismicity: 2006 IBC with spectral acceleration for short periods S_s = 0.904, and spectral acceleration for a 1 second period S_1 = 0.319. The design engineer shall verify these spectral acceleration values with the 2006 IBC ground motion maps.
! Roof Load: 50 psf ground snow. Calculate roof snow load as specified in the Utah Uniform Building Standard Act Rules R156-56 issued March 27, 2007. Design for snowdrift where appropriate.
! Floor Design Live Loads: Floor design live loads shall be in accordance with the latest edition of the DFCM Design Manual and as follows:

1. 80 psf live load
2. 20 psf movable partition load
3. Concentrated live loads on suspended floors – 2,500 pounds, or as required by equipment
4. Areas of concentrated standard file storage - 125 psf
5. Floor areas supporting high density rolling files – 250 psf, or as appropriate
6. Paper storage areas – 125 to 300 psf as appropriate
7. Mechanical Equipment Rooms – 125 psf minimum, or more if required by the actual weight of mechanical equipment

Areas where heavy load concentrations exceed the normal loading requirements shall be designed for the specific load case.

Note: The more stringent requirement between the 2006 IBC, the DFCM Design Manual, and the loads given above shall govern.

Criteria for control of vibration in floor structures are discussed in Section 3.1 of the DFCM Design Manual.

Structural System Selection Cost Comparison

The structural system chosen for the building shall be selected based upon the following criteria:

! A cost comparison of different structural systems shall be investigated. The comparison should be broken down with each component of cost significance being listed separately.

! Various structural systems comparing building construction time, material availability, coordination of various trades, lead times for ordering materials, appearance, owner preference, maintenance costs, flexibility for future remodeling, and compatibility with surrounding buildings should be considered when choosing the final structural systems for the building.

! Damage to the building structure and its contents due to lateral earthquake and/or wind loads should be evaluated between various structural systems. Damage control to building non-structural systems is a pertinent and important consideration when selecting the building structural system.

More rigid shear wall and/or braced frame lateral force resisting systems reduce damage to non-structural elements due to lateral drift, but increase the earthquake accelerations experienced by the non-structural elements. The stiffer lateral systems usually limit non-structural damage to a lower level than more flexible moment frame type lateral force resisting system. However, a moment frame lateral force resisting system provides almost unlimited programmatic and planning flexibility initially and during the life of the building.

All cost comparisons between structural systems should include interface costs between other building components such as architectural finishes, exterior enclosure systems, mechanical systems, and electrical systems.

Life cycle costing methods should be used where applicable.

Future Building Expansion

Future vertical expansion of the new facility is not anticipated at this time. Horizontal expansion may take place in the future, but it should be assumed future horizontal expansions will be self supporting for both gravity and lateral loads. The structure need not be designed to support future horizontal or vertical expansions.

Wind Design

At present, the planned occupant load in the building will be such that the building can be appropriately classified as a category III building. A wind importance factor, "I_W" of 1.15 should be used in the wind design analysis according to Table 1604.5 of the 2006 International Building Code, subject to verification of the final occupant load by the design team.

Roof Snow Load Design

At present, the planned occupant load in the building will be such that the building can be appropriately classified as a category III building. A snow importance factor, "I_S" of 1.10 should be used in the snow load design analysis according to Table 1604.5 of the 2006 International Building Code, subject to verification of the final occupant load by the design team.

Earthquake Design

At present, the planned occupant load in the building will be such that the building can be appropriately classified as a category IIII building. A seismic importance factor, "I_E" of 1.25 should be used in the earthquake design analysis according to Table 1604.5 of the 2006 International Building Code, subject to verification of the final occupant load by the design team.

Control of Suspended Floor Structure Vibrations

Control of suspended floor and bridge structure and vibrations due to human and mechanically induced excitation forces shall be considered in the selection of the building structural floor framing systems. At this time, no vibration sensitive equipment is anticipated in the building. If, as design progresses, vibration sensitive equipment is located in the building, suspended floor structures shall be designed to limit vibration to appropriate levels for the equipment under consideration. Floors shall be designed to comply with the vibration criteria in Section 3.1 of the DFCM Design Manual.

Testing and Inspections

The Architect/Engineer, and the selected testing lab, shall perform periodic construction observations, testing, and special inspections, as outlined in Chapter 17 of the International Building Code. The design engineer shall list all required special inspections on the contract drawings, and perform periodic construction observations as required by the A/E agreement. Costs for special inspections and testing services will be paid for directly by the owner.

Distance to Nearest Fault

The distance to the nearest fault is not clearly known at this time, but the fault is probably located near the base of the mountains to the east. The design team should take appropriate measures to consider the location of the fault during the design phase of the project, and as the geotechnical investigation is completed.

5.2 MECHANICAL, PLUMBING, AND FIRE PROTECTION

MECHANICAL UTILITIES

- Heat Source: Connect to the 10" direct buried high pressure steam line and the 5" direct buried condensate line located south of the building. Connect near existing pipe anchor, or provide new anchor in existing lines and new pipe expansion loop. Provide a manhole with valves at the new connection. Run direct buried steam and condensate lines from new manhole into a basement mechanical room in the new building. New direct buried piping will be run in gilsulate insulation or Ric-wil Perma-pipe.

- Fire sprinkling and domestic water supply: Connect to the USU 6" water main in 1200 East. Make one 6" connection the main. Branch the domestic water service off and provide meter at the park strip. Bring separate fire sprinkling and domestic water lines into the building. Provide new fire hydrants at the building.

- Sanitary Sewer: Connect to the Logan City 8" sanitary sewer main on the west side of 1200 East.

- Roof Drainage: Run the roof drainage to new dry sumps located around the building.

MECHANICAL SYSTEMS

CODES
- International Building Code, 2006
- International Mechanical Code, 2006
- International Plumbing Code, 2006
- International Fire Code, 2006
- International Energy Conservation Code, 2006
- NFPA 13
- Utah State Boiler Code

STANDARDS
- DFCM Design Criteria
- USU Architect & Engineer Manual
- ASHRAE Guidelines and Standards

SUSTAINABILITY
Mechanical sustainable design features will be considered and incorporated where appropriate.

Water Use Reduction:
- Water Closets – 1.6 gal/flush max.
- Urinals – Consider waterless type
- Lavatory faucets – Low Flow, 1.8. GPM sensor type

Energy Conservation:

- Commissioning of mechanical systems.
- Hot Water System – variable flow with VFD.
- Chilled Water System – variable flow with VFD.
- Occupancy control on VAV boxes (combined with lighting control)
- Outside air control from CO_2 measurement
- 30 deg F temp. difference on hot water system, in lieu of 20 deg.
- 13 deg F temperature difference on chilled water system, in lieu of 10 deg.
- Reduced static pressure drop through air handlers (400 feet/minute in lieu of 500 feet/minute)

Protection of Atmosphere

- Use non-CFC and non-HCFC Refrigerants

Energy Use Measurements & Verification

- Provide vortex type steam meter on building.

Indoor Environmental Quality

- Monitor and control CO_2 levels in all densely occupied spaces.
- Monitor and control outside air flow from CO_2 sensors.
- Follow SMACNA Guidelines to protect HVAC system during construction.
- Pre-occupancy building flush-out. Ventilate the building prior to occupancy to flush out contaminate.
- Exhaust Janitors closets and photocopy areas.
- Provide individual thermostatic controls for exterior offices, corner offices, unique spaces, each classroom, etc.
- Consider in-floor radiant heating in the on-grade classrooms to improve the comfort of children.
- Provide baseboard radiation in areas with a high proportion of exterior glass

DESIGN TEMPERATURES

	Winter	Summer
Outdoor Temperature	-20˚ F	94˚ DB/65˚ WB
Indoor Temperature	72˚ F	72˚ F/50% RH Max.

ACOUSTICAL CRITERIA

Since a portion of the facility will be used for deaf children, all classrooms should be designed to accommodate deaf children, from a background noise consideration.

The Acoustical Society of America (ASA) recommends a noise level of NC 25 to 30 in standard classrooms. ASA recommends that diffusers be selected at NC 20 to 25 for standard classrooms. For this facility, the classroom design will be NC 25 with diffusers selected at NC 20.

HEAT SOURCE

The heat source will be the campus central steam system. High pressure steam will be piped to the building. The pressure will be reduced to 15 PSI. Two steam-to water heat exchangers will be provided for redundancy. Each heat exchanger will be sized for 60% of the load.

COOLING SOURCE

There is a campus central chilled water system. It is remote from the proposed building and funding is not available to extend it to the building. The cooling load is approximately 150 tons. The system will be designed to accommodate future connection to the campus central water systems: the coils will be selected at the campus central chilled water supply and return temperatures. A water-cooled chiller will use about 40% less energy than an air cooled chiller. The installed cost of a water cooled chiller will be about $40,000 more than an air-cooled chiller due to the cost of the chiller room. The chiller will be located on the roof. The chiller will have two compressors minimum and two refrigeration circuits for redundancy. If a water-cooled chiller is used, the cooling tower will also be located on the roof.

VENTILATION

Ventilation will be provided in compliance with the 2006 IMC.

Classrooms – 15 CFM/person
Office Space - 20 CFM/person

An outside air flow measuring device will be provided at each air handler. A CO2 sensor will reset the outside air flow between minimum and a maximum value.

HVAC SYSTEM

A central variable air volume (VAV) reheat system is a good fit for this building. A single air handler would be located in the Penthouse mechanical room. VAV Boxes with hot water reheat coils would be provided for each zone. The air handler should have two parallel fans for redundancy.

PERIMETER RADIATION

Perimeter hot water finned tube radiation will be provided in spaces with a high proportion of exterior glass.

RADIANT FLOOR HEATING

Hot water radiant floor heating should be considered in Classrooms built on grade. This will provide a more comfortable space for children.

AIR DISTRIBUTION

The ducts from the air handler to VAV boxes should be medium velocity (3000 fpm max, 0.25" w.g./100 feet max P.D.) The ceiling space will be a return air plenum.

HEATING HOT WATER PIPING SYTEM

Hot water supply temperature - 180˚F
Hot water return temperature - 150˚F
Primary standby pumps each sized at 100% flow. Variable flow, VFD's on each pump.

CHILLED WATER PIPING SYSTEM
Chilled water supply temperature - 42˚F
Chilled water return temperature - 55˚F
Primary – Standby pumps, each sized at 100% flow. Variable flow primary loop (to minimum flow allowed by chiller), VFD's on each pump.

AUTOMATIC TEMPERATURE CONTROLS
Direct Digital Controls (DDC) with electric damper and valve actuators. Approved manufacturers/installers are Johnson Controls/Johnson Controls and TAC Controls/Utah Controls.

FIRE SPRINKLING
Automatic wet-pipe sprinkler system with a Class I standpipe in two stairways. Piping will be standard weight black steel with mechanical couplings, threaded joints or welded joints.

PLUMBING
In the children's toilet rooms, "Primary" plumbing fixtures, will be used. In the public toilet rooms, the water closets will be flush valve (1.6 gal/flush), wall hung; the urinals will be waterless, if approved by USU; the lavatories will have sensor type faucets with flow restrictors.

The domestic water heater will be electric due to the small hot water load.

5.3 ELECTRICAL

ELECTRICAL DESIGN NARRATIVE

A. Codes –

The electrical work will comply with the laws, ordinances, and rules of the State of Utah, and local government. In addition, the following codes are applicable:

NEC (National Electrical Code)
NFC (National Fire Code)
IFC (International Fire Code)
IBC (International Building Code)
ASHRAE 90.1 (Energy Code)

B. Standards – The Applicable standards are as follows:

USU Design Standards
State of Utah (DFCM) Standards
UL (Underwriters Laboratories)
ASTM (American Society for Testing and Materials)
ANSI (American National Standards Institute)
NEMA (National Electrical Manufacturer's Association)
IEEE (Institute of Electrical and Electronics Engineers)
EIA/TIA (Electronic Industries Association/Telecommunications Industries Association)
IESNA (Illuminating Engineering Society of North America)

C. Raceways –

Raceways shall be steel; EMT conduit (Electrical Metallic Tubing) shall be used throughout for branch circuits and feeders. Rigid Metal Conduit shall be used for service entrance conductors. PVC Conduit shall be used under slab and below grade with rigid elbows. Final conduit connections to lighting fixtures shall be by means of a flexible conduit whip, not exceeding 6 feet in length. Conduit connections to vibrating equipment shall be by means of flexible seal-tite conduit. Conduit fittings shall be malleable steel. Aluminum conduit and conduit fittings shall not be acceptable. Minimum raceway size shall be 3/4 inch.

D. Cable Tray –

Provide UL-listed cable tray, hot-dipped (after fabrication) galvanized corrosion-resistant finish systems of sizes, types and capacities indicated, and meeting all requirements of NEMA VE-1. Grind all rough edges, drip concentrations, etc, to smooth finish. Apply cold zinc spray to all field cut surfaces.

E. Conductors –

Conductors shall be copper. Solid conductor for sizes #12 AWG and smaller; stranded conductor for sizes #10 AWG and larger. Insulation shall be THHN/THWN, rated for 600 volts. Aluminum conductors shall not be acceptable. Minimum conductor size for branch circuits shall be #12 AWG. All 20 amp branch circuits over 100 feet in length shall be #10 conductor. All conductors will be color coded according to the NEC and the campus standard.

F. Voltage Drop –

The voltage drop for feeders shall be limited to 2 percent. The voltage drop for branch circuits shall be limited to 3 percent.

G. Site Utilities –

New facility is approximately 60,000 square foot, three level building located east of the soccer field in the corner of the parking area, 1200 East 850 North. Currently, existing light poles are in the parking area that will require removal.

Power: Utilizing existing power manhole 14M5 located approximately on the southwest corner of the project in the parking area. A new switch will be necessary and can be located in the manhole or at the site. Extend new copper 15 kV feeders with copper tape shields and EPR insulation and 100% copper neutral in ductbank to the service transformer and high voltage switch.

The main service transformer will be pad mounted located outside of the building. It will be oil-filled with copper winding or aluminum windings and harmonic distortion less than 5%. Primary voltage 12470 voltage, and secondary voltage 120/208 voltage, 3 phase, 4 wire.

Communication: Utilize existing communication manhole (MH.14M1) west of the aforementioned power manhole. From this manhole extend (4) 4" conduits to the building MDF. (One for copper, one for fiber, one for TV and one for spare.) Bury the conduit a minimum of 36" with caution marker tape twelve inches below ground level. Conduit will be placed in a trench with a minimum 3" bed of fine wash sand or pea gravel. Backfill will be fine wash sand or pea gravel encased around the conduits a minimum of twelve inches.

H. Power Distribution –

Distribution of power within the building will be at 120/208 volts, 3 phase, 4 wire. Receptacles, small motors and miscellaneous equipment, large mechanical equipment and lighting will all be on separate panelboards.

An electronic meter will be provided at the main electrical service entrance to monitor volts, amps, kW hours, power factor, etc.

TVSS (Transient Voltage Surge Suppression) will be provided at the main electrical service entrance equipment.

Distribution switchboards and appliance panelboards shall be UL listed, with steel enclosure, with 16-gauge minimum thickness, and dead-front construction. Distribution boards shall be equipped with copper bus bars, full-sized neutral bus, and ground bus.

Lighting and appliance panelboards shall be UL listed, with steel enclosure. Panel front shall include hinged

door-in-door construction, with flush locks and keys, all panels, keyed alike. Panels shall include interior index card in a clear plastic holder, and engraved formica label on the outside of the enclosure. Panels shall be equipped with copper bus bars, full-sized neutral bus, and ground bus. Lugs shall be copper rated (CU-AL lugs are not acceptable). Circuit breakers shall be bolt-on type, thermal magnetic trip. Panels shall have 20 percent spare space and capacity.

Motor starters shall be rated for the type and size of motor served. Manual type starters with thermal overload shall be provided for single phase, fractional horsepower motors. Line voltage multi-phase combination magnetic starters with integral fused disconnect, with dual element fuses and thermal overload protection in all phases shall be provided for three phase motors.

Variable frequency controller shall be provided for mechanical HVAC equipment, which requires adjustable speed control, per USU standards. Variable frequency controllers shall be of the pulse-width modulation type. All units shall be tested after installation for voltage and current harmonic distortion to ensure it is within acceptable limits. Provide a manual bypass as part of controller. Controls, indicators and keypad will be on the front panel – door mounted. Each variable frequency controller unit shall carry a three-year warranty for parts and labor.

I. Wiring Devices –

Wiring devices shall comply with NEMA standards Pub. No. WD 1. Switches and receptacles shall be specification grade, and rated at 20 amps and 120 volts AC. Receptacles shall be 3-wire grounding type. GFI (Ground fault circuit interrupter) type receptacles shall be rated 20 amps, 120 volts AC, with solid-state ground fault sensing and 5 milliamp trip level. Receptacles in toilet rooms, wet areas, or within 6 feet of any sink shall be GFI type. Receptacles on the building exterior shall be GFI type. All coverplates shall be stainless steel.

J. Lighting –

Lighting will be primarily of the fluorescent type. See drawings for style and type of fixtures. Fixtures shall generally be equipped with 4 foot, 32 watt, 24,000 hour lamp life, energy-saving T8 lamps. Lamps shall be low mercury content. Biax and compact fluorescent lamps shall also be used where the light fixture style does not readily lend itself to 4 foot lamps. Ballasts for fluorescent lamps shall be high frequency, electronic energy-saving type, with power factor above 95 percent and harmonic distortion of less than 10 percent.

Exterior light fixtures shall be surface mounted, with metal halide lamps or compact fluorescent and high power factor, cold weather ballasts. Provide full cut-off luminaries; comply with light pollution reduction requirements.

Lighting Illumination Levels as recommended by IESNA are as follows:

Space Description	Illumination Level – lux (footcandles)

Offices	500 lux	(50 footcandles)
Conference rooms	500 lux	(50 footcandles)
Classrooms	500 - 600 lux	(50 - 60 footcandles)
Corridors	100 - 150 lux	(10 - 15 footcandles)
Toilet rooms	200 lux	(20 footcandles)
Storage rooms	150 lux	(15 footcandles)
Communications room	250 - 300 lux	(25 - 30 footcandles)
Mechanical room	250 - 300 lux	(25 - 30 footcandles)

Exterior Lighting. Exterior light poles are the campus standard style. Compact fluorescent lamps in exterior building mounted fixtures will be used in order to provide emergency egress lighting at the building exits.

Ballasts. Provide electronic rapid start fluorescent lamp ballasts. Ballast shall be programmable start capable of operating lamp types indicated, with power factor (ratio of actual power to apparent power) above 95%, ballast factor of .71, and operating with audible noise level lower than the quietest C.B.M. certified ballast for the same application, listed as class A. Provide ballasts which operate at a frequency above 20K Hz from an input frequency of 60 Hz; have an efficacy factor (relative light output per watt consumed) at least 10% above the C.B.M. certified electromagnetic system for the same application; and have a lamp crest factor (ratio of peak to R.M.S. lamp current) of 1.7 or less. Ballasts shall have a total current harmonic distortion of less than 10%. Provide HID ballasts, of ratings, types and makes as recommended by lamp manufacturer, which properly match lamps to power line by providing appropriate voltage and impedances for which lamps are designed. Equip exterior fixtures with low temperature starting ballasts. Provide high power factor, or power factor improved ballasts.
Lighting Control. Control of exterior lighting will be by photocell and time clock. Lighting in the common spaces (lobbies and student lounge) is controlled by time clock. Lighting in office spaces is controlled with a combination of toggle switch in combination with automatic occupancy sensors. Dimming is provided for all fixtures in Distance Learning and Observation rooms. Lighting in toilet rooms will be controlled solely by occupancy sensors.

K. Emergency Power –

Emergency power shall be provided and sized for life safety including exit and egress lighting, telephone, data, and fire alarm, and security as applicable.
The emergency power will be provided from a diesel emergency generator. The generator will be located outside of the building. The generator fuel capacity is 24 hours of emergency power at full load. The generator will be capable of starting and assuming the emergency load within 10 seconds of a power outage.

Automatic transfer switch will be provided in the Main Electrical Room and will be wired to automatically start the generator upon loss of utility power. Emergency feeder conductors and control wiring will be provided for the emergency panels.

L. Grounding –

Grounding shall be provided for the entire raceway, service entrance, enclosures and equipment system. Grounding shall be provided in accordance with the NEC. A separate grounding conductor shall be provided for all feeders, equipment circuits and branch circuit runs. Grounding conductors shall be sized in accordance with the NEC.

M. Fire Alarm –

The fire alarm system shall be analog addressable, class A loop type, and electrically supervised. Horn/strobe devices shall be 95 dB and a minimum of 15 candela. Smoke detector devices shall be photoelectric type. Manual pull station devices shall be single-action type with key reset. Duct detectors shall be provided in return air ducts for air handling units, which have a capacity in excess of 56.6 cubic meters/minute (2000 cubic feet/minute). Elevator recall function will be provided to recall the elevator to the floor of building egress. Control modules for fan shutdown. Monitor modules for fire sprinkler flow and tamper switches.
All fire alarm wiring shall be installed in ¾ inch conduit. The fire alarm panel will report alarms to the campus master central fire alarm panel.

N. Security –

A raceway system shall be provided for security. Junction boxes will be located at each exterior door and ¾ conduit shall be run from the junction box to the main electrical room. A 3/8 inch flexible conduit shall be extended from each junction box and stubbed into the door frame. Rough-in for exterior camera's, interior camera's at entry's, card readers, entry communication and "buzz'-in" system for door control at pre-school.

O. Clocks –

Clocks will be provided in the classrooms, distance learning, open office, dining, kitchen, resource, and breakrooms. Minimum size of clock will be 12" in diameter and 120V with battery. Clock correction equipment will be located in Communication Rooms. The clocks will meet USU campus standard.

P. Telecommunications –

A structured cabling system for voice and data shall be provided within the building and will include both backbone cabling and horizontal distribution cabling. Backbone cabling for voice and data will be provided from the main level telecommunications room to the telecommunications closets located within the building so that no cable exceeds 250' in length. All cabling, both voice and data shall be Category 6. All outlets will serve as a combination telephone and data outlet. Provide fiber and copper cables per current USU standards.

Q. Audio-visual –

Provide equipment rough-in and raceway for distance learning rooms, observation and audiology. In Distance Learning provide rough-in for plasma screen, smart board, overhead projector, conference table floor box, lectern floor box, sound speakers, voice amplication and equipment cabinet. Data connections are provided

at each floor box and at the equipment cabinet. In the classrooms rough-in for an overhead projector, and future smart board.

R. Sound Enhancement –

Provide a sound enhancement system to amplify an instructors voice to overcome the deleterious effects of background noise, reduce teacher fatigue and assure speech clarity of class presentation and participation. Provide an infrared wireless system with no channel restrictions, no interference, a room contained signal; three band equalizer and three stereo inputs. Provide volume controls for TV/VCR, CD/Tape and computer, four individual speaker volume controls, powers up to eight speakers, signal quality indicator, two channel infrared option and output for personal FM systems. System includes speakers, cables, microphones transmitters, receivers, diodes, batteries, chargers, etc., as required for a complete operational system.

S. Television –

Provide master antenna TV systems, of types, capacities, and channels/frequencies as indicated; consisting of channel filters, distribution amplifiers, modulators, cabling, matching transformers, baluns, signal dividers, and other components as required for a complete installation. Except as otherwise indicated, provide manufacturer's standard system components; construct and design in accordance with published product information. Passive distribution equipment shall pass frequencies from 5 to 500 MHz. The system shall receive and distribute signals from the local community cable system. Television channels shall transmit through projector. Coordination with the local CATV company to be sure that the cable drop provides a signal of at least +10 dBmV. The contractor shall provide 2 channel elimination filters and 2 modulators.

T. Energy Utilization -

The standard that governs the requirements for energy utilization is ASHRAE 90.1. This standard outlines the power density requirements for electrical lighting systems as well as energy related to mechanical cooling and heating.

As it applies to electrical lighting systems, ASHRAE 90.1 limits the power density that can be used for interior lighting. There are two ways to calculate the energy requirements: one is the space-by-space method, in which the power density allowance is calculated for each individual space within the building, and added to a total. The second method is the building area method, in which an average power density requirement must be met for the entire building. For this type of building, the lighting power density allowance is an average of 1.2 watts per square foot over the entire building.

Dual level switching and occupancy sensors are provided for offices in order to provide the user with control over the amount of illumination (and power density) utilized for any particular task. Offices are typically located on the building perimeter and will have light contribution from exterior windows; dual level switching will be beneficial in these spaces.

In toilet room spaces, motion sensors are provided to control the lights automatically. This provides the most cost effective means of conserving energy in these types of spaces.

U. Lightning Protection –

A lightning protection risk analysis will be performed per NFPA 780. If risk exceeds moderate risk a lightning protection system will be provided.

3.1 SITE CONSIDERATIONS

The location chosen for the building is currently an asphalt parking lot without determined pedestrian circulation paths. There is a major pedestrian circulation corridor through the center of the housing quad to the southwest. The southwest corner of the parking lot where the current sidewalks meet will be the focus of campus foot traffic to and from the building. The student/faculty entrance/circulation scheme for the building should recognize and address this campus circulation path.

The parents and children coming to the Preschool for the Deaf and the Daycare Center comprise a separate user group which will arriving via vehicles. Temporary parking for parents and circulation to and from the Daycare and Preschool should be optimized so that entrances are south facing and near to parking areas.

3.2 QUALITY AND IMAGE

The exterior building materials should be compatible with existing facilities. Materials exterior and interior should be low maintenance and durable. Emergency generator, transformers, dumpsters and other utility equipment should be either located underground or screened from view. Screens and enclosures should be an integral part of the facility design.

3.3 BUILDING FORM AND MASSING

The image below was developed as a programmatic massing exercise. It represents a possible building footprint of approximately 20,000 square feet at 3 stories oriented with a south exposure on the site.

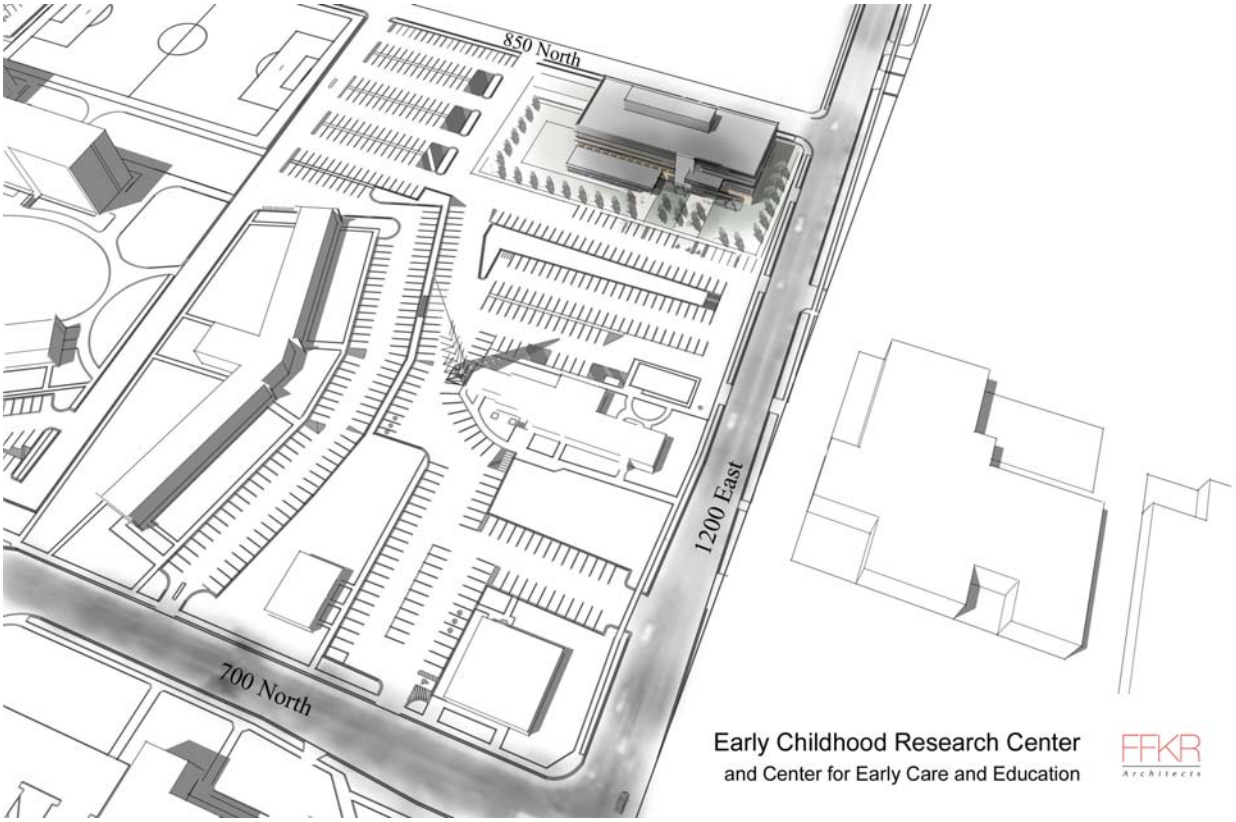

3.4 INTERNAL CIRCULATION

Level 1

It has been decided that the building should provide two main public entrances on Level 1, as follows.

One entrance will serve the two preschool facilities. This entrance must have a vestibule, with the interior doors of the vestibule provided with electronic access control so that only authorized staff and parents may enter. The building should be organized so that preschool users encounter the combined office facility immediately upon entering through the secured doors. Building circulation should then be organized with direct access to the zone of the Preschool for the Deaf or the Center for Early Care and Education. Regarding the Preschool for the Deaf, organization should be such that the Auditory Screening Suite is near the entrance.

One entrance will serve as the public entrance to the Emma Eccles Jones Early Childhood Research Center located on Levels 2 and 3. An elevator serving the upper levels must be provided at this entrance. This entrance must be configured so that authorized staff from the Center for Early Childhood Research can access the preschools through a door with electronic security, or through the preschool office. This is necessary because preschool students may, with parental approval, and parental and / or staff supervision, participate in early childhood research studies on level 2 of the facility.

Circulation on Level 1 must also allow for convenient, secured access to the secure playground facility without having to traverse unsecured areas of the building or grounds. In addition, it is desirable that the students of the Center for Early Childhood Education be able to access the secured playground without traveling though the zone of the Preschool for the Deaf.

3.5 INTERNAL RELATIONSHIPS

Level 1

Level 1 of the proposed facility will house the Center for Early Care and Education and the Preschool for the Deaf. Both of these facilities will provide care and instruction for children from ages 6 weeks to 5 years. The two facilities will function with separate staffs of teachers and care givers. At the same time the two preschools will share the use of food service, dining, administration and work space, lobbies, and playgrounds.

The students in the Preschool for the Deaf will require special environments to optimize their educational opportunities, as discussed elsewhere in this program. At the same time, one of the goals of the Preschool for the Deaf is for their students to begin the process of main streaming with normal hearing children as part of their preschool education. The goal of the design of the Level 1 space should be to create separate zones for the classroom and diagnostic functions of the two schools, while at the same time utilizing the common spaces to allow co-mingling of the students.

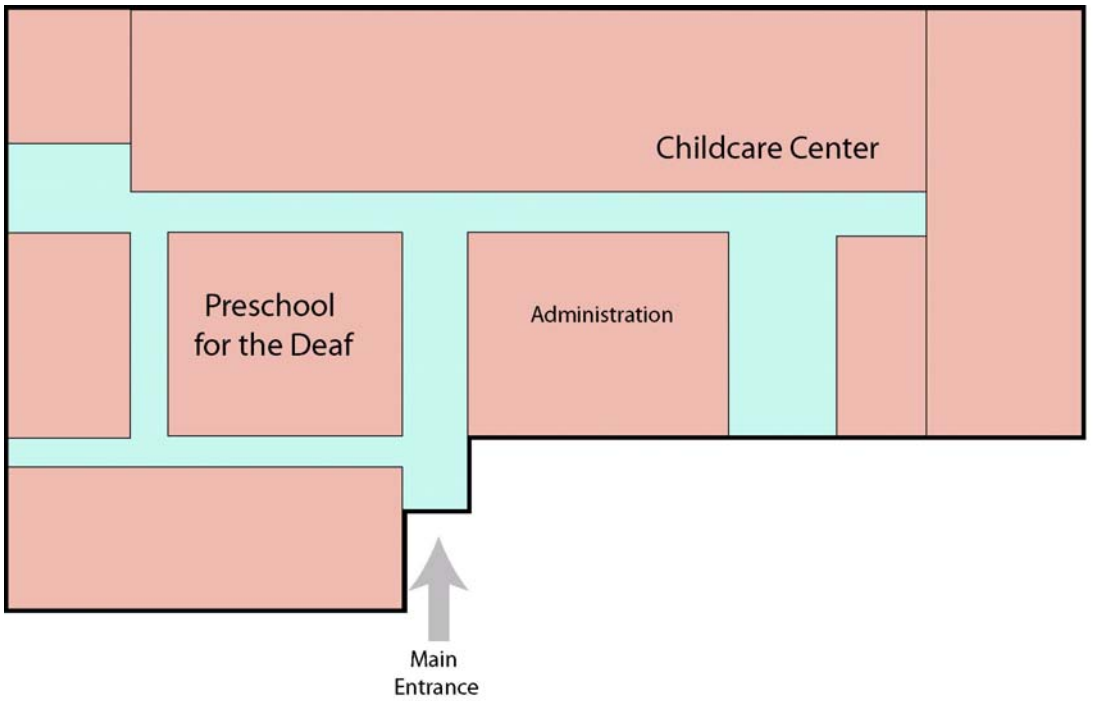

First Floor

Level 2

Level 2 of the proposed facility will house those functions of the Center for Early Childhood Research which interface directly with the public, and with College of Education students. Public population visiting the floor will range from parents attending special training classes or seeking parent resource materials, to preschool and elementary school students and their parents who are receiving tutoring, or participating in research projects. College of Education students will be on the floor to observe teaching or tutoring sessions as part of their curriculum, or attending sessions in the outreach classroom facilities. They may also may be working as paid teaching assistants in numerous Center functions.

The facilities of Level 2 must be divided to the greatest extent possible into separate zones for the following functions:
1. functions for preschool and elementary school children,
2. functions for adults and College of Education students who are using the faiclity without children.
3. Auxillary areas which support the activities of the floor.

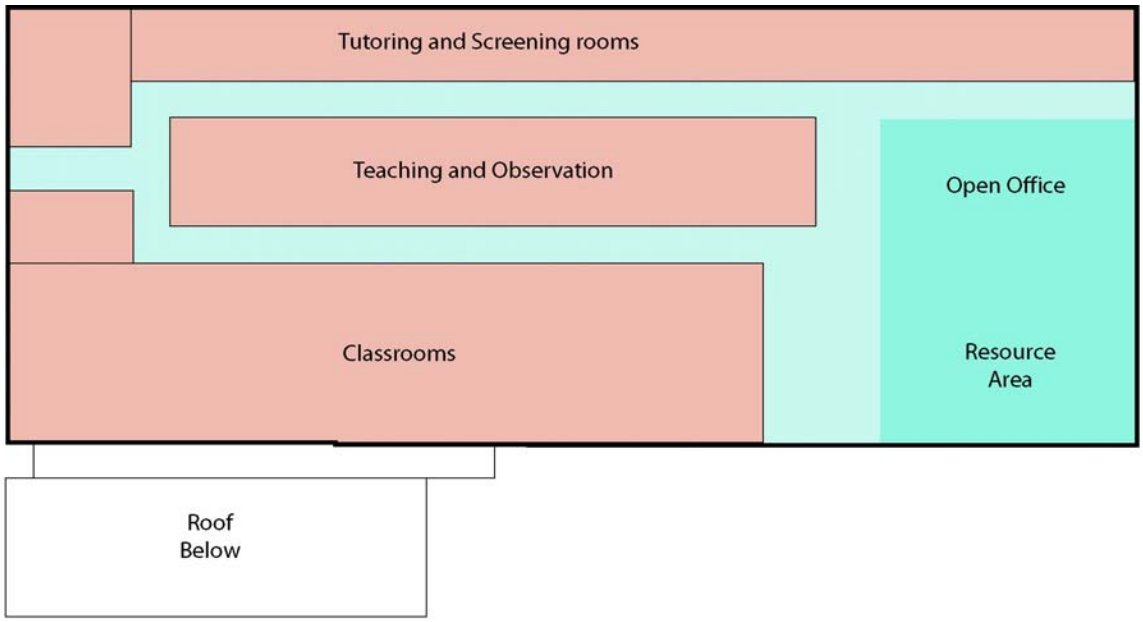

Second Floor

Level 3

The majority of the Level Three floor plate is open office space. It is suggested that perimeter offices be grouped along the north and south walls leaving the southeast corner of the building open to shared views to the mountains.

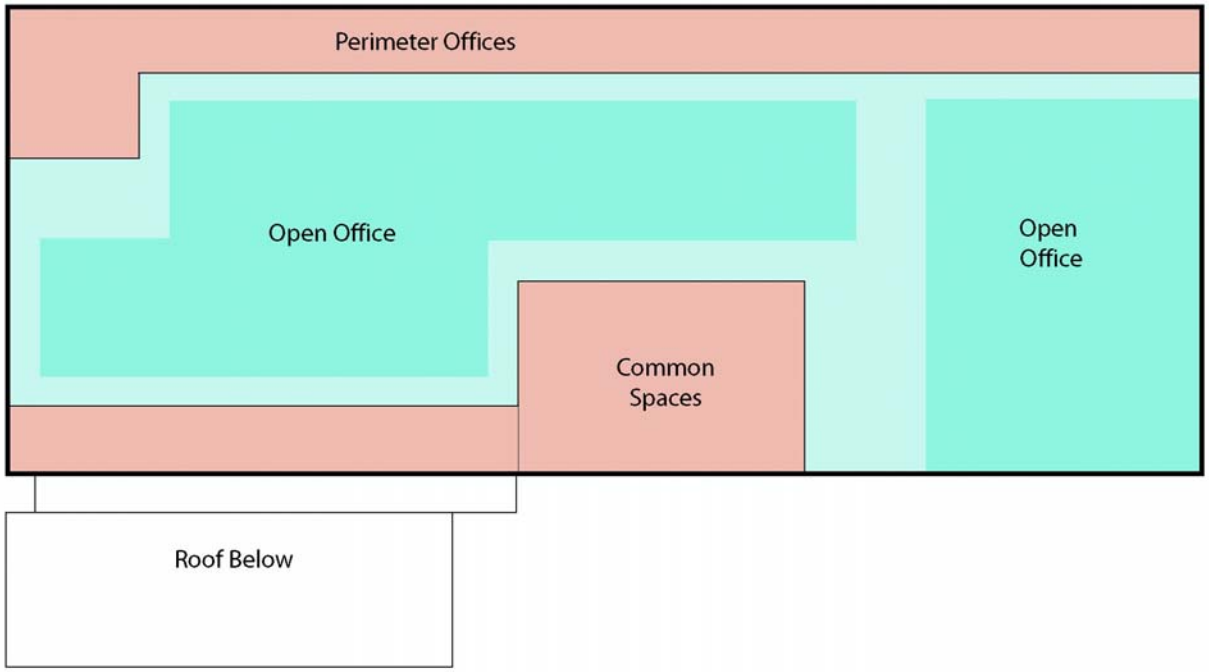

Third Floor

3.6 BUILDING CODE ANALYSIS

This analysis is based on the assumptions made in the program including the Site plan, Individual Space Summary and Stacking diagrams. Given the space allocations and intended uses, it represents the most efficient approach to fire protection and life safety.

APPLICABLE CODES, STANDARDS, AND GUIDELINES

2006 International Building Code
Rule R156-56 Utah Uniform Building Standards Act Rules
2006 International Fire Code
2006 International Plumbing Code
2006 International Mechanical Code
2006 International Energy Conservation Code
2003 National Electrical Code
ICC/ANSI A117.1-2003
ASHRAE 90.1
USU Design Guidelines
State of Utah DFCM design standards

USE AND OCCUPANCY CLASSIFICATION

Level One	Groups B and E
Level Two	Groups B and E
Level Three	Group B

Level One Multi-purpose space is an assembly area that is an accessory to the Group E and not considered to be a separate occupancy according to ***508.3.1 Accessory occupancies***

The administrative suite on level one including reception, offices, and conference areas is classified Group B as per IBC 304.1.

The Preschool for the Deaf facilities and Daycare shall be classified Group E, according to IBC ***305.1 Education Group E***.

"Educational Group E occupancy Includes, among others the use of a building or structure, or a portion thereof, by six or more persons at any time for educational purposes through the 12th grade.

And according to R156-56-704. Statewide Amendments to the IBC ***Section 305.2 DayCare.***

"The building or structure, or portion thereof, for educational, supervision, child day care centers, or personal care services of more than four children shall be classified as a Group E occupancy. See Section 421 for special requirements for Group E child care centers."

Section 421 as added by Utah amendment R156-56 dictates special requirements for group E daycare centers as follows:

"Section 421 Group E Child Day Care Centers. Group E child day care centers shall comply with Section 421.

421.1 Location at grade. Group E child day care centers shall be located at the level of exit discharge.

Exception: Child day care spaces for children over the age of 24 months may be located on the second floor of buildings equipped with automatic fire protection throughout and an automatic fire alarm system.

421.2 Egress. All Group E child day care spaces with an occupant load of more than 10 shall have a second means of egress. If the second means of egress is not an exit door leading directly to the exterior, the room shall have an emergency escape and rescue window complying with Section 1026."

These requirements apply to the Daycare facilities of Level One and indicate special limitations and requirements to the Drop-in Daycare if located on Level Two.

ALLOWABLE BUILDING HEIGHTS AND AREAS

Occupancy	Construction Type IIA
Group B	5 stories, 37,500 sf per flr
Group E	3 stories, 26,500 sf per flr.

Table 508.3.3 indicates required separation of occupancies B and E to be 1 Hour, 508.3 Nonseparated occupancies allows those occupancies to remain nonseparated assuming the most restrictive provisons of Section 403 and Chapter 9 are applied to the entire building.

The more restrictive E occupancy allows for planned floor area and height without increases.

TYPES OF CONSTRUCTION

TABLE 601 FIRE-RESISTANCE RATING REQUIREMENTS FOR BUILDING ELEMENTS

	TYPE IIA
Structural Frame	1hr
Exterior Bearing walls	1hr
Interior Bearing walls	1hr
Exterior Nonbearing walls and partitions	0hr (Table 602)
(assuming 30'min separation from property lines)	
Interior Nonbearing walls and partitions	0hr
Floor Construction	1hr
Roof Construction	1hr

Note e applies to Type IIA so sprinklers should be substituted for 1-hour fire-resistance rated construction.

EGRESS

The following occupant load factors shall be used:

USE	Flr Area/Occupant
Accessory storage areas, mechanical equipment room	300 gross
Business Areas	100 gross
Daycare	35 net
Educational Classroom Area	20 net
Kitchens, commercial	200 gross

4.0 SPACE USE PROGRAM

4.1 INDIVIDUAL SPACE SUMMARY

No.		Space Name	Units	Area	Net SF		Adjacencies	Comments
	FIRST FLOOR							
1.1		Entrance Lobby	1	640	640			
	Preschool for the Deaf							Verify how food prep is handled
1.2		Classroom	5	430	2,150			sinks in classrooms, fully glazed doors, low windows 18-24", CCTV camera in classrm.
1.3		Classroom Observation	5	60	300		classroom	one way glass?
1.4		Children's toilet	5	64	320		classroom	low sinks and toilets
1.5		Therapy Room	6	55	330			
1.6		Therapy Observation	1	200	200		therapy room	one way glass?
1.7		Discovery Room	1	500	500			
1.8		Conference Room	1	190	190		administrative suite	
1.9		Director	1	110	110		administrative suite	
1.10		Secure Records Room	1	120	120			
1.11		Commons/Lunch	1	1000	1,000		kitchen	
1.12		Audiology Suite	1	800	800		entrance lobby	
		Library		0	0			Share space upstairs
		Subtotal Preschool for the Deaf			**6,020**			
	Center for Early Care and Education							Gross Area per pre-existing program 8,062 gsf
2.1		Classroom	5	1000	5,000			
2.2		Classroom Observation	5	90	450		classroom	
2.3		Children's Toilet	5	65	325		classroom	
2.4		Director Office	1	110	110		administrative suite	
2.5		Conference Room	1	190	190		administrative suite	
2.6		Teacher Work Room/cubicles	1	550	550		administrative suite	
2.7		Admin Asst Area	1	120	120		administrative suite	
2.8		Staff/ Public Toilets	2	50	100			
2.9		Kitchen	1	250	250		Commons, and near service entrance	
2.10		Dry Storage	1	50	50		Kitchen	
2.11		Child Care Admin.	1	1000	1,000			
		Subtotal Child Care			**8,145**			
	Drop-in Daycare							
4.1		Drop-in Child Care	1	590	590			
4.2		Drop-in Child Care Restroom	1	60	60			
		Subtotal Daycare Care			**650**			
		Subtotal 1st floor			**15,455**			

No.		Space Name	Units	Area	Net SF		Adjacencies	Comments
	SECOND FLOOR							
	Administrative Suite							
3.1		Reception / Secretarial	1	200	200		Close to main stair.	Required by ECE and CLDC. Becomes building wide reception on 2nd floor
3.2		LLL Director	1	160	160			
3.3		CLDC Director	1	160	160			
3.5		AAC Offices	2	110	220			
3.6		Seminar / Conference Room	1	240	240			Space for meeting with Research Teams, Intervention Groups, etc.
		Admin. Subtotal			**980**			
	Common Spaces							
4.4		Secure Storage Room	1	120	120			Storage of data, student records, and test storage
4.5		Resource Area	1	2000	2,000		Located convenient to student traffic	A. Materials Check-out. B. Tables for Student Study Groups. Shared by all building occupants
4.6		Distance Delivery Classrooms	2	1000	2,000			
4.7		Observed Teaching Room	8	168	1,344			One way glass for observing teaching of small groups of children. Rooms observed from both Observation Hallway and Resource Area
4.8		Observation rooms	8	95	760			
4.10	***Open Office***		8	60	480			
		LLL Grad Students	2					Open Office
		CLDC Grad Students	5					Open Office
		AIC Grad Student	1					Open Office

No.		Space Name	Units	Area	Net SF		Adjacencies	Comments
	LLL - Language and Literacy Learning Laboratory							
5.1		Auditory Screening Room	1	156	156			Special sound proof room
5.3		Eye Movement Photo Lab	1	165	165			House new equipment acquired by Ray Reutzel
5.4		Individual Testing Room	1	132	132			
5.5		CLDC Transcription Lab	8	60	480			
	Future Use							
6.1		In person tutoring rooms	6	81	486			
6.4		Consult	1	90	90			
		Subtotal 2nd floor			**9,193**			
	THIRD FLOOR							
	ECE Administrative Suite							
7.1		ECE Reception / Secretarial	1	200	200			
7.2		ECE Director	1	160	160			
7.3		ECE Associate Director	1	110	110			
7.4		ECE Program Director	2	110	220			
7.5		ECE Faculty Offices	4	110	440			
7.6		Shared Conference Room	1	270	270			12 to 15 people.
		Admin. Subtotal			**1,400**			
	Common Spaces							
7.7		Break / Work Room	1	900	900			
7.8		Secure Records Storage	1	120	120			
7.9		Server room	1	154	154			Dedicated cooling, NCHAM servers
7.10		ECE Research Cubicles	16	60	960			Grad students; open office
7.11		Storage	1	200	200			

No.		Space Name	Units	Area	Net SF		Adjacencies	Comments
	NCHAM - National Center for Hearing Assessment and Management							
8.1		NCHAM Director	1	160	160			
8.2		NCHAM Faculty Offices	16	110	1,760			
8.3		NCHAM Conference Room	2	270	540			
8.4		NCHAM Prog Dev.	8	60	480			Program Dev. Team; 4 Programmers, 4 Test Team
8.5		NCHAM Cubicles	44	60	2,640			4 Graduate Students, 4 Undergraduate Students +2 future
8.6		NCHAM Help Desk	4	60	240			4 People: They benefit from interaction when answering questions on phone- open office
		NCHAM Subtotal			**5,820**			
		Subtotal 3rd floor			**9,354**			
	Programmed Areas by Floor					**GSF**		
		Subtotal 1st floor			15,455	20,000		
		Subtotal 2nd floor			9,193	16,000		
		Subtotal 3rd floor			9,354	16,000		
		Mechanical Penthouse				4,000		
							net/gross	
	Total programmed area				**34,002**	**56,000**	61%	

4.2 ROOM DATA SHEETS

Preschool for the Deaf
SPACE PROGRAM

1.2 Classroom

Room Name:	Classroom
Desired SF Area:	430 sq ft
Quantity:	5
Number of Occupants:	varies
Hours and days Used:	Business hours

PROXIMITY & ACCESS REQUIREMENTS

Lower Level

ARCHITECTURAL CHARACTERISTICS

Windows :	Yes
Doors :	Yes, 3'-0"
Floor Finish:	Carpet and VCT
Wall Finish :	Painted Gyp. Bd
Ceiling Finish:	Acoustical Ceiling Tile
Millwork:	Upper and Lower cabinetry and built-in shelving with cubbies for coats and bags

ENGINEERING SYSTEMS

HVAC	Standard
Electrical	Standard
Plumbing	Sink
Lighting	Direct/indirect linear pendants and under-cabinet
Phone/Data Ports	Standard
Special Requirements	Upgrade OISTC rating at exterior windows

FURNISHINGS

White board, bulletin board

MISCELLANEOUS & OTHER DETAILS

Projection Screen CCTV camera, Voice amplification and Comm system for Observation

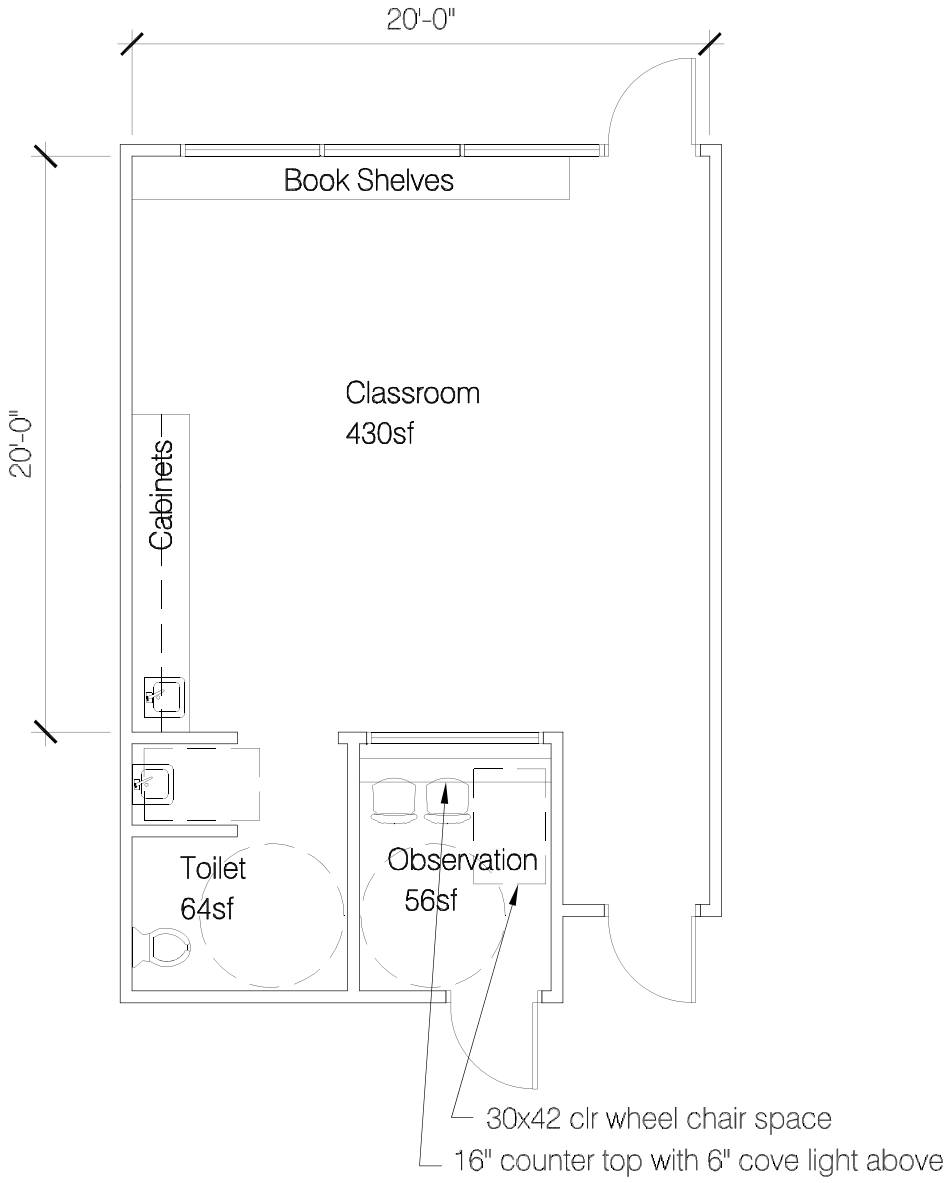
20'-0"
Book Shelves
Classroom
430sf
20'-0"
Cabinets
Toilet
64sf
Observation
56sf
30x42 clr wheel chair space
16" counter top with 6" cove light above

Preschool for the Deaf
SPACE PROGRAM

1.3 Observation

Room Name:	Observation
General Space Description:	small room for two or three occupants observing classroom.
Desired SF Area:	60 sq ft
Quantity:	5
Number of Occupants:	varies
Purpose of Space :	Classroom Observation
Hours and days Used:	Business hours

PROXIMITY & ACCESS REQUIREMENTS

Lower Level

Must be adjacent to :	Classroom

ARCHITECTURAL CHARACTERISTICS

Windows :	One-way Glass
Doors :	Yes, 3'-0"
Floor Finish:	Carpet
Wall Finish :	Painted Gyp. Bd
Ceiling Finish:	Acoustical Ceiling Tile
Millwork:	desk with light cove.

ENGINEERING SYSTEMS

HVAC	Standard
Electrical	standard
Plumbing	none
Lighting	Direct/indirect linear pendants and cove light w/dimmer in millwork. switched separately.
Phone/Data Ports	3 ea. at desk
Special Requirements	

FURNISHINGS

(2) chairs

MISCELLANEOUS & OTHER DETAILS

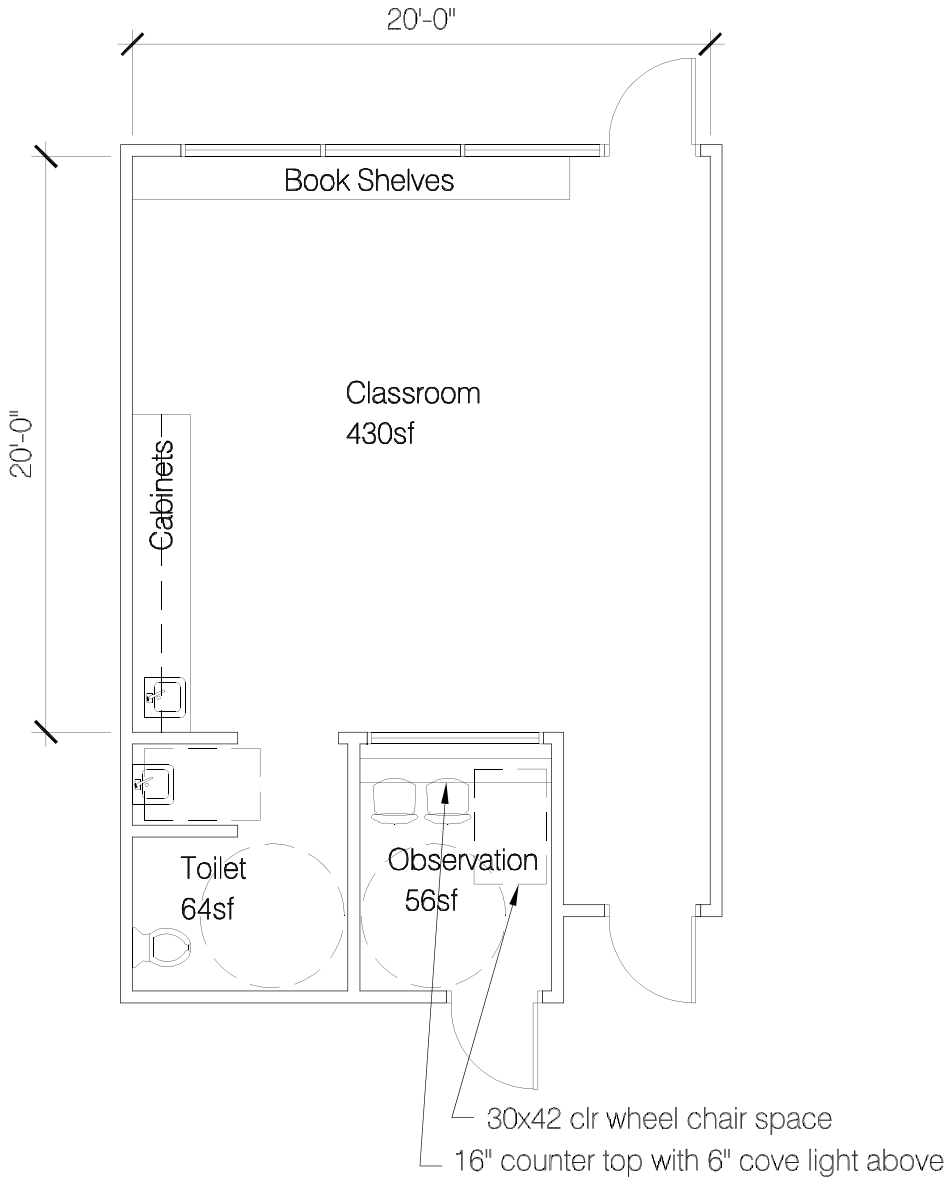
20'-0"
Book Shelves
Classroom
430sf
20'-0"
Cabinets
Toilet
64sf
Observation
56sf
30x42 clr wheel chair space
16" counter top with 6" cove light above

Preschool for the Deaf
SPACE PROGRAM

1.4 Children's Toilet

Room Name:	Restroom
General Space Description:	Children's semi-private restroom adjacent to classroom
Desired SF Area:	64 sq ft
Quantity:	5

PROXIMITY & ACCESS REQUIREMENTS

Must be adjacent to :	Classroom

ARCHITECTURAL CHARACTERISTICS

Windows :	No
Doors :	No
Floor Finish:	Ceramic Tile
Wall Finish :	Ceramic Tile
Ceiling Finish:	Painted Gyp. Bd
Millwork:	No

ENGINEERING SYSTEMS

HVAC	Exhaust
Electrical	GFCI
Plumbing	Small Toilet and Lav
Lighting	wall mount flourescent
Phone/Data Ports	none
Special Requirements	

FURNISHINGS

MISCELLANEOUS & OTHER DETAILS

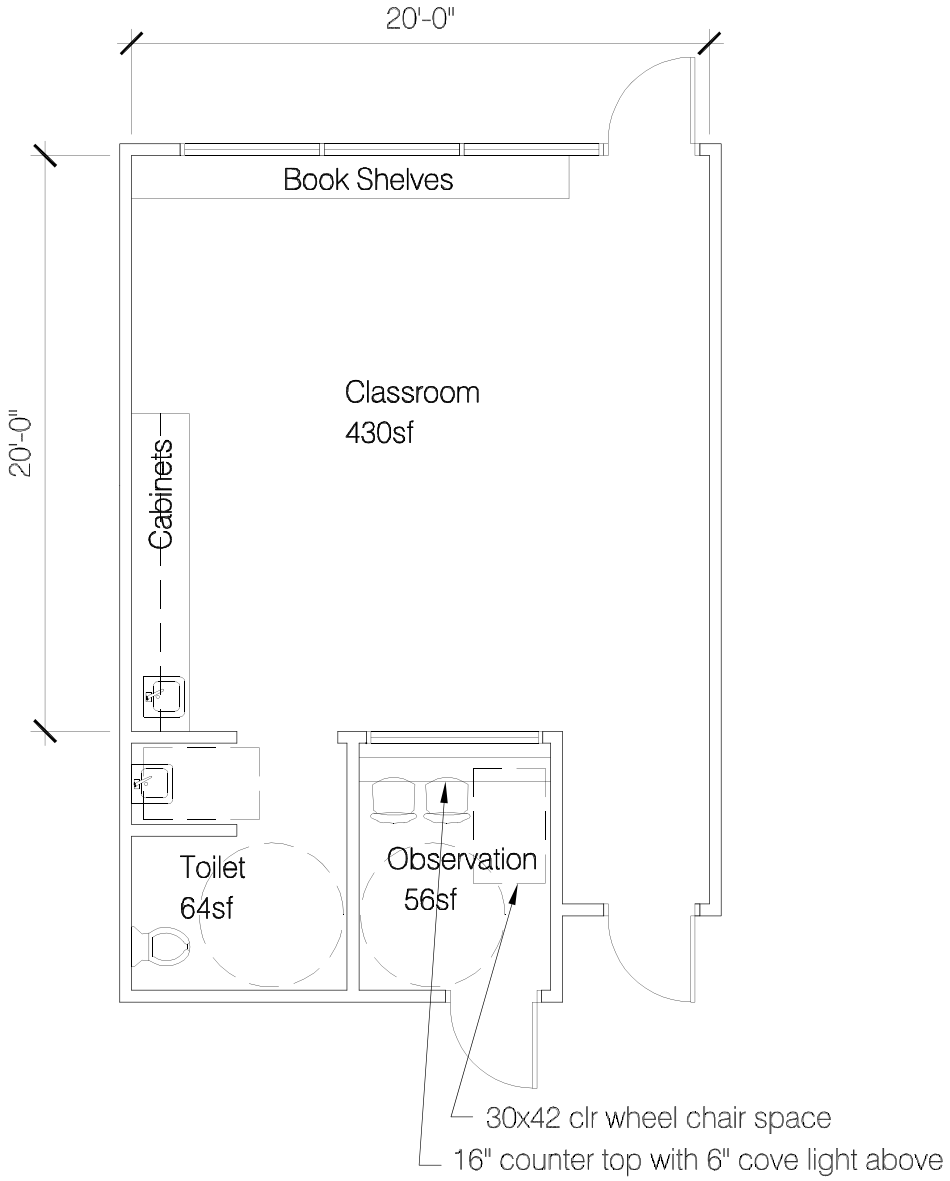
20'-0"
Book Shelves
Classroom
430sf
20'-0"
Cabinets
Toilet
64sf
Observation
56sf
30x42 clr wheel chair space
16" counter top with 6" cove light above

Preschool for the Deaf
SPACE PROGRAM

1.5 Therapy Room

Room Name:	Therapy
Desired SF Area:	55 sq ft
Quantity:	6
Number of Occupants:	varies

PROXIMITY & ACCESS REQUIREMENTS

ARCHITECTURAL CHARACTERISTICS

Windows :	One-way glass
Doors :	Yes, 3'-0", fully glazed.
Floor Finish:	Carpet
Wall Finish :	Painted Gyp. Bd
Ceiling Finish:	Acoustical Ceiling Tile
Millwork:	none

ENGINEERING SYSTEMS

HVAC	Standard
Electrical	Standard
Plumbing	none
Lighting	Direct/indirect linear pendant
Phone/Data Ports	Standard
Special Requirements	Comm system for Observation

FURNISHINGS

MISCELLANEOUS & OTHER DETAILS

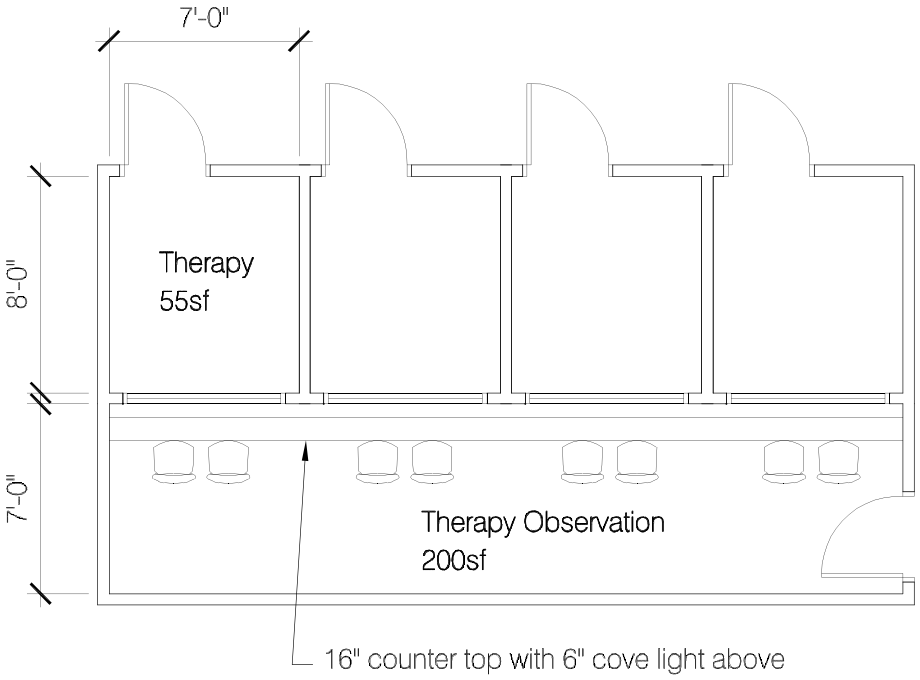
7'-0"
8'-0"
7'-0"
Therapy
55sf
Therapy Observation
200sf
16" counter top with 6" cove light above

Preschool for the Deaf
SPACE PROGRAM

1.6 Therapy Observation

Room Name:	Observation
Desired SF Area:	200 sq ft
Quantity:	1

PROXIMITY & ACCESS REQUIREMENTS

Must be adjacent to :	Therapy

ARCHITECTURAL CHARACTERISTICS

Windows :	One-way Glass
Doors :	Yes, 3'-0"
Floor Finish:	Carpet
Wall Finish :	Painted Gyp. Bd
Ceiling Finish:	Acoustical Tile
Millwork:	Desk with light cove.

ENGINEERING SYSTEMS

HVAC	Standard
Electrical	power at desktop
Plumbing	none
Lighting	Light cove at millwork. and direct/indirect linear pendants switched separately.
Phone/Data Ports	standard along desktop
Special Requirements	Comm system for listening to therapy

FURNISHINGS

MISCELLANEOUS & OTHER DETAILS

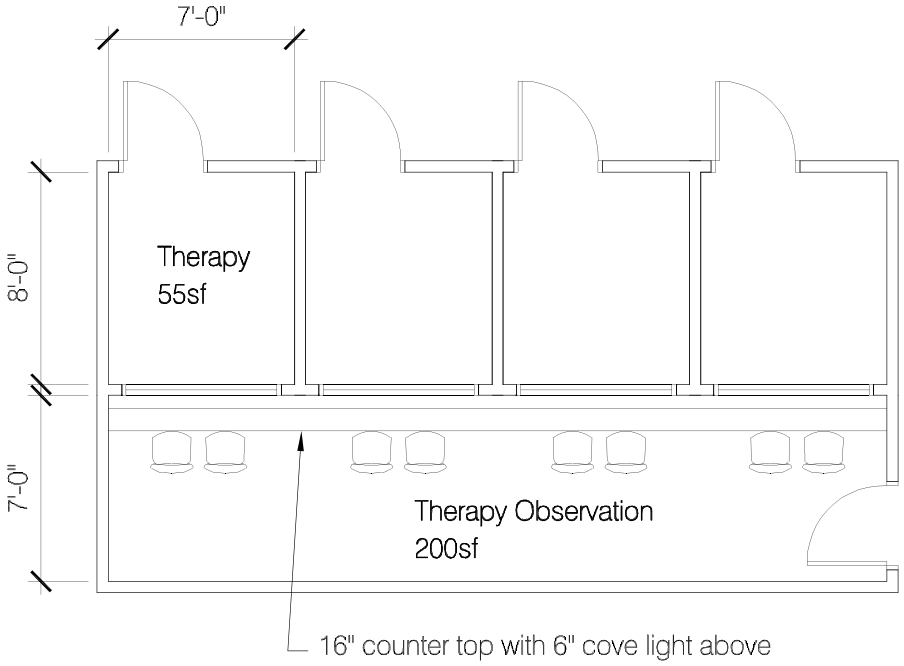
7'-0"
8'-0"
7'-0"
Therapy
55sf
Therapy Observation
200sf
16" counter top with 6" cove light above

Preschool for the Deaf
SPACE PROGRAM

1.7 Discovery Room

Room Name:	Discovery Room
Desired SF Area:	500 sq ft
Quantity:	1

PROXIMITY & ACCESS REQUIREMENTS

Must be near :	Classrooms

ARCHITECTURAL CHARACTERISTICS

Windows :	Yes
Doors :	Yes, 3'-0", fully glazed
Floor Finish:	Carpet
Wall Finish :	Painted Gyp. Bd
Ceiling Finish:	Acoustical Tile
Millwork:	book shelves

ENGINEERING SYSTEMS

HVAC	Standard
Electrical	Standard
Plumbing	None
Lighting	Direct/Indirect pendants
Phone/Data Ports	Standard
Special Requirements	

FURNISHINGS

MISCELLANEOUS & OTHER DETAILS

Preschool for the Deaf
SPACE PROGRAM

1.8 Conference Room

Room Name:	Conference Room
Desired SF Area:	190 sq ft
Quantity:	1

PROXIMITY & ACCESS REQUIREMENTS

Must be near :

ARCHITECTURAL CHARACTERISTICS

Windows :	Yes
Doors :	Yes, 3'-0", fully glazed
Floor Finish:	Carpet
Wall Finish :	Painted Gyp. Bd
Ceiling Finish:	Acoustical Tile
Millwork:	shallow storage cabinets

ENGINEERING SYSTEMS

HVAC	Standard
Electrical	Floor box at conf table.
Plumbing	none
Lighting	direct/indirect linear pendants. dimmable
Phone/Data Ports	Floor box at conf table.
Special Requirements	Infrastructure for video conferencing.

FURNISHINGS

Conference table and 8 Chairs

MISCELLANEOUS & OTHER DETAILS

Recessed projection screen

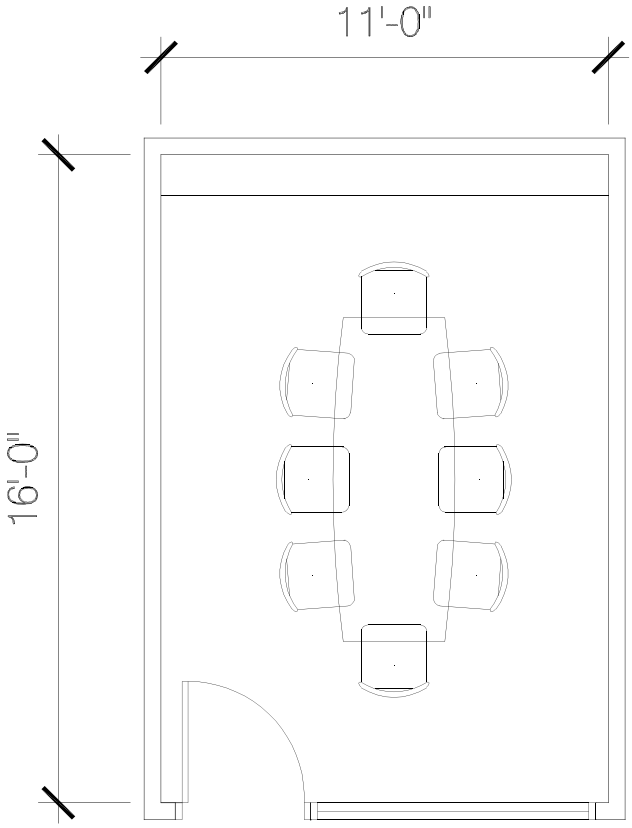
11'-0"
16'-0"

Preschool for the Deaf
SPACE PROGRAM

1.9 Director's Office

Room Name:	Director
Desired SF Area:	110 sq ft
Quantity:	1

PROXIMITY & ACCESS REQUIREMENTS

Located within :	Administrative Suite

ARCHITECTURAL CHARACTERISTICS

Windows :	Yes
Doors :	Yes, 3'-0", Fully Glazed
Floor Finish:	Carpet
Wall Finish :	Painted Gyp. Bd
Ceiling Finish:	Acoustical Tile
Millwork:	none

ENGINEERING SYSTEMS

HVAC	Standard
Electrical	Standard
Plumbing	none
Lighting	Direct/indorect linear pendant
Phone/Data Ports	Standard
Special Requirements	

FURNISHINGS

Desk, Task chair, File cabinet, (2) Guest chairs

MISCELLANEOUS & OTHER DETAILS

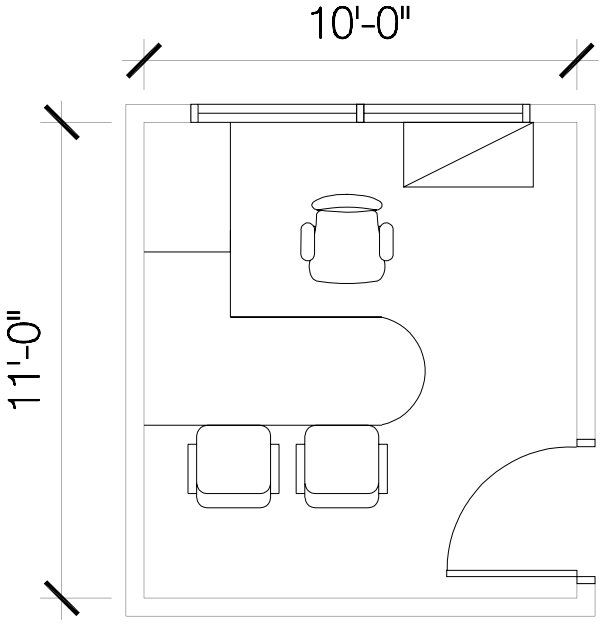
10'-0"
11'-0"

Preschool for the Deaf
SPACE PROGRAM

1.10 Secure Storage

Room Name:	Records
Desired SF Area:	120 sq ft
Quantity:	1
Purpose of Space :	Secure Records Storage

PROXIMITY & ACCESS REQUIREMENTS

ARCHITECTURAL CHARACTERISTICS

Windows :	no
Doors :	Yes, 3'-0"
Floor Finish:	VCT
Wall Finish :	Painted Gyp. Bd
Ceiling Finish:	Acoustical Tile
Millwork:	none

ENGINEERING SYSTEMS

HVAC	
Electrical	Standard
Plumbing	none
Lighting	Recessed Flourescent
Phone/Data Ports	none
Security Electronics	Card reader or keypad
Special Requirements	

FURNISHINGS

File Cabinets

MISCELLANEOUS & OTHER DETAILS

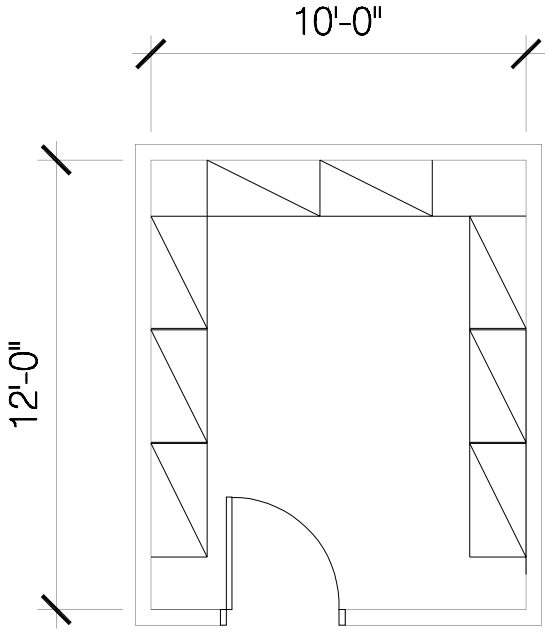
10'-0"
12'-0"

Preschool for the Deaf
SPACE PROGRAM

1.11 Commons/Lunch

Room Name:	Commons
Desired SF Area:	1000 sq ft
Quantity:	1

PROXIMITY & ACCESS REQUIREMENTS

Must be adjacent to :	Kitchen

ARCHITECTURAL CHARACTERISTICS

Windows :	Yes
Doors :	Yes, 3'-0", Fully glazed
Floor Finish:	Linoleum
Wall Finish :	Painted Gyp. Bd.
Ceiling Finish:	Acoustical Tile

ENGINEERING SYSTEMS

HVAC	Standard
Electrical	Standard
Plumbing	none
Lighting	Standard
Phone/Data Ports	Standard
Special Requirements	

FURNISHINGS

Lunch Tables w/Built in bench.

MISCELLANEOUS & OTHER DETAILS

Preschool for the Deaf
SPACE PROGRAM

1.12 Audiology Suite

Room Name:	Audiology Suite
Desired SF Area:	800 sq ft
Quantity:	1

PROXIMITY & ACCESS REQUIREMENTS

Must be near :	Building Entrance

ARCHITECTURAL CHARACTERISTICS

Windows :	not required
Doors :	Yes, 3'-0"
Floor Finish:	Carpet
Wall Finish :	Painted Gyp. Bd ?
Ceiling Finish:	Acoustical Tile

ENGINEERING SYSTEMS

HVAC	Standard
Electrical	Standard
Plumbing	Standard
Lighting	Standard
Phone/Data Ports	Standard
Special Requirements	STC 55 minimum

FURNISHINGS/EQUIPMENT

MISCELLANEOUS & OTHER DETAILS

2nd Level Administrative Suite
SPACE PROGRAM

3.1 Reception/ Secretarial

Room Name:	Reception/ Secretarial
General Space Description:	Desk area for 2 occupants.
Desired SF Area:	200 sq ft
Quantity:	1
Number of Occupants:	2
Purpose of Space:	Information to visitors
Hours and days Used:	business hours

PROXIMITY & ACCESS REQUIREMENTS

Must be near to :	Entrance stair

ARCHITECTURAL CHARACTERISTICS

Windows :	None
Doors :	None
Floor Finish:	Carpet
Wall Finish :	N/A
Ceiling Finish:	Acoustical Ceiling Tile
Millwork:	Two level reception desk for two users

ENGINEERING SYSTEMS

HVAC	Standard air exchange
Electrical	At knee space
Plumbing	None
Lighting	Recessed cans above work surfaces
Phone/Data Ports	At knee space
Special Requirements	

FURNISHINGS/EQUIPMENT

MISCELLANEOUS & OTHER DETAILS

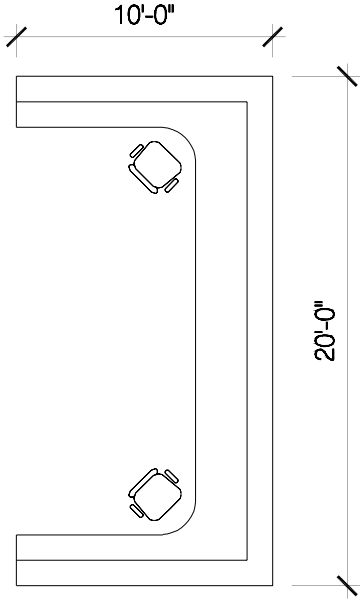
10'-0"
20'-0"

2nd Level Administrative Suite
SPACE PROGRAM

3.2 LLL Director's Office

Room Name:	Director
General Space Description:	Individual Private Office
Desired SF Area:	160 sq ft
Quantity:	1
Number of Occupants:	1
Hours and days Used:	Needs to accommodate extended hours

PROXIMITY & ACCESS REQUIREMENTS

Located within Administrative Suite

ARCHITECTURAL CHARACTERISTICS

Windows :	Yes, view preferred
Doors :	Yes, 3'-0", Fully glazed
Floor Finish :	Carpet
Wall Finish :	Gypsum Board
Ceiling Finish:	Acoustical Ceiling Tile

ENGINEERING SYSTEMS

HVAC	Standard air exchange
Electrical	Standard
Plumbing	None
Lighting	Direct/indirect linear pendants
Phone/Data Ports	Standard
Special Requirements	

FURNISHINGS

Desk, Task Chair, and bookshelf
2 guest chairs
2 File cabinets

MISCELLANEOUS & OTHER DETAILS

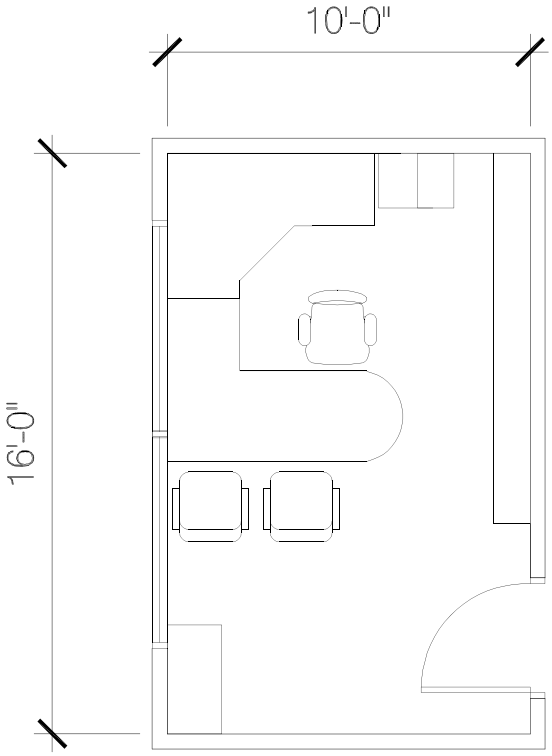
10'-0"
16'-0"

2nd Level Administrative Suite
SPACE PROGRAM

3.3 CLDC Director's Office

Room Name:	Director
General Space Description:	Individual Private Office (Works with 4 to 8 years old)
Desired SF Area:	160 sq ft
Quantity:	1
Number of Occupants:	1
Purpose of Space:	Office, work area
Hours and days Used:	Needs to accommodate extended hours

PROXIMITY & ACCESS REQUIREMENTS

Located within Administrative Suite

ARCHITECTURAL CHARACTERISTICS

Windows :	Yes, view preferred
Doors :	Yes, 3'-0", Fully glazed
Floor Finish :	Carpet
Wall Finish :	Gypsum Board
Ceiling Finish :	Acoustical Ceiling Tile

ENGINEERING SYSTEMS

HVAC	Standard air exchange
Electrical	Standard
Plumbing	None
Lighting	Direct/indirect pendants
Phone/Data Ports	Standard
Special Requirements	

FURNISHINGS

Desk, Task Chair, and bookshelf
2 guest chairs
2 File cabinets

MISCELLANEOUS & OTHER DETAILS

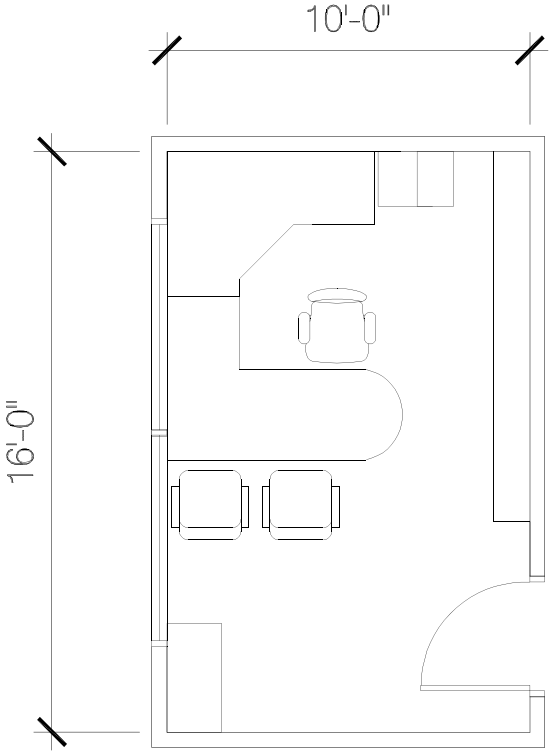
10'-0"
16'-0"

2nd Level Administrative Suite
SPACE PROGRAM

3.5 AAC Private Offices

Room Name:	Office
General Space Description:	Individual Private Office
Desired SF Area:	110 sq ft
Quantity:	2
Number of Occupants:	1
Purpose of Space:	Office, work area
Hours and days Used:	Needs to accommodate extended hours

PROXIMITY & ACCESS REQUIREMENTS

Located within Administrative Suite

ARCHITECTURAL CHARACTERISTICS

Windows :	Yes, view preferred
Doors :	Yes, 3'-0", Fully Glazed
Floor Finish :	Carpet
Wall Finish :	Gypsum Board
Ceiling Finish:	Ceiling Tile

ENGINEERING SYSTEMS

HVAC	Standard air exchange
Electrical	Standard
Plumbing	None
Lighting	Direct/indirect linear pendant
Phone/Data Ports	Standard
Special Requirements	

FURNISHINGS

Desk, Task Chair, Lateral File, and 2 guest chairs

MISCELLANEOUS & OTHER DETAILS

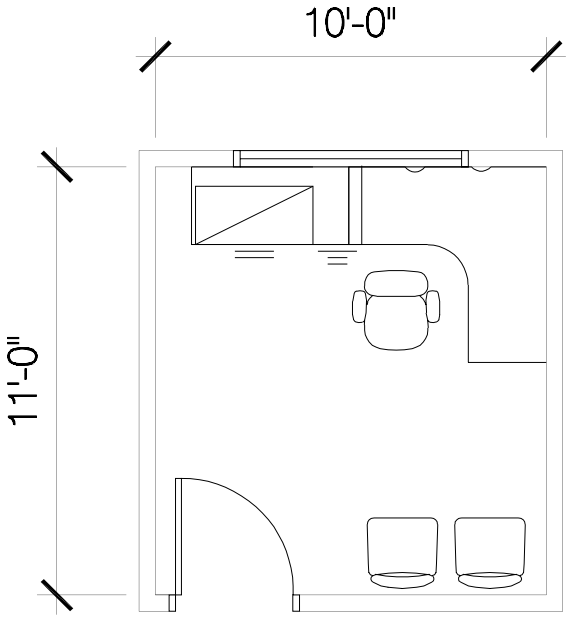
10'-0"
11'-0"

2nd Level Administrative Suite
SPACE PROGRAM

3.6 Seminar/ Conference Room

Room Name:	Conference Room
General Space Description:	large rooms for group meetings and work area
Desired SF Area:	240 sq ft
Quantity:	1
Number of Occupants:	Varies
Purpose of Space:	Space for meeting with research teams, Intervention groups, etc.
Hours and days Used:	Varies

PROXIMITY & ACCESS REQUIREMENTS

Located in administrative suite

ARCHITECTURAL CHARACTERISTICS

Windows :	Yes
Doors :	Yes, 3'-0", fully glazed
Floor Finish:	Carpet
Wall Finish :	Painted gyp.
Ceiling Finish:	Acoustical Ceiling Tile
Millwork:	shallow storage cabinets

ENGINEERING SYSTEMS

HVAC	Standard air exchange
Electrical	Floor box at conf. table
Plumbing	None
Lighting	linear pendant and recessed cans
Phone/Data Ports	Floor box at conf. table
Special Requirements	Infrastructure for video conferencing and projector

FURNISHINGS

Conference table and 10 conference chairs

MISCELLANEOUS & OTHER DETAILS

Recessed projection screen, Ceiling mounted projector by owner

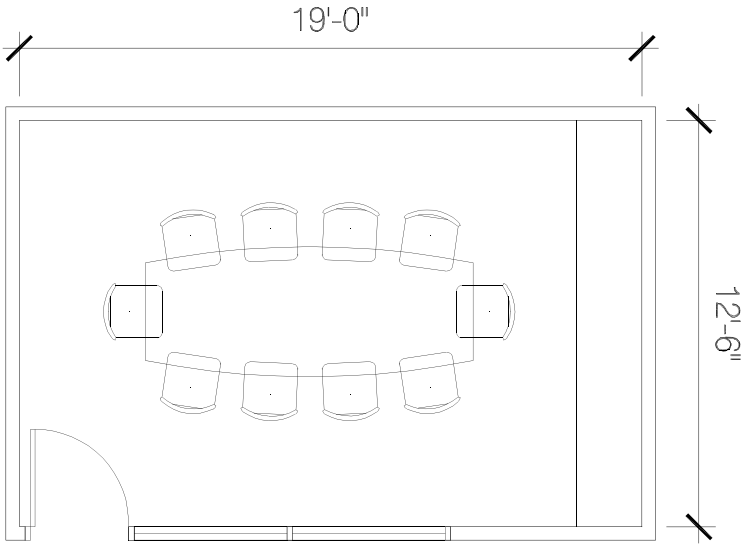
19'-0"
12'-6"

Second Level Common Area
SPACE PROGRAM

4.1 Drop-in Child Care

Room Name:	Child Care
General Space Description:	Open play area
Desired SF Area:	560 sq ft
Quantity:	1
Number of Occupants:	Shared, varies.
Purpose of Space:	Child Care
Hours and days Used:	Business hours

PROXIMITY & ACCESS REQUIREMENTS

Must be near to :	Entrance stair
Access:	Public

ARCHITECTURAL CHARACTERISTICS

Windows :	Yes, View preferred
Doors :	3'-0", Fully glazed
Floor Finish:	Carpet
Wall Finish:	Painted Gypsum Board
Ceiling Finish:	Acoustical Ceiling Tile

ENGINEERING SYSTEMS

HVAC	Standard air exchange
Electrical	Standard
Plumbing	Sink
Lighting	direct/indirect
Phone/Data Ports	Standard
Special Requirements	

FURNISHINGS

Low Table, Low Chairs, bookshelves.

MISCELLANEOUS & OTHER DETAILS

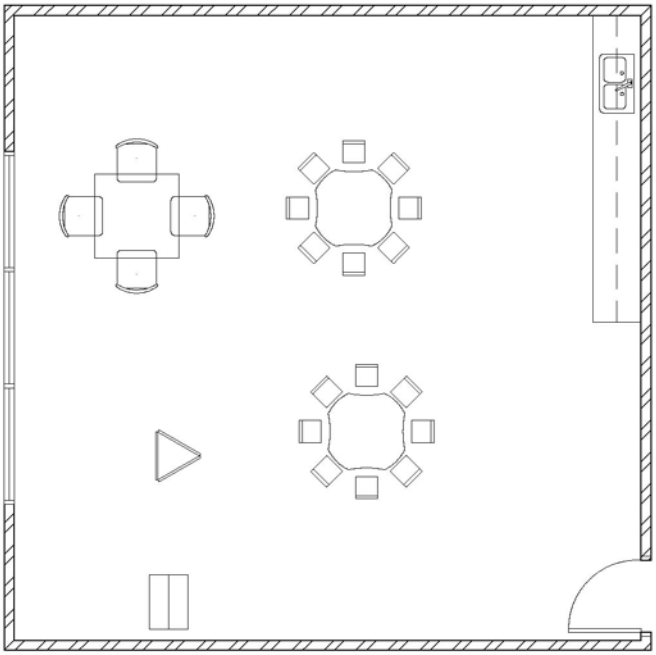

Second Level Common Area
SPACE PROGRAM

4.2 Drop-in Child Care Restroom

Room Name:	Restroom
Desired SF Area:	60 sq ft
Quantity:	1
Purpose of Space:	Child Care support
Hours and days Used:	Business hours

PROXIMITY & ACCESS REQUIREMENTS

Must be adjacent to :	Drop-in Child Care
Access:	Child Care Staff

ARCHITECTURAL CHARACTERISTICS

Windows :	No
Doors :	No
Floor Finish:	Ceramic Tile
Wall Finish:	Ceramic Tile
Ceiling Finish:	Gyp. Bd.
General Character of Room:	Private restroom, children friendly, ADA compliant

ENGINEERING SYSTEMS

HVAC	Standard air exchange
Electrical	GFCI
Plumbing	Toilet, Sink, Floor Drain
Lighting	wall mount flourescent
Phone/Data Ports	None
Special Requirements	ADA Compliant

FURNISHINGS

MISCELLANEOUS & OTHER DETAILS

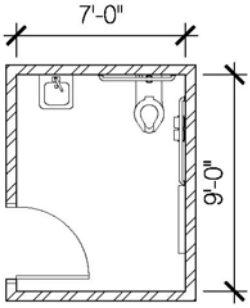
7'-0"
9'-0"

Second Level Common Area
SPACE PROGRAM

4.4 Secure Storage Room

Room Name:	Records
Desired SF Area:	120 sq ft
Quantity:	1
Purpose of Space:	Storage of data, students records and test storage.
Hours and days Used:	all

PROXIMITY & ACCESS REQUIREMENTS

2nd Level

ARCHITECTURAL CHARACTERISTICS

Windows :	None
Doors :	Yes, 3'-0"
Floor Finish :	VCT
Wall Finish :	Gypsum Board
Ceiling Finish:	Acoustical Ceiling Tile

ENGINEERING SYSTEMS

HVAC	Standard air exchange
Electrical	standard
Plumbing	None
Lighting	Recessed flourescent
Phone/Data Ports	none
Security Electronics	Keypad or cardreader
Special Requirements	

FURNISHINGS

File cabinets

MISCELLANEOUS & OTHER DETAILS

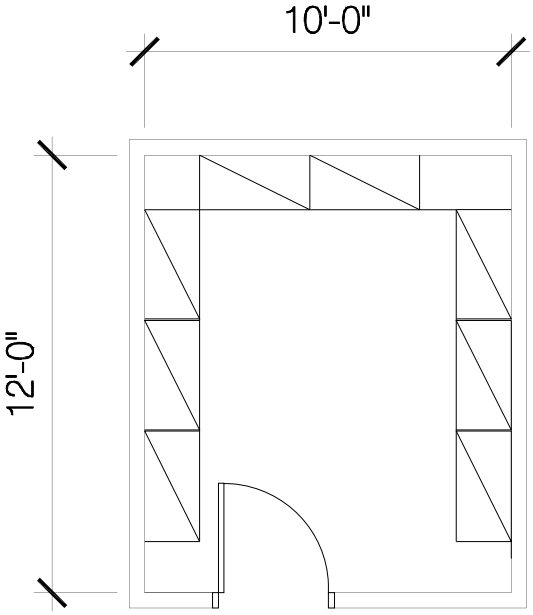
10'-0"
12'-0"

Second Level Common Area
SPACE PROGRAM

4.5 Resource Area

Room Name:	Resource Area
General Space Description:	Large Room for students, parents, and teachers.
Desired SF Area:	2000 sq ft
Quantity:	1
Number of Occupants:	Shared by all bldg occupants
Purpose of Space:	Multipurpose room, space for study area, parent waiting
Hours and days Used:	Needs to accommodate extended hours

PROXIMITY & ACCESS REQUIREMENTS

Access :	Located convenient to student traffic

ARCHITECTURAL CHARACTERISTICS

Windows :	Yes, View preferred
Doors :	Open to building circulation
Floor Finish:	Carpet
Wall Finish :	Gypsum Board
Ceiling Finish:	Acoustical Ceiling Tile
General Character of Room:	Flexible space with tables for student study groups

ENGINEERING SYSTEMS

HVAC	Standard air exchange
Electrical	floor boxes at study tables
Plumbing	EWC
Lighting	Direct/indirect pendants
Phone/Data Ports	floor boxes at study tables
Special Requirements	Keypad Access

FURNISHINGS

(8) Tables (32) Chairs, Bookshelves

MISCELLANEOUS & OTHER DETAILS

Materials Check-out

Second Level Common Area
SPACE PROGRAM

4.6 Distance Delivery Classrooms

Room Name:	Distance Delivery Classrooms
General Space Description:	Large Classroom
Desired SF Area:	1000 sq ft
Quantity:	2
Number of Occupants:	33

PROXIMITY & ACCESS REQUIREMENTS

level two

ARCHITECTURAL CHARACTERISTICS

Windows :	Yes
Doors :	Yes, 3'-0", fully glazed
Floor Finish :	Carpet
Wall Finish :	Painted gyp.
Ceiling Finish :	Acoustical Ceiling Tile

ENGINEERING SYSTEMS

HVAC	Standard air exchange
Electrical	Standard
Plumbing	None
Lighting	Direct indirect pendants
Phone/Data Ports	Standard
Special Requirements	Distance Education infrastructure

FURNISHINGS/EQUIPMENT

Projector and podium (by owner), Screen, Camera,

MISCELLANEOUS & OTHER DETAILS

Have RCDE (Regional Campus and Distance Education) involved in design and set-up of room to conform to University standards.

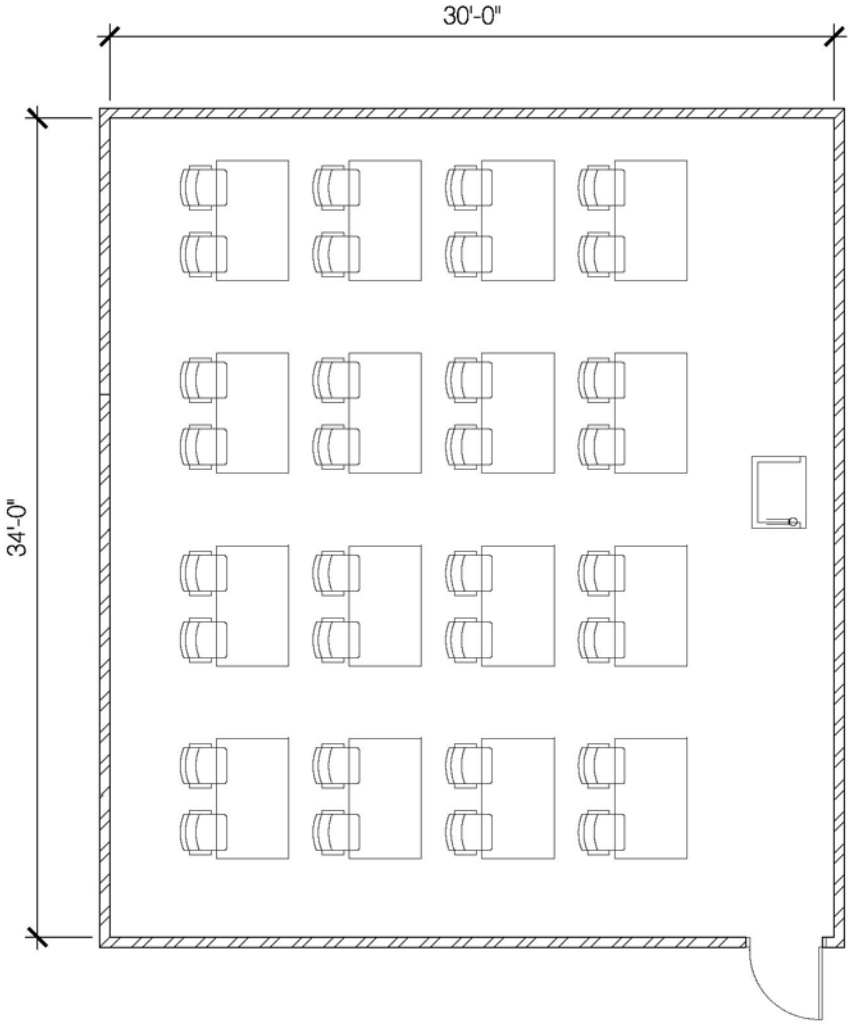
30'-0"
34'-0"

Second Level Common Area
SPACE PROGRAM

4.7 Observed Teaching Room

Room Name:	tutoring
Desired SF Area:	168 sq ft
Quantity:	8
Number of Occupants:	6 max
Purpose of Space:	Small group tutoring
Hours and days Used:	business hours

PROXIMITY & ACCESS REQUIREMENTS

Rooms observed from Observation hallway

ARCHITECTURAL CHARACTERISTICS

Windows :	One-way glass
Doors :	3'-0" glazed
Floor Finish :	Carpet
Wall Finish :	N/A
Ceiling Finish:	Acoustical Ceiling Tile

ENGINEERING SYSTEMS

HVAC	Standard air exchange
Electrical	Standard
Plumbing	None
Lighting	Direct/Indirect pendants
Phone/Data Ports	Standard
Special Requirements	2 way Comm system for observation and listening capability from observation rm

FURNISHINGS

table for 4 students and 1 teacher

MISCELLANEOUS & OTHER DETAILS

One way glass for observing teaching of small groups of children.

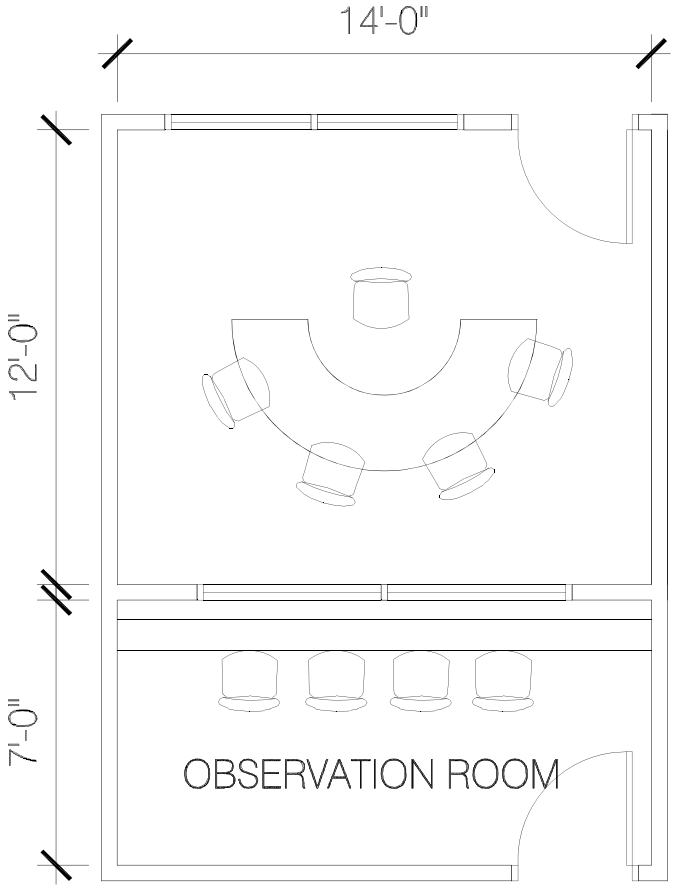
14'-0"
12'-0"
7'-0"
OBSERVATION ROOM

Second Level Common Area
SPACE PROGRAM

4.8 Observation Room

Room Name:	Observation
General Space Description:	adjacent to observed teaching rooms
Desired SF Area:	95 sq ft
Quantity:	8
Number of Occupants:	Varies
Hours and days Used:	Business hours

PROXIMITY & ACCESS REQUIREMENTS

Must be adjacent to :	Teaching rooms

ARCHITECTURAL CHARACTERISTICS

Windows :	None
Floor Finish:	Carpet
Wall Finish :	Gypsum Board
Ceiling Finish:	Acoustical Ceiling Tile
Millwork:	desk with light cove

ENGINEERING SYSTEMS

HVAC	Standard air exchange
Electrical	Power at work surface
Plumbing	None
Lighting	Cove light at work surface
Phone/Data Ports	Data at work surface
Special Requirements	2 way Comm system for observation and listening capability of teaching rooms.

FURNISHINGS

chairs

MISCELLANEOUS & OTHER DETAILS

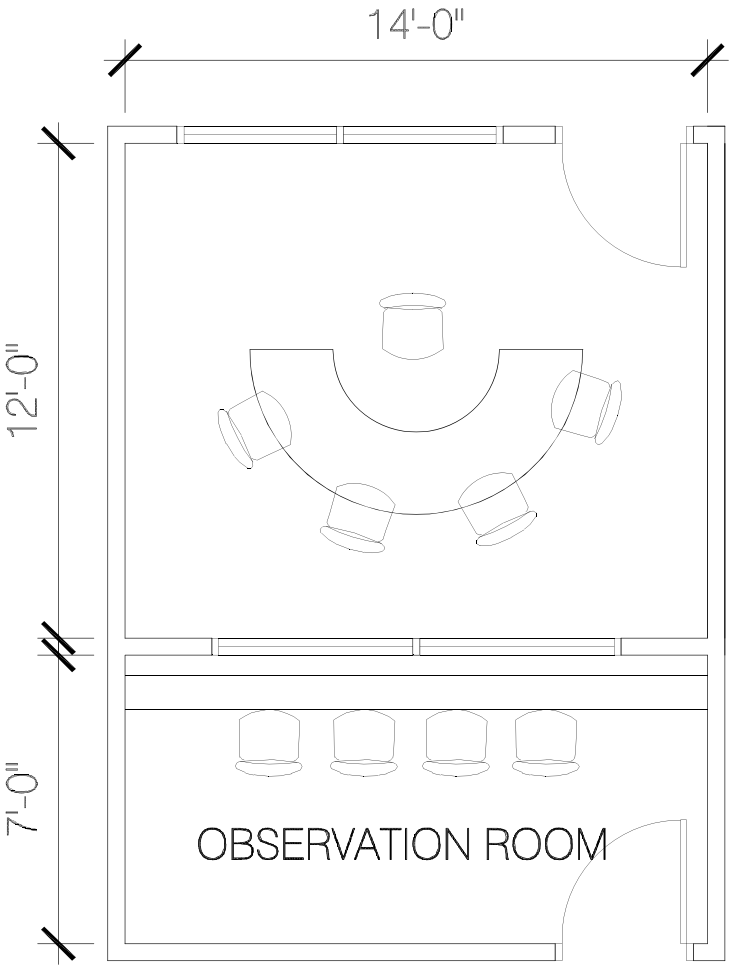
14'-0"
12'-0"
7'-0"
OBSERVATION ROOM

Second Level Common Area
SPACE PROGRAM

4.10 Open Office

Room Name:	Open Office
General Space Description:	Individual Work Station
Desired SF Area:	60 sq ft
Quantity:	8
Number of Occupants:	1
Purpose of Space:	Work area for 1 person
Hours and days Used:	Need to accommodate extended hours

PROXIMITY & ACCESS REQUIREMENTS

Access:	Faculty and Student Faculty

ARCHITECTURAL CHARACTERISTICS

Windows :	Should allow natural light into open office
Doors :	N/A
Floor Finish:	Carpet
Wall Finish :	N/A
Ceiling Finish:	Acoustical Ceiling Tile

ENGINEERING SYSTEMS

HVAC	Standard air exchange
Electrical	Floor box connected to modular furnishings
Plumbing	None
Lighting	Direct/indirect pendants
Phone/Data Ports	Floor box connected to modular furnishings
Special Requirements	

FURNISHINGS

Modular Cubicles with desk, Task Chairs, locking File cabinets

MISCELLANEOUS & OTHER DETAILS

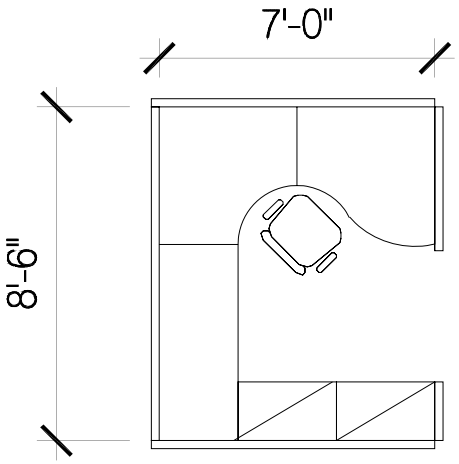
8'-6"
7'-0"

LLL - Language and Literacy Learning Laboratory
SPACE PROGRAM

5.1 Auditory Screening Room

Room Name:	Auditory Screening Room
General Space Description:	sound proof room
Desired SF Area:	156 sq ft
Quantity:	1
Number of Occupants:	2
Hours and days Used:	business hours

PROXIMITY & ACCESS REQUIREMENTS

2nd floor in lab group

ARCHITECTURAL CHARACTERISTICS

Windows :	None
Doors :	Yes, 3'-0" with door bottom
Floor Finish:	Carpet
Ceiling Finish:	Acoustical Ceiling Tile
Millwork:	Storage cabinets with locking files drawers.

ENGINEERING SYSTEMS

HVAC	Standard air exchange
Electrical	Standard
Plumbing	None
Lighting	Direct/indirect
Phone/Data Ports	Standard
Special Requirements	Special Sound Proof Room

FURNISHINGS

30x36 table, 2 chairs

MISCELLANEOUS & OTHER DETAILS

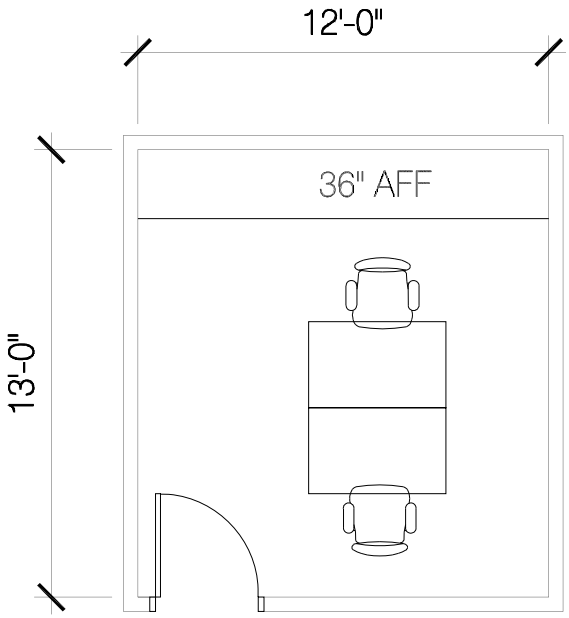
12'-0"
13'-0"
36" AFF

LLL - Language and Literacy Learning Laboratory
SPACE PROGRAM

5.3 Eye Movement Photo Lab

Room Name:	Eye Movement Photo lab
Desired SF Area:	140 sq ft
Quantity:	1
Number of Occupants:	2
Purpose of Space:	research
Hours and days Used:	Business hours

PROXIMITY & ACCESS REQUIREMENTS

Must be near to :	Director's Office
Access :	Keypad

ARCHITECTURAL CHARACTERISTICS

Windows :	None
Doors :	Yes, 3'-0"
Floor Finish :	Carpet
Wall Finish :	Painted gyp.
Ceiling Finish :	Acoustical Ceiling Tile
Millwork:	Storage cabinets

ENGINEERING SYSTEMS

HVAC	Standard air exchange
Electrical	Standard
Plumbing	None
Lighting	special requirements?
Phone/Data Ports	Standard
Special Requirements	Keypad Access

FURNISHINGS/EQUIPMENT

2 30x30 desks, 2 chairs, new equipment acquired by Ray Reutzel

MISCELLANEOUS & OTHER DETAILS

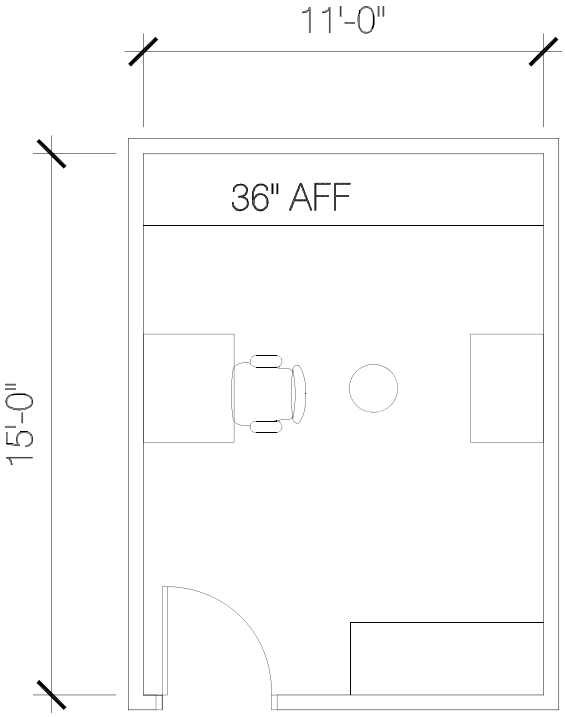
11'-0"
36" AFF
15'-0"

5.4 Individual Testing Room

Room Name:	Individual testing Room
Desired SF Area:	132 sq ft
Quantity:	1
Number of Occupants:	2
Purpose of Space:	Assessment of children
Hours and days Used:	business hours

PROXIMITY & ACCESS REQUIREMENTS

Must be near to :	Other LLL functions
Access :	Keyed lock

ARCHITECTURAL CHARACTERISTICS

Windows :	None
Doors :	Yes, 3'-0"
Floor Finish:	Carpet
Wall Finish :	N/A
Ceiling Finish:	Acoustical Ceiling Tile
Millwork:	none

ENGINEERING SYSTEMS

HVAC	Standard air exchange
Electrical	Standard
Plumbing	None
Lighting	Direct/indirect
Phone/Data Ports	Standard
Special Requirements	

FURNISHINGS

36x48 table, 2 chairs, locking file cabinet

MISCELLANEOUS & OTHER DETAILS

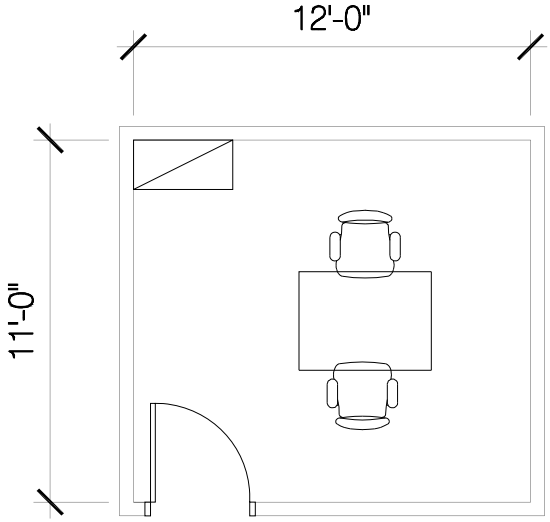
12'-0"
11'-0"

ELL - Early Language and Literature
SPACE PROGRAM

5.5 Transcription Lab

Room Name:	Transcription Lab
General Space Description:	Individual Work Stations
Desired SF Area:	480 sq ft
Quantity:	1
Number of Occupants:	8
Purpose of Space:	Office, work area

PROXIMITY & ACCESS REQUIREMENTS

2nd floor

ARCHITECTURAL CHARACTERISTICS

Windows :	None
Doors :	3'-0" fully glazed
Floor Finish:	Carpet
Wall Finish :	Painted Gyp.
Ceiling Finish:	Acoustical Ceiling Tile
General Character of Room:	Work area and office

ENGINEERING SYSTEMS

HVAC	Standard air exchange
Electrical	Power to Modular furniture
Plumbing	None
Lighting	Direct/'indirect linear pendants
Phone/Data Ports	Data to modular furniture
Special Requirements	

FURNISHINGS

Cubicles, Task Chairs, locking File Cabinets

MISCELLANEOUS & OTHER DETAILS

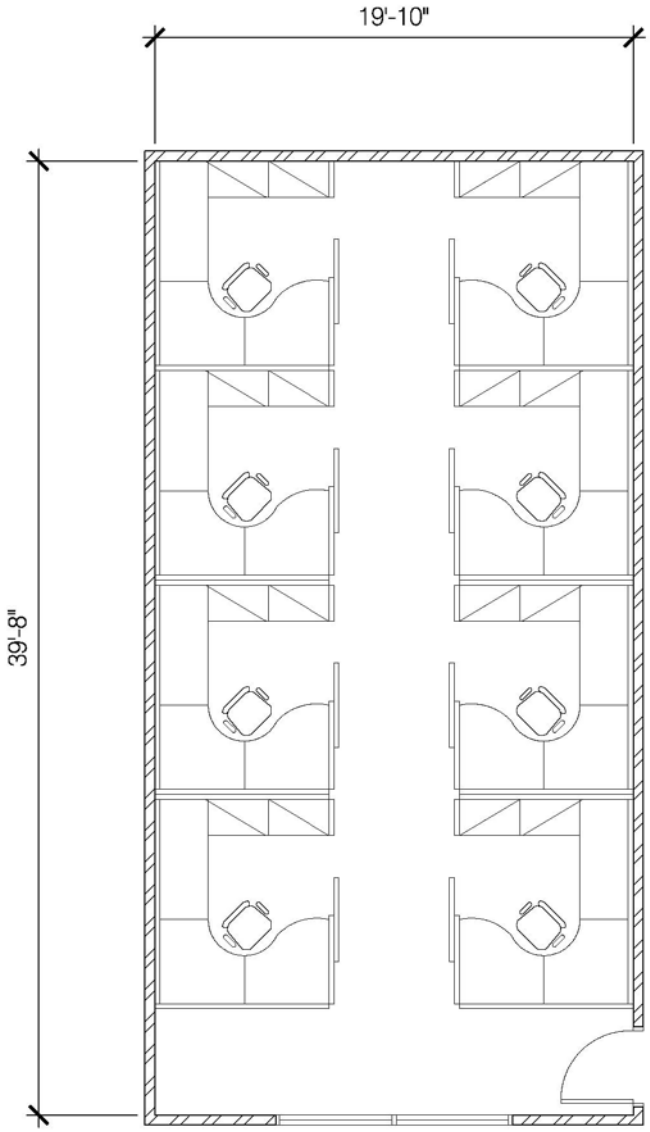
19'-10"
39'-8"

AIC - Academic Interventions Clinic
SPACE PROGRAM

6.1 In Person Tutoring Rooms

Room Name:	Tutoring Rooms
General Space Description:	Individual Tutoring Station
Desired SF Area:	81 sq ft
Quantity:	6
Number of Occupants:	2
Purpose of Space:	Individual Tutoring
Hours and days Used:	Varies

PROXIMITY & ACCESS REQUIREMENTS

2nd level

ARCHITECTURAL CHARACTERISTICS

Windows :	Interior 1 Way glass
Doors :	3'-0" glazed
Floor Finish:	Carpet
Wall Finish :	Painted Gypsum Board
Ceiling Finish:	Acoustical Ceiling Tile

ENGINEERING SYSTEMS

HVAC	Standard air exchange
Electrical	Standard
Plumbing	None
Lighting	Direct/indirect
Phone/Data Ports	Standard
Special Requirements	Comm system for Observation- sound system for listening capability

FURNISHINGS

Table, (2) Chairs

MISCELLANEOUS & OTHER DETAILS

Needs to be wired for computer capability. Will use laptops in this room.

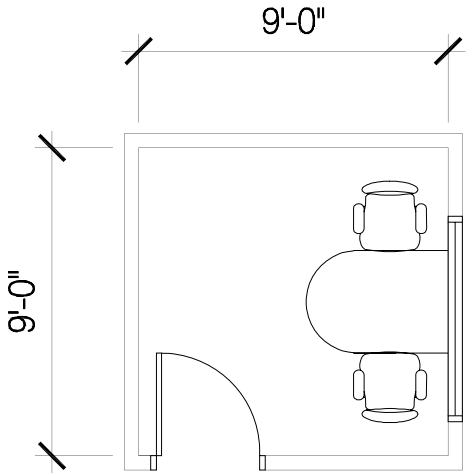
9'-0"
9'-0"

6.4 AIC Consult

Room Name:	Consult
General Space Description:	Small Meeting Room
Desired SF Area:	90 sq ft
Quantity:	1
Number of Occupants:	4 (Tutor, Parents and Student)
Purpose of Space:	Meeting room

PROXIMITY & ACCESS REQUIREMENTS

ARCHITECTURAL CHARACTERISTICS

Doors :	Yes, 3'-0"
Floor Finish :	Carpet
Wall Finish :	Gypsum Board
Ceiling Finish:	Acoustical Ceiling Tile

ENGINEERING SYSTEMS

HVAC	Standard air exchange
Electrical	Standard
Plumbing	None
Lighting	Direct/indirect pendant
Phone/Data Ports	Standard
Special Requirements	

FURNISHINGS

Table, (4) Chairs

MISCELLANEOUS & OTHER DETAILS

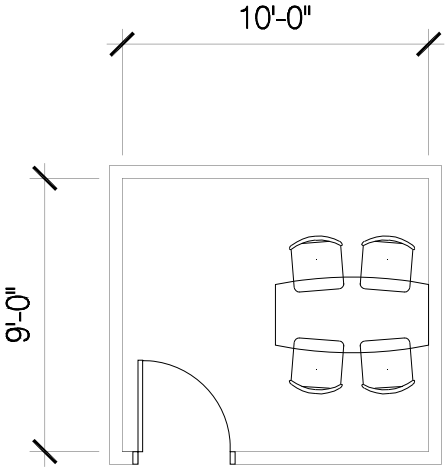
9'-0"
10'-0"

ECE Administrative Suite
SPACE PROGRAM

7.1 Reception/ Secretarial

Room Name:	Reception/ Secretarial
General Space Description:	Desk area with 2 occupants.
Desired SF Area:	200 sq ft
Quantity:	1
Number of Occupants:	2
Purpose of Space:	Visitor Reception and office administration
Hours and days Used:	M-F 8-5pm

PROXIMITY & ACCESS REQUIREMENTS

Must be near to :	Main entrance stair
Access:	

ARCHITECTURAL CHARACTERISTICS

Windows :	None
Doors :	None
Floor Finish:	Carpet
Wall Finish :	Painted Gyp.
Ceiling Finish:	Acoustical Ceiling Tile

ENGINEERING SYSTEMS

HVAC	Standard air exchange
Electrical	power at knee spaces
Plumbing	None
Lighting	Recessed cans above work surfaces
Phone/Data Ports	Data at knee spaces
Special Requirements	

FURNISHINGS

(2) Task Chairs

MISCELLANEOUS & OTHER DETAILS

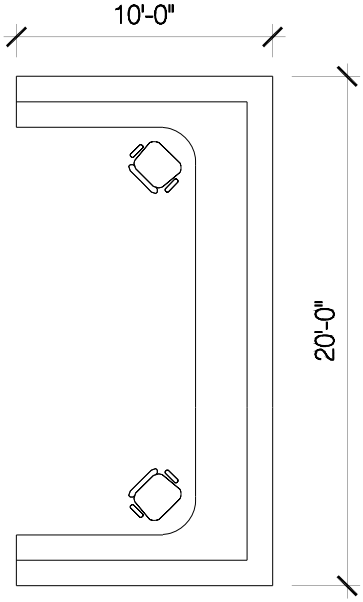
10'-0"
20'-0"

ECE Administrative Suite
SPACE PROGRAM

7.2 ECE Director

Room Name:	Director
General Space Description:	Individual Private Office
Desired SF Area:	160 sq ft
Quantity:	1
Purpose of Space:	Private Office for the Director.
Hours and days Used:	Needs to accommodate extended hours

PROXIMITY & ACCESS REQUIREMENTS

Located within Administrative suite

Near to:	Reception/secretarial
Access:	Faculty, Students, Public

ARCHITECTURAL CHARACTERISTICS

Windows :	Yes, view preferred
Doors :	Yes, 3'-0"
Floor Finish:	Carpet
Wall Finish :	Gypsum Board
Ceiling Finish:	Acoustical Ceiling Tile

ENGINEERING SYSTEMS

HVAC	Standard air exchange
Electrical	Standard
Plumbing	None
Lighting	Direct/indirect pendants
Phone/Data Ports	Standard
Special Requirements	

FURNISHINGS

Desk, Book Shelves, File Cabinets, Task Chair, (2) Guest Chairs

MISCELLANEOUS & OTHER DETAILS

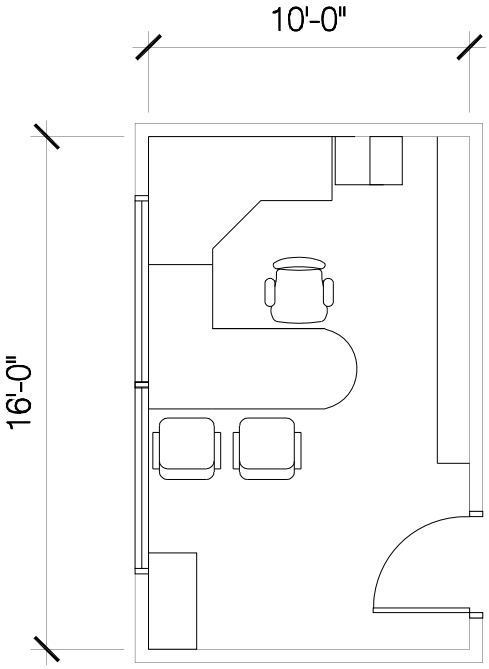
10'-0"
16'-0"

ECE Administrative Suite
SPACE PROGRAM

7.3 ECE Associate Director's Office

Room Name:	Associate Director
General Space Description:	Individual Private Office
Desired SF Area:	110 sq ft
Quantity:	1
Purpose of Space:	Private Office for the Associate Director
Hours and days Used:	Needs to accommodate extended hours

PROXIMITY & ACCESS REQUIREMENTS

Located within administrative suite

Access:	Faculty, Students.

ARCHITECTURAL CHARACTERISTICS

Windows :	Yes, view preferred
Doors :	Yes, 3'-0"
Floor Finish:	Carpet
Wall Finish :	Gypsum Board
Ceiling Finish:	Acoustical Ceiling Tile

ENGINEERING SYSTEMS

HVAC	Standard air exchange
Electrical	Standard
Plumbing	None
Lighting	Direct/indirect linear pendant
Phone/Data Ports	Standard
Special Requirements	

FURNISHINGS

Desk, Credenza, Task Chair, (2) Guest Chair, File Cabinets, Book shelves

MISCELLANEOUS & OTHER DETAILS

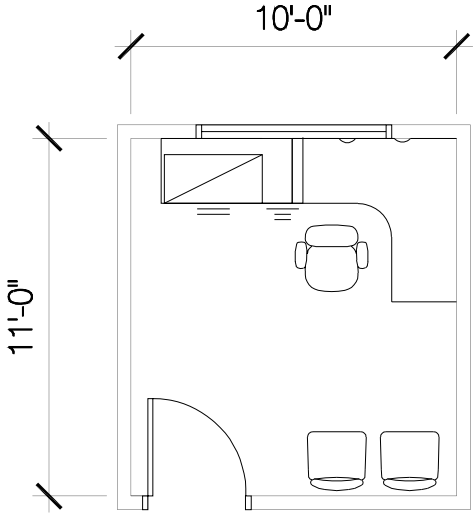
10'-0"
11'-0"

ECE Administrative Suite
SPACE PROGRAM

7.4 ECE Program Director's Office

Room Name:	Program Director
General Space Description:	Individual Private Office
Desired SF Area:	110 sq ft
Quantity:	2
Purpose of Space:	Office, work area
Hours and days Used:	Needs to accommodate extended hours

PROXIMITY & ACCESS REQUIREMENTS

Located within administrative suite
Access: Faculty, Students

ARCHITECTURAL CHARACTERISTICS

Windows :	Yes, view preferred
Doors :	Yes, 3'-0"
Floor Finish:	Carpet
Wall Finish :	Gypsum Board
Ceiling Finish:	Acoustical Ceiling Tile

ENGINEERING SYSTEMS

HVAC	Standard air exchange
Electrical	Standard
Plumbing	None
Lighting	direct/indirect linear pendant
Phone/Data Ports	Standard
Special Requirements	

FURNISHINGS

Desk, Task chair, file cabinet, (2) guest chairs

MISCELLANEOUS & OTHER DETAILS

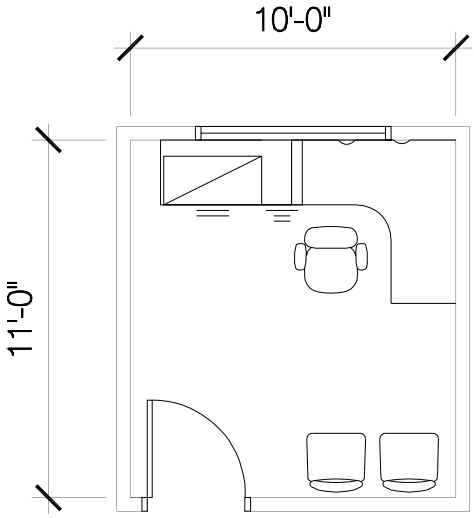
10'-0"
11'-0"

ECE Administrative Suite
SPACE PROGRAM

7.5 ECE Faculty Office

Room Name:	Faculty Office
General Space Description:	Individual Private Office
Desired SF Area:	110 sq ft
Quantity:	4
Purpose of Space:	Office, work area
Hours and days Used:	Needs to accommodate extended hours

PROXIMITY & ACCESS REQUIREMENTS

Located within Administrative suite
Access: Faculty, Students.

ARCHITECTURAL CHARACTERISTICS

Windows :	Yes, view preferred
Doors :	Yes, 3'-0"
Floor Finish:	Carpet
Wall Finish :	Gypsum Board
Ceiling Finish:	Acoustical Ceiling Tile

ENGINEERING SYSTEMS

HVAC	Standard air exchange
Electrical	Standard
Plumbing	None
Lighting	Direct/indirect linear pendant
Phone/Data Ports	Standard
Special Requirements	

FURNISHINGS

Desk, Task chair, File cabinet, (2) guest chairs

MISCELLANEOUS & OTHER DETAILS

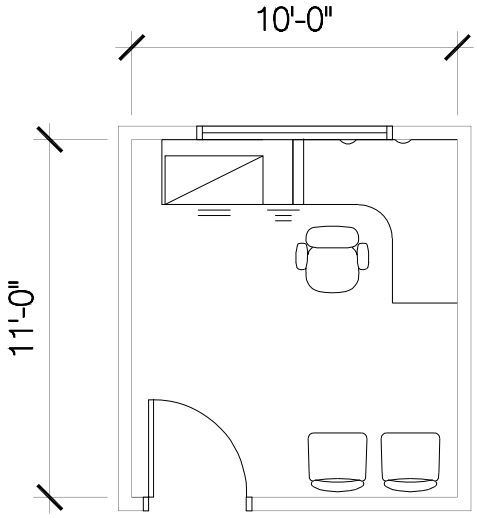
10'-0"
11'-0"

7.6 Conference Room

Room Name:	Conference
Desired SF Area:	270 sq ft
Quantity:	1
Number of Occupants:	12 to 15
Purpose of Space:	Shared group meeting area.
Hours and days Used:	Needs to accommodate extended hours

PROXIMITY & ACCESS REQUIREMENTS

Located within administrative suite

ARCHITECTURAL CHARACTERISTICS

Windows :	Yes, views preferred
Doors :	Yes, 3'-0", Fully glazed
Floor Finish:	Carpet
Wall Finish :	Painted Gypsum Board
Ceiling Finish:	Acoustical Ceiling Tile

ENGINEERING SYSTEMS

HVAC	Standard air exchange
Electrical	Floor box at conference table
Plumbing	None
Lighting	Direct/Indirect linear pendant
Phone/Data Ports	Floor box at conference table
Special Requirements	Video-conferencing infrastructure

FURNISHINGS

Conference Table and chairs, Projector

MISCELLANEOUS & OTHER DETAILS

Projection screen.

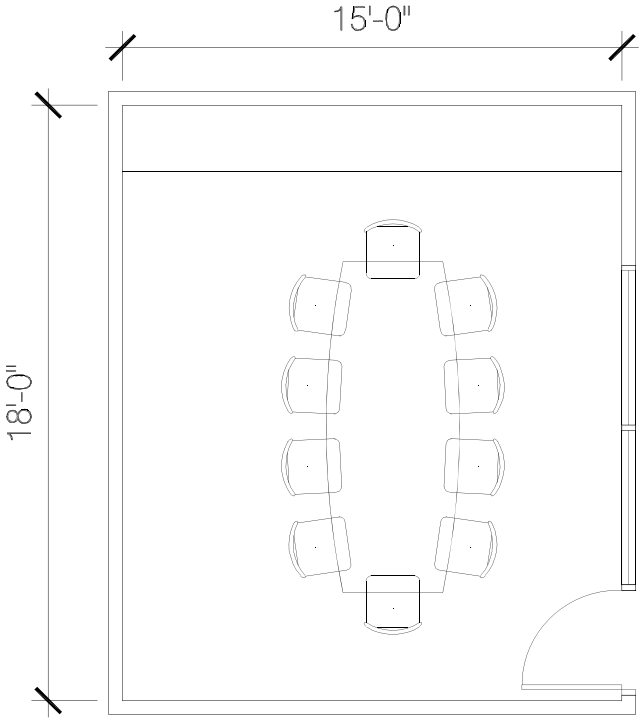
15'-0"
18'-0"

3rd Floor Common Areas
SPACE PROGRAM

7.7 Break/Work Room

Room Name:	Break/ Work Room
Desired SF Area:	900 sq ft
Quantity:	1
Number of Occupants:	Varies
Purpose of Space:	Multipurpose room
Hours and days Used:	Varies

PROXIMITY & ACCESS REQUIREMENTS

Access: All building occupants

ARCHITECTURAL CHARACTERISTICS

Windows :	Yes, Views preferred
Doors :	Yes, (2) 3'-0"
Floor Finish:	VCT.
Wall Finish :	Painted Gypsum Board
Ceiling Finish:	Acoustical Ceiling Tile

ENGINEERING SYSTEMS

HVAC	Standard air exchange
Electrical	Standard, Copier, Elec. Oven/Range, Microwave
Plumbing	Sink, Coffee maker, Ice-maker in refrigerator
Lighting	Direct/indirect linear pendants
Phone/Data Ports	Standard
Special Requirements	

FURNISHINGS/EQUIPMENT

Refrigerator, copier, Tables & Chairs, vending

MISCELLANEOUS & OTHER DETAILS

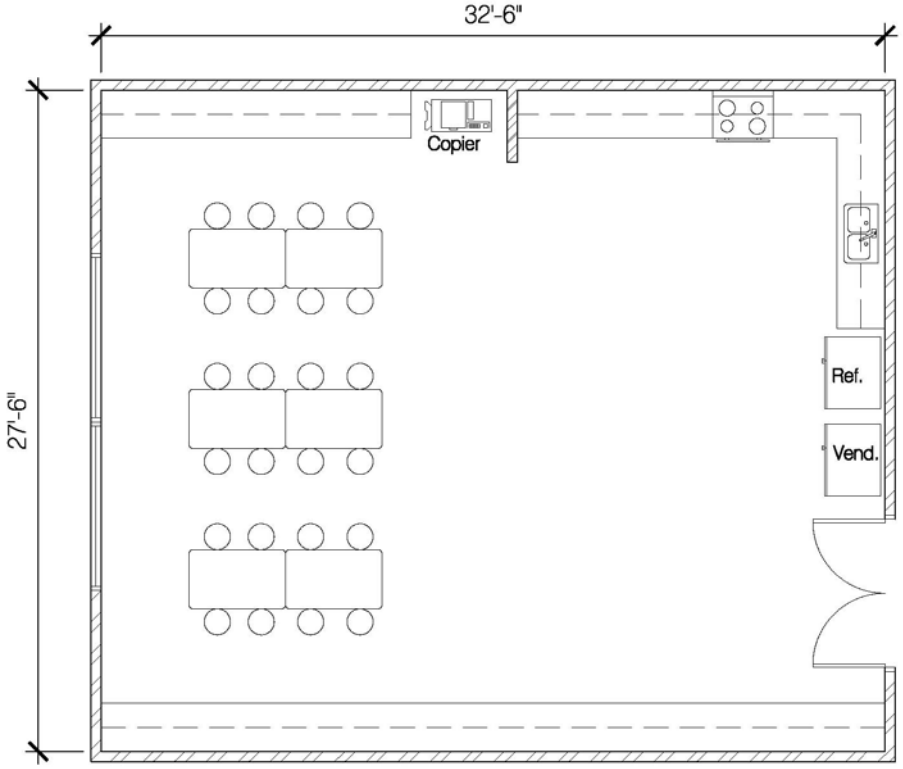
32'-6"
27'-6"
Copier
Ref.
Vend.

3rd Floor Common Areas
SPACE PROGRAM

7.8 Secure Storage

Room Name:	Records
Desired SF Area:	120 sq ft
Quantity:	1

PROXIMITY & ACCESS REQUIREMENTS

Access :	Electronic keypad

ARCHITECTURAL CHARACTERISTICS

Windows :	no
Doors :	Yes, 3'-0"
Floor Finish:	VCT
Wall Finish :	Painted Gyp. Bd
Ceiling Finish:	Acoustical Tile
Millwork:	none

ENGINEERING SYSTEMS

HVAC	Standard
Electrical	Standard
Plumbing	none
Lighting	Recessed flourescent
Phone/Data Ports	Standard
Security Electronics	Keypad lock
Special Requirements	

FURNISHINGS

File Cabinets

MISCELLANEOUS & OTHER DETAILS

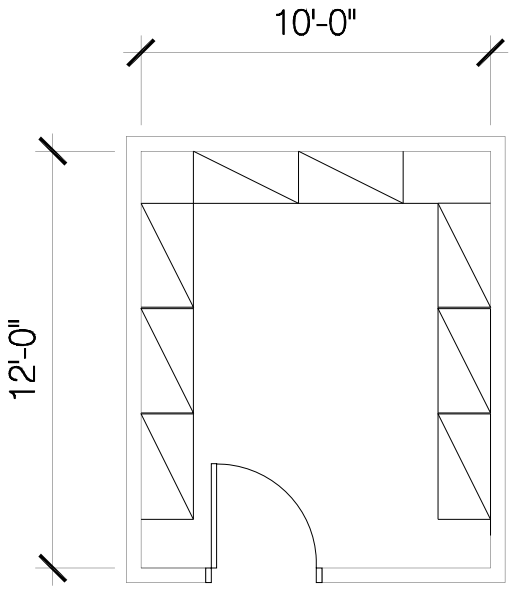
10'-0"
12'-0"

3rd Floor Common Areas
SPACE PROGRAM

7.9 Server Room

Room Name:	Server Room
General Space Description:	Server racks and IT work station
Desired SF Area:	154 sq ft
Quantity:	1
Number of Occupants:	1
Purpose of Space :	Space for IT equipment and IT workstation

PROXIMITY & ACCESS REQUIREMENTS

Access: Keyed lock

ARCHITECTURAL CHARACTERISTICS

Windows :	No
Doors :	Yes, 3'-0"
Floor Finish:	VCT
Wall Finish :	Painted Gyp. Bd
Ceiling Finish:	Acoustical Ceiling Tile

ENGINEERING SYSTEMS

HVAC	Dedicated Cooling
Electrical	As required
Plumbing	None
Lighting	Recessed flourescent
Phone/Data Ports	As required
Special Requirements	

FURNISHINGS

Shelving, Server Racks, Work Station, Task Chair

MISCELLANEOUS & OTHER DETAILS

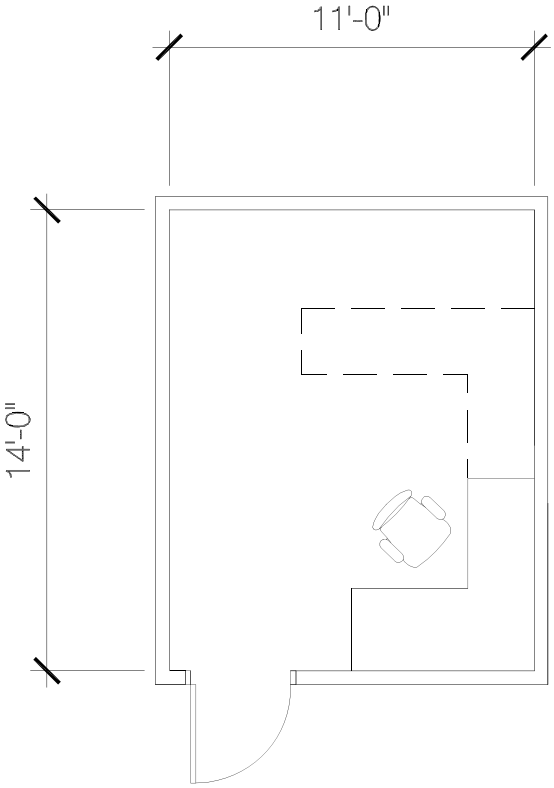
11'-0"
14'-0"

3rd Floor Common Areas
SPACE PROGRAM

7.10 Research Cubicles

Room Name:	Open Office
General Space Description:	Individual Work Stations
Desired SF Area:	60 sq ft
Quantity:	16
Number of Occupants:	1
Purpose of Space:	Work area for 1 person
Hours and days Used:	Need to accommodate extended hours

PROXIMITY & ACCESS REQUIREMENTS

Access: Faculty

ARCHITECTURAL CHARACTERISTICS

Windows :	Yes
Doors :	N/A
Floor Finish:	Carpet
Wall Finish :	N/A
Ceiling Finish:	Acoustical Ceiling Tile

ENGINEERING SYSTEMS

HVAC	Standard air exchange
Electrical	Floor boxes at modular furniture
Plumbing	None
Lighting	Direct/indirect linear pendants
Phone/Data Ports	Floor boxes at modular furniture
Special Requirements	

FURNISHINGS

Modular furniture, desk, task chair, (2) file cabinets

MISCELLANEOUS & OTHER DETAILS

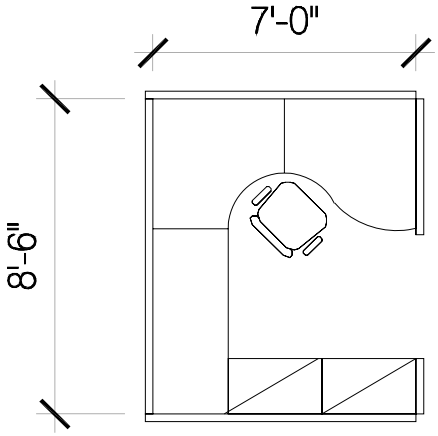
7'-0"
8'-6"

8.1 Director's Office

Room Name:	Director
General Space Description:	Individual Private Office
Desired SF Area:	160 sq ft
Quantity:	1
Number of Occupants:	1
Purpose of Space:	Office, work area
Hours and days Used:	Needs to accommodate extended hours

PROXIMITY & ACCESS REQUIREMENTS

3rd floor

ARCHITECTURAL CHARACTERISTICS

Windows :	Yes, view preferred
Doors :	Yes, 3'-0"
Floor Finish:	Carpet
Wall Finish :	Gypsum Board
Ceiling Finish:	Acoustical Ceiling Tile

ENGINEERING SYSTEMS

HVAC	Standard air exchange
Electrical	Standard
Plumbing	None
Lighting	Direct/Indirect linear pendant
Phone/Data Ports	Standard
Special Requirements	

FURNISHINGS

Desk, File Cabinets, Bookshelves, Task Chair, Guest Chairs.

MISCELLANEOUS & OTHER DETAILS

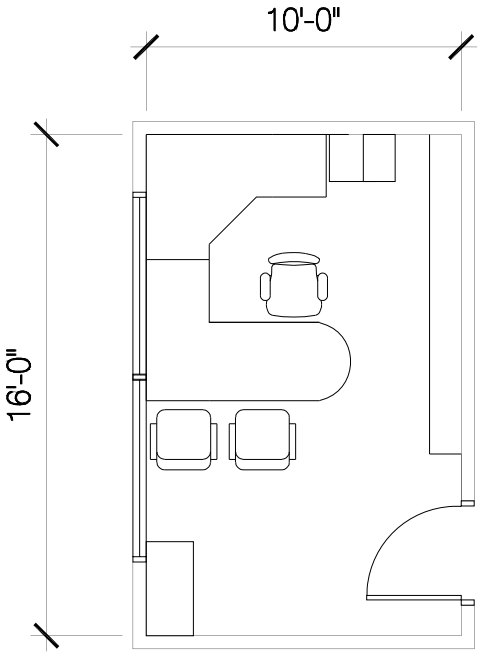
10'-0"
16'-0"

NCHAM - National Center for Hearing Assessment and Management
SPACE PROGRAM

8.2 NCHAM Faculty Offices

Room Name:	Office
General Space Description:	Individual Private Office
Desired SF Area:	110 sq ft
Quantity:	16
Number of Occupants:	1
Purpose of Space:	Office, work area
Hours and days Used:	Needs to accommodate extended hours

PROXIMITY & ACCESS REQUIREMENTS

Must be near to :	NCHAM Facilities

ARCHITECTURAL CHARACTERISTICS

Windows :	Yes, view preferred
Doors :	Yes, 3'-0"
Floor Finish:	Carpet
Wall Finish:	Painted Gypsum Board
Ceiling Finish:	Acoustical Ceiling Tile

ENGINEERING SYSTEMS

HVAC	Standard air exchange
Electrical	Standard
Plumbing	None
Lighting	Direct/Indirect linear pendant
Phone/Data Ports	Standard
Special Requirements	

FURNISHINGS

Desk, Task chair, (2) Guest chairs, File Cabinet

MISCELLANEOUS & OTHER DETAILS

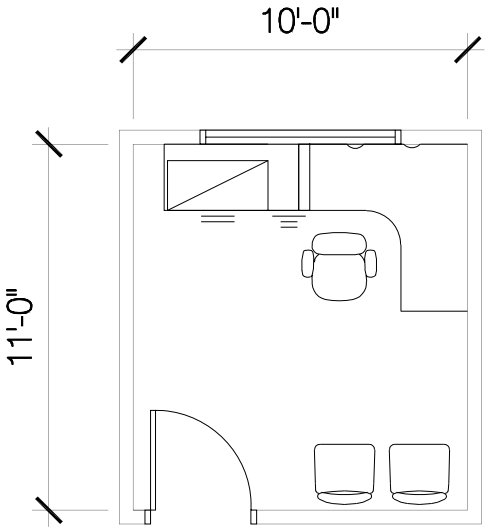
10'-0"
11'-0"

8.3 Conference Room

Room Name:	Conference Room
General Space Description:	Private space for group meetings
Desired SF Area:	270 sq ft
Quantity:	1
Number of Occupants:	Varies
Purpose of Space:	Provides private space for group meetings and presentations
Hours and days Used:	Varies

PROXIMITY & ACCESS REQUIREMENTS

3rd Level

ARCHITECTURAL CHARACTERISTICS

Windows :	Yes, view preferred
Doors :	Yes, 3'-0", Fully glazed
Floor Finish :	Carpet
Wall Finish :	Gypsum Board
Ceiling Finish :	Acoustical Ceiling Tile
Millwork:	Storage cabinets

ENGINEERING SYSTEMS

HVAC	Standard air exchange
Electrical	floor box at conference table
Plumbing	None
Lighting	Direct/indirect linear pendant
Phone/Data Ports	floor box at conference table
Special Requirements	Tele-conferencing infrastructure

FURNISHINGS/EQUIPMENT

Conference table, chairs, Projector

MISCELLANEOUS & OTHER DETAILS

Projection screen

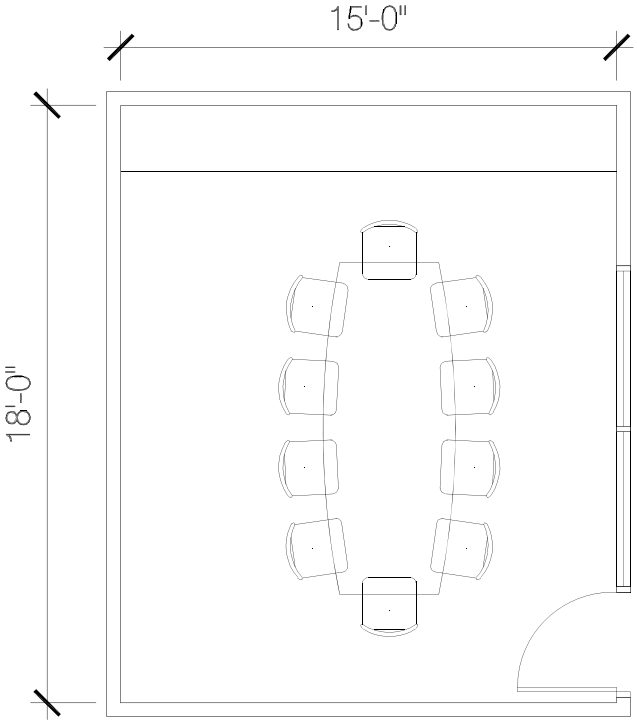
15'-0"
18'-0"

8.4 Open Office

Room Name:	Program Development
General Space Description:	Open area for (8) 60 sq ft work stations
Desired SF Area:	480 sq ft
Quantity:	1
Number of Occupants:	8 (Program Development Team: 4 Programmers, 4 Test Team)
Purpose of Space:	House 8 workstations
Hours and days Used:	Needs to accommodate extended hours

PROXIMITY & ACCESS REQUIREMENTS

3rd Level

ARCHITECTURAL CHARACTERISTICS

Windows :	Yes, view preferred
Doors :	None
Floor Finish:	Carpet
Wall Finish :	Gypsum Board
Ceiling Finish :	Acoustical Ceiling Tile

ENGINEERING SYSTEMS

HVAC	Standard air exchange
Electrical	floor boxes at modular office furnishings
Plumbing	None
Lighting	Direct/indirect linear pendants
Phone/Data Ports	floor boxes at modular office furnishings
Special Requirements	

FURNISHINGS

MISCELLANEOUS & OTHER DETAILS

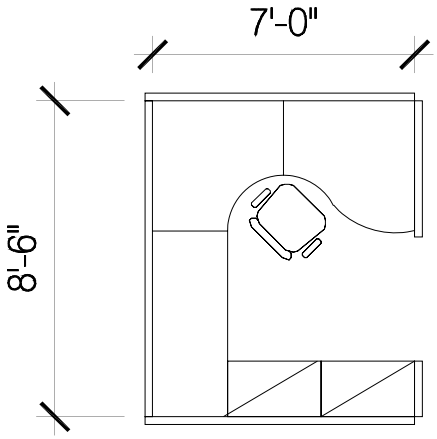
8'-6"
7'-0"

NCHAM - National Center for Hearing Assessment and Management
SPACE PROGRAM

8.5 Open Office - Students

Room Name:	Open Office
General Space Description:	Open area for (44) 60 sq ft work stations
Desired SF Area:	2640sq ft
Quantity:	1
Number of Occupants:	44
Purpose of Space:	Work area
Hours and days Used:	Extended hours

PROXIMITY & ACCESS REQUIREMENTS

Must be near to :	NCHAM Facilities

ARCHITECTURAL CHARACTERISTICS

Windows :	yes
Doors :	N/A
Floor Finish:	Carpet
Wall Finish :	Painted Gypsum Board
Ceiling Finish:	Acoustical Ceiling Tile

ENGINEERING SYSTEMS

HVAC	Standard air exchange
Electrical	Floor boxes at modular office furnishings
Plumbing	None
Lighting	Direct/indirect linear pendant
Phone/Data Ports	Floor boxes at modular office furnishings
Special Requirements	

FURNISHINGS

MISCELLANEOUS & OTHER DETAILS

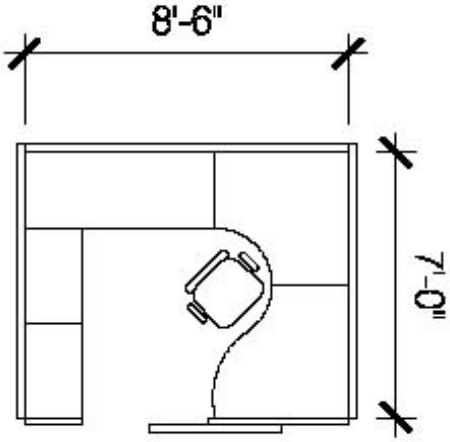
7'-0"
8'-6"

8.6 Help Desk

Room Name:	Help Desk
General Space Description:	Open area for 4 work stations
Desired SF Area:	240 sq ft
Quantity:	1
Number of Occupants:	4
Purpose of Space:	Working area with occasional interaction with public and answering Phones.
Hours and days Used:	Business hours

PROXIMITY & ACCESS REQUIREMENTS

3rd Level

ARCHITECTURAL CHARACTERISTICS

Windows :	No
Doors :	N/A
Floor Finish:	Carpet
Wall Finish :	Painted Gypsum Board
Ceiling Finish:	Acoustical Ceiling Tile

ENGINEERING SYSTEMS

HVAC	Standard air exchange
Electrical	Floor box at modular office furnishings
Plumbing	None
Lighting	Direct/Indirect linear pendant
Phone/Data Ports	Floor box at modular office furnishings
Special Requirements	

FURNISHINGS

(4) Task Chairs

MISCELLANEOUS & OTHER DETAILS

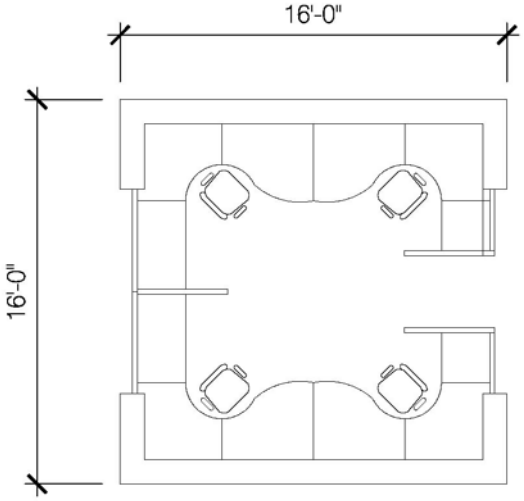
16'-0"
16'-0"

5.0 BUILDING SYSTEMS PERFORMANCE CRITERIA

5.1 STRUCTURAL Section 5 Page 2
5.2 MECHANICAL, PLUMBING, AND FIRE PROTECTION Section 5 Page 7
5.3 ELECTRICAL Section 5 Page 11

5.1 STRUCTURAL

Structural

The structural design for this project should provide a building system which will integrate with the program requirements for space layout, as well as with the architectural and building service needs, while meeting current code standards for vertical and horizontal load carrying capacity. User needs in terms of current flexibility of the spaces and future adaptability of use should be considered. The level of user comfort as determined by the acoustic and vibration sensitivity of the structure also should be addressed.

Structural / Service Coordination

Layout of the structural grid will need to respect the classroom and office planning module established for the various building functions. During the design phase, a completely integrated approach to building systems is recommended. Distribution of HVAC, plumbing and electrical services must be carefully coordinated with the structural elements, particularly at framing intersections and major crossover points. This close coordination must be achieved in order to avoid conflicts and limit penetrations of major structural members.

Codes and Standards

The building structure shall be designed in accordance with the 2006 Edition of the International Building Code.

Codes and standards that apply to the design of this building are:

- 2006 International Building Code
- Utah Uniform Building Standard Act Rules R156-56, March 27, 2007
- DFCM Design Manual, March 15, 2006
- Utah State University Design Standards, latest edition
- American Institute of Steel Construction (AISC) Manual of Steel Construction with Commentary
- ACI 318 Building Code Requirements for Reinforced Concrete
- American Iron and Steel Institute (AISI) Specifications for the design of Cold-Formed Steel Structural Members
- American Welding Society (ANSI/AWS) D1.1 Structural Welding Code
- Steel Joist Institute (SJI) for open web joists and girders
- Steel Deck Institute (SDI) for metal floor and roof decks

Geotechnical Criteria

The geotechnical report for this project is not complete at this time. As a result, specific information or data regarding the geotechnical conditions and constraints at the site are not presently known. Based on the geotechnical findings at the nearby Edith Bowen Lab School, the building can probably be founded on reinforced concrete spread footings.

Once the final building size, configuration, structural system, and column loads have been defined in more detail, the project geotechnical consultant shall provide guidance on the following design criteria as well as any other criteria deemed by the geotechnical consultant to be important.

I. Soil bearing capacity
II. Structural fill requirements
III. Potential differential settlements
IV. Potential for expansion or collapse of soils due to moisture changes
V. Liquefaction potential
VI. Groundwater characteristics and restrictions
VII. Seismic considerations, coefficients, fault traces, etc.
VIII. Lateral soil pressures – active and passive
IX. Alternate foundation systems
X. Pavement sections

Basis of Design

Loading Criteria:

The structural systems in the facility shall be designed to meet the requirements of the 2006 International Building Code (IBC) and the DFCM Design Manual adopted by the Utah State Building Board. Copies of the Design Manual can be obtained from the Division of Facilities Construction Management (DFCM) web site. The following minimum requirements should be anticipated:

! Wind Velocity: 90 mph, Exposure "B" or "C", for the building structure, as appropriate to the site. Use exposure C for design of cladding and building elements.
! Seismicity: 2006 IBC with spectral acceleration for short periods S_s = 0.904, and spectral acceleration for a 1 second period S_1 = 0.319. The design engineer shall verify these spectral acceleration values with the 2006 IBC ground motion maps.
! Roof Load: 50 psf ground snow. Calculate roof snow load as specified in the Utah Uniform Building Standard Act Rules R156-56 issued March 27, 2007. Design for snowdrift where appropriate.
! Floor Design Live Loads: Floor design live loads shall be in accordance with the latest edition of the DFCM Design Manual and as follows:

1. 80 psf live load
2. 20 psf movable partition load
3. Concentrated live loads on suspended floors – 2,500 pounds, or as required by equipment
4. Areas of concentrated standard file storage - 125 psf
5. Floor areas supporting high density rolling files – 250 psf, or as appropriate
6. Paper storage areas – 125 to 300 psf as appropriate
7. Mechanical Equipment Rooms – 125 psf minimum, or more if required by the actual weight of mechanical equipment

Areas where heavy load concentrations exceed the normal loading requirements shall be designed for the specific load case.

Note: The more stringent requirement between the 2006 IBC, the DFCM Design Manual, and the loads given above shall govern.

Criteria for control of vibration in floor structures are discussed in Section 3.1 of the DFCM Design Manual.

Structural System Selection Cost Comparison

The structural system chosen for the building shall be selected based upon the following criteria:

! A cost comparison of different structural systems shall be investigated. The comparison should be broken down with each component of cost significance being listed separately.

! Various structural systems comparing building construction time, material availability, coordination of various trades, lead times for ordering materials, appearance, owner preference, maintenance costs, flexibility for future remodeling, and compatibility with surrounding buildings should be considered when choosing the final structural systems for the building.

! Damage to the building structure and its contents due to lateral earthquake and/or wind loads should be evaluated between various structural systems. Damage control to building non-structural systems is a pertinent and important consideration when selecting the building structural system.

More rigid shear wall and/or braced frame lateral force resisting systems reduce damage to non-structural elements due to lateral drift, but increase the earthquake accelerations experienced by the non-structural elements. The stiffer lateral systems usually limit non-structural damage to a lower level than more flexible moment frame type lateral force resisting system. However, a moment frame lateral force resisting system provides almost unlimited programmatic and planning flexibility initially and during the life of the building.

All cost comparisons between structural systems should include interface costs between other building components such as architectural finishes, exterior enclosure systems, mechanical systems, and electrical systems.

Life cycle costing methods should be used where applicable.

Future Building Expansion

Future vertical expansion of the new facility is not anticipated at this time. Horizontal expansion may take place in the future, but it should be assumed future horizontal expansions will be self supporting for both gravity and lateral loads. The structure need not be designed to support future horizontal or vertical expansions.

Wind Design

At present, the planned occupant load in the building will be such that the building can be appropriately classified as a category III building. A wind importance factor, "I_W" of 1.15 should be used in the wind design analysis according to Table 1604.5 of the 2006 International Building Code, subject to verification of the final occupant load by the design team.

Roof Snow Load Design

At present, the planned occupant load in the building will be such that the building can be appropriately classified as a category III building. A snow importance factor, "I_S" of 1.10 should be used in the snow load design analysis according to Table 1604.5 of the 2006 International Building Code, subject to verification of the final occupant load by the design team.

Earthquake Design

At present, the planned occupant load in the building will be such that the building can be appropriately classified as a category IIII building. A seismic importance factor, "I_E" of 1.25 should be used in the earthquake design analysis according to Table 1604.5 of the 2006 International Building Code, subject to verification of the final occupant load by the design team.

Control of Suspended Floor Structure Vibrations

Control of suspended floor and bridge structure and vibrations due to human and mechanically induced excitation forces shall be considered in the selection of the building structural floor framing systems. At this time, no vibration sensitive equipment is anticipated in the building. If, as design progresses, vibration sensitive equipment is located in the building, suspended floor structures shall be designed to limit vibration to appropriate levels for the equipment under consideration. Floors shall be designed to comply with the vibration criteria in Section 3.1 of the DFCM Design Manual.

Testing and Inspections

The Architect/Engineer, and the selected testing lab, shall perform periodic construction observations, testing, and special inspections, as outlined in Chapter 17 of the International Building Code. The design engineer shall list all required special inspections on the contract drawings, and perform periodic construction observations as required by the A/E agreement. Costs for special inspections and testing services will be paid for directly by the owner.

Distance to Nearest Fault

The distance to the nearest fault is not clearly known at this time, but the fault is probably located near the base of the mountains to the east. The design team should take appropriate measures to consider the location of the fault during the design phase of the project, and as the geotechnical investigation is completed.

5.2 MECHANICAL, PLUMBING, AND FIRE PROTECTION

MECHANICAL UTILITIES

- Heat Source: Connect to the 10" direct buried high pressure steam line and the 5" direct buried condensate line located south of the building. Connect near existing pipe anchor, or provide new anchor in existing lines and new pipe expansion loop. Provide a manhole with valves at the new connection. Run direct buried steam and condensate lines from new manhole into a basement mechanical room in the new building. New direct buried piping will be run in gilsulate insulation or Ric-wil Perma-pipe.

- Fire sprinkling and domestic water supply: Connect to the USU 6" water main in 1200 East. Make one 6" connection the main. Branch the domestic water service off and provide meter at the park strip. Bring separate fire sprinkling and domestic water lines into the building. Provide new fire hydrants at the building.

- Sanitary Sewer: Connect to the Logan City 8" sanitary sewer main on the west side of 1200 East.

- Roof Drainage: Run the roof drainage to new dry sumps located around the building.

MECHANICAL SYSTEMS

CODES
- International Building Code, 2006
- International Mechanical Code, 2006
- International Plumbing Code, 2006
- International Fire Code, 2006
- International Energy Conservation Code, 2006
- NFPA 13
- Utah State Boiler Code

STANDARDS
- DFCM Design Criteria
- USU Architect & Engineer Manual
- ASHRAE Guidelines and Standards

SUSTAINABILITY
Mechanical sustainable design features will be considered and incorporated where appropriate.

Water Use Reduction:
- Water Closets – 1.6 gal/flush max.
- Urinals – Consider waterless type
- Lavatory faucets – Low Flow, 1.8. GPM sensor type

Energy Conservation:

- Commissioning of mechanical systems.
- Hot Water System – variable flow with VFD.
- Chilled Water System – variable flow with VFD.
- Occupancy control on VAV boxes (combined with lighting control)
- Outside air control from CO_2 measurement
- 30 deg F temp. difference on hot water system, in lieu of 20 deg.
- 13 deg F temperature difference on chilled water system, in lieu of 10 deg.
- Reduced static pressure drop through air handlers (400 feet/minute in lieu of 500 feet/minute)

Protection of Atmosphere

- Use non-CFC and non-HCFC Refrigerants

Energy Use Measurements & Verification

- Provide vortex type steam meter on building.

Indoor Environmental Quality

- Monitor and control CO_2 levels in all densely occupied spaces.
- Monitor and control outside air flow from CO_2 sensors.
- Follow SMACNA Guidelines to protect HVAC system during construction.
- Pre-occupancy building flush-out. Ventilate the building prior to occupancy to flush out contaminate.
- Exhaust Janitors closets and photocopy areas.
- Provide individual thermostatic controls for exterior offices, corner offices, unique spaces, each classroom, etc.
- Consider in-floor radiant heating in the on-grade classrooms to improve the comfort of children.
- Provide baseboard radiation in areas with a high proportion of exterior glass

DESIGN TEMPERATURES

	Winter	Summer
Outdoor Temperature	-20˚ F	94˚ DB/65˚ WB
Indoor Temperature	72˚ F	72˚ F/50% RH Max.

ACOUSTICAL CRITERIA

Since a portion of the facility will be used for deaf children, all classrooms should be designed to accommodate deaf children, from a background noise consideration.

The Acoustical Society of America (ASA) recommends a noise level of NC 25 to 30 in standard classrooms. ASA recommends that diffusers be selected at NC 20 to 25 for standard classrooms. For this facility, the classroom design will be NC 25 with diffusers selected at NC 20.

HEAT SOURCE

The heat source will be the campus central steam system. High pressure steam will be piped to the building. The pressure will be reduced to 15 PSI. Two steam-to water heat exchangers will be provided for redundancy. Each heat exchanger will be sized for 60% of the load.

COOLING SOURCE

There is a campus central chilled water system. It is remote from the proposed building and funding is not available to extend it to the building. The cooling load is approximately 150 tons. The system will be designed to accommodate future connection to the campus central water systems: the coils will be selected at the campus central chilled water supply and return temperatures. A water-cooled chiller will use about 40% less energy than an air cooled chiller. The installed cost of a water cooled chiller will be about $40,000 more than an air-cooled chiller due to the cost of the chiller room. The chiller will be located on the roof. The chiller will have two compressors minimum and two refrigeration circuits for redundancy. If a water-cooled chiller is used, the cooling tower will also be located on the roof.

VENTILATION

Ventilation will be provided in compliance with the 2006 IMC.

Classrooms – 15 CFM/person
Office Space - 20 CFM/person

An outside air flow measuring device will be provided at each air handler. A CO2 sensor will reset the outside air flow between minimum and a maximum value.

HVAC SYSTEM

A central variable air volume (VAV) reheat system is a good fit for this building. A single air handler would be located in the Penthouse mechanical room. VAV Boxes with hot water reheat coils would be provided for each zone. The air handler should have two parallel fans for redundancy.

PERIMETER RADIATION

Perimeter hot water finned tube radiation will be provided in spaces with a high proportion of exterior glass.

RADIANT FLOOR HEATING

Hot water radiant floor heating should be considered in Classrooms built on grade. This will provide a more comfortable space for children.

AIR DISTRIBUTION

The ducts from the air handler to VAV boxes should be medium velocity (3000 fpm max, 0.25" w.g./100 feet max P.D.) The ceiling space will be a return air plenum.

HEATING HOT WATER PIPING SYTEM

Hot water supply temperature - 180˚F
Hot water return temperature - 150˚F
Primary standby pumps each sized at 100% flow. Variable flow, VFD's on each pump.

CHILLED WATER PIPING SYSTEM
Chilled water supply temperature - 42˚F
Chilled water return temperature - 55˚F
Primary – Standby pumps, each sized at 100% flow. Variable flow primary loop (to minimum flow allowed by chiller), VFD's on each pump.

AUTOMATIC TEMPERATURE CONTROLS
Direct Digital Controls (DDC) with electric damper and valve actuators. Approved manufacturers/installers are Johnson Controls/Johnson Controls and TAC Controls/Utah Controls.

FIRE SPRINKLING
Automatic wet-pipe sprinkler system with a Class I standpipe in two stairways. Piping will be standard weight black steel with mechanical couplings, threaded joints or welded joints.

PLUMBING
In the children's toilet rooms, "Primary" plumbing fixtures, will be used. In the public toilet rooms, the water closets will be flush valve (1.6 gal/flush), wall hung; the urinals will be waterless, if approved by USU; the lavatories will have sensor type faucets with flow restrictors.

The domestic water heater will be electric due to the small hot water load.

5.3 ELECTRICAL

ELECTRICAL DESIGN NARRATIVE

A. Codes –

The electrical work will comply with the laws, ordinances, and rules of the State of Utah, and local government. In addition, the following codes are applicable:

NEC (National Electrical Code)
NFC (National Fire Code)
IFC (International Fire Code)
IBC (International Building Code)
ASHRAE 90.1 (Energy Code)

B. Standards – The Applicable standards are as follows:

USU Design Standards
State of Utah (DFCM) Standards
UL (Underwriters Laboratories)
ASTM (American Society for Testing and Materials)
ANSI (American National Standards Institute)
NEMA (National Electrical Manufacturer's Association)
IEEE (Institute of Electrical and Electronics Engineers)
EIA/TIA (Electronic Industries Association/Telecommunications Industries Association)
IESNA (Illuminating Engineering Society of North America)

C. Raceways –

Raceways shall be steel; EMT conduit (Electrical Metallic Tubing) shall be used throughout for branch circuits and feeders. Rigid Metal Conduit shall be used for service entrance conductors. PVC Conduit shall be used under slab and below grade with rigid elbows. Final conduit connections to lighting fixtures shall be by means of a flexible conduit whip, not exceeding 6 feet in length. Conduit connections to vibrating equipment shall be by means of flexible seal-tite conduit. Conduit fittings shall be malleable steel. Aluminum conduit and conduit fittings shall not be acceptable. Minimum raceway size shall be 3/4 inch.

D. Cable Tray –

Provide UL-listed cable tray, hot-dipped (after fabrication) galvanized corrosion-resistant finish systems of sizes, types and capacities indicated, and meeting all requirements of NEMA VE-1. Grind all rough edges, drip concentrations, etc, to smooth finish. Apply cold zinc spray to all field cut surfaces.

E. Conductors –

Conductors shall be copper. Solid conductor for sizes #12 AWG and smaller; stranded conductor for sizes #10 AWG and larger. Insulation shall be THHN/THWN, rated for 600 volts. Aluminum conductors shall not be acceptable. Minimum conductor size for branch circuits shall be #12 AWG. All 20 amp branch circuits over 100 feet in length shall be #10 conductor. All conductors will be color coded according to the NEC and the campus standard.

F. Voltage Drop –

The voltage drop for feeders shall be limited to 2 percent. The voltage drop for branch circuits shall be limited to 3 percent.

G. Site Utilities –

New facility is approximately 60,000 square foot, three level building located east of the soccer field in the corner of the parking area, 1200 East 850 North. Currently, existing light poles are in the parking area that will require removal.

Power: Utilizing existing power manhole 14M5 located approximately on the southwest corner of the project in the parking area. A new switch will be necessary and can be located in the manhole or at the site. Extend new copper 15 kV feeders with copper tape shields and EPR insulation and 100% copper neutral in ductbank to the service transformer and high voltage switch.

The main service transformer will be pad mounted located outside of the building. It will be oil-filled with copper winding or aluminum windings and harmonic distortion less than 5%. Primary voltage 12470 voltage, and secondary voltage 120/208 voltage, 3 phase, 4 wire.

Communication: Utilize existing communication manhole (MH.14M1) west of the aforementioned power manhole. From this manhole extend (4) 4" conduits to the building MDF. (One for copper, one for fiber, one for TV and one for spare.) Bury the conduit a minimum of 36" with caution marker tape twelve inches below ground level. Conduit will be placed in a trench with a minimum 3" bed of fine wash sand or pea gravel. Backfill will be fine wash sand or pea gravel encased around the conduits a minimum of twelve inches.

H. Power Distribution –

Distribution of power within the building will be at 120/208 volts, 3 phase, 4 wire. Receptacles, small motors and miscellaneous equipment, large mechanical equipment and lighting will all be on separate panelboards.

An electronic meter will be provided at the main electrical service entrance to monitor volts, amps, kW hours, power factor, etc.

TVSS (Transient Voltage Surge Suppression) will be provided at the main electrical service entrance equipment.

Distribution switchboards and appliance panelboards shall be UL listed, with steel enclosure, with 16-gauge minimum thickness, and dead-front construction. Distribution boards shall be equipped with copper bus bars, full-sized neutral bus, and ground bus.

Lighting and appliance panelboards shall be UL listed, with steel enclosure. Panel front shall include hinged

door-in-door construction, with flush locks and keys, all panels, keyed alike. Panels shall include interior index card in a clear plastic holder, and engraved formica label on the outside of the enclosure. Panels shall be equipped with copper bus bars, full-sized neutral bus, and ground bus. Lugs shall be copper rated (CU-AL lugs are not acceptable). Circuit breakers shall be bolt-on type, thermal magnetic trip. Panels shall have 20 percent spare space and capacity.

Motor starters shall be rated for the type and size of motor served. Manual type starters with thermal overload shall be provided for single phase, fractional horsepower motors. Line voltage multi-phase combination magnetic starters with integral fused disconnect, with dual element fuses and thermal overload protection in all phases shall be provided for three phase motors.

Variable frequency controller shall be provided for mechanical HVAC equipment, which requires adjustable speed control, per USU standards. Variable frequency controllers shall be of the pulse-width modulation type. All units shall be tested after installation for voltage and current harmonic distortion to ensure it is within acceptable limits. Provide a manual bypass as part of controller. Controls, indicators and keypad will be on the front panel – door mounted. Each variable frequency controller unit shall carry a three-year warranty for parts and labor.

I. Wiring Devices –

Wiring devices shall comply with NEMA standards Pub. No. WD 1. Switches and receptacles shall be specification grade, and rated at 20 amps and 120 volts AC. Receptacles shall be 3-wire grounding type. GFI (Ground fault circuit interrupter) type receptacles shall be rated 20 amps, 120 volts AC, with solid-state ground fault sensing and 5 milliamp trip level. Receptacles in toilet rooms, wet areas, or within 6 feet of any sink shall be GFI type. Receptacles on the building exterior shall be GFI type. All coverplates shall be stainless steel.

J. Lighting –

Lighting will be primarily of the fluorescent type. See drawings for style and type of fixtures. Fixtures shall generally be equipped with 4 foot, 32 watt, 24,000 hour lamp life, energy-saving T8 lamps. Lamps shall be low mercury content. Biax and compact fluorescent lamps shall also be used where the light fixture style does not readily lend itself to 4 foot lamps. Ballasts for fluorescent lamps shall be high frequency, electronic energy-saving type, with power factor above 95 percent and harmonic distortion of less than 10 percent.

Exterior light fixtures shall be surface mounted, with metal halide lamps or compact fluorescent and high power factor, cold weather ballasts. Provide full cut-off luminaries; comply with light pollution reduction requirements.

Lighting Illumination Levels as recommended by IESNA are as follows:

Space Description	Illumination Level – lux (footcandles)

Offices	500 lux	(50 footcandles)
Conference rooms	500 lux	(50 footcandles)
Classrooms	500 - 600 lux	(50 - 60 footcandles)
Corridors	100 - 150 lux	(10 - 15 footcandles)
Toilet rooms	200 lux	(20 footcandles)
Storage rooms	150 lux	(15 footcandles)
Communications room	250 - 300 lux	(25 - 30 footcandles)
Mechanical room	250 - 300 lux	(25 - 30 footcandles)

Exterior Lighting. Exterior light poles are the campus standard style. Compact fluorescent lamps in exterior building mounted fixtures will be used in order to provide emergency egress lighting at the building exits.

Ballasts. Provide electronic rapid start fluorescent lamp ballasts. Ballast shall be programmable start capable of operating lamp types indicated, with power factor (ratio of actual power to apparent power) above 95%, ballast factor of .71, and operating with audible noise level lower than the quietest C.B.M. certified ballast for the same application, listed as class A. Provide ballasts which operate at a frequency above 20K Hz from an input frequency of 60 Hz; have an efficacy factor (relative light output per watt consumed) at least 10% above the C.B.M. certified electromagnetic system for the same application; and have a lamp crest factor (ratio of peak to R.M.S. lamp current) of 1.7 or less. Ballasts shall have a total current harmonic distortion of less than 10%. Provide HID ballasts, of ratings, types and makes as recommended by lamp manufacturer, which properly match lamps to power line by providing appropriate voltage and impedances for which lamps are designed. Equip exterior fixtures with low temperature starting ballasts. Provide high power factor, or power factor improved ballasts.
Lighting Control. Control of exterior lighting will be by photocell and time clock. Lighting in the common spaces (lobbies and student lounge) is controlled by time clock. Lighting in office spaces is controlled with a combination of toggle switch in combination with automatic occupancy sensors. Dimming is provided for all fixtures in Distance Learning and Observation rooms. Lighting in toilet rooms will be controlled solely by occupancy sensors.

K. Emergency Power –

Emergency power shall be provided and sized for life safety including exit and egress lighting, telephone, data, and fire alarm, and security as applicable.
The emergency power will be provided from a diesel emergency generator. The generator will be located outside of the building. The generator fuel capacity is 24 hours of emergency power at full load. The generator will be capable of starting and assuming the emergency load within 10 seconds of a power outage.

Automatic transfer switch will be provided in the Main Electrical Room and will be wired to automatically start the generator upon loss of utility power. Emergency feeder conductors and control wiring will be provided for the emergency panels.

L. Grounding –

Grounding shall be provided for the entire raceway, service entrance, enclosures and equipment system. Grounding shall be provided in accordance with the NEC. A separate grounding conductor shall be provided for all feeders, equipment circuits and branch circuit runs. Grounding conductors shall be sized in accordance with the NEC.

M. Fire Alarm –

The fire alarm system shall be analog addressable, class A loop type, and electrically supervised. Horn/strobe devices shall be 95 dB and a minimum of 15 candela. Smoke detector devices shall be photoelectric type. Manual pull station devices shall be single-action type with key reset. Duct detectors shall be provided in return air ducts for air handling units, which have a capacity in excess of 56.6 cubic meters/minute (2000 cubic feet/minute). Elevator recall function will be provided to recall the elevator to the floor of building egress. Control modules for fan shutdown. Monitor modules for fire sprinkler flow and tamper switches.
All fire alarm wiring shall be installed in ¾ inch conduit. The fire alarm panel will report alarms to the campus master central fire alarm panel.

N. Security –

A raceway system shall be provided for security. Junction boxes will be located at each exterior door and ¾ conduit shall be run from the junction box to the main electrical room. A 3/8 inch flexible conduit shall be extended from each junction box and stubbed into the door frame. Rough-in for exterior camera's, interior camera's at entry's, card readers, entry communication and "buzz'-in" system for door control at pre-school.

O. Clocks –

Clocks will be provided in the classrooms, distance learning, open office, dining, kitchen, resource, and breakrooms. Minimum size of clock will be 12" in diameter and 120V with battery. Clock correction equipment will be located in Communication Rooms. The clocks will meet USU campus standard.

P. Telecommunications –

A structured cabling system for voice and data shall be provided within the building and will include both backbone cabling and horizontal distribution cabling. Backbone cabling for voice and data will be provided from the main level telecommunications room to the telecommunications closets located within the building so that no cable exceeds 250' in length. All cabling, both voice and data shall be Category 6. All outlets will serve as a combination telephone and data outlet. Provide fiber and copper cables per current USU standards.

Q. Audio-visual –

Provide equipment rough-in and raceway for distance learning rooms, observation and audiology. In Distance Learning provide rough-in for plasma screen, smart board, overhead projector, conference table floor box, lectern floor box, sound speakers, voice amplication and equipment cabinet. Data connections are provided

at each floor box and at the equipment cabinet. In the classrooms rough-in for an overhead projector, and future smart board.

R. Sound Enhancement –

Provide a sound enhancement system to amplify an instructors voice to overcome the deleterious effects of background noise, reduce teacher fatigue and assure speech clarity of class presentation and participation. Provide an infrared wireless system with no channel restrictions, no interference, a room contained signal; three band equalizer and three stereo inputs. Provide volume controls for TV/VCR, CD/Tape and computer, four individual speaker volume controls, powers up to eight speakers, signal quality indicator, two channel infrared option and output for personal FM systems. System includes speakers, cables, microphones transmitters, receivers, diodes, batteries, chargers, etc., as required for a complete operational system.

S. Television –

Provide master antenna TV systems, of types, capacities, and channels/frequencies as indicated; consisting of channel filters, distribution amplifiers, modulators, cabling, matching transformers, baluns, signal dividers, and other components as required for a complete installation. Except as otherwise indicated, provide manufacturer's standard system components; construct and design in accordance with published product information. Passive distribution equipment shall pass frequencies from 5 to 500 MHz. The system shall receive and distribute signals from the local community cable system. Television channels shall transmit through projector. Coordination with the local CATV company to be sure that the cable drop provides a signal of at least +10 dBmV. The contractor shall provide 2 channel elimination filters and 2 modulators.

T. Energy Utilization -

The standard that governs the requirements for energy utilization is ASHRAE 90.1. This standard outlines the power density requirements for electrical lighting systems as well as energy related to mechanical cooling and heating.

As it applies to electrical lighting systems, ASHRAE 90.1 limits the power density that can be used for interior lighting. There are two ways to calculate the energy requirements: one is the space-by-space method, in which the power density allowance is calculated for each individual space within the building, and added to a total. The second method is the building area method, in which an average power density requirement must be met for the entire building. For this type of building, the lighting power density allowance is an average of 1.2 watts per square foot over the entire building.

Dual level switching and occupancy sensors are provided for offices in order to provide the user with control over the amount of illumination (and power density) utilized for any particular task. Offices are typically located on the building perimeter and will have light contribution from exterior windows; dual level switching will be beneficial in these spaces.

In toilet room spaces, motion sensors are provided to control the lights automatically. This provides the most cost effective means of conserving energy in these types of spaces.

U. Lightning Protection –

A lightning protection risk analysis will be performed per NFPA 780. If risk exceeds moderate risk a lightning protection system will be provided.

6.0 COST ANALYSIS

6.1 CAPITOL BUDGET ESTIMATE SECTION 6 PAGE 2
6.2 PROJECT ESTIMATE SECTION 6 PAGE 7
6.3 FURNISHINGS ESTIMATE SECTION 6 PAGE 17

6.1 CAPITOL BUDGET ESTIMATE

Capital Development Projects

Capital Budget Estimate (CBE)

Project Name:	Early Childhood Education Center
Agency/Institution:	USU
Project Manager:	Dave McKay

Cost Summary	**$ Amount**	**Cost Per SF**	**Notes**
Facility Cost	$ 12,956,400	$212.40	
Additional Construction Cost	$ -	$0.00	
Site Cost	$ -	$0.00	
Total Construction Cost	**$ 12,956,400**	**$212.40**	
Soft Costs:			
Hazardous Materials	$ -		
Pre-Design/Planning	$ 100,000		
Design	$ 910,000		
Property Acquisition	$ -		
Furnishings & Equipment	$ 1,615,830		
Information Technology:	$ 195,000		
Utah Art (1% of Construction Budget)	$ -		
Testing & Inspection	$ 130,000		
Contingency	$ 583,038		
Moving/Occupancy	$ 20,000		
Builder's Risk Insurance (0.15% of Construction Budget)	$ 19,435		
Legal Services (0.2% of Construction Budget)	$ 25,913		
DFCM Management	$ -		
User Fees	$ 300,000		
Commissioning	$ 130,000		
CAD Services (0.07% of Construction Budget)	$ 9,069		
Other Costs	$ -		
Total Soft Costs	**$ 4,038,285**	**$66.20**	
TOTAL PROJECT COST	**$ 16,994,685**	**$278.60**	
Previous Funding	**$ -**		
Other Funding Sources **(Identify in note)**	$ 17,000,000		
REQUEST FOR STATE FUNDING	**$ (5,315)**		

Project Information

Gross Square Feet	61,000	Base Cost Date	Jan. 2007
Net Square Feet	39,276	Estimated Bid Date	Feb. 2008
Net/Gross Ratio	64%	Est. Completion Date	Aug. 2009
		Last Modified Date	24-Jan-07
		Print Date	6/28/2007

Project Name:	**Early Childhood Education Center**				
Agency/Institution:	**USU**				
Project Manager:	**Dave McKay**				
Description	**Explanation**	**Units**	**Unit Cost**	**Cost**	**Escalated Cost**
Facility Cost		**GSF**			
New Facility Cost Details:					
New Building		61,000	$ 177.00	$ 10,797,000	$ 12,956,400
				$ -	$ -
				$ -	$ -
				$ -	$ -
				$ -	$ -
				$ -	$ -
Subtotal - New Facility Costs		**61,000**		**$ 10,797,000**	**$ 12,956,400**
Remodel Facility Cost Details:					
				$ -	$ -
				$ -	$ -
				$ -	$ -
				$ -	$ -
				$ -	$ -
				$ -	$ -
Subtotal - Remodel Facility Costs		**-**		**$ -**	**$ -**
TOTAL FACILITY COST		**61,000**		**$ 10,797,000**	**$ 12,956,400**
Additional Construction Cost Details:					
Connection Fees				$ -	$ -
Utility tunnel, steam, chilled piping				$ -	$ -
				$ -	$ -
				$ -	$ -
				$ -	$ -
				$ -	$ -
TOTAL ADDITIONAL CONSTRUCTION COST				**$ -**	**$ -**
Site Cost Details:					
Site demo and reconstruction	Included in Building Costs			$ -	$ -
				$ -	$ -
				$ -	$ -
				$ -	$ -
				$ -	$ -
				$ -	$ -
				$ -	$ -
				$ -	$ -
				$ -	$ -
				$ -	$ -
				$ -	$ -
				$ -	$ -
TOTAL SITE COST				**$ -**	**$ -**
TOTAL CONSTRUCTION COST				**$ 10,797,000**	**$ 12,956,400**
OTHER PROJECT INFORMATION:					
Total Net Square Feet:	**39,276**				
Base Cost Date:	**Jan. 2007**				
Estimated Bid Date:	**Feb. 2008**				
Estimated Completion Date:	**Aug. 2009**				
Last Modified Date:	**24-Jan-07**				
Inflation Escalation Factor Included:	**20.00%**				
Location Factor Included:	**0.00%**				
Hazardous Materials Cost Details:					
Pre-Construction Survey				$ -	$ -
				$ -	$ -
Plan and Monitoring				$ -	$ -
				$ -	$ -
Abatement/Removal				$ -	$ -
				$ -	$ -
TOTAL HAZARDOUS MATERIALS COST				**$ -**	**$ -**
Pre-Design/Planning:					
Planning Fund Reimbursement				$ -	
				$ -	

Programming		1	$ 90,000.00	$ 90,000	
				$ -	
Environmental Assessment				$ -	
				$ -	
Geotechnical Investigation/Surveys		1	$ 10,000.00	$ 10,000	
				$ -	
TOTAL PRE-DESIGN/PLANNING COST				**$ 100,000**	
Design Costs:					
A/E Design Fees					
Basic design		1	$ 910,000.00	$ 910,000	
Peer review				$ -	
				$ -	
				$ -	
				$ -	
Total A/E Design Fees				$ 910,000	
Additional Printing Costs		-		$ -	
				$ -	
Value Management Costs				$ -	
		-		$ -	
TOTAL DESIGN COST				**$ 910,000**	
Property Acquisition:					
				$ -	
				$ -	
				$ -	
				$ -	
TOTAL PROPERTY ACQUISITION COST				**$ -**	
Furnishings & Equipment Costs:					
Furnishings Detail:					
FF@E		1	$ 1,415,830.00	$ 1,415,830	
				$ -	
				$ -	
				$ -	
				$ -	
				$ -	
				$ -	
				$ -	
Total Furnishings				$ 1,415,830	
Equipment Detail:					
				$ -	
A / V Equipment		1	$ 100,000.00	$ 100,000	
				$ -	
				$ -	
				$ -	
				$ -	
				$ -	
Total Equipment				$ 100,000	
FF&E Design Costs		1	$ 100,000.00	$ 100,000	
				$ -	
TOTAL FURNISHINGS & EQUIPMENT COSTS				**$ 1,615,830**	
Information Technology Costs:					
ITS	1.5% of Construction Cost	1	$ 195,000.00	$ 195,000	
				$ -	
				$ -	
				$ -	
TOTAL INFORMATION TECHNOLOGY COST				**$ 195,000**	
UTAH ART	If N/A, change YES to NO. To supercede 1% calculation enter amount in unit cost	**NO**		**$ -**	
Testing & Inspection Costs:					
Building Code Inspection	1% of Construction Cost	1	$ 130,000.00	$ 130,000	
				$ -	
Material Testing				$ -	
				$ -	
Special Inspections				$ -	
				$ -	
TOTAL TESTING & iNSPECTION COSTS				**$ 130,000**	

Moving/Occupance Costs:					
				$ -	
Moving/Temp Relocation		1	$ 20,000.00	$ 20,000	
				$ -	
				$ -	
TOTAL MOVING/OCCUPANCY COSTS				**$ 20,000**	
DFCM Management:					
				$ -	
				$ -	
				$ -	
				$ -	
TOTAL DFCM MANAGEMENT				**$ -**	
User Fees:					
USU project manager		1	$ 300,000.00	$ 300,000	
USU connection fee to chiller system				$ -	
				$ -	
				$ -	
TOTAL USER FEES				**$ 300,000**	
Commissioning:					
Commissioning:		1	$ 130,000.00	$ 130,000	
				$ -	
				$ -	
				$ -	
TOTAL COMMISSIONING COSTS				**$ 130,000**	
Other Costs:					
				$ -	
				$ -	
				$ -	
				$ -	
TOTAL OTHER COSTS				**$ -**	
Previous Funding:					
(Only show state appropriated funding & include costs covered by that funding in appropriate category.)					
TOTAL PREVIOUS FUNDING				**$ -**	
Other Funding Sources:					
(List and describe each source)					
				$ 15,000,000	
				$ 2,000,000	
TOTAL OTHER FUNDING SOURCES				**$ 17,000,000**	

6.2 PROJECT ESTIMATE

PROJECT ESTIMATE	CONSTRUCTION CONTROL CORPORATION	1/23/2007

PROJECT NAME……..…..EMMA ECCLES JONES EARLY CHILDHOOD CENTER
LOCATION ……..……LOGAN, UT
ARCHITECT……..……..…..FFKR SF 61,000
STAGE OF DESIGN……SCHEMATIC

CSI #	DESCRIPTION			
	BUILDING COST SUMMARY			
02	**SITEWORK & DEMOLITION**		**$ 8.14**	**$ 496,401**
03	**CONCRETE**		**$ 7.34**	**$ 448,032**
04	**MASONRY**		**$ 8.03**	**$ 489,965**
05	**METALS**		**$ 19.19**	**$ 1,170,813**
06	**WOODS & PLASTICS**		**$ 3.65**	**$ 222,528**
07	**THERMAL & MOISTURE PROTECTION**		**$ 7.43**	**$ 453,366**
08	**DOORS & WINDOWS**		**$ 10.68**	**$ 651,698**
09	**FINISHES**		**$ 17.17**	**$ 1,047,549**
10	**SPECIALTIES**		**$ 2.21**	**$ 134,569**
11	**EQUIPMENT**		**$ 0.51**	**$ 30,881**
12	**FURNISHINGS**		**$ 0.27**	**$ 16,616**
14	**CONVEYING EQUIPMENT**		**$ 1.28**	**$ 78,225**
15	**MECHANICAL**		**$ 28.32**	**$ 1,727,648**
16	**ELECTRICAL**		**$ 21.83**	**$ 1,331,715**
	SUBTOTAL		**$ 136.07**	**8,300,004**
	GENERAL CONDITIONS	**10%**	**$ 13.61**	**830,000**
	OVERHEAD & PROFIT	**5%**	**$ 6.80**	**415,000**
	DESIGN CONTINGENCY	**15%**	**$ 20.41**	**1,245,001**
	BASE SCHOOL ESTIMATE		**$ 176.89**	**$ 10,790,005**

PROJECT ESTIMATE	CONSTRUCTION CONTROL CORPORATION	1/23/2007

PROJECT NAME……..…..EMMA ECCLES JONES EARLY CHILDHOOD CENTER
LOCATION ……..……LOGAN, UT
ARCHITECT……..……..…..FFKR SF 61,000
STAGE OF DESIGN……SCHEMATIC

CSI #	DESCRIPTION				
02	**SITEWORK & DEMOLITION**				
	Demolition:				
	Sawcutting	1 LS	$ 1,575.00	$	1,575
	Demo Lot Lights	3 EA	$ 682.50	$	2,048
	Remove light circuitry	330 LF	$ 4.15	$	1,369
	Remove Curb at road	40 LF	$ 7.30	$	292
	Demo Asphalt Paving	94900 SF	$ 0.62	$	58,791
	Miscellaneous Demolition	1 LS	$ 5,250.00	$	5,250
	Subtotal for Demolition			**$**	**69,324**
	Earthwork:				
	Site Clearing	94900 SF	$ 0.26	$	24,911
	Site Grading	75900 SF	$ 0.33	$	24,705
	Building Excavation	2815 CY	$ 6.30	$	17,733
	Backfill & Compaction	2815 CY	$ 13.28	$	37,388
	Imported Fills	1000 CY	$ 12.60	$	12,600
	Gravel Under Slab	372 TNS	$ 18.38	$	6,827
	Building Grading	19000 SF	$ 0.37	$	6,983
	Subtotal for Earthwork			**$**	**131,148**
	Site Utilities	1 LS	$ 78,750.00	**$**	**78,750**
	Landscaping				
	Landscape Irrigation	38930 SF	$ 0.36	$	13,898
	Topsoil	476 CY	$ 18.38	$	8,743
	Rubberized surface at playground	1350 SF	$ 13.28	$	17,931
	Sod	38930 SF	$ 0.36	$	13,898
	Plantings	1 Allow	$ 42,000.00	$	42,000
	Subtotal for Landscaping			**$**	**96,470**

PROJECT ESTIMATE	CONSTRUCTION CONTROL CORPORATION	1/23/2007

PROJECT NAME……..…..EMMA ECCLES JONES EARLY CHILDHOOD CENTER
LOCATION ……..……LOGAN, UT
ARCHITECT……..……..…..FFKR SF 61,000
STAGE OF DESIGN……SCHEMATIC

CSI #	DESCRIPTION				
	Site Concrete				
	Sidewalk Regular	6500 SF	$ 3.68	$	23,888
	Miscellaneous Site Concrete	1 LS	$ 10,500.00	$	10,500
	Curb & Gutter	910 LF	$ 14.33	$	13,043
	Mowstrip	214 LF	$ 9.08	$	1,944
	New Concrete Approach	180 SF	$ 4.88	$	879
	Dumpster Area Footing	3 CY	$ 309.75	$	929
	Dumpster CMU	300 SF	$ 13.63	$	4,089
	Dumpster Wall Cap	30 LF	$ 20.63	$	619
	Subtotal for Site Concrete			**$**	**55,890**
	Site Specialties				
	Wrought Iron Fence at playground	214 LF	$ 68.25	$	14,606
	Gates at play ground	2 EA	$ 1,207.50	$	2,415
	Subtotal for Site Specialties			**$**	**17,021**
	Asphalt Paving				
	Asphalt Paving	29560 SF	$ 1.58	$	46,557
	Striping	29560 SF	$ 0.04	$	1,242
	Subtotal Asphalt Paving			**$**	**47,799**
	TOTAL SITEWORK & DEMOLITION			**$**	**496,401**
03	**CONCRETE**				
	Footings Continuous	220 CY	$ 309.75	$	68,145
	Spot Footings	218 CY	$ 320.25	$	69,815
	12" Foundation	4248 SF	$ 17.83	$	75,738
	Slab on grade	23640 SF	$ 3.57	$	84,395
	Topping Slab 3"	42000 SF	$ 3.57	$	149,940
	TOTAL CONCRETE			**$**	**448,032**

PROJECT ESTIMATE	CONSTRUCTION CONTROL CORPORATION	1/23/2007

PROJECT NAME……..…..EMMA ECCLES JONES EARLY CHILDHOOD CENTER
LOCATION ……..……LOGAN, UT
ARCHITECT……..……..…..FFKR SF 61,000
STAGE OF DESIGN……SCHEMATIC

CSI #	DESCRIPTION				
04	**MASONRY**				
	Brick Veneer	29256 SF	$ 16.75	$	489,965
	TOTAL MASONRY			**$**	**489,965**
05	**METALS**				
	Metal Floor Structure	42000 SF	$ 15.70	$	659,295
	Metal Roof Structure	20000 SF	$ 11.50	$	229,950
	Metal Roof Deck	20000 SF	$ 1.94	$	38,850
	Metal Floor Deck	42000 SF	$ 1.89	$	79,380
	Ladder	40 LF	$ 99.75	$	3,990
	Stair Pan- Regular	6 EA	$ 10,363.50	$	62,181
	Stair Pan- Decorative	2 EA	$ 21,000.00	$	42,000
	Wall mounted hand rail	272 LF	$ 68.25	$	18,564
	Free Standing Railing	332 LF	$ 110.25	$	36,603
	TOTAL METALS			**$**	**1,170,813**
06	**WOOD & PLASTICS**				
	Carpentry:				
	Wood Plates & Blocking	10000 BF	$ 3.86	$	38,640
	Subtotal for Carpentry			**$**	**38,640**
	Millwork:				
	Base Cabinet With Top	270 LF	$ 183.75	$	49,613
	Desktop at observation rooms	112 LF	$ 120.75	$	13,524
	Wall Hung Cabinet	270 LF	$ 141.75	$	38,273
	Book Shelves at classroom	280 LF	$ 99.75	$	27,930
	Storage Shelving at Pantry	30 LF	$ 68.25	$	2,048
	Miscellaneous Millwork	1 LS	$ 52,500.00	$	52,500
	Subtotal for Millwork			**$**	**183,888**

PROJECT ESTIMATE	CONSTRUCTION CONTROL CORPORATION	1/23/2007

PROJECT NAME……..……EMMA ECCLES JONES EARLY CHILDHOOD CENTER
LOCATION ……..……LOGAN, UT
ARCHITECT……..……..……FFKR SF 61,000
STAGE OF DESIGN……SCHEMATIC

CSI #	DESCRIPTION				
	TOTAL WOOD & PLASTICS			**$**	**222,528**
07	**THERMAL & MOISTURE PROTECTION**				
	R-30 Rigid Insulation	20000 SF	$ 2.36	$	47,250
	Sound Batt	73980 SF	$ 0.48	$	35,732
	R-19 Insulation at exterior studwall	31800 SF	$ 0.68	$	21,704
	Singly ply roof membrane	20000 SF	$ 2.36	$	47,250
	Metal Wall Cap	800 LF	$ 8.03	$	6,426
	Soffit at Canopy	800 SF	$ 10.13	$	8,106
	Louvered Sunshade at south & west side of building	2184 SF	$ 82.95	$	181,163
	Metal Flashing	3000 SF	$ 5.88	$	17,640
	Roof Hatches	1 EA	$ 735.00	$	735
	Sprayed on Fireproofing	61000 SF	$ 1.26	$	76,860
	Caulking & Sealants	1 LS	$ 10,500.00	$	10,500
	TOTAL THERMAL & MOISTURE PROTECTION			**$**	**453,366**
08	**DOORS & WINDOWS**				
	Single Interior Wood Door	140 EA	$ 1,039.50	$	145,530
	Double Interior Door	4 EA	$ 1,417.50	$	5,670
	Coiling Grill	200 SF	$ 37.80	$	7,560
	6' Aluminum Doors with Glass	7 PAIR	$ 2,362.50	$	16,538
	3' Aluminum Doors with Glass	9 EA	$ 1,207.50	$	10,868
	Exterior Aluminum Storefront	2770 SF	$ 33.60	$	93,072
	Operable Aluminum windows	2000 SF	$ 38.33	$	76,650
	Curtainwall	2544 SF	$ 68.25	$	173,628
	Interior Glazing- One Way	2000 SF	$ 39.90	$	79,800
	Interior Glazing	1400 SF	$ 29.40	$	41,160
	Mirrors	100 SF	$ 12.23	$	1,223

PROJECT ESTIMATE	CONSTRUCTION CONTROL CORPORATION	1/23/2007

PROJECT NAME……..…..EMMA ECCLES JONES EARLY CHILDHOOD CENTER
LOCATION ……..……LOGAN, UT
ARCHITECT……..……..…..FFKR SF 61,000
STAGE OF DESIGN……SCHEMATIC

CSI #	DESCRIPTION				
	TOTAL DOORS & WINDOWS			**$**	**651,698**
09	**FINISHES**				
	Metal Stud Interior Framing	73980 SF	$ 2.32	$	171,671
	Exterior Studwall	31800 SF	$ 4.04	$	128,552
	5/8" Gyp Single Layer	179760 SF	$ 1.37	$	245,372
	Double layer gyp at sound walls	3200 SF	$ 2.12	$	6,787
	Suspended Gyp Board Ceilings	1960 SF	$ 3.36	$	6,586
	Lobby Ceiling	590 SF	$ 6.98	$	4,120
	Ceramic Floor Tile	1916 SF	$ 9.98	$	19,112
	Ceramic Tile Base	426 LF	$ 8.93	$	3,802
	Ceramic Wall Tile	3408 SF	$ 9.45	$	32,206
	Kitchen Floor Tile	272 SF	$ 9.98	$	2,713
	Break Area VCT	1672 SF	$ 1.73	$	2,897
	Washable Acoustic Ceiling	272 SF	$ 2.36	$	643
	Acoustic Ceiling	56250 SF	$ 2.36	$	132,891
	CARPET	6104 SY	$ 23.10	$	141,013
	Lobby Porcelain Tile	590 SF	$ 9.98	$	5,885
	Rubber Base	10806 LF	$ 1.52	$	16,453
	Paint/ Stain Doors & Frames	144 EA	$ 89.25	$	12,852
	Paint Gypsum Board	182960 SF	$ 0.45	$	82,606
	Paint Ceiling	1960 SF	$ 0.50	$	988
	Paint Interior Exposed Ceiling	2200 SF	$ 1.30	$	2,864
	Seal Masonry	29256 SF	$ 0.33	$	9,523
	Sealed Concrete	2200 SF	$ 0.33	$	716
	FRP	500 SF	$ 3.10	$	1,549
	Miscellaneous Finishes	1 LS	$ 15,750.00	$	15,750

PROJECT ESTIMATE	CONSTRUCTION CONTROL CORPORATION	1/23/2007

PROJECT NAME……..…..EMMA ECCLES JONES EARLY CHILDHOOD CENTER
LOCATION ……..……LOGAN, UT
ARCHITECT……..……..…..FFKR SF 61,000
STAGE OF DESIGN……SCHEMATIC

CSI #	DESCRIPTION				
	TOTAL FINISHES			**$**	**1,047,549**
10	**SPECIALTIES**				
	Fire Extinguisher w/ Cabinet- In Halls	12 EA	$ 296.10	$	3,554
	Toilet Accessories	28 SETS	$ 367.50	$	10,290
	Toilet Patitions	12 EA	$ 997.50	$	11,970
	Urinal Screens	4 EA	$ 262.50	$	1,050
	Marker Board	896 SF	$ 12.34	$	11,054
	Tackable Wallboard	3920 SF	$ 4.88	$	19,139
	Lockers- Double Tiered	240 EA	$ 239.40	$	57,456
	Projection Screens	14 EA	$ 682.50	$	9,555
	Identifying Devices	1 LS	$ 10,500.00	$	10,500
	TOTAL SPECIALTIES			**$**	**134,569**
11	**EQUIPMENT**				
	Commerical Warming Oven	1 EA	$ 3,832.50	$	3,833
	Range	1 EA	$ 2,782.50	$	2,783
	Range Hood	1 EA	$ 1,029.00	$	1,029
	Microwaves	2 EA	$ 682.50	$	1,365
	Sanitizing Dishwasher	1 EA	$ 6,825.00	$	6,825
	Upright Freezer Unit	1 EA	$ 2,362.50	$	2,363
	Refridgerator	1 EA	$ 2,362.50	$	2,363
	Preparation Table	1 EA	$ 997.50	$	998
	Base Cabinets w/ Stainless Steel Top	24 LF	$ 246.75	$	5,922
	Wall Hung Cabinets	24 LF	$ 141.75	$	3,402
	TOTAL EQUIPMENT			**$**	**30,881**
12	**FURNISHINGS**				
	Entrance Mats	240 SF	$ 14.70	$	3,528

PROJECT NAME……..…..EMMA ECCLES JONES EARLY CHILDHOOD CENTER
LOCATION ……..……LOGAN, UT
ARCHITECT……..……..…..FFKR SF 61,000
STAGE OF DESIGN……SCHEMATIC

CSI #	DESCRIPTION				
	Blinds	2770 SF	$ 4.73	$	13,088
	TOTAL FURNISHINGS			**$**	**16,616**
14	**CONVEYING SYSTEMS**				
	Passenger Elevator 3 Stop- two sided	1 EA	$ 78,225.00	$	78,225
	TOTAL CONVEYING SYSTEMS			**$**	**78,225**
15	**MECHANICAL**				
	HVAC	61000 SF	$ 21.53	**$**	**1,313,025**
	Fire Protection:	61000 SF	$ 3.15	**$**	**192,150**
	Plumbing:				
	One Compartment Sink	32 EA	$ 693.00	$	22,176
	Water Closet	28 EA	$ 714.00	$	19,992
	Two Compartment Sink	3 EA	$ 735.00	$	2,205
	Three Compartment Sink at Kitchen	1 EA	$ 1,207.50	$	1,208
	Urinal	4 EA	$ 714.00	$	2,856
	Wall Lavs	27 EA	$ 682.50	$	18,428
	Service Sink	3 EA	$ 609.00	$	1,827
	Floor Sinks	1 EA	$ 336.00	$	336
	Drinking Fountain	14 EA	$ 546.00	$	7,644
	Water Cooler	6 EA	$ 714.00	$	4,284
	Water Heater	3 EA	$ 1,522.50	$	4,568
	Expansion Tank	3 EA	$ 1,302.00	$	3,906
	Roof Drains	20 EA	$ 173.25	$	3,465
	Roof Drain Piping	1200 LF	$ 15.38	$	18,459
	Water Lines	5000 LF	$ 11.18	$	55,913
	Sewer / Vent Lines	3350 LF	$ 15.38	$	51,532
	Clean & Flush Lines	1 LS	$ 3,675.00	$	3,675

PROJECT ESTIMATE	CONSTRUCTION CONTROL CORPORATION	1/23/2007

PROJECT NAME……..……EMMA ECCLES JONES EARLY CHILDHOOD CENTER
LOCATION ……..……LOGAN, UT
ARCHITECT……..……..……FFKR SF 61,000
STAGE OF DESIGN……SCHEMATIC

CSI #	DESCRIPTION			
	Subtotal for Plumbing			**$ 222,473**
	TOTAL MECHANICAL			**$ 1,727,648**
16	**ELECTRICAL**			
	Service & Distribution	61000 SF	$ 4.88	**$ 297,833**
	Power	61000 SF	$ 3.10	**$ 188,948**
	Site Lighting	1 LS	$ 31,500.00	**$ 31,500**
	Lighting	61000 SF	$ 6.83	**$ 416,325**
	Special Systems	61000 SF	$ 4.15	**$ 252,998**
	Fire/ Smoke Alarm Systems	61000 SF	$ 2.36	**$ 144,113**
	TOTAL ELECTRICAL			**$ 1,331,715**

6.3 FURNISHINGS ESTIMATE

DATE: 1/24/2007

PRELIMINARY PROGRAMMATIC COST ESTIMATE - FURNISHINGS

Center for Early Care and Education
Utah State University
FFKR No. 06093

AREA	DESCRIPTION	RMS	COST	EXTENDED	TOTALS
LEVEL 1					
PRE-SCHOOL					
	INFANTS	1	15,000.00	15,000.00	
	1-2 YEAR	1	15,000.00	15,000.00	
	2-3 YEAR	1	15,000.00	15,000.00	
	3-4 YEAR	1	15,000.00	15,000.00	
	4-5 YEAR	1	15,000.00	15,000.00	
	KITCHEN	1		-	
	DINING/ M.P.	1	10,000.00	10,000.00	
	CONFERENCE	1	5,500.00	5,500.00	
	DIRECTOR	1	8,000.00	8,000.00	
	SCHOOL OFFICE & WORK	1	15,000.00	15,000.00	
					113,500.00
PRE-SCHOOL FOR THE DEAF					
	CLASSROOMS	5	15,000.00	75,000.00	
	DISCOVERY	1	15,000.00	15,000.00	
	DIR.	1	8,000.00	8,000.00	
	CONFERENCE	1	5,500.00	5,500.00	
					103,500.00
REMAINING AREAS					
	DROP-IN DAY CARE	1	9,000.00	9,000.00	
	THERAPY	4	1,500.00	6,000.00	
	OBSERVATION	1	5,500.00	5,500.00	
	AUDIOLOGY	1	8,000.00	8,000.00	
	AUDIOLOGY OFFICES	3	2,500.00	7,500.00	
	SECURE STORAGE	1	1,750.00	1,750.00	
					37,750.00

DATE: 1/24/2007

PRELIMINARY PROGRAMMATIC COST ESTIMATE - FURNISHINGS

Center for Early Care and Education
Utah State University
FFKR No. 06093

AREA	DESCRIPTION	RMS	COST	EXTENDED	TOTALS
LEVEL 2					
REMAINING AREAS					
1.8	BREAK ROOM / WORK ROOM	1	9,900.00	9,900.00	
1.9	RESOURCE AREA	1	25,000.00	25,000.00	
3.1	DIRECTOR	1	12,400.00	12,400.00	
3.13	PARENT TRAINING	1	6,500.00	6,500.00	
3.2	CONFERENCE	1	6,750.00	6,750.00	
3.3	DISTANCE DELIVERY CLASSRM.	2	15,000.00	30,000.00	
3.4	CONFERENCE	1	6,750.00	6,750.00	
3.5	AUDITORY SCREENING ROOM	1	1,750.00	1,750.00	
3.6	VISUAL SCREENING ROOM	1	2,000.00	2,000.00	
3.7	EYE MOVEMENT PHOTO LAB	1	2,000.00	2,000.00	
3.8	INDIVIDUAL TESTING ROOM	1	1,750.00	1,750.00	
3.9	TEACHING OBSERVATION RM	8	2,200.00	17,600.00	
4.1	DIRECTORS OFFICE	1	10,000.00	10,000.00	
4.3	TRANSCRIPTION	1	28,000.00	28,000.00	
4.4	SECURE FILE STORAGE	1	12,500.00	12,500.00	
5.1	DIRECTORS OFFICE	1	10,000.00	10,000.00	
5.4	IN PERSON TUTORING ROOMS	6	1,400.00	8,400.00	
5.5	ON-LINE TUTORING	1	12,400.00	12,400.00	
5.6	TUTORING OBSERVATION RM	3	2,800.00	8,400.00	
8.3	STAFF OFFICES	2	5,750.00	11,500.00	
	OPEN OFFICES	20	4,000.00	80,000.00	
					303,600.00
LEVEL 3					
1.8	BREAK ROOM / WORK ROOM	1	9,900.00	9,900.00	
2.6	CONFERENCE ROOM	1	6,750.00	6,750.00	
9.4	CONFERENCE ROOM	1	6,750.00	6,750.00	
9.5	FILES	1	11,250.00	11,250.00	
9.6	LIBRARY	1	35,500.00	35,500.00	
	DIRECTORS OFFICES	4	12,400.00	49,600.00	
	PRIVATE OFFICES	29	5,000.00	145,000.00	
	OPEN OFFICES	76	3,500.00	266,000.00	
					530,750.00

DATE: 1/24/2007

PRELIMINARY PROGRAMMATIC COST ESTIMATE - FURNISHINGS

Center for Early Care and Education
Utah State University
FFKR No. 06093
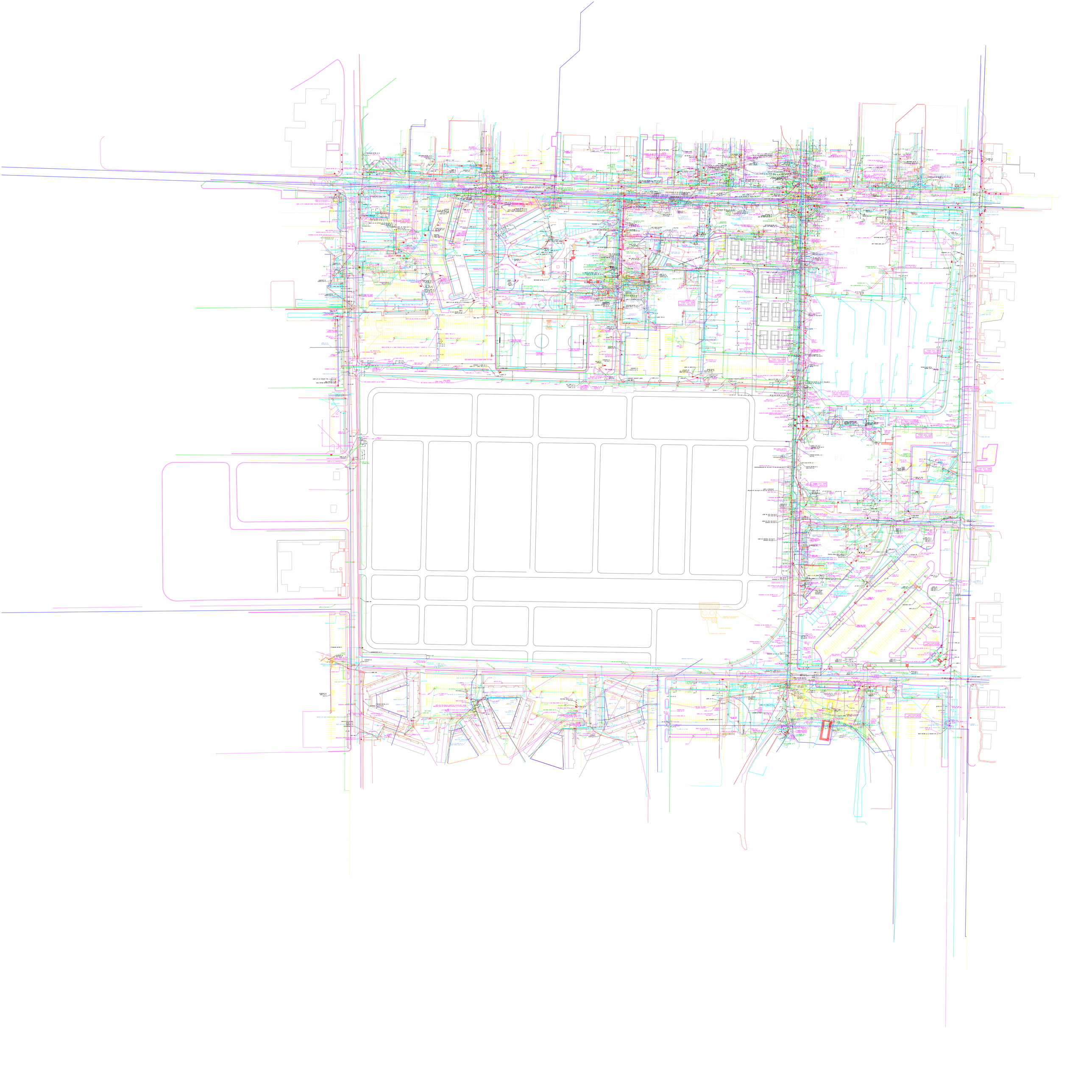
AREA	DESCRIPTION	RMS	COST	EXTENDED	TOTALS
		PRESCHOOL:			**113,500.00**
		PRESCHOOL FOR THE DEAF:			**103,500.00**
		REMAINING AREAS:			**872,100.00**
		SUBTOTAL:			**1,089,100.00**
		FREIGHT @ 10% OF SUBTOTAL:			**108,910.00**
		INSTALLATION @ 10%:			**108,910.00**
		CONTINGENCY @ 10%:			**108,910.00**
		GRAND TOTAL:			**1,415,830.00**