State of Utah

GARY R. HERBERT
Governor

GREGORY S. BELL
Lt. Governor

Department of Administrative Services
KIMBERLY K. HOOD
Executive Director

Division of Facilities Construction and Management
RICH AMON
Interim Director

Addendum No. 2

Date:	May 30, 2013
To:	Contractors
From:	Rick James - Project Manager
Reference:	George S. Eccles Student Life Center University of Utah – Salt Lake City, Utah DFCM Project No. 08015750
Subject:	**Addendum No. 2**

Pages	Addendum Cover Sheet	1	page
	Architect's Addendum No. 1	123	pages
	Total	124	pages

Note: This Addendum shall be included as part of the Contract Documents. Items in this Addendum apply to all drawings and specification sections whether referenced or not involving the portion of the work added, deleted, modified, or otherwise addressed in the Addendum. Acknowledge receipt of this Addendum in the space provided on the Bid Form. Failure to do so may subject the Bidder to Disqualification.

2.1 **SCHEDULE CHANGES:** There are no Project Schedule changes.

2.2 **GENERAL ITEMS**: See attached Architect's Addendum No. 1 dated May 28, 2013.

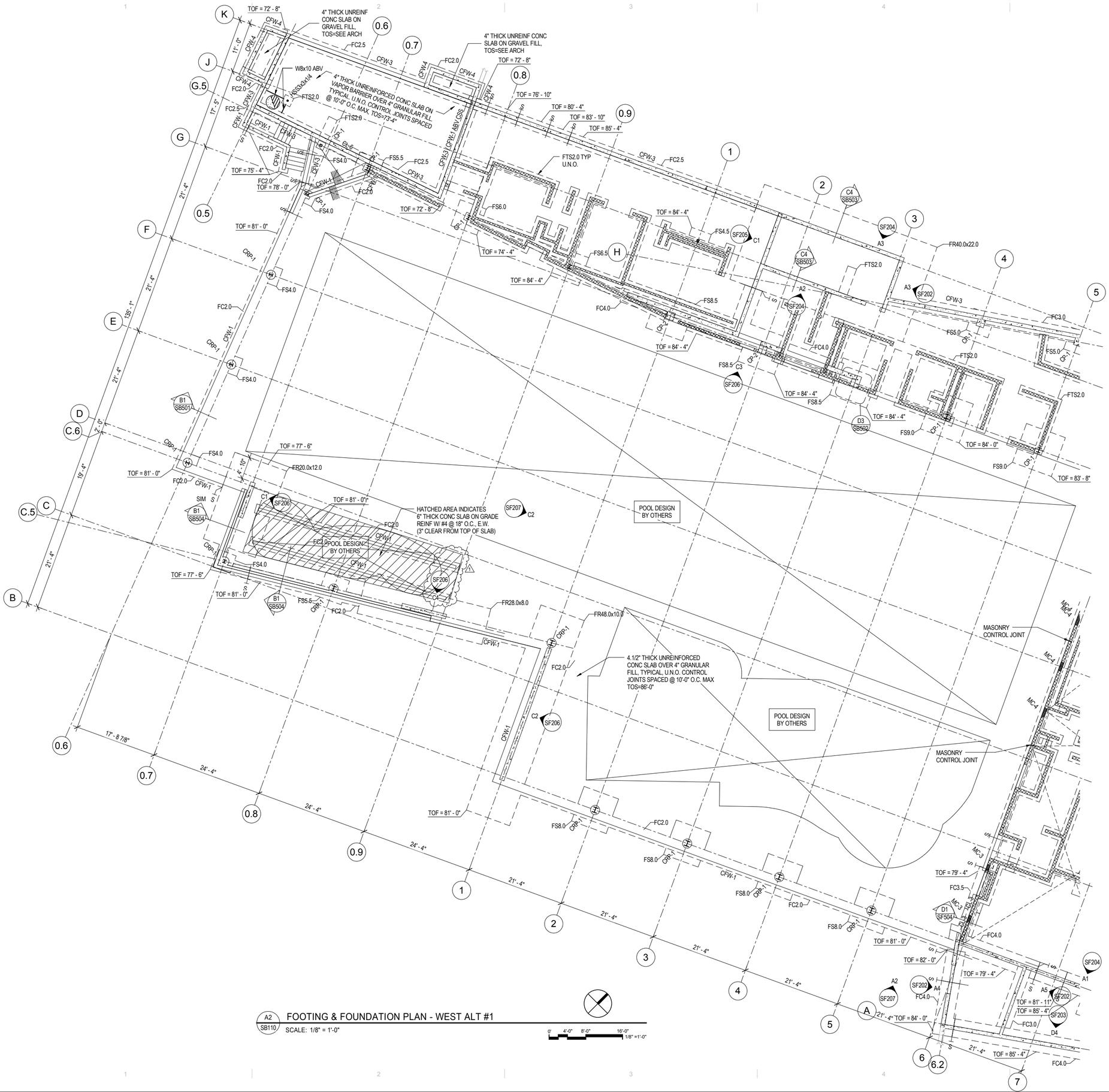

A2 SB110 FOOTING & FOUNDATION PLAN - WEST ALT #1

SCALE: 1/8" = 1'-0"

0' 4'-0" 8'-0" 16'-0"
1/8" =1'-0"

C:\Revit Models\2010-271 UU Student Life Ctr Struct-Central_williams.rvt
5/24/2013 2:01:14 PM

MHTN ARCHITECTS
MHTN Architects, Inc.
420 East South Temple
Suite 100
Salt Lake City, Utah 84111
Telephone (801) 595-6700
Telefax (801) 595-6717
www.mhtn.com

Hastings+Chivetta
ARCHITECTURE • PLANNING • ENGINEERING
622 Emerson, Suite 200
St. Louis, MO 63141
Tel. 314.863.5717
Fax. 314.863.2823
www.hastingschivetta.com

REAVELEY ENGINEERS + ASSOCIATES
Consulting Structural Engineers

BUILDING OFFICIAL STAMP

UNIVERSITY OF UTAH

STUDENT LIFE CENTER

1836 E. BALLIF ROAD
SALT LAKE CITY, UTAH 84112

SEAL

04/15/2013

MHTN PROJECT NO. PROJ 2010562

DRAWN BY: YW CHECKED BY: RM

ISSUED:

NO.	DATE	DESCRIPTION

CONTRACTOR TO VERIFY DRAWINGS IN FIELD USE REFLECT LAST REVISION DATE.

NO.	DATE	DESCRIPTION
1	MAY 28, 2013	ADDENDUM ONE

SHEET NAME

FOOTING & FDTN PLAN - WEST ALT #1

BID DOCUMENTS
May 15, 2013

SHEET NUMBER

SB110

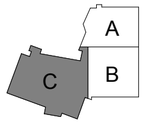

KEYPLAN

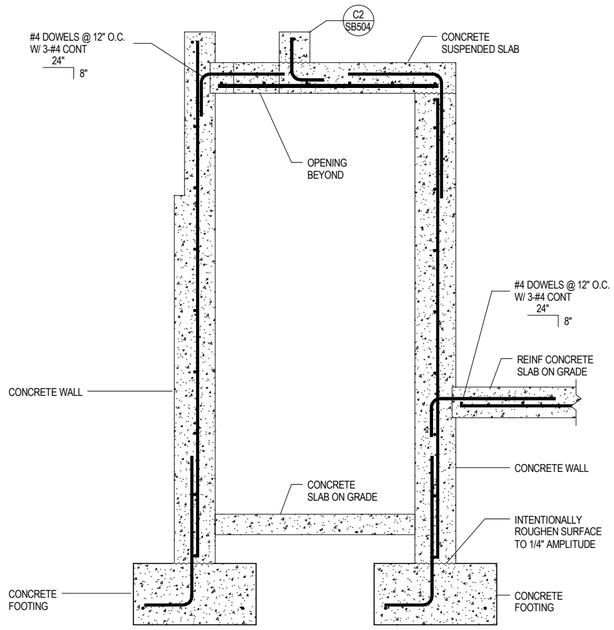

C1 / SB504 MECHANICAL TUNNEL SECTION

NO SCALE

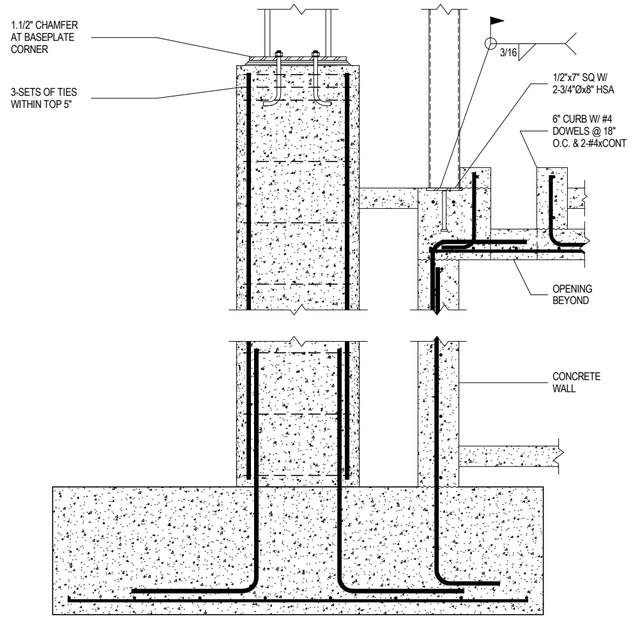

C2 / SB504 STEEL COLUMN BASE AT MECHANICAL TUNNEL

NO SCALE

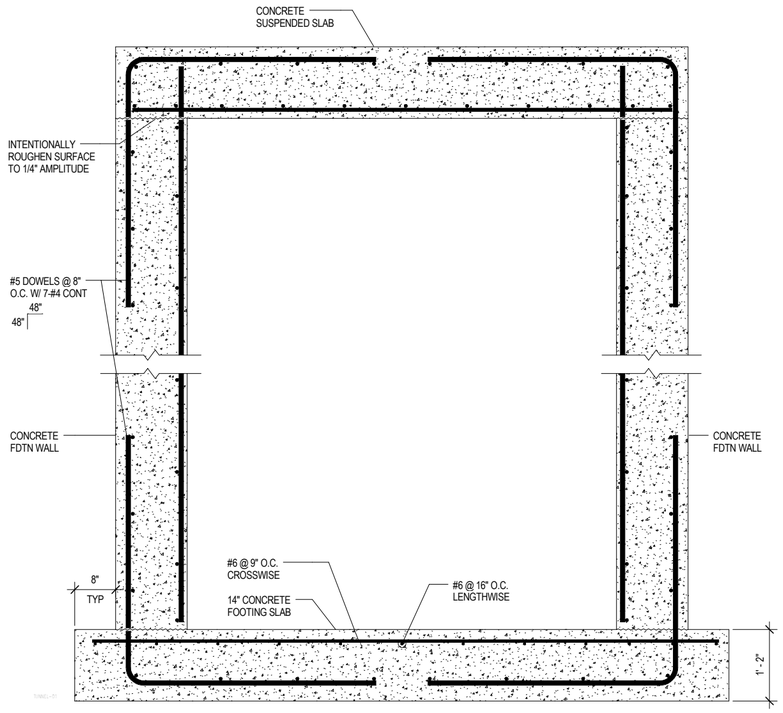

C4 / SB504 TYPICAL TUNNEL SECTION

NO SCALE

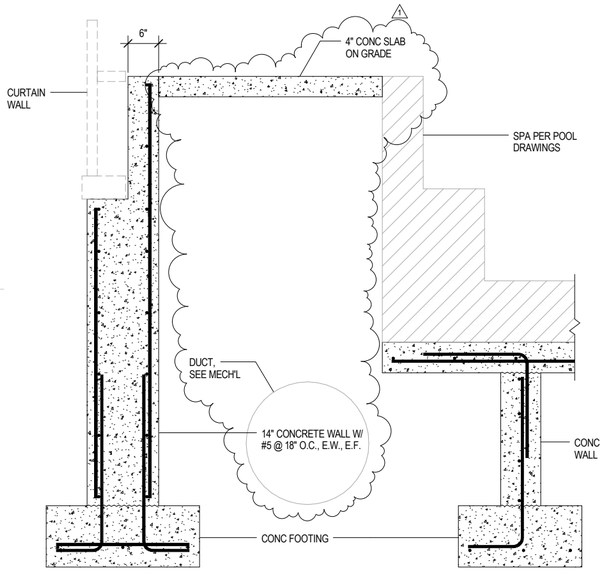

B1 / SB504 SECTION AT SPA

NO SCALE

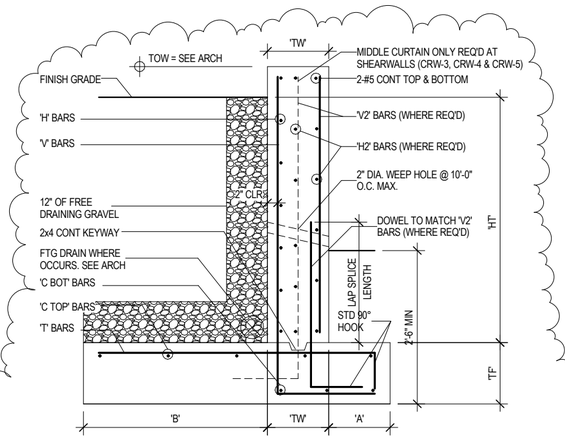

LANDSCAPE CONCRETE RETAINING WALL SCHEDULE

MARK	'HT'	'A'	'B'	'TW'	'TF'	'V' BARS		'H' BARS		'V2' BARS		'H2' BARS		'T' BARS		'C TOP' BARS		'C BOT' BARS	
						SIZE	SPACE	SIZE	SPACE	SIZE	SPACE	SIZE	SPACE	SIZE	SPACE	SIZE	SPACE	SIZE	SPACE
LRW-1	3'-0"	1'-0"	1'-10"	8"	1'-0"	#5	18"	#5	18"	--	--	--	--	#5	14"	4-#5	12"	2-#5	15"
LRW-2	5'-0"	1'-0"	2'-10"	8"	1'-0"	#5	18"	#5	18"	--	--	--	--	#5	14"	5-#5	12"	2-#5	15"
LRW-3	7'-6"	1'-0"	4'-4"	8"	1'-0"	#5	9" *	#5	18"	--	--	--	--	#5	14"	6-#5	13.2"	2-#5	15"
LRW-4	3'-0"	1'-0"	1'-6"	1'-0"	1'-0"	#5	18"	#5	18"	#5	18"	#5	18"	#5	14"	4-#5	12"	3-#5	9.5"
LRW-5	5'-0"	1'-0"	2'-6"	1'-0"	1'-0"	#5	18"	#5	18"	#5	18"	#5	18"	#5	14"	5-#5	12"	3-#5	9.5"
LRW-6	7'-6""	1'-0"	4'-0"	1'-0"	1'-0"	#5	16"	#5	18"	#5	18"	#5	18"	#5	14"	6-#5	13.2"	3-#5	9.5"

NOTES:

1. 'V' BARS SHALL NOT BE SPLICED BELOW MID-HEIGHT OF WALL
2. FOR WALLS WITH 'HT' OF 9'-0" & GREATER & 'V' BARS SPACED AT 9" O.C. OR LESS, ONE HALF OF THE 'V' BARS CAN BE DISCONTIUED FROM MID-HEIGHT TO TOP OF WALL.
3. * DENOTES THAT 1/2 OF 'V' BARS MAY BE TERMINATED AT HALF HEIGHT OF WALL.

A2 / SB504 TYPICAL LANDSCAPE CONCRETE RETAINING WALL SCHEDULE AND DETAIL

NO SCALE

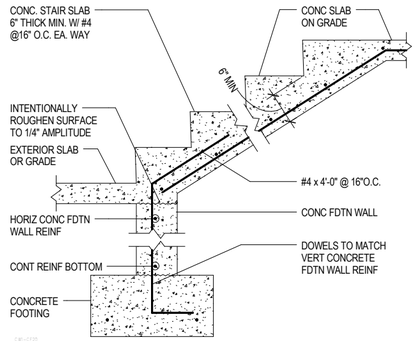

B5 / SB504 TYP CONCRETE STAIR SLAB ON GRADE TO CONC FOUNDATION WALL

NO SCALE

MHTN
ARCHITECTS
MHTN Architects, Inc.
420 East South Temple
Suite 100
Salt Lake City, Utah 84111
Telephone (801) 595-6700
Telefax (801) 595-6717
www.mhtn.com

Hastings+Chivetta
ARCHITECTURE • PLANNING • ENGINEERING
622 Emerson, Suite 200
St. Louis, MO 63141
Tel. 314.863.5717
Fax. 314.863.2823
www.hastingschivetta.com

REAVELEY
ENGINEERS + ASSOCIATES
Consulting Structural Engineers

BUILDING OFFICIAL STAMP

UNIVERSITY OF UTAH

STUDENT LIFE CENTER

1836 E. BALLIF ROAD
SALT LAKE CITY, UTAH 84112

SEAL

04/15/2013

MHTN PROJECT NO. PROJ 2010562

DRAWN BY: YW CHECKED BY: RM

ISSUED:

NO.	DATE	DESCRIPTION

CONTRACTOR TO VERIFY DRAWINGS IN FIELD USE REFLECT LAST REVISION DATE.

NO.	DATE	DESCRIPTION
1	MAY 28, 2013	ADDENDUM ONE

SHEET NAME

FOOTING & FOUNDATION DETAILS

BID DOCUMENTS

May 15, 2013

SHEET NUMBER

SB504

C:\Revit Models\2010-271 UU Student Life Cntr Struct-Central_ywilliams.rvt
5/24/2013 2:01:15 PM

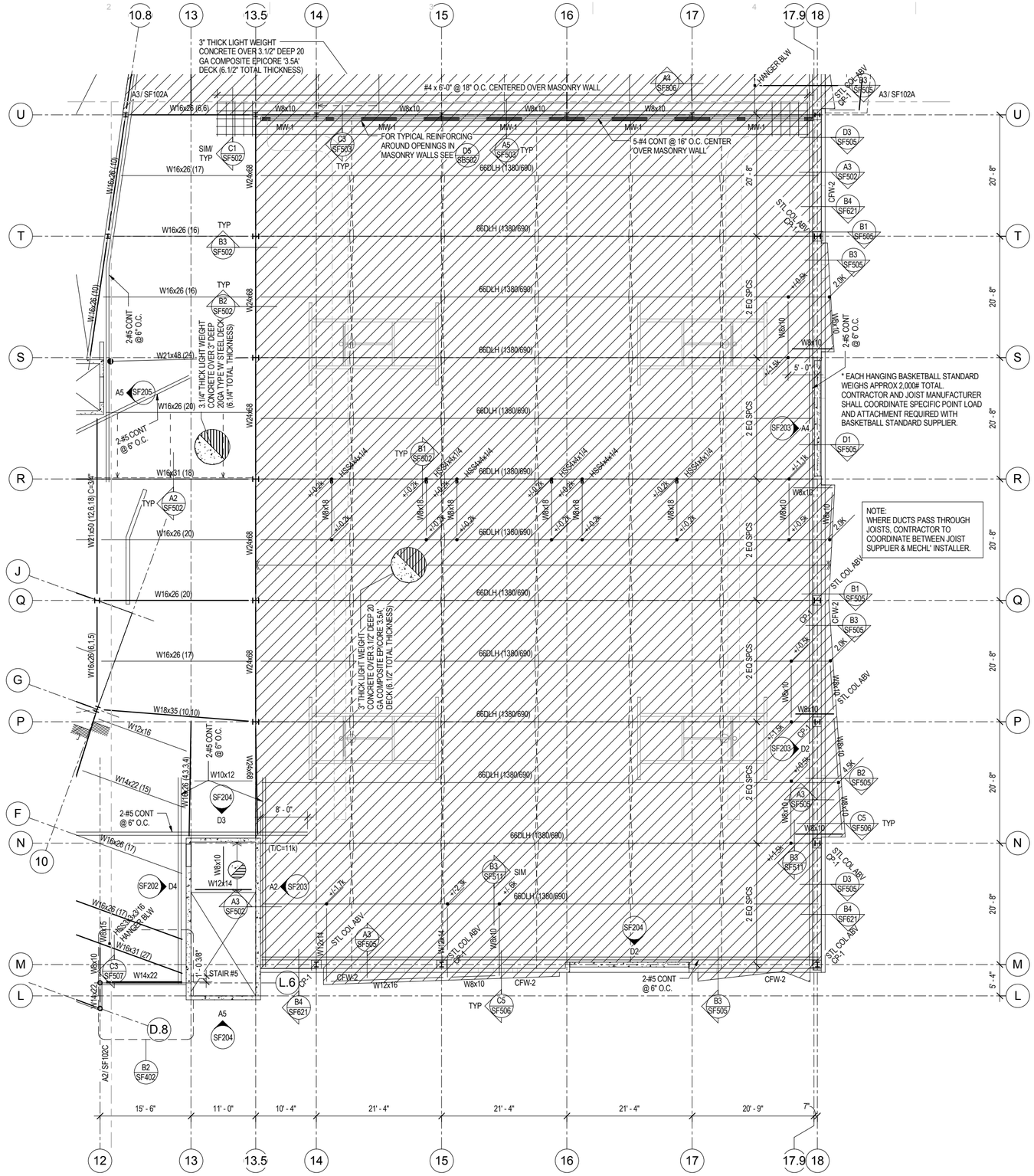

A2 SF102B SECOND FLOOR FRAMING PLAN - SOUTH

SCALE: 1/8" = 1'-0"

0' 4'-0" 8'-0" 16'-0" 1/8" =1'-0"

FLOOR FRAMING PLAN LEGEND

- CONCRETE WALL
- CONCRETE LINTEL IN CONCRETE WALL
- CONCRETE COLUMN IN CONCRETE WALL
- CONCRETE COLUMN
- CONCRETE JAMB COLUMN POURED MONOLITHIC WITH CONCRETE WALL
- MASONRY WALL
- MASONRY LINTEL IN MASONRY WALL
- MASONRY COLUMN IN MASONRY WALL
- STEEL COLUMN - TUBE
- STEEL COLUMN - WIDE FLANGE
- STEEL BRACED FRAME
- MOMENT CONNECTION
- COLLECTOR CONNECTION SEE B1/S601
- STEEL BEAM OR GIRDER
- STEEL JOIST OR PURLIN
- STEEL ANGLE BRACE / KICKER. SEE B1/S501 FOR SLAB EDGE KICKER.
- CROSS BRIDGING
- HORIZONTAL BRIDGING
- ROOF TIE-BACK LOCATION SEE TIE-BACK DETAILS
- CHANGE IN ELEVATION
- CONCRETE ON METAL DECK
- ROOF DECK
- SPECIAL DECK AREA
- RECESSED/DEPRESSED SLAB ON METAL DECK
- OPENING

FLOOR FRAMING PLAN NOTES

1. SEE D4/SF501 FOR SLAB REINFORCING OVER GIRDERS.
2. SEE DETAILS D1/S501 FOR MISCELLANEOUS FLOOR OPENINGS.
3. SEE GENERAL STRUCTURAL NOTE (V.J.7) FOR STEEL DECK REQUIREMENTS WHERE 3-SPAN CONDITIONS ARE NOT POSSIBLE.
4. SEE TYPICAL REINFORCING AROUND MISC OR RECESSED MASONRY OPENINGS FOR OPENINGS OR RECESSES IN MASONRY WALLS.
5. 5.1/2" LONG HSA AT 3.1/2" STEEL FLOOR DECK & 5" HSA AT 3" STEEL FLOOR DECK.

MHTN ARCHITECTS
MHTN Architects, Inc.
420 East South Temple
Suite 100
Salt Lake City, Utah 84111
Telephone (801) 595-6700
Telefax (801) 595-6717
www.mhtn.com

Hastings+Chivetta
ARCHITECTURE • PLANNING • ENGINEERING
622 Emerson, Suite 200
St. Louis, MO 63141
Tel. 314.863.5717
Fax. 314.863.2823
www.hastingschivetta.com

REAVELEY ENGINEERS + ASSOCIATES
Consulting Structural Engineers

BUILDING OFFICIAL STAMP

UNIVERSITY OF UTAH
STUDENT LIFE CENTER
1836 E. BALLIF ROAD
SALT LAKE CITY, UTAH 84112

SEAL

MHTN PROJECT NO. PROJ 2010562

DRAWN BY: YW CHECKED BY: RM

ISSUED:

NO.	DATE	DESCRIPTION

CONTRACTOR TO VERIFY DRAWINGS IN FIELD USE REFLECT LAST REVISION DATE:

NO.	DATE	DESCRIPTION
1	APR 15, 2013	DFCM Comments
2	MAY 28, 2013	ADDENDUM ONE

SHEET NAME
SECOND FLOOR FRAMING PLAN - SOUTH
BID DOCUMENTS
May 15, 2013

SHEET NUMBER
SF102B

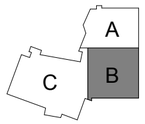

KEYPLAN

C:\Revit Models\2010-271 UU Student Life Ctr Struct-Central_ywilliams.rvt
5/24/2013 2:01:19 PM

A1 SF102C CHEMICAL ROOM ROOF FRAMING PLAN
SCALE: 1/8" = 1'-0"

A2 SF102C SECOND FLOOR FRAMING PLAN - WEST
SCALE: 1/8" = 1'-0"

0' 4'-0" 8'-0" 16'-0"
1/8" =1'-0"

FLOOR FRAMING PLAN LEGEND

- CONCRETE WALL
- CONCRETE LINTEL IN CONCRETE WALL
- CONCRETE COLUMN IN CONCRETE WALL
- CONCRETE COLUMN
- CONCRETE JAMB COLUMN POURED MONOLITHIC WITH CONCRETE WALL
- MASONRY WALL
- MASONRY LINTEL IN MASONRY WALL
- MASONRY COLUMN IN MASONRY WALL
- STEEL COLUMN - TUBE
- STEEL COLUMN - WIDE FLANGE
- STEEL BRACED FRAME
- MOMENT CONNECTION
- COLLECTOR CONNECTION SEE B1/S601
- STEEL BEAM OR GIRDER
- STEEL JOIST OR PURLIN
- STEEL ANGLE BRACE / KICKER. SEE B1/S501 FOR SLAB EDGE KICKER.
- CROSS BRIDGING
- HORIZONTAL BRIDGING
- ROOF TIE-BACK LOCATION SEE TIE-BACK DETAILS
- 0" CHANGE IN ELEVATION
- CONCRETE ON METAL DECK
- ROOF DECK
- SPECIAL DECK AREA
- RECESSED/DEPRESSED SLAB ON METAL DECK
- OPENING

FLOOR FRAMING PLAN NOTES

1. SEE D4/SF501 FOR SLAB REINFORCING OVER GIRDERS.
2. SEE DETAILS D1/S501 FOR MISCELLANEOUS FLOOR OPENINGS.
3. SEE GENERAL STRUCTURAL NOTE (V.J.7) FOR STEEL DECK REQUIREMENTS WHERE 3-SPAN CONDITIONS ARE NOT POSSIBLE.
4. SEE TYPICAL REINFORCING AROUND MISC OR RECESSED MASONRY OPENINGS FOR OPENINGS OR RECESSES IN MASONRY WALLS.
5. 5.1/2" LONG HSA AT 3.1/2" STEEL FLOOR DECK & 5" HSA AT 3" STEEL FLOOR DECK.

MHTN ARCHITECTS
MHTN Architects, Inc.
420 East South Temple
Suite 100
Salt Lake City, Utah 84111
Telephone (801) 595-6700
Telefax (801) 595-6717
www.mhtn.com

Hastings+Chivetta
ARCHITECTURE • PLANNING • ENGINEERING
622 Emerson, Suite 200
St. Louis, MO 63141
Tel. 314.863.5717
Fax. 314.863.2823
www.hastingschivetta.com

REAVELEY ENGINEERS + ASSOCIATES
Consulting Structural Engineers

BUILDING OFFICIAL STAMP

UNIVERSITY OF UTAH
STUDENT LIFE CENTER
1836 E. BALLIF ROAD
SALT LAKE CITY, UTAH 84112

SEAL:

04/15/2013

MHTN PROJECT NO. PROJ 2010562

DRAWN BY: YW CHECKED BY: RM

ISSUED:

NO	DATE	DESCRIPTION

CONTRACTOR TO VERIFY DRAWINGS IN FIELD USE REFLECT LAST REVISION DATE.

NO	DATE	DESCRIPTION
1	MAY 28, 2013	ADDENDUM ONE

SHEET NAME
SECOND FLOOR FRAMING PLAN - WEST
BID DOCUMENTS
May 15, 2013

SHEET NUMBER
SF102C

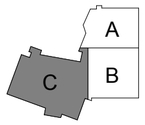

KEYPLAN

C:\Revit Models\2010-271 UU Student Life Ctr Struct-Central_jwilliams.rvt
5/24/2013 2:01:23 PM

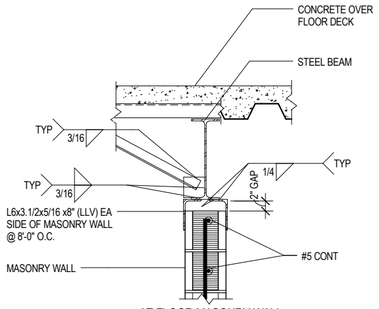

AT FLOOR MASONRY WALL CENTERED ON STEEL BEAM

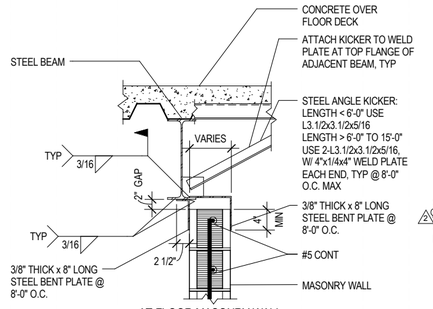

AT FLOOR MASONRY WALL OFFSET FROM STEEL BEAM

D1 / SF503 TYPICAL NON-BEARING MASONRY WALL CONNECTION TO FLOOR

NO SCALE

NOTE:
AT INTERSECTING BEAMS PROVIDE A 2" MIN GAP BELOW THE BEAM AND 1" MIN GAP ON EA SIDE OF BEAM

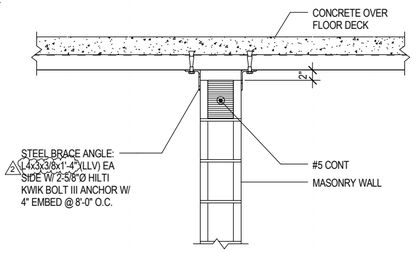

CONDITION AT DECK PERPENDICULAR TO WALL

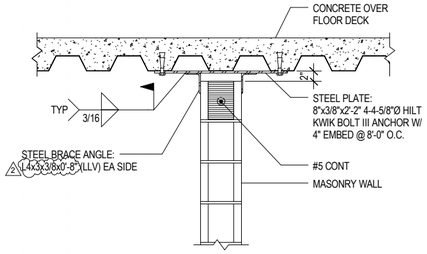

CONDITION AT DECK PARALLEL TO WALL

D3 / SF503 TYPICAL NON-BEARING MASONRY WALL BRACE AT UNDERSIDE OF FLOOR DECK

NO SCALE

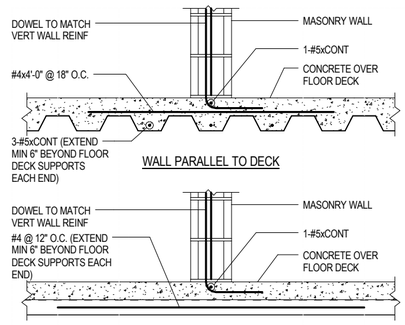

D5 / SF503 TYPICAL MASONRY WALL ON CONCRETE OVER METAL DECK

NO SCALE

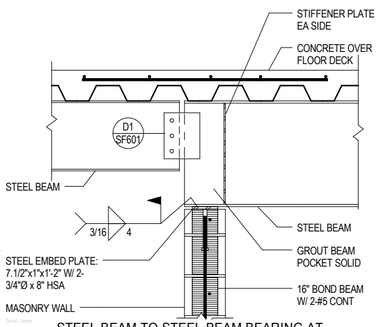

C1 / SF503 STEEL BEAM TO STEEL BEAM BEARING AT MASONRY WALL

NO SCALE

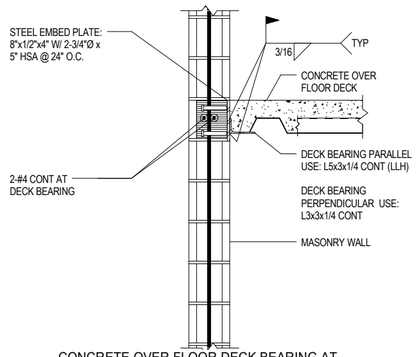

C2 / SF503 CONCRETE OVER FLOOR DECK BEARING AT MASONRY WALL

NO SCALE

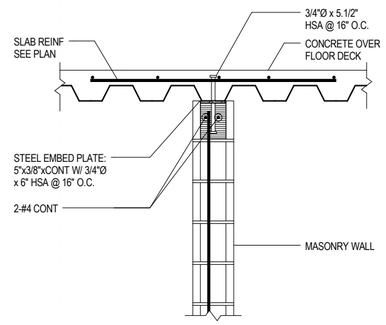

C3 / SF503 FLOOR DECK TRANSITION AT MASONRY WALL

NO SCALE

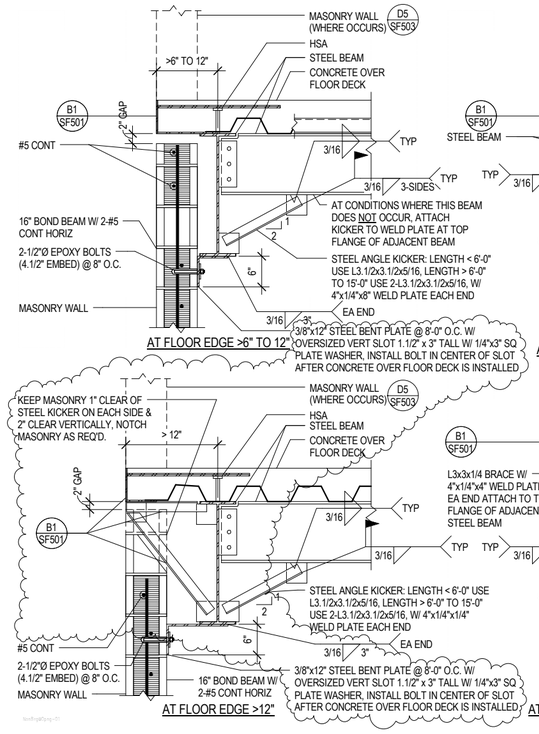

AT FLOOR EDGE >6" TO 12"

AT FLOOR EDGE >12"

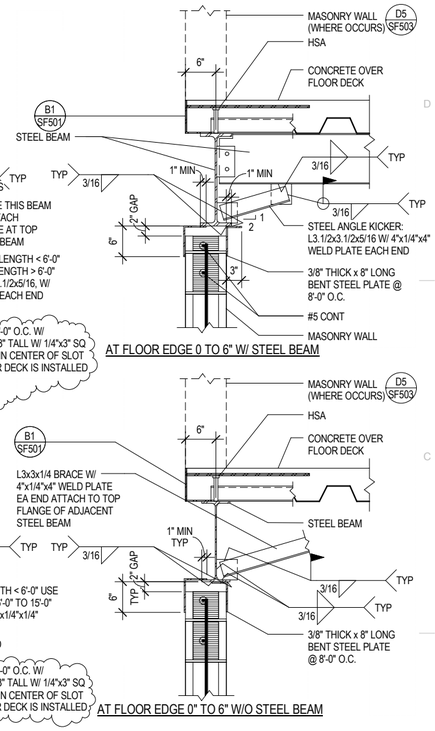

AT FLOOR EDGE 0 TO 6" W/ STEEL BEAM

AT FLOOR EDGE 0" TO 6" W/O STEEL BEAM

B4 / SF503 TYPICAL NON-BEARING MASONRY WALL CONNECTION TO FLOOR

NO SCALE

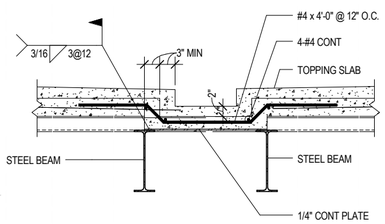

B1 / SF503 TRENCH DRAIN IN CONCRETE OVER FLOOR DECK

NO SCALE

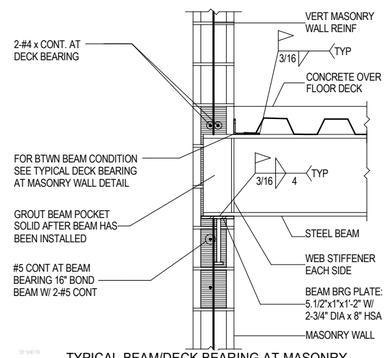

B3 / SF503 TYPICAL BEAM/DECK BEARING AT MASONRY WALL

NO SCALE

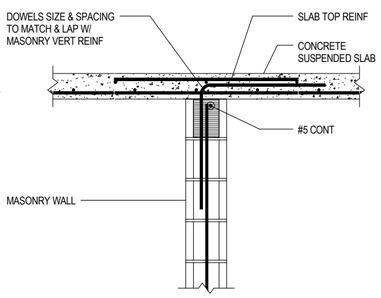

A1 / SF503 CONCRETE SUSPENDED SLAB TO MASONRY WALL

NO SCALE

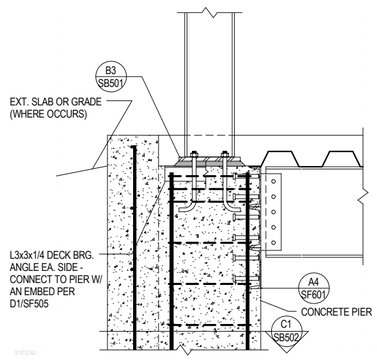

A2 / SF503 STEEL BEAM TO CONCRETE PIER

NO SCALE

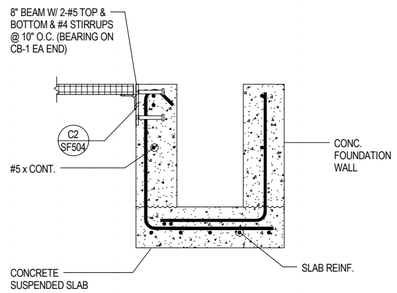

A3 / SF503 CONCRETE BEAM TO CONCRETE SUSPENDED SLAB

NO SCALE

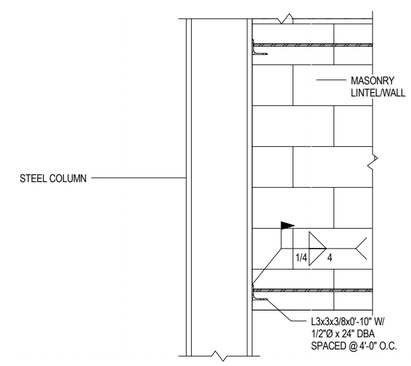

A4 / SF503 MASONRY LINTEL BEARING ON STEEL COLUMN

NO SCALE

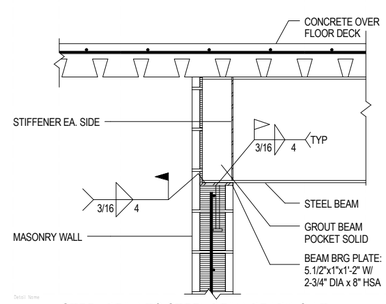

A5 / SF503 STEEL BEAM TO STEEL BEAM BEARING AT MASONRY WALL

NO SCALE

MHTN ARCHITECTS
MHTN Architects, Inc.
420 East South Temple
Suite 100
Salt Lake City, Utah 84111
Telephone (801) 595-6700
Telefax (801) 595-6717
www.mhtn.com

Hastings+Chivetta
ARCHITECTURE • PLANNING • ENGINEERING
622 Emerson, Suite 200
St. Louis, MO 63141
Tel. 314.863.5717
Fax. 314.863.2823
www.hastingschivetta.com

REAVELEY ENGINEERS + ASSOCIATES
Consulting Structural Engineers

BUILDING OFFICIAL STAMP

UNIVERSITY OF UTAH
STUDENT LIFE CENTER
1836 E. BALLIF ROAD
SALT LAKE CITY, UTAH 84112

SEAL

04/15/2013

MHTN PROJECT NO. PROJ 2010562

DRAWN BY: YW CHECKED BY: RM

ISSUED:

NO.	DATE	DESCRIPTION

CONTRACTOR TO VERIFY DRAWINGS IN FIELD USE REFLECT LAST REVISION DATE.

NO.	DATE	DESCRIPTION
1	APR 15, 2013	OFCM Comments
2	MAY 28, 2013	ADDENDUM ONE

SHEET NAME
FLOOR FRAMING DETAILS

BID DOCUMENTS
May 15, 2013

SHEET NUMBER
SF503

C:\Revit Models\2010-271 UU Student Life Ctr Struct-Central_williams.rvt
5/24/2013 2:01:28 PM

UNIVERSITY OF UTAH
STUDENT LIFE CENTER
1836 E. BALLIF ROAD
SALT LAKE CITY, UTAH 84112

BID DOCUMENTS
MAY 15, 2013

ABBREVIATIONS

AC	AIR CONDITIONING
AFF	ABOVE FINISH FLOOR
ALT	ALTERNATE
ALUM	ALUMINUM
APPROX	APPROXIMATE
ARCH	ARCHITECTURAL
BD	BOARD
BLDG	BUILDING
BLKG	BLOCKING
BO	BOTTOM OF
BOT	BOTTOM
BRG	BEARING
BYD	BEYOND
CB	CATCH BASIN
CIP	CAST-IN-PLACE
CJ	CONTROL JOINT
CL	CENTER LINE
CLG	CEILING
CMU	CONCRETE MASONRY UNIT
CO	CLEANOUT
COL	COLUMN
COMM	COMMUNICATION
CONC	CONCRETE
CONF	CONFERENCE
CONST	CONSTRUCTION
CONT	CONTINUOUS
CONTR	CONTRACTOR
COORD	COORDINATE
CORR	CORRIDOR
CSK	COUNTER SUNK
CTR	CENTER
DEMO	DEMOLITION
DIA	DIAMETER
DIAG	DIAGONAL
DIM	DIMENSION
DN	DOWN
DR	DOOR
DS	DOWNSPOUT
DTL	DETAIL
DWG	DRAWING
EIFS	EXTERIOR INSULATION AND FINISH SYSTEM
EL	ELEVATION
ELEC	ELECTRICAL
ELEV	ELEVATOR
EQ	EQUAL
EQUIP	EQUIPMENT
EWC	ELECTRICAL WATER COOLER
EXP	EXPANSION
FD	FLOOR DRAIN
FEC	FIRE EXTINGUISHER CABINET
FIN	FINISH
FIN FLR	FINISH FLOOR
FLR	FLOOR
FT	FEET
GA	GAUGE/GAGE
GI	GALVANIZED IRON
GLU-LAM	GLUE LAMINATED
GYP BD	GYPSUM BOARD
HC	HANDICAPPED
HVAC	HEATING, VENTILATION, AIR CONDITIONING
ID	INSIDE DIAMETER
INT	INTERIOR
ISO	ISOMETRIC
JAN	JANITOR
JST	JOIST
JT	JOINT
KD	KNOCK DOWN
KOP	KNOCKOUT PANEL
LAB	LABORATORY
LAV	LAVATORY
MAINT	MAINTENANCE
MAX	MAXIMUM
MECH	MECHANICAL
MEZZ	MEZZANINE
MFR	MANUFACTURER
MH	MANHOLE
MIN	MINIMUM
MISC	MISCELLANEOUS
MO	MASONRY OPENING
NIC	NOT IN CONTRACT
NO	NUMBER
NOM	NOMINAL
NTS	NOT TO SCALE
OA	OVERALL
OC	ON CENTER
OD	OUTSIDE DIAMETER
OH	OVER HEAD
OH DR	OVERHEAD DOOR
OPP	OPPOSITE
PERP	PERPENDICULAR
PL	PLATE
PL	PROPERTY LINE
PL GL	PLATE GLASS
PLAM	PLASTIC LAMINATE
PLBG	PLUMBING
PLYWD	PLYWOOD
PR	PAIR
PREFAB	PREFABRICATED
QTY	QUANTITY
RD	ROOF DRAIN
REINF	REINFORCED / REINFORCING
REQD	REQUIRE / REQUIRED
RFG	REFRIGERATOR
RM	ROOM
RO	ROUGH OPENING
RTD	RATED
RTU	ROOF TOP UNIT
RV	ROOF VENT
SCHED	SCHEDULE
SIM	SIMILAR
SPEC	SPECIFICATION
SQ	SQUARE
STD	STANDARD
STL	STEEL
STRUC	STRUCTURAL
SUSP CLG	SUSPENDED CEILING
THK	THICKNESS
TO	TOP OF
TOB	TOP OF BEAM
TOS	TOP OF SLAB, TOP OF STRUCTURE
TOW	TOP OF PARTITION
TYP	TYPICAL
UNO	UNLESS NOTED OTHERWISE
VCT	VINYL COMPOSITION TILE
VERT	VERTICAL
VEST	VESTIBULE
VTR	VENT THROUGH ROOF
W/	WITH
W/O	WITHOUT
WC	WATER CLOSET
WD	WOOD
WF	WIDE FLANGE
WH	WATER HEATER
WWF	WELDED WIRE FABRIC
XFMR	Transformer

GENERAL SYMBOLS

SEE PLUMBING, MECHANICAL AND ELECTRICAL FOR DISCIPLINE SYMBOLS

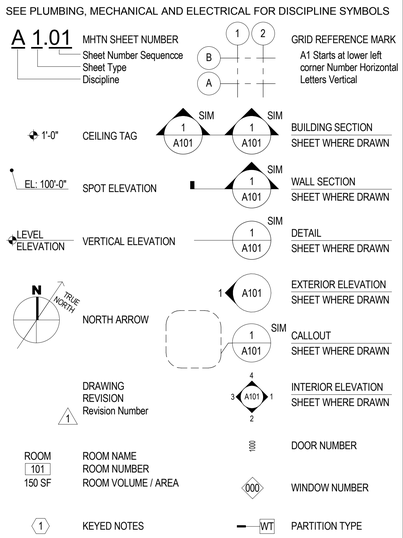

MATERIALS

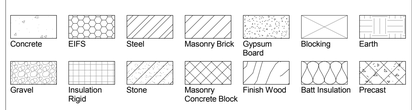

VICINITY MAP

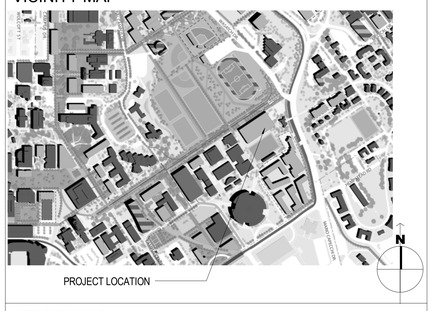

APPROVALS

APPROVERS NAME, TITLE	DATE:
APPROVERS NAME, TITLE	DATE:
APPROVERS NAME, TITLE	DATE:

INDEX TO DRAWINGS - BID DOCUMENTS

GENERAL

GI000.2	COVER SHEET VOL.#2
GI001.2	SHEET INDEX VOL.#2

MECHANICAL

MH000	LEGEND OF MECH SYMBOLS AND ABBREV.
MH001	GENERAL NOTES
MS100	MECHANICAL SITE PLAN
MS201	TUNNEL PLAN AND PROFILE
MS202	TUNNEL PLAN AND PROFILE
MS301	CHILLED WATER EQUIPMENT ROOM
MS401	TUNNEL DETAILS AND NODES
MS402	TUNNEL DETAILS AND NODES
MS403	TUNNEL DETAILS AND NODES
MS501	PIPING DETAILS
MS502	PIPING DETAILS
MS503	PIPING DETAILS
MS504	PIPING DETAILS
MS701	PIPING SCHEMATICS
MH100A	PARTIAL MECHANICAL PLAN
MH100B	PARTIAL MECHANICAL PLAN
MH100C	PARTIAL MECHANICAL PLAN
MH101A	PARTIAL MECHANICAL PLAN
MH101B	PARTIAL MECHANICAL PLAN
MH101C	PARTIAL MECHANICAL PLAN
MH102A	PARTIAL MECHANICAL PLAN
MH102B	PARTIAL MECHANICAL PLAN
MH102C	PARTIAL MECHANICAL PLAN
MH103A	PARTIAL MECHANICAL PLAN
MH103B	PARTIAL MECHANICAL PLAN
MH103C	PARTIAL MECHANICAL PLAN
MH104A	PARTIAL MECHANICAL PLAN
MH104B	PARTIAL MECHANICAL PLAN
MH104C	PARTIAL MECHANICAL PLAN
MH105	LOWER LEVEL ALTERNATE 1 MECH PLAN
MH106	FIRST LEVEL ALTERNATE 1 MECH PLAN
MH107	ROOF ALTERNATE 1 MECH PLAN
MH301	MECHANICAL SECTIONS
MH302	MECHANICAL SECTIONS
MH303	MECHANICAL SECTIONS
MH304	MECHANICAL SECTIONS
MH305	MECHANICAL SECTIONS
MH306	MECHANICAL SECTIONS
MH401	ENLARGED MECHANICAL PLANS
MH402	ENLARGED MECHANICAL PLANS
MH403	ENLARGED MECHANICAL PENTHOUSE PLAN
MH404	ENLARGED MECHANICAL PLANS
MH501	MECHANICAL DETAILS
MH502	MECHANICAL DETAILS
MH503	MECHANICAL DETAILS
MH504	MECHANICAL DETAILS
MH505	MECHANICAL DETAILS
MH506	MECHANICAL DETAILS
MH507	MECHANICAL DETAILS
MH508	MECHANICAL DETAILS
MH509	MECHANICAL DETAILS
MH601	MECHANICAL SCHEDULES
MH602	MECHANICAL SCHEDULES
MH603	MECHANICAL SCHEDULES
MH701	AIR FLOW SCHEMATICS
MH702	AIR FLOW SCHEMATICS
MH703	HEATING SCHEMATICS
MH704	COOLING SCHEMATICS
MH705	SCHEMATIC DETAILS
MP100A	PARTIAL MECHANICAL PIPING PLAN
MP100B	PARTIAL MECHANICAL PIPING PLAN
MP100C	PARTIAL MECHANICAL PIPING PLAN
MP101A	PARTIAL MECHANICAL PIPING PLAN
MP101B	PARTIAL MECHANICAL PIPING PLAN
MP101C	PARTIAL MECHANICAL PIPING PLAN
MP102A	PARTIAL MECHANICAL PIPING PLAN
MP102B	PARTIAL MECHANICAL PIPING PLAN
MP102C	PARTIAL MECHANICAL PIPING PLAN
MP103A	PARTIAL MECHANICAL PIPING PLAN
MP103B	PARTIAL MECHANICAL PIPING PLAN
MP103C	PARTIAL MECHANICAL PIPING PLAN
MP105	LOWER LEVEL ALTERNATE 1 MECH PIPE PLAN
MP106	ALTERNATE 3 MECHANICAL PIPING PLANS
MP107	ALTERNATE 3 MECHANICAL PIPING PLANS
PP100A	PARTIAL PLUMBING PLAN
PP100B	PARTIAL PLUMBING PLAN
PP100C	PARTIAL PLUMBING PLAN
PP101A	PARTIAL PLUMBING PLAN
PP101B	PARTIAL PLUMBING PLAN
PP101C	PARTIAL PLUMBING PLAN
PP102A	PARTIAL PLUMBING PLAN
PP102B	PARTIAL PLUMBING PLAN
PP102C	PARTIAL PLUMBING PLAN
PP103A	PARTIAL PLUMBING PLAN
PP103B	PARTIAL PLUMBING PLAN
PP103C	PARTIAL PLUMBING PLAN
PP104A	PARTIAL PLUMBING PLAN
PP104B	PARTIAL PLUMBING PLAN
PP104C	PARTIAL PLUMBING PLAN
PP105	LOWER LEVEL ALTERNATE 1 PLUMBIGN PLAN
PP106	LOWER LEVEL ALTERNATE 1 PLUMBIGN PLAN
PP107	FIRST LEVEL ALTERNATE 1 PLUMBING PLAN
PP108	FIRST LEVEL ALTERNATE 1 PLUMBING PLAN
PP109	ROOF ALTERNATE 1 PLUMBING PLAN
PP401	ENLARGED PLUMBING PLANS
PP402	ENLARGED PLUMBING PLANS

ELECTRICAL

EG100	SYMBOLS, ABBREVIATIONS AND SHEET INDEX
EG100	SYMBOLS, ABBREVIATIONS AND SHEET INDEX
ED100.1	ELECTRICAL SITE DEMOLITION
ES100.2	ENLARGED ELECTRICAL SITE PLAN
ES100.3	ENLARGED ELECTRICAL SITE PLAN
ES100.4	LIGHTNING PROTECTION PLAN
ES100	SITE LIGHTING PLAN BASE BID
ES100.5	ENLARGED ELECTRICAL TUNNEL PLAN
ES100A	SITE LIGHTING PLAN ALTERNATE
ES500	MANHOLE DETAILS
ES501	ELECTRICAL SITE DETAILS
ES502	SITE LIGHTING DETAILS
EL100.A	LOWER LEVEL LIGHTING AREA A
EL100.B	LOWER LEVEL LIGHTING AREA B
EL100.C	LOWER LEVEL LIGHTING AREA C
EL200.C1	LOWER LEVEL LIGHTING - ALTERNATE 1A
EL200.C2	LOWER LEVEL LIGHTING - ALTERNATE 1B
EL101.A	LEVEL 1 LIGHTING AREA A
EL101.B	LEVEL 1 LIGHTING AREA B
EL101.C	LEVEL 1 LIGHTING AREA C
EL201.B	ALTERNATE 3 LIGHTING AREA B
EL201.C1	LEVEL 1 LIGHTING ATERNATE 1A
EL201.C2	LEVEL 1 LIGHTING ALTERNATE 1B
EL102.A	LEVEL 2 LIGHTING AREA A
EL102.B	LEVEL 2 LIGHTING AREA B
EL102.C	LEVEL 2 LIGHTING AREA C
EL103.A	LEVEL 3 LIGHTING AREA A
EL103.B	LEVEL 3 LIGHTING AREA B
EL103.C	LEVEL 3 LIGHTING AREA C
EL501	ELEVATION STAIRWELL LIGHTING
EL601	LUMINARE SCHEDULE
EL602	LUMINARE SCHEDULE
EL701	LIGHTING DETAILS
EL702	LIGHTING DETAILS
EL703	LIGHTING CONTROL SYSTEM RISER DIAGRAM
EL704	LIGHTING CONTROL DETAILS
EL705	CLIMBING WALL LIGHTING
EP100.A	LOWER LEVEL POWER PLAN AREA A
EP100.B	LOWER LEVEL POWER PLAN AREA B
EP100.C	LOWER LEVEL POWER PLAN AREA C
EP200.C1	LOWER LEVEL POWER PLAN ALTERNATE 1A
EP200.C2	LOWER LEVEL POWER PLAN ALTERNATE 1B
EP101.A	LEVEL 1 POWER PLAN AREA A
EP101.B	LEVEL 1 POWER PLAN AREA B
EP101.C	LEVEL 1 POWER PLAN AREA C
EP201.B	POWER PLAN AREA B ALTERNATE 3
EP102.A	LEVEL 2 POWER PLAN AREA A
EP102.B	LEVEL 2 POWER PLAN AREA B
EP102.C	LEVEL 2 POWER PLAN AREA C
EP103.A	LEVEL 3 POWER PLAN AREA A
EP103.B	LEVEL 3 POWER PLAN AREA B
EP103.C	LEVEL 3 POWER PLAN AREA C
EP104.A	ROOF POWER PLAN AREA A
EP104.B	ROOF POWER PLAN AREA B
EP104.C	ROOF POWER PLAN AREA C
EP130	STORAGE SHED ELECTRICAL PLANS
EP204.C	ROOF POWER PLAN AREA C ALT 1
EP501	ENLARGED ELECTRICAL AND DATA ROOMS
EP502	ENLARGED LOWER LEVEL ROOMS
EP503	POWER PLANS ENLARGED VIEWS
EP504	ENLARGED U. OF U. CREDIT UNION
EP600	ONE-LINE DIAGRAM - 480V
EP601	ONE LINE DIAGRAM - 208V
EP602	EMERGENCY ONE-LINE DIAGRAM
EP603	PANEL SCHEDULES
EP604	PANEL SCHEDULES
EP605	PANEL SCHEDULES
EP606	PANEL SCHEDULES
EP607	PANEL SCHEDULES
EP608	PANEL SCHEDULES
EP609	ELECTRICAL SCHEDULES
EP610	RELAY PANELS
EP701	ELECTRICAL DETAILS
EY100.A	LOWER LEVEL SYSTEMS PLAN AREA A
EY100.B	LOWER LEVEL SYSTEMS PLAN AREA B
EY100.C	LOWER LEVEL SYSTEMS PLAN AREA C
EY200.C1	LOWER LEVEL SYSTEMS PLAN ALTERNATE 1A
EY200.C2	LOWER LEVEL SYSTEMS PLAN ALTERNATE 1B
EY101.A	LEVEL 1 SYSTEMS PLAN AREA A
EY101.B	LEVEL 1 SYSTEMS PLAN AREA B
EY101.C	LEVEL 1 SYSTEMS PLAN AREA C
EY201.B	SYSTEMS PLAN AREA B ALTERNATE 3
EY102.A	LEVEL 2 SYSTEMS PLAN AREA A
EY102.B	LEVEL 2 SYSTEMS PLAN AREA B
EY102.C	LEVEL 2 SYSTEMS PLAN AREA C
EY103.A	LEVEL 3 SYSTEMS PLAN AREA A
EY103.B	LEVEL 3 SYSTEMS PLAN AREA B
EY103.C	LEVEL 3 SYSTEMS PLAN AREA C
EY201.C	LEVEL 1 SYSTEMS ATERNATE 1
EY300	LOWER LEVEL CABLETRAY PLAN
EY301	LEVEL 1 CABLETRAY PLAN
EY302	LEVEL 2 CABLETRAY PLAN
EY303	LEVEL 3 CABLETRAY PLAN
EY500	ENLARGED SYSTEMS FLOOR PLANS
EY601	TELECOM RISER DIAGRAM
EY602	MDF AND IDF ROOM LAYOUTS
EY603	FIRE ALARM RISER DIAGRAM
EY604	SECURITY RISER DIAGRAM
EY605	ACCESS CONTROL DETAIL
EY705	A/V DETAILS
EY706	A/V DETAILS
EY707	A/V DETAILS
EY709	A/V EQUIPMENT SCHEDULES
EY710	A/V EQUIPMENT SCHEDULES
EY711	A/V EQUIPMENT SCHEDULES
EY712	A/V EQUIPMENT SCHEDULES
EY713	A/V EQUIPMENT SCHEDULES
EY714	A/V EQUIPMENT SCHEDULES
EY715	A/V EQUIPMENT SCHEDULES

POOL

WF010.0	GENERAL NOTES
WF010.1	GENERAL NOTES – ALTERNATE BID
WF100.0	LOWER LEVEL OVERALL POOL PLAN
WF100.1	LOWER LEVEL OVERALL POOL PLAN – ALT. BID
WF101.0	FIRST FLOOR POOL CHEMICAL ROOM PLAN
WF101.1	FIRST FLOOR POOL CHEMICAL ROOM PLAN – ALT. BID1 & 2
WF400.0	ACTIVITY POOL PLAN
WF400.1	ACTIVITY POOL DIMENSION PLAN
WF400.2	ACTIVITY POOL PIPING PLAN
WF400.3	ACTIVITY POOL FITTING DIMENSION PLAN
WF401.0	ACTIVITY POOL PLAN – ALT 1
WF401.1	ACTIVITY POOL DIMENSION PLAN – ALT 1
WF401.2	ACTIVITY POOL PIPING PLAN – ALTERNATE 1
WF401.3	ACTIVITY POOL FITTING DIM PLAN
WF402.0	LAP POOL PLAN – ALT 1
WF402.1	LAP POOL DIMENSION PLAN – ALT 1
WF402.2	LAP POOL PIPING PLAN – ALT 1
WF402.3	LAP FITTING DIMENSION PLAN – ALTERNATE 1
WF403.0	LOWER LEVEL RAISED SPA PLAN
WF403.1	SPA DIMENSION PLAN
WF403.2	SPA CIRCULATION PIPING PLAN
WF403.3	SPA JET PIPING PLAN
WF404.0	RAISED SPA PLAN – ALT 1
WF404.1	SPA DIMENSION PLAN – ALT 1
WF404.2	SPA CIRCULATION PIPING PLAN – ALT 1
WF404.3	SPA JET PIPING PLAN – ALT 1
WF405.0	OUTDOOR LEISURE POOL PLAN – ALT 2
WF405.1	OUTDOOR LEISURE POOL DIMENSION PLAN – ALT 2
WF405.2	OUTDOOR LEISURE PIPING PLAN – ALT 1 AND 2
WF406.0	LOWER LEVEL POOL EQUIPMENT ROOM PLAN
WF407.0	POOL EQUIPMENT ROOM PLAN – ALT BID 1
WF407.1	POOL EQUIPMENT ROOM PIPING PLAN – ALT BID
WF410.0	ACTIVITY POOL SECTIONS
WF410.1	ACTIVITY POOL SECTIONS
WF411.0	ACTIVITY POOL SECTIONS – ALTERNATE BID 1
WF412.0	LAP POOL SECTIONS – ALTERNATE BID 1
WF412.1	LAP POOL SECTIONS – ALTERNATE BID 1
WF413.0	SPA SECTIONS AND DETAILS
WF414.0	SPA SECTIONS – ALT BID 1
WF415.0	OUTDOOR LEISURE POOL SECTIONS – ALT BID 2
WF416.0	LOWER LEVEL EQUIPMENT ROOM SECTIONS
WF417.0	LOWER LEVEL EQUIPMENT ROOM SECTIONS – ALT 1
WF417.1	LOWER LEVEL EQUIPMENT ROOM SECTIONS – ALT 1
WF500.0	EQUIPMENT SCHEMATICS
WF500.1	EQUIPMENT SCHEMATICS – ALT 1 AND 2
WF501.0	EQUIPMENT DETAILS
WF502.0	EQUIPMENT DETAILS
WF503.0	DETAILS
WF504.0	DETAILS
WF505.0	DETAILS
WF506.0	DETAILS
WF507.0	DETAILS ALTERNATE 2
WF508.0	BULKHEAD DETAILS ALT BID 2
WF601.0	POOL EQUIPMENT SCHEDULES
WF601.1	POOL EQUIPMENT SCHEDULES – ALT BID 1
WF601.2	POOL EQUIPMENT SCHEDULES – ALT BIDS

CONSULTANTS

INTERIOR ARCHITECTURE	CIVIL	STRUCTURAL	MECHANICAL	ELECTRICAL	ENERGY MODELING	WATER DESIGN
HASTINGS + CHIVETTA 622 Emerson, Suite 200 St. Louis, MO 63141 P: 314.863.5717 F: 314.863.2823	GREAT BASIN ENGINEERING, INC. 5746 SOUTH 1475 EAST OGDEN, UT 84403 P: 801.521.0222 F: 801.392.7544	REAVELY ENGINEERS + ASSOC. 675 EAST 500 SOUTH, STE. 400 SALT LAKE CITY, UT 84102 P: 801.486.3883 F: 801.485.0911	VAN BOERUM & FRANK ASSOC., INC. 330 SOUTH 300 EAST SALT LAKE CITY, UT 84111 P: 801.530.3148 F: 801.530.3150	KEN GARNER ENGINEERING 102 WEST 500 SOUTH #225 SALT LAKE CITY, UT 84101 P: 801.328.8800 F: 801.326.8802	ETC GROUP, LLC 1997 SOUTH 1100 EAST, STE. 201 SALT LAKE CITY, UT 84106 P: 801.278.1927 F: 801.486.0668	WATER DESIGN, INC. 5047 S. GALLERIA DR. MURRAY, UT 84123 P: 801.261.4009 F: 801.261.4069

MHTN
ARCHITECTS
MHTN Architects, Inc.
420 East South Temple
Suite 100
Salt Lake City, Utah 84111
Telephone (801) 595-6700
Telefax (801) 595-6717
www.mhtn.com

Hastings+Chivetta
ARCHITECTURE • PLANNING • ENGINEERING
622 Emerson, Suite 200
St. Louis, MO 63141
Tel. 314.863.5717
Fax. 314.863.2823
www.hastingschivetta.com

BUILDING OFFICIAL STAMP

UNIVERSITY OF UTAH
STUDENT LIFE CENTER
1836 E. BALLIF ROAD
SALT LAKE CITY, UTAH 84112

SEAL

M+TN PROJECT NO.

DRAWN BY: Author CHECKED BY: Checker

ISSUED:

NO.	DATE	DESCRIPTION

REVISIONS: CONTRACTOR TO VERIFY DRAWINGS IN FIELD USE REFLECT LAST REVISION DATE.

NO.	DATE	DESCRIPTION
1	MAY 28,2013	ADDENDUM ONE

SHEET NAME
SHEET INDEX VOL#2

BID DOCUMENTS
MAY 15, 2013

SHEET NUMBER
GI001.2

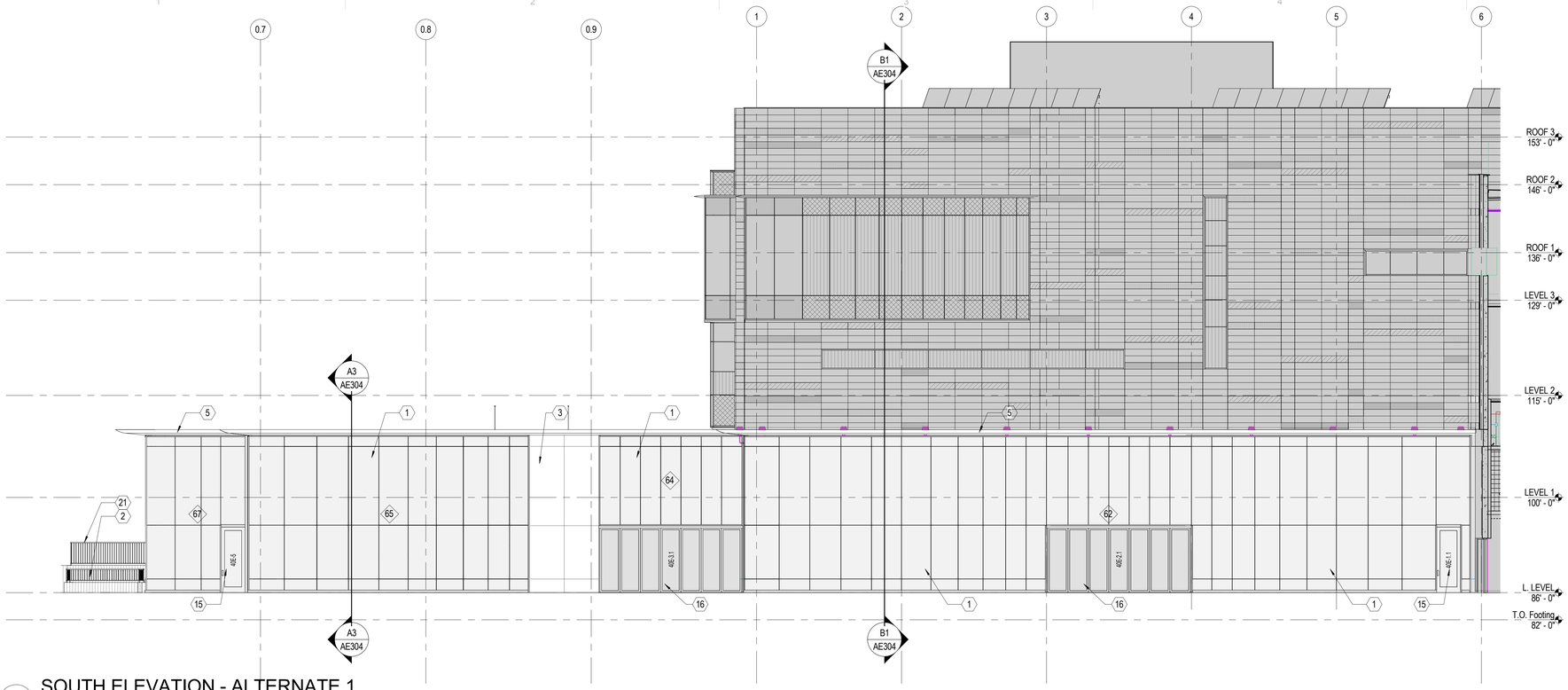

C5 SOUTH ELEVATION - ALTERNATE 1

SCALE: 1/8" = 1'-0"

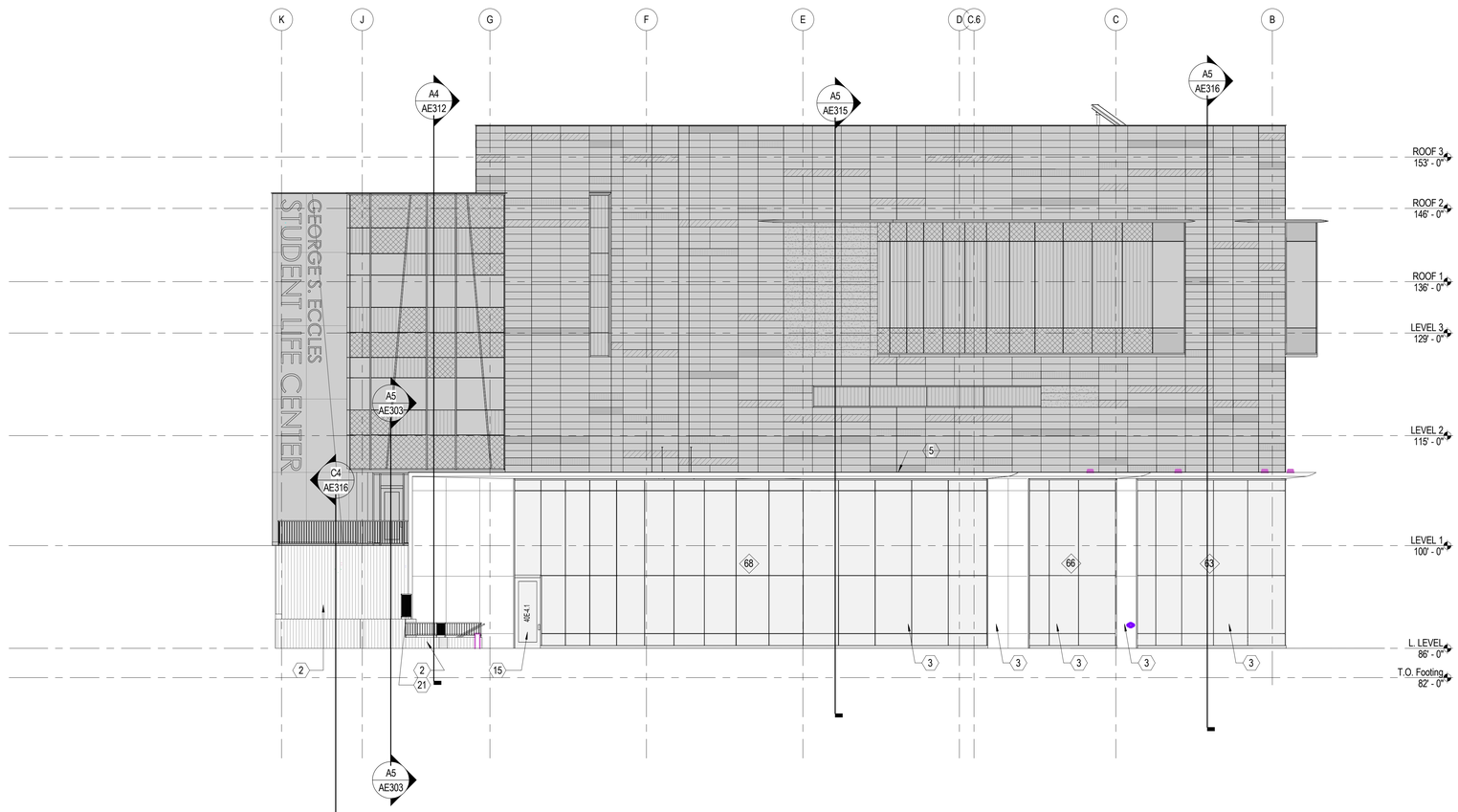

A5 WEST ELEVATION ALTERNATE 1

SCALE: 1/8" = 1'-0"

GENERAL NOTES

1. REFER TO THE FIRE CODE PLAN FOR INDICATION OF THE WALLS THAT ARE TO RECEIVE FIRE RATINGS.

2. FINISHES APPLY TO ALL SIMILAR ELEMENTS FOR THAT FAÇADE.

3. COORDINATE EXTERIOR LIGHTING WITH ELECTRICAL DRAWINGS.

4. ALL EXTERIOR EXPOSED METAL TRIM, TRELLISES, RAILINGS, MOLDING, FRAMES, CASTINGS, ETC., NOT INDICATED TO BE PREFINISHED, SHALL BE PAINTED.

5. EXTERIOR SIGNAGE SHALL BE CAST ALUMINUM. FONT CENTURY GOTHIC, SIZE AND THICKNESS AS INDICATED. PROVIDE BLOCKING BEHIND PANELS FOR ATTACHMENT.

KEYNOTES

1. ALUMINUM CURTAIN WALL SYSTEM REFER TO WINDOW SCHEDULE
2. VERTICALLY-ORIENTED BOARD-FORMED CONCRETE
3. DRY-JOINT COMPOSITE METAL PANEL RAINSCREEN SYSTEM
4. GLASS GARAGE DOOR
5. METAL PANEL CANOPY
6. SIGNAGE, REFER TO GENERAL NOTE #5
7. MECHANICAL LOUVER - COLOR BY ARCHITECT
8. ALUMINUM SOLAR SHADE
9. RETAINING WALL
10. PERFORATED TERRACOTTA W/GLAZING BEHIND
11. GFRC COLUMN COVER
12. TRANSLUCENT GLASS CANOPY
13. MECHANICAL EQUIPMENT
14. MAINTENANCE / EGRESS DOOR REFER TO DOOR SCHEDULE
15. ENTRY DOORS REFER TO DOOR SCHEDULE
16. GLASS ACCORDIAN DOOR
17. STAIR
18. ALIGN ELEMENTS
19. DRY-JOINT TERRACOTTA RAINSCREEN SYSTEM, RE: RAINSCREEN PATTERN SHEETS
20. ALUMINUM INFILL PANEL - COLOR BY ARCHITECT
21. RAILING
22. FUTURE SOLAR HOT WATER PANELS
23. CONCRETE BRIDGE
24. DAVIT CRANE
25. MECHANICAL SHAFT
26. UNIVERSAL ACCESS BOLLARD
28. 2" RECESSED IN CONCRETE WALL
29. CONCRETE BASE

ALTERNATE LEGEND

LIGHT GRAY AREAS ARE BASE BID ARE NOT PART OF THE ALTERNATE.

MHTN
ARCHITECTS
MHTN Architects, Inc.
420 East South Temple
Suite 100
Salt Lake City, Utah 84111
Telephone (801) 595-6700
Telefax (801) 595-6717
www.mhtn.com

Hastings+Chivetta
ARCHITECTURE • PLANNING • ENGINEERING
622 Emerson, Suite 200
St. Louis, MO 63141
Tel. 314.863.5717
Fax. 314.863.2623
www.hastingschivetta.com

BUILDING OFFICIAL STAMP

UNIVERSITY OF UTAH
STUDENT LIFE CENTER
1836 E. BALLIF ROAD
SALT LAKE CITY, UTAH 84112

SEAL

MHTN PROJECT NO. PROJ 2010562

DRAWN BY: Author CHECKED BY: Checker

ISSUED:

NO.	DATE	DESCRIPTION

CONTRACTOR TO VERIFY DRAWINGS IN FIELD USE REFLECT LAST REVISION DATE:

NO.	DATE	DESCRIPTION
1	MAY 24,2013	ADDENDUM ONE

SHEET NAME
EXTERIOR ELEVATION ALTERNATE 1
BID DOCUMENTS
MAY 15, 2013

SHEET NUMBER
AE207

C:\Users\rumi\Documents\A12-2010562_UofU_StudentLifeCenter_Central_rumi.rvt
5/17/2013 4:21:00 PM

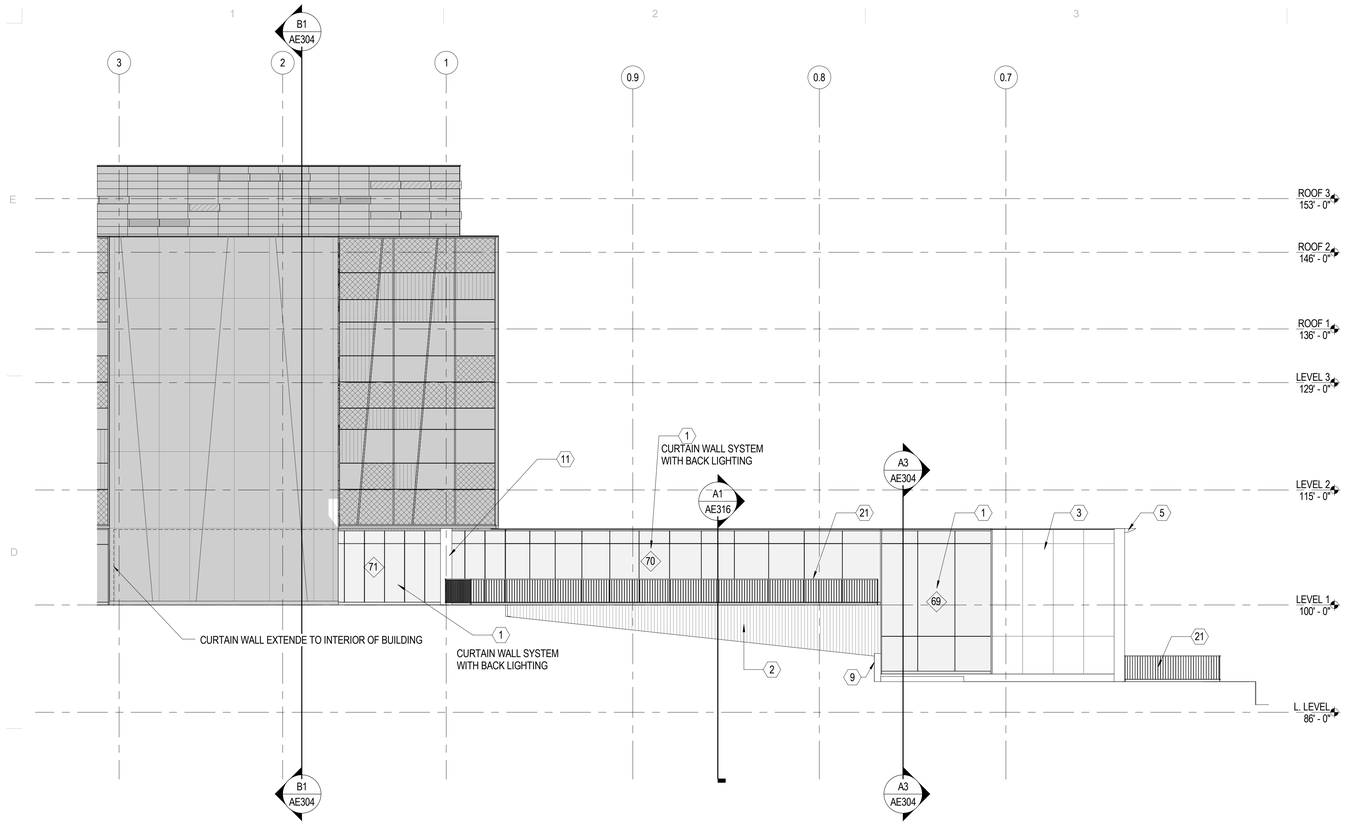

C5 NORTH ELEVATION ALTERNATE 1

SCALE: 1/8" = 1'-0"

GENERAL NOTES

1. REFER TO THE FIRE CODE PLAN FOR INDICATION OF THE WALLS THAT ARE TO RECEIVE FIRE RATINGS.

2. FINISHES APPLY TO ALL SIMILAR ELEMENTS FOR THAT FAÇADE.

3. COORDINATE EXTERIOR LIGHTING WITH ELECTRICAL DRAWINGS.

4. ALL EXTERIOR EXPOSED METAL TRIM, TRELLISES, RAILINGS, MOLDING, FRAMES, CASTINGS, ETC., NOT INDICATED TO BE PREFINISHED, SHALL BE PAINTED.

5. EXTERIOR SIGNAGE SHALL BE CAST ALUMINUM. FONT CENTURY GOTHIC, SIZE AND THICKNESS AS INDICATED. PROVIDE BLOCKING BEHIND PANELS FOR ATTACHMENT.

KEYNOTES

1. ALUMINUM CURTAIN WALL SYSTEM REFER TO WINDOW SCHEDULE
2. VERTICALLY-ORIENTED BOARD-FORMED CONCRETE
3. DRY-JOINT COMPOSITE METAL PANEL RAINSCREEN SYSTEM
4. GLASS GARAGE DOOR
5. METAL PANEL CANOPY
6. SIGNAGE, REFER TO GENERAL NOTE #5
7. MECHANICAL LOUVER - COLOR BY ARCHITECT
8. ALUMINUM SOLAR SHADE
9. RETAINING WALL
10. PERFORATED TERRACOTTA W/GLAZING BEHIND
11. GFRC COLUMN COVER
12. TRANSLUCENT GLASS CANOPY
13. MECHANICAL EQUIPMENT
14. MAINTENANCE / EGRESS DOOR REFER TO DOOR SCHEDULE
15. ENTRY DOORS REFER TO DOOR SCHEDULE
16. GLASS ACCORDIAN DOOR
17. STAIR
18. ALIGN ELEMENTS
19. DRY-JOINT TERRACOTTA RAINSCREEN SYSTEM, RE: RAINSCREEN PATTERN SHEETS
20. ALUMINUM INFILL PANEL - COLOR BY ARCHITECT
21. RAILING
22. FUTURE SOLAR HOT WATER PANELS
23. CONCRETE BRIDGE
24. DAVIT CRANE
25. MECHANICAL SHAFT
26. UNIVERSAL ACCESS BOLLARD
28. 2" RECESSED IN CONCRETE WALL
29. CONCRETE BASE

ALTERNATE LEGEND

LIGHT GRAY AREAS ARE BASE BID ARE NOT PART OF THE ALTERNATE.

MHTN
ARCHITECTS
MHTN Architects, Inc.
420 East South Temple
Suite 100
Salt Lake City, Utah 84111
Telephone (801) 595-6700
Telefax (801) 595-6717
www.mhtn.com

Hastings+Chivetta
ARCHITECTURE • PLANNING • ENGINEERING
622 Emerson, Suite 200
St. Louis, MO 63141
Tel. 314.863.5717
Fax. 314.863.2623
www.hastingschivetta.com

BUILDING OFFICIAL STAMP

UNIVERSITY OF UTAH
STUDENT LIFE CENTER
1836 E. BALLIF ROAD
SALT LAKE CITY, UTAH 84112

SEAL

MHTN PROJECT NO. PROJ 2010562

DRAWN BY: Author CHECKED BY: Checker

ISSUED:

NO.	DATE	DESCRIPTION

CONTRACTOR TO VERIFY DRAWINGS IN FIELD USE REFLECT LAST REVISION DATE.

NO.	DATE	DESCRIPTION
1	MAY 24,2013	ADDENDUM ONE

SHEET NAME
EXTERIOR ELEVATION ALTERNATE 1
BID DOCUMENTS
MAY 15, 2013

SHEET NUMBER
1
AE208

C:\Users\ium\Documents\A12-2010562_UofU_StudentLifeCenter_Central_ium.rvt
5/17/2013 4:22:22 PM

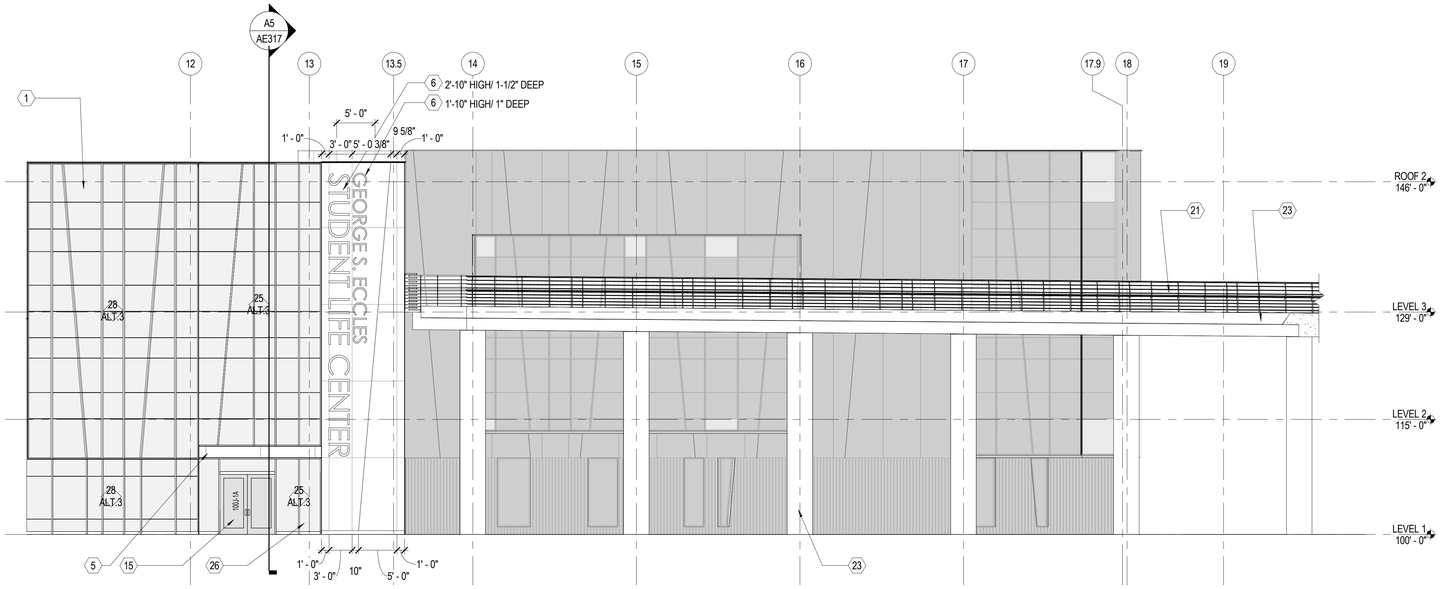

C1 SOUTH ELEVATION - ALTERNATE

SCALE: 1/8" = 1'-0"

ALTERNATE LEGEND

LIGHT GRAY AREAS ARE BASE BID ARE NOT PART OF THE ALTERNATE.

GENERAL NOTES

1. REFER TO THE FIRE CODE PLAN FOR INDICATION OF THE WALLS THAT ARE TO RECEIVE FIRE RATINGS.

2. FINISHES APPLY TO ALL SIMILAR ELEMENTS FOR THAT FAÇADE.

3. COORDINATE EXTERIOR LIGHTING WITH ELECTRICAL DRAWINGS.

4. ALL EXTERIOR EXPOSED METAL TRIM, TRELLISES, RAILINGS, MOLDING, FRAMES, CASTINGS, ETC., NOT INDICATED TO BE PREFINISHED, SHALL BE PAINTED.

5. EXTERIOR SIGNAGE SHALL BE CAST ALUMINUM. FONT CENTURY GOTHIC, SIZE AND THICKNESS AS INDICATED. PROVIDE BLOCKING BEHIND PANELS FOR ATTACHMENT.

KEYNOTES

1. ALUMINUM CURTAIN WALL SYSTEM REFER TO WINDOW SCHEDULE
2. VERTICALLY-ORIENTED BOARD-FORMED CONCRETE
3. DRY-JOINT COMPOSITE METAL PANEL RAINSCREEN SYSTEM
4. GLASS GARAGE DOOR
5. METAL PANEL CANOPY
6. SIGNAGE, REFER TO GENERAL NOTE #5
7. MECHANICAL LOUVER - COLOR BY ARCHITECT
8. ALUMINUM SOLAR SHADE
9. RETAINING WALL
10. PERFORATED TERRACOTTA W/GLAZING BEHIND
11. GFRC COLUMN COVER
12. TRANSLUCENT GLASS CANOPY
13. MECHANICAL EQUIPMENT
14. MAINTENANCE / EGRESS DOOR REFER TO DOOR SCHEDULE
15. ENTRY DOORS REFER TO DOOR SCHEDULE
16. GLASS ACCORDIAN DOOR
17. STAIR
18. ALIGN ELEMENTS
19. DRY-JOINT TERRACOTTA RAINSCREEN SYSTEM, RE: RAINSCREEN PATTERN SHEETS
20. ALUMINUM INFILL PANEL - COLOR BY ARCHITECT
21. RAILING
22. FUTURE SOLAR HOT WATER PANELS
23. CONCRETE BRIDGE
24. DAVIT CRANE
25. MECHANICAL SHAFT
26. UNIVERSAL ACCESS BOLLARD
28. 2" RECESSED IN CONCRETE WALL
29. CONCRETE BASE

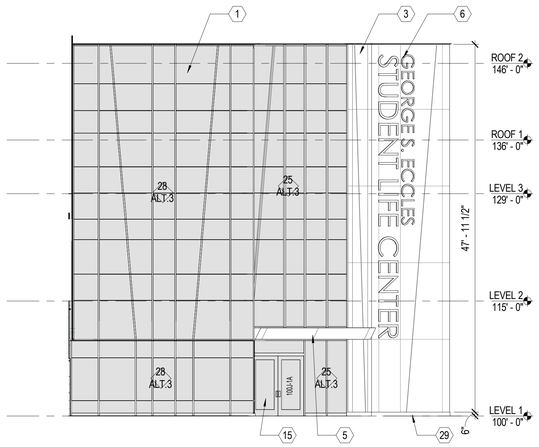

A3 SOUTH ELEVATION - ALTERNATE

SCALE: 1/8" = 1'-0"

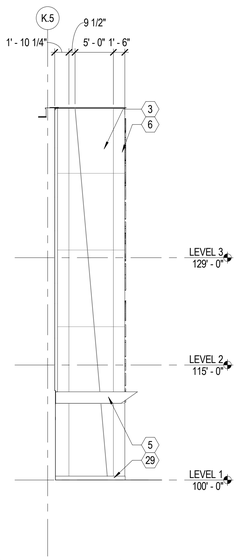

A4 WEST ELEVATION - ALTERNATE

SCALE: 1/8" = 1'-0"

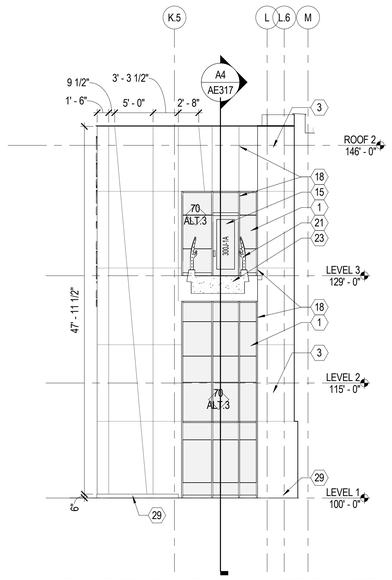

A5 EAST ELEVATION - ALTERNATE

SCALE: 1/8" = 1'-0"

MHTN ARCHITECTS
MHTN Architects, Inc.
420 East South Temple
Suite 100
Salt Lake City, Utah 84111
Telephone (801) 595-6700
Telefax (801) 595-6717
www.mhtn.com

Hastings+Chivetta
ARCHITECTURE • PLANNING • ENGINEERING
622 Emerson, Suite 200
St. Louis, MO 63141
Tel. 314.863.5717
Fax. 314.863.2623
www.hastingschivetta.com

BUILDING OFFICIAL STAMP

UNIVERSITY OF UTAH

STUDENT LIFE CENTER

1836 E. BALLIF ROAD
SALT LAKE CITY, UTAH 84112

SEAL

MHTN PROJECT NO. PROJ 2010562

DRAWN BY: Author CHECKED BY: Checker

ISSUED:

NO.	DATE	DESCRIPTION

CONTRACTOR TO VERIFY DRAWINGS IN FIELD USE REFLECT LAST REVISION DATE:

NO.	DATE	DESCRIPTION
1	MAY 24,2013	ADDENDUM ONE

SHEET NAME:

EXTERIOR ELEVATION ALTERNATE 3
BID DOCUMENTS
MAY 15, 2013

SHEET NUMBER

1 AE209

C:\Users\rum\Documents\A12-2010562_UofU_StudentLifeCenter_Central_rum.rvt
5/17/2013 4:23:34 PM

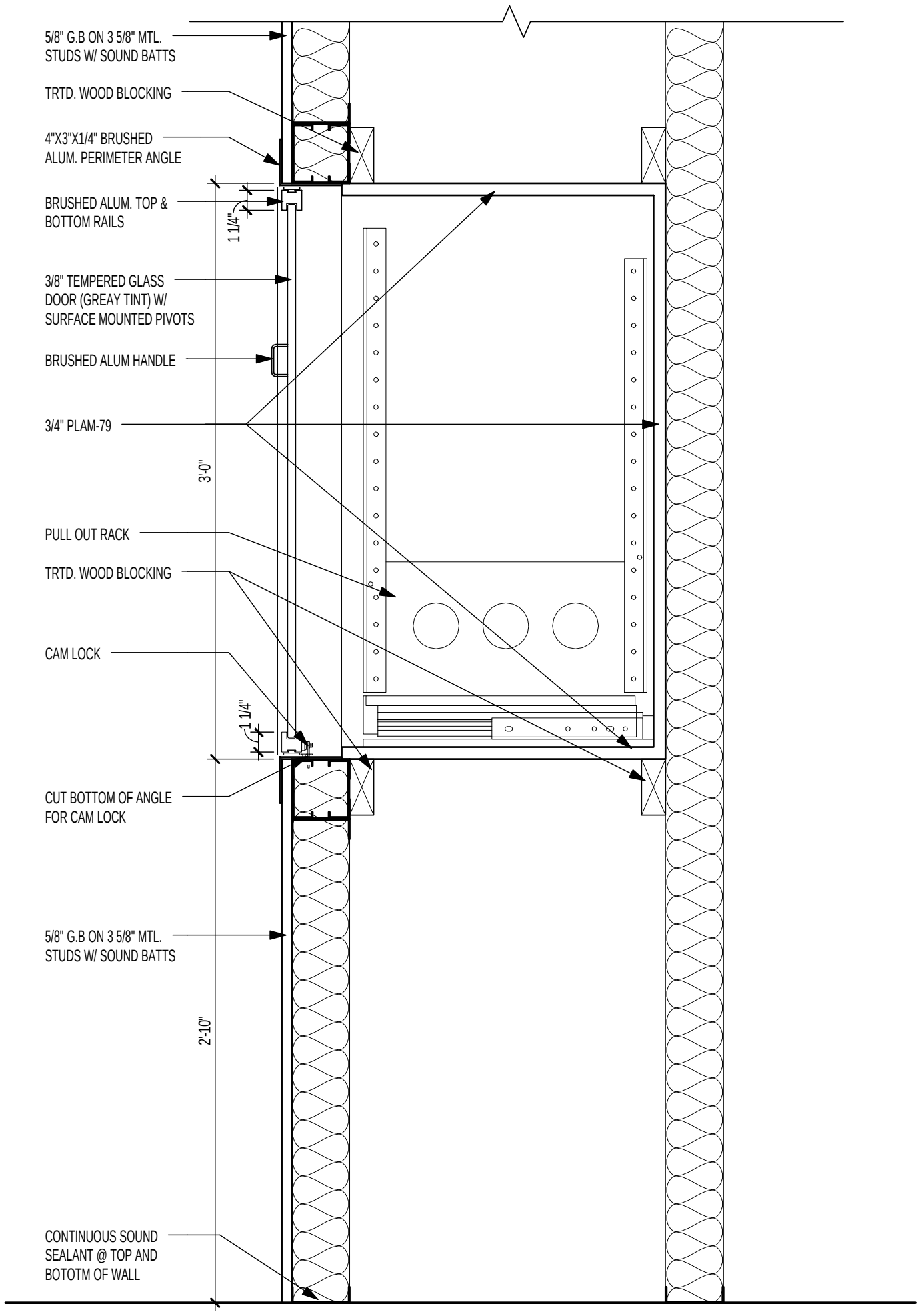

AV CABINET SECTION

SCALE | **1 1/2" = 1'-0"**

MHTN
ARCHITECTS
MHTN Architects, Inc.
420 East South Temple
Suite 100
Salt Lake City, Utah 84111
TEL 801.595.6700
FAX 801.595.6717
www.mhtn.com

Hastings+Chivetta
ARCHITECTURE • PLANNING • ENGINEERING
622 Emerson
Suite 200
Saint Louis, MO 63141
TEL 314.863.5717
FAX 314.863.2823

UNIVERSITY OF UTAH

STUDENT LIFE CENTER

1836 E. BALLIF ROAD
SALT LAKE CITY, UTAH 84112

PROJECT NO. PROJ 2010562
DATE: May 28, 2013
SHEET REFERENCE
A4/AE551
SHEET NUMBER
AD01-AE001

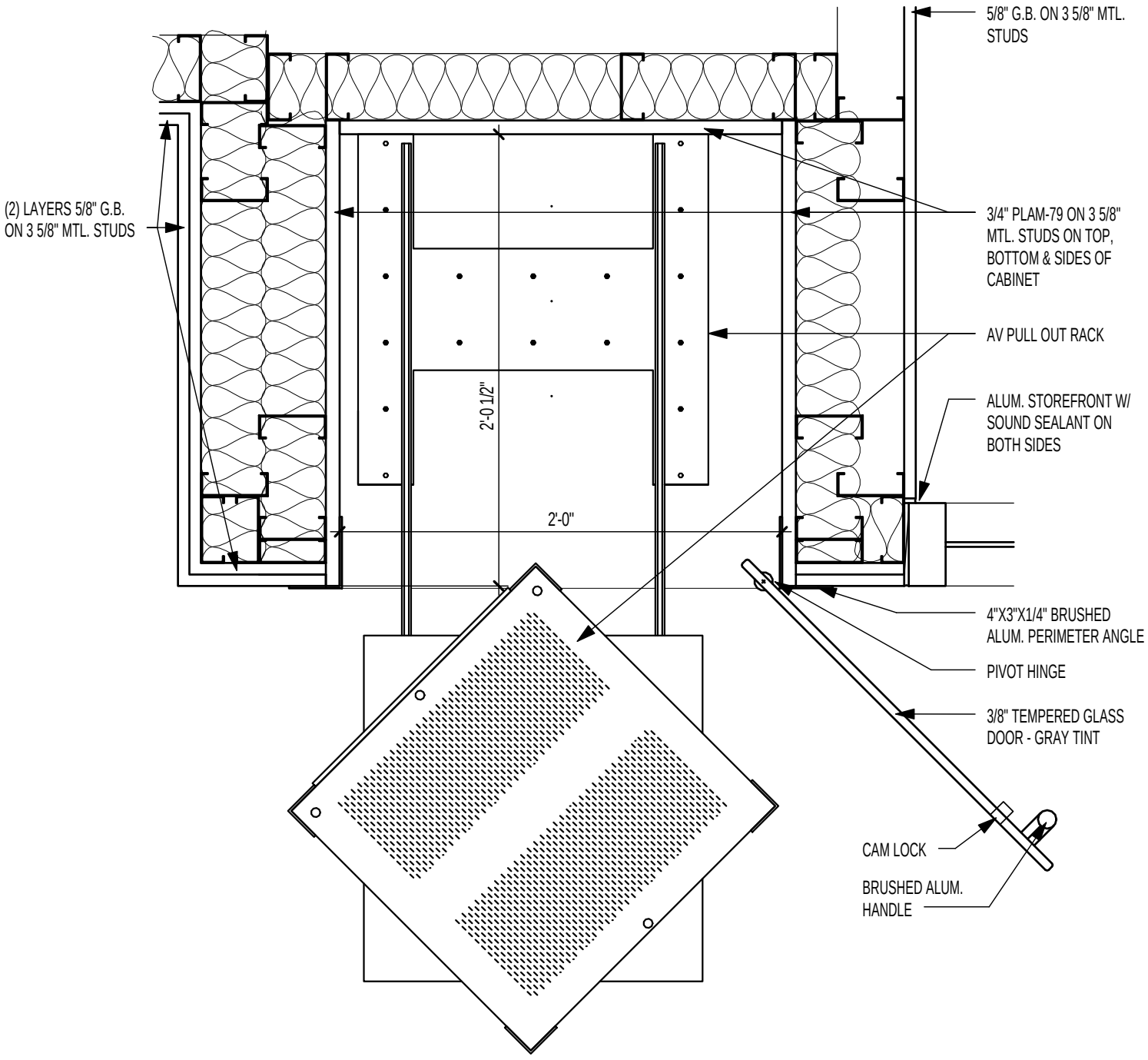

CABINET PLAN DETAIL

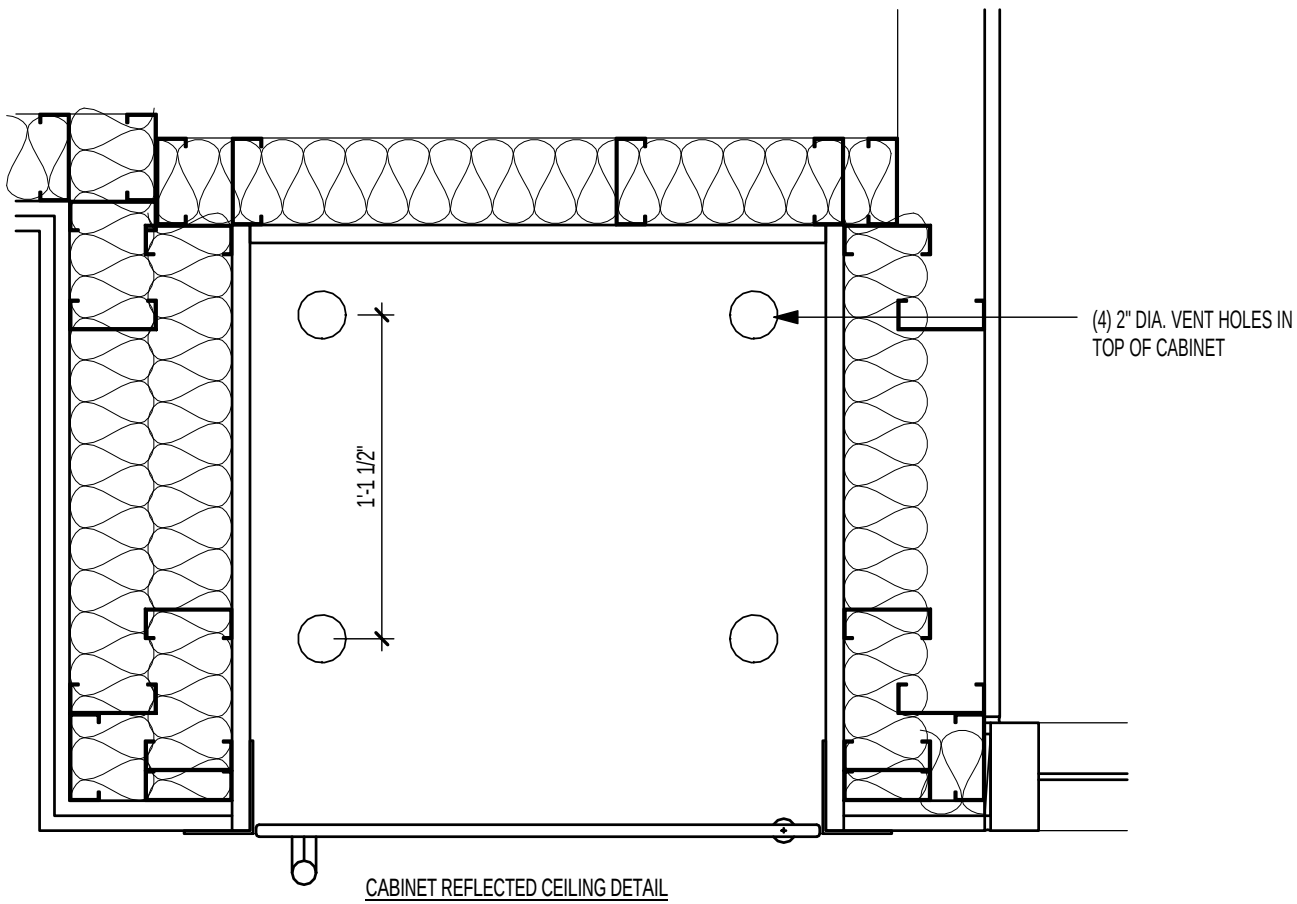

CABINET REFLECTED CEILING DETAIL

AV CABINET PLAN DETAILS

SCALE | **1 1/2" = 1'-0"**

UNIVERSITY OF UTAH

STUDENT LIFE CENTER

1836 E. BALLIF ROAD
SALT LAKE CITY, UTAH 84112

PROJECT NO. PROJ 2010562

DATE: May 28, 2013

SHEET REFERENCE
A4/AE551

SHEET NUMBER
AD01-AE002

Hastings+Chivetta
ARCHITECTURE • PLANNING • ENGINEERING
622 Emerson
Suite 200
Saint Louis, MO 63141
TEL 314.863.5717
FAX 314.863.2823

MHTN
ARCHITECTS
MHTN Architects, Inc.
420 East South Temple
Suite 100
Salt Lake City, Utah 84111
TEL 801.595.6700
FAX 801.595.6717
www.mhtn.com

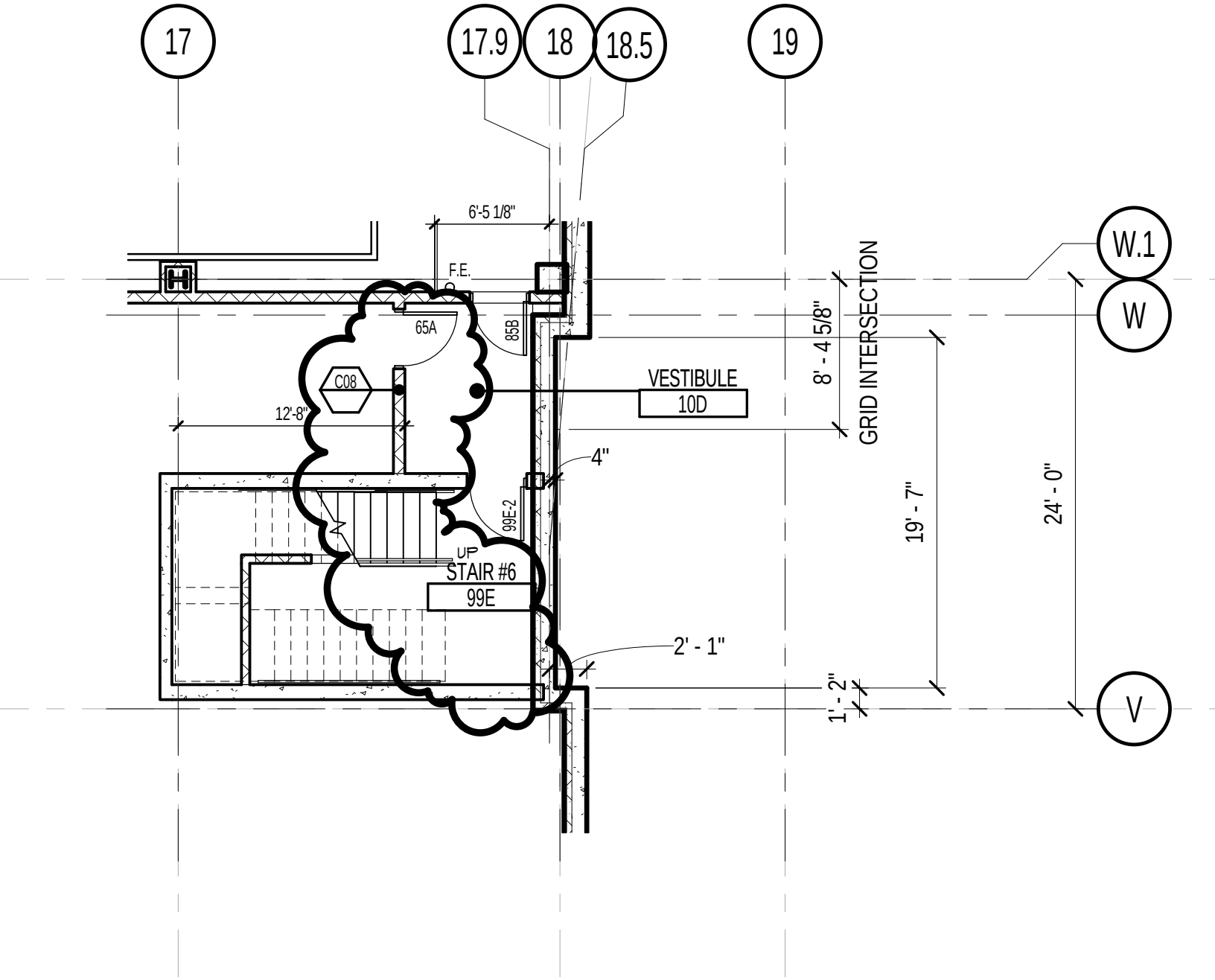

Hastings+Chivetta
ARCHITECTURE • PLANNING • ENGINEERING

MHTN Architects, Inc.
420 East South Temple
Suite 100
Salt Lake City, Utah 84111
TEL 801.595.6700
FAX 801.595.6717
www.mhtn.com

UNIVERSITY OF UTAH
STUDENT LIFE CENTER

PROJECT NO. PROJ 2010562

DATE: 05-28-2013

SHEET NUMBER
AD01-AE003

SHEET REFERENCE
AE101A

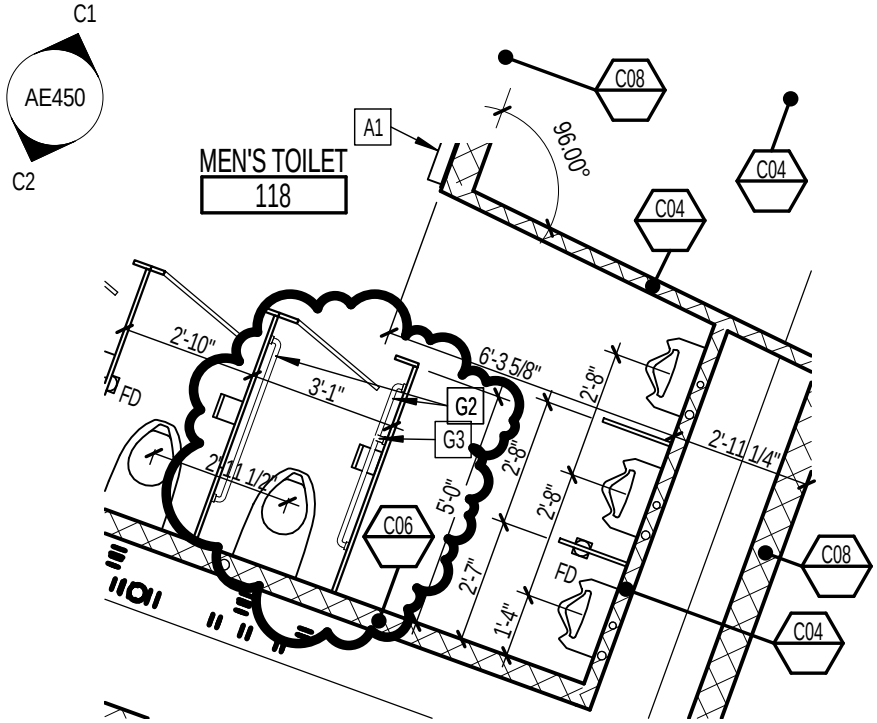

PARTIAL PLAN @ MEN'S TLT 118 - ALT 1

SCALE | **1/4" = 1'-0"**

Hastings+Chivetta
ARCHITECTURE • PLANNING • ENGINEERING

MHTN Architects, Inc.
420 East South Temple
Suite 100
Salt Lake City, Utah 84111
TEL 801.595.6700
FAX 801.595.6717
www.mhtn.com

UNIVERSITY OF UTAH
STUDENT LIFE CENTER

PROJECT NO. PROJ 2010562

DATE: 05-28-2013

SHEET NUMBER
AD01-AE004

SHEET REFERENCE
C1/AE433

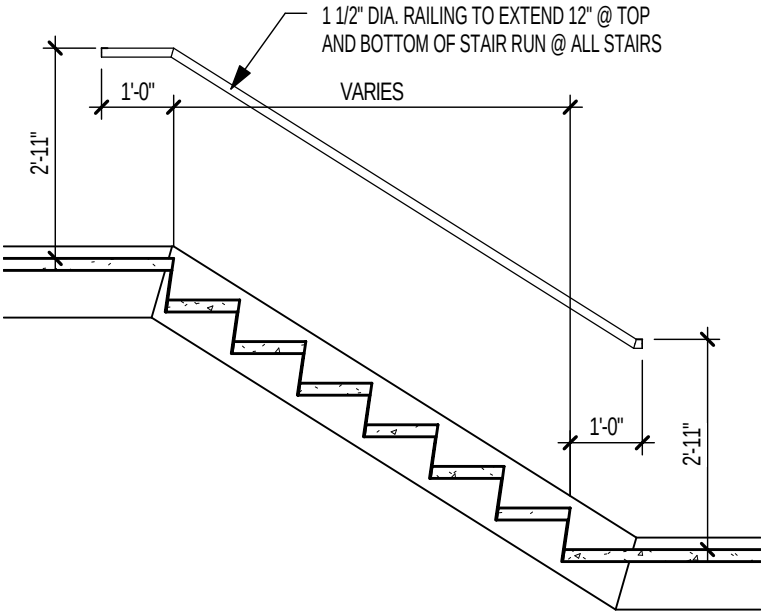

TYP RAILING DIMENSIONS

SCALE | **3/8" = 1'-0"**

Hastings+Chivetta
ARCHITECTURE • PLANNING • ENGINEERING

MHTN Architects, Inc.
420 East South Temple
Suite 100
Salt Lake City, Utah 84111
TEL 801.595.6700
FAX 801.595.6717
www.mhtn.com

UNIVERSITY OF UTAH
STUDENT LIFE CENTER

PROJECT NO. PROJ 2010562

DATE:

SHEET NUMBER
AD01-AE005

SHEET REFERENCE
A3/AE533

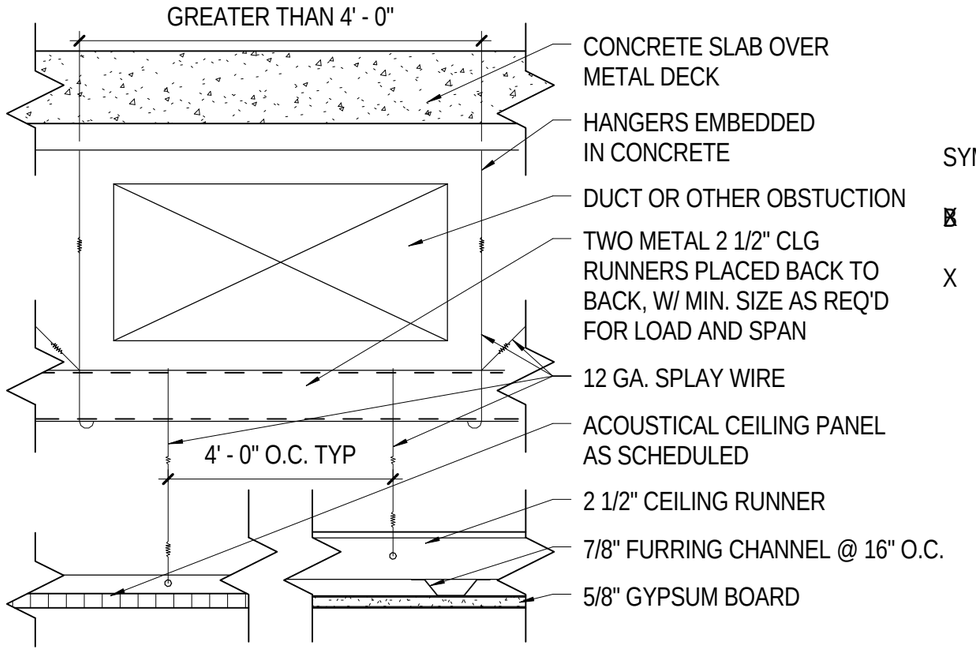

SYMBOL LEGEND:

B 'BERC2' CLIP PERIMETER WIRES

X HANGER WIRES

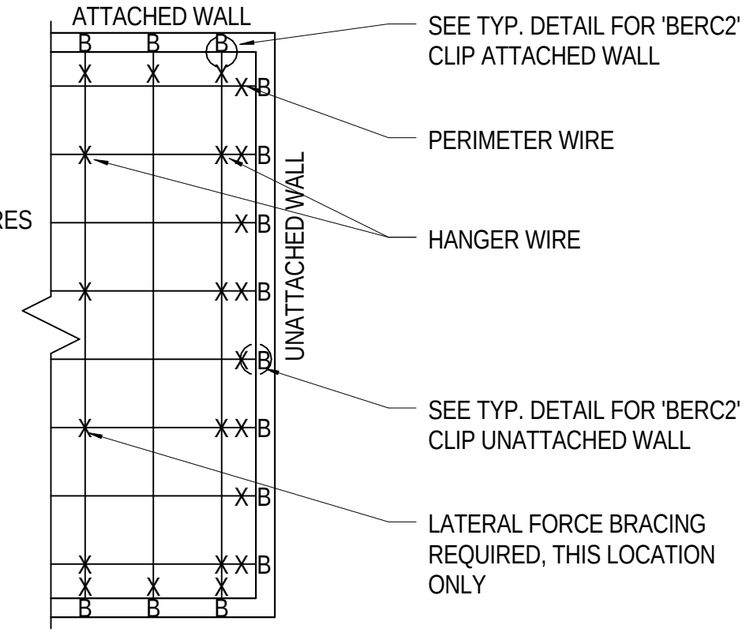

CEILING PLAN

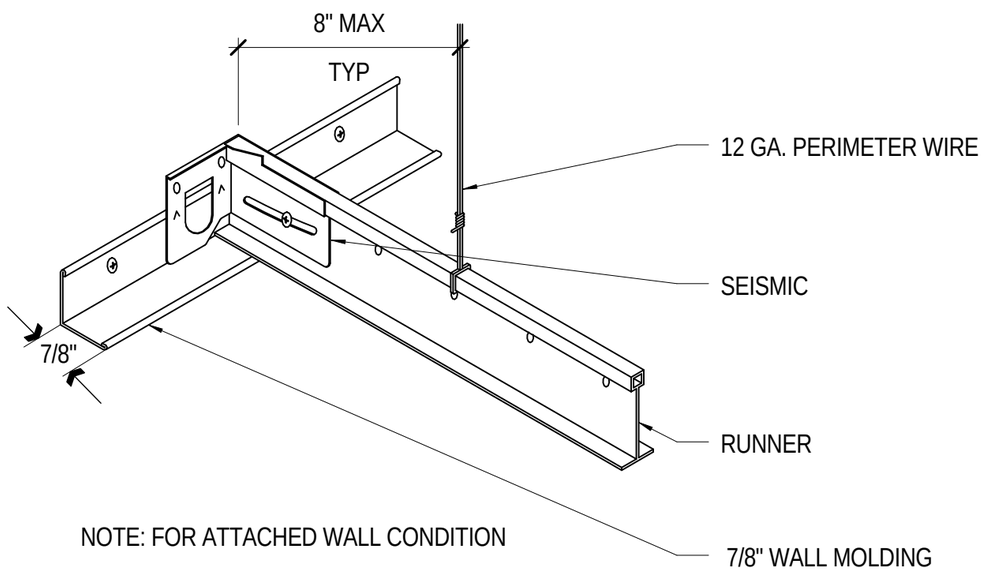

NOTE: FOR ATTACHED WALL CONDITION

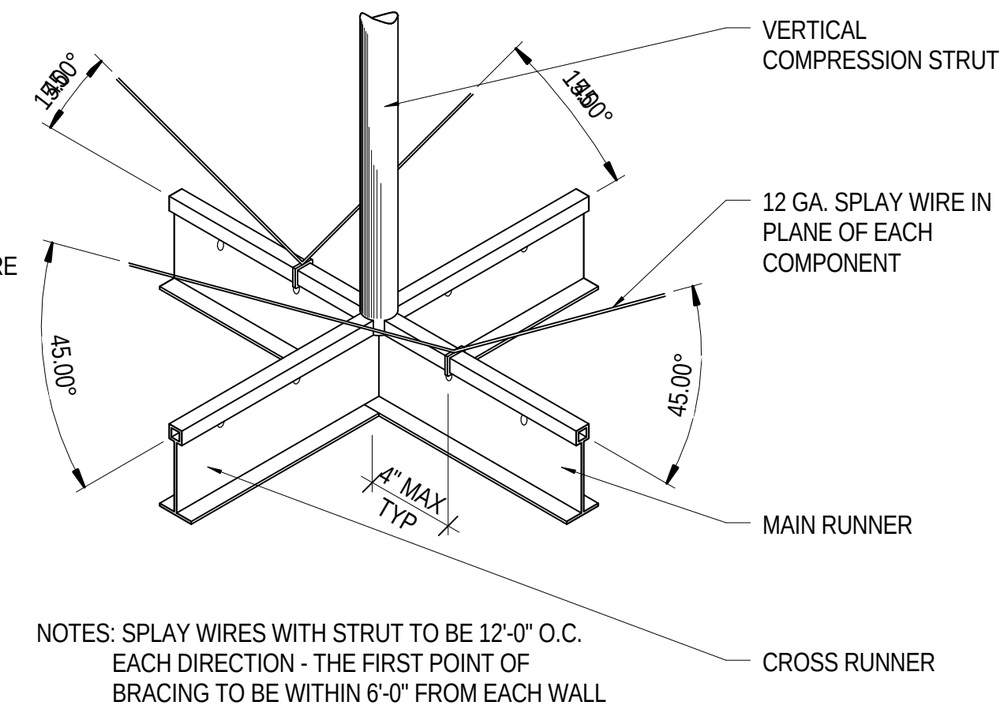

NOTES: SPLAY WIRES WITH STRUT TO BE 12'-0" O.C. EACH DIRECTION - THE FIRST POINT OF BRACING TO BE WITHIN 6'-0" FROM EACH WALL

CEILING BRACING DETAILS

SCALE | **1 1/2" = 1'-0"**

MHTN ARCHITECTS
MHTN Architects, Inc.
420 East South Temple
Suite 100
Salt Lake City, Utah 84111
TEL 801.595.6700
FAX 801.595.6717
www.mhtn.com

Hastings+Chivetta
ARCHITECTURE • PLANNING • ENGINEERING
622 Emerson
Suite 200
Saint Louis, MO 63141
TEL 314.863.5717
FAX 314.863.2823

UNIVERSITY OF UTAH
STUDENT LIFE CENTER
1836 E. BALLIF ROAD
SALT LAKE CITY, UTAH 84112

PROJECT NO. PROJ 2010562

DATE: May 28, 2013

SHEET REFERENCE
C4/AE540

SHEET NUMBER
AD01-AE006

C:\Users\mhilmes\Documents_Projects\2995.00 Utah Student Center-2012_mhilmes.rvt
5/28/2013 2:59:35 PM

C:\Users\mhilmes\Documents_Projects\2995.00 Utah Student Center-2012_mhilmes.rvt
5/28/2013 3:00:21 PM

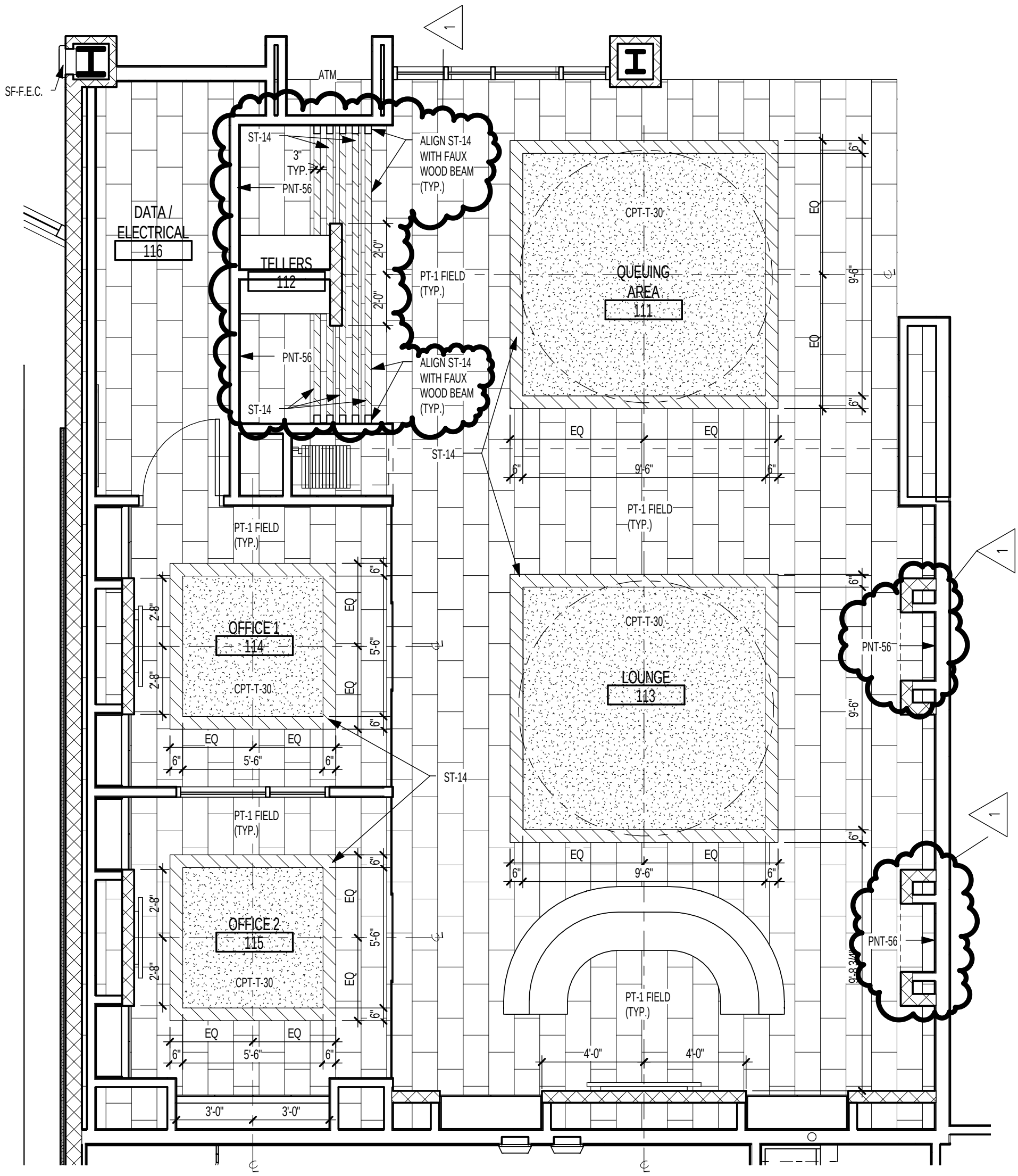

Revised CREDIT UNION FLOOR PATTERN

SCALE | **1/4" = 1'-0"**

MHTN ARCHITECTS
MHTN Architects, Inc.
420 East South Temple
Suite 100
Salt Lake City, Utah 84111
TEL 801.595.6700
FAX 801.595.6717
www.mhtn.com

Hastings+Chivetta
ARCHITECTURE • PLANNING • ENGINEERING
622 Emerson
Suite 200
Saint Louis, MO 63141
TEL 314.863.5717
FAX 314.863.2823

UNIVERSITY OF UTAH

STUDENT LIFE CENTER

1836 E. BALLIF ROAD
SALT LAKE CITY, UTAH 84112

PROJECT NO. PROJ 2010562
DATE: May 28, 2013
SHEET REFERENCE A3/AE431
SHEET NUMBER AD01-AE007

C:\Users\mhilmes\Documents_Projects\2995.00 Utah Student Center-2012_mhilmes.rvt
5/28/2013 3:01:13 PM

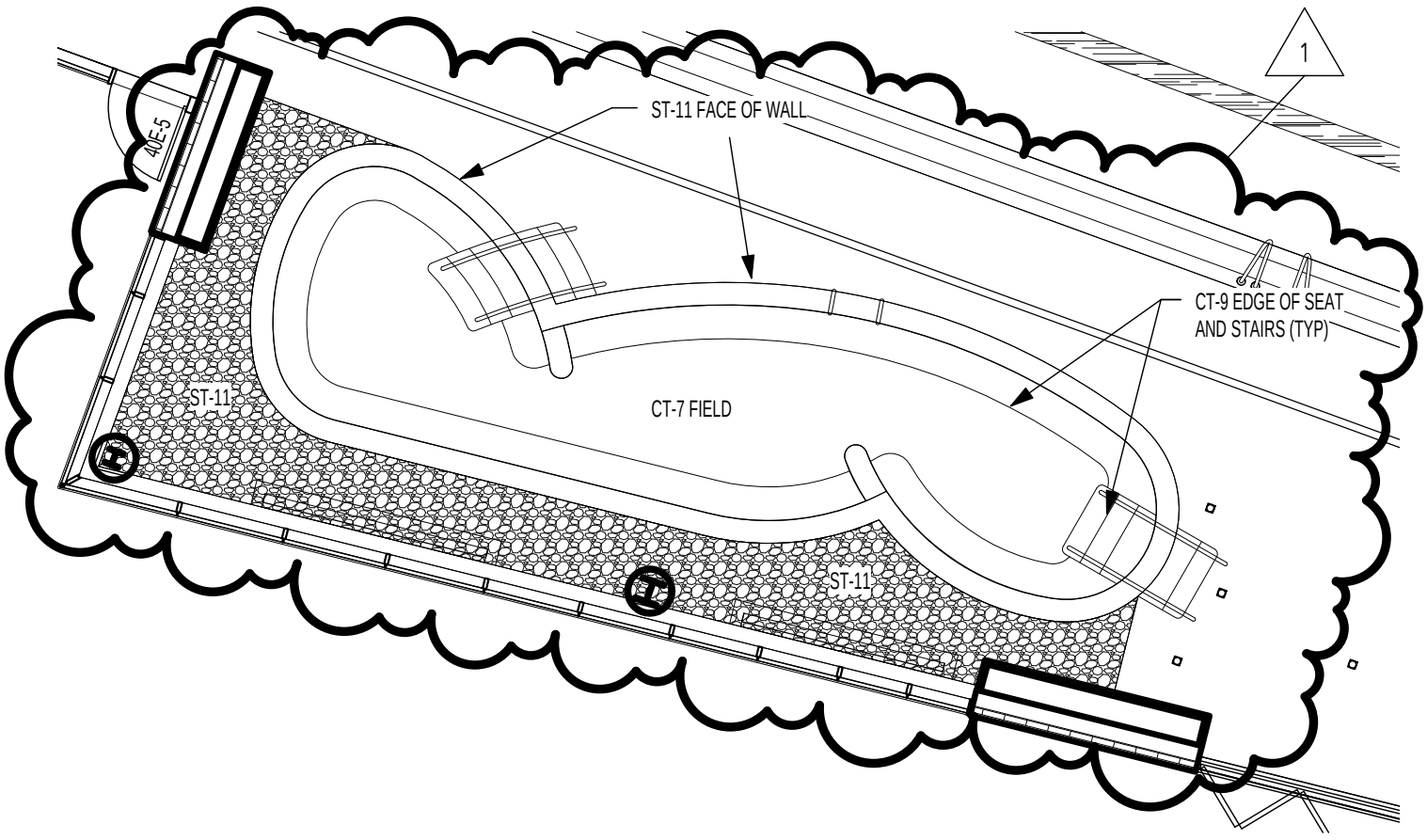

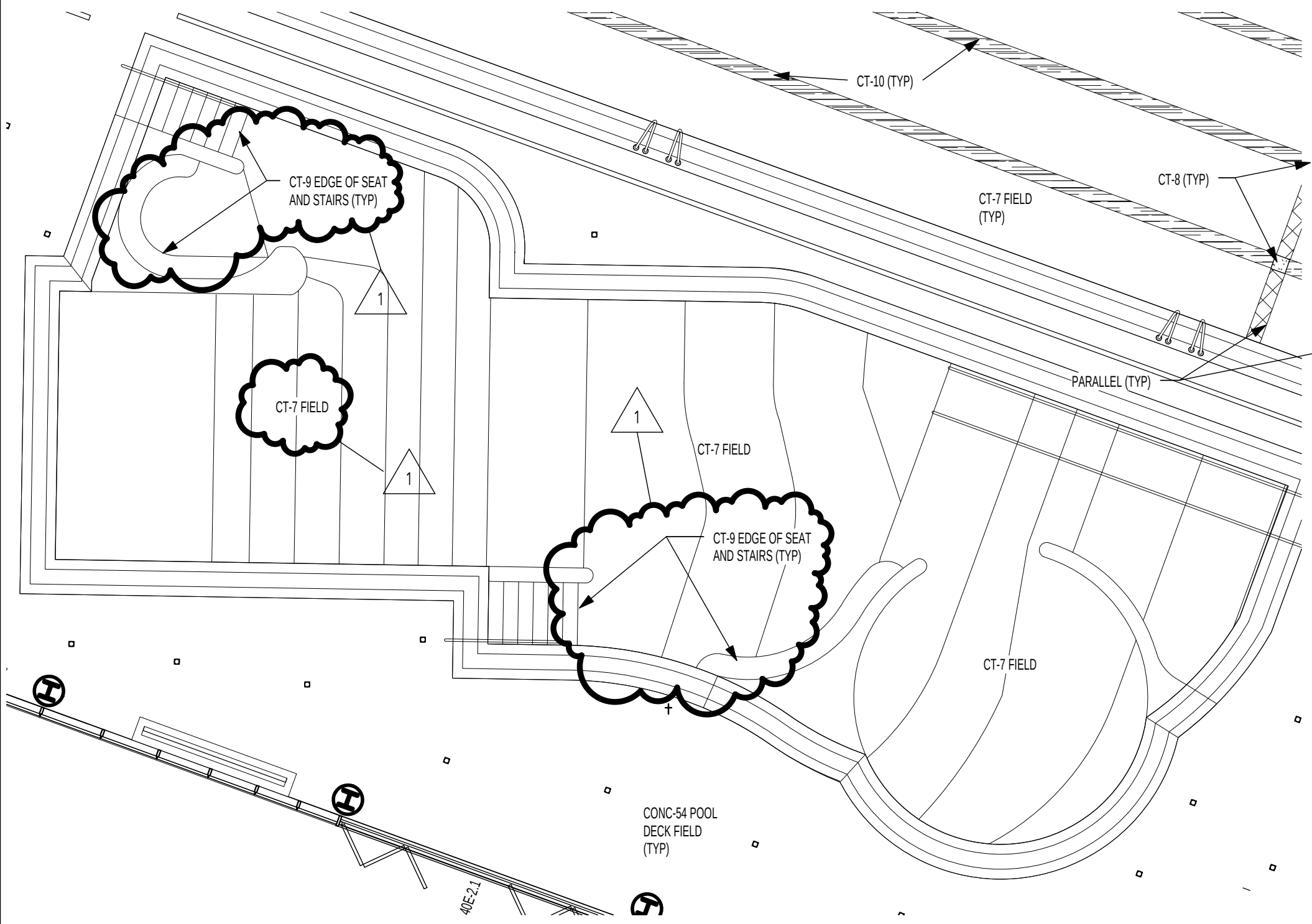

Revised ENLARGED LOWER LEVEL FLOOR PATTERN (50m POOL)

SCALE | **1/8" = 1'-0"**

MHTN ARCHITECTS
MHTN Architects, Inc.
420 East South Temple
Suite 100
Salt Lake City, Utah 84111
TEL 801.595.6700
FAX 801.595.6717
www.mhtn.com

Hastings+Chivetta
ARCHITECTURE • PLANNING • ENGINEERING
622 Emerson
Suite 200
Saint Louis, MO 63141
TEL 314.863.5717
FAX 314.863.2823

UNIVERSITY OF UTAH

STUDENT LIFE CENTER

1836 E. BALLIF ROAD
SALT LAKE CITY, UTAH 84112

PROJECT NO. PROJ 2010562
DATE: May 28, 2013
SHEET REFERENCE A1/AF104
SHEET NUMBER AD01-AE008

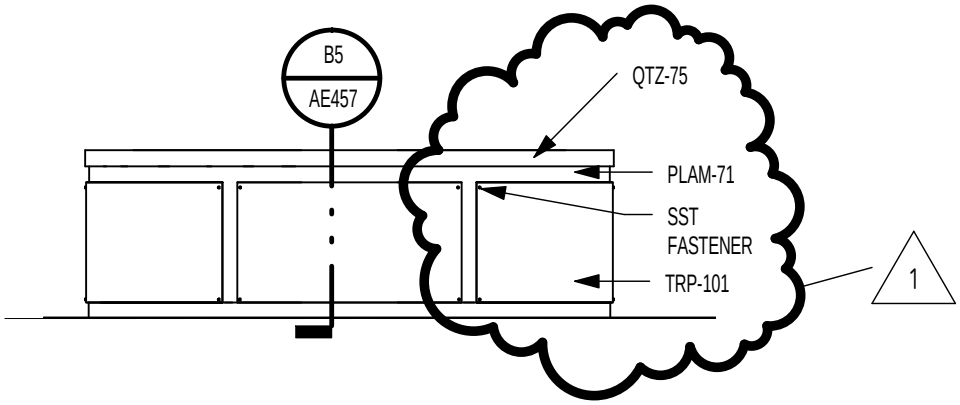

Revised CREDIT UNION DESK FRONT

SCALE | **1/4" = 1'-0"**

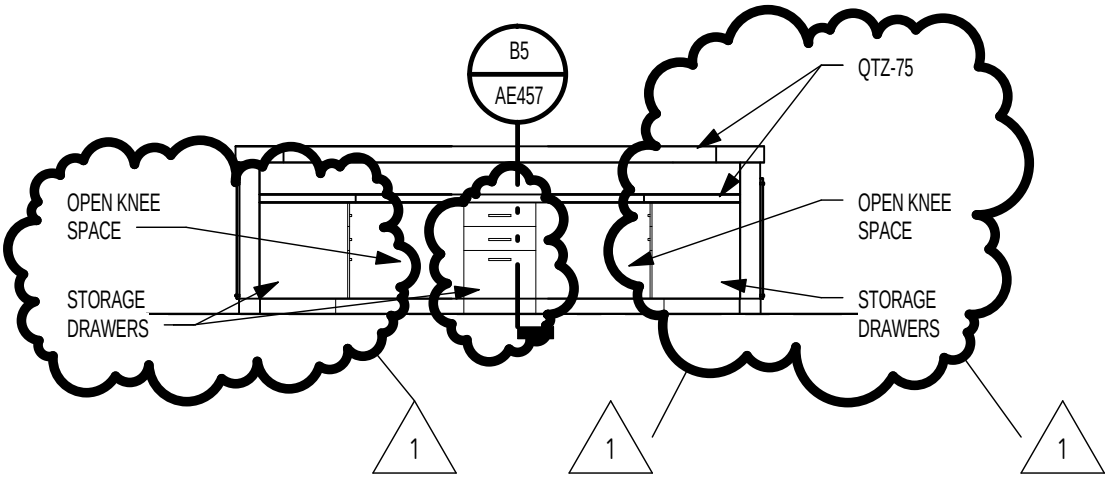

Revised CREDIT UNION DESK BACK

SCALE | **1/4" = 1'-0"**

Hastings+Chivetta
ARCHITECTURE • PLANNING • ENGINEERING

MHTN Architects, Inc.
420 East South Temple
Suite 100
Salt Lake City, Utah 84111
TEL 801.595.6700
FAX 801.595.6717
www.mhtn.com

UNIVERSITY OF UTAH
STUDENT LIFE CENTER

PROJECT NO. PROJ 2010562

DATE: 05-28-2013

SHEET NUMBER
AD01-AE009

SHEET REFERENCE
AE446

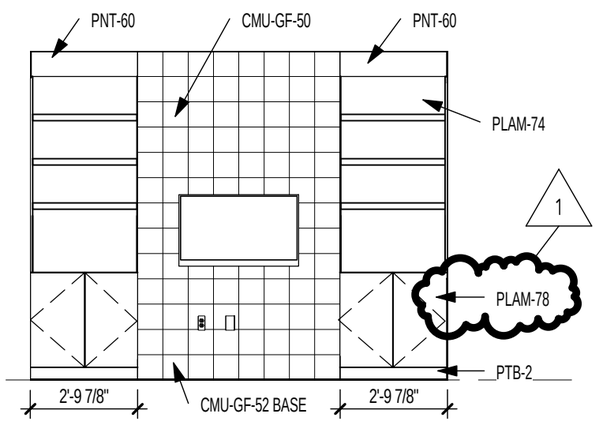

Revised C. U. OFFICES W. INT. ELEV.

SCALE | **1/4" = 1'-0"**

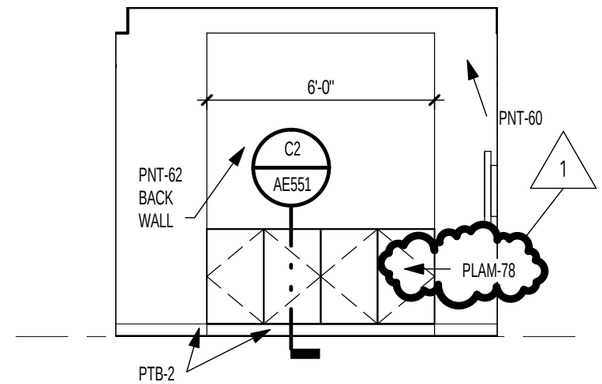

Revised CREDIT UNION OFFICE S. INT. ELV.

SCALE | **1/4" = 1'-0"**

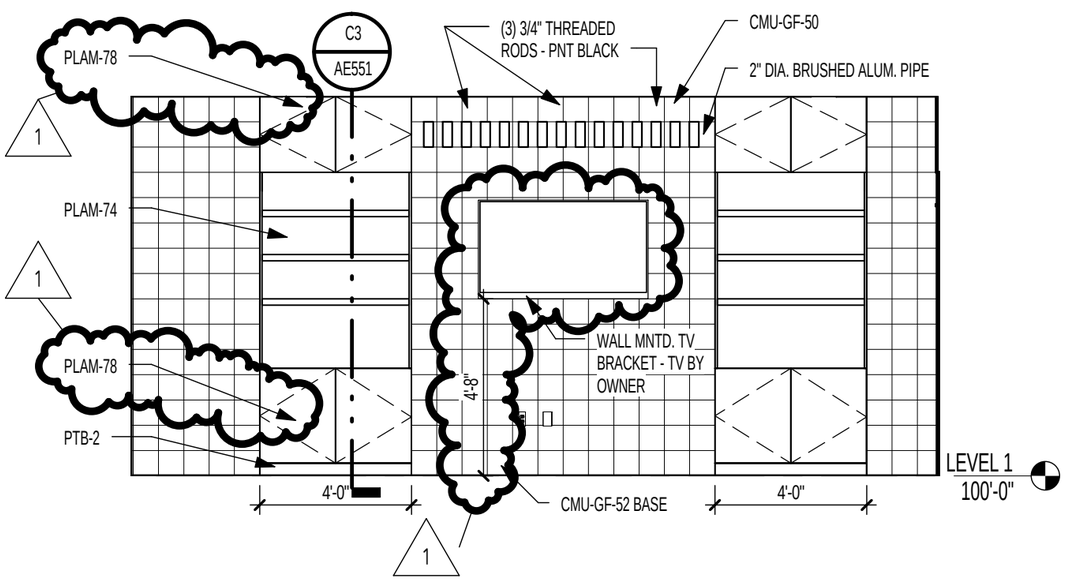

Revised CREDIT UNION SOUTH INT. ELEV.

SCALE | **1/4" = 1'-0"**

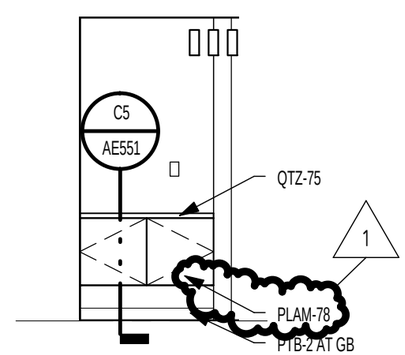

Revised TELLER INT. ELEV.

SCALE | **1/4" = 1'-0"**

MHTN
ARCHITECTS
MHTN Architects, Inc.
420 East South Temple
Suite 100
Salt Lake City, Utah 84111
TEL 801.595.6700
FAX 801.595.6717
www.mhtn.com

Hastings+Chivetta
ARCHITECTURE • PLANNING • ENGINEERING
622 Emerson
Suite 200
Saint Louis, MO 63141
TEL 314.863.5717
FAX 314.863.2823

UNIVERSITY OF UTAH
STUDENT LIFE CENTER
1836 E. BALLIF ROAD
SALT LAKE CITY, UTAH 84112

PROJECT NO. PROJ 2010562

DATE: May 28, 2013

SHEET REFERENCE
AE448

SHEET NUMBER
AD01-AE010

C:\Users\mhilmes\Documents_Projects\2995.00 Utah Student Center-2012_mhilmes.rvt
5/28/2013 3:02:09 PM

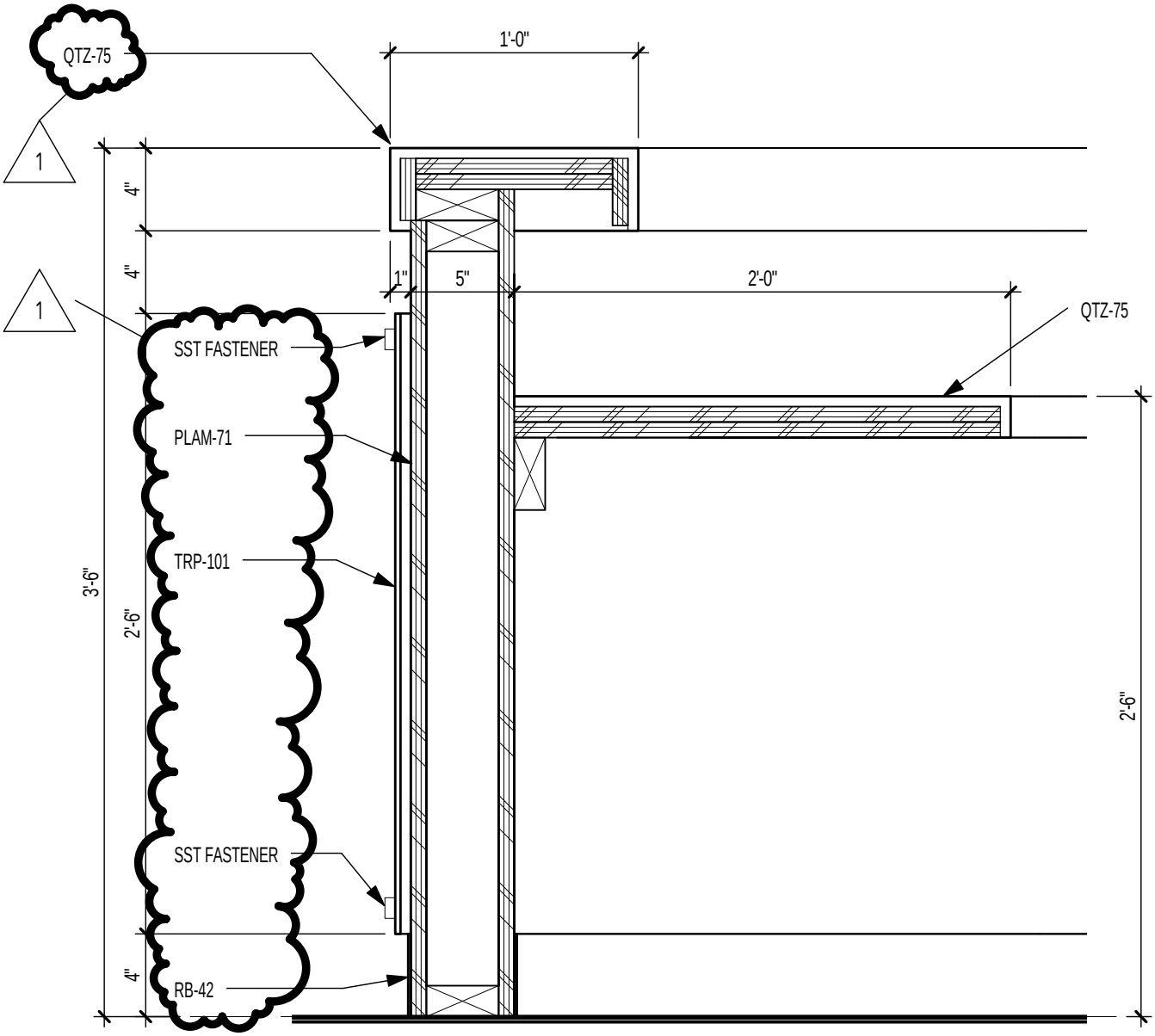

Revised CREDIT UNION DESK SECTION

SCALE | **1 1/2" = 1'-0"**

Hastings+Chivetta
ARCHITECTURE • PLANNING • ENGINEERING

MHTN Architects, Inc.
420 East South Temple
Suite 100
Salt Lake City, Utah 84111
TEL 801.595.6700
FAX 801.595.6717
www.mhtn.com

UNIVERSITY OF UTAH
STUDENT LIFE CENTER

PROJECT NO. PROJ 2010562

DATE: 05-28-2013

SHEET NUMBER
AD01-AE011

SHEET REFERENCE
AE457

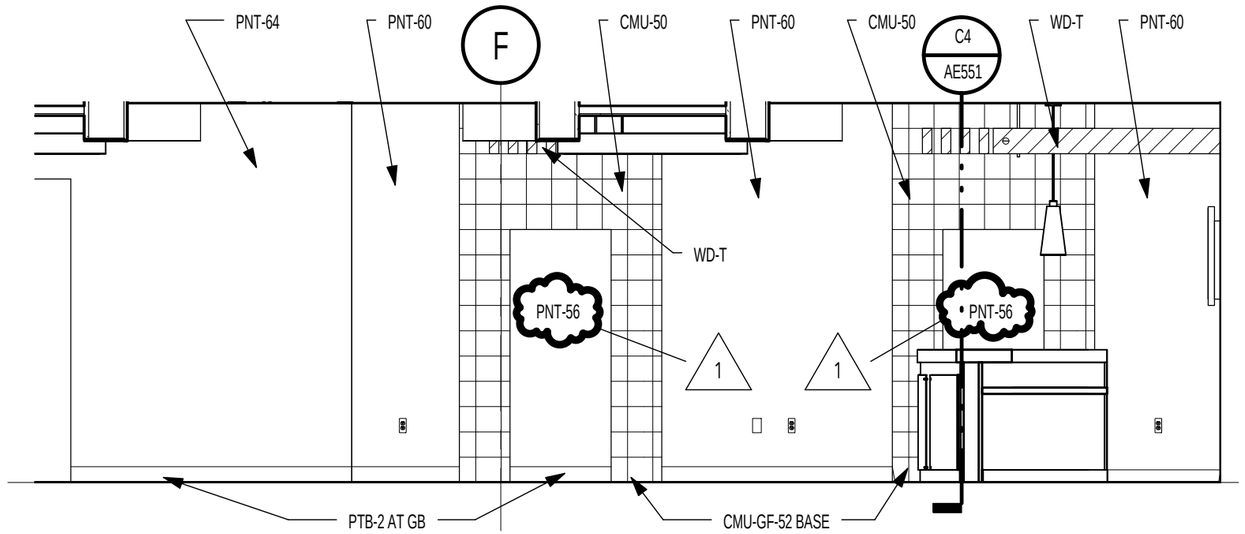

Revised CREDIT UNION EAST INTERIOR ELEVATION

SCALE | **1/4" = 1'-0"**

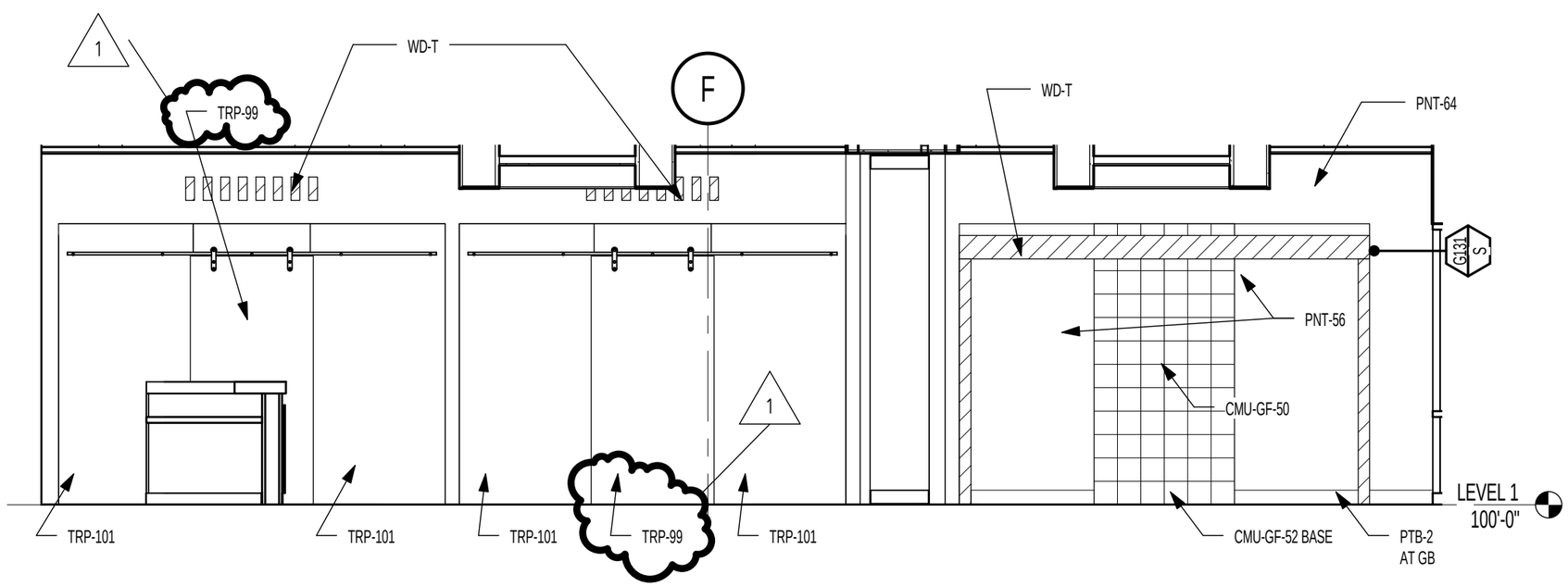

Revised CREDIT UNION WEST INTERIOR ELEVATION

SCALE | **1/4" = 1'-0"**

MHTN
ARCHITECTS

MHTN Architects, Inc.
420 East South Temple
Suite 100
Salt Lake City, Utah 84111
TEL 801.595.6700
FAX 801.595.6717
www.mhtn.com

Hastings+Chivetta
ARCHITECTURE • PLANNING • ENGINEERING

622 Emerson
Suite 200
Saint Louis, MO 63141
TEL 314.863.5717
FAX 314.863.2823

UNIVERSITY OF UTAH

STUDENT LIFE CENTER

1836 E. BALLIF ROAD
SALT LAKE CITY, UTAH 84112

PROJECT NO. PROJ 2010562

DATE: May 28, 2013

SHEET REFERENCE
AE447

SHEET NUMBER
AD01-AE012

C:\Users\mhilmes\Documents_Projects\2995.00 Utah Student Center-2012_mhilmes.rvt
5/28/2013 3:02:32 PM

FINISH SCHEDULE

NUMBER	ROOM NAME	FLOOR FINISH	FLOOR COLOR	BASE MATERIAL	BASE COLOR	WALL MATERIAL	WALL FINISH	WALL COLOR	CEILING MATERIAL	CEILING FINISH	CEILING COLOR	REMARKS
LOWER LEVEL												
5	LOBBY	PT/ST	1/11,14	CMU-GF	52	CMU-GF	PRF	50	AB-22	PRF	80	F
5B	VENDING	PT/ST	1/11,14	CMU-GF	52	CMU-GF	PRF	50	AB-22	PRF	80	F
6	IM OFFICE	VET	20	RB	41	CMU-S	PNT-L	60	AB-22	PRF	80	
7	MAIN DATA	CONC/SC-PS	*	RB	41	CMU	PNT-L	60	EXPD	N	*	
10	CORRIDOR	PT/ST	1/11,14	CMU-GF	52	CMU-GF/GB	PRF/PNT-L/GLT	50/64/15	AB-22/GB	PRF/PNT-L	80/62	F, K, R, N
10B	CORRIDOR	PT/ST	1/11,14	CMU-GF	52	CMU-GF/GB	PRF/PNT-L	50/64	AB-22/GB	PRF/PNT-L	80/62	F
10C	CORRIDOR	PT	1	CMU-GF	52	CMU-GF/GB	PRF/PNT-L/GLT	50/64/15	AB-22/GB	PRF/PNT-L	80/61,64,67	F, GG, R, N
10D	VESTIBULE	CONC/SC-PS	*	RB	41	CMU	PNT-L	60	EXPD	N	*	
10F	MAIN ELECTRIC	CONC/SC-PS	*	RB	41	CMU	PNT-L	60	EXPD	N	*	
10J	CRS STORAGE	CONC/SC-PS	*	N	*	CMU	PNT-L	60	EXPD	N	*	
10K	CUSTODIAL	CONC/SC-PS	*	N	*	CMU	PNT-E	60	AB-22	PRF	80	
10M	MECHANICAL	CONC/SC-PS	*	N	*	CMU/CONC	PNT-E	60	EXPD	N	*	
10N	MECHANICAL	CONC/SC-PS	*	N	*	CMU/CONC	PNT-E	60	EXPD	N	*	
11	HALLWAY	PT/ST	1/11,14	CMU-GF	52	CMU-GF	PRF	50	AB-22	PRF	80	F
11E	ELEVATOR#1	PT	3	N	*	SST	PRF	*	SST	PRF	*	
20	CORRIDOR	PT/ST	1/11,14	CMU-GF	52	CMU-GF	PRF	50	AB-22/GB	PRF/PNT-L	80/58,59,64,67	F, GG
21	ISSUE DESK	CONC/SC-PS	*	RB	41	CMU-GF	PRF	50	AB-22/GB	PRF/PNT-L	80/67	G
22	ISSUE STORAGE	CONC/SC-PS	*	RB	41	CMU	PNT-L	60	EXPD	PNT-L	62	G
24	LAUNDRY	CONC/SC-PS	*	RB	41	CMU	PNT-L	60	EXPD	PNT-L	62	G
25	LOUNGE	WD-V	21	RB	40	CMU-S	PNT-L	60	AB-22	PRF	80	
25A	COMPUTER	WD-V	21	RB	40	CMU-S	PNT-L	60	AB-22	PRF	80	M, JJ
25B	BREAK	WD-V	21	RB	40	CMU-S	PNT-L	60	AB-22/GB	PRF/PNT-L	80/62	G
25C	STUDY	WD-V	21	RB	40	CMU-S	PNT-L	60	AB-22	PRF	80	M
25D	STAFF	WD-V	21	RB	40	CMU-S	PNT-L	60	AB-22	PRF	80	K
25E	CHANGING ROOM	PT	4	PTB	6	CMU-S	PNT-L/PT	60/4,5	PLAS/GB	PRF/PNT-E	*/62	O
40	NATATORIUM	CT/ST/CONC-STN	7,8,9,10/11/5 4	CMU-G	53	CMU-GF	PRF/GLT	50/15	EXPD/AP	SC-E/PRF	62/91,92,93	F, H, I, N
40A	OFFICE	PT	4	PTB	6	CMU-S	PNT-E	60	AB-22MR	PRF	81	
40B	FIRST AID	PT	4	PTB	6	CMU-S	PNT-E	60	AB-22MR	PRF	81	G
40C	CHANGING	PT	4	PTB	6	CMU	PT/PNT-E/GLT	4,5/60/15	PLAS	PRF	*	C
40D	CHANGING	PT	4	PTB	6	CMU	PT/PNT-E/GLT	4,5/60/15	PLAS	PRF	*	C
40F	STORAGE	CONC/SC-PS	*	N	*	CMU/CONC	PNT-E	60	EXPD	N	*	
40J	WET CUSTODIAL	CONC/SC-PS	*	RB	41	CMU	PNT-L	60	EXPD	N	*	
40S	OUTDOOR STORAGE	CONC/SC-PS	*	N	*	CONC	PNT-E	60	EXPD	N	*	
41	WOMEN'S LOCKER	PT	3,4	PTB	6	CMU-GF	PRF/PT/GLT	50,52/4,5/15	GB/AB-22MR	PNT-L/PRF	61,62/81	C, J, P
41S	WOMEN'S SHOWER	PT	3	PTB	6	CMU	PT/GLT	4,5/15	PLAS	PRF	*	C, J
41T	WOMEN'S TOILET	PT	3	PTB	6	CMU-GF	PRF/PT/GLT	50/4,5/15	GB-WR	PNT-E	62	A, C, J
42	COMBATIVES	WD-A	*	VRB	*	CMU-S	PNT-L	60	AB-22/EXPD	PRF/PNT-L	80/69	Q
44	RACQUETBALL COURT	WD-R	*	VRB	*	CMU	PWP	*	GB	PNT-E	62	
45	CORRIDOR	CONC/SC-PS	*	RB	41	CMU	PNT-L	60	AB-22	PRF	80	
45A	CRS STORAGE/ MAINTENANCE	CONC/SC-PS	*	N	*	CMU	PNT-E	60	EXPD	N	*	
45B	POOL EQUIPMENT	CONC/SC-PS	*	N	*	CMU	PNT-E	60	EXPD	N	*	
45C	POOL SERVICE	CONC/SC-PS	*	N	*	CONC	PNT-E	60	EXPD	N	*	
46	RACQUETBALL COURT	WD-R	*	VRB	*	CMU	PWP	*	GB	PNT-E	62	
47	MEN'S LOCKER	PT	3,4	PTB	6	CMU-GF	PRF/PT/GLT	50,52/4,5/15	GB/AB-22MR	PNT-L/PRF	61,62/81	C, J, P
47S	MEN'S SHOWER	PT	3	PTB	6	CMU	PT/GLT	4,5/15	PLAS	PRF	*	C, J
47T	MEN'S TOILET	PT	3	PTB	6	CMU-GF	PRF/PT/GLT	50/4,5/15	GB-WR	PNT-E	62	A, C, J
55	MAC GYM	SSF-T	108	CMU-GF	52	CMU-GF/GB-HI/WD	PRF/PNT-L/PRF	51,52/60,63/102	EXPD	PNT-WDF	62	I, R, S, X
60	RECEPTION	CPT-T	30	RB	40	CMU-S	PNT-L	59,60	AB-22	PRF	80	G, U, Z
60A	TRAINING ROOM	VET	20	RB	41	CMU-S	PNT-L	60	AB-22	PRF	80	G, Z
60B	EXAM	VET	20	RB	41	CMU-S	PNT-L	60	AB-22	PRF	80	G
60C	HYDROTHERAPY	PT	3	PTB	6	CMU-S	PNT-L/PT	60/4,5	AB-22	PRF	80	D,G, Z
65	GENERAL STORAGE	CONC/SC-PS	*	RB	41	CMU	PNT-L	60	EXPD	N	*	
65A	MAC STORAGE	CONC/SC-PS	*	RB	41	CMU	PNT-L	60	EXPD	N	*	
75	ROCK CLIMBING	SSF-T	109	RB	41	PRF	PRF	-	EXPD	PNT-E	62	
75A	SERVICE COUNTER	SSF-T	109	RB	41	CMU-S	PNT-L	60	GB	PNT-L	62	G
75B	CLIMB SEATING	PT	1	PTB/CMU-GF	2/52	CMU-GF	PRF	50	GB/AB-22	PNT-L/PRF	62/80	F, Q, KK
85	MECHANICAL	CONC/SC-PS	*	RB	41	CMU	PNT-L	60	EXPD	N	*	
99A	STAIR #1	PT	1	CMU-GF/PTB	52/2	CMU-GF	PRF	50	GB	PNT-L	62	V, LL
99B	STAIR #2	CONC/SC-PS	*	RB	41	CONC	PNT-L	60	EXPD	PNT-L	62	W
99C	STAIR #3	CONC/SC-PS	*	RB	41	CONC	PNT-L	60	EXPD	PNT-L	62	W
99D	STAIR #4	CONC/SC-PS	*	RB	41	CONC	PNT-L	60	EXPD	PNT-L	62	W
99E	STAIR #6	CONC/SC-PS	*	RB	41	CONC	PNT-L	60	EXPD	PNT-L	62	W
99F	STAIR #5	CONC/SC-PS	*	RB	41	CONC	PNT-L	60	EXPD	PNT-L	62	W
LEVEL 1												
100	LOBBY	PT/ST	1/11,14	CMU-GF/PTB	52/2	CMU-GF	PRF	50,51	AB-22/GB	PRF/PNT-L	80/62,67	F, R, GG
100A	VESTIBULE	CPT-T	31	N	*	GL	*	*	MTL	PRF	*	
100B	LOBBY	PT/ST	1/11,14	CMU-GF/PTB	52/2	GB/MTL	PNT-L/PRF	67/*	AB-22/GB	PRF/PNT-L	80/62	F, R
100C	CONCOURSE	PT/ST	1/11,14	CMU-GF/PTB	52/2	CMU-GF	PRF	50,51	AB-22/GB	PRF/PNT-L	80/62, 64, 67	F, R, GG
100D	CONCOURSE	PT/ST	1/11,14	CMU-GF/PTB	52/2	CMU-GF/GB/MTL	PRF/PNT-L/PRF	50,51/67/*	AB-22/GB	PRF/PNT-L	80/62, 64, 67	F, R, GG
100E	DATA	CONC/SC-PS	*	RB	41	GB	PNT-L	60	EXPD	N	*	
100F	CORRIDOR	PT	1	PTB	2	GB/GL	PNT-L/PRF/GLT	60/*/15	AB-22/GB	PRF/PNT-L	80/62, 64, 67	GG, N
100G	CORRIDOR	CONC/SC-PS	*	RB	41	GB	PNT-L	60	AB-22	PRF	80	
100H	VESTIBULE	CPT-T	31	CMU-GF	52	CONC/GL	PNT-L/*	60/*	GB	PNT-E	62	
100J	VESTIBULE	CPT-T	31	PTB	2	GL/MTL	PRF/PRF	*/*	GB	PNT-E	62	
100L	WOMEN'S TOILET	PT	1	PT	1	GB-WR	PT/GLT/PNT-L	1,2/15/60	GB-WR	PNT-L	62	A, HH, LL
100M	MEN'S TOILET	PT	1	PT	1	GB-WR	PT/GLT/PNT-L	1,2/15/60	GB-WR	PNT-L	62	A, HH, LL
100N	VESTIBULE	CPT-T	31	PTB	2	CONC/MTL	PNT-L/PRF	60/*	MTL	PRF	*	
100P	WET CUSTODIAL	CONC/SC-PS	*	RB	41	GB-WR	PNT-E/FRP	60/*	EXPD	N	*	L
100Q	RETAIL STORAGE	CONC/SC-PS	*	RB	41	GB	PNT-L	60	EXPD	N	*	
101	CONTROL	PT	1	PTB	2	GB	PNT-L	67	AB-22/GB	PRF/PNT-L	80/62, 67	A, GG, LL
104	ELECT.	CONC/SC-PS	*	RB	41	GB	PNT-L	60	EXPD	N	*	
105	JUICE BAR	PT	1	PTB	2	GB	PT	4	AB-22	PRF	80	LL
106	OFFICE	CPT-T	30	RB	40	GB	PNT-L	60	AB-22	PRF	80	
109	OFFICE	CPT-T	30	RB	40	GB	PNT-L	60	AB-22	PRF	80	
111	QUEUING AREA	PT/ST/CPT-T	1/14/30	PTB/CMU-GF	2/52	GB/CMU-GF	PNT-L/PRF	60,64/50	AB-22/GB/WD-T	PRF/PNT-L/PRF	82/62/*	CC
112	TELLERS	PT/ST/CPT-T	1/14/30	PTB	2	GB	PNT-L	56,60	GB/WD-T	PNT-L/PRF	62/*	CC
113	LOUNGE	PT/ST/CPT-T	1/14/30	PTB/CMU-GF	2/52	GB/CMU-GF	PNT-L/PRF	56,60, 64/50	WD-T/GB/AB-22	PRF/PNT-L/PRF	*62/82	CC
114	OFFICE 1	PT/ST/CPT-T	1/14/30	PTB	2	GB/CMU-GF	PNT-L/PRF	60/50	AB-22	PRF	80	CC
115	OFFICE 2	PT/ST/CPT-T	1/14/30	PTB	2	GB/CMU-GF	PNT-L/PRF	60,62/50	AB-22	PRF	80	CC
115S	DRY CUSTODIAL	CONC/SC-PS	*	RB	41	GB	PNT-L	60	EXPD	N	*	
116	DATA / ELECTRICAL	CONC/SC-PS	*	RB	41	GB	PNT-L	60	EXPD	N	*	
117	CAFE	PT	1	PT	4	GB	PT/PNT-L	4/67	GB/WD-T	PNT-L/PRF	67/*	LL
117A	KITCHEN	PT	1	PT	4	GB	PT	4	AB-22MR	PRF	81	LL
120	MECHANICAL	CONC/SC-PS	*	RB	41	GB	PNT-L	60	EXPD	N	*	
145	CLASSROOM	VET	20	RB	40	CMU-S/GB	PNT-L	60	AB-22	PRF	80	
145A	STORAGE	CONC/SC-PS	*	N	*	CONC	PNT-L	60	AB-22	PRF	80	
150	LOBBY	CONC-ST	54	CMU-GF	52	CMU-GF	PRF	50,51	EXPD/GB	PNT-E/PNT-E	62/62	
155	OUTDOOR RECREATION STORAGE	CONC-BF	*	RB	41	CMU	PNT-L	60	EXPD	N	*	
155A	CONTROL DESK	CONC-ST	54	CMU-GF	52	CMU-GF	PRF	50	GB/WD-T	PNT-L/*	62/*	G
155B	OFFICE	CPT-T	30	RB	40	CMU	PNT-L	60	AB-22	PRF	80	
155C	OFFICE	CPT-T	30	RB	40	CMU	PNT-L	60	AB-22	PRF	80	
155D	STORAGE-01	CONC/SC-PS	*	N	*	CMU/GB/CHL	PNT-L	60	EXPD	N	*	
155E	STORAGE-02	CONC/SC-PS	*	N	*	GB/CHL	PNT-L	60	EXPD	N	*	
155F	BIKE	CONC/SC-PS	*	RB	41	GB	PNT-L	60	EXPD	PNT-L	62	
155G	REPAIR	CONC/SC-PS	*	RB	41	CMU	PNT-L	60	EXPD	PNT-L	62	
155H	OFFICE	CPT-T	30	RB	40	CMU	PNT-L	60	AB-22	PRF	80	
155J	WORK	CONC/SC-PS	*	RB	40	CMU	PNT-L	60	EXPD	PNT-L	62	G
155K	TOILET	PT	1	PT	1	CMU	PNT-L/PT/GLT	60/1,2/15	GB-WR	PNT-E	62	HH
155L	LAUNDRY	CONC/SC-PS	*	RB	41	CMU	PNT-L	60	AB-22MR	PRF	81	G
155M	PREP	CONC/SC-PS	*	RB	41	CMU	PNT-L	60	AB-22MR	PRF	81	G
197	CHEMICAL STORAGE	CONC/SC-PS	*	N	*	CMU/CONC	PNT-L	60	EXPD	N	*	
198	GROUNDS MAINT.	CONC/SC-PS	*	RB	41	GB	PNT-L	60	EXPD	N	*	
198B	CHEMICAL	CONC/SC-PS	*	N	*	CMU/CONC	PNT-L	60	EXPD	N	*	
199A	STAIR #1	PT	1	PTB	2	*	PNT-L	60	GB	PNT-L	62	V, LL
199B	STAIR #2	CONC/SC-PS	*	RB	41	CONC	PNT-L	60	EXPD	PNT-L	62	W
199C	STAIR #3	CONC/SC-PS	*	RB	41	CONC	PNT-L	60	EXPD	PNT-L	62	W
199D	STAIR #4	CONC/SC-PS	*	RB	41	CONC	PNT-L	60	EXPD	PNT-L	62	W
199E	STAIR #5	CONC/SC-PS	*	RB	41	CONC	PNT-L	60	EXPD	PNT-L	62	W
199F	STAIR #6	CONC/SC-PS	*	RB	41	CONC	PNT-L	60	GB	PNT-L	62	W

FINISH SCHEDULE

NUMBER	ROOM NAME	FLOOR FINISH	FLOOR COLOR	BASE MATERIAL	BASE COLOR	WALL MATERIAL	WALL FINISH	WALL COLOR	CEILING MATERIAL	CEILING FINISH	CEILING COLOR	REMARKS
LEVEL 2												
200	LOBBY	PT/ST	1/11,14	PTB	2	GB	PNT-L	60	AB-22/GB	PRF/PNT-L	80/62	F
200M	TOILET	PT	3	PTB	6	GB	PNT-L/PT/GLT	60/4,5/15	GB	PNT-L	62	A, C
200P	WET CUSTODIAL	CONC/SC-PS	*	N	*	GB-WR	PNT-E/FRP	60	EXPD	N	*	L
201E	DATA	CONC/SC-PS	*	RB	41	GB	PNT-L	60	EXPD	N	*	
201F	ELECTRICAL	CONC/SC-PS	*	RB	41	GB	PNT-L	60	EXPD	N	*	
210	CORRIDOR	PT/ST	1/11,14	PTB/CMU-GF	2/52	CMU-GF/MTL/GL/GB	PRF/PRF/PRF/PNT-L	51/*/*/60	AB-22/GB	PRF/PNT-L	80/62	F, R
212	CHER AMI	PT	1	PTB/CMU-GF	2/52	CMU-GF/GL	PRF/PRF	51/*	AB-22/GB	PRF/PNT-L	80/62	F, R
215	3 COURT GYMNASIUM	WD-P	*	VRB/CMU-GF	*/52	CMU-GF/MTL/GB/WD	PRF/PRF/PNT-L/STN	50/*/60,67,57,58,59/102	EXPD	PNT-WDF	62	I, Q, R, AA
215A	GYM. STORAGE	CONC/SC-PS	*	N	*	CONC/CMU	PNT-L	60	EXPD	N	*	N
220	CORRIDOR	PT/ST	1/11,14	PTB/CMU-GF	2/52	CMU-GF/GB	PRF/PNT-L/GLT	51/60/15	AB-22/GB	PRF/PNT-L	80/62	F, R
222	GYM. STORAGE	CONC/SC-PS	*	RB	41	GB	PNT-L	60	EXPD	N	*	
234	MEN'S TOILET	PT	1	PT	1	GB-WR	PT/GLT/PNT-L	1,2/15/60	GB-WR	PNT-L	62	A, HH, LL
235	FITNESS CENTER	SSF-T	103,104,105	SSF-T	103,104,105	CMU-GF/GB/WD	PRF/PNT-L/STN	50,52/60,67/102	AB-22/GB	PRF/PNT-L	80/62	F, R, DD
235A	QUIET FITNESS	SSF-T	104	RB	41	GB/MTL/TC	PNT-L/PRF/PRF	60/*/*	AB-22/GB	PRF/PNT-L	80/62	R
235B	STORAGE	CONC/SC-PS	*	N	*	GB/CONC	PNT-L	60/60	EXPD	N	*	
235C	WET CUSTODIAL	CONC/SC-PS	*	N	*	GB-WR	PNT-E/FRP	60/*	EXPD	N	*	L
235D	STORAGE	CONC/SC-PS	*	RB	41	GB	PNT-L	60	EXPD	N	*	
236	WOMEN'S TOILET	PT	1	PT	1	GB-WR	PT/GLT/PNT-L	1,2/15/60	GB-WR	PNT-L	62	A, HH, LL
240	RECEPTION	WD-V	21	RB	40	GB	PNT-L	60,61	AB-22	PRF	80	G
240A	OFFICE	CPT-T	30	RB	40	GB	PNT-L	60	AB-22	PRF	80	
240B	OFFICE	CPT-T	30	RB	40	GB	PNT-L	60	AB-22	PRF	80	
240C	OFFICE	CPT-T	30	RB	40	GB	PNT-L	60	AB-22	PRF	80	
240D	WORK ROOM	CPT-T	30	RB	40	GB	PNT-L	60	AB-22	PRF	80	
240E	WORK ROOM	WD-V	21	RB	40	GB	PNT-L	60	AB-22	PRF	80	
240F	MASSAGE	WD-V	21	RB	40	GB	WC-V/GLT	90/15	AB-22	PRF	80	E
240G	PT	WD-V	21	RB	40	GB	PNT-L	60	AB-22	PRF	80	
240H	HALLWAY	WD-V	21	RB	40	GB	PNT-L	60	AB-22	PRF	80	
250	CORRIDOR	PT	1	PTB	2	GB/WD	PNT-L/PRF	57,58,59,67/102	GB	PNT-L	60,57,58,59	R, GG
250A	CORRIDOR	PT	1	PTB	2	GB	PNT-L	60	AB-22/GB	PRF/PNT-L	80/62	
255	EXERCISE ROOM 1	WD-A	*	VRB	*	GB	PNT-L	60,67,59	AB-22/GB	PRF/PNT-L	80/60, 67	R, GG
265	EXERCISE ROOM 2	WD-A	*	VRB	*	GB	PNT-L	60, 67,57	AB-22/GB	PRF/PNT-L	80/60, 67	R, GG
275	EXERCISE ROOM 4	WD-A	*	VRB	*	GB	PNT-L	60	AB-22/GB	PRF/PNT-L	80/60,69	R, GG
285	EXERCISE ROOM 3	WD-A	*	VRB	*	GB	PNT-L	60, 67, 68	AB-22/GB	PRF/PNT-L	80/60, 67	R, GG
299A	STAIR #1	PT	1	PTB	2	CONC	PNT-L	60	GB	PNT-L	62	V, LL
299B	STAIR #2	CONC/SC-PS	*	RB	41	CONC	PNT-L	60	EXPD	PNT-L	62	W
299C	STAIR #3	CONC/SC-PS	*	RB	41	CONC	PNT-L	60	EXPD	PNT-L	62	W
299D	STAIR #4	CONC/SC-PS	*	RB	41	CONC	PNT-L	60	EXPD	PNT-L	62	W
299E	STAIR #5	CONC/SC-PS	*	RB	41	CONC	PNT-L	60	EXPD	PNT-L	62	W
299F	STAIR #6	CONC/SC-PS	*	RB	41	CONC	PNT-L	60	EXPD	PNT-L	62	W
LEVEL 3												
300	LOBBY / VENDING	PT/ST	1/11,14	CMU-GF/PTB	52/2	GB	PNT-L/GLT	60/15	AB-22/GB	PRF/PNT-L	80/62	F, N
300H	TOILET	PT	3	PTB	6	GB	PNT-L/PT/GLT	60/4,5/15	GB	PNT-L	62	C
300K	WET CUSTODIAL	CONC/SC-PS	*	N	*	GB-WR	PNT-E/FRP	60/*	EXPD	N	*	L
300N	TOILET	PT	3	PTB	6	GB	PNT-L/PT/GLT	60/4,5/15	GB	PNT-L	62	C
301D	DATA	CONC/SC-PS	*	RB	41	GB	PNT-L	60	EXPD	N	*	
301F	ELECTRICAL	CONC/SC-PS	*	RB	41	GB	PNT-L	60	EXPD	N	*	
301G	ELEVATOR EQUIPMENT	CONC/SC-PS	*	RB	41	GB	PNT-L	60	EXPD	N	*	
305	STRETCHING	SSF-P	106	RB	41	GB	PNT-L	60	AB-22/GB	PRF/PNT-L	80/62	
307	WET CUSTODIAL	CONC/SC-PS	*	N	*	GB	PNT-L/PWP	60/*	EXPD	N	*	
310	FITNESS	SSF-P	106	RB	41	GB	PNT-L	60	EXPD/GB	PNT-WDF	62	I
315	JOGGING TRACK	SSF-P	106,107	RB	41	GB	PNT-L	60	EXPD/GB	PNT-WDF	62	I, BB
315A	STORAGE	PT	4	PTB	6	GB	PNT-L/PT	60/4,5	GB-WR	PNT-E	62	C
320	FITNESS	SSF-P	106	RB	41	GB	PNT-L	60	EXPD	PNT-E	62	
340	LOBBY	CPT-T	30	RB	40	GB	PNT-L	60	AB-22/GB	PRF/PNT-L	80/62	
340C	CONFERENCE ROOM	CPT-T	30	RB	40	GB	PNT-L	60	AB-22/GB	PRF/PNT-L	80/62	
340F	STAFF	CPT-T	30	RB	40	GB	PNT-L	60	AB-22	PRF	80	
341	OFFICE	CPT-T	30	RB	40	GB	PNT-L	60	AB-22	PRF	80	
343	OFFICE	CPT-T	30	RB	40	GB	PNT-L	60	AB-22	PRF	80	
345	OFFICE	CPT-T	30	RB	40	GB	PNT-L	60	AB-22	PRF	80	
347	OFFICE	CPT-T	30	RB	40	GB	PNT-L	60	AB-22	PRF	80	
349	OFFICE	CPT-T	30	RB	40	GB	PNT-L	60	AB-22	PRF	80	
350	BREAK ROOM	WD-V	21	RB	40	GB	PNT-L	60	AB-22	PRF	80	
351	OFFICE	CPT-T	30	RB	40	GB	PNT-L	60	AB-22	PRF	80	G
353	HALLWAY	CPT-T	30	RB	40	GB	PNT-L	60	AB-22	PRF	80	
355	DIRECTOR OFFICE	CPT-T	30	RB	40	GB	PNT-L	60	AB-22	PRF	80	
360	WORK ROOM	CPT-T	30	RB	40	GB	PNT-L	60	AB-22	PRF	80	
360A	STORAGE	CPT-T	30	RB	40	GB	PNT-L	60	AB-22	PRF	80	G
370	CORRIDOR	SSF-P	106	RB	41	GB	PNT-L	60	AB-22	PRF	80	
399A	STAIR #1	PT	1	PTB	2	CONC	PNT-L	60	GB	PNT-L	60	V, LL
399B	STAIR #2	CONC/SC-PS	*	RB	41	CONC	PNT-L	60	EXPD	PNT-L	60	W
399C	STAIR #3	CONC/SC-PS	*	RB	41	CONC	PNT-L	60	EXPD	PNT-L	60	W
399D	STAIR #4	CONC/SC-PS	*	RB	41	CONC	PNT-L	60	EXPD	PNT-L	60	W
399E	STAIR #5	CONC/SC-PS	*	RB	41	CONC	PNT-L	60	EXPD	PNT-L	60	W
399F	STAIR #6	CONC/SC-PS	*	RB	41	CONC	PNT-L	60	EXPD	PNT-L	60	W
Roof 4												
400	PENTHOUSE	CONC/SC-PS	*	RB	41	GB	PNT-L	60	EXPD	N	*	
499	STAIR #4	CONC/SC-PS	*	N	*	GB	PNT-L	60	EXPD	N	*	

50 METER POOL - ALTERNATE 1 FINISH SCHEDULE

NUMBER	ROOM NAME	FLOOR FINISH	FLOOR COLOR	BASE MATERIAL	BASE COLOR	WALL MATERIAL	WALL FINISH	WALL COLOR	CEILING MATERIAL	CEILING FINISH	CEILING COLOR	REMARKS
LOWER LEVEL												
118	MEN'S TOILET	PT	3	PTB	6	CMU-GF	*/PT/GLT	50/4,5/15	GB-WR	PNT-E	62	A, C
119	MEN'S LOCKER ROOM	PT	3,4	PTB	6	CMU-GF	*/PT/GLT	50,52/4,5/15	GB/AB-22MR	PNT-L/PRF	61, 62/81	C, J, P
121	MEN'S SHOWER	PT	3	PTB	6	CMU	PT/GLT	4/15	PLAS	PRF	*	C
125	WOMEN'S TOILET	PT	3	PTB	6	CMU-GF	*/PT/GLT	50/4,5/15	GB-WR	PNT-E	62	A, C
126	WOMEN'S LOCKER ROOM	PT	3,4	PTB	6	CMU-GF	*/PT/GLT	50,52/4,5/15	GB/AB-22MR	PNT-L/PRF	61, 62/81	C, J, P
127	WOMEN'S SHOWER	PT	3	PTB	6	CMU	PT/GLT	4/15	PLAS	PRF	*	C
128	NATATORIUM STORAGE	CONC/SC-PS	*	N	*	CMU	PNT-L	60	EXPD	N	*	
129	POOL MECHANICAL ROOM	CONC/SC-PS	*	N	*	CMU	PNT-L	60	EXPD	N	*	
130	CRS STORAGE	CONC/SC-PS	*	N	*	CMU	PNT-L	60	EXPD	N	*	
131	NATATORIUM MECHANICAL ROOM	CONC/SC-PS	*	N	*	CMU	PNT-L	60	EXPD	N	*	
132	NATATORIUM/ 50 METER POOL	CT/ST/CONC-STN	7,8,9,10/11/5 4	CMU-G	53	CMU-GF	PRF	50	EXPD/AP	SC-E/PRF	62/91,92,93	F, H, I

FINISH SCHEDULE - ALTERNATE #3

NUMBER	ROOM NAME	FLOOR FINISH	FLOOR COLOR	BASE MATERIAL	BASE COLOR	WALL MATERIAL	WALL FINISH	WALL COLOR	CEILING MATERIAL	CEILING FINISH	CEILING COLOR	REMARKS
LEVEL 1												
100K	VESTIBULE	PT	1	PTB	2	CMU/GL	PNT-L/PRF	60/*	GB/AB-22	PNT-L/PRF	62/80	
LEVEL 3												
300A	VESTIBULE	PT	1	PTB	2	CMU/GL	PNT-L/PRF	60/*	GB/AB-22	PNT-L/PRF	62/80	

TRANSITION SCHEDULE

TRANSITIONS	MANUFACTURER	STYLE	FINISH
CPT TO PT	SCHULTER	RENO-TK	BRUSHED STAINLESS STEEL
CPT TO CONC	JOHNSONITE	CTA-15-J	CABERNET
CPT TO VET	JOHNSONITE	CTA-15-H	CABERNET
PT TO CONC	SCHULTER	RENO RAMP - 2.5"	BRUSHED STAINLESS STEEL
PT TP VET	SCHULTER	RENO-U	BRUSHED STAINLESS STEEL
PT TO SSF	SCHULTER	RENO-TK	BRUSHED STAINLESS STEEL
PT TO WD	SEE SPEC	PER WD MANUFACTURER	
ALL TRANSITION HEIGHTS TO BE FIELD VERIFIED BY INSTALLER			

MHTN ARCHITECTS
MHTN Architects, Inc.
420 East South Temple
Suite 100
Salt Lake City, Utah 84111
Telephone (801) 595-6700
Telefax (801) 595-6717
www.mhtn.com

Hastings+Chivetta
ARCHITECTURE • PLANNING • ENGINEERING
622 Emerson, Suite 200
St. Louis, MO 63141
Tel. 314.863.5717
Fax. 314.863.2823
www.hastingschivetta.com

UNIVERSITY OF UTAH
STUDENT LIFE CENTER
1836 E. BALLIF ROAD
SALT LAKE CITY, UTAH 84112

SEAL

MHTN PROJECT NO. PROJ 2010562
DRAWN BY: Author CHECKED BY: Checker

ISSUED:

NO.	DATE	DESCRIPTION

CONTRACTOR TO VERIFY DRAWINGS IN FIELD USE REFLECT LAST REVISION DATE.

NO.	DATE	DESCRIPTION
1	05-28-2013	Addendum #1

SHEET NAME
FINISH & COLOR SCHEDULES

BID DOCUMENTS
May 28, 2013

SHEET NUMBER
AE605

C:\Users\smithlmes\Documents_Projects\2995.00 Utah Student Center-2012_mhtlmes.rvt
5/29/2013 8:21:29 AM

COLOR + MATERIAL LEGEND

#	MANUFACTURER	TYPE / FINISH	NUMBER	COLOR	SIZE	NOTES
PORCELAIN TILE (PT)						
1	DAL TILE	SAN MICHELE	S141	DORATO - VEIN CUT	12" X 24" X 3/8"	GROUT: LATICRETE 24 NATURAL GRAY
2	DAL TILE	SAN MICHELE	P43C9	DORATO	3" X 12"	GROUT: LATICRETE 24 NATURAL GRAY
3	FLORIDA TILE	QUARTEZ - 36 PIECE MOSAIC(2 X 2)	FT126003/M122	CORNERSTONE	12" X 12" (2" MOSAIC)	GROUT: LATICRETE 24 NATURAL GRAY
4	FLORIDA TILE	QUARTEZ - FIREPLACE MOSAIC	FT126003/FP12	CORNERSTONE	12" X 12"	GROUT: LATICRETE 24 NATURAL GRAY
5	FLORIDA TILE	QUARTEZ - BULLNOSE	P43N9	CORNERSTONE	3" X 12"	GROUT: LATICRETE 24 NATURAL GRAY
6	FLORIDA TILE	QUARTEZ - COVE BASE	P36C9	CORNERSTONE	6" X 12"	GROUT: LATICRETE 24 NATURAL GRAY
CERAMIC TILE (CT)						
7	AMERICAN OLEAN	UNGLAZED MOSAIC TILE	A25	ICE WHITE	2" X 2"	GROUT: LATICRETE 18 SAUTERNE
8	AMERICAN OLEAN	UNGLAZED MOSAIC TILE	A24	ALMOND	2" X 2"	GROUT: LATICRETE 18 SAUTERNE
9	AMERICAN OLEAN	UNGLAZED MOSAIC TILE	A80	CHILI PEPPER	2" X 2"	GROUT: LATICRETE 54 DUSTY ROSE
10	AMERICAN OLEAN	UNGLAZED MOSAIC TILE	A42	CINNABAR	2" X 2"	GROUT: LATICRETE 46 QUARRY RED
STONE TILE (ST)						
11	ROCA	ROCK-ART JULIANO MOSAIC STONE	FMV1997 621	TEJA	12" X 12"	CONTACT: JENNIFER COX 1-314-517-7584 GROUT: LATICRETE 24 NATURAL GRAY
12	ROCA	ROCK-ART TEODOSIO BORDER	FMV19JE621	TEJA	3" X 12"	CONTACT: JENNIFER COX 1-314-517-7584 GROUT: LATICRETE 24 NATURAL GRAY
14	GLOBAL GRANITE & MARBLE	LIMESTONE	N/A	VOGUE BROWN BRUSHED	3" X	CONTACT: JENNIFER COX 1-314-517-7584 GROUT: LATICRETE 24 NATURAL GRAY
GLASS TILE (GLT)						
15	DAL TILE	SONTERRA COLLECTION	SR7811M51P	SR78 TERRACOTTA	1" X 1"(SHEETS 12" X 12")	GROUT: LATICRETE 46 QUARRY RED
VINYL ENHANCED TILE (VET)						
20	AZROCK	AZTERRA	AT101	MARBLED	12" X 12" X 1/8"	
WOOD VINYL (WD-V)						
21	MANNINGTON	NATURE'S PATHS	N/A	HERITAGE CHERRY NATURAL	6" X 36"	
CARPET TILE (CPT-T)						
30	TANDUS	ABSTRACTION	03590	PRIMARY RED 29003	24" X 24"	INSTALL RANDOM
31	LEE'S CARPET	STEP UP	D0763/MM013	524 SUNDANCE	24" X 24"	MONOLITHIC
RUBBER BASE (RB)						
40	JOHNSONITE	RUBBER BASE - 4" COVE	15	CABERNET	4" H	
41	JOHNSONITE	RUBBER BASE - 4" COVE	186	MOUSI	4" H	
42	JOHNSONITE	RUBBER BASE - 4" STRAIGHT	40	BLACK	4" H	
CONCRETE MASONRY UNIT-GROUND FACE (CMU-GF)						
50	TRENWYTH	TRENDSTONE	N/A	SOUTHWEST GOLD		LIGHTEST
51	TRENWYTH	TRENDSTONE	N/A	DESERT YELLOW		MEDIUM
52	TRENWYTH	TRENDSTONE	N/A	BLACK MOUNTAIN		DARK
CONCRTRE MASONRY UNIT -GLAZED BLOCK (CMU-G)						
53	TRENWTH	ASTA GLAZE	N/A	PEANUT BRITTLE		NATATORIUM
CONCRETE SYSTEM - STAINED (CONC-ST)						
54	SCOFIELD SYSTEMS	LITHOCHROME - FRACTURED SLATE TEXTURE	AYR-29/A29	TERRA COTTA/TERRA COTTA		FRAC
PAINT (PNT)						
56	BENJAMIN MOORE	REFER TO SPECIFICATIONS	2080-10	RASBERRY TRUFFLE		
57	SHERWIN WILLIAMS	REFER TO SPECIFICATIONS	SW 6682	JUNE DAY		ACCENT - YELLOW
58	SHERWIN WILLIAMS	REFER TO SPECIFICATIONS	SW 6649	TANGO		ACCENT - LT. ORANGE
59	SHERWIN WILLIAMS	REFER TO SPECIFICATIONS	SW 6628	ROBUST ORANGE		ACCENT - DK. ORANGE
60	PITTSBURGH PAINTS	REFER TO SPECIFICATIONS	511-3	ABBEY WHITE		GENERAL WALL PAINT
61	PITTSBURGH PAINTS	REFER TO SPECIFICATIONS	329-7	BAKED BEAN		ACCENT
62	PITTSBURGH PAINTS	REFER TO SPECIFICATIONS	518-1	DELICATE WHITE		CEILING
63	SHERWIN WILLIAMS	REFER TO SPECIFICATIONS	SW 6367	VIVA GOLD		ACCENT - MAC GYM
64	PITTSBURGH PAINTS	REFER TO SPECIFICATIONS	SW 6120	BELIEVABLE BUFF		ACCENT - SOFFITS
65	PITTSBURGH PAINTS	REFER TO SPECIFICATIONS	518-4	FLAGSTONE		DOOR FRAMES
66	PITTSBURGH PAINTS	REFER TO SPECIFICATIONS	530-6	GIBALTAR GRAY		RAILING
67	PITTSBURGH PAINTS	REFER TO SPECIFICATIONS	231-7	RUM PUNCH		ACCENT - RED
68	SHERWIN WILLIAMS	REFER TO SPECIFICATIONS	SW 6557	WOOD VIOLET		ACCENT - PURPLE
69	PITTSBURGH PAINTS	REFER TO SPECIFICATIONS	518-7	BLACK MAGIC		BLACK
PLASTIC LAMINATE (PLAM)						
70	LAMINART	PLASTIC LAMINATE	7901-VT	ROMAN GOLD	FINISH: OYSTER SHIELD	
71	FORMICA	PLASTIC LAMINATE - DECO METAL	4748	VERTICAL CORRAGATED		
72	NEVAMAR	PLASTIC LAMINATE	W8371T	GRAND ISLE MAPLE		
73	FORMICA	PLASTIC LAMINATE	845-58	SPECTRUM RED		
74	WILSONART	PLASTIC LAMINATE	D354-60	[illegible]		
78	TBD SELECTED BY ARCHITECT	PLASTIC LAMINATE		TBD SELECTED BY ARCHITECT		
79	PONITE	PLASTIC LAMINATE	SE101	BLACK	AV CABINETS	
QUARTZ (QTZ) & SOLID POLYMER SURFACE (SPS)						
75	CAMBRIA	QUARTZ	0820	YORKSHIRE	3 CM	
76	CAMBRIA	QUARTZ	4210	CARDIGAN RED	3 CM	
77	WILSONART	SOLID SURFACE	9145CY	CRYSTAL CHAMPAGNE	13 MM	
ACOUSTICAL BOARD CEILING (AB-22)						
80	ARMSTRONG	DUNE - ANGLED TEGULAR	1774	WHITE	2 X 2	GRID: - 15/16" PRELUDE - WHITE
81	ARMSTRONG	CERAMAGUARD - FINE FISSURED	607	WHITE	2 X 2	GRID: 15/16" A; PRELUDE PLUS
82	ARMSTRONG	FINE FISSURED	1728	TECH BLACK	2 X 2	GRID: 15/16" PRELUDE - TECH BLACK
WALLCOVERING - VINYL (WCV)						
89	WOLF GORDON	BARBARIES BARBAROSSA	G8181291	2403	54" LY	
90	DESIGNTEX	DNA - DIGITAL DURAPRANE	DW11000	N/A	54" LY	DIGITAL IMAGE PRINTING
ACOUSTICAL PANEL (AP)						
91	CARNEGIE	METEOR	6427	726	56" LY	UNBACKED
92	CARNEGIE	METEOR	6427	719	56" LY	UNBACKED
93	CARNEGIE	METEOR	6427	718	56" LY	UNBACKED
[illegible]						
99	3-FORM	VARIA ECORESIN - WOOD	N/A	HIGHRES WENGE	3/8" THICK - FINISH: PATINA	
100	3-FORM	ONYX - VEIN CUT	N/A	SAND	3/8" THICK	
101	3-FORM	VARIA ECORESIN - ORGANICS	N/A	CURRENT FIREWORK	3/8" THICK - FINISH: SANDSTONE	
WOOD DOORS (WD)						
102	EGGERS INDUSTRIES	PLAIN SLICE CHERRY	N2367-09	01 CLEAR		
SPORTS FLOOR (SSF-T/SSF-P)						
103	MONDO FLOOR	G SPORT IMPACT	11 554	CUSTOM RED	10 MM THICK	
104	MONDO FLOOR	SPORT IMPACT	062	SAND	10 MM THICK	
105	MONDO FLOOR	SPORT IMPACT	011	MEDIUM GREY	10 MM THICK	
108	MONDO FLOOR	RAMFLEX	G707	GREY	10 MM THICK	
TRACK						
106	MONDO FLOOR	SPORTFLEX M	P31	MEDIUM GREY	10 MM THICK	
107	MONDO FLOOR	SPORTFLEX M	P30	RED	10 MM THICK	
CLIMBING WALL FLOOR						
109	DINOFLEX	SAFET FLOOR	3012	TERRA COTTA RED PIGMENT	9 CM THICK	
CUSTOMER'S OWN MATERIAL (COM)						
110	DESIGNTEX	ROCKET	2693-102	DUNE	54" WIDE	
111	DESIGNTEX	ROCKET	2693-301	FLAME	54" WIDE	
112	DESIGNTEX	PIVOT	3374-301	POPPY	54" WIDE	

FINISH ABBREVIATIONS

AB-22	ACOUSTICAL BOARD CEILING (2'X2')
AB-22MR	ACOUSTICAL BOARD CEILING (2'x2' MOISTURE RESISTANT)
AB-24	ACOUSTICAL BOARD CEILING (2'x4')
AB-24MR	ACOUSTICAL BOARD CEILING (2'x4' MOISTURE RESISTANT)
AP	ACOUSTICAL PANEL
B-H	HORIZONTAL BLINDS
B-V	VERTICAL BLINDS
CHL	CHAIN LINK FENCE
CMU	CONCRETE MASONRY UNITS
CMU-G	CONCRETE MASONRY UNIT - GLAZED
CMU-GF	CONCRETE MASONRY UNIT (GROUND FACE OR BURNISHED SCORED 8 X 8)
CMU-S	CONCRETE MASONRY UNIT (STANDARD 8 X 8 SCORED)
COM	MATERIAL THAT IS SELECTED BY OWNER. PROVIDED BY CONTRACTOR.
CONC	CONCRETE
CONC-BF	CONCRETE - BROOM FINISH
CONC-STN	CONCRETE - STAINED
CONC/SC-PS	CONCRETE FLOORING WITH SPECIAL COATING PENETRATING SEALER
CPT-T	CARPET TILE
CT	CERAMIC TILE
CTB	CERAMIC TILE BASE
EX	EXISTING
EXPD	EXPOSED
F	FABRIC
FRP	FIBERGLASS REINFORCED PANEL
FWC	FABRIC WALLCOVERING
GB	GYPSUM WALLBOARD (STANDARD)
GB-HI	GYPSUM WALLBOARD (HIGH IMPACT)
GB-WR	GYPSUM WALLBOARD (WATER RESISTANT)
GL	GLASS
GLT	GLASS TILE
MTL	METAL
N	NONE
OTA	OPEN TO ABOVE
PLAM	PLASTIC LAMINATE
PLAS	PLASTER - STANDARD
PNT	PAINT - SEE SPECIFICATION
PNT-E	PAINT - EPOXY
PNT-L	PAINT - LATEX
PNT-WDF	PAINT - WET DRY FALL
PRF	PREFINISHED
PT	PORCELAIN TILE
PTB	PORCELAIN TILE BASE
PVC	POLYCARBONATE VINYL CEILING
PWP	PREFINISHED WALL PANELS
QTZ	QUARTZ
RB	RUBBER BASE
RSTR	RUBBER STAIR TREAD & RISERS
S-F	FABRIC SHADES
SC	SPECIAL COATING - SEE SPECIFICATION
SC-E	SPECIAL COATING - EPOXY
SC-GS	SPECIAL COATING - GRAFFITI SEALER
SC-PS	SPECIAL COATING - PENETRATING SEALER
SPS	SOLID POLYMER SURFACE
SSF-P	SPECIAL SPORTS FLOORING - POURED
SSF-T	SPECIAL SPORTS FLOORING - TILE
SST	STAINLESS STEEL
ST	STONE
STG	RUBBER STAIR STRINGER
STL	STEEL
STN	STAIN
STR	STRUCTURE
SV	SHEET VINYL FLOORING
TC	TERRA COTTA PANELS
TRF	TURF
TRP	TRANSLUCENT RESIN PANEL
VET	VINYL ENHANCED TILE
VRB	VENTED RUBBER BASE
WC-V	WALL COVERING - VINYL
WD-A	WOOD ATHLETIC FLOORING (AEROBICS)
WD-P	WOOD ATHLETIC FLOORING (PERFORMANCE)
WD-R	WOOD ATHLETIC FLOORING (RACQUETBALL)
WD-T	MICROLITE WOOD TRELLIS
WD-V	WOOD - VINYL
WDB	WOOD BASE

FINISH REMARKS

A	COUNTERS TO BE QTZ-75.
AA	REFER TO AE102C FOR GAME LINES AND AE441 FOR ELEVATIONS & MATERIALS.
B	REFER TO AE101C FOR LOCATION OF AP PANELS.
BB	REFER TO AE103 SHEETS FOR FLOOR COLOR LOCATIONS.
C	FULL HEIGHT TILE IN SHOWERS. TILE WAINSCOT EVERYWHERE ELSE. REFER TO CS/AE446 ELEVATION FOR MATERIAL LOCATIONS.
CC	REFER TO AE431 AND AC104 FOR MORE INFORMATION.
D	PT WAINSCOT ON WET WALL - 57" AFF INCLUDING BASE.
DD	REFER TO AE453 FOR CASEWORK MATERIALS AND ELEVATIONS.
E	REFER TO A2/AE447 FOR ELEVATION.
F	REFER TO FLOOR PATTERN SHEETS (AF) FOR FLOOR PATTERN.
G	REFER TO ELEVATIONS FOR CASEWORK FINISHES.
GG	REFER TO CEILING PLANS FOR CEILING PAINT LOCATIONS.
H	REFER TO REFLECTED CEILING PLANS FOR LOCATION OF PAINT COLORS.
HH	TILE WAINSCOT ALL WALLS. REFER TO B4/AE447 FOR TYPICAL PATTERN.
I	EXPOSED DUCTS AND MECHANICAL TO BE PAINTED TO MATCH PNT-62. REFER TO ELEVATIONS FOR WALL MATERIAL LOCATIONS.
J	REFER TO AF101B FOR FLOOR PATTERN.
JJ	REFER TO ELEVATION B3/AE445 FOR TACKBOARD DETAILS.
K	LOCKERS TO BE PHENOLIC - MATCH PLAM-72.
KK	PTB AT BENCH.
L	FRP TO BE AT MOP SINK - 48" AFF - EXTEND 12" PAST MOP SINK.
LL	PT FLOOR TO BE RUNNING BOND CONTINUED FROM CORRIDOR.
M	COUNTER TO BE PLAM-70.
N	GLT-15 AT ELECTRIC WATER COOLER BACK WALL - FULL HEIGHT.
O	WALL TILE AT SHOWER ONLY WITH PT-5 AT OUTSIDE CORNERS OF SHOWER. REFER TO ELEVATION THIS ROOM.
P	PHENOLIC LOCKERS TO MATCH PLAM-72. BENCHES TO BE QTZ-75.
Q	BENCH CLUBBES TO MATCH WD-102.
R	REFER TO ELEVATIONS FOR LOCATIONS OF WALL MATERIALS.
S	REFER TO AE100B FOR GAME LINE COLORS.
T	NOT USED
U	EAST WALL TO BE PNT-59.
V	PTB AT LANDINGS.
W	RB AT LANDINGS.
X	REFER TO AE440 FOR ENLARGED WALL PHOTO LOCATIONS AND SPECIFICATIONS FOR ACTUAL IMAGES.
Y	NOT USED
Z	REFER TO C3/AE431 FOR FLOORING MATERIAL LOCATIONS.

FINISH GENERAL NOTES

1	* DENOTES COLOR NOT APPLICABLE
2	HOLLOW METAL DOOR AND WINDOW FRAMES TO MATCH PNT-65.
3	WOOD DOORS TO MATCH WD-102
4	WINDOW STOOLS TO BE QTZ-75.
5	TOILET PARTITIONS TO BE SOLID PHENOLIC
6	B-H/T TO BE LOCATED ON ALL EXTERIOR OFFICE AND CONFERENCE ROOM WINDOWS
7	ALL COUNTERS WITH SINKS TO BE QTZ UNLESS OTHERWISE NOTED.
8	ALL TRANSITIONS TO BE FIELD VERIFIED BY FLOORING INSTALLER.
9	ALL LOCKERS TO BE PHENOLIC - MATCH PLAM-72.
10	CMU-GF-S2 BASE - ALL TO BE 1 COURSE HIGH (UNLESS OTHERWISE NOTED)
11	BEHIND ELECTRIC WALTER COOLERS - INSTALL GLT-15 FULL HEIGHT - BACK WALL ONLY. REFER TO A3/AE447. (TYP)
12	WHEN CEILINGS ARE TO BE PAINTED OUT BLACK USE PNT-69 (TYP).
13	STAIR RISERS, STRINGERS AND RAILING TO MATCH PNT-66.

±	PLUS OR MINUS
Ø	DIAMETER
AB	ACOUSTICAL BOARD
AC DR	ACCESS DOOR
ACC	ACCESSORIES
ACST	ACOUSTIC
ACVP	ACRYLIC CEMENT VENEER PLASTER
AD	AREA DRAIN
ADD/	ADD, ADDITION, ADDITIONAL
ADDM	ADDENDUM
ADJ	ADJUSTABLE
ADJT	ADJACENT
AED	AUTOMATED EXTERNAL DEFIBRILLATOR
AFF	ABOVE FINISH FLOOR
AGGR	AGGREGATE
AL	ALUMINUM
ALT	ALTERNATE
ALUM	ALUMINUM
AP	ACOUSTICAL PANEL
APPROX	APPROXIMATE
ARCH	ARCHITECTURAL
ASPH	ASPHALT
AUTO	AUTOMATIC
B	BASE
B.L.	BRICK LEDGE
B.O.	BOTTOM OF ...
B.O.M.	BOTTOM OF METAL DECK
B/C	BOTTOM OF CURB
B/F	BOTTOM OF FOOTING
B/M	BENCH MARK
B/MD	BOTTOM OF METAL DECK
B/W	BOTTOM OF WALL
BB STOP	BASKETBALL BACKSTOP
BD	BOARD
BIT	BITUMINOUS
BJ	BAR JOIST
BK	BOOK
BK BD	BACKING BOARD
BL BD	BULLETIN BOARD
BLDG	BUILDING
BLK	BLOCK
BLKG	BLOCKING
BM	BEAM
BM/FE	BRACKET MOUNTED FIRE EXTINGUISHER
BOT	BOTTOM
BR	BEDROOM
BRD	BOARD
BRG	BEARING
BRK	BRICK
BRKT	BRACKET
BRZ	BRONZE
BSMT	BASEMENT
C	COURSE (BRICK)
C/C	CENTER TO CENTER
CARP	CARPENTRY
CB	CATCH BASIN
CB WK	CABINET WORK
CBT	CABINET
CBVP	CEMENT BOARD VENEER PLASTER
CEM	CEMENT
CEM BD	CEMENT BOARD
CER	CERAMIC
CI	CAGE IRON
CJ	CONTROL JOINT
CL	CENTERLINE
CLG	CEILING
CLO	CLOSET
CLR	CLEAR
CMU	CONCRETE MASONRY UNIT
CMU-B	BURNISHED BLOCK
CMU-GF	GROUND FACE BLOCK
CMU-S	8x8 SCORED BLOCK
CMU-SF	SPLIT FACED BLOCK
CNTR	COUNTER
COL	COLUMN
COMPO	COMPOSITION
CONC	CONCRETE
CONF	CONFERENCE
CONN	CONNECT
CONSTR	CONSTRUCTION
CONT	CONTINUOUS
CONTR	CONTRACTOR
CORR	CORRIDOR
COV	COVER
CP	COPPER
CPS	COUNTERSUNK PHILLIPS SCREW
CPT	CARPET
CPU	COMPUTER
CS	COUNTERSUNK
CSMT	CASEMENT
CSWK	CASEWORK
CT	CERAMIC TILE
CTD	COATED
CTL	CONTROL
CTR	CENTER
CUH	CABINET UNIT HEATER
CW	COLD WATER
CWS	COUNTERSUNK WOOD SCREW
CYL	CYLINDER (TEST)
D	DRAIN
DBL	DOUBLE
DEPT	DEPARTMENT
DET	DETAIL
DF	DRINK FOUNTAIN
DIA	DIAMETER
DIM	DIMENSION
DIR	DIRECTOR
DISP	DISPENSER
DK LEV	DOCK LEVELER
DK SH	DOCK SHELTER
DK SL	DOCK SEAL
DN	DOWN
DO	DOOR OPENING
DP	DEEP
DR	DOOR
DS	DOWN SPOUT
DTL	DETAIL
DWG	DRAWING
DWO	DOWEL
DWR	DRAWER
DWTR	DUMB WAITER
EA	EACH
EJ	EXPANSION JOINT
EL	ELEVATION
ELECT	ELECTRICAL
ELEV	ELEVATOR
EMER	EMERGENCY
ENCL	ENCLOSURE
ENGR	ENGINEER
ENTR	ENTRANCE
EOS	EDGE OF SLAB
EP	EPOXY
EQ	EQUAL
EQP	EQUIPPED, EQUIPMENT
EW	EACH WAY
EWC	ELECTRIC WATER COOLER
EX	EXISTING
EXH	EXHAUST
EXP	EXPANSION
EXPD	EXPOSED
EXT	EXTERIOR
EXTD	EXTENDED
F.O.	FACE OF ...
FB/FEC	SURFACE MOUNTED FIRE EXTINGUISHER CABINET W/ FIRE BLANKET
FD	FLOOR DRAIN
FDN	FOUNDATION
FEC	FIRE EXTINGUISHER CABINET
FFL	FINISH FLOOR LINE
FR/FEC	FULLY RECESSED FIRE EXTINGUISHER CABINET
FRP	FIBERGLASS REINFORCED PANEL
FS	FLOOR SINK
FT	FOOT, FEET
FWC	FABRIC WALL COVERING

GA	GAUGE
GB	GYPSUM BOARD
GB-WR	WATER RESISTANT GYPSUM BOARD
GC	GENERAL CONTRACTOR
GF BD	GLASS FIBER BOARD
GFRC	GLASS FIBER REINFORCED
GL	GLASS
GLZ	GLAZED
GR	GRADE
GRAN	GRANULAR
GRNT	GRANITE
GRT	GROUT
GS	GYPSUM SHEATHING
GYM	GYMNASIUM
GYP	GYPSUM
HB	HOSE BIB
HC	HOLLOW CORE
HDDB	HARDBOARD
HDR	HEADER
HDW	HARDWARE
HDWD	HARDWOOD
HM	HOLLOW METAL
HNRL	HANDRAIL
HOR	HORIZONTAL
HP	HIGH POINT
HR	HOUR
HT	HEIGHT
HW	HOT WATER
ID	INSIDE DIAMETER
IEC	IN ELECTRICAL CONTRACT
IMC	IN MECHANICAL CONTRACT
IN	INCH, INCHES
INCIN	INCINERATOR
INSUL	INSULATION
INT	INTERIOR
IPC	IN PLUMBING CONTRACT
JAN	JANITOR
JC	JANITOR'S CLOSET
JF	JOINT FILLER
JST	JOIST
JT	JOINT
KIT	KITCHEN
KO	KNEE OPENING
KS	KNEE SPACE
LAB	LABORATORY
LAM	LAMINATE
LAV	LAVATORY
LDR	LADDER
LDRY	LAUNDRY
LG	LENGTH
LKR	LOCKER
LL	LEAD-LINED
LN-CHT	LINEN CHUTE
LP	LOW POINT
LR	LIVING ROOM
LRG	LARGE
LS	LOOSE
LUM	LUMINOUS
MAX	MAXIMUM
MB	MARKERBOARD
MBR	MASTER BEDROOM
MC	MEDICINE CABINET
MECH	MECHANICAL
MEMBR	MEMBRANE
MEZZ	MEZZANINE
MFR	MANUFACTURER
MGR	MANAGER
MH	MANHOLE
MIR	MIRROR
MISC	MISCELLANEOUS
MLDG	MOULDING
MLWK	MILLWORK
MN	MINIMUM
MNTG	MOUNTING
MO	MASONRY OPENING
MRB	MARBLE
MTD	MOUNTED
MTG	MEETING
MTL	METAL
MUL	MULLION
N	NONE
NIC	NOT IN CONTRACT
NO	NUMBER
NOM	NOMINAL
NRC	NOISE REDUCTION COEFFICIENT
NS	NON-SLIP
NTD	NOTED
NTS	NOT TO SCALE
OA	OVERALL
OBS	OBSCURE
OC	ON CENTER
OD	OUTSIDE DIAMETER
OF	OUTSIDE FACE
OFF	OFFICE
OH	OVERHEAD
OP	OPAQUE
OPG	OPENING
OPP	OPPOSITE
ORD	OVERFLOW ROOF DRAIN
ORN	ORNAMENTAL
OSCI	OWNER SUPPLIED, CONTRACTOR INSTALLED
OSOI	OWNER SUPPLIED, OWNER INSTALLED
PAV	PAVER
PB	PIPE BOLLARD
PBD	PARTICLE BOARD
PC	PIECE
PCC	PRECAST CONCRETE
PCP	PREFABRICATED COOLER PANEL
PCPL	PORTLAND CEMENT PLASTER
PE	PHYSICAL EDUCATION
PF	PREFABRICATED
PF-RFG	PREFORMED ROOFING
PI-SD	PREFORMED SIDING
PL	PLASTIC
PLAM	PLASTIC LAMINATED
PLAS	PLASTER
PLWD	PLYWOOD
PNL	PANEL
PNT	PAINT
PP	PLASTIC PANEL
PR	PAIR
PRF	PREFINISHED
PRJ	PROJECTED
PRT	PROTECTION
PRTN	PARTITION
PS	PLASTER STOP
PT	PORCELAIN TILE
PTD	PAINTED
PTM	PAINT TO MATCH
PTN	PATTERN
PVC	POLYVINYL CHLORIDE
PVMT	PAVEMENT
QT	QUARRY TILE
R	RISER, RADIUS
RA	RETURN AIR
RAD	RADIUS
RB	RUBBER BASE
RBM	REINFORCED BRICK MASONRY
RCMU	REINFORCED CONCRETE MASONRY UNIT
RCP	REFLECTED CEILING PLAN
RD	ROOF DRAIN
REBAR	REINFORCING BAR
REF	REFRIGERATOR
REINF	REINFORCE, REINFORCING
REQD	REQUIRED
RES	RESILIENT
REV DR	REVOLVING DOOR
RF	ROOF
RFG	ROOFING
RGH	ROUGH
RGST	REGISTER
RI	RIGID INSULATION

RM	ROOM
RO	ROUGH OPENING
RT	RESILIENT TILE
RUB	RUBBER
RWD	REDWOOD
SAB	SOUND ATTENUATION BLANKET
SC	SPECIAL COATING
SCHD	SCHEDULE
SCOREBD	SCOREBOARD
SECT	SECTION, SECTIONAL
SF	SEAMLESS FLOORING, SQUARE FEET
SGT	STRUCTURAL GLAZED TILE
SHR	SHOWER
SHT	SHEET
SHTH	SHEATHING
SHV	SHELVING
SIM	SIMILAR
SL	SEALANT
SLR	SEALER
SM	SEAM
SM/FEC	SURFACE MOUNTED FIRE EXTINGUISHER CABINET
SMR	SINGLE MEMBRANE ROOF
SO FPR	SPRAY-ON FIREPROOFING
SPEC	SPECIFICATIONS)
SPS	SOLID POLYMER SURFACE
SQ	SQUARE
SR/FEC	SEMI-RECESSED FIRE EXTINGUISHER CABINET
SS	SERVICE SINK
SSF	SPECIAL SPORTS FLOORING
SST	STAINLESS STEEL
ST	STONE
STA	STATION
STC	SOUND TRANSMISSION CLASS
STD	STANDARD
STL	STEEL
STM	STAIN TO MATCH
STN	STAIN
STNWK	STONEWORK
STOR	STORAGE
STR	STRUCTURAL, STRUCTURE
SUSP	SUSPENDED
SV	SHEET VINYL
SYM	SYMMETRICAL
SYS	SYSTEM
T	TREAD
T&G	TONGUE AND GROOVE
T.F.O.	TO FACE OF...
T.O.	TOP OF ...
T/B	TOP OF BEAM
T/BL	TOP OF BRICK LEDGE
T/C	TOP OF CURB
T/CONC	TOP OF CONCRETE
T/F	TOP OF FOOTING
T/J	TOP OF JOIST
T/M	TOP OF MASONRY
T/S	TOP OF STEEL
T/W	TOP OF WALL
TEL	TELEPHONE
TEMP	TEMPERED
TER	TERRAZZO
THK	THICK, THICKNESS
TLT	TOILET
TR FN	TROWEL FINISH
TRCP	TRASH RECEPTACLE
TRF	TURF
TRT WD	TREATED WOOD
TV	TELEVISION
TX-FN	TEXTURED FINISH
TYP	TYPICAL
UL	UNDERWRITER'S LABEL
UN	UNFINISHED
UON	UNLESS OTHERWISE NOTED
V	VINYL
VAR	VARIABLE
VARS	VARSITY
VB	VINYL BASE
VCT	VINYL COMPOSITION TILE
VERT	VERTICAL
VEST	VESTIBULE
VM	VENDING MACHINE
VNR	VENEER
VWC	VINYL WALL COVERING
W	WATER
W/	WITH ...
W/O	WITHOUT ...
WB	WALL BASE
WC	WATER CLOSET
WD	WOOD
WDW	WINDOW
WG	WIRE GLASS
WH	WEEP HOLE
WHTR	WATER HEATER
WID	WIDTH
WK	WORK
WNST	WAINSCOT
WO	WHERE OCCURS
WP	WATERPROOF, WATERPROOFING
WPT	WORK POINT
WR	WATER RESISTANT
WT	WEIGHT
WWF	WELDED WIRE FABRIC
YH	YARD HYDRANT

MHTN ARCHITECTS
MHTN Architects, Inc.
420 East South Temple
Suite 100
Salt Lake City, Utah 84111
Telephone (801) 595-6700
Telefax (801) 595-6717
www.mhtn.com

Hastings+Chivetta
ARCHITECTURE • PLANNING • ENGINEERING
622 Emerson, Suite 200
St. Louis, MO 63141
Tel. 314.863.5717
Fax. 314.863.2823
www.hastingschivetta.com

UNIVERSITY OF UTAH

STUDENT LIFE CENTER

1836 E. BALLIF ROAD
SALT LAKE CITY, UTAH 84112

SEAL

MHTN PROJECT NO. PROJ 2010562

DRAWN BY: Author CHECKED BY: Checker

ISSUED:

NO.	DATE	DESCRIPTION

CONTRACTOR TO VERIFY DRAWINGS IN FIELD USE REFLECT LAST REVISION DATE.

NO.	DATE	DESCRIPTION
1	05-28-2013	Addendum #1

SHEET NAME

COLOR, MATERIAL LEGEND/ABBREV.

BID DOCUMENTS
May 28, 2013

SHEET NUMBER

AE606

C:\Users\mhtnres\Documents_Projects\2595.00 Utah Student Center-2012_mhtnres.rvt
5/29/2013 8:22:17 AM

DOOR TYPES (NOT ALL TYPES SHOWN MAY BE USED)

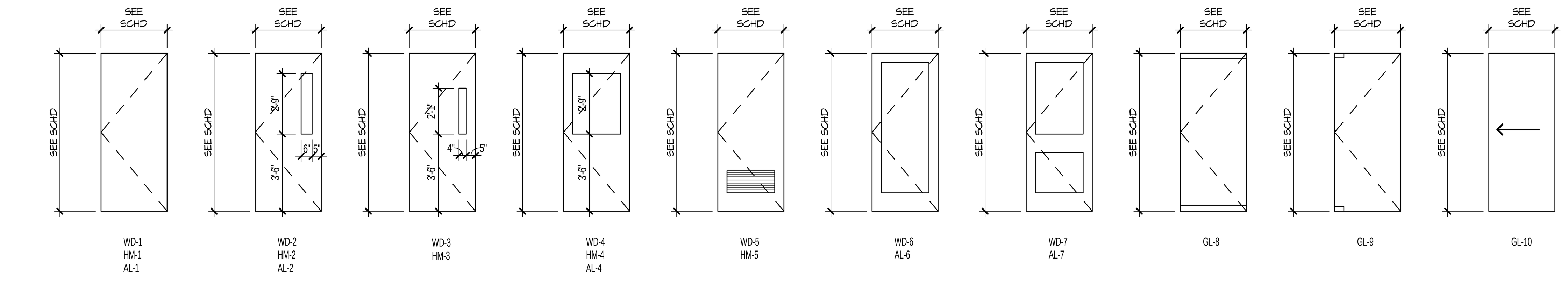

FRAME TYPES (NOT ALL TYPES SHOWN MAY BE USED)

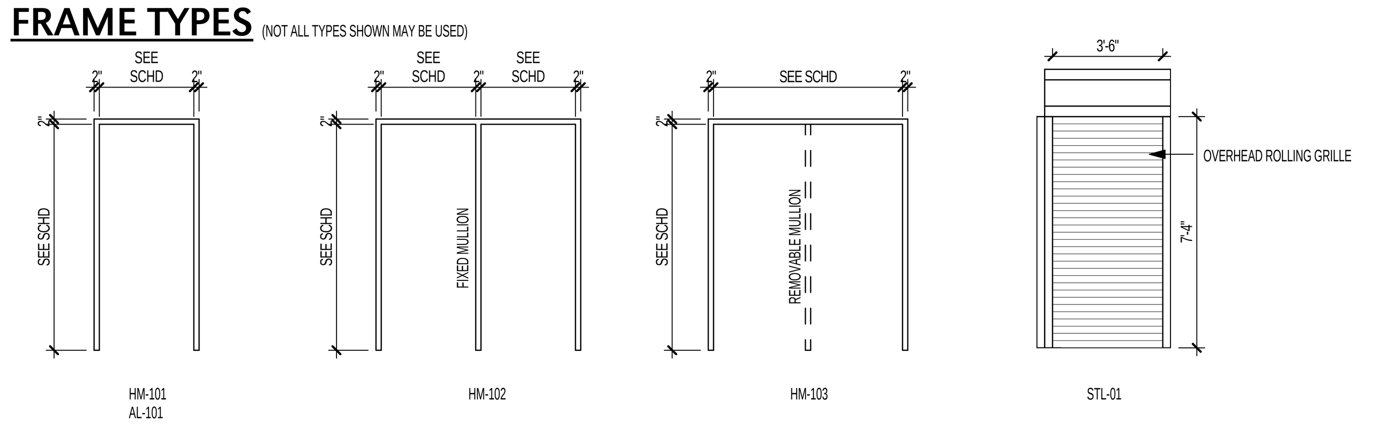

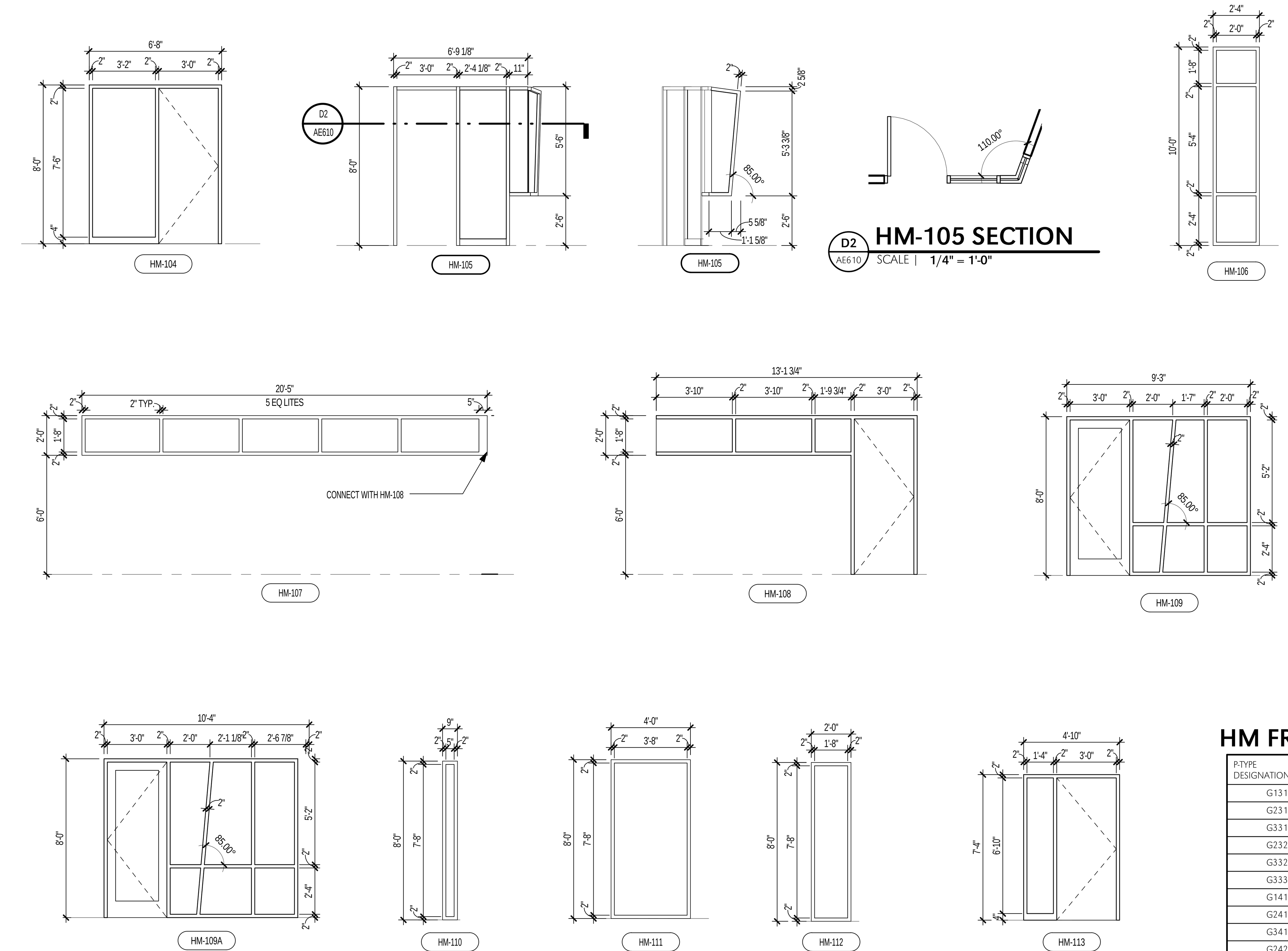

D2 AE610 **HM-105 SECTION** SCALE | 1/4" = 1'-0"

GENERAL NOTES

1. CONTRACTOR SHALL COMPLY WITH ALL THE REQUIREMENTS OF THE 2009 IBC CONCERNING OPENINGS.
2. SIZE OF ROUGH OPENINGS PER WINDOW MANUFACTURER. (TYP)
3. SAFETY GLAZING MUST COMPLY WITH LABELING AS PER IBC 2009 2406.2.
4. FRAME EXTENSIONS TO ADJUST TO WALL DEPTH ARE TYPICAL - REFER TO WINDOW DETAILS.
5. THICKNESS OF GLAZING WITHIN DOORS ARE CALLED OUT ON DOOR SCHEDULES / DOOR MANUFACTURER.
6. EXTERIOR GLAZING AS NOTED ON WINDOW ELEVATIONS.
7. WINDOWS TO OPERATE AS SHOWN ON THE EXTERIOR BUILDING ELEVATIONS.
8. ALL GLAZING IS TEMPERED GLAZING, UON.
9. GENERAL CONTRACTOR TO COORDINATE ALL TRADES INVOLVED.
10. INSTALLATION PROCEDURES SHALL FOLLOW WRITTEN RECOMMENDATIONS FROM WINDOW MANUFACTURER - SHOWN DETAILS ARE FOR REFERENCE ONLY. CONTRACTOR TO COORDINATE RECOMMENDED INSTALLATION PROCEDURE FROM OTHER MANUFACTURERS AND SUBMIT FOR ARCHITECTS REVIEW.
11. TYPICAL GLAZING VALUES (BASE UNIT VALUES):
DOUBLE PANE (1"): VLT - 70%, U-VALUE - 0.29 Btu/ (hr x sqft x °F), SHGC - 0.38
TRIPLE PANE (1 3/4"): VLT - 63%, U-VALUE - 0.21 Btu/ (hr x sqft x °F), SHGC - 0.34
12. PROVIDE CLOSURE TO BOTTOM OF VERTICAL MULLIONS
13. LAMINATED GLASS WHERE INDICATED.

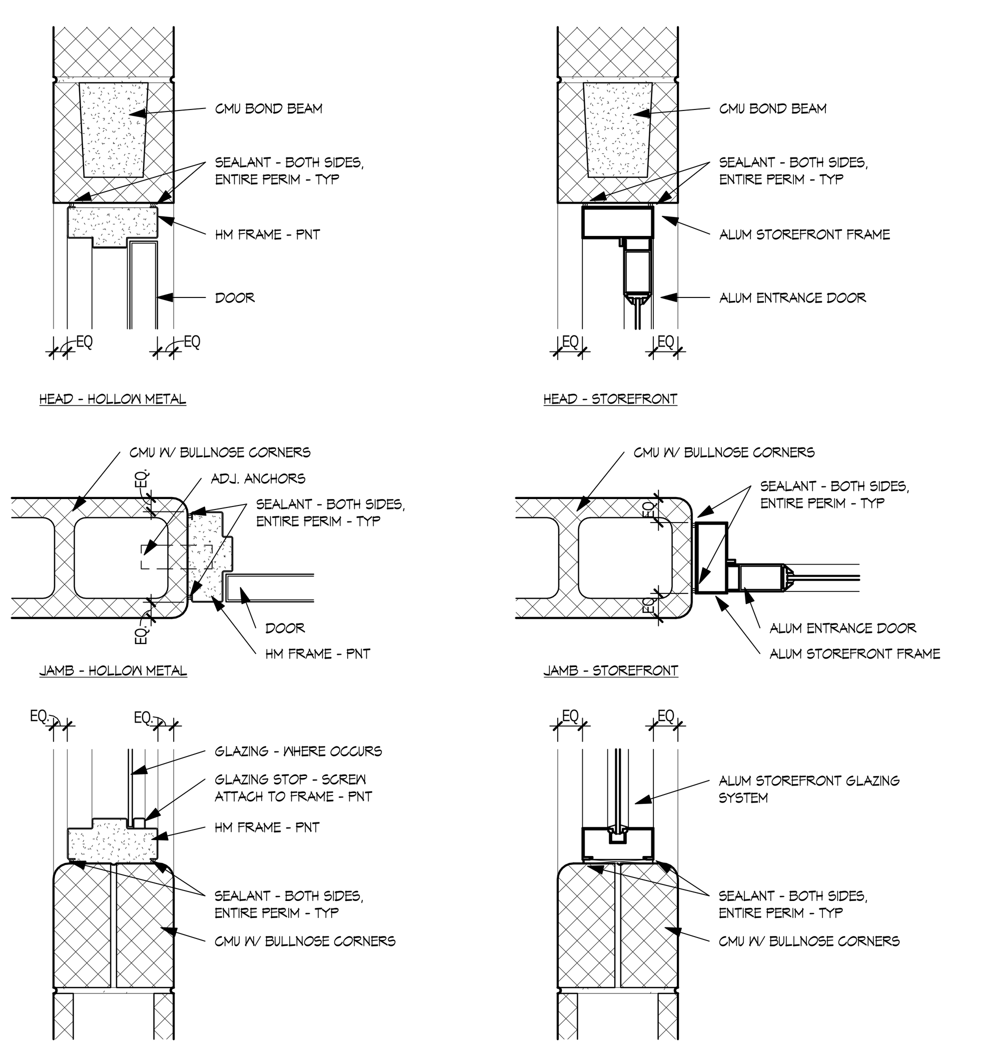

15 AE610 **OPENINGS IN CMU PARTITIONS DETAILS** SCALE | 1 1/2" = 1'-0"

HM FRAME SIZE SCHEDULE

P-TYPE DESIGNATION	P-TYPE WIDTH	FRAME DEPTH
G131	4 7/8"	5 7/8"
G231	5 1/2"	6 1/2"
G331	6 1/8"	7 1/8"
G232	6 1/8"	7 1/8"
G332	6 3/4"	7 3/4"
G333	7 1/8"	8 1/8"
G141	5 1/4"	6 1/4"
G241	5 7/8"	6 7/8"
G341	6 1/2"	7 1/2"
G242	6 1/2"	7 1/2"
G342	7 1/8"	8 1/8"
G343	7 3/4"	8 3/4"
G161	7 1/4"	8 1/4"
G261	7 7/8"	8 7/8"
G361	8 1/2"	6"
G262	8 1/2"	6"
G362	9 1/8"	6"
G363	9 3/4"	6"
C06	5 5/8"	5 1/2"
C08	7 5/8"	5 3/4"
C10	9 5/8"	5 3/4"
C12	11 5/8"	5 3/4"

NOTES:
1. THE MAXIMUM FRAME DEPTH SHALL BE 9".
2. SEE FRAME TYPE ELEVATIONS AND DOOR SCHEDULE FOR ADDITIONAL INFORMATION.

GLAZING LEGEND

- (A) INTERIOR LAMINATED GLASS
- (X) 1 HOUR FIRE-RESISTANCE RATED GLASS
- (Y) INTERIOR 1/4" TEMPERED GLASS - 35% GRAY FRIT
- (Z) INTERIOR 1/4" TEMPERED GLASS - 50% WHITE FRIT
- (AA) INTERIOR 1/4" TEMPERED GLASS - 50% WARM GRAY FRIT
- (BB) INTERIOR 1/4" TEMPERED GLASS - 35% WHITE FRIT
- (CC) INTERIOR INSULATED GLASS - 1/4" LAMINATED/1/2" AIRSPACE/1/4" HEAT STRENGTHENED GLASS

DOOR SCHEDULE

NUMBER	WIDTH LEAF 1	WIDTH LEAF 2	HEIGHT	DOOR TYPE	FRAME TYPE	RATING	HDW GROUP	ALUM HDW	REMARKS
MECH LEVEL									
10M-A	3'-0"		7'-2"	HM-1	HM-101	90 MIN	24		
10M-B	3'-0"	3'-0"	7'-2"	HM-1	HM-101	90 MIN	16.1		
LOWER LEVEL									
6	3'-0"		7'-10"	WD-1	HM-104		13		
7	3'-0"		7'-10"	WD-1	HM-101	-	14		CARD READER
10	3'-1"	3'-1"	7'-10"	AL-6	AL-107			K	REMOVABLE MULLION
10F-1	3'-0"		7'-10"	WD-1	HM-101	45 MIN	15		
10F-2	3'-0"	3'-0"	7'-10"	WD-1	HM-101	45 MIN	16		
10J	3'-0"		7'-10"	WD-1	HM-101	-	37		
10K	3'-0"	3'-0"	7'-10"	WD-1	HM-101	-	39		
10N	3'-0"	3'-0"	7'-10"	WD-1	HM-101	45 MIN	16.2		
11	3'-0"		7'-10"	AL-6	AL-120			H	
22	3'-0"	3'-0"	7'-10"	WD-1	HM-101	-	32		CARD READER
25	3'-0"		7'-10"	WD-1	HM-108		14		CARD READER
25C	3'-0"		7'-2"	WD-1	HM-113		43		
25E	3'-0"		7'-2"	WD-1	HM-101	-	44		
40A-1	3'-0"		7'-2"	WD-1	HM-113		13		
40A-2	3'-0"		7'-10"	AL-6	AL-106	60 MIN		K	
40B	3'-0"		7'-10"	AL-6	AL-106	60 MIN		K	
40C	3'-0"		7'-10"	WD-1	HM-101	-	45		ALUMINUM DOOR WITH ALUMINUM PANEL
40D	3'-0"		7'-10"	WD-1	HM-101	-	45		ALUMINUM DOOR WITH ALUMINUM PANEL
40F	3'-0"	3'-0"	7'-10"	AL-6	AL-102	-		M	ALUMINUM DOORS WITH ALUMINUM PANELS
40J	3'-0"		7'-10"	AL-6	AL-101	-		K	ALUMINUM DOOR W/ ALUMINUM PANEL
41	3'-0"		7'-10"	WD-1	HM-101	-	26		
41S	3'-0"		7'-10"	AL-6	AL-101	-		N	FROSTED GLASS IN DOOR PANEL
45	3'-0"	2'-0"	7'-10"	WD-1	HM-101	-	21		
45A	3'-0"	3'-0"	7'-10"	WD-1	HM-101	-	38		
45B	3'-0"		7'-10"	WD-1	HM-101	-	35		
47	3'-0"		7'-10"	WD-1	HM-101	-	26		
47S-1	3'-0"		7'-10"	AL-6	AL-101	-		N	FROSTED GLASS IN DOOR PANEL
47S-2	3'-0"		7'-10"	WD-1	HM-101	-	34		
60	3'-0"	3'-0"	8'-0"	GL-8	–	-		R	ALL GLASS DOORS
60B	3'-0"		7'-2"	WD-1	HM-101	-	43		
65	3'-0"	3'-0"	7'-10"	WD-1	HM-101		41		
65A	3'-0"		7'-2"	HM-1	HM-101	-	33		
75	3'-0"	3'-0"	7'-10"	AL-6	AL-111	60 MIN		P	
75-1	3'-0"	3'-0"	7'-10"	HM-1	HM-101	60 MIN	17		
85A	3'-0"	3'-0"	7'-10"	WD-1	HM-101	-	40		
85B	3'-0"		7'-2"	HM-1	HM-101	-	33		
99B	3'-2"		7'-10"	WD-3	HM-101	60 MIN	18		
99C	3'-2"		7'-10"	WD-3	HM-101	60 MIN	18		PANIC ALARM
99D	3'-0"		7'-10"	WD-3	HM-101	60 MIN	19		CARD READER / PANIC ALARM
99E-2	3'-0"		7'-2"	HM-1	HM-101	60 MIN	23		
99F	3'-2"		7'-10"	WD-3	HM-101	60 MIN	18		PANIC ALARM
LEVEL 1									
100D-1	1'-7"		10'-0"	-	–	60 MIN			RATED POCKET DOOR
100D-2	27'-0"		10'-0"	-	–	60 MIN			RATED POCKET DOOR
100E	3'-0"		7'-10"	WD-1	HM-101	-			CARD READER
100G-1	3'-0"	2'-0"	7'-10"	WD-1	HM-101	-	21		
100P	3'-0"		7'-10"	WD-1	HM-101	-			
100Q	3'-0"		7'-10"	WD-1	HM-101	-			
100R	3'-0"		7'-10"	WD-1	HM-101	-	33		
104	3'-0"		7'-10"	WD-1	HM-101	60 MIN	24		
106	3'-0"		7'-10"	WD-1	HM-104			J	
108	3'-0"		7'-10"	WD-1	HM-105			J	
111	23'-9 1/4"		10'-0"	-	–	-	01		OPERABLE WALL W/ 1'-8"W GLS PANELS
114	3'-6"		7'-1"	GL-10	GL-06				
115	3'-6"		7'-1"	GL-10	GL-06				
116	3'-0"		7'-2"	WD-1	HM-101	-	35		
117	3'-6"		7'-2"	CD-1	–	-			OVERHEAD ROLLING GRILLE
117A	3'-4"		7'-10"	WD-3	HM-101		37		
120-1	3'-0"	2'-0"	7'-10"	WD-1	HM-101	-	40		
145	3'-0"		7'-10"	AL-6	AL-120			P	
145A	3'-0"		7'-2"	WD-1	HM-101	-	33		
150	3'-0"		7'-0"	GL-9	–			R	
150-1	1'-6"		8'-6"	-	–	60 MIN			RATED POCKET DOOR
150-2	24'-8 3/8"		10'-0"	-	–	60 MIN			RATED POCKET DOOR
155	3'-0"		7'-2"	WD-1	HM-101	-	35		
155B	3'-0"		7'-10"	WD-6	HM-109		13		
155C	3'-0"		7'-10"	WD-6	HM-109		13		
155H	3'-0"		7'-10"	WD-6	HM-109A		13		
155K	3'-0"		7'-2"	WD-1	HM-101	-	45		
198B	3'-0"	3'-0"	7'-2"	WD-1	HM-101	-	47		
199D	3'-0"		7'-10"	WD-3	[illegible]	60 MIN	19		
199E-A	3'-2"		7'-10"	WD-1	HM-103	60 MIN	18		
199E-B	3'-2"		7'-10"	WD-1	HM-103	60 MIN	18		
LEVEL 2									
200M	3'-0"		7'-2"	WD-1	HM-101	-	45		
200P	3'-0"		7'-2"	WD-1	HM-101	-	37		
201E	3'-0"		7'-10"	WD-1	HM-101	-	14		CARD READER
201F	3'-0"		7'-10"	WD-1	HM-101	-	35		
205-1	1'-6"		10'-0"	-	–	60 MIN			RATED POCKET DOOR
205-2	11'-0"		10'-0"	-	–	60 MIN			RATED POCKET DOOR
215-1	3'-0"	3'-0"	7'-10"	WD-6	AL-110		25		
215-2	3'-0"		7'-10"	WD-6	AL-109		25		
215-2a	3'-0"		7'-10"	WD-6	AL-109	60 MIN			
215-3	3'-0"		7'-10"	WD-6	AL-109		25		
215-3a	3'-0"		7'-10"	WD-6	AL-109	60 MIN			
215A	3'-0"	3'-0"	7'-10"	WD-1	HM-101		29		
220-1	1'-6"		10'-0"	-	–	60 MIN			RATED POCKET DOOR
220-2	16'-8 9/16"		10'-0"	-	–	60 MIN			RATED POCKET DOOR
222	3'-0"	3'-0"	7'-10"	WD-1	HM-101	-	41		
235-1	3'-0"		7'-10"	AL-6	AL-121	60 MIN		P	60 MIN RATED
235-2	3'-0"		7'-10"	AL-6	AL-121	60 MIN		P	60 MIN RATED
235A	3'-0"		8'-0"	WD-6	AL-118			28	
235B	3'-0"	3'-0"	7'-10"	WD-1	HM-101	-	29		
235C	4'-0"		7'-10"	WD-1	HM-101	-	42		
235D	3'-0"	3'-0"	7'-10"	WD-1	HM-101	-	29		
240	3'-0"		7'-10"	WD-1	AL-125			P	
240A	3'-0"		7'-2"	WD-1	HM-113		13		
240B	3'-0"		7'-2"	WD-1	HM-113		13		
240C	3'-0"		7'-2"	WD-1	HM-113		13		
240D	3'-0"		7'-2"	WD-1	HM-113		43		
240E	3'-0"		7'-2"	WD-1	HM-113		44		
240F	3'-0"		7'-0"	WD-1	HM-101	-	30		
240G	3'-0"		7'-0"	WD-1	HM-101	-			
255	3'-0"		7'-0"	WD-6	AL-100		31		CARD READER
265-1	3'-0"		7'-0"	WD-6	AL-100		27		CARD READER
265-2	3'-0"		7'-0"	WD-6	AL-100		27		CARD READER
275	3'-0"		7'-0"	WD-6	AL-103		31		CARD READER
285	3'-0"		7'-0"	WD-6	AL-100		31		CARD READER
299B	3'-4"		7'-10"	WD-3	HM-101	60 MIN	18		PANIC ALARM
299C	3'-4"		7'-10"	WD-3	HM-101	60 MIN	18		PANIC ALARM
299D	3'-4"		7'-10"	WD-3	HM-101	60 MIN	19		CARD READER / PANIC ALARM
299E	3'-4"		7'-10"	WD-3	HM-101	60 MIN	22		PANIC ALARM
299F	3'-4"		7'-10"	WD-3	HM-101	60 MIN	18		PANIC ALARM
LEVEL 3									
300H	3'-0"		7'-2"	WD-1	HM-101	-	45		
300K-1	3'-0"		7'-2"	WD-1	HM-101	-	37		
300N	3'-0"		7'-2"	WD-1	HM-101	-	45		
301D	3'-0"		7'-10"	WD-1	HM-101	-	14		CARD READER
301F	3'-0"		7'-10"	WD-1	HM-101	-	35		
301G	3'-0"		7'-10"	WD-1	HM-101	60 MIN	24		
307	4'-0"		7'-10"	WD-1	HM-101	-	42		
315A	3'-0"		7'-2"	WD-1	HM-101	-	45		
340	3'-0"		7'-10"	AL-6	AL-116			L	
340C	3'-0"		7'-2"	WD-1	HM-101	-	43		
341	3'-0"		7'-2"	WD-1	HM-113		13		
343	3'-0"		7'-2"	WD-1	HM-113		13		
345	3'-0"		7'-2"	WD-1	HM-113		13		
347	3'-0"		7'-2"	WD-1	HM-113		13		
349	3'-0"		7'-2"	WD-1	HM-113		13		
351	3'-0"		7'-2"	WD-1	HM-113		13		
355	3'-0"		7'-2"	WD-1	HM-113		13		
360A	3'-0"		7'-2"	WD-1	HM-101	-	36		
399B	3'-0"		7'-10"	WD-3	HM-101	60 MIN	18		PANIC ALARM
399C	3'-0"		7'-10"	WD-3	HM-101	60 MIN	18		PANIC ALARM
399D	3'-0"		6'-10"	WD-3	HM-101	60 MIN	19		CARD READER / PANIC ALARM
399E	3'-6"		7'-10"	WD-3	HM-101	60 MIN	22		PANIC ALARM
399F	3'-0"		7'-2"	WD-3	HM-101	60 MIN	18		

MHTN ARCHITECTS
MHTN Architects, Inc.
420 East South Temple
Suite 100
Salt Lake City, Utah 84111
Telephone (801) 595-6700
Telefax (801) 595-6717
www.mhtn.com

Hastings+Chivetta
ARCHITECTURE • PLANNING • ENGINEERING
622 Emerson, Suite 200
St. Louis, MO 63141
Tel. 314.863.5717
Fax. 314.863.2823
www.hastingschivetta.com

UNIVERSITY OF UTAH
STUDENT LIFE CENTER
1836 E. BALLIF ROAD
SALT LAKE CITY, UTAH 84112

SEAL

MHTN PROJECT NO. PROJ 2010562
DRAWN BY: Author CHECKED BY: Checker
ISSUED:
NO. DATE DESCRIPTION
CONTRACTOR TO VERIFY DRAWINGS IN FIELD USE REFLECT LAST REVISION DATE.
NO. DATE DESCRIPTION
1 05-28-2013 Addendum #1

SHEET NAME
DOOR SCHEDULE & DOOR TYPES
BID DOCUMENTS
May 28, 2013
SHEET NUMBER
AE610

C:\Users\mhilmes\Documents_Projects\2995.00 Utah Student Center-2012_mhilmes.rvt
5/29/2013 8:19:23 AM

SYMBOL LIST

- CEILING SURFACE / PENDANT SUSPENDED FIXTURE
- LINEAR SUSPENDED PENDANT FIXTURE
- LINEAR SUSPENDED PENDANT FIXTURE (EMERGENCY POWER)
- RECESSED DOWNLIGHT
- RECESSED DOWNLIGHT (EMERGENCY POWER)
- WALL MOUNTED LIGHT FIXTURE
- RECESSED WALL MOUNTED LIGHT FIXTURE
- WALL MOUNTED LIGHT FIXTURE (EMERGENCY POWER)
- WALL MOUNTED FLOODLIGHT
- EXIT LIGHT CEILING
- WALL MOUNTED EXIT LIGHT
- GROUND MOUNTED LIGHT FIXTURE
- POLE MOUNTED LIGHT FIXTURE
- DUAL POLE MOUNTED LIGHT FIXTURE
- POLE TOP MOUNTED LIGHT FIXTURE
- RECESSED FLUORESCENT LIGHT FIXTURE
- RECESSED FLUORESCENT LIGHT FIXTURE (EMERGENCY POWER)
- FLUORESCENT STRIP LIGHT FIXTURE
- WALL MOUNTED FLUORESCENT LIGHT FIXTURE
- WALL MOUNTED LIGHT FIXTURE (EMERGENCY POWER)
- EMERGENCY BATTERY LIGHT FIXTURE
- SURFACE FLUORESCENT LIGHT FIXTURE
- SURFACE FLUORESCENT LIGHT FIXTURE (EMERGENCY POWER)
- LIGHT TRACK WITH LIGHT FIXTURES
- S — SINGLE POLE SWITCH
- ^{K} — KEY SWITCH
- ^{M} — MOMENTARY CONTACT SWITCH
- ^{MK} — MOMENTARY CONTACT KEY SWITCH
- ^{3K} — 3 - WAY KEY SWITCH
- ^{3} — 3 - WAY SWITCH
- ^{PB} — PUSHBUTTON SWITCH
- ^{RC} — REMOTE CONTROL
- ^{LV} — LOW VOLTAGE SWITCH
- ^{LM} — LOW VOLTAGE MASTER
- ^{VR} — SWITCH WITH VANDAL RESISTANT COVER PLATE
- ^{X} — EXPLOSION PROOF
- ^{L} — LINE VOLTAGE SENTRY SWITCH
- ^{P} — PILOT LIGHT
- ^{T} — THERMAL SWITCH
- TS — DIGITAL TIME SWITCH
- D — DIMMER
- OS — OCCUPANCY SENSOR, CEILING MOUNT
- OS — OCCUPANCY SENSOR, WALL MOUNT
- PP — POWER PACK
- SP — SLAVE POWER PACK
- ECU — EMERGENCY CONTROL RELAY UNIT
- DUPLEX RECEPTACLE
- USB — SINGLE RECEPTACLE WITH USB
- DUPLEX RECEPTACLE ISOLATED GROUND
- DUPLEX RECEPTACLE (EMERGENCY POWER)
- DUPLEX RECEPTACLE GFI
- SINGLE RECEPTACLE
- DUPLEX RECEPTACLE, FLUSH CEILING
- DUPLEX RECEPTACLE, FLUSH CEILING ISO GROUND
- QUADRAPLEX RECEPTACLE
- QUADRAPLEX RECEPTACLE ISOLATED GROUND
- QUADRAPLEX RECEPTACLE GFI
- DUPLEX RECEPTACLE, FLUSH IN FLOOR
- COMBO FLOORBOX WITH QUADRAPLEX RECEPT. AND DATA
- COMBO QUADRAPLEX FLUSH IN FLOOR WITH INTERCOM
- COMBO FLOORBOX WITH DUP. RECEPT. AND DATA
- DUPLEX RECEPTACLE, PEDESTAL MOUNTED
- QUADRAPLEX RECEPTACLE, PEDESTAL MOUNTED
- POKE-THRU DEVICE
- RANGE RECEPTACLE
- SPECIAL OUTLET TO MATCH EQUIPMENT PLUG
- SPECIAL OUTLET TO MATCH EQUIPMENT PLUG, FLUSH IN FLOOR
- J — JUNCTION BOX
- J — JUNCTION BOX, FLUSH FLOOR MOUNTED
- J — MULTI OUTLET ASSEMBLY
- SURFACE EQUIPMENT CABINET AS NOTED
- RECESSED EQUIPMENT CABINET AS NOTED
- SURFACE ELECTRICAL PANELBOARD
- RECESSED ELECTRICAL PANELBOARD
- R — RELAY
- LIGHTNING ARRESTER
- SB — SPLICEBOX
- PB — PULLBOX

- PC — PHOTO CONTROL
- PS — POWER SUPPLY
- T — TRANSFORMER (FLOOR PLAN)
- T — THERMOSTAT
- M — METER BASE
- NON-FUSED DISCONNECT SWITCH
- F — FUSED DISCONNECT SWITCH
- MANUAL STARTER
- MAGNETIC STARTER
- C — CONTACTOR
- COMBINATION STARTER/NON-FUSED DISCONNECT SWITCH
- F — COMBINATION STARTER/FUSED DISCONNECT SWITCH
- MOTOR CONNECTION
- PUSH BUTTON
- EMERGENCY POWER OFF BUTTON, 46" AFF
- START-STOP BUTTON
- UP-DOWN-STOP BUTTON
- 3 — DATA OUTLET: # INDICATES QTY.; NO DESIGNATION =(2) DATA OUTLET
- 3 — DATA OUTLET - ABOVE COUNTER: # INDICATES QTY.; NO DESIGNATION =(2) DATA OUTLET
- 3 — DATA OUTLET - FLUSH IN FLOOR: # INDICATES QTY.; NO DESIGNATION =(2) DATA OUTLET
- 3 — TELEPHONE OUTLET: # INDICATES QTY.; NO DESIGNATION =(1) TELEPHONE OUTLET
- 3 — TELEPHONE OUTLET - ABOVE COUNTER: # INDICATES QTY.; NO DESIGNATION =(1) TELEPHONE OUTLET
- 3 — TELEPHONE OUTLET - FLUSH IN FLOOR: # INDICATES QTY.; NO DESIGNATION =(1) TELEPHONE OUTLET
- 3D,1P — COMMUNICATIONS OUTLET: D=DATA, P=TELEPHONE, F=FIBER, # INDICATES QTY. NO DESIGNATION=(2) DATA OUTLET, (1) TELEPHONE OUTLET
- 3D,1P — COMMUNICATIONS OUTLET - ABOVE COUNTER D=DATA, P=TELEPHONE, F=FIBER, # INDICATES QTY. NO DESIGNATION=(2) DATA OUTLET, (1) TELEPHONE OUTLET
- 3D,1P — COMMUNICATIONS OUTLET - FLUSH IN FLOOR D=DATA, P=TELEPHONE, F=FIBER, # INDICATES QTY. NO DESIGNATION=(2) DATA OUTLET, (1) TELEPHONE OUTLET
- WIRELESS LAN TRANSMITTER
- 19" TELECOM EQUIPMENT RACK WITH VERTICAL WIRE MGMT.
- 19" TELECOM EQUIPMENT RACK
- S# — CEILING SPEAKER, RECESSED (# INDICATES TYPE)
- S# — WALL SPEAKER (# INDICATES TYPE)
- M# — MICROPHONE RECEPTACLE, WALL (# INDICATES TYPE)
- M — MICROPHONE RECEPTACLE, FLUSH FLOOR
- TV — T.V. OUTLET
- # — T.V.SECURITY CAMERA (# INDICATES TYPE)
- # — ROUND T.V.SECURITY CAMERA (# INDICATES TYPE)
- CLOCK
- WALL MOUNTED CLOCK
- PROGRAM HORN
- BUZZER
- BELL
- CHIME
- IC — INTERCOM STATION, SECURITY
- CR — CARD READER
- K — KEYPAD
- MS — MOTION SENSOR, CEILING MOUNTED
- MS — MOTION SENSOR, WALL MOUNTED

- FACP — FIRE ALARM CONTROL PANEL
- FAVE — FIRE ALARM VOICE EVACUATION PANEL
- ANN — FIRE ALARM ANNUNCIATOR
- FV — FIRE ALARM VISUAL SIGNAL
- F — FIRE ALARM HORN
- FV — FIRE ALARM VISUAL SIGNAL WITH HORN
- SS — FIRE ALARM VISUAL SIGNAL WITH SPEAKER
- F — FIRE ALARM MANUAL PULL STATION
- Z — FIRE ALARM FSD CONTROL RELAY
- F — FIRE ALARM CHIME
- FV — FIRE ALARM CHIME / VISUAL
- F — FIRE ALARM BELL
- S — DUCT DETECTOR
- S — PHOTO ELECTRIC SMOKE DETECTOR
- R — RATE OF RISE/THERMAL DETECTOR
- H — HEAT DETECTOR
- FS — FLOW SWITCH
- PS — FIRE ALARM PRESSURE SWITCH
- TS — O.S. & Y. VALVE TAMPER SWITCH
- CM — FIRE ALARM CONTROL MODULE
- MM — FIRE ALARM MONITOR MODULE
- FSD — FIRE SMOKE DAMPER
- DC — DOOR CONTACT
- ES — ELECTRIC STRIKE
- GA — GENERATOR ANNUNCIATOR
- NAC — NOTIFICATION APPLIANCE CIRCUIT EXTENDER
- RFCC — REMOTE FIRE COMMAND CENTER
- ML — MAGNETIC LOCK
- RA — RESCUE ANNUNCIATOR STATION
- RC — RESCUE CALL STATION
- RX — SECURITY REQUEST TO EXIT
- MAGNETIC DOOR HOLDER (WALL OR FLOOR MOUNTED)
- # — DRAWING NOTE DESIGNATION
- # — LIGHT FIXTURE DESIGNATION
- FLEXIBLE CONDUIT
- CONDUIT CONCEALED IN WALLS, CEILING OR FLOOR
- CONDUIT CONCEALED IN SLAB, UNDERGROUND OR UNDERFLOOR
- EXISTING CONDUIT
- GROUND WIRE
- STUB UP
- STUB DOWN
- STUB OUT
- ISOLATED GROUND CONDUCTOR / EQUIPMENT GROUND CONDUCTOR
- PHASE CONDUCTOR / NEUTRAL CONDUCTOR
- PHASE CONDUCTOR / NEUTRAL CONDUCTOR / PROVIDE GREEN GROUND WIRE / SIZED PER NEC IN ALL RACEWAYS
- AHU-1 — MECHANICAL EQUIPMENT DESIGNATION
- CABLE TRAY FOR DATA TELEPHONE AND SOUND/PAGING ONLY (NO CONTROL WIRING)
- TRANSFORMER (ONE-LINES)
- BREAKER
- MANHOLE
- 600A DEADBREAK MOLDED PRODUCT TERMINATION (15KV)
- 600A DEADBREAK MOLDED PRODUCT SPLICE (15KV)
- G&W UNIVERSAL CE TERMINATION (15KV)
- G&W UNIVERSAL CE SPLICE (15KV)
- 200A LOADBREAK MOLDED PRODUCT TERMINATION (15KV)
- MEDIUM VOLTAGE SPLICE (15KV HEATSHRINK OR LOADSHRINK)

ABBREVIATIONS

AFF	ABOVE FINISHED FLOOR
AIC	AMP INTERRUPTING CURRENT (SYMMETRICAL)
AL	ALUMINUM
BG	BELOW GRADE
C	CONDUIT
CFCI	CONTRACTOR FURNISHED CONTRACTOR INSTALLED
CLG	CEILING
CTR	ABOVE COUNTER DEVICE
CKT	CIRCUIT
CO	CONDUIT ONLY
CU	COPPER
EM	EMERGENCY
(E)	EXISTING
EWC	ELECTRIC WATER COOLER
EWH	ELECTRIC WATER HEATER
(F)	FUTURE
FA	FIRE ALARM
FACP	FIRE ALARM CONTROL PANEL
FLA	FULL LOAD AMPS
GFI	GROUND FAULT INTERRUPTER
GFP	GROUND FAULT PROTECTOR
GND	GROUND
GRC	GALVANIZED RIGID CONDUIT
IG	ISOLATED GROUND
LTG	LIGHTING
MCB	MAIN CIRCUIT BREAKER
MCC	MOTOR CONTROL CENTER
MLO	MAIN LUGS ONLY
(N)	NEW
NAC	NOTIFICATION APPLIANCE CIRCUIT
NIC	NOT IN CONTRACT
NL	NIGHT LIGHT
NTS	NOT TO SCALE
OFCI	OWNER FURNISHED CONTRACTOR INSTALLED
OFOI	OWNER FURNISHED OWNER INSTALLED
PNL	PANEL
(R)	RELOCATE
S	SWITCHED
SPD	SURGE PROTECTIVE DEVICE
ST	SHUNT TRIP
TYP	TYPICAL
UNO	UNLESS NOTED OTHERWISE
VR	VANDAL RESISTANT
WG	WIRE GUARD
WP	WEATHER PROOF
(X)	DEMOLISH/DELETE
XFMR	TRANSFORMER

AUDIO VISUAL SYMBOLS

- EQUIPMENT CABINET (# INDICATES TYPE)
- MV# — MASTER VOLUME (# INDICATES TYPE)
- VC# — VOLUME CONTROL (# INDICATES TYPE)
- PROGRAM HORN
- H — HDMI INPUT
- V — VGA INPUT
- VH — VGA/HDMI INPUT COMBO
- A — AMPLIFIER (FLOOR PLAN)
- S — SPLITTER (FLOOR PLAN)
- C — CAMERA INPUT
- DC — DIRECTIONAL COUPLER
- AMPLIFIER(ONE-LINE)
- SPLITTER(ONE-LINE)
- CP1 — CUSTOM PLATE (# INDICATES TYPE)
- -RG8- — ANTENNA CABLE
- -CAT5- — CAT5 CABLE
- -CAT6- — CAT6 CABLE
- -S- — SPEAKER CABLE
- -M- — MICROPHONE CABLE
- -IC- — INTERCOM CABLE

NOTE: NOT ALL SYMBOLS USED ON DRAWINGS.

SHEET INDEX

SHEET #	SHEET NAME
EG100	SYMBOLS, ABBREVIATIONS AND SHEET INDEX
ED100.1	ELECTRICAL SITE DEMOLITION
ES100.2	ENLARGED ELECTRICAL SITE PLAN
ES100.3	ENLARGED ELECTRICAL SITE PLAN
ES100.4	LIGHTNING PROTECTION PLAN
ES100	SITE LIGHTING PLAN BASE BID
ES100.5	ENLARGED ELECTRICAL TUNNEL PLAN
ES100A	SITE LIGHTING PLAN ALTERNATE
ES500	MANHOLE DETAILS
ES501	ELECTRICAL SITE DETAILS
ES502	SITE LIGHTING DETAILS
EL100.A	LOWER LEVEL LIGHTING AREA A
EL100.B	LOWER LEVEL LIGHTING AREA B
EL100.C	LOWER LEVEL LIGHTING AREA C
EL200.C1	LOWER LEVEL LIGHTING - ALTERNATE 1A
EL200.C2	LOWER LEVEL LIGHTING - ALTERNATE 1B
EL101.A	LEVEL 1 LIGHTING AREA A
EL101.B	LEVEL 1 LIGHTING AREA B
EL101.C	LEVEL 1 LIGHTING AREA C
EL201.B	ALTERNATE 3 LIGHTING AREA B
EL201.C1	LEVEL 1 LIGHTING ATERNATE 1A
EL201.C2	LEVEL 1 LIGHTING ALTERNATE 1B
EL102.A	LEVEL 2 LIGHTING AREA A
EL102.B	LEVEL 2 LIGHTING AREA B
EL102.C	LEVEL 2 LIGHTING AREA C
EL103.A	LEVEL 3 LIGHTING AREA A
EL103.B	LEVEL 3 LIGHTING AREA B
EL103.C	LEVEL 3 LIGHTING AREA C
EL501	ELEVATION STAIRWELL LIGHTING
EL601	LUMINARE SCHEDULE
EL602	LUMINARE SCHEDULE
EL701	LIGHTING DETAILS
EL702	LIGHTING DETAILS
EL703	LIGHTING CONTROL SYSTEM RISER DIAGRAM
EL704	LIGHTING CONTROL DETAILS
EL705	CLIMBING WALL LIGHTING
EP100.A	LOWER LEVEL POWER PLAN AREA A
EP100.B	LOWER LEVEL POWER PLAN AREA B
EP100.C	LOWER LEVEL POWER PLAN AREA C
EP200.C1	LOWER LEVEL POWER PLAN ALTERNATE 1A
EP200.C2	LOWER LEVEL POWER PLAN ALTERNATE 1B
EP101.A	LEVEL 1 POWER PLAN AREA A
EP101.B	LEVEL 1 POWER PLAN AREA B
EP101.C	LEVEL 1 POWER PLAN AREA C
EP201.B	POWER PLAN AREA B ALTERNATE 3
EP102.A	LEVEL 2 POWER PLAN AREA A
EP102.B	LEVEL 2 POWER PLAN AREA B
EP102.C	LEVEL 2 POWER PLAN AREA C
EP103.A	LEVEL 3 POWER PLAN AREA A
EP103.B	LEVEL 3 POWER PLAN AREA B
EP103.C	LEVEL 3 POWER PLAN AREA C
EP104.A	ROOF POWER PLAN AREA A
EP104.B	ROOF POWER PLAN AREA B
EP104.C	ROOF POWER PLAN AREA C
EP130	STORAGE SHED ELECTRICAL PLANS
EP204.C	ROOF POWER PLAN AREA C ALT 1
EP501	ENLARGED ELECTRICAL AND DATA ROOMS
EP502	ENLARGED LOWER LEVEL ROOMS
EP503	POWER PLANS ENLARGED VIEWS
EP504	ENLARGED U. OF U. CREDIT UNION
EP600	ONE-LINE DIAGRAM - 480V
EP601	ONE LINE DIAGRAM - 208V
EP602	EMERGENCY ONE-LINE DIAGRAM
EP603	PANEL SCHEDULES
EP604	PANEL SCHEDULES
EP605	PANEL SCHEDULES
EP606	PANEL SCHEDULES
EP607	PANEL SCHEDULES
EP608	PANEL SCHEDULES
EP609	ELECTRICAL SCHEDULES
EP610	RELAY PANELS
EP701	ELECTRICAL DETAILS
EY100.A	LOWER LEVEL SYSTEMS PLAN AREA A
EY100.B	LOWER LEVEL SYSTEMS PLAN AREA B
EY100.C	LOWER LEVEL SYSTEMS PLAN AREA C
EY200.C1	LOWER LEVEL SYSTEMS PLAN ALTERNATE 1A
EY200.C2	LOWER LEVEL SYSTEMS PLAN ALTERNATE 1B
EY101.A	LEVEL 1 SYSTEMS PLAN AREA A
EY101.B	LEVEL 1 SYSTEMS PLAN AREA B
EY101.C	LEVEL 1 SYSTEMS PLAN AREA C
EY201.B	SYSTEMS PLAN AREA B ALTERNATE 3
EY102.A	LEVEL 2 SYSTEMS PLAN AREA A
EY102.B	LEVEL 2 SYSTEMS PLAN AREA B
EY102.C	LEVEL 2 SYSTEMS PLAN AREA C
EY103.A	LEVEL 3 SYSTEMS PLAN AREA A
EY103.B	LEVEL 3 SYSTEMS PLAN AREA B
EY103.C	LEVEL 3 SYSTEMS PLAN AREA C
EY201.C	LEVEL 1 SYSTEMS AETERNATE 1
EY300	LOWER LEVEL CABLETRAY PLAN
EY301	LEVEL 1 CABLETRAY PLAN
EY302	LEVEL 2 CABLETRAY PLAN
EY303	LEVEL 3 CABLETRAY PLAN
EY500	ENLARGED SYSTEMS FLOOR PLANS
EY601	TELECOM RISER DIAGRAM
EY602	MDF AND IDF ROOM LAYOUTS
EY603	FIRE ALARM RISER DIAGRAM
EY604	SECURITY RISER DIAGRAM
EY605	ACCESS CONTROL DETAIL
EY705	A/V DETAILS
EY706	A/V DETAILS
EY707	A/V DETAILS
EY709	A/V EQUIPMENT SCHEDULES
EY710	A/V EQUIPMENT SCHEDULES
EY711	A/V EQUIPMENT SCHEDULES
EY712	A/V EQUIPMENT SCHEDULES
EY713	A/V EQUIPMENT SCHEDULES
EY714	A/V EQUIPMENT SCHEDULES
EY715	A/V EQUIPMENT SCHEDULES

MHTN ARCHITECTS
MHTN Architects, Inc.
420 East South Temple
Suite 100
Salt Lake City, Utah 84111
Telephone (801) 595-6700
Telefax (801) 595-6717
www.mhtn.com

Hastings+Chivetta
ARCHITECTURE • PLANNING • ENGINEERING
622 Emerson, Suite 200
St. Louis, MO 63141
Tel. 314.863.5717
Fax. 314.863.2823
www.hastingschivetta.com

BUILDING OFFICIAL STAMP

Ken Garner Engineering, Inc.
Electrical Engineering Consultants, Inc.
102 West 500 South, Suite 225
Salt Lake City, Utah 84101
P. 801.328.8800
F. 801.328.8802
Contact: Paris LeLaCheur
Project #: 2010-117.00

UNIVERSITY OF UTAH
STUDENT LIFE CENTER
1836 E. BALLIF ROAD
SALT LAKE CITY, UTAH 84112

SEAL

MHTN PROJECT NO. 2010562.00
DRAWN BY: Author CHECKED BY: Checker

ISSUED:

NO.	DATE	DESCRIPTION

CONTRACTOR TO VERIFY DRAWINGS IN FIELD USE REFLECT LAST REVISION DATE.

NO.	DATE	DESCRIPTION
1	05-28-2013	ADDENDUM ONE

SHEET NAME
SYMBOLS, ABBREVIATIONS AND SHEET
BID DOCUMENTS
May 15, 2013

SHEET NUMBER
EG100

C:\Users\brown.KGE\Documents\2010-117.00_KGE_STUDENT LIFE_ELECTRICAL_CENTERAL_2012_brown.rvt
5/28/2013 3:22:37 PM

KEYED NOTES:

1. EXCAVATE AND DEMOLISH ABANDONED UNDERGROUND CONDUIT.
2. SEE ONE LINE DIAGRAM ON SHEET EP600 FOR 600 MU SPLICE LOCATIONS.
3. DEMOLISH EXISTING LIGHT POLE, BASE, FIXTURE, CONDUIT AND WIRE BACK TO NEAREST FIXTURE TO REMAIN. IF NO FIXTURES REMAIN. DEMOLISH BACK TO SOURCE.
4. TRANSFORMER AND BREAKER ENCLOSURE TO BE DEMOLISHED UNDER ANOTHER PROJECT SCOPE.
5. EXISTING IRRIGATION CONTROLLERS TO BE RELOCATED. COORDINATE WITH LANDSCAPE ARCHITECT FOR EXACT LOCATION.
6. DEMOLISH EXISTING ELECTRICAL BOX.
7. EXISTING TELECOM/POWER DUCT BANK TO BE DEMOLISHED AND RELOCATED. LOCATION AND ROUTING SHALL BE DECIDED UNDER ANOTHER PROJECT. COST OF RELOCATING DUCT BANK AND POWER ALSO UNDER OTHER PROJECT. TELECOM PORTION SHALL BE COORDINATED UNDER THIS SCOPE AND USE SAME TRENCHING AS POWER.
8. EXISTING TELECOM DUCT BANK TO BRIDGE TO BE DEMOLISHED ALONG WITH FIBER FEED.
9. EXISTING DUCT BANK AND DOWN FEEDER TO REMAIN AND BE PROTECTED, FEEDS FROM MH.36B.
10. EXISTING ABANDONED ELECTRICAL DUCT BANK TO BE DEMOLISHED.
11. CONTINUES TO TELECOM MANHOLE MH361X.
12. CONTINUES TO HONORS HOUSING.
13. EXISTING TELECOM DUCT BANK TO BE PROTECTED AND REMAIN.

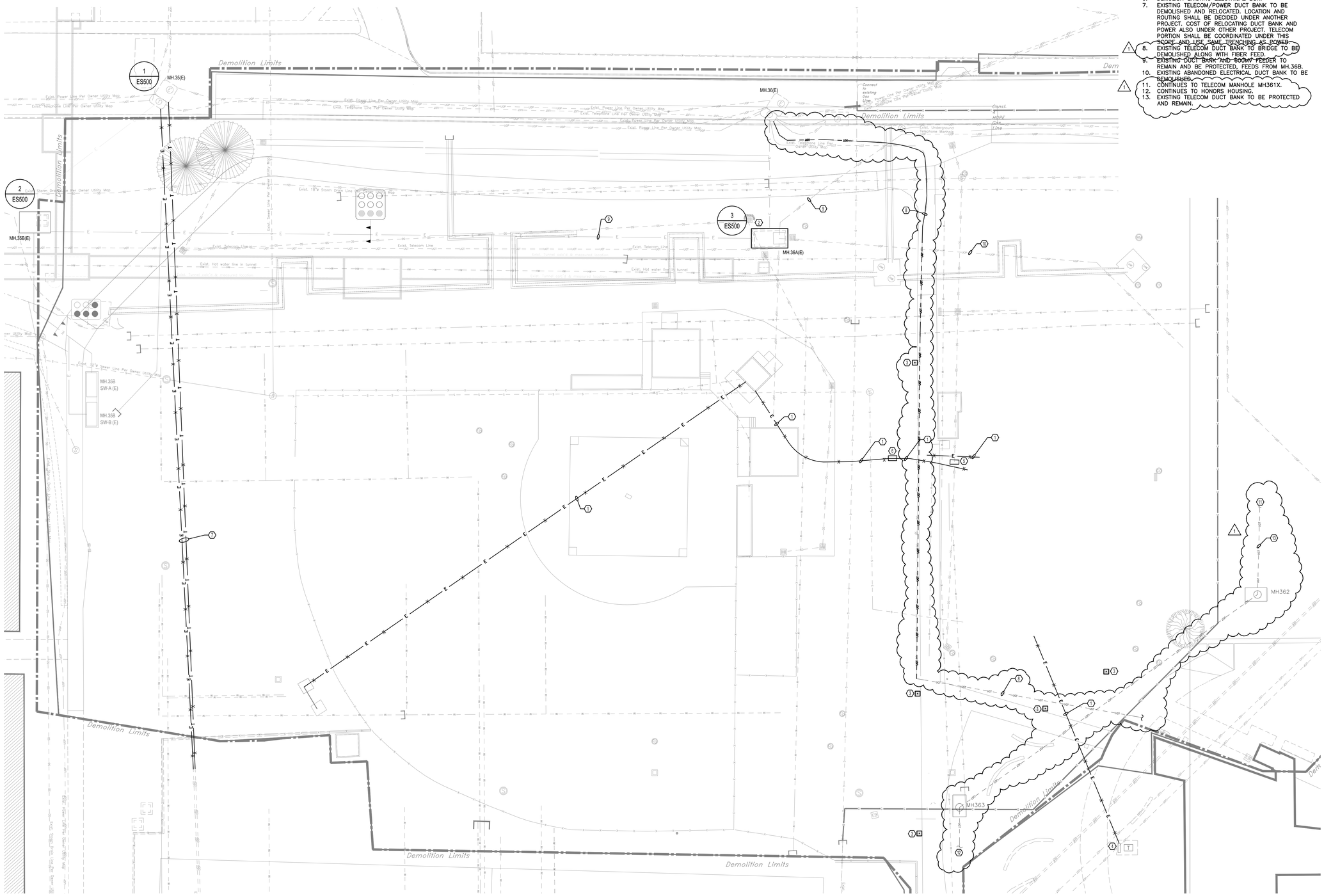

1 ED100.1 DEMOLITION ELECTRICAL SITE PLAN

SCALE: 1" = 20'

MHTN ARCHITECTS
MHTN Architects, Inc.
420 East South Temple
Suite 100
Salt Lake City, Utah 84111
Telephone (801) 595-6700
Telefax (801) 595-6717
www.mhtn.com

622 Emerson, Suite 200
St. Louis, MO 63141
Tel. 314.863.5717
Fax. 314.863.2823
www.hastingschivetta.com

Ken Garner Engineering, Inc.
ELECTRICAL CONSULTING ENGINEERS
102 West 500 South, Suite 225
Salt Lake City, Utah 84101
Telephone: 801.328.8800
Fax: 801.328.8802
Contact: Paris LeLaCheur
Project #: 2010-117.00

UNIVERSITY OF UTAH

STUDENT LIFE CENTER

1836 E. BALLIF ROAD
SALT LAKE CITY, UTAH 84112

SEAL

MHTN PROJECT NO. 2010562.00

DRAWN BY: KGE CHECKED BY: KGE

ISSUED:

NO.	DATE	DESCRIPTION

CONTRACTOR TO VERIFY DRAWINGS IN FIELD USE REFLECT LAST REVISION DATE.

NO.	DATE	DESCRIPTION
1	05-24-2013	ADDENDUM ONE

SHEET NAME

ELECTRICAL DEMOLITION SITE PLAN
BID DOCUMENTS
MAY 15, 2013

SHEET NUMBER

ED100.1

By: rbrown; May 28, 2013 – 9:33am
H:\2010\University of Utah\U of U Student Life 10117\Cad\ED100.1.dwg

KEYED NOTES - SHEET EL101.C

1. CONTINUATION ON LEVEL 2.
2. CONTINUATION ON LEVEL 1.
3. CONNECT ALL EXIT SIGNS TO UNSWITCHED EM. CIRCUIT.
4. STAIRWELL LIGHTING FIXTURES SHALL HAVE 2 BALLASTS AND 2 LAMPS WITH INTEGRATED OCCUPANCY SENSOR; ONE LAMP CONSTANTLY ON, ONE LAMP SENSORED.
5. CORRIDOR OCCUPANCY SENSORS SHALL BE CONNECTED TO THE RELAY CONTROL PANEL ON THIS FLOOR TO CONTROL CORRIDOR LIGHTING. DURING DAYTIME (OCCUPIED) MODE THE OCCUPANCY SENSORS SHALL CONTROL THE NORMAL LIGHTING IN ZONES AND EMERGENCY LIGHTING SHALL REMAIN ON.DURING NIGHT TIME (UNOCCUPIED) MODE: NORMAL LIGHTING SHALL REMAIN OFF. EMERGENCY LIGHTING SHALL BE TURNED OFF BY LIGHTING CONTROL SYSTEM'S TIME CLOCK. DURING OFF HOURS AND UPON SENSING OCCUPANCY, ALL EMERGENCY LIGHTS SHALL TURN ON.
6. POOL LIGHTING SHALL BE CONNECTED TO RELAY CONTROL PANEL ON THIS FLOOR TO CONTROL THE LIGHTING IN THIS ZONE BY LIGHTING CONTROL SYSTEM'S TIME CLOCK. PROVIDE GFCI BREAKER FOR POOL LIGHTINGS.
7. RACQUETBALL LIGHTING SHALL BE CONNECTED TO RELAY CONTROL PANEL ON THIS FLOOR TO CONTROL THE LIGHTING IN THIS ZONE BY LIGHTING CONTROL SYSTEM'S TIME CLOCK.
8. LOW VOLTAGE 2 BUTTON OVERRIDE SWITCH SHALL BE CONNECTED TO THE RELAY CONTROL SYSTEM TO TURN CORRIDOR LIGHTS ON/OFF AFTER HOURS.
9. ELECTRICAL CONTRACTOR TO COORDINATE WITH THE FRAMING CONTRACTOR FOR THE AREAS WHERE LINEAR FIXTURES TRANSITION FROM PENDANT MOUNT TO RECESS MOUNT. FIXTURE IS TO BE CONTINUOUS WITH NO SECTION BREAK, THE FRAMING AND GYP. BOARD IS TO BE INSTALLED TO ACCOMMODATE THE LIGHTING FIXTURE. ELECTRICAL CONTRACTOR IS TO COORDINATE THE FRAMING OPENING WITH THE FIXTURE SUBMITTED, NOT THE DIMENSION SHOWN ON THE LUMINAIRE SCHEDULE. ACTUAL FIXTURE WIDTHS MAY VARY FROM MANUFACTURER TO MANUFACTURER.
10. ADJUST LIGHTING AS NEEDED TO ACCOMMODATE MECHANICAL UNITS.
11. DIMMING PHOTOSENSOR TO OPERATE A STANDARD 0-10 VDC ELECTRONIC DIMMING DRIVER. COORDINATE THE PROPER HEIGHT AN LOCATION WITH MANUFACTURER AND ARCHETECTURAL PLANS.
12. FIXTURES TO BE CONTROLLED BY PHOTOSENSOR. CONTROL SCHEMS. WILL BE SET THROUGH PROGRAMING.

GENERAL NOTES - SHEET EL101.C

A. COORDINATE MOUNTING HEIGHT OF ALL LIGHT FIXTURES WITH ARCHITECTURAL PLANS/ DRAWINGS.
B. MAKE SMOOTH TRANSITION FOR LIGHT FIXTURES WITH RESPECT TO CEILING TRANSITION. COORDINATE THIS WITH ARCHITECTURAL PLANS/DRAWINGS.

1 EL101.C C ENLARGED LEVEL 1 RCP PLAN WEST
SCALE |1/8" = 1'-0"

0' 4'-0" 8'-0" 16'-0"
1/8" =1'-0"

KEYPLAN

MHTN
ARCHITECTS
MHTN Architects, Inc.
420 East South Temple
Suite 100
Salt Lake City, Utah 84111
Telephone (801) 595-6700
Telefax (801) 595-6717
www.mhtn.com

Hastings+Chivetta
ARCHITECTURE • PLANNING • ENGINEERING
622 Emerson, Suite 200
St. Louis, MO 63141
Tel. 314.863.5717
Fax. 314.863.2823
www.hastingschivetta.com

BUILDING OFFICIAL STAMP
Ken Garner
Engineering, Inc.
Electrical Engineering Consultants, Inc.
102 West 500 South, Suite 225
Salt Lake City, Utah 84101
P. 801.328.8800
F. 801.328.8802
Contact: Paris LeLaCheur
Project #: 2010-117.00

UNIVERSITY OF UTAH
STUDENT LIFE CENTER
1836 E. BALLIF ROAD
SALT LAKE CITY, UTAH 84112

SEAL

MHTN PROJECT NO. 2010562.00

DRAWN BY: KGE CHECKED BY: KGE

ISSUED:

NO.	DATE	DESCRIPTION

CONTRACTOR TO VERIFY DRAWINGS IN FIELD USE REFLECT LAST REVISION DATE:

NO.	DATE	DESCRIPTION
1	05-28-2013	ADDENDUM ONE

SHEET NAME
LEVEL 1
LIGHTING AREA
C
BID DOCUMENTS
May 15, 2013

SHEET NUMBER
EL101.C

C:\Users\drown.KGE\Documents\2010-117.00_KGE_STUDENT LIFE_ELECTRICAL_CENTERAL_2012_rbrown.rvt
5/28/2013 9:39:20 AM

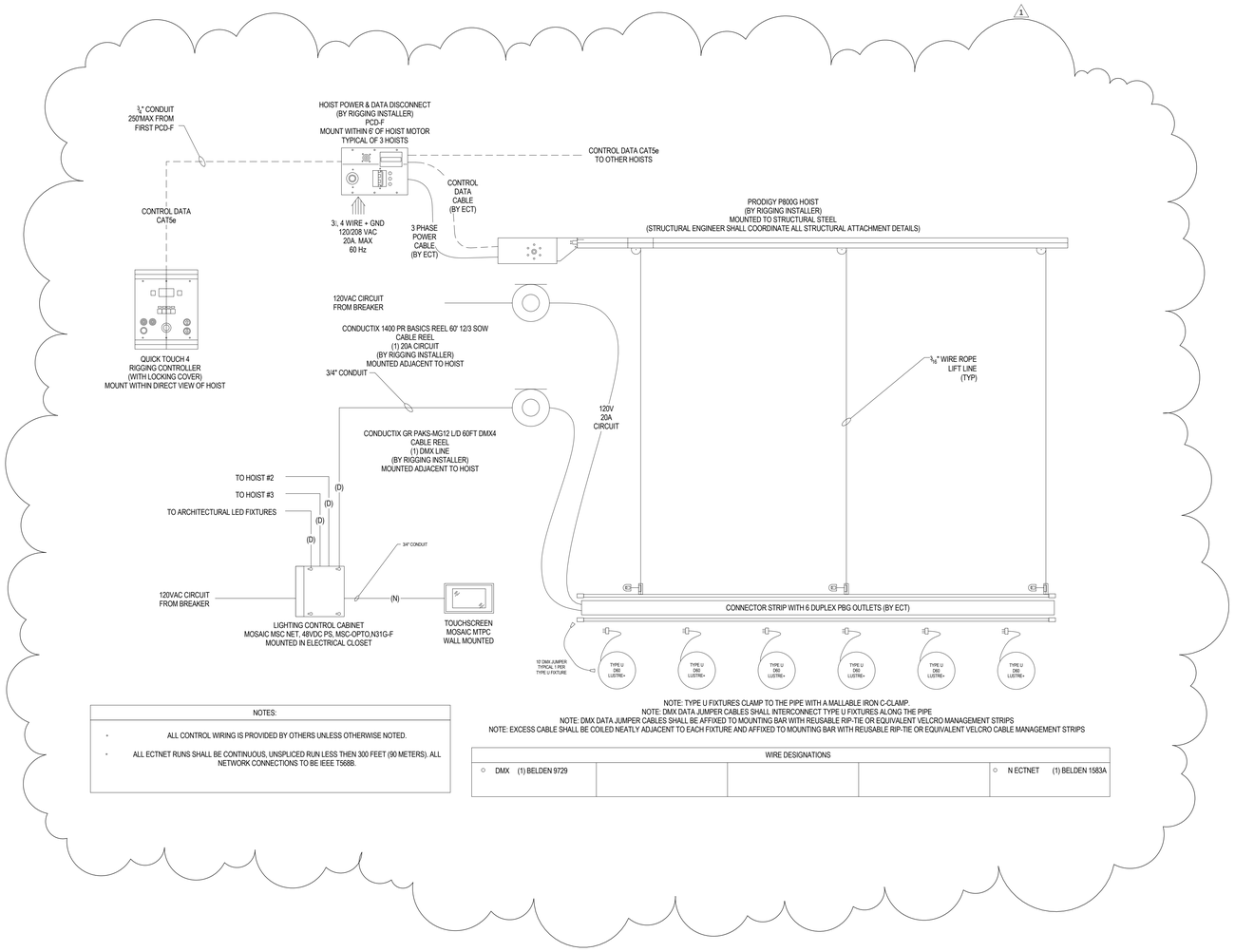

NOTE: TYPE U FIXTURES CLAMP TO THE PIPE WITH A MALLABLE IRON C-CLAMP.
NOTE: DMX DATA JUMPER CABLES SHALL INTERCONNECT TYPE U FIXTURES ALONG THE PIPE
NOTE: DMX DATA JUMPER CABLES SHALL BE AFFIXED TO MOUNTING BAR WITH REUSABLE RIP-TIE OR EQUIVALENT VELCRO MANAGEMENT STRIPS
NOTE: EXCESS CABLE SHALL BE COILED NEATLY ADJACENT TO EACH FIXTURE AND AFFIXED TO MOUNTING BAR WITH REUSABLE RIP-TIE OR EQUIVALENT VELCRO CABLE MANAGEMENT STRIPS

NOTES:
• ALL CONTROL WIRING IS PROVIDED BY OTHERS UNLESS OTHERWISE NOTED.
• ALL ECTNET RUNS SHALL BE CONTINUOUS, UNSPLICED RUN LESS THEN 300 FEET (90 METERS). ALL NETWORK CONNECTIONS TO BE IEEE T568B.

WIRE DESIGNATIONS				
◇ DMX (1) BELDEN 9729				◇ N ECTNET (1) BELDEN 1583A

MHTN
ARCHITECTS
MHTN Architects, Inc.
420 East South Temple
Suite 100
Salt Lake City, Utah 84111
Telephone (801) 595-6700
Telefax (801) 595-6717
www.mhtn.com

Hastings+Chivetta
ARCHITECTURE • PLANNING • ENGINEERING
622 Emerson, Suite 200
St. Louis, MO 63141
Tel. 314.863.5717
Fax. 314.863.2823
www.hastingschivetta.com

BUILDING OFFICIAL STAMP
Ken Garner
Engineering, Inc.
Electrical Engineering Consultants, Inc.
102 West 500 South, Suite 225
Salt Lake City, Utah 84101
P. 801.328.8800
F. 801.328.8802
Contact: Paris LeLaCheur
Project #: 2010-117.00

UNIVERSITY OF UTAH
STUDENT LIFE CENTER
1836 E. BALLIF ROAD
SALT LAKE CITY, UTAH 84112

SEAL

MHTN PROJECT NO. 2010562.00
DRAWN BY: Author CHECKED BY: Checker

ISSUED:

NO.	DATE	DESCRIPTION

CONTRACTOR TO VERIFY DRAWINGS IN FIELD USE REFLECT LAST REVISION DATE:

NO.	DATE	DESCRIPTION
1	05-28-2013	ADDENDUM ONE

SHEET NAME
CLIMBING WALL
LIGHTING

BID DOCUMENTS
May 15, 2013

SHEET NUMBER
EL705

C:\Users\drown.KGE\Documents\2010-117.00_KGE_STUDENT LIFE_ELECTRICAL_CENTERAL_2012_rhrown.rvt
5/28/2013 9:40:27 AM

KEYED NOTES - SHEET EP100.B

1. POWER FOR SCOREBOARD CONTROLLER. COORDINATE WITH ARCHITECT FOR EXACT LOCATION.
2. J-BOX MOUNTED IN CEILING FOR 120V POWER TO MECHANICAL VAV BOX. COORDINATE WITH MECHANICAL FOR EXACT LOCATION.
3. RECEPTACLE FOR POWER TO SCOREBOARD. COORDINATE WITH ARCHITECT FOR EXACT LOCATION.
4. INSTALL A LCD TV HERE. SEE EQUIPMENT LIST FOR MANUFACTURER AND MODEL. (TV DISTRIBUTION SYSTEM, SHEET EY710)
5. PROVIDE THERMAL SWITCH FOR MOTORIZED BACKBOARD DISCONNECT.
6. PROVIDE LOCKABLE CABINET FOR LIGHTING SWITCHES AND MOTORIZED EQUIPMENT MOMENTARY KEYED SWITCHES. CABINET SHALL BE RECESSED IN COLUMN WALL.
7. DEDICATED RECEPTACLE FOR MICROWAVE OVEN. COORDINATE EXACT LOCATION PRIOR TO ROUGHIN. COORDINATE WITH ARCHITECT FOR EXACT MOUNTING LOCATION AND HEIGHT. PROVIDE WIRE GUARD.
9. J-BOX FOR POWER TO MOTORIZED SHADES. COORDINATE EXACT LOCATION OF J-BOX WITH SHADE INSTALLER.
10. J-BOX FOR FUTURE POWER TO MOTORIZED SHADES. PROVIDE J-BOX AND CONDUIT ONLY BACK TO ROOM 10F.

GENERAL NOTES - SHEET EP100.B

A. PROVIDE (2) 3/4" CONDUITS TO EACH DATA LOCATION. EACH CONDUIT SHALL RUN FROM NEAREST CABLE TRAY TO OUTLET LOCATION AND SHALLHAVE A PULL STRING INSTALLED. ALL WIRING IS TO BE DONE BY UNIVERSITY OF UTAH NETCOM DEPARTYMENT.
B. UNIVERSITY OF UTAH NET COM SHALL PROVIDE ALL 19" TELECOM RACKS AND MAKE ALL FINAL CONNECTIONS.

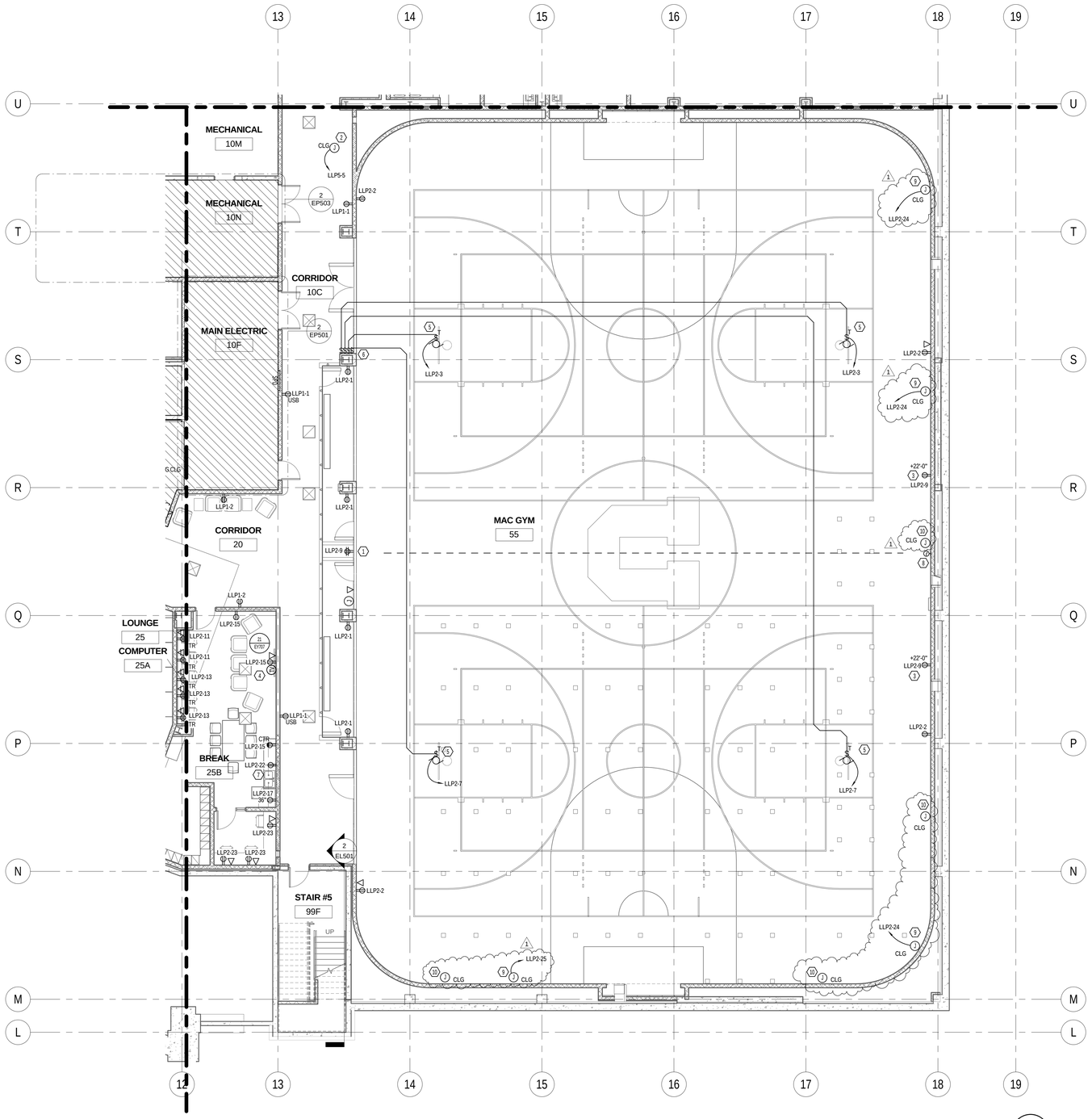

1 EP100.B B ENLARGED LOWER LEVEL POWER PLAN SOUTH
SCALE |1/8" = 1'-0"

0' 4'-0" 8'-0" 16'-0"
1/8" =1'-0"

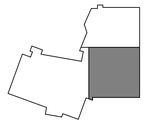

KEYPLAN

MHTN
ARCHITECTS
MHTN Architects, Inc.
420 East South Temple
Suite 100
Salt Lake City, Utah 84111
Telephone (801) 595-6700
Telefax (801) 595-6717
www.mhtn.com

Hastings+Chivetta
ARCHITECTURE • PLANNING • ENGINEERING
622 Emerson, Suite 200
St. Louis, MO 63141
Tel. 314.863.5717
Fax. 314.863.2823
www.hastingschivetta.com

BUILDING OFFICIAL STAMP

Ken Garner Engineering, Inc.
Electrical Engineering Consultants, Inc.
102 West 500 South, Suite 225
Salt Lake City, Utah 84101
P: 801.328.8800
F: 801.328.8802
Contact: Paris LeLaCheur
Project #: 2010-117.00

UNIVERSITY OF UTAH

STUDENT LIFE CENTER

1836 E. BALLIF ROAD
SALT LAKE CITY, UTAH 84112

SEAL

MHTN PROJECT NO. 2010562.00

DRAWN BY: KGE CHECKED BY: KGE

ISSUED:

NO.	DATE	DESCRIPTION

CONTRACTOR TO VERIFY DRAWINGS IN FIELD USE REFLECT LAST REVISION DATE.

NO.	DATE	DESCRIPTION
1	05-28-2013	ADDENDUM ONE

SHEET NAME

LOWER LEVEL POWER PLAN AREA B
BID DOCUMENTS
May 15, 2013

SHEET NUMBER

EP100.B

C:\Users\rbrown.KGE\Documents\2010-117.00_KGE_STUDENT LIFE_ELECTRICAL_CENTERAL_2012_rbrown.rvt
5/28/2013 9:45:39 AM

KEYED NOTES - SHEET EP100.C

1. VFD PROVIDED BY OTHERS. COORDINATE WITH MECHANICAL FOR EXACT LOCATION.
2. J-BOX MOUNTED IN CEILING FOR 120V POWER TO MECHANICAL VAV BOX. COORDINATE WITH MECHANICAL FOR EXACT LOCATION.
3. CIRCUIT CONTINUES TO LIGHT FIXTURE IN PIT. SEE LIGHTING SHEET FOR CONTINUATION.
4. INSTALL A LCD TV HERE. SEE EQUIPMENT LIST FOR MANUFACTURER AND MODEL. (TV DISTRIBUTION SYSTEM, SHEET EY710)
5. INSTALL TOUCH PANEL INTERFACE HERE.
6. INSTALL LAN DROPS AND TV DROPS INSIDE THE EQUIPMENT CABINET #2.
7. DEDICATED 20A CIRCUITS FOR A/V EQUIPMENT CABINET.
8. J-BOX FOR CONTROL WIRING BETWEEN EMERGENCY SHUT OFF AND TIMER PUSH BUTTONS. PUSH BUTTONS PROVIDED BY POOL MANUFACTURER, INSTALLED BY DIV 26.
9. INSTALL RECEPTACLES HORIZONTALLY ABOVE COUNTER AND BELOW MIRROR. COORDINATE HEIGHT WITH MILLWORK.
10. POWER FOR RADIO CHARGING STATIONS.
11. POWER FOR OWNER PROVIDED TIME CLOCK.
12. ELEVATOR 2-WAY COMMUNICATION PER 2009 IBC 1007.8. COORDINATE WITH ELEVATOR MANUFACTURER FOR EXACT LOCATION.
13. 120V 20A DEDICATED DIRCUIT FOR ELEVATOR CAB LIGHTS.
14. J-BOX FOR ELEVATOR RECALL.
15. J-BOX FOR POWER TO DIGITAL CLOCK. COORDINATE WITH ARCHITECT FOR EXACT LOCATION.

GENERAL NOTES - SHEET EP100.C

A. PROVIDE (2) 3/4" CONDUITS TO EACH DATA LOCATION. EACH CONDUIT SHALL RUN FROM NEAREST CABLE TRAY TO OUTLET LOCATION AND SHALLHAVE A PULL STRING INSTALLED. ALL WIRING IS TO BE DONE BY UNIVERSITY OF UTAH NETCOM DEPARTYMENT.
B. UNIVERSITY OF UTAH NET COM SHALL PROVIDE ALL 19" TELECOM RACKS AND MAKE ALL FINAL CONNECTIONS.

1 EP100.C C ENLARGED LOWER LEVEL POWER PLAN WEST
SCALE |1/8" = 1'-0"

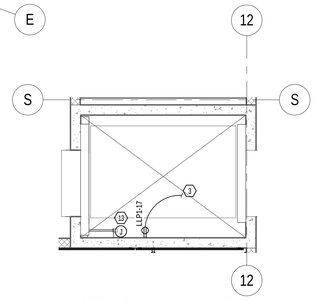

2 EP100.C ENLARGED ELEVATOR #1
SCALE |1/4" = 1'-0"

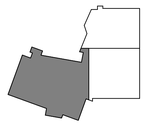

KEYPLAN

MHTN ARCHITECTS
MHTN Architects, Inc.
420 East South Temple
Suite 100
Salt Lake City, Utah 84111
Telephone (801) 595-6700
Telefax (801) 595-6717
www.mhtn.com

Hastings+Chivetta
ARCHITECTURE • PLANNING • ENGINEERING
622 Emerson, Suite 200
St. Louis, MO 63141
Tel. 314.863.5717
Fax. 314.863.2623
www.hastingschivetta.com

BUILDING OFFICIAL STAMP
Ken Garner Engineering, Inc.
Electrical Engineering Consultants, Inc.
102 West 500 South, Suite 225
Salt Lake City, Utah 84101
P. 801.328.8800
F. 801.328.8802
Contact: Paris LeLaCheur
Project #: 2010-117.00

UNIVERSITY OF UTAH

STUDENT LIFE CENTER

1836 E. BALLIF ROAD
SALT LAKE CITY, UTAH 84112

SEAL

MHTN PROJECT NO. 2010562.00

DRAWN BY: KGE CHECKED BY: KGE

ISSUED:

NO.	DATE	DESCRIPTION

CONTRACTOR TO VERIFY DRAWINGS IN FIELD USE REFLECT LAST REVISION DATE.

NO.	DATE	DESCRIPTION
1	05-28-2013	ADDENDUM ONE

SHEET NAME
LOWER LEVEL POWER PLAN AREA C
BID DOCUMENTS
May 15, 2013

SHEET NUMBER
EP100.C

C:\Users\ftrown.KGE\Documents\2010-117.00_KGE_STUDENT LIFE_ELECTRICAL_CENTERAL_2012_ftrown.rvt
5/28/2013 9:45:57 AM

KEYED NOTES - SHEET EP101.A

1. J-BOX MOUNTED IN CEILING FOR 120V POWER TO MECHANICAL VAV BOX. COORDINATE WITH MECHANICAL FOR EXACT LOCATION.
2. INSTALL ONE TV DROP AND TWO LAN DROPS INSIDE THE EQUIPMENT CABINET.
3. INSTALL A LCD TV HERE. SEE EQUIPMENT LIST FOR MANUFACTURER AND MODEL. (TV DISTRIBUTION SYSTEM, SHEET EY710)
4. DEDICATED 20A CIRCUITS FOR A/V EQUIPMENT CABINET.
5. POWER FOR DISHWASHER. COORDINATE CONNECTION TYPE WITH EQUIPMENT PRIOR TO ROUGH-IN.
6. J-BOX FOR POWER TO FOLDING DOOR MOTOR. MOTOR AND DOOR CONTROL BY OTHERS. DIV.26 TO PROVIDE ALL REQUIRED CONDUIT, DISCONNECTS AND WIRING BETWEEN DOOR, MOTOR AND CONTROL LOCATIONS.
7. CEILING MOUNT TV OUTLET AND LCD TVS.
8. J-BOX FOR POWER TO MOTORIZED SHADES. MOUNT J-BOX IN SOFFIT.
9. J-BOX FOR POWER TO FUTURE MOTORIZED SHADES. PROVIDE J-BOX AND STUB CONDUIT TO ACCESSIBLE CIELING SPACE. COORDINATE EXACT J-BOX LOCATION WITH SHADE INSTALLER.

1

GENERAL NOTES - SHEET EP101.A

A. PROVIDE (2) 3/4" CONDUITS TO EACH DATA LOCATION. EACH CONDUIT SHALL RUN FROM NEAREST CABLE TRAY TO OUTLET LOCATION AND SHALL HAVE A PULL STRING INSTALLED. ALL WIRING IS TO BE DONE BY UNIVERSITY OF UTAH NETCOM DEPARTYMENT.
B. UNIVERSITY OF UTAH NET COM SHALL PROVIDE ALL 19" TELECOM RACKS AND MAKE ALL FINAL CONNECTIONS.

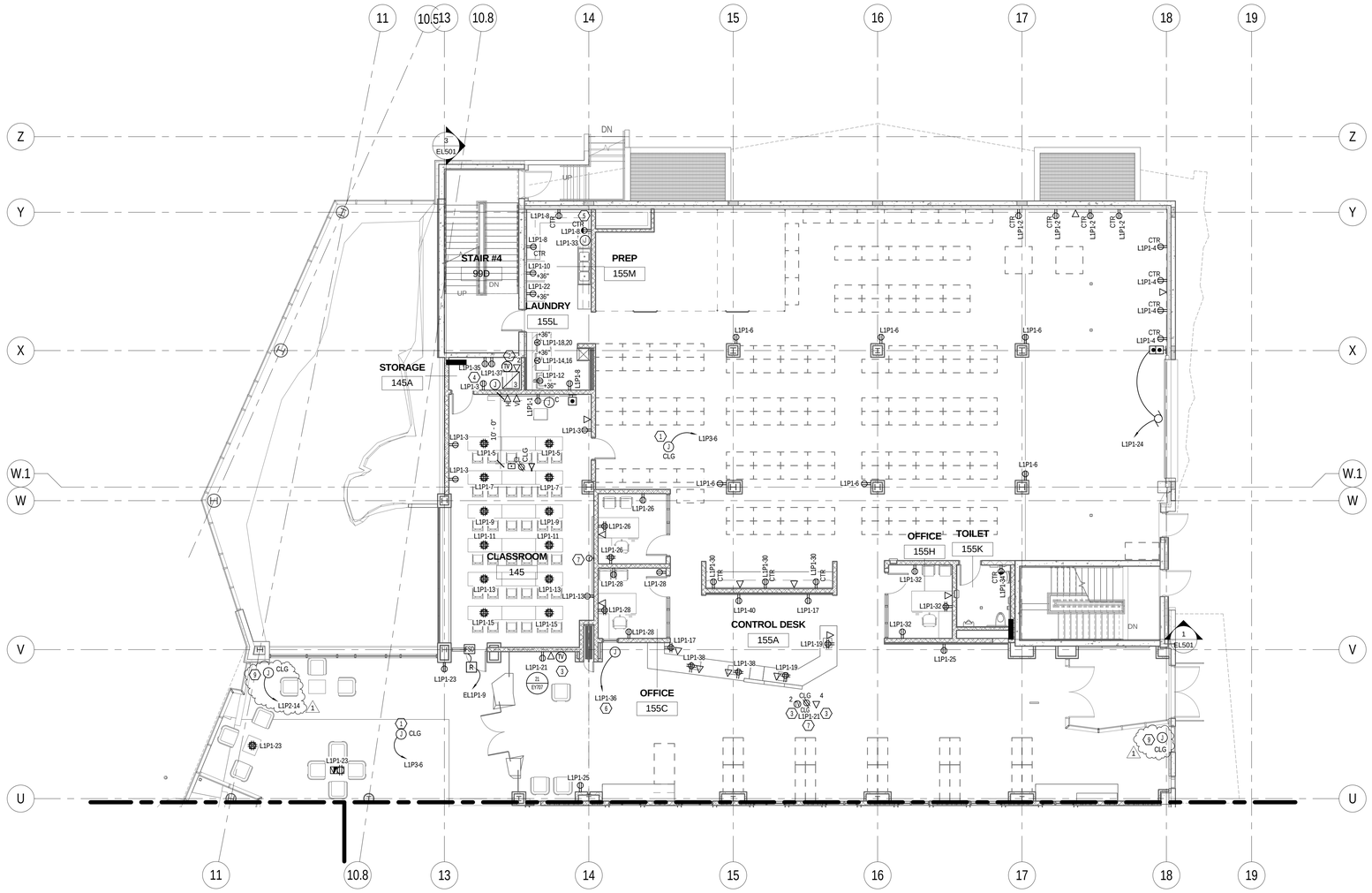

1 A ENLARGED LEVEL 1 POWER PLAN NORTH
EP101.A SCALE [1/8" = 1'-0"

0' 4'-0" 8'-0" 16'-0"
1/8" =1'-0"

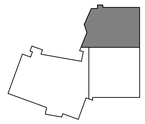

KEYPLAN

MHTN ARCHITECTS
MHTN Architects, Inc.
420 East South Temple
Suite 100
Salt Lake City, Utah 84111
Telephone (801) 595-6700
Telefax (801) 595-6717
www.mhtn.com

Hastings+Chivetta
ARCHITECTURE • PLANNING • ENGINEERING
622 Emerson, Suite 200
St. Louis, MO 63141
Tel. 314.863.5717
Fax. 314.863.2823
www.hastingschivetta.com

BUILDING OFFICIAL STAMP
Ken Garner Engineering, Inc.
Electrical Engineering Consultants, Inc.
102 West 500 South, Suite 225
Salt Lake City, Utah 84101
P. 801.328.8800
F. 801.328.8802
Contact: Paris LeLaCheur
Project #: 2010-117.00

UNIVERSITY OF UTAH

STUDENT LIFE CENTER

1836 E. BALLIF ROAD
SALT LAKE CITY, UTAH 84112

SEAL

MHTN PROJECT NO. 2010562.00

DRAWN BY: KGE CHECKED BY: KGE

ISSUED:

NO.	DATE	DESCRIPTION

CONTRACTOR TO VERIFY DRAWINGS IN FIELD USE REFLECT LAST REVISION DATE.

NO.	DATE	DESCRIPTION
1	05-28-2013	ADDENDUM ONE

SHEET NAME
LEVEL 1 POWER PLAN AREA A

BID DOCUMENTS
May 15, 2013

SHEET NUMBER
EP101.A

C:\Users\brown.KGE\Documents\2010-117.00_KGE_STUDENT LIFE_ELECTRICAL_CENTERAL_2012_brown.rvt
5/28/2013 9:46:07 AM

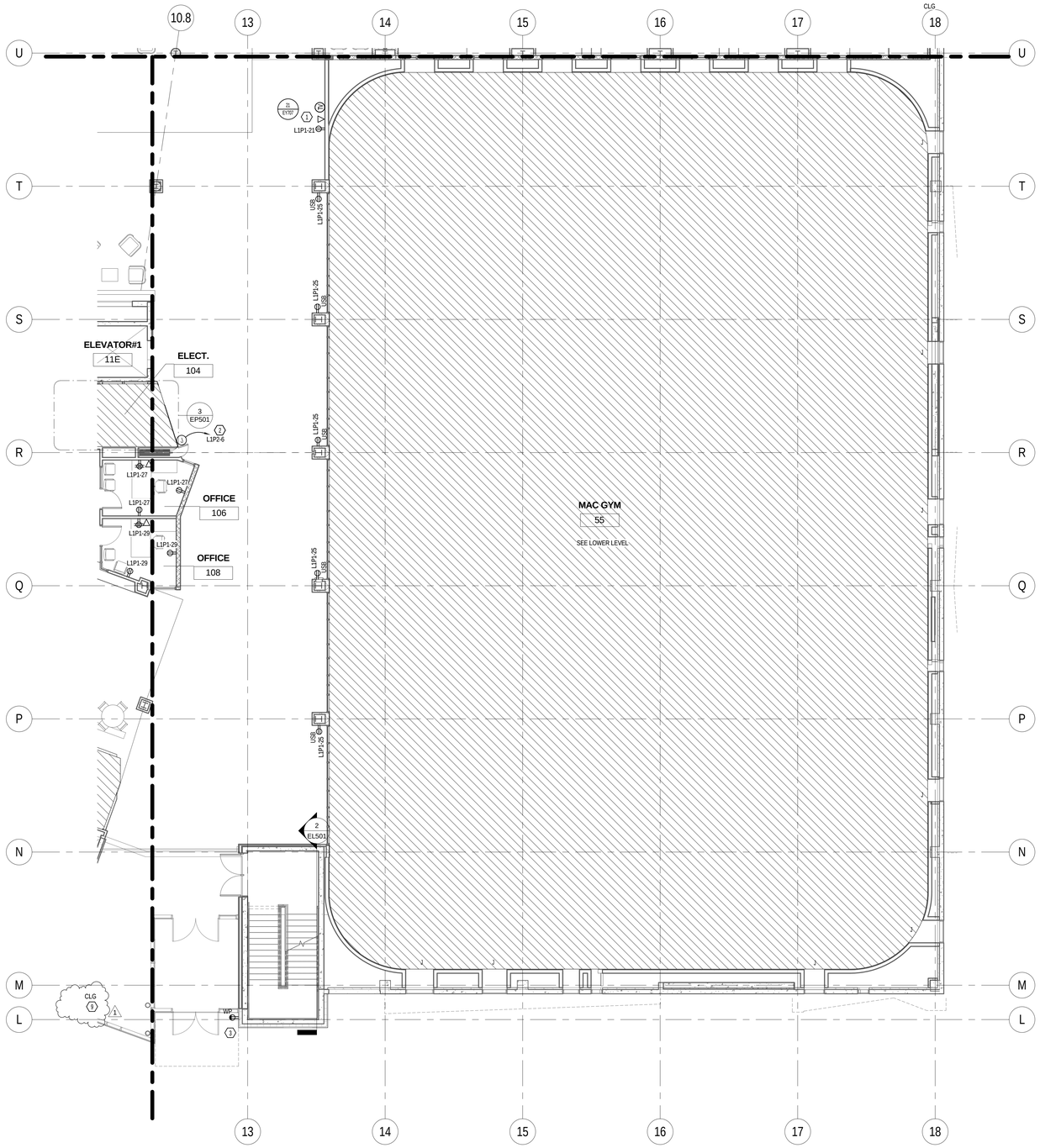

1 EP101.B B ENLARGED LEVEL 1 POWER PLAN SOUTH
SCALE |1/8" = 1'-0"

0' 4'-0" 8'-0" 16'-0"
1/8" =1'-0"

KEYNOTES - SHEET EP101.B

1. INSTALL A LCD TV HERE. SEE EQUIPMENT LIST FOR MANUFACTURER AND MODEL. (TV DISTRIBUTION SYSTEM, SHEET EY710)
2. JUNCTION BOX FOR POWER TO FOLDING DOOR MOTOR. MOTOR AND DOOR CONTROL BY OTHERS. DIV. 26 TO PROVIDE ALL REQUIRED CONDUIT, DISCONNECTS AND WIRING BETWEEN DOOR, MOTOR AND CONTROL LOCATIONS.
3. RECEPTACLE ON CANOPY FOR SNOW MELT. PROVIDE A 120V DEDICATED DIRCUIT. PROVIDE A 30MA BREAKER IN PANEL.

GENERAL NOTES - SHEET EP101.B

A. PROVIDE (2) 3/4" CONDUITS TO EACH DATA LOCATION. EACH CONDUIT SHALL RUN FROM NEAREST CABLE TRAY TO OUTLET LOCATION AND SHALL HAVE A PULL STRING INSTALLED. ALL WIRING IS TO BE DONE BY UNIVERSITY OF UTAH NETCOM DEPARTMENT.
B. UNIVERSITY OF UTAH NET COM SHALL PROVIDE ALL 19" TELECOM RACKS AND MAKE ALL FINAL CONNECTIONS.

MHTN ARCHITECTS
MHTN Architects, Inc.
420 East South Temple
Suite 100
Salt Lake City, Utah 84111
Telephone (801) 595-6700
Telefax (801) 595-6717
www.mhtn.com

Hastings+Chivetta
ARCHITECTURE • PLANNING • ENGINEERING
622 Emerson, Suite 200
St. Louis, MO 63141
Tel. 314.863.5717
Fax. 314.863.2823
www.hastingschivetta.com

BUILDING OFFICIAL STAMP

Ken Garner Engineering, Inc.
Electrical Engineering Consultants, Inc.
102 West 500 South, Suite 225
Salt Lake City, Utah 84101
P. 801.328.8800
F. 801.328.8802
Contact: Paris LeLaCheur
Project #: 2010-117.00

UNIVERSITY OF UTAH
STUDENT LIFE CENTER
1836 E. BALLIF ROAD
SALT LAKE CITY, UTAH 84112

SEAL

MHTN PROJECT NO. 2010562.00

DRAWN BY: KGE CHECKED BY: KGE

ISSUED:

NO.	DATE	DESCRIPTION

CONTRACTOR TO VERIFY DRAWINGS IN FIELD USE REFLECT LAST REVISION DATE.

NO.	DATE	DESCRIPTION
1	05-28-2013	ADDENDUM ONE

SHEET NAME
LEVEL 1 POWER PLAN AREA B

BID DOCUMENTS
May 15, 2013

SHEET NUMBER
EP101.B

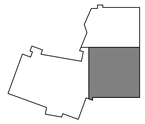
KEYPLAN

C:\Users\brown.KGE\Documents\2010-117.00_KGE_STUDENT LIFE_ELECTRICAL_CENTERAL_2012_brown.rvt
5/28/2013 9:46:13 AM

KEYED NOTES - SHEET EP101.C

1. COORDINATE LOCATION OF FLOOR BOX WITH ARCHITECTURAL DRAWINGS.
2. JUNCTION BOX MOUNTED IN CEILING FOR 120V POWER TO MECHANICAL VAV BOX. COORDINATE WITH MECHANICAL FOR EXACT LOCATION.
3. RECEPTACLES FOR FUTURE MOVEABLE CART. CART BY OTHERS.
4. INSTALL A LCD TV HERE. SEE EQUIPMENT LIST FOR MANUFACTURER AND MODEL. (TV DISTRIBUTION SYSTEM, SHEET EY710)
5. ELEVATOR 2-WAY COMMUNICATION PER 2009 IBC 1007.8. COORDINATE WITH ELEVATOR MANUFACTURER FOR EXACT LOCATION.
6. POWER FOR FIREPLACE BLOWER/EXHAUST.
7. RECEPTACLE ON CANOPY FOR SNOW MELT. PROVIDE A 120V DEDICATED CIRCUIT. PROVIDE A 30MA BREAKER IN PANEL.
8. J-BOX FOR POWER TO MOTORIZED SHADES.
9. J-BOX FOR POWER TO FUTURE MOTORIZED SHADES. PROVIDE J-BOX AND STUB CONDUIT TO ACCESSIBLE CIEILING SPACE COORDINATE EXACT J-BOX LOCATION WITH SHADE INSTALLER.

GENERAL NOTES - SHEET EP101.C

A. CONTRACTOR TO FIELD VERIFY ALL EXISTING CONDITIONS, MATERIALS, FINISHES, AND DIMENSIONS BEFORE ANY WORK BEGINS.
B. CONTRACTOR TO ENSURE THAT ALL CORRIDORS OUTSIDE OF CONSTRUCTION AREA ARE KEPT CLEAN AND CLEAR OF DEBRIS AND OBSTRUCTIONS AT ALL TIMES.
C. PROTECT ALL ITEMS TO REMAIN FROM DAMAGE.

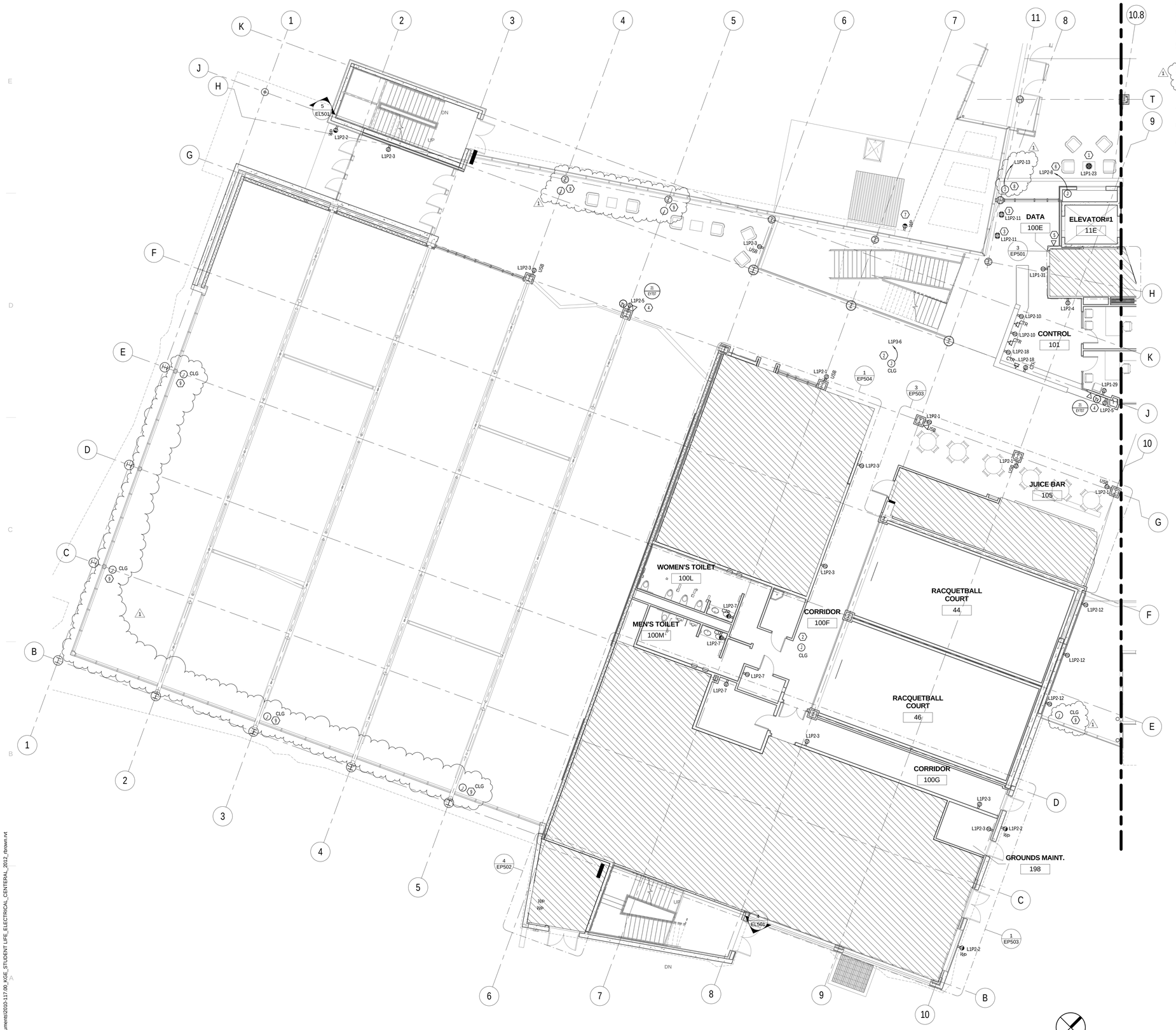

1 EP101.C C ENLARGED LEVEL 1 POWER PLAN WEST
SCALE | 1/8" = 1'-0"

0' 4'-0" 8'-0" 16'-0"
1/8" =1'-0"

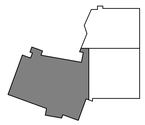

KEYPLAN

C:\Users\drown.KGE\Documents\2010-117.00_KGE_STUDENT LIFE_ELECTRICAL_CENTERAL_2012_rbrown.rvt
5/28/2013 9:46:22 AM

MHTN ARCHITECTS
MHTN Architects, Inc.
420 East South Temple
Suite 100
Salt Lake City, Utah 84111
Telephone (801) 595-6700
Telefax (801) 595-6717
www.mhtn.com

Hastings+Chivetta
ARCHITECTURE • PLANNING • ENGINEERING
622 Emerson, Suite 200
St. Louis, MO 63141
Tel. 314.863.5717
Fax. 314.863.2823
www.hastingschivetta.com

BUILDING OFFICIAL STAMP

Ken Garner Engineering, Inc.
Electrical Engineering Consultants, Inc.
102 West 500 South, Suite 225
Salt Lake City, Utah 84101
P. 801.328.8800
F. 801.328.8802
Contact: Paris LeLaCheur
Project #: 2010-117.00

UNIVERSITY OF UTAH

STUDENT LIFE CENTER

1836 E. BALLIF ROAD
SALT LAKE CITY, UTAH 84112

SEAL

MHTN PROJECT NO. 2010562.00

DRAWN BY: KGE CHECKED BY: KGE

ISSUED:

NO.	DATE	DESCRIPTION

CONTRACTOR TO VERIFY DRAWINGS IN FIELD USE REFLECT LAST REVISION DATE:

NO.	DATE	DESCRIPTION
1	05-28-2013	ADDENDUM ONE

SHEET NAME

LEVEL 1 POWER PLAN AREA C

BID DOCUMENTS
May 15, 2013

SHEET NUMBER

EP101.C

KEYED NOTES - SHEET EP102.A

1. J-BOX MOUNTED IN CEILING FOR 120V POWER TO MECHANICAL VAV BOX. COORDINATE WITH MECHANICAL FOR EXACT LOCATION.
2. BAF FANS WITH BUILT IN VFD. FANS CONTROLLED BY MANUFACTURER PROVIDED CONTROLLER. COORDINATE WITH MECH DWGS FOR LOCATION OF CONTROLLER. PROVIDE ALL REQUIRED CONDUIT AND J-BOXES FROM CONTROL LOCATION TO FAN VFD.
3. INSTALL A LCD TV HERE. SEE EQUIPMENT LIST FOR MANUFACTURERAND MODEL. (TV DISTRIBUTION SYSTEM, SHEET EY710)
4. DEDICATED 20A CIRCUITS FOR A/V EQUIPMENT CABINET.
5. CONTRACTOR SHALL COORDINATE RECEPTACLE HEIGHTS AND LOCATIONS WITH MIRRORS.
6. J-BOXFOR POWER TO FOLDING DOOR MOTOR. MOTOR AND DOOR CONTROL BY OTHERS. DIV. 26 TO PROVIDE ALL REQUIRED CONDUIT, DISCONNECTS AND WIRING BETWEEN DOOR, MOTOR AND CONTROL LOCATIONS.
7. MOUNT ABOVE DOOR.
8. MOUNT ABOVE COAT HOOK AT APPROXIMATLY 7'-0" A.F.F.
9. J-BOX FOR MOTORIZED SHADES. COORDINATE EXACT LOCATION OF J-BOX WITH SHADE INSTALLER.
10. J-BOX FOR POWER TO FUTURE MOTORIZED SHADES. PROVIDE J-BOX AND STUB CONDUIT TO ACCESSIBLE CIELING SPACE. COORDINATE EXACT LOCATION WITH SHADE INSTALLER.

GENERAL NOTES - SHEET EP102.A

A. PROVIDE (2) 3/4" CONDUITS TO EACH DATA LOCATION. EACH CONDUIT SHALL RUN FROM NEAREST CABLE TRAY TO OUTLET LOCATION AND SHALLHAVE A PULL STRING INSTALLED. ALL WIRING IS TO BE DONE BY UNIVERSITY OF UTAH NETCOM DEPARTMENT.
B. UNIVERSITY OF UTAH NET COM SHALL PROVIDE ALL 19" TELECOM RACKS AND MAKE ALL FINAL CONNECTIONS.

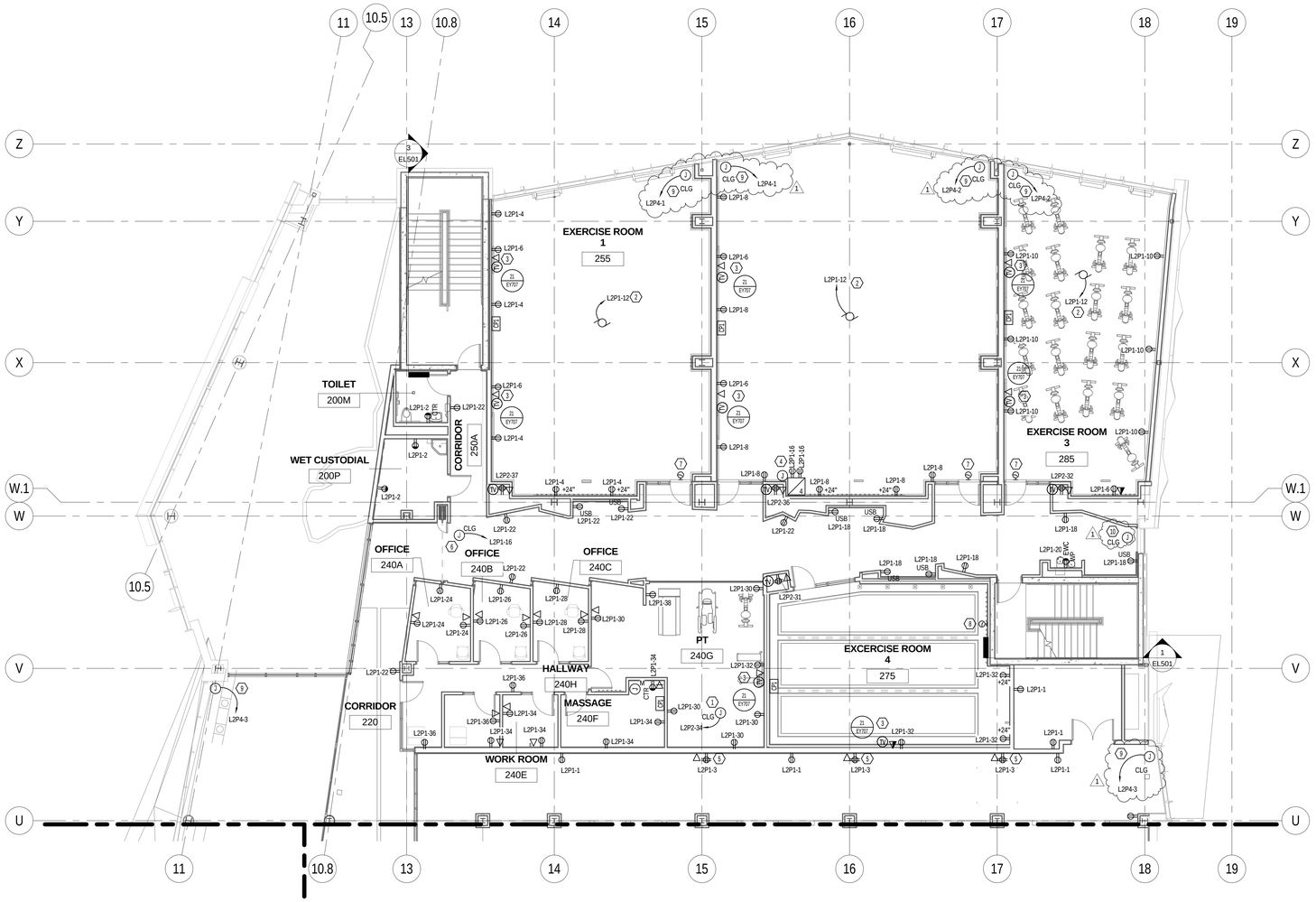

1 EP102.A A ENLARGED LEVEL 2 POWER PLAN NORTH
SCALE |1/8" = 1'-0"

0' 4'-0" 8'-0" 16'-0"
1/8" =1'-0"

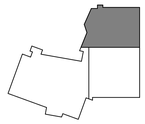

KEYPLAN

MHTN ARCHITECTS
MHTN Architects, Inc.
420 East South Temple
Suite 100
Salt Lake City, Utah 84111
Telephone (801) 595-6700
Telefax (801) 595-6717
www.mhtn.com

Hastings+Chivetta
ARCHITECTURE • PLANNING • ENGINEERING
622 Emerson, Suite 200
St. Louis, MO 63141
Tel. 314.863.5717
Fax. 314.863.2823
www.hastingschivetta.com

BUILDING OFFICIAL STAMP
Ken Garner Engineering, Inc.
Electrical Engineering Consultants, Inc.
102 West 500 South, Suite 225
Salt Lake City, Utah 84101
P. 801.328.8800
F. 801.328.8802
Contact: Paris LeLaCheur
Project #: 2010-117.00

UNIVERSITY OF UTAH
STUDENT LIFE CENTER
1836 E. BALLIF ROAD
SALT LAKE CITY, UTAH 84112

SEAL

MHTN PROJECT NO. 2010562.00
DRAWN BY: KGE CHECKED BY: KGE

ISSUED:

NO.	DATE	DESCRIPTION

CONTRACTOR TO VERIFY DRAWINGS IN FIELD USE REFLECT LAST REVISION DATE.

NO.	DATE	DESCRIPTION
1	05-28-2013	ADDENDUM ONE

SHEET NAME
LEVEL 2 POWER PLAN AREA A

BID DOCUMENTS
May 15, 2013

SHEET NUMBER
EP102.A

C:\Users\drown.KGE\Documents\2010-117.00_KGE_STUDENT LIFE_ELECTRICAL_CENTERAL_2012_drown.rvt
5/28/2013 9:46:31 AM

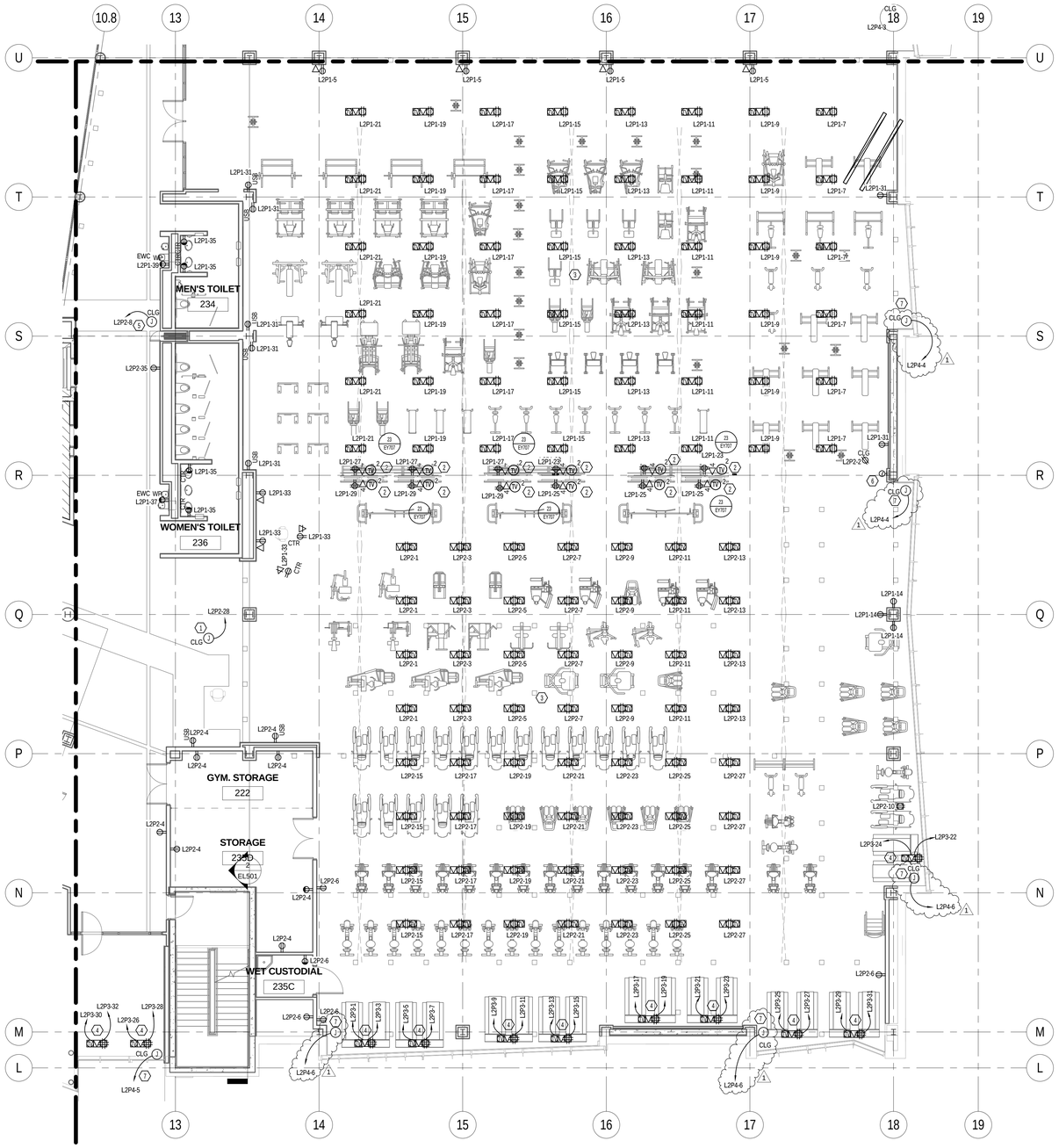

1 B ENLARGED LEVEL 2 POWER PLAN SOUTH
EP102.B SCALE | 1/8" = 1'-0"

0' 4'-0" 8'-0" 16'-0"
1/8" = 1'-0"

KEYED NOTES - SHEET EP102.B

1. J-BOX MOUNTED IN CEILING FOR 120V POWER TO MECHANICAL VAV BOX. COORDINATE WITH MECHANICAL FOR EXACT LOCATION.
2. INSTALL (2) LCD TVS HERE. SEE EQUIPMENT LIST FOR MANUFACTURER AND MODEL. (TV DISTRIBUTION SYSTEM. SHEET EY710).
3. ALL FLOOR BOXES IN FITTNESS ROOM SHALL BE INSTALLED SO COVER PLATE IS FLUSH WITH FLOOR FINISH. COORDINATE WITH ARCHITECTURAL FOR FINISHES.
4. TREADMILL RECEPTACLES SHALL BE A NEMA 5-20R. ALL TREADMILLS ARE DEDICATED 20A CIRCUITS AND CANNOT SHARE NEUTRAL.
5. J-BOX FOR POWER TO FOLDING DOOR MOTOR. MOTOR AND DOOR CONTROL BY OTHERS. DIV. 26 TO PROVIDE ALL REQUIRED CONDUIT, DISCONNECTS AND WIRING BETWEEN DOOR, MOTOR AND CONTROL LOCATIONS.
6. COORDINATE EXACT LOCATION AND HEIGHT WITH ARCHITECT FOR MOUNTING.
7. J-BOX FOR MOTORIZED SHADES. COORDINATE EXACT LOCATION OF J-BOX WITH SHADE INSTALLER.
8. J-BOX FOR POWER TO FUTURE MOTORIZED SHADES. PROVIDE J-BOX AND STUB CONDUIT TO ACCESSIBE CEILING SPACE. COORDINATE EXACT J-BOX LOCATION WITH SHADE INSTALLER.

GENERAL NOTES - SHEET EP102.B

A. PROVIDE (2) 3/4" CONDUITS TO EACH DATA LOCATION. EACH CONDUIT SHALL RUN FROM NEAREST CABLE TRAY
TO OUTLET LOCATION AND SHALLHAVE A PULL STRING INSTALLED. ALL WIRING IS TO BE DONE BY UNIVERSITY OF UTAH NETCOM DEPARTYMENT .
B. UNIVERSITY OF UTAH NET COM SHALL PROVIDE ALL 19" TELECOM RACKS AND MAKE ALL FINAL CONNECTIONS.

MHTN
ARCHITECTS
MHTN Architects, Inc.
420 East South Temple
Suite 100
Salt Lake City, Utah 84111
Telephone (801) 595-6700
Telefax (801) 595-6717
www.mhtn.com

Hastings+Chivetta
ARCHITECTURE • PLANNING • ENGINEERING
622 Emerson, Suite 200
St. Louis, MO 63141
Tel. 314.863.5717
Fax. 314.863.2823
www.hastingschivetta.com

BUILDING OFFICIAL STAMP
Ken Garner
Engineering, Inc.
Electrical Engineering Consultants, Inc.
102 West 500 South, Suite 225
Salt Lake City, Utah 84101
P. 801.328.8800
F. 801.328.8802
Contact: Paris LeLaCheur
Project #: 2010-117.00

UNIVERSITY OF UTAH
STUDENT LIFE CENTER
1836 E. BALLIF ROAD
SALT LAKE CITY, UTAH 84112

SEAL

MHTN PROJECT NO. 2010562.00
DRAWN BY: KGE CHECKED BY: KGE

ISSUED:

NO.	DATE	DESCRIPTION

CONTRACTOR TO VERIFY DRAWINGS IN FIELD USE REFLECT LAST REVISION DATE:

NO.	DATE	DESCRIPTION
1	05-28-2013	ADDENDUM ONE

SHEET NAME
LEVEL 2 POWER PLAN AREA B

BID DOCUMENTS
May 15, 2013

SHEET NUMBER
EP102.B

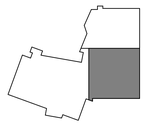
KEYPLAN

C:\Users\ttrown.KGE\Documents\2010-117.00_KGE_STUDENT LIFE_ELECTRICAL_CENTERAL_2012_ttrown.rvt
5/28/2013 9:46:46 AM

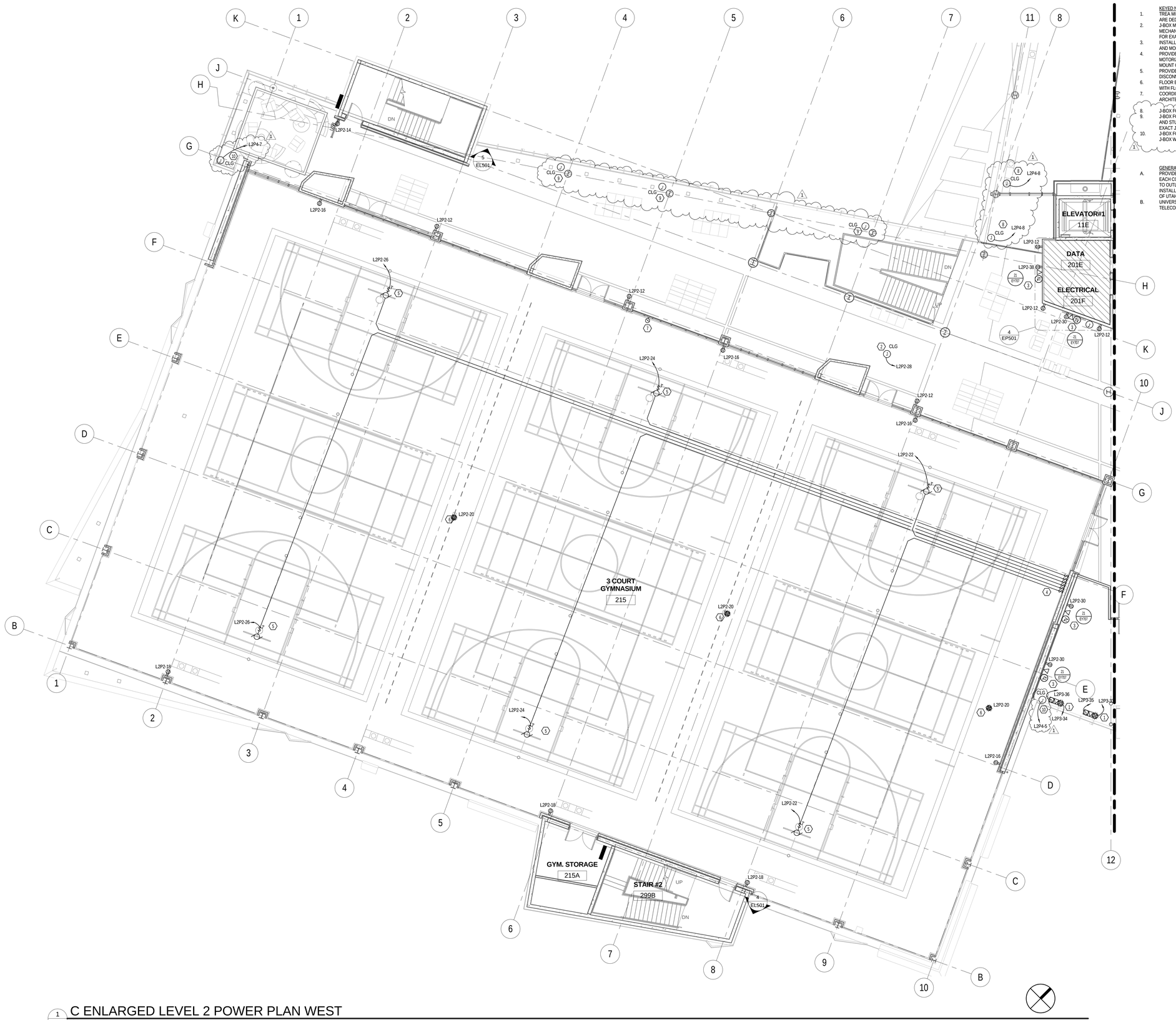

1 C ENLARGED LEVEL 2 POWER PLAN WEST
EP102.C SCALE | 1/8" = 1'-0"

0' 4'-0" 8'-0" 16'-0"
1/8" =1'-0"

KEYPLAN

KEYED NOTES - SHEET EP102.C

1. TREA MILL RECEPTACLES SHALL BE A NEMA 5-20R. ALL TREAD MILLS ARE DEDICATED 20A CIRCUITS AND CANNOT SHARE NEUTRAL.
2. J-BOX MOUNTED IN CEILING FOR 120V POWER TO MECHANICAL VAV BOX. COORDINATE WITH MECHANICAL FOR EXACT LOCATION.
3. INSTALL A LCD TV HERE. SEE EQUIPMENT LIST FOR MANUFACTURER AND MODEL. (TV DISTRIBUTION SYSTEM, SHEET EY710).
4. PROVIDE LOCKABLE CABINET FOR LIGHTING SWITCHES AND MOTORIZED EQUIPMENT MOMENTARY KEYED SWITCHES. SURFACE MOUNT CABINET
5. PROVIDE THERMAL SWITCH FOR MOTORIZED BACKBOARD DISCONNECT.
6. FLOOR BOXES SHALL BE MOUNTED SO COVER PLATES ARE FLUSH WITH FLOOR FINISH. PULL (1) 3/4"C AS SPARE FOR FUTURE.
7. COORDINATE EXACT LOCATION AND HEIGHT FOR MOUNTING WITH ARCHITECT.
8. J-BOX FOR POWER TO MOTORIZED SHADES. MOUNT J-BOX IN SOFFIT.
9. J-BOX FOR POWER TO FUTURE MOTORIZED SHADES PROVIDE J-BOX AND STUB CONDUIT TO ACCESSIBLE CIELING SPACE. COORDINATE EXACT J-BOX LOCATION WITH SHADE INSTALLER.
10. J-BOX FOR MOTORIZED SHADES. COORDINATE EXACT LOCATION OF J-BOX WITH SHADE INSTALLER.

GENERAL NOTES - SHEET EP102.C

A. PROVIDE (2) 3/4" CONDUITS TO EACH DATA LOCATION. EACH CONDUIT SHALL RUN FROM NEAREST CABLE TRAY TO OUTLET LOCATION AND SHALLHAVE A PULL STRING INSTALLED. ALL WIRING IS TO BE DONE BY UNIVERSITY OF UTAH NETCOM DEPARTYMENT.
B. UNIVERSITY OF UTAH NET COM SHALL PROVIDE ALL 19" TELECOM RACKS AND MAKE ALL FINAL CONNECTIONS.

MHTN
ARCHITECTS
MHTN Architects, Inc.
420 East South Temple
Suite 100
Salt Lake City, Utah 84111
Telephone (801) 595-6700
Telefax (801) 595-6717
www.mhtn.com

Hastings+Chivetta
ARCHITECTURE • PLANNING • ENGINEERING
622 Emerson, Suite 200
St. Louis, MO 63141
Tel. 314.863.5717
Fax. 314.863.2823
www.hastingschivetta.com

BUILDING OFFICIAL STAMP
Ken Garner
Engineering, Inc.
Electrical Engineering Consultants, Inc.
102 West 500 South, Suite 225
Salt Lake City, Utah 84101
P. 801.328.8800
F. 801.328.8802
Contact: Paris LeLaCheur
Project #: 2010-117.00

UNIVERSITY OF UTAH
STUDENT LIFE CENTER
1836 E. BALLIF ROAD
SALT LAKE CITY, UTAH 84112

SEAL

MHTN PROJECT NO. 2010562.00
DRAWN BY: KGE CHECKED BY: KGE

ISSUED:

NO.	DATE	DESCRIPTION

CONTRACTOR TO VERIFY DRAWINGS IN FIELD USE REFLECT LAST REVISION DATE.

NO.	DATE	DESCRIPTION
1	05-28-2013	ADDENDUM ONE

SHEET NAME
LEVEL 2 POWER PLAN AREA C

BID DOCUMENTS
May 15, 2013

SHEET NUMBER
EP102.C

C:\Users\drown.KGE\Documents\2010-117.00_KGE_STUDENT LIFE_ELECTRICAL_CENTERAL_2012_drown.rvt
5/28/2013 9:46:57 AM

KEYED NOTES - SHEET EP103.A

1. INSTALL A LCD TV HERE. SEE EQUIPMENT LIST FOR MANUFACTURER AND MODEL. (TV DISTRIBUTION SYSTEM, SHEET EY710).
2. SEE DETAIL 1/EP702 FOR TYPICAL LAYOUT OF CONFERENCE ROOM.
3. MOTORIZED SCREEN. COORDINATE WITH SCREEN MANUFACTURER FOR EXACT REQUIRMENTS.
4. COORDINATE WITH ARCHITECT FOR MOUNTING HEIGHT.
5. J-BOX FOR POWER TO FUTURE MOTORIZED SHADES. PROVIDE J-BOX AND STUB CONDUIT TO CCESSIBLE CIELING SPACE. COORDINATE EXACT J-BOX LOCATION WITH SHADE INSTALLER.
6. J-BOX FOR MOTORIZED SHADES. COORDINATE EXACT LOCATION OF J-BOX WITH SHADE INSTALLER.

GENERAL NOTES - SHEET EP103.A

A. PROVIDE (2) 3/4" CONDUITS TO EACH DATA LOCATION. EACH CONDUIT SHALL RUN FROM NEAREST CABLE TRAY TO OUTLET LOCATION AND SHALLHAVE A PULL STRING INSTALLED. ALL WIRING IS TO BE DONE BY UNIVERSITY OF UTAH NETCOM DEPARTYMENT.
B. UNIVERSITY OF UTAH NET COM SHALL PROVIDE ALL 19" TELECOM RACKS AND MAKE ALL FINAL CONNECTIONS.

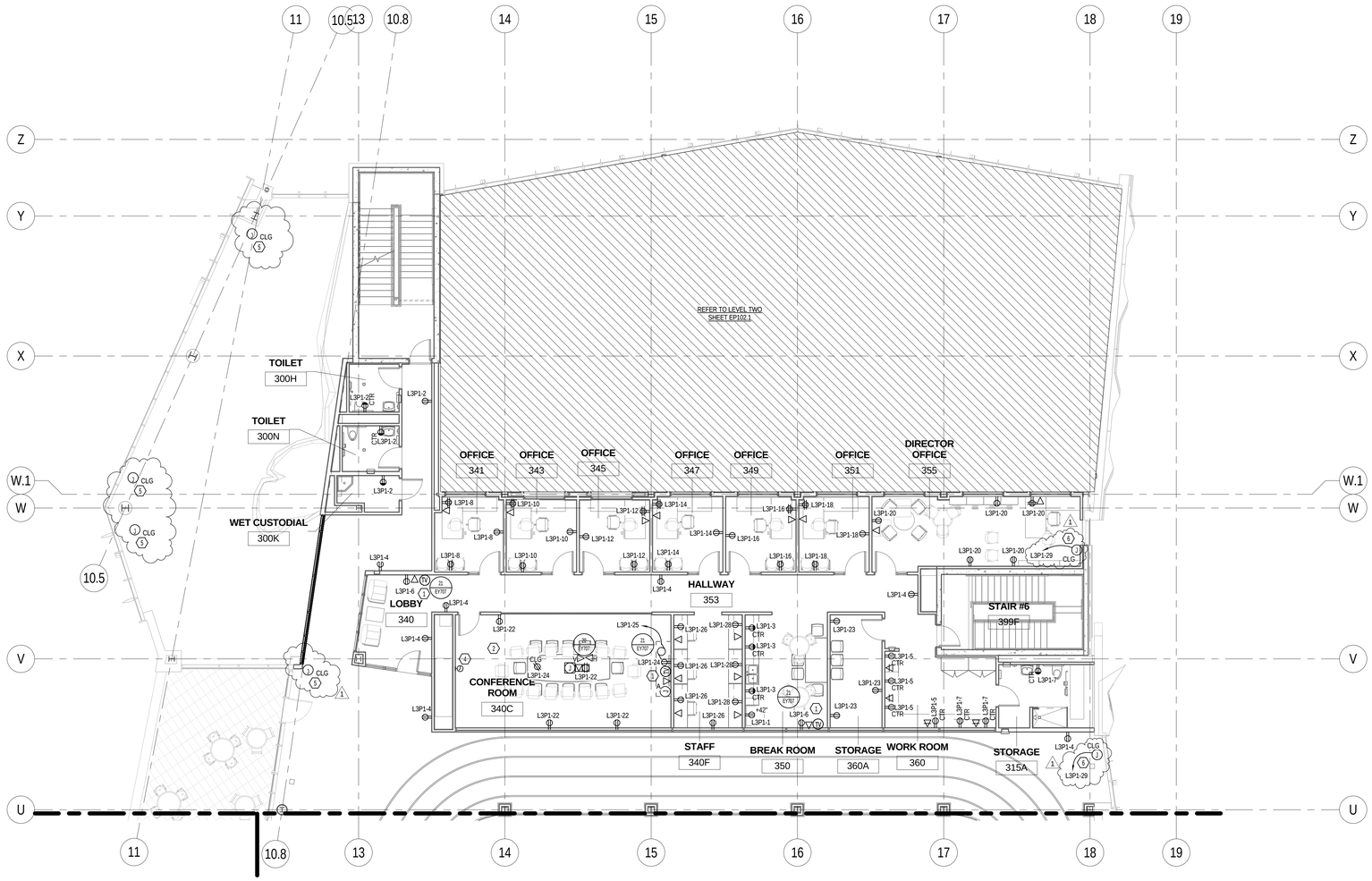

1 EP103.A A ENLARGED LEVEL 3 POWER PLAN NORTH
SCALE |1/8" = 1'-0"

0' 4'-0" 8'-0" 16'-0"
1/8" =1'-0"

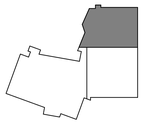

KEYPLAN

MHTN ARCHITECTS
MHTN Architects, Inc.
420 East South Temple
Suite 100
Salt Lake City, Utah 84111
Telephone (801) 595-6700
Telefax (801) 595-6717
www.mhtn.com

Hastings+Chivetta
ARCHITECTURE • PLANNING • ENGINEERING
622 Emerson, Suite 200
St. Louis, MO 63141
Tel. 314.863.5717
Fax. 314.863.2623
www.hastingschivetta.com

BUILDING OFFICIAL STAMP
Ken Garner Engineering, Inc.
Electrical Engineering Consultants, Inc.
102 West 500 South, Suite 225
Salt Lake City, Utah 84101
P. 801.328.8800
F. 801.328.8802
Contact: Paris LeLaCheur
Project #: 2010-117.00

UNIVERSITY OF UTAH
STUDENT LIFE CENTER
1836 E. BALLIF ROAD
SALT LAKE CITY, UTAH 84112

SEAL

MHTN PROJECT NO. 2010562.00

DRAWN BY: KGE CHECKED BY: KGE

ISSUED:

NO.	DATE	DESCRIPTION

CONTRACTOR TO VERIFY DRAWINGS IN FIELD USE REFLECT LAST REVISION DATE:

NO.	DATE	DESCRIPTION
1	05-28-2013	ADDENDUM ONE

SHEET NAME
LEVEL 3 POWER PLAN AREA A

BID DOCUMENTS
May 15, 2013

SHEET NUMBER
EP103.A

C:\Users\ttrown.KGE\Documents\2010-117.00_KGE_STUDENT LIFE_ELECTRICAL_CENTERAL_2012_ttrown.rvt
5/28/2013 9:47:06 AM

KEYED NOTES - SHEET EP103.B

1. BAF FANS WITH BUILT IN VFD. FANS CONTROLLED BY MANUFACTURER PROVIDED CONTROLLER. COORDINATE WITH MECHANICAL DRAWINGS FOR LOCATION OF CONTROLLER LOCATION TO FAN VFD.
2. CEILING MOUNTED NETWORK CONNECTIONS, POWER OUTLETS AND TV OTPUTS.
3. CEILING MOUNT (3) TVS FACING (3) DIFFERENT DIRECTIONS TO DISPLAY CURRENT TIME AND CURRENT RUNNING DIRECTION.
4. TREADMILL RECEPTACLES SHALL BE A NEMA 5-20R. ALL TREAD MILLS ARE DEDICATED 20A CIRCUITS AND CANNOT SHARE NEUTRAL.
5. J-BOX FOR MOTORIZED SHADES. COORDINATE EXACT LOCATION OF J-BOX WITH SHADE INSTALLER.

GENERAL NOTES - SHEET EP103.B

A. PROVIDE (2) 3/4" CONDUITS TO EACH DATA LOCATION. EACH CONDUIT SHALL RUN FROM NEAREST CABLE TRAY TO OUTLET LOCATION AND SHALL HAVE A PULL STRING INSTALLED. ALL WIRING IS TO BE DONE BY UNIVERSITY OF UTAH NETCOM DEPARTYMENT.
B. UNIVERSITY OF UTAH NET COM SHALL PROVIDE ALL 19" TELECOM RACKS AND MAKE ALL FINAL CONNECTIONS.

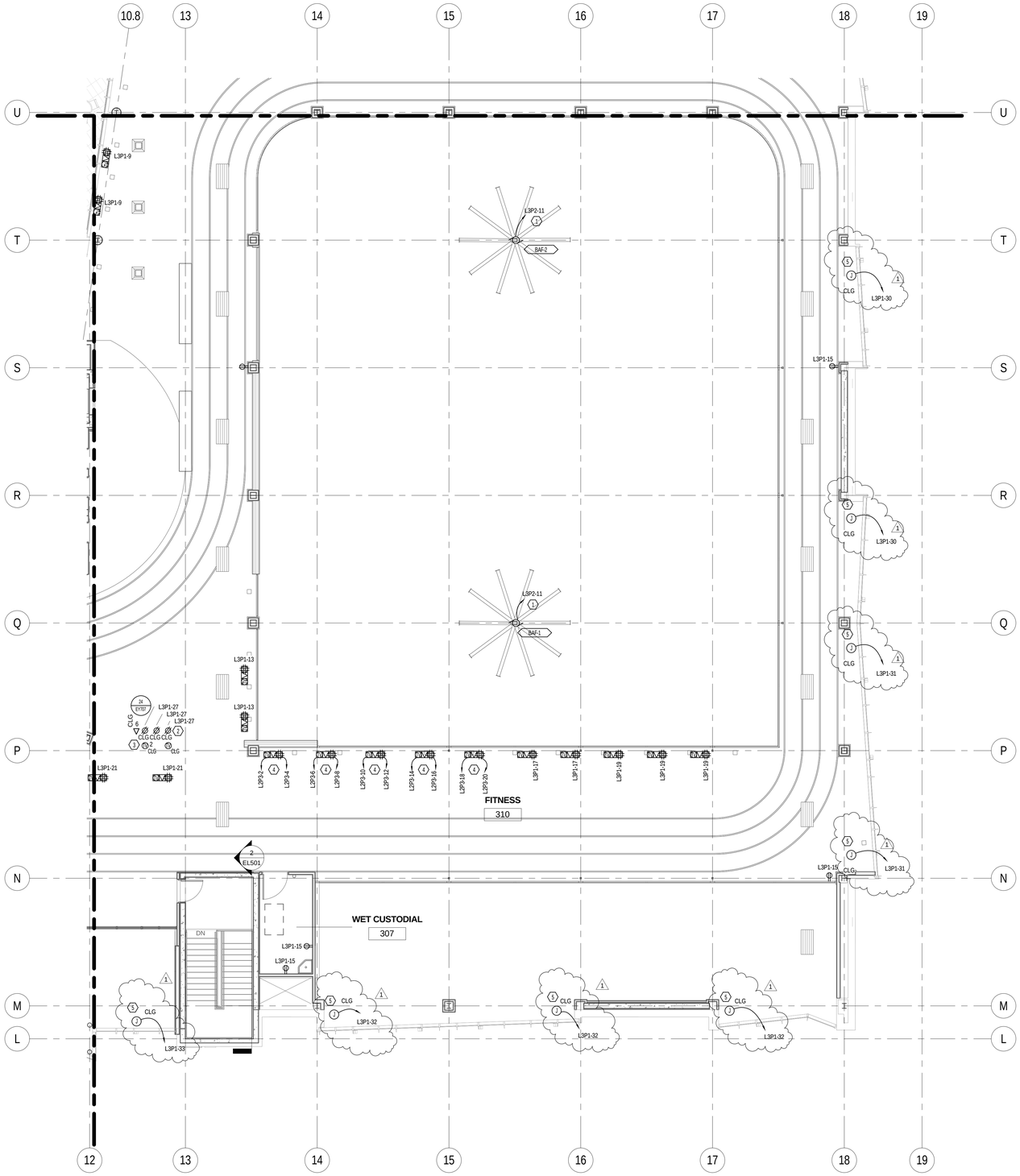

1 EP103.B B ENLARGED LEVEL 3 POWER PLAN SOUTH
SCALE | 1/8" = 1'-0"

0' 4'-0" 8'-0" 16'-0"
1/8" =1'-0"

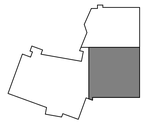

KEYPLAN

MHTN ARCHITECTS
MHTN Architects, Inc.
420 East South Temple
Suite 100
Salt Lake City, Utah 84111
Telephone (801) 595-6700
Telefax (801) 595-6717
www.mhtn.com

Hastings+Chivetta
ARCHITECTURE • PLANNING • ENGINEERING
622 Emerson, Suite 200
St. Louis, MO 63141
Tel. 314.863.5717
Fax. 314.863.2823
www.hastingschivetta.com

BUILDING OFFICIAL STAMP

Ken Garner Engineering, Inc.
Electrical Engineering Consultants, Inc.
102 West 500 South, Suite 225
Salt Lake City, Utah 84101
P. 801.328.8800
F. 801.328.8802
Contact: Paris LeLaCheur
Project #: 2010-117.00

UNIVERSITY OF UTAH
STUDENT LIFE CENTER
1836 E. BALLIF ROAD
SALT LAKE CITY, UTAH 84112

SEAL

MHTN PROJECT NO. 2010562.00

DRAWN BY: KGE CHECKED BY: KGE

ISSUED:

NO.	DATE	DESCRIPTION

CONTRACTOR TO VERIFY DRAWINGS IN FIELD USE REFLECT LAST REVISION DATE.

NO.	DATE	DESCRIPTION
1	05-28-2013	ADDENDUM ONE

SHEET NAME
LEVEL 3 POWER PLAN AREA B

BID DOCUMENTS
May 15, 2013

SHEET NUMBER
EP103.B

C:\Users\brown.KGE\Documents\2010-117.00_KGE_STUDENT LIFE_ELECTRICAL_CENTERAL_2012_drawn.rvt
5/28/2013 9:47:13 AM

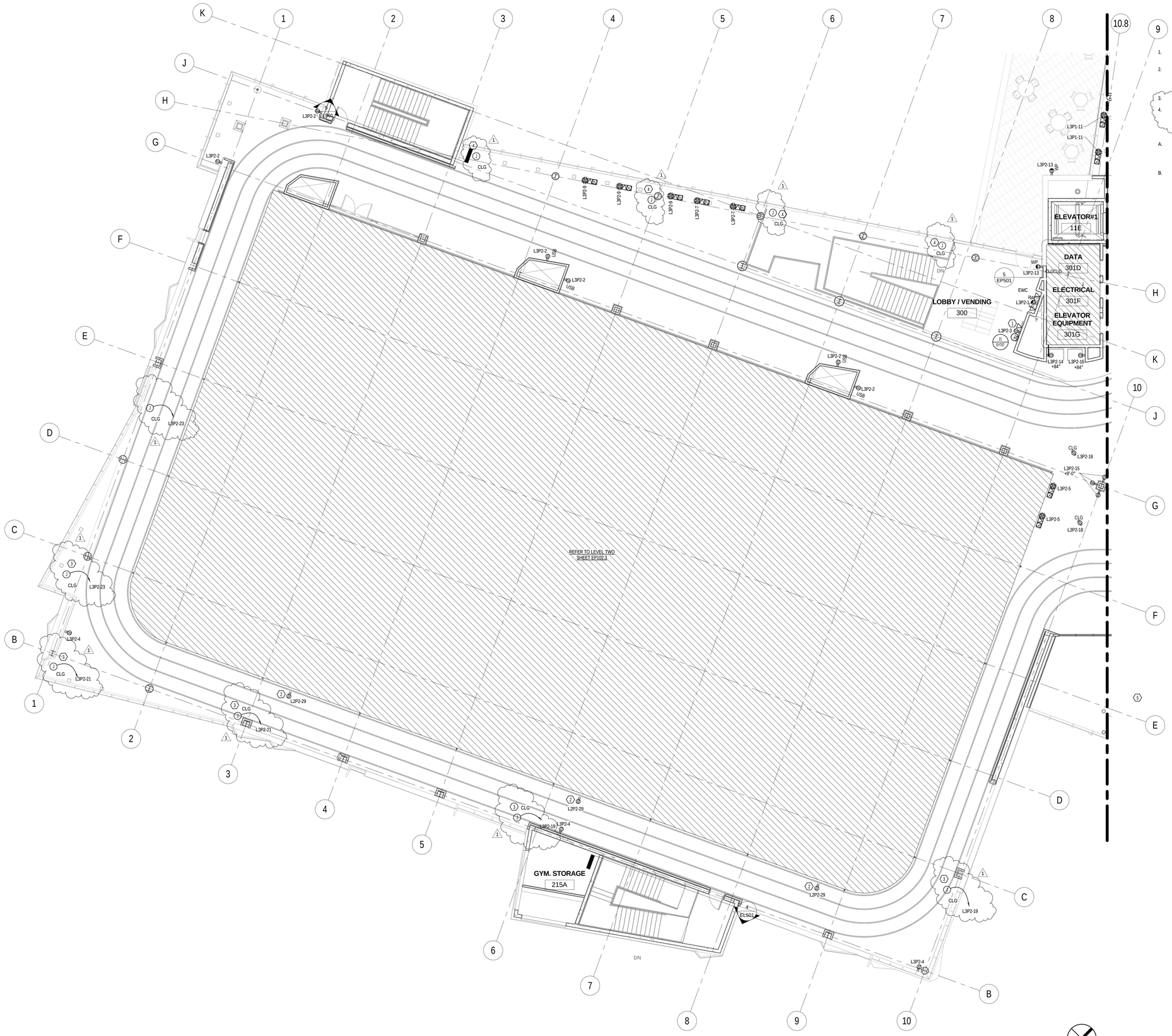

1 EP103.C C ENLARGED LEVEL 3 POWER PLAN WEST
SCALE |1/8" = 1'-0"

0' 4'-0" 8'-0" 16'-0"
1/8" =1'-0"

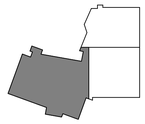

KEYPLAN

KEYED NOTES - SHEET EP103.C

1. INSTALL A LCD TV HERE. SEE EQUIPMENT LIST FOR MANUFACTURER AND MODEL. (TV DISTRIBUTION SYSTEM, SHEET EY710)
2. RECEPTACLES MOUNTED TO SUSPENDED TRACK FOR POWER TO SCORBOARDS. COORDINATE EXACT LOCATION WITH OTHER TRADES. RUN CONDUIT TIGHT AGAINS UNDER SIDE OF TRACK.
3. J-BOX FOR MOTORIZED SHADES. COORDINATE EXACT LOCATION OF J-BOX WITH SHADE INSTALLER.
4. J-BOXFOR POWER TO FUTURE MOTORIZED SHADES. PROVIDE J-BOX AND STUB CONDUIT TO ACCESSIBLE CIELING SPACE COORDINATE EXACT J-BOX LOCATION WITH SHADE INSTALLER.

GENERAL NOTES - SHEET EP104.A

A. PROVIDE (2) 3/4" CONDUITS TO EACH DATA LOCATION. EACH CONDUIT SHALL RUN FROM NEAREST CABLE TRAY TO OUTLET LOCATION AND SHALLHAVE A PULL STRING INSTALLED. ALL WIRING IS TO BE DONE BY UNIVERSITY OF UTAH NETCOM DEPARTYMENT.
B. UNIVERSITY OF UTAH NET COM SHALL PROVIDE ALL 19" TELECOM RACKS AND MAKE ALL FINAL CONNECTIONS.

MHTN
ARCHITECTS
MHTN Architects, Inc.
420 East South Temple
Suite 100
Salt Lake City, Utah 84111
Telephone (801) 595-6700
Telefax (801) 595-6717
www.mhtn.com

Hastings+Chivetta
ARCHITECTURE • PLANNING • ENGINEERING
622 Emerson, Suite 200
St. Louis, MO 63141
Tel. 314.863.5717
Fax. 314.863.2823
www.hastingschivetta.com

BUILDING OFFICIAL STAMP

Ken Garner
Engineering, Inc.
Electrical Engineering Consultants, Inc.
102 West 500 South, Suite 225
Salt Lake City, Utah 84101
P. 801.328.8800
F. 801.328.8802
Contact: Paris LeLaCheur
Project #: 2010-117.00

UNIVERSITY OF UTAH

STUDENT LIFE CENTER

1836 E. BALLIF ROAD
SALT LAKE CITY, UTAH 84112

SEAL

MHTN PROJECT NO. 2010562.00

DRAWN BY: KGE CHECKED BY: KGE

ISSUED:

NO.	DATE	DESCRIPTION

CONTRACTOR TO VERIFY DRAWINGS IN FIELD USE REFLECT LAST REVISION DATE.

NO.	DATE	DESCRIPTION
1	05-28-2013	ADDENDUM ONE

SHEET NAME

LEVEL 3 POWER PLAN AREA C

BID DOCUMENTS
May 15, 2013

SHEET NUMBER

EP103.C

C:\Users\brown.KGE\Documents\2010-117.00_KGE_STUDENT LIFE_ELECTRICAL_CENTERAL_2012_brown.rvt
5/28/2013 9:47:21 AM

KEYED NOTES - SHEET EP200.C1

1. RELIEF FANS POWER. SEE MECHANICAL SCHEDULE AND DRAWINGS FOR COORDINATION.
2. SUPPLY FANS POWER. SEE MECHANICAL SCHEDULE AND DRAWINGS FOR COORDINATION.
3. VFD'S PROVIDED BY MECHANICAL.
4. PROVIDE 120V POWER TO AIR HANDLER MARINE LIGHTS. DIV.26 TO INSTALL LIGHTS AND MAKE ALL FINAL CONNECTION.
5. J-BOX FOR CONTROL WIRING BETWEEN EMERGENCY SHUTOFF AND TIMER PUSH BUTTONS. PUSH BUTTONS PROVIDED BY POOL MANUFACTURER. INSTALLED BY DIV.26

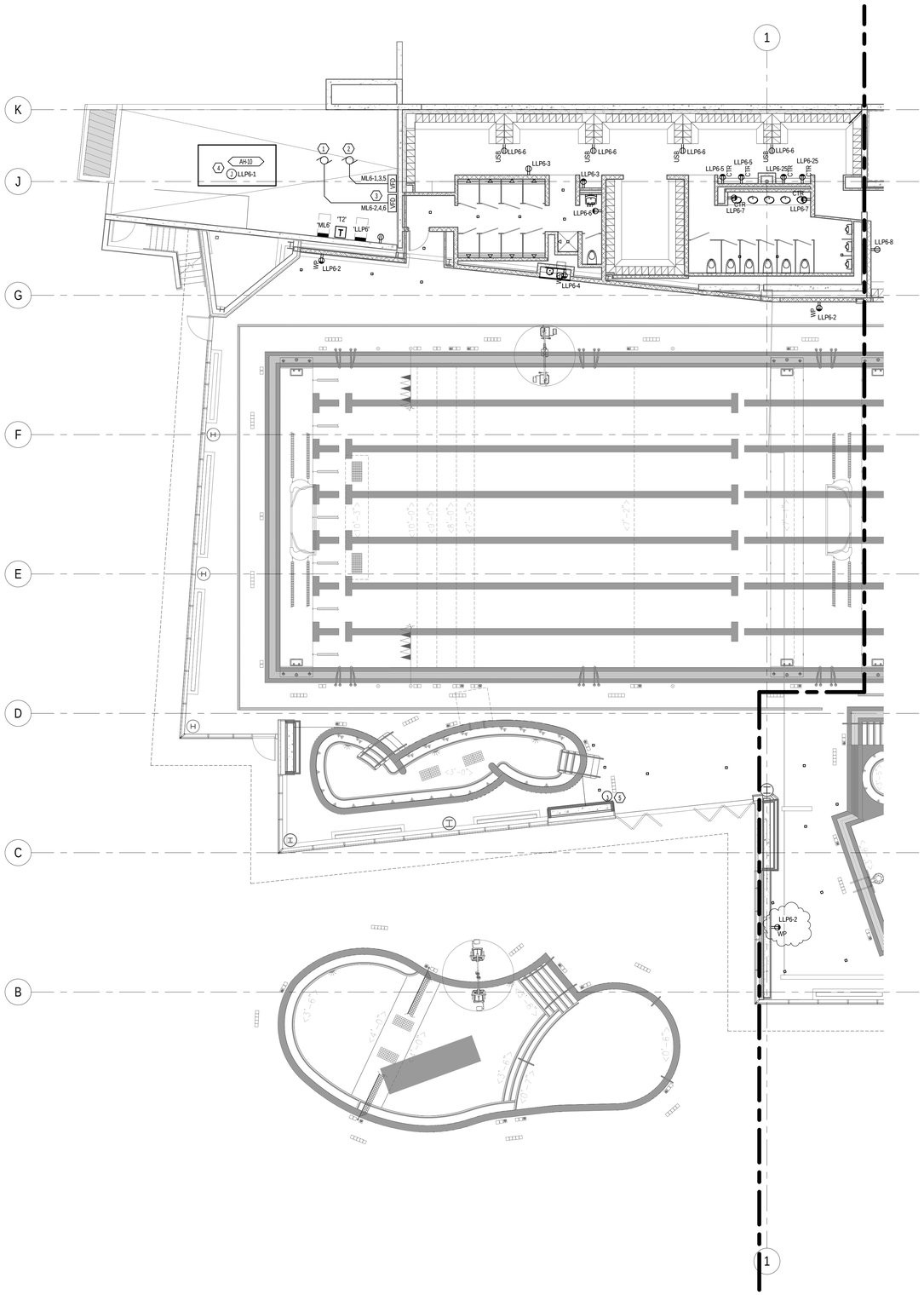

1 LOWER LEVEL POWER PLAN ALTERNATE 1A
EP200.C1 SCALE | 1/8" = 1'-0"

MHTN
ARCHITECTS
MHTN Architects, Inc.
420 East South Temple
Suite 100
Salt Lake City, Utah 84111
Telephone (801) 595-6700
Telefax (801) 595-6717
www.mhtn.com

Hastings+Chivetta
ARCHITECTURE • PLANNING • ENGINEERING
622 Emerson, Suite 200
St. Louis, MO 63141
Tel. 314.863.5717
Fax. 314.863.2823
www.hastingschivetta.com

BUILDING OFFICIAL STAMP

Ken Garner
Engineering, Inc.
Electrical Engineering Consultants, Inc.
102 West 500 South, Suite 225
Salt Lake City, Utah 84101
P. 801.328.8800
F. 801.328.8802
Contact: Paris LeLaCheur
Project #: 2010-117.00

UNIVERSITY OF UTAH
STUDENT LIFE CENTER
1836 E. BALLIF ROAD
SALT LAKE CITY, UTAH 84112

SEAL

MHTN PROJECT NO. 2010562.00

DRAWN BY: Author CHECKED BY: KGE

ISSUED:

NO.	DATE	DESCRIPTION

CONTRACTOR TO VERIFY DRAWINGS IN FIELD USE REFLECT LAST REVISION DATE.

NO.	DATE	DESCRIPTION
1	05-28-2013	ADDENDUM ONE

SHEET NAME
LOWER LEVEL POWER PLAN ALTERNATE 1A
BID DOCUMENTS
May 15, 2013

SHEET NUMBER
EP200.C1

C:\Users\brown.KGE\Documents\2010-117.00_KGE_STUDENT LIFE_ELECTRICAL_CENTERAL_2012_brown.rvt
5/28/2013 9:47:32 AM

KEYED NOTES - SHEET EP200.C2

1. ALL ELECTRICAL PANELS, TRANSFORMERS, J-BOXES, AND RECEPTACLE ENCLOSURES IN POOL EQUIPMENT ROOM SHALL BE NEMA 4X RATED.
2. PROVIDE A 20A GFCI CIRCUIT BREAKER.
3. VFD'S PROVIDED BY MECHANICAL.
4. BASE BID AND ALTERNATE ARE THE SAME IN THIS AREA. SEE BASE BID SHEETS.
5. COORDINATE EXACT LOCATION WITH ARCHITECT.

GENERAL NOTES - SHEET EP200.C2

A. SEE POOL DRAWINGS SHEET WF406.0 FOR POOL EQUIPMENT INTERLOCKING. PROVIDE ALL REQUIRED CONTROL WIRING IN 3/4" PVC COATED RIGID CONDUIT.
B. ALL CONDUIT INSIDE POOL EQUIPMENT ROOM SHALL BE A PVC COATED RIGID CONDUIT.

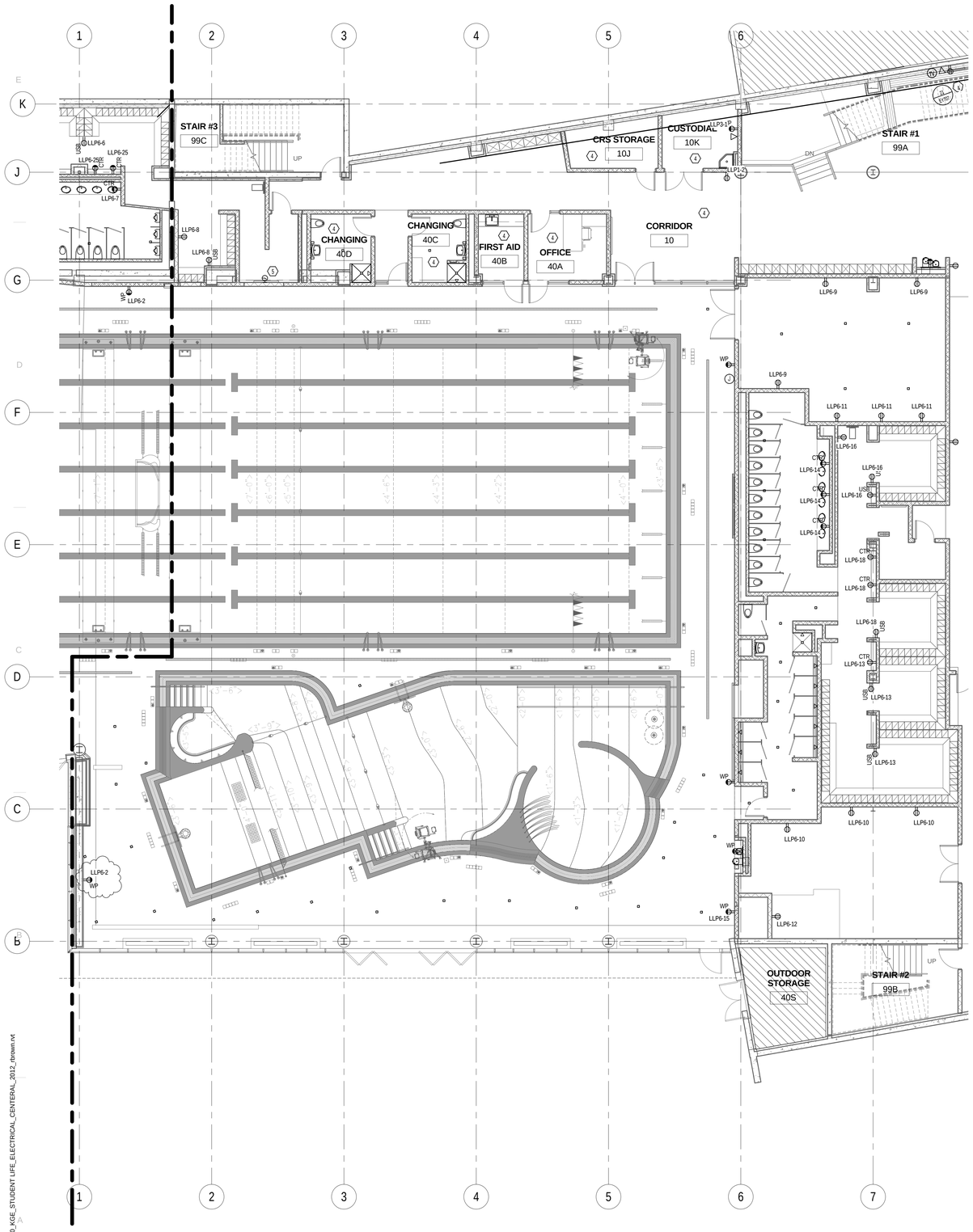

1 EP200.C2 LOWER LEVEL POWER PLAN ALTERNATE 1B
SCALE |1/8" = 1'-0"

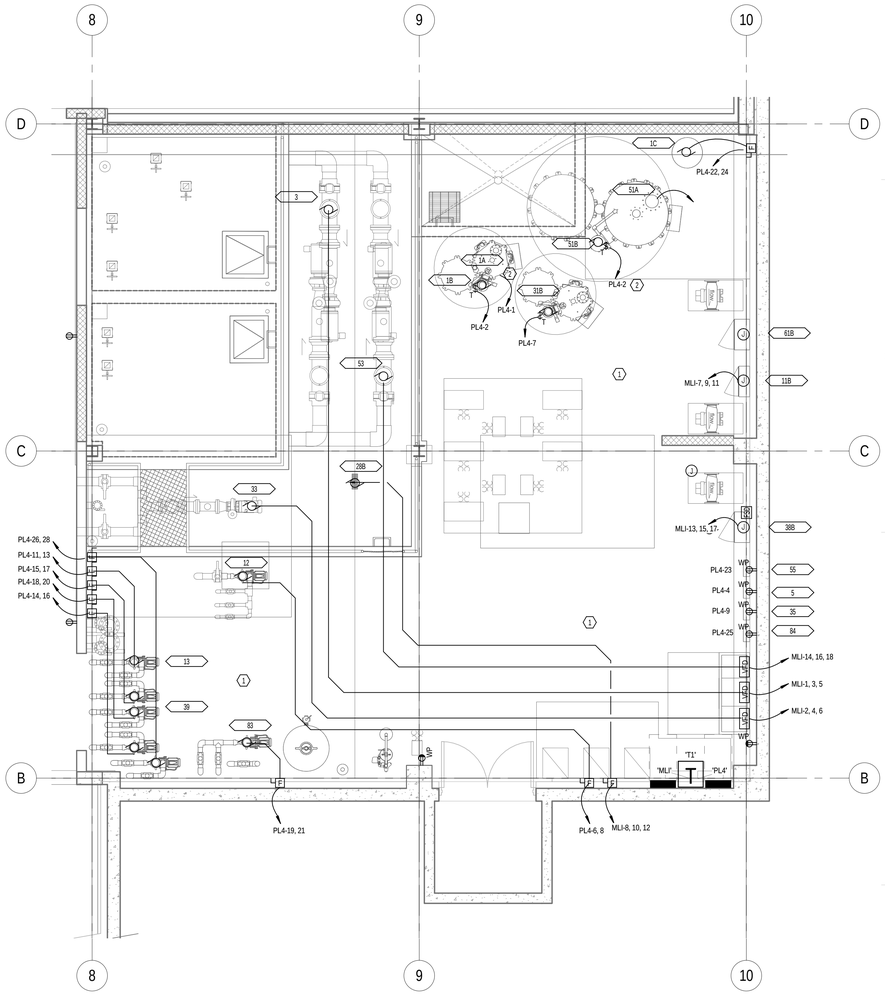

2 EP200.C2 ENLARGED POOL EQUIPMENT ROOM - ALTERNATE 1
SCALE |1/4" = 1'-0"

MHTN ARCHITECTS
MHTN Architects, Inc.
420 East South Temple
Suite 100
Salt Lake City, Utah 84111
Telephone (801) 595-6700
Telefax (801) 595-6717
www.mhtn.com

Hastings+Chivetta
ARCHITECTURE • PLANNING • ENGINEERING
622 Emerson, Suite 200
St. Louis, MO 63141
Tel. 314.863.5717
Fax. 314.863.2823
www.hastingschivetta.com

BUILDING OFFICIAL STAMP

Ken Garner Engineering, Inc.
Electrical Engineering Consultants, Inc.
102 West 500 South, Suite 225
Salt Lake City, Utah 84101
P. 801.328.8800
F. 801.328.8802
Contact: Paris LeLaCheur
Project #: 2010-117.00

UNIVERSITY OF UTAH
STUDENT LIFE CENTER
1836 E. BALLIF ROAD
SALT LAKE CITY, UTAH 84112

SEAL

MHTN PROJECT NO. 2010562.00

DRAWN BY: KGE CHECKED BY: KGE

ISSUED:

NO.	DATE	DESCRIPTION

CONTRACTOR TO VERIFY DRAWINGS IN FIELD USE REFLECT LAST REVISION DATE.

NO.	DATE	DESCRIPTION
1	05-28-2013	ADDENDUM ONE

SHEET NAME
LOWER LEVEL POWER PLAN ALTERNATE 1B
BID DOCUMENTS
May 15, 2013

SHEET NUMBER
EP200.C2

C:\Users\rdrown.KGE\Documents\2010-117.00_KGE_STUDENT LIFE_ELECTRICAL_CENTERAL_2012_rbrown.rvt
5/28/2013 9:47 AM

KEYED NOTES - SHEET EP204.C

1. RECEPTACLE FOR SNOW MELT ON CANOPY. PROVIDE A DEDICATED 120V CIRCUIT TO EACH RECEPTACLE. PROVIDE A 30MA BREAKER IN PANEL.

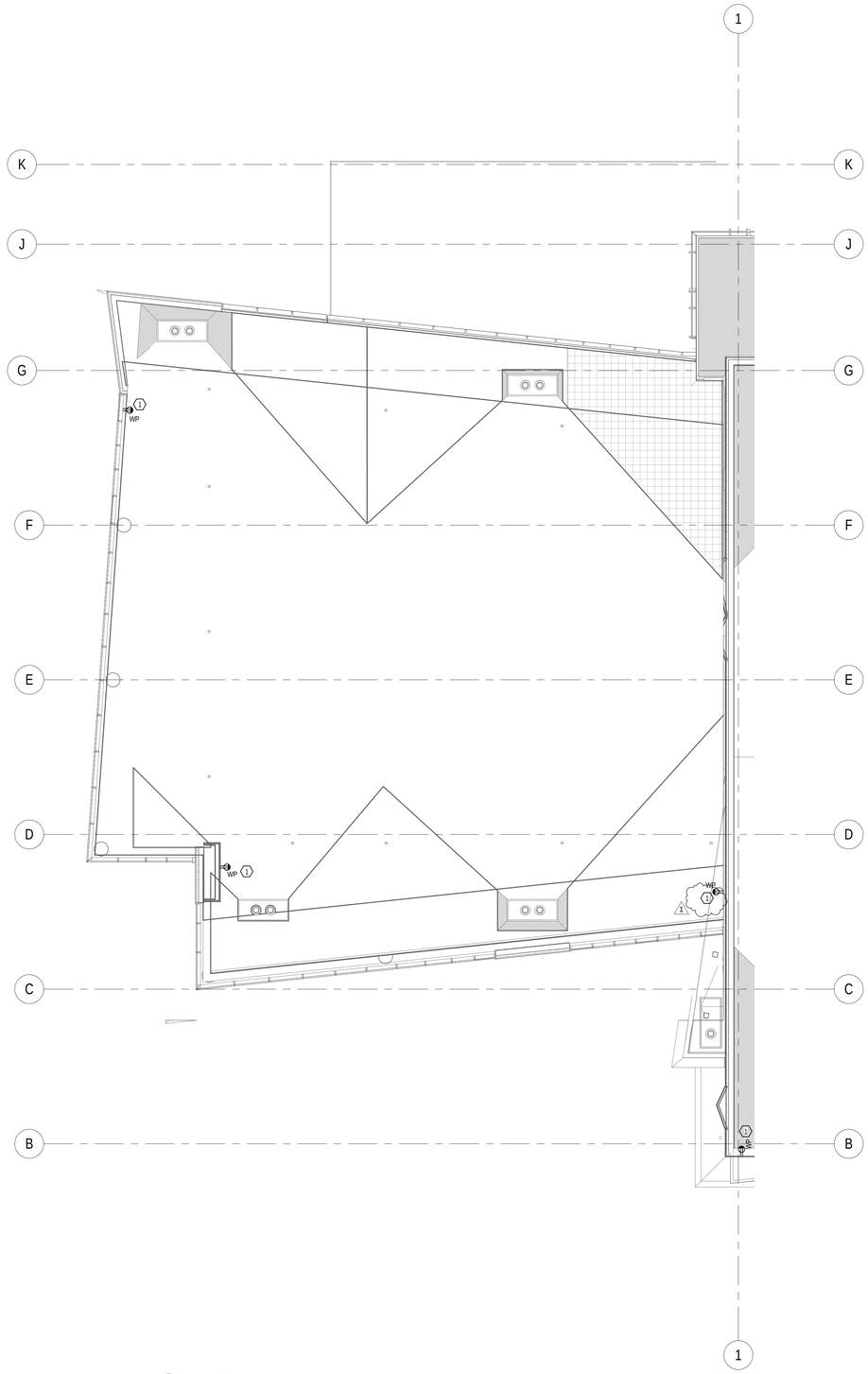

1 EP204.C ROOF 3 POWER PLAN ALTERNATE 1
SCALE |1/8" = 1'-0"

C:\Users\rbrown.KGE\Documents\2010-117.00_KGE_STUDENT LIFE_ELECTRICAL_CENTERAL_2012_rbrown.rvt
5/28/2013 9:47:59 AM

MHTN
ARCHITECTS
MHTN Architects, Inc.
420 East South Temple
Suite 100
Salt Lake City, Utah 84111
Telephone (801) 595-6700
Telefax (801) 595-6717
www.mhtn.com

Hastings+Chivetta
ARCHITECTURE • PLANNING • ENGINEERING
622 Emerson, Suite 200
St. Louis, MO 63141
Tel. 314.863.5717
Fax. 314.863.2823
www.hastingschivetta.com

BUILDING OFFICIAL STAMP

Ken Garner
Engineering, Inc.
Electrical Engineering Consultants, Inc.
102 West 500 South, Suite 225
Salt Lake City, Utah 84101
P. 801.328.8800
F. 801.328.8802
Contact: Paris LeLaCheur
Project #: 2010-117.00

UNIVERSITY OF UTAH
STUDENT LIFE CENTER
1836 E. BALLIF ROAD
SALT LAKE CITY, UTAH 84112

SEAL

MHTN PROJECT NO. 2010562.00

DRAWN BY: Author CHECKED BY: Checker

ISSUED:

NO.	DATE	DESCRIPTION

CONTRACTOR TO VERIFY DRAWINGS IN FIELD USE REFLECT LAST REVISION DATE.

NO.	DATE	DESCRIPTION
1	05-28-2013	ADDENDUM ONE

SHEET NAME
ROOF POWER PLAN AREA C ALT 1
BID DOCUMENTS
May 15, 2013

SHEET NUMBER
EP204.C

KEYED NOTES - SHEET EP504

1. COORDINATE EXACT LOCATION OF JUNCTION BOX AND DATA FOR EACH KIOSK PRIOR TO ROUGH-IN.
2. PROVIDE AND INSTALL (1) 1" INNER DUCT WITH (1) 12 STRAND FIBER FROM IDF ROOM ON THIS LEVEL.
3. COORDINATE EXACT LOCATION OF J-BOX AND DATA FOR ATM MACHINE PRIOR TO ROUGHIN.
4. 19" TELECOM RACK PROVIDED BY UNIVERSITY NETCOM. LIVE EQUIPMENT BY CREDIT UNIOIN. FINAL CONNECTIONS BY CREDIT UNION.
5. PROVIDE A 96" H X 48" W X 3/4" D FIRE TREATED PLYWOOD BACKBOARD. MOUNT 6" AFF.

GENERAL NOTES - SHEET EP504

A. PROVIDE (2) 3/4" CONDUITS TO EACH DATA LOCATION. EACH CONDUIT SHALL RUN FROM NEAREST CABLE TRAY TO OUTLET LOCATION AND SHALLHAVE A PULL STRING INSTALLED. ALL WIRING IS TO BE DONE BY UNIVERSITY OF UTAH NETCOM DEPARTYMENT.
B. UNIVERSITY OF UTAH NET COM SHALL PROVIDE ALL 19" TELECOM RACKS AND MAKE ALL FINAL CONNECTIONS.

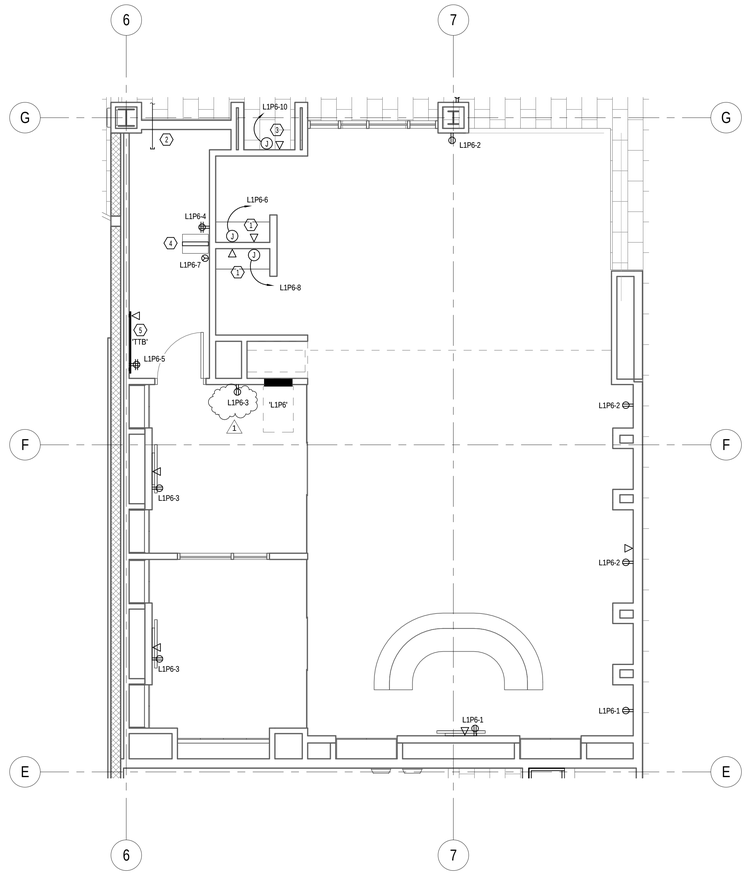

1 EP504 ENLARGED LEVEL 1 POWER PLAN UOFUCU
SCALE |1/4" = 1'-0"

MHTN ARCHITECTS
MHTN Architects, Inc.
420 East South Temple
Suite 100
Salt Lake City, Utah 84111
Telephone (801) 595-6700
Telefax (801) 595-6717
www.mhtn.com

Hastings+Chivetta
ARCHITECTURE • PLANNING • ENGINEERING
622 Emerson, Suite 200
St. Louis, MO 63141
Tel. 314.863.5717
Fax. 314.863.2823
www.hastingschivetta.com

BUILDING OFFICIAL STAMP

Ken Garner Engineering, Inc.
Electrical Engineering Consultants, Inc.
102 West 500 South, Suite 225
Salt Lake City, Utah 84101
P. 801.328.8800
F. 801.328.8802
Contact: Paris LeLaCheur
Project #: 2010-117.00

UNIVERSITY OF UTAH
STUDENT LIFE CENTER
1836 E. BALLIF ROAD
SALT LAKE CITY, UTAH 84112

SEAL

MHTN PROJECT NO. 2010562.00

DRAWN BY: Author CHECKED BY: KGE

ISSUED:

NO.	DATE	DESCRIPTION

CONTRACTOR TO VERIFY DRAWINGS IN FIELD USE REFLECT LAST REVISION DATE.

NO.	DATE	DESCRIPTION
1	05-28-2013	ADDENDUM ONE

SHEET NAME

ENLARGED U. OF U. CREDIT UNION

BID DOCUMENTS
May 15, 2013

SHEET NUMBER

EP504

C:\Users\rdrown.KGE\Documents\2010-117.00_KGE_STUDENT LIFE_ELECTRICAL_CENTERAL_2012_rbrown.rvt
5/28/2013 9:48:04 AM

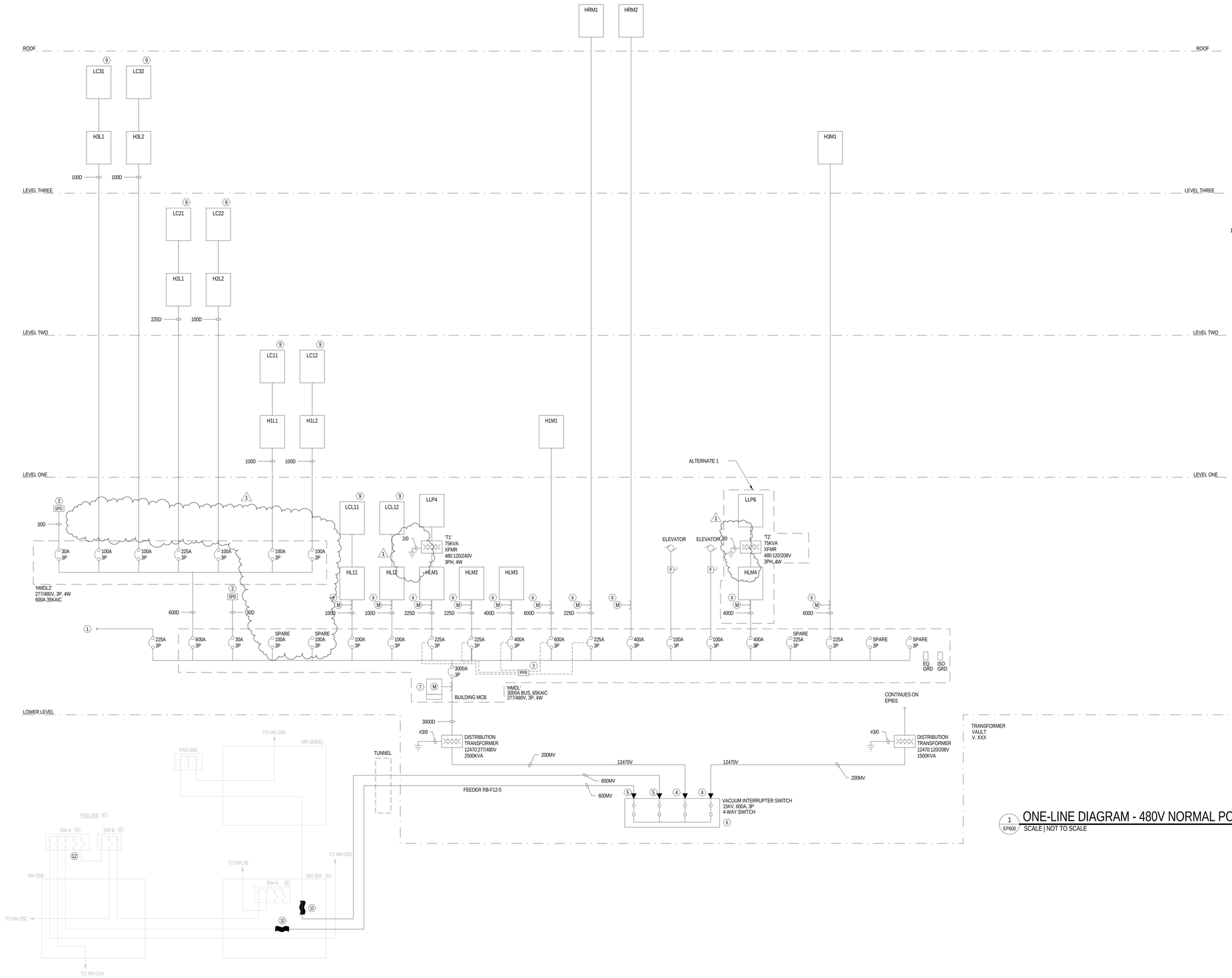

1 EP600 ONE-LINE DIAGRAM - 480V NORMAL POWER DISTRIBUTION

SCALE | NOT TO SCALE

KEYED NOTES - EP600

1. SEE SHEET EP602 FOR CONTINUATION TO EMERGENCY DISTRIBUTION SYSTEM.
2. TVSS: 277/480V.
3. PHASE FAILURE RELAY.
4. PROVIDE AND INSTALL 200A MOLDED PRODUCT LOADBREAK TERMINATIONS.
5. PROVIDE AND INSTALL 600A MOLDED PRODUCT DEADBREAK TERMINATIONS.
6. PROVIDE AND INSTALL NEW 15.5KV SOLID DIELECTRIC VFI SWITCH. SWITCH IS TO BE SINGLE SIDED. SWITCH IS ONLY AND INSTALLED ON STAINLESS STEEL MOUNTING FRAME.
7. METERING AT MAIN SWITCHBOARDS (SERVICE ENTRANCE). PROVIDE SQUARE D POWER LOGIC CIRCUIT MONITOR, CLASS 3000, MODEL CM-3350. PROVIDE METERS, CURRENT AND POTENTIAL TRANSFORMERS, SELECTOR SWITCHES, WIRING , ETC. AS REQUIRED FOR COMPLETE METERING SYSTEM WITH THE CAPABILITY TO CONNECT BY ETHERNET TO THE MAIN CAMPUS UTILITY MANAGEMENT SYSTEM.
8. PROVIDE POWER METERING FOR LEED MEASUREMENT AND VERIFICATION. PROVIDE ONE GROUP OF THE METERS TO MEASURE ALL MECHANICAL LOADS. PROVIDE SECOND GROUP OF METERS TO MEASURE ALL LIGHTING LOADS. PROVIDE THIRD GROUP OF METERS TO MEASURE ALL OTHER ELECTRICAL LOADS. PROVIDE CURRENT AND POTENTIAL TRANSFORMERS AS REQUIRED. PROVIDE DATA RECORDER AND SOFTWARE FOR DATA RECORDING AND PROCESSING PROVIDE INTERFACE BETWEEN LEED METERING EQUIPMENT AND BUILDING MANAGEMENT SYSTEM.
9. LIGHTING CONTROL PANEL.
10. PROVIDE NEW MEDIUM VOLTAGE 15KV COLD SHRINK CABLE SPLICE IN MH.36A. SEE SHEET ES500 FOR MANHOLE DETAILS AND SPLICE LOCATIONS.

GENERAL NOTES - SHEET EP600

A. ALL SWITCHING RESULTING IN A BUILDING OUTAGE SHALL BE COMPLETED AT NIGHT AND ON WEEKENDS. OUTAGES ARE TO BE COORDINATED THROUGH UNIVERSITY ELECTRIC SHOP TWO WEEKS PRIOR TO THE DESIRED OUTAGE DATE.
B. DIVISION 26 SHALL COMPLETE THE FOLLOWING IN EACH MANHOLE WHERE ANY DEMOLITION OR NEW WORK OCCURS: REMOVE ALL DEBRIS, SWEEP OUT MANHOLE, CLEAN UP OF OLD OIL SPILLS, CLEAN UP OF NEW OIL SPILLS, LEAVE MANHOLE IN CLEAN CONDITION.
C. EACH FEEDER IS TO BE LOOPED INSIDE EACH MANHOLE FOR AT LEAST 360°.
D. CONTRACTOR IS TO PROVIDE AND INSTALL MEDIUM VOLTAGE CABLE SPLICES AS NECESSARY TO ENSURE PROPER CABLE PULLING TENSIONS ARE MAINTAINED THROUGHOUT THE ENTIRE LENGTH OF THE CABLE PULL. MINIMIZE THE USE OF CABLE SPLICES THROUGHOUT THE PROJECT. ALL CABLE TO CABLE MEDIUM VOLTAGE SPLICES ARE TO BE 1583 RAYCHEM HEATSHRINK SPLICES OR 3M COLDSHRINK SPLICES UNLESS NOTED OTHERWISE. PROVIDE ONE SPLICE KIT PER PHASE AND SUPPORT CABLES TO MANHOLE WALL WITHIN 12" ON EITHER SIDE OF THE SPLICE.
E. ALL MEDIUM VOLTAGE CABLING IS TO CONSIST OF (3)#500KCM COPPER EPR (15KV) SINGLE CONDUCTOR CABLES WITH (1)#4/0 (THWN) 600V GRND FOR MAIN DISTRIBUTION LINES AND (3)#4/0 COPPER EPR (15KV) SINGLE CONDUCTOR CABLES WITH (1)#4 (THWN) 600V GRND FOR RUNS FROM VFI SWITCHES TO TRANSFORMERS.
F. MEDIUM VOLTAGE CABLING IN VAULTS IS TO BE BUNDLED AND RUN IN EITHER RIGID METAL CONDUIT OR SUPPORTED BY HOOKS FROM SWITCH TO TRANSFORMER(S). CABLES WILL NOT BE RUN ALONG THE FLOOR IN THE VAULTS.

MHTN
ARCHITECTS
MHTN Architects, Inc.
420 East South Temple
Suite 100
Salt Lake City, Utah 84111
Telephone (801) 595-6700
Telefax (801) 595-6717
www.mhtn.com

Hastings+Chivetta
ARCHITECTURE • PLANNING • ENGINEERING
622 Emerson, Suite 200
St. Louis, MO 63141
Tel. 314.863.5717
Fax. 314.863.2823
www.hastingschivetta.com

BUILDING OFFICIAL STAMP
Ken Garner
Engineering, Inc.
Electrical Engineering Consultants, Inc.
102 West 500 South, Suite 225
Salt Lake City, Utah 84101
P. 801.328.8800
F. 801.328.8802
Contact: Paris LeLaCheur
Project #: 2010-117.00

UNIVERSITY OF UTAH
STUDENT LIFE CENTER
1836 E. BALLIF ROAD
SALT LAKE CITY, UTAH 84112

SEAL

MHTN PROJECT NO. 2010562.00

DRAWN BY: Author CHECKED BY: Checker

ISSUED:

NO.	DATE	DESCRIPTION

CONTRACTOR TO VERIFY DRAWINGS IN FIELD USE REFLECT LAST REVISION DATE.

NO.	DATE	DESCRIPTION
1	05-28-2013	ADDENDUM ONE

SHEET NAME
ONE-LINE
DIAGRAM - 480V

BID DOCUMENTS
May 15, 2013

SHEET NUMBER
EP600

C:\Users\brown.KGE\Documents\2010-117.00_KGE_STUDENT LIFE_ELECTRICAL_CENTERAL_2012_brown.rvt
5/28/2013 9:48:26 AM

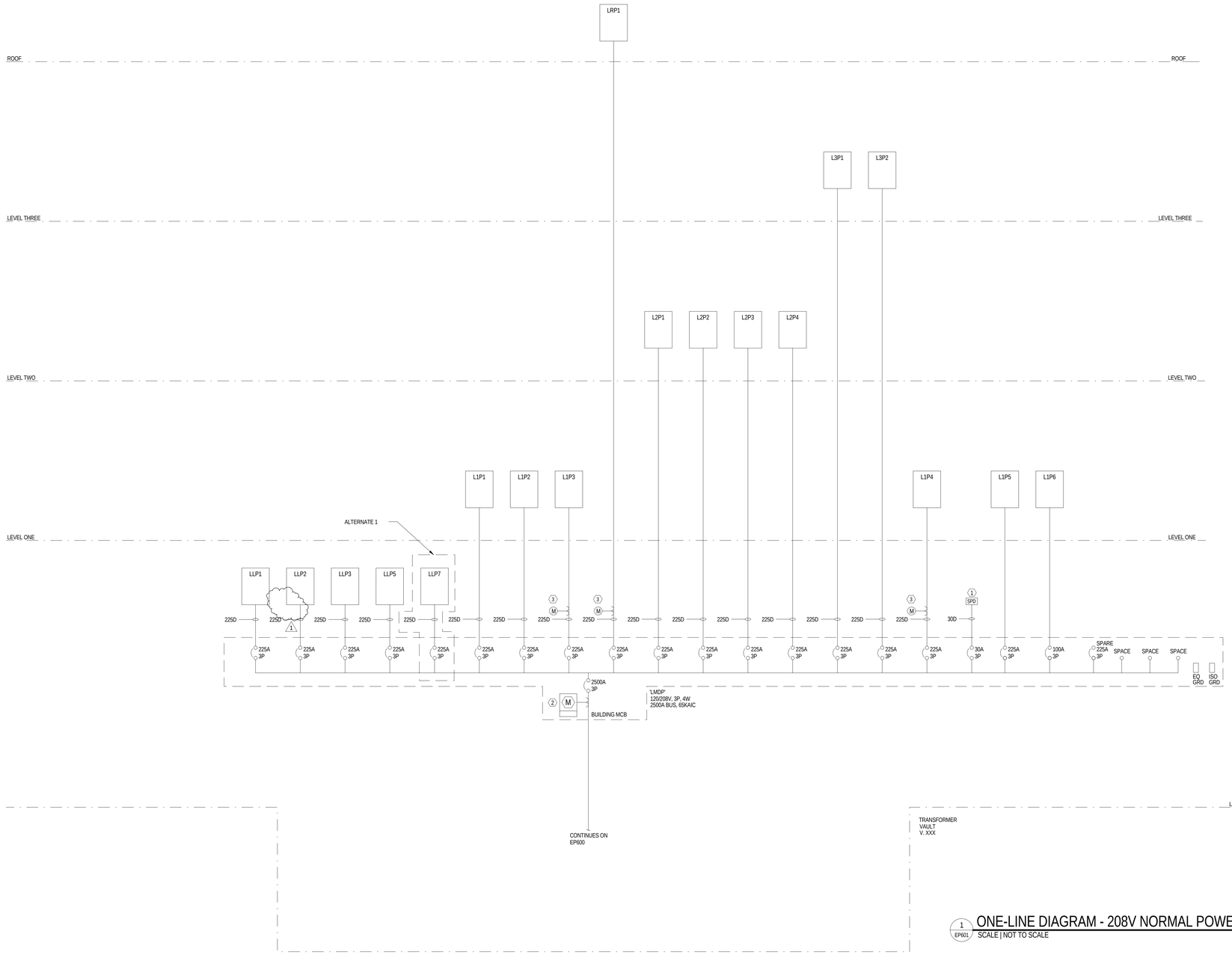

1 EP601 ONE-LINE DIAGRAM - 208V NORMAL POWER DISTRIBUTION

SCALE | NOT TO SCALE

KEYED NOTES - EP601

1. TVSS 120/208V
2. METERING MAIN SWITCHBOARDS (CERVICE ENTRANCE). PROVIDE SQUARE D POWER LOGIC CIRCUIT MONITOR. ALASS 3000.MODEL CM3350. PROVIDE METERS CURRENT AND POTENTIAL TRANSFORMERS, SELECTOR SWITCHES WIRING , ETC. AS REQUIRED FOR COMPLETE METERING SYSTEM WITH THE CAPABILITY TO CONNECT BY ETHERNET TO THE MAION CAMPUS UTILITY MANAGEMENT SYSTEM.
3. PROVIDE POWER METERING FOR LEED MEASUREMENT AND VERIFICATION. PROVIDE ONE GROUP OF THE METERS TO MEASURE ALL MECHANICAL LOADS. PROVIDE SECOND GROUP OF METERS TO MEASURE ALL LIGHTING LOADS. PROVIDE THIRD GROUP OF METERS TO MEASURE ALL OTHER ELECTRICAL LOADS. PROVIDE CURRENT AND POTENTIAL TRANSFORMERS AS REQUIRED. PROVIDE DATA RECORDER AND SOFTWARE FOR DATA RECORDING AND PROCESSING PROVIDE INTERFACE BETWEEN LEED METERING EQUIPMENT AND BUILDING MANAGEMENT SYSTEM.

GENERAL NOTES - SHEET EP601

A. ALL SWITCHING RESULTING IN A BUILDING OUTAGE SHALL BE COMPLETED AT NIGHT AND ON WEEKENDS. OUTAGES ARE TO BE COORDINATED THROUGH UNIVERSITY ELECTRIC SHOP TWO WEEKS PRIOR TO THE DESIRED OUTAGE DATE.
B. DIVISION 26 SHALL COMPLETE THE FOLLOWING IN EACH MANHOLE WHERE ANY DEMOLITION OR NEW WORK OCCURS: REMOVE ALL DEBRIS, SWEEP OUT MANHOLE, CLEAN UP OF OLD OIL SPILLS, CLEAN UP OF NEW OIL SPILLS, LEAVE MANHOLE IN CLEAN CONDITION.
C. EACH FEEDER IS TO BE LOOPED INSIDE EACH MANHOLE FOR AT LEAST 360°.
D. CONTRACTOR IS TO PROVIDE AND INSTALL MEDIUM VOLTAGE CABLE SPLICES AS NECESSARY TO ENSURE PROPER CABLE PULLING TENSIONS ARE MAINTAINED THROUGHOUT THE ENTIRE LENGTH OF THE CABLE PULL. MINIMIZE THE USE OF CABLE SPLICES THROUGHOUT THE PROJECT. ALL CABLE TO CABLE MEDIUM VOLTAGE SPLICES ARE TO BE 1583 RAYCHEM HEATSHRINK SPLICES OR 3M COLDSHRINK SPLICES UNLESS NOTED OTHERWISE. PROVIDE ONE SPLICE KIT PER PHASE AND SUPPORT CABLES TO MANHOLE WALL WITHIN 12" ON EITHER SIDE OF THE SPLICE.
E. ALL MEDIUM VOLTAGE CABLING IS TO CONSIST OF (3)#500KCM COPPER EPR (15KV) SINGLE CONDUCTOR CABLES WITH (1)#4/0 (THWN) 600V GRND FOR MAIN DISTRIBUTION LINES AND (3)#4/0 COPPER EPR (15KV) SINGLE CONDUCTOR CABLES WITH (1)#4 (THWN) 600V GRND FOR RUNS FROM VFI SWITCHES TO TRANSFORMERS.
F. MEDIUM VOLTAGE CABLING IN VAULTS IS TO BE BUNDLED AND RUN IN EITHER RIGID METAL CONDUIT OR SUPPORTED BY HOOKS FROM SWITCH TO TRANSFORMER(S). CABLES WILL NOT BE RUN ALONG THE FLOOR IN THE VAULTS.
G. ALL 120/208V POWER PANELS AND DISTRIBUTION BOARDS TO HAVE EQUIPMENT AND ISOLATED GROUND BUS PER UNIVERSITY STANDARDS.
H. ALL CONDUITS ABOVE GRADE SHOULD BE EMT OR RGC METAL CONDUITS. MINIMUM CONDUIT SIZE SHOULD BE 3/4". INSTALLATION OF THE MC CABLE IS NOT ALLOWED.
I. FLEXIBLE CONDUITS IN LENGTHS GREATER THAN 6 FEET SHOULD NOT BE USED.
J. ALL CONDUCTORS SHOULD BE COPPER WITH CODE APPROVED INSULATION SUITABLE FOR THE INTENDED LOCATION. THE MINIMUM CONDUCTOR SIZE FOR POWER AND LIGHT CIRCUITS TO BE #12. ALUMINUM CONDUCTORS ARE NOT ALLOWED.
K. ALL DISTRIBUTION AND BRANCH PANELS TO BE PROVIDED WITH MINIMUM 50% SPARE CAPACITY FOR FUTURE LOADS. ALL PANELS TO BE PROVIDED WITH COPPER BUS AND COPPER RATED LUGS. ALUMINUM BUS AND COPPER-ALUMINUM RATED LUGS ARE NOT ALLOWED.
L. ALL DISTRIBUTION AND BRANCH PANELS TO BE PROVIDED WITH MINIMUM 50% SPARE CIRCUIT BREAKER SPACE.
M. ALL DISTRIBUTION TRANSFORMERS TO BE OIL-FILLED WITH FR3 FLUID AND TO HAVE COPPER WINDINGS. REFER TO THE UNIVERSITY OF UTAH SPECIFICATION STANDARDS FOR ADDITIONAL INFORMATION REGARDING IMPEDANCE, TAPS, LOAD-BREAK SWITCHES, AND ALL OTHER ACCESSORIES.

MHTN ARCHITECTS
MHTN Architects, Inc.
420 East South Temple
Suite 100
Salt Lake City, Utah 84111
Telephone (801) 595-6700
Telefax (801) 595-6717
www.mhtn.com

Hastings+Chivetta
ARCHITECTURE • PLANNING • ENGINEERING
622 Emerson, Suite 200
St. Louis, MO 63141
Tel. 314.863.5717
Fax. 314.863.2823
www.hastingschivetta.com

BUILDING OFFICIAL STAMP
Ken Garner Engineering, Inc.
Electrical Engineering Consultants, Inc.
102 West 500 South, Suite 225
Salt Lake City, Utah 84101
P. 801.328.8800
F. 801.328.8802
Contact: Paris LeLaCheur
Project #: 2010-117.00

UNIVERSITY OF UTAH
STUDENT LIFE CENTER
1836 E. BALLIF ROAD
SALT LAKE CITY, UTAH 84112

SEAL

MHTN PROJECT NO. 2010562.00
DRAWN BY: Author CHECKED BY: Checker

ISSUED:

NO.	DATE	DESCRIPTION

CONTRACTOR TO VERIFY DRAWINGS IN FIELD USE REFLECT LAST REVISION DATE.

NO.	DATE	DESCRIPTION
1	05-28-2013	ADDENDUM ONE

SHEET NAME
ONE LINE DIAGRAM - 208V

BID DOCUMENTS
May 15, 2013

SHEET NUMBER
EP601

C:\Users\brown.KGE\Documents\2010-117.00_KGE_STUDENT LIFE_ELECTRICAL_CENTERAL_2012_drown.rvt
5/28/2013 9:48:32 AM

Branch Panel: EHLL1

Location: MAIN ELECTRIC 10F
Supply From:
Mounting: SURFACE
Enclosure: TYPE 1
Volts: 480/277 Wye
Phases: 3
Wires: 4
A.I.C. Rating:
Mains Type: MB
Mains Rating: 225 A
MCB Rating:

CKT	Circuit Description	DF	LOAD	BKR	P	A		B		C		P	BKR	LOAD	DF	Circuit Description	CKT
1	L STAIR #2-2 99B-2	L	86	20 A	1	86	0					1	20 A	0	L	CUSTODIAL CLOSET	2
3	L STAIR #3 99C	L	86	20 A	1			86	0			1	0 A	0	--	Spare - ALT. 1B	4
5	CORRIDOR 10	L	340	20 A	1					340	43	1	20 A	43	L	L	6
7	Spare - ALT. 1B	--	0	0 A	1	0	215					1	20 A	215	L	L	8
9	Spare - ALT. 1A	--	0	0 A	1			0	86			1	20 A	86	L	L	10
11	LOCKER ROOM	L	603	20 A	1					603	756	1	20 A	753	L	L	12
13	L	L	624	20 A	1	628	2279					1	20 A	2279	L	CORRIDOR 20	14
15	L	L	974	20 A	1			976	47			1	20 A	47	L	L	16
17																	18
19																	20
21																	22
23																	24
25																	26
27																	28
29																	30
31																	32
33																	34
35																	36
37																	38
39																	40
41																	42
					Total	3208		1195		1742							
					Total	12 A		4 A		7 A							

Legend:
DEMAND FACTORS: (R-RECEPTACLES 100%<10,000VA, 50%>10,000VA) (L-LIGHTING 125%) (M-MECHANICAL 100%) (C-CONTINUOUS 125%) (K-KITCHEN PER NEC TABLE 220.56) (L-LIGHTING 125%)

Load Classification	Connected Load	Demand Factor	Estimated	Panel Totals	
L	6145	125.00%	7681		
				Total Conn. Load:	6145
				Total Est. Demand:	7681
				Total Conn. Current:	7 A
				Total Est. Demand	9 A

Notes:

Branch Panel: ELLP1

Location: MAIN ELECTRIC 10F
Supply From:
Mounting: SURFACE
Enclosure: TYPE 1
Volts: 120/208 Wye
Phases: 3
Wires: 4
A.I.C. Rating:
Mains Type: MB
Mains Rating: 225 A
MCB Rating:

CKT	Circuit Description	DF	LOAD	BKR	P	A		B		C		P	BKR	LOAD	DF	Circuit Description	CKT
1	'FACP' RM 7	--	500	20 A	1	500	1000					2	20 A	2000	R	UPS BACKUP	2
3	'SEC' RM 7	--	500	20 A	1			500	1000								4
5	FIRE SMOKE DAMPER	M	560	20 A	1					560	1000	2	20 A	2000	R	UPS BACKUP	6
7	RECEPTACLES	R	180	20 A	1	180	1000										8
9	RECEPTACLES	R	720	20 A	1			720	180			1	20 A	180	R	RECEPTACLES	10
11	RECEPT. TRANS.	R	180	20 A	1					180							12
13	RECEPT. TRANS.	R	180	20 A	1	180											14
15																	16
17																	18
19																	20
21																	22
23																	24
25																	26
27																	28
29																	30
31																	32
33																	34
35																	36
37																	38
39																	40
41																	42
					Total	2860		2400		1740							
					Total	25 A		21 A		15 A							

Legend:
DEMAND FACTORS: (R-RECEPTACLES 100%<10,000VA, 50%>10,000VA) (L-LIGHTING 125%) (M-MECHANICAL 100%) (C-CONTINUOUS 125%) (K-KITCHEN PER NEC TABLE 220.56) (L-LIGHTING 125%)

Load Classification	Connected Load	Demand Factor	Estimated	Panel Totals	
R	5440	100.00%	5440		
M	560	100.00%	560		
				Total Conn. Load:	7000
				Total Est. Demand:	7000
				Total Conn. Current:	19 A
				Total Est. Demand	19 A

Notes:

Branch Panel: HL11

Location: MAIN ELECTRIC 10F
Supply From:
Mounting: SURFACE
Enclosure: TYPE 1
Volts: 480/277 Wye
Phases: 3
Wires: 4
A.I.C. Rating:
Mains Type: MB
Mains Rating: 225 A
MCB Rating:

CKT	Circuit Description	DF	LOAD	BKR	P	A		B		C		P	BKR	LOAD	DF	Circuit Description	CKT
1	L IM OFFICE-1 6-1	L	0	20 A	1	0	0					1	20 A	0	L	LOWER LEVEL ROOMS	2
3	CORRIDOR LIGHTING	L	1579	20 A	1			1585	470			1	20 A	470	L	CRS STORAGE 45A	4
5	Spare - ALT. 1B	--	0	0 A	1					0	327	1	20 A	327	L	SHOWERS	6
7	Spare - ALT. 1B	--	0	0 A	1	0	669					1	20 A	665	L	L	8
9	Spare - ALT. 1B	--	0	0 A	1			0	0			1	0 A	0	--	Spare - ALT. 1A	10
11																	12
13																	14
15																	16
17																	18
19																	20
21																	22
23																	24
25																	26
27																	28
29																	30
31																	32
33																	34
35																	36
37																	38
39																	40
41																	42
					Total	669		2055		327							
					Total	3 A		8 A		1 A							

Legend:
DEMAND FACTORS: (R-RECEPTACLES 100%<10,000VA, 50%>10,000VA) (L-LIGHTING 125%) (M-MECHANICAL 100%) (C-CONTINUOUS 125%) (K-KITCHEN PER NEC TABLE 220.56) (L-LIGHTING 125%)

Load Classification	Connected Load	Demand Factor	Estimated	Panel Totals	
L	3051	125.00%	3814		
				Total Conn. Load:	3051
				Total Est. Demand:	3814
				Total Conn. Current:	4 A
				Total Est. Demand	5 A

Notes:

Branch Panel: HL12

Location: MAIN ELECTRIC 10F
Supply From:
Mounting: SURFACE
Enclosure: TYPE 1
Volts: 120/208 Wye
Phases: 3
Wires: 4
A.I.C. Rating:
Mains Type: MB
Mains Rating: 225 A
MCB Rating:

CKT	Circuit Description	DF	LOAD	BKR	P	A		B		C		P	BKR	LOAD	DF	Circuit Description	CKT
1																	2
3																	4
5																	6
7																	8
9																	10
11																	12
13																	14
15																	16
17																	18
19																	20
21																	22
23																	24
25																	26
27																	28
29																	30
31																	32
33																	34
35																	36
37																	38
39																	40
41																	42
					Total	0		0		0							
					Total	0 A		0 A		0 A							

Legend:
DEMAND FACTORS: (R-RECEPTACLES 100%<10,000VA, 50%>10,000VA) (L-LIGHTING 125%) (M-MECHANICAL 100%) (C-CONTINUOUS 125%) (K-KITCHEN PER NEC TABLE 220.56) (L-LIGHTING 125%)

Load Classification	Connected Load	Demand Factor	Estimated	Panel Totals	
				Total Conn. Load:	0
				Total Est. Demand:	0
				Total Conn. Current:	0 A
				Total Est. Demand	0 A

Notes:

Branch Panel: HLM1

Location:
Supply From:
Mounting: SURFACE
Enclosure: TYPE 1
Volts: 480/277 Wye
Phases: 3
Wires: 4
A.I.C. Rating:
Mains Type: MB
Mains Rating: 225 A
MCB Rating:

CKT	Circuit Description	DF	LOAD	BKR	P	A		B		C		P	BKR	LOAD	DF	Circuit Description	CKT
1						3047	3047										2
3	M	M	9141	20 A	3			3047	3047			3	20 A	9141	M	M	4
5										3047	3047						6
7						0	582										8
9	J-BOX	M	0	20 A	3			0	582			3	20 A	1745	M	28B 8,10,12	10
11										0	582						12
13						0											14
15	J-BOX	M	0	20 A	3			0									16
17										0							18
19																	20
21																	22
23																	24
25																	26
27																	28
29																	30
31																	32
33																	34
35																	36
37																	38
39																	40
41																	42
					Total	6676		6676		6676							
					Total	24 A		24 A		24 A							

Legend:
DEMAND FACTORS: (R-RECEPTACLES 100%<10,000VA, 50%>10,000VA) (L-LIGHTING 125%) (M-MECHANICAL 100%) (C-CONTINUOUS 125%) (K-KITCHEN PER NEC TABLE 220.56) (L-LIGHTING 125%)

Load Classification	Connected Load	Demand Factor	Estimated	Panel Totals	
M	20027	100.00%	20027		
				Total Conn. Load:	20027
				Total Est. Demand:	20027
				Total Conn. Current:	24 A
				Total Est. Demand	24 A

Notes:

Branch Panel: HLM2

Location: MECHANICAL 85
Supply From:
Mounting: SURFACE
Enclosure: TYPE 1
Volts: 480/277 Wye
Phases: 3
Wires: 4
A.I.C. Rating:
Mains Type: ML
Mains Rating: 225 A
MCB Rating:

CKT	Circuit Description	DF	LOAD	BKR	P	A		B		C		P	BKR	LOAD	DF	Circuit Description	CKT
1						2327	8421										2
3	AH-1 RELIEF FANS	M	6980	20 A	3			2327	8421			3	20 A	25264	M	AH-1 SUPPLY FANS	4
5										2327	8421						6
7						0	0										8
9	AH-1 REDUNDANT VFD	M	0	20 A	3			0	0			3	20 A	0	M	AH-1 REDUNDANT VFD	10
11										0	0						12
13						2642	12632										14
15	AH-2 RELIEF FANS	M	7926	20 A	3			2642	12632			3	60 A	37896	M	AH-2 SUPPLY FANS	16
17										2642	12632						18
19						0	0										20
21	AH-2 REDUNDANT VFD	M	0	20 A	3			0	0			3	20 A	0	M	AH-2 REDUNDANT VFD	22
23										0	0						24
25						887	2659										26
27	AH-9 RELIEF FANS	M	2660	20 A	3			887	2659			3	20 A	7976	M	AH-9 SUPPLY FANS	28
29										887	2659						30
31																	32
33																	34
35																	36
37																	38
39																	40
41																	42
					Total	29567		29567		29567							
					Total	107 A		107 A		107 A							

Legend:
DEMAND FACTORS: (R-RECEPTACLES 100%<10,000VA, 50%>10,000VA) (L-LIGHTING 125%) (M-MECHANICAL 100%) (C-CONTINUOUS 125%) (K-KITCHEN PER NEC TABLE 220.56) (L-LIGHTING 125%)

Load Classification	Connected Load	Demand Factor	Estimated	Panel Totals	
M	88702	100.00%	88702		
				Total Conn. Load:	88702
				Total Est. Demand:	88702
				Total Conn. Current:	107 A
				Total Est. Demand	107 A

Notes:

Branch Panel: HLM3

Location: MECHANICAL 85
Supply From:
Mounting: SURFACE
Enclosure: TYPE 1
Volts: 480/277 Wye
Phases: 3
Wires: 4
A.I.C. Rating:
Mains Type: ML
Mains Rating: 600 A
MCB Rating:

CKT	Circuit Description	DF	LOAD	BKR	P	A		B		C		P	BKR	LOAD	DF	Circuit Description	CKT
1						18005	18005										2
3	HWP-01	M	54015	100 A	3			18005	18005			3	100 A	54015	M	HWP-02	4
5										18005	18005						6
7						5817	5817										8
9	HWP-03	M	17451	60 A	3			5817	5817			3	60 A	17451	M	HWP-04	10
11										5817	5817						12
13						7479	7479										14
15	HWP-05	M	22437	20 A	3			7479	7479			3	20 A	22437	M	HWP-06	16
17										7479	7479						18
19						22437	22437										20
21	CHWP-1	M	67311	40 A	3			22437	22437			3	40 A	67311	M	CHWP-02	22
23										22437	22437						24
25																	26
27																	28
29																	30
31																	32
33																	34
35																	36
37																	38
39																	40
41																	42
					Total	107476		107476		107476							
					Total	388 A		388 A		388 A							

Legend:
DEMAND FACTORS: (R-RECEPTACLES 100%<10,000VA, 50%>10,000VA) (L-LIGHTING 125%) (M-MECHANICAL 100%) (C-CONTINUOUS 125%) (K-KITCHEN PER NEC TABLE 220.56) (L-LIGHTING 125%)

Load Classification	Connected Load	Demand Factor	Estimated	Panel Totals	
M	322428	100.00%	322428		
				Total Conn. Load:	322428
				Total Est. Demand:	322428
				Total Conn. Current:	388 A
				Total Est. Demand	388 A

Notes:

Branch Panel: LLP1

Location: MAIN ELECTRIC 10F
Supply From:
Mounting: SURFACE
Enclosure: TYPE 1
Volts: 120/208 Wye
Phases: 3
Wires: 4
A.I.C. Rating:
Mains Type: ML
Mains Rating: 250 A
MCB Rating:

CKT	Circuit Description	DF	LOAD	BKR	P	A		B		C		P	BKR	LOAD	DF	Circuit Description	CKT
1	RECEPTACLES	R	1440	20 A	1	1440	1440					1	20 A	1440	R	R CORRIDOR 20	2
3	RECEPTACLES	R	720	20 A	1			720									4
5	RECEPTACLES	R	540	20 A	1					540	180	1	20 A	180	R	VENDING 5B	6
7	RECEPTACLES	R	1260	20 A	1	1260	180					1	20 A	180	R	VENDING 5B	8
9	RECEPTACLES	R	1080	20 A	1			1080	180			1	20 A	180	R	VENDING 5B	10
11	RECEPTACLES TR	R	720	20 A	1					720	540	1	20 A	540	R	RECEPTACLES	12
13	HYDRO EQUIPMENT	R	180	20 A	1	180	1080					1	20 A	1080	R	RECEPTACLES	14
15	RECEPTACLES	R	540	20 A	1			540	360			1	20 A	360	R	RADIO CHARGER	16
17	RECEPTACLES	R	900	20 A	1					900	720	1	20 A	720	R	RADIO/TIME CLOCK	18
19																	20
21	TR ROOM EQUIPMENT	R	180	20 A	1			180									22
23	TR ROOM EQUIPMENT	R	540	20 A	1					540							24
25	TR ROOM EQUIPMENT	R	180	20 A	1	180											26
27	TR ROOM EQUIPMENT	R	360	20 A	1			360									28
29	TR ROOM EQUIPMENT	R	360	20 A	1					360							30
31																	32
33																	34
35																	36
37																	38
39																	40
41																	42
					Total	5760		3420		4500							
					Total	49 A		29 A		39 A							

Legend:
DEMAND FACTORS: (R-RECEPTACLES 100%<10,000VA, 50%>10,000VA) (L-LIGHTING 125%) (M-MECHANICAL 100%) (C-CONTINUOUS 125%) (K-KITCHEN PER NEC TABLE 220.56) (L-LIGHTING 125%)

Load Classification	Connected Load	Demand Factor	Estimated	Panel Totals	
R	13680	86.55%	11840		
				Total Conn. Load:	13680
				Total Est. Demand:	11840
				Total Conn. Current:	38 A
				Total Est. Demand	33 A

Notes:

Branch Panel: LLP2

1

Location: MAIN ELECTRIC 10F
Supply From:
Mounting: SURFACE
Enclosure: TYPE 1
Volts: 120/208 Wye
Phases: 3
Wires: 4
A.I.C. Rating:
Mains Type: ML
Mains Rating: 250 A
MCB Rating:

CKT	Circuit Description	DF	LOAD	BKR	P	A		B		C		P	BKR	LOAD	DF	Circuit Description	CKT
1	TEAM BOX RECEPT	R	720	20 A	1	720	720					1	20 A	720	R	RECEPTACLES	2
3	BACKBOARD MOTOR	M	0	20 A	1			0	540			1	20 A	540	R	RECEPTACLES	4
5	RECEPTACLES	R	1080	20 A	1					1080	180	1	20 A	180	R	WASHER	6
7	BACKBOARD MOTOR	M	0	20 A	1	0	180					1	20 A	180	R	WASHER	8
9	SCOREBOARD POWER	R	720	20 A	1			720	180			2	20 A	360	R	DRYER	10
11	COMPUTERS	R	720	20 A	1					720	180						12
13	COMPUTERS	R	1080	20 A	1	1080	180					2	20 A	360	R	DRYER	14
15	T.V. RECEPTACLES	R	540	20 A	1			540	180								16
17	REFRIDGERATOR	R	180	20 A	1					180	180	1	20 A	180	R	T.V. RECEPTACLE	18
19	A/V EQUIPMENT	R	180	20 A	1	180	540					1	20 A	540	R	RECEPTACLES	20
21	A/V EQUIPMENT	R	180	20 A	1			180	180			1	20 A	180	R	MICROWAVE	22
23	RECEPTACLES	R	540	20 A	1					540	1500	1	20 A	1500	M	MOTORIZED SHADES	24
25	MOTORIZED SHADES	M	500	20 A	1	500	1080					1	20 A	1080	R	RECEPTACLES	26
27									720			1	20 A	720	R	RECEPTACLES	28
29																	30
31																	32
33																	34
35																	36
37																	38
39																	40
41																	42
					Total	5180		3240		4560							
					Total	45 A		27 A		40 A							

Legend:
DEMAND FACTORS: (R-RECEPTACLES 100%<10,000VA, 50%>10,000VA) (L-LIGHTING 125%) (M-MECHANICAL 100%) (C-CONTINUOUS 125%) (K-KITCHEN PER NEC TABLE 220.56) (L-LIGHTING 125%)

Load Classification	Connected Load	Demand Factor	Estimated	Panel Totals	
R	10980	95.54%	10490		
M	2000	100.00%	2000		
				Total Conn. Load:	12980
				Total Est. Demand:	12490
				Total Conn. Current:	36 A
				Total Est. Demand	35 A

Notes:

MHTN ARCHITECTS
MHTN Architects, Inc.
420 East South Temple
Suite 100
Salt Lake City, Utah 84111
Telephone (801) 595-6700
Telefax (801) 595-6717
www.mhtn.com

Hastings+Chivetta
ARCHITECTURE • PLANNING • ENGINEERING
622 Emerson, Suite 200
St. Louis, MO 63141
Tel. 314.863.5717
Fax. 314.863.2823
www.hastingschivetta.com

BUILDING OFFICIAL STAMP

Ken Garner Engineering, Inc.
Electrical Engineering Consultants, Inc.
102 West 500 South, Suite 225
Salt Lake City, Utah 84101
P. 801.328.8800
F. 801.328.8802
Contact: Paris LeLaCheur
Project #: 2010-117.00

UNIVERSITY OF UTAH
STUDENT LIFE CENTER
1836 E. BALLIF ROAD
SALT LAKE CITY, UTAH 84112

SEAL

MHTN PROJECT NO. 2010562.00
DRAWN BY: KGE CHECKED BY: KGE

ISSUED

NO.	DATE	DESCRIPTION

CONTRACTOR TO VERIFY DRAWINGS IN FIELD USE REFLECT LAST REVISION DATE.

NO.	DATE	DESCRIPTION
1	05-28-2013	ADDENDUM ONE

SHEET NAME
PANEL SCHEDULES

BID DOCUMENTS
May 15, 2013

SHEET NUMBER
EP603

C:\Users\tbrown.KGE\Documents\2010-117.00_KGE_STUDENT LIFE_ELECTRICAL_CENTERAL_2012_tbrown.rvt
5/28/2013 9:48:47 AM

Branch Panel: LLP3

Location: MAIN ELECTRIC 10F
Supply From:
Mounting: SURFACE
Enclosure: TYPE 1
Volts: 120/208 Wye
Phases: 3
Wires: 4
A.I.C. Rating:
Mains Type: ML
Mains Rating: 250 A
MCB Rating:

CKT	Circuit Description	DF	LOAD	BKR	P	A		B		C		P	BKR	LOAD	DF	Circuit Description	CKT
1	RECEPTACLES	R	540	20 A	1	540	900					1	20 A	900	R	RECEPTACLES	2
3	RECEPTACLES	R	720	20 A	1			720	720			1	20 A	720	R	RECEPTACLES	4
5	RECEPTACLES	R	1080	20 A	1					1080	540	1	20 A	540	R	RECEPTACLES	6
7	RECEPTACLES	R	360	20 A	1	360	360					1	20 A	360	R	RECEPTACLES	8
9	RECEPTACLES	R	1080	20 A	1			1080	900			1	20 A	900	R	RECEPTACLES	10
11	RECEPTACLES	R	360	20 A	1					360	180	1	20 A	180	R	EWC	12
13	RECEPTACLES	R	720	20 A	1	720	360					1	20 A	360	--	RECEPTACLES POOL	14
15	CLOCK	C	500	20 A	1			500	540			1	20 A	540	--	RECEPTACLES POOL	16
17	L	L	0	20 A	1					18	360	1	20 A	360	R	RECEPTACLES	18
19	R	R	360	20 A	1	360											20
21																	22
23																	24
25																	26
27																	28
29																	30
31																	32
33																	34
35																	36
37																	38
39																	40
41																	42
					Total	3600		4460		2538							
					Total	31 A		39 A		21 A							

Legend:
DEMAND FACTORS: (R-RECEPTACLES 100%<10,000VA, 50%>10,000VA) (L-LIGHTING 125%) (M-MECHANICAL 100%) (C-CONTINUOUS 125%) (K-KITCHEN PER NEC TABLE 220.56) (L-LIGHTING 125%)

Load Classification	Connected Load	Demand Factor	Estimated	Panel Totals	
R	9180	100.00%	9180		
L	18	125.00%	22	**Total Conn. Load:**	10598
C	500	100.00%	500	**Total Est. Demand:**	10602
				Total Conn. Current:	29 A
				Total Est. Demand	29 A

Notes:

Branch Panel: LLP4

Location:
Supply From:
Mounting: SURFACE
Enclosure: TYPE 1
Volts: 120/240 Single
Phases: 1
Wires: 3
A.I.C. Rating:
Mains Type: MB
Mains Rating: 100 A
MCB Rating:

CKT	Circuit Description	DF	LOAD	BKR	P	A		B		P	BKR	LOAD	DF	Circuit Description	CKT
1	1A	R	1000	20 A	1	1000									2
3	RECEPTACLES RM 45B	R	360	20 A	1			360	180	1	20 A	180	R	RECEPTACLES RM 45B	4
5	31A 5	R	0	20 A	1	0	2040			2	30 A	4080	M	12A 6,8	6
7									2040						8
9	RECEPTACLES RM 45B	R	180	20 A	1	180	2040			2	30 A	4080	M	12B 10,12	10
11	13 11,13	M	4080	30 A	2			2040	2040						12
13						2040	506			2	30 A	1012	M	39 14,16	14
15	39 15,17	M	1012	30 A	2			506	506						16
17						506	506			2	30 A	1012	M	39 18,20	18
19									506						20
21							1440			2	20 A	2880	M	1C 24,26	22
23									1440						24
25															26
27															28
29															30
31															32
33															34
35															36
37															38
39															40
41															42
					Total	10258		9618							
					Total	85 A		80 A							

Legend:
DEMAND FACTORS: (R-RECEPTACLES 100%<10,000VA, 50%>10,000VA) (L-LIGHTING 125%) (M-MECHANICAL 100%) (C-CONTINUOUS 125%) (K-KITCHEN PER NEC TABLE 220.56) (L-LIGHTING 125%)

Load Classification	Connected Load	Demand Factor	Estimated	Panel Totals	
R	1720	100.00%	1720		
M	18156	100.00%	18156	**Total Conn. Load:**	19876
				Total Est. Demand:	19876
				Total Conn. Current:	83 A
				Total Est. Demand	83 A

Notes:

Branch Panel: LLP5

Location: MECHANICAL 85
Supply From:
Mounting: SURFACE
Enclosure: TYPE 1
Volts: 120/208 Wye
Phases: 3
Wires: 4
A.I.C. Rating:
Mains Type: MB
Mains Rating: 250 A
MCB Rating:

CKT	Circuit Description	DF	LOAD	BKR	P	A		B		C		P	BKR	LOAD	DF	Circuit Description	CKT
1	AH-1, 2, 9 MARINE	M	0	20 A	1	0	2256					1	20 A	2256	M	EC-AH-1,2,9	2
3	RECEPTACLES	R	1080	20 A	1			1080	1000			1	20 A	1000	M	WS-01	4
5	CEILING J-BOX	R	900	20 A	1					900							6
7																	8
9																	10
11																	12
13																	14
15																	16
17																	18
19																	20
21																	22
23																	24
25																	26
27																	28
29																	30
31																	32
33																	34
35																	36
37																	38
39																	40
41																	42
					Total	2256		2080		900							
					Total	20 A		19 A		8 A							

Legend:
DEMAND FACTORS: (R-RECEPTACLES 100%<10,000VA, 50%>10,000VA) (L-LIGHTING 125%) (M-MECHANICAL 100%) (C-CONTINUOUS 125%) (K-KITCHEN PER NEC TABLE 220.56) (L-LIGHTING 125%)

Load Classification	Connected Load	Demand Factor	Estimated	Panel Totals	
R	1980	100.00%	1980		
M	3256	100.00%	3256	**Total Conn. Load:**	5236
				Total Est. Demand:	5236
				Total Conn. Current:	15 A
				Total Est. Demand	15 A

Notes:

Branch Panel: LLP6

Location:
Supply From:
Mounting: SURFACE
Enclosure: TYPE 1
Volts: 120/208 Wye
Phases: 3
Wires: 4
A.I.C. Rating:
Mains Type: MB
Mains Rating: 225 A
MCB Rating:

CKT	Circuit Description	DF	LOAD	BKR	P	A		B		C		P	BKR	LOAD	DF	Circuit Description	CKT
1	R	R	180	20 A	1	180	540					1	20 A	540	R	R	2
3	R	R	360	20 A	1			360	180			1	20 A	180	R	R	4
5	R	R	360	20 A	1					360	900	1	20 A	900	R	R	6
7	R	R	360	20 A	1	360	360					1	20 A	360	R	50 M POOL REC.	8
9	ALT 1 NAT STORAGE	R	540	20 A	1			540	540			1	20 A	540	R	ALT 1 CRS STORAGE	10
11	ALT 1 NAT STORAGE	R	540	20 A	1					540	180	1	20 A	180	R	ALT 1 CRS STORAGE	12
13	ALT 1 REC.	R	540	20 A	1	540	540					1	20 A	540	R	ALT 1 REC.	14
15	50 M POOL REC.	R	180	20 A	1			180	540			1	20 A	540	R	ALT 1 REC.	16
17											540	1	20 A	540	R	ALT 1 REC.	18
19																	20
21																	22
23																	24
25	R	R	360	20 A	1	360											26
27																	28
29																	30
31																	32
33																	34
35																	36
37																	38
39																	40
41																	42
					Total	2880		2340		2520							
					Total	24 A		20 A		21 A							

Legend:
DEMAND FACTORS: (R-RECEPTACLES 100%<10,000VA, 50%>10,000VA) (L-LIGHTING 125%) (M-MECHANICAL 100%) (C-CONTINUOUS 125%) (K-KITCHEN PER NEC TABLE 220.56) (L-LIGHTING 125%)

Load Classification	Connected Load	Demand Factor	Estimated	Panel Totals	
R	7740	100.00%	7740		
				Total Conn. Load:	7740
				Total Est. Demand:	7740
				Total Conn. Current:	21 A
				Total Est. Demand	21 A

Notes:

Branch Panel: LLP7

Location: MAIN ELECTRIC 10F
Supply From:
Mounting: SURFACE
Enclosure: TYPE 1
Volts: 120/208 Wye
Phases: 3
Wires: 4
A.I.C. Rating:
Mains Type: MB
Mains Rating: 225 A
MCB Rating:

CKT	Circuit Description	DF	LOAD	BKR	P	A		B		C		P	BKR	LOAD	DF	Circuit Description	CKT
1																	2
3																	4
5																	6
7																	8
9																	10
11																	12
13																	14
15																	16
17																	18
19																	20
21																	22
23																	24
25																	26
27																	28
29																	30
31																	32
33																	34
35																	36
37																	38
39																	40
41																	42
					Total	0		0		0							
					Total	0 A		0 A		0 A							

Legend:
DEMAND FACTORS: (R-RECEPTACLES 100%<10,000VA, 50%>10,000VA) (L-LIGHTING 125%) (M-MECHANICAL 100%) (C-CONTINUOUS 125%) (K-KITCHEN PER NEC TABLE 220.56) (L-LIGHTING 125%)

Load Classification	Connected Load	Demand Factor	Estimated	Panel Totals	
				Total Conn. Load:	0
				Total Est. Demand:	0
				Total Conn. Current:	0 A
				Total Est. Demand	0 A

Notes:

Branch Panel: ML6

Location:
Supply From:
Mounting: SURFACE
Enclosure: TYPE 1
Volts: 480/277 Wye
Phases: 3
Wires: 4
A.I.C. Rating:
Mains Type: MB
Mains Rating: 225 A
MCB Rating:

CKT	Circuit Description	DF	LOAD	BKR	P	A		B		C		P	BKR	LOAD	DF	Circuit Description	CKT
1						987	987										2
3	M	M	2960	20 A	3			987	987			3	20 A	2960	M	M	4
5										987	987						6
7																	8
9																	10
11																	12
13																	14
15																	16
17																	18
19																	20
21																	22
23																	24
25																	26
27																	28
29																	30
31																	32
33																	34
35																	36
37																	38
39																	40
41																	42
					Total	1973		1973		1973							
					Total	7 A		7 A		7 A							

Legend:
DEMAND FACTORS: (R-RECEPTACLES 100%<10,000VA, 50%>10,000VA) (L-LIGHTING 125%) (M-MECHANICAL 100%) (C-CONTINUOUS 125%) (K-KITCHEN PER NEC TABLE 220.56) (L-LIGHTING 125%)

Load Classification	Connected Load	Demand Factor	Estimated	Panel Totals	
M	5920	100.00%	5920		
				Total Conn. Load:	5920
				Total Est. Demand:	5920
				Total Conn. Current:	7 A
				Total Est. Demand	7 A

Notes:

MHTN ARCHITECTS
MHTN Architects, Inc.
420 East South Temple
Suite 100
Salt Lake City, Utah 84111
Telephone (801) 595-6700
Telefax (801) 595-6717
www.mhtn.com

Hastings+Chivetta
ARCHITECTURE • PLANNING • ENGINEERING
622 Emerson, Suite 200
St. Louis, MO 63141
Tel. 314.863.5717
Fax. 314.863.2823
www.hastingschivetta.com

BUILDING OFFICIAL STAMP
Ken Garner Engineering, Inc.
Electrical Engineering Consultants, Inc.
102 West 500 South, Suite 225
Salt Lake City, Utah 84101
P. 801.328.8800
F. 801.328.8802
Contact: Paris LeLaCheur
Project #: 2010-117.00

UNIVERSITY OF UTAH
STUDENT LIFE CENTER
1836 E. BALLIF ROAD
SALT LAKE CITY, UTAH 84112

SEAL

MHTN PROJECT NO. 2010562.00
DRAWN BY: KGE CHECKED BY: KGE

ISSUED:

NO.	DATE	DESCRIPTION

CONTRACTOR TO VERIFY DRAWINGS IN FIELD USE REFLECT LAST REVISION DATE.

NO.	DATE	DESCRIPTION
1	05-28-2013	ADDENDUM ONE

SHEET NAME
PANEL SCHEDULES

BID DOCUMENTS
May 15, 2013

SHEET NUMBER
EP604

C:\Users\rbrown.KGE\Documents\2010-117.00_KGE_STUDENT LIFE_ELECTRICAL_CENTERAL_2012_rbrown.rvt
5/28/2013 9:48:57 AM

Branch Panel: EH1L1

Location: ELECT. 104 **Volts:** 480/277 Wye **A.I.C. Rating:**
Supply From: **Phases:** 3 **Mains Type:** MB
Mounting: SURFACE **Wires:** 4 **Mains Rating:** 225 A
Enclosure: TYPE 1 **MCB Rating:**

CKT	Circuit Description	DF	LOAD	BKR	P	A		B		C		P	BKR	LOAD	DF	Circuit Description	CKT
1	CLASSROOM 145	L	0	20 A	1	0	752					1	20 A	752	L	OUTDOOR REC 155	2
3									145			1	20 A	145	L	L LOBBY 150	4
5	CONCOURSE LIGHTING	L	985	20 A	1					996	0	1	20 A	0	L	L MAC GYM-1 55-1	6
7	LIGHTING MAIN	L	282	20 A	1	282	390					1	20 A	390	L	L	8
9	L MAC GYM-1 55-1	L	0	20 A	1			0	0			1	20 A	0	L	L MAC GYM-1 55-1	10
11	POOL EQUIP 45B	L	504	20 A	1					506	0	1	20 A	0	L	Other MAC GYM-1 55-1	12
13																	14
15																	16
17																	18
19																	20
21																	22
23																	24
25																	26
27																	28
29																	30
31																	32
33																	34
35																	36
37																	38
39																	40
41																	42
					Total	1424		145		1502							
					Total	6 A		1 A		6 A							

Legend:
DEMAND FACTORS: (R-RECEPTACLES 100%<10,000VA, 50%>10,000VA) (L-LIGHTING 125%) (M-MECHANICAL 100%) (C-CONTINUOUS 125%) (K-KITCHEN PER NEC TABLE 220.56) (L-LIGHTING 125%)

Load Classification	Connected Load	Demand Factor	Estimated	Panel Totals	
L	3071	125.00%	3839		
				Total Conn. Load:	3071
				Total Est. Demand:	3839
				Total Conn. Current:	4 A
				Total Est. Demand	5 A

Notes:

Branch Panel: EL1P1

Location: ELECT. 104 **Volts:** 120/208 Wye **A.I.C. Rating:**
Supply From: **Phases:** 3 **Mains Type:** MB
Mounting: SURFACE **Wires:** 4 **Mains Rating:** 225 A
Enclosure: TYPE 1 **MCB Rating:**

CKT	Circuit Description	DF	LOAD	BKR	P	A		B		C		P	BKR	LOAD	DF	Circuit Description	CKT
1	UPS POWER	R	360	20 A	2	180	360					1	20 A	360	R	RECEPTACLES	2
3								180	360			1	20 A	360	R	RECEPTACLES	4
5	UPS POWER\	R	360	20 A	2					180	500	1	20 A	500	--	'NAC'	6
7						180	500					1	20 A	500	--	'SEC'	8
9	FIRE SMOKE DAMPER	M	500	20 A	1			500									10
11																	12
13																	14
15																	16
17																	18
19																	20
21																	22
23																	24
25																	26
27																	28
29																	30
31																	32
33																	34
35																	36
37																	38
39																	40
41																	42
					Total	1220		1040		680							
					Total	11 A		9 A		6 A							

Legend:
DEMAND FACTORS: (R-RECEPTACLES 100%<10,000VA, 50%>10,000VA) (L-LIGHTING 125%) (M-MECHANICAL 100%) (C-CONTINUOUS 125%) (K-KITCHEN PER NEC TABLE 220.56) (L-LIGHTING 125%)

Load Classification	Connected Load	Demand Factor	Estimated	Panel Totals	
R	1440	100.00%	1440		
M	500	100.00%	500	**Total Conn. Load:**	2940
				Total Est. Demand:	2940
				Total Conn. Current:	8 A
				Total Est. Demand	8 A

Notes:

Branch Panel: H1L1

Location: ELECT. 104 **Volts:** 480/277 Wye **A.I.C. Rating:**
Supply From: **Phases:** 3 **Mains Type:** MB
Mounting: SURFACE **Wires:** 4 **Mains Rating:** 225 A
Enclosure: TYPE 1 **MCB Rating:**

CKT	Circuit Description	DF	LOAD	BKR	P	A		B		C		P	BKR	LOAD	DF	Circuit Description	CKT
1	L	L	29	20 A	1	29	1457					1	20 A	1457	L	OUT DOOR REC 155	2
3	L OFFICE 108	L	930	20 A	1			942	150			1	20 A	150	L	L	4
5	L DATA 100E	L	94	20 A	1					94	765	1	20 A	765	L	L	6
7	NATATORIUM	L	0	20 A	1	0	0					1	20 A	0	L	L Space 100N	8
9	NATATORIUM	L	0	20 A	1			0	10			1	20 A	10	--	L	10
11	NATATORIUM	L	0	20 A	1					0	0	1	20 A	0	--	L	12
13	NATATORIUM	L	0	20 A	1	0	0					1	20 A	0	--	L	14
15	NATATORIUM	L	0	20 A	1			0	0			1	20 A	0	--	L	16
17											0	1	20 A	0	--	L	18
19	L OFFICE 155C	L	188	20 A	1	188											20
21										0		1	20 A	0	--	L	22
23																	24
25																	26
27																	28
29																	30
31																	32
33																	34
35																	36
37																	38
39																	40
41																	42
					Total	1674		1102		859							
					Total	6 A		4 A		3 A							

Legend:
DEMAND FACTORS: (R-RECEPTACLES 100%<10,000VA, 50%>10,000VA) (L-LIGHTING 125%) (M-MECHANICAL 100%) (C-CONTINUOUS 125%) (K-KITCHEN PER NEC TABLE 220.56) (L-LIGHTING 125%)

Load Classification	Connected Load	Demand Factor	Estimated	Panel Totals	
L	3625	125.00%	4531		
				Total Conn. Load:	3635
				Total Est. Demand:	4541
				Total Conn. Current:	4 A
				Total Est. Demand	5 A

Notes:
* PROVIDE GFCI BREAKER

Branch Panel: H1L2

Location: ELECT. 104 **Volts:** 480/277 Wye **A.I.C. Rating:**
Supply From: **Phases:** 3 **Mains Type:** MB
Mounting: SURFACE **Wires:** 4 **Mains Rating:** 225 A
Enclosure: TYPE 1 **MCB Rating:**

CKT	Circuit Description	DF	LOAD	BKR	P	A		B		C		P	BKR	LOAD	DF	Circuit Description	CKT
1	L RACQUETBALL	L	2724	20 A	1	2724											2
3	L RACQUETBALL	L	2724	20 A	1			2724									4
5	Other MAC GYM-1 55-1	L	360	20 A	1					360							6
7	Other MAC GYM-1 55-1	L	360	20 A	1	360											8
9	Other MAC GYM-1 55-1	L	360	20 A	1			360									10
11	Other MAC GYM-1 55-1	L	4320	20 A	1					4320							12
13																	14
15																	16
17																	18
19																	20
21																	22
23																	24
25																	26
27																	28
29																	30
31																	32
33																	34
35																	36
37																	38
39																	40
41																	42
					Total	3084		3084		4680							
					Total	11 A		11 A		17 A							

Legend:
DEMAND FACTORS: (R-RECEPTACLES 100%<10,000VA, 50%>10,000VA) (L-LIGHTING 125%) (M-MECHANICAL 100%) (C-CONTINUOUS 125%) (K-KITCHEN PER NEC TABLE 220.56) (L-LIGHTING 125%)

Load Classification	Connected Load	Demand Factor	Estimated	Panel Totals	
L	10848	125.00%	13560		
				Total Conn. Load:	10848
				Total Est. Demand:	13560
				Total Conn. Current:	13 A
				Total Est. Demand	16 A

Notes:

Branch Panel: H1M1

Location: MECHANICAL 120 **Volts:** 480/277 Wye **A.I.C. Rating:**
Supply From: **Phases:** 3 **Mains Type:** MB
Mounting: SURFACE **Wires:** 4 **Mains Rating:** 225 A
Enclosure: TYPE 1 **MCB Rating:**

CKT	Circuit Description	DF	LOAD	BKR	P	A		B		C		P	BKR	LOAD	DF	Circuit Description	CKT
1						48752	0										2
3	AH-4 RELIEF FANS	M	146256	60 A	3			48752	0			3	20 A	0	M	AH-4 REDUNDANT VFD	4
5										48752	0						6
7						91410	21269										8
9	AH-3	M	274230	150 A	3			91410	21269			3	20 A	63808	M	EAH-4	10
11										91410	21269						12
13						0	12632										14
15	EAH-4 REDUNDANT VFD	M	0	20 A	3			0	12632			3	20 A	37896	M	SMP-01, SMP-02	16
17										0	12632						18
19																	20
21																	22
23	Spare	--	0	20 A	1					0	0	1	30 A	0	--	Spare	24
25	Spare	--	0	30 A	1	0	0					1	20 A	0	--	Spare	26
27	Spare	--	0	20 A	1			0	0			1	20 A	0	--	Spare	28
29	Spare	--	0	20 A	1					0	0	1	20 A	0	--	Spare	30
31	Spare	--	0	20 A	1	0	0					1	20 A	0	--	Spare	32
33	Spare	--	0	20 A	1			0	0			1	20 A	0	--	Spare	34
35	Spare	--	0	20 A	1					0	0	1	20 A	0	--	Spare	36
37	Space	--	--	--	--	0	0					--	--	--	--	Space	38
39	Space	--	--	--	--			0	0			--	--	--	--	Space	40
41	Space	--	--	--	--					0	0	--	--	--	--	Space	42
					Total	174063		174063		174063							
					Total	628 A		628 A		628 A							

Legend:
DEMAND FACTORS: (R-RECEPTACLES 100%<10,000VA, 50%>10,000VA) (L-LIGHTING 125%) (M-MECHANICAL 100%) (C-CONTINUOUS 125%) (K-KITCHEN PER NEC TABLE 220.56) (L-LIGHTING 125%)

Load Classification	Connected Load	Demand Factor	Estimated	Panel Totals	
M	522190	100.00%	522190		
				Total Conn. Load:	522190
				Total Est. Demand:	522190
				Total Conn. Current:	628 A
				Total Est. Demand	628 A

Notes:

Branch Panel: L1P1

Location: ELECT. 104 **Volts:** 120/208 Wye **A.I.C. Rating:**
Supply From: **Phases:** 3 **Mains Type:** ML
Mounting: SURFACE **Wires:** 4 **Mains Rating:** 250 A
Enclosure: TYPE 1 **MCB Rating:**

CKT	Circuit Description	DF	LOAD	BKR	P	A		B		C		P	BKR	LOAD	DF	Circuit Description	CKT
1	PROJECTOR	R	180	20 A	1	180	720					1	20 A	720	R	RECEPTACLES	2
3	RECEPTACLES	R	720	20 A	1			720	720			1	20 A	720	R	RECEPTACLES	4
5	RECEPTACLES	R	360	20 A	1					360	1080	1	20 A	1080	R	RECEPTACLES	6
7	RECEPTACLES	R	360	20 A	1	360	720					1	20 A	720	R	RECEPTACLES	8
9	RECEPTACLES	R	360	20 A	1			360	180			1	20 A	180	R	REFRIGERATOR	10
11	RECEPTACLES	R	360	20 A	1					360	180	1	20 A	180	R	WASHER	12
13	RECEPTACLES	R	540	20 A	1	540	180					2	20 A	360	R	DRYER	14
15	RECEPTACLES	R	360	20 A	1			360	180								16
17	RECEPTACLES	R	540	20 A	1					540	180	2	20 A	360	R	DRYER	18
19	RECEPTACLES	R	720	20 A	1	720	180										20
21	T.V. CEILING	R	540	20 A	1			540	180			1	20 A	180	R	REFRIGERATOR	22
23	RECEPTACLES	R	720	20 A	1					720	500	1	20 A	500	M	ROLL UP DOOR	24
25	RECEPTACLES	R	1260	20 A	1	1260	900					1	20 A	900	R	RECEPTACLES	26
27	R OFFICE	R	720	20 A	1			720	900			1	20 A	900	R	RECEPTACLES	28
29	RECEPTACLES	R	720	20 A	1					720	540	1	20 A	540	R	RECEPTACLES	30
31	RECEPTACLES	R	180	20 A	1	180	720					1	20 A	720	R	RECEPTACLES	32
33	DISHWASHER	M	0	20 A	1			0	180			1	20 A	180	R	RECEPTACLES	34
35	AV EQUIP	R	1000	20 A	1					1000	1000	1	20 A	1000	M	WON DOOR	36
37	AV EQUIP	R	1000	20 A	1	1000	720					1	20 A	720	R	R CONTROL DESK 155A	38
39	Spare	--	0	20 A	1			0	180			1	20 A	180	R	R CONTROL DESK 155A	40
41	Spare	--	0	20 A	1					0	0	1	20 A	0	--	Spare	42
					Total	8380		5220		7180							
					Total	72 A		44 A		62 A							

Legend:
DEMAND FACTORS: (R-RECEPTACLES 100%<10,000VA, 50%>10,000VA) (L-LIGHTING 125%) (M-MECHANICAL 100%) (C-CONTINUOUS 125%) (K-KITCHEN PER NEC TABLE 220.56) (L-LIGHTING 125%)

Load Classification	Connected Load	Demand Factor	Estimated	Panel Totals	
R	19280	75.93%	14640		
M	1500	100.00%	1500	**Total Conn. Load:**	20780
				Total Est. Demand:	16140
				Total Conn. Current:	58 A
				Total Est. Demand	45 A

Notes:

Branch Panel: L1P2

Location: ELECT. 104 **Volts:** 120/208 Wye **A.I.C. Rating:**
Supply From: **Phases:** 3 **Mains Type:** ML
Mounting: SURFACE **Wires:** 4 **Mains Rating:** 250 A
Enclosure: TYPE 1 **MCB Rating:**

CKT	Circuit Description	DF	LOAD	BKR	P	A		B		C		P	BKR	LOAD	DF	Circuit Description	CKT
1	RECEPTACLES	R	720	20 A	1	720	540					1	20 A	540	R	RECEPTACLES	2
3	RECEPTACLES	R	1440	20 A	1			1440	180			1	20 A	180	R	R CONTROL-1 101-1	4
5	RECEPTACLES	R	360	20 A	1					360	1000	1	20 A	1000	M	DOOR POWER	6
7	RECEPTACLES	R	720	20 A	1	720	1000					1	20 A	1000	M	JUNCTION BOX	8
9	RECEPTACLES	R	360	20 A	1			360	360			1	20 A	360	R	R CONTROL-1 101-1	10
11	R LOBBY 100B	R	360	20 A	1					360	540	1	20 A	540	R	RECEPTACLES	12
13	M	M	166	20 A	1	166	500					1	20 A	500	M	MOTORIZED SHADES	14
15																	16
17											360	1	20 A	360	R	R Room 101-1, 100C	18
19																	20
21																	22
23																	24
25	Spare	--	0	20 A	1	0	0					1	20 A	0	--	Spare	26
27	Spare	--	0	20 A	1			0	0			1	20 A	0	--	Spare	28
29	Spare	--	0	20 A	1					0	0	1	20 A	0	--	Spare	30
31	Spare	--	0	20 A	1	0	0					1	20 A	0	--	Spare	32
33	Spare	--	0	20 A	1			0	0			1	20 A	0	--	Spare	34
35	Spare	--	0	20 A	1					0	0	1	20 A	0	--	Spare	36
37	Space	--	--	--	--	0	0					--	--	--	--	Space	38
39	Space	--	--	--	--			0	0			--	--	--	--	Space	40
41	Space	--	--	--	--					0	0	--	--	--	--	Space	42
					Total	3646		2340		2620							
					Total	31 A		20 A		22 A							

Legend:
DEMAND FACTORS: (R-RECEPTACLES 100%<10,000VA, 50%>10,000VA) (L-LIGHTING 125%) (M-MECHANICAL 100%) (C-CONTINUOUS 125%) (K-KITCHEN PER NEC TABLE 220.56) (L-LIGHTING 125%)

Load Classification	Connected Load	Demand Factor	Estimated	Panel Totals	
R	5940	100.00%	5940		
M	2666	100.00%	2666	**Total Conn. Load:**	8606
				Total Est. Demand:	8606
				Total Conn. Current:	24 A
				Total Est. Demand	24 A

Notes:

Branch Panel: L1P3

Location: MECHANICAL 120 **Volts:** 120/208 Wye **A.I.C. Rating:**
Supply From: **Phases:** 3 **Mains Type:** ML
Mounting: SURFACE **Wires:** 4 **Mains Rating:** 250 A
Enclosure: TYPE 1 **MCB Rating:**

CKT	Circuit Description	DF	LOAD	BKR	P	A		B		C		P	BKR	LOAD	DF	Circuit Description	CKT
1	EC-AH-4	M	864	20 A	1	864	900					1	20 A	900	R	RECEPTACLES	2
3	POOL EQUIP 6	R	180	20 A	1			180	360			1	20 A	360	R	POOL EQIUP 37,9A	4
5	POOL EQUIP 36	R	180	20 A	1					180	498	1	20 A	498	M	VAV BOXES	6
7	RECEPTACLES	R	360	20 A	1	360											8
9																	10
11																	12
13	RECEPTACLE CHEM	R	180	20 A	1	180											14
15	RECEPTACLE CHEM	R	180	20 A	1			180									16
17	RECEPTACLE CHEM	R	180	20 A	1					180							18
19																	20
21																	22
23																	24
25																	26
27																	28
29																	30
31																	32
33																	34
35																	36
37																	38
39																	40
41																	42
					Total	2304		720		858							
					Total	19 A		6 A		7 A							

Legend:
DEMAND FACTORS: (R-RECEPTACLES 100%<10,000VA, 50%>10,000VA) (L-LIGHTING 125%) (M-MECHANICAL 100%) (C-CONTINUOUS 125%) (K-KITCHEN PER NEC TABLE 220.56) (L-LIGHTING 125%)

Load Classification	Connected Load	Demand Factor	Estimated	Panel Totals	
R	2520	100.00%	2520		
M	1362	100.00%	1362	**Total Conn. Load:**	3882
				Total Est. Demand:	3882
				Total Conn. Current:	11 A
				Total Est. Demand	11 A

Notes:

Branch Panel: L1P4

Location: KITCHEN-2 117-2 **Volts:** 120/208 Wye **A.I.C. Rating:**
Supply From: **Phases:** 3 **Mains Type:** MB
Mounting: RECESSED **Wires:** 4 **Mains Rating:** 225 A
Enclosure: TYPE 1 **MCB Rating:**

CKT	Circuit Description	DF	LOAD	BKR	P	A		B		C		P	BKR	LOAD	DF	Circuit Description	CKT
1	EQUIP K-1,K4,K6	R	540	20 A	1	540	180					1	20 A	180	R	EQUIP K-14	2
3	EQUIP K-2	R	180	20 A	1			180	180			1	20 A	180	R	EQUIP K-13	4
5	EQUIP K-3	R	360	20 A	2					180	180	1	20 A	180	R	EQUIP K-13	6
7						180	0					1	20 A	0	M	EQUIP K-12	8
9	EQUIP K-3	R	360	20 A	2			180	0			2	20 A	0	M	EQUIP K-11B	10
11										180	0						12
13	EQUIP K-3	R	360	20 A	2	180	0					2	20 A	0	M	EQUIP K-11A	14
15								180	0								16
17	EQUIP K-5	R	1000	20 A	1					1000	180	1	20 A	180	R	EQUIP K-10	18
19	EQUIP K-7	R	180	20 A	1	180	180					1	20 A	180	R	EQUIP K-10	20
21	EQUIP K-7	R	180	20 A	1			180	180			1	20 A	180	R	EQUIP K-8	22
23	P.O.S. STATION	R	360	20 A	1					360	720	1	20 A	720	R	MENU BOARDS	24
25																	26
27																	28
29																	30
31																	32
33																	34
35																	36
37																	38
39																	40
41																	42
					Total	1440		1080		2800							
					Total	12 A		9 A		24 A							

Legend:
DEMAND FACTORS: (R-RECEPTACLES 100%<10,000VA, 50%>10,000VA) (L-LIGHTING 125%) (M-MECHANICAL 100%) (C-CONTINUOUS 125%) (K-KITCHEN PER NEC TABLE 220.56) (L-LIGHTING 125%)

Load Classification	Connected Load	Demand Factor	Estimated	Panel Totals	
R	5320	100.00%	5320		
M	0	0.00%	0	**Total Conn. Load:**	5320
				Total Est. Demand:	5320
				Total Conn. Current:	15 A
				Total Est. Demand	15 A

Notes:

MHTN ARCHITECTS
MHTN Architects, Inc.
420 East South Temple
Suite 100
Salt Lake City, Utah 84111
Telephone (801) 595-6700
Telefax (801) 595-6717
www.mhtn.com

Hastings+Chivetta
ARCHITECTURE • PLANNING • ENGINEERING
622 Emerson, Suite 200
St. Louis, MO 63141
Tel. 314.863.5717
Fax. 314.863.2823
www.hastingschivetta.com

BUILDING OFFICIAL STAMP

Ken Garner Engineering, Inc.
Electrical Engineering Consultants, Inc.
102 West 500 South, Suite 225
Salt Lake City, Utah 84101
P. 801.328.8800
F. 801.328.8802
Contact: Paris LeLaCheur
Project #: 2010-117.00

UNIVERSITY OF UTAH
STUDENT LIFE CENTER
1836 E. BALLIF ROAD
SALT LAKE CITY, UTAH 84112

SEAL

MHTN PROJECT NO. 2010562.00
DRAWN BY: KGE CHECKED BY: KGE

ISSUED:

NO.	DATE	DESCRIPTION

CONTRACTOR TO VERIFY DRAWINGS IN FIELD USE REFLECT LAST REVISION DATE.

NO.	DATE	DESCRIPTION

SHEET NAME
PANEL SCHEDULES

BID DOCUMENTS
May 15, 2013

SHEET NUMBER
EP605

C:\Users\brown.KGE\Documents\2010-117.00_KGE_STUDENT LIFE_ELECTRICAL_CENTERAL_2012_brown.rvt
5/28/2013 9:49:03 AM

Branch Panel: L1P5

Location: | **Volts:** 120/208 Wye | **A.I.C. Rating:**
Supply From: | **Phases:** 3 | **Mains Type:** MB
Mounting: SURFACE | **Wires:** 4 | **Mains Rating:** 100 A
Enclosure: TYPE 1 | **MCB Rating:**

CKT	Circuit Description	DF	LOAD	BKR	P	A		B		C		P	BKR	LOAD	DF	Circuit Description	CKT
1	RECEPTACLES	R	720	20 A	1	720	0					1	20 A	0	M	ROLLUP DOOR MOTOR	2
3	RECEPTACLES	R	900	20 A	1			900	0			1	20 A	0	M	ROLLUP DOOR MOTOR	4
5	L	L	180	20 A	1					180	0	1	20 A	0	M	ROLLUP DOOR MOTOR	6
7	L	L	261	20 A	1	261	0					1	20 A	0	M	ROLLUP DOOR MOTOR	8
9																	10
11																	12
13																	14
15																	16
17																	18
19																	20
21																	22
23																	24
25																	26
27																	28
29																	30
31																	32
33																	34
35																	36
37																	38
39																	40
41																	42
					Total	981		900		180							
					Total	9 A		8 A		2 A							

Legend:
DEMAND FACTORS: (R-RECEPTACLES 100%<10,000VA, 50%>10,000VA) (L-LIGHTING 125%) (M-MECHANICAL 100%) (C-CONTINUOUS 125%) (K-KITCHEN PER NEC TABLE 220.56) (L-LIGHTING 125%)

Load Classification	Connected Load	Demand Factor	Estimated	Panel Totals	
R	1620	100.00%	1620		
M	0	0.00%	0	**Total Conn. Load:**	2061
L	441	125.00%	551	**Total Est. Demand:**	2171
				Total Conn. Current:	6 A
				Total Est. Demand	6 A

Notes:

Branch Panel: L1P6

Location: OFFICE 115B | **Volts:** 120/208 Wye | **A.I.C. Rating:**
Supply From: | **Phases:** 3 | **Mains Type:** MB
Mounting: SURFACE | **Wires:** 4 | **Mains Rating:** 100 A
Enclosure: TYPE 1 | **MCB Rating:**

CKT	Circuit Description	DF	LOAD	BKR	P	A		B		C		P	BKR	LOAD	DF	Circuit Description	CKT
1	R RETAIL 115	R	360	20 A	1	360	540					1	20 A	540	R	R RETAIL 115	2
3	R OFFICE 115C	R	540	20 A	1			540	360			1	20 A	360	R	R	4
5	R	R	360	20 A	1					360	0	1	20 A	0	M	M OFFICE 115A	6
7	R	R	180	20 A	1	180	0					1	20 A	0	M	M OFFICE 115A	8
9									0			1	20 A	0	M	M CONCOURSE 100C	10
11																	12
13																	14
15																	16
17																	18
19																	20
21																	22
23																	24
25																	26
27																	28
29																	30
31																	32
33																	34
35																	36
37																	38
39																	40
41																	42
					Total	1080		900		360							
					Total	10 A		8 A		3 A							

Legend:
DEMAND FACTORS: (R-RECEPTACLES 100%<10,000VA, 50%>10,000VA) (L-LIGHTING 125%) (M-MECHANICAL 100%) (C-CONTINUOUS 125%) (K-KITCHEN PER NEC TABLE 220.56) (L-LIGHTING 125%)

Load Classification	Connected Load	Demand Factor	Estimated	Panel Totals	
R	2340	100.00%	2340		
M	0	0.00%	0	**Total Conn. Load:**	2340
				Total Est. Demand:	2340
				Total Conn. Current:	6 A
				Total Est. Demand	6 A

Notes:

Branch Panel: EH2L1

Location: ELECTRICAL 201F | **Volts:** 480/277 Wye | **A.I.C. Rating:**
Supply From: | **Phases:** 3 | **Mains Type:** MB
Mounting: SURFACE | **Wires:** 4 | **Mains Rating:** 225 A
Enclosure: TYPE 1 | **MCB Rating:**

CKT	Circuit Description	DF	LOAD	BKR	P	A		B		C		P	BKR	LOAD	DF	Circuit Description	CKT
1	L	L	0	20 A	1	0											2
3	L	L	348	20 A	1			348	360			1	20 A	360	R	RECEPTACLES	4
5	Spare - ALT. 3	--	0	0 A	1					0							6
7																	8
9																	10
11																	12
13																	14
15																	16
17																	18
19																	20
21																	22
23																	24
25																	26
27																	28
29																	30
31																	32
33																	34
35																	36
37																	38
39																	40
41																	42
					Total	0		708		0							
					Total	0 A		3 A		0 A							

Legend:
DEMAND FACTORS: (R-RECEPTACLES 100%<10,000VA, 50%>10,000VA) (L-LIGHTING 125%) (M-MECHANICAL 100%) (C-CONTINUOUS 125%) (K-KITCHEN PER NEC TABLE 220.56) (L-LIGHTING 125%)

Load Classification	Connected Load	Demand Factor	Estimated	Panel Totals	
R	360	100.00%	360		
L	348	125.00%	435	**Total Conn. Load:**	708
				Total Est. Demand:	795
				Total Conn. Current:	1 A
				Total Est. Demand	1 A

Notes:

Branch Panel: EL2P1

Location: ELECTRICAL 201F | **Volts:** 120/208 Wye | **A.I.C. Rating:**
Supply From: | **Phases:** 3 | **Mains Type:** MB
Mounting: SURFACE | **Wires:** 4 | **Mains Rating:** 225 A
Enclosure: TYPE 1 | **MCB Rating:**

CKT	Circuit Description	DF	LOAD	BKR	P	A		B		C		P	BKR	LOAD	DF	Circuit Description	CKT
1	UPS POWER	R	360	20 A	2	180	360					1	20 A	360	R	RECEPTACLES	2
3								180									4
5	UPS POWER	R	360	20 A	2					180	0	--	--	--	--	'SEC'	6
7						180	0					--	--	--	--	'NAC'	8
9																	10
11																	12
13																	14
15																	16
17																	18
19																	20
21																	22
23																	24
25																	26
27																	28
29																	30
31																	32
33																	34
35																	36
37																	38
39																	40
41																	42
					Total	720		180		180							
					Total	6 A		2 A		2 A							

Legend:
DEMAND FACTORS: (R-RECEPTACLES 100%<10,000VA, 50%>10,000VA) (L-LIGHTING 125%) (M-MECHANICAL 100%) (C-CONTINUOUS 125%) (K-KITCHEN PER NEC TABLE 220.56) (L-LIGHTING 125%)

Load Classification	Connected Load	Demand Factor	Estimated	Panel Totals	
R	1080	100.00%	1080		
				Total Conn. Load:	1080
				Total Est. Demand:	1080
				Total Conn. Current:	3 A
				Total Est. Demand	3 A

Notes:

Branch Panel: H2L1

Location: ELECTRICAL 201F | **Volts:** 480/277 Wye | **A.I.C. Rating:**
Supply From: | **Phases:** 3 | **Mains Type:** MB
Mounting: SURFACE | **Wires:** 4 | **Mains Rating:** 225 A
Enclosure: TYPE 1 | **MCB Rating:**

CKT	Circuit Description	DF	LOAD	BKR	P	A		B		C		P	BKR	LOAD	DF	Circuit Description	CKT
1	L	L	282	20 A	1	282											2
3	L	L	406	20 A	1			406									4
5	L CORRIDOR 220	L	2601	20 A	1					2601							6
7																	8
9																	10
11																	12
13																	14
15																	16
17																	18
19																	20
21																	22
23																	24
25																	26
27																	28
29																	30
31																	32
33																	34
35																	36
37																	38
39																	40
41																	42
					Total	282		406		2601							
					Total	1 A		2 A		9 A							

Legend:
DEMAND FACTORS: (R-RECEPTACLES 100%<10,000VA, 50%>10,000VA) (L-LIGHTING 125%) (M-MECHANICAL 100%) (C-CONTINUOUS 125%) (K-KITCHEN PER NEC TABLE 220.56) (L-LIGHTING 125%)

Load Classification	Connected Load	Demand Factor	Estimated	Panel Totals	
L	3289	125.00%	4111		
				Total Conn. Load:	3289
				Total Est. Demand:	4111
				Total Conn. Current:	4 A
				Total Est. Demand	5 A

Notes:

Branch Panel: H2L2

Location: ELECTRICAL 201F | **Volts:** 480/277 Wye | **A.I.C. Rating:**
Supply From: | **Phases:** 3 | **Mains Type:** MB
Mounting: SURFACE | **Wires:** 4 | **Mains Rating:** 100 A
Enclosure: TYPE 1 | **MCB Rating:**

CKT	Circuit Description	DF	LOAD	BKR	P	A		B		C		P	BKR	LOAD	DF	Circuit Description	CKT
1																	2
3																	4
5																	6
7																	8
9																	10
11																	12
13																	14
15																	16
17																	18
19																	20
21																	22
23																	24
25																	26
27																	28
29																	30
31																	32
33																	34
35																	36
37																	38
39																	40
41																	42
					Total	0		0		0							
					Total	0 A		0 A		0 A							

Legend:
DEMAND FACTORS: (R-RECEPTACLES 100%<10,000VA, 50%>10,000VA) (L-LIGHTING 125%) (M-MECHANICAL 100%) (C-CONTINUOUS 125%) (K-KITCHEN PER NEC TABLE 220.56) (L-LIGHTING 125%)

Load Classification	Connected Load	Demand Factor	Estimated	Panel Totals	
				Total Conn. Load:	0
				Total Est. Demand:	0
				Total Conn. Current:	0 A
				Total Est. Demand	0 A

Notes:

Branch Panel: L2P1

Location: ELECTRICAL 201F | **Volts:** 120/208 Wye | **A.I.C. Rating:**
Supply From: | **Phases:** 3 | **Mains Type:** ML
Mounting: SURFACE | **Wires:** 4 | **Mains Rating:** 250 A
Enclosure: TYPE 1 | **MCB Rating:**

CKT	Circuit Description	DF	LOAD	BKR	P	A		B		C		P	BKR	LOAD	DF	Circuit Description	CKT
1	RECEPTACLES	R	900	20 A	1	900	540					1	20 A	540	R	RECEPTACLES	2
3	RECEPTACLES	R	1080	20 A	1			1080	900			1	20 A	900	R	RECEPTACLES	4
5	RECEPTACLES	R	720	20 A	1					720	900	1	20 A	900	R	RECEPTACLES	6
7	FITNESS EQUIP.	R	2160	20 A	1	2160	1260					1	20 A	1260	R	RECEPTACLES	8
9	FITNESS EQUIP.	R	2160	20 A	1			2160	1080			1	20 A	1080	R	RECEPTACLES	10
11	FITNESS EQUIP.	R	2160	20 A	1					2160	1404	1	20 A	1404	M	BAF FANS	12
13	FITNESS EQUIP.	R	2160	20 A	1	2160	540					1	20 A	540	R	RECEPTACLES	14
15	FITNESS EQUIP.	R	2160	20 A	1			2160	360			1	20 A	360	R;	M	16
17	FITNESS EQUIP.	R	2160	20 A	1					2160	1260	1	20 A	1260	R	FITNESS EQUIP.	18
19	FITNESS EQUIP.	R	2160	20 A	1	2160	180					1	20 A	180	R	FITNESS EQUIP.	20
21	FITNESS EQUIP.	R	2160	20 A	1			2160	1260			1	20 A	1260	R	RECEPTACLES	22
23	FITNESS T.V.	R	1080	20 A	1					1080	540	1	20 A	540	R	RECEPTACLES	24
25	FITNESS T.V.	R	1080	20 A	1	1080	540					1	20 A	540	R	RECEPTACLES	26
27	FITNESS T.V.	R	1080	20 A	1			1080	540			1	20 A	540	R	RECEPTACLES	28
29	FITNESS T.V.	R	1080	20 A	1					1080	900	1	20 A	900	R	RECEPTACLES	30
31	RECEPTACLES	R	1260	20 A	1	1260	720					1	20 A	720	R	RECEPTACLES	32
33	RECEPTACLES	R	720	20 A	1			720	1080			1	20 A	1080	R	RECEPTACLES	34
35	RECEPTACLES	R	720	20 A	1					720	540	1	20 A	540	R	RECEPTACLES	36
37	RECEPTACLES	R	180	20 A	1	180	180					1	20 A	180	R	TREADMILL	38
39	RECEPTACLES	R	180	20 A	1			180									40
41																	42
					Total	13860		14760		13464							
					Total	116 A		124 A		112 A							

Legend:
DEMAND FACTORS: (R-RECEPTACLES 100%<10,000VA, 50%>10,000VA) (L-LIGHTING 125%) (M-MECHANICAL 100%) (C-CONTINUOUS 125%) (K-KITCHEN PER NEC TABLE 220.56) (L-LIGHTING 125%)

Load Classification	Connected Load	Demand Factor	Estimated	Panel Totals	
R	40680	62.29%	25340		
M	1404	100.00%	1404	**Total Conn. Load:**	42084
				Total Est. Demand:	26744
				Total Conn. Current:	117 A
				Total Est. Demand	74 A

Notes:

Branch Panel: L2P2

Location: ELECTRICAL 201F | **Volts:** 120/208 Wye | **A.I.C. Rating:**
Supply From: | **Phases:** 3 | **Mains Type:** ML
Mounting: SURFACE | **Wires:** 4 | **Mains Rating:** 250 A
Enclosure: TYPE 1 | **MCB Rating:**

CKT	Circuit Description	DF	LOAD	BKR	P	A		B		C		P	BKR	LOAD	DF	Circuit Description	CKT
1	FITNESS EQUIP.	R	1440	20 A	1	1440	180					1	20 A	180	R	RECEPTACLES	2
3	FITNESS EQUIP.	R	1440	20 A	1			1440	1440			1	20 A	1440	R	RECEPTACLES	4
5	FITNESS EQUIP.	R	1440	20 A	1					1440	900	1	20 A	900	R	RECEPTACLES	6
7	FITNESS EQUIP.	R	1440	20 A	1	1440	1000					1	20 A	1000	R	WON DOOR	8
9	FITNESS EQUIP.	R	1440	20 A	1			1440	180			1	20 A	180	R	RECEPTACLES	10
11	FITNESS EQUIP.	R	1440	20 A	1					1440	1080	1	20 A	1080	R	RECEPTACLES	12
13	FITNESS EQUIP.	R	1440	20 A	1	1440	540					1	20 A	540	R	RECEPTACLES	14
15	FITNESS EQUIP.	R	1440	20 A	1			1440	720			1	20 A	720	R	RECEPTACLES	16
17	FITNESS EQUIP.	R	1440	20 A	1					1440	720	1	20 A	720	R	RECEPTACLES	18
19	FITNESS EQUIP.	R	1440	20 A	1	1440	720					1	20 A	720	R	RECEPTACLES	20
21	FITNESS EQUIP.	R	1440	20 A	1			1440	2000			1	20 A	2000	M	BACKBOARDS	22
23	FITNESS EQUIP.	R	1440	20 A	1					1440	2000	1	20 A	2000	M	BACKBOARDS	24
25	FITNESS EQUIP.	R	1440	20 A	1	1440	2000					1	20 A	2000	M	BACKBOARDS	26
27	FITNESS EQUIP.	R	1440	20 A	1			1440	360			1	20 A	360	R	RECEPTACLES	28
29	SCOREBOARDS REC.	R	540	20 A	1					540	540	1	20 A	540	R	T.V. POWER	30
31	RECEPTACLE	R	360	20 A	1	360	360					1	20 A	360	R	RECEPTACLE	32
33	R Room 201E, 201F	R	360	20 A	1			360	500			1	20 A	500	R	R PT 240F	34
35	R CORRIDOR 220	R	180	20 A	1					180	360	1	20 A	360	R	RECEPTACLE	36
37	RECEPTACLE	R	360	20 A	1	360	180					1	20 A	180	R	RECEPTACLE	38
39																	40
41																	42
					Total	12900		12760		12080							
					Total	108 A		107 A		101 A							

Legend:
DEMAND FACTORS: (R-RECEPTACLES 100%<10,000VA, 50%>10,000VA) (L-LIGHTING 125%) (M-MECHANICAL 100%) (C-CONTINUOUS 125%) (K-KITCHEN PER NEC TABLE 220.56) (L-LIGHTING 125%)

Load Classification	Connected Load	Demand Factor	Estimated	Panel Totals	
R	31740	65.75%	20870		
M	6000	100.00%	6000	**Total Conn. Load:**	37740
				Total Est. Demand:	26870
				Total Conn. Current:	105 A
				Total Est. Demand	75 A

Notes:

Branch Panel: L2P3

Location: ELECTRICAL 201F | **Volts:** 120/208 Wye | **A.I.C. Rating:**
Supply From: | **Phases:** 3 | **Mains Type:** ML
Mounting: SURFACE | **Wires:** 4 | **Mains Rating:** 250 A
Enclosure: TYPE 1 | **MCB Rating:**

CKT	Circuit Description	DF	LOAD	BKR	P	A		B		C		P	BKR	LOAD	DF	Circuit Description	CKT
1	TREADMILL	R	360	20 A	1	360	360					1	20 A	360	R	TREADMILL	2
3	TREADMILL	R	360	20 A	1			360	360			1	20 A	360	R	TREADMILL	4
5	TREADMILL	R	360	20 A	1					360	360	1	20 A	360	R	TREADMILL	6
7	TREADMILL	R	360	20 A	1	360	360					1	20 A	360	R	TREADMILL	8
9	TREADMILL	R	360	20 A	1			360	360			1	20 A	360	R	TREADMILL	10
11	TREADMILL	R	360	20 A	1					360	360	1	20 A	360	R	TREADMILL	12
13	TREADMILL	R	360	20 A	1	360	360					1	20 A	360	R	TREADMILL	14
15	TREADMILL	R	360	20 A	1			360	360			1	20 A	360	R	TREADMILL	16
17	TREADMILL	R	360	20 A	1					360	360	1	20 A	360	R	TREADMILL	18
19	TREADMILL	R	360	20 A	1	360	360					1	20 A	360	R	TREADMILL	20
21	TREADMILL	R	360	20 A	1			360	360			1	20 A	360	R	TREADMILL	22
23	TREADMILL	R	360	20 A	1					360	360	1	20 A	360	R	TREADMILL	24
25	TREADMILL	R	360	20 A	1	360	360					1	20 A	360	R	TREADMILL	26
27	TREADMILL	R	360	20 A	1			360	360			1	20 A	360	R	TREADMILL	28
29	TREADMILL	R	360	20 A	1					360	360	1	20 A	360	R	TREADMILL	30
31	TREADMILL	R	360	20 A	1	360	360					1	20 A	360	R	TREADMILL	32
33	TREADMILL	R	360	20 A	1			360	360			1	20 A	360	R	TREADMILL	34
35	TREADMILL	R	360	20 A	1					360	360	1	20 A	360	R	TREADMILL	36
37																	38
39																	40
41																	42
					Total	4320		4320		4320							
					Total	36 A		36 A		36 A							

Legend:
DEMAND FACTORS: (R-RECEPTACLES 100%<10,000VA, 50%>10,000VA) (L-LIGHTING 125%) (M-MECHANICAL 100%) (C-CONTINUOUS 125%) (K-KITCHEN PER NEC TABLE 220.56) (L-LIGHTING 125%)

Load Classification	Connected Load	Demand Factor	Estimated	Panel Totals	
R	12960	88.58%	11480		
				Total Conn. Load:	12960
				Total Est. Demand:	11480
				Total Conn. Current:	36 A
				Total Est. Demand	32 A

Notes:

MHTN ARCHITECTS
MHTN Architects, Inc.
420 East South Temple
Suite 100
Salt Lake City, Utah 84111
Telephone (801) 595-6700
Telefax (801) 595-6717
www.mhtn.com

Hastings+Chivetta
ARCHITECTURE • PLANNING • ENGINEERING
622 Emerson, Suite 200
St. Louis, MO 63141
Tel. 314.863.5717
Fax. 314.863.2823
www.hastingschivetta.com

BUILDING OFFICIAL STAMP

Ken Garner Engineering, Inc.
Electrical Engineering Consultants, Inc.
102 West 500 South, Suite 225
Salt Lake City, Utah 84101
P. 801.328.8800
F. 801.328.8802
Contact: Paris LeLaCheur
Project #: 2010-117.00

UNIVERSITY OF UTAH
STUDENT LIFE CENTER
1836 E. BALLIF ROAD
SALT LAKE CITY, UTAH 84112

SEAL

MHTN PROJECT NO. 2010562.00
DRAWN BY: KGE | CHECKED BY: KGE

ISSUED:

NO.	DATE	DESCRIPTION

CONTRACTOR TO VERIFY DRAWINGS IN FIELD USE REFLECT LAST REVISION DATE.

NO.	DATE	DESCRIPTION

SHEET NAME
PANEL SCHEDULES

BID DOCUMENTS
May 15, 2013

SHEET NUMBER
EP606

C:\Users\drown.KGE\Documents\2010-117.00_KGE_STUDENT LIFE_ELECTRICAL_CENTERAL_2012_drown.rvt
5/28/2013 9:49:10 AM

Branch Panel: L2P4

Location: ELECTRICAL 201F **Volts:** 120/208 Wye **A.I.C. Rating:**
Supply From: **Phases:** 3 **Mains Type:** ML
Mounting: SURFACE **Wires:** 4 **Mains Rating:** 250 A
Enclosure: TYPE 1 **MCB Rating:**

CKT	Circuit Description	DF	LOAD	BKR	P	A		B		C		P	BKR	LOAD	DF	Circuit Description	CKT
1	MOTORIZED SHADES	M	1000	20 A	1	1000	1000					1	20 A	1000	M	MOTORIZED SHADES	2
3	MOTORIZED SHADES	M	1000	20 A	1			1000	1000			1	20 A	1000	M	MOTORIZED SHADES	4
5	MOTORIZED SHADES	M	1000	20 A	1					1000	1500	1	20 A	1500	M	MMOTORIZED SHADES	6
7	MOTORIZED SHADES	M	500	20 A	1	500	1000					1	20 A	1000	M	MOTORIZED SHADES	8
9																	10
11																	12
13																	14
15																	16
17																	18
19																	20
21																	22
23																	24
25																	26
27																	28
29																	30
31																	32
33																	34
35																	36
37																	38
39																	40
41																	42
					Total	3500		2000		2500							
					Total	30 A		17 A		21 A							

Legend:
DEMAND FACTORS: (R-RECEPTACLES 100%<10,000VA, 50%>10,000VA) (L-LIGHTING 125%) (M-MECHANICAL 100%) (C-CONTINUOUS 125%) (K-KITCHEN PER NEC TABLE 220.56) (L-LIGHTING 125%)

Load Classification	Connected Load	Demand Factor	Estimated	Panel Totals	
M	8000	100.00%	8000		
				Total Conn. Load:	8000
				Total Est. Demand:	8000
				Total Conn. Current:	22 A
				Total Est. Demand	22 A

Notes:

Branch Panel: EH3L1

Location: ELECTRICAL 301F **Volts:** 480/277 Wye **A.I.C. Rating:**
Supply From: **Phases:** 3 **Mains Type:** MB
Mounting: SURFACE **Wires:** 4 **Mains Rating:** 225 A
Enclosure: TYPE 1 **MCB Rating:**

CKT	Circuit Description	DF	LOAD	BKR	P	A		B		C		P	BKR	LOAD	DF	Circuit Description	CKT
1	L	L	0	20 A	1	0	0					1	20 A	0	L	L	2
3	L	L	0	20 A	1			0	0			1	20 A	0	L	L	4
5	L	L	0	20 A	1					0	0	1	20 A	0	L	L	6
7	L	L	0	20 A	1	0	0					1	20 A	0	L	L	8
9	L	L	0	20 A	1			0	0			1	20 A	0	L	L	10
11	L	L	94	20 A	1					94	0	1	20 A	0	L	L	12
13							29					1	20 A	29	L	L	14
15																	16
17																	18
19																	20
21																	22
23																	24
25																	26
27																	28
29																	30
31																	32
33																	34
35																	36
37																	38
39																	40
41																	42
					Total	29		0		94							
					Total	0 A		0 A		0 A							

Legend:
DEMAND FACTORS: (R-RECEPTACLES 100%<10,000VA, 50%>10,000VA) (L-LIGHTING 125%) (M-MECHANICAL 100%) (C-CONTINUOUS 125%) (K-KITCHEN PER NEC TABLE 220.56) (L-LIGHTING 125%)

Load Classification	Connected Load	Demand Factor	Estimated	Panel Totals	
L	123	125.00%	154		
				Total Conn. Load:	123
				Total Est. Demand:	154
				Total Conn. Current:	0 A
				Total Est. Demand	0 A

Notes:

Branch Panel: EL3P1

Location: ELECTRICAL 301F **Volts:** 120/208 Wye **A.I.C. Rating:**
Supply From: **Phases:** 3 **Mains Type:** MB
Mounting: SURFACE **Wires:** 4 **Mains Rating:** 225 A
Enclosure: TYPE 1 **MCB Rating:**

CKT	Circuit Description	DF	LOAD	BKR	P	A		B		C		P	BKR	LOAD	DF	Circuit Description	CKT
1	R DATA 301D	R	360	20 A	2	180	180					1	20 A	180	R	R DATA 301D	2
3								180	180			1	20 A	180	R	R DATA 301D	4
5	R DATA 301D	R	360	20 A	2					180	0	--	--	--	--	'NAC'	6
7						180	0					--	--	--	--	'SEC'	8
9																	10
11																	12
13																	14
15																	16
17																	18
19																	20
21																	22
23																	24
25																	26
27																	28
29																	30
31																	32
33																	34
35																	36
37																	38
39																	40
41																	42
					Total	540		360		180							
					Total	5 A		3 A		2 A							

Legend:
DEMAND FACTORS: (R-RECEPTACLES 100%<10,000VA, 50%>10,000VA) (L-LIGHTING 125%) (M-MECHANICAL 100%) (C-CONTINUOUS 125%) (K-KITCHEN PER NEC TABLE 220.56) (L-LIGHTING 125%)

Load Classification	Connected Load	Demand Factor	Estimated	Panel Totals	
R	1080	100.00%	1080		
				Total Conn. Load:	1080
				Total Est. Demand:	1080
				Total Conn. Current:	3 A
				Total Est. Demand	3 A

Notes:

Branch Panel: H3L1

Location: ELECTRICAL 301F **Volts:** 480/277 Wye **A.I.C. Rating:**
Supply From: **Phases:** 3 **Mains Type:** MB
Mounting: SURFACE **Wires:** 4 **Mains Rating:** 225 A
Enclosure: TYPE 1 **MCB Rating:**

CKT	Circuit Description	DF	LOAD	BKR	P	A		B		C		P	BKR	LOAD	DF	Circuit Description	CKT
1	L	L	360	20 A	1	360	29					1	20 A	29	L	L EXERCISE ROOM 1	2
3	L	L	360	20 A	1			360	0			1	20 A	0	L	L OFFICE 341	4
5	L	L	360	20 A	1					360	0	1	0 A	0	--	Spare - ALT. 3	6
7	L	L	360	20 A	1	360	580					1	20 A	580	L	L	8
9	L	L	360	20 A	1			360	29			1	20 A	29	L	L	10
11																	12
13																	14
15																	16
17																	18
19																	20
21																	22
23																	24
25																	26
27																	28
29																	30
31																	32
33																	34
35																	36
37																	38
39																	40
41																	42
					Total	1329		749		360							
					Total	5 A		3 A		1 A							

Legend:
DEMAND FACTORS: (R-RECEPTACLES 100%<10,000VA, 50%>10,000VA) (L-LIGHTING 125%) (M-MECHANICAL 100%) (C-CONTINUOUS 125%) (K-KITCHEN PER NEC TABLE 220.56) (L-LIGHTING 125%)

Load Classification	Connected Load	Demand Factor	Estimated	Panel Totals	
L	2438	125.00%	3048		
				Total Conn. Load:	2438
				Total Est. Demand:	3048
				Total Conn. Current:	3 A
				Total Est. Demand	4 A

Notes:

Branch Panel: H3L2

Location: ELECTRICAL 301F **Volts:** 480/277 Wye **A.I.C. Rating:**
Supply From: **Phases:** 3 **Mains Type:** MB
Mounting: SURFACE **Wires:** 4 **Mains Rating:** 225 A
Enclosure: TYPE 1 **MCB Rating:**

CKT	Circuit Description	DF	LOAD	BKR	P	A		B		C		P	BKR	LOAD	DF	Circuit Description	CKT
1	L	L	360	20 A	1	360											2
3	L	L	360	20 A	1			360									4
5	L	L	360	20 A	1					360							6
7	L	L	360	20 A	1	360											8
9	L	L	360	20 A	1			360									10
11	L	L	360	20 A	1					360							12
13																	14
15																	16
17																	18
19																	20
21																	22
23																	24
25																	26
27																	28
29																	30
31																	32
33																	34
35																	36
37																	38
39																	40
41																	42
					Total	720		720		720							
					Total	3 A		3 A		3 A							

Legend:
DEMAND FACTORS: (R-RECEPTACLES 100%<10,000VA, 50%>10,000VA) (L-LIGHTING 125%) (M-MECHANICAL 100%) (C-CONTINUOUS 125%) (K-KITCHEN PER NEC TABLE 220.56) (L-LIGHTING 125%)

Load Classification	Connected Load	Demand Factor	Estimated	Panel Totals	
L	2160	125.00%	2700		
				Total Conn. Load:	2160
				Total Est. Demand:	2700
				Total Conn. Current:	3 A
				Total Est. Demand	3 A

Notes:

Branch Panel: L3P1

Location: ELECTRICAL 301F **Volts:** 120/208 Wye **A.I.C. Rating:**
Supply From: **Phases:** 3 **Mains Type:** ML
Mounting: SURFACE **Wires:** 4 **Mains Rating:** 250 A
Enclosure: TYPE 1 **MCB Rating:**

CKT	Circuit Description	DF	LOAD	BKR	P	A		B		C		P	BKR	LOAD	DF	Circuit Description	CKT
1	R BREAK ROOM 350	R	180	20 A	1	180	720					1	20 A	720	R	R Room 300H, 300N,	2
3	R BREAK ROOM 350	R	540	20 A	1			540	1260			1	20 A	1260	R	R Room 320, 353	4
5	R WORK ROOM 360	R	720	20 A	1					720	360	1	20 A	360	R	R BREAK ROOM 350	6
7	R Room 360	R	540	20 A	1	540	720					1	20 A	720	R	R OFFICE 341	8
9	R FITNESS 320	R	720	20 A	1			720	720			1	20 A	720	R	R OFFICE 343	10
11	R FITNESS 320	R	720	20 A	1					720	720	1	20 A	720	R	R OFFICE 345	12
13	R STRETCHING-2 305-2	R	720	20 A	1	720	720					1	20 A	720	R	R OFFICE 347	14
15	R Room 307	R	720	20 A	1			720	720			1	20 A	720	R	R OFFICE 349	16
17	R Space 40G	R	720	20 A	1					720	720	1	20 A	720	R	R OFFICE 351	18
19	R Space 40G	R	1080	20 A	1	1080	1080					1	20 A	1080	R	R DIRECTOR OFFICE	20
21	R STRETCHING-2 305-2	R	720	20 A	1			720	720			1	20 A	720	R	R CONFERENCE ROOM	22
23	R Space 100R	R	540	20 A	1					540	360	1	20 A	360	R	R CONFERENCE ROOM	24
25	M CONFERENCE ROOM	M	1012	20 A	1	1012	720					1	20 A	720	R	R STAFF 340F	26
27	R	R	540	20 A	1			540	540			1	20 A	540	R	R STAFF 340F	28
29	M DIRECTOR OFFICE	M	1000	20 A	1					1000	1000	1	20 A	1000	M	MOTORIZED SHADES	30
31	MOTORIZED SHADES	M	1000	20 A	1	1000	1500					1	20 A	1500	M	MOTORIZED SHADES	32
33	MOTORIZED SHADES	M	500	20 A	1			500									34
35																	36
37																	38
39																	40
41																	42
					Total	9992		7700		6860							
					Total	84 A		65 A		57 A							

Legend:
DEMAND FACTORS: (R-RECEPTACLES 100%<10,000VA, 50%>10,000VA) (L-LIGHTING 125%) (M-MECHANICAL 100%) (C-CONTINUOUS 125%) (K-KITCHEN PER NEC TABLE 220.56) (L-LIGHTING 125%)

Load Classification	Connected Load	Demand Factor	Estimated	Panel Totals	
R	18540	76.97%	14270		
M	6012	100.00%	6012	**Total Conn. Load:**	24552
				Total Est. Demand:	20282
				Total Conn. Current:	68 A
				Total Est. Demand	56 A

Notes:

Branch Panel: L3P2

Location: ELECTRICAL 301F **Volts:** 120/208 Wye **A.I.C. Rating:**
Supply From: **Phases:** 3 **Mains Type:** ML
Mounting: SURFACE **Wires:** 4 **Mains Rating:** 250 A
Enclosure: TYPE 1 **MCB Rating:**

CKT	Circuit Description	DF	LOAD	BKR	P	A		B		C		P	BKR	LOAD	DF	Circuit Description	CKT
1	R LOBBY/ VENDING 300	R	180	20 A	1	180	1080					1	20 A	1080	R	RECEPTACLES	2
3	R LOBBY/ VENDING 300	R	180	20 A	1			180	540			1	20 A	540	R	RECEPTACLES	4
5	R STRETCHING-2 305-2	R	720	20 A	1					720	500	1	20 A	500	M	ELEVATOR LIGHTS	6
7	RECEPTACLES	R	720	20 A	1	720	1500					1	20 A	1500	M	ELEVATOR CONTROLS	8
9	RECEPTACLES	R	1080	20 A	1			1080	500			1	20 A	500	M	ELEVATOR LIGHTS	10
11	M	M	936	20 A	1					936	1500	1	20 A	1500	M	ELEVATOR CONTROLS	12
13	RECEPTACLES	R	360	20 A	1	360	180					1	20 A	180	R	R LOBBY / VENDING	14
15	R STRETCHING 305	R	540	20 A	1			540	180			1	20 A	180	R	R LOBBY / VENDING	16
17	R Room 301G, 301F	R	360	20 A	1					360	360	1	20 A	360	R	R STRETCHING 305	18
19	MOTORIZED SHADES	M	1000	20 A	1	1000											20
21	MOTORIZED SHADES	M	1000	20 A	1			1000									22
23	MOTORIZED SHADES	M	1000	20 A	1					1000							24
25																	26
27																	28
29																	30
31																	32
33																	34
35																	36
37																	38
39																	40
41																	42
					Total	5020		4020		5376							
					Total	43 A		34 A		46 A							

Legend:
DEMAND FACTORS: (R-RECEPTACLES 100%<10,000VA, 50%>10,000VA) (L-LIGHTING 125%) (M-MECHANICAL 100%) (C-CONTINUOUS 125%) (K-KITCHEN PER NEC TABLE 220.56) (L-LIGHTING 125%)

Load Classification	Connected Load	Demand Factor	Estimated	Panel Totals	
R	6480	100.00%	6480		
M	7936	100.00%	7936	**Total Conn. Load:**	14416
				Total Est. Demand:	14416
				Total Conn. Current:	40 A
				Total Est. Demand	40 A

Notes:

Branch Panel: P34

Location: ELECTRICAL 301F **Volts:** 120/208 Wye **A.I.C. Rating:**
Supply From: **Phases:** 3 **Mains Type:** ML
Mounting: SURFACE **Wires:** 4 **Mains Rating:** 250 A
Enclosure: TYPE 1 **MCB Rating:**

CKT	Circuit Description	DF	LOAD	BKR	P	A		B		C		P	BKR	LOAD	DF	Circuit Description	CKT
1	ROCK WALL LIGHT HOIST	M	1800	20 A	3	600	105					1	20 A	0	L	ROCK WALL LIGHTING	2
3								600	105			1	20 A	0	L	ROCK WALL LIGHTING	4
5										600	105	1	20 A	0	L	ROCK WALL LIGHTING	6
7	ROCK WALL LIGHT HOIST	M	1800	20 A	3	600	18					1	20 A	0	L	ROCK WALL LIGHTING	8
9								600									10
11										600							12
13	ROCK WALL LIGHT HOIST	M	1800	20 A	3	600											14
15								600									16
17										600							18
19																	20
21																	22
23																	24
25																	26
27																	28
29																	30
31																	32
33																	34
35																	36
37																	38
39																	40
41																	42
					Total	1923		1905		1905							
					Total	16 A		16 A		16 A							

Legend:
DEMAND FACTORS: (R-RECEPTACLES 100%<10,000VA, 50%>10,000VA) (L-LIGHTING 125%) (M-MECHANICAL 100%) (C-CONTINUOUS 125%) (K-KITCHEN PER NEC TABLE 220.56) (L-LIGHTING 125%)

Load Classification	Connected Load	Demand Factor	Estimated	Panel Totals	
M	5400	100.00%	5400		
L	333	125.00%	416	**Total Conn. Load:**	5733
				Total Est. Demand:	5816
				Total Conn. Current:	16 A
				Total Est. Demand	16 A

Notes:

MHTN ARCHITECTS
MHTN Architects, Inc.
420 East South Temple
Suite 100
Salt Lake City, Utah 84111
Telephone (801) 595-6700
Telefax (801) 595-6717
www.mhtn.com

Hastings+Chivetta
ARCHITECTURE • PLANNING • ENGINEERING
622 Emerson, Suite 200
St. Louis, MO 63141
Tel. 314.863.5717
Fax. 314.863.2823
www.hastingschivetta.com

BUILDING OFFICIAL STAMP

Ken Garner Engineering, Inc.
Electrical Engineering Consultants, Inc.
102 West 500 South, Suite 225
Salt Lake City, Utah 84101
P. 801.328.8800
F. 801.328.8802
Contact: Paris LeLaCheur
Project #: 2010-117.00

UNIVERSITY OF UTAH
STUDENT LIFE CENTER
1836 E. BALLIF ROAD
SALT LAKE CITY, UTAH 84112

SEAL

M+HTN PROJECT NO. 2010562.00
DRAWN BY: KGE CHECKED BY: KGE

ISSUED:

NO.	DATE	DESCRIPTION

CONTRACTOR TO VERIFY DRAWINGS IN FIELD USE REFLECT LAST REVISION DATE:

NO.	DATE	DESCRIPTION

SHEET NAME
PANEL SCHEDULES

BID DOCUMENTS
May 15, 2013

SHEET NUMBER
EP607

C:\Users\rbrown.KGE\Documents\2010-117.00_KGE_STUDENT LIFE_ELECTRICAL_CENTERAL_2012_rbrown.rvt
5/28/2013 9:49:17 AM

Branch Panel: HRM1

Location:
Supply From:
Mounting: SURFACE
Enclosure: TYPE 1

Volts: 480/277 Wye
Phases: 3
Wires: 4

A.I.C. Rating:
Mains Type: MB
Mains Rating: 225 A
MCB Rating:

CKT	Circuit Description	DF	LOAD	BKR	P	A		B		C		P	BKR	LOAD	DF	Circuit Description	CKT
1						0	5317										2
3	M	M	0	20 A	3			0	5317			3	20 A	15951	M	AH-7, RELIEF FANS	4
5										0	5317						6
7						0	18282										8
9	M	M	0	60 A	3			0	18282			3	60 A	54846	M	AH-7, SUPPLY FANS	10
11										0	18282						12
13						0	0										14
15	AH-8, RELIEF FANS	M	0	20 A	3			0	0			3	20 A	0	M	M	16
17										0	0						18
19						0	0										20
21	AH-8, SUPPLY FANS	M	0	20 A	3			0	0			3	20 A	0	M	M	22
23										0	0						24
25																	26
27																	28
29																	30
31																	32
33																	34
35																	36
37																	38
39																	40
41																	42
					Total	23599		23599		23599							
					Total	85 A		85 A		85 A							

Legend:
DEMAND FACTORS: (R-RECEPTACLES 100%<10,000VA, 50%>10,000VA) (L-LIGHTING 125%) (M-MECHANICAL 100%) (C-CONTINUOUS 125%) (K-KITCHEN PER NEC TABLE 220.56) (L-LIGHTING 125%)

Load Classification	Connected Load	Demand Factor	Estimated	Panel Totals	
M	70797	100.00%	70797		
				Total Conn. Load:	70797
				Total Est. Demand:	70797
				Total Conn. Current:	85 A
				Total Est. Demand	85 A

Notes:

Branch Panel: HRM2

Location:
Supply From:
Mounting: SURFACE
Enclosure: TYPE 1

Volts: 480/277 Wye
Phases: 3
Wires: 4

A.I.C. Rating:
Mains Type: MB
Mains Rating: 225 A
MCB Rating:

CKT	Circuit Description	DF	LOAD	BKR	P	A		B		C		P	BKR	LOAD	DF	Circuit Description	CKT
1						0	7533										2
3	M	M	0	40 A	3			0	7533			3	40 A	22599	M	AH-6, RELIEF FANS	4
5										0	7533						6
7						0	0										8
9	M	M	0	20 A	3			0	0			3	125 A	0	M	M	10
11										0	0						12
13						12852	0										14
15	AH-5, RELIEF FANS	M	38555	125 A	3			12852	0			3	125 A	0	M	M	16
17										12852	0						18
19						47644	0										20
21	AH-5, SUPPLY FANS	M	142932	40 A	3			47644	0			3	40 A	0	M	M	22
23										47644	0						24
25						24376											26
27	AH-6, SUPPLY FANS	M	73128	125 A	3			24376									28
29										24376							30
31																	32
33																	34
35																	36
37																	38
39																	40
41																	42
					Total	92405		92405		92405							
					Total	334 A		334 A		334 A							

Legend:
DEMAND FACTORS: (R-RECEPTACLES 100%<10,000VA, 50%>10,000VA) (L-LIGHTING 125%) (M-MECHANICAL 100%) (C-CONTINUOUS 125%) (K-KITCHEN PER NEC TABLE 220.56) (L-LIGHTING 125%)

Load Classification	Connected Load	Demand Factor	Estimated	Panel Totals	
M	277214	100.00%	277214		
				Total Conn. Load:	277214
				Total Est. Demand:	277214
				Total Conn. Current:	333 A
				Total Est. Demand	333 A

Notes:

Branch Panel: LRP1

Location:
Supply From:
Mounting: SURFACE
Enclosure: TYPE 1

Volts: 120/208 Wye
Phases: 3
Wires: 4

A.I.C. Rating:
Mains Type: MB
Mains Rating: 225 A
MCB Rating:

CKT	Circuit Description	DF	LOAD	BKR	P	A		B		C		P	BKR	LOAD	DF	Circuit Description	CKT
1	M	M	696	20 A	1	696	0					1	20 A	0	Ot	M	2
3	M	M	696	20 A	1			696	696			1	20 A	696	Ot	Other	4
5	RECEPTACLES	R	540	20 A	1					540	360	1	20 A	360	R	RECEPTACLES	6
7																	8
9																	10
11																	12
13																	14
15																	16
17																	18
19																	20
21																	22
23																	24
25																	26
27																	28
29																	30
31																	32
33																	34
35																	36
37																	38
39																	40
41																	42
					Total	696		1392		900							
					Total	6 A		12 A		8 A							

Legend:
DEMAND FACTORS: (R-RECEPTACLES 100%<10,000VA, 50%>10,000VA) (L-LIGHTING 125%) (M-MECHANICAL 100%) (C-CONTINUOUS 125%) (K-KITCHEN PER NEC TABLE 220.56) (L-LIGHTING 125%)

Load Classification	Connected Load	Demand Factor	Estimated	Panel Totals	
Other	0	0.00%	0		
R	900	100.00%	900	**Total Conn. Load:**	2988
M	2088	100.00%	2088	**Total Est. Demand:**	2988
				Total Conn. Current:	8 A
				Total Est. Demand	8 A

Notes:

MHTN ARCHITECTS
MHTN Architects, Inc.
420 East South Temple
Suite 100
Salt Lake City, Utah 84111
Telephone (801) 595-6700
Telefax (801) 595-6717
www.mhtn.com

Hastings+Chivetta
ARCHITECTURE • PLANNING • ENGINEERING
622 Emerson, Suite 200
St. Louis, MO 63141
Tel. 314.863.5717
Fax. 314.863.2823
www.hastingschivetta.com

BUILDING OFFICIAL STAMP
Ken Garner Engineering, Inc.
Electrical Engineering Consultants, Inc.
102 West 500 South, Suite 225
Salt Lake City, Utah 84101
P. 801.328.8800
F. 801.328.8802
Contact: Paris LeLaCheur
Project #: 2010-117.00

UNIVERSITY OF UTAH
STUDENT LIFE CENTER
1836 E. BALLIF ROAD
SALT LAKE CITY, UTAH 84112

SEAL

MHTN PROJECT NO. 2010562.00
DRAWN BY: Author CHECKED BY: Checker

ISSUED:

NO.	DATE	DESCRIPTION

CONTRACTOR TO VERIFY DRAWINGS IN FIELD USE REFLECT LAST REVISION DATE.

NO.	DATE	DESCRIPTION

SHEET NAME
PANEL SCHEDULES

BID DOCUMENTS
May 15, 2013

SHEET NUMBER
EP608

C:\Users\tbrown.KGE\Documents\2010-117.00_KGE_STUDENT LIFE_ELECTRICAL_CENTERAL_2012_tbrown.rvt
5/28/2013 9:49:23 AM

MECHANICAL EQUIPMENT LIST

ID	DESCRIPTION	V	PH	HP	VA	MCA	AMPS	DISCONNECT SIZE	DISCONNECT FUSED	STARTER	FEEDER	LOCATION	REMARKS
DOF-1	OUTSIDE AIR	460	3	1/2	841		1.10				20D		
AH-1	AIR HANDLER											NORTH LOWER LEVEL MECH ROOM	1,2,3
EC-AH-1	EVAPORATIVE COOLER PUMP	120	1	0.25	696		7.20	30	20.00	DIV. 26	20A	AH-1	
EC-1	AIR WASH	120	1	0.2	528		4.40	THERMAL	SWITCH		20A	AH-1	
RLF-AH-1.1	RELIEF AIR FAN	460	3	1	1745		2.10	VFD			20D	AH-1	2,3
RLF-AH-1.2	RELIEF AIR FAN	460	3	1	1745		2.10	VFD			20D	AH-1	2,3
RLF-AH-1.3	RELIEF AIR FAN	460	3	1	1745		2.10	VFD			20D	AH-1	2,3
RLF-AH-1.4	RELIEF AIR FAN	460	3	1	1745		2.10	VFD			20D	AH-1	2,3
SF-AH-1.1	SUPPLY AIR FAN	460	3	5	6316		7.60	VFD			20D	AH-1	2,3
SF-AH-1.2	SUPPLY AIR FAN	460	3	5	6316		7.60	VFD			20D	AH-1	2,3
SF-AH-1.3	SUPPLY AIR FAN	460	3	5	6316		7.60	VFD			20D	AH-1	2,3
SF-AH-1.4	SUPPLY AIR FAN	460	3	5	6316		7.60	VFD			20D	AH-1	2,3
AH-2	AIR HANDLER											NORTH LOWER LEVEL MECH ROOM	1,2,3
EC-AH-2	EVAPORATIVE COOLER PUMP	120	1	0.25	696		7.20	30	20.00	DIV. 26	20A	AH-2	
EC-2	AIR WASH	120	1	0.2	528		4.40	THERMAL	SWITCH		20A	AH-2	
RLF-AH-2.1	RELIEF AIR FAN	460	3	0.75	1321		1.60	VFD			20D	AH-2	2,3
RLF-AH-2.2	RELIEF AIR FAN	460	3	0.75	1321		1.60	VFD			20D	AH-2	2,3
RLF-AH-2.3	RELIEF AIR FAN	460	3	0.75	1321		1.60	VFD			20D	AH-2	2,3
RLF-AH-2.4	RELIEF AIR FAN	460	3	0.75	1321		1.60	VFD			20D	AH-2	2,3
RLF-AH-2.5	RELIEF AIR FAN	460	3	0.75	1321		1.60	VFD			20D	AH-2	2,3
RLF-AH-2.6	RELIEF AIR FAN	460	3	0.75	1321		1.60	VFD			20D	AH-2	2,3
SF-AH-2.1	SUPPLY AIR FAN	460	3	5	6316		7.60	VFD			20D	AH-2	2,3
SF-AH-2.2	SUPPLY AIR FAN	460	3	5	6316		7.60	VFD			20D	AH-2	2,3
SF-AH-2.3	SUPPLY AIR FAN	460	3	5	6316		7.60	VFD			20D	AH-2	2,3
SF-AH-2.4	SUPPLY AIR FAN	460	3	5	6316		7.60	VFD			20D	AH-2	2,3
SF-AH-2.5	SUPPLY AIR FAN	460	3	5	6316		7.60	VFD			20D	AH-2	2,3
SF-AH-2.6	SUPPLY AIR FAN	460	3	5	6316		7.60	VFD			20D	AH-2	2,3
AH-3	AIR HANDLER											WEST ENTRY LEVEL MECH ROOM	1,2,3
RLF-AH-3.1	RELIEF AIR FAN	460	3	25	28254		34.00	VFD			50D	AH-3	3
RLF-AH-3.2	RELIEF AIR FAN	460	3	25	28254		34.00	VFD			50D	AH-3	3
SF-AH-3.1	SUPPLY AIR FAN	460	3	15	17451		21.00	VFD			30D	AH-3	3
SF-AH-3.2	SUPPLY AIR FAN	460	3	15	17451		21.00	VFD			30D	AH-3	3
ER-AH-3	RECOVERY												
AH-4	AIR HANDLER											WEST ENTRY LEVEL MECH ROOM	1,2,3
EC-AH-4	EVAPORATIVE COOLER PUMP	120	1	0.25	696		7.20	30	20.00	DIV. 26	20A	AH-4	
EC-4	AIR WASH	120	1	0.2	528		4.40	THERMAL	SWITCH		20A	AH-4	
RLF-AH-4.1	RELIEF AIR FAN	460	3	7.5	9141		11.00	VFD			20D	AH-4	2,3
RLF-AH-4.2	RELIEF AIR FAN	460	3	7.5	9141		11.00	VFD			20D	AH-4	2,3
RLF-AH-4.3	RELIEF AIR FAN	460	3	7.5	9141		11.00	VFD			20D	AH-4	2,3
RLF-AH-4.4	RELIEF AIR FAN	460	3	7.5	9141		11.00	VFD			20D	AH-4	2,3
SF-AH-4.1	SUPPLY AIR FAN	460	3	10	11634		14.00	VFD			20D	AH-4	2,3
SF-AH-4.2	SUPPLY AIR FAN	460	3	10	11634		14.00	VFD			20D	AH-4	2,3
SF-AH-4.3	SUPPLY AIR FAN	460	3	10	11634		14.00	VFD			20D	AH-4	2,3
SF-AH-4.4	SUPPLY AIR FAN	460	3	10	11634		14.00	VFD			20D	AH-4	2,3
AH-5	AIR HANDLER											ROOF	1,2,3
EC-AH-5	EVAPORATIVE COOLER PUMP	120	1	0.25	696		7.20	30	20.00	DIV. 26	20A	AH-5	
EC-5	AIR WASH	120	1	0.2	528		4.40	THERMAL	SWITCH		20A	AH-5	
RLF-AH-5.1	RELIEF AIR FAN	460	3	3	3989		4.80	VFD			20D	AH-5	2,3
RLF-AH-5.2	RELIEF AIR FAN	460	3	3	3989		4.80	VFD			20D	AH-5	2,3
RLF-AH-5.3	RELIEF AIR FAN	460	3	3	3989		4.80	VFD			20D	AH-5	2,3
RLF-AH-5.4	RELIEF AIR FAN	460	3	3	3989		4.80	VFD			20D	AH-5	2,3
SF-AH-5.1	SUPPLY AIR FAN	460	3	15	17451		21.00	VFD			30D	AH-5	2,3
SF-AH-5.2	SUPPLY AIR FAN	460	3	15	17451		21.00	VFD			30D	AH-5	2,3
SF-AH-5.3	SUPPLY AIR FAN	460	3	15	17451		21.00	VFD			30D	AH-5	2,3
SF-AH-5.4	SUPPLY AIR FAN	460	3	15	17451		21.00	VFD			30D	AH-5	2,3
AH-6	AIR HANDLER											ROOF	1,2,3
EC-AH-6	EVAPORATIVE COOLER PUMP	120	1	0.25	696		7.20	30	20.00	DIV. 26	20A	AH-6	
EC-6	AIR WASH	120	1	0.2	528		4.40	THERMAL	SWITCH		20A	AH-6	
RLF-AH-6.1	RELIEF AIR FAN	460	3	1.5	2493		3.00	VFD			20D	AH-6	2,3
RLF-AH-6.2	RELIEF AIR FAN	460	3	1.5	2493		3.00	VFD			20D	AH-6	2,3
RLF-AH-6.3	RELIEF AIR FAN	460	3	1.5	2493		3.00	VFD			20D	AH-6	2,3
RLF-AH-6.4	RELIEF AIR FAN	460	3	1.5	2493		3.00	VFD			20D	AH-6	2,3
RLF-AH-6.5	RELIEF AIR FAN	460	3	1.5	2493		3.00	VFD			20D	AH-6	2,3
RLF-AH-6.6	RELIEF AIR FAN	460	3	1.5	2493		3.00	VFD			20D	AH-6	2,3
RLF-AH-6.7	RELIEF AIR FAN	460	3	1.5	2493		3.00	VFD			20D	AH-6	2,3
RLF-AH-6.8	RELIEF AIR FAN	460	3	1.5	2493		3.00	VFD			20D	AH-6	2,3
RLF-AH-6.9	RELIEF AIR FAN	460	3	1.5	2493		3.00	VFD			20D	AH-6	2,3
RLF-AH-6.10	RELIEF AIR FAN	460	3	1.5	2493		3.00	VFD			20D	AH-6	2,3
RLF-AH-6.11	RELIEF AIR FAN	460	3	1.5	2493		3.00	VFD			20D	AH-6	2,3
RLF-AH-6.12	RELIEF AIR FAN	460	3	1.5	2493		3.00	VFD			20D	AH-6	2,3
SF-AH-6.1	SUPPLY AIR FAN	460	3	7.5	9141		11.00	VFD			20D	AH-6	2,3
SF-AH-6.2	SUPPLY AIR FAN	460	3	7.5	9141		11.00	VFD			20D	AH-6	2,3
SF-AH-6.3	SUPPLY AIR FAN	460	3	7.5	9141		11.00	VFD			20D	AH-6	2,3
SF-AH-6.4	SUPPLY AIR FAN	460	3	7.5	9141		11.00	VFD			20D	AH-6	2,3
SF-AH-6.5	SUPPLY AIR FAN	460	3	7.5	9141		11.00	VFD			20D	AH-6	2,3
SF-AH-6.6	SUPPLY AIR FAN	460	3	7.5	9141		11.00	VFD			20D	AH-6	2,3
SF-AH-6.7	SUPPLY AIR FAN	460	3	7.5	9141		11.00	VFD			20D	AH-6	2,3
SF-AH-6.8	SUPPLY AIR FAN	460	3	7.5	9141		11.00	VFD			20D	AH-6	2,3
SF-AH-6.9	SUPPLY AIR FAN	460	3	7.5	9141		11.00	VFD			20D	AH-6	2,3
SF-AH-6.10	SUPPLY AIR FAN	460	3	7.5	9141		11.00	VFD			20D	AH-6	2,3
SF-AH-6.11	SUPPLY AIR FAN	460	3	7.5	9141		11.00	VFD			20D	AH-6	2,3
SF-AH-6.12	SUPPLY AIR FAN	460	3	7.5	9141		11.00	VFD			20D	AH-6	2,3
AH-7	AIR HANDLER											NORTH PENTHOUSE	1,2,3
EC-AH-7	EVAPORATIVE COOLER PUMP	120	1	0.25	696		7.20	30	20.00	DIV. 26	20A	AH-7	
EC-7	AIR WASH	120	1	0.2	528		4.40	THERMAL	SWITCH		20A	AH-7	
RLF-AH-7.1	RELIEF AIR FAN	460	3	1.5	2493		3.00	VFD			20D	AH-7	2,3
RLF-AH-7.2	RELIEF AIR FAN	460	3	1.5	2493		3.00	VFD			20D	AH-7	2,3
RLF-AH-7.3	RELIEF AIR FAN	460	3	1.5	2493		3.00	VFD			20D	AH-7	2,3
RLF-AH-7.4	RELIEF AIR FAN	460	3	1.5	2493		3.00	VFD			20D	AH-7	2,3
RLF-AH-7.5	RELIEF AIR FAN	460	3	1.5	2493		3.00	VFD			20D	AH-7	2,3
RLF-AH-7.6	RELIEF AIR FAN	460	3	1.5	2493		3.00	VFD			20D	AH-7	2,3
SF-AH-7.1	SUPPLY AIR FAN	460	3	10	11634		14.00	VFD			20D	AH-7	2,3
SF-AH-7.2	SUPPLY AIR FAN	460	3	10	11634		14.00	VFD			20D	AH-7	2,3
SF-AH-7.3	SUPPLY AIR FAN	460	3	10	11634		14.00	VFD			20D	AH-7	2,3
SF-AH-7.4	SUPPLY AIR FAN	460	3	10	11634		14.00	VFD			20D	AH-7	2,3
SF-AH-7.5	SUPPLY AIR FAN	460	3	10	11634		14.00	VFD			20D	AH-7	2,3
SF-AH-7.6	SUPPLY AIR FAN	460	3	10	11634		14.00	VFD			20D	AH-7	2,3
AH-8	AIR HANDLER											NORTH PENTHOUSE	1,2,3
EC-AH-8	EVAPORATIVE COOLER PUMP	120	1	0.25	696		7.20	30	20.00	DIV. 26	20A	AH-8	
EC-8	AIR WASH	120	1	0.2	528		4.40	THERMAL	SWITCH		20A	AH-8	
RLF-AH-8.1	RELIEF AIR FAN	460	3	1	1745		2.10	VFD			20D	AH-8	2,3
RLF-AH-8.2	RELIEF AIR FAN	460	3	1	1745		2.10	VFD			20D	AH-8	2,3
RLF-AH-8.3	RELIEF AIR FAN	460	3	1	1745		2.10	VFD			20D	AH-8	2,3
RLF-AH-8.4	RELIEF AIR FAN	460	3	1	1745		2.10	VFD			20D	AH-8	2,3
SF-AH-8.1	SUPPLY AIR FAN	460	3	5	6316		7.60	VFD			20D	AH-8	2,3
SF-AH-8.2	SUPPLY AIR FAN	460	3	5	6316		7.60	VFD			20D	AH-8	2,3
SF-AH-8.3	SUPPLY AIR FAN	460	3	5	6316		7.60	VFD			20D	AH-8	2,3
SF-AH-8.4	SUPPLY AIR FAN	460	3	5	6316		7.60	VFD			20D	AH-8	2,3
AH-9	AIR HANDLER											NORTH LOWER LEVEL MECH ROOM	1,2,3
EC-AH-9	EVAPORATIVE COOLER PUMP	120	1	0.25	696		7.20	30	20.00	DIV. 26	20A	AH-9	
EC-9	AIR WASH	120	1	0.2	528		4.40	THERMAL	SWITCH		20A	AH-9	
RLF-AH-9.1	RELIEF AIR FAN	460	3	0.75	1330		1.60	VFD			20D	AH-9	2,3
RLF-AH-9.2	RELIEF AIR FAN	460	3	0.75	1330		1.60	VFD			20D	AH-9	2,3
RLF-AH-9.3	RELIEF AIR FAN	460	3	0.75	1330		1.60	VFD			20D	AH-9	2,3
RLF-AH-9.4	RELIEF AIR FAN	460	3	0.75	1330		1.60	VFD			20D	AH-9	2,3
SF-AH-9.1	SUPPLY AIR FAN	460	3	3	3988		4.80	VFD			20D	AH-9	2,3
SF-AH-9.2	SUPPLY AIR FAN	460	3	3	3988		4.80	VFD			20D	AH-9	2,3
SF-AH-9.3	SUPPLY AIR FAN	460	3	3	3988		4.80	VFD			20D	AH-9	2,3
SF-AH-9.4	SUPPLY AIR FAN	460	3	3	3988		4.80	VFD			20D	AH-9	2,3
EAH-4	AIR HANDLER											WEST ENTRY LEVEL MECH ROOM	2,3
EF-EAH-4.1	EXHAUST AIR FAN	460	3	3	3988		3.00	VFD			20D	EAH-4	2,3
EF-EAH-4.2	EXHAUST AIR FAN	460	3	3	3988		3.00	VFD			20D	EAH-4	2,3
EF-EAH-4.3	EXHAUST AIR FAN	460	3	3	3988		3.00	VFD			20D	EAH-4	2,3
EF-EAH-4.4	EXHAUST AIR FAN	460	3	3	3988		3.00	VFD			20D	EAH-4	2,3
DEF-1	EXHAUST AIR FAN	460	3	1	1745		2.10	30	5.00	DIV. 26	20D	SEE PLANS	
DEF-2	EXHAUST AIR FAN	460	3	0.5	914		1.10	30	5.00	DIV. 26	20D	SEE PLANS	
DEF-3	EXHAUST AIR FAN	460	3	1	1745		2.10	30	5.00	DIV. 26	20D	SEE PLANS	
DEF-4	EXHAUST AIR FAN	460	3	0.75	1330		1.60	30	5.00	DIV. 26	20D	SEE PLANS	
DEF-5	EXHAUST AIR FAN	460	3	2	2825		3.40	30	10.00	DIV. 26	20D	SEE PLANS	
DEF-6	EXHAUST AIR FAN	460	3	2	2825		3.40	30	10.00	DIV. 26	20D	SEE PLANS	
ATC	ATC CONTROL	120	1		500		4.10	30	10.00		20A	SEE PLANS	5
EWC-1	ELECTRIC WATER COOLER	120	1								20A	SEE PLANS	
CHWP-1	PUMP	460	3	20	22437		27.00	60	40.00	DIV. 26	40D	MECH ROOM 10N	
CHWP-2	PUMP	460	3	20	22437		27.00	60	40.00	DIV. 26	40D	MECH ROOM 10N	
CP-01	PUMP	460	3	0.5	914		1.10	30	5.00	DIV. 26	20D	HC-01	
CP-03	PUMP	460	3	3	3988		3.00	30	10.00	DIV. 26	20D	HC-03	
CP-04	PUMP	460	3	0.5	914		1.10	30	5.00	DIV. 26	20D	HC-04	
CP-05	PUMP	120	1	0.125	500		4.10	30	10.00	DIV. 26	20A	HC-05	
CP-06	PUMP	120	1									HC-6	
CP-09	PUMP	460	3	0.5	914		1.10	30	5.00	DIV. 26	20D	HC-09	
CP-9	PUMP	120	1	0.125	500		4.10	30	10.00	DIV. 26	20A	HC-9	
CP-10	PUMP	120	1	0.125	500		4.10	30	10.00	DIV. 26	20A	HC-10	
CP-12	PUMP	120	1	0.125	500		4.10	30	10.00	DIV. 26	20A	HC-12	
HWP-01	PUMP	460	3	50	54015		65.00	VFD			100D	BOIL ROOM	
HWP-02	PUMP	460	3	50	54015		65.00	VFD			100D	BOIL ROOM	
HWP-03	PUMP	460	3	15	17451		21.00	VFD			40D	BOIL ROOM	
HWP-04	PUMP	460	3	15	17451		21.00	VFD			40D	BOIL ROOM	
P-1	PUMP	460	3	20	22437		27.00	30	10.00	DIV. 26	40D	SW MECH ROOM	
P-2	PUMP	460	3	20	22437		27.00	30	10.00	DIV. 26	40D	SW MECH ROOM	
P-1	PUMP	460	3							DIV. 26		SW MECH ROOM	
PHP-01	PUMP	460	3	20	22437		27.00	VFD			40D	BOIL ROOM	
PHP-02	PUMP	460	3	20	22437		27.00	VFD			40D	BOIL ROOM	
SMP-01	PUMP	460	3	5	6316		7.60	VFD			20D	BOIL ROOM	
SMP-02	PUMP	460	3	5	6316		7.60	VFD			20D	BOIL ROOM	
RCP-1	RECIRCULATING PUMP	120	1	0.75	1656		13.80	30	20.00	DIV. 26	20A	BOIL ROOM	
RCP-2	RECIRCULATING PUMP	120	1	0.75	1656		13.80	30	20.00	DIV. 26	20A	BOIL ROOM	
WS-1	WATER SOFTENER	120	1										
SCF-01	ROOF UPBLAST DOME	460	3	7.5	8141		11.00	30	20.00	DIV. 26	20D	ROOF	
SCF-02	ROOF UPBLAST DOME	460	3	7.5	8141		11.00	30	20.00	DIV. 26	20D	ROOF	
DMV-1	MIXING STATION	120	1										

NOTES:
1. VERIFY ELECTRICAL REQUIREMENTS WITH MANUFACTURER
2. VFD BY MECHANICAL. COORDINATE LOCAITONS.
3. PROVIDE A 120V CIRCUIT FOR MARINE LIGHTS.
4. SINGLE POINT CONNECTION
5. ON EMERGENCY POWER. SEE PANEL SCHEDULES AND PLANS

POOL EQUIPMENT LIST

ID	DESCRIPTION	V	PH	HP	VA	MCA	AMPS	DISCONNECT SIZE	DISCONNECT FUSED	STARTER	FEEDER	LOCATION	REMARKS
1A	RMF CONTROLLER	120	1		1800		15.00	GFCI PLUG			20A	POOL EQUIPMENT ROOM	
1B	FILTER VACUUM SYSTEM	120	1		2400		20.00	THERMAL	SWITCH		30A	POOL EQUIPMENT ROOM	
1C	FILTER AIR COMPRESSOR	120	1	2	500		15.00	GFCI PLUG			20A	POOL EQUIPMENT ROOM	
3	CIRCULATION PUMP	460	3	3			34.00	VFD			20C	POOL EQUIPMENT ROOM	
5	CHEMICAL CONTROLLER	120	1		500		1.00	GFCI PLUG			20A	POOL EQUIPMENT ROOM	
6	LIQUID CHLORINE FEED PUMP	120	1		1000			GFCI PLUG			20A	CHEMICAL ROOM	
9A	CO2 FEED SYSTEM	120	1		500			GFCI PLUG			20A	CHEMICAL ROOM	
11B	UV SYSTEM CONTROL PANEL	480	3		26592		32.00	BREAKER			40C	POOL EQUIPMENT ROOM	
12A	FEATURES PUMP	230	1	3			9.60	30	20.00		20C	POOL EQUIPMENT ROOM	
12B	FEATURES PUMP	230	1	3			9.60	30	20.00		20C	POOL EQUIPMENT ROOM	
13	FEATURES PUMP	230	1	3			9.60	30	20.00		20C	POOL EQUIPMENT ROOM	
28B	CHAIN HOIST	460	3	1			2.10	30	15.00		20C	POOL EQUIPMENT ROOM	
31A	RMF CONTROLLER	120	1		1800		15.00	GFCI PLUG			20A	POOL EQUIPMENT ROOM	
31B	FILTER VACUUM SYSTEM	120	1		2400		20.00	THERMAL	SWITCH		30A	POOL EQUIPMENT ROOM	
33	CIRCULATION PUMP	460	3	3			14.00	VFD			60C	POOL EQUIPMENT ROOM	
35	CHEMICAL CONTROLLER	120	1		500		1.00	GFCI PLUG			20A	POOL EQUIPMENT ROOM	
36	LIQUID CHLORINE FEED PUMP	120	1		1000							CHEMICAL ROOM	
37	CO2 FEED SYSTEM	120	1		1000			GFCI PLUG			20A	CHEMICAL ROOM	
38B	UV SYSTEM CONTROL PANEL	480	3		26592		32.00	BREAKER			40C	POOL EQUIPMENT ROOM	
39	HYDRO-THERAPY PUMP	230	1				8.00	30	20.00		20C	POOL EQUIPMENT ROOM	

50M POOL EQUIPMENT LIST - ALTERNATE 1

ID	DESCRIPTION	V	PH	HP	VA	MCA	AMPS	DISCONNECT SIZE	DISCONNECT FUSED	STARTER	FEEDER	LOCATION	REMARKS
51A	RMF CONTROLLER	120	1		1800		15.00	GFCI PLUG			20A	POOL EQUIPMENT ROOM	
51B	FILTER VACUUM SYSTEM	120	1		2400		20.00	THERMAL	SWITCH		30A	POOL EQUIPMENT ROOM	
53	CIRCULATION PUMP	460	3	25			34.00	VFD			60C	POOL EQUIPMENT ROOM	
55	CHEMICAL CONTROLLER	120	1		500		1.00	GFCI PLUG			20A	POOL EQUIPMENT ROOM	
61B	UV SYSTEM CONTROL PANEL	480	3		26592		32.00	BREAKER			40C	POOL EQUIPMENT ROOM	
83	CIRCULATION PUMP	460	3	3			14.00	VFD			20C	POOL EQUIPMENT ROOM	
84	CHEMICAL CONTROLLER	120	1		500		1.00	GFCI PLUG			20A	POOL EQUIPMENT ROOM	

KITCHEN EQUIPMENT SCHEDULE - FRESHENS

	DESCRIPTION	V	PH	HP	KW	AMPS	DISCONNECT SIZE	DISCONNECT FUSE SIZE	FURN. BY	WIRES	CONDUIT	QUANTITY	REMARKS
K-1	TWO-WELL DROP IN REFRIG COLD PAN	120	1	1/5		3.9			DIV 16			1	
K-2	REFRIGERATED CREPE STATION								DIV 16			1	
K-3	CREPE MAKERS	277	3		3.7			20A	DIV 16			3	
K-4	DROP-IN REFRIG COLD PAN	120	1	1/5		2.4	NEMA 5-15P		DIV 16			1	
K-5	MICROWAVE OVEN	120	1			13.4	NEMA 5-15R		DIV 16			1	
K-6	DROP-IN REFRIG COLD PAN	120	1	1/5		2.4	NEMA 5-15P		DIV 16			1	
K-7	BLENDER	120	1			13.0			DIV 16			2	
K-8	DROP-IN 3 WELL COLD PAN	120	1	1/5		3.9	NEMA 5-15P		DIV 16			1	
K-9	AIR SCREEN - SALAD GREENS	120	1	3/4		13.0	NEMA L14-20		DIV 16			1	
K-10	AIR SCREEN - BEVERAGES	120	1	3/4		13.0	NEMA L14-20		DIV 16			1	
K-11A	SOFT SERVE MACHINE	208	3	1.5		19.0		25A	DIV 16			1	LEFT AIR COOLED
K-11B	SOFT SERVE MACHINE	208	3	1.5		15.0		20A	DIV 16			1	RIGHT AIR COOLED
K-12	ICE MAKER	120	1			9.7		20A	DIV 16			1	
K-13	TWO DOOR REFRIGERATORS	120	1			9.0	NEMA 5-15P	15A	DIV 16			2	
K-14	TWO DOOR REACH-IN FREEZER	120	1			11.0	NEMA 5-20P	15A	DIV 16			1	

MHTN ARCHITECTS
MHTN Architects, Inc.
420 East South Temple
Suite 100
Salt Lake City, Utah 84111
Telephone (801) 595-6700
Telefax (801) 595-6717
www.mhtn.com

Hastings+Chivetta
ARCHITECTURE • PLANNING • ENGINEERING
622 Emerson, Suite 200
St. Louis, MO 63141
Tel. 314.863.5717
Fax. 314.863.2823
www.hastingschivetta.com

BUILDING OFFICIAL STAMP
Ken Garner Engineering, Inc.
Electrical Engineering Consultants, Inc.
102 West 500 South, Suite 225
Salt Lake City, Utah 84101
P. 801.328.8800
F. 801.328.8802
Contact: Paris LeLaCheur
Project #: 2010-117.00

UNIVERSITY OF UTAH
STUDENT LIFE CENTER
1836 E. BALLIF ROAD
SALT LAKE CITY, UTAH 84112

SEAL

MHTN PROJECT NO. 2010562.00
DRAWN BY: KGE CHECKED BY: KGE

ISSUED:

NO.	DATE	DESCRIPTION

CONTRACTOR TO VERIFY DRAWINGS IN FIELD.USE REFLECT LAST REVISION DATE.

NO.	DATE	DESCRIPTION

SHEET NAME
ELECTRICAL SCHEDULES

BID DOCUMENTS
May 15, 2013

SHEET NUMBER
EP609

C:\Users\rbrown.KGE\Documents\2010-117.00_KGE_STUDENT LIFE_ELECTRICAL_CENTERAL_2012_rbrown.rvt
5/28/2013 9:49:29 AM

RELAY PANEL SCHEDULE 3RD LEVEL

LOCATION: 1ST LEVEL ELECTRICAL RM 104 | PANEL: LC31

MOUNTING: SURFACE MOUNT., 277V, W/24A RELAYS

RELAY CKT	RELAY #	DESCRIPTION	CIRCUIT	CONTROL	NOTES
a	1	LEVEL 3 FITNES CENTER LTG	L31-1		3
b	2	LEVEL 3 FITNES CENTER LTG	L31-3		3
c	3	LEVEL 3 FITNES CENTER LTG	L31-5		3
d	4	LEVEL 3 FITNES CENTER LTG	L31-7		3
e	5	LEVEL 3 FITNES CENTER LTG	L31-9		3
f	6	LEVEL 3 FITNES CENTER LTG			3,5
g	7				
h	8				
i	9				
j	10				
k	11				
l	12				
m	13				
n	14				
o	15				
p	16	20A, 277V, SPARE RELAY FOR FUTURE			
PROVIDE EMERGENCY/NORMAL POWER BARRIER IN RELAY PANEL FOR CODE REQUIRED SEPARATION.					
q	17	LEVEL 3 FITNES CENTER LTG	EL31-1		3,6
r	18	LEVEL 3 FITNES CENTER LTG	EL31-3		3,6
s	19	LEVEL 3 FITNES CENTER LTG	EL31-5		3,6
t	20	LEVEL 3 FITNES CENTER LTG	EL31-7		3,6
u	21	LEVEL 3 FITNES CENTER LTG	EL31-9		3,6
v	22	LEVEL 3 FITNES CENTER LTG	EL31-14		
w	23				
x	24	20A, 277V, SPARE RELAY FOR FUTURE			

NOTES

1. LOCAL CONTROL IS PROVIDED WITH OCCUPANCY SENSING AND MANUAL SWITCH OVERRIDE.
2. LOCAL CONTROL IS PROVIDED WITH MANUAL SWITCH.
3. CENTRAL MANUAL OVERRIDE SWITCH TO TURN ON LIGHTS DURING NIGHT MODE.
4. OCCUPANCY SENSOR SHALL CONTROL INDIVIDUAL ZONES.
5. OCCUPANCY SENSOR SHALL ENABLE ALL EMERGENCY FIXTURES SIMULTANEOUSLY DURING NIGHT MODE.
6. MONITOR THE STATE OF THE GENERATOR DRY CONTRACT CLOSURE BY LOW VOLTAGE INPUT TO LC SYSTEM.

RELAY PANEL SCHEDULE 3RD LEVEL

LOCATION: 1ST LEVEL ELECTRICAL RM 104 | PANEL: LC32

MOUNTING: SURFACE MOUNT., 277V, W/24A RELAYS

RELAY CKT	RELAY #	DESCRIPTION	CIRCUIT	CONTROL	NOTES
a	1	LEVEL 3, 3-COURT GYMNASIUM LTG	L32-1	TIME CLOCK/DAY:ON-NIGHT:OFF	3
b	2	LEVEL 3, 3-COURT GYMNASIUM LTG	L32-3	TIME CLOCK/DAY:ON-NIGHT:OFF	3
c	3	LEVEL 3, 3-COURT GYMNASIUM LTG	L32-5	TIME CLOCK/DAY:ON-NIGHT:OFF	3
d	4	LEVEL 3, 3-COURT GYMNASIUM LTG	L32-7	TIME CLOCK/DAY:ON-NIGHT:OFF	3
e	5	LEVEL 3, 3-COURT GYMNASIUM LTG	L32-9	TIME CLOCK/DAY:ON-NIGHT:OFF	3
f	6	LEVEL 3, 3-COURT GYMNASIUM LTG	L32-11	TIME CLOCK/DAY:ON-NIGHT:OFF	3
g	7				
h	8				
i	9				
j	10				
k	11				
l	12				
m	13				
n	14				
o	15				
p	16	20A, 277V, SPARE RELAY FOR FUTURE			
PROVIDE EMERGENCY/NORMAL POWER BARRIER IN RELAY PANEL FOR CODE REQUIRED SEPARATION.					
q	17	LEVEL 3, 3-COURT GYMNASIUM LTG	EL31-2		3,6
r	18	LEVEL 3, 3-COURT GYMNASIUM LTG	EL31-4		3,6
s	19	LEVEL 3, 3-COURT GYMNASIUM LTG	EL31-6		3,6
t	20	LEVEL 3, 3-COURT GYMNASIUM LTG	EL31-8		3,6
u	21	LEVEL 3, 3-COURT GYMNASIUM LTG	EL31-10		3,6
v	22	LEVEL 3, 3-COURT GYMNASIUM LTG	EL31-12		3,6
w	23				
x	24	20A, 277V, SPARE RELAY FOR FUTURE			

NOTES

1. LOCAL CONTROL IS PROVIDED WITH OCCUPANCY SENSING AND MANUAL SWITCH OVERRIDE.
2. LOCAL CONTROL IS PROVIDED WITH MANUAL SWITCH.
3. CENTRAL MANUAL OVERRIDE SWITCH TO TURN ON LIGHTS DURING NIGHT MODE.
4. OCCUPANCY SENSOR SHALL CONTROL INDIVIDUAL ZONES.
5. OCCUPANCY SENSOR SHALL ENABLE ALL EMERGENCY FIXTURES SIMULTANEOUSLY DURING NIGHT MODE.
6. MONITOR THE STATE OF THE GENERATOR DRY CONTRACT CLOSURE BY LOW VOLTAGE INPUT TO LC SYSTEM.

MHTN
ARCHITECTS
MHTN Architects, Inc.
420 East South Temple
Suite 100
Salt Lake City, Utah 84111
Telephone (801) 595-6700
Telefax (801) 595-6717
www.mhtn.com

Hastings+Chivetta
ARCHITECTURE • PLANNING • ENGINEERING
622 Emerson, Suite 200
St. Louis, MO 63141
Tel. 314.863.5717
Fax. 314.863.2823
www.hastingschivetta.com

BUILDING OFFICIAL STAMP

Ken Garner
Engineering, Inc.
Electrical Engineering Consultants, Inc.
102 West 500 South, Suite 225
Salt Lake City, Utah 84101
P. 801.328.8800
F. 801.328.8802
Contact: Paris LeLaCheur
Project #: 2010-117.00

UNIVERSITY OF UTAH

STUDENT LIFE CENTER

1836 E. BALLIF ROAD
SALT LAKE CITY, UTAH 84112

SEAL

MHTN PROJECT NO. 2010562.00

DRAWN BY: Author CHECKED BY: Checker

ISSUED:

NO.	DATE	DESCRIPTION

CONTRACTOR TO VERIFY DRAWINGS IN FIELD USE REFLECT LAST REVISION DATE.

NO.	DATE	DESCRIPTION
1	05-28-2013	ADDENDUM ONE

SHEET NAME
RELAY PANELS

BID DOCUMENTS
May 15, 2013

SHEET NUMBER
EP610

C:\Users\drown.KGE\Documents\2010-117.00_KGE_STUDENT LIFE_ELECTRICAL_CENTERAL_2012_drown.rvt
5/28/2013 9:49:37 AM

KEYED NOTES - SHEET ES100.2

1. PROVIDE AND INSTALL NEW CONCRETE ENCASED DUCT BANK FROM MH 36A TO NEW XFMR VAULT. DUCT BANK SHALL BE INSTALLED OVER TOP OF TUNNEL EXTENSION TO BUILDING. COORDINATE WITH OTHER TRADES FOR EXACT ROUTING.
2. PROVIDE AND INSTALL NEW MEDIUM VOLTAGE CABLING IN DUCT BANK BETWEEN MH 36A AND XFMR VAULT. SEE ONE LINE DIAGRAM SHEET EP600
3. EXISTING DUCTBANK AND MEDIUM VOLTAGE CABLE TO REMAIN AND BE PROTECTED DURING CONSTRUCTION. CONTRACTOR RESPONSIBLE FOR SHORING DUCT BANK DURING BUILDING EXCAVATION. CONTRACTOR SHALL VERIFY EXACT ROUTING OF DUCTBANK BEFORE ANY WORK BEGINS. COORDINATE AND SCHEDULE WITH ENGINEER.
4. CONTINUES TO HONORS HOUSING. PROTECT AND MAINTAIN.
5. REFEED BRIDGE TELECOM FROM MH362. PROVIDE (1) 4" CONDUIT FROM MH362. COORDINATE WITH U OF U NETCOM AND CENTURY LINE FOR NEW CABLE. CABLE AND CABLE INSTALL BY NETCOM.

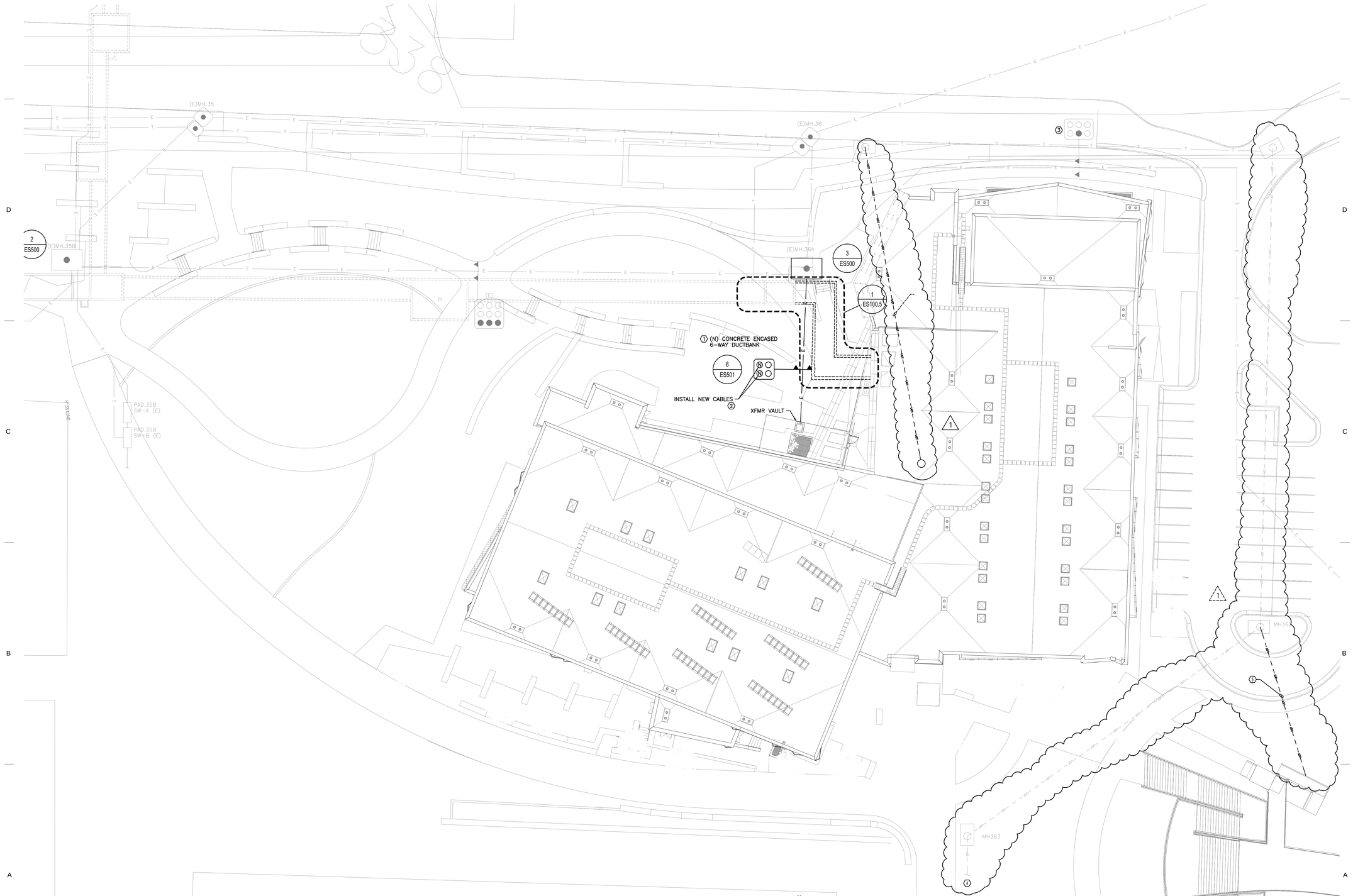

1 ES100.2 ENLARGED ELECTRICAL SITE PLAN

SCALE: 1" = 20'

MHTN ARCHITECTS
MHTN Architects, Inc.
420 East South Temple
Suite 100
Salt Lake City, Utah 84111
Telephone: (801) 595-6700
Telefax: (801) 595-6717
www.mhtn.com

622 Emerson, Suite 200
St. Louis, MO 63141
Tel. 314.863.5717
Fax. 314.863.2823
www.hastingschivetta.com

Ken Garner Engineering, Inc.
ELECTRICAL CONSULTING ENGINEERS
102 West 500 South, Suite 225
Salt Lake City, Utah 84101
Telephone: 801.328.8800
Fax: 801.328.8802
Contact: Paris LeLaCheur
Project #: 2010-117.00

UNIVERSITY OF UTAH
STUDENT LIFE CENTER
1836 E. BALLIF ROAD
SALT LAKE CITY, UTAH 84112

SEAL

MHTN PROJECT NO. 2010562.00

DRAWN BY: KGE CHECKED BY: KGE

ISSUED:

NO.	DATE	DESCRIPTION

CONTRACTOR TO VERIFY DRAWINGS IN FIELD USE REFLECT LAST REVISION DATE.

NO.	DATE	DESCRIPTION
1	05-24-2013	ADDENDUM ONE

SHEET NAME
ENLARGED ELECTRICAL SITE PLAN
BID DOCUMENTS
MAY 15, 2013

SHEET NUMBER
ES100.2

By: rbrown; May 28, 2013 – 9:35am
H:\2010\University of Utah\U of U Student Life 10117\Cad\ES100.2.dwg

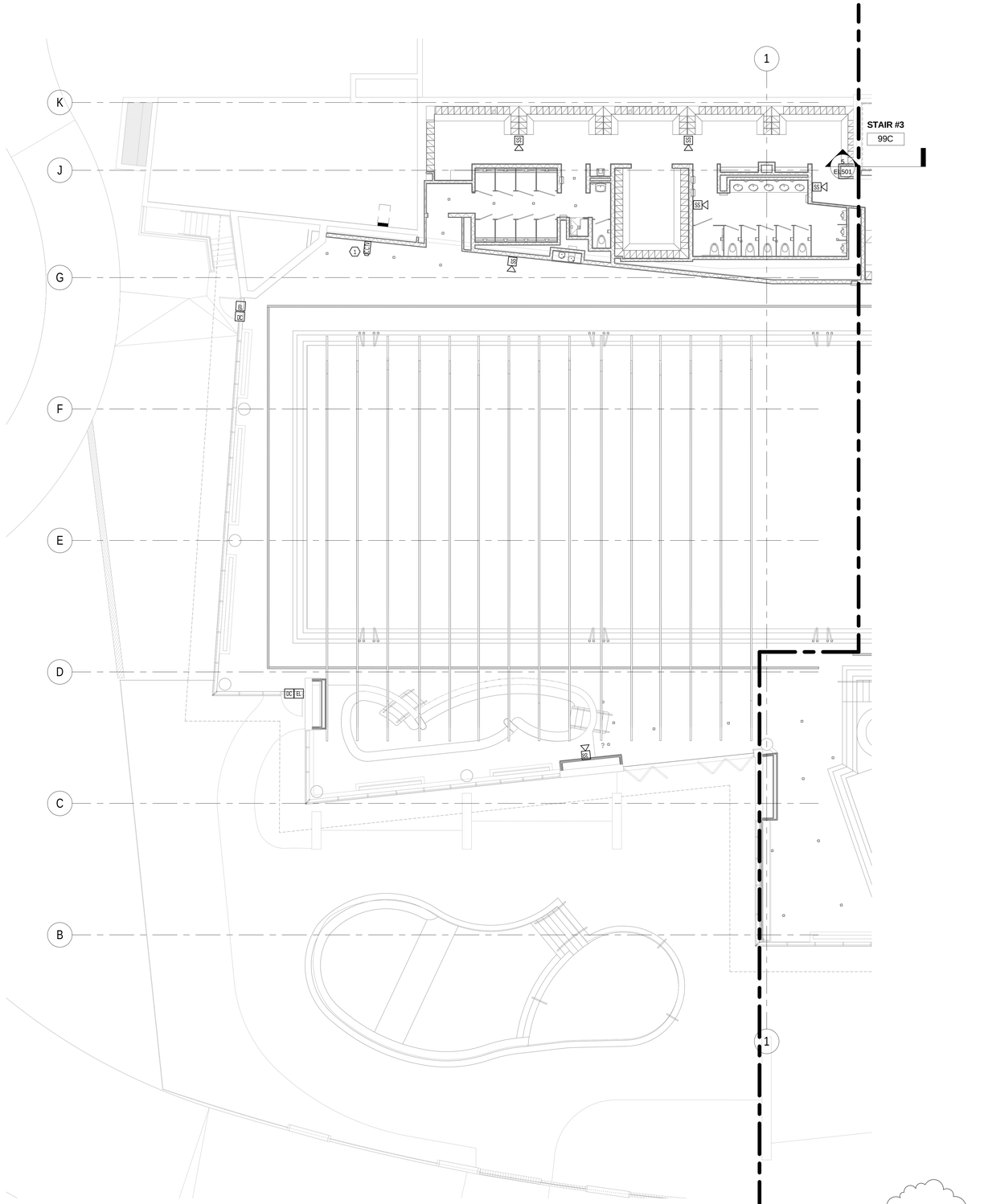

1 LOWER LEVEL SYSTEMS PLAN ALTERNATE 1A
EY200.C1 SCALE | 1/8" = 1'-0"

MHTN
ARCHITECTS
MHTN Architects, Inc.
420 East South Temple
Suite 100
Salt Lake City, Utah 84111
Telephone (801) 595-6700
Telefax (801) 595-6717
www.mhtn.com

Hastings+Chivetta
ARCHITECTURE • PLANNING • ENGINEERING
622 Emerson, Suite 200
St. Louis, MO 63141
Tel. 314.863.5717
Fax. 314.863.2823
www.hastingschivetta.com

BUILDING OFFICIAL STAMP

Ken Garner
Engineering, Inc.
Electrical Engineering Consultants, Inc.
102 West 500 South, Suite 225
Salt Lake City, Utah 84101
P. 801.328.8800
F. 801.328.8802
Contact: Paris LeLaCheur
Project #: 2010-117.00

UNIVERSITY OF UTAH
STUDENT LIFE CENTER
1836 E. BALLIF ROAD
SALT LAKE CITY, UTAH 84112

SEAL

MHTN PROJECT NO. 2010562.00

DRAWN BY: Author CHECKED BY: Checker

ISSUED:

NO.	DATE	DESCRIPTION

CONTRACTOR TO VERIFY DRAWINGS IN FIELD USE REFLECT LAST REVISION DATE.

NO.	DATE	DESCRIPTION
1	05-28-2013	ADDENDUM ONE

SHEET NAME
LOWER LEVEL SYSTEMS PLAN ALTERNATE 1A
BID DOCUMENTS
May 15, 2013

SHEET NUMBER
EY200.C1

C:\Users\tbrown.KGE\Documents\2010-117.00_KGE_STUDENT LIFE_ELECTRICAL_CENTERAL_2012_tbrown.rvt
5/28/2013 9:49:48 AM

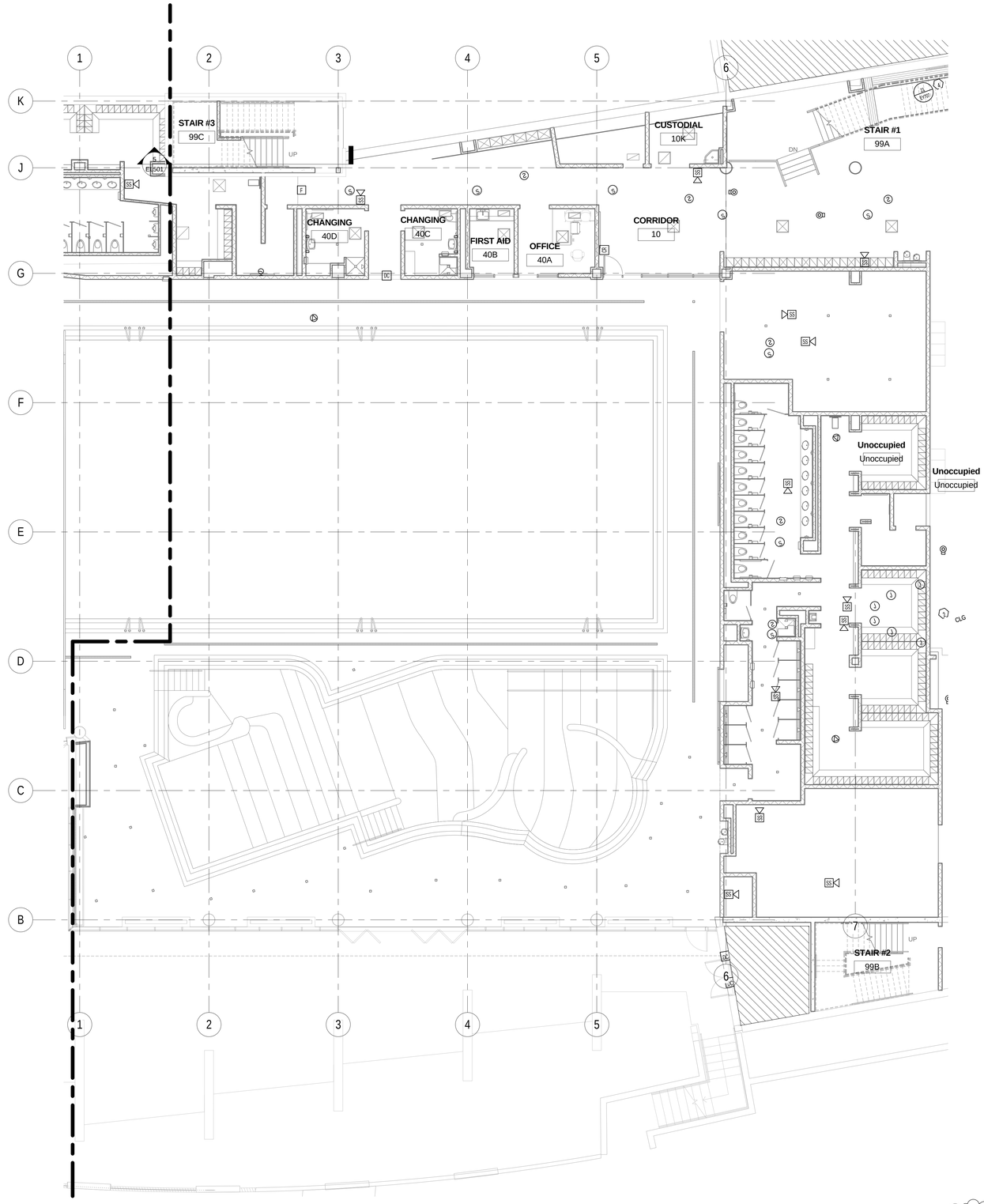

1 EY200.C2 LOWER LEVEL SYSTEMS PLAN ALTERNATE 1B
SCALE | 1/8" = 1'-0"

MHTN
ARCHITECTS
MHTN Architects, Inc.
420 East South Temple
Suite 100
Salt Lake City, Utah 84111
Telephone (801) 595-6700
Telefax (801) 595-6717
www.mhtn.com

Hastings+Chivetta
ARCHITECTURE • PLANNING • ENGINEERING
622 Emerson, Suite 200
St. Louis, MO 63141
Tel. 314.863.5717
Fax. 314.863.2823
www.hastingschivetta.com

BUILDING OFFICIAL STAMP

Ken Garner
Engineering, Inc.
Electrical Engineering Consultants, Inc.
102 West 500 South, Suite 225
Salt Lake City, Utah 84101
P. 801.328.8800
F. 801.328.8802
Contact: Paris LeLaCheur
Project #: 2010-117.00

UNIVERSITY OF UTAH
STUDENT LIFE CENTER
1836 E. BALLIF ROAD
SALT LAKE CITY, UTAH 84112

SEAL

MHTN PROJECT NO. 2010562.00

DRAWN BY: Author CHECKED BY: Checker

ISSUED:

NO.	DATE	DESCRIPTION

CONTRACTOR TO VERIFY DRAWINGS IN FIELD USE REFLECT LAST REVISION DATE.

NO.	DATE	DESCRIPTION
1	05-28-2013	ADDENDUM ONE

SHEET NAME
LOWER LEVEL
SYSTEMS PLAN
ALTERNATE 1B
BID DOCUMENTS
May 15, 2013

SHEET NUMBER
EY200.C2

C:\Users\brown.KGE\Documents\2010-117.00_KGE_STUDENT LIFE_ELECTRICAL_CENTERAL_2012_drown.rvt
5/28/2013 9:49:57 AM

KEYED NOTES - SHEET EY601

1. EXTEND TO GROUND BUS IN MAIN ELECTRICAL ROOM.
2. FOR CONNECTION TO FUTURE TELECOM RACKS. ALL RACKS AND CABLING BY OTHERS.
3. FOR CONNECTION TO LADDER TYP CABLE TRAY COORDINATE HEIGHT OF CABLE TRAY IN TELECOM AREAS WITH OWNER. CONNECT TO WIRE BASKET TRAY WITH #6 AWG CU WHERE APPLICABLE.
4. GROUND BUS BAR. SIZE BUS BAR PER DRAWING.

GENERAL NOTES - SHEET EY601

A. CONTRACTOR TO FIELD VERIFY ALL EXISTING CONDITIONS, MATERIALS, FINISHES, AND DIMENSIONS BEFORE AND AFTER DEMOLITION.
B. CONTRACTOR TO ENSURE THAT ALL CORRIDORS OUTSIDE OF CONSTRUCTION AREA ARE KEPT CLEAN AND CLEAR OF DEBRIS AND OBSTRUCTIONS AT ALL TIMES.
C. PROTECT ALL ITEMS TO REMAIN FROM DAMAGE.

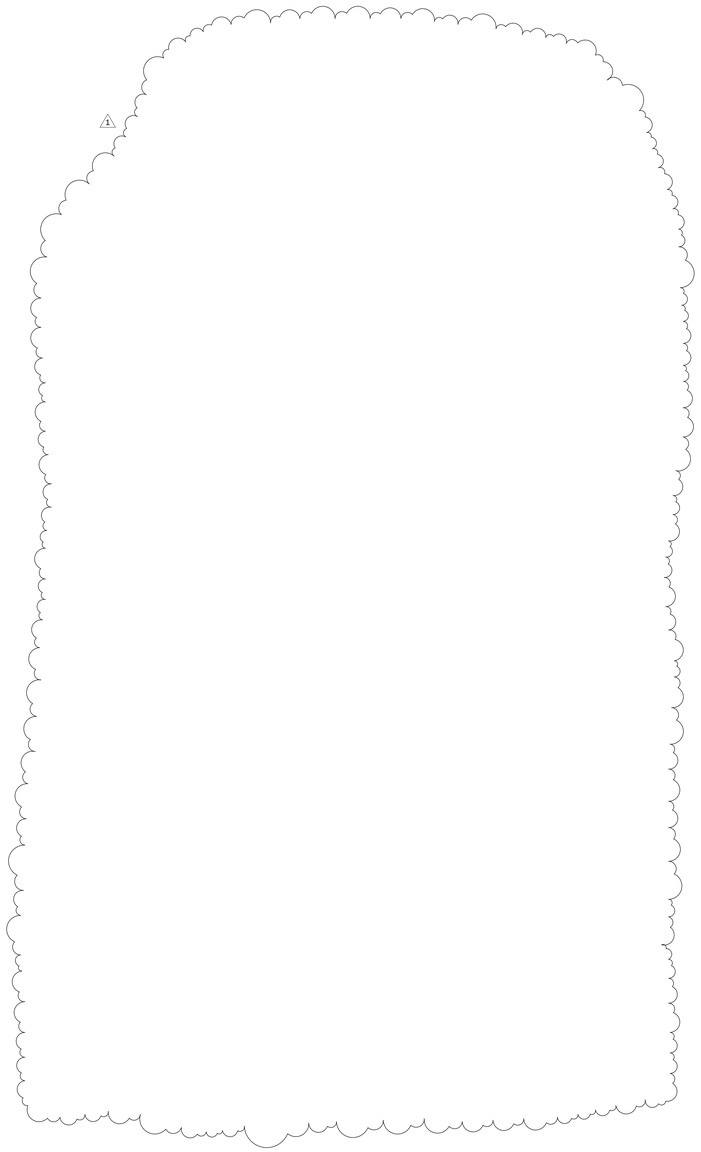

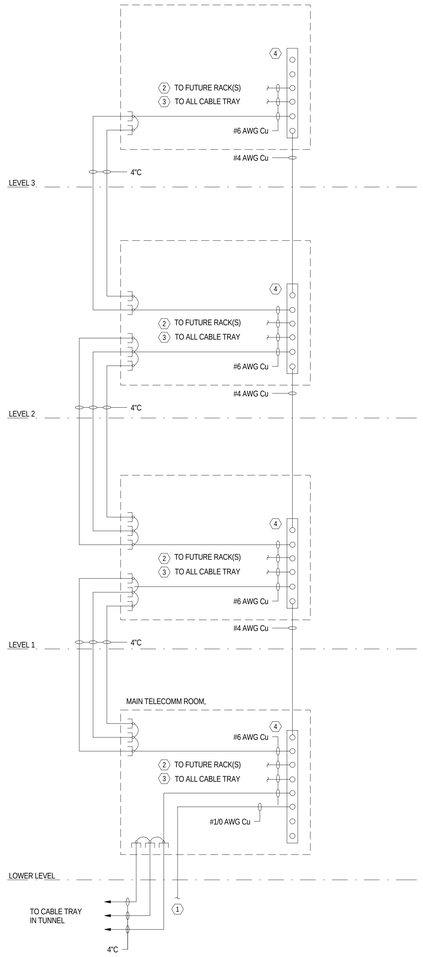

2 EY601 TELECOMM RISER DIAGRAM
SCALE | NOT TO SCALE

MHTN ARCHITECTS
MHTN Architects, Inc.
420 East South Temple
Suite 100
Salt Lake City, Utah 84111
Telephone (801) 595-6700
Telefax (801) 595-6717
www.mhtn.com

Hastings+Chivetta
ARCHITECTURE • PLANNING • ENGINEERING
622 Emerson, Suite 200
St. Louis, MO 63141
Tel. 314.863.5717
Fax. 314.863.2823
www.hastingschivetta.com

BUILDING OFFICIAL STAMP

Ken Garner Engineering, Inc.
Electrical Engineering Consultants, Inc.
102 West 500 South, Suite 225
Salt Lake City, Utah 84101
P. 801.328.8800
F. 801.328.8802
Contact: Paris LeLaCheur
Project #: 2010-117.00

UNIVERSITY OF UTAH
STUDENT LIFE CENTER
1836 E. BALLIF ROAD
SALT LAKE CITY, UTAH 84112

SEAL

MHTN PROJECT NO. 2010562.00

DRAWN BY: Author CHECKED BY: Checker

ISSUED:

NO.	DATE	DESCRIPTION

CONTRACTOR TO VERIFY DRAWINGS IN FIELD USE REFLECT LAST REVISION DATE:

NO.	DATE	DESCRIPTION
1	05-28-2013	ADDENDUM ONE

SHEET NAME
TELECOM RISER DIAGRAM

BID DOCUMENTS
May 15, 2013

SHEET NUMBER
EY601

C:\Users\drown.KGE\Documents\2010-117.00_KGE_STUDENT LIFE_ELECTRICAL_CENTERAL_2012_rbrown.rvt
5/28/2013 9:50:03 AM

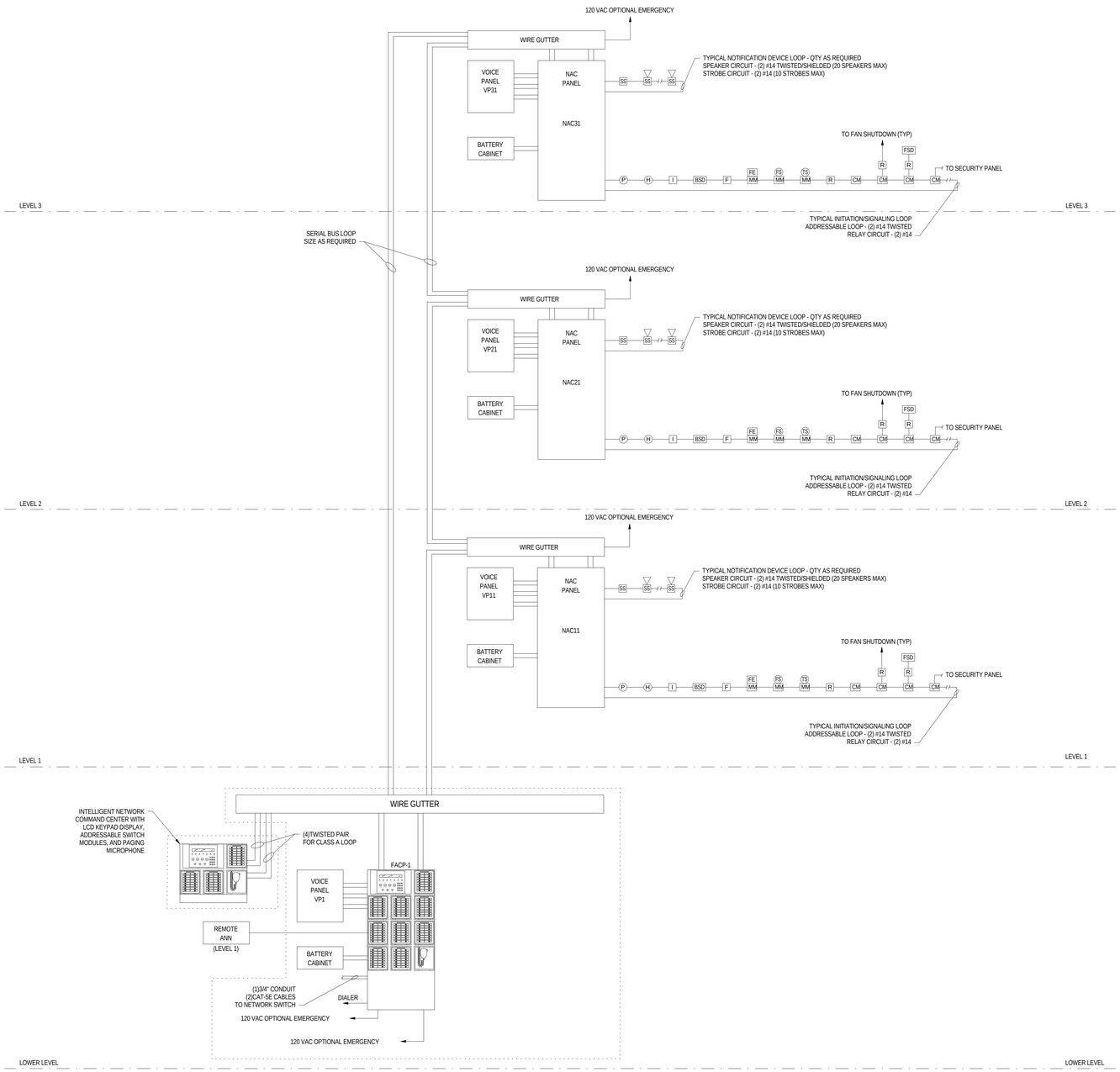

1 EY703 FIRE ALARM RISER DIAGRAM
NO SCALE

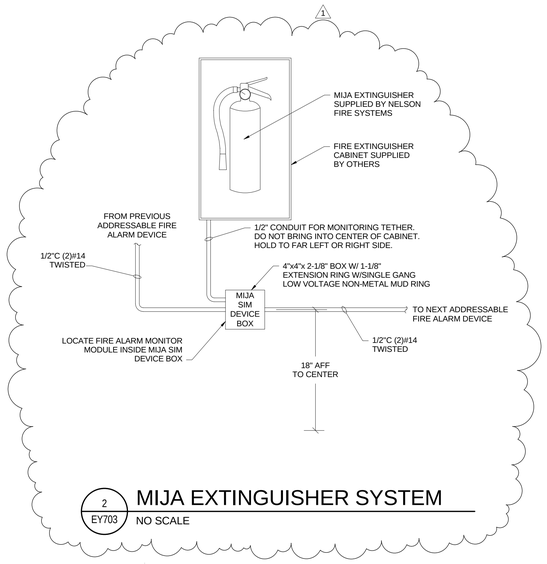

2 EY703 MIJA EXTINGUISHER SYSTEM
NO SCALE

C:\Users\tbrown.KGE\Documents\2010-117.00_KGE_STUDENT LIFE_ELECTRICAL_CENTERAL_2012_tbrown.rvt
5/28/2013 9:50:11 AM

MHTN
ARCHITECTS
MHTN Architects, Inc.
420 East South Temple
Suite 100
Salt Lake City, Utah 84111
Telephone (801) 595-6700
Telefax (801) 595-6717
www.mhtn.com

Hastings+Chivetta
ARCHITECTURE • PLANNING • ENGINEERING
622 Emerson, Suite 200
St. Louis, MO 63141
Tel. 314.863.5717
Fax. 314.863.2823
www.hastingschivetta.com

BUILDING OFFICIAL STAMP

Ken Garner Engineering, Inc.
Electrical Engineering Consultants, Inc.
102 West 500 South, Suite 225
Salt Lake City, Utah 84101
P. 801.328.8800
F. 801.328.8802
Contact: Paris LeLaCheur
Project #: 2010-117.00

UNIVERSITY OF UTAH
STUDENT LIFE CENTER
1836 E. BALLIF ROAD
SALT LAKE CITY, UTAH 84112

SEAL

MHTN PROJECT NO: 2010562.00

DRAWN BY: Author CHECKED BY: Checker

ISSUED:

NO.	DATE	DESCRIPTION

CONTRACTOR TO VERIFY DRAWINGS IN FIELD USE REFLECT LAST REVISION DATE.

NO.	DATE	DESCRIPTION
1	05-28-2013	ADDENDUM ONE

SHEET NAME
FIRE ALARM RISER DIAGRAM

BID DOCUMENTS
May 15, 2013

SHEET NUMBER
EY603

EP (TYPICAL ALL STEPS)

FINGERWALL PRE-CAST CONCRETE COPING SEGMENTS. FOR ENLARGED PATTERN DIMENSION PLAN SEE SHEET WF401.1

PROVIDE 2 FLOATS

3 FLOATS

BASKETBALL ANCHOR LOCATION

ZERO DEPTH BEACH ENTRY

ING REQUIREMENTS SEE
_ NOTES SHEET WF010.1 AND
ENT NATIONAL ELECTRIC CODE
80.26(C) OR CURRENT
ELECTRICAL CODE. SEE
: DETAIL 7/506.

FINGERWALL PRE-CAST CONCRETE COPING SEGMENTS SPAN OVER TO THE BACK OF THE POOL BOND BEAM. GUTTER GRATING NOT REQUIRED UNDER THE FINGERWALL COPING SPAN. BOND BEAM RAISED AT COPING SECTIONS. SEE SECTION G/WF411.0. ALSO SEE PIPING PLAN FOR ENCASED GUTTER PIPE TRANSITION. (TYPICAL)

OMIT LIP OF COPING AT ZERO DEPTH ENTRY

APPROXIMATE PLAY FEATURE WATER SPRAY / SPLASH ZONE (TYPICAL)

ADJUST COPING JOINTS AS NEEDED TO ALLOW FOR SPRAYS

ENLARGED ACTIVITY POOL PLAN - ALT BID

SCALE: 1/8" = 1'-0"

N TRUE NORTH

MHTN ARCHITECTS
420 East South Temple
Suite 100
Salt Lake City, Utah 84111
TEL 801.595.6700
FAX 801.595.6717
www.mhtn.com

Hastings+Chivetta
ARCHITECTURE • PLANNING • ENGINEERING
622 Emerson
Suite 200
Saint Louis, MO 63141
TEL 314.863.5717
FAX 314.863.2823

WATER DESIGN, INC.
5047 Galleria Drive
Murray, Utah 84123
Telephone (801) 461-4009
Telefax (801) 461-4069
www.waterdesigninc.com

UNIVERSITY OF UTAH

STUDENT LIFE CENTER

1836 E. BALLIF ROAD
SALT LAKE CITY, UTAH 84112

PROJECT NO. 2010562

DATE: MAY 28, 2013

SHEET REFERENCE

WF401.0

SHEET NUMBER

AD01-WF01

ACTIVITY POOL
DECK EQUIPMENT SCHEDULE

MARK	DESCRIPTION	QUANTITY	DETAIL	REQUIREMENT
1	POOL STRUCTURE	AROUND POOL PERIMETER	B / WF410.1 C / WF410.1	STEEL REINFORCED SHOTCRETE
	REMARKS: REINFORCED SHOTCRETE GUTTER POOL STRUCTURE. POOL SHELL SHALL BE BONDED PER THE REQUIRMENTS OF THE NATIONAL ELECTRIC CODE ARTICLE 680.			
2	POOL GUTTER	AROUND POOL PERIMETER	1 / WF410.0 1 / WF410.1	PRECAST STONE GUTTER COPING W/LAWSON AQUATICS PARALLEL FLOW GRATING
	REMARKS: PROVIDE PRECAST STONE GUTTER EDGE WITH HAND HOLD AROUND PERIMETER OF POOL. PROVIDE PARALLEL FLOW GRATING AROUND PERIMETER OF GUTTER. PROVIDE PRECAST COPING STONE BEHIND GRATING. SEAL INTERIOR OF GUTTER WITH AQUAFIN 2KM. 1			
3	TILED FINGER WALL WITH COPING	SEE PLAN	3 / WF410.0 F / WF411.0 SIMILAR	PRE-CAST COPING STONE SEGMENTS
	REMARKS: STEEL REINFORCED CONCRETE WALLS WITH PRE-CAST CONCRETE COPING. WALL TILE SHALL MATCH POOL FINISH TILE. TOP OF WALL SHALL BE ABOVE THE WATER. PROVIDE PRE-CAST COPING COLOR SAMPLES TO ARCHITECT FOR SELECTION. PROVIDE PRE-CAST COPING SAMPLE / MOCK-UP TO THE ARCHITECT FOR REVIEW. AT THE SITTING BENCH FINGER WALL COPING, PROVIDE CHANNELS THRU THE COPING STONES TO ACCOMMODATE THE DECK JET WATER FLOW (FIELD CUT) - SEE ITEM 8 BELOW.			
4	POOL WALL AND FLOOR INTERIOR FINISH	AS REQUIRED	N/A	2" X 2" NON-SLIP CERAMIC TILE
	REMARKS: FINISH SHALL BE WATERPROOF AND FREE FROM DEFECTS. PROVIDE TILE SAMPLES TO ARCHITECT FOR SELECTION. COLOR SELECTION BY ARCHITECT.			

Hastings+Chivetta
ARCHITECTURE • PLANNING • ENGINEERING

MHTN Architects, Inc.
420 East South Temple
Suite 100
Salt Lake City, Utah 84111
TEL 801.595.6700
FAX 801.595.6717
www.mhtn.com

UNIVERSITY OF UTAH
STUDENT LIFE CENTER

PROJECT NO. 2010562

DATE: May 28, 2013

Water Design Inc.
5047 S. Galleria Dr.
Murray, Utah 84123

SHEET NUMBER
AD01-WF02

SHEET REFERENCE
WF401.0

ACTIVITY POOL
DECK EQUIPMENT SCHEDULE

MARK	DESCRIPTION	QUANTITY	DETAIL	REQUIREMENT
7	POOL DECK	AS REQUIRED	CONTINUOUS AROUND POOL	NON-SLIP CONCRETE
	REMARKS: MINIMUM 5' WIDE NON-SLIP CONCRETE DECK CONTINUOUS AROUND POOL PERIMETER. SLOPE DECK 1/4" PER FOOT AWAY FROM BACK OF BOND BEAM TO DECK DRAINS. DECK AND DECK DRAINS BY GENERAL CONTRACTOR. INDOOR DECK DRAINS SHALL DRAIN TO SANITARY SEWER.			
8	ANGLED DECK SPRAYS 1	1 SET WITH 7 NOZZLES	5 / WF505 SIMILAR	CRYSTAL FOUNTAINS STREAM JETS #WMD-100 (800) 779-0748
	REMARKS: SEVEN DIRECTIONAL WATER JETS ON CUSTOM PVC MANIFOLD. MAXIMUM WATER VELOCITY FOR INTERACTIVE PLAY IS 20 FT./SEC. INSTALL PER MANUFACTURER'S INSTRUCTIONS AND AT ANGLE AS SHOWN ON DETAIL. PROVIDE CHANNEL THRU THE COPING STONE TO ACCOMMODATE THE WATER FLOW (FIELD CUT)			
9	WATER LAVA	2	6 / WF505	WATER ODYSSEY #W068
	REMARKS: PROVIDE LEVEL (HORIZONTAL) PLANE AT NOZZLE FOR VERTICAL WATER SPRAY. STAINLESS STEEL CONSTRUCTION. INSTALL PER MANUFACTURER'S REQUIREMENTS. PROVIDE THICKENED FLOOR SLAB AND LEVELING PAD AS REQUIRED. PROVIDE COLOR CHOICES OF ACRYLIC TOP FOR SELECTION BY ARCHITECT.			
10	VOLLEYBALL POSTS ANCHORS AND NET	1 NET WITH WITH TWO POSTS	4 / WF505	SR SMITH COMMERCIAL VOLLEYBALL GAME WITH CUSTOM WIDTH NET

Hastings+Chivetta
ARCHITECTURE • PLANNING • ENGINEERING

MHTN Architects, Inc.
420 East South Temple
Suite 100
Salt Lake City, Utah 84111
TEL 801.595.6700
FAX 801.595.6717
www.mhtn.com

UNIVERSITY OF UTAH
STUDENT LIFE CENTER

PROJECT NO. 08015750

DATE: May 28, 2013

Water Design Inc
5047 S. Galleria Dr.
Murray, Utah 84123

SHEET NUMBER
AD01-WF03

SHEET REFERENCE
WF401.0

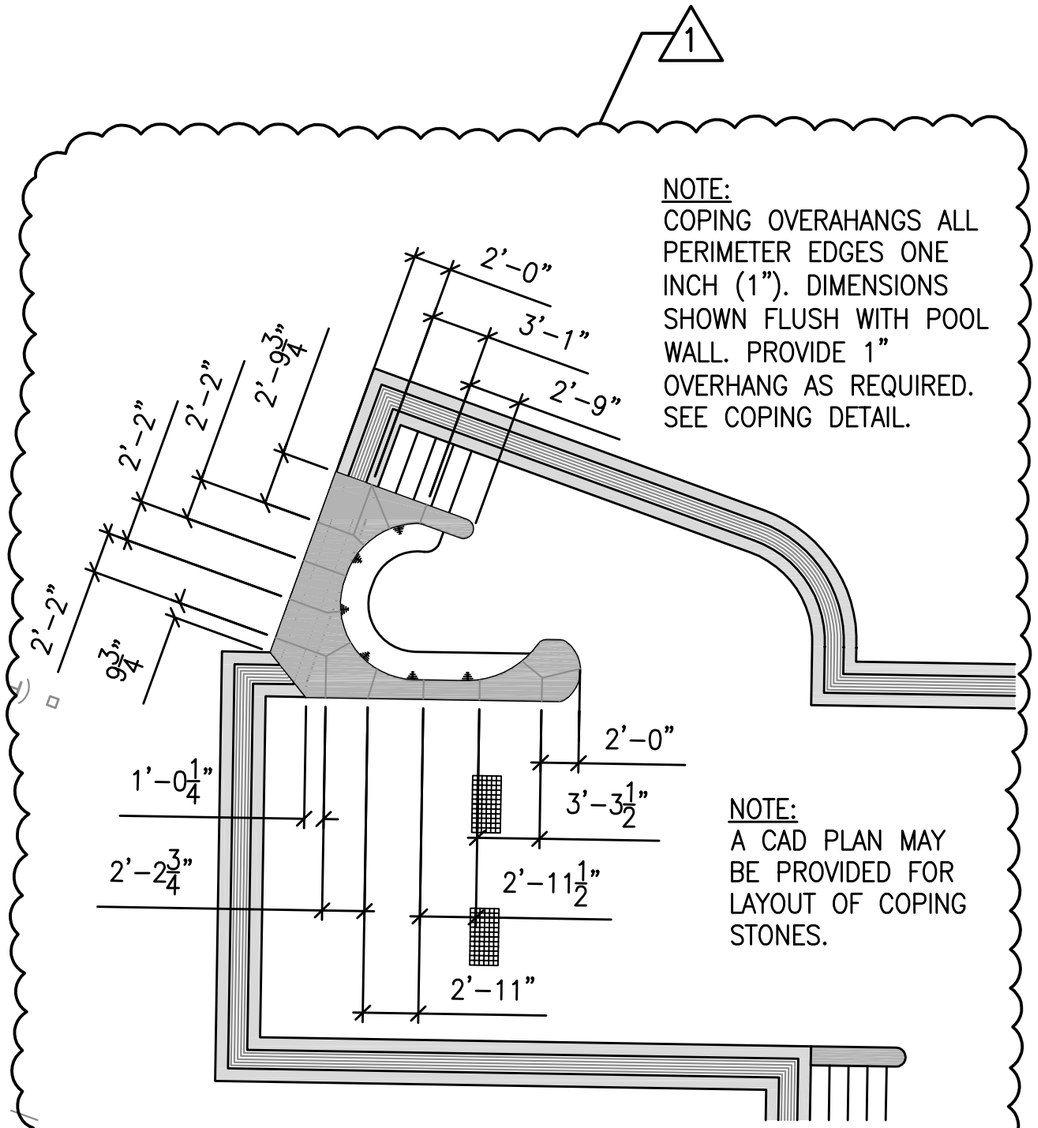

NOTE:
COPING OVERAHANGS ALL PERIMETER EDGES ONE INCH (1"). DIMENSIONS SHOWN FLUSH WITH POOL WALL. PROVIDE 1" OVERHANG AS REQUIRED. SEE COPING DETAIL.

NOTE:
A CAD PLAN MAY BE PROVIDED FOR LAYOUT OF COPING STONES.

COPING SEGMENT DIMENSION PLAN AT BUBBLE COUCH

SCALE: 1/8" = 1'-0"

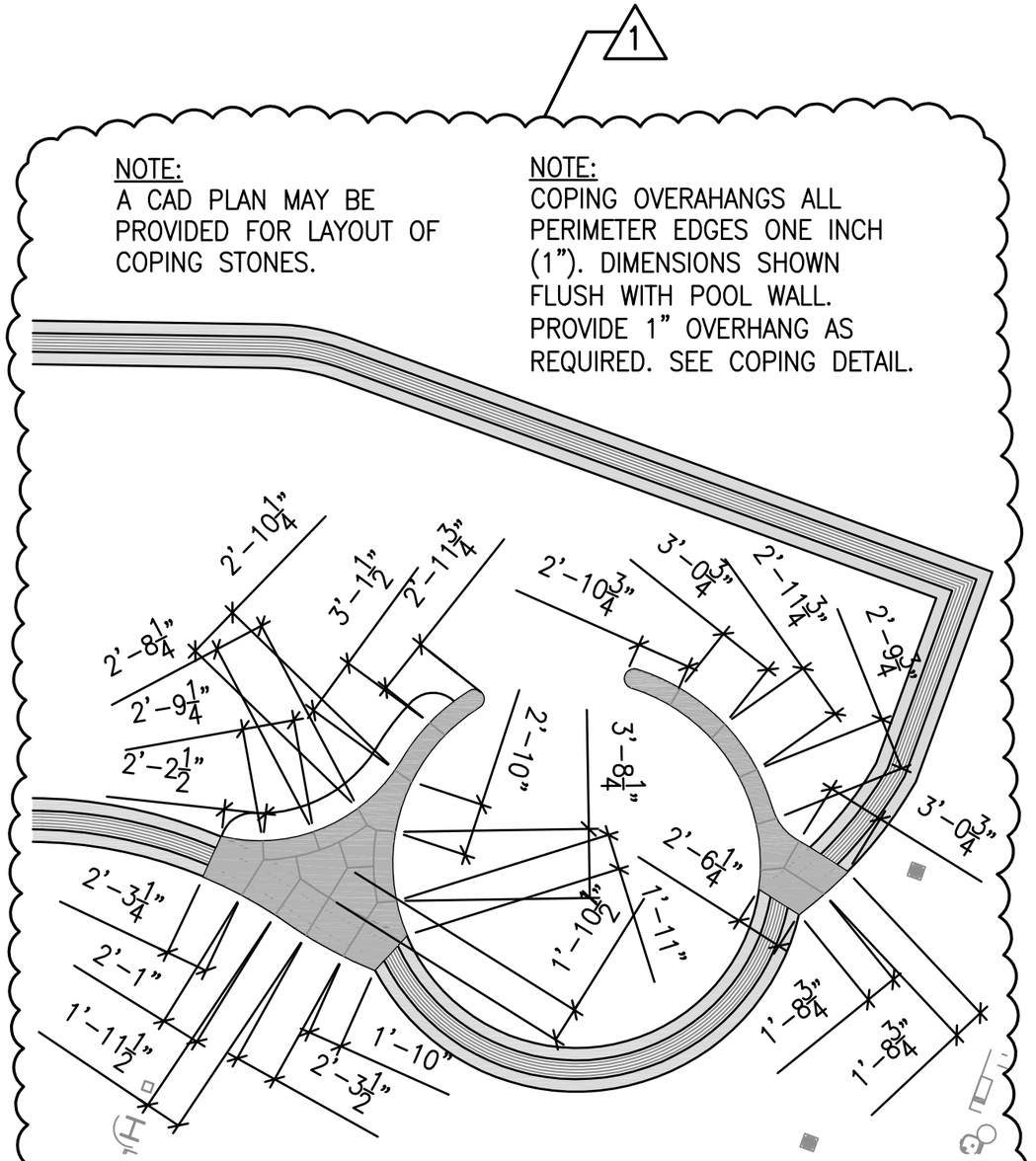

NOTE:
A CAD PLAN MAY BE PROVIDED FOR LAYOUT OF COPING STONES.

NOTE:
COPING OVERAHANGS ALL PERIMETER EDGES ONE INCH (1"). DIMENSIONS SHOWN FLUSH WITH POOL WALL. PROVIDE 1" OVERHANG AS REQUIRED. SEE COPING DETAIL.

COPING SEGMENT DIMENSION PLAN AT CIRCULAR AREA

SCALE: 1/8" = 1'-0"

MHTN ARCHITECTS
420 East South Temple
Suite 100
Salt Lake City, Utah 84111
TEL 801.595.6700
FAX 801.595.6717
www.mhtn.com

Hastings+Chivetta
ARCHITECTURE • PLANNING • ENGINEERING
622 Emerson
Suite 200
Saint Louis, MO 63141
TEL 314.863.5717
FAX 314.863.2823

WATER DESIGN, INC.
5047 Galleria Drive
Murray, Utah 84123
Telephone (801) 461-4009
Telefax (801) 461-4069
www.waterdesigninc.com

UNIVERSITY OF UTAH
STUDENT LIFE CENTER
1836 E. BALLIF ROAD
SALT LAKE CITY, UTAH 84112

PROJECT NO. 2010562
DATE: MAY 28, 2013

SHEET REFERENCE
WF401.1
SHEET NUMBER
AD01-WF04

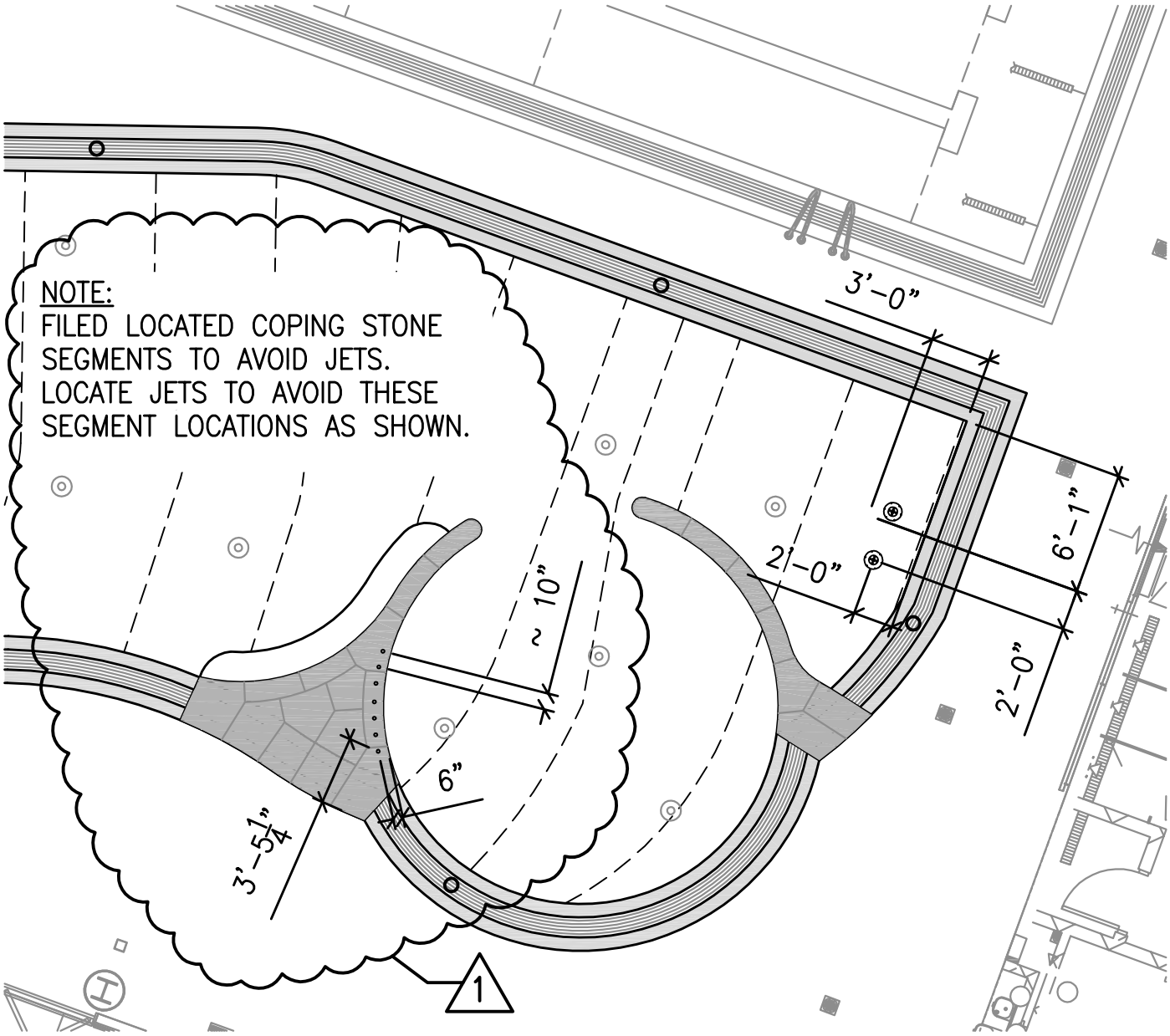

ACTIVITY POOL FEATURE DIMENSION PLAN

SCALE: 1/8" = 1'-0"

Hastings+Chivetta
ARCHITECTURE • PLANNING • ENGINEERING

MHTN Architects, Inc.
420 East South Temple
Suite 100
Salt Lake City, Utah 84111
TEL 801.595.6700
FAX 801.595.6717
www.mhtn.com

UNIVERSITY OF UTAH
STUDENT LIFE CENTER

PROJECT NO. 2010562

DATE: May 28, 2013

Water Design Inc.
5047 S. Galleria Dr.
Murray, Utah 84123

SHEET NUMBER
AD01-WF05

SHEET REFERENCE
WF401.3

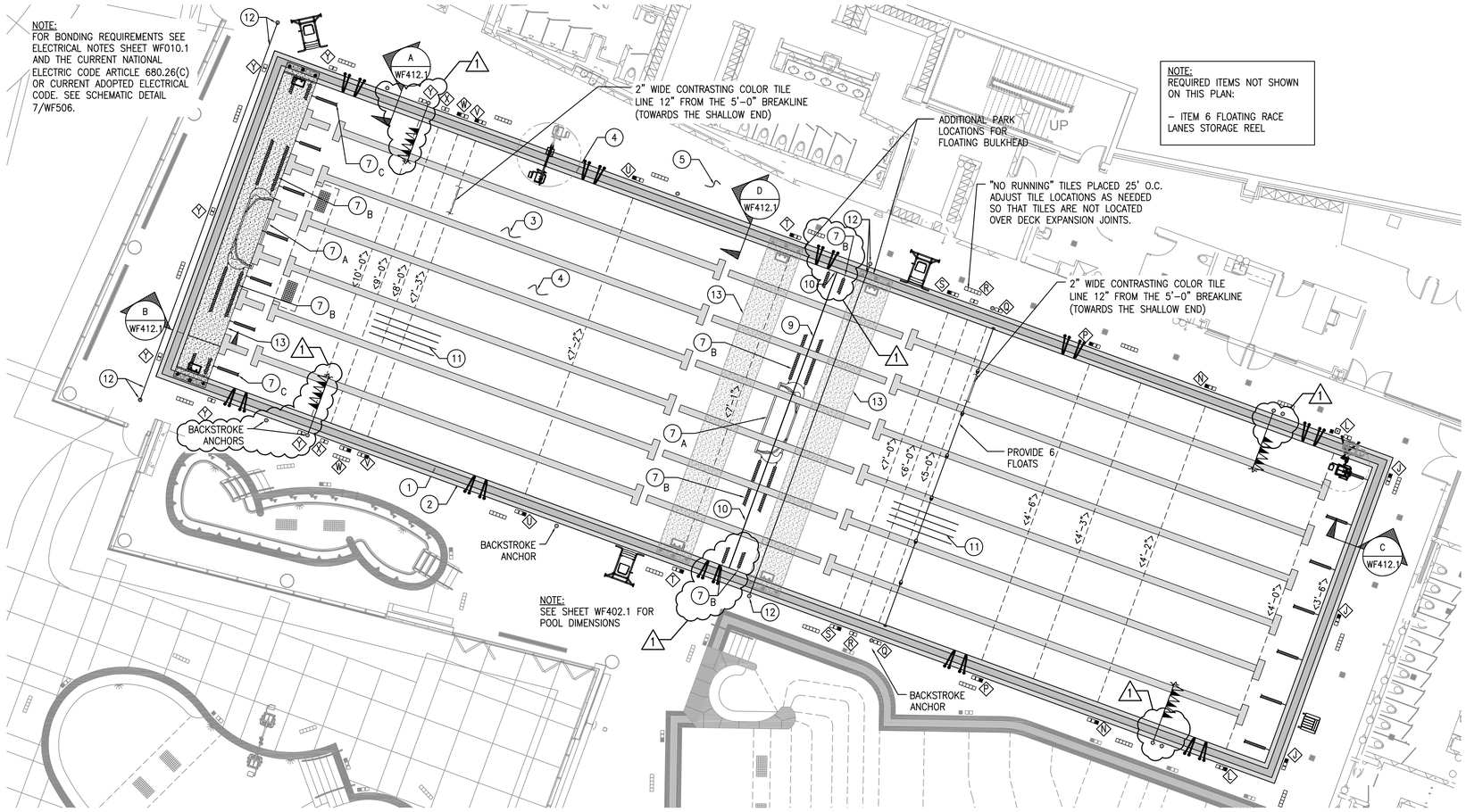

NOTE:
REQUIRED ITEMS NOT SHOWN ON THIS PLAN:

– ITEM 6 FLOATING RACE LANES STORAGE REEL

50 METER LAP POOL DATA

SIZE:	46'–0" x 169'–2 1/2"
WATER DEPTH:	3'–6" TO 10'–3"
SHAPE:	RECTANGULAR
CONSTRUCTION TYPE:	SHOTCRETE
PERIMETER AREA:	7,784 SQ.FT.
WATER AREA: (LESS SF AREA OF BULKHEAD)	7,554 SQ.FT.
PERIMETER:	430'–5"
VOLUME:	352,601 GALLONS
MIN. FLOW:	1,175 GPM
MAX. FLOW:	1,300 GPM
TURNOVER AT MINIMUM FLOW:	5 HOUR

ALTERNATE BID 1

THIS 50 METER LAP POOL AND ITS PIPING IS AN ALTERNATE BID ITEM

ENLARGED 50 METER LAP POOL PLAN

SCALE: 1/8" = 1'-0"

50 METER LAP POOL DECK EQUIPMENT SCHEDULE

MARK	DESCRIPTION	QUANTITY	DETAIL	REQUIREMENT
F	DEPTH MARKER TILES	SEE PLAN	1/WF501	IN-LAYS, INC. OR EQUAL

REMARKS: FROST PROOF GLAZED TILE W/4" HIGH NUMBERS WITH CONTRASTING COLOR BACKGROUND ON VERTICAL WALL AT WATERLINE. PROVIDE 6" x 6" FROST PROOF NON-SKID TILE W/4" HIGH NUMBERS WITH CONTRASTING COLOR BACKGROUND ON POOL DECK. SEE DETAIL FOR DEPTH MARKER KEY. WATER DEPTH SHALL BE PLAINLY MARKED AT LOCATION OF MINIMUM AND MAXIMUM POOL WATER DEPTHS AND AT ONE FOOT INCREMENTS OF DEPTH. MARKERS SHALL BE SPACED AT MAX. 25'–0" C.C. TILES PROVIDED BY POOL CONTRACTOR AND INSTALLED BY DECK CONTRACTOR.

MARK	DESCRIPTION	QUANTITY	DETAIL	REQUIREMENT
NO DIVING	"NO DIVING" ICON TILES	SEE PLAN	1/WF501	IN-LAYS, INC. OR EQUAL

REMARKS: 6" X 6" NON-SKID, FROSTPROOF, CERAMIC NO DIVING TILE WITH LETTERING AND ICON ON CONTRASTING COLOR BACKGROUND ON POOL DECK. AT 25'–0" C.C. MAXIMUM ADJACENT TO DEPTH MARKERS IN LOCATIONS AS SHOWN ON THE PLAN. TILES PROVIDED BY POOL CONTRACTOR AND INSTALLED BY DECK CONTRACTOR.

MARK	DESCRIPTION	QUANTITY	DETAIL	REQUIREMENT
	"NO RUNNING" TILES	SEE PLAN	1/WF501	IN-LAYS, INC. OR EQUAL

REMARKS: 6" x 6" NON-SKID, FROSTPROOF, CERAMIC "NO RUNNING" TILES WITH 4" HIGH RED LETTERING ON CONTRASTING COLOR BACKGROUND. PLACE ON DECK AT 25'–0" C.C. MAXIMUM. "NO RUNNING" TILES PROVIDED BY POOL CONTRACTOR AND INSTALLED BY DECK CONTRACTOR

MARK	DESCRIPTION	QUANTITY	DETAIL	REQUIREMENT
G	HANDICAP LIFT AND ANCHOR	1	5/WF501	SPECTRUM PRODUCTS GALLATIN WP400 BASE STAND CUSTOM ANCHORAGE

REMARKS: WITH WIDE POOL BOND BEAM, PROVIDE THE LIFT WITH A CUSTOM BASE STAND, LEVELER FOOT AND A CUSTOM SEAT POLE. POOL CONTRACTOR SHALL PROVIDE THE LIFT COMPLETE WITH ANCHOR, FLEXIBLE HOSE, AND LIFT COVER. PROVIDE CONCRETE FOOTING SIZED PER MANUFACTURER'S RECOMMENDATIONS. POOL CONTRACTOR SHALL VERIFY THAT ALL ANCHORS ARE SET AT THE CORRECT ELEVATION JUST PRIOR TO THE DECK POUR. THE FLUSH MOUNTED WATER BOX SHALL BE MOUNTED IN THE DECK BY THE GENERAL CONTRACTOR AT THE LOCATION PER THE MANUFACTURER'S DETAIL. MECHANICAL CONTRACTOR SHALL PROVIDE THE FLUSH MOUNTED HOSE BIB BOX, SUPPLY LINE AND A HOSE SPIGOT WITH MINIMUM 55 PSI AND MAXIMUM 65 PSI FOR INSTALLATION INTO THE WATER BOX. HOSE BIB BOX SHALL HAVE DRAIN TO WASTE.

MARK	DESCRIPTION	QUANTITY	DETAIL	REQUIREMENT
	ADA COMPLIANT LIFT AND ANCHOR	1	6/SP400	SPECTRUM PRODUCTS SWIM LIFT TRAVELER II XRC-500

REMARKS: PROVIDE ELECTRICALLY (BATTERY) OPERATED LIFT COMPLETE WITH ANCHOR KIT (WITH KEY AND LID), STAINLESS STEEL TRANSPORT CART, BATTERY CHARGER, AN EXTRA BATTERY AND THE PROTECTIVE COVER. THE DECK CONTRACTOR SHALL INSTALL THE LIFT ANCHOR. POOL CONTRACTOR SHALL VERIFY THAT THE ANCHOR HAS BEEN INSTALLED AT THE CORRECT LOCATION/ ELEVATION PRIOR TO THE CONCRETE PLACEMENT.PROVIDE FOOTING PER MANUFACTURER'S RECOMMENDATIONS.

MARK	DESCRIPTION	QUANTITY	DETAIL	REQUIREMENT
	LIFEGUARD CHAIR – MOVABLE – 6' HIGH CHAIR	3	7/WF501	SPECTRUM PRODUCTS DISCOVERY #20160

REMARKS: PROVIDE LIFE GUARD CHAIRS COMPLETE WITH MOUNTED LIFE BUOY HOLDER AND RING GUIDE & SOCKET FOR SHEPHERD'S CROOK. LOCATE LIFE GUARD CHAIRS PER REQUIRED STATE AND LOCAL CODES, AND PER OWNER'S DIRECTIONS.

MARK	DESCRIPTION	QUANTITY	DETAIL	REQUIREMENT
	LIFEGUARD CHAIR SEAT HEIGHT 30"	1	8/WF501	LINCOLN "CHAMPION" #38-057 OR APPROVED EQUAL

REMARKS: PROVIDE RECYCLED PLASTIC GUARD CHAIR WITH LIFETIME WARRANTY. PROVIDE COLOR CHOICES TO ARCHITECT FOR SELECTION. LOCATE LIFEGUARD CHAIRS PER REQUIRED STATE AND LOCAL CODES, AND PER OWNER'S DIRECTIONS.

MARK	DESCRIPTION	QUANTITY	DETAIL	REQUIREMENT
	OUTLET FRAME AND GRATE		SEE LAP POOL PIPING PLAN AND FITTING SCHEDULE SHEET WF402.2	

MARK	DESCRIPTION	QUANTITY	DETAIL	REQUIREMENT
	"PRETZEL TYPE" GRABRAILS, ANCHORS AND RECESSED STEPS	10 SETS	6/WF501	SPECTRUM 30" BURBOT .065" THICKNESS CUSTOM LENGTH

REMARKS: PROVIDE STAINLESS STEEL PRETZEL STYLE GRABRAILS PROVIDE CUSTOM LENGTH TO ACCOMMODATE INSTALLATION BEHIND THE WIDE POOL GUTTER WALL / BOND BEAM. PROVIDE STAINLESS STEEL GRABRAILS WITH 4" BRONZE INSTITUTIONAL ANCHOR ASSEMBLY AND STAINLESS STEEL ROUND ESCUTCHEON PLATE (SPECTRUM #24097). FOUR ANCHORS AND FOUR ESCUTCHEON PLATES REQUIRED FOR EACH GRABRAIL SET. POOL CONTRACTOR SHALL VERIFY THAT ALL ANCHORS ARE SET AT THE CORRECT ELEVATION JUST PRIOR TO THE DECK PLACEMENT. PROVIDE THREE WHITE RECESSED STEPS PER GRABRAIL LOCATION (S.R. SMITH #62-209-4001).

MARK	DESCRIPTION	QUANTITY	DETAIL	REQUIREMENT
	SWIM LANE MARKERS AND WALL TARGET	SEE PLAN	6/WF501	WATERPROOF CERAMIC TILE

REMARKS: USE UNGLAZED CERAMIC TILE. PROVIDE CONTRASTING COLOR. SUBMIT COLOR AND TILE SIZE CHOICES TO ARCHITECT.

MARK	DESCRIPTION	QUANTITY	DETAIL	REQUIREMENT
	FLOATING SWIM LANE LINES AND WALL ANCHORS	14–25 YD LANES LINES 7–50M EXTENSIONS 14–WALL ANCHORS	N/A	COMPETITOR 4" DIAMETER DISKS

REMARKS: PROVIDE TWO SETS OF SEVEN 25 YD LANE LINES (TOTAL 14) WITH 7 CENTER CONNECTOR LANE LINES TO CREATE THE 50 METER LANE LINES. SUBMIT COLOR CHOICES OF LANE LINES TO ARCHITECT FOR SELECTION. THE LAST 15 FEET OF EACH LANE LINE SHALL BE A CONTRASTING COLOR. THE COLOR OF THE CENTER CONNECTING LANE LINES USED TO CREATE THE 50M LANES SHALL MATCH THE COLOR OF THE 25 YD LANES. POOL CONTRACTOR SHALL ALSO PROVIDE AND INSTALL ABS CUP ANCHORS WITH STAINLESS STEEL BAR. (STA–RITE OR APPROVED EQUAL. SEE DETAIL 10/SP503).

MARK	DESCRIPTION	QUANTITY	DETAIL	REQUIREMENT
1	BACKSTROKE STANCHION POSTS AND ANCHORS	4 POSTS AND 12 ANCHORS	11/WF501	PARAGON AQUATICS #38106 (8'–0")

REMARKS: STAINLESS STEEL POST 1.90" O.D.X 0.145" WALL. PROVIDE BRONZE SOCKETS WITH THREADED CAP (KOI PARAGON #38201TC). SEE PLAN FOR MULTIPLE ANCHOR LOCATIONS (FOR VARIOUS SWIM COURSES) POOL CONTRACTOR SHALL VERIFY THAT ALL ANCHORS ARE SET AT THE CORRECT ELEVATION JUST PRIOR TO THE DECK PLACEMENT. PROVIDE TWO SLIDING COLLARS WITH ONE EYEBOLT EACH COLLAR FOR EACH STANCHION POST.

MARK	DESCRIPTION	QUANTITY	DETAIL	REQUIREMENT
	BACKSTROKE LINE W/PENNANTS	2 PENNANT LINES	N/A	LINCOLN AQUATICS "CHAMPION" PENNANTS #53-020

REMARKS: PROVIDE MINIMUM 46 PENNANTS (VERIFY). PROVIDE PENNANTS COMPLETE WITH CABLE (#50–175) AND HARDWARE PACKAGE (#50–030). PROVIDE SUBMITTAL FOR ARCHITECTS SELECTION OF CUSTOM NUMBERING AND/ OR LETTERING TO PROVIDE ON THE PENNANTS. ARCHITECT TO SELECT COLORS. SUBMIT ALL COLORS INCLUDING PREMIUM FOR SELECTION. VERIFY LENGTH OF CABLE REQUIRED TO REACH STANCHION POSTS.

MARK	DESCRIPTION	QUANTITY	DETAIL	REQUIREMENT
	SAFETY ROPE WITH FLOATS	1 LOCATION	9/WF501	LINCOLN AQUATICS

REMARKS: SPACE FLOATS MAXIMUM 7'–0" C.C. PROVIDE 3/4"ø ROPE (VERIFY LENGTH REQUIRED). PROVIDE FLOATS, FLOAT COLLARS AND HOOKS. FASTEN FLOATS TO ROPE WITH FLOAT COLLARS SO THAT FLOATS CANNOT SLIDE ON ROPE. PROVIDE NUMBER OF FLOATS AS SHOWN ON PLAN. PROVIDE ABS CUP ANCHORS WITH STAINLESS STEEL BAR. (STA RITE OR APPROVED EQUAL. SEE DETAIL 10/WF503).

MARK	DESCRIPTION	QUANTITY	DETAIL	REQUIREMENT
1	POOL STRUCTURE	AROUND POOL PERIMETER	A/WF412.1	STEEL REINFORCED SHOTCRETE

REMARKS: REINFORCED SHOTCRETE GUTTER POOL STRUCTURE. POOL SHELL SHALL BE BONDED PER THE REQUIREMENTS OF THE NATIONAL ELECTRIC CODE ARTICLE 680.

MARK	DESCRIPTION	QUANTITY	DETAIL	REQUIREMENT
2	POOL GUTTER	AROUND POOL PERIMETER	1/WF412.1 1/WF412.1	PRECAST STONE GUTTER COPING W/LAWSON AQUATICS PARALLEL FLOW GRATING

REMARKS: PROVIDE PRECAST STONE GUTTER EDGE WITH HAND HOLD AROUND PERIMETER OF POOL. PROVIDE PARALLEL FLOW GRATING AROUND PERIMETER OF GUTTER. PROVIDE PRECAST COPING STONE BEHIND GRATING. SEAL INTERIOR OF GUTTER WITH AQUAFIN 2KM.

MARK	DESCRIPTION	QUANTITY	DETAIL	REQUIREMENT
3	POOL WALL AND FLOOR INTERIOR FINISH	AS REQUIRED	1/WF412.1	2" X 2" NON–SLIP CERAMIC TILE

REMARKS: FINISH SHALL BE WATERPROOF AND FREE FROM DEFECTS. PROVIDE TILE SAMPLES TO ARCHITECT FOR SELECTION. COLOR SELECTION BY ARCHITECT.

MARK	DESCRIPTION	QUANTITY	DETAIL	REQUIREMENT
4	POOL SHELL WATERPROOFING	AS REQUIRED	N/A	AQUAFIN 2K/M OR EQUAL

REMARKS: PRIOR TO THE TILE FINISH INSTALLATION, WATERPROOF INTERIOR OF POOL. PREPARE SURFACE PER MANUFACTURER'S SPECIFICATIONS. SEE WATERPROOFING SPECIFICATIONS AND MANUFACTURER'S INSTALLATION INSTRUCTIONS FOR ADDITIONAL INFORMATION AND REQUIREMENTS.

MARK	DESCRIPTION	QUANTITY	DETAIL	REQUIREMENT
5	POOL DECK	AS REQUIRED	CONTINUOUS AROUND POOL	NON–SLIP CONCRETE

REMARKS: MINIMUM 5' WIDE NON–SLIP CONCRETE DECK CONTINUOUS AROUND POOL PERIMETER. SLOPE DECK 1/4" PER FOOT AWAY FROM BACK OF GUTTER TO DECK DRAINS. DECK AND DECK DRAINS BY GENERAL CONTRACTOR. INDOOR DECK DRAINS SHALL DRAIN TO SANITARY SEWER.

MARK	DESCRIPTION	QUANTITY	DETAIL	REQUIREMENT
6	FLOATING RACE LANE STORAGE REEL	3	N/A	PARAGON AQUATICS #75101–SS

REMARKS: EACH REEL PROVIDES 540' OF LANE CAPACITY WITH STAINLESS STEEL CASTERS. PROVIDE WITH STORAGE REEL COVERS.

MARK	DESCRIPTION	QUANTITY	DETAIL	REQUIREMENT
7 A	WATER POLO FLOATING GOAL	2 GOALS	N/A	LINCOLN AQUATICS ANTIMAVE SENIOR FLIP FLOAT

REMARKS: PROVIDE WATER POLO GOALS COMPLETE WITH NETS, POWDER COATED ALUMINUM FRAME WITH FIBERGLASS FLOATATION PANELS.

MARK	DESCRIPTION	QUANTITY	DETAIL	REQUIREMENT
7 B	WATER POLO OUT–OF–BOUNDS DEMARCATION FLOATING LINES	4 LANE LINES AND 4 WALL ANCHORS	N/A	LINCOLN AQUATICS COMPETITOR #50–045 4" DIAMETER DISCS

REMARKS: PROVIDE CUSTOM LENGTH LINES TO IDENTIFY WATER POLO OUT–OF–BOUNDS DEMARCATION. POOL CONTRACTOR SHALL PROVIDE FLOATING LINE DISTRIBUTOR WITH POOL DIMENSIONS / LAYOUT FOR COMPETITOR SWIM PRODUCTS TO DETERMINE THE REQUIRED LENGTH OF LINES TO BE BE ABLE TO SPAN BETWEEN AND CONNECT AT ONE END TO THE FLOATING GOALS AND THE OTHER END OF THE LINES SHALL ATTACH TO WALL ANCHORS. PROVIDE COMPLETE WITH HARDWARE PACKAGE FOR EACH LANE AS REQUIRED. PROVIDE DISC COLOR CHOICES TO ARCHITECT FOR SELECTION. POOL CONTRACTOR SHALL PROVIDE AND INSTALL ABS CUP ANCHORS WITH STAINLESS STEEL BAR. (STA–RITE OR APPROVED EQUAL. SEE DETAIL 10/SP503).

MARK	DESCRIPTION	QUANTITY	DETAIL	REQUIREMENT
7 C	WATER POLO COURSE FLOATING LANE LINE & HARDWARE PACKAGE	2 LANE LINES	N/A	LINCOLN AQUATICS COMPETITOR #50–045 4" DIAMETER DISCS

REMARKS: PROVIDE CUSTOM LENGTH LINES TO IDENTIFY WATER POLO COURSE. CONFIGURE THE LANES TO IDENTIFY COURSE ZONES. POOL CONTRACTOR SHALL PROVIDE LANE DISTRIBUTOR WITH POOL DIMENSIONS / LAYOUT FOR COMPETITOR SWIM PRODUCTS TO DETERMINE THE REQUIRED ZONE DEMARCATION. PROVIDE COMPLETE WITH HARDWARE PACKAGE FOR EACH LANE AS REQUIRED. ONE END OF THE COURSE DEMARCATION FLOATING LINES SHALL UTILIZE THE SAME WALL ANCHORS AS THE OUTSIDE SWIM LANE LINES UTILIZE. THE OTHER END OF THE COURSE DEMARCATION LINE WILL CONNECT TO THE ANCHOR LOCATED ON THE BULKHEAD. (NO ADDITIONAL WALL ANCHORS REQUIRED). PROVIDE COLORS AS DESIGNATED BY USA WATER POLO REGULATIONS.

MARK	DESCRIPTION	QUANTITY	DETAIL	REQUIREMENT
8	TOE HOLD	DEEP END WALL	6/WF501	PER ANSI, STATE AND LOCAL CODE REQUIREMENTS

REMARKS: BOTTOM OF TOE HOLD SHALL SLOPE TOWARDS THE POOL TO ALLOW FOR COMPLETE DRAINAGE. NO PART OF THE TOE HOLD SHALL EXTEND PAST THE FACE OF THE WALL. BOTTOM OF TOE HOLD SHALL BE MIN. 3'–6" BELOW WATER LEVEL. POOL CONTRACTOR SHALL THICKEN THE POOL WALL BEHIND THE TOE HOLD.

MARK	DESCRIPTION	QUANTITY	DETAIL	REQUIREMENT
9	FLOOR CONTROL JOINT	1 LOCATION	2/WF413 3/WF413	SEE DETAIL 1

REMARKS: INSTALL WATERSTOP COMPATIBLE WITH CHEMICALLY TREATED WATER. PROVIDE JOINT WITH WR MEADOWS PRODUCTS: DECK–O–FOAM, P/G EPOXY PRIMER, KOOL ROD BACKER ROD AND POLYSUPHIDE SEALANT. PROVIDE TILE ON EITHER SIDE OF THE JOINT THAT MATCHES THE POOL TILE FINISH.

MARK	DESCRIPTION	QUANTITY	DETAIL	REQUIREMENT
10	WALL CONTROL JOINT	SEE PLAN	5/WF413	SEE DETAIL 1

REMARKS: INSTALL WATERSTOP COMPATIBLE WITH CHEMICALLY TREATED WATER. PROVIDE JOINT WITH WR MEADOWS PRODUCTS: DECK–O–FOAM, P/G EPOXY PRIMER, KOOL ROD BACKER ROD AND POLYSUPHIDE SEALANT. PROVIDE TILE ON EITHER SIDE OF THE JOINT THAT MATCHES THE POOL TILE FINISH.

MARK	DESCRIPTION	QUANTITY	DETAIL	REQUIREMENT
11	ADDITIONAL STEEL AT BREAKLINE	TWO LOCATIONS 12" O.C.	4/WF413	#4 REINFORCING BARS 10'–0" LONG EACH

MARK	DESCRIPTION	QUANTITY	DETAIL	REQUIREMENT
12	WATER POLO PROTECTIVE NETTING	TWO LOCATIONS EACH WITH TWO 10' HIGH POSTS AND ANCHORSWITH CUSTOM LENGTH NETS	N/A	LINCOLN AQUATICS CHAMPION SAFETY NETTING PACKAGE

REMARKS: PROTECTIVE NETTING SYSTEM SHALL BE COMPLETE WITH STAINLESS CARABINERS SPACED EVERY 2 FT OF NET, NETTING, BRONZE ANCHORS. POOL CONTRACTOR SHALL PROVIDE POST ANCHORS FOR INSTALLATION IN THE THICKENED DECK BY THE DECK CONTRACTOR. POOL CONTRACTOR SHALL CONFIRM THAT THE ANCHORS ARE IN THE CORRECT LOCATION PRIOR TO THE DECK POUR. ANCHORS SHALL HAVE THREADED CLOSURE PLATES FOR WHEN THE POSTS ARE NOT IN PLACE.

MARK	DESCRIPTION	QUANTITY	DETAIL	REQUIREMENT
13	MOVABLE BULKHEAD	1	SEE DETAILS SHEET WF508	STARK OR APPROVED EQUAL

REMARKS: 5' WIDE X 46' WATER SPAN X 5' DEEP. PROVIDE 3 DOCKING LOCATIONS ON POOL AS SHOWN ON PLAN. PROVIDE TARGETS AND LANE LINE ANCHORS ON BOTH SIDES OF BULKHEAD. PROVIDE WITH TOE HOLD ON BOTH SIDES OF BULKHEAD. PROVIDE COMPLETE WITH BLOWER TO INFLATE BELLOWS TO MOVE BULKHEAD.

The entire contents of the attached documents, including all sketches, plans, studies, drawings, schedules and specifications and all copyrights therein are, and shall remain the sole property of Water Design Incorporated. The documents and their contents may not be used, photocopied or reproduced digitally, electronically or in any other manner without the express prior written consent of Water Design Incorporated.

MHTN
ARCHITECTS
MHTN Architects, Inc.
420 East South Temple
Suite 100
Salt Lake City, Utah 84111
Telephone (801) 595-6700
Telefax (801) 595-6717
www.mhtn.com

Hastings+Chivetta
ARCHITECTURE • PLANNING • ENGINEERING
622 Emerson, Suite 200
St. Louis, MO 63141
Tel. 314.863.5717
Fax. 314.863.2623
www.hastingschivetta.com

Water Design Inc.
5047 S. Galleria Dr.
Murray, Utah 84123
Phone : (801) 261-4009
Fax : (801) 261-4069
www.waterdesigninc.com

BUILDING OFFICIAL STAMP

UNIVERSITY OF UTAH
STUDENT LIFE CENTER
1836 E. BALLIF ROAD
SALT LAKE CITY, UTAH 84112

SEAL

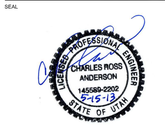

MHTN PROJECT NO.

DRAWN BY: ACR CHECKED BY: BA

ISSUED:

NO.	DATE	DESCRIPTION

CONTRACTOR TO VERIFY DRAWINGS IN FIELD.USE REFLECT LAST REVISION DATE.

NO.	DATE	DESCRIPTION
1	MAY 28, 2013	ADDENDUM 1

SHEET NAME

LAP POOL PLAN - ALT 1

BID DOCUMENTS
MAY 15, 2013

SHEET NUMBER

WF402.0

SHEET NUMBER

AD01-WF06

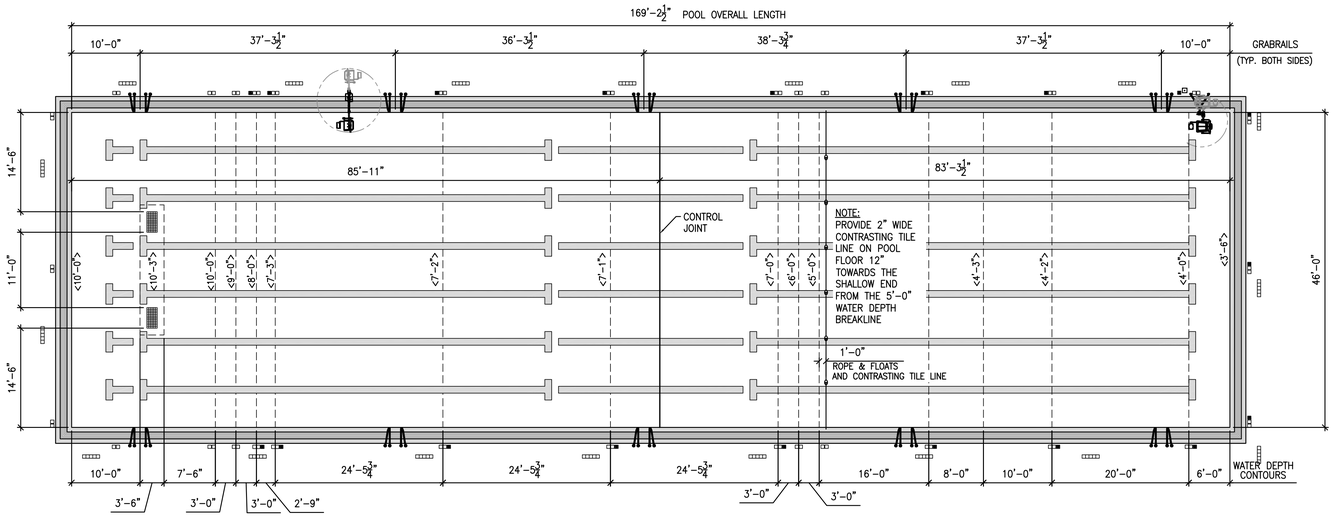

50 METER LAP POOL DIMENSION PLAN

SCALE: 1/8" = 1'-0"

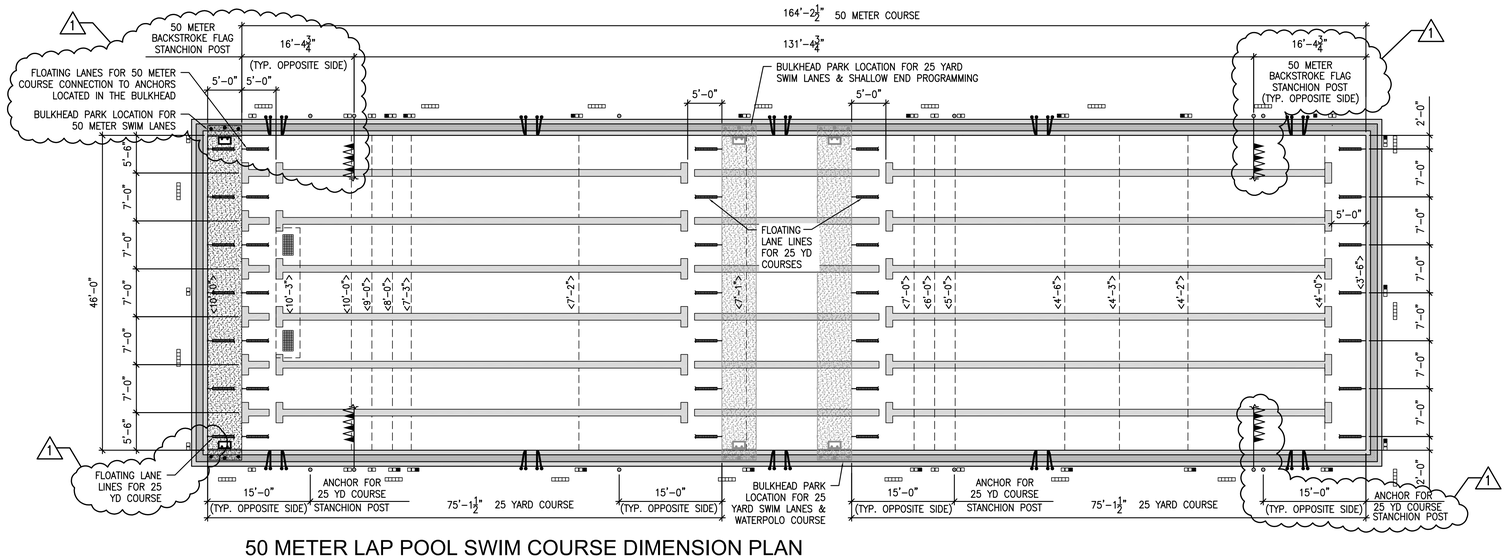

50 METER LAP POOL SWIM COURSE DIMENSION PLAN

SCALE: 1/8" = 1'-0"

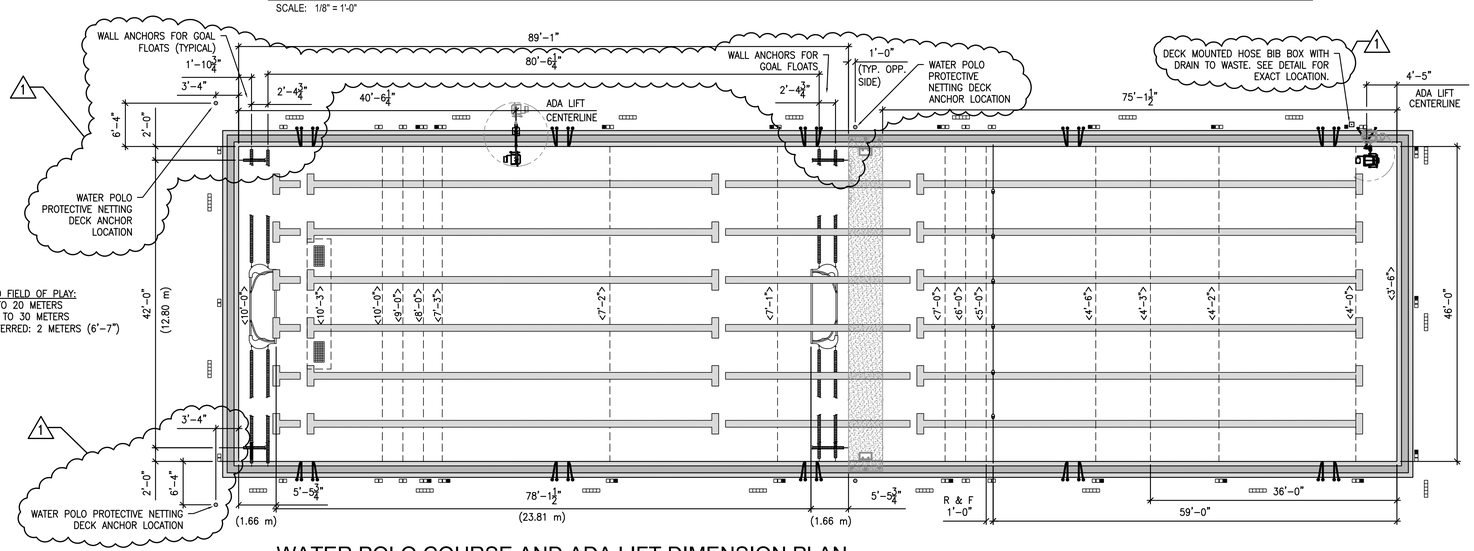

WATER POLO COURSE AND ADA LIFT DIMENSION PLAN

SCALE: 1/8" = 1'-0"

ALTERNATE BID 1

THIS 50 METER LAP POOL AND ITS PIPING IS AN ALTERNATE BID ITEM

The entire contents of the attached documents, including all sketches, plans, studies, drawings, schedules and specifications and all copyrights therein are, and shall remain the sole property of Water Design Incorporated. The documents and their contents may not be used, photocopied or reproduced digitally, electronically or in any other manner without the express prior written consent of Water Design Incorporated.

SHEET NUMBER

AD01-WF07

MHTN ARCHITECTS
MHTN Architects, Inc.
420 East South Temple
Suite 100
Salt Lake City, Utah 84111
Telephone (801) 595-6700
Telefax (801) 595-6717
www.mhtn.com

Hastings+Chivetta
ARCHITECTURE • PLANNING • ENGINEERING
622 Emerson, Suite 200
St. Louis, MO 63141
Tel. 314.863.5717
Fax. 314.863.2623
www.hastingschivetta.com

Water Design Inc.
5047 S. Galleria Dr.
Murray, Utah 84123
Phone : (801) 261-4009
Fax : (801) 261-4069
www.waterdesigninc.com

BUILDING OFFICIAL STAMP

UNIVERSITY OF UTAH
STUDENT LIFE CENTER
1836 E. BALLIF ROAD
SALT LAKE CITY, UTAH 84112

SEAL

LICENSED PROFESSIONAL ENGINEER
CHARLES ROSS ANDERSON
145580-2202
5-15-13
STATE OF UTAH

MHTN PROJECT NO.

DRAWN BY: ACR CHECKED BY: BA

ISSUED:

NO.	DATE	DESCRIPTION

CONTRACTOR TO VERIFY DRAWINGS IN FIELD USE REFLECT LAST REVISION DATE.

NO.	DATE	DESCRIPTION
1	MAY 28, 2013	ADDENDUM 1

SHEET NAME

LAP POOL DIMENSION PLAN - ALTERNATE 1

BID DOCUMENTS
MAY 15, 2013

SHEET NUMBER

WF402.1

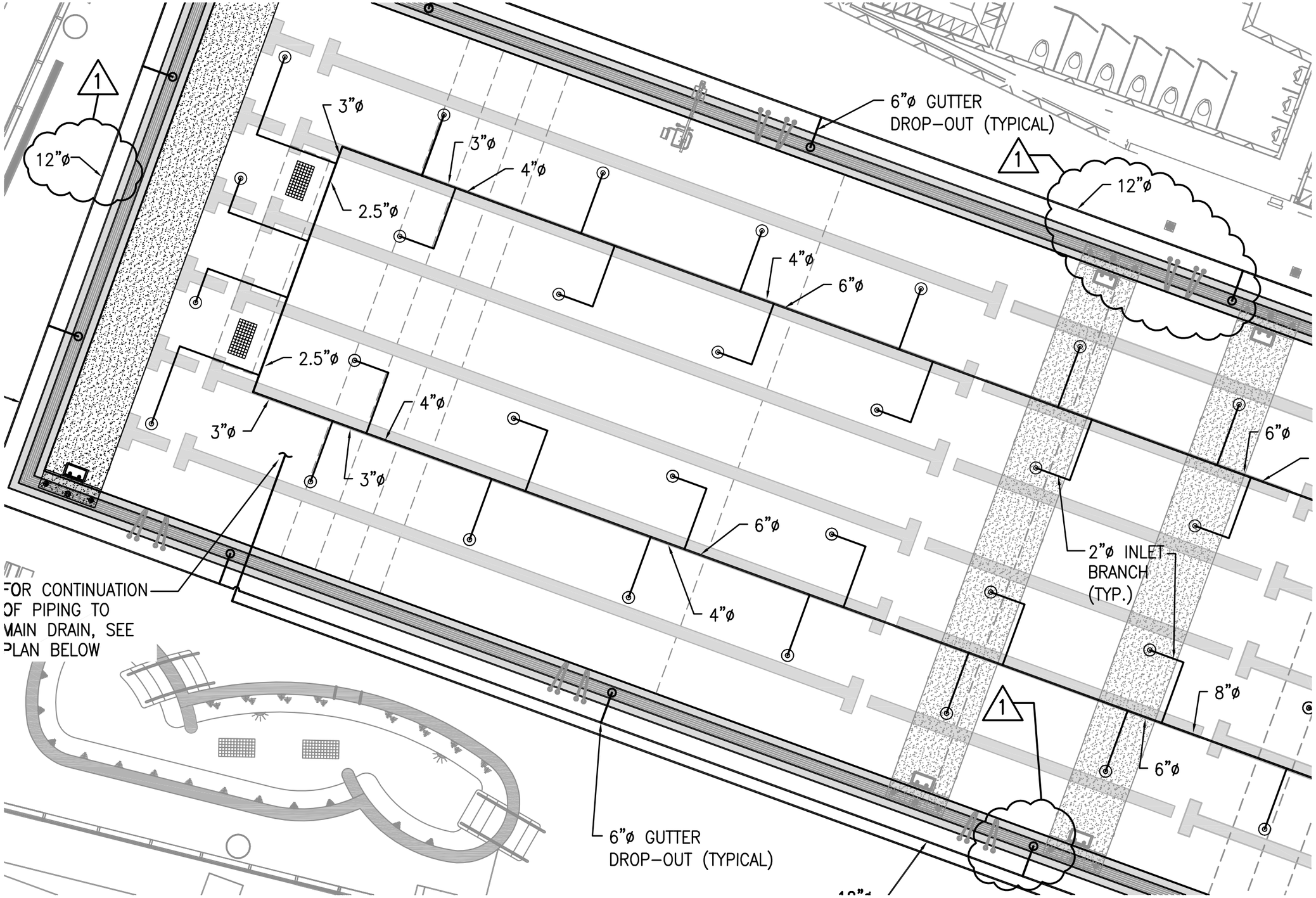

50 METER LAP POOL PIPING PLAN

SCALE: 1/8" = 1'-0"

N TRUE NORTH

MHTN ARCHITECTS
420 East South Temple
Suite 100
Salt Lake City, Utah 84111
TEL 801.595.6700
FAX 801.595.6717
www.mhtn.com

Hastings+Chivetta
ARCHITECTURE • PLANNING • ENGINEERING
622 Emerson
Suite 200
Saint Louis, MO 63141
TEL 314.863.5717
FAX 314.863.2823

WATER DESIGN, INC.
5047 Galleria Drive
Murray, Utah 84123
Telephone (801) 461-4009
Telefax (801) 461-4069
www.waterdesigninc.com

UNIVERSITY OF UTAH

STUDENT LIFE CENTER

1836 E. BALLIF ROAD
SALT LAKE CITY, UTAH 84112

PROJECT NO. 2010562

DATE: MAY 28, 2013

SHEET REFERENCE

WF402.2

SHEET NUMBER

AD01-WF08

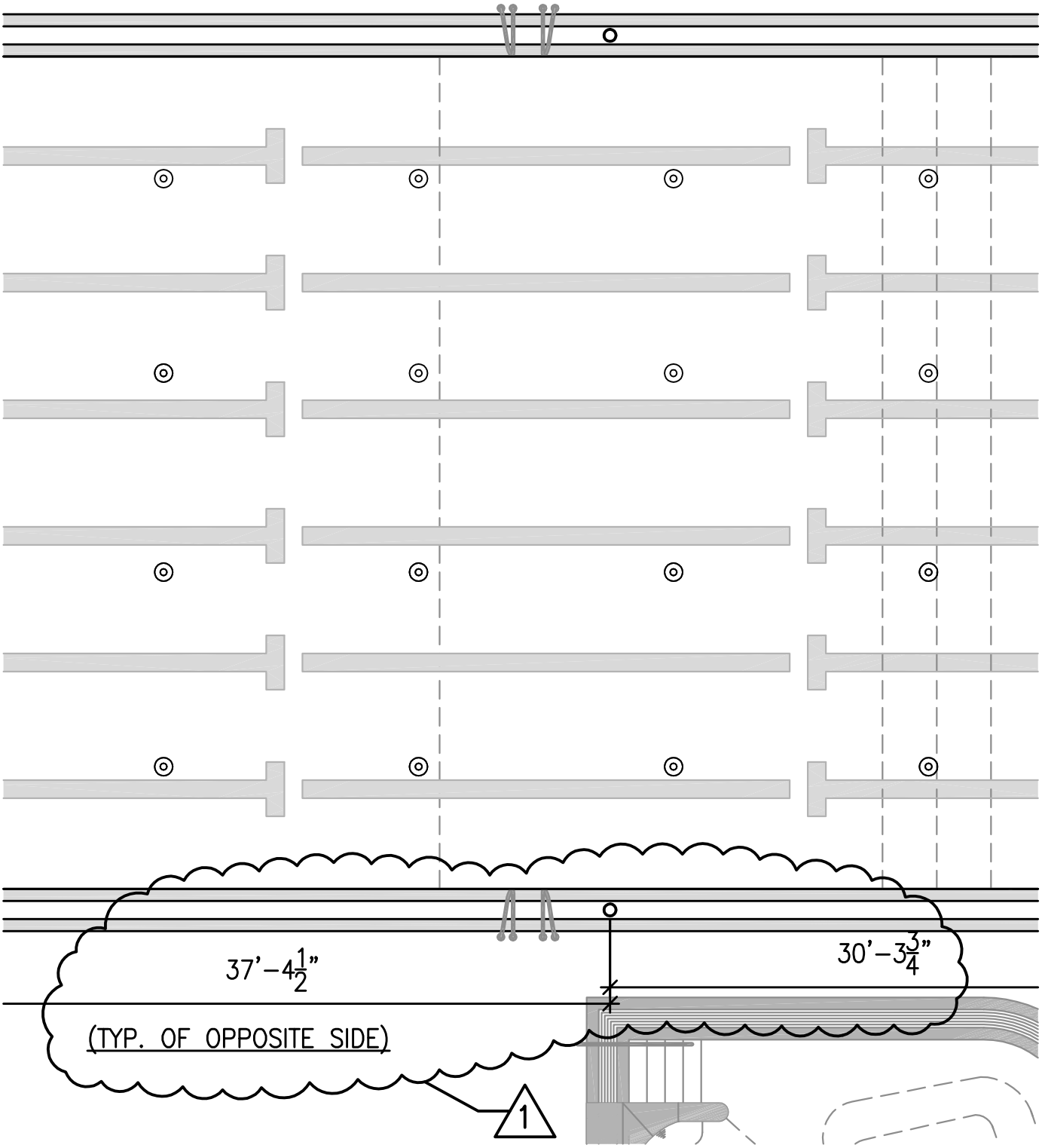

50 METER LAP POOL MAIN DRAIN AND GUTTER DROP-OUT DIMENSION PLAN

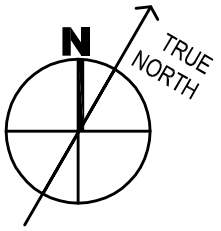

SCALE: 1/8" = 1'-0"

Hastings+Chivetta
ARCHITECTURE • PLANNING • ENGINEERING

MHTN Architects, Inc.
420 East South Temple
Suite 100
Salt Lake City, Utah 84111
TEL 801.595.6700
FAX 801.595.6717
www.mhtn.com

UNIVERSITY OF UTAH
STUDENT LIFE CENTER

PROJECT NO. 2010562

DATE: May 28, 2013

Water Design Inc
5047 S. Galleria Dr.
Murray, Utah 84123

SHEET NUMBER
AD01-WF09

SHEET REFERENCE
WF402.3

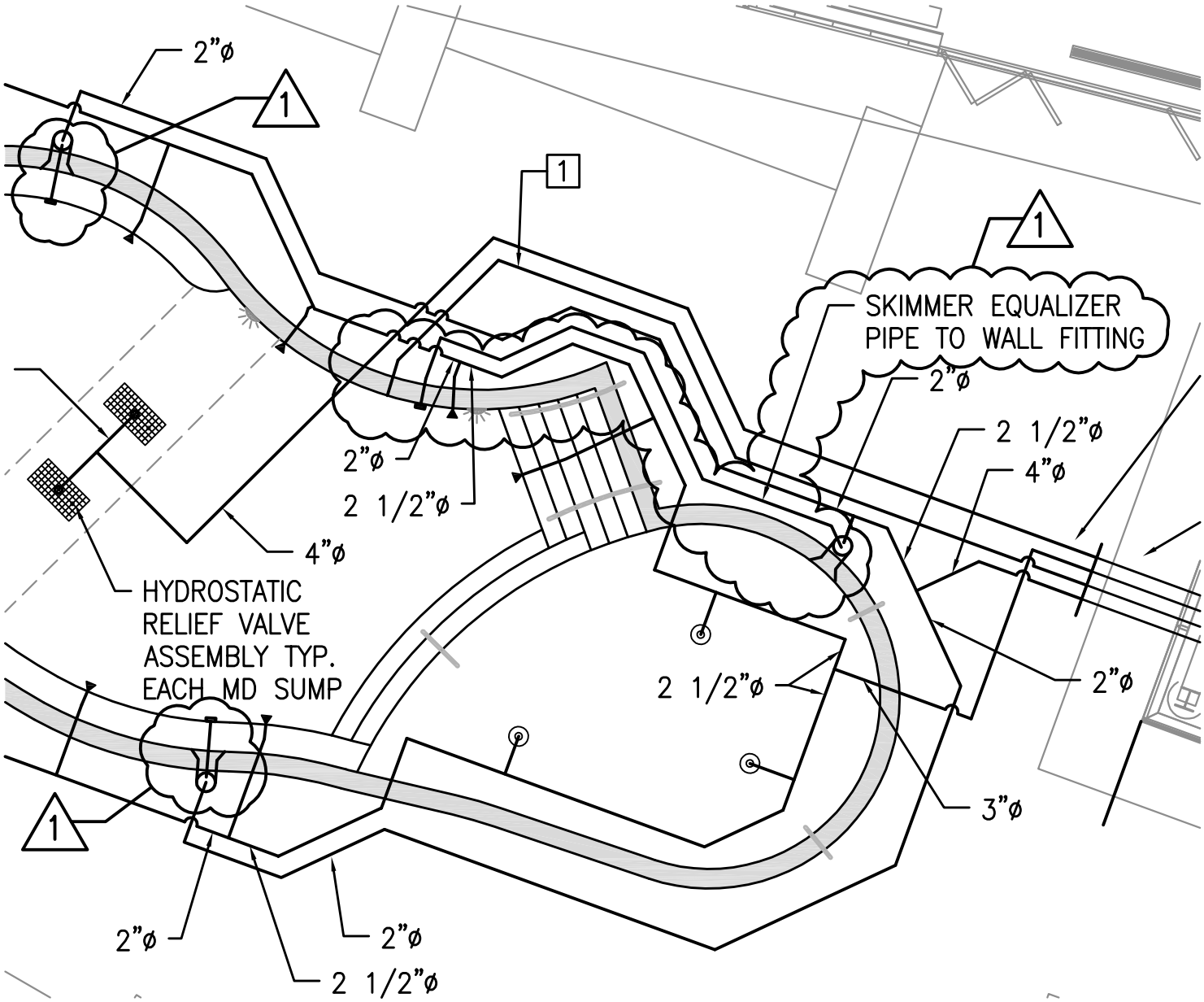

OUTDOOR LEISURE POOL FITTING AND PIPING PLAN

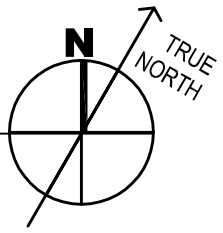

SCALE: 1/8" = 1'-0"

Hastings+Chivetta
ARCHITECTURE • PLANNING • ENGINEERING

MHTN Architects, Inc.
420 East South Temple
Suite 100
Salt Lake City, Utah 84111
TEL 801.595.6700
FAX 801.595.6717
www.mhtn.com

UNIVERSITY OF UTAH
STUDENT LIFE CENTER

PROJECT NO. 2010562

DATE: May 28, 2013

Water Design Inc.
5047 S. Galleria Dr.
Murray, Utah 84123

SHEET NUMBER
AD01-WF10

SHEET REFERENCE
WF405.2

OUTDOOR LEISURE POOL FITTING SCHEDULE

MARK	DESCRIPTION	QUANTITY	DETAIL	REQUIREMENT
	SURFACE SKIMMER	3	4 / WF507	WATERWAYS OR APPROVED EQUAL

REMARKS: NSF APPROVED. PROVIDE WITH FLOAT VALVE AND CHECK VALVE. PROVIDE EQUALIZER LINE WITH COVER COMPLIANT WITH VGBA REGULATIONS (SEE BELOW). PROVIDE ROUND FRAME WITH POUR-A-LID COVER. POUR-A-LID SHALL MATCH COPING AND/OR FAUX ROCK COLOR. SUBMIT LID COLOR CHOICES TO ARCHITECT. ARCHITECT SHALL SELECT COLOR.

	SURFACE SKIMMER EQUALIZER FITTING COVER	3	4 / WF507	AQUASTAR 6HP10* COVER WITH RND*** FITTING

REMARKS: PROVIDE CURRENT ADOPTED ASME/ANSI A112.19.8 STANDARD EQUALIZER COVER FITTING. SUBMIT COVER COLOR CHOICES TO ARCHITECT. ARCHITECT SHALL SELECT COLOR.

Hastings+Chivetta
ARCHITECTURE • PLANNING • ENGINEERING

MHTN Architects, Inc.
420 East South Temple
Suite 100
Salt Lake City, Utah 84111
TEL 801.595.6700
FAX 801.595.6717
www.mhtn.com

UNIVERSITY OF UTAH
STUDENT LIFE CENTER

PROJECT NO. 2010562

DATE: May 28, 2013

Water Design Inc.
5047 S. Galleria Dr.
Murray, Utah 84123

SHEET NUMBER
AD01-WF11

SHEET REFERENCE
WF405.2

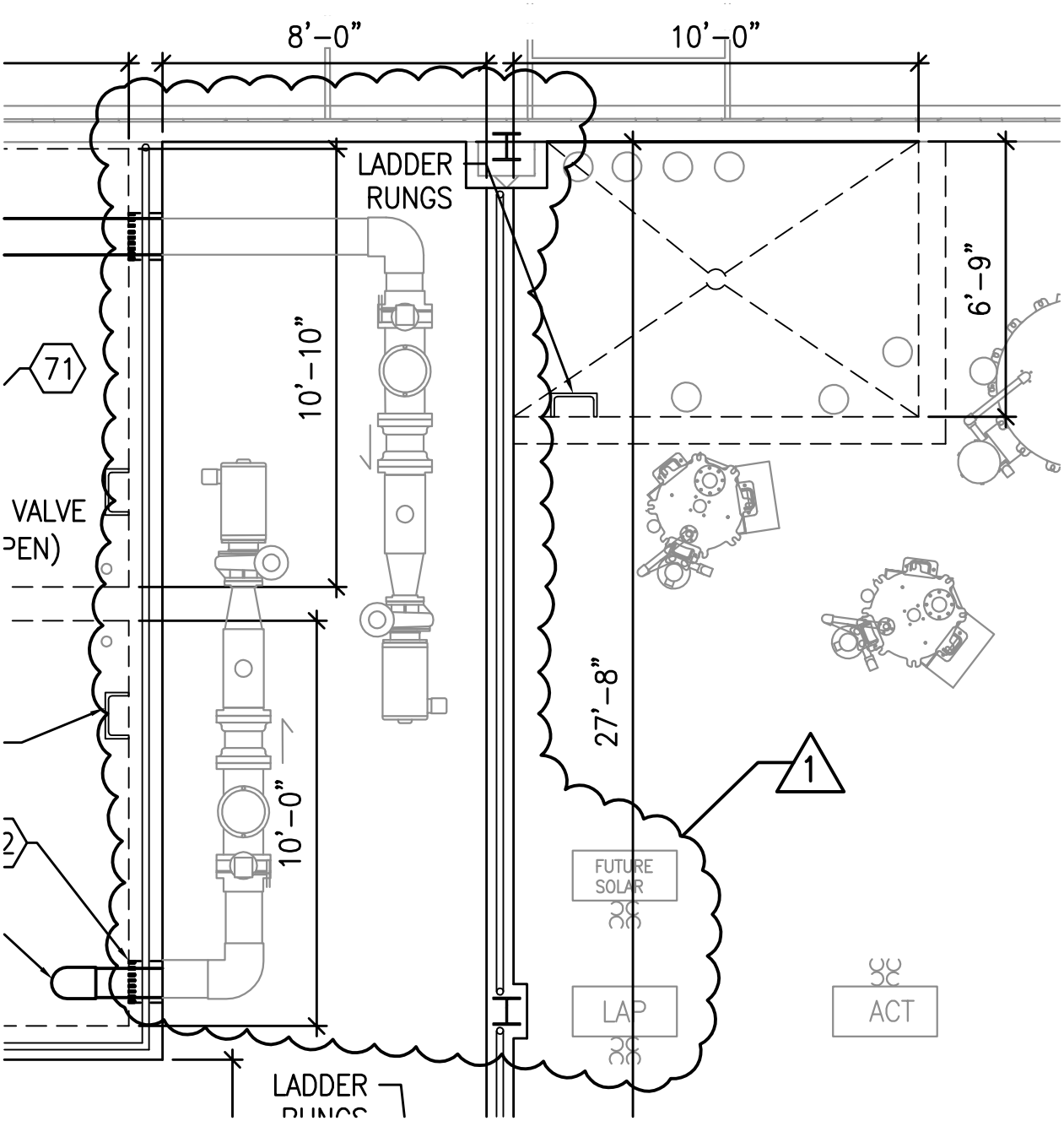

POOL EQUIPMENT ROOM UNDERGROUND PIPING PLAN (ALTERNATE BID)

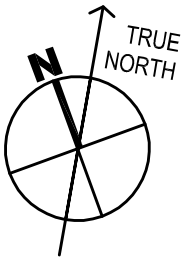

SCALE: 1/4" = 1'-0"

Hastings+Chivetta
ARCHITECTURE • PLANNING • ENGINEERING

MHTN Architects, Inc.
420 East South Temple
Suite 100
Salt Lake City, Utah 84111
TEL 801.595.6700
FAX 801.595.6717
www.mhtn.com

UNIVERSITY OF UTAH
STUDENT LIFE CENTER

PROJECT NO. 2010562

DATE: May 28, 2013

Water Design Inc.
5047 S. Galleria Dr.
Murray, Utah 84123

SHEET NUMBER
AD01-WF12

SHEET REFERENCE
WF407.1

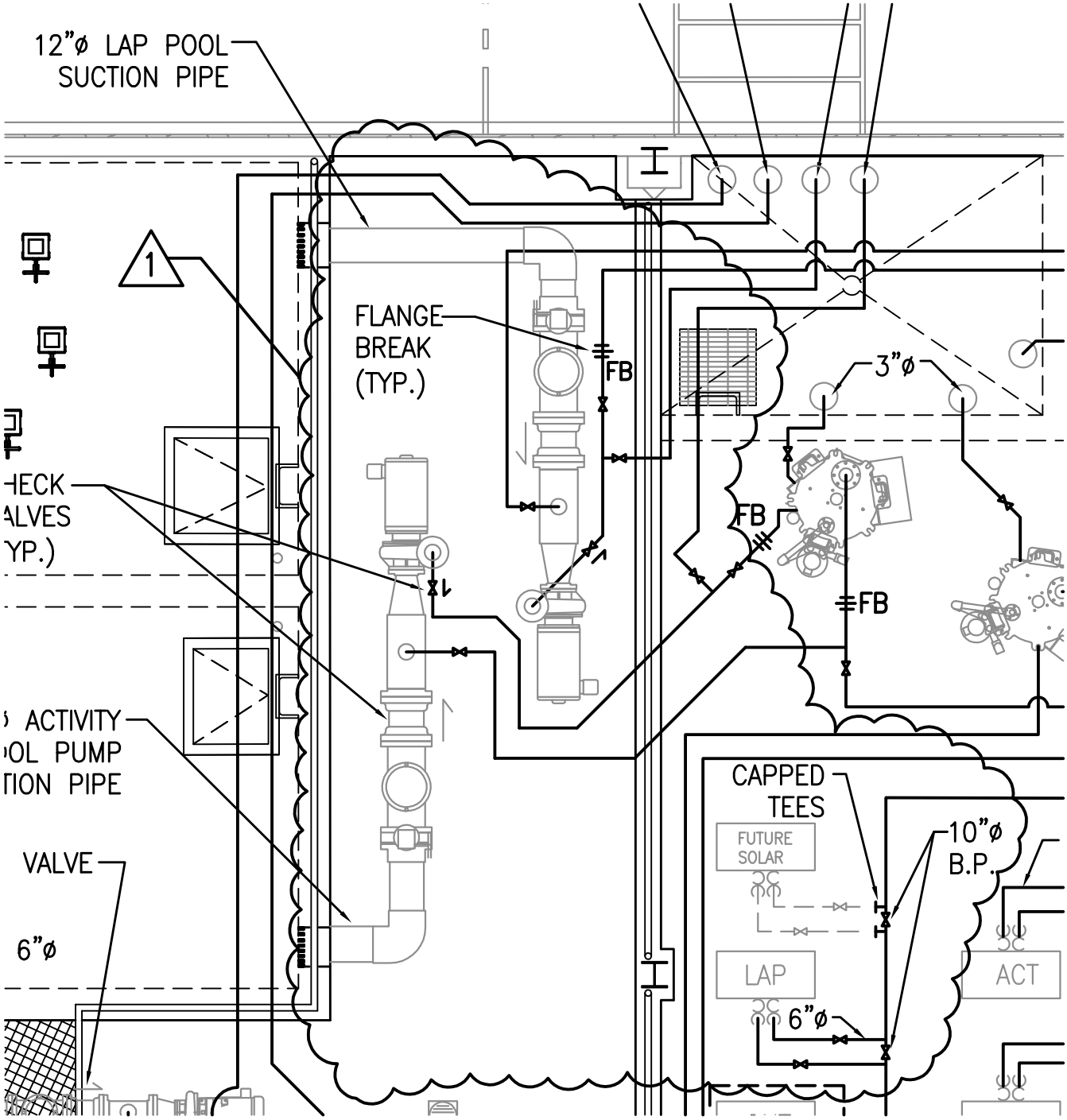

POOL EQUIPMENT ROOM CIRCULATION FACE PIPING PLAN (ALTERNATE BID)

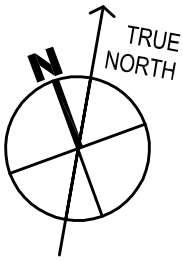

SCALE: 1/4" = 1'-0"

Hastings+Chivetta
ARCHITECTURE • PLANNING • ENGINEERING

MHTN Architects, Inc.
420 East South Temple
Suite 100
Salt Lake City, Utah 84111
TEL 801.595.6700
FAX 801.595.6717
www.mhtn.com

UNIVERSITY OF UTAH
STUDENT LIFE CENTER

PROJECT NO. 2010562

DATE: May 28, 2013

Water Design Inc.
5047 S. Galleria Dr.
Murray, Utah 84123

SHEET NUMBER
AD01-WF13

SHEET REFERENCE
WF407.1

EQUIPMENT SCHEDULES:

FOR EQUIPMENT SCHEDULE HEXEGON REFERENCES,
SEE SHEETS WF601.1 AND WF601.2

EQUIPMENT INTERLOCKING NOTES:

SEE SHEETS WF601.1 AND WF601.2

1

Hastings+Chivetta
ARCHITECTURE • PLANNING • ENGINEERING

MHTN Architects, Inc.
420 East South Temple
Suite 100
Salt Lake City, Utah 84111
TEL 801.595.6700
FAX 801.595.6717
www.mhtn.com

UNIVERSITY OF UTAH
STUDENT LIFE CENTER

PROJECT NO. 2010562

DATE: May 28, 2013

Water Design Inc.
5047 S. Galleria Dr.
Murray, Utah 84123

SHEET NUMBER
AD01-WF14

SHEET REFERENCE
WF407.1

SECTION 01 91 13

GENERAL COMMISSIONING REQUIREMENTS

TABLE OF CONTENTS

PART 1 GENERAL 2

1.01 THE COMMISSIONING PROCESS 2
1.02 DEFINITIONS AND ABBREVIATIONS: 3
1.03 SCOPE OF WORK 3
1.04 CONTRACTOR PARTICIPATION 3
1.05 COORDINATION & SCHEDULING 4
1.06 COMMISSIONING DOCUMENTATION 6

PART 2 PRODUCTS 8

2.01 TEST EQUIPMENT 8
2.02 BAS HARDWARE AND SOFTWARE SUPPORT 8
2.03 ELECTRICAL MONITORING SYSTEM HARDWARE AND SOFTWARE SUPPORT 10

PART 3 EXECUTION 10

3.01 PREFUNCTIONAL PROCEDURES 10
3.02 CONTRACTOR PRE-STARTUP TESTING 11
3.03 START-UP PROCEDURES 13
3.04 CONTRACTOR POST-STARTUP TESTING 14
3.05 FUNCTIONAL PERFORMANCE PROCEDURES 18
3.06 FIRE/LIFE SAFETY PROCEDURES 19
3.07 EMERGENCY SYSTEM PROCEDURE 22
3.08 ISSUE RESOLUTION 24
3.09 ACCEPTANCE 26
3.10 APPENDICES 27
APPENDIX 1 – ABBREVIATIONS AND DEFINITIONS 27
APPENDIX 2 – SAMPLE COMMISISONING TRACKING FORMS 31
APPENDIX 3 - LIST OF REQUIRED PREFUNCTIONAL CHECKLISTS 31
APPENDIX 4 – SAMPLE PREFUNCTIONAL CHECKLISTS 32
APPENDIX 5 – SAMPLE FUNCTIONAL PERFORMANCE CHECKLISTS 34

PART 1 GENERAL

1.01 THE COMMISSIONING PROCESS

A. Definition

1 Commissioning (Cx) is a systematic quality assurance process which helps ensure that selected equipment and systems are installed and operate per the contract documents and project's design intent.

2 The commissioning process consists of a series of procedures which start as soon as commissioned equipment and systems start being installed and continues thru the end of the construction process.

B. Commissioning Authority:

1 The Cx process for systems covered by the Cx specifications, will be led by independent commissioning authority (CxA).

C. Commissioning Team

1 The Cx process will be a team effort and will encompass and coordinate the traditionally separate functions of system documentation, system installation, equipment start-up, control system calibration, testing, balancing, verification and performance checkouts.

2 The General Contractor (CM/GC) and Sub-contractors installing and/or furnishing equipment and systems listed in Section 1.3 - Scope of Work including their subcontractors, suppliers, vendors and the TAB Contractors will be part of the Cx Team.

D. Impact on Contractor Responsibility:

1 The Cx Process does not reduce the responsibility of the installing contractors to provide a finished and fully functioning product. The Cx Process also does not alter any obligation the Contractors have for operation and maintenance manuals, training or any other contractual requirements.

2 The CxA does not have the authority to provide direction to the Contractors. Any issues arising during the Commissioning Process which impact schedules, costs or contractual obligations should be addressed to the CM/GC for resolution.

3 If necessary, the Cx Team will take-over responsibility for completion of the Contractor's commissioning responsibilities at the contractor's expense.

E. Commissioning Process Overview:

As part of the commissioning process, the contractors shall participate in the following Commissioning Activities:

1 Pre-Functional Procedures (PFPs) consist of a series of field observations conducted during the installation of commissioned equipment to verify that equipment is installed per the contract documents and is ready for startup.

2 Contractor Pre-Startup Testing consists of normally specified contractor testing such as leak testing of ductwork and piping and megger testing of electrical equipment. The commissioning process is used to ensure that this testing is rigorously executed and documented in preparation for equipment startup.

3 Equipment Startup Procedures ensure that startup is performed per the equipment manufacturer's recommended procedures and that startup activities and data are documented for future reference.

4 Contractor Post-Startup Testing consists of normally specified contractor testing activities occurring after startup including, but not limited to, TAB of ventilation and hydronic systems, control system point-to-point testing and testing of BAS sequences of operation, individual room thermostat operation, emergency generator testing, etc. The commissioning process provides oversight during the execution and documentation of these tests to ensure successful system operation.

5 Functional Performance Procedures (FPPs) determine if equipment, sub-systems and major systems operate in accordance with the design intent and the contract documents. Specific issues, which will be evaluated in these procedures, include equipment capacity & efficiency, operation of safeties and interlocks, control system operation stability and tuning.

6 Fire Life Safety Procedures (FLSPs) evaluate interactive operation of building systems in response to simulated fire conditions.

7 Emergency System Procedure (ESP) evaluates integrated operation of building systems in response to a simulated electric utility power failure. The ESP checks the operation of both the emergency power system(s) and all other building systems specified to operate under emergency power conditions.

1.02 DEFINITIONS AND ABBREVIATIONS:

A. Abbreviations and definitions of common commissioning process terms are attached as Appendix 1 to this specification.

1.03 SCOPE OF WORK

A. The following procedures and requirements apply to all contractors, sub-contractors, suppliers and vendors furnishing and/or installing components, equipment and systems covered by the commissioning scope as outlined below.

B. Covered Systems:

1 The commissioning scope will include the equipment and systems listed below:

01 91 13	General Cx Requirements
07 00 00	Thermal and Moisture Protection
08 00 00	Openings
22 08 00	Cx of plumbing
23 08 00	Cx of HVAC & DDC
26 08 00	Cx of Electrical Systems

1.04 CONTRACTOR PARTICIPATION

A. General

1 Contractors providing and/or installing equipment and systems included in Section 1.3 ‘Scope of Work’ above are required to participate fully in the Commissioning Process.

2 Participating Contractors shall include all costs to complete the Cx requirements in their contract price including all costs for sub-contractors, vendors and suppliers.

3 Participating Contractors shall ensure acceptable representation, with the means and authority to prepare, coordinate and execute the Commissioning Process as described in the contract documents.

4 Core/Shell and Build-out Contractors shall cooperate fully with each other and the Commissioning Process.

B. Contractor's Commissioning Representative (CCR)

1 Each contractor participating in the Cx Process will each designate a single-point contact person to work with the CxA and the Commissioning Team to coordinate commissioning activities, ensure timely execution of Cx Procedures and prompt resolution of commissioning issues.

2 The CCR shall be the contractor's Project Manager, Field Superintendent or similar with authority to do the following:

a. Make decisions regarding commissioning activities and issues

b. Schedule technicians for participation in commissioning activities

c. Interface between the Commissioning Team and the contractor's sub-contractors, vendors and suppliers.

d. Commit to commissioning schedules and completion dates.

3 The CCR will be responsible for coordinating the contractor's participation in the Cx Process. As part of this role, the CCR shall

a. Attend all Commissioning Meetings

b. Keep the CM/GC and CxA apprised of the contractor's progress, schedules and other matters impacting execution of the Commissioning Procedures.

c. Coordinate the contractor's work schedules and staffing to ensure that the qualified technician(s) are available and present during the agreed upon schedules and for sufficient duration to complete procedures, tests, adjustments, and/or problem resolutions.

d. Ensure that the contractors Commissioning Notebook(s) and Contractor Commissioning Documents are being maintained on-site, well organized and current as required in item 1.6 'Commissioning Documentation' of this specification.

C. Field Technicians

1 The Contractor shall provide qualified field technicians who are trained and familiar with installation, operation and troubleshooting of systems and equipment being commissioned for participation in the commissioning activities outlined in this document.

2 These same technicians shall be made available to assist the CxA in resolving commissioning Field Observation Notes (FONs®) issues and for repeat and follow-up commissioning tasks as required.

3 Contractors shall arrange for and provide technicians from their sub-contractors, vendors and suppliers where specified and where contractor's own personnel lack the required training or experience necessary to ensure that all commissioned equipment and systems are correctly installed and fully functional.

4 System performance problems and discrepancies may require additional technician time, CxA time, reconstruction of systems, and/or replacement of system components. The additional technician time will be made available for subsequent Cx periods at no cost to the Owner until the required system performance is obtained.

1.05 COORDINATION & SCHEDULING

A. Commissioning Meetings

1 Commissioning Orientation Meeting

a. The CxA will conduct and initial Commissioning Orientation Meeting for the Contractors and selected Sub-contractors to familiarize all parties with the Cx

process, and to ensure that the roles and responsibilities of each party are clearly understood.

b. This meeting will be scheduled by the CM/GC and CxA after awarding of contracts but prior to the start of construction.

2 On-going Commissioning Progress Meetings

a. The CxA will conduct regularly scheduled Commissioning Progress Meetings for the duration of the project construction phase.

b. The purpose of these meetings will be to coordinate and schedule Cx activities, review Cx activity status, and discuss status and resolution of Cx issues (i.e. Field Observation Notes®).

c. Cx Progress Meetings will start soon after installation of commissioned systems begins and will occur as appropriate.

3 Emergency System Procedure Planning Meetings

a. In addition to the on-going meetings described above, the CxA will conduct a series of meetings attended by the full Commissioning Team to coordinate and plan the Emergency System Procedures (ESP) and Fire/Life Safety Procedures (FLSP).

b. It is anticipated that this activity will require approximately 6 meetings lasting 1-2 hours each. Additional meetings will be added to this schedule if necessary to ensure fully developed and coordinated procedures prior to ESP and FLSP execution.

B. Scheduling of Cx Activities

1 The Contractors will work with the CM/GC and CxA to schedule the Cx activities using established protocols. Most of this work will be conducted as part of the On-Going Commissioning Meetings. Once scheduled, the commissioning activities will be integrated into the master schedule by the CM/GC.

2 Coordination, scheduling and completion of commissioning activities described in this specification are the responsibility of the Contractor(s) and the CM/GC. Note that the Cx schedule relies on the progress of the construction schedule, for which the CM/GC and Contractor(s) are also responsible.

3 Scheduling problems will be brought to the attention of the CxA and CM/GC in a timely manner in order to expedite the Cx Process and to minimize interruption to both the construction and commissioning schedules.

4 Commissioning of systems will proceed per the criteria established in the specific sections that follow, with activities to be performed on a timely basis.

5 In general, Prefunctional Procedures and Contractor Pre-startup Testing will be completed and documented prior to equipment startup. Exceptions to this requirement, may be allowed with prior agreement by the Commissioning Team and CM/GC if needed to expedite progress.

6 Equipment Startup Procedures and Contractor Post-startup Testing (including TAB, Control Contractor Point-to-Point Testing and Control Contractor Sequence Checkouts) will be successfully completed, and fully documented prior to initiation of Functional Performance Procedures and Integrated System Procedures.

7 Issues identified during execution of the Commissioning Process and documented by the CxA on the Field Observation Notes® will be addressed promptly to minimize the potential for schedule disruptions and to prevent the accumulation of large numbers of outstanding issues as the job progresses.

C. Notification of Field Activities

1 Many of the Commissioning Procedures which will be performed by the Contractors need to be witnessed and signed-off by either the CM/GC and/or Commissioning Team. Selected Commissioning Procedures may also be witnessed by the Owner. See Part 3 of this specification for specific requirements regarding which procedures need to be witnessed and signed-off.

2 To facilitate witnessing of these procedures, the Contractor(s) must provide advance notice to the GC/CM and Commissioning Team prior to procedure execution. The amount of advance notice required will be jointly agreed to by the GC/CM, Cx Team and Contractor. Typical intervals are 48 – 72 hours, but in no case will notification be less than 24 hours prior to procedure execution.

3 Any procedures may be witnessed by the GC/CM, CxA or other appropriate member of the Cx Team. It is the contractor's responsibility to coordinate with the GC/CM in advance of each procedure to ensure that the appropriate personnel will be available to witness as desired. Procedures which have been conducted without adequate notice will be deemed incomplete and will be re-tested by the contractors (with witnesses present) at no cost to the Owner and without delay to either the construction or commissioning schedules.

1.06 COMMISSIONING DOCUMENTATION

A. General

1 Timely and accurate documentation of commissioning activities is essential for the commissioning process to be effective. To this end, all commissioning activities conducted by the contractors shall be documented as outlined below and in Part 3 Execution of this specification.

2 Contractor Commissioning Documents which will be completed by the contractors include the following:

a. Prefunctional Checklists

b. Pre-startup Contractor Test Forms

c. Equipment Startup Plans and Forms

d. Post-startup Contractor Test Forms & Reports

3 All Contractor Commissioning Documents prepared by the contractors will be fully completed in a neat and workmanlike manner so as to be fully legible. Documentation which, at the Commissioning Team's discretion, is incomplete, inaccurate or less than fully legible shall be deemed unacceptable.

4 Commissioning procedures and tests, which are rejected by the team due to incomplete, inaccurate or illegible contractor documentation, shall be repeated by the contractor and new Contractor Commissioning Documents shall be prepared to the Commissioning Team's satisfaction at no additional cost to the Owner.

5 Procedures deemed unacceptable by the Commissioning Team after being repeated due to inadequate documentation may be subject to completion by the CxA, as outlined in item 3.8 'Cost of Re-Evaluation' below.

6 All Contractor Commissioning Documents will be completed on the job-site concurrent with the activities being documented. Remedial documentation of commissioning activities either off-site or after the procedures have been completed is unacceptable.

7 All Contractor Commissioning Documents will be submitted to the Commissioning Team for review and acceptance upon completion.

B. Contractor Commissioning Process Status Tracking System

1 Contractors shall be responsible for maintaining a tracking system to monitor the progress of their commissioning activities. This tracking system will include spreadsheet-based tracking forms and/or sets of drawings which will be marked-up by the contractor to indicate status of specified commissioning activities.

2 The CxA will assist the contractor in developing and setting up their tracking system.

3 The contractors shall regularly update their tracking system forms and/or drawings as commissioning activities are completed so as to provide a readily available summary of the current status of the contractor's commissioning activities.

4 Tracking forms and marked-up drawings shall be kept in the Contractor's Commissioning Notebook(s) as outlined below and made available to the GC/CM and Cx Team on request for review.

5 Sample tracking system forms are included as Appendix 2 to this specification. These sample forms are provided for reference only to assist contractors in preparing their bids for this project. The actual forms used on this project will be similar in scope and format to the sample forms, but the specific content will differ somewhat from the sample forms to specifically reference the requirements of this project.

C. Commissioning Notebook(s)

1 All Contractor Commissioning Documents (including both in-progress and completed documentation) and Contractor Commissioning Process Status Tracking System forms shall be kept on-site in the contractor's field office, neatly organized, in 3-ring notebooks known as Commissioning Notebooks. The Contractor will keep the material in the Notebooks up-to-date on a daily basis as commissioning tasks occur.

2 Commissioning Notebooks shall be labeled on both cover and spine to indicate the contractor's name, the project name and the notebook's contents.

3 The CxA will assist the contractors in setting up and organizing their Commissioning Notebooks.

4 Commissioning Notebooks shall be kept available to the Cx Team and GC/CM for their review

D. Record Drawings

1 Contractors shall regularly update a 'redlined' set of record drawings showing commissioned systems as work is being installed so that the drawings remain current with the field work, and as required in Division 1 of the project specifications.

2 Redlining record drawings at the end of construction shall not be acceptable

3 The Contractors up-to-date, in-progress redlines shall be kept on-site in the Contractor's field office and available for review by the Cx Team.

E. Access to Contractor Documentation

1 Contractors shall provide the CxA with access to shop drawings, coordination drawings, equipment cut-sheets, schematics, in-progress record drawings, etc. to assist the CxA in execution of the Cx process.

PART 2 PRODUCTS

2.01 TEST EQUIPMENT

A. General

1 The party responsible for each Commissioning Procedure shall furnish all tools, equipment and instrumentation required for execution of that Procedure.

2 Testing equipment and instrumentation used for execution of Commissioning Procedures will be of sufficient quality and accuracy to test and/or measure system performance with the tolerances specified in the specifications. If not otherwise noted, the following minimum requirements apply:

a. Temperature sensors and digital thermometers: certified calibration within the past year to an accuracy of 1.0 °F and a resolution of + or - 0.1°F.

b. Pressure sensors: accuracy of + or - 2.0% of the value range being measured (not full range of meter) and calibrated within the last year.

c. Electrical meters (voltage, current, etc.) shall be true RMS and shall have been calibrated within the last year.

d. Specialty meters (db, RF, etc.) shall be calibrated with the last year.

e. Other sensors used for testing, (RH, CO, CO_2, etc.) shall have been calibrated within the last 6 months.

3 All test equipment and instrumentation used for Commissioning Procedures will be calibrated according to the manufacturer's recommended intervals and when dropped or damaged.

4 Calibration tags will be affixed or certificates readily available.

B. Proprietary Test Equipment

1 Proprietary test equipment, interface devices and software required by any contractor, vendor or equipment manufacturer for programming, start-up, or other commissioning activity whether specified or not, shall be provided by the manufacturer of the equipment for use during commissioning.

2 The Contractor or Manufacturer providing such equipment will demonstrate its use, and assist in the Cx process as needed.

3 Special equipment, tools and instruments (only available from vendor, specific to a piece of equipment) required for testing equipment, according to these Contract Documents will be included in the base bid price to the Contractor and left on site, except for stand-alone data logging equipment that may be used by the CxA.

2.02 BAS HARDWARE AND SOFTWARE SUPPORT

A. Field Panel Software and Hardware

1 The BAS Contractor shall furnish the CxA with one (1) copy of all hardware and software needed to connect to, communicate with and command the BAS field panels and controllers at no additional charge to the CxA.. This hardware and software will be used by the CxA for execution of the commissioning process. Software and hardware provided to the CxA for this purpose, does not include any provisions for use by the Project Test & Balance Contractor (PTB).

2 Hardware and software covered under this requirement includes, but is not limited to:

a. Latest versions of proprietary software.

b. Communication modules, software keys, and similar hardware needed for communication from a laptop computer, PDA or similar device to field panels or controllers

c. Proprietary cables required for communication between laptop computers or PDAs to field panels or controllers

d. Passwords, access levels and similar software permissions necessary for execution of the Cx Process.

e. Software and hardware manuals for all control system hardware and software provided to the CxA.

3 This requirement is not meant to include provision of standard hardware such as laptop computers and PDAs nor provision of standard software such as Windows or MS Explorer.

4 At the conclusion of the Commissioning Process, this hardware and software will be turned over to the Owner's Facility Management personnel for their use in operating and maintaining the building.

B. Front-End Software & Hardware

1 The BAS Contractor shall furnish the CxA with one (1) copy of their front-end software and associated hardware as needed to connect to, communicate with and command the BAS at no additional charge to the CxA or the project.

2 Hardware and software covered under this requirement includes, but is not limited to:

a. Proprietary software needed to communicate to field panels or controllers. Revision levels for all software shall be identical with the revision level being provided to the project for the front-end operator workstation(s).

b. Communication modules, software keys, and similar hardware needed for operation of the software or to communicate with the BAS.

c. Proprietary cables required for communication between laptop computers and the BAS.

d. Passwords, access levels and similar software permissions necessary for execution of the Cx Process.

e. Software and hardware manuals for all control system hardware and software provided to the CxA.

3 This requirement is not meant to include provision of standard hardware such as laptop computers nor provision of standard software such as Windows or MS Explorer.

C. Operator Workstation Access

1 The BAS Contractor shall provide the CxA with software and hardware needed for accessing the BAS' front-end operator workstation(s). At a minimum, this shall include appropriate level user identification names and passwords. Access level shall allow the CxA to fully execute all commissioning procedures and will include the ability to:

a. View system operation

b. Override set-points

c. Command digital and analog output points

d. View BAS programming source code (read-only)

e. View and print graphics

f. Create, view, modify, print and download trend logs, histories and reports

D. Technical Support

1 The BAS Contractor shall also provide technical support to the CxA as reasonably requested by the CxA regarding setting up and operating BAS hardware and software to support successful execution of the Cx Process.

E. Duration of Support

1 Use of hardware and software provided under this section may be limited to the duration of the Cx Process at the BAS Contractors discretion, but shall not be terminated until final completion of the Cx Process including resolution of all outstanding construction phase FONs® issues and successful execution of Post-Occupancy phase commissioning activities.

2.03 ELECTRICAL MONITORING SYSTEM HARDWARE AND SOFTWARE SUPPORT

A. The contractor providing the Electrical Monitoring System shall provide the CxA with software and hardware as outlined in section 2.2 above, where applicable, to support commissioning of the electrical monitoring and distribution systems.

PART 3 EXECUTION

3.01 PREFUNCTIONAL PROCEDURES

A. Scope

1 The Prefunctional Procedures (PFP) consists of a series of field observations and documentation conducted during the installation of commissioned equipment to verify the following:

a. Installed equipment matches the specifications and approved submittals

b. Equipment is installed per the specifications, drawings, manufacturer's recommendations, and good current practice

c. Utility connections to equipment, such as electrical, steam, chilled water, etc. have been successfully completed

d. Equipment is ready for start-up

2 Contractors should expect to complete one (1) Prefunctional Checklist for each major piece of equipment covered by the commissioning process such as pumps, fans, air handling units, control panels, switchgear, substations, and electrical distribution panels.

3 Additional checklists will be required to verify installation of distribution systems such as piping, ductwork, electrical wire and conduit, etc. The number of required Prefunctional Checklists will vary from system to system, and may be limited to one form per system per zone (or possibly per floor) for repetitive items.

4 See Appendix 3 for a list of Prefunctional Checklists that will be completed by the contractors as part of this project.

B. Prefunctional Checklists

1 A selection of sample Prefunctional Checklists are included at the end of this specification as Appendix 4. These sample forms are provided for reference only to assist contractors in preparing their bids for this project. The actual forms used on this project will be similar in scope and format to the sample forms, but the specific content will differ somewhat from the sample forms to specifically reference the requirements of this project.

2 The Prefunctional Checklists used for this project will be finalized by the CxA after receipt of equipment Installation, Operation & Maintenance (IOM) Manuals from the Contractors (see item C1 below)

3 Prefunctional Checklists shall be completed and maintained on-site per the requirements of this specification, Section 1.6 'Commissioning Documentation'.

C. Contractor Requirements

1 The Contractors shall provide the CxA with one (1) copy of the equipment manufacturer's standard Installation, Operation and Maintenance (IOM) Manuals within 60 days after approval of submittals. The CxA will use the installation recommendations included in these documents to finalize the Prefunctional Checklists.

2 The contractors furnishing and/or installing the equipment being commissioned will be responsible for the execution of the Prefunctional Procedures and accurate completion of the Prefunctional Checklists for that equipment.

3 The CxA will provide oversight and assistance to the contractors during the execution of the Prefunctional Procedures and will periodically review the contractors in-progress Prefunctional Checklists for accuracy, completeness and to verify that checklists are being kept up-to-date.

4 Contractors shall begin execution of the Prefunctional Procedures as soon as the affected equipment arrives on the job site, by verifying nameplate information matches the specifications and approved submittals.

5 During installation, the contractors shall regularly review and update the appropriate Prefunctional Checklists so that potential installation issues are identified as early in the construction process as possible. The CxA will periodically review the contractor's in-progress Prefunctional Checklists to verify that they are current with the project status.

6 Issues observed during the PFPs will be immediately reported to the GC/CM and CxA in accordance with the procedures outlined in this specification, Section 3.8 'Issue Resolution'.

7 PFP's will be substantially complete, reviewed and accepted by the CxA prior to equipment start-up. Exceptions to this requirement will be allowed at the CxA's discretion, but will be limited to minor items, such as labeling of equipment, which will not impact start-up or subsequent equipment operation.

8 Contractors shall regularly update their Contractor Commissioning Process Status Tracking System to indicate current PFP status.

9 The Contractor shall furnish all tools, test equipment and instrumentation required for completion of the PFPs. All instruments shall meet the requirements of Part 2 of this specification.

3.02 CONTRACTOR PRE-STARTUP TESTING

A. Scope

1 Commissioning activities and requirements related to contractor/vendor pre-startup testing for commissioned equipment and systems will follow the process described in this section. This process does not reduce the contractor's responsibility for successfully completing and documenting all testing requirements outlined in other sections of the specifications.

2 The goals of these activities are to help ensure that the specified testing is rigorously executed using sound test procedures and that all tests are thoroughly documented.

B. Contractor Pre-startup Test Forms

1 The Contractor Pre-startup Testing shall be documented using test forms which, at a minimum, will record the following information:

a. Type of test being performed (hydrostatic leak test, pneumatic leak test, megger test, db, RF, flows, etc.)

b. System or equipment being tested

c. Technician(s) performing the test

d. Test date and time

e. Detailed description of section of system being tested (if applicable)

f. All data collected during the test to quantify test performance (static and differential pressures, test duration, radio frequency, electrical resistance, etc.)

g. Signature of technician(s) performing test

h. Signature of GC/CM or Cx Team member witnessing the test

2 Contractors and vendors may use their standard testing forms; providing these forms meet the requirements outlined above and have been previously reviewed and approved by the Cx Team.

3 If standard test forms are not available, the CxA will assist the Contractors and Vendors develop test forms for the Contractors and Vendors use.

4 All test forms will be fully completed and maintained by the contractor per the requirements of this specification, Section 1.6 'Commissioning Documentation'.

5 All test forms will be submitted to the GC/CM for review and acceptance by the Cx Team upon completion.

C. Contractor Requirements

1 Prior to initiating any of the Pre-startup Testing covered by this specification the contractor will meet with the CxA to review the contractor's proposed test procedures and test forms.

2 The contractor shall be responsible for successful completion and documentation of all specified pre-startup testing.

3 The GC/CM and/or the Cx Team will witness selected Pre-startup Tests to ensure that approved procedures are being followed and that tests are being properly documented.

4 Any Pre-startup Tests may be witnessed by either the GC/CM, CxA or other appropriate member of the Cx Team. It is the contractor's responsibility to coordinate with the GC/CM in advance of each test to ensure that the appropriate personnel will be available to witness the test as desired. Tests which have been conducted without adequate notice will be deemed incomplete and will be re-tested by the contractors.

5 Issues observed during the Contractor Pre-startup Testing will be immediately reported to the GC/CM and CxA in accordance with procedures outlined in this specification, Section 3.8 'Issue Resolution'.

6 All Contractor Pre-startup Testing shall be substantially complete, reviewed and accepted by the CxA prior to equipment start-up. Exceptions to this requirement will be allowed at the CxA's discretion, but will be limited to minor items, which will not impact start-up or subsequent equipment operation.

7 Contractors shall regularly update their Contractor Commissioning Process Status Tracking System to indicate current status of their Pre-startup Testing. The CxA will periodically review the contractor's in-progress test forms and tracking system for accuracy, completeness and to verify that checklists are being kept up-to-date.

8 The Contractor shall furnish all tools, test equipment and instrumentation required for completion of the Pre-startup Testing. All instruments shall meet the requirements of Part 2 of this specification.

3.03 START-UP PROCEDURES

A. Scope

1 Commissioning activities and requirements related to Equipment Startup are meant to help ensure the following:

a. Equipment installation and Pre-startup Testing has been fully completed and documented prior to startup

b. Startup procedures meet the equipment manufacturer's recommendations

c. Startup activities are fully documented

2 Equipment Startup requirements covered by this section of the commissioning specification includes the following:

a. All commissioned equipment requiring startup by the equipment manufacturer, vendor or representative

b. All rotating equipment including, but not limited to, pumps, fans, compressors, and generators with a motor or engine size of 5hp or greater or serving critical equipment.

c. All electrical equipment including, but not limited to switchgear, substations, transformers and distribution panels operating at 460V or greater

d. Where required in the specifications regardless of size or voltage.

B. Equipment Startup Plan

1 At least 30 days prior to scheduled Equipment Startup, the responsible contractor shall prepare and submit a written Startup Plan which, at a minimum, will include the following:

a. Personnel required for startup including vendors, other trades, etc.

b. Prerequisites required for startup (utility connections, PFP's, Pre-startup Testing, and other as applicable)

c. Proposed startup procedures

d. Proposed forms to be used for documenting startup procedures

e. Proposed preventive maintenance forms and procedures (if equipment to be kept in service after startup)

2 Where available, the equipment manufacturer's standard startup procedures and forms should be used as the basis of the contractor's Startup Plan. Where equipment manufacturer's standard startup procedures and/or forms are not available, the Cx Team will assist the contractors in developing the necessary procedures and forms.

3 The Cx Team will review the contractor's proposed Startup Plan(s) and will recommend revisions as appropriate prior to scheduling of startup activities.

4 Startup of covered equipment shall be documented using Startup Forms which have been previously reviewed and approved as part of the contractor's Startup Plan.

5 All Startup Forms will be fully completed and maintained by the contractor per the requirements of this specification, Section 1.6 'Commissioning Documentation'.

6 All Startup Forms will be submitted to the GC/CM for review, and acceptance by the Cx Team upon completion.

C. Contractor Requirements

1 The Contractor(s) will coordinate with the GC/CM to schedule startup activities. This will include the following:

a. Ensuring that all PFP's and contractor Pre-startup Testing are completed and documented prior to startup

b. Ensuring that all required utilities are available prior to startup

c. Ensuring that appropriate personnel have been identified and scheduled to participate including vendors, manufacturer's representatives, other trades, etc.

d. Tools, test equipment and/or instrumentation required for startup will be available

2 No unscheduled and/or inappropriate startups shall be allowed.

3 The Cx Team and/or GC/CM will witness selected startups to ensure that approved procedures are being followed and that activities are being properly documented.

4 Any Startup procedures may be witnessed by either the GC/CM, CxA or other appropriate member of the Cx Team. It is the contractor's responsibility to coordinate with the GC/CM in advance of each procedure to ensure that the appropriate personnel will be available to witness the test as desired. Procedures which have been conducted without adequate notice will be deemed incomplete and will be re-tested.

5 Issues observed during execution of the Startup Procedures will be immediately reported to the GC/CM and CxA in accordance with procedures outlined in this specification, Section 3.8 'Issue Resolution'.

6 Contractors shall regularly update their Contractor Commissioning Process Status Tracking System to indicate current status of their Startup Procedures. The CxA will periodically review the contractor's Startup Forms and tracking system for accuracy, completeness and to verify that documentation is being kept up-to-date.

7 The Contractor shall furnish all tools, test equipment and instrumentation required for completion of the Startup Procedures. All instruments shall meet the requirements of Part 2 of this specification.

8 Equipment which will not be left in operation after startup shall be laid-up by the contractor per the manufacturer's recommended procedures.

9 Equipment kept in use after startup, shall be operated and maintained by the responsible Contractor per the equipment manufacturer's published O&M procedures.

10 All maintenance activities performed by the Contractor(s) will be documented on pre-approved maintenance work order forms. These forms may be furnished by the Owner's Facilities Management Department; otherwise the contractors will develop appropriate forms and submit them for review and approval as part of their startup plan.

11 Completed maintenance work order forms shall be submitted to the GC/CM for review and acceptance by the Cx Team upon completion.

3.04 CONTRACTOR POST-STARTUP TESTING

A. Scope

1 Commissioning activities and requirements related to Contractor Post-startup Testing for commissioned equipment and systems will follow the process described in this section. This process does not reduce the contractor's responsibility for successfully completing and documenting all testing requirements outlined in other sections of the specifications.

2 The goal of these activities are to augment the testing requirements listed elsewhere in the specifications and to help ensure that the specified testing is rigorously executed using sound test procedures and that all tests are thoroughly documented.

B. Contractor Post-startup Test Reports

1 The Contractor Post-startup Testing shall be documented using test forms which, at a minimum, will record the following information:

a. Type of test being performed (duct traverse, point-to-point checkout, etc.)

b. System or equipment being tested

c. Technician(s) performing the test

d. Test date and time

e. Detailed description of system or section of system being tested

f. All data collected during the test to quantify test performance (pressures, flow rates, rpm, volts, amps, temperatures, etc.)

g. Signature of technician(s) performing test

h. Signature of GC/CM or Cx Team member witnessing the test (where applicable)

2 Contractors may use their standard testing forms, providing these forms meet the requirements outlined above and have been previously reviewed and approved by the Cx Team.

3 All test forms will be fully completed and maintained by the contractor per the requirements of this specification, Section 1.6 ‘Commissioning Documentation’.

4 All test forms will be submitted to the GC/CM for review and acceptance by the Cx Team upon completion.

C. General Requirements

1 Prior to initiating any of the Post-startup Testing covered by this specification, the contractor shall meet with the CxA to review the contractor’s proposed test procedures and test forms.

2 The contractor shall be responsible for successful completion and documentation of all specified Post-startup Testing.

3 The CxA will provide oversight and assistance to the contractors in developing their test procedures and test forms.

4 The GC/CM and/or Cx Team will witness selected Post-startup Tests to ensure that approved procedures are being followed and that tests are being properly documented.

5 Issues observed during the Contractor Post-startup Testing will be immediately reported to the GC/CM and CxA in accordance with procedures outlined in this specification, Section 3.8 ‘Issue Resolution’.

6 Contractors shall regularly update their Contractor Commissioning Process Status Tracking System to indicate current status of their Post-startup Testing. The CxA will periodically review the contractor’s in-progress test forms and tracking system for accuracy, completeness and to verify that checklists are being kept up-to-date.

7 The Contractor shall furnish all tools, test equipment and instrumentation required for completion of the Post-startup Testing. All instruments shall meet the requirements of Part 2 of this specification.

8 The Contractor shall provide a written list of instrumentation which will be used for Post-startup Testing indicating instrument make, model number, serial number, range, accuracy and calibration date to the CxA prior to the start of testing.

D. HVAC Test and Balance

1 Project Test and Balance Contractor (PTB) Requirements

a. The PTB shall be responsible for successful completion and documentation of all TAB activities specified in Division 23 and elsewhere in these specifications as appropriate.

b. Prior to the start of TAB activities, the PTB shall submit proposed TAB procedures and documentation to the CxA for review.

c. After this review, and prior to start of field work, the PTB will attend one or more planning meetings as required with the Commissioning Team to review and discuss outstanding issues relating to TAB procedures and forms, discuss resolution of issues identified during the PTB's plan review and field inspections, and to coordinate field work.

d. Prior to the start of field work, the PTB shall issue a final set of TAB procedures and TAB forms incorporating comments received from the Commissioning Team review

e. The PTB will notify the Commissioning Team a minimum of two (2) weeks in advance of the time for start of TAB work to allow the CxA time to assess system readiness.

f. The PTB will work cooperatively with the CxA

g. The PTB shall coordinate with the controls contractor to ensure that changes made to the control system during TAB (flow coefficients, duct areas, etc.) are archived and become the default or initial values for these parameters.

h. The PTB shall ensure that all areas of the project, including patient rooms, are balanced to the appropriate air pressure relationships for those areas (negative or positive pressure).

i. The PTB shall provide daily lists of issues and/or problems identified during TAB work to the GC/CM and CxA for follow-up & resolution with the appropriate contractors.

j. Participate in verification of the TAB report, which will consist of repeating any selected measurement contained in the TAB report where required by the CxA for verification or diagnostic purposes.

k. The TAB Final Acceptance Inspection specified in Division 23 shall be conducted by the CxA. and will include a field verification of up to 10% of the PTB's field readings.

l. The PTB will provide technicians and instrumentation to support the field verification.

m. Instruments used for the field verification shall be the same instruments (by model and serial number) that were used for the original TAB work.

n. Failure of an item during the TAB field verification is defined as:

1) For all readings other than sound, a deviation of more than 10 percent from the reported value.

2) For sound pressure readings, a deviation of 3 decibels. (Note: variations in background noise must be considered).

o. A failure of more than 10 percent of the readings tested during the field verification shall result in the rejection of the final TAB report and require re-balancing of the system(s) in question.

E. Controls & Instrumentation Testing

1 Prior to start of control system Functional Performance Procedures, the Building Automation System (BAS) Contractor shall verify and document that all control systems are installed and operating properly including the following:

a. Control Panels & Hardware Installation shall be fully verified and the appropriate Pre-Functional checklists completed prior to proceeding to subsequent installation/checkout steps.

b. Point-to-Point Checkout shall be completed and documented per the requirements specified in Div 23 and elsewhere in these specifications as appropriate, and item 3 below.

c. Control Sequence Checkout. Contractor shall verify that operation of control system programming matches all specified sequences of operation. For these checkouts, the Contractor shall, as much as possible, simulate actual operating conditions for the various operating modes being tested (heating, cooling, emergency power, etc) by false-loading systems, adjusting setpoints and similar techniques. The CxA will make the control sequence FP Checklists available to the BAS Contractor for use in these checkouts.

d. Tune all Control Loops to obtain the fastest stable response without unreasonable hunting, offset or overshoot. Record tuning parameters and response test results for each control loop and provide trend reports to document results. Trend logs shall show both steady-state operation and response to setpoint changes as specified in Div 23 and elsewhere in these specifications as appropriate.

e. Test All Alarms and Safeties. Record all alarm parameters and alarm messages. Document all alarms and safeties have been tested and are functioning properly.

2 The BAS Contractor shall work with the TAB Contractor(s) to make sure that changes to the BAS made during TAB, such as flow coefficients, flow setpoints and duct areas are permanently archived in the BAS and become the initial or default values for their respective controllers. If BAS adjustments made by the TAB Contractor(s) get lost or overwritten prior to archiving, it shall be the BAS Contractor's responsibility to re-enter this data at no additional cost to the Owner.

3 Point-to-Point Checkout Requirements

a. Items described in this section apply to and augment the Field Points Testing requirements as specified in Div 23 and elsewhere in these specifications as appropriate.

1) These procedures will verify the following for each physical control point:

2) Field device is installed per the manufacturer's recommendations and the project drawings and specifications

3) Field verify calibration of all analog inputs and outputs

4) Verify labeling of controllers, field devices, and wiring

5) Physical points are correctly addressed and communicating properly between its controller and the field device.

b. Detailed written procedures for execution of Point-to-Point Checkouts shall be submitted to the CxA and Engineer by the Contractor for review and approval prior to the start of testing. Proposed procedures shall be based on the manufacturer's recommendations and good current practice. Include proposed test forms as part of this submittal.

c. The Contractor shall provide all tools and instrumentation necessary for execution of this testing. All instrumentation must be in calibration and meet the requirements of Part 2 of this specification.

d. The CxA reserves the right to field verify up to 10% of the Contractor's Point-to-Point Checkout testing. The Contractor shall provide the technicians and instrumentation used for the original testing to assist the CxA with this field verification.

3.05 FUNCTIONAL PERFORMANCE PROCEDURES

A. Scope

1 Functional Performance Procedures (FPP) are executed after commissioned equipment and systems have been installed, started-up and balanced. The goal of these procedures is to verify that commissioned equipment, sub-systems and major systems operate and perform per the design intent and the project specifications.

2 Equipment-level FPPs will be used to verify operation and capacity of selected equipment such as boilers, chillers, cooling towers, pumps, exhaust fans, air handling units, etc.

3 System-level FPPs will verify the following aspects of system operation

a. System operation under both normal and alternate operating conditions and modes

b. Interactions between equipment and sub-systems

c. Operation of safeties and interlocks

d. Control system operation, response time, stability and tuning

e. System response to abnormal and/or emergency conditions such as equipment failure and power outages

f. Prepare for execution of Integrated System Procedures

4 See Appendix 3 for a list of Functional Performance Procedures (FPPs) that will be completed for this project.

B. Functional Performance Checklists

1 A selection of sample Functional Performance Checklists are included at the end of this specification as Appendix 5. These sample forms are provided for reference only to assist contractors in preparing their bids for this project. The actual procedures and forms used for this project will be similar in scope and format to the samples, but the specific content will differ somewhat to specifically address the requirements of this project.

2 The Functional Performance Procedures and Checklists used for this project will be finalized by the CxA after receipt of approved contractor submittals, including equipment Installation – Operations & Maintenance bulletins.

C. Contractor Requirements

1 The GC/CM will coordinate and schedule FPP activities in conjunction with the contractors and other members of the Cx Team.

2 Scheduling of FPPs will be contingent on notification from the affected contractor(s) to the GC/CM and CxA that equipment and systems are ready for checkout.

3 Other prerequisites for execution of FPPs shall include the following

a. All PFP's, Contractor Pre-startup Testing and Startup Procedures have been completed and documented

b. TAB has been completed

c. Field Observation Notes® affecting equipment or system performance or operation have been resolved

4 Prior to claiming readiness for FPP, the controls contractor shall ensure that the following items are completed and documented:

a. Point-to-point checkouts

b. Verify that network communication between all devices and systems is established

c. Sequence of Operation checkouts

d. Printed and annotated trend logs and histories establishing acceptable operation including

1) Stable control

2) Recovery from upset/changes (e.g., from setback)

3) Special and/or seasonal modes

4) Emergency and alarm modes including loss/restoration of power

5 Execution of the FPPs will be led by the CxA with assistance from the contractors providing and installing the equipment and systems being commissioned.

6. Typical contractor activities during FPP execution may include the following

a. Starting/stopping equipment

b. Energizing/de-energizing electrical distribution gear

c. Opening/closing valves and dampers

d. Manipulating BAS inputs, outputs and setpoints

e. Setup, collection and downloading of BAS trend data

Alternately, these activities may be performed directly by the CxA with prior permission from the appropriate contractor(s). In either case, the Contractor(s) shall maintain full responsibility for the facility, equipment and systems operated during the FPPs, maintain all guarantees and warranties, and shall repair any damage to the facility caused during the FPPs.

7. Contractors shall provide the services of vendor's technicians at the CxA's request to assist in commissioning of major equipment such as chillers, boilers and emergency generators.

8. Tools, test equipment and instrumentation required for completion of the FPPs shall be provided by the CxA except for special-purpose or proprietary tools, test equipment and instrumentation which will be provided by the contractors. All instruments shall meet the requirements of Part 2 of this specification.

3.06 FIRE/LIFE SAFETY PROCEDURES

A. Scope

1 The Fire/Life Safety Procedures (FLSPs) will verify and document operation of commissioned systems in response to simulated fire or smoke conditions.

2 Operation of various systems and sub-systems that are part of the response to fire will, in many cases, be functionally verified during the FPP process prior to these interactive tests.

3 The object of these procedures is to check that all systems affected by a fire or smoke operate interactively as specified in the contract documents and as required to meet the needs of the Owner.

4 A typical FLSP will consist of the following steps:

a. Simulate a fire condition by tripping one or more Fire Alarm System (FAS) initiating devices (smoke/heat detectors, flow switches, pull stations, etc.)

b. Verify FAS operation including, but not limited to:

1) Operation of visual and audible notification devices including speakers, horns, bells, strobes, beacons, etc.

2) Receipt of alarms at all FAS control panel(s), annunciator panel(s), alarm printers, etc.

3) Operation of FAS controlled hardware such as magnetic hold-opens, overhead fire doors, WON doors, etc.

4) Operation of interfaces between FAS and other building systems such as BAS, security, architectural dimming controls, conference center audio systems, overhead paging, emergency response staff communication, etc.

c. Verify operation of HVAC smoke management system(s) including, but not limited to the following:

1) Operation of air handling units in the smoke management mode

2) Return/exhaust and smoke fan operation

3) Operation of fire/smoke dampers, including proper indication of damper position to BAS.

4) Verify differential static pressures between smoke zone(s) and adjacent zones

5) Verify containment and evacuation of smoke from selected areas

d. Verify operation of fire door hardware (measurement of door opening forces, latching of doors while smoke management systems are operational, etc.)

e. Verify Security System operation (release of electric door locks, interaction with infant abduction protection system, etc.)

f. Verify operation of vertical transport system (elevator recall, alternate floor recall, etc)

g. Verify operation of other building systems connected to the FAS (architectural dimming and audio systems, etc).

h. Reset FAS and verify return of all affected systems (FAS, BAS, HVAC, Security, Vertical transport, etc.) to normal operation.

5 Specific requirements for some FLSPs may vary somewhat from the ‘typical’ list outlined above to match the specified system operation in each area of the project (i.e. requirements for lab areas will differ somewhat from requirements for the lobby).

B. General Requirements

1 Scheduling and execution of the FLSPs will be contingent on notification from all affected Contractors that their equipment and systems are complete, fully operational, and ready for checkout

2 Other prerequisites for execution of FLSPs shall include the following:

a. Affected building systems shall be fully operational and running under normal automatic control.

b. All specified contractor testing and FPPs have been successfully completed and documented

c. Field Observation Notes® affecting equipment or system performance and operation have been resolved

3 FLSPs shall be completed prior to Owner Training and the Final Operation Orientation / Demonstration phases of the project.

4 Where possible, FLSPs will be scheduled during normal working hours. However, due to the disruptive nature of some FLSPs the contractors should be prepared to execute some of these procedures either at night or on weekends.

C. Contractor Requirements

1 The Commissioning Team will, as a joint effort, refine, coordinate, schedule and direct the execution of the FLSPs.

2 The CxA will develop checklists and other documentation requirements for the FLSPs.

3 Typical contractor activities during FLSP execution may include the following

a. Tripping of FAS initiating devices

b. Observing and documenting equipment and system operation

c. Resetting of fire alarm devices, fire doors, etc.

d. Setup, collection and downloading of BAS trend data

4 Contractors supplying and/or installing the following equipment & systems shall participate in all FLSPs:

a. Fire Alarm System

b. Building Automation System

c. Magnetic door hold-opens

d. Door hardware

e. Security

f. Test and Balance (TAB) contractor

5 Contractors supplying and/or installing the following equipment & systems shall participate in selected FLSPs designed to verify operation of their equipment and systems.

a. Vertical Transportation

b. Other Systems (dimming systems, etc.)

6 A detailed list of FLSPs will be developed by the Cx Team during construction. For budgeting purposes, contractors involved in all FLSPs, as listed above, should plan on participating in one FLSP per smoke zone. Contractors participating in selected FLSPs should plan on participating in six (6) FLSPs each.

7 Tools, test equipment and instrumentation required for completion of the FLSPs will be provided by the CxA except for special-purpose or proprietary tools, test equipment and instrumentation which will be provided by the contractors. All instruments will meet the requirements of Part 2 of this specification.

3.07 EMERGENCY SYSTEM PROCEDURE

A. Scope

1 The Emergency System Procedure (ESP) will verify and document operation of commissioned systems in response to simulated electrical utility power failures.

2 Operation of various systems and sub-systems that are part of the response to power loss will, in many cases, be functionally verified during the FPP process prior to these interactive tests.

3 Objectives of the ESP include verifying operation of the emergency power system and interactive operation of all commissioned systems and equipment fed by the emergency power system.

4 Systems which will be evaluated during the ESP include:

a. Electrical Systems including normal, emergency and critical power

b. Fire/Life Safety Systems

c. Mechanical Systems

d. Smoke Evacuation Systems

e. Building Automation System

f. Plumbing Systems

g. All other systems specified to operate on emergency power

5 Aspects of system operation which will be verified as part of the ESP include the following:

a. System interactions will be observed for potential conflicts or operating problems.

b. Communication between systems will be verified to be properly sent, received, and result in the intended action. This will include routing and printing of alarm messages and operation of remote monitoring and notification systems.

c. Transition between operating modes will be verified to be smooth and free of anomalous behavior which might negatively impact occupants, jeopardize building operation or result in unnecessary wear and tear on building systems.

6 A typical ESP will consist of the following steps:

a. Simulate a utility power failure by disconnecting incoming electrical power from the local utility.

b. Verify / demonstrate operation of emergency power systems including, but not limited to:

1) Emergency generators

2) Paralleling switchgear

3) Automatic transfer switches

4) Double-ended switchboards

5) Generator shedding

6) Load shedding and prioritization

7) Remote alarming & monitoring systems

c. Verify and document operation of building systems on emergency power:

1) Check equipment/system status on normal power prior to simulated power failure

2) Observe transition from normal to emergency power, document any anomalous or unexpected operational issues

3) Verify equipment/system operation on emergency power.

4) Simulate selected equipment failures and fire alarm conditions; evaluate equipment & system response to these conditions while operating on emergency power.

d. Restore normal utility power. Observe and document operation of all affected building systems during transition from emergency back to normal power.

7 A detailed ESP plan will be developed by the CxA and refined by the Cx Team during construction to meet the specified requirements of this project.

B. General Requirements

1 Scheduling and execution of the ESP will be contingent on notification from all affected Contractors that their equipment and systems are complete, fully operational, and ready for checkout

2 Other prerequisites for execution of the ESP shall include the following

a. Affected building systems shall be fully operational and running under normal automatic control.

b. All specified contractor testing, FPPs and FLSPs have been successfully completed and documented

c. Field Observation Notes® affecting equipment or system performance and operation have been resolved

3 The ESP shall be completed prior to Owner Training and the Final Operation Orientation / Demonstration phases of the project.

4 Due to the disruptive nature of the ESP, contractors should be prepared to execute these procedures either at night or on weekends.

C. Contractor Requirements

1 The Commissioning Team will, as a joint effort, refine, coordinate, schedule and direct the execution of the ESP. The contractors are expected to participate in this effort as outlined above.

2 Typical contractor activities during ESP execution may include the following

a. Observing and documenting equipment and system operation

b. Manipulation of equipment and systems to simulate various operating modes. This will include starting/stopping equipment, tripping FAS devices, etc.

c. Resetting of fire alarm devices, fire doors, etc.

d. Setup, collection and downloading of BAS trend data

3 It is anticipated that the ESP shall be executed on 2 consecutive days. Duration of testing on each of the 2 days is expected to be approximately 12-14 hours per day.

4 The Electrical Contractor(s) shall work with the CM/GC and the Electric Utility Provider to plan and coordinate electrical service interruptions to the building as required for execution of the ESP.

5 Contractors shall include the cost for 2 attempts at completion of the ESP in their proposals to allow for potential repeats of procedures which are unsuccessful on the first attempt.

6 Tools, test equipment and instrumentation required for completion of the ESP will be provided by the CxA except for special-purpose or proprietary tools, test equipment and instrumentation which will be provided by the contractors. All instruments will meet the requirements of Part 2 of this specification.

3.08 ISSUE RESOLUTION

A. Scope

1 The CxA will maintain and periodically publish a Field Observation Notes (FONs®) Report, which will be used to document issues identified during the commissioning process.

2 The contractor(s) shall promptly respond to the FONs® Reports in writing concerning the status of each open issue identified as their responsibility during execution of the commissioning process. Contractor responses shall include the following information as appropriate:

a. Explanations of any questions or disagreements (issue responsibility incorrectly assigned, issue outside of contractor's scope, etc.)

b. Actions taken to resolve issue

c. Proposed actions including completion dates

3 The Contractors, including their sub-contractors, vendors and suppliers are responsible for resolution of all issues identified during execution of the commissioning process. The CxA will be available to work with the contractors and facilitate issue resolution.

4 Contractors shall responded to the FONs® issues in a timely manner, typically within 72 hours of notification, to avoid impact to the construction schedule including the commissioning process.

5 The information reported in the FONs® shall not be construed to authorize any changes in contractual requirements, schedules or project costs. Any such questions will be promptly directed to the CM/GC or other parties as designated in the contract documents.

B. Contractor Requirements

1 During Prefunctional Procedures, Pre-startup Testing, Startup Procedures and Post-startup Testing:

a. Issues identified by the contractors during execution of Prefunctional Procedures, Pre-Startup Testing, Startup Procedures or Post Startup Procedures shall be clearly noted on the appropriate Prefunctional Checklist, Startup Form, Test Form, or noted on a separate sheet and attached to the appropriate Checklist or Form.

b. Outstanding items of the PFP, Pre-startup Testing, Startup Procedures or Post-startup Testing that were not completed successfully shall also be noted at the bottom of the appropriate Checklist, Form or on an attached sheet.

c. Contractors shall notify the CM/GC, with a copy to the CxA, of any outstanding issues or deficiencies in writing within (2) two days of issue identification.

d. The CxA will review the issue notification reports and submit any comments and questions to the CM/GC, contractor or A/E as appropriate.

e. The contractor(s), including appropriate sub-contractors, vendors and suppliers will work with the CxA to correct and re-evaluate issues or uncompleted items.

f. As soon as outstanding items have been corrected, the contractor(s) shall:

1) Notify the GC/CM and CxA that the issue has been resolved by updating and resubmitting their issue notification report.

2) Resubmit updated Checklists, Startup Forms and/or Test Forms as applicable

g. Issues identified during Prefunctional Procedures and Pre-startup Testing shall be resolved prior to Startup of the affected equipment or system.

h. Items left incomplete, which later cause deficiencies or delays during execution of FPPs, FLSPs or ESP may result in back-charges to the responsible party. Also see "Failure Due to Manufacturer Defect" procedures in this section.

2 During Functional Performance Procedures, Fire Life Safety Procedures and Emergency Systems Procedures

a. Issues noted during execution of FPPs, FLSPs or ESP will be noted on the test forms by the CxA.

b. Minor issues may be corrected immediately on identification and prior to proceeding with the procedure being executed at the discretion of the CxA. The CxA's decision will be based on what impact the issue has on the procedure being executed, and the expected time required to resolve the new issue. Issues resolved in this manner, will be documented on the appropriate form or checklist.

c. CxA will endeavor to expedite the checkout process and minimize unnecessary delays, while not compromising the integrity of the procedures.

d. Once any questions are resolved on an issue and the contractor(s) accepts responsibility to correct it:

1) The CxA will document the issue on the FONs® Report and the contractor response and intentions and then go on to another procedure or sequence.

2) The contractor(s) will correct the issue, and submit a written statement of correction certifying that the equipment is ready to be re-evaluated to the CxA.

3) The contractor reschedules the re-evaluation with the CM/GC and CxA and the checkout is repeated once. If satisfactory performance is not achieved during the second procedure, the cost of additional procedures will be billed in accordance with the paragraphs below "Cost of Re-Evaluation".

e. If there are questions about an issue, regarding whether it is an issue, who is responsible, or how to resolve it:

1) The CxA will document the issue on the FONs® Report with the contractor's response and a copy will given to the CM/GC and contractor representative(s) assumed to be responsible.

2) The CxA will document the resolution process on the FONs® Report.

3) Once the interpretation and resolution have been decided, the appropriate party will correct the issue, sign a statement of correction and submit it to the CxA.

4) The contractor reschedules the checkout with the CxA and the checkout is repeated once. If satisfactory performance is not achieved during the second procedure, the cost of additional procedures will be billed in accordance with the paragraphs below "Cost of Re-Evaluation".

3 If issues are identified by the CxA during spot-checks of completed contractor Cx Procedures (Prefunctional Procedures, Pre-Startup Testing, Startup Procedures or Post Startup Procedures); it shall be the contractors responsibility to demonstrate that the identified issues are not widespread and pervasive for all similar systems and equipment

installed for this project. This may require re-execution of all affected Cx Procedures as determined by the Commissioning Team.

C. Cost of Re-Evaluation

1 The cost for Contractors to re-execute any Commissioning Procedure due to open issues shall be borne by the contractors.

2 The CxA will be available for two attempts of any Commissioning Procedure (one initial and one re-try) with minimal follow-up where necessary (due to deficiencies, systems not ready, etc.) to try to accomplish each checkout as part of the contract. When additional work is required because systems are not ready or because they do not successfully pass Commissioning Procedures after they have been indicated as ready, the contractor will be charged for the additional costs. Additional fees will be paid to the CxA by the Owner/CM/GC and shall be reimbursed by the Contractor.

3 Any required re-testing by any contractor shall not be allowed as a justified reason for a claim of delay or for a time extension by the contractor.

D. Failure Due to Manufacturer Defect

1 If 2%, or ten, whichever is greater, of similar types (size alone does not constitute a difference) of equipment from one manufacturer or supplier fail to perform to the Contract Documents (mechanically or substantively) due to manufacturing, handling, or similar defect, not allowing it to meet its submitted performance spec, all similar units may be considered unacceptable by the A/E or CM/GC. In such case, the contractor(s) shall provide the Owner with the following:

2 Within one week of notification from the A/E or GC/CM, the contractor shall cause the manufacturer's representative to examine 10% of other identical units making a record of the findings. The findings shall be provided to the A/E and CM/GC within two weeks of the original notice.

3 Within two weeks of the original notification, the manufacturer, through the contractor, shall provide a signed and dated, written explanation of the issue, cause of failures, etc. and all proposed solutions, which shall include full equipment submittals. The proposed solutions shall not significantly exceed the specification requirements of the original installation.

4 The A/E and CM/GC will determine whether a replacement of all identical units or a repair is acceptable.

5 Sufficient examples to allow adequate evaluation of the proposed solution will be installed by the contractor, and the CxA and A/E will be allowed to perform PFPs and FPPs on the installations for sufficient time to determine the performance, upon which the A/E and CM/GC will, with recommendations by the CxA, decide whether to accept the solution.

6 After such procedures are performed and the results have been accepted as noted above, the contractor and/or manufacturer shall replace or repair all identical items, at their expense and extend the warranty accordingly, if the original equipment warranty had begun.

7 The replacement/repair work shall proceed with reasonable speed beginning within one week from when units or parts can be obtained.

3.09 ACCEPTANCE

Only after the satisfactory completion of the Pre-Functional Installation, Start-Up/Testing, Functional Performance and System Performance Checkouts will the system be ready for acceptance. At no time will acceptance be made for individual pieces of equipment. Final acceptance will only be for systems that will operate as intended in the basis of design and the design intent.

3.10 APPENDICES

C:\PROJECT\661.1 (DFCM Student Life)\Cx Planning\Cx Specs\661.1_Gen_Cx_ 019113.doc

APPENDIX 1 – ABBREVIATIONS AND DEFINITIONS

The following are common abbreviations used in the Commissioning Specifications

Abbrev.	Description	Abbrev.	Description
A/E	Architect/Engineer	IOM	Installation, Operation & Maintenance Manual
BAS	Building Automation System	ISP	Integrated Systems Procedure
CxA	Commissioning Authority	IT	Information Technology
CC	Prime Controls Contractor	ME	Mechanical Engineer
CCR	Contractor's Commissioning Representative	MC	Prime Mechanical Contractor
Cx	Commissioning	O&M	Operation and Maintenance
EC	Prime Electrical Contractor	PF	Pre-Functional
EE	Electrical Engineer	PFP	Pre-Functional Procedure
ESP	Emergency Systems Procedure	PM	Owner's Project Manager
FLSP	Fire Life Safety Procedure	PTB	Project Test & Balance Contractor
FM	Owner's Facilities Management	Subs	Subcontractors
FMP	Failure Mode Procedure	TAB	Test, Adjust and Balance
FONs®	Field Observation Notes®		
FP	Functional Performance		
FPP	Functional Performance Procedure		
CM/GC	General Contractor/Construction Manager		

Note that the terms Contractor, MC, EC, CC, or PTB as used in the Commissioning Specification should be understood to include both the associated Contractor and any sub-contractors, vendors and suppliers providing services or equipment to the General Contractor.

Definitions

Acceptance Phase: Final phase of the construction occurring after successful execution of all required Cx Procedures and Final Operational Testing during which system installation and operation is demonstrated to the Owner and Authority Having Jurisdiction for the purposes of achieving occupancy and accreditation.

Approval: acceptance that a document, piece of equipment or system has been reviewed and found to be properly installed and is functioning in the tested modes according to the contract documents.

Architect Engineer (A/E): the prime consultant (architect) and sub-consultants who comprise the design team, generally the mechanical designer/engineer and the electrical designer/engineer.

Building Automation System (BAS) central DDC control system used to control and monitor operation of the buildings mechanical systems.

Commissioning Authority (CxA): an independent person, company or agent retained by the owner and not otherwise associated with the A/E team members or contracting team members. The CxA implements the overall commissioning process and carries out or observes the tasks necessary to complete the commissioning process. The CxA does not take an oversight role like the owner's representative or construction manager.

Commissioning Report: the document that records the results of the commissioning process, including the as-built performance of the MEP system and documents all sign-offs.

Commissioning Specifications: the contract document that details the contractor's role and responsibilities for execution of the Cx process.

Commissioning Team: those people responsible for working together in carrying out the commissioning process.

Contract Documents: the documents binding on parties involved in the construction of this project (drawings, specifications, change orders, amendments, contracts, etc.)

Contractor: refers to all contractors or authorized representatives and all applicable subs, vendors, and suppliers contracted through that (those) contractors as well as any vendors or suppliers contracted directly to the Owner. This defines any and all General Contractor, Prime or Trade Labor Contractor as "Contractor(s) whether or not self-performing work.

Control system: systems which provide control and monitoring functions for associated mechanical, electrical, plumbing and specialty systems.

Datalogging: monitoring flows, currents, status, pressures, etc. of equipment using stand-alone dataloggers separate from the control or BAS systems.

Design Narrative or Design Documentation: sections of either the Design Intent or Basis of Design, generally included in early A/E submittals to describe proposed systems.

Emergency Systems Procedures (ESPs): A scripted test of facility electrical, mechanical , and other building systems designed for the facility and performed under simulated failure of utility power. Procedures include, failure of utility power while monitoring critical back-up systems and the systems that they power, verification of automatic re-start procedures and performance after restoration of power, and documentation of equipment operating status and parameters during all phases of the test.

Factory Testing: testing of equipment by the equipment manufacturer's personnel usually conducted at the manufacturer's factory or assembly plant. Factory testing is often witnessed by an Owner's representative and/or other members of the Cx Team prior to releasing the equipment for delivery to the job site.

Field Observation Notes® (FONs®): Electronic database or spreadsheet tracking method used by the CA for monitoring the status of issues raised during execution of the Cx Process.

Fire Life Safety Procedures: Part of the ISPs used to evaluate interactive operation of building systems under simulated fire conditions. Typical procedures include tripping selected smoke detectors and verify operation of HVAC systems, elevator systems, fire doors, security systems, etc. May also include evaluation of smoke evacuation from selected spaces using smoke bombs, theatrical fog generators or similar smoke substitutes.

Functional Performance Checklist: the document containing a list of items developed by the CA to record the performance of the equipment or system in question during Functional Performance Procedures.

Functional Performance Procedures (FPPs): A series of evaluations developed by the CxA to verify operation of equipment and systems using manual (direct observation) or monitoring methods. FPPs are performed after completion of the Prefunctional Procedures, Startup Procedures, Contractor Pre-startup and Post-startup Testing and serve as a prerequisite for the ISPs.

Equipment level FPPs verify the capacity, performance and efficiency of commissioned equipment relative to the manufacturer's published (submitted) equipment data and the contract documents. System-level FPPs evaluate dynamic operation of systems and sub-systems under various operating conditions (heating, cooling, etc.) as outlined in the Sequence of Operations. Emphasis in the system-level FPPs is on programming and operation of the BAS.

General Contractor/Construction Manager: the contractor responsible for overall day-to-day management and coordination of the project. The CM/GC serves as the bridge between the Owner and the Prime Trade Contractors.
Integrated Systems Procedures: A series of procedures including Fire Life Safety Procedures and Emergency System Procedures used to evaluate building-wide operation of commissioned systems under simulated fires and power failure conditions. During the ISP's emphasis is placed on evaluating interactions between building systems and transition of building systems between different operating modes.

Issue: (or Open Issue) a condition in the installation or function of a component, piece of equipment or system that is not in compliance with the contract documents (that is, does not perform properly or is not complying with the design intent).

Manual Procedures: Cx Procedures which use hand-held instruments, immediate control system readouts or direct observation to verify performance (contrasted to analyzing monitored data taken over time to make the "observation").

Monitoring: the recording of parameters (flow, current, status, pressure, etc.) of equipment operation using dataloggers or the trending capabilities of control systems.

Non-Compliance: see Issue.

Non-Conformance: see Issue.

Over-written Value: writing over a sensor value in the control system to see the response of a system (e.g., changing the outside air temperature value from 50F to 75F to verify economizer operation). See also "Simulated Signal."

Owner-Contracted Tests: tests paid for by the Owner outside the Contractor's contract and for which the CxA does not oversee. These tests will not be repeated during functional tests if properly documented.

Pre-Functional Checklist: An inspection list that is used to document that equipment is installed correctly and is ready for startup. These checklists are developed by the CxA and are completed by the Contractors with oversight and assistance from the CxA.

Pre-Functional Procedures (PFPs): A series of static inspections used to verify equipment installation and to prepare the equipment or system for initial operation (e.g., belt tension, oil levels, etc.). The word "Pre-Functional" refers to before Startup. Even without a commissioning process, contractors typically perform some, if not many, of the PFP items a CxA will recommend. However, few contractors document in writing the execution of these items. Therefore, for most equipment, the contractors execute the PFP on their own. The CxA only requires that the procedures be documented in writing, and does not witness much of the PFP, except for larger or more critical pieces of equipment.

Project Manager (PM): the contracting and managing authority for the owner over the design and/or construction of the project.

Project Test and Balancing Contractor: the contractor(s) who is responsible for Testing, Adjusting and Balancing the facilities HVAC systems.

Sampling: functionally testing only a fraction of the total number of identical or near identical pieces of equipment. Typically used for devices such as VAV boxes.

Seasonal Performance Checkouts: functional checkouts that are deferred until the system(s) will experience conditions closer to their design conditions.

Simulated Condition: condition that is created for the purpose of testing the response of a system (e.g., applying a hair drier to a room temperature sensor to see the response in a VAV box).

Simulated Signal: disconnecting a sensor and using a signal generator to send an amperage, resistance or pressure to the transducer and DDC system to simulate a sensor value.

Specifications: the construction specifications of the Contract Documents, may be abbreviated as spec or specs.

Startup Procedures: Procedures followed for the initial energizing or starting of equipment, following a pre-approved Startup Plan. Startup Procedures occur after successful execution of Prefunctional Procedures and Contractor Pre-startup Testing.

Startup Plan. A set of written procedures used to prepare for and startup of a piece of equipment. Startup Plans are typically based on standard procedures and documentation provided by the equipment manufacturer.

Subs: the subcontractors to the contractor(s) or vendors who provide and/or install building components and systems.

Testing Contractors: a Sub, responsible for various contractor-required system testing (e.g., generator load tests, ATS testing, telecom loop testing, etc.).

Test Procedures: the step-by-step process which must be executed to fulfill the test requirements. Test procedures typically include documentation requirements which also must be completed to constitute a completed procedure.

Test Requirements: requirements specifying what modes and functions, etc. shall be tested. The test requirements are not the detailed test procedures. The test requirements are specified in the Contract Documents (Sections 15997; 16997, etc.). Examples include duct leakage, hydro, megger testing and other similar tests.

Trending: monitoring of equipment and system operation using the Building Automation System.

Vendor: supplier of equipment.

APPENDIX 2 – SAMPLE COMMISISONING TRACKING FORMS

Commissioning Status Tracking Report

Updated on: 12/13/01 Updated by: MVS

			BY E-CUBE					BY CONTRACTOR (Insert Date Complete)								BY E-CUBE					
Equip. Tag	Description	Location	PF Forms	% PF Cx Completed				Start-up Done	Start-up Report	Submittals	Manuf I-OM Manuals	Test and Balance	T&B Report	O&M Manuals		Functional Forms	% FF Cx Complete				Notes
Air-Handling Units																					
AHU-1	1st Flr AHU	2nd Flr Mech (2-21)																			Awaiting completion of controls
AHU-2	2nd & 3rd Flr AHU	2nd Flr Mech (2-39)																			Awaiting completion of controls
AHU-3	Kitchen/Dining Rm AHU	2nd Flr Mech (2-39)																			
AHU-4	Gymnasium AHU	2nd Flr Mech (2-21)																			Awaiting completion of controls
MAU-1	Kitchen Hood Unit	Roof																			
Air Conditioning Unit																					
AC-1	MDF Room Unit																				
ACC-1	AC-1 Condensing Unit	Roof																			
Fans																					
TE-1	Toilet Exhuast	Rm 2-21																			
TE-2	Toilet Exhuast	Roof																			
ER-1	AHU-1 Exh	Mech Room 2-21																			Need to check fan pressures
ER-2	AHU-2 Exh	Mech Room 2-39																			
ER-3	AHU-3 Exh	Mech Room																			
DE-1	Dishwasher Exh	Roof																			
KE-1	Kitchen Exh	Roof																			Need to check fan pressures
Terminal Units																					
FPBs	Fan Powered	General																			Awaiting completion of Controls
VAVs	Variable Air Volume	General																			Awaiting completion of Controls
CVBs	Constant Volume	General																			
Air Cooled Chillers																					
CH-1	Air Cooled Chiller	Roof																			To be re-tested in Spring 2002
CH-2	Air Cooled Chiller	Roof																			To be re-tested in Spring 2002

Sample, E-Cube ©

APPENDIX 3 - LIST OF REQUIRED PREFUNCTIONAL CHECKLISTS

APPENDIX 4 – SAMPLE PREFUNCTIONAL CHECKLISTS

PROJECT NAME

Pump - Prefunctional Checklist

System(s):	**Unit ID:**
Location:	**Ref Dwgs:**
Name / Company / Date(s):	

Instructions: Check off items as completed. Work in progress should be left blank until done.
Note comments, problems, etc. in spaces provided. Installing contractor to sign-off form when complete.

Nameplate Data:

Pump:	Manuf:	Model #:	Serial #:
	GPM:	HD:	HP:
	Imp Size:	Pump Type:	RPM:
Motor:	Manuf:	Model #:	Serial #:
	HP:	Volts/Amps:	RPM:
	SF:	PF:	EFF:
	Frame:	Encl:	Insul Class:
Starter:	Manuf:	Type:	Size:
	Htr Manuf:	Size:	Manual Reset:

ITEM	OK	COMMENTS
Storage / Handling		
Protected against dirt / debris during storage		
Motor protected from water/moisture		
Pump openings covered until pipe connected		
Labeling and Identification		
Unit labeled w/ engraved plastic nameplate		
Pump and motor mfg. nameplate installed, readable		
General Installation		
Located per plans		
Pump/motor nameplate data matches equipment schedule		
Pump installed on 4" housekeeping pad		
Installed level and plumb		
Adequate clearance for service / maintenance		
No visible sign of leaks		
Coupling installed, no noticable slop		
Pump/motor shafts rotate freely		
OSHA approved coupling guard installed		
Flow direction correct		
Baseplate grouted with Embeco non-shrinking grout		
Foundation bolts tightened		
Final alignment done after grouting and bolts tightened		
Pump Motor		
1.15 Service Factor		
ODP Enclosure		
Rated for inverter duty, class H insulation w/ VFD		
Motor base adjustable for alignment		

Notes:

Sample, E-Cube ©

APPENDIX 4 – SAMPLE PREFUNCTIONAL CHECKLISTS (continued)

ITEM	OK	COMMENTS
Vibration Isolation		
Pump mounted on steel/concrete inertia base		
Vib isolation per spec 15240		
Pump base placed on blocks prior to isol. Install		
2" clearence between inertia base and housekeep pad		
Weight transferred to springs after piping done, system filled		
Inertia base free to move, springs not bottomed-out		
Trash/debris removed from under inertia base		
Flex conns. installed on suc/disch (per manuf instr)		
Piping within 50' of pumps isolated		
Piping Connections		
Piping supported separately from pump		
Piping installed level and plumb		
Suction/discharge isolation vlvs installed, accessible		
Y-strainer w/ blowoff valve in pump suction line		
Check valve and manual balancing valve in discharge		
5 dia of straight pipe @ inlet to end-suction pump		
Air separator/strainer at pump suction line		
Low point drains, high point vents installed		
Press guage across strainer & across pump		
Guage piping installed @ tapped holes in pump flanges		
Pump base drain valved and run to nearest floor drain		
Exp. tanks installed @ pump suction, air charge OK		
Insulation		
Cold water pumps (< 60F) instulated with armaflex		
Armaflex fitted to pump, removable w/ velcro closures		
Insulation doesn't cover nameplates		
Electrical Connections		
Electrical connections complete		
Final connection to motor w/ flex		
Power available from MCC or VFD		
Local disconnect switch installed (if applicable)		
Starter, VFD and/or local disconnect labeled		
Conduit routing & support OK		
Conduit and wire size per code/spec.		
Fuses and motor overloads installed		
Fuse sizing correct, overload size/setting correct		
Overloads set for manual reset (not auto)		

Notes:

Signatures:

Installing Contractor / Vendor: Date:

Sample, E-Cube ©

APPENDIX 5 – SAMPLE FUNCTIONAL PERFORMANCE CHECKLISTS

PROJECT NAME
PUMP - FUNCTIONAL PERFORMANCE CHECKLIST

Location: Equipment ID:

Participants *(name, company, phone, date(s))*: Installing Contractor:
Reference Dwgs:

Manufacturer / Nameplate:

Operating Conditions:

Testing Instruments Used:

FUNCTIONAL PERFORMANCE					
ITEM	**OK/Value**			**COMMENTS**	
General					
Hand / Off / Auto operation OK					
Start / Stop vibration and noise acceptable					
Run vibration / noise / cavitation acceptable					
Pump rotation correct					
No visible leaks					
Flow proving					
Motor Temperature OK					
Shut-Off Pressures					
	Measured	Gauge	TAB		
Suction pressure					
Discharge pressure					
Differential pressure (Design = _____)					
Impeller size OK					
Local gauges correct					
Operating Flows & Pressures					
	Measured	Gauge	TAB		
Suction pressure					
Discharge pressure					
Differential pressure (Design = _____)					
Flow Rate (Design = _____ GPM)					
Electrical Meaurements					
Volts (Design = _____ +/- 10%)		A/B:	A/C:	B/C:	
Amps (FLA = _____) (SFA = _____)		A:	B:	C:	
Power (kW)		W1:	W2:		
Power Factor					
Heater size / settings correct					
Heaters set for manual reset					
Companion Equipment					
Differential Pressure switches functional					
Diff. Press switches indicate poistive flow					
Flow switch functional					
CT sensor functional					

COMMENTS AND OBSERVATIONS:

Sample, E-Cube ©

END OF SECTION

MHTN ARCHITECTS

Addendum No. 1 Issued: 05/28/13

Addendum No. One
for the
Studend Life Center
Bid Package
MHTN Project No. 2010562

All Contractors submitting proposals on the above captioned project shall be governed by the following addendum, changes and explanations to the bidding documents dated May 15, 2013 and shall submit their bids in accordance therewith:

Changes to the Project Manual:

A1.1 **Section 019113, General Commissioning Requirements.** Issue as an attachment to this addendum.

A1.2 **Section 055100, Metal Stairs.** Add the following:

Paragraph 2.7.B.6: Risers: Perforated metal, with pattern of 1/2-inch squares on 11/16-inch centers.

A1.3 **Section 055213, Pipe and Tube Railings.** Modify Paragraph 2.1.B.6 as follows:

~~Woven-Wire Mesh~~ *Welded Wire Mesh*: ~~Intermediate-crimp,~~ square pattern, 4~~-inch (50-mm)~~ *2-inch welded wire mesh* ~~woven-wire mesh~~, made from ~~0.135-inch (3.5-mm)~~ *0.125* nominal diameter wire complying with ASTM A 510 (ASTM A 510M).

A1.4 **Section 097200, Wall Coverings.** Add the following:

Paragraph 1.2.A.3. Decorative cast vinyl film with custom images provided by Owner, for 3-court gym metal panel surfaces. Representations of images follow this section. Paragraph 2.3.

2.3 DECORATIVE CAST VINYL FILM

A. Cast Vinyl Film: Dimensionally stable, cast PVC film, 2-mil- (0.05-mm-) minimum thickness, with pressure-sensitive, clear adhesive back for adhering to metal panels and releasable protective backing.

1. Products: Subject to compliance with requirements, manufacturers with products that may be incorporated into the Work include, but are not limited to, the following:

a. Avery Dennison.
b. FDC Graphic Films, Inc.
c. Oracal USA.
d. 3M.

2. Use: Suitable for interior applications.
3. Patterns: Custom graphics provided by Owner as indicated. Representations of images follow this section.
4. Film will be used to create decals of custom images. Vinyl will remain in the positive areas of the image; vinyl will be cut out of the negative areas of the image. (Addendum 01)

Paragraph 3.3.G. Decorative Cast Vinyl Film: Apply to metal panels in areas indicated. Remove air bubbles, blisters and other defects.

A1.5 Attachment 097200B, Custom Images for Cast Vinyl Film. Issue as an attachment to this addendum.

A1.6 Section 122413, Roller Shades. Incorporate the following changes into this section:
The roller shades will be motorized, but will not be computer controlled.
There will be no manual shades.
There will be no black out shades.

A1.7 **SECTION - 233116** Non Metal Ductwork- The following is added to this specification:

PART 2 PRODUCTS – UNDERGROUND DUCTWORK
A. Acceptable Manufacturers:
1. Blue Duct by AQC Industries
B. DUCT MATERIAL AND SEALANTS
1. Provide elbows, pipe, diffusers, plenum, clamp & gasket, boots, saddle registers, caulk,
water gauge test and adapters as required by drawings for underground installation. Provide 10-yr manufacturer's parts warranty.
2. Ductwork shall be HDPE, food grade, closed cell plastic material that is recyclable, does not emit volatile organic compounds, and conforms to ASTM-D2412. Ductwork shall be resistant to mildew, mold (UL 181B), and radon gas (BSS 7239-88). Ductwork shall not rust or crack under external stress or strain. Ductwork shall have R-10 thermal insulation value without the use of external insulation. Fiberglass style ductwork or PVC coated galvanized steel ductwork shall NOT be acceptable.
3. All joints shall be gasket and sealed. Clamps and gaskets shall be used on ductwork without flanges. Clamps shall be polyethylene with 410 stainless steel plates and stainless steel screws. Gaskets shall comprise of ¼" thick butyl rubber sealant tape with Tedlar facing that is water and UV resistant and shall not stain. Gaskets shall comply
with ASTM-E84 for flame and smoke spread.
4. Flanged joints and duct branches shall use a co-polymer adhesive caulking sealant that
is water and UV resistant. Flanges shall be connected with stainless steel bolts.
5. Assembled ductwork shall be able to maintain +/- 10" static pressure with no leakage.
6. Assembled ductwork shall be approved for installations 27" below flood plain elevation
without water intrusion.
7. Duct system installed by manufacture trained installer will be a air and water tight system.

PART 3 EXECUTION
A. Installation
1. Follow manufacturer's installation instructions.

2. Excavate a trench evenly. No bedding is required, but sand or light aggregate may be used. Backfill material may consist of pea greavel, sand or excavated material, if equivalent. Tamper backfill material to hold in place. No not allow heavy loads to travel over backfilled duct, as crushing may occur.
3. Cut piping material with hand, circular, reciprocating, or chain saw.
4. Apply gaskets, clamps, sealant, screws or bolts to connect ductwork.

B. Testing
1. Currently no code requirement for air testing underground duct systems.
2. If desired a test we recommend SMACNA air duct leakage test standard.
3. Test ductwork 24 hours after installation

C. Cleaning
1. Remove dust and debris from ductwork prior to occupancy.

Changes to the Drawings:

GENERAL

A1.8 Sheet GI101.1:
1. Move SB110 Footing & FDTN Plan to below SB101C in the drawing index.

A1.9 Sheet GI101.2:
1. Replace Sheet, note the following revisions:
   a. Add WF508 BULKHEAD DETAILS ALT BID 1 to the sheet index under POOL
   b. Delete MP107 Alternate 3 mechanical piping plans from the sheet index.
   c. Revise Electrical Sheet list order in the index.

Attached GI101.2

A1.10 Sheet GI003.1:
1. Mark Approved Fabricator and Yes to Fabricators(IBC 1704.2) at Special Inspection, Material Testing & Structural observation items Required by Chapter 17 of the 2009 IBC

STRUCTURAL

A1.11 Sheet SB110: Replace SB110 with new SB110
1. Extend spa foundation near grid 0.9

A1.12 Sheet SB 504: Replace sheet SB504 with new SB504
1. Revise detail B1
2. Add details A2 landscape retaining wall schedule. See attached Sheet SB504

A1.13 Sheet SF102C:
1. Delete both SF102C sheets and replaced with new SF102B and new SF102C.

A1.14 Sheet SF503: Replace sheet SF503 with new SF503
1. Revise notes in detail B4.

ARCHITECTURAL

A1.15 Sheet AS401:

1. Revise Key note 24 as follow: CONCRETE STEP – SEE D1/AS504

A1.16 Sheet AS401A:

1. Revise Key note 24 as follow: CONCRETE STEP – SEE D1/AS504

A1.17 Sheet AS402

1. Revise Key note 24 as follow: CONCRETE STEP – SEE D1/AS504

A1.18 Sheet AE100A

1. Delete door #99E-1. Add door #65A with hardware group 33. Vestibule 10D to increase in size. West wall to increase. See attached AD01-AE003

A1.19 Sheet AF104

1. A1 Lower Level Finish Plan – Alternate 1. See attached AD01-AE008

a. Add CT-9 at edge of seat and stairs (typ.)
b. Add ST-11 to small pool surround
c. Add ST-11 to Floor Material Legend

A1.20 Sheet AE207

1. Add sheet AE207 to the drawing set

A1.21 Sheet AE208

1. Add sheet AE208 to the drawings set

A1.22 Sheet AE209

1. Add sheet AE209 to the drawing set

A1.23 Sheets AE311, AE312, AE313, AE314, AE315, AE316 and AE317

1. All locations noting Below Grade Rigid Insulation (EXPS) shall be 2" thickness (min. R-10)

A1.24 Sheet AE311

1. Wall Section A1: Add Motorized Window shade note to WT-43 Levels 2 and 3
2. Wall Section A4: Delete motorized window shade from WT-39.

A1.25 Sheet AE312

1. Wall Section A3: Delete motorized window shade from WT-30
2. Wall Section A4: Add motorized window shade to WT-34 Level 2 and 3.
3. Wall Section A5: Add motorized window shade to WT-41 (Exercise rooms 1 and 2)

A1.26 Sheet AE313

1. Wall Section A3: Add motorized window shade to WT-13 at Level 3.
2. Wall Section A5
   a. Delete motorized window shade from WT-20 and WT-16,
   b. Add Motorized Window Shade to WT-44 and WT-46 Levels 2 and 3.

A1.27 Sheet AE430

1. Add dimensions to indicate all toilet partitions are 60" deep minimum.
2. Enlarged Plan C2 : Dimension added and revised to show 3-0" clear at transfer showers in rooms 40D & 40C.

A1.28 Sheet AE431

1. A3 Credit Union Floor Plan: See attached AD01-AE007
   a. Locate ST-14 accent bands at Teller 112
   b. Locate PNt-56 accent wall at Teller 112 and Lounge 113.

A1.29 Sheet AE433

1. Toilet room 118: Revised toilet compartment size on eastern most stall to 3'-0" w/ grab bars on both sides of stall to comply with ambulatory accessibility. See attached AD01-AE004
2. Enlarged Plan A1: Shall say Enlarged Plan @ Women's Locker Room Alternate 1
3. Enlarged Plan C1: Shall say Enlarged Plan @ Men's Locker Room – Alternate 1
4. Add dimensions to indicate all toilet partitions are 60" deep minimum.

A1.30 Sheet AE442

1. B5/AE442 – Revise note "AV CABINET" to "AV CABINET – SEE A4/AE551"

A1.31 Sheet AE443

1. A3/AE443 & C1/AE443 – Revise note "AV CABINET" to "AV CABINET – SEE A4/AE551"

A1.32 Sheet AE446

1. B5 Credit Union Desk: Front Notate finishes. See attached AD01-AE009
2. B4 Credit Union Desk Back:
   a. Notate finishes
   b. Add under counter casework

A1.33 Sheet AE447

1. B5 Credit Union East Interior Elevation: Add PNT-56 accent walls
2. A6 Credit Union West Interior Elevation: Delete WD-102 and replace with TRP-99.
3. See attached AD01-AE012

A1.34 Sheet AE448

1. C5 C. U. Offices W. Int. Elev.: Delete PLAM-72 and replace with PLAM-78
2. B4 Credit Union Office S. Int. Elev: Delete PLAM-74 and replace with PLAM-78
3. B5 Credit Union South Int. Elev.:
   a. Delete PLAM-72 and replace with PLAM-78
   b. Changed television size to 60"
   c. Raised television height to 4'-8"
4. A5 Teller Int. Elev.: Delete PLAM-72 and replace with PLAM-78
5. See attached AD01-AE010

A1.35 Sheet AE457

1. B5 Credit Union Desk Section:
   a. Delete PLAM replace with PLAM-71
   b. Delete QTZ-76 and replace with QTZ-75
   c. Delete Plexi-glass and replace with TRP-101
   d. Delete RB Base and replace with RB-42
   e. Locate SST Fasteners

See attached AD01-AE011

A1.36 Sheet AE533

1. Added detail showing typical railing dimensions. See attached AD01-AE005

A1.37 Sheet AE540

1. Revised ceiling bracing details. C4/AE540. See attached AD01-AE006

A1.38 Sheet AE551

1. Added AV cabinet section. See attached AD01-AE001
2. Added AV cabinet plan details. See attached AD01-AE002

A1.39 Sheet AE605: Re-issue (entire sheet)

1. 50 Meter Pool – Alternate 1 Finish Schedule
   a. 132 Natatorium – Add ST-11 to Floor Finish/Color
2. Finish Schedule
   a. Removed PNT-56 from Room 111
   b. Added PNT-56 to Room 112

A1.40 Sheet AE606: Re-issue (entire sheet)

1. Add PLAM-78
2. Add PLAM-79
3. Add TRP-99

A1.41 Sheet AE610; Re-issue (entire sheet)

1. Delete door #112
2. Delete door # 99E-1
3. Add door #65A
4. Door # 75 – Revise 45 min rating to 60 min
5. Door #199E-A – add 60 min rating
6. Door #199E-B – add 60 min rating
7. Door #100D-1 – add 60 min rating - Revise remarks “Wondoor Pocket Door” to “Rated Pocket Door”.
8. Door #100D-2 - Revise remarks “Wondoor” to “Rated Pocket Door”.
9. Door #150-1 – add 60 min rating - Revise remarks “Wondoor Pocket Door” to “Rated Pocket Door”.
10. Door #150-2 - Revise remarks “Wondoor” to “Rated Pocket Door”.
11. Door #205-1 – add 60 min rating - Revise remarks “Wondoor Pocket Door” to “Rated Pocket Door”.
12. Door #205-2 - Revise remarks “Wondoor” to “Rated Pocket Door”.
13. Door #220-1 – add 60 min rating - Revise remarks “Wondoor Pocket Door” to “Rated Pocket Door”.
14. Door #220-2 - Revise remarks “Wondoor” to “Rated Pocket Door”.
15. Door #235-2 – add 60 min rating – hardware group P

A1.42 Sheets AE620, AE621, AE622, AE623, AE624, AE625, AE626, AE627, AE628 and AE630

1. Add Motorized window shade to: WT-33 Levels 2 and 3; WT-35 Levels 2 and 3; WT-42 (Exercise rooms 1 and 2); WT-9; WT-8; WT-7 portion at lobby area; WT-5; WT-16; WT-17; WT-25 (levels 2 and 3) or WT-71 Alt 3 and WT-73 Alt.3; WT-26 (levels 2 and 3) or WT-26B Alt 3 and WT-72 Alt 3; WT-27 or WT-27 Alt 3 (levels 2 and 3); WT-45; WT-47; WT-48; WT 49; WT-56; WT-57; WT-58; WT-54; WT-51; WT-52.

MECHANICAL

A1.43 Sheet - MS402

1. The sheet "TUNNEL DETAIL AND NODES" was previously numbered MS401 and has been changed to MS402.

A1.44 Sheet - MS403

1. The sheet "TUNNEL DETAIL AND NODES" was previously numbered MS401 and has been changed to MS403.

A1.45 SHEET - MH100A

1. Tag quantity changed from "0" to "2" for return grill tag in ROCK CLIMBING 75.

A1.46 SHEET - MH100B

1. Balancing dampers added to two duct branches supplying CORRIDOR 10C off of VAV box 4-1.
2. Balancing damper added to duct on gridline "T" and between 13 and 13.5.
3. Balancing damper added to duct serving STUDY 25C.

A1.47 SHEET - MH100C

1. Keynote #1 added to duct at gridline ~6.5 and between "b" and "c".
2. Exhaust diffuser in MEN'S TOILET 47T changed to from 16" round to 12" round and the exhaust branch to it changed from 16/12 to 12/10.
3. Exhaust diffusers in WOMEN'S LOCKER 41 removed. (qty. 4)

A1.48 SHEET - MH101A

1. Duct size tags "12/12" added to transfer return ducts for OFFICE 155B and OFFICE 155C.
2. Sidewall supply diffusers changed to type CD-8 in OUTDOOR RECREATION STORAGE 155.
3. Return grill tagged in CLIMBING WALL 75, 36"x72" RG-4/10,000 CFM.

A1.49 SHEET - MH101B

1. Keynote #1 added to left 32" supply duct supplying MAC GYM.
2. Sidewall supply diffusers changed to type CD-4 in MAC GYM 55.

A1.50 SHEET - MH101C

1. Dryer vent size tags added, 4Ø. Located @ gridlines "10" and between "f" and "d".
2. Duct size tag added to transfer return duct from ELECTRICAL 104, "12/12".

A1.51 SHEET - MH103A

1. Linear diffusers in exercise rooms changed from 6' length to 4' length.

A1.52 SHEET - MH103B

1. Balancing dampers added to each of the 9 supply diffusers over FITNESS 320.

A1.53 SHEET - MH103C

1. Balancing damper added to 52" return duct to be balanced @ 8500 CFM.

A1.54 SHEET - MH106

1. Diffuser tag 14" EG-1 500 CFM added to exhaust diffuser in WOMEN'S TOILET 100L.
   Diffuser tag 12" EG-1 375 CFM added to exhaust diffuser in MEN'S TOILET 100M.
2. Diffuser tag 8" EG-2 130 CFM added to exhaust diffuser in WET CUSTODIAL 100P.

3. Diffuser tag CD-1 190 CFM added to supply diffuser in CORRIDOR 100F.

A1.55 SHEET - MH602

1. On the PUMP SCHEDULE ID's CHWP-1 & 2 now have note #2 "PUMP ON VFD" associated with them.
2. On the HYDRONIC TO HYDRONIC HEAT EXCHANGER SCHEDULE ID PLHX-1 BASE BID has been added. MANUFACTURER AND MODEL NUMBER – SONDEX S22-IG10-32-TK-LIQUID, TYPE -PLATE AND FRAME, USAGE - HEATING, LOAD BTU – 1600000, FLOW RATE – 164.1, ENTERING LEAVING TEMP – 180/160, WORKING FLUID – WATER, HEAD LOSS – 15, FLOW RATE – 321.9, ENTERING LEAVING TEMP – 86/96, WORKING FLUID – WATER, HEAD LOSS – 15, DIA LENGTH – 23.622/43, SURFACE AREA – 83.85.

A1.56 SHEET - MH603

1. On the PLUMBING FIXTURE SCHEDULE fixture S-6 MASSAGE SINK, ½" CW, ½" HW, 2" W, 1 ½" V, SINGLE COMPARTMENT ON TOP OF COUNTER.
2. On the PLUMBING FIXTURE SCHEDULE fixture HB-2 has been added. ID HB-2, ½" CW, NON FREEZE BOXED GROUND HYDRANT ¾", JR SMITH MODEL 5810, BRONZE NON FREEZE GROUND HYDRANT TITH "T" HANDLE KEY, AND BRONZE HYDRANT BOX.
3. On the GRILLES, REGISTERS AND DIFFUSERS SCHEDULE ID CD-2 the model number has changed from ML-38 to ML-39.

A1.57 SHEET - MP100A

1. Thermostat and keynote #3 "THERMOSTAT TO BE CONNECTED TO AIR HANDLER NUMBER 9." added to ROCK CLIMBING 75 area.

A1.58 SHEET - MP100B

1. Thermostat and keynote #2 "THERMOSTAT TO BE CONNECTED TO AIRHANDLER NUMBER 1". added to MAC GYM 55.

A1.59 SHEET - MP105

1. PLHX-4 and SLHX-1 switched locations. Mechanical piping changed to accommodate new locations of heat exchangers.

A1.60 SHEET - PP100A

1. New waste line to drain in MECHANICAL 85.

A1.61 SHEET - PP100C

1. Added 3" size tag to waste lines in two locations along west end of pool.
2. Added 2" size tag to waste line in CHANGING 40D.
3. Added 3" size tag to waste line picking up deck drains on east side of pool.
4. Keynoted two domestic cold water lines with keyed note #9 " WATER CONNECTION TO POOL EQUIPMENT, COORDINATE WITH POOL EQUIPMENT DRAWINGS." coming into POOL EQUIPMENT 45B.

A1.62 SHEET - PP101A

1. Riser shown and tag added to domestic cold water line "2" DCW UP" near STAIR #6.

A1.63 SHEET - PP101C

1. Floor sink tag FS-1 added in MECHANICAL 120.

A1.64 SHEET - PP102A

1. Tags 6" RDO/RD DN added to the roof drain and roof drain overflow drops.

A1.65 SHEET - PP103A

1. Pipe sizes added to rooms TOILET 300H and TOILET 300N plumbing.

A1. 66 SHEET - PP103C

1. Keynote #8 "CONNECT TO EVAPORATIVE SECTION ON AIR HANDLER" added to domestic cold water line located at air handler above 3 COURT GYMNASIUM 215.

A1.67 SHEET - PP105

1. Keynote #4 "WATER LINE TO RUN BELOW GRADE" added to domestic cold water line located on the south side of the natatorium.
2. Domestic cold water design changed on west end of CRS STORAGE 130. Two pipe size tags added to domestic cold water line running under grades.

ELECTRICAL

A1.68 General instructions

A. Contractor shall coordinate location of all junction boxes required for motorized shades with Architect and Shade installer prior to rough in.

DRAWINGS

A1.69 Sheet EG100 – Symbols Abbreviations and Sheet Index

1. Replace Sheet EG100 with new EG100

A1.70 Sheet ED100.1 – Electrical Demolition Site Plan

1. Change: Keyed Note #8
2. Add: Keyed Note #11 – See attached sheet ED100.1
3. Add: Keyed Note #12 – See attached sheet ED100.1
4. Add: Keyed Note #13 – See attached sheet ED100.1
5. Add: Showed locations of telecom manholes and existing routing.

A1.71 Sheet ES100.2 – Enlarged Electrical Site Plan

1. Add: Telecom routing from MH361 to main telecom room.
2. Add: Existing Routing and locations of telecom manholes and ductbank.
3. Add: Routing from MH362 to reefed telecom to existing bridge.
4. Add: Keyed Note #4 – See attached sheet ES100.2
5. Add: Keyed Note #5 - See attached sheet ES100.2

A1.72 Sheet EL101.C – Level 1 Lighting Area C

1. Replace Sheet EL101.C with new sheet EL101.C

A1.73 Sheet EL705 – Climbing Wall Lighting

1. Add new sheet EL705 to drawing set.

A1.74 Sheet EP100.B – Lower Level Power Plan Area B

1. Add: Keyed Note #9 – See attached sheet EP100.B
2. Add: Keyed Note #10 – See attached sheet EP100.B
3, Add: Junction boxes in various locations for motorized shades and future motorized shades. See attached sheet EP100.B for locations.

A1.75 Sheet EP100.C – Lower Level Power Plan Area C

1, Clarification: Circuits to receptacles in natatorium.
2. ADD: Receptacle in natatorium at grid B6.
3. See attached EP100.C

A1.76 Sheet EP101.A – Level 1 Power Plan Area A

1. Add: Keyed Note #8 – See attached sheet EP101.A
2. Add: Keyed Note #9 – See attached sheet EP101.A
3. Add: Junction boxes in various locations for motorized shades and future motorized shades. See attached sheet EP101.A for locations.

A1.77 Sheet EP101.B – Level 1 Power Plan Area B

1. Replace Sheet EP101.B with new sheet EP101.B

A1.78 Sheet EP101.C – Level 1 Power Plan Area C

1. Add: Keyed Note #8 – See attached sheet EP101.C
2. Add: Keyed Note #9 – See attached sheet EP101.C
3. Add: Junction boxes in various locations for motorized shades and future motorized shades. See attached sheet EP101.C for locations.

A1.79 Sheet EP102.A – Level 2 Power Plan Area A

1. Add: Keyed Note #9 – See attached sheet EP102.A
2. Add: Keyed Note #10 – See attached sheet EP102.A
3. Add: Junction boxes in various locations for motorized shades and future motorized shades. See attached sheet EP102.A for locations.

A1.80 Sheet EP102.B – Level 2 Power Plan Area B

1. Add: Keyed Note #7 – See attached sheet EP102.B
2. Add: Keyed Note #8 – See attached sheet EP102.B
3. Add: Junction boxes in various locations for motorized shades and future motorized shades. See attached sheet EP102.B for locations.

A1.81 Sheet EP102.C – Level 2 Power Plan Area C

1. Add: Keyed Note #8 – See attached sheet EP102.C
2. Add: Keyed Note #9 – See attached sheet EP102.C
3. Add: Junction boxes in various locations for motorized shades and future motorized shades. See attached sheet EP102.C for locations.

A1.82 Sheet EP103.A – Level 3 Power Plan Area A

1. Add: Keyed Note #5 – See attached sheet EP103.A
2. Add: Keyed Note #6 – See attached sheet EP103.A
3. Add: Junction boxes in various locations for motorized shades and future motorized shades. See attached sheet EP103.A for locations.

A1.83 Sheet EP103.B – Level 3 Power Plan Area B

1. Add: Keyed Note #5 – See attached sheet EP103.B
2. Add: Junction boxes in various locations for motorized shades and future motorized shades. See attached sheet EP103.B for locations.

A1.84 Sheet EP103.C – Level 3 Power Plan Area C

1. Add: Keyed Note #3 – See attached sheet EP103.C
2. Add: Keyed Note #4 – See attached sheet EP103.C
3. Add: Junction boxes in various locations for motorized shades and future motorized shades. See attached sheet EP103.C for locations.

A1.85 Sheet EP200.C1 – Lower Level Power Plan Alternate 1A

1. Add: Added Water Protected GFCI receptacle and circuit to approximately grid line C1. See attached EP200-C1

A1.86 Sheet EP200.C2 – Lower Level Power Plan Alternate 1B

1. Replace Sheet EP200.C2 with new EP200C.2

A1.87 Sheet EP201.C – Level 1 Power Alternate 1

1. Removed sheet EP201.C from project.

A1.88 Sheet EP204.C – Roof Power Plan Area C Alt.1

1. Replace Sheet EP204.C with new sheet EP204.C

A1.89 Sheet EP504 – Enlarged U of U Credit Union

1. Replace Sheet EP504 with new sheet EP504

A1.90 Sheet EP600 – Oneline Diagram 480V

1. Change: Removed submeters from panels – see attached sheet EP600
2. Change: Moved Panels H1L1 and H1L2 with corresponding lighting control panels from panel HMDL to panel HMLD2.
3. Add: Added grounding to step down transformers T1 and T2.

A1.91 Sheet EP601 – Oneline Diagram 208V

1. Change: Removed submeter from panel LLP2. See attached EP601

A1.92 Sheet EP603 – Panel Schedules

1. Change: Updated various panel schedules – see attached sheet EP603.
2. Change: Renamed sheet from 'Panel Schedules Lower Level ' to 'Panel Schedules'.

A1.93 Sheet EP604 – Panel Schedules

1. Change: Updated various panel schedules – see attached sheet EP604.
2. Change: Renamed sheet from 'Panel Schedules Lower Level ' to 'Panel Schedules'.

A1.94 Sheet EP605 – Panel Schedules

1. Change: Updated various panel schedules – see attached sheet EP605.
2. Change: Renamed sheet from 'Panel Schedules Level 1' to 'Panel Schedules'.
3. Add: Added panel schedules L1P5 and L1P6 to sheet.

A1.95 Sheet EP606 – Panel Schedules

1. Change: Updated various panel schedules – see attached sheet EP606.
2. Change: Renamed sheet from 'Panel Schedules Level 2' to 'Panel Schedules'.

A1.96 Sheet EP607 – Panel Schedules

1. Change: Updated various panel schedules – see attached sheet EP607.
2. Change: Renamed sheet from 'Panel Schedules Level 3' to 'Panel Schedules'.
3. Add: Added panel schedule H3L2 to sheet.

A1.97 Sheet EP608 – Panel Schedule

1. Replace Sheet EP608 with new EP608

A1.98 Sheet EP609 – Electrical Schedules

1. Replace Sheet EP609 with new EP609

A1.99 Sheet EP610 – Relay Panels

1. Replace Sheet EP610 with new EP610

A1.100 Sheet EY200.C1 – Lower Level Systems Plan Alt. 1A

1. Replace sheet EY200.C1 with new sheet EY200.C1

A1.101 Sheet EY200.C2 – Lower Level Systems Plan Alt. 1b

1. Replace Sheet EY200.C2 with new sheet EY200.C2

A1.102 Sheet EY601 – Telecom Riser Diagram

1. Change: Deleted Detail #1 Raceway and grounding riser diagram from sheet. Grounding is provided on sheet EY602.

See attached EY601

A1.103 Sheet EY603 – Fire Alarm Riser Diagram

1. Add: Added Detail 2 to sheet – MIJA Extinguisher system. See attached sheet EY603 for details.

POOL

A1.104 Sheet WF101.0 Activity Pool Chemical Feed Equipment Schedule:

1. Item 9B: CO2 Bulk Storage Container mfg. & model # revised

A1.105 Sheet WF401.0 Enlarged Activity Pool Plan – Alt Bid:

1. Note clarified at sitting bench finger wall coping
2. Note added at bubble couch finger wall coping
3. Note added at coping joint and water feature interface.
4. See attached AD01-WF01
5. WF401.0 Activity Pool Deck Equipment Schedule:
   Item 3: Finger wall coping remarks clarified. See attached AD01-WF02
6. WF401.0 Activity Pool Deck Equipment Schedule:
   Item 8: Deck Jets remarks clarified. See attached AD01-WF03

A1.106 Sheet WF401.1 New Dimension Plans added to sheet Plan:

1. Coping Segment Dimension Plan at Bubble Couch
2. Coping Segment Dimension Plan at Circular Area
3. See attached AD01-WF04

A1.107 Sheet WF401.3 Activity Pool Feature Dimension Plan:

1. Dimensions added to Deck Spray feature. See attached AD01-WF05

A1.108 Sheet WF402.0 Lap Pool Plan – Alt:

1. Enlarged 50 Meter Lap Pool Plan
   a. Four wall anchors added for water polo out-of bounds demarcation floating lane lines
   b. Backstroke Pennant anchor locations clarified to be shown at 16'-4 ¾" from 50 meter course length end walls. Depth markers shifted to accommodate anchors
   c. One additional pair of backstroke anchor locations shown to accommodate above course length
2. 50 Meter Lap Pool Deck Equipment Schedule:
   a. Backstroke Stanchion Posts and Anchors: 2 additional deck anchors added to the quantity required (12 backstroke stanchion post deck anchors now required)
   b. · Backstroke Line w/Pennants: Quantity required clarified to read: "2 Pennant Lines"
   c. Item 7B: Quantity clarified to include four wall anchors. Remarks clarified to require the water polo out-of bounds demarcation floating lane lines extend to wall anchors
   d. Item 7C: Quantity required clarified to read: "2 Lane Lines"
   e. Item 9: Floor Control Joint remarks clarified

f. Item 10: Wall Control Joint remarks clarified

3. See attached Full Sheet WF402.0, AD01-WF06

A1.109 Sheet WF402.1 Lap Pool Dimension Plan – Alternate 1:

1. 50 Meter Lap Pool Swim Course Dimension Plan:
   a. Backstroke Pennant anchor locations clarified and dimensioned at 16'4 ¾" from 50 meter course length end walls. Depth markers shifted to accommodate anchors
   b. One additional pair of backstroke anchor locations shown to accommodate above course length
2. Water Polo Course and ADA Lift Dimension Plan:
   a. Four wall anchors added with dimensions for water polo out-of bounds demarcation floating lane lines
   b. Dimensions added to indicated locations of the water polo protective netting deck anchors (4 locations)
   c. Note at ADA lift hose bib deck box clarified to show the requirement for only one lift requiring a hose bib deck box

3. See attached Full Sheet WF402.1, ADD01.WF07.

A1.110 Sheet Sheet WF402.2 50 Meter Lap Pool Piping Plan:

1. Gutter loop piping size clarified to read 12" diameter
2. Two gutter drop-outs shifted to avoid interference with wall anchors
3. See attached AD01-WF08.

A1.111 Sheet WF402.3 50 Meter Lap Pool MD & Gutter Drop-out Dimension Plan:

1. Gutter drop-out location dimension revised (typical both sides of pool). See attached AD01-WF08.

A1.112 Sheet WF403.0 Raised Spa Schedule (base bid):

1. Item 1: refer to the State adopted 2011 NEC (not 2008 as listed)

A1.113 Sheet WF404.0 Raised Spa Schedule (alt bid 1):

1. Item 1: refer to the State adopted 2011 NEC (not 2008 as listed)

A1.114 Sheet WF405.0 Outdoor Leisure Pool Schedule:

1. Item 1: refer to the State adopted 2011 NEC (not 2008 as listed)

A1.115 Sheet WF405.2 Outdoor Leisure Pool Fitting and Piping Plan:

1. Floor equalizer fitting eliminated and a wall fitting replaced with a wall fitting. Piping extended to wall fitting
2. Remaining skimmers equalizer fitting shown with piping
3. See attached AD01-WF10.

A1.116 Sheet WF405.2 Outdoor Leisure Pool Fitting Schedule:

1. Schedule title revised
2. Surface Skimmer Equalizer Fitting Cover quantity increased to 3
3. Surface Skimmer Equalizer Floor Cover deleted
4. See attached AD01-WF11

A1.117 Sheet WF407.0

1. Lower Level Pool Equipment Room Plan: Lap Pool Heat Exchanger (hexagon 52) and FUTURE Solar Heat Exchanger locations switched to accommodate better piping installation
2. Equipment Schedules boxed note: Reference added not boxed note to see

Equipment Interlocking Notes on sheets WF 601.1 and WF601.2

A1.118 Sheet WF407.1

1. Pool Equipment Room Underground Piping Plan (Alternate Bid):
   a. Lap Pool and Activity Pool circulation pump locations revised to match as shown on WF407.0
   b. Solar Heat Exchanger and Lap Pool Heat Exchanger locations switched
   c. See attached AD01-WF12
2. Pool Equipment Room Circulation Face Piping Plan (Alternate Bid):
   a. Lap Pool and Activity Pool circulation pump locations revised to match as shown on WF407.0
   b. Piping associated with the above two pumps revised
   c. Lap Pool Heat Exchanger and FUTURE Solar Heat Exchanger and Lap Pool Heat Exchanger locations switched to accommodate better piping installation
   d. Piping associated with the above two heat exchangers revised
   e. 10" diameter by-pass valve and 10" capped tees added to the lap pool face piping for connection to the future solar heat exchanger.
   f. See attached AD01-WF13

3. Equipment Schedules boxed note: Reference added not boxed note to see Equipment Interlocking Notes on sheets WF 601.1 and WF601.2. See attached AD01-WF14

Attachments:

Project Manual
1. Section 019113 General Commissioning Requirements
2. Section 097200B Custom Images for Cast Vinyl Film

General
1. GI101.2 Sheet Index Volume 2.

Structural
1. SB110
2. SB504
3. SF102B
4. SF102C
5. SF503

Architecture
1. AD01-AE003
2. AD01-AE008
3. AD01-AE007
4. AD01-AE009
5. AE207
6. AE208

7. AE209
8. AD01-AE004
9. AD01-AE0012
10. AD01-AE010
11. AD01-AE011
12. AD01.AE005
13. AD01.AE006
14. AD01.AE001
15. AD01.AE002
16. AE605
17. AE606
18. AE610

Electrical

1. EG100
2. ED100.1
3. ES100.2
4. EL101.C
5. EL705
6. EP100.B
7. EP100.C
8. EP101.A
9. EP101.B
10. EP101.C
11. EP102.A
12. EP102.B
13. EP102.C
14. EP103.A
15. EP103.B
16. EP103.C
17. EP200.C1
18. EP200.C2
19. EP204.C
20. EP504
21. EP600
22. EP601
23. EP603
24. EP604
25. EP605
26. EP606
27. EP607
28. EP608
29. EP609
30. EP610
31. EY200.C1
32. EY200.C2
33. EY601
34. EY603

Pool

1. AD01-WF01
2. AD01-WF02
3. AD01-WF03
4. AD01-WF04
5. AD01-WF05
6. WF402.0 (AD01-WF06)
7. WF402.1 (AD01-WF07)

8. AD01-WF08
9. AD01-WF09
10. AD01-WF10
11. AD01-WF11
12. AD01.WF12
13. AD01.WF13
14. AD01.WF14

End of Addendum No. 1

The Project Team Leader has reviewed this document and found it in compliance with internal standards

Angelica M. Pavoni 5/29/2013

Team Leader Date