THE UNIVERSITY OF UTAH

The Dept. of CAMPUS DESIGN & CONSTRUCTION

1795 E South Campus Drive Rm 201
Salt Lake City, Utah 84112
PH# (801) 581-6022
FAX: (801) 581-6081
CONTACT: MICHAEL BECK

ARCHITECTURE

## MHTN ARCHITECTS, INC.

420 EAST SOUTH TEMPLE
Salt Lake City, Utah 84111
801.595.6700 (Office)
801.395.6717 (Fax)
PEGGY MCDONOUGH

## HASTINGS + CHIVETTA

622 Emerson, Suite 200
St. Louis, MO 63141
314.863.5717 (Office)
314.863.2823 (Fax)
STEVE DEHEKKER

STRUCTURAL

## REAVELEY ENGINEERS + ASSOCIATES

675 EAST 500 SOUTH, Ste 400
Salt Lake City, Utah 84102
801.486.3883 (Office)
MARK HARRIS

LANDSCAPE

## MHTN ARCHITECTS, INC.

420 EAST SOUTH TEMPLE
Salt Lake City, Utah 84111
801.595.6700 (Office)
801.395.6717 (Fax)
RANDY BOUDRERO

CIVIL

## GREAT BASIN ENGINEERING, INC.

5746 South 1475 East
Ogden, Utah 84403
Phone: 801.521.0222
COURY MORRIS

MECHANICAL

## VAN BOERUM & FRANK ASSOCIATES, INC.

330 South 300 East
Salt Lake City, UT 84111
Phone: 801.530.3148
KIM HARRIS

ELECTRICAL

## KEN GARNER ENGINEERING

102 WEST 500 SOUTH # 225
Salt Lake City, Utah 84101
801.328.8800 (Office)
801.326.8802 (Fax)
KEN GARNER

POOL

## WATER DESIGN INC.

5047 S. Galleria Drive
Murray, Utah 84123
801.261.4009 (Office)
801.261.4069 (Fax)
CHARLES ROSS ANDERSON

UNIVERSITY OF UTAH

# UNIVERSITY OF UTAH
# STUDENT LIFE CENTER

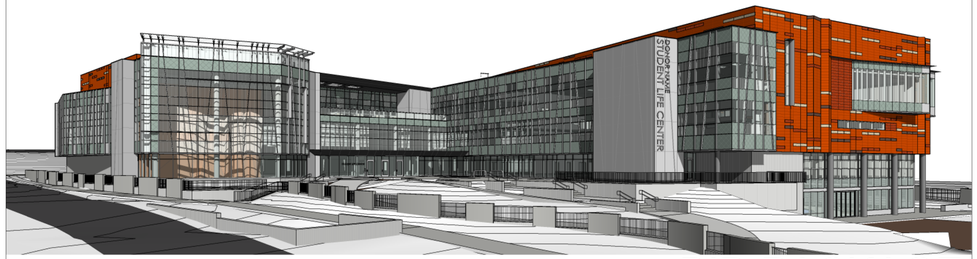


## BID PACKAGE

ISSUE DATE:
MAY 15, 2013

UNIVERSITY OF UTAH PROJECT #
21102

DFCM PROJECT #
08015750

Sheet Number
GI000.2

C:\Users\rum\Documents\A12-2010562_UofU_StudentLifeCenter_Central_rum.rvt
5/14/2013 3:24:28 PM

# UNIVERSITY OF UTAH
# STUDENT LIFE CENTER
## 1836 E. BALLIF ROAD
## SALT LAKE CITY, UTAH 84112

## BID PACKAGE
## MAY 15, 2013

## ABBREVIATIONS

| | |
|---|---|
| AC | AIR CONDITIONING |
| AFF | ABOVE FINISH FLOOR |
| ALT | ALTERNATE |
| ALUM | ALUMINUM |
| APPROX | APPROXIMATE |
| ARCH | ARCHITECTURAL |
| BD | BOARD |
| BLDG | BUILDING |
| BLKG | BLOCKING |
| BO | BOTTOM OF |
| BOT | BOTTOM |
| BRG | BEARING |
| BYD | BEYOND |
| CB | CATCH BASIN |
| CIP | CAST-IN-PLACE |
| CJ | CONTROL JOINT |
| CL | CENTER LINE |
| CLG | CEILING |
| CMU | CONCRETE MASONRY UNIT |
| CO | CLEANOUT |
| COL | COLUMN |
| COMM | COMMUNICATION |
| CONC | CONCRETE |
| CONF | CONFERENCE |
| CONST | CONSTRUCTION |
| CONT | CONTINUOUS |
| CONTR | CONTRACTOR |
| COORD | COORDINATE |
| CORR | CORRIDOR |
| CSK | COUNTER SUNK |
| CTR | CENTER |
| DEMO | DEMOLITION |
| DIA | DIAMETER |
| DIAG | DIAGONAL |
| DIM | DIMENSION |
| DN | DOWN |
| DR | DOOR |
| DS | DOWNSPOUT |
| DTL | DETAIL |
| DWG | DRAWING |
| EIFS | EXTERIOR INSULATION AND FINISH SYSTEM |
| EL | ELEVATION |
| ELEC | ELECTRICAL |
| ELEV | ELEVATOR |
| EQ | EQUAL |
| EQUIP | EQUIPMENT |
| EWC | ELECTRICAL WATER COOLER |
| EXP | EXPANSION |
| FD | FLOOR DRAIN |
| FEC | FIRE EXTINGUISHER CABINET |
| FIN | FINISH |
| FIN FLR | FINISH FLOOR |
| FLR | FLOOR |
| FT | FEET |
| GA | GAUGE/GAGE |
| GI | GALVANIZED IRON |
| GLU-LAM | GLUE LAMINATED |
| GYP BD | GYPSUM BOARD |
| HC | HANDICAPPED |
| HVAC | HEATING, VENTILATION, AIR CONDITIONING |
| ID | INSIDE DIAMETER |
| INT | INTERIOR |
| ISO | ISOMETRIC |
| JAN | JANITOR |
| JST | JOIST |
| JT | JOINT |
| KD | KNOCK DOWN |
| KOP | KNOCKOUT PANEL |
| LAB | LABORATORY |
| LAV | LAVATORY |
| MAINT | MAINTENANCE |
| MAX | MAXIMUM |
| MECH | MECHANICAL |
| MEZZ | MEZZANINE |
| MFR | MANUFACTURER |
| MH | MANHOLE |
| MIN | MINIMUM |
| MISC | MISCELLANEOUS |
| MO | MASONRY OPENING |
| NIC | NOT IN CONTRACT |
| NO | NUMBER |
| NOM | NOMINAL |
| NTS | NOT TO SCALE |
| OA | OVERALL |
| OC | ON CENTER |
| OD | OUTSIDE DIAMETER |
| OH | OVER HEAD |
| OH DR | OVERHEAD DOOR |
| OPP | OPPOSITE |
| PERP | PERPENDICULAR |
| PL | PLATE |
| PL | PROPERTY LINE |
| PL GL | PLATE GLASS |
| PLAM | PLASTIC LAMINATE |
| PLBG | PLUMBING |
| PLYWD | PLYWOOD |
| PR | PAIR |
| PREFAB | PREFABRICATED |
| QTY | QUANTITY |
| RD | ROOF DRAIN |
| REINF | REINFORCED / REINFORCING |
| REQD | REQUIRE / REQUIRED |
| RFG | REFRIGERATOR |
| RM | ROOM |
| RO | ROUGH OPENING |
| RTD | RATED |
| RTU | ROOF TOP UNIT |
| RV | ROOF VENT |
| SCHED | SCHEDULE |
| SIM | SIMILAR |
| SPEC | SPECIFICATION |
| SQ | SQUARE |
| STD | STANDARD |
| STL | STEEL |
| STRUC | STRUCTURAL |
| SUSP CLG | SUSPENDED CEILING |
| THK | THICKNESS |
| TO | TOP OF |
| TOB | TOP OF BEAM |
| TOS | TOP OF SLAB, TOP OF STRUCTURE |
| TOW | TOP OF PARTITION |
| TYP | TYPICAL |
| UNO | UNLESS NOTED OTHERWISE |
| VCT | VINYL COMPOSITION TILE |
| VERT | VERTICAL |
| VEST | VESTIBULE |
| VTR | VENT THROUGH ROOF |
| W/ | WITH |
| W/O | WITHOUT |
| WC | WATER CLOSET |
| WD | WOOD |
| WF | WIDE FLANGE |
| WH | WATER HEATER |
| WWF | WELDED WIRE FABRIC |
| XFMR | Transformer |

## GENERAL SYMBOLS

SEE PLUMBING, MECHANICAL AND ELECTRICAL FOR DISCIPLINE SYMBOLS

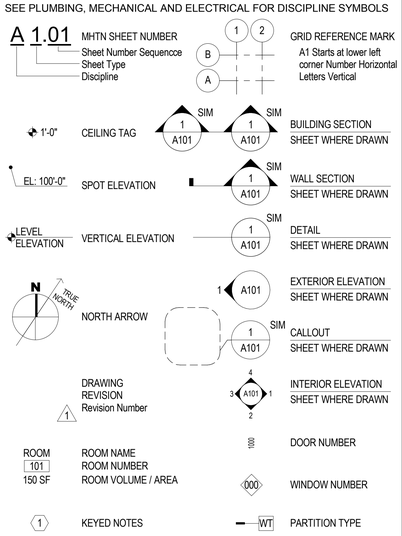


## MATERIALS

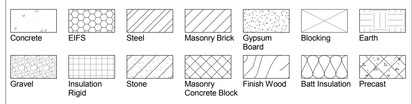


## VICINITY MAP

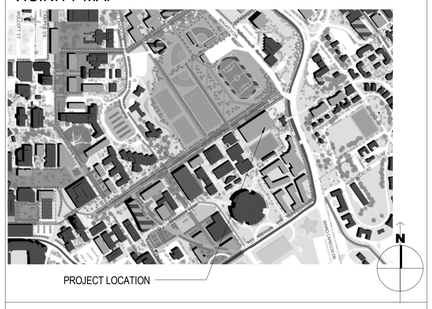


## APPROVALS

| | |
|---|---|
| APPROVERS NAME, TITLE | DATE: |
| APPROVERS NAME, TITLE | DATE: |
| APPROVERS NAME, TITLE | DATE: |

## INDEX TO DRAWINGS - BID PACKAGE


GENERAL

GI000.2 COVER SHEET VOL.#2
GI001.2 SHEET INDEX VOL.#2

MECHANICAL

MH000 LEGEND OF MECH SYMBOLS AND ABBREV.
MH001 GENERAL NOTES
MS100 MECHANICAL SITE PLAN
MS201 TUNNEL PLAN AND PROFILE
MS202 TUNNEL PLAN AND PROFILE
MS301 CHILLED WATER EQUIPMENT ROOM
MS401 TUNNEL DETAILS AND NODES
MS402 TUNNEL DETAILS AND NODES
MS403 TUNNEL DETAILS AND NODES
MS501 PIPING DETAILS
MS502 PIPING DETAILS
MS503 PIPING DETAILS
MS504 PIPING DETAILS
MS701 PIPING SCHEMATICS
MH100A PARTIAL MECHANICAL PLAN
MH100B PARTIAL MECHANICAL PLAN
MH100C PARTIAL MECHANICAL PLAN
MH101A PARTIAL MECHANICAL PLAN
MH101B PARTIAL MECHANICAL PLAN
MH101C PARTIAL MECHANICAL PLAN
MH102A PARTIAL MECHANICAL PLAN
MH102B PARTIAL MECHANICAL PLAN
MH102C PARTIAL MECHANICAL PLAN
MH103A PARTIAL MECHANICAL PLAN
MH103B PARTIAL MECHANICAL PLAN
MH103C PARTIAL MECHANICAL PLAN
MH104A PARTIAL MECHANICAL PLAN
MH104B PARTIAL MECHANICAL PLAN
MH104C PARTIAL MECHANICAL PLAN
MH105 LOWER LEVEL ALTERNATE 1 MECH PLAN
MH106 FIRST LEVEL ALTERNATE 1 MECH PLAN
MH107 ROOF ALTERNATE 1 MECH PLAN
MH301 MECHANICAL SECTIONS
MH302 MECHANICAL SECTIONS
MH303 MECHANICAL SECTIONS
MH304 MECHANICAL SECTIONS
MH305 MECHANICAL SECTIONS
MH306 MECHANICAL SECTIONS
MH401 ENLARGED MECHANICAL PLANS
MH402 ENLARGED MECHANICAL PLANS
MH403 ENLARGED MECHANICAL PENTHOUSE PLAN
MH404 ENLARGED MECHANICAL PLANS
MH501 MECHANICAL DETAILS
MH502 MECHANICAL DETAILS
MH503 MECHANICAL DETAILS
MH504 MECHANICAL DETAILS
MH505 MECHANICAL DETAILS
MH506 MECHANICAL DETAILS
MH507 MECHANICAL DETAILS
MH508 MECHANICAL DETAILS
MH509 MECHANICAL DETAILS
MH601 MECHANICAL SCHEDULES
MH602 MECHANICAL SCHEDULES
MH603 MECHANICAL SCHEDULES
MH701 AIR FLOW SCHEMATICS
MH702 AIR FLOW SCHEMATICS
MH703 HEATING SCHEMATICS
MH704 COOLING SCHEMATICS
MH705 SCHEMATIC DETAILS
MP100A PARTIAL MECHANICAL PIPING PLAN
MP100B PARTIAL MECHANICAL PIPING PLAN
MP100C PARTIAL MECHANICAL PIPING PLAN
MP101A PARTIAL MECHANICAL PIPING PLAN
MP101B PARTIAL MECHANICAL PIPING PLAN
MP101C PARTIAL MECHANICAL PIPING PLAN
MP102A PARTIAL MECHANICAL PIPING PLAN
MP102B PARTIAL MECHANICAL PIPING PLAN
MP102C PARTIAL MECHANICAL PIPING PLAN
MP103A PARTIAL MECHANICAL PIPING PLAN
MP103B PARTIAL MECHANICAL PIPING PLAN
MP103C PARTIAL MECHANICAL PIPING PLAN
MP105 LOWER LEVEL ALTERNATE 1 MECH PIPE PLAN
MP106 ALTERNATE 3 MECHANICAL PIPING PLANS
MP107 ALTERNATE 3 MECHANICAL PIPING PLANS
PP100A PARTIAL PLUMBING PLAN
PP100B PARTIAL PLUMBING PLAN
PP100C PARTIAL PLUMBING PLAN
PP101A PARTIAL PLUMBING PLAN
PP101B PARTIAL PLUMBING PLAN
PP101C PARTIAL PLUMBING PLAN
PP102A PARTIAL PLUMBING PLAN
PP102B PARTIAL PLUMBING PLAN
PP102C PARTIAL PLUMBING PLAN
PP103A PARTIAL PLUMBING PLAN
PP103B PARTIAL PLUMBING PLAN
PP103C PARTIAL PLUMBING PLAN
PP104A PARTIAL PLUMBING PLAN
PP104B PARTIAL PLUMBING PLAN
PP104C PARTIAL PLUMBING PLAN
PP105 LOWER LEVEL ALTERNATE 1 PLUMBIGN PLAN
PP106 LOWER LEVEL ALTERNATE 1 PLUMBIGN PLAN
PP107 FIRST LEVEL ALTERNATE 1 PLUMBING PLAN
PP108 FIRST LEVEL ALTERNATE 1 PLUMBING PLAN
PP109 ROOF ALTERNATE 1 PLUMBING PLAN
PP401 ENLARGED PLUMBING PLANS
PP402 ENLARGED PLUMBING PLANS

ELECTRICAL

EG100 SYMBOLS, ABBREVIATIONS AND SHEET INDEX
ED100.1 ELECTRICAL SITE DEMOLITION
ES100.2 ENLARGED ELECTRICAL SITE PLAN
ES100.3 ENLARGED ELECTRICAL SITE PLAN
ES100.4 LIGHTNING PROTECTION PLAN
ES100 SITE LIGHTING PLAN BASE BID
ES100.5 ENLARGED ELECTRICAL TUNNEL PLAN
ES100A SITE LIGHTING PLAN ALTERNATE
ES500 MANHOLE DETAILS
ES501 ELECTRICAL SITE DETAILS
EL100.A LOWER LEVEL LIGHTING AREA A
EL100.B LOWER LEVEL LIGHTING AREA B
EL100.C LOWER LEVEL LIGHTING AREA C
EL200.C1 LOWER LEVEL LIGHTING - ALTERNATE 1A
EL200.C2 LOWER LEVEL LIGHTING - ALTERNATE 1B
EL101.A LEVEL 1 LIGHTING AREA A
EL101.B LEVEL 1 LIGHTING AREA B
EL101.C LEVEL 1 LIGHTING AREA C
EL201.B ALTERNATE 3 LIGHTING AREA B
EL201.C1 LEVEL 1 LIGHTING ATERNATE 1A
EL201.C2 LEVEL 1 LIGHTING ALTERNATE 1B
EL102.A LEVEL 2 LIGHTING AREA A
EL102.B LEVEL 2 LIGHTING AREA B
EL102.C LEVEL 2 LIGHTING AREA C
EL103.A LEVEL 3 LIGHTING AREA A
EL103.B LEVEL 3 LIGHTING AREA B
EL103.C LEVEL 3 LIGHTING AREA C
EL501 ELEVATION STAIRWELL LIGHTING
EL601 LUMINARE SCHEDULE
EL701 LIGHTING DETAILS
EL702 LIGHTING DETAILS
EL703 LIGHTING CONTROL SYSTEM RISER DIAGRAM
EL704 LIGHTING CONTROL DETAILS
EP100.A LOWER LEVEL POWER PLAN AREA A
EP100.B LOWER LEVEL POWER PLAN AREA B
EP100.C LOWER LEVEL POWER PLAN AREA C
EP200.C1 LOWER LEVEL POWER PLAN ALTERNATE 1A
EP200.C2 LOWER LEVEL POWER PLAN ALTERNATE 1B
EP101.A LEVEL 1 POWER PLAN AREA A
EP101.B LEVEL 1 POWER PLAN AREA B
EP101.C LEVEL 1 POWER PLAN AREA C
EP201.B POWER PLAN AREA B ALTERNATE 3
EP102.A LEVEL 2 POWER PLAN AREA A
EP102.B LEVEL 2 POWER PLAN AREA B
EP102.C LEVEL 2 POWER PLAN AREA C
EP103.A LEVEL 3 POWER PLAN AREA A
EP103.B LEVEL 3 POWER PLAN AREA B
EP103.C LEVEL 3 POWER PLAN AREA C
EP104.A ROOF POWER PLAN AREA A
EP104.B ROOF POWER PLAN AREA B
EP104.C ROOF POWER PLAN AREA C
EP130 STORAGE SHED ELECTRICAL PLANS
EP201.C LEVEL 1 POWER ATERNATE 1
EP204.C ROOF POWER PLAN AREA C ALT 1
EP501 ENLARGED ELECTRICAL AND DATA ROOMS
EP502 ENLARGED LOWER LEVEL ROOMS
EP503 POWER PLANS ENLARGED VIEWS
EP504 ENLARGED U. OF U. CREDIT UNION
EP600 ONE-LINE DIAGRAM - 480V
EP602 EMERGENCY ONE-LINE DIAGRAM
EP603 PANEL SCHEDULES LOWER LEVEL
EP604 PANEL SCHEDULES LOWER LEVEL
EP605 PANEL SCHEDULES LEVEL 1
EP606 PANEL SCHEDULES LEVEL 2
EP607 PANEL SCHEDULES LEVEL 3
EP609 ELECTRICAL SCHEDULES
EP608 PANEL SCHEDULES ROOF
EP601 ONE LINE DIAGRAM - 208V
EP701 ELECTRICAL DETAILS
EY100.A LOWER LEVEL SYSTEMS PLAN AREA A
EY100.B LOWER LEVEL SYSTEMS PLAN AREA B
EY100.C LOWER LEVEL SYSTEMS PLAN AREA C
EY200.C1 LOWER LEVEL SYSTEMS PLAN ALTERNATE 1A
EY200.C2 LOWER LEVEL SYSTEMS PLAN ALTERNATE 1B
EY101.A LEVEL 1 SYSTEMS PLAN AREA A
EY101.B LEVEL 1 SYSTEMS PLAN AREA B
EY101.C LEVEL 1 SYSTEMS PLAN AREA C
EY201.B SYSTEMS PLAN AREA B ALTERNATE 3
EY102.A LEVEL 2 SYSTEMS PLAN AREA A
EY102.B LEVEL 2 SYSTEMS PLAN AREA B
EY102.C LEVEL 2 SYSTEMS PLAN AREA C
EY103.A LEVEL 3 SYSTEMS PLAN AREA A
EY103.B LEVEL 3 SYSTEMS PLAN AREA B
EY103.C LEVEL 3 SYSTEMS PLAN AREA C
EY500 ENLARGED SYSTEMS FLOOR PLANS
EY201.C LEVEL 1 SYSTEMS ATERNATE 1
EY300 LOWER LEVEL CABLETRAY PLAN
EY301 LEVEL 1 CABLETRAY PLAN
EY302 LEVEL 2 CABLETRAY PLAN
EY303 LEVEL 3 CABLETRAY PLAN
EY601 TELECOM RISER DIAGRAM
EY602 MDF AND IDF ROOM LAYOUTS
EY603 FIRE ALARM RISER DIAGRAM
EY604 SECURITY RISER DIAGRAM
EY605 ACCESS CONTROL DETAIL
EY705 A/V DETAILS
EY706 A/V DETAILS
EY707 A/V DETAILS
EY709 A/V EQUIPMENT SCHEDULES
EY710 A/V EQUIPMENT SCHEDULES
EY711 A/V EQUIPMENT SCHEDULES
EY712 A/V EQUIPMENT SCHEDULES
EY713 A/V EQUIPMENT SCHEDULES
EY714 A/V EQUIPMENT SCHEDULES
EY715 A/V EQUIPMENT SCHEDULES

POOL

WF010.0 GENERAL NOTES
WF010.1 GENERAL NOTES – ALTERNATE BID
WF100.0 LOWER LEVEL OVERALL POOL PLAN
WF100.1 LOWER LEVEL OVERALL POOL PLAN – ALT. BID
WF101.0 FIRST FLOOR POOL CHEMICAL ROOM PLAN
WF101.1 FIRST FLOOR POOL CHEMICAL ROOM PLAN – ALT. BID1 & 2
WF400.0 ACTIVITY POOL PLAN
WF400.1 ACTIVITY POOL DIMENSION PLAN
WF400.2 ACTIVITY POOL PIPING PLAN
WF400.3 ACTIVITY POOL FITTING DIMENSION PLAN
WF401.0 ACTIVITY POOL PLAN – ALT 1
WF401.1 ACTIVITY POOL DIMENSION PLAN – ALT 1
WF401.2 ACTIVITY POOL PIPING PLAN – ALTERNATE 1
WF401.3 ACTIVITY POOL FITTING DIM PLAN
WF402.0 LAP POOL PLAN – ALT 1
WF402.1 LAP POOL DIMENSION PLAN – ALT 1
WF402.2 LAP POOL PIPING PLAN – ALT 1
WF402.3 LAP FITTING DIMENSION PLAN – ALTERNATE 1
WF403.0 LOWER LEVEL RAISED SPA PLAN
WF403.1 SPA DIMENSION PLAN
WF403.2 SPA CIRCULATION PIPING PLAN
WF403.3 SPA JET PIPING PLAN
WF404.0 RAISED SPA PLAN – ALT 1
WF404.1 SPA DIMENSION PLAN – ALT 1
WF404.2 SPA CIRCULATION PIPING PLAN – ALT 1
WF404.3 SPA JET PIPING PLAN – ALT 1
WF405.0 OUTDOOR LEISURE POOL PLAN – ALT 2
WF405.1 OUTDOOR LEISURE POOL DIMENSION PLAN – ALT 2
WF405.2 OUTDOOR LEISURE PIPING PLAN – ALT 1 AND 2
WF406.0 LOWER LEVEL POOL EQUIPMENT ROOM PLAN
WF407.0 POOL EQUIPMENT ROOM PLAN – ALT BID 1
WF407.1 POOL EQUIPMENT ROOM PIPING PLAN – ALT BID
WF410.0 ACTIVITY POOL SECTIONS
WF410.1 ACTIVITY POOL SECTIONS
WF411.0 ACTIVITY POOL SECTIONS – ALTERNATE BID 1
WF412.0 LAP POOL SECTIONS – ALTERNATE BID 1
WF412.1 LAP POOL SECTIONS – ALTERNATE BID 1
WF413.0 SPA SECTIONS AND DETAILS
WF414.0 SPA SECTIONS – ALT BID 1
WF415.0 OUTDOOR LEISURE POOL SECTIONS – ALT BID 2
WF416.0 LOWER LEVEL EQUIPMENT ROOM SECTIONS
WF417.0 LOWER LEVEL EQUIPMENT ROOM SECTIONS – ALT 1
WF417.1 LOWER LEVEL EQUIPMENT ROOM SECTIONS – ALT 1
WF500.0 EQUIPMENT SCHEMATICS
WF500.1 EQUIPMENT SCHEMATICS – ALT 1 AND 2
WF501.0 EQUIPMENT DETAILS
WF502.0 EQUIPMENT DETAILS
WF503.0 DETAILS
WF504.0 DETAILS
WF505.0 DETAILS
WF506.0 DETAILS
WF507.0 DETAILS ALTERNATE 2
WF601.0 POOL EQUIPMENT SCHEDULES
WF601.1 POOL EQUIPMENT SCHEDULES – ALT BID 1
WF601.2 POOL EQUIPMENT SCHEDULES – ALT BIDS


## CONSULTANTS


| INTERIOR ARCHITECTURE | CIVIL | STRUCTURAL | MECHANICAL | ELECTRICAL | ENERGY MODELING | WATER DESIGN |
|---|---|---|---|---|---|---|
| HASTINGS + CHIVETTA<br>622 Emerson, Suite 200<br>St. Louis, MO 63141<br>P: 314.863.5717<br>F: 314.863.2823 | GREAT BASIN ENGINEERING, INC.<br>5746 SOUTH 1475 EAST<br>OGDEN, UT 84403<br>P: 801.521.0222<br>F: 801.392.7544 | REAVELY ENGINEERS + ASSOC.<br>675 EAST 500 SOUTH, STE. 400<br>SALT LAKE CITY, UT 84102<br>P: 801.486.3883<br>F: 801.485.0911 | VAN BOERUM & FRANK ASSOC., INC.<br>330 SOUTH 300 EAST<br>SALT LAKE CITY, UT 84111<br>P: 801.530.3148<br>F: 801.530.3150 | KEN GARNER ENGINEERING<br>102 WEST 500 SOUTH #225<br>SALT LAKE CITY, UT 84101<br>P: 801.328.8800<br>F: 801.326.8802 | ETC GROUP, LLC<br>1997 SOUTH 1100 EAST, STE. 201<br>SALT LAKE CITY, UT 84106<br>P: 801.278.1927<br>F: 801.486.0668 | WATER DESIGN, INC.<br>5047 S. GALLERIA DR.<br>MURRAY, UT 84123<br>P: 801.261.4009<br>F: 801.261.4069 |



MHTN
ARCHITECTS
**MHTN Architects, Inc.**
420 East South Temple
Suite 100
Salt Lake City, Utah 84111
Telephone (801) 595-6700
Telefax (801) 595-6717
www.mhtn.com

**Hastings+Chivetta**
ARCHITECTURE • PLANNING • ENGINEERING
622 Emerson, Suite 200
St. Louis, MO 63141
Tel. 314.863.5717
Fax. 314.863.2823
www.hastingschivetta.com


BUILDING OFFICIAL STAMP

UNIVERSITY OF UTAH
STUDENT LIFE CENTER
1836 E. BALLIF ROAD
SALT LAKE CITY, UTAH 84112

SEAL

MHTN PROJECT NO.

DRAWN BY: Author CHECKED BY: Checker

ISSUED:

| NO. | DATE | DESCRIPTION |
|---|---|---|

REVISIONS: CONTRACTOR TO VERIFY DRAWINGS IN FIELD USE REFLECT LAST REVISION DATE.

| NO. | DATE | DESCRIPTION |
|---|---|---|

SHEET NAME
SHEET INDEX VOL#2

BID PACKAGE
MAY 15, 2013

SHEET NUMBER
GI001.2

# LEGEND OF MECHANICAL SYMBOLS AND ABBREVIATIONS

## DUCTWORK/GRILLES

- POSITIVE PRESSURE DUCT - RISE
- POSITIVE PRESSURE DUCT - DROP
- NEGATIVE PRESSURE DUCT - RISE
- NEGATIVE PRESSURE DUCT - DROP
- ROUND DUCT - RISE
- ROUND DUCT - DROP
- UNDER FLOOR DUCT
- TURNING VANES
- FRESH AIR LOUVER
- RELIEF AIR OR EXHAUST AIR LOUVER
- 12X12 / 200 — CEILING SUPPLY DIFFUSER
- 22X22 / 200 — CEILING RETURN REGISTER
- 12X12 / 200 — CEILING EXHAUST REGISTER, (BALANCE TO MATCH SUPPLY IF RETURN CFM IS NOT SHOWN)
- 24X10 / 200 — SIDEWALL SUPPLY REGISTER
- 24X10 / 200 — SIDEWALL EXHAUST OR RETURN REGISTER
- 12X12 / 200 — CEILING SUPPLY DIFFUSER WITH FLEXIBLE DUCT
- 12X12 / 200 — CEILING AIR GRILLE WITH FLEXIBLE DUCT

  (TOP FIGURES INDICATE NECK SIZE. BOTTOM FIGURE INDICATES CFM.)
- CEILING RETURN AIR GRILE W/ SOUND BOOT
- 3-1" SLOTS @ 48" 400 — LINEAR DIFFUSER WITH PLENUM AND FLEXIBLE DUCT CONNECTION. NO. OF SLOTS & SIZE OF SLOT ON TOP, ACTIVE LENGTH AND CFM ON BOTTOM
- FLEXIBLE DUCT CONNECTION
- FLEXIBLE DUCT
- 12/8 FO — FLAT OVAL DUCT WITH NET INSIDE DIMENSIONS SHOWN IN INCHES.
- 12/8 — RECTANGULAR DUCT WITH NET INSIDE DIMENSIONS SHOWN IN INCHES.
- 12ø — ROUND DUCT WITH NET INSIDE DIMENSIONS SHOWN IN INCHES.
- UP — INCLINED RISE
- DN — INCLINED DROP

  (WITH RESPECT TO AIR FLOW 15° NOMINAL INCLINE WITH RADIUS TURNS=DEPTH OF DUCT.)
- W R — R/W=1. ROUND DUCT SIMILAR TO RECTANGULAR
- 12/12 8/8 — RECTANGULAR TO RECTANGULAR OR ROUND TO ROUND DUCT TRANSFORMATION MAXIMUM 15° INCLUDED ANGLE EXCEPT WHERE SHOWN OTHERWISE.
- 12/12 12ø — RECTANGULAR TO ROUND DUCT TRANSFORMATION
- R G B — BRANCH DUCT SPLIT WITH 6" WIDTH AND MIN. R=WIDTH OF BRANCH DUCT DOWNSTREAM. ELBOW TURNING VANE OPTIONAL.
- 45° 1.5D 2.5D D D — TAP ENTRY AREA EQUALS 150% OF BRANCH AREA
- 12 12/12 — HIGH EFFICIENCY FITTING
- MANUAL VOLUME DAMPER
- FD — FIRE DAMPER IN DUCT, W/ ACCESS PANEL REQD.
- FSD — COMBINATION FIRE/SMOKE DAMPER W/ ACCESS PANEL
- SD — SMOKE DAMPER W/ ACCESS PANEL
- BDD — BACK DRAFT DAMPER
- ATC OR — ATC DAMPER
- AD — ACCESS PANEL IN DUCT OR PLENUM
- HEATING OR COOLING COIL IN DUCT
- SINGLE DUCT AIR TERMINAL BOX VARIABLE OR CONSTANT VOLUME. MIN. 1-1/2 TERMINAL INLET SIZE STRAIGHT DUCT AT TERMINAL INLET.
- 4-WAY BLOW PATTERN
- 3-WAY BLOW PATTERN
- 2-WAY BLOW PATTERN
- 2-WAY BLOW PATTERN
- 1-WAY BLOW PATTERN
- SD — DUCT SMOKE DETECTOR

## PIPING

- OR — SHUT OFF VALVE
- OR — BALL VALVE
- OR — BUTTERFLY VALVE
- MOTOR OPERATED BUTTERFLY VALVE
- OR — GATE VALVE
- GATE VALVE - NON RISING STEM
- OR — ANGLE VALVE
- OR — GLOBE VALVE
- OR — PLUG VALVE
- SHUT OFF PLUG VALVE FOR FOR USE WITH PRESSURE GAUGE
- OR — CHECK VALVE
- OR — LATERAL STRAINER WITH BLOW-OFF VALVE, PROVIDE HOSE END WITH CAP WHERE DISCHARGE IS NOT PIPED TO DRAIN
- F&T — F&T=FLOAT & THERMOSTATIC
- RPBP — REDUCED PRESSURE BACKFLOW PREVENTOR W/ DRAIN PAN
- OR — PRESSURE REDUCING VALVE EXTERNAL PRESSURE
- OR — PRESSURE REDUCING VALVE SELF CONTAINED
- OR — ATC - 2 WAY VALVE
- OR — ATC - 3 WAY VALVE
- S — SOLENOID VALVE
- 0.0 GPM — OR — CBV — CALIBRATED BALANCING VALVE WITH GPM INDICATED
- VENTURI FLOW METER
- GPM LB/HR. — FLOW METER ORIFICE
- OR — RELIEF VALVE
- AIR VENT-MANUAL
- A — AIR VENT-AUTO
- FLOW SWITCH
- PS — PRESSURE SWITCH
- OR — TEMPERATURE AND PRESSURE TEST PORT
- TW — THERMOMETER WELL
- 0-100°F — THERMOMETER - TEMP RANGE AS INDICATED
- PRESSURE GAUGE WITH SHUT OFF PLUG VALVE
- PRESSURE GAUGE WITH PIGTAIL
- OR — UNION
- OR — FLANGE
- OR — FLEXIBLE EXPANSION JOINT
- REDUCER
- ECCENTRIC REDUCER
- BRANCH - BOTTOM CONNECTION
- BRANCH - TOP CONNECTION
- BRANCH - SIDE CONNECTION
- RISE OR DROP
- RISER - DOWN (ELBOW)
- RISER - UP (ELBOW)
- PIPE CAP
- ARROW INDICATES DIRECTION OF FLOW IN PIPE
- DN — LEADER INDICATES DOWNWORD SLOPE
- VALVE IN RISE
- OR — 90° ELBOW
- 45° ELBOW
- ALIGNMENT GUIDE
- ANCHOR

## PLUMBING

- THERMOSTATIC MIXING VALVE
- HOSE BIBB
- FLOOR SINK
- FLOOR DRAIN
- FCO / COTG — FLOOR CLEAN-OUT OR CLEAN-OUT TO GRADE
- ROOF DRAIN
- DOWNSPOUT NOZZLE
- VTR — VENT THRU ROOF
- WATER HAMMER ARRESTOR
- CLEAN-OUT
- FILL PORT
- DRAIN PAN AND P-TRAP
- (NAME) — FIXTURE FROM LEVEL ABOVE
- DEMOLITION

## EQUIPMENT

- UNIT HEATER
- INLINE PUMP
- INLINE PUMP
- FAN

## FIRE

- HOSE VALVE
- NRS GATE VALVE WITH SUPERVISION
- FLOW SWITCH
- FIRE RISER
- SPRINKLER HEAD
- F — FIRE SPRINKLER WATER

## ANNOTATIONS

- P-1 — PLUMBING FIXTURES
- POINT OF CONNECTION
- A / M-101 — SECTION TAG - TOP FIGURE IS SECTION NO. BOTTOM FIGURE IS SHEET NO.
- A / M101 — DETAIL TAG - TOP FIGURE IS DETAIL NO. BOTTOM FIGURE IS SHEET NO.
- EF / 1 — EQUIPMENT IDENTIFICATION
- 1 — KEYED NOTE IDENTIFICATION
- S — SWITCH
- S — SENSOR
- T — THERMOSTAT
- TN — NIGHT THERMOSTAT

## LINETYPES

- AV — ACID VENT
- AW — ACID WASTE
- BBD — BOILER BLOW DOWN
- BF — BOILER FEED WATER
- B — BRINE
- C02 — CARBON DIOXIDE
- CA — COMPRESSED AIR
- CF — CHEMICAL FEED
- CHWS — CHILLED WATER SUPPLY
- CHWR — CHILLED WATER RETURN
- CS — CONDENSER WATER SUPPLY
- CR — CONDENSER WATER RETURN
- DOMESTIC COLD WATER (DCW)
- DOMESTIC HOT WATER (DHW)
- DOMESTIC HOT WATER RETURN (DHWR)
- DI — DEIONIZED WATER SUPPLY
- DIR — DEIONIZED WATER RETURN
- (SHWS) — SOLAR HEATING WATER SUPPLY
- (SHWR) — SOLAR HEATING WATER RETURN
- GHR — GLYCOL HEAT RECOVERY PIPING
- G(NAME) — GLYCOL PIPING SOLUTION
- FOR — FUEL OIL RETURN
- FOS — FUEL OIL SUPPLY
- FOV — FUEL OIL VENT
- FVS — FLUSH VALVE SUPPLY
- G — NATURAL GAS
- HG — HOT GAS
- HFR — HELICOPTER FUEL RETURN
- HFS — HELICOPTER FUEL SUPPLY
- HP(NAME) — HIGH PRESSURE DOMESTIC WATER
- HPC — HIGH PRESSURE CONDENSATE
- HPS — HIGH PRESSURE STEAM
- HWR — HEATING HOT WATER RETURN
- HWS — HEATING HOT WATER SUPPLY
- IA — INSTRUMENT AIR
- IA 120 — INSTRUMENT AIR AT PRESSURE INDICATED
- ICW — INDUSTRIAL COLD WATER
- IHW — INDUSTRIAL HOT WATER
- IHWR — INDUSTRIAL HOT WATER RETURN
- ISCW — INDUSTRIAL SOFT COLD WATER
- LA — LAB AIR
- LV — LAB VACUUM
- LPC — LOW PRESSURE CONDENSATE
- LPG — LIQUIFIED PETROLEUM GAS
- LPS — LOW PRESSURE STEAM
- LW — LAB WATER
- LWR — LAB WATER RETURN
- MA — MEDICAL AIR
- MA 120 — MEDICAL AIR AT PRESSURE INDICATED
- MPC — MEDIUM PRESSURE CONDENSATE
- MPS — MEDIUM PRESSURE STEAM

## LINETYPES CONT.

- MUW — MAKE UP WATER
- MV — MEDICAL VACUUM
- N — NITROGEN
- N2O — NITROUS OXIDE
- OX — MEDICAL OXYGEN
- OX 120 — MEDICAL OXYGEN AT PRESSURE INDICATED
- PC — PUMPED CONDENSATE
- RO — REVERSE OSMOSIS WATER SUPPLY
- ROR — REVERSE OSMOSIS WATER RETURN
- RD — ROOF DRAIN
- RDO — ROOF DRAIN OVERFLOW
- RL — REFRIGERANT LIQUID
- RS — REFRIGERANT SUCTION
- SEWER (BELOW GRADE)
- SEWER (ABOVE GRADE)
- SW — SOFT DOMESTIC WATER
- TW — TEMPERED WATER
- TWR — TEMPERED WATER RETURN
- V — VACUUM
- VENT (SEWER)
- (F) NAME — FUTURE PIPE


MHTN ARCHITECTS
MHTN Architects, Inc.
420 East South Temple
Suite 100
Salt Lake City, Utah 84111
Telephone (801) 595-6700
Telefax (801) 595-6717
www.mhtn.com

Hastings+Chivetta
ARCHITECTURE • PLANNING • ENGINEERING
622 Emerson, Suite 200
St. Louis, MO 63141
Tel. 314.863.5717
Fax. 314.863.2823
www.hastingschivetta.com

VAN BOERUM & FRANK ASSOCIATES, INC.
CONSULTING ENGINEERS
Salt Lake City • Logan • St. George • Tempe
330 South 300 East 801.530.3148 T
Salt lake City, UT 84111 801.530.3150 F


UNIVERSITY OF UTAH
STUDENT LIFE CENTER
1836 E. BALLIF ROAD
SALT LAKE CITY, UTAH 84112


©2007 MHTN ARCHITECTS, INC.
Drawings, written material, and design concepts shall not be used or reproduced in whole or part in any form or format without prior written consent of MHTN Architects, Inc. Do not scale drawings. Use given dimensions only. If not shown, verify correct dimensions with the Architect. Contractor shall check and verify all dimensions and conditions at job site.


SEAL

MHTN PROJECT NO.

DRAWN BY: CHECKED BY:

ISSUED:

| NO. | DATE | DESCRIPTION |
|---|---|---|

CONTRACTOR TO VERIFY DRAWINGS IN FIELD USE REFLECT LAST REVISION DATE:

| NO. | DATE | DESCRIPTION |
|---|---|---|

SHEET NAME

LEGEND OF MECH SYMBOLS AND ABBREV.

BID DOCUMENTS

MAY 15, 2013

SHEET NUMBER

MH000

D:__Bim\Local\Mechanical_Central_JRobker.rvt
5/14/2013 12:48:25 PM

# PLUMBING GENERAL NOTES

1. UNLESS OTHERWISE NOTED, SLOPE PIPE AS FOLLOWS: WASTE BRANCHES: 1/4" PER FOOT; WASTE MAINS: 1/4" PER FOOT; ROOF DRAIN/ROOF DRAIN OVERFLOW: 1/8" PER FOOT.

2. NOT USED

3. PLUMBING DRAWINGS ARE SCHEMATIC IN NATURE. FIELD VERIFY EXACT PIPE ROUTING AND COORDINATE WITH ALL OTHER TRADES.

4. ALL PIPING IN PLUMBING CHASES SHALL BE ARRANGED TO ALLOW MAINTENANCE ACCESS.

5. NO PIPING TO RUN OVER ELECTRICAL PANELS, VFD'S OR MCC'S. PROTECT EQUIPMENT WITH A 42" DEEP ZONE IN FRONT OF PANELS, VFD'S, AND MCC'S.

6. COORDINATE FAN ROOM FLOOR DRAIN LOCATIONS WITH COOLING COIL AND HEATING COIL LOCATIONS.

7. CONTRACTOR TO PROVIDE VALVE IDENTIFICATION AND LOCATION ON ALL CEILING TILES WHERE VALVES ARE LOCATED.

8. PIPING AND ROUTING SHOWN, INCLUDING ALL BELOW FLOOR DECK PIPING, IS APPROXIMATE. IT IS UP TO THE CONTRACTOR TO FIELD VERIFY THE EXACT LOCATION AND SIZE OF ALL PIPING.

9. REFER TO ARCHITECTURAL DRAWINGS FOR FIXTURE MOUNTING HEIGHTS, DIMENSIONS, AND OTHER REQUIREMENTS.

10. CONTRACTOR TO VERIFY CONNECTION SIDE OF ADA FIXTURES AND ADJUST ACCORDINGLY. INSTALL FLUSH VALVES HANDLES ON WIDE SIDE OF ALL FIXTURES.

11. LOCATE ALL VENTS MINIMUM 25' AWAY FROM AIR INTAKES.

12. INSTALL ALL DOMESTIC WATER LINES BELOW DUCTWORK.

13. INSTALL A 24" X 24" ACCESS DOOR BELOW ALL ISOLATION VALVES, BALANCING VALVES AND WATER HAMMER ARRESTORS WHERE MOUNTED ABOVE HARD CEILINGS.

14. MOUNT ALL ISOLATION VALVES, CONTROL VALVES, BALANCING VALVES, ETC. NEAR CEILING HEIGHT FOR ACCESSIBILITY.

15. INSTALL ALL EQUIPMENT WITH SUFFICIENT CLEARANCE FOR MAINTENANCE PER MANUFACTURERS RECOMMENDATION.

16. COORDINATE ALL FLOOR PENETRATIONS WITH STRUCTURAL AND PROVIDE SLEEVES AS NECESSARY.

17. COORDINATE EXACT LOCATION OF PLUMBING WITH STRUCTURAL MEMBERS, LIGHTS, REFLECTED CEILING, CABLE TRAY, DUCTWORK, MECHANICAL PIPING, MEDICAL GASES, FIRE PROTECTION AND OTHER TRADES, TYPICAL.

18. COORDINATE THE LOCATION OF THE FLOOR DRAIN, SHOWER DRAIN, OR FLOOR SINK WITH ARCHITECTURAL AND STRUCTURAL, TYPICAL.

19. ACCESS DOORS SHALL BE PROVIDED TO ALL WATER HAMMER ARRESTORS IN WALLS OR ABOVE CEILINGS.

20. SEE PLUMBING FIXTURE SCHEDULE FOR PIPE SIZES OF WASTE, VENT AND DOMESTIC WATER TO/FROM SINGLE FIXTURE.

21. HOSE BIBBS SHOWN AT LAVATORIES ARE TO BE MOUNTED AT AN ACCESSIBLE LOCATION UNDER THE LAVATORY.

22. COORDINATE EXACT LOCATION OF PLUMBING PIPING WITH STRUCTURAL MEMBERS, LIGHTS, REFLECTED CEILING PLANS, CABLE TRAY, ELECTRICAL CONDUITS, DUCTWORK, MECHANICAL AND FIRE PROTECTION PIPING, AND ALL OTHER TRADES AND ALL EXISTING CONDITIONS.

23. LOCATE CIRCUIT SETTERS, VALVES, WATER HAMMER ARRESTORS, ETC. IN ACCESSIBLE LOCATIONS. PROVIDE 24"X24" ACCESS PANEL WHERE ITEM IS LOCATED ABOVE A HARD CEILING.

24. ALL PIPE AND DUCT SIZES SHALL REMAIN THE SAME SIZE SHOWN, IN THE DIRECTION OF FLOW, UNTIL SHOWN OTHERWISE.

# MECHANICAL GENERAL NOTES

1. COORDINATE EXACT PLACEMENT OF DIFFUSERS, GRILLES, AND REGISTERS WITH ARCHITECTURAL REFLECTED CEILING PLAN, TYPICAL.

2. SEE DETAIL FOR DIFFUSER CONNECTIONS TO DUCTWORK, TYPICAL.

3. BRANCH DUCTWORK SHALL BE SIZED TO MATCH THE NECK INLET SIZE OF THE DIFFUSERS, REGISTER OR GRILLE IT SERVES UNLESS NOTED OTHERWISE, TYPICAL.

4. COORDINATE EXACT MOUNTING LOCATION OF ALL THERMOSTATS WITH LATEST REVISION OF ARCHITECTURAL ELEVATION AND FURNISHINGS PLANS, TYPICAL.

5. THE MECHANICAL CONTRACTOR SHALL BE RESPONSIBLE FOR CAULKING AND SEALING ALL PENETRATIONS IN FIRE AND SMOKE RATED PARTITIONS TO MAINTAIN RATINGS. SEE SPECIFICATION, TYPICAL.

6. THE MECHANICAL CONTRACTOR SHALL PROVIDE FIRE, SMOKE OR COMBINATION FIRE/SMOKE DAMPERS AT ALL LOCATIONS SHOWN ON THE CONTRACT DOCUMENTS AND AS REQUIRED TO MEET THE INTEGRITY OF ALL SMOKE AND FIRE PARTITIONS. THE CONTRACTOR SHALL REFER TO THE LATEST ARCHITECTURAL LIFE SAFETY PLANS FOR ALL FIRE AND SMOKE PARTITION LOCATIONS. DAMPERS ARE TO BE PROVIDED WITH SHUTOFF/TEST SWITCH AT EACH LOCATION.

7. PROVIDE AND INSTALL TURNING VANES IN ALL SQUARE LOW PRESSURE DUCTWORK AT ELBOWS OR TEES, TYPICAL.

8. INSTALL ALL TERMINAL BOXES IN EASILY ACCESSIBLE AND SERVICEABLE LOCATIONS, MEETING ALL MANUFACTURERS REQUIRED CLEARANCES ON EACH SIDE, SEE DETAILS, TYPICAL.

9. CONTRACTOR SHALL OFF-SET, TRANSITION AND PROVIDE CHANGES AS REQUIRED FOR COORDINATION WITH OTHER TRADES, TYPICAL.

10. DUCTWORK SIZES SHOWN ARE INSIDE CLEAR DIMENSIONS. REFER TO MECHANICAL SPECIFICATIONS FOR EXTENT OF DUCT INSULATION AND LINER.

11. PROVIDE AND INSTALL REMOTE DAMPER OPERATORS FOR ALL DAMPERS INSTALLED ABOVE INACCESSIBLE CEILINGS, SEE MECHANICAL SPECIFICATIONS FOR EQUIPMENT REQUIREMENTS, TYPICAL.

12. PROVIDE AND INSTALL HIGH EFFICIENCY TAKE-OFF FITTINGS AND BALANCING DAMPER AT ALL BRANCH CONNECTIONS TO LOW PRESSURE DUCTWORK.

13. PROVIDE AND INSTALL HIGH EFFICIENCY OR CONICAL TAKE-OFFS AT ALL BRANCH CONNECTIONS TO MEDIUM PRESSURE DUCTWORK.

14. WHERE DUCTWORK CROSSES, SUPPLY DUCTWORK IS USUALLY BELOW RETURN AND EXHAUST DUCT. RETURN DUCTWORK IS USUALLY BELOW EXHAUST DUCTS.

15. AT LOCATIONS WHERE DIFFUSERS OR GRILLES ARE UNDER DUCTWORK, CONTRACTOR TO FABRICATE TRANSITION BOOT FROM FLEX CONNECTION TO DIFFUSER OR GRILLE WITH BALANCING DAMPER, TYPICAL.

16. THE MECHANICAL CONTRACTOR SHALL PROVIDE CEILING MOUNTED ACCESS DOORS FOR ALL FIRE, SMOKE AND COMBINATION FIRE/SMOKE DAMPERS INSTALLED ABOVE INACCESSIBLE CEILING. FIELD VERIFY EXACT INSTALLATION LOCATIONS PRIOR TO COMMENCING WORK AND COORDINATE INSTALLATIONS WITH LATEST ARCHITECTURAL REFLECTED CEILING PLANS.

17. MECHANICAL CONTRACTOR SHALL ENSURE THAT ALL EQUIPMENT IS PROVIDED AND INSTALLED WITH CLEARANCES PER MANUFACTURERS RECOMMENDATIONS. THE CONTRACTOR SHALL MAINTAIN PROPER SERVICE SPACE FOR COIL PULLS, BAS DEVICES, MAINTENANCE ACCESS, ETC.

18. ALL VAV BOXES TO HAVE REHEAT COILS, EXCEPT AS NOTED. PROVIDE A MINIMUM OF TWO DUCT DIAMETERS OF STRAIGHT ROUND DUCT TO INLET OF VAV BOX. BOX SHALL BE HARD CONNECTED (CONICAL) TO MEDIUM PRESSURE DUCT, TYPICAL.

19. PROVIDE ACCESS DOORS TO ACCESS VAV BOX CONTROLS ABOVE HARD CEILINGS. PROVIDE MIN. 24" X 24".

20. ALL PIPE AND DUCT SIZES SHALL REMAIN THE SAME SIZE SHOWN, IN THE DIRECTION OF FLOW, UNTIL SHOWN OTHERWISE.

21. ALL DUCTWORK ABOVE HARD CEILINGS SHALL BE EXTENDED ALL THE WAY TO THE SUPPLY DIFFUSERS, RETURN GRILLS OR EXHAUST GRILLS WHETHER OR NOT HARD DUCT OR FLEX DUCT IS SHOWN ON PLANS. FLEX DUCT WILL NOT BE ALLOWED TO DIFFUSERS OR GRILLS ABOVE HARD CEILINGS. FLEX DUCT WILL BE REQUIRED IN AREAS ABOVE T-BAR CEILINGS.

22. NEW DUCTWORK, PIPING AND EQUIPMENT SHALL BE COORDINATED WITH STRUCTURE, LIGHTS, REFLECTED CEILING PLANS, CABLE TRAY, ELECTRICAL CONDUIT, PLUMBING, MECHANICAL AND FIRE PROTECTION PIPING, MEDICAL GASES, ALL OTHER TRADES AND ALL OTHER EXISTING CONDITIONS.

23. THE CONTRACTOR SHALL INFORM THE DESIGNER OF ANY PROPOSED DEVIATIONS FROM THE CONTRACT DOCUMENTS.

24. PROVIDE ACCESS TO ALL TEMPERATURE CONTROLS ABOVE CEILING. LOCATE IN ACCESSIBLE LOCATION. WHERE THERE ARE HARD CEILINGS THE CONTRACTOR SHALL PROVIDE 24"X24" ACCESS DOOR.

25. INSTALL CLEANOUTS IN DRAIN PIPING AS INDICATED, AND WHERE NOT INDICATED, ACCORDING TO THE FOLLOWING.

a) SIZE SAME AS DRAINAGE PIPING UP TO 4" NPS. USE 4" NPS FOR LARGER. DRAINAGE PIPING UNLESS LARGER CLEANOUT IS INDICATED.

b) LOCATE AT MINIMUM INTERVALS OF 50 FT FOR PIPING 4" NPS AND SMALLER AND 100 FT FOR LARGER PIPING.

c) LOCATE AT THE BASE OF EACH VERTICAL STACK.

# GENERAL NOTES

1. ALL WORK SHALL BE DONE WITH WATER CONTROL IN MIND. CONTAINMENT OF WATER IS NECESSARY TO PREVENT WATER FROM DAMAGING OTHER AREAS OF THE BUILDING.

2. NEW DUCTWORK, PIPING AND EQUIPMENT SHALL BE COORDINATED WITH STRUCTURE, LIGHTS, REFLECTED CEILING PLANS, CABLE TRAY, ELECTRICAL CONDUIT, PLUMBING, MECHANICAL AND FIRE PROTECTION PIPING, MEDICAL GASES, ALL OTHER TRADES AND ALL OTHER EXISTING CONDITIONS.

3. THE CONTRACTOR SHALL INFORM THE DESIGNER OF ANY PROPOSED DEVIATIONS FROM THE CONTRACT DOCUMENTS.

4. NOT ALL INFORMATION IS SHOWN ON THE HVAC DRAWINGS. THE CONTRACTOR SHALL BE RESPONSIBLE FOR COORDINATING INFORMATION ON ALL OTHER CONSTRUCTION DOCUMENTS INCLUDING ARCHITECTURAL, STRUCTURAL, MECHANICAL, AND ELECTRICAL DRAWINGS. THE CONTRACTOR WILL BE FAMILIAR WITH THE DRAWINGS, SPECIFICATIONS, AND ADDENDUMS.

5. THE WORKING DRAWINGS ARE DIAGRAMMATIC (DRAWINGS ARE NOT TO BE SCALED). BECAUSE OF THE SMALL SCALE OF THE DRAWINGS, THEY DO NOT SHOW EVERY OFFSET, BEND OR ELBOW NECESSARY FOR THE COMPLETE INSTALLATION IN THE SPACE PROVIDED. ALL LOCATIONS FOR HVAC EQUIPMENT SHALL BE CHECKED AND COORDINATED WITH THE ARCHITECTURAL, MECHANICAL, STRUCTURAL, AND ELECTRICAL DRAWINGS.

6. SPACE ABOVE ALL CEILINGS IS EXTREMELY LIMITED. CAREFUL COORDINATION IS REQUIRED WITH ALL TRADES BEFORE ANY PIPE, DUCT, OR EQUIPMENT IS ORDERED AND/OR INSTALLED. 1/4" SCALE SHOP DRAWINGS (SUBMITTED TO VBFA FOR APPROVAL) ARE REQUIRED FOR ALL DIVISION THIS WORK. ANY CONFLICTS AND/OR CHANGES FOUND DURING INSTALLATION THAT RESULT FROM LACK OF COORDINATION BY THE CONTRACTORS DURING THE SHOP DRAWING PROCESS ARE THE RESPONSIBILITY OF THE CONTRACTOR

7. THE DRAWINGS AND SPECIFICATION HAVE BEEN PREPARED TO SUPPLEMENT EACH OTHER AND THEY SHALL BE INTERPRETED AS AN INTEGRAL UNIT WITH THE ITEMS SHOWN ON ONE AND NOT THE OTHER BEING FURNISHED AND INSTALLED AS THOUGH SHOWN AND CALLED OUT IN BOTH.

8. ANY PART OF THIS INSTALLATION THAT FAILS, IS UNFIT, OR BECOMES DAMAGED DURING CONSTRUCTION SHALL BE REPAIRED OR REPLACED BY THE CONTRACTOR AT NO ADDITIONAL COST TO THE OWNER.

9. ALL EQUIPMENT SHALL PROVIDE THE SCHEDULED PERFORMANCE AT THE SITE ALTITUDE.

10. THE CONTRACTOR IS RESPONSIBLE FOR ALL EQUIPMENT (INCLUDED IN THIS BID) CHECK-IN, SAFEKEEEPING, AND DAMAGE.

11. HEATING HOT WATER, SUPPLY AND RETURN MAY BE DIRECTLY SUPPORTED TO UNISTRUT BY MEANS OF CLAMPS, AND INSULATED UP TO SUPPORT SYSTEM.

# MECHANICAL PIPING GENERAL NOTES

1. PROVIDE ALL MATERIALS AND EQUIPMENT AND PERFORM ALL LABOR REQUIRED TO INSTALL COMPLETE AND OPERABLE PIPING SYSTEMS AS INDICATED ON THE DRAWINGS, AS SPECIFIED AND AS REQUIRED BY CODE.

2. UNLESS OTHERWISE NOTED: ALL MECHANICAL PIPING IS OVERHEAD TO RUN ABOVE DUCTWORK AND TIGHT TO UNDERSIDE OF STRUCTURE.

3. WHERE VALVING OR EQUIPMENT IS LOCATED ABOVE HARD CEILINGS PROVIDE AN ACCESS DOOR IN CEILING. MINIMUM ACCESS DOOR SIZE OF 24"X24".

4. NO PIPING TO RUN OVER ELECTRICAL PANELS, VFD'S OR MCC'S. PROTECT EQUIPMENT WITH A 42" DEEP ZONE IN FRONT OF PANELS, VFD'S, AND MCC'S.

5. SLEEVE PIPING THRU WALLS/FOUNDATIONS WHERE REQUIRED.

6. INSTALL PIPING SO THAT ALL VALVES, STRAINERS, UNIONS, TRAPS, FLANGES, AND OTHER APPURTENANCES REQUIRING ACCESS ARE ACCESSIBLE.

7. ALL VALVES SHALL BE INSTALLED SO THAT VALVE REMAINS IN SERVICE WHEN EQUIPMENT OR PIPING ON EQUIPMENT SIDE OF VALVE IS REMOVED.

8. PROVIDE AN AIR VENT AT THE HIGH POINT OF EACH DROP IN THE HEATING AND CHILLED WATER PIPING SYSTEM.

9. INSTALL ALL PIPING WITHOUT FORCING OR SPRINGING.

10. ALL VALVES SHALL BE ADJUSTED FOR SMOOTH AND EASY OPERATION.

11. PROVIDE ISOLATION VALVES AT EACH EXIT/ENTRANCE INTO SHAFT WHETHER OR NOT SHOWN.

12. ALL PIPE AND DUCT SIZES SHALL REMAIN THE SAME SIZE SHOWN, IN THE DIRECTION OF FLOW, UNTIL SHOWN OTHERWISE.

13. COORDINATE LOCATION OF THERMOSTAT WITH ARCHITECTURAL FURNISHING PLANS. MOUNT THERMOSTAT AT HEIGHT AS SPECIFIED ON ARCHITECTURAL.

14. CONTRACTOR TO PROVIDE VALVE IDENTIFICATION AND LOCATION ON ALL CEILING TILES WHERE VALVES ARE LOCATED.


MHTN ARCHITECTS
**MHTN Architects, Inc.**
420 East South Temple
Suite 100
Salt Lake City, Utah 84111
Telephone (801) 595-6700
Telefax (801) 595-6717
www.mhtn.com

**Hastings+Chivetta**
ARCHITECTURE • PLANNING • ENGINEERING
622 Emerson, Suite 200
St. Louis, MO 63141
Tel. 314.863.5717
Fax. 314.863.2823
www.hastingschivetta.com

VAN BOERUM & FRANK ASSOCIATES, INC.
CONSULTING ENGINEERS
Salt Lake City • Logan • St. George • Tempe
330 South 300 East 801.530.3148 T
Salt lake City, UT 84111 801.530.3150 F
VBFA Project 1002


REGISTERED PROFESSIONAL ENGINEER
No. 324030
BRADLY W. ROSENHAN
STATE OF UTAH

UNIVERSITY OF UTAH
STUDENT LIFE CENTER
1836 E. BALLIF ROAD
SALT LAKE CITY, UTAH 84112


©2007 MHTN ARCHITECTS, INC.
Drawings, written material, and design concepts shall not be used or reproduced in whole or part in any form or format without prior written consent of MHTN ARCHITECTS, INC. Drawings are intended to be given dimensions only. If not shown, verify correct dimensions with the Architect. Contractor shall check and verify all dimensions and conditions at job site.


SEAL

MHTN PROJECT NO.

DRAWN BY: CHECKED BY:

ISSUED:

| NO. | DATE | DESCRIPTION |
|---|---|---|

CONTRACTOR TO VERIFY DRAWINGS IN FIELD-USE REFLECT LAST REVISION DATE:

| NO. | DATE | DESCRIPTION |
|---|---|---|

SHEET NAME

GENERAL NOTES

BID DOCUMENTS
MAY 15, 2013

SHEET NUMBER

MH001

D:_BimLocal\Mechanical_Central_JRobker.rvt
5/14/2013 12:48:26 PM

# KEYED NOTES

1. CONNECT TO PRIMARY PUMPING LOOP IN CHILLED WATER PLANT. SEE PIPING SCHEMATIC.
2. DISCONNECT EXISTING CHILLED WATER PIPING TO NON-HPER FACILITIES. COORDINATE WITH PLAN OPERATIONS.
3. CHILLED WATER SUPPLY AND RETURN INSTALLED ABOVE EXISTING LAY-IN ACOUSTICAL CEILING.
4. EXISTING HPER PEDESTRIAN TUNNEL WITH UTILITIES ABOVE THE CEILING MOUNTED ON WIDE FLANGE STEEL BEAMS. CEILING IS TIGHT TO BOTTOM OF STEEL FLANGES.
5. ENTER EAST HPER GYMNASIUM AND RISE UP IN CORNER TO ROOF STRUCTURE.
6. PIPING INSTALLED HANGING FROM TRUSS PANEL POINT. ROUTE PIPING ABOVE BOTTOM CHORD.
7. DROP PIPING DOWN IN CORNER OF GYMNASIUM. SEAL PENETRATION TO EXTERIOR UNDERGROUND PIPING.
8. PIPING AT 5'-0" COVER EXTENDED THROUGH LANDSCAPED AREA TO EXISTING TUNNEL.
9. CONNECT TO EXISTING HIGH TEMPERATURE WATER STUBS AT NODE 8. EXTEND IN RACK SYSTEM TO HTW CONVERTER ROOM.
10. CHWS & CHWR IN EXISTING PIPING RACK.
11. CHILLED WATER PIPING TO RACK WALLS IN EXPANSION LOOP 12.
12. SEE MECHANICAL FOR CONTINUATION.

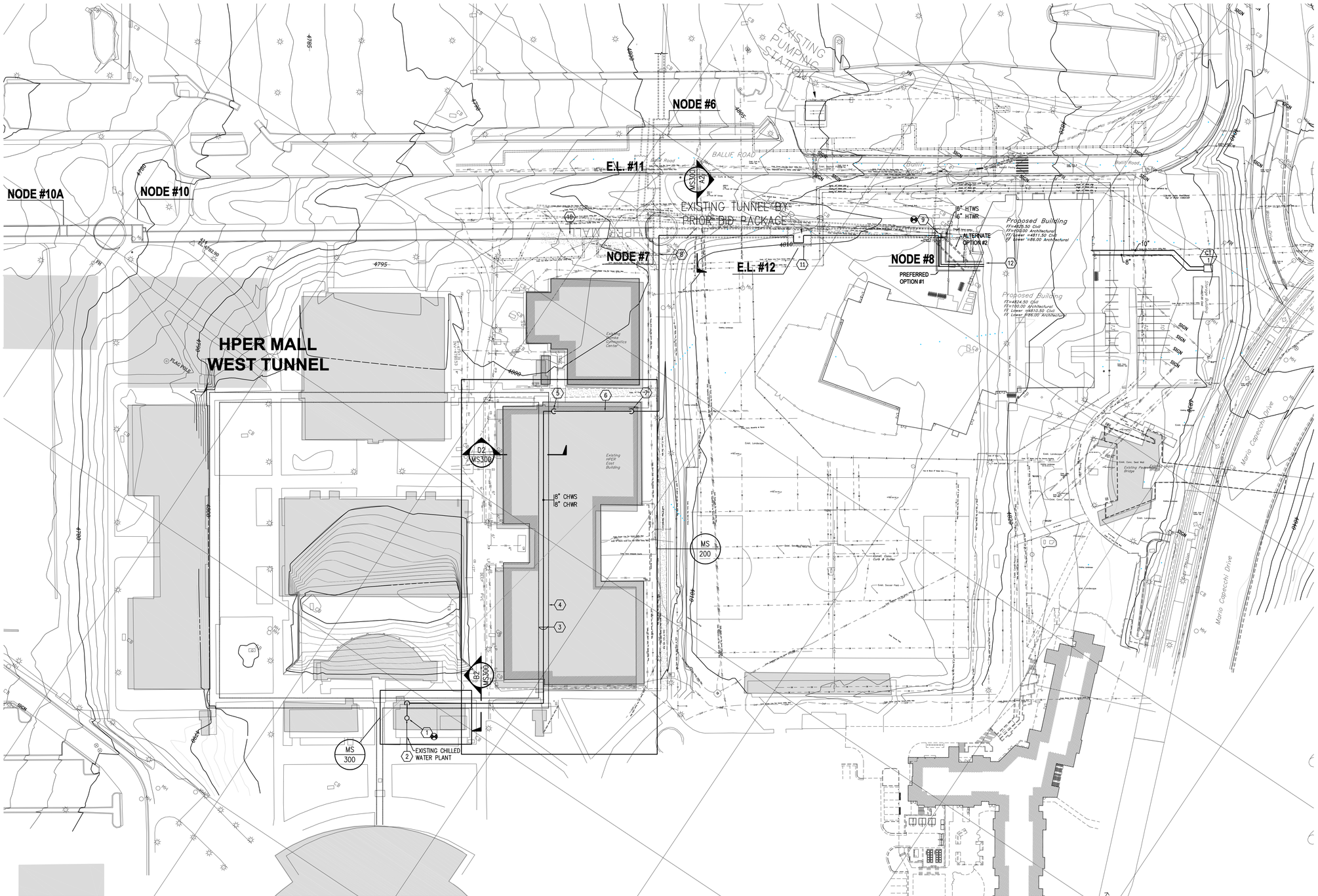


## MECHANICAL SITE PLAN

0 25'-0" 50'-0" 100'-0"

SCALE: 1"= 50'-0"


MHTN ARCHITECTS

**MHTN Architects, Inc.**
420 East South Temple
Suite 100
Salt Lake City, Utah 84111
Telephone (801) 595-6700
Telefax (801) 595-6717
www.mhtn.com

VAN BOERUM & FRANK ASSOCIATES, INC.
CONSULTING ENGINEERS
WWW.VBFA.COM
Salt Lake City • Logan • St. George • Tempe
330 South 300 East 801.530.3148 T
Salt Lake City, UT 84111 801.530.3150 F
VBFA Project Numb 10452


# UNIVERSITY OF UTAH
## STUDENT LIFE CENTER
1836 E. BALLIF ROAD
SALT LAKE CITY, UTAH AND 84112


©2007 MHTN ARCHITECTS, INC.
Drawings, written material, and design concepts shall not be used or reproduced in whole or part in any form or format without prior written consent of MHTN Architects, Inc. Do not scale drawings. Use given dimensions only. If not shown, verify correct dimensions with the Architect. Contractor shall check and verify all dimensions and conditions at job site.


SEAL

MHTN PROJECT NO.

DRAWN BY: CHECKED BY:

ISSUED:

| NO. | DATE | DESCRIPTION |
|---|---|---|

CONTRACTOR TO VERIFY DRAWINGS IN FIELD USE REFLECT LAST REVISION DATE.

| NO. | DATE | DESCRIPTION |
|---|---|---|

SHEET NAME
MECHANICAL SITE PLAN

BID DOCUMENTS
MAY 15, 2013

SHEET NUMBER
MS100

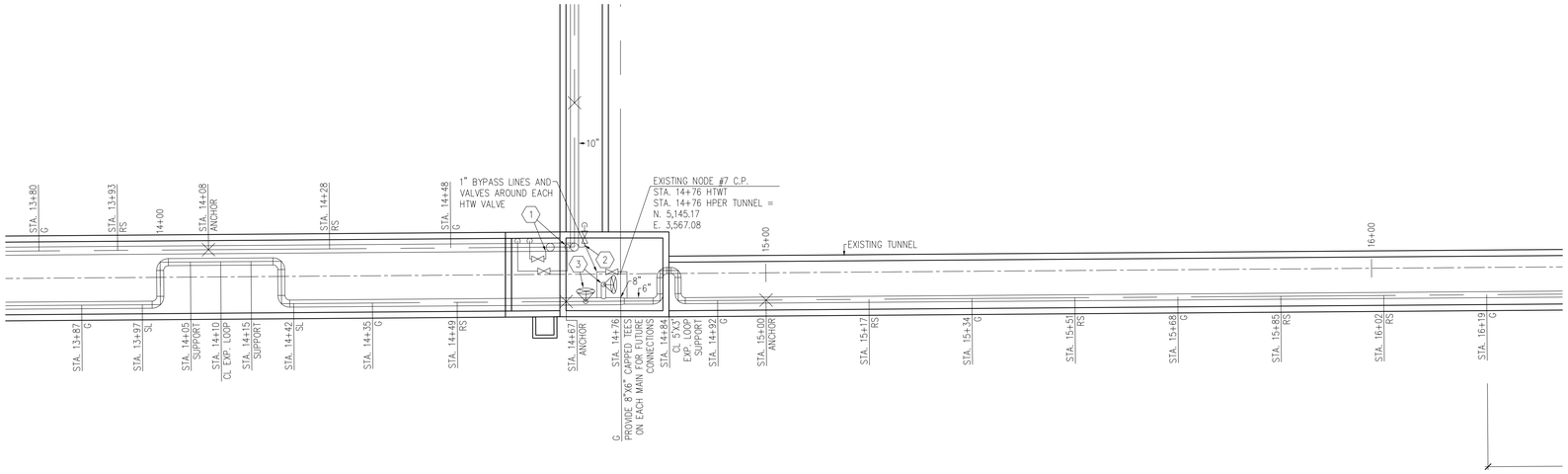


1 MS201 HPER EAST TUNNEL PIPING PLAN
SCALE: 1"=10'-0"

## LEGEND

RS – ROLLER SUPPORT
G – GUIDE
SL – SLIDE
X – ANCHOR

## KEYED NOTES

1. PROVIDE VENT AT HIGH POINT OF 10" MAINS. SEE DETAIL.
2. PROVIDE DRAIN AT LOW POINT OF 10" MAINS.
3. PROVIDE 1/2" PIPE AND VALVE BETWEEN VALVE AND CAP.

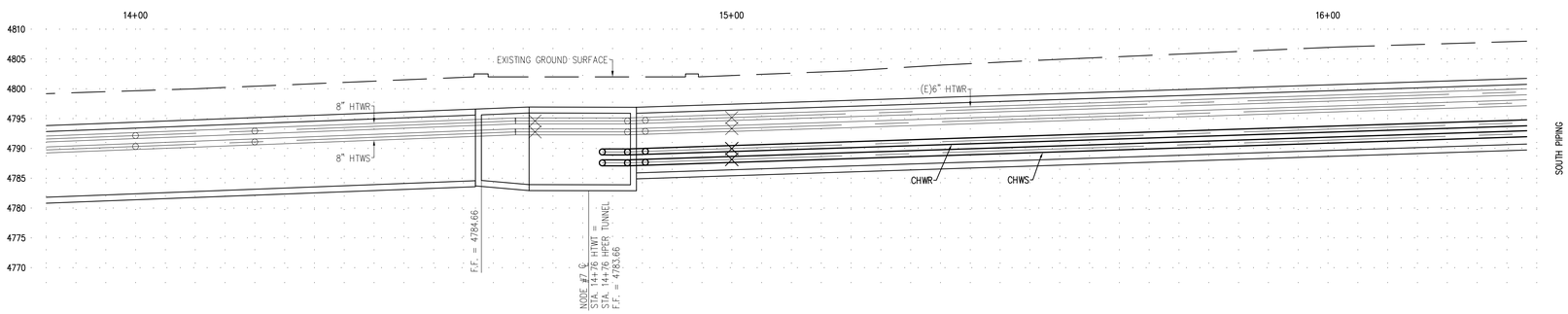


2 MS201 HPER EAST TUNNEL PIPING PROFILE SOUTH SIDE (Z-3)
SCALE: H: 1"=10'-0" V: 1"=10'-0"

0' 20' 40'

MHTN
ARCHITECTS
MHTN Architects, Inc.
420 East South Temple
Suite 100
Salt Lake City, Utah 84111
Telephone (801) 595-6700
Telefax (801) 595-6717
www.mhtn.com

VAN BOERUM & FRANK ASSOCIATES, INC.
CONSULTING ENGINEERS
WWW.VBFA.COM
Salt Lake City • Logan • St. George • Tempe
330 South 300 East 801.530.3148 T
Salt Lake City, UT 84111 801.530.3150 F
VBFA Project Numb 10452

# UNIVERSITY OF UTAH
## STUDENT LIFE CENTER
1836 E. BALLIF ROAD
SALT LAKE CITY, UTAH AND 84112

©2007 MHTN ARCHITECTS, INC.
Drawings, written material, and design concepts shall not be used or reproduced in whole or part in any form or format without prior written consent of MHTN Architects, Inc. Do not scale drawings. Use given dimensions only. If not shown, verify correct dimensions with the Architect. Contractor shall check and verify all dimensions and conditions at job site.

SEAL

MHTN PROJECT NO.
DRAWN BY: CHECKED BY:

ISSUED:

| NO. | DATE | DESCRIPTION |
|---|---|---|

CONTRACTOR TO VERIFY DRAWINGS IN FIELD USE REFLECT LAST REVISION DATE:

| NO. | DATE | DESCRIPTION |
|---|---|---|

SHEET NAME
TUNNEL PLAN AND PROFILE

BID DOCUMENTS
MAY 15, 2013

SHEET NUMBER
MS201

## LEGEND

RS – ROLLER SUPPORT
G – GUIDE
SL – SLIDE
X – ANCHOR

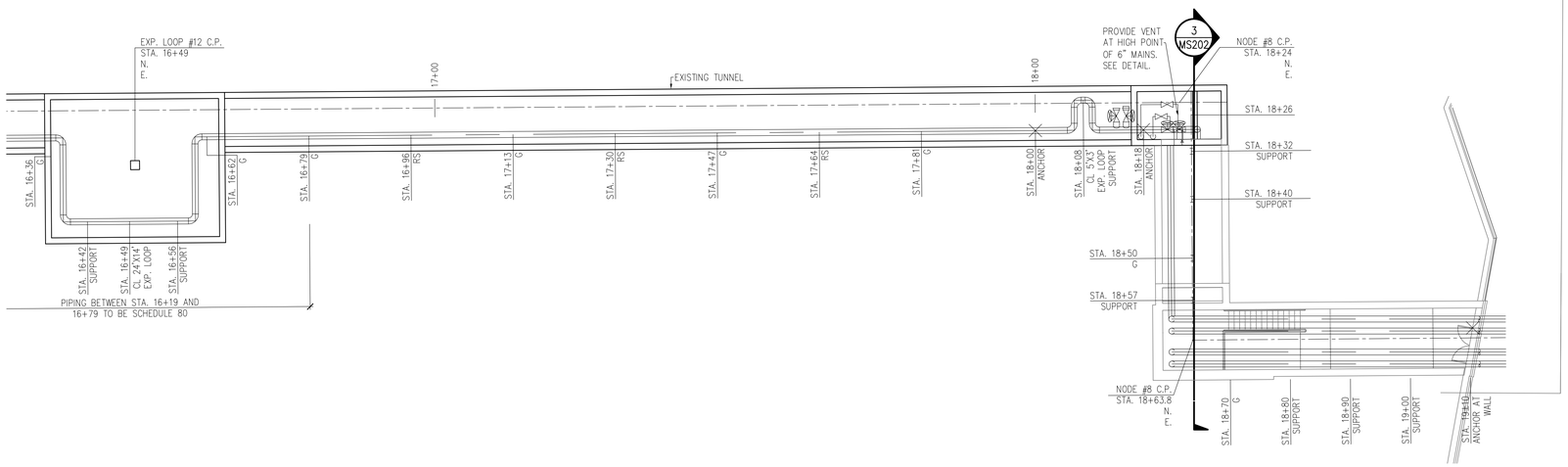


1 MS202 HPER EAST TUNNEL PIPING PLAN
SCALE: 1"=10'-0"

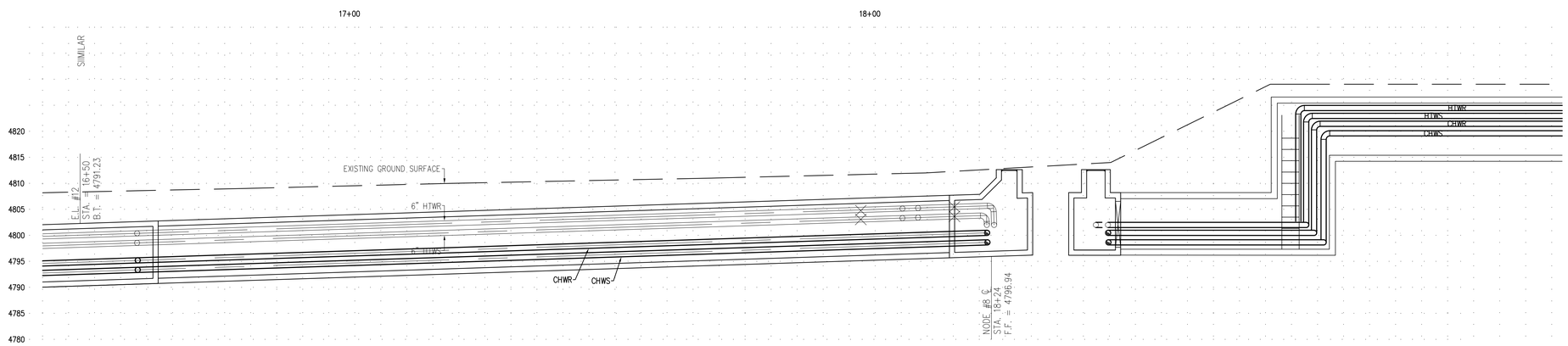


2 MS202 HPER EAST TUNNEL PIPING PROFILE SOUTH SIDE (Z-4)
SCALE: H: 1"=10'-0" V: 1"=10'-0"

0' 20' 40'

3 MS202 TUNNEL PIPING PROFILE
SCALE: H: 1"=10'-0" V: 1"=10'-0"

0' 20' 40'


MHTN
ARCHITECTS
MHTN Architects, Inc.
420 East South Temple
Suite 100
Salt Lake City, Utah 84111
Telephone (801) 595-6700
Telefax (801) 595-6717
www.mhtn.com

VAN BOERUM & FRANK ASSOCIATES, INC.
CONSULTING ENGINEERS
WWW.VBFA.COM
Salt Lake City • Logan • St. George • Tempe
330 South 300 East 801.530.3148 T
Salt Lake City, UT 84111 801.530.3150 F
VBFA Project Numb 10452


# UNIVERSITY OF UTAH
## STUDENT LIFE CENTER
1836 E. BALLIF ROAD
SALT LAKE CITY, UTAH AND 84112


©2007 MHTN ARCHITECTS, INC.
Drawings, written material, and design concepts shall not be used or reproduced in whole or part in any form or format without prior written consent of MHTN Architects, Inc. Do not scale drawings. Use given dimensions only. If not shown, verify correct dimensions with the Architect. Contractor shall check and verify all dimensions and conditions at job site.


SEAL

MHTN PROJECT NO:
DRAWN BY: CHECKED BY:

ISSUED:

| NO. | DATE | DESCRIPTION |
|---|---|---|
| | | |

CONTRACTOR TO VERIFY DRAWINGS IN FIELD USE REFLECT LAST REVISION DATE:

| NO. | DATE | DESCRIPTION |
|---|---|---|
| | | |

SHEET NAME
TUNNEL PLAN AND PROFILE

BID DOCUMENTS
MAY 15, 2013

SHEET NUMBER
MS202

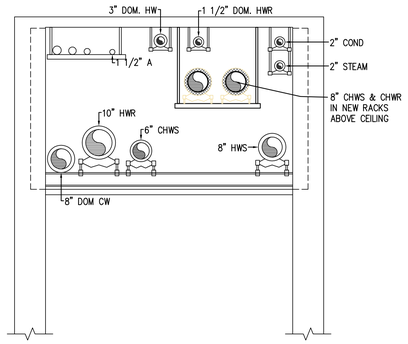


D2 MS301 HPER EAST BUILDING CEILING SECTION
SCALE: 1/2" = 1'-0"
0' 2' 4'

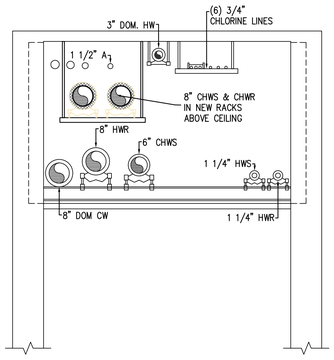


B2 MS301 HPER EAST BUILDING CEILING SECTION
SCALE: 1/2" = 1'-0"
0' 2' 4'

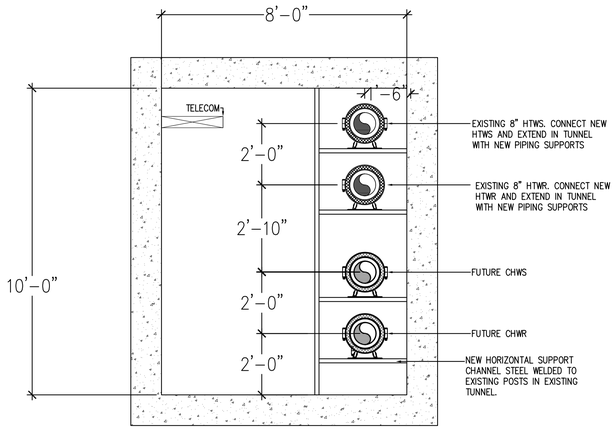


A2 MS301 EAST HPER TUNNEL SECTION
SCALE: 1/2" = 1'-0"
0' 2' 4'

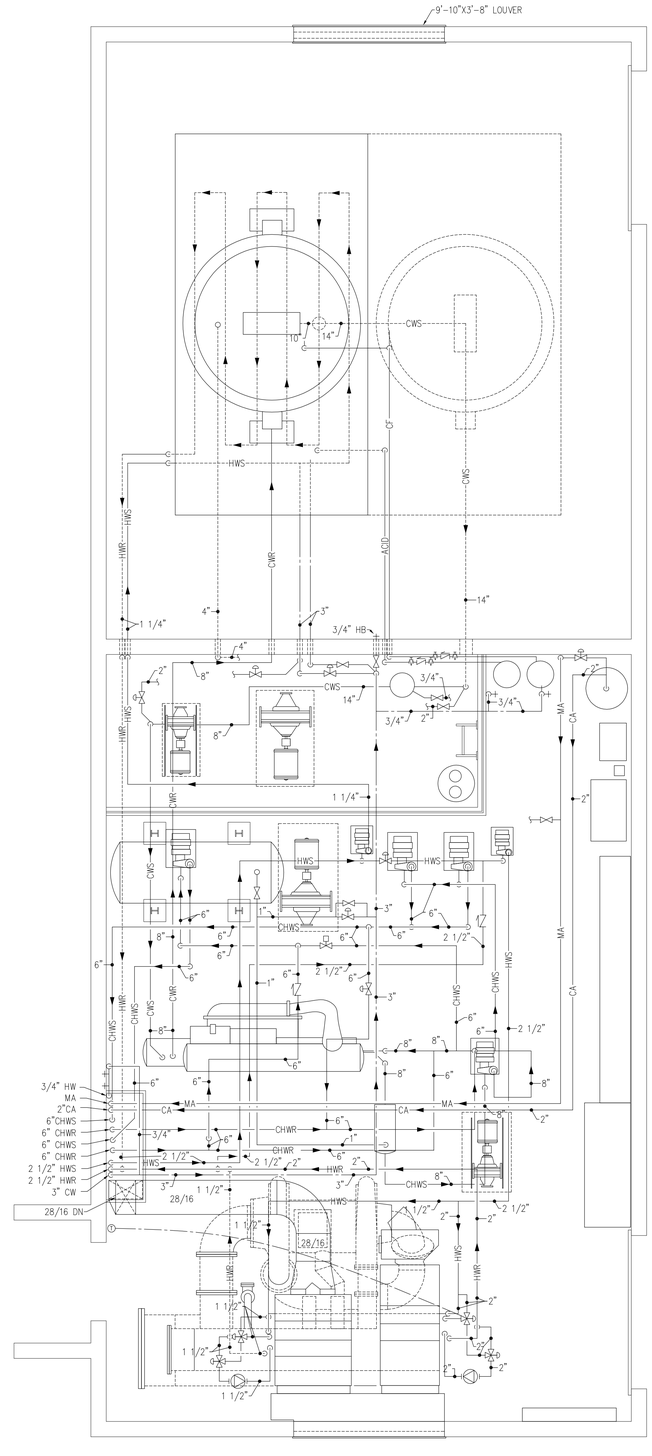


A4 MS301 CHILLED WATER EQUIPMENT ROOM
SCALE: 1/4" = 1'-0"
0' 4' 8'

MHTN
ARCHITECTS
MHTN Architects, Inc.
420 East South Temple
Suite 100
Salt Lake City, Utah 84111
Telephone (801) 595-6700
Telefax (801) 595-6717
www.mhtn.com

VAN BOERUM
& FRANK ASSOCIATES, INC.
CONSULTING ENGINEERS
WWW.VBFA.COM
Salt Lake City • Logan • St. George • Tempe
330 South 300 East 801.530.3148 T
Salt Lake City, UT 84111 801.530.3150 F
VBFA Project Numb 10452

# UNIVERSITY OF UTAH
## STUDENT LIFE CENTER
1836 E. BALLIF ROAD
SALT LAKE CITY, UTAH AND 84112

©2007 MHTN ARCHITECTS, INC.
Drawings, written material, and design concepts shall not be used or reproduced in whole or part in any form or format without prior written consent of MHTN Architects, Inc. Do not scale drawings. Use given dimensions only. Check and verify correct dimensions and conditions at Architects. Contractor shall check and verify all dimensions and conditions at job site.

SEAL

MHTN PROJECT NO.
DRAWN BY: CHECKED BY:

ISSUED:

| NO | DATE | DESCRIPTION |
|---|---|---|
| | | |

CONTRACTOR TO VERIFY DRAWINGS IN FIELD USE REFLECT LAST REVISION DATE

| NO | DATE | DESCRIPTION |
|---|---|---|
| | | |

SHEET NAME
CHILLED WATER EQUIPMENT ROOM
BID DOCUMENTS
MAY 15, 2013

SHEET NUMBER
MS301

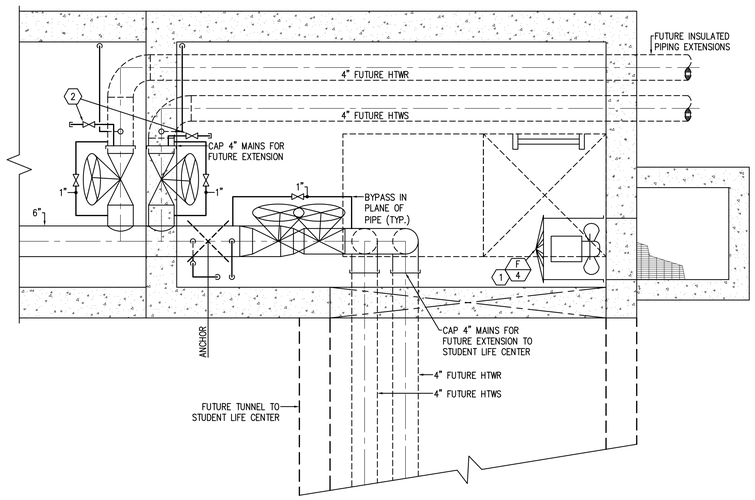


C2 / MS401 HPER MALL TUNNEL - NODE #8 (EXISTING)
SCALE: 1/2" = 1'-0"

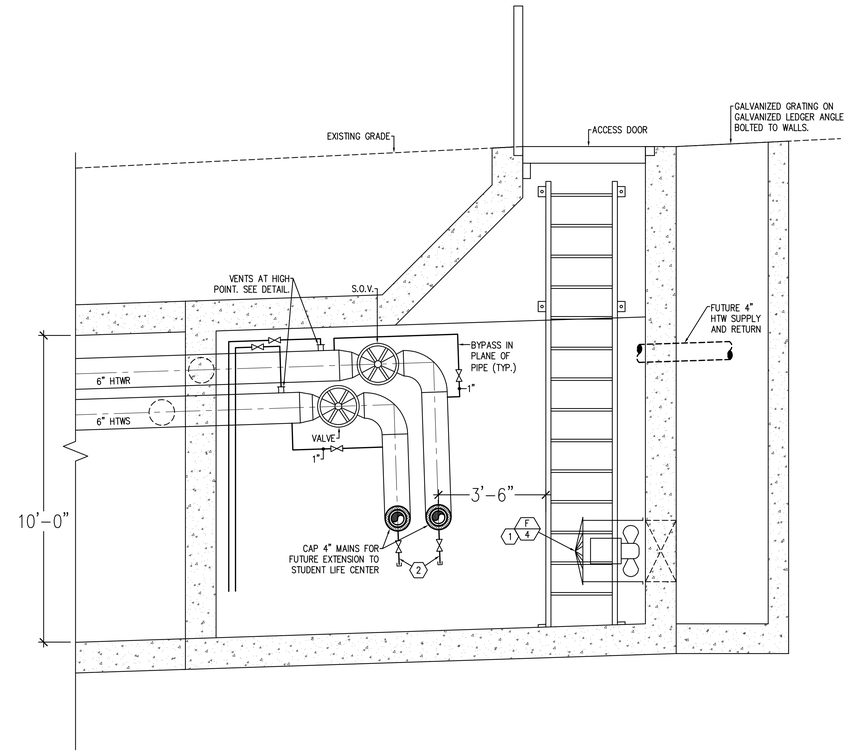


C4 / MS401 HPER MALL TUNNEL - NODE #8 (EXISTING)
SCALE: 1/2" = 1'-0"

## KEYED NOTES

1. F-4: JM 630 AEROFOIL 6200 CFM @ 0.5 S.P. WHEEL DIA. 630 MM 1.0 HP, 208/3/60 1170 RPM.
2. PROVIDE 1/2" PIPE AND VALVE BETWEEN VALVE AND CAP.

MHTN ARCHITECTS
MHTN Architects, Inc.
420 East South Temple
Suite 100
Salt Lake City, Utah 84111
Telephone (801) 595-6700
Telefax (801) 595-6717
www.mhtn.com

VAN BOERUM & FRANK ASSOCIATES, INC.
CONSULTING ENGINEERS
WWW.VBFA.COM
Salt Lake City • Logan • St. George • Tempe
330 South 300 East 801.530.3148 T
Salt Lake City, UT 84111 801.530.3150 F
VBFA Project Numb 10452

# UNIVERSITY OF UTAH
## STUDENT LIFE CENTER
1836 E. BALLIF ROAD
SALT LAKE CITY, UTAH AND 84112

©2007 MHTN ARCHITECTS, INC.
Drawings, written material, and design concepts shall not be used or reproduced in whole or part in any form or format without prior written consent of MHTN Architects, Inc. Do not scale drawings. Use given dimensions only. If not shown, verify correct dimensions with the Architect. Contractor shall check and verify all dimensions and conditions at job site.

SEAL

MHTN PROJECT NO.
DRAWN BY: CHECKED BY:

ISSUED:

| NO | DATE | DESCRIPTION |
|---|---|---|

CONTRACTOR TO VERIFY DRAWINGS IN FIELD USE REFLECT LAST REVISION DATE.

| NO | DATE | DESCRIPTION |
|---|---|---|

SHEET NAME
TUNNEL DETAIL AND NODES

BID DOCUMENTS
MAY 15, 2013

SHEET NUMBER
MS401

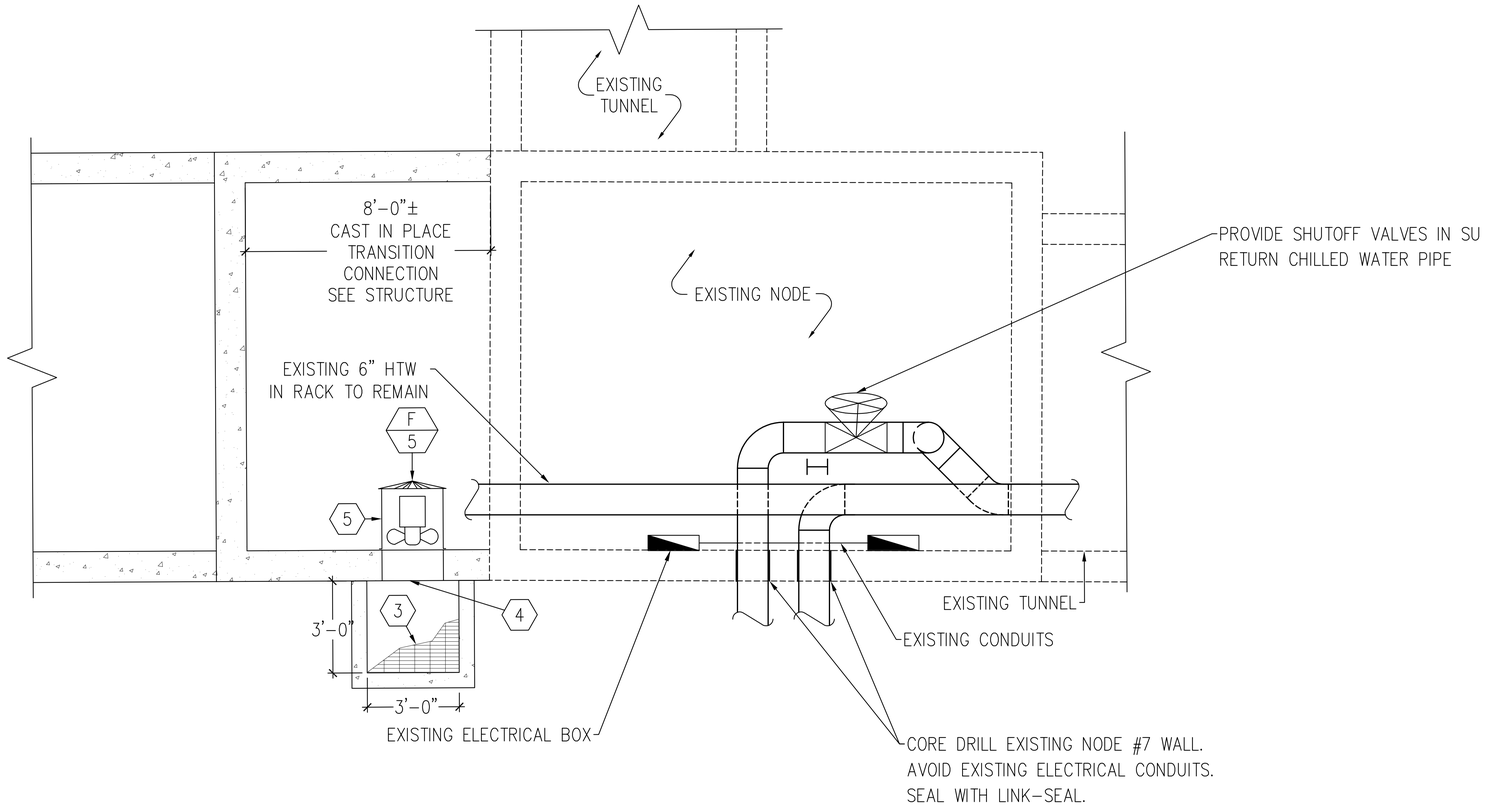


G12 / MS402 ~~MS401~~

# TUNNEL NODE #7 PLAN

SCALE: 1/4" = 1'-0"

0' 4' 8'

## KEYED NOTES

1. F-4: JM 630 AEROFOIL 6200 CFM @ 0.5 S.P. WHEEL DIA. 630 MM 1.0 HP, 208/3/60 1170 RPM.
2. PROVIDE 1/2" PIPE AND VALVE BETWEEN VALVE AND CAP.

MHTN
ARCHITECTS
MHTN Architects, Inc.
420 East South Temple
Suite 100
Salt Lake City, Utah 84111
Telephone (801) 595-6700
Telefax (801) 595-6717
www.mhtn.com

VAN BOERUM & FRANK ASSOCIATES, INC.
CONSULTING ENGINEERS
WWW.VBFA.COM
Salt Lake City • Logan • St. George • Tempe
330 South 300 East 801.530.3148 T
Salt Lake City, UT 84111 801.530.3150 F
VBFA Project Numb 10452

UNIVERSITY OF UTAH
STUDENT LIFE CENTER
1836 E. BALLIF ROAD
SALT LAKE CITY, UTAH AND 84112

©2007 MHTN ARCHITECTS, INC.
Drawings, written material, and design concepts shall not be used or reproduced in whole or part in any form or format without prior written consent of MHTN Architects, Inc. Do not scale drawings. Use given dimensions only. If not shown, verify correct dimensions with the Architect. Contractor shall check and verify all dimensions and conditions at job site.

SEAL

MHTN PROJECT NO:

DRAWN BY: CHECKED BY:

ISSUED:

| NO. | DATE | DESCRIPTION |
|---|---|---|

CONTRACTOR TO VERIFY DRAWINGS IN FIELD USE REFLECT LAST REVISION DATE:

| NO. | DATE | DESCRIPTION |
|---|---|---|

SHEET NAME
TUNNEL DETAIL AND NODES

BID DOCUMENTS
MAY 15, 2013

SHEET NUMBER
MS401

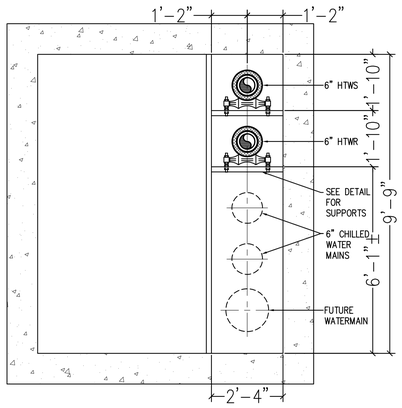


G2 TYPICAL TUNNEL SECTION - HPER EAST
MS403 MS401
SCALE: 1/2" = 1'-0"

0' 2' 4'

## KEYED NOTES

1. F-4: JM 630 AEROFOIL 6200 CFM @ 0.5 S.P. WHEEL DIA. 630 MM 1.0 HP, 208/3/60 1170 RPM.
2. PROVIDE 1/2" PIPE AND VALVE BETWEEN VALVE AND CAP.

MHTN
ARCHITECTS
**MHTN Architects, Inc.**
420 East South Temple
Suite 100
Salt Lake City, Utah 84111
Telephone (801) 595-6700
Telefax (801) 595-6717
www.mhtn.com

VAN BOERUM & FRANK ASSOCIATES, INC.
CONSULTING ENGINEERS
WWW.VBFA.COM
Salt Lake City • Logan • St. George • Tempe
330 South 300 East 801.530.3148 T
Salt Lake City, UT 84111 801.530.3150 F
VBFA Project Numb 10452

# UNIVERSITY OF UTAH
## STUDENT LIFE CENTER
1836 E. BALLIF ROAD
SALT LAKE CITY, UTAH AND 84112

©2007 MHTN ARCHITECTS, INC.
Drawings, written material, and design concepts shall not be used or reproduced in whole or part in any form or format without prior written consent of MHTN Architects, Inc. Do not scale drawings. Use given dimensions only. If not shown, verify correct dimensions with the Architect. Contractor shall check and verify all dimensions and conditions at job site.

SEAL

MHTN PROJECT NO.

DRAWN BY: CHECKED BY:

ISSUED:

| NO. | DATE | DESCRIPTION |
|---|---|---|

CONTRACTOR TO VERIFY DRAWINGS IN FIELD USE REFLECT LAST REVISION DATE:

| NO. | DATE | DESCRIPTION |
|---|---|---|

SHEET NAME
TUNNEL DETAIL AND NODES

BID DOCUMENTS
MAY 15, 2013

SHEET NUMBER
MS401

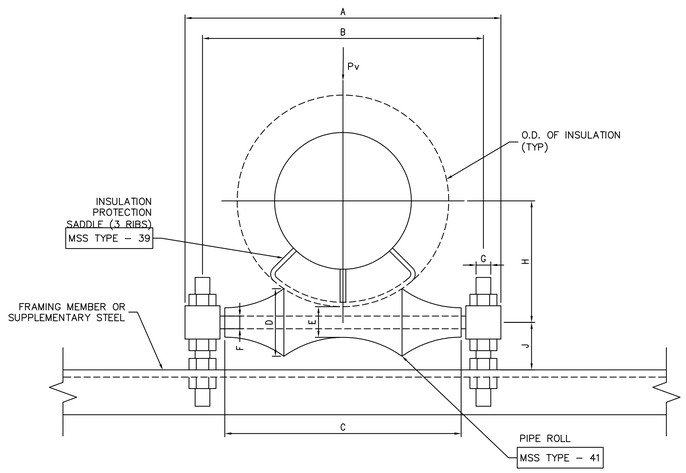


4 MS501 ROLLER SUPPORT TYPICAL DETAIL

NO SCALE

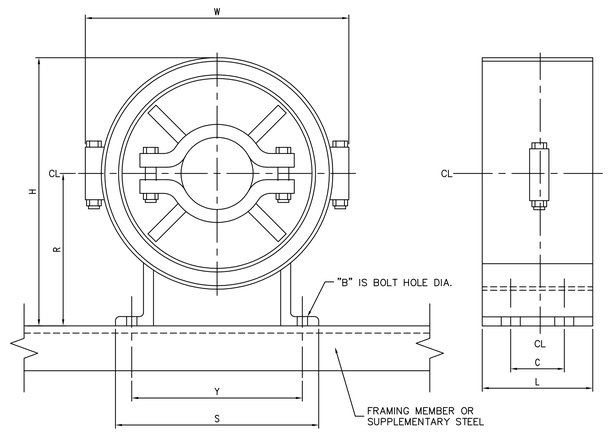


2 MS501 GUIDED SUPPORT TYPICAL DETAIL

NO SCALE

| PIPE SIZE | SERVICE | INSUL. THICK | DIMENSIONS | | | | | | | | | BODY SIZE |
|---|---|---|---|---|---|---|---|---|---|---|---|---|
| | | | A | B | C | D | E | F | G | H | J | |
| 10" | HTW | 3 1/2" | 24 1/2" | 21 7/8" | 18 1/4" | 5 7/16" | 2 1/4" | 1 1/4" | 1" | 10 1/2" | 2 7/8" | 18 |
| 8" | HTW | 3 1/2" | 22 1/8" | 19 3/4" | 16 1/4" | 5" | 2 5/8" | 1 1/4" | 1" | 9 7/16" | 2 7/8" | 16 |
| 6" | HTW | 3 1/2" | 20 1/8" | 19 3/4" | 14 1/4" | 4 5/8" | 2 1/2" | 1 1/8" | 15/16" | 8 3/8" | 2 1/2" | 14 |
| | | | | | | | | | | | | |

TYPICAL PIPE SUPPORT
GRINNEL FIG. 171 OR
EQUAL

5 MS501 ROLLER SUPPORT SCHEDULE

NO SCALE

| PIPE SIZE | SERVICE | INSUL. THICK | DIMENSIONS | | | | | | | | BODY SIZE |
|---|---|---|---|---|---|---|---|---|---|---|---|
| | | | H | R | W | Y | B | C | L | S | |
| 10" | HTW | 3 1/2" | 22" | 11 1/2" | 23 5/8" | 14 1/8" | 7/8" | 4" | 6" | 16" | 10 |
| 8" | HTW | 3 1/2" | 20" | 10 1/2" | 21 5/8" | 11 1/4" | 3/4" | 4" | 6" | 13 3/4" | 9 |
| 6" | HTW | 3" | 17 7/8" | 9 1/2" | 18 7/8" | 10 1/4" | 3/4" | 4" | 6" | 11 3/4" | 8 |
| | | | | | | | | | | | |

TYPICAL PIPE GUIDE
ATS MODEL GA OR
EQUAL

3 MS501 GUIDE SCHEDULE

NO SCALE

1. FOR 3 1/2" THICK INSULATION USE 3" SADDLE (GRINNEL FIG. 164) WITH PIPE SUPPORT ONLY.
2. FOR 2" THICK INSULATION USE 2" SADDLE (GRINNEL FIG. 162) WITH PIPE SUPPORT ONLY.
3. ALL SADDLES AND GUIDES TO ALLOW A MINIMUM OF 12" GROWTH.
4. INSTALL SUCH THAT PIPE GROWTH (12" MAX.) IS ALLOWED IN THE DIRECTION OF THE EXPANSION JOINT.
5. "J" DIMENSION SHOULD BE FIELD SET TO AVOID INTERFERENCE.

1 MS501 ROLLER AND GUIDE GENERAL NOTES

NO SCALE

MHTN
ARCHITECTS
MHTN Architects, Inc.
420 East South Temple
Suite 100
Salt Lake City, Utah 84111
Telephone (801) 595-6700
Telefax (801) 595-6717
www.mhtn.com

VAN BOERUM & FRANK ASSOCIATES, INC.
CONSULTING ENGINEERS
WWW.VBFA.COM
Salt Lake City • Logan • St. George • Tempe
330 South 300 East 801.530.3148 T
Salt Lake City, UT 84111 801.530.3150 F
VBFA Project Numb 10452

UNIVERSITY OF UTAH
STUDENT LIFE CENTER
1836 E. BALLIF ROAD
SALT LAKE CITY, UTAH AND 84112

©2007 MHTN ARCHITECTS, INC.
Drawings, written material, and design concepts shall not be used or reproduced in whole or part in any form or format without prior written consent of MHTN Architects, Inc. Do not scale drawings. Use given dimensions only. If not shown, verify correct dimensions with the Architect. Contractor shall check and verify all dimensions and conditions at job site.

SEAL

MHTN PROJECT NO.

DRAWN BY: CHECKED BY:

ISSUED:

| NO. | DATE | DESCRIPTION |
|---|---|---|
| | | |

CONTRACTOR TO VERIFY DRAWINGS IN FIELD USE REFLECT LAST REVISION DATE.

| NO. | DATE | DESCRIPTION |
|---|---|---|
| | | |

SHEET NAME
PIPING DETAILS

BID DOCUMENTS
MAY 15, 2013

SHEET NUMBER
MS501

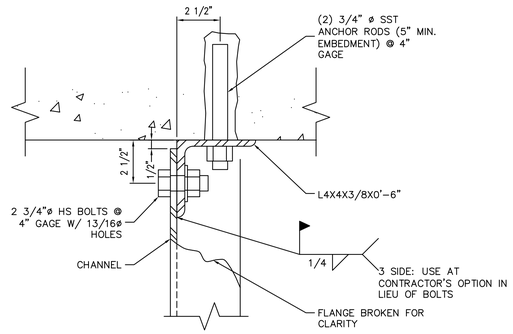


2 / MS502 CLIP ANGLE @ CEILING
SCALE: 3"=1'-0"

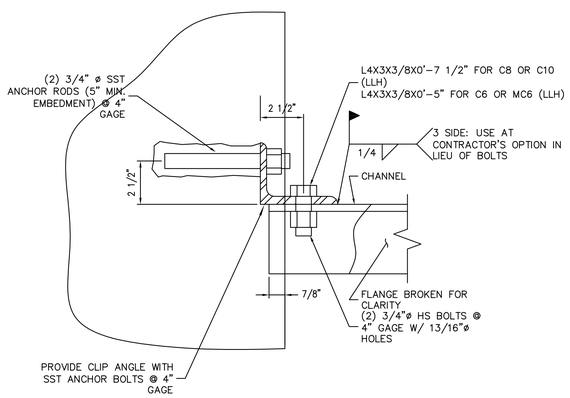


5 / MS502 CLIP ANGLE @ WALL
SCALE: 3"=1'-0"

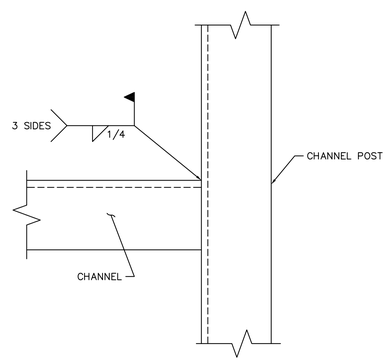


3 / MS502 SUPPORT CHANNEL
SCALE: 3"=1'-0"

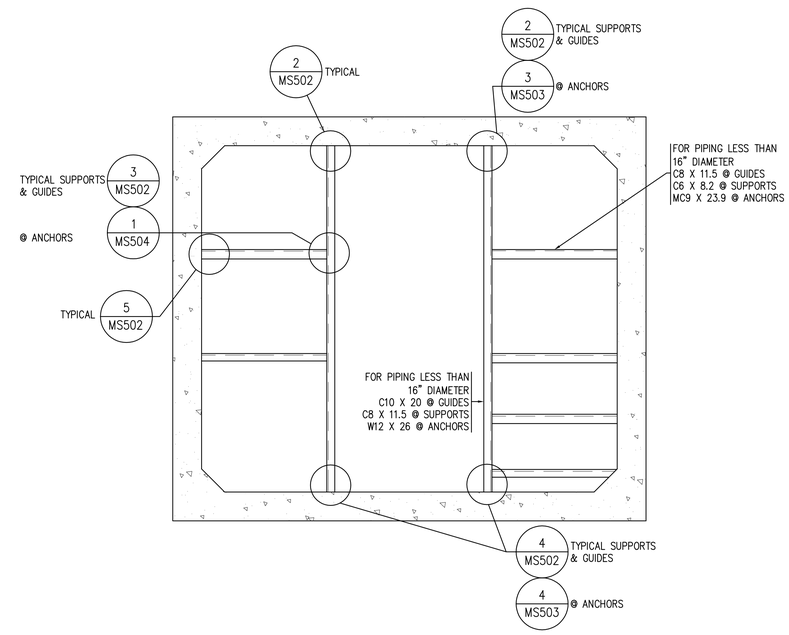


1 / MS502 STRUCT. STEEL SUPPORT TYPICAL SECTION
SCALE: 1/4"=1'-0"

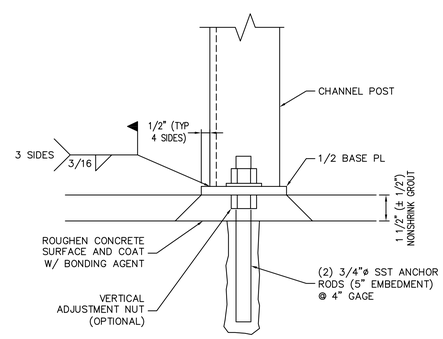


4 / MS502 CLIP ANGLE @ CEILING
SCALE: 3"=1'-0"


MHTN
ARCHITECTS
MHTN Architects, Inc.
420 East South Temple
Suite 100
Salt Lake City, Utah 84111
Telephone (801) 595-6700
Telefax (801) 595-6717
www.mhtn.com

VAN BOERUM & FRANK ASSOCIATES, INC.
CONSULTING ENGINEERS
WWW.VBFA.COM
Salt Lake City • Logan • St. George • Tempe
330 South 300 East 801.530.3148 T
Salt Lake City, UT 84111 801.530.3150 F
VBFA Project Numb 10452


# UNIVERSITY OF UTAH
## STUDENT LIFE CENTER
1836 E. BALLIF ROAD
SALT LAKE CITY, UTAH AND 84112


©2007 MHTN ARCHITECTS, INC.
Drawings, written material, and design concepts shall not be used or reproduced in whole or part in any form or format without prior written consent of MHTN Architects, Inc. Do not scale drawings. Use given dimensions only. If not shown, verify correct dimensions with the Architect. Contractor shall check and verify all dimensions and conditions at job site.


SEAL

MHTN PROJECT NO.

DRAWN BY: CHECKED BY:

ISSUED:

| NO. | DATE | DESCRIPTION |
|---|---|---|

CONTRACTOR TO VERIFY DRAWINGS IN FIELD USE REFLECT LAST REVISION DATE.

| NO. | DATE | DESCRIPTION |
|---|---|---|

SHEET NAME
PIPING DETAILS

BID DOCUMENTS
MAY 15, 2013

SHEET NUMBER
MS502

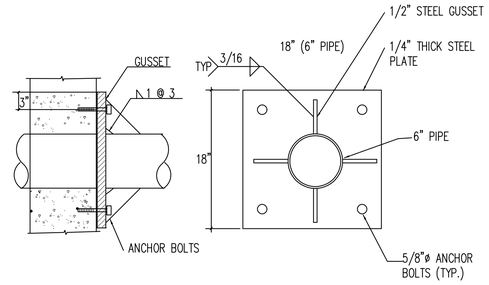


## ANCHOR DETAIL (MANHOLE)
NO SCALE

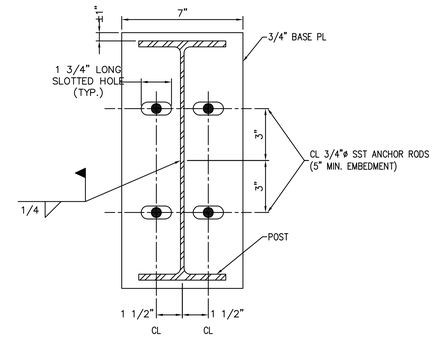


4 / MS503 ANCHOR POST BASE PL
SCALE: 3"=1'-0"

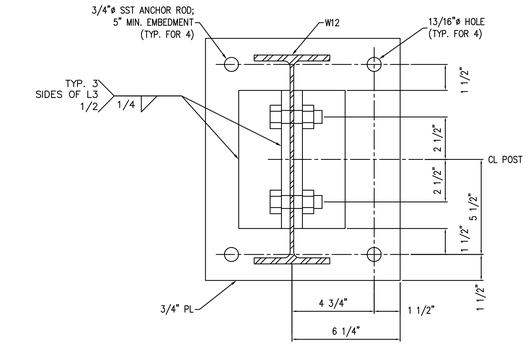


1 / MS503 CLIP ANGLE @ CEILING
SCALE: 3"=1'-0"

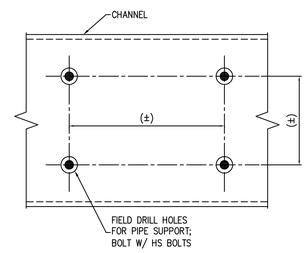


5 / MS503 CHANNEL BOLT LAYOUT
SCALE: 3"=1'-0"

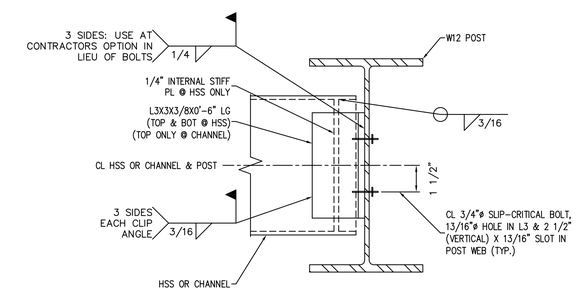


2 / MS503 CHANNEL CONNECTION
SCALE: 3"=1'-0"

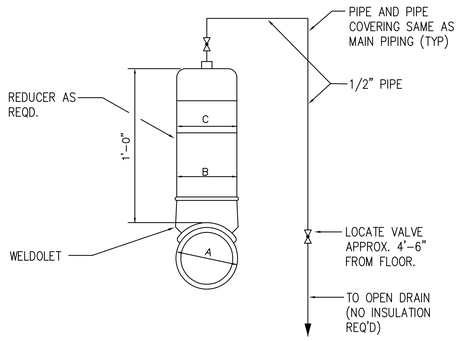


NOTE:

HIGH POINTS OF ALL PIPING TO BE VENTED.

| PIPE SIZE (nom) A | DIAMETER | |
|---|---|---|
| | B | C |
| 6" | 6" | 6" |
| 8" | 6" | 6" |
| 10" | 6" | 6" |

7 / MS503 HIGH TEMPERATURE WATER AIR VENT DETAIL
NO SCALE

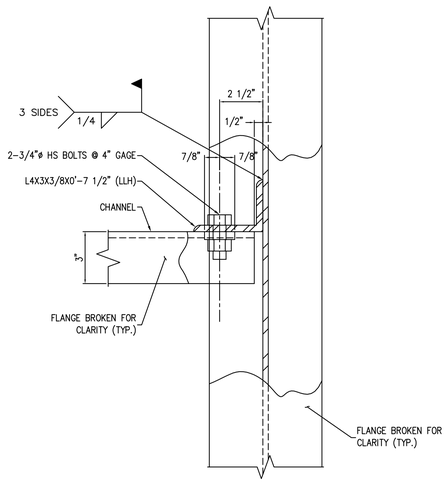


6 / MS503 CHANNEL CONNECTION ELEVATION
SCALE: 3"=1'-0"

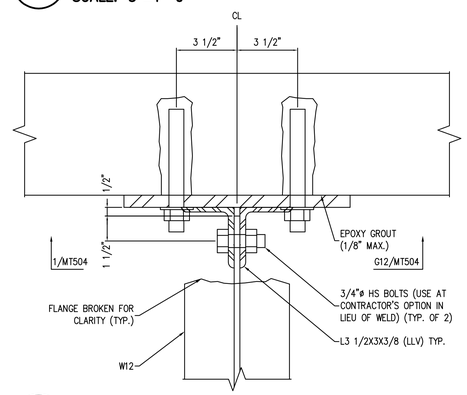


3 / MS503 CLIP ANGLE @ CEILING
SCALE: 3"=1'-0"

MHTN
ARCHITECTS
MHTN Architects, Inc.
420 East South Temple
Suite 100
Salt Lake City, Utah 84111
Telephone (801) 595-6700
Telefax (801) 595-6717
www.mhtn.com

VAN BOERUM & FRANK ASSOCIATES, INC.
CONSULTING ENGINEERS
WWW.VBFA.COM
Salt Lake City • Logan • St. George • Tempe
330 South 300 East 801.530.3148 T
Salt Lake City, UT 84111 801.530.3150 F
VBFA Project Numb 10452

# UNIVERSITY OF UTAH
# STUDENT LIFE CENTER
1836 E. BALLIF ROAD
SALT LAKE CITY, UTAH AND 84112

©2007 MHTN ARCHITECTS, INC.
Drawings, written material, and design concepts shall not be used or reproduced in whole or part in any form or format without prior written consent of MHTN Architects, Inc. Do not scale drawings. Use given dimensions only. If not shown, verify correct dimensions with the Architect. Contractor shall check and verify all dimensions and conditions at job site.

SEAL

MHTN PROJECT NO:
DRAWN BY: CHECKED BY:
ISSUED:

| NO. | DATE | DESCRIPTION |
|---|---|---|

CONTRACTOR TO VERIFY DRAWINGS IN FIELD USE REFLECT LAST REVISION DATE:

| NO. | DATE | DESCRIPTION |
|---|---|---|

SHEET NAME
PIPING DETAILS

BID DOCUMENTS
MAY 15, 2013

SHEET NUMBER
MS503

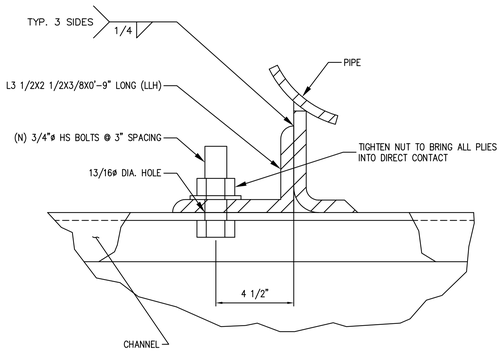


5 / MS504 DETAIL
NO SCALE

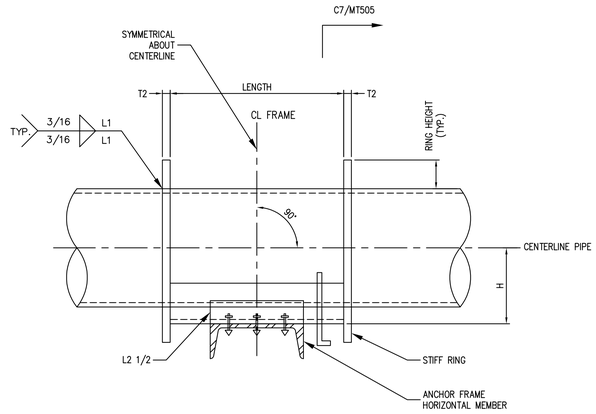


3 / MS504 ANCHOR DETAIL – ELEVATION
NO SCALE

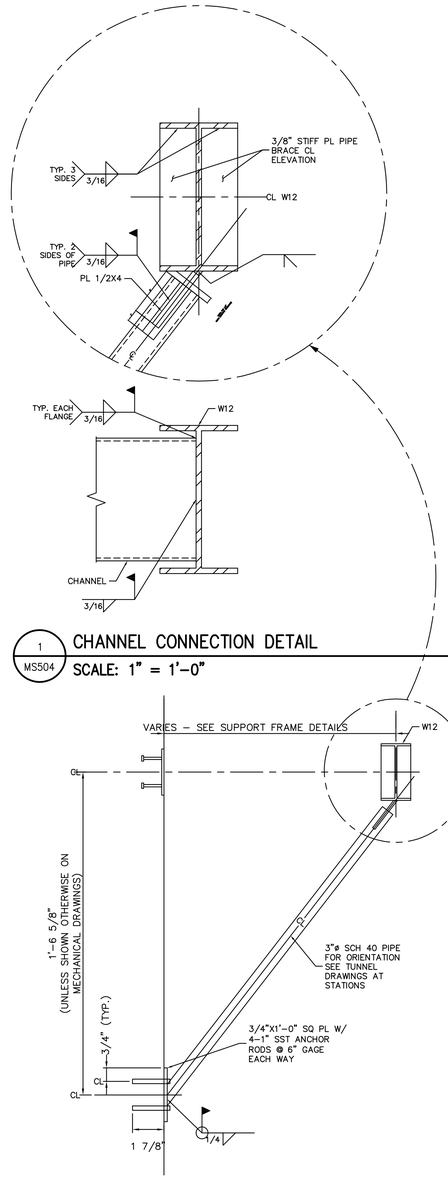


1 / MS504 CHANNEL CONNECTION DETAIL
SCALE: 1" = 1'-0"

2 / MS504 ANCHOR SUPPORT – PLAN VIEW
SCALE: 1" = 1'-0"

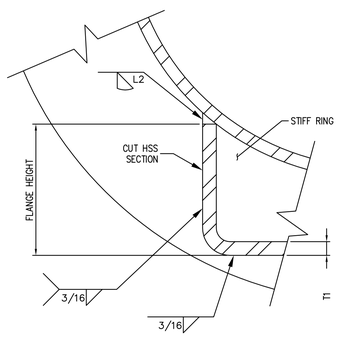


6 / MS504 ATTACHMENT TO CHANNEL DETAIL
NO SCALE

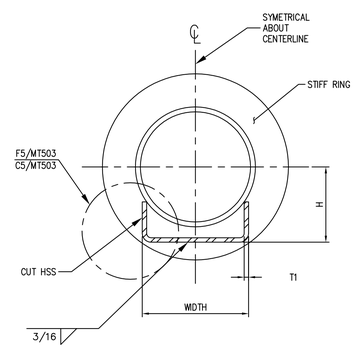


4 / MS504 ANCHOR DETAIL –END VIEW
NO SCALE

B7/MT505 HIGH TEMPERATURE WATER ANCHOR SCHEDULE

| PIPE DIA. | LENGTH (IN) | WIDTH (IN) | FLANGE HT (IN) | T1 (IN) | RING HT (IN) | T2 (IN) | L1 (IN–IN) | L2 (IN–IN) | H (IN) | N BOLTS |
|---|---|---|---|---|---|---|---|---|---|---|
| 10" | 13 | 8 | 3 | 3/8 | 2 | 3/8 | 2–6 | 3–5 | 7 | 3 |
| 8" | 10 | 6 | 3 | 3/8 | 2 | 3/8 | 2–8 | 2–4 | 6 1/2 | 2 |
| 6" OR SMALLER | 9 | 4 | 3 | 1/4 | 1 | 1/4 | 2–8 | 2–4 | 5 3/4 | 2 |

MHTN
ARCHITECTS
MHTN Architects, Inc.
420 East South Temple
Suite 100
Salt Lake City, Utah 84111
Telephone (801) 595-6700
Telefax (801) 595-6717
www.mhtn.com

VAN BOERUM & FRANK ASSOCIATES, INC.
CONSULTING ENGINEERS
WWW.VBFA.COM
Salt Lake City • Logan • St. George • Tempe
330 South 300 East 801.530.3148 T
Salt Lake City, UT 84111 801.530.3150 F
VBFA Project Numb 10452

# UNIVERSITY OF UTAH
## STUDENT LIFE CENTER
1836 E. BALLIF ROAD
SALT LAKE CITY, UTAH AND 84112

©2007 MHTN ARCHITECTS, INC.
Drawings, written material, and design concepts shall not be used or reproduced in whole or part in any form or format without prior written consent of MHTN Architects, Inc. Do not scale drawings. Use given dimensions only. If not shown, verify correct dimensions with the Architect. Contractor shall check and verify all dimensions and conditions at job site.

SEAL

MHTN PROJECT NO.
DRAWN BY: CHECKED BY:
ISSUED:

| NO | DATE | DESCRIPTION |
|---|---|---|

CONTRACTOR TO VERIFY DRAWINGS IN FIELD USE REFLECT LAST REVISION DATE.

| NO | DATE | DESCRIPTION |
|---|---|---|

SHEET NAME
PIPING DETAILS

BID DOCUMENTS
MAY 15, 2013

SHEET NUMBER
MS504

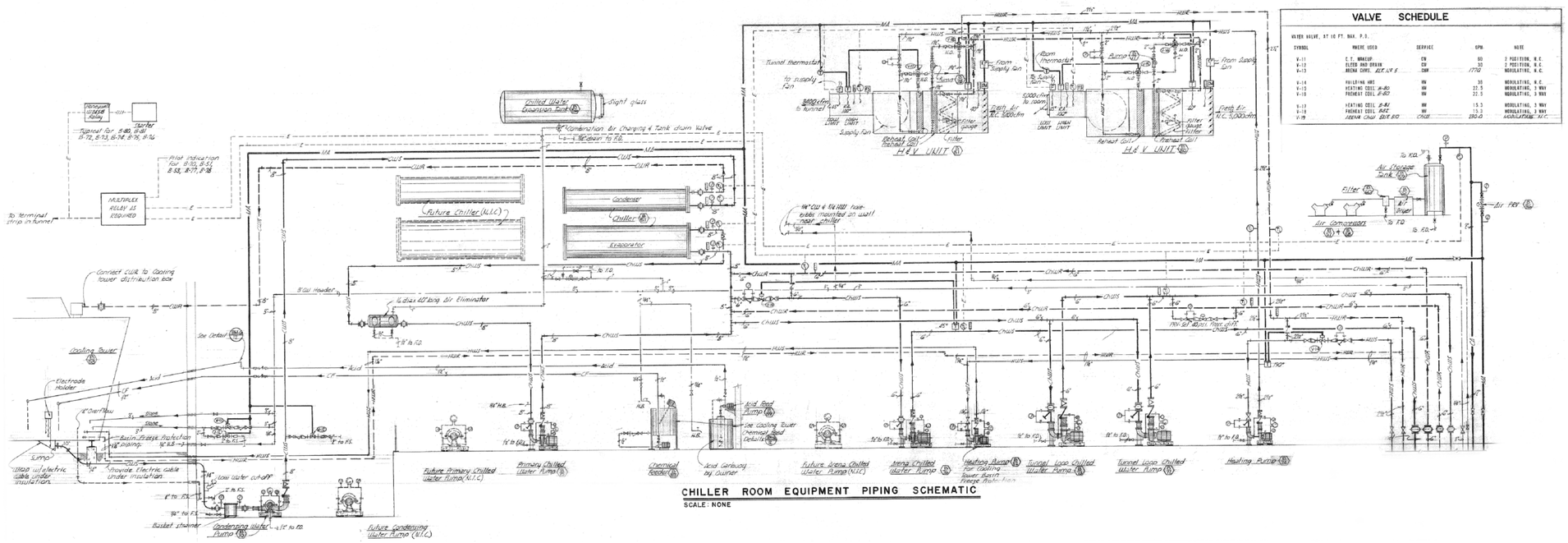


CHILLER ROOM EQUIPMENT PIPING SCHEMATIC

SCALE: NONE

## VALVE SCHEDULE

VALVES VALVE, AT 10 FT. MAX. P.D.

| SYMBOL | WHERE USED | SERVICE | GPM. | NOTE |
|---|---|---|---|---|
| V-11 | C.T. MANIFOLD | CW | 60 | 2 POSITION, N.C. |
| V-12 | SLEEP AND DRAIN | CW | 30 | 2 POSITION, N.C. |
| V-13 | ARENA CONN. SEE V-4 & 5 | CHW | 1770 | MODULATING, N.C. |
| V-14 | HOUSING HRC | HW | 35 | MODULATING, N.C. |
| V-15 | HEATING COIL B-80 | HW | 27.5 | MODULATING, 3 WAY |
| V-16 | PREHEAT COIL B-80 | HW | 27.5 | MODULATING, 3 WAY |
| V-17 | HEATING COIL B-81 | HW | 15.3 | MODULATING, 3 WAY |
| V-18 | PREHEAT COIL B-81 | HW | 15.3 | MODULATING, 3 WAY |
| V-19 | ARENA CHW SEE B-10 | CHW | 280.0 | MODULATING, N.C. |

MHTN
ARCHITECTS
**MHTN Architects, Inc.**
420 East South Temple
Suite 100
Salt Lake City, Utah 84111
Telephone (801) 595-6700
Telefax (801) 595-6717
www.mhtn.com

VAN BOERUM & FRANK ASSOCIATES, INC.
CONSULTING ENGINEERS
WWW.VBFA.COM
Salt Lake City • Logan • St. George • Tempe
330 South 300 East 801.530.3148 T
Salt Lake City, UT 84111 801.530.3150 F
VBFA Project Numb 10452

# UNIVERSITY OF UTAH
## STUDENT LIFE CENTER
1836 E. BALLIF ROAD
SALT LAKE CITY, UTAH AND 84112

©2007 MHTN ARCHITECTS, INC.
Drawings, written material, and design concepts shall not be used or reproduced in whole or part in any form or format without prior written consent of MHTN Architects, Inc. Do not scale drawings. Use given dimensions only. If not shown, verify correct dimensions with the Architect. Contractor shall check and verify all dimensions and conditions at job site.

SEAL

MHTN PROJECT NO.

DRAWN BY: CHECKED BY:

ISSUED:

| NO. | DATE | DESCRIPTION |
|---|---|---|

CONTRACTOR TO VERIFY DRAWINGS IN FIELD USE REFLECT LAST REVISION DATE:

| NO. | DATE | DESCRIPTION |
|---|---|---|

SHEET NAME
PIPING SCHEMATICS

BID DOCUMENTS
MAY 15, 2013

SHEET NUMBER
MS701

## SHEET KEYNOTES

| | |
|---|---|
| 1 | DUCT RISES TO FLOOR ABOVE. SEE MH101B. |

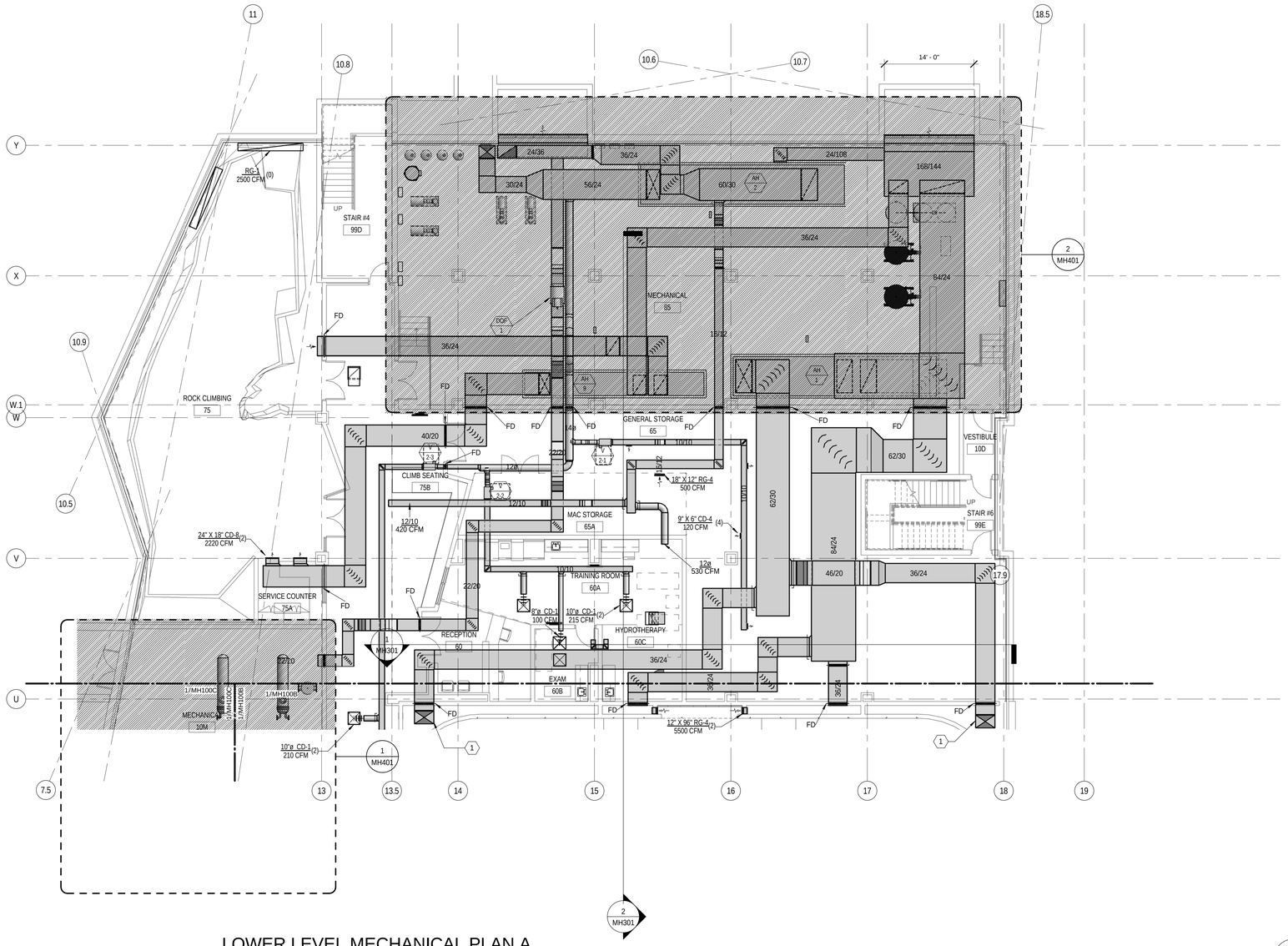
RG-1
2500 CFM
(0)
STAIR #4
99D
UP
ROCK CLIMBING
75
CLIMB SEATING
75B
SERVICE COUNTER
75A
MECHANICAL
10M
MECHANICAL
65
GENERAL STORAGE
65
MAC STORAGE
65A
TRAINING ROOM
60A
RECEPTION
60
EXAM
60B
HYDROTHERAPY
60C
VESTIBULE
10D
STAIR #6
99E
FD
24" X 18" CD-8
2220 CFM
(2)
12/10
420 CFM
18" X 12" RG-4
500 CFM
9" X 6" CD-4
120 CFM
(4)
12ø
530 CFM
8"ø CD-1
100 CFM
10"ø CD-1
215 CFM
(2)
12" X 96" RG-4
5500 CFM
(2)
10"ø CD-1
210 CFM
(2)
1/MH100C
1/MH100B
1/MH100D
1/MH100E
1/MH100F
1/MH100G
1/MH100H
1/MH100I
1/MH100J
1/MH100K
1/MH100L
1/MH100M
1/MH100N
1/MH100O
1/MH100P
1/MH100Q
1/MH100R
1/MH100S
1/MH100T
1/MH100U
1/MH100V
1/MH100W
1/MH100X
1/MH100Y
1/MH100Z
1/MH100AA
1/MH100AB
1/MH100AC
1/MH100AD
1/MH100AE
1/MH100AF
1/MH100AG
1/MH100AH
1/MH100AI
1/MH100AJ
1/MH100AK
1/MH100AL
1/MH100AM
1/MH100AN
1/MH100AO
1/MH100AP
1/MH100AQ
1/MH100AR
1/MH100AS
1/MH100AT
1/MH100AU
1/MH100AV
1/MH100AW
1/MH100AX
1/MH100AY
1/MH100AZ
1/MH100AAA
1/MH100AAB
1/MH100AAC
1/MH100AAD
1/MH100AAE
1/MH100AAF
1/MH100AAG
1/MH100AAH
1/MH100AAI
1/MH100AAJ
1/MH100AAK
1/MH100AAL
1/MH100AAM
1/MH100AAN
1/MH100AAO
1/MH100AAP
1/MH100AAQ
1/MH100AAR
1/MH100AAS
1/MH100AAT
1/MH100AAU
1/MH100AAV
1/MH100AAW
1/MH100AAX
1/MH100AAY
1/MH100AAZ
1/MH100AABA
1/MH100AABB
1/MH100AABC
1/MH100AABD
1/MH100AABE
1/MH100AABF
1/MH100AABG
1/MH100AABH
1/MH100AABI
1/MH100AABJ
1/MH100AABK
1/MH100AABL
1/MH100AABM
1/MH100AABN
1/MH100AABO
1/MH100AABP
1/MH100AABQ
1/MH100AABR
1/MH100AABS
1/MH100AABT
1/MH100AABU
1/MH100AABV
1/MH100AABW
1/MH100AABX
1/MH100AABY
1/MH100AABZ
1/MH100AACA
1/MH100AACB
1/MH100AACC
1/MH100AACD
1/MH100AACE
1/MH100AACF
1/MH100AACG
1/MH100AACH
1/MH100AACI
1/MH100AACJ
1/MH100AACK
1/MH100AACL
1/MH100AACM
1/MH100AACN
1/MH100AACO
1/MH100AACP
1/MH100AACQ
1/MH100AACR
1/MH100AACS
1/MH100AACT
1/MH100AACU
1/MH100AACV
1/MH100AACW
1/MH100AACX
1/MH100AACY
1/MH100AACZ
1/MH100AADA
1/MH100AADB
1/MH100AADC
1/MH100AADD
1/MH100AADE
1/MH100AADF
1/MH100AADG
1/MH100AADH
1/MH100AADI
1/MH100AADJ
1/MH100AADK
1/MH100AADL
1/MH100AADM
1/MH100AADN
1/MH100AADO
1/MH100AADP
1/MH100AADQ
1/MH100AADR
1/MH100AADS
1/MH100AADT
1/MH100AADU
1/MH100AADV
1/MH100AADW
1/MH100AADX
1/MH100AADY
1/MH100AADZ
1/MH100AAEA
1/MH100AAEB
1/MH100AAEC
1/MH100AAED
1/MH100AAEE
1/MH100AAEF
1/MH100AAEG
1/MH100AAEH
1/MH100AAEI
1/MH100AAEJ
1/MH100AAEK
1/MH100AAEL
1/MH100AAEM
1/MH100AAEN
1/MH100AAEO
1/MH100AAEP
1/MH100AAEQ
1/MH100AAER
1/MH100AAES
1/MH100AAET
1/MH100AAEU
1/MH100AAEV
1/MH100AAEW
1/MH100AAEX
1/MH100AAEY
1/MH100AAEZ
1/MH100AAFA
1/MH100AAFB
1/MH100AAFC
1/MH100AAFD
1/MH100AAFE
1/MH100AAFF
1/MH100AAFG
1/MH100AAFH
1/MH100AAFI
1/MH100AAFJ
1/MH100AAFK
1/MH100AAFL
1/MH100AAFM
1/MH100AAFN
1/MH100AAFO
1/MH100AAFP
1/MH100AAFQ
1/MH100AAFR
1/MH100AAFS
1/MH100AAFT
1/MH100AAFU
1/MH100AAFV
1/MH100AAFW
1/MH100AAFX
1/MH100AAFY
1/MH100AAFZ
1/MH100AAGA
1/MH100AAGB
1/MH100AAGC
1/MH100AAGD
1/MH100AAGE
1/MH100AAGF
1/MH100AAGG
1/MH100AAGH
1/MH100AAGI
1/MH100AAGJ
1/MH100AAGK
1/MH100AAGL
1/MH100AAGM
1/MH100AAGN
1/MH100AAGO
1/MH100AAGP
1/MH100AAGQ
1/MH100AAGR
1/MH100AAGS
1/MH100AAGT
1/MH100AAGU
1/MH100AAGV
1/MH100AAGW
1/MH100AAGX
1/MH100AAGY
1/MH100AAGZ
1/MH100AAHA
1/MH100AAHB
1/MH100AAHC
1/MH100AAHD
1/MH100AAHE
1/MH100AAHF
1/MH100AAHG
1/MH100AAHH
1/MH100AAHI
1/MH100AAHJ
1/MH100AAHK
1/MH100AAHL
1/MH100AAHM
1/MH100AAHN
1/MH100AAHO
1/MH100AAHP
1/MH100AAHQ
1/MH100AAHR
1/MH100AAHS
1/MH100AAHT
1/MH100AAHU
1/MH100AAHV
1/MH100AAHW
1/MH100AAHX
1/MH100AAHY
1/MH100AAHZ
1/MH100AAIA
1/MH100AAIB
1/MH100AAIC
1/MH100AAID
1/MH100AAIE
1/MH100AAIF
1/MH100AAIG
1/MH100AAIH
1/MH100AAII
1/MH100AAIJ
1/MH100AAIK
1/MH100AAIL
1/MH100AAIM
1/MH100AAIN
1/MH100AAIO
1/MH100AAIP
1/MH100AAIQ
1/MH100AAIR
1/MH100AAIS
1/MH100AAIT
1/MH100AAIU
1/MH100AAIV
1/MH100AAIW
1/MH100AAIX
1/MH100AAIY
1/MH100AAIZ
1/MH100AAJA
1/MH100AAJB
1/MH100AAJC
1/MH100AAJD
1/MH100AAJE
1/MH100AAJF
1/MH100AAJG
1/MH100AAJH
1/MH100AAJI
1/MH100AAJJ
1/MH100AAJK
1/MH100AAJL
1/MH100AAJM
1/MH100AAJN
1/MH100AAJO
1/MH100AAJP
1/MH100AAJQ
1/MH100AAJR
1/MH100AAJS
1/MH100AAJT
1/MH100AAJU
1/MH100AAJV
1/MH100AAJW
1/MH100AAJX
1/MH100AAJY
1/MH100AAJZ
1/MH100AAKA
1/MH100AAKB
1/MH100AAKC
1/MH100AAKD
1/MH100AAKE
1/MH100AAKF
1/MH100AAKG
1/MH100AAKH
1/MH100AAKI
1/MH100AAKJ
1/MH100AAKK
1/MH100AAKL
1/MH100AAKM
1/MH100AAKN
1/MH100AAKO
1/MH100AAKP
1/MH100AAKQ
1/MH100AAKR
1/MH100AAKS
1/MH100AAKT
1/MH100AAKU
1/MH100AAKV
1/MH100AAKW
1/MH100AAKX
1/MH100AAKY
1/MH100AAKZ
1/MH100AALA
1/MH100AALB
1/MH100AALC
1/MH100AALD
1/MH100AALE
1/MH100AALF
1/MH100AALG
1/MH100AALH
1/MH100AALI
1/MH100AALJ
1/MH100AALK
1/MH100AALL
1/MH100AALM
1/MH100AALN
1/MH100AALO
1/MH100AALP
1/MH100AALQ
1/MH100AALR
1/MH100AALS
1/MH100AALT
1/MH100AALU
1/MH100AALV
1/MH100AALW
1/MH100AALX
1/MH100AALY
1/MH100AALZ
1/MH100AAMA
1/MH100AAMB
1/MH100AAMC
1/MH100AAMD
1/MH100AAME
1/MH100AAMF
1/MH100AAMG
1/MH100AAMH
1/MH100AAMI
1/MH100AAMJ
1/MH100AAMK
1/MH100AAML
1/MH100AAMM
1/MH100AAMN
1/MH100AAMO
1/MH100AAMP
1/MH100AAMQ
1/MH100AAMR
1/MH100AAMS
1/MH100AAMT
1/MH100AAMU
1/MH100AAMV
1/MH100AAMW
1/MH100AAMX
1/MH100AAMY
1/MH100AAMZ
1/MH100AANA
1/MH100AANB
1/MH100AANC
1/MH100AAND
1/MH100AANE
1/MH100AANF
1/MH100AANG
1/MH100AANH
1/MH100AANI
1/MH100AANJ
1/MH100AANK
1/MH100AANL
1/MH100AANM
1/MH100AANN
1/MH100AANO
1/MH100AANP
1/MH100AANQ
1/MH100AANR
1/MH100AANS
1/MH100AANT
1/MH100AANU
1/MH100AANV
1/MH100AANW
1/MH100AANX
1/MH100AANY
1/MH100AANZ
1/MH100AAOA
1/MH100AAOB
1/MH100AAOC
1/MH100AAOD
1/MH100AAOE
1/MH100AAOF
1/MH100AAOG
1/MH100AAOH
1/MH100AAOI
1/MH100AAOJ
1/MH100AAOK
1/MH100AAOL
1/MH100AAOM
1/MH100AAON
1/MH100AAOO
1/MH100AAOP
1/MH100AAOQ
1/MH100AAOR
1/MH100AAOS
1/MH100AAOT
1/MH100AAOU
1/MH100AAOV
1/MH100AAOW
1/MH100AAOX
1/MH100AAOY
1/MH100AAOZ
1/MH100AAPA
1/MH100AAPB
1/MH100AAPC
1/MH100AAPD
1/MH100AAPE
1/MH100AAPF
1/MH100AAPG
1/MH100AAPH
1/MH100AAPI
1/MH100AAPJ
1/MH100AAPK
1/MH100AAPL
1/MH100AAPM
1/MH100AAPN
1/MH100AAPO
1/MH100AAPP
1/MH100AAPQ
1/MH100AAPR
1/MH100AAPS
1/MH100AAPT
1/MH100AAPU
1/MH100AAPV
1/MH100AAPW
1/MH100AAPX
1/MH100AAPY
1/MH100AAPZ
1/MH100AAQA
1/MH100AAQB
1/MH100AAQC
1/MH100AAQD
1/MH100AAQE
1/MH100AAQF
1/MH100AAQG
1/MH100AAQH
1/MH100AAQI
1/MH100AAQJ
1/MH100AAQK
1/MH100AAQL
1/MH100AAQM
1/MH100AAQN
1/MH100AAQO
1/MH100AAQP
1/MH100AAQQ
1/MH100AAQR
1/MH100AAQS
1/MH100AAQT
1/MH100AAQU
1/MH100AAQV
1/MH100AAQW
1/MH100AAQX
1/MH100AAQY
1/MH100AAQZ
1/MH100AARA
1/MH100AARB
1/MH100AARC
1/MH100AARD
1/MH100AARE
1/MH100AARF
1/MH100AARG
1/MH100AARH
1/MH100AARI
1/MH100AARJ
1/MH100AARK
1/MH100AARL
1/MH100AARM
1/MH100AARN
1/MH100AARO
1/MH100AARP
1/MH100AARQ
1/MH100AARR
1/MH100AARS
1/MH100AART
1/MH100AARU
1/MH100AARV
1/MH100AARW
1/MH100AARX
1/MH100AARY
1/MH100AARZ
1/MH100AASA
1/MH100AASB
1/MH100AASC
1/MH100AASD
1/MH100AASE
1/MH100AASF
1/MH100AASG
1/MH100AASH
1/MH100AASI
1/MH100AASJ
1/MH100AASK
1/MH100AASL
1/MH100AASM
1/MH100AASN
1/MH100AASO
1/MH100AASP
1/MH100AASQ
1/MH100AASR
1/MH100AASS
1/MH100AAST
1/MH100AASU
1/MH100AASV
1/MH100AASW
1/MH100AASX
1/MH100AASY
1/MH100AASZ
1/MH100AATA
1/MH100AATB
1/MH100AATC
1/MH100AATD
1/MH100AATE
1/MH100AATF
1/MH100AATG
1/MH100AATH
1/MH100AATI
1/MH100AATJ
1/MH100AATK
1/MH100AATL
1/MH100AATM
1/MH100AATN
1/MH100AATO
1/MH100AATP
1/MH100AATQ
1/MH100AATR
1/MH100AATS
1/MH100AATT
1/MH100AATU
1/MH100AATV
1/MH100AATW
1/MH100AATX
1/MH100AATY
1/MH100AATZ
1/MH100AAUA
1/MH100AAUB
1/MH100AAUC
1/MH100AAUD
1/MH100AAUE
1/MH100AAUF
1/MH100AAUG
1/MH100AAUH
1/MH100AAUI
1/MH100AAUJ
1/MH100AAUK
1/MH100AAUL
1/MH100AAUM
1/MH100AAUN
1/MH100AAUO
1/MH100AAUP
1/MH100AAUQ
1/MH100AAUR
1/MH100AAUS
1/MH100AAUT
1/MH100AAUU
1/MH100AAUV
1/MH100AAUW
1/MH100AAUX
1/MH100AAUY
1/MH100AAUZ
1/MH100AAVA
1/MH100AAVB
1/MH100AAVC
1/MH100AAVD
1/MH100AAVE
1/MH100AAVF
1/MH100AAVG
1/MH100AAVH
1/MH100AAVI
1/MH100AAVJ
1/MH100AAVK
1/MH100AAVL
1/MH100AAVM
1/MH100AAVN
1/MH100AAVO
1/MH100AAVP
1/MH100AAVQ
1/MH100AAVR
1/MH100AAVS
1/MH100AAVT
1/MH100AAVU
1/MH100AAVV
1/MH100AAVW
1/MH100AAVX
1/MH100AAVY
1/MH100AAVZ
1/MH100AAWA
1/MH100AAWB
1/MH100AAWC
1/MH100AAWD
1/MH100AAWE
1/MH100AAWF
1/MH100AAWG
1/MH100AAWH
1/MH100AAWI
1/MH100AAWJ
1/MH100AAWK
1/MH100AAWL
1/MH100AAWM
1/MH100AAWN
1/MH100AAWO
1/MH100AAWP
1/MH100AAWQ
1/MH100AAWR
1/MH100AAWS
1/MH100AAWT
1/MH100AAWU
1/MH100AAWV
1/MH100AAWW
1/MH100AAWX
1/MH100AAWY
1/MH100AAWZ
1/MH100AAXA
1/MH100AAXB
1/MH100AAXC
1/MH100AAXD
1/MH100AAXE
1/MH100AAXF
1/MH100AAXG
1/MH100AAXH
1/MH100AAXI
1/MH100AAXJ
1/MH100AAXK
1/MH100AAXL
1/MH100AAXM
1/MH100AAXN
1/MH100AAXO
1/MH100AAXP
1/MH100AAXQ
1/MH100AAXR
1/MH100AAXS
1/MH100AAXT
1/MH100AAXU
1/MH100AAXV
1/MH100AAXW
1/MH100AAXX
1/MH100AAXY
1/MH100AAXZ
1/MH100AAYA
1/MH100AAYB
1/MH100AAYC
1/MH100AAYD
1/MH100AAYE
1/MH100AAYF
1/MH100AAYG
1/MH100AAYH
1/MH100AAYI
1/MH100AAYJ
1/MH100AAYK
1/MH100AAYL
1/MH100AAYM
1/MH100AAYN
1/MH100AAYO
1/MH100AAYP
1/MH100AAYQ
1/MH100AAYR
1/MH100AAYS
1/MH100AAYT
1/MH100AAYU
1/MH100AAYV
1/MH100AAYW
1/MH100AAYX
1/MH100AAYY
1/MH100AAYZ
1/MH100AAZA
1/MH100AAZB
1/MH100AAZC
1/MH100AAZD
1/MH100AAZE
1/MH100AAZF
1/MH100AAZG
1/MH100AAZH
1/MH100AAZI
1/MH100AAZJ
1/MH100AAZK
1/MH100AAZL
1/MH100AAZM
1/MH100AAZN
1/MH100AAZO
1/MH100AAZP
1/MH100AAZQ
1/MH100AAZR
1/MH100AAZS
1/MH100AAZT
1/MH100AAZU
1/MH100AAZV
1/MH100AAZW
1/MH100AAZX
1/MH100AAZY
1/MH100AAZZ
1/MH100AABA
1/MH100AABB
1/MH100AABC
1/MH100AABD
1/MH100AABE
1/MH100AABF
1/MH100AABG
1/MH100AABH
1/MH100AABI
1/MH100AABJ
1/MH100AABK
1/MH100AABL
1/MH100AABM
1/MH100AABN
1/MH100AABO
1/MH100AABP
1/MH100AABQ
1/MH100AABR
1/MH100AABS
1/MH100AABT
1/MH100AABU
1/MH100AABV
1/MH100AABW
1/MH100AABX
1/MH100AABY
1/MH100AABZ
1/MH100AACA
1/MH100AACB
1/MH100AACC
1/MH100AACD
1/MH100AACE
1/MH100AACF
1/MH100AACG
1/MH100AACH
1/MH100AACI
1/MH100AACJ
1/MH100AACK
1/MH100AACL
1/MH100AACM
1/MH100AACN
1/MH100AACO
1/MH100AACP
1/MH100AACQ
1/MH100AACR
1/MH100AACS
1/MH100AACT
1/MH100AACU
1/MH100AACV
1/MH100AACW
1/MH100AACX
1/MH100AACY
1/MH100AACZ
1/MH100AADA
1/MH100AADB
1/MH100AADC
1/MH100AADD
1/MH100AADE
1/MH100AADF
1/MH100AADG
1/MH100AADH
1/MH100AADI
1/MH100AADJ
1/MH100AADK
1/MH100AADL
1/MH100AADM
1/MH100AADN
1/MH100AADO
1/MH100AADP
1/MH100AADQ
1/MH100AADR
1/MH100AADS
1/MH100AADT
1/MH100AADU
1/MH100AADV
1/MH100AADW
1/MH100AADX
1/MH100AADY
1/MH100AADZ
1/MH100AAEA
1/MH100AAEB
1/MH100AAEC
1/MH100AAED
1/MH100AAEE
1/MH100AAEF
1/MH100AAEG
1/MH100AAEH
1/MH100AAEI
1/MH100AAEJ
1/MH100AAEK
1/MH100AAEL
1/MH100AAEM
1/MH100AAEN
1/MH100AAEO
1/MH100AAEP
1/MH100AAEQ
1/MH100AAER
1/MH100AAES
1/MH100AAET
1/MH100AAEU
1/MH100AAEV
1/MH100AAEW
1/MH100AAEX
1/MH100AAEY
1/MH100AAEZ
1/MH100AAFA
1/MH100AAFB
1/MH100AAFC
1/MH100AAFD
1/MH100AAFE
1/MH100AAFF
1/MH100AAFG
1/MH100AAFH
1/MH100AAFI
1/MH100AAFJ
1/MH100AAFK
1/MH100AAFL
1/MH100AAFM
1/MH100AAFN
1/MH100AAFO
1/MH100AAFP
1/MH100AAFQ
1/MH100AAFR
1/MH100AAFS
1/MH100AAFT
1/MH100AAFU
1/MH100AAFV
1/MH100AAFW
1/MH100AAFX
1/MH100AAFY
1/MH100AAFZ
1/MH100AAGA
1/MH100AAGB
1/MH100AAGC
1/MH100AAGD
1/MH100AAGE
1/MH100AAGF
1/MH100AAGG
1/MH100AAGH
1/MH100AAGI
1/MH100AAGJ
1/MH100AAGK
1/MH100AAGL
1/MH100AAGM
1/MH100AAGN
1/MH100AAGO
1/MH100AAGP
1/MH100AAGQ
1/MH100AAGR
1/MH100AAGS
1/MH100AAGT
1/MH100AAGU
1/MH100AAGV
1/MH100AAGW
1/MH100AAGX
1/MH100AAGY
1/MH100AAGZ
1/MH100AAHA
1/MH100AAHB
1/MH100AAHC
1/MH100AAHD
1/MH100AAHE
1/MH100AAHF
1/MH100AAHG
1/MH100AAHH
1/MH100AAHI
1/MH100AAHJ
1/MH100AAHK
1/MH100AAHL
1/MH100AAHM
1/MH100AAHN
1/MH100AAHO
1/MH100AAHP
1/MH100AAHQ
1/MH100AAHR
1/MH100AAHS
1/MH100AAHT
1/MH100AAHU
1/MH100AAHV
1/MH100AAHW
1/MH100AAHX
1/MH100AAHY
1/MH100AAHZ
1/MH100AAIA
1/MH100AAIB
1/MH100AAIC
1/MH100AAID
1/MH100AAIE
1/MH100AAIF
1/MH100AAIG
1/MH100AAIH
1/MH100AAII
1/MH100AAIJ
1/MH100AAIK
1/MH100AAIL
1/MH100AAIM
1/MH100AAIN
1/MH100AAIO
1/MH100AAIP
1/MH100AAIQ
1/MH100AAIR
1/MH100AAIS
1/MH100AAIT
1/MH100AAIU
1/MH100AAIV
1/MH100AAIW
1/MH100AAIX
1/MH100AAIY
1/MH100AAIZ
1/MH100AAJA
1/MH100AAJB
1/MH100AAJC
1/MH100AAJD
1/MH100AAJE
1/MH100AAJF
1/MH100AAJG
1/MH100AAJH
1/MH100AAJI
1/MH100AAJJ
1/MH100AAJK
1/MH100AAJL
1/MH100AAJM
1/MH100AAJN
1/MH100AAJO
1/MH100AAJP
1/MH100AAJQ
1/MH100AAJR
1/MH100AAJS
1/MH100AAJT
1/MH100AAJU
1/MH100AAJV
1/MH100AAJW
1/MH100AAJX
1/MH100AAJY
1/MH100AAJZ
1/MH100AAKA
1/MH100AAKB
1/MH100AAKC
1/MH100AAKD
1/MH100AAKE
1/MH100AAKF
1/MH100AAKG
1/MH100AAKH
1/MH100AAKI
1/MH100AAKJ
1/MH100AAKK
1/MH100AAKL
1/MH100AAKM
1/MH100AAKN
1/MH100AAKO
1/MH100AAKP
1/MH100AAKQ
1/MH100AAKR
1/MH100AAKS
1/MH100AAKT
1/MH100AAKU
1/MH100AAKV
1/MH100AAKW
1/MH100AAKX
1/MH100AAKY
1/MH100AAKZ
1/MH100AALA
1/MH100AALB
1/MH100AALC
1/MH100AALD
1/MH100AALE
1/MH100AALF
1/MH100AALG
1/MH100AALH
1/MH100AALI
1/MH100AALJ
1/MH100AALK
1/MH100AALL
1/MH100AALM
1/MH100AALN
1/MH100AALO
1/MH100AALP
1/MH100AALQ
1/MH100AALR
1/MH100AALS
1/MH100AALT
1/MH100AALU
1/MH100AALV
1/MH100AALW
1/MH100AALX
1/MH100AALY
1/MH100AALZ
1/MH100AAMA
1/MH100AAMB
1/MH100AAMC
1/MH100AAMD
1/MH100AAME
1/MH100AAMF
1/MH100AAMG
1/MH100AAMH
1/MH100AAMI
1/MH100AAMJ
1/MH100AAMK
1/MH100AAML
1/MH100AAMM
1/MH100AAMN
1/MH100AAMO
1/MH100AAMP
1/MH100AAMQ
1/MH100AAMR
1/MH100AAMS
1/MH100AAMT
1/MH100AAMU
1/MH100AAMV
1/MH100AAMW
1/MH100AAMX
1/MH100AAMY
1/MH100AAMZ
1/MH100AANA
1/MH100AANB
1/MH100AANC
1/MH100AAND
1/MH100AANE
1/MH100AANF
1/MH100AANG
1/MH100AANH
1/MH100AANI
1/MH100AANJ
1/MH100AANK
1/MH100AANL
1/MH100AANM
1/MH100AANN
1/MH100AANO
1/MH100AANP
1/MH100AANQ
1/MH100AANR
1/MH100AANS
1/MH100AANT
1/MH100AANU
1/MH100AANV
1/MH100AANW
1/MH100AANX
1/MH100AANY
1/MH100AANZ
1/MH100AAOA
1/MH100AAOB
1/MH100AAOC
1/MH100AAOD
1/MH100AAOE
1/MH100AAOF
1/MH100AAOG
1/MH100AAOH
1/MH100AAOI
1/MH100AAOJ
1/MH100AAOK
1/MH100AAOL
1/MH100AAOM
1/MH100AAON
1/MH100AAOO
1/MH100AAOP
1/MH100AAOQ
1/MH100AAOR
1/MH100AAOS
1/MH100AAOT
1/MH100AAOU
1/MH100AAOV
1/MH100AAOW
1/MH100AAOX
1/MH100AAOY
1/MH100AAOZ
1/MH100AAPA
1/MH100AAPB
1/MH100AAPC
1/MH100AAPD
1/MH100AAPE
1/MH100AAPF
1/MH100AAPG
1/MH100AAPH
1/MH100AAPI
1/MH100AAPJ
1/MH100AAPK
1/MH100AAPL
1/MH100AAPM
1/MH100AAPN
1/MH100AAPO
1/MH100AAPP
1/MH100AAPQ
1/MH100AAPR
1/MH100AAPS
1/MH100AAPT
1/MH100AAPU
1/MH100AAPV
1/MH100AAPW
1/MH100AAPX
1/MH100AAPY
1/MH100AAPZ
1/MH100AAQA
1/MH100AAQB
1/MH100AAQC
1/MH100AAQD
1/MH100AAQE
1/MH100AAQF
1/MH100AAQG
1/MH100AAQH
1/MH100AAQI
1/MH100AAQJ
1/MH100AAQK
1/MH100AAQL
1/MH100AAQM
1/MH100AAQN
1/MH100AAQO
1/MH100AAQP
1/MH100AAQQ
1/MH100AAQR
1/MH100AAQS
1/MH100AAQT
1/MH100AAQU
1/MH100AAQV
1/MH100AAQW
1/MH100AAQX
1/MH100AAQY
1/MH100AAQZ
1/MH100AARA
1/MH100AARB
1/MH100AARC
1/MH100AARD
1/MH100AARE
1/MH100AARF
1/MH100AARG
1/MH100AARH
1/MH100AARI
1/MH100AARJ
1/MH100AARK
1/MH100AARL
1/MH100AARM
1/MH100AARN
1/MH100AARO
1/MH100AARP
1/MH100AARQ
1/MH100AARR
1/MH100AARS
1/MH100AART
1/MH100AARU
1/MH100AARV
1/MH100AARW
1/MH100AARX
1/MH100AARY
1/MH100AARZ
1/MH100AASA
1/MH100AASB
1/MH100AASC
1/MH100AASD
1/MH100AASE
1/MH100AASF
1/MH100AASG
1/MH100AASH
1/MH100AASI
1/MH100AASJ
1/MH100AASK
1/MH100AASL
1/MH100AASM
1/MH100AASN
1/MH100AASO
1/MH100AASP
1/MH100AASQ
1/MH100AASR
1/MH100AASS
1/MH100AAST
1/MH100AASU
1/MH100AASV
1/MH100AASW
1/MH100AASX
1/MH100AASY
1/MH100AASZ
1/MH100AATA
1/MH100AATB
1/MH100AATC
1/MH100AATD
1/MH100AATE
1/MH100AATF
1/MH100AATG
1/MH100AATH
1/MH100AATI
1/MH100AATJ
1/MH100AATK
1/MH100AATL
1/MH100AATM
1/MH100AATN
1/MH100AATO
1/MH100AATP
1/MH100AATQ
1/MH100AATR
1/MH100AATS
1/MH100AATT
1/MH100AATU
1/MH100AATV
1/MH100AATW
1/MH100AATX
1/MH100AATY
1/MH100AATZ
1/MH100AAUA
1/MH100AAUB
1/MH100AAUC
1/MH100AAUD
1/MH100AAUE
1/MH100AAUF
1/MH100AAUG
1/MH100AAUH
1/MH100AAUI
1/MH100AAUJ
1/MH100AAUK
1/MH100AAUL
1/MH100AAUM
1/MH100AAUN
1/MH100AAUO
1/MH100AAUP
1/MH100AAUQ
1/MH100AAUR
1/MH100AAUS
1/MH100AAUT
1/MH100AAUU
1/MH100AAUV
1/MH100AAUW
1/MH100AAUX
1/MH100AAUY
1/MH100AAUZ
1/MH100AAVA
1/MH100AAVB
1/MH100AAVC
1/MH100AAVD
1/MH100AAVE
1/MH100AAVF
1/MH100AAVG
1/MH100AAVH
1/MH100AAVI
1/MH100AAVJ
1/MH100AAVK
1/MH100AAVL
1/MH100AAVM
1/MH100AAVN
1/MH100AAVO
1/MH100AAVP
1/MH100AAVQ
1/MH100AAVR
1/MH100AAVS
1/MH100AAVT
1/MH100AAVU
1/MH100AAVV
1/MH100AAVW
1/MH100AAVX
1/MH100AAVY
1/MH100AAVZ
1/MH100AAWA
1/MH100AAWB
1/MH100AAWC
1/MH100AAWD
1/MH100AAWE
1/MH100AAWF
1/MH100AAWG
1/MH100AAWH
1/MH100AAWI
1/MH100AAWJ
1/MH100AAWK
1/MH100AAWL
1/MH100AAWM
1/MH100AAWN
1/MH100AAWO
1/MH100AAWP
1/MH100AAWQ
1/MH100AAWR
1/MH100AAWS
1/MH100AAWT
1/MH100AAWU
1/MH100AAWV
1/MH100AAWW
1/MH100AAWX
1/MH100AAWY
1/MH100AAWZ
1/MH100AAXA
1/MH100AAXB
1/MH100AAXC
1/MH100AAXD
1/MH100AAXE
1/MH100AAXF
1/MH100AAXG
1/MH100AAXH
1/MH100AAXI
1/MH100AAXJ
1/MH100AAXK
1/MH100AAXL
1/MH100AAXM
1/MH100AAXN
1/MH100AAXO
1/MH100AAXP
1/MH100AAXQ
1/MH100AAXR
1/MH100AAXS
1/MH100AAXT
1/MH100AAXU
1/MH100AAXV
1/MH100AAXW
1/MH100AAXX
1/MH100AAXY
1/MH100AAXZ
1/MH100AAYA
1/MH100AAYB
1/MH100AAYC
1/MH100AAYD
1/MH100AAYE
1/MH100AAYF
1/MH100AAYG
1/MH100AAYH
1/MH100AAYI
1/MH100AAYJ
1/MH100AAYK
1/MH100AAYL
1/MH100AAYM
1/MH100AAYN
1/MH100AAYO
1/MH100AAYP
1/MH100AAYQ
1/MH100AAYR
1/MH100AAYS
1/MH100AAYT
1/MH100AAYU
1/MH100AAYV
1/MH100AAYW
1/MH100AAYX
1/MH100AAYY
1/MH100AAYZ
1/MH100AAZA
1/MH100AAZB
1/MH100AAZC
1/MH100AAZD
1/MH100AAZE
1/MH100AAZF
1/MH100AAZG
1/MH100AAZH
1/MH100AAZI
1/MH100AAZJ
1/MH100AAZK
1/MH100AAZL
1/MH100AAZM
1/MH100AAZN
1/MH100AAZO
1/MH100AAZP
1/MH100AAZQ
1/MH100AAZR
1/MH100AAZS
1/MH100AAZT
1/MH100AAZU
1/MH100AAZV
1/MH100AAZW
1/MH100AAZX
1/MH100AAZY
1/MH100AAZZ
1/MH100AABA
1/MH100AABB
1/MH100AABC
1/MH100AABD
1/MH100AABE
1/MH100AABF
1/MH100AABG
1/MH100AABH
1/MH100AABI
1/MH100AABJ
1/MH100AABK
1/MH100AABL
1/MH100AABM
1/MH100AABN
1/MH100AABO
1/MH100AABP
1/MH100AABQ
1/MH100AABR
1/MH100AABS
1/MH100AABT
1/MH100AABU
1/MH100AABV
1/MH100AABW
1/MH100AABX
1/MH100AABY
1/MH100AABZ
1/MH100AACA
1/MH100AACB
1/MH100AACC
1/MH100AACD
1/MH100AACE
1/MH100AACF
1/MH100AACG
1/MH100AACH
1/MH100AACI
1/MH100AACJ
1/MH100AACK
1/MH100AACL
1/MH100AACM
1/MH100AACN
1/MH100AACO
1/MH100AACP
1/MH100AACQ
1/MH100AACR
1/MH100AACS
1/MH100AACT
1/MH100AACU
1/MH100AACV
1/MH100AACW
1/MH100AACX
1/MH100AACY
1/MH100AACZ
1/MH100AADA
1/MH100AADB
1/MH100AADC
1/MH100AADD
1/MH100AADE
1/MH100AADF
1/MH100AADG
1/MH100AADH
1/MH100AADI
1/MH100AADJ
1/MH100AADK
1/MH100AADL
1/MH100AADM
1/MH100AADN
1/MH100AADO
1/MH100AADP
1/MH100AADQ
1/MH100AADR
1/MH100AADS
1/MH100AADT
1/MH100AADU
1/MH100AADV
1/MH100AADW
1/MH100AADX
1/MH100AADY
1/MH100AADZ
1/MH100AAEA
1/MH100AAEB
1/MH100AAEC
1/MH100AAED
1/MH100AAEE
1/MH100AAEF
1/MH100AAEG
1/MH100AAEH
1/MH100AAEI
1/MH100AAEJ
1/MH100AAEK
1/MH100AAEL
1/MH100AAEM
1/MH100AAEN
1/MH100AAEO
1/MH100AAEP
1/MH100AAEQ
1/MH100AAER
1/MH100AAES
1/MH100AAET
1/MH100AAEU
1/MH100AAEV
1/MH100AAEW
1/MH100AAEX
1/MH100AAEY
1/MH100AAEZ
1/MH100AAFA
1/MH100AAFB
1/MH100AAFC
1/MH100AAFD
1/MH100AAFE
1/MH100AAFF
1/MH100AAFG
1/MH100AAFH
1/MH100AAFI
1/MH100AAFJ
1/MH100AAFK
1/MH100AAFL
1/MH100AAFM
1/MH100AAFN
1/MH100AAFO
1/MH100AAFP
1/MH100AAFQ
1/MH100AAFR
1/MH100AAFS
1/MH100AAFT
1/MH100AAFU
1/MH100AAFV
1/MH100AAFW
1/MH100AAFX
1/MH100AAFY
1/MH100AAFZ
1/MH100AAGA
1/MH100AAGB
1/MH100AAGC
1/MH100AAGD
1/MH100AAGE
1/MH100AAGF
1/MH100AAGG
1/MH100AAGH
1/MH100AAGI
1/MH100AAGJ
1/MH100AAGK
1/MH100AAGL
1/MH100AAGM
1/MH100AAGN
1/MH100AAGO
1/MH100AAGP
1/MH100AAGQ
1/MH100AAGR
1/MH100AAGS
1/MH100AAGT
1/MH100AAGU
1/MH100AAGV
1/MH100AAGW
1/MH100AAGX
1/MH100AAGY
1/MH100AAGZ
1/MH100AAHA
1/MH100AAHB
1/MH100AAHC
1/MH100AAHD
1/MH100AAHE
1/MH100AAHF
1/MH100AAHG
1/MH100AAHH
1/MH100AAHI
1/MH100AAHJ
1/MH100AAHK
1/MH100AAHL
1/MH100AAHM
1/MH100AAHN
1/MH100AAHO
1/MH100AAHP
1/MH100AAHQ
1/MH100AAHR
1/MH100AAHS
1/MH100AAHT
1/MH100AAHU
1/MH100AAHV
1/MH100AAHW
1/MH100AAHX
1/MH100AAHY
1/MH100AAHZ
1/MH100AAIA
1/MH100AAIB
1/MH100AAIC
1/MH100AAID
1/MH100AAIE
1/MH100AAIF
1/MH100AAIG
1/MH100AAIH
1/MH100AAII
1/MH100AAIJ
1/MH100AAIK
1/MH100AAIL
1/MH100AAIM
1/MH100AAIN
1/MH100AAIO
1/MH100AAIP
1/MH100AAIQ
1/MH100AAIR
1/MH100AAIS
1/MH100AAIT
1/MH100AAIU
1/MH100AAIV
1/MH100AAIW
1/MH100AAIX
1/MH100AAIY
1/MH100AAIZ
1/MH100AAJA
1/MH100AAJB
1/MH100AAJC
1/MH100AAJD
1/MH100AAJE
1/MH100AAJF
1/MH100AAJG
1/MH100AAJH
1/MH100AAJI
1/MH100AAJJ
1/MH100AAJK
1/MH100AAJL
1/MH100AAJM
1/MH100AAJN
1/MH100AAJO
1/MH100AAJP
1/MH100A

## SHEET KEYNOTES

1 DUCT RISES TO FLOOR ABOVE. SEE MH101B.

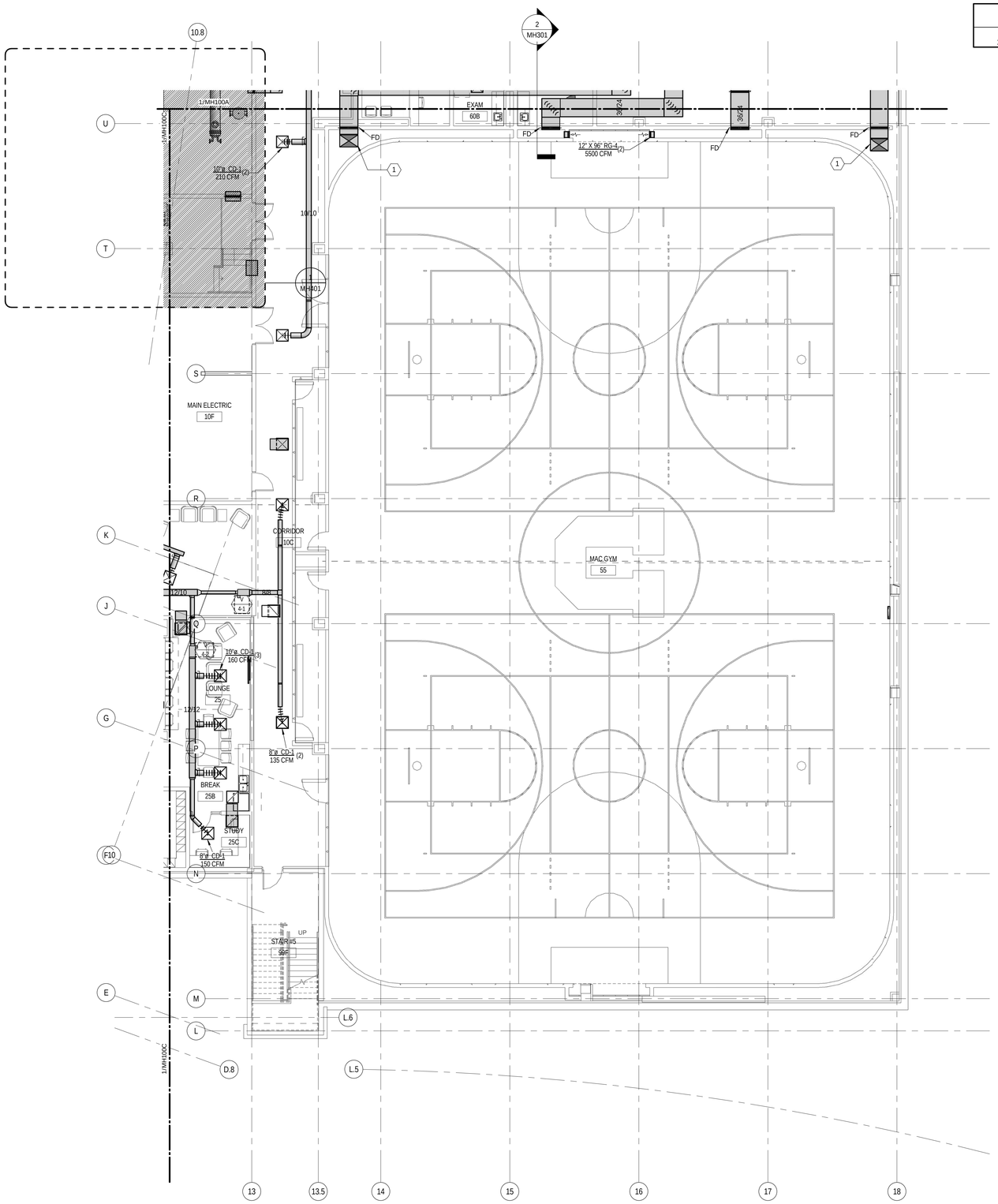


## LOWER LEVEL MECHANICAL PLAN B

0' 4'-0" 8'-0" 16'-0"
1/8" =1'-0"

SCALE: 1/8" = 1'-0"

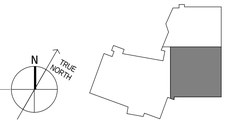


KEYPLAN


MHTN ARCHITECTS

**MHTN Architects, Inc.**
420 East South Temple
Suite 100
Salt Lake City, Utah 84111
Telephone (801) 595-6700
Telefax (801) 595-6717
www.mhtn.com

**Hastings+Chivetta**
ARCHITECTURE • PLANNING • ENGINEERING
622 Emerson, Suite 200
St. Louis, MO 63141
Tel. 314.863.5717
Fax. 314.863.2823
www.hastingschivetta.com

VAN BOERUM & FRANK ASSOCIATES, INC.
CONSULTING ENGINEERS
Salt Lake City • Logan • St. George • Tempe
330 South 300 East 801.530.3148 T
Salt lake City, UT 84111 801.530.3150 F
VBF# Project 1362


# UNIVERSITY OF UTAH
## STUDENT LIFE CENTER
1836 E. BALLIF ROAD
SALT LAKE CITY, UTAH 84112


©2007 MHTN ARCHITECTS, INC.
Drawings, written material, and design concepts shall not be used or reproduced in whole or in part, without the written and dated permission consent of MHTN Architects, Inc. Do not scale drawings. Use given dimensions only. If not shown, verify correct dimensions with the Architect. Contractor shall check and verify all dimensions and conditions at job site.


SEAL

MHTN PROJECT NO.

DRAWN BY: CHECKED BY:

ISSUED:

| NO. | DATE | DESCRIPTION |
|---|---|---|
| | | |

CONTRACTOR TO VERIFY DRAWINGS IN FIELD USE REFLECT LAST REVISION DATE:

| NO. | DATE | DESCRIPTION |
|---|---|---|
| | | |

SHEET NAME

PARTIAL MECHANICAL PLAN

BID DOCUMENTS

MAY 15, 2013

SHEET NUMBER

# MH100B

D:_Bim\Local\Mechanical_Central_JRobker.rvt
5/14/2013 12:48:40 PM

## SHEET KEYNOTES

| | |
|---|---|
| 1 | DUCT RISES TO FLOOR ABOVE. SEE MH101C. |
| 2 | LOUVER TO HAVE A CLEAR ANODIZED FINISH. |

# LOWER LEVEL MECHANICAL PLAN C

SCALE: 1/8" = 1'-0"

KEYPLAN


MHTN ARCHITECTS
**MHTN Architects, Inc.**
420 East South Temple
Suite 100
Salt Lake City, Utah 84111
Telephone (801) 595-6700
Telefax (801) 595-6717
www.mhtn.com

**Hastings+Chivetta**
ARCHITECTURE • PLANNING • ENGINEERING
622 Emerson, Suite 200
St. Louis, MO 63141
Tel. 314.863.5717
Fax. 314.863.2823
www.hastingschivetta.com

VAN BOERUM & FRANK ASSOCIATES, INC.
CONSULTING ENGINEERS
Salt Lake City • Logan • St. George • Tempe
330 South 300 East 801.530.3148 T
Salt lake City, UT 84111 801.530.3150 F


# UNIVERSITY OF UTAH
## STUDENT LIFE CENTER
1836 E. BALLIF ROAD
SALT LAKE CITY, UTAH 84112


©2007 MHTN ARCHITECTS, INC.
Drawings, written material, and design concepts shall not be used or reproduced in whole or part in any form or format without prior written consent of MHTN Architects, Inc. Do not scale drawings. Use given dimensions only. If not shown, verify correct dimensions with the Architect. Contractor shall check and verify all dimensions and conditions at job site.


SEAL

MHTN PROJECT NO.

DRAWN BY: CHECKED BY:

ISSUED:

| NO. | DATE | DESCRIPTION |
|---|---|---|

CONTRACTOR TO VERIFY DRAWINGS IN FIELD USE REFLECT LAST REVISION DATE.

| NO. | DATE | DESCRIPTION |
|---|---|---|

SHEET NAME
PARTIAL MECHANICAL PLAN
BID DOCUMENTS
MAY 15, 2013

SHEET NUMBER
# MH100C

D:__Bim\Local\Mechanical_Central_JRobker.rvt
5/14/2013 12:46:54 PM

## SHEET KEYNOTES

| | |
|---|---|
| 1 | DUCT DROPS TO FLOOR BELOW. SEE MH100A. |
| 2 | DUCT RISES TO FLOOR ABOVE. SEE MH102A. |
| 3 | DRYER VENT TERMINATION. |

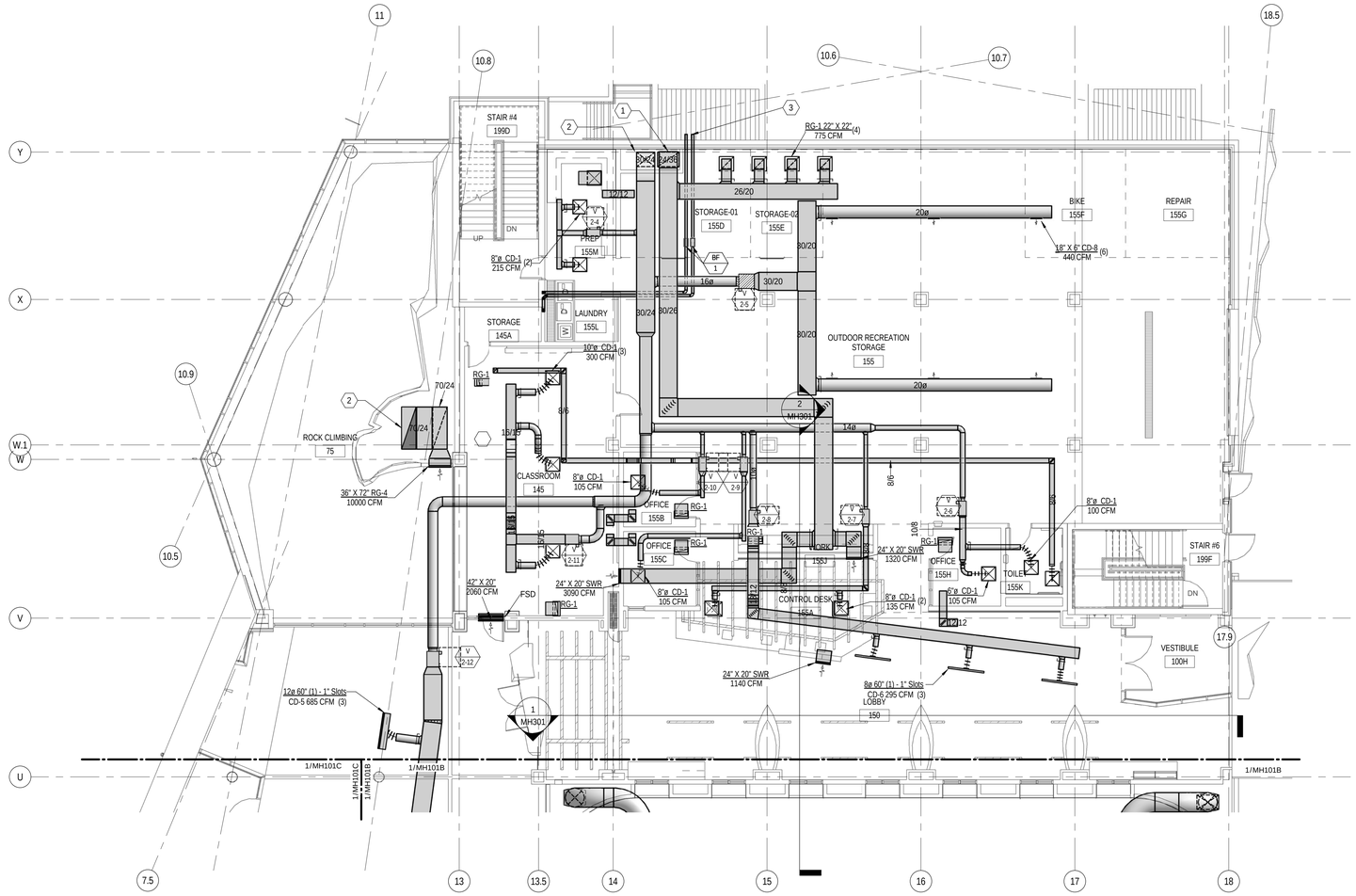


# FIRST LEVEL MECHANICAL PLAN A

0' 4'-0" 8'-0" 16'-0"
1/8" =1'-0"

SCALE: 1/8" = 1'-0"

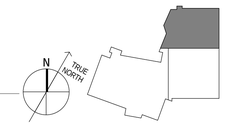


KEYPLAN


MHTN ARCHITECTS
**MHTN Architects, Inc.**
420 East South Temple
Suite 100
Salt Lake City, Utah 84111
Telephone (801) 595-6700
Telefax (801) 595-6717
www.mhtn.com

**Hastings+Chivetta**
ARCHITECTURE • PLANNING • ENGINEERING
622 Emerson, Suite 200
St. Louis, MO 63141
Tel. 314.863.5717
Fax. 314.863.2823
www.hastingschivetta.com

VAN BOERUM & FRANK ASSOCIATES, INC.
CONSULTING ENGINEERS
Salt Lake City • Logan • St. George • Tempe
330 South 300 East 801.530.3148 T
Salt lake City, UT 84111 801.530.3150 F


# UNIVERSITY OF UTAH
## STUDENT LIFE CENTER
1836 E. BALLIF ROAD
SALT LAKE CITY, UTAH 84112


©2007 MHTN ARCHITECTS, INC.
Drawings, written material, and design concepts shall not be used or reproduced in whole or part in any form or format without prior written consent of MHTN Architects, Inc. Do not scale drawings. Use given dimensions only. If not shown, verify correct dimensions with the Architect. Contractor shall check and verify all dimensions and conditions at job site.


SEAL

MHTN PROJECT NO.

DRAWN BY: CHECKED BY:

ISSUED:

| NO. | DATE | DESCRIPTION |
|---|---|---|

CONTRACTOR TO VERIFY DRAWINGS IN FIELD USE REFLECT LAST REVISION DATE.

| NO. | DATE | DESCRIPTION |
|---|---|---|

SHEET NAME
PARTIAL MECHANICAL PLAN
BID DOCUMENTS
MAY 15, 2013

SHEET NUMBER
MH101A

D:_Bim\Local\Mechanical_Central_JRobker.rvt
5/14/2013 12:49:02 PM

## SHEET KEYNOTES

| | |
|---|---|
| 1 | DUCT DROPS TO FLOOR BELOW. SEE MH100B. |
| 2 | RUN DUCTS THROUGH JOISTS. |

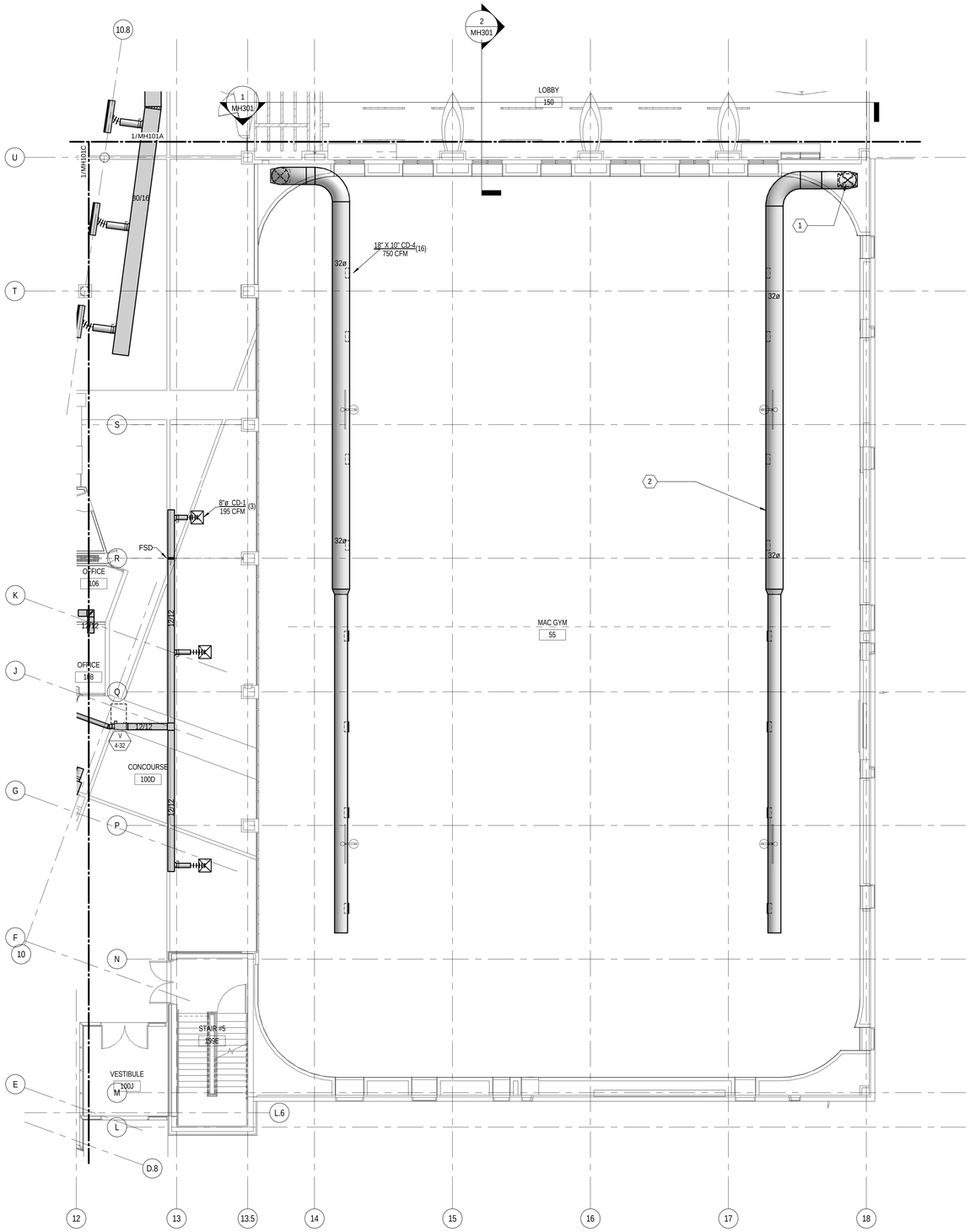


# FIRST LEVEL MECHANICAL PLAN B

0' 4'-0" 8'-0" 16'-0"
1/8" =1'-0"

SCALE: 1/8" = 1'-0"

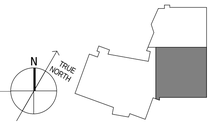


KEYPLAN


MHTN
ARCHITECTS
**MHTN Architects, Inc.**
420 East South Temple
Suite 100
Salt Lake City, Utah 84111
Telephone (801) 595-6700
Telefax (801) 595-6717
www.mhtn.com

**Hastings+Chivetta**
ARCHITECTURE • PLANNING • ENGINEERING
622 Emerson, Suite 200
St. Louis, MO 63141
Tel. 314.863.5717
Fax. 314.863.2823
www.hastingschivetta.com

VAN BOERUM & FRANK ASSOCIATES, INC.
CONSULTING ENGINEERS
Salt Lake City • Logan • St. George • Tempe
330 South 300 East 801.530.3148 T
Salt lake City, UT 84111 801.530.3150 F


# UNIVERSITY OF UTAH
## STUDENT LIFE CENTER
1836 E. BALLIF ROAD
SALT LAKE CITY, UTAH 84112


©2007 MHTN ARCHITECTS, INC.
Drawings, written material, and design concepts shall not be used or reproduced in whole or part in any form or format without prior written consent of MHTN Architects, Inc. Do not scale drawings. Use given dimensions only. If not shown, verify correct dimensions with the Architect. Contractor shall check and verify all dimensions and conditions at job site.


SEAL

MHTN PROJECT NO.

DRAWN BY: CHECKED BY:

ISSUED:

| NO. | DATE | DESCRIPTION |
|---|---|---|
| | | |

CONTRACTOR TO VERIFY DRAWINGS IN FIELD USE REFLECT LAST REVISION DATE.

| NO. | DATE | DESCRIPTION |
|---|---|---|
| | | |

SHEET NAME

PARTIAL MECHANICAL PLAN

BID DOCUMENTS

MAY 15, 2013

SHEET NUMBER

# MH101B

D:__Bim\Local\Mechanical_Central_JRobker.rvt
5/14/2013 12:49:08 PM

# FIRST LEVEL MECHANICAL PLAN C

0' 4'-0" 8'-0" 16'-0"
1/8" =1'-0"

SCALE: 1/8" = 1'-0"

D:_BimLocal\Mechanical_Central_JRobker.rvt
5/14/2013 12:49:21 PM

## SHEET KEYNOTES

1. RUN DUCTS THROUGH JOISTS.
2. DUCT RISES TO FLOOR ABOVE. SEE MH102C.
3. LOUVER TO HAVE A CLEAR ANODIZED FINISH.
4. DISTRIBUTE 4260 CFM TO EXTERIOR GLAZING VIA LOW THROW NOZZLES.
5. DISTRIBUTE 4260 CFM TO SPACE VIA HIGH AND MID THROW NOZZLES.
6. 34 INCH ROUND DUCT TO BE FABRIC DUCT IN NATATORIUM.
7. RETURN GRILLE TO BE INSTALLED ON END OF DUCT.


MHTN
ARCHITECTS
**MHTN Architects, Inc.**
420 East South Temple
Suite 100
Salt Lake City, Utah 84111
Telephone (801) 595-6700
Telefax (801) 595-6717
www.mhtn.com

**Hastings+Chivetta**
ARCHITECTURE • PLANNING • ENGINEERING
622 Emerson, Suite 200
St. Louis, MO 63141
Tel. 314.863.5717
Fax. 314.863.2823
www.hastingschivetta.com

VAN BOERUM & FRANK ASSOCIATES, INC.
CONSULTING ENGINEERS
Salt Lake City • Logan • St. George • Tempe
330 South 300 East 801.530.3148 T
Salt lake City, UT 84111 801.530.3150 F


# UNIVERSITY OF UTAH
## STUDENT LIFE CENTER
1836 E. BALLIF ROAD
SALT LAKE CITY, UTAH 84112


©2007 MHTN ARCHITECTS, INC.
Drawings, written material, and design concepts shall not be used or reproduced in whole or part in any form or format without prior written consent of MHTN Architects, Inc. Do not scale drawings. Use given dimensions only. If not shown, verify correct dimensions with the Architect. Contractor shall check and verify all dimensions and conditions at job site.


SEAL

MHTN PROJECT NO.

DRAWN BY: CHECKED BY:

ISSUED:

| NO. | DATE | DESCRIPTION |
|---|---|---|
| | | |

CONTRACTOR TO VERIFY DRAWINGS IN FIELD USE REFLECT LAST REVISION DATE.

| NO. | DATE | DESCRIPTION |
|---|---|---|
| | | |

SHEET NAME
PARTIAL MECHANICAL PLAN
BID DOCUMENTS
MAY 15, 2013

SHEET NUMBER
MH101C

## SHEET KEYNOTES

| | |
|---|---|
| 1 | DUCT RISES TO FLOOR ABOVE. SEE MH103A. |

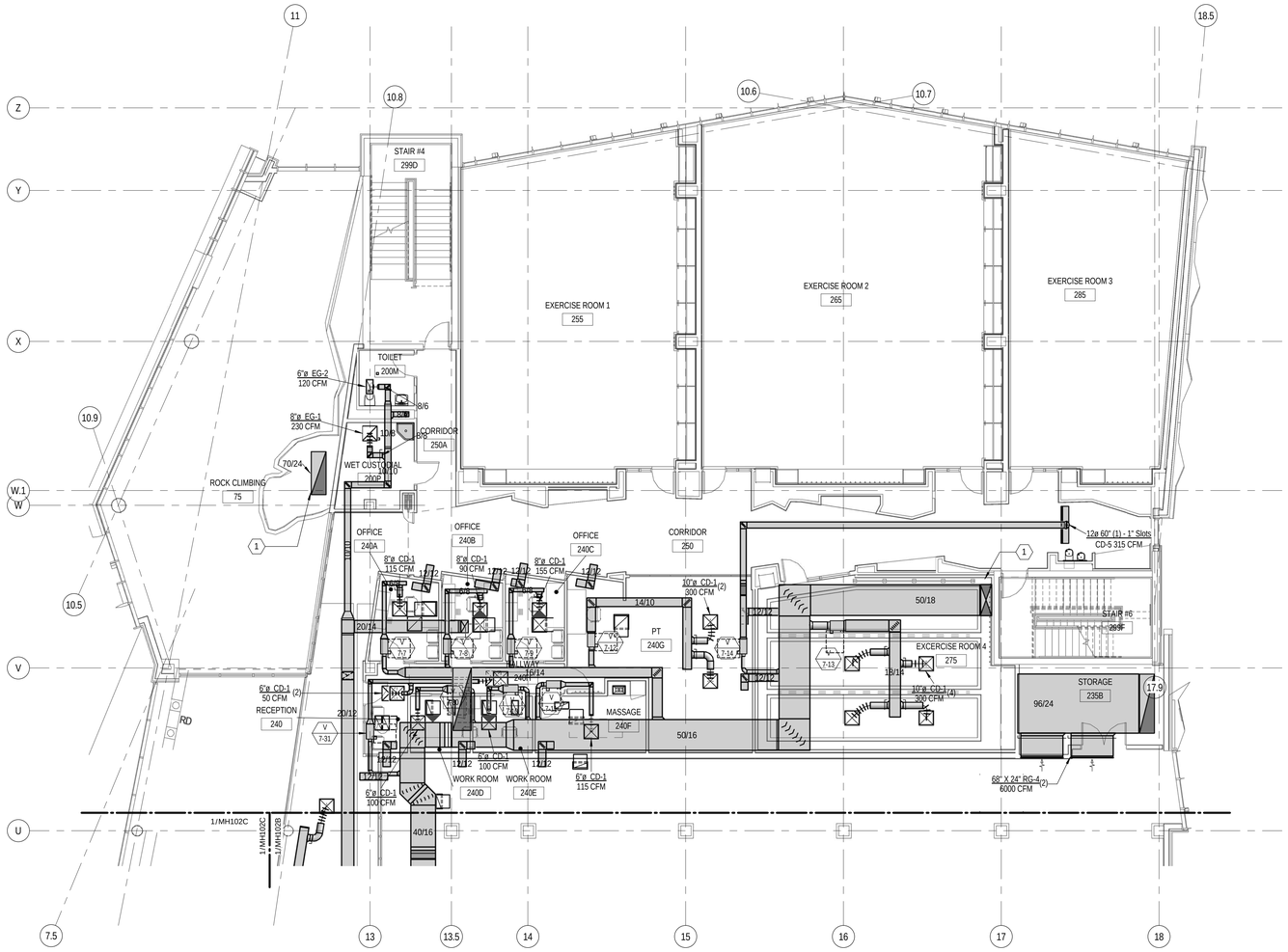


## SECOND LEVEL MECHANICAL PLAN A

0' 4'-0" 8'-0" 16'-0"
1/8" =1'-0"

SCALE: 1/8" = 1'-0"

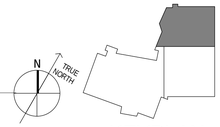


KEYPLAN


MHTN ARCHITECTS
**MHTN Architects, Inc.**
420 East South Temple
Suite 100
Salt Lake City, Utah 84111
Telephone (801) 595-6700
Telefax (801) 595-6717
www.mhtn.com

**Hastings+Chivetta**
ARCHITECTURE • PLANNING • ENGINEERING
622 Emerson, Suite 200
St. Louis, MO 63141
Tel. 314.863.5717
Fax. 314.863.2823
www.hastingschivetta.com

VAN BOERUM & FRANK ASSOCIATES, INC.
CONSULTING ENGINEERS
Salt Lake City • Logan • St. George • Tempe
330 South 300 East 801.530.3148 T
Salt lake City, UT 84111 801.530.3150 F


# UNIVERSITY OF UTAH
## STUDENT LIFE CENTER
1836 E. BALLIF ROAD
SALT LAKE CITY, UTAH 84112


©2007 MHTN ARCHITECTS, INC.
Drawings, written material, and design concepts shall not be used or reproduced in whole or part in any form or format without prior written consent of MHTN Architects, Inc. Do not scale drawings. Use given dimensions only. If not shown, verify correct dimensions with the Architect. Contractor shall check and verify all dimensions and conditions at job site.


SEAL

MHTN PROJECT NO.

DRAWN BY: CHECKED BY:

ISSUED:

| NO. | DATE | DESCRIPTION |
|---|---|---|

CONTRACTOR TO VERIFY DRAWINGS IN FIELD USE REFLECT LAST REVISION DATE.

| NO. | DATE | DESCRIPTION |
|---|---|---|

SHEET NAME
PARTIAL MECHANICAL PLAN
BID DOCUMENTS
MAY 15, 2013

SHEET NUMBER
MH102A

D:__Bim\Local\Mechanical_Central_JRobker.rvt
5/14/2013 12:49:28 PM

## SHEET KEYNOTES

| | |
|---|---|
| 1 | SUPPLY GRILLE TO BE INSTALLED IN VERTICAL SOFFIT FACE. |
| 2 | DUCT RISES TO FLOOR ABOVE. SEE MH103B. |

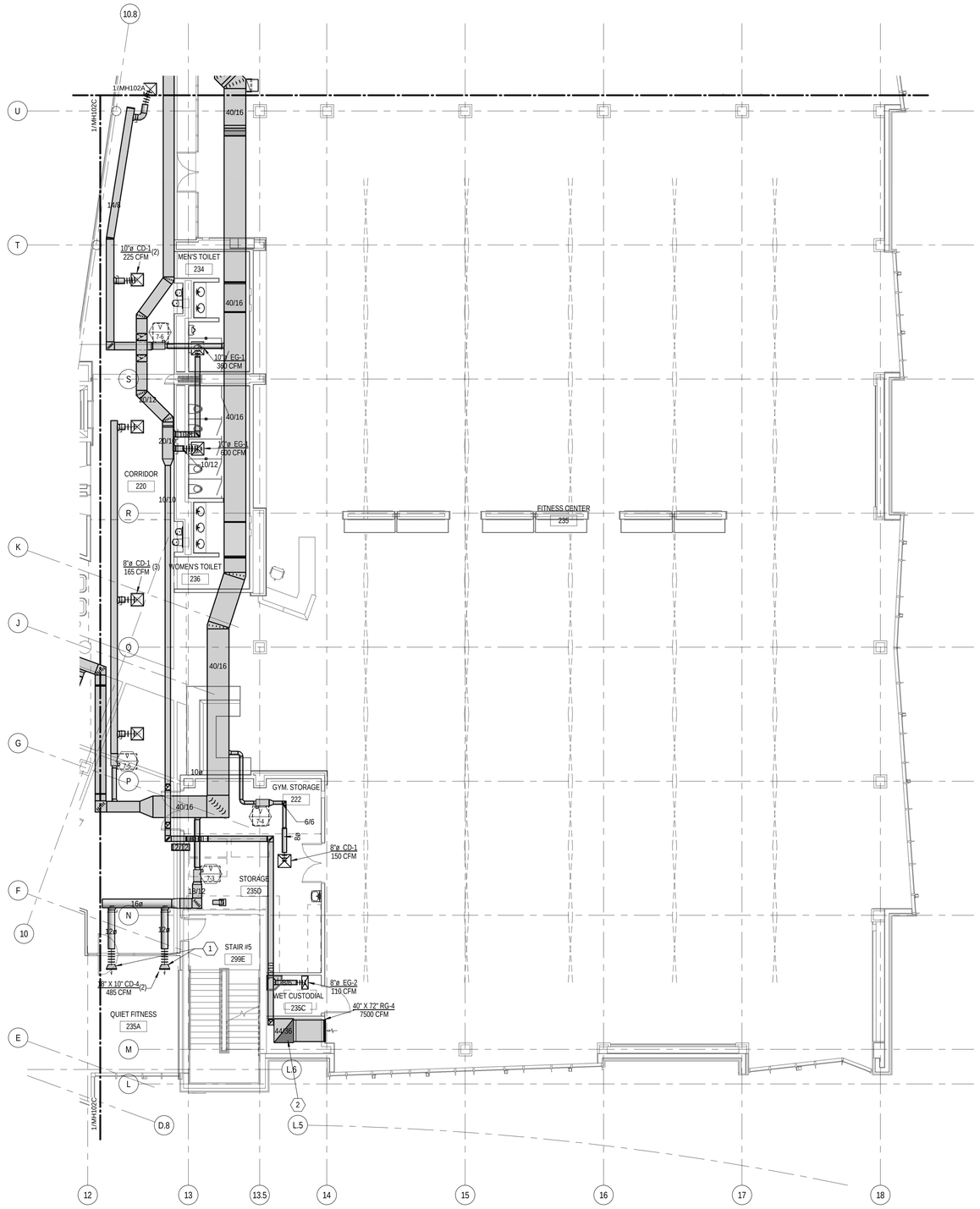


## SECOND LEVEL MECHANICAL PLAN B

0' 4'-0" 8'-0" 16'-0"
1/8" =1'-0"

SCALE: 1/8" = 1'-0"

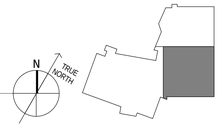


KEYPLAN


MHTN ARCHITECTS

**MHTN Architects, Inc.**
420 East South Temple
Suite 100
Salt Lake City, Utah 84111
Telephone (801) 595-6700
Telefax (801) 595-6717
www.mhtn.com

**Hastings+Chivetta**
ARCHITECTURE • PLANNING • ENGINEERING
622 Emerson, Suite 200
St. Louis, MO 63141
Tel. 314.863.5717
Fax. 314.863.2823
www.hastingschivetta.com

VAN BOERUM & FRANK ASSOCIATES, INC.
CONSULTING ENGINEERS
Salt Lake City • Logan • St. George • Tempe
330 South 300 East 801.530.3148 T
Salt lake City, UT 84111 801.530.3150 F


# UNIVERSITY OF UTAH
## STUDENT LIFE CENTER
1836 E. BALLIF ROAD
SALT LAKE CITY, UTAH 84112


©2007 MHTN ARCHITECTS, INC.
Drawings, written material, and design concepts shall not be used or reproduced in whole or part in any form or format without prior written consent of MHTN Architects, Inc. Do not scale drawings. Use given dimensions only. If not shown, verify correct dimensions with the Architect. Contractor shall check and verify all dimensions and conditions at job site.


SEAL

MHTN PROJECT NO.

DRAWN BY: CHECKED BY:

ISSUED:

| NO. | DATE | DESCRIPTION |
|---|---|---|

CONTRACTOR TO VERIFY DRAWINGS IN FIELD USE REFLECT LAST REVISION DATE.

| NO. | DATE | DESCRIPTION |
|---|---|---|

SHEET NAME
PARTIAL MECHANICAL PLAN
BID DOCUMENTS
MAY 15, 2013

SHEET NUMBER
MH102B

D:_BimLocal\Mechanical_Central_JRobker.rvt
5/14/2013 12:49:35 PM

## SHEET KEYNOTES

1 DUCT RISES TO FLOOR ABOVE. SEE MH103C.

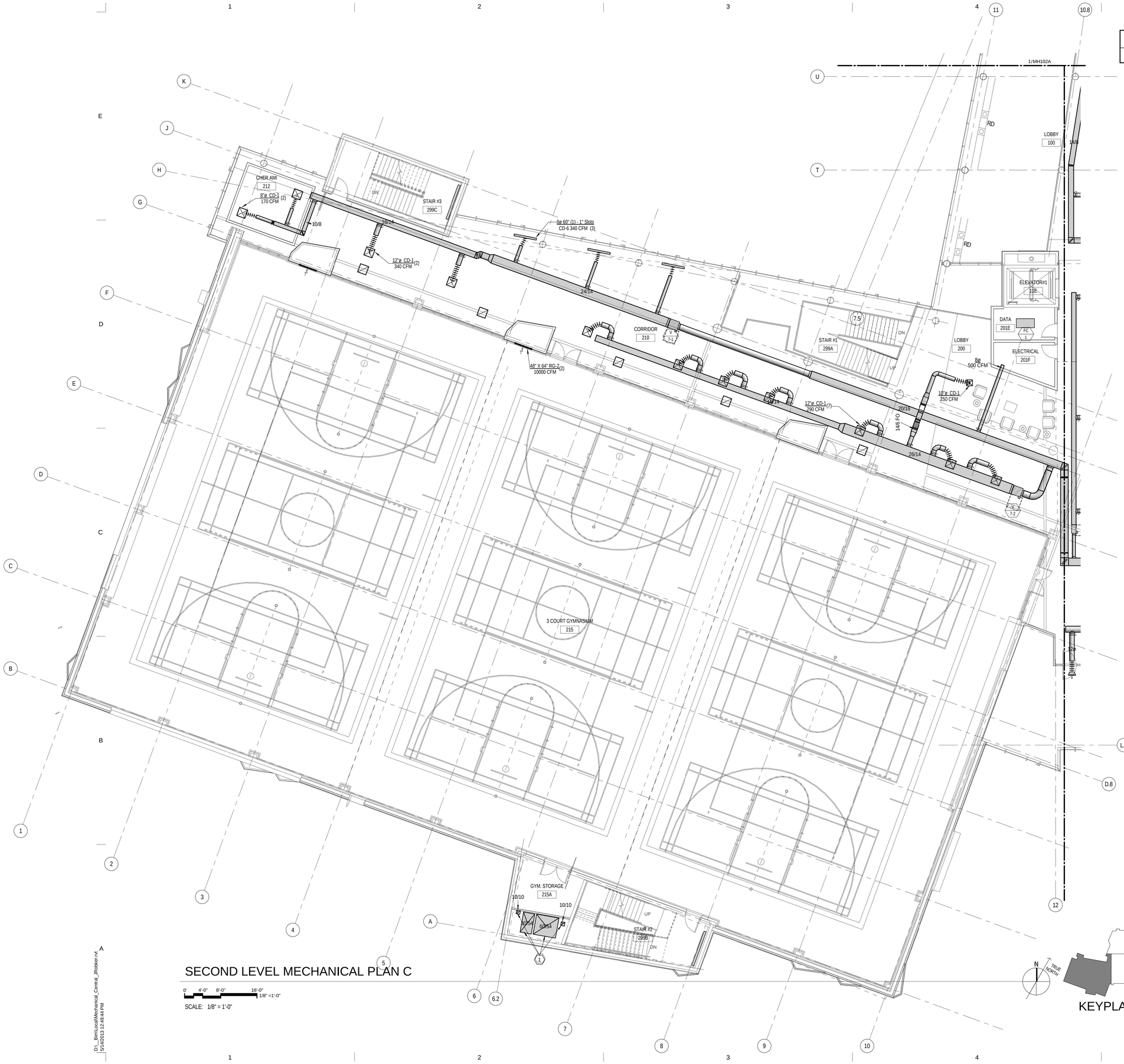


SECOND LEVEL MECHANICAL PLAN C

0' 4'-0" 8'-0" 16'-0"
1/8" =1'-0"

SCALE: 1/8" = 1'-0"

KEYPLAN

D:_Bim\Local\Mechanical_Central_JRoeker.rvt
5/14/2013 12:49:44 PM


MHTN
ARCHITECTS
**MHTN Architects, Inc.**
420 East South Temple
Suite 100
Salt Lake City, Utah 84111
Telephone (801) 595-6700
Telefax (801) 595-6717
www.mhtn.com

**Hastings+Chivetta**
ARCHITECTURE • PLANNING • ENGINEERING
622 Emerson, Suite 200
St. Louis, MO 63141
Tel. 314.863.5717
Fax. 314.863.2823
www.hastingschivetta.com

VAN BOERUM & FRANK ASSOCIATES, INC.
CONSULTING ENGINEERS
Salt Lake City • Logan • St. George • Tempe
330 South 300 East 801.530.3148 T
Salt lake City, UT 84111 801.530.3150 F
VBF# Project 1002


# UNIVERSITY OF UTAH
## STUDENT LIFE CENTER
1836 E. BALLIF ROAD
SALT LAKE CITY, UTAH 84112


©2007 MHTN ARCHITECTS, INC.
Drawings, written material, and design concepts shall not be used or reproduced in whole or part in any form or format without prior written consent of MHTN Architects, Inc. Do not scale drawings. Use given dimensions only. If not shown, verify correct dimensions with the Architect. Contractor shall check and verify all dimensions and conditions at job site.


SEAL

MHTN PROJECT NO.

DRAWN BY: CHECKED BY:

ISSUED:

| NO. | DATE | DESCRIPTION |
|---|---|---|
| | | |

CONTRACTOR TO VERIFY DRAWINGS IN FIELD USE REFLECT LAST REVISION DATE.

| NO. | DATE | DESCRIPTION |
|---|---|---|
| | | |

SHEET NAME

PARTIAL MECHANICAL PLAN

BID DOCUMENTS

MAY 15, 2013

SHEET NUMBER

# MH102C

## SHEET KEYNOTES

| | |
|---|---|
| 1 | DUCT DROPS TO FLOOR BELOW. SEE MH102A. |
| 2 | SEE SHEET MH403 FOR CONTINUATION. |

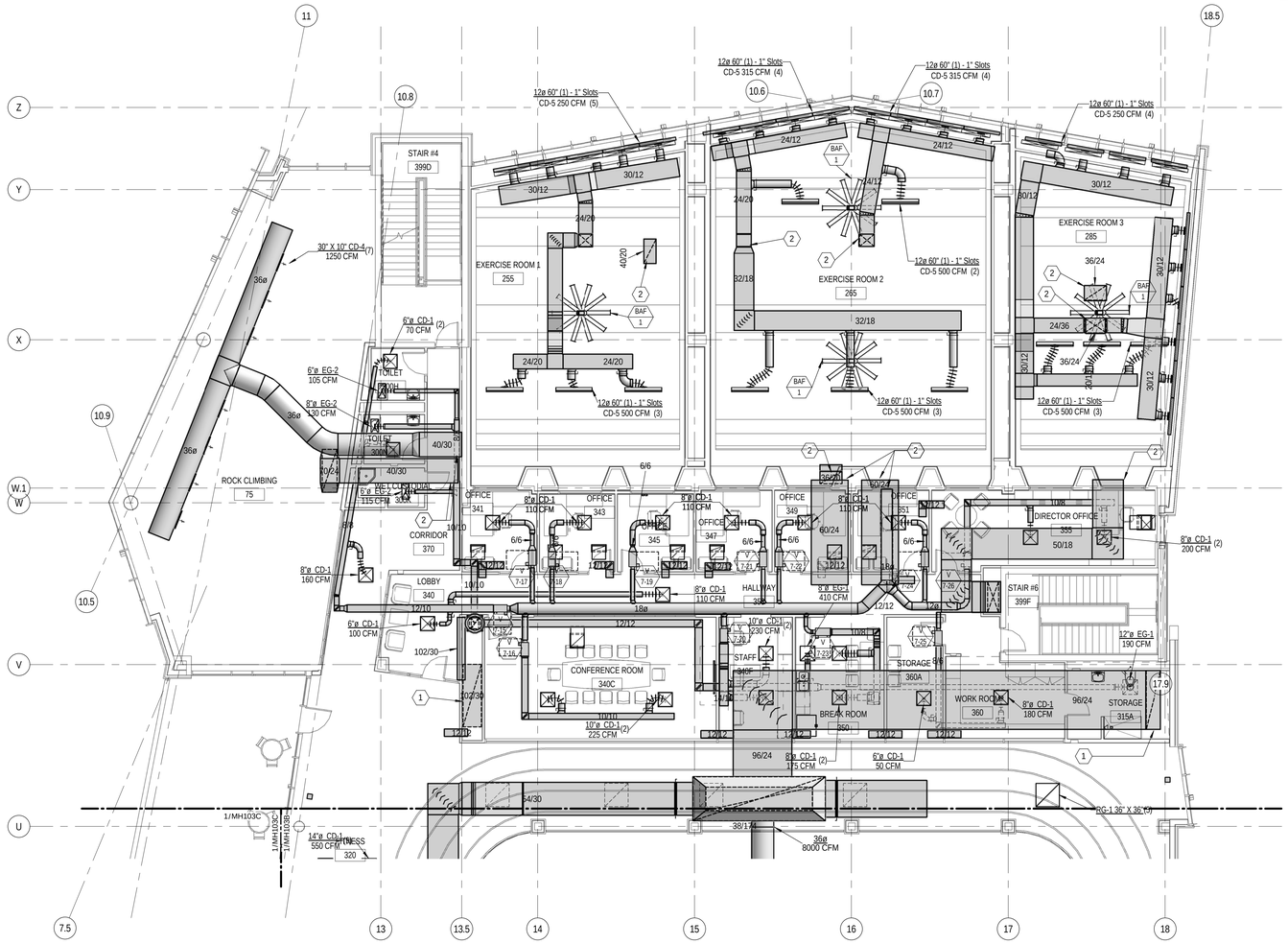


# THIRD LEVEL MECHANICAL PLAN A

0' 4'-0" 8'-0" 16'-0"
1/8" =1'-0"

SCALE: 1/8" = 1'-0"

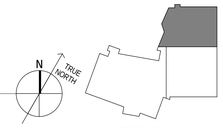


KEYPLAN


MHTN
ARCHITECTS
**MHTN Architects, Inc.**
420 East South Temple
Suite 100
Salt Lake City, Utah 84111
Telephone (801) 595-6700
Telefax (801) 595-6717
www.mhtn.com

**Hastings+Chivetta**
ARCHITECTURE • PLANNING • ENGINEERING
622 Emerson, Suite 200
St. Louis, MO 63141
Tel. 314.863.5717
Fax. 314.863.2823
www.hastingschivetta.com

VAN BOERUM & FRANK ASSOCIATES, INC.
CONSULTING ENGINEERS
Salt Lake City • Logan • St. George • Tempe
330 South 300 East 801.530.3148 T
Salt lake City, UT 84111 801.530.3150 F
VBF# Project 1002


# UNIVERSITY OF UTAH
## STUDENT LIFE CENTER
1836 E. BALLIF ROAD
SALT LAKE CITY, UTAH 84112


©2007 MHTN ARCHITECTS, INC.
Drawings, written material, and design concepts shall not be used or reproduced in whole or part in any form or format without prior written consent of MHTN Architects, Inc. Do not scale drawings. Use given dimensions only. If not shown, verify correct dimensions with the Architect. Contractor shall check and verify all dimensions and conditions at job site.


SEAL

MHTN PROJECT NO.

DRAWN BY: CHECKED BY:

ISSUED:

| NO. | DATE | DESCRIPTION |
|---|---|---|

CONTRACTOR TO VERIFY DRAWINGS IN FIELD USE REFLECT LAST REVISION DATE.

| NO. | DATE | DESCRIPTION |
|---|---|---|

SHEET NAME

PARTIAL MECHANICAL PLAN

BID DOCUMENTS

MAY 15, 2013

SHEET NUMBER

# MH103A

D:_BimLocal\Mechanical_Central_JRobker.rvt
5/14/2013 12:49:57 PM

## SHEET KEYNOTES

| | |
|---|---|
| 1 | DUCT TO COORDINATE WITH STRUCTURE. CONNECT TO AIR HANDLER OPENING IN ROOF CURB. |
| 2 | RUN DUCTS THROUGH JOISTS. |
| 3 | DUCT DROPS TO FLOOR BELOW. SEE MH102B. |

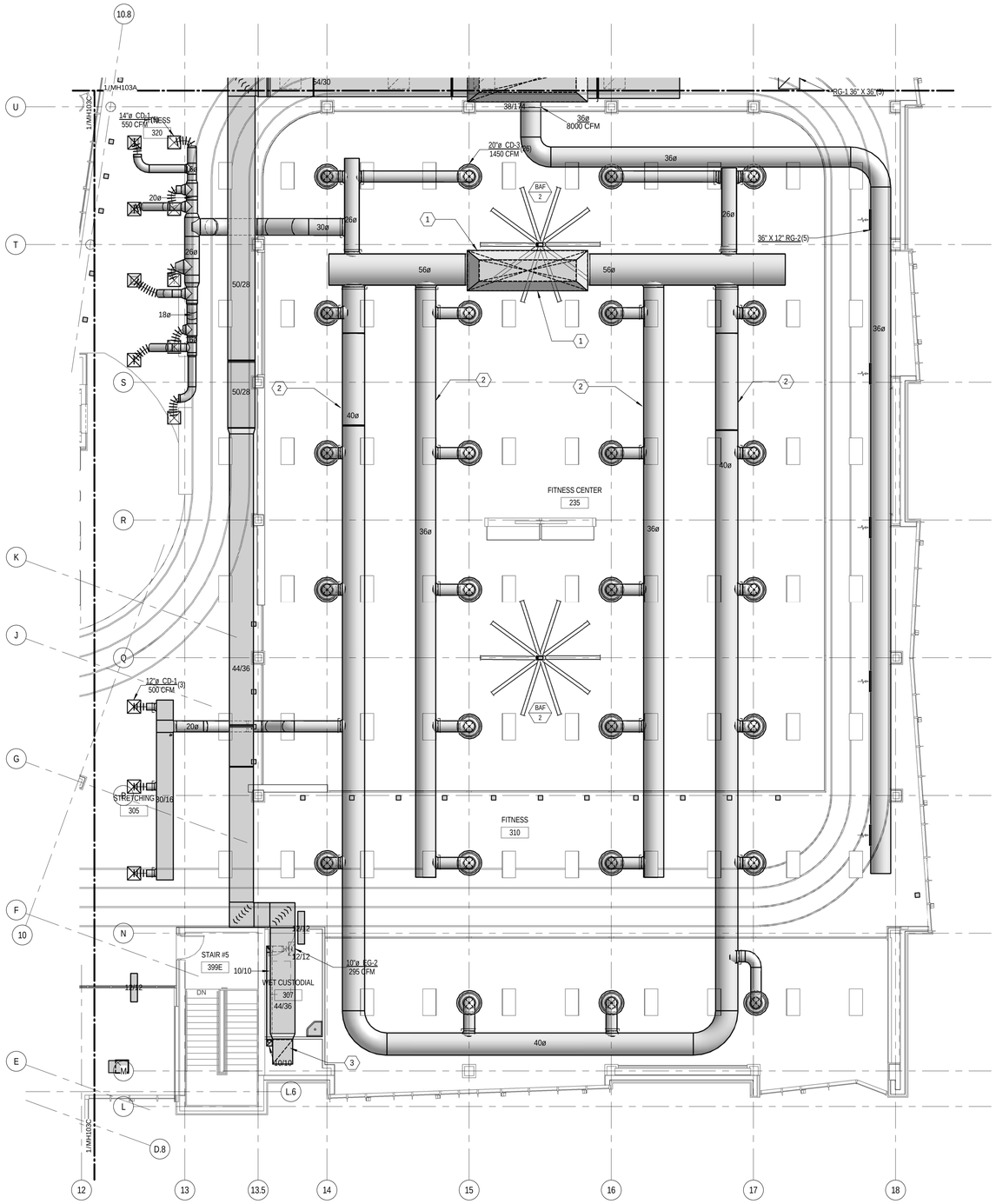


# THIRD LEVEL MECHANICAL PLAN B

0' 4'-0" 8'-0" 16'-0"
1/8" =1'-0"

SCALE: 1/8" = 1'-0"

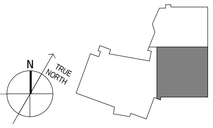


KEYPLAN


MHTN
ARCHITECTS
**MHTN Architects, Inc.**
420 East South Temple
Suite 100
Salt Lake City, Utah 84111
Telephone (801) 595-6700
Telefax (801) 595-6717
www.mhtn.com

**Hastings+Chivetta**
ARCHITECTURE • PLANNING • ENGINEERING
622 Emerson, Suite 200
St. Louis, MO 63141
Tel. 314.863.5717
Fax. 314.863.2823
www.hastingschivetta.com

VAN BOERUM & FRANK ASSOCIATES, INC.
CONSULTING ENGINEERS
Salt Lake City • Logan • St. George • Tempe
330 South 300 East 801.530.3148 T
Salt lake City, UT 84111 801.530.3150 F


# UNIVERSITY OF UTAH
## STUDENT LIFE CENTER
1836 E. BALLIF ROAD
SALT LAKE CITY, UTAH 84112


©2007 MHTN ARCHITECTS, INC.
Drawings, written material, and design concepts shall not be used or reproduced in whole or part in any form or format without prior written consent of MHTN Architects, Inc. Do not scale drawings. Use given dimensions only. If not shown, verify correct dimensions with the Architect. Contractor shall check and verify all dimensions and conditions at job site.


SEAL

MHTN PROJECT NO.

DRAWN BY: CHECKED BY:

ISSUED:

| NO. | DATE | DESCRIPTION |
|---|---|---|

CONTRACTOR TO VERIFY DRAWINGS IN FIELD USE REFLECT LAST REVISION DATE.

| NO. | DATE | DESCRIPTION |
|---|---|---|

SHEET NAME
PARTIAL MECHANICAL PLAN
BID DOCUMENTS
MAY 15, 2013

SHEET NUMBER
MH103B

D:_BimLocal\Mechanical_Central_JRobker.rvt
5/14/2013 12:50:10 PM

## SHEET KEYNOTES

1 TRANSITION TO AIR HANDLER AND ROOF CURB.

2 RUN DUCTS THROUGH JOISTS.

3 RELIEF AIR LOUVER.

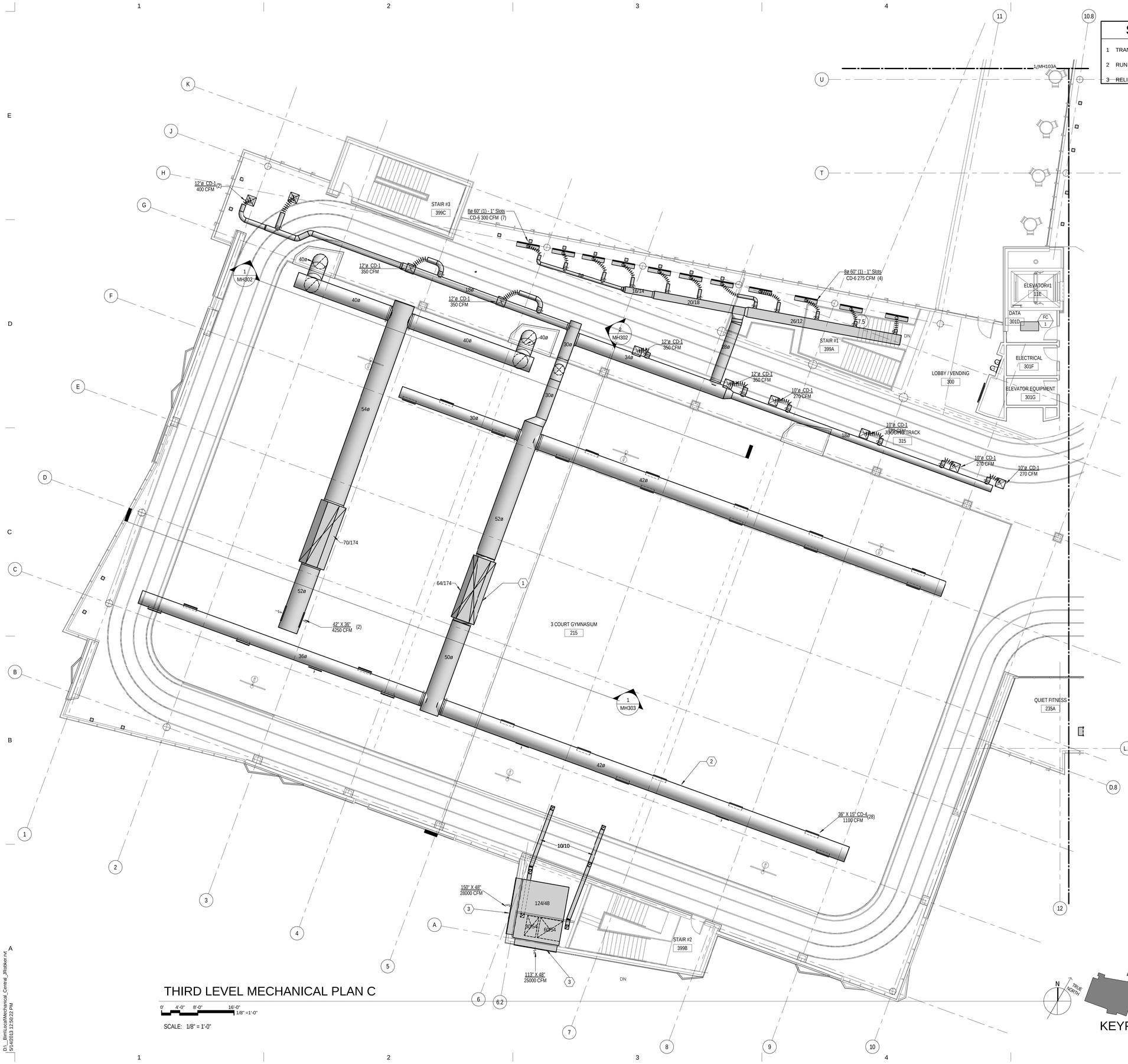


THIRD LEVEL MECHANICAL PLAN C

0' 4'-0" 8'-0" 16'-0"
1/8" =1'-0"

SCALE: 1/8" = 1'-0"

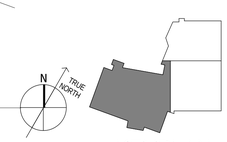


KEYPLAN

D:_BimLocal\Mechanical_Central_JRobke.rvt
5/14/2013 12:50:22 PM


MHTN
ARCHITECTS
**MHTN Architects, Inc.**
420 East South Temple
Suite 100
Salt Lake City, Utah 84111
Telephone (801) 595-6700
Telefax (801) 595-6717
www.mhtn.com

**Hastings+Chivetta**
ARCHITECTURE • PLANNING • ENGINEERING
622 Emerson, Suite 200
St. Louis, MO 63141
Tel. 314.863.5717
Fax. 314.863.2823
www.hastingschivetta.com

VAN BOERUM & FRANK ASSOCIATES, INC.
CONSULTING ENGINEERS
Salt Lake City • Logan • St. George • Tempe
330 South 300 East 801.530.3148 T
Salt lake City, UT 84111 801.530.3150 F
VBF# Project 1002


# UNIVERSITY OF UTAH

## STUDENT LIFE CENTER

1836 E. BALLIF ROAD
SALT LAKE CITY, UTAH 84112


©2007 MHTN ARCHITECTS, INC.

Drawings, written material, and design concepts shall not be used or reproduced in whole or part in any form or format without prior written consent of MHTN Architects, Inc. Do not scale drawings. Use given dimensions only. If not shown, verify correct dimensions with the Architect. Contractor shall check and verify all dimensions and conditions at job site.


SEAL

MHTN PROJECT NO.

DRAWN BY: CHECKED BY:

ISSUED:

| NO. | DATE | DESCRIPTION |
|---|---|---|
| | | |

CONTRACTOR TO VERIFY DRAWINGS IN FIELD USE REFLECT LAST REVISION DATE.

| NO. | DATE | DESCRIPTION |
|---|---|---|
| | | |

SHEET NAME

PARTIAL MECHANICAL PLAN

BID DOCUMENTS

MAY 15, 2013

SHEET NUMBER

MH103C

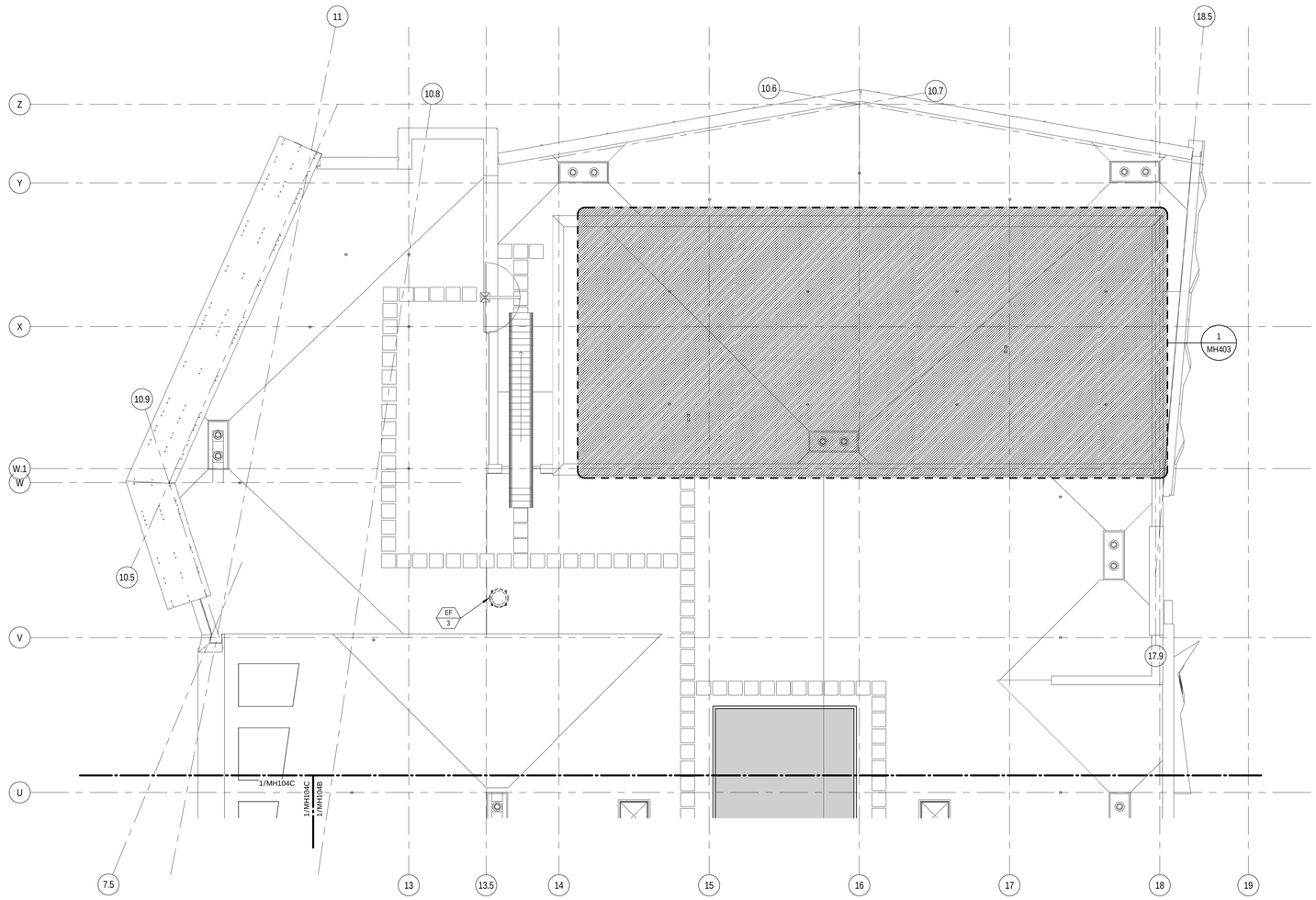


## ROOF MECHANICAL PLAN - NORTH

0' 4'-0" 8'-0" 16'-0"
1/8" =1'-0"

SCALE: 1/8" = 1'-0"

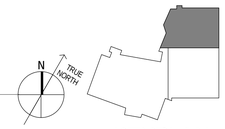


KEYPLAN

MHTN
ARCHITECTS
**MHTN Architects, Inc.**
420 East South Temple
Suite 100
Salt Lake City, Utah 84111
Telephone (801) 595-6700
Telefax (801) 595-6717
www.mhtn.com

**Hastings+Chivetta**
ARCHITECTURE • PLANNING • ENGINEERING
622 Emerson, Suite 200
St. Louis, MO 63141
Tel. 314.863.5717
Fax. 314.863.2823
www.hastingschivetta.com

VAN BOERUM & FRANK ASSOCIATES, INC.
CONSULTING ENGINEERS
Salt Lake City • Logan • St. George • Tempe
330 South 300 East 801.530.3148 T
Salt lake City, UT 84111 801.530.3150 F
VBF# Project 1002

# UNIVERSITY OF UTAH
## STUDENT LIFE CENTER
1836 E. BALLIF ROAD
SALT LAKE CITY, UTAH 84112

©2007 MHTN ARCHITECTS, INC.
Drawings, written material, and design concepts shall not be used or reproduced in whole or part in any form or format without prior written consent of MHTN Architects, Inc. Do not scale drawings. Use given dimensions only. If not shown, verify correct dimensions with the Architect. Contractor shall check and verify all dimensions and conditions at job site.

SEAL

MHTN PROJECT NO.

DRAWN BY: CHECKED BY:

ISSUED:

| NO. | DATE | DESCRIPTION |
|---|---|---|
| | | |

CONTRACTOR TO VERIFY DRAWINGS IN FIELD USE REFLECT LAST REVISION DATE.

| NO. | DATE | DESCRIPTION |
|---|---|---|
| | | |

SHEET NAME

PARTIAL MECHANICAL PLAN
BID DOCUMENTS
MAY 15, 2013

SHEET NUMBER

MH104A

D:__Bim\Local\Mechanical_Central_JRobker.rvt
5/14/2013 12:50:28 PM

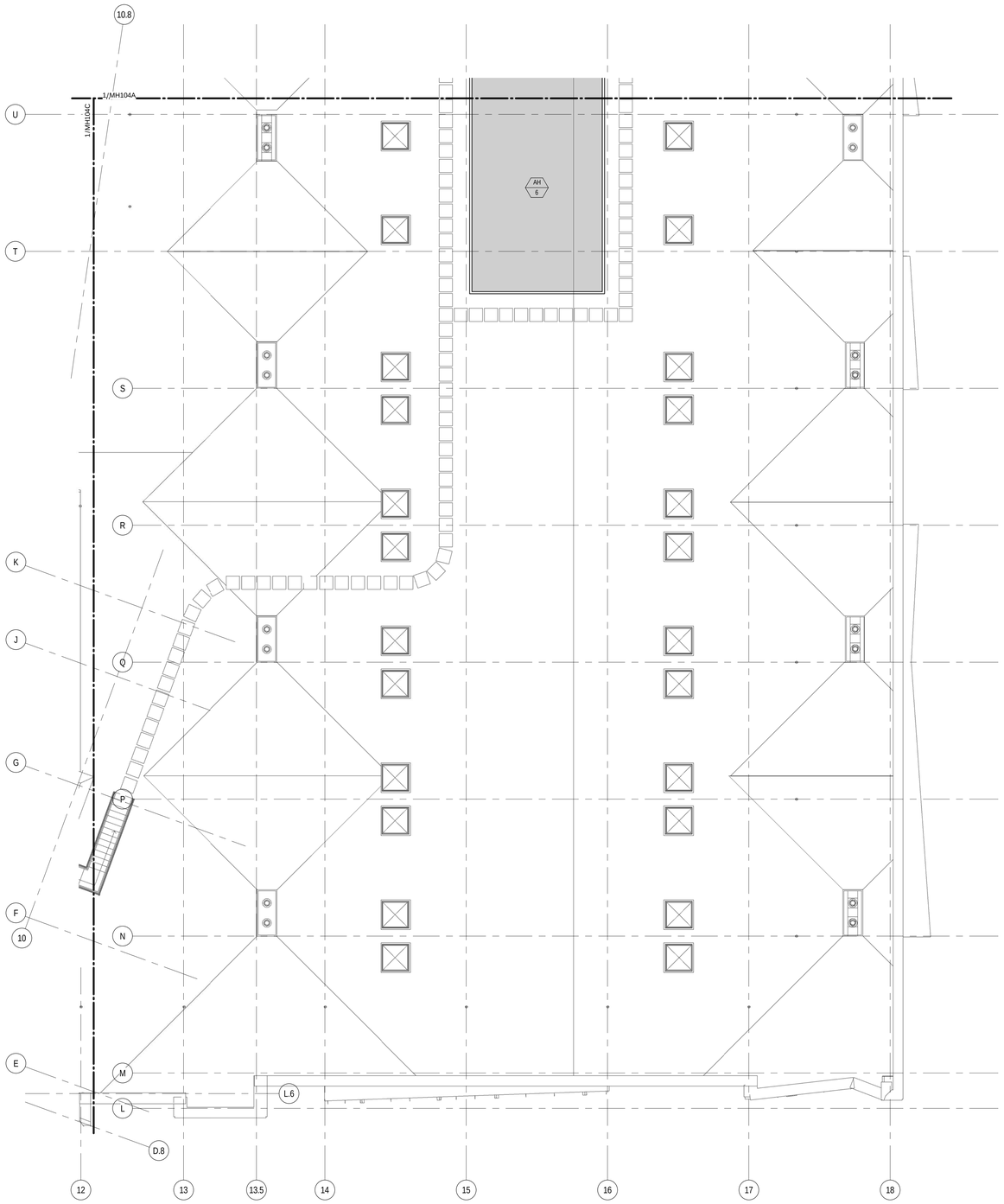


## ROOF MECHANICAL PLAN - SOUTH

0' 4'-0" 8'-0" 16'-0"
1/8" =1'-0"

SCALE: 1/8" = 1'-0"

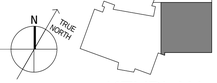


KEYPLAN

D:_BimLocal\Mechanical_Central_JRobker.rvt
5/14/2013 12:50:33 PM


MHTN
ARCHITECTS
**MHTN Architects, Inc.**
420 East South Temple
Suite 100
Salt Lake City, Utah 84111
Telephone (801) 595-6700
Telefax (801) 595-6717
www.mhtn.com

**Hastings+Chivetta**
ARCHITECTURE • PLANNING • ENGINEERING
622 Emerson, Suite 200
St. Louis, MO 63141
Tel. 314.863.5717
Fax. 314.863.2823
www.hastingschivetta.com

VAN BOERUM & FRANK ASSOCIATES, INC.
CONSULTING ENGINEERS
Salt Lake City • Logan • St. George • Tempe
330 South 300 East 801.530.3148 T
Salt lake City, UT 84111 801.530.3150 F


# UNIVERSITY OF UTAH
## STUDENT LIFE CENTER
1836 E. BALLIF ROAD
SALT LAKE CITY, UTAH 84112


©2007 MHTN ARCHITECTS, INC.
Drawings, written material, and design concepts shall not be used or reproduced in whole or part in any form or format without prior written consent of MHTN Architects, Inc. Do not scale drawings. Use given dimensions only. If not shown, verify correct dimensions with the Architect. Contractor shall check and verify all dimensions and conditions at job site.


SEAL

MHTN PROJECT NO.

DRAWN BY: CHECKED BY:

ISSUED:

| NO. | DATE | DESCRIPTION |
|---|---|---|

CONTRACTOR TO VERIFY DRAWINGS IN FIELD USE REFLECT LAST REVISION DATE.

| NO. | DATE | DESCRIPTION |
|---|---|---|

SHEET NAME

PARTIAL MECHANICAL PLAN

BID DOCUMENTS

MAY 15, 2013

SHEET NUMBER

# MH104B

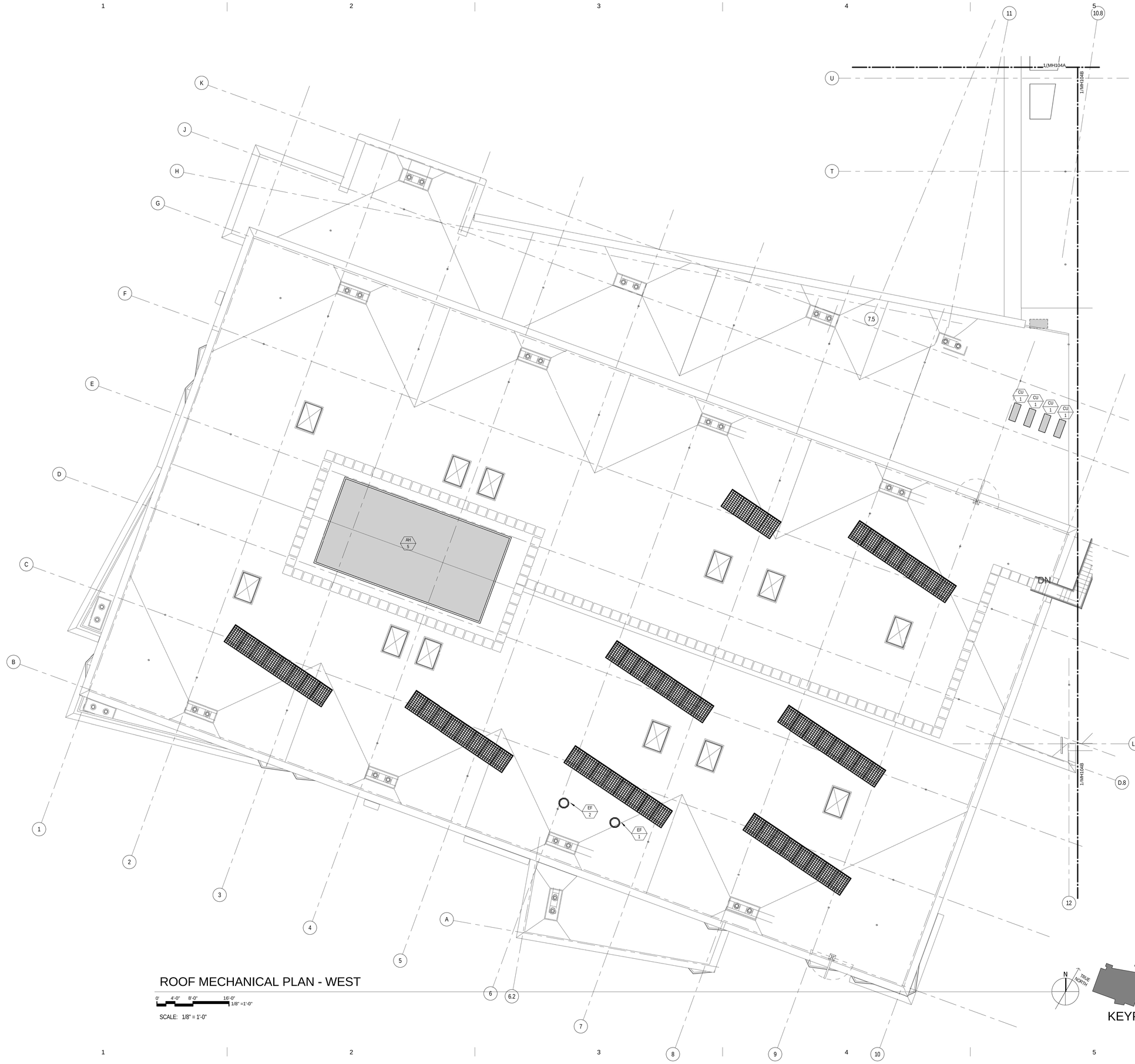


D:__Bim\Local\Mechanical_Central_JRobker.rvt
5/14/2013 12:50:51 PM


MHTN
ARCHITECTS
**MHTN Architects, Inc.**
420 East South Temple
Suite 100
Salt Lake City, Utah 84111
Telephone (801) 595-6700
Telefax (801) 595-6717
www.mhtn.com

**Hastings+Chivetta**
ARCHITECTURE • PLANNING • ENGINEERING
622 Emerson, Suite 200
St. Louis, MO 63141
Tel. 314.863.5717
Fax. 314.863.2823
www.hastingschivetta.com

VAN BOERUM & FRANK ASSOCIATES, INC.
CONSULTING ENGINEERS
Salt Lake City • Logan • St. George • Tempe
330 South 300 East 801.530.3148 T
Salt lake City, UT 84111 801.530.3150 F


# UNIVERSITY OF UTAH
## STUDENT LIFE CENTER
1836 E. BALLIF ROAD
SALT LAKE CITY, UTAH 84112


©2007 MHTN ARCHITECTS, INC.
Drawings, written material, and design concepts shall not be used or reproduced in whole or part in any form or format without prior written consent of MHTN Architects, Inc. Do not scale drawings. Use given dimensions only. If not shown, verify correct dimensions with the Architect. Contractor shall check and verify all dimensions and conditions at job site.


SEAL

MHTN PROJECT NO.

DRAWN BY: CHECKED BY:

ISSUED:

| NO. | DATE | DESCRIPTION |
|---|---|---|
| | | |

CONTRACTOR TO VERIFY DRAWINGS IN FIELD USE REFLECT LAST REVISION DATE.

| NO. | DATE | DESCRIPTION |
|---|---|---|
| | | |

SHEET NAME
PARTIAL MECHANICAL PLAN
BID DOCUMENTS
MAY 15, 2013

SHEET NUMBER
# MH104C

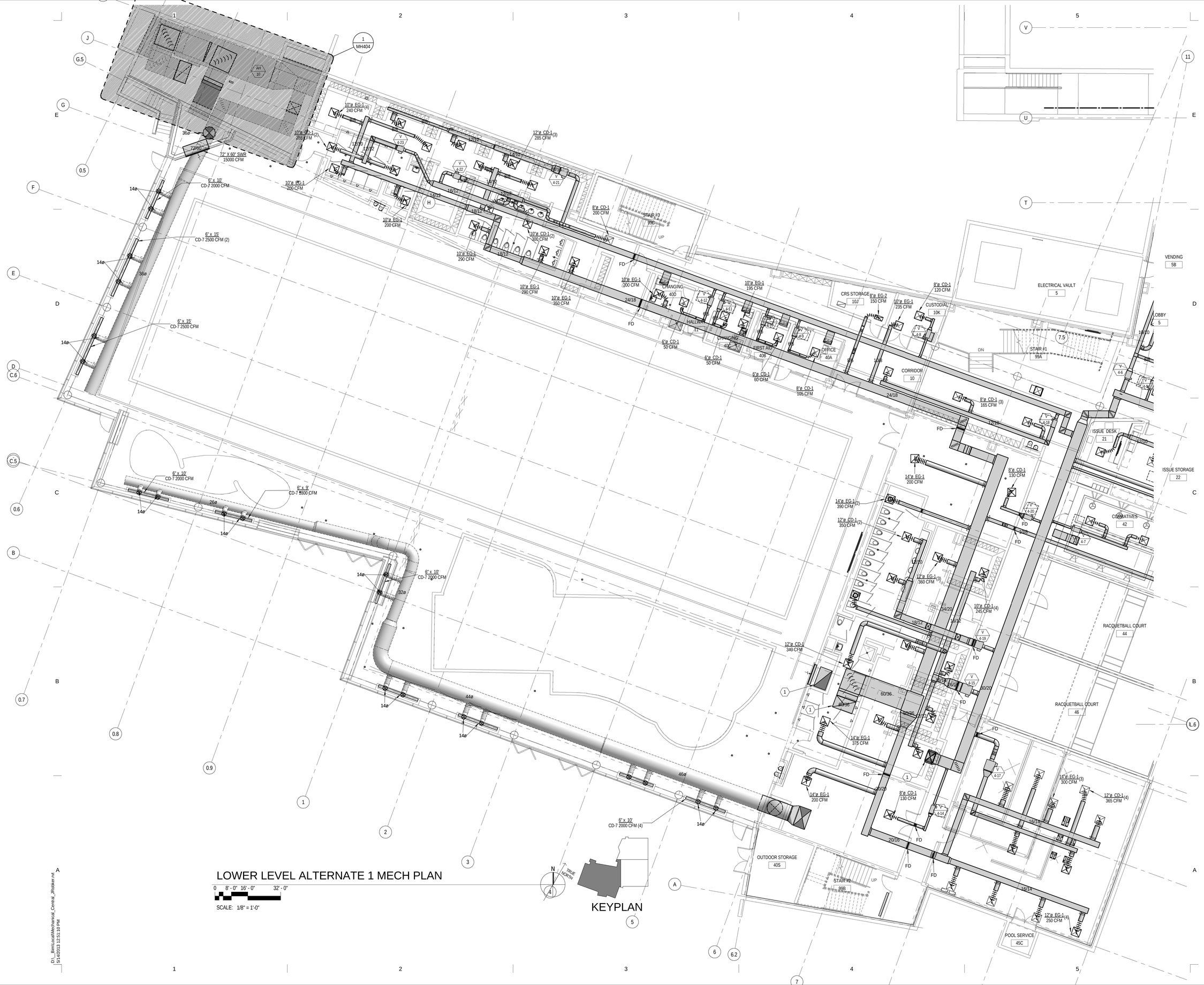


# LOWER LEVEL ALTERNATE 1 MECH PLAN

0 8' - 0" 16' - 0" 32' - 0"

SCALE: 1/8" = 1'-0"

KEYPLAN

D:_BimLocal\Mechanical_Central_JRobker.rvt
5/14/2013 12:51:10 PM


MHTN
ARCHITECTS

**MHTN Architects, Inc.**
420 East South Temple
Suite 100
Salt Lake City, Utah 84111
Telephone (801) 595-6700
Telefax (801) 595-6717
www.mhtn.com

**Hastings+Chivetta**
ARCHITECTURE • PLANNING • ENGINEERING
622 Emerson, Suite 200
St. Louis, MO 63141
Tel. 314.863.5717
Fax. 314.863.2823
www.hastingschivetta.com

VAN BOERUM & FRANK ASSOCIATES, INC.
CONSULTING ENGINEERS
Salt Lake City • Logan • St. George • Tempe
330 South 300 East 801.530.3148 T
Salt lake City, UT 84111 801.530.3150 F


# UNIVERSITY OF UTAH

## STUDENT LIFE CENTER

1836 E. BALLIF ROAD
SALT LAKE CITY, UTAH 84112


©2007 MHTN ARCHITECTS, INC.
Drawings, written material, and design concepts shall not be used or reproduced in whole or part in any form or format without prior written consent of MHTN Architects, Inc. Do not scale drawings. Use given dimensions only. If not shown, verify correct dimensions with the Architect. Contractor shall check and verify all dimensions and conditions at job site.


SEAL

MHTN PROJECT NO.

DRAWN BY: CHECKED BY:

ISSUED:

| NO. | DATE | DESCRIPTION |
|---|---|---|
| | | |

CONTRACTOR TO VERIFY DRAWINGS IN FIELD USE REFLECT LAST REVISION DATE.

| NO. | DATE | DESCRIPTION |
|---|---|---|
| | | |

SHEET NAME

LOWER LEVEL ALTERNATE 1 MECH PLAN

BID DOCUMENTS

MAY 15, 2013

SHEET NUMBER

MH105

## SHEET KEYNOTES

| | |
|---|---|
| 1 | DUCT DROPS TO FLOOR BELOW. SEE MH100A. |
| 2 | DUCT RISES TO FLOOR ABOVE. SEE MH102A. |
| 3 | DUCT DROPS TO FLOOR BELOW. SEE MH100B. |
| 4 | RUN DUCTS THROUGH JOISTS. |
| 5 | DISTRIBUTE 1500 CFM TO EXTERIOR GLAZING VIA LOW THROW NOZZLES. |
| 6 | DISTRIBUTE 1500 CFM TO SPACE VIA HIGH AND MID THROW NOZZLES. |
| 7 | DISTRIBUTE 3000 CFM TO EXTERIOR GLAZING VIA LOW THROW NOZZLES. |
| 8 | DISTRIBUTE 4260 CFM TO SPACE VIA HIGH AND MID THROW NOZZLES. |
| 9 | DISTRIBUTE 4260 CFM TO EXTERIOR GLAZING VIA LOW THROW NOZZLES. |
| 10 | 34 INCH ROUND DUCT TO BE FABRIC DUCT IN NATATORIUM. |
| 11 | 26 INCH ROUND DUCT TO BE FABRIC DUCT IN NATATORIUM. |
| 12 | DUCT DROPS TO FLOOR BELOW. SEE MH105. |

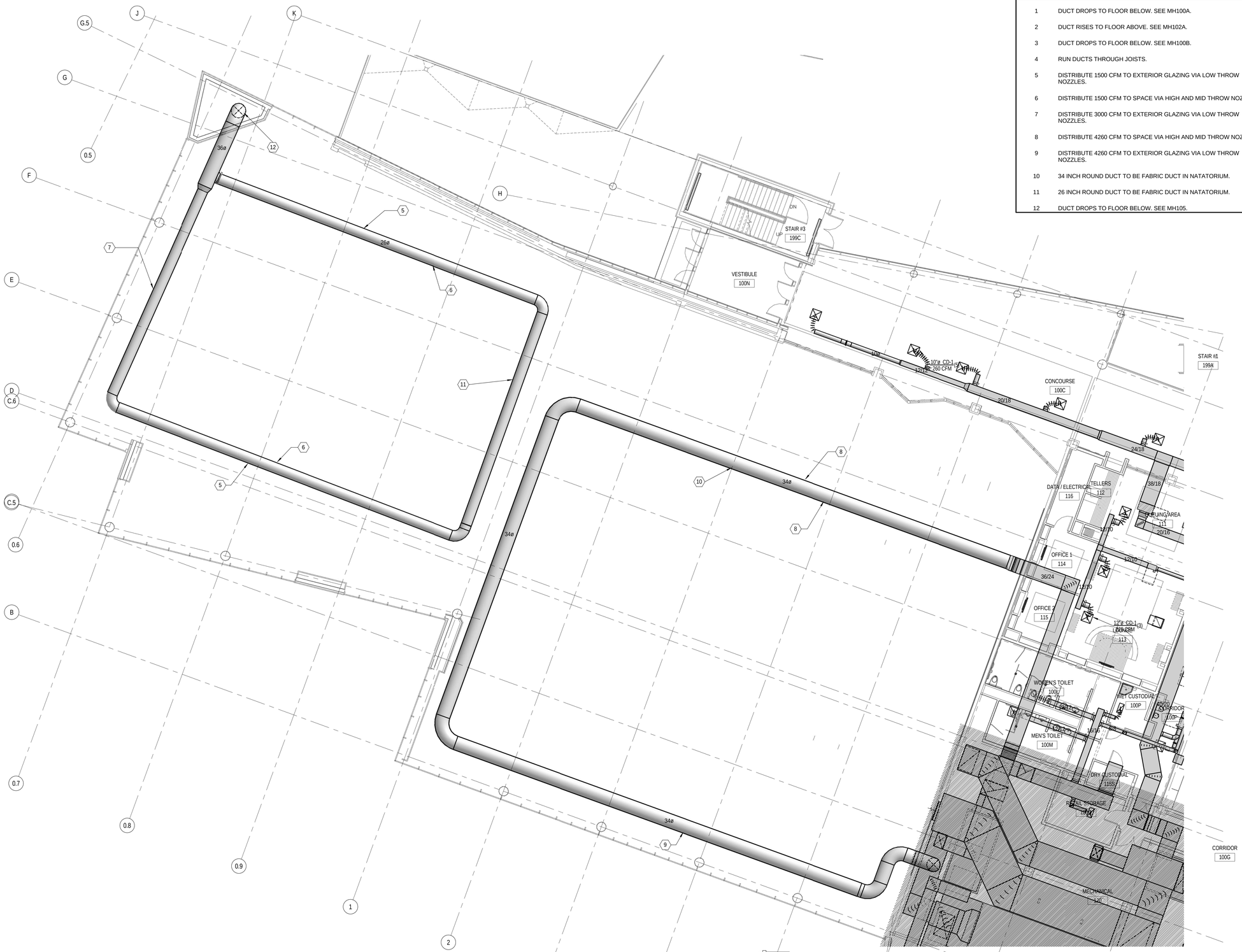


# FIRST LEVEL ALTERNATE 1 MECHANICAL PLAN

0 8' - 0" 16' - 0" 32' - 0"

SCALE: 1/8" = 1'-0"

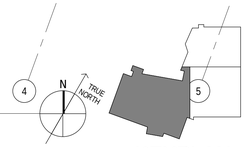


KEYPLAN


MHTN
ARCHITECTS
**MHTN Architects, Inc.**
420 East South Temple
Suite 100
Salt Lake City, Utah 84111
Telephone (801) 595-6700
Telefax (801) 595-6717
www.mhtn.com

**Hastings+Chivetta**
ARCHITECTURE • PLANNING • ENGINEERING
622 Emerson, Suite 200
St. Louis, MO 63141
Tel. 314.863.5717
Fax. 314.863.2823
www.hastingschivetta.com

VAN BOERUM & FRANK ASSOCIATES, INC.
CONSULTING ENGINEERS
Salt Lake City • Logan • St. George • Tempe
330 South 300 East 801.530.3148 T
Salt lake City, UT 84111 801.530.3150 F


# UNIVERSITY OF UTAH
## STUDENT LIFE CENTER
1836 E. BALLIF ROAD
SALT LAKE CITY, UTAH 84112


©2007 MHTN ARCHITECTS, INC.
Drawings, written material, and design concepts shall not be used or reproduced in whole or part in any form or format without prior written consent of MHTN Architects, Inc. Do not scale drawings. Use given dimensions only. If not shown, verify correct dimensions with the Architect. Contractor shall check and verify all dimensions and conditions at job site.


SEAL

MHTN PROJECT NO.

DRAWN BY: CHECKED BY:

ISSUED:

| NO. | DATE | DESCRIPTION |
|---|---|---|

CONTRACTOR TO VERIFY DRAWINGS IN FIELD USE REFLECT LAST REVISION DATE.

| NO. | DATE | DESCRIPTION |
|---|---|---|

SHEET NAME

FIRST LEVEL ALTERNATE 1 MECH PLAN

BID DOCUMENTS

MAY 15, 2013

SHEET NUMBER

MH106

D:_BimLocal\Mechanical_Central_JRoliker.rvt
5/14/2013 12:51:20 PM

ROOF ALTERNATE 1 MECHANICAL PLAN

0 4' - 0" 8' - 0" 16' - 0"

SCALE: 1/8" = 1'-0"

KEYPLAN

D:__Bim\Local\Mechanical_Central_JRobker.rvt
5/14/2013 12:51:35 PM

MHTN
ARCHITECTS

**MHTN Architects, Inc.**
420 East South Temple
Suite 100
Salt Lake City, Utah 84111
Telephone (801) 595-6700
Telefax (801) 595-6717
www.mhtn.com

**Hastings+Chivetta**
ARCHITECTURE • PLANNING • ENGINEERING
622 Emerson, Suite 200
St. Louis, MO 63141
Tel. 314.863.5717
Fax. 314.863.2823
www.hastingschivetta.com

VAN BOERUM & FRANK ASSOCIATES, INC.
CONSULTING ENGINEERS
Salt Lake City • Logan • St. George • Tempe
330 South 300 East 801.530.3148 T
Salt lake City, UT 84111 801.530.3150 F
VBFA Project 1002

# UNIVERSITY OF UTAH

## STUDENT LIFE CENTER

1836 E. BALLIF ROAD
SALT LAKE CITY, UTAH 84112

©2007 MHTN ARCHITECTS, INC.
Drawings, written material, and design concepts shall not be used or reproduced in whole or part in any form or format without prior written consent of MHTN Architects, Inc. Do not scale drawings. Use given dimensions only. If not shown, verify correct dimensions with the Architect. Contractor shall check and verify all dimensions and conditions at job site.

SEAL

MHTN PROJECT NO.

DRAWN BY: CHECKED BY:

ISSUED:

| NO. | DATE | DESCRIPTION |
|---|---|---|
| | | |

CONTRACTOR TO VERIFY DRAWINGS IN FIELD USE REFLECT LAST REVISION DATE.

| NO. | DATE | DESCRIPTION |
|---|---|---|
| | | |

SHEET NAME

ROOF
ALTERNATE 1
MECH PLAN
BID DOCUMENTS
MAY 15, 2013

SHEET NUMBER

MH107

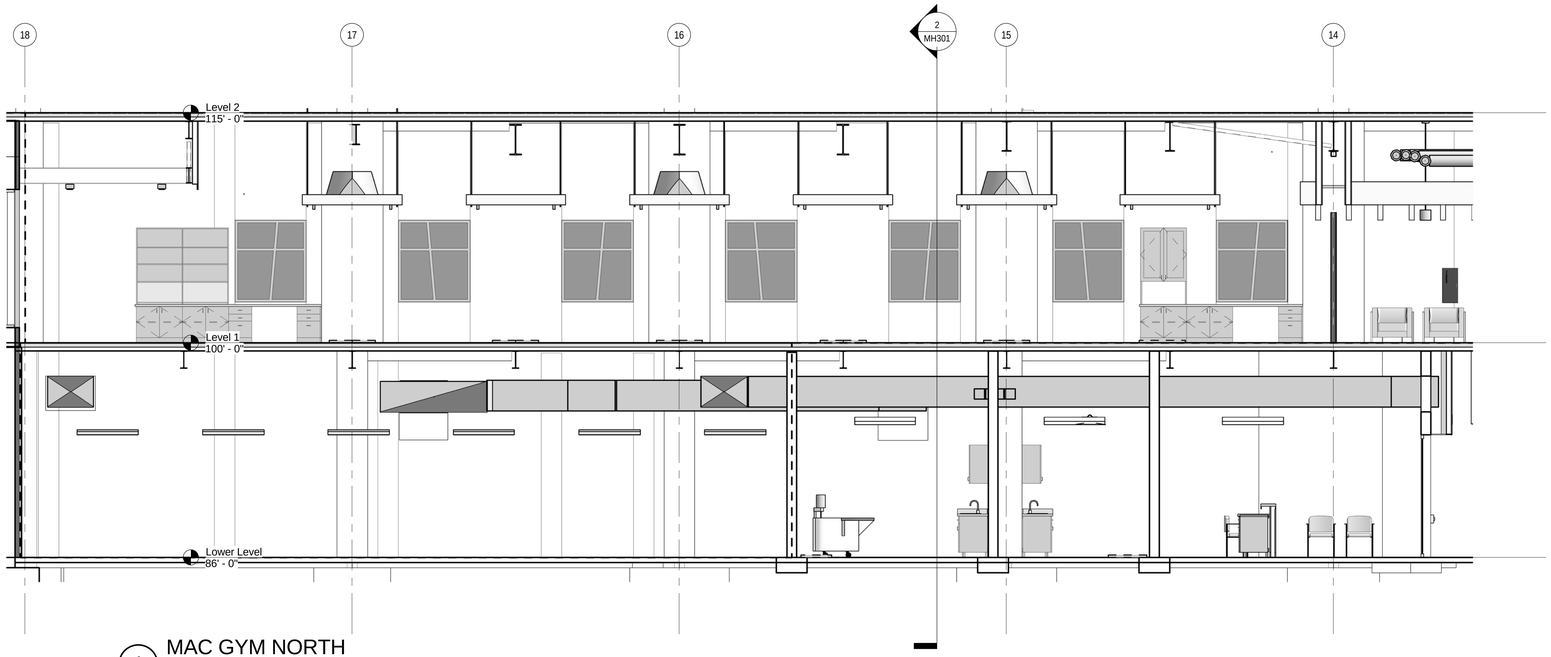


1 MAC GYM NORTH

0' 2'-0" 4'-0" 8'-0" 1/4" =1'-0"

SCALE: 1/4" = 1'-0"

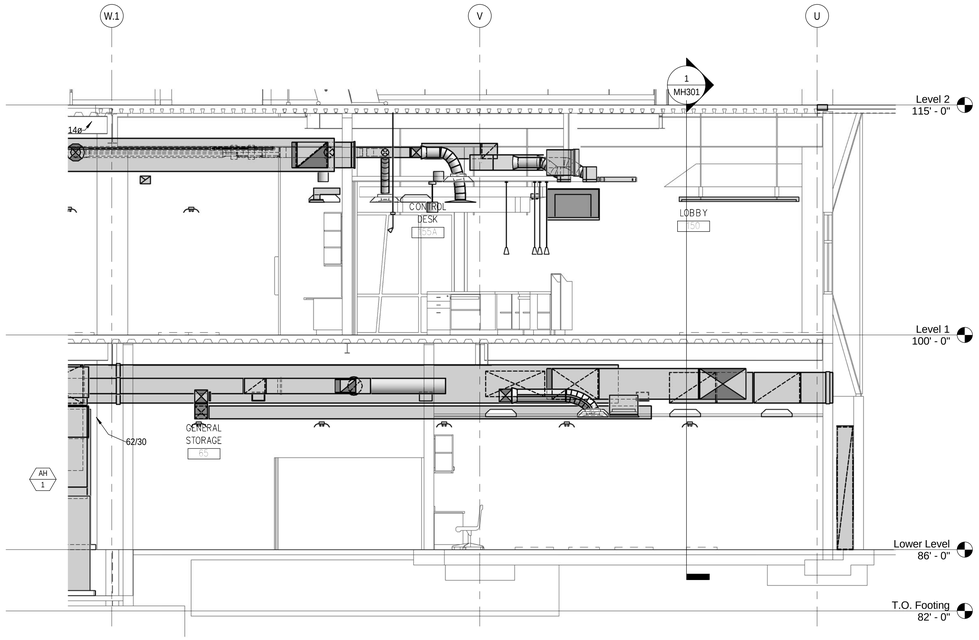


2 MAC GYM EAST

0' 2'-0" 4'-0" 8'-0" 1/4" =1'-0"

SCALE: 1/4" = 1'-0"

D:_Bim\Local\Mechanical_Central_JRobker.rvt
5/14/2013 12:51:44 PM


MHTN
ARCHITECTS
**MHTN Architects, Inc.**
420 East South Temple
Suite 100
Salt Lake City, Utah 84111
Telephone (801) 595-6700
Telefax (801) 595-6717
www.mhtn.com

**Hastings+Chivetta**
ARCHITECTURE • PLANNING • ENGINEERING
622 Emerson, Suite 200
St. Louis, MO 63141
Tel. 314.863.5717
Fax. 314.863.2823
www.hastingschivetta.com

VAN BOERUM & FRANK ASSOCIATES, INC.
CONSULTING ENGINEERS
Salt Lake City • Logan • St. George • Tempe
330 South 300 East 801.530.3148 T
Salt lake City, UT 84111 801.530.3150 F


# UNIVERSITY OF UTAH

## STUDENT LIFE CENTER

1836 E. BALLIF ROAD
SALT LAKE CITY, UTAH 84112


©2007 MHTN ARCHITECTS, INC.
Drawings, written material, and design concepts shall not be used or reproduced in whole or in part, without the written and dated permission consent of MHTN Architects, Inc. Do not scale drawings. Use given dimensions only. If not shown, verify correct dimensions with the Architect. Contractor shall check and verify all dimensions and conditions at job site.


SEAL

MHTN PROJECT NO.

DRAWN BY: CHECKED BY:

ISSUED:

| NO. | DATE | DESCRIPTION |
|---|---|---|
| | | |

CONTRACTOR TO VERIFY DRAWINGS IN FIELD USE REFLECT LAST REVISION DATE:

| NO. | DATE | DESCRIPTION |
|---|---|---|
| | | |

SHEET NAME

MECHANICAL SECTIONS

BID DOCUMENTS
MAY 15, 2013

SHEET NUMBER

MH301

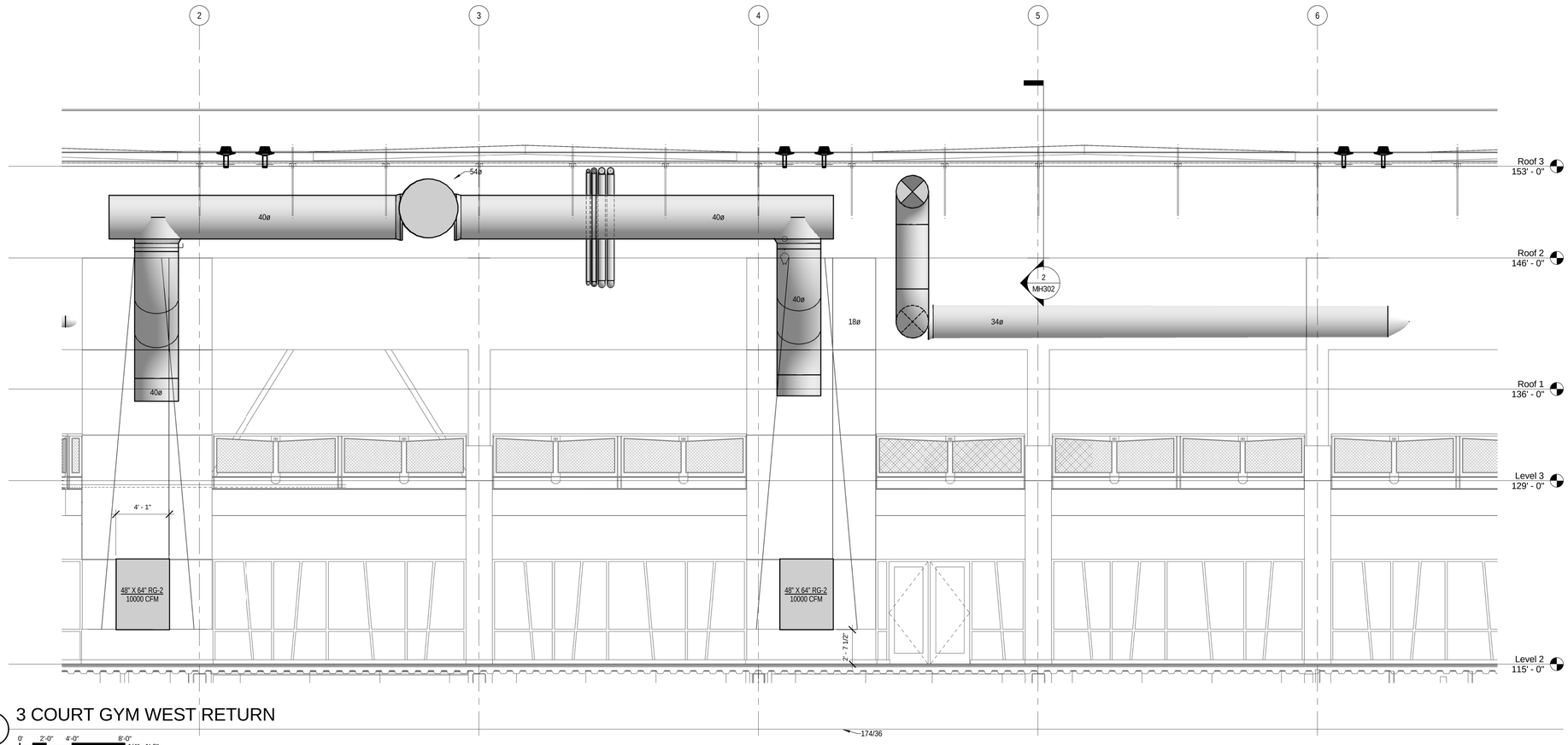


1 3 COURT GYM WEST RETURN

0' 2'-0" 4'-0" 8'-0" 1/4" =1'-0"

SCALE: 1/4" = 1'-0"

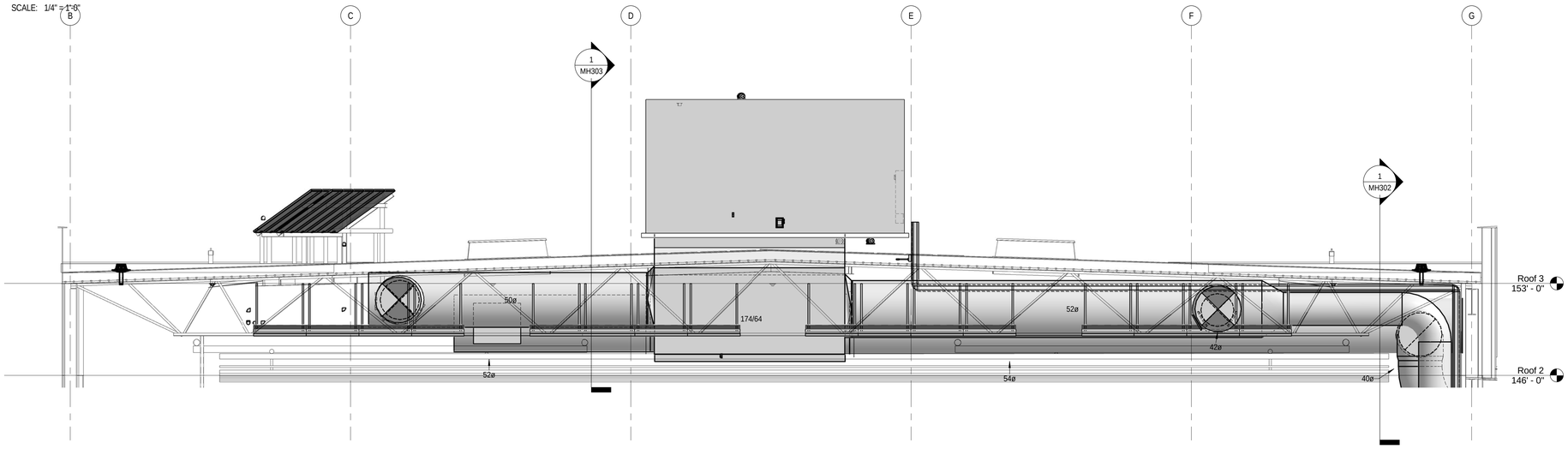


2 3 COURT GYM WEST SUPPLY

0' 2'-0" 4'-0" 8'-0" 1/4" =1'-0"

SCALE: 1/4" = 1'-0"

D:_Bim\Local\Mechanical_Central_JRobker.rvt
5/14/2013 12:51:59 PM

MHTN
ARCHITECTS
**MHTN Architects, Inc.**
420 East South Temple
Suite 100
Salt Lake City, Utah 84111
Telephone (801) 595-6700
Telefax (801) 595-6717
www.mhtn.com

**Hastings+Chivetta**
ARCHITECTURE • PLANNING • ENGINEERING
622 Emerson, Suite 200
St. Louis, MO 63141
Tel. 314.863.5717
Fax. 314.863.2823
www.hastingschivetta.com

VAN BOERUM & FRANK ASSOCIATES, INC.
CONSULTING ENGINEERS
Salt Lake City • Logan • St. George • Tempe
330 South 300 East 801.530.3148 T
Salt lake City, UT 84111 801.530.3150 F
VBF# Project 1002

# UNIVERSITY OF UTAH
## STUDENT LIFE CENTER
1836 E. BALLIF ROAD
SALT LAKE CITY, UTAH 84112

©2007 MHTN ARCHITECTS, INC.
Drawings, written material, and design concepts shall not be used or reproduced without the written consent of MHTN Architects, Inc. Permission to use requires consent of MHTN Architects, Inc. Do not scale drawings. Use given dimensions only. If not shown, verify correct dimensions with the Architect. Contractor shall check and verify all dimensions and conditions at job site.

SEAL

MHTN PROJECT NO.

DRAWN BY: CHECKED BY:

ISSUED:

| NO. | DATE | DESCRIPTION |
|---|---|---|
| | | |

CONTRACTOR TO VERIFY DRAWINGS IN FIELD USE REFLECT LAST REVISION DATE:

| NO. | DATE | DESCRIPTION |
|---|---|---|
| | | |

SHEET NAME
MECHANICAL SECTIONS

BID DOCUMENTS
MAY 15, 2013

SHEET NUMBER
MH302

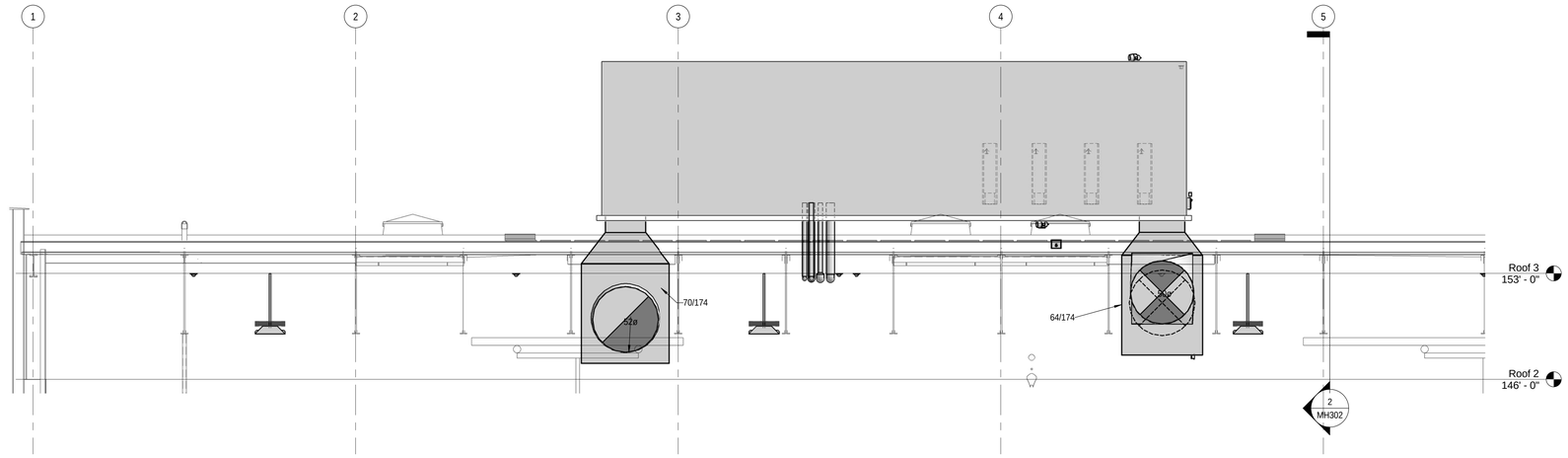


1 3 COURT GYM NORTH WEST

0' 2'-0" 4'-0" 8'-0"
1/4" =1'-0"

SCALE: 1/4" = 1'-0"

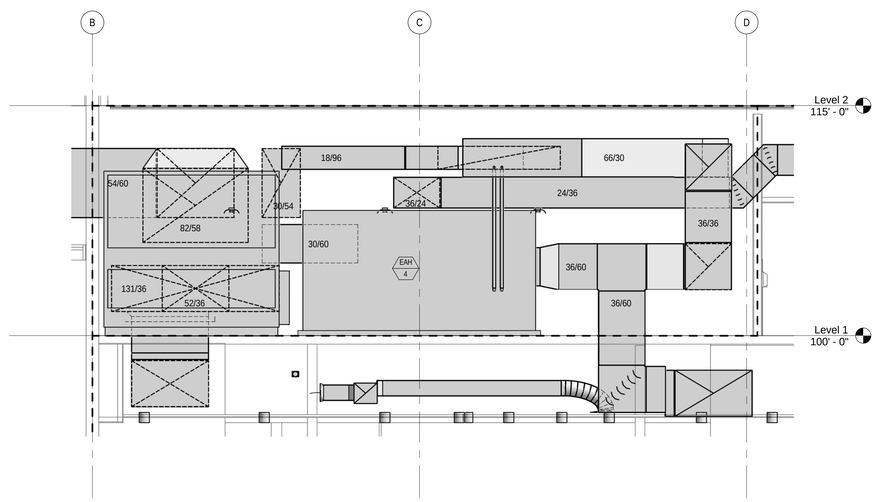


2 AH-3 SECTION NORTH WEST

0' 2'-0" 4'-0" 8'-0"
1/4" =1'-0"

SCALE: 1/4" = 1'-0"

D:_Bim\Local\Mechanical_Central_JRoldeker.rvt
5/14/2013 12:52:07 PM


MHTN
ARCHITECTS
**MHTN Architects, Inc.**
420 East South Temple
Suite 100
Salt Lake City, Utah 84111
Telephone (801) 595-6700
Telefax (801) 595-6717
www.mhtn.com

**Hastings+Chivetta**
ARCHITECTURE • PLANNING • ENGINEERING
622 Emerson, Suite 200
St. Louis, MO 63141
Tel. 314.863.5717
Fax. 314.863.2823
www.hastingschivetta.com

VAN BOERUM & FRANK ASSOCIATES, INC.
CONSULTING ENGINEERS
Salt Lake City • Logan • St. George • Tempe
330 South 300 East 801.530.3148 T
Salt lake City, UT 84111 801.530.3150 F


# UNIVERSITY OF UTAH
## STUDENT LIFE CENTER
1836 E. BALLIF ROAD
SALT LAKE CITY, UTAH 84112


©2007 MHTN ARCHITECTS, INC.
Drawings, written material, and design concepts shall not be used or reproduced in whole or in part in any form or format without prior written consent of MHTN Architects, Inc. Do not scale drawings. Use given dimensions only. If not shown, verify correct dimensions with the Architect. Contractor shall check and verify all dimensions and conditions at job site.


SEAL

MHTN PROJECT NO.

DRAWN BY: CHECKED BY:

ISSUED:

| NO. | DATE | DESCRIPTION |
|---|---|---|

CONTRACTOR TO VERIFY DRAWINGS IN FIELD-USE REFLECT LAST REVISION DATE.

| NO. | DATE | DESCRIPTION |
|---|---|---|

SHEET NAME
MECHANICAL SECTIONS

BID DOCUMENTS
MAY 15, 2013

SHEET NUMBER
MH303

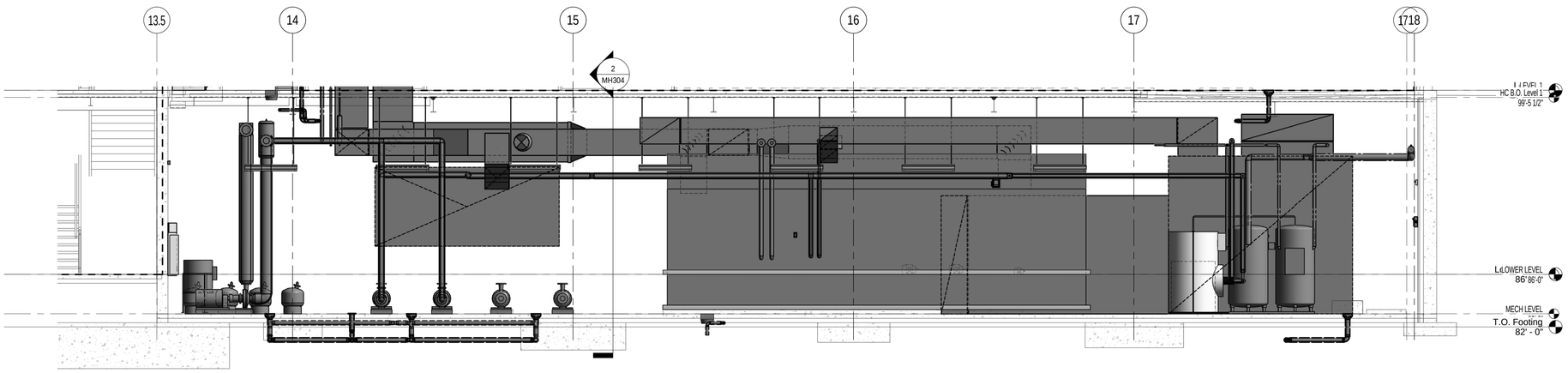


## LOWER LEVEL MECHANICAL ROOM NORTH SECTION

SCALE: 1/4" = 1'-0"

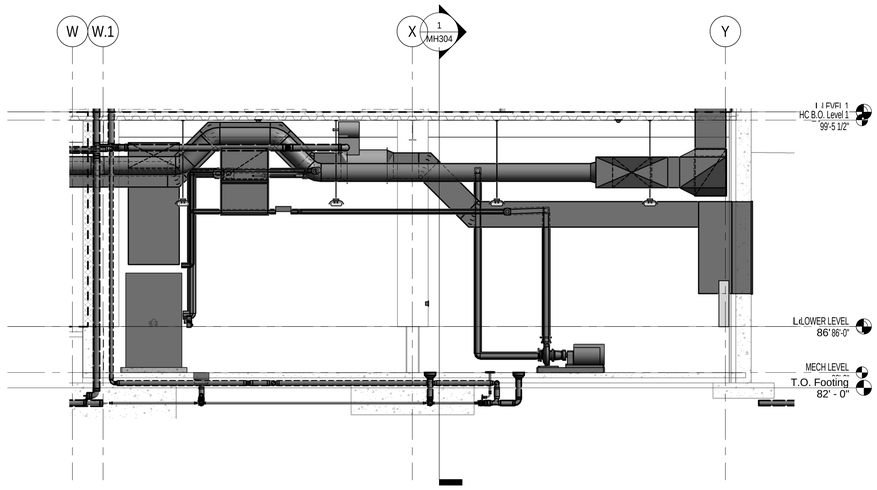


## 2 LOWER LEVEL MECHANICAL ROOM WEST SECTION

SCALE: 1/4" = 1'-0"


MHTN
ARCHITECTS
**MHTN Architects, Inc.**
420 East South Temple
Suite 100
Salt Lake City, Utah 84111
Telephone (801) 595-6700
Telefax (801) 595-6717
www.mhtn.com

**Hastings+Chivetta**
ARCHITECTURE • PLANNING • ENGINEERING
622 Emerson, Suite 200
St. Louis, MO 63141
Tel. 314.863.5717
Fax. 314.863.2823
www.hastingschivetta.com

VAN BOERUM & FRANK ASSOCIATES, INC.
CONSULTING ENGINEERS
Salt Lake City • Logan • St. George • Tempe
330 South 300 East 801.530.3148 T
Salt lake City, UT 84111 801.530.3150 F
VBF# Project 1002


REGISTERED PROFESSIONAL ENGINEER
No. 324030
BRADLY W. ROSENHAN
STATE OF UTAH

# UNIVERSITY OF UTAH
## STUDENT LIFE CENTER
1836 E. BALLIF ROAD
SALT LAKE CITY, UTAH 84112


©2007 MHTN ARCHITECTS, INC.
Drawings, written material, and design concepts shall not be used or reproduced in whole or in part in any form or format without prior written consent of MHTN Architects, Inc. Do not scale drawings. Use given dimensions only. If not shown, verify correct dimensions with the Architect. Contractor shall check and verify all dimensions and conditions at job site.


SEAL

MHTN PROJECT NO.

DRAWN BY: CHECKED BY:

ISSUED:

| NO. | DATE | DESCRIPTION |
|---|---|---|

CONTRACTOR TO VERIFY DRAWINGS IN FIELD USE REFLECT LAST REVISION DATE.

| NO. | DATE | DESCRIPTION |
|---|---|---|

SHEET NAME
MECHANICAL SECTIONS

BID DOCUMENTS
MAY 15, 2013

SHEET NUMBER
MH304

D:__Bim\Local\Mechanical_Central_JRoiker.rvt
5/14/2013 12:52:26 PM

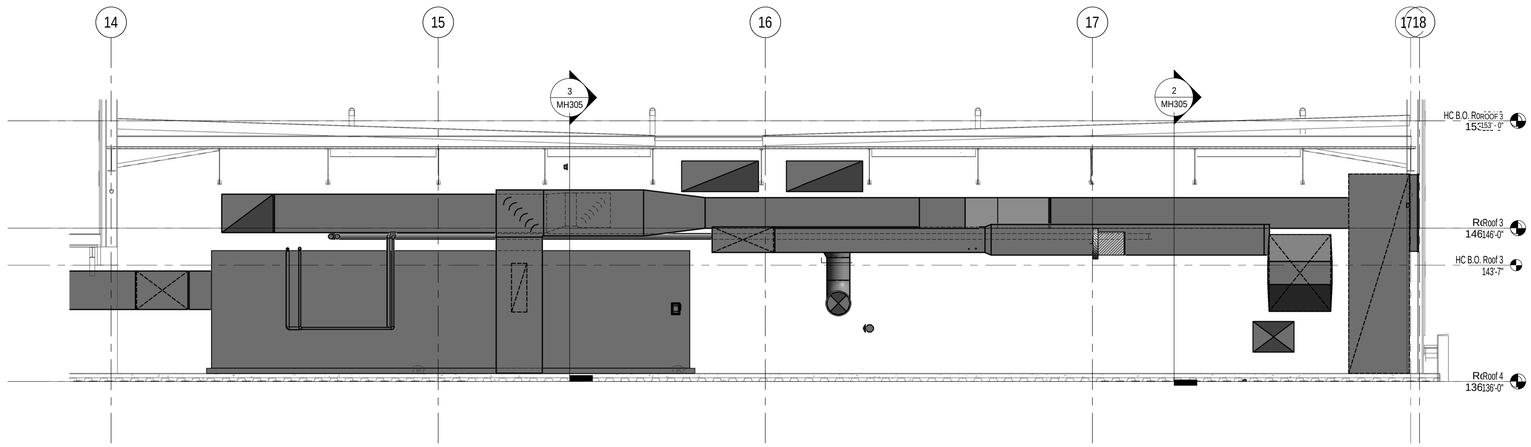


ENLARGED MECHANICAL
PENTHOUSE PLAN NORTH

1

SCALE: 1/4" = 1'-0"

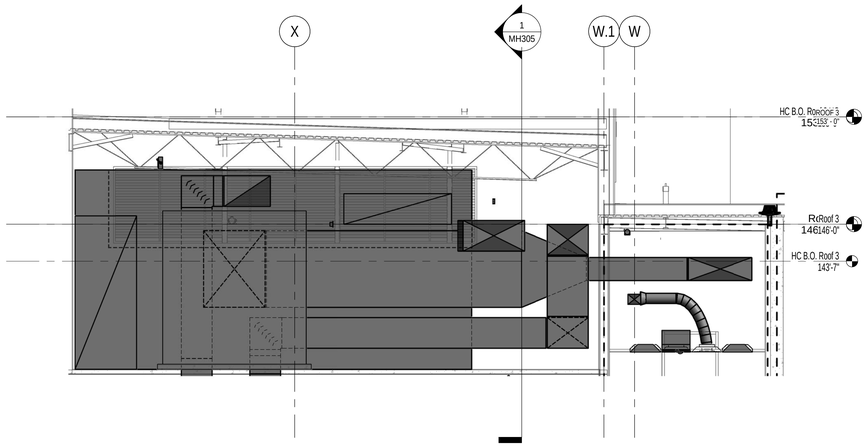


ENLARGED MECHANICAL
PENTHOUSE PLAN EAST SECTION

2

SCALE: 1/4" = 1'-0"

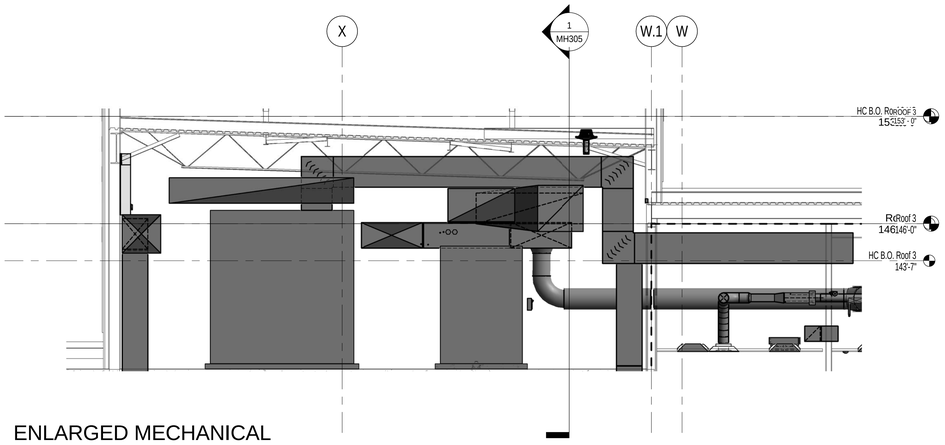


ENLARGED MECHANICAL
PENTHOUSE PLAN EAST SECTION
#2

3

SCALE: 1/4" = 1'-0"

D:_Bim\Local\Mechanical_Central_JRoiker.rvt
5/14/2013 12:52:38 PM

MHTN
ARCHITECTS
**MHTN Architects, Inc.**
420 East South Temple
Suite 100
Salt Lake City, Utah 84111
Telephone (801) 595-6700
Telefax (801) 595-6717
www.mhtn.com

**Hastings+Chivetta**
ARCHITECTURE • PLANNING • ENGINEERING
622 Emerson, Suite 200
St. Louis, MO 63141
Tel. 314.863.5717
Fax. 314.863.2823
www.hastingschivetta.com

VAN BOERUM
& FRANK ASSOCIATES, INC.
CONSULTING ENGINEERS
Salt Lake City • Logan • St. George • Tempe
330 South 300 East 801.530.3148 T
Salt lake City, UT 84111 801.530.3150 F
VBFA Project 1002

BUILDING OFFICIAL STAMP

# UNIVERSITY OF UTAH
## STUDENT LIFE CENTER
1836 E. BALLIF ROAD
SALT LAKE CITY, UTAH 84112

©2007 MHTN ARCHITECTS, INC.
Drawings, written material, and design concepts shall not be used or reproduced in whole or in part in any form or format without prior written consent of MHTN Architects, Inc. Do not scale drawings. Use given dimensions only. If not shown, verify correct dimensions with the Architect. Contractor shall check and verify all dimensions and conditions at job site.

SEAL

MHTN PROJECT NO.

DRAWN BY: CHECKED BY:

ISSUED:

| NO. | DATE | DESCRIPTION |
|---|---|---|

CONTRACTOR TO VERIFY DRAWINGS IN FIELD-USE REFLECT LAST REVISION DATE.

| NO. | DATE | DESCRIPTION |
|---|---|---|

SHEET NAME
MECHANICAL SECTIONS

BID DOCUMENTS
MAY 15, 2013

SHEET NUMBER
MH305

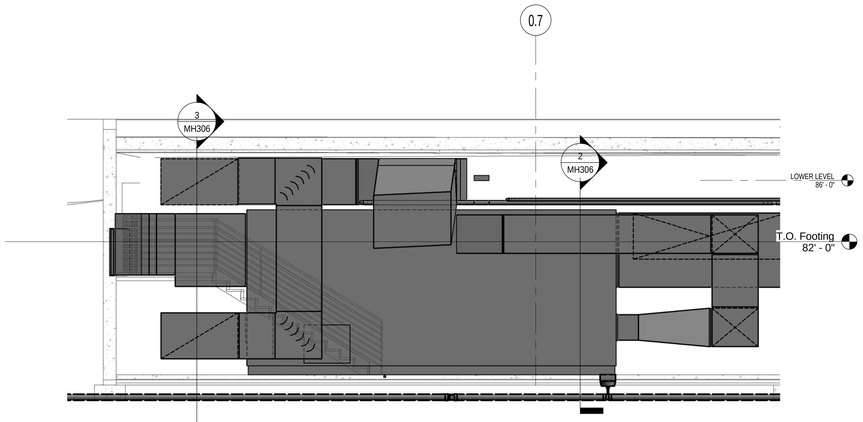


ENLARGED ALTERNATE 1
NATATORIUM MECHANICAL
NORTH SECTION

1

SCALE: 1/4" = 1'-0"

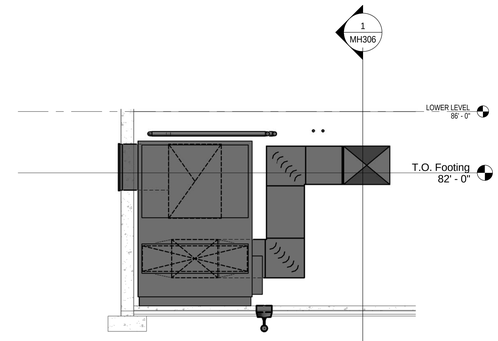


ENLARGED ALTERNATE 1
NATATORIUM MECHANICAL ROOM
EAST SECTION #1

2

SCALE: 1/4" = 1'-0"

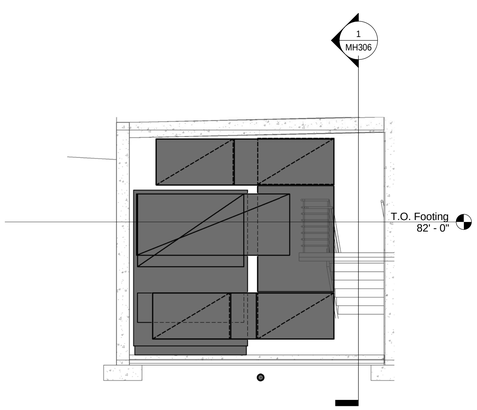


ENLARGED ALTERNATE 1
NATATORIUM MECHANICAL ROOM
EAST SECTION #2

3

SCALE: 1/4" = 1'-0"

D:_Bim\Local\Mechanical_Central_JRobker.rvt
5/14/2013 12:52:49 PM

MHTN
ARCHITECTS
**MHTN Architects, Inc.**
420 East South Temple
Suite 100
Salt Lake City, Utah 84111
Telephone (801) 595-6700
Telefax (801) 595-6717
www.mhtn.com

**Hastings+Chivetta**
ARCHITECTURE • PLANNING • ENGINEERING
622 Emerson, Suite 200
St. Louis, MO 63141
Tel. 314.863.5717
Fax. 314.863.2823
www.hastingschivetta.com

VAN BOERUM
& FRANK ASSOCIATES, INC.
CONSULTING ENGINEERS
Salt Lake City • Logan • St. George • Tempe
330 South 300 East 801.530.3148 T
Salt lake City, UT 84111 801.530.3150 F
VBFA Project 1042

BUILDING OFFICIAL STAMP

# UNIVERSITY OF UTAH
## STUDENT LIFE CENTER
1836 E. BALLIF ROAD
SALT LAKE CITY, UTAH 84112

©2007 MHTN ARCHITECTS, INC.
Drawings, written material, and design concepts shall not be used or reproduced in whole or in part in any form or format without prior written consent of MHTN Architects, Inc. Do not scale drawings. Use given dimensions only. If not shown, verify correct dimensions with the Architect. Contractor shall check and verify all dimensions and conditions at job site.

SEAL

MHTN PROJECT NO.

DRAWN BY: CHECKED BY:

ISSUED:

| NO. | DATE | DESCRIPTION |
|---|---|---|

CONTRACTOR TO VERIFY DRAWINGS IN FIELD-USE REFLECT LAST REVISION DATE.

| NO. | DATE | DESCRIPTION |
|---|---|---|

SHEET NAME
MECHANICAL SECTIONS

BID DOCUMENTS
MAY 15, 2013

SHEET NUMBER
MH306

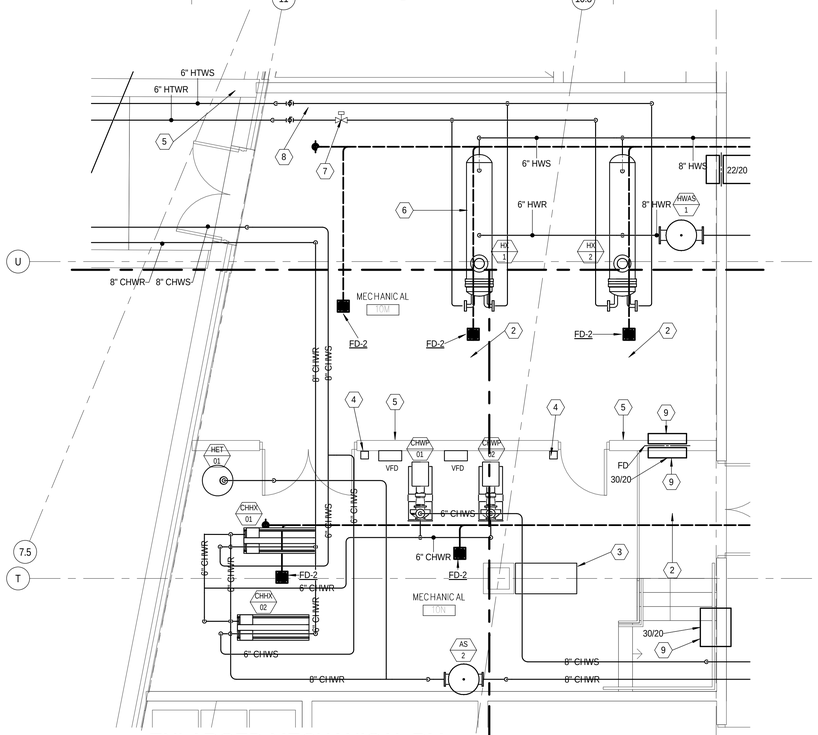


ENLARGED MECHANICAL RM 10M-10N PLAN

1

0 2' - 0" 4' - 0" 8' - 0"

SCALE: 1/4" = 1'-0"

## SHEET KEYNOTES

| | |
|---|---|
| 1 | 4" HOUSEKEEPING PAD, TYPICAL. |
| 2 | I-BEAM HOIST LOCATION, SEE STRUCTURAL. |
| 3 | SPEEDAIRE 4B237, 3 HP AIR COMPRESSOR OR EQUAL. CONNECT TO PNEUMATIC VALVES ON HTW SYSTEM. |
| 4 | EMERGENCY SHUTOFF SWITH FOR HTW SYSTEM. |
| 5 | INSTALL ANCHOR PLATE ON WALL FOR HOIST HOOK TO ATTACH TO. |
| 6 | SEE HEAT EXCHANGER DETAILS FOR PIPING. |
| 7 | PNEUMATIC SHUTOFF VALVE, SEE DETAILS. |
| 8 | HTW BYPASS, SEE DETAILS. |
| 9 | RETURN GRILLE TO BE INSTALLED ON END OF DUCT. |

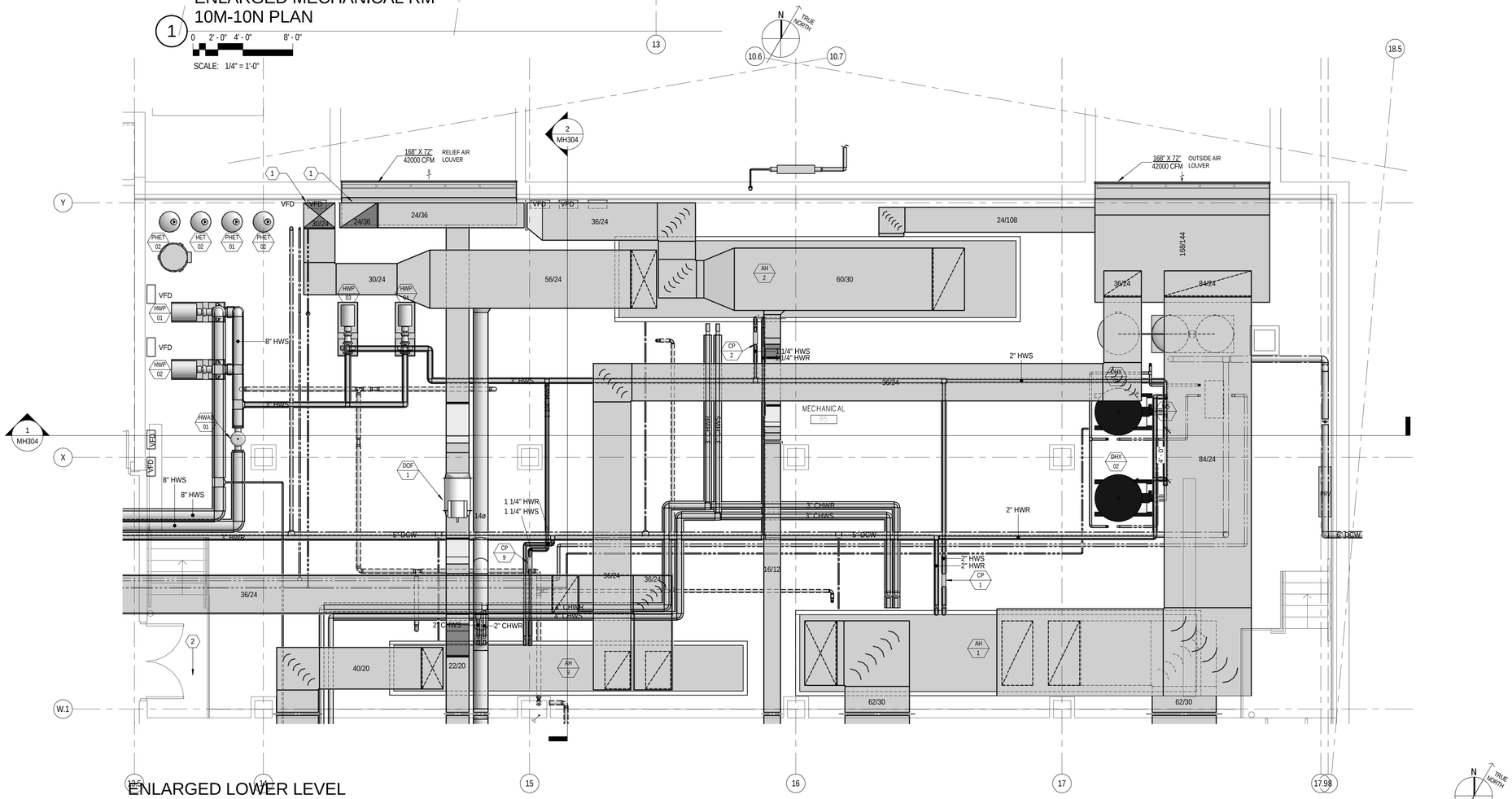


ENLARGED LOWER LEVEL MECHANICAL ROOM 85 PLAN

2

0 2' - 0" 4' - 0" 8' - 0"

SCALE: 1/4" = 1'-0"

D:_BimLocal\Mechanical_Central_JRobker.rvt
5/14/2013 12:53:06 PM


MHTN ARCHITECTS

**MHTN Architects, Inc.**
420 East South Temple
Suite 100
Salt Lake City, Utah 84111
Telephone (801) 595-6700
Telefax (801) 595-6717
www.mhtn.com

**Hastings+Chivetta**
ARCHITECTURE • PLANNING • ENGINEERING
622 Emerson, Suite 200
St. Louis, MO 63141
Tel. 314.863.5717
Fax. 314.863.2823
www.hastingschivetta.com

VAN BOERUM & FRANK ASSOCIATES, INC.
CONSULTING ENGINEERS
Salt Lake City • Logan • St. George • Tempe
330 South 300 East 801.530.3148 T
Salt lake City, UT 84111 801.530.3150 F


# UNIVERSITY OF UTAH
## STUDENT LIFE CENTER
1836 E. BALLIF ROAD
SALT LAKE CITY, UTAH 84112


©2007 MHTN ARCHITECTS, INC.
Drawings, written material, and design concepts shall not be used or reproduced in whole or part in any form or format without prior written consent of MHTN Architects, Inc. Do not scale drawings. Use given dimensions only. If not shown, verify correct dimensions with the Architect. Contractor shall check and verify all dimensions and conditions at job site.


SEAL

MHTN PROJECT NO.

DRAWN BY: CHECKED BY:

ISSUED:

| NO. | DATE | DESCRIPTION |
|---|---|---|

CONTRACTOR TO VERIFY DRAWINGS IN FIELD USE REFLECT LAST REVISION DATE.

| NO. | DATE | DESCRIPTION |
|---|---|---|

SHEET NAME

ENLARGED MECHANICAL PLANS

BID DOCUMENTS

MAY 15, 2013

SHEET NUMBER

MH401

## SHEET KEYNOTES

1. ALL EQUIPMENT AND PIPING FOR SNOWMELT SHALL BE BROKEN OUT FOR BID ALTERNATE PRICING.
2. GLYCOL FEED UNIT.
3. 4" HOUSEKEEPING PAD, TYPICAL.
4. DUCT DROPS TO FLOOR BELOW. SEE MH100C.
5. DRYER VENT TERMINATION.

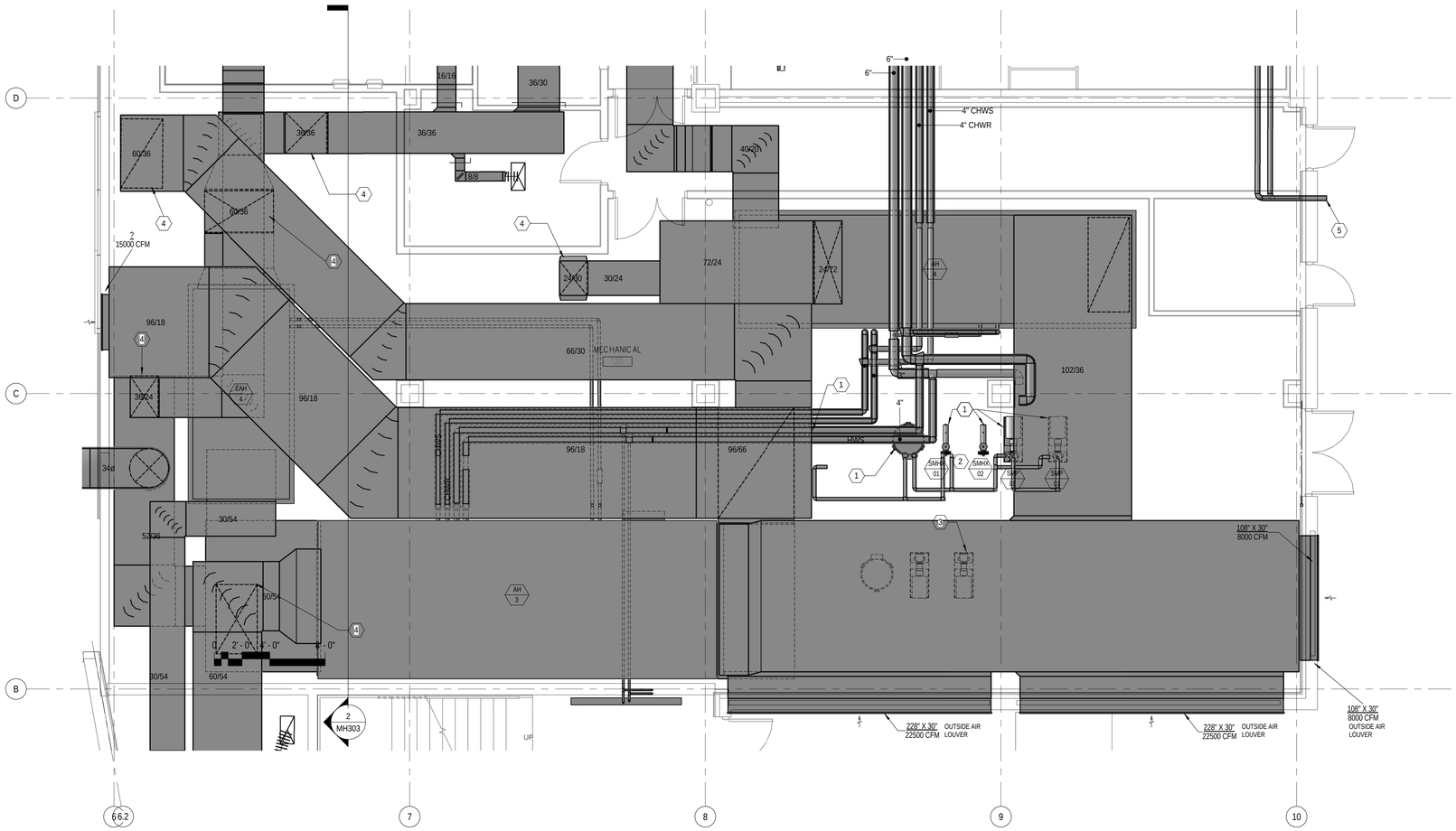


ENLARGED MECHANICAL ROOM
120

1

SCALE: 1/4" = 1'-0"

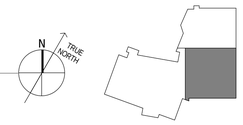


KEYPLAN


MHTN
ARCHITECTS
**MHTN Architects, Inc.**
420 East South Temple
Suite 100
Salt Lake City, Utah 84111
Telephone (801) 595-6700
Telefax (801) 595-6717
www.mhtn.com

**Hastings+Chivetta**
ARCHITECTURE • PLANNING • ENGINEERING
622 Emerson, Suite 200
St. Louis, MO 63141
Tel. 314.863.5717
Fax. 314.863.2823
www.hastingschivetta.com

VAN BOERUM & FRANK ASSOCIATES, INC.
CONSULTING ENGINEERS
Salt Lake City • Logan • St. George • Tempe
330 South 300 East 801.530.3148 T
Salt lake City, UT 84111 801.530.3150 F


# UNIVERSITY OF UTAH
## STUDENT LIFE CENTER
1836 E. BALLIF ROAD
SALT LAKE CITY, UTAH 84112


©2007 MHTN ARCHITECTS, INC.
Drawings, written material, and design concepts shall not be used or reproduced in whole or part in any form or format without prior written consent of MHTN Architects, Inc. Do not scale drawings. Use given dimensions only. If not shown, verify correct dimensions with the Architect. Contractor shall check and verify all dimensions and conditions at job site.


SEAL

MHTN PROJECT NO.

DRAWN BY: CHECKED BY:

ISSUED:

| NO. | DATE | DESCRIPTION |
|---|---|---|
| | | |

CONTRACTOR TO VERIFY DRAWINGS IN FIELD USE REFLECT LAST REVISION DATE.

| NO. | DATE | DESCRIPTION |
|---|---|---|
| | | |

SHEET NAME

ENLARGED MECHANICAL PLANS
BID DOCUMENTS
MAY 15, 2013

SHEET NUMBER

MH402

D:__Bim\Local\Mechanical_Central_JRobker.rvt
5/14/2013 12:53:18 PM

## SHEET KEYNOTES

| | |
|---|---|
| 1 | OUSIDE AIR LOUVER. |
| 2 | RELIEF AIR LOUVER. |

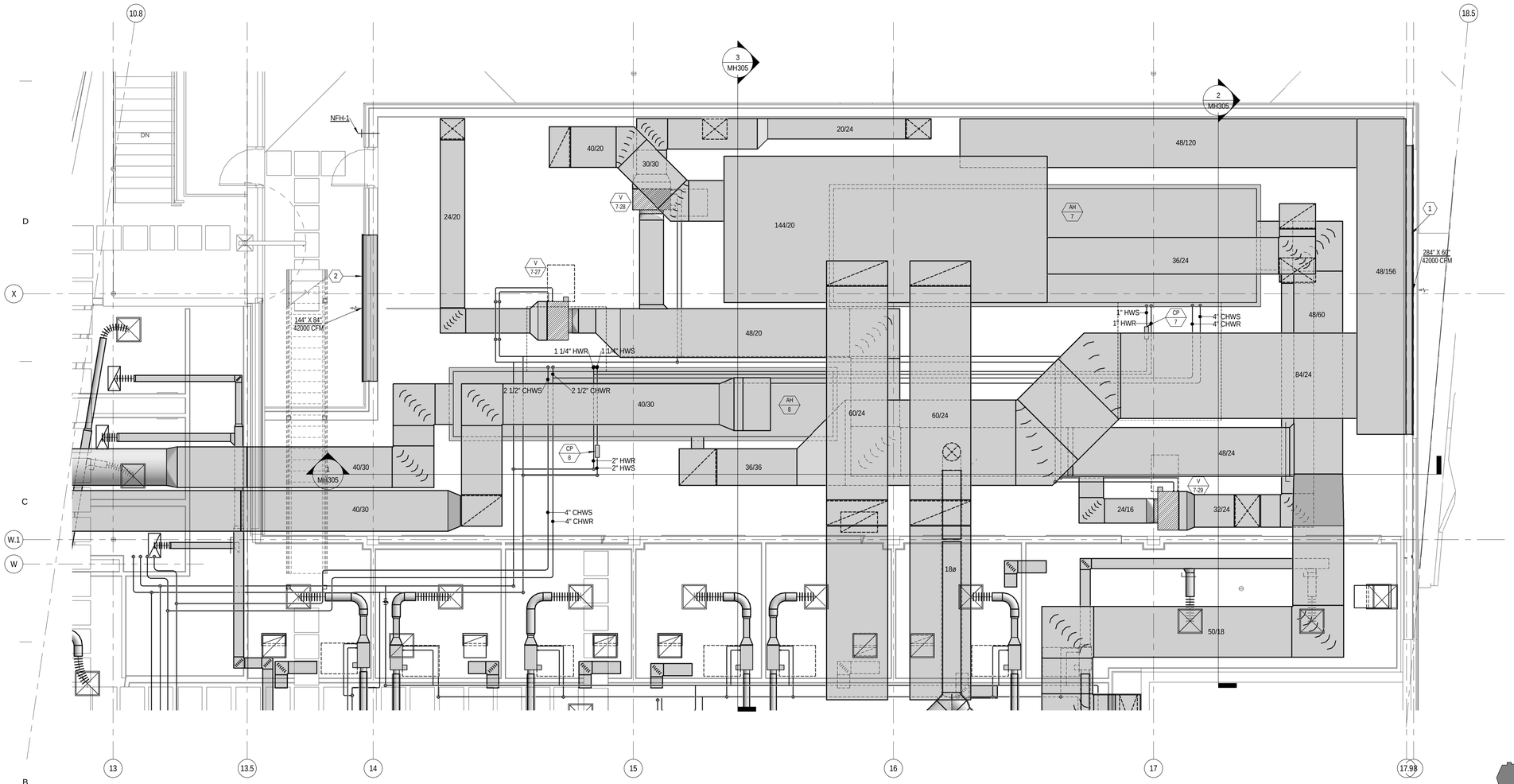


# ENLARGED MECHANICAL PENTHOUSE PLAN

1

0 2' - 0" 4' - 0" 8' - 0"

SCALE: 1/4" = 1'-0"

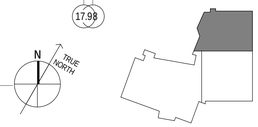


KEYPLAN

D:_BimLocal\Mechanical_Central_JRobker.rvt
5/14/2013 12:53:29 PM


MHTN ARCHITECTS

**MHTN Architects, Inc.**
420 East South Temple
Suite 100
Salt Lake City, Utah 84111
Telephone (801) 595-6700
Telefax (801) 595-6717
www.mhtn.com

**Hastings+Chivetta**
ARCHITECTURE • PLANNING • ENGINEERING
622 Emerson, Suite 200
St. Louis, MO 63141
Tel. 314.863.5717
Fax. 314.863.2823
www.hastingschivetta.com

VAN BOERUM & FRANK ASSOCIATES, INC.
CONSULTING ENGINEERS
Salt Lake City • Logan • St. George • Tempe
330 South 300 East 801.530.3148 T
Salt lake City, UT 84111 801.530.3150 F
VBF# Project 1002


# UNIVERSITY OF UTAH
## STUDENT LIFE CENTER
1836 E. BALLIF ROAD
SALT LAKE CITY, UTAH 84112


©2007 MHTN ARCHITECTS, INC.
Drawings, written material, and design concepts shall not be used or reproduced in whole or part in any form or format without prior written consent of MHTN ARCHITECTS, INC. Do not scale drawings - use given dimensions only. If not shown, verify correct dimensions with the Architect. Contractor shall check and verify all dimensions and conditions at job site.


SEAL

MHTN PROJECT NO.

DRAWN BY: CHECKED BY:

ISSUED:

| NO. | DATE | DESCRIPTION |
|---|---|---|

CONTRACTOR TO VERIFY DRAWINGS IN FIELD USE REFLECT LAST REVISION DATE:

| NO. | DATE | DESCRIPTION |
|---|---|---|

SHEET NAME

ENLARGED MECHANICAL PENTHOUSE

BID DOCUMENTS

MAY 15, 2013

SHEET NUMBER

# MH403

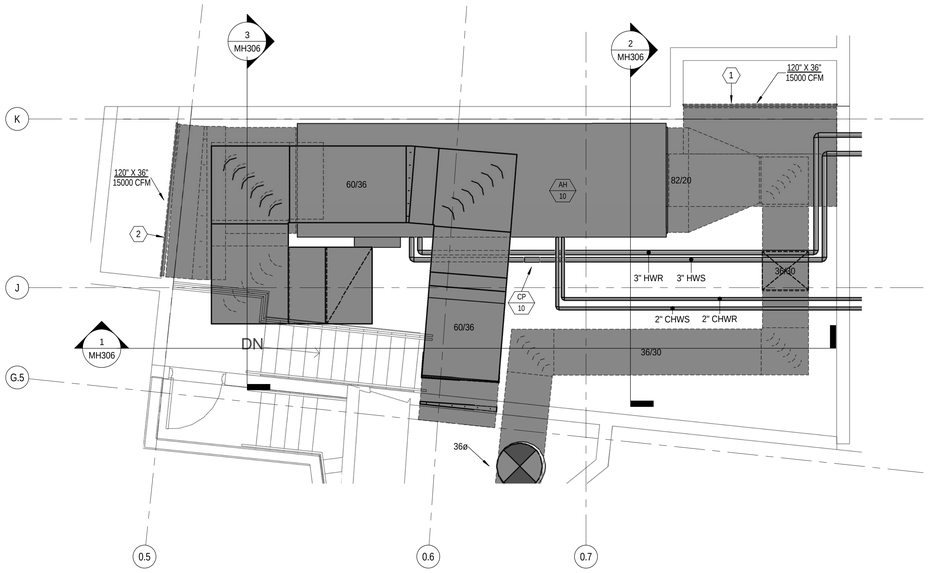


ENLARGED ALTERNATE 1
NATATORIUM MECHANICAL ROOM

1

0' 2'-0" 4'-0" 8'-0"
1/4" =1'-0"

SCALE: 1/4" = 1'-0"

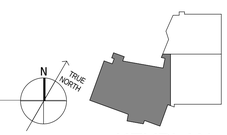


KEYPLAN

MHTN
ARCHITECTS
**MHTN Architects, Inc.**
420 East South Temple
Suite 100
Salt Lake City, Utah 84111
Telephone (801) 595-6700
Telefax (801) 595-6717
www.mhtn.com

**Hastings+Chivetta**
ARCHITECTURE • PLANNING • ENGINEERING
622 Emerson, Suite 200
St. Louis, MO 63141
Tel. 314.863.5717
Fax. 314.863.2823
www.hastingschivetta.com

VAN BOERUM
& FRANK ASSOCIATES, INC.
CONSULTING ENGINEERS
Salt Lake City • Logan • St. George • Tempe
330 South 300 East 801.530.3148 T
Salt lake City, UT 84111 801.530.3150 F
VBF# Project 1002

# UNIVERSITY OF UTAH
## STUDENT LIFE CENTER
1836 E. BALLIF ROAD
SALT LAKE CITY, UTAH 84112

©2007 MHTN ARCHITECTS, INC.
Drawings, written material, and design concepts shall not be used or reproduced in whole or part in any form or format without prior written consent of MHTN Architects, Inc. Do not scale drawings. Use given dimensions only. If not shown, verify correct dimensions with the Architect. Contractor shall check and verify all dimensions and conditions at job site.

SEAL

MHTN PROJECT NO.

DRAWN BY: CHECKED BY:

ISSUED:

| NO. | DATE | DESCRIPTION |
|---|---|---|
| | | |

CONTRACTOR TO VERIFY DRAWINGS IN FIELD USE REFLECT LAST REVISION DATE.

| NO. | DATE | DESCRIPTION |
|---|---|---|
| | | |

SHEET NAME

ENLARGED MECHANICAL PLANS
BID DOCUMENTS
MAY 15, 2013

SHEET NUMBER

MH404

D:_BimLocal\Mechanical_Central_JRobker.rvt
5/14/2013 12:53:32 PM

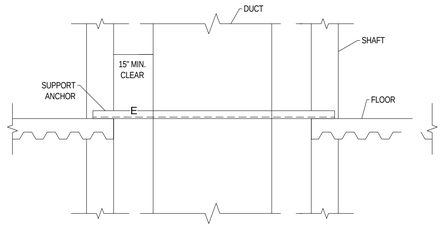


## 19 DUCT IN SHAFT SUPPORT DETAIL
MH501 NO SCALE

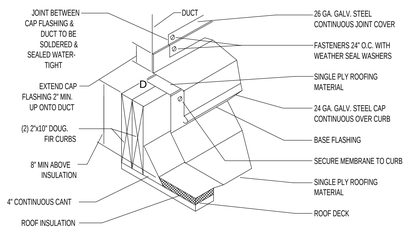


## 20 ROOF CURB DETAIL
MH501 NO SCALE

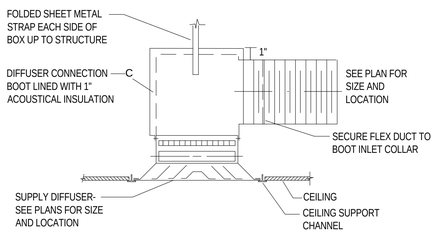


## 21 SUPPLY DIFFUSER W/ FLEX DUCT DETAIL
MH501 NO SCALE

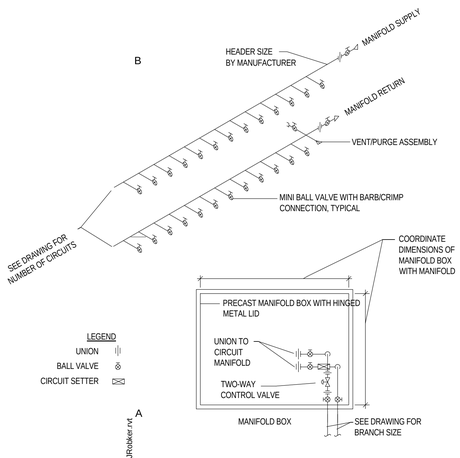


## 22 SNOW MELT MANIFOLD DETAIL
MH501 NO SCALE

D:_BimLocal\Mechanical_Central_JRobker.rvt
5/14/2013 12:53:33 PM

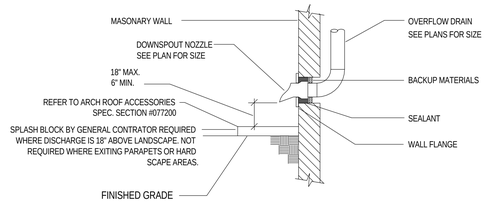


## 14 DOWNSPOUT NOZZLE DETAIL
MH501 NO SCALE

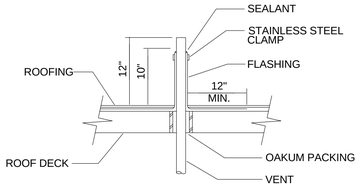


## 15 VENT THRU ROOF FLASHING & SLEEVING DETAIL
MH501 NO SCALE

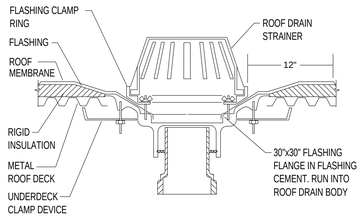


## 16 ROOF DRAIN
MH501 NO SCALE

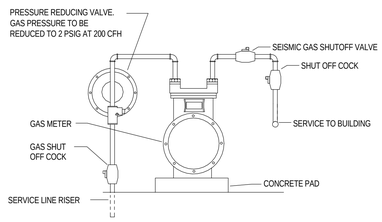


## 17 GAS METER DETAIL
MH501 NO SCALE

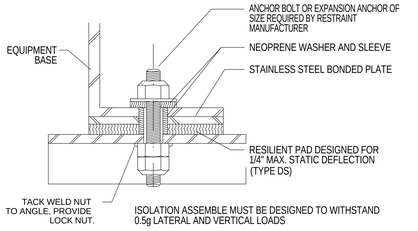


## 18 RESILIENT PAD ISOLATOR RESTRAINT DETAIL
MH501 NO SCALE

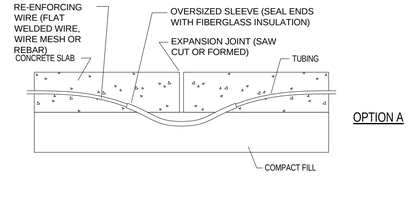


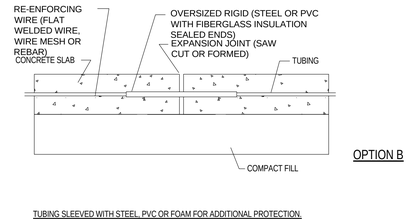


## 10 SNOW MELT TUBING IN SLAB
MH501 NO SCALE

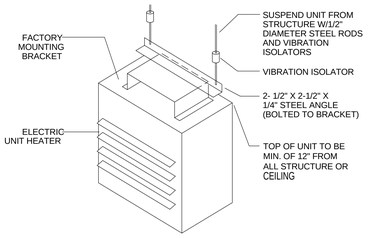


## 11 ELECTRIC UNIT HEATER MOUNTING DETAIL
MH501 NO SCALE

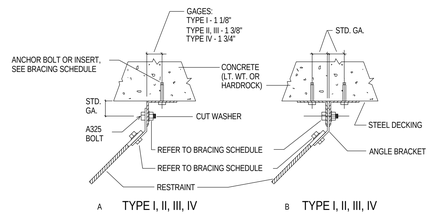


## 12 RESTRAINT CONNECTIONS TO CONCRETE
MH501 NO SCALE

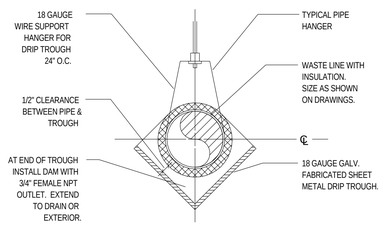


## 13 CROSS SECTIONAL DETAIL OF DRIP TROUGH
MH501 NO SCALE

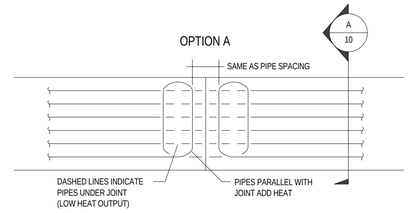


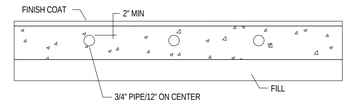


SECTION A

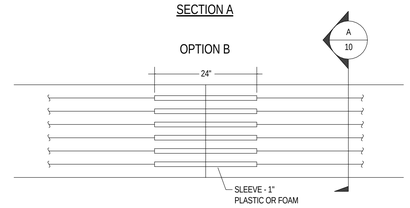


## 6 SNOW MELT SYSTEM JOINT DETAIL
MH501 NO SCALE

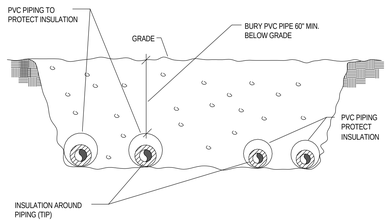


## 7 BELOW GRADE PIPING DETAIL
MH501 NO SCALE

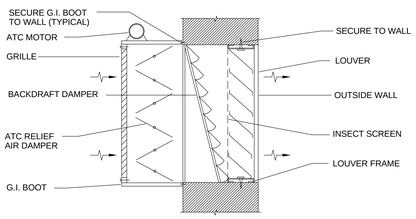


## 8 ATC RELIEF AIR DAMPER & LOUVER SECTION
MH501 NO SCALE

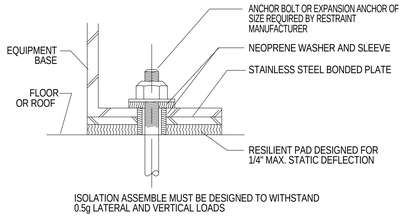


## 9 RESILIENT PAD ISOLATOR RESTRAINT DETAIL
MH501 NO SCALE

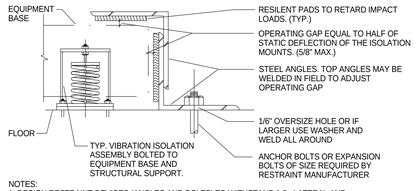


NOTES:
1 DESIGN RESTRAINT DEVICES (ANGLES AND BOLTS) TO WITHSTAND 1.0g LATERAL AND VERTICAL LOADS.
2 INSTALL LATERAL RESTRAINING DEVICES ON ALL SIDES OF EQUIPMENT BASE

## 1 SPRING ISOLATOR RESTRAINT DETAIL
MH501 NO SCALE

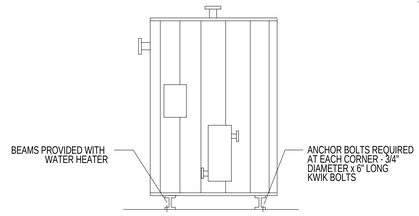


## 2 WATER HEATER ANCHORAGE
MH501 NO SCALE

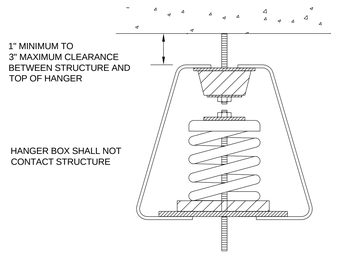


## 3 VIBRATION ISOLATION HANGER CLEARANCE
MH501 NO SCALE

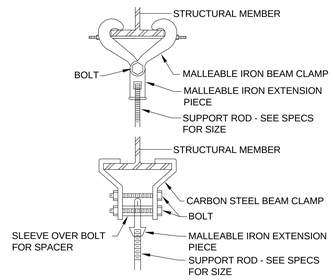


## 4 BEAM CLAMPS FOR PIPE OR EQUIPMENT SUPPORT
MH501 NO SCALE

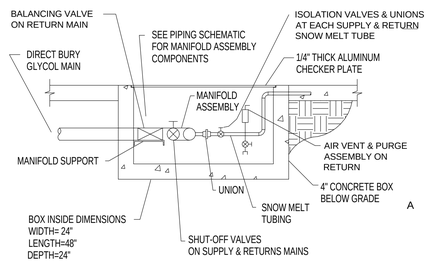


## 5 SNOW MELT ZONE BOX
MH501 NO SCALE


MHTN ARCHITECTS
MHTN Architects, Inc.
420 East South Temple
Suite 100
Salt Lake City, Utah 84111
Telephone (801) 595-6700
Telefax (801) 595-6717
www.mhtn.com

Hastings+Chivetta
ARCHITECTURE • PLANNING • ENGINEERING
622 Emerson, Suite 200
St. Louis, MO 63141
Tel. 314.863.5717
Fax. 314.863.2823
www.hastingschivetta.com

VAN BOERUM & FRANK ASSOCIATES, INC.
CONSULTING ENGINEERS
Salt Lake City • Logan • St. George • Tempe
330 South 300 East 801.530.3148 T
Salt lake City, UT 84111 801.530.3150 F


# UNIVERSITY OF UTAH
# STUDENT LIFE CENTER
1836 E. BALLIF ROAD
SALT LAKE CITY, UTAH 84112


©2007 MHTN ARCHITECTS, INC.
Drawings, written material, and design concepts shall not be used or reproduced in whole or part in any form or format without prior written consent of MHTN ARCHITECTS, INC. Do not scale drawings - use only given dimensions only. If not shown, verify correct dimensions with the Architect. Contractor shall check and verify all dimensions and conditions at job site.


SEAL

MHTN PROJECT NO.

DRAWN BY: CHECKED BY:

ISSUED:

| NO. | DATE | DESCRIPTION |
|---|---|---|

CONTRACTOR TO VERIFY DRAWINGS IN FIELD USE REFLECT LAST REVISION DATE:

| NO. | DATE | DESCRIPTION |
|---|---|---|

SHEET NAME
MECHANICAL DETAILS

BID DOCUMENTS
MAY 15, 2013

SHEET NUMBER
MH501

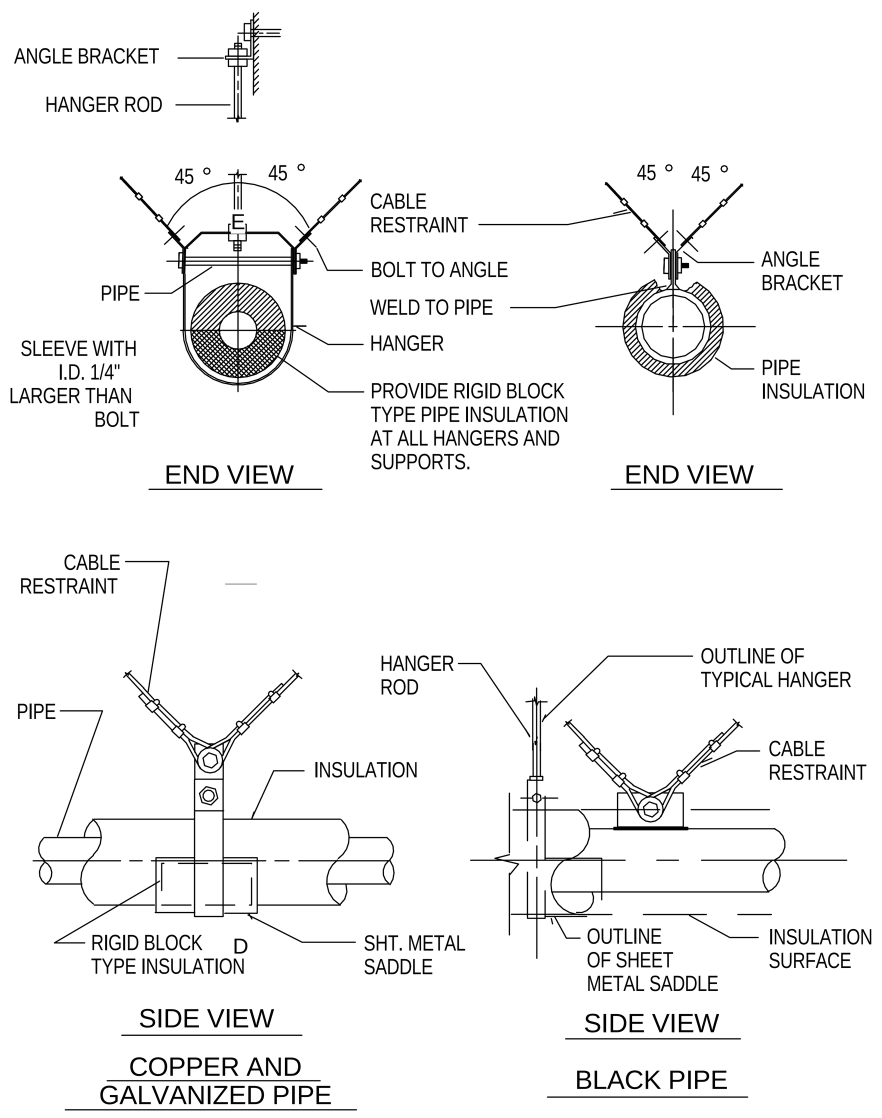


## 16 PIPING RESTRAINT DETAIL
MH502 NO SCALE

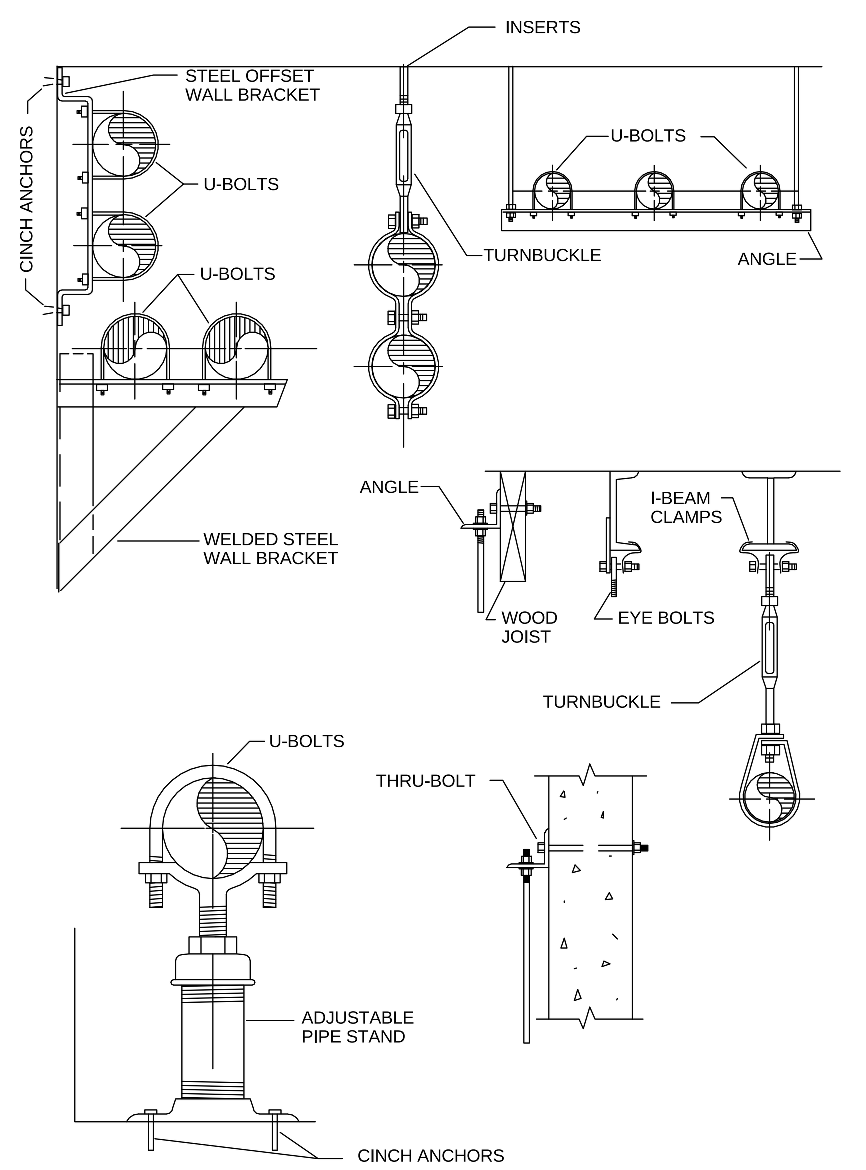


## 13 TYPICAL PIPE SUPPORT DETAIL
MH502 NO SCALE

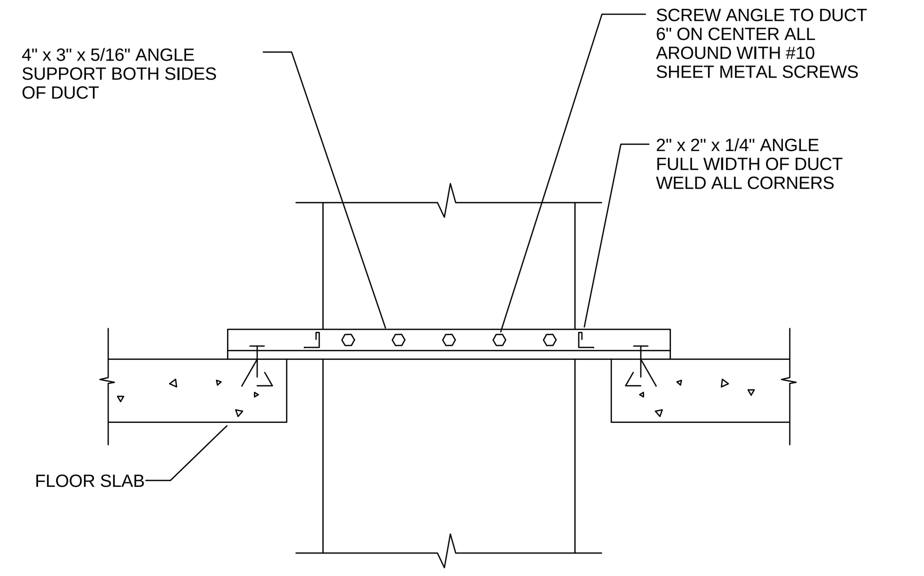


NOTES:

1. SUPPORT DUCT AT EACH FLOOR.
2. SUPPORT OF ROUND DUCT SIMILAR EXCEPT SCREW CLAMP TO DUCT SAME SIZE AS DUCT OUTSIDE DIAMETER AND BOLT CLAMP TO ANGLE SUPPORTS.
3. SIZE SUPPORT ANGLES AND DUCT CLAMPS AS REQUIRED TO SUPPORT WEIGHT OF DUCTWORK.
4. OMIT SCREWS AT FUME EXHAUST DUCTS AND BOLT ANGLES TO DUCT COMPANION ANGLE FLANGES.

## 10 DUCT RISER SUPPORT IN CHASE DETAIL
MH502 NO SCALE

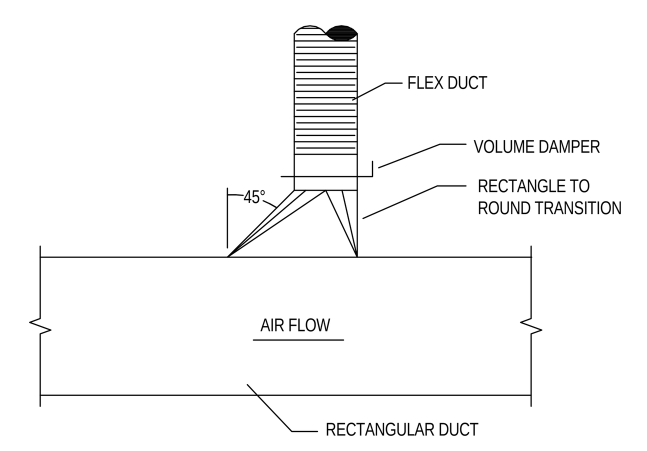


## 6 HIGH EFFICIENCY TAKE-OFF DETAIL
MH502 NO SCALE

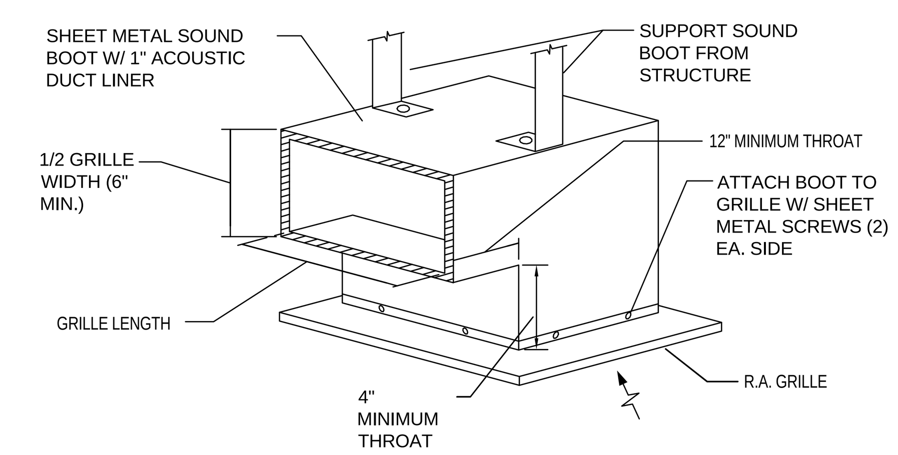


## 1 R.A. GRILLE WITH SOUND BOOT
MH502 NO SCALE

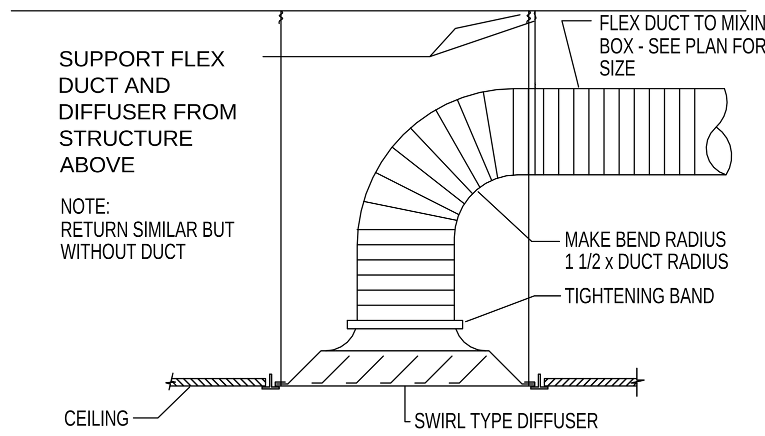


## 7 DIFFUSER CONNECTION DETAIL
MH502 NO SCALE

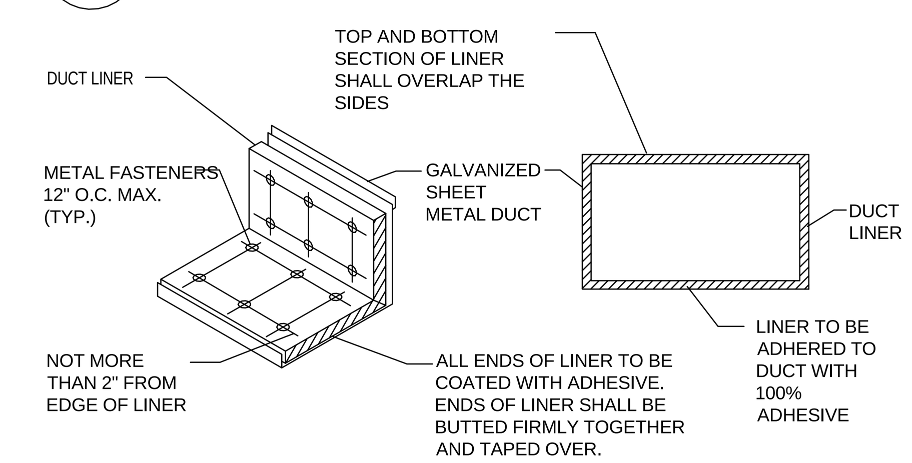


## 2 DUCT LINER DETAIL
MH502 NO SCALE

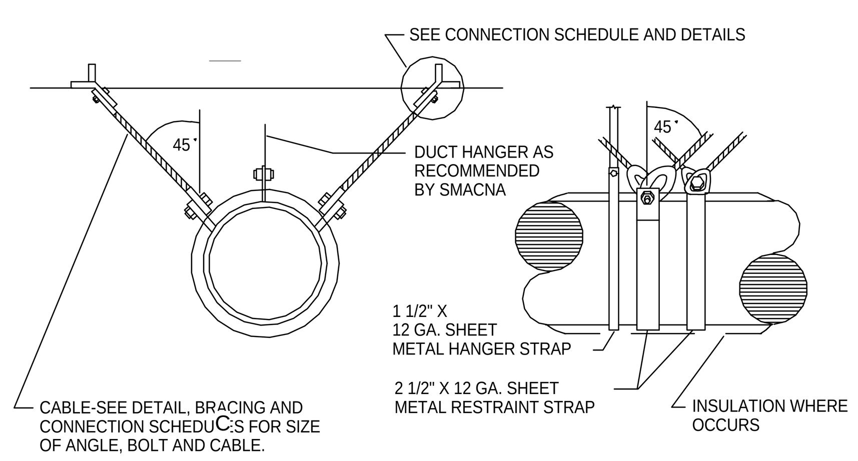


## 17 CABLE BRACING FOR ROUND AND OVAL DUCTS
MH502 NO SCALE

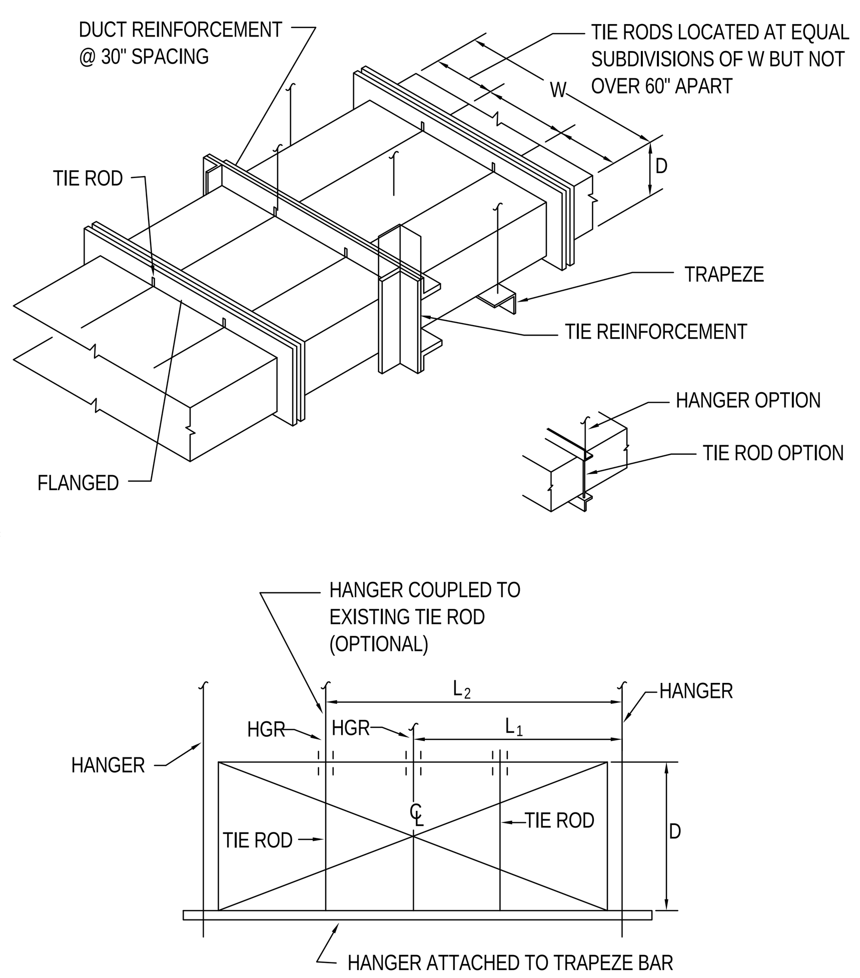


## 14 LARGE DUCT REINFORCEMENT DETAIL
MH502 NO SCALE

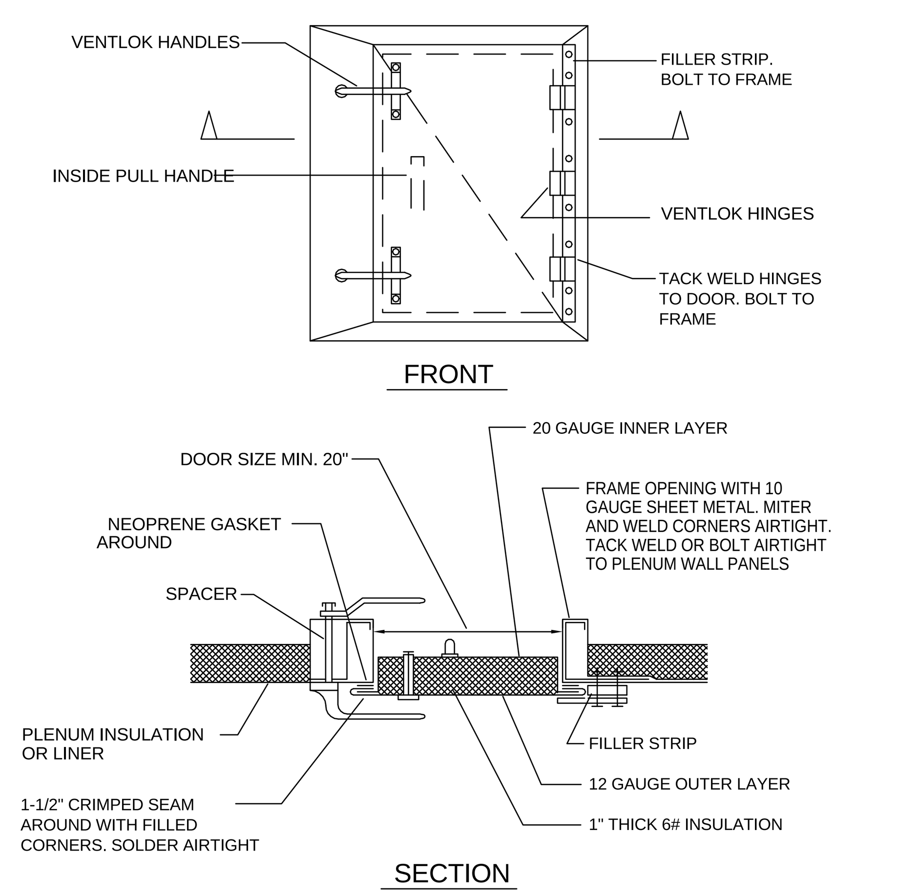


NOTES:

1. BOLTED JOINTS SET IN MASTIC FOR AIRTIGHT JOINT.
2. DOORS SHALL BE A MINIMUM 2'-6" x 1'-8" UNLESS SHOWN OTHERWISE

## 11 PLENUM DOOR
MH502 NO SCALE

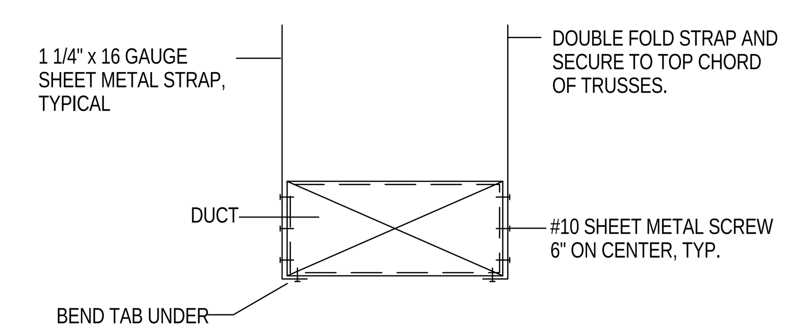


NOTE:
USE SPECIFIED SPACING AND NOT LESS THAN ONE SUPPORT PER BRANCH.

## 8 RECTANGULAR DUCT SUPPORT
MH502 NO SCALE

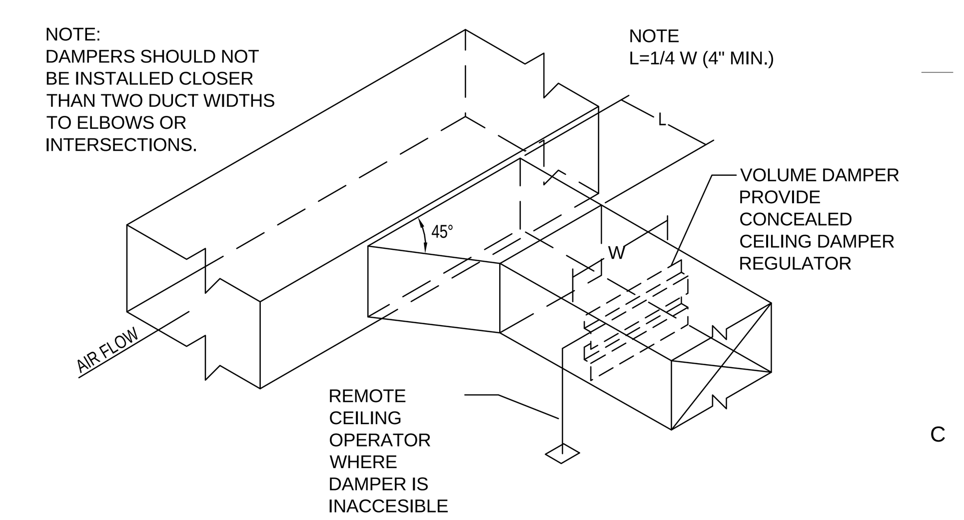


## 3 BRANCH DUCT TAKE-OFF & DAMPER DETAIL
MH502 NO SCALE

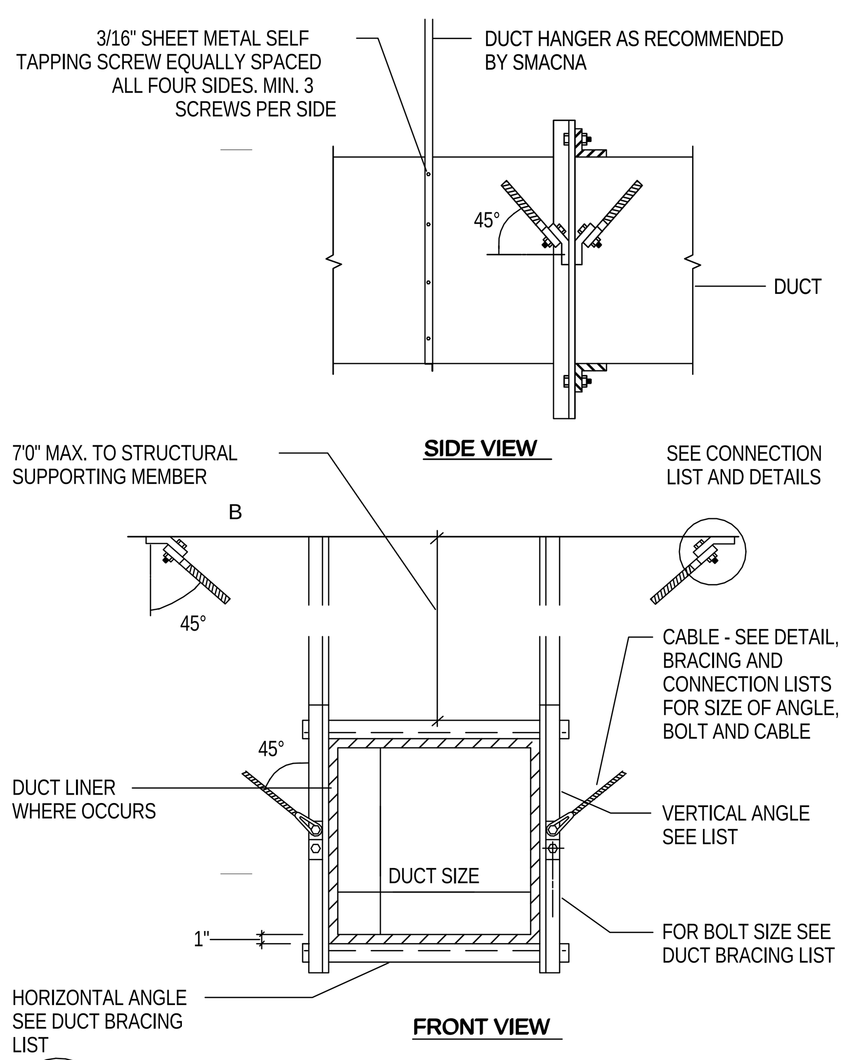


## 18 CABLE BRACING FOR RECTANGULAR DUCTS
MH502 NO SCALE

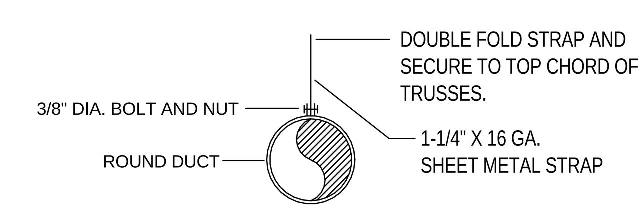


NOTE:
USE SPECIFIED SPACING AND NOT LESS THAN ONE SUPPORT PER BRANCH.

## 9 ROUND DUCT SUPPORT DETAIL
MH502 NO SCALE

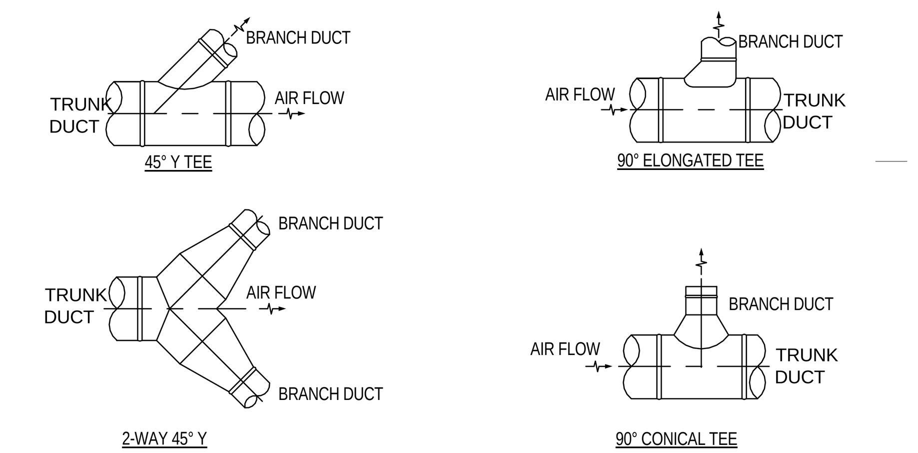


## 4 ROUND DUCT BRANCH TAKE-OFF DETAILS
MH502 NO SCALE

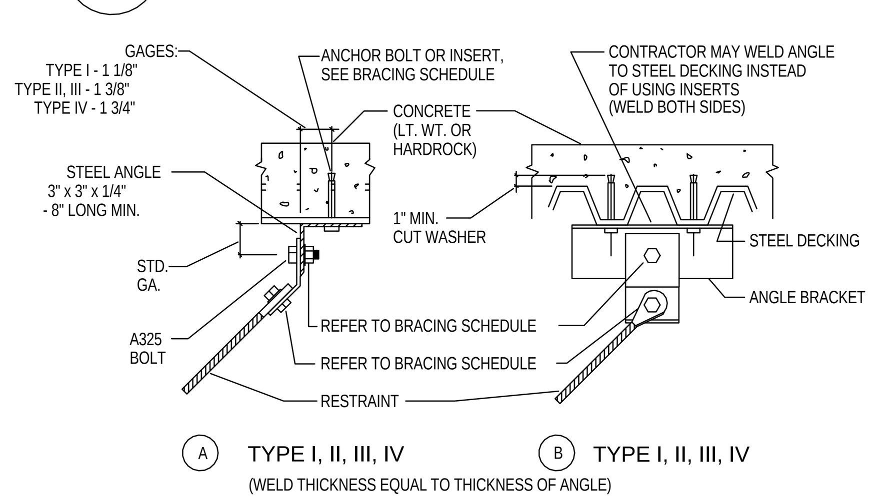


## 15 RESTRAINT CONNECTIONS TO STEEL
MH502 NO SCALE

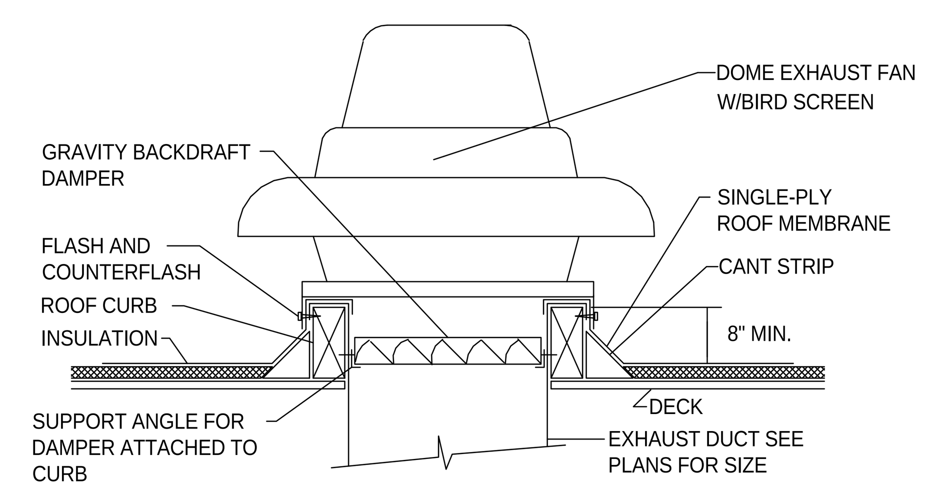


## 12 EXHAUST FAN DETAIL
MH502 NO SCALE

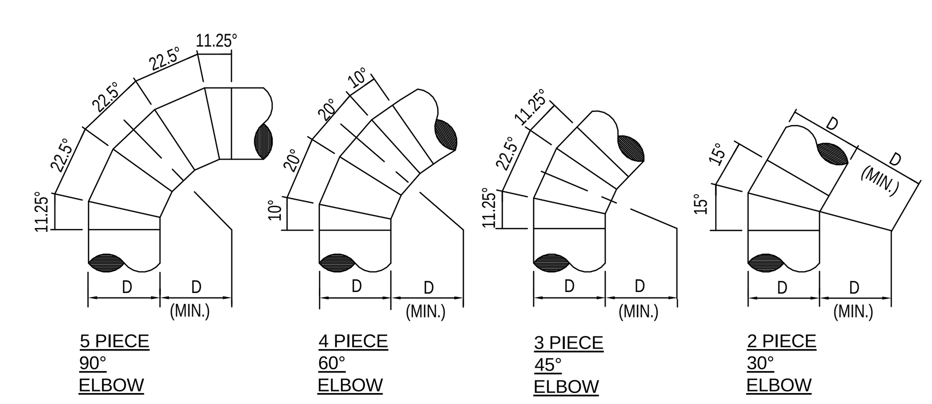


## 5 ROUND DUCT ELBOW DETAILS
MH502 NO SCALE

D:__Bim\Local\Mechanical_Central_JRobker.rvt
5/14/2013 12:53:34 PM


MHTN ARCHITECTS
MHTN Architects, Inc.
420 East South Temple
Suite 100
Salt Lake City, Utah 84111
Telephone (801) 595-6700
Telefax (801) 595-6717
www.mhtn.com

Hastings+Chivetta
ARCHITECTURE • PLANNING • ENGINEERING
622 Emerson, Suite 200
St. Louis, MO 63141
Tel. 314.863.5717
Fax. 314.863.2823
www.hastingschivetta.com

VAN BOERUM & FRANK ASSOCIATES, INC.
CONSULTING ENGINEERS
www.vbfa.com
Salt Lake City • Logan • St. George • Tempe
330 South 300 East 801.530.3148 T
Salt lake City, UT 84111 801.530.3150 F
VBFA Project# 10452


# UNIVERSITY OF UTAH
# STUDENT LIFE CENTER
1836 E. BALLIF ROAD
SALT LAKE CITY, UTAH 84112


©2007 MHTN ARCHITECTS, INC.
Drawings, written material, and design concepts shall not be used or reproduced in whole or part in any form or format without prior written consent of MHTN Architects, Inc. Do not scale drawings. Use given dimensions only. If not shown, verify correct dimensions with the Architect. Contractor shall check and verify all dimensions and conditions at job site.


SEAL

MHTN PROJECT NO.
DRAWN BY: CHECKED BY:

ISSUED:

| NO. | DATE | DESCRIPTION |
|---|---|---|

CONTRACTOR TO VERIFY DRAWINGS IN FIELD USE REFLECT LAST REVISION DATE.

| NO. | DATE | DESCRIPTION |
|---|---|---|

SHEET NAME
MECHANICAL DETAILS

BID DOCUMENTS
MAY 15, 2013

SHEET NUMBER
MH502

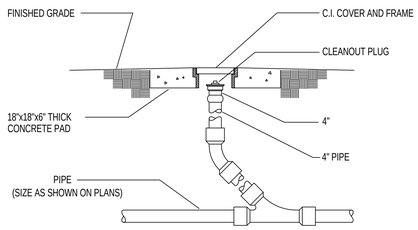


## 15 CLEANOUT TO GRADE DETAIL (COTG)
MH503 NO SCALE

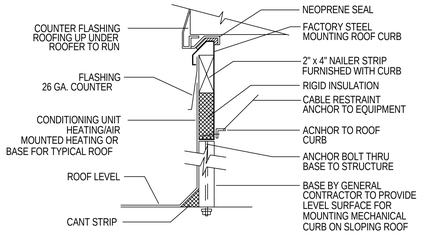


## 10 ROOF CURB DETAIL
MH503 NO SCALE

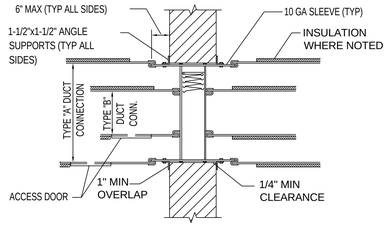


## 6 WALL MOUNTED FIRE DAMPER DETAIL
MH503 NO SCALE

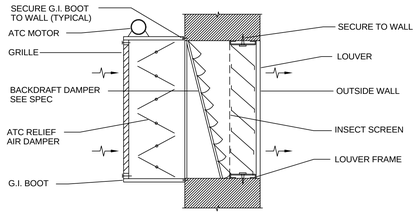


## 1 ATC RELIEF AIR DAMPER & LOUVER SECTION
MH503 NO SCALE

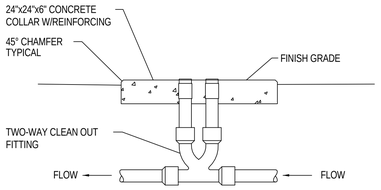


## 16 TWO-WAY CLEANOUT TO GRADE DETAIL
MH503 NO SCALE

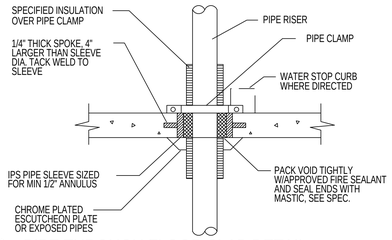


## 11 PIPE THROUGH FLOOR SLAB DETAIL
MH503 NO SCALE

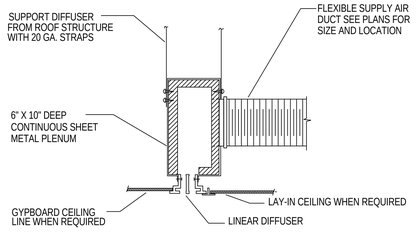


## 7 LINEAR DIFFUSER & PLENUM DETAIL
MH503 NO SCALE

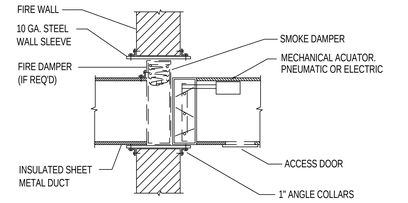


## 2 SMOKE DAMPER DETAIL
MH503 NO SCALE

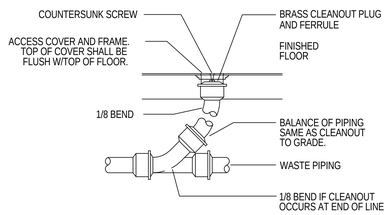


## 17 FLOOR CLEANOUT DETAIL
MH503 NO SCALE

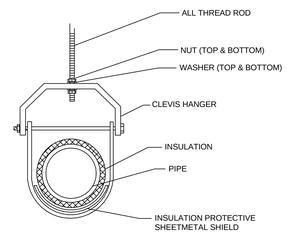


## 12 TYPICAL CLEVIS HANGER DETAIL
MH503 NO SCALE

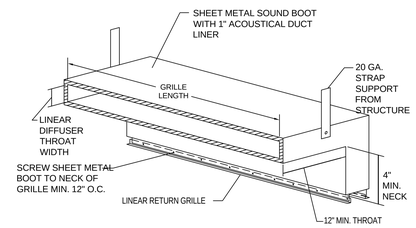


## 8 LINEAR RETURN GRILLE WITH SOUND BOOT DETAIL
MH503 NO SCALE

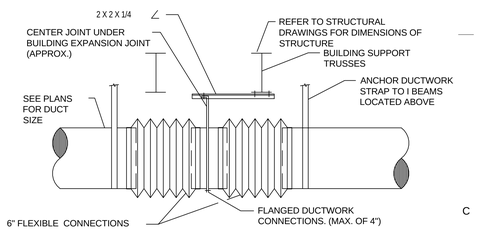


## 3 FLEX CONNECTION DETAIL
MH503 NO SCALE

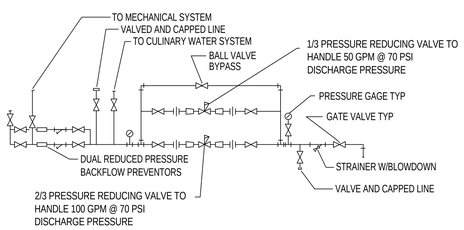


## 18 PRV DETAIL
MH503 NO SCALE

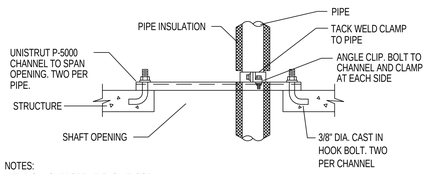


NOTES:
1. TYPICAL SUPPORT AT EACH FLOOR.
2. FOR MULTIPLE PIPES INSTALL CHANNELS IN PARALLEL AND PROVIDE ADDITIONAL FRAMING. SIZES OF FRAMING MEMBERS AS REQUIRED TO SUPPORT TOTAL WEIGHT OF PIPE.
3. INSULATE CLAMP AT CHILLED WATER PIPE ONLY.

## 13 PIPE RISER SUPPORT DETAIL
MH503 NO SCALE

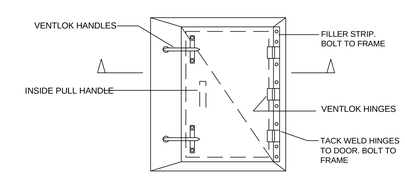


FRONT

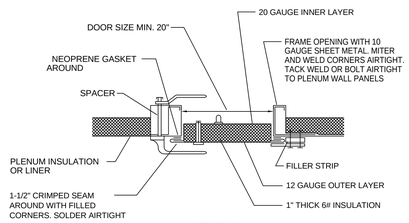


SECTION

NOTES:
1. BOLTED JOINTS SET IN MASTIC FOR AIRTIGHT JOINT.
2. DOORS SHALL BE A MINIMUM 2'-6" x 1'-8" UNLESS SHOWN OTHERWISE

## 9 PLENUM DOOR
MH503 NO SCALE

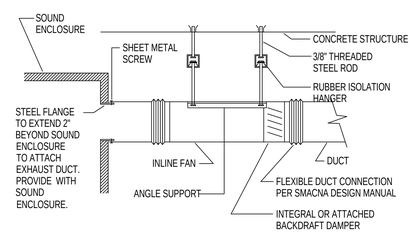


## 5 EXHAUST FAN SUPPORT DETAIL
MH503 NO SCALE

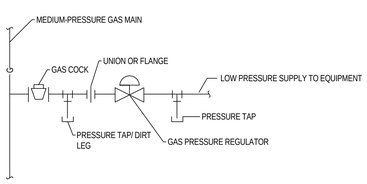


## 19 MEDIUM TO LOW PRESSURE GAS REGULATOR DETAIL
MH503 NO SCALE

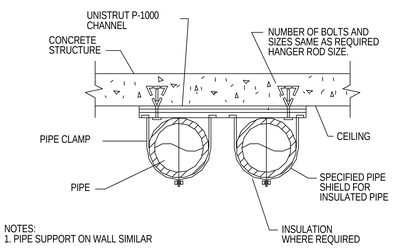


NOTES:
1. PIPE SUPPORT ON WALL SIMILAR

## 14 PIPE SUPPORT ON CEILING
MH503 NO SCALE

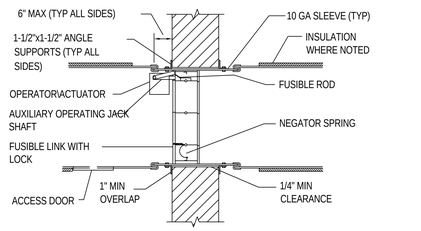


## 4 COMBINATION FIRE SMOKE DAMPER DETAIL
MH503 NO SCALE


MHTN ARCHITECTS
MHTN Architects, Inc.
420 East South Temple
Suite 100
Salt Lake City, Utah 84111
Telephone (801) 595-6700
Telefax (801) 595-6717
www.mhtn.com

Hastings+Chivetta
ARCHITECTURE • PLANNING • ENGINEERING
622 Emerson, Suite 200
St. Louis, MO 63141
Tel. 314.863.5717
Fax. 314.863.2823
www.hastingschivetta.com

VAN BOERUM & FRANK ASSOCIATES, INC.
CONSULTING ENGINEERS
Salt Lake City • Logan • St. George • Tempe
330 South 300 East 801.530.3148 T
Salt lake City, UT 84111 801.530.3150 F


# UNIVERSITY OF UTAH
# STUDENT LIFE CENTER
1836 E. BALLIF ROAD
SALT LAKE CITY, UTAH 84112


©2007 MHTN ARCHITECTS, INC.
Drawings, written material, and design concepts shall not be used or reproduced in whole or part in any form or format without prior written consent of MHTN Architects, Inc. Do not scale drawings. Use given dimensions only. If not shown, verify correct dimensions with the Architect. Contractor shall check and verify all dimensions and conditions at job site.


SEAL

MHTN PROJECT NO.
DRAWN BY: CHECKED BY:

ISSUED:

| NO. | DATE | DESCRIPTION |
|---|---|---|

CONTRACTOR TO VERIFY DRAWINGS IN FIELD USE REFLECT LAST REVISION DATE.

| NO. | DATE | DESCRIPTION |
|---|---|---|

SHEET NAME
MECHANICAL DETAILS

BID DOCUMENTS
MAY 15, 2013

SHEET NUMBER
MH503

D:_BimLocal\Mechanical_Central_JRobker.rvt
5/14/2013 12:53:36 PM

System No. W-L-7040

F Ratings — 1 and 2 Hrs (See Items 1 and 3)

T Rating — 0 Hr

WL 7040

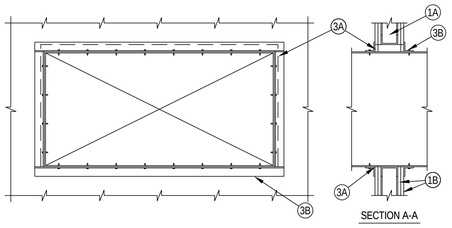


1. Wall Assembly — The fire-rated gypsum wallboard/stud wall assembly shall be constructed of the materials and in the manner specified in the individual U300 or U400 Series Wall and Partition Designs in the Fire Resistance Directory and shall include the following construction features:
   A. Studs — Wall framing may consist of either wood studs or steel channel studs. Wood studs to consist of nom 2 by 4 in. lumber spaced 16 in. OC. Steel studs to be min 2-1/2 in. wide and spaced max 24 in. Additional framing members shall be used to completely frame around opening.
   B. Gypsum Board* — Nom 5/8 in. thick with square or tapered edges. The gypsum wallboard type, number of layers and sheet orientation shall be as specified in the individual Wall and Partition Design Number. Max area of opening is 1300 in. with the dimension of 50 in. The hourly F rating of the firestop system is equal to the hourly fire rating of the wall assembly in which it is installed.
2. Steel Duct — Nom 24 in. by 48 in. (or smaller) No. 24 gauge (or heavier) galv steel duct to be installed within the firestop system. The annular space shall be min 0 (point contact) in. to a max 2 in. Duct to be rigidly supported on both sides of the wall assembly.
3. Firestop System — The firestop system shall consist of the following:
   A. Fill, Void or Cavity Material* —Sealant — Min 5/8 in. thickness of fill material applied within annulus flush with both surfaces of wall. At point contact location, a min 1/2 in. diam bead of fill material shall be applied to the wall/duct interface on both surfaces of wall. HILTI CONSTRUCTION CHEMICALS, DIV OF HILTI INC — FS-ONE Sealant, CP601S Elastomeric Firestop Sealant or CP606 Flexible Sealant.
   B. Steel Retaining Angle — No. 18 MSG (0.048 in.) galv steel angles cut to fit contour of duct with a 2 in. overlap on the duct and a min 1 in. overlap on the gypsum board assembly on both sufaces of wall. 2 in. leg of angle secured to duct with min No. 8 by 3/4 in. long sheet metal screws, spaced a max of 6 in. OC. When bead of fill material is used at joint contact locations, angles shall be installed prior to full material curing.

*Bearing the UL Classification Mark

Hilti Firestop Systems

Reproduced by HILTI, Inc. Courtesy of Underwriters Laboratories, Inc. November 13, 2001

CLASSIFIED C UL US

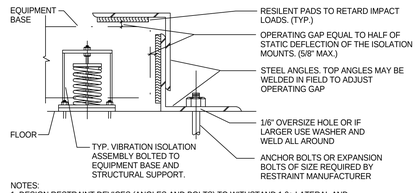


NOTES:
1 DESIGN RESTRAINT DEVICES (ANGLES AND BOLTS) TO WITHSTAND 1.0g LATERAL AND VERTICAL LOADS.
2 INSTALL LATERAL RESTRAINING DEVICES ON ALL SIDES OF EQUIPMENT BASE

## 5 / MH504 SPRING ISOLATOR RESTRAINT DETAIL

NO SCALE

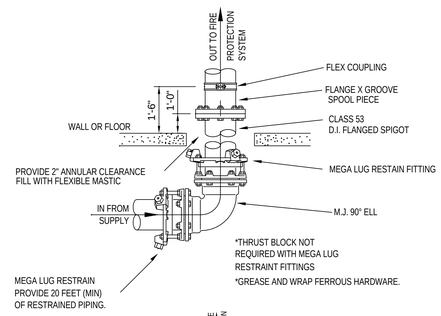


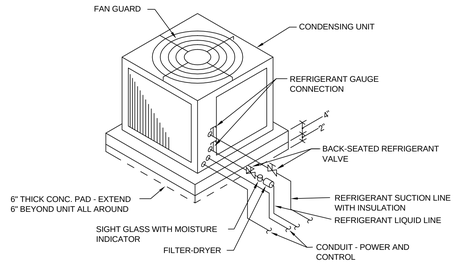


## 6 / MH504 AIR-COOLED CONDENSING UNIT SLAB MOUNTED AT GRADE

NO SCALE

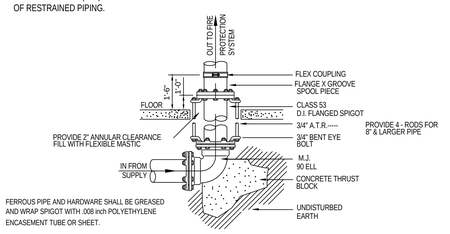


## 3 / MH504 FLANGED SPIGOT THRU FLOOR

NO SCALE

## DETAIL L E G E N D

1. FROM SUPPLY.
2. VERTICAL RISER.
3. INDICATING TYPE FLOOR CONTROL VALVE WITH SUPERVISORY SWITCH.
4. CHECK VALVE.
5. VANE TYPE WATERFLOW SWITCH WIRING BY DIVISION 16.
6. PRESSURE GAUGE, AND 3 WAY VALVE WITH PLUG AND NIPPLES.
7. TO SPRINKLER SYSTEM.
8. DRAIN/TEST VALVE WITH ORIFICE, SIZED AS REQUIRED.
9. EXPRESS DRAIN.
10. 2 1/2" HOSE VALVE, WITH 1 1/2" REDUCER AND CAP.
11. FLEXIBLE COUPLINGS AS REQUIRED FOR SEISMIC PROTECTION OF PIPING.

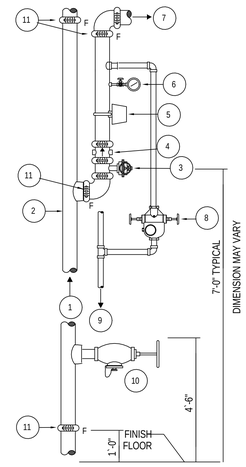


FLOOR CONTROL ASSEMBLY & HOSE VALVE

## 1 / MH504 COMBINED STANDPIPE DETAIL

NO SCALE

System No. W-L-7042

F Ratings - 1 and 2 Hr (See Items 1 and 3)

T Rating - 0 Hr

WL 7042

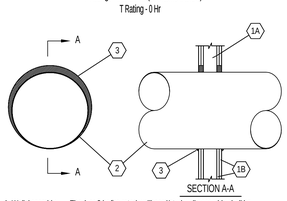


1. Wall Assembly The 1 or 2 hr fire rated wallboard/stud wall assembly shall be constructed of the materials and in the manner specified in the individual U300 or U400 Series Wall and Partition Designs in the UL Fire Resistance Directory and shall include the following construction features.
   A. Studs Wall framing may consist of either wood studs or steel channel studs. Wood studs to consist of nom 2 by 4 in. lumber spaced 16 in. OC. Steel studs to be min 2-1/2 in. wide and spaced 24 in. OC.
   B. Gypsum Board* For 1 hr assembly, one layer of min 5/8 in. thick wallboard as required in the individual Wall and Partition Design. For 2 hr assembly, two layers of min 5/8 in. thick wallboard as required in the individual Wall and Partition Design. Max diam of opening is 14-1/2 in. for wood stud walls and 21-3/4 for steel stud walls.

The hourly F and T Ratings of the firestop system is equal to the hourly fire rating of the wall assembly in which it is installed.

2. Through Penetrant Galv steel duct to be installed concentrically or eccentrically within the firestop system. The annular space between the duct and periphery of opening shall be 0 in. (point contact) and max 1-1/2 in. Duct to be rigidly supported on both sides of wall assembly.
   A. Spiral Wound HVAC Duct Nom 20 in. diam (or smaller) No. 24 MSG (or heavier) galv steel spriral wound duct.
   B. Sheet Metal Duct Nom 12 in. diam (or smaller) No. 28 MSG (or heavier) galv sheet steel duct.
3. Fill, Void or Cavity Material*–Sealant Min 5/8 in. and 1-1/4 in. thickness of fill material applied within annulus, flush with both surfaces of wall assembly for 1 or 2 hr rated walls, respectively. At the point contact location between duct and wallboard, a min 1/2 in. diam bead of sealant shall be applied at the wallboard/duct interface on both surfaces of wall assembly.
   HILTI CONSTRUCTION CHEMICALS, DIV OF HILTI INC – CP601S Elastomeric Firestop Sealant, FS-ONE Sealant or CP606 Flexible Firestop Sealant

*Bearing the UL Classification Mark

Hilti Firestop Systems

Reproduced by HILTI, Inc. Courtesy of Underwriters Laboratories, Inc. November 30, 2000

CLASSIFIED C UL US

System No. C-AJ-7111

F Rating -- 2 Hr

T Rating -- 0 Hr

CAJ 7111

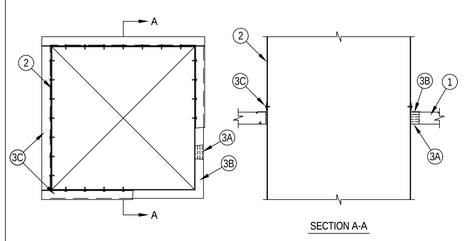


Hilti Firestop Systems

Reproduced by HILTI, Inc. Courtesy of Underwriters Laboratories, Inc. September 09, 2005

CLASSIFIED C UL US

1. DRY PIPE VALVE
2. PRIMING CHAMBER
3. AIR PRESSURE GAUGE
4. RESTRICTED VENT
5. PRIMING WATER TEST COCKS HIGH & LOW LEVELS
6. DRIP CUP
7. ALARM TEST VALVE NORMALLY SHUT
8. ALARM SHUT OFF VALVE AND CHECK VALVE NORMALLY OPEN
9. WATER PRESSURE GAUGE
10. MAIN DRAIN VALVE - PIPE TO EXTERIOR
11. DRIP CUP DRAIN
12. PRESSURE SWITCH
13. DOUBLE CHECK VALVE ASSEMBLY-
14. PIPE TO DISCHARGE AT GARAGE FLOOR
15. CONTROL VALVE W/ TAMPER SWITCH
16. CHECK VALVE
17. PRIMING WATER SUPPLY VALVE
18. TO FIRE DEPT. CONNECTION
19. AIR SUPPLY CONTROL VALVE
20. PRESSURE RELIEF VALVE
21. RESTRICTED ORIFICE
22. AIR LINE BYPASS
23. CONDENSATE CHAMBER
24. FLEXIBLE SECTION
25. FROM WATER MAIN
26. PRESSURE SWITCH FOR LOW AIR PRESSURE SIGNAL
27. FLOW SWITCH
28. TO COMBINED STANDPIPE

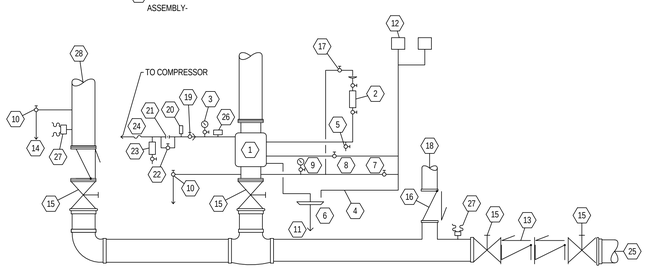


## 4 / MH504 FIRE SPRINKLER AND STANDPIPE RISER MANIFOLD ASSEMBLY

NO SCALE

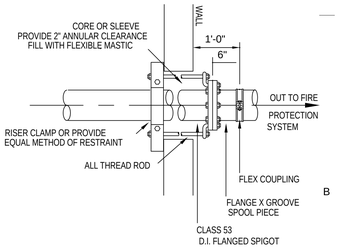


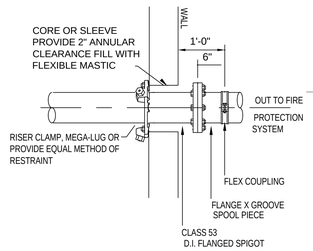


## 2 / MH504 FLANGED SPIGOT THRU WALL

NO SCALE


MHTN ARCHITECTS

**MHTN Architects, Inc.**
420 East South Temple
Suite 100
Salt Lake City, Utah 84111
Telephone (801) 595-6700
Telefax (801) 595-6717
www.mhtn.com

**Hastings+Chivetta**
ARCHITECTURE • PLANNING • ENGINEERING
622 Emerson, Suite 200
St. Louis, MO 63141
Tel. 314.863.5717
Fax. 314.863.2823
www.hastingschivetta.com

VAN BOERUM & FRANK ASSOCIATES, INC.
CONSULTING ENGINEERS
Salt Lake City • Logan • St. George • Tempe
330 South 300 East 801.530.3148 T
Salt lake City, UT 84111 801.530.3150 F
VBFA Project 1002


REGISTERED PROFESSIONAL ENGINEER
No. 324030
BRADLY W. ROSENHAN
STATE OF UTAH

# UNIVERSITY OF UTAH
# STUDENT LIFE CENTER
1836 E. BALLIF ROAD
SALT LAKE CITY, UTAH 84112


©2007 MHTN ARCHITECTS, INC.
Drawings, written material, and design concepts shall not be used or reproduced in whole or part in any form or format without prior written consent of MHTN Architects, Inc. Do not scale drawings. Use given dimensions only. If not shown, verify correct dimensions with the Architect. Contractor shall check and verify all dimensions and conditions at job site.


SEAL

MHTN PROJECT NO.

DRAWN BY: CHECKED BY:

ISSUED:

| NO. | DATE | DESCRIPTION |
|---|---|---|

CONTRACTOR TO VERIFY DRAWINGS IN FIELD USE REFLECT LAST REVISION DATE.

| NO. | DATE | DESCRIPTION |
|---|---|---|

SHEET NAME

MECHANICAL DETAILS

BID DOCUMENTS

MAY 15, 2013

SHEET NUMBER

MH504

D:__Bim\Local\Mechanical_Central_JRobker.rvt
5/14/2013 12:53:37 PM

WL 5028

## System No. W-L-5028

F Ratings - 1 and 2 Hr (See Item 1)
T Ratings - 3/4 Hr
L Rating at Ambient - Less Than 1 CFM/sq ft
L Rating at 400 F - Less Than 1 CFM/sq ft

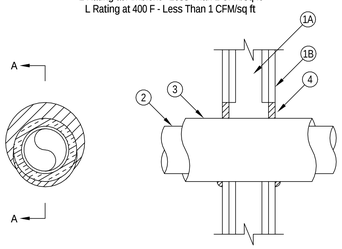


SECTION A-A

1. Wall Assembly — The 1 or 2 hr fire-rated gypsum wallboard/stud wall assembly shall be constructed of the materials and in the manner specified in the individual U300 or U400 Series Wall and Partition Designs in the UL Fire Resistance Directory and shall include the following construction features:

A. Studs — Wall framing may consist of either wood studs or steel channel studs. Wood studs to consist of nom 2 by 4 in. lumber spaced 16 in. OC. Steel studs to be min 2-1/2 in. wide and spaced max 24 in. OC.
B. Gypsum Board* — 5/8 in. thick, 4 ft wide with square or tapered edges. The gypsum wallboard type, thickness, number of layers, fastener type and sheet orientation shall be as specified in the individual Wall and Partition Design. Max diam of opening is 7-1/2 in. The hourly F Rating of the firestop system is equal to the hourly fire rating of the wall assembly in which it is installed.

2. Through Penetrants — One metallic pipe or tubing to be centered within the firestop system. Pipe or tubing to be rigidly supported on both sides of wall assembly. The following types and sizes of metallic pipes or tubing may be used:

A. Steel Pipe — Nom 4 in. diam (or smaller) Schedule 40 (or heavier) steel pipe.
B. Copper Tubing — Nom 2 in. diam (or smaller) Type L (or heavier) copper tubing.
C. Copper Pipe — Nom 2 in. diam (or smaller) Regular (or heavier) copper pipe.

3. Tube Insulation — Plastics+ — Nom 3/4 in. thick acrylonitrile butadiene/polyvinyl chloride (AB/PVC) flexible foam furnished in the form of tubing. An annular space of min 0 in. (point contact) to max 1-1/2 in. is required within the firestop system.

See Plastics+ (QMFZ2) category in the Recognized Component Directory for names of manufacturers. Any Recognized Component tube insulation material meeting the above specifications and having a UL 94 Flammability Classification of 94-5VA may be used.
The hour T Rating of the firestop system is dependent on the hourly fire rating of the wall assembly in which it is installed, the size and type of through penetrant and the pipe covering thickness, as shown in the table below:

| Wall Assembly Hr Rating | Type + | Through Penetrant Max Diam In. |
|---|---|---|
| 1 | A | 4 |
| 1 | A, B, or C | 2 |
| 2 | A | 4 |
| 2 | A, B, or C | 2 |

+Indicates penetrant type as itemized in Item 2.

4. Fill, Void or Cavity Material* — Sealant — Min 5/8 in. thickness of fill material applied within the annulus, flush with both surfaces of wall. At the point contact location between pipe covering and gypsum wallboard, a min 1/2 in. diam bead of fill material shall be applied at the pipe covering/gypsum wallboard interface on both surfaces of wall.

HILTI CONSTRUCTION CHEMICALS, DIV OF
HILTI INC — FS-ONE Sealant

*Bearing the UL Classification Mark

Hilti Firestop Systems

Reproduced by HILTI, Inc. Courtesy of Underwriters Laboratories, Inc. February 08, 2006

CLASSIFIED C UL US

Page: 1 of 2

CAJ 7084

## System No. C-AJ-7084

F Rating - 2 Hr
T Rating - 0 Hr

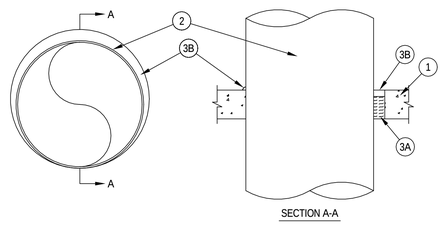


SECTION A-A

1. Floor or Wall Assembly - Min 4-1/2 in. thick reinforced lightweight or normal weight (100-150 pcf) concrete. Wall may also be constructed of any UL Classified Concrete Blocks*. Max diam of opening is 21-3/4 in.
See Concrete Blocks (CAZT) category in the Fire Resistance Directory for names of manufacturers.
2. Through Penetrant - Galv steel duct to be installed concentrically or eccentrically within the firestop system. The annular space between the duct and periphery of opening shall be 0 in. (point contact) and max 1-1/2 in. Duct to be rigidly supported on both sides of wall assembly.
A. Spiral Wound HVAC Duct - Nom 20 in. diam (or smaller) No. 24 MSG (or heavier) galv steel spiral wound duct.
B. Sheet Metal Duct - Nom 12 in. diam (or smaller) No. 28 MSG (or heavier) galv sheet steel duct.
3. Firestop System - The firestop system shall consist of the following:
A. Packing Material - Min 3-1/2 in. thickness of min 4.0 pcf mineral wool batt insulation firmly packed into opening as a permanent form. Packing material to be recessed from top surface of floor or both surfaces of wall to accommodate the required thickness of fill material.
B. Fill, Void or Cavity Material*-Sealant - Min 1 in. thickness of fill material applied within annulus, flush with top surface of floor or both surfaces of wall assembly. At the point contact location between duct and periphery of opening, a min 1/2 in. diam bead of sealant shall be applied at the concrete/duct interface.
HILTI CONSTRUCTION CHEMICALS, DIV OF
HILTI INC - FS-ONE Sealant, CP601S Elastomeric Firestop Sealant, CP606 Flexible Firestop Sealant or CP 604 Self-Leveling Firestop Sealant.
(Note: CP 604 Self-Leveling Firestop Sealant to be used on floor assemblies only.)
*Bearing the UL Classification Mark

Hilti Firestop Systems

Reproduced by HILTI, Inc. Courtesy of Underwriters Laboratories, Inc. July 08, 2003

CLASSIFIED C UL US

WL C-BJ-1034

UL/cUL SYSTEM NO. C-BJ-1034

## METALLIC PIPE THROUGH CONCRETE FLOOR/WALL OR BLOCK WALL

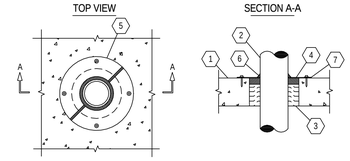


1. CONCRETE FLOOR OR WALL ASSEMBLY (4-HR FIRE RATING.
A. KIGHTWEIGHT OR NORMA WEIGHT CONCRETE FLOOR (MIN 5-1/2" THICK)
B.LIGHTWEIGHT OR NORMAL WEIGHT CONCRETE WALL (MIN 6" THICK)
C.ANY UL/ULC CLASSIFIED CONCRETE BLOCK WALL
2. PENETRATING ITEM TO BE ANY ONE OF THE FOLLOWING:
A. MAXIMUM 4" NORMAL DIAMETER STEEL PIPE (SCHEDULE 40 OR HEAVIER)
B. MAXIMUM 4" NORMAL DIAMETER STEEL CONDUIT.
C. MAXIMUM 4" NORMAL DIAMETER EMT.
3. MINIMUM 4" THICKNESS MINERAL WOOL (MIN 4 PCF DENSITY) TIGHTLY PACKAGED.
4. MINIMUM 1" DEPTH HILTI FS-ONE INTUMESCENT FIRESTOP SEALANT.
5. MINIMU 18 GA. SHEET METAL COVER PLATE SECURELY ATTACHED WITH HILTI POWDER ACTIVATED FASTNERS (X-ZF 27 PINS)
6. MINIMUM 1/2" BEAD HILTI FS-ONE INTUMESCENT FIRESTOP SEALANT AT INTERFACE BETWEEN COVERPLATE AND PIPE.
7. SEE NOTE NO. 3 BELOW.

NOTES: 1. MAXIMUM DIAMTER OF OPENING=10-1/2".
2. ANNULAR SPACE = MINIMUM 3/4". MAXIMUM 3".
3. PROVIDE A GENEROUS BEAD OF HILTI FS-ONE INTUMESCENT FIRESTOP SEALANT ALONG EDGE OF COVER PLATE.
4. INSIDE DIAMETER OD STEEL PLATE SHOULD BE SAME AS PIPE OUTSIDE DIAMTER. OUTSIDE DIAMETER OF STEEL PLATE IS TO BE SIZED MINIMUM 1-1/2" LARGER THAN PERIPHERY OF OPENING.

Hilti Firestop Systems

Reproduced by HILTI, Inc. Courtesy of Underwriters Laboratories, Inc. December 07, 2002

CLASSIFIED C UL US

WL 7096

## System No. W-L-7096

F Rating - 1 Hr
T Rating - 0 Hr

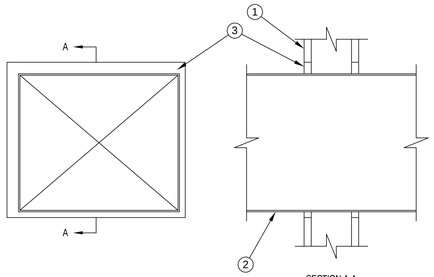


SECTION A-A

1. Wall Assembly -- The 1 hr fire-rated gypsum board/stud wall assembly shall be constructed of the materials and in the manner described in the individual U400 Series Wall or Partition Design in the UL Fire Resistance Directory and shall include the following construction features:
A. Studs -- Wall framing to consist of min 3-1/2 in. wide steel channel studs, fabricated from 25 MSG galv steel, spaced max 24 in. OC.
B. Gypsum Board* -- One layer of nom 5/8 in. thick gypsum board, as specified in the individual Wall and Partition Design. Max area of opening is 202 sq in. with max dimension of 15-1/4 in.
2. Steel Duct -- Nom 12 in by 14 in. (or smaller) No. 24 gauge (or heavier) galv steel duct to be installed either concentrically or eccentrically within the firestop system. The annular space shall be min ¼ in. to max 1 in. Duct to be rigidly supported on both sides of the wall assembly.
3. Fill, Void or Cavity Material - Sealant* -- Min 5/8 in. thickness of fill material applied within annular space, flush with both surfaces of wall.
HILTI CONSTRUCTION CHEMICALS, DIV OF
HILTI INC -- FS-ONE Sealant
*Bearing the UL Classification Mark

Hilti Firestop Systems

Reproduced by HILTI, Inc. Courtesy of Underwriters Laboratories, Inc. December 07, 2002

CLASSIFIED C UL US

WL 7059

## System No. W-L-7059

F Ratings - 1 and 2 Hr
T Rating - 1/2 and 3/4 Hr

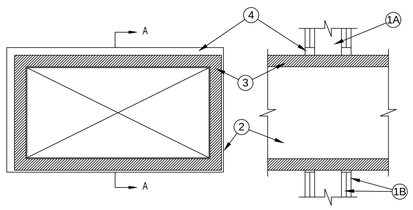


SECTION A-A

1. Wall Assembly The 1 or 2 fire-rated gypsum wallboard/stud wall assembly shall be constructed of the materials and in the manner specified in the individual U400 Series or Partition Designs in the UL Fire Resistance Directory and shall include the following construction features:
A. Studs Wall framing shall consist of channel studs. Steel studs to be min 2-1/2 in . wide and spaced max 24 in. OC. The opening in the wll to accommodate the steel duct (Item 2) shall be framed on all sides using lengths of studs installed between the vertical studs and attached to the studs at each end. The framed opening in the wall shall be a nom 6 in. wide and 12 in. or higher than the width and height of the steel duct.
B. Wallboard, Gypsum* 5/8 in. thick, 4 ft wide with square or tapered edges. The gypsum wallboard type, thickness, number of layers, fastener type and sheet orientation shall be as specified in teh individual U300 or U400 Series Design in the UL Fire Resistance Directory. Max area of opening is 395 sq. in. with max dimensions of 26-3/4 in. for steel studs.

2. Steel Duct Nom 24 in. by 12 in. (or smaller) 24 guage (or heavier) steel duct. to be installed eccentrically within the opening. the annular space shall be min 1 in. to max 1-3/4. Duct to be rigidly supported on both sides of the wall assembly.
3. Batt and Blanket* - Max 1-1/2 thick glass fiber batt or blanket (min. 3.4 pcf) jacketed on the outside with a foil-scrim-kraft facing, compressed 50% such that the annular space within the firestop system shall be min 1/4 in. to max 1 in. See Batts and Blankets (BKNV) category in the Building Materials Directory for names manufacturers. Any batt or blanket meeting the above specifications and bearing the UL Classification Marking with a Flame Spread Index of 25 or less and a smoke Developed Index 50 or less may be used.
4. Fill, Void or Cavity Material* - Sealant Min 5/8 in. or 1-1/4 in. thickness of fill material applied within the annulus, flush with both surfaces of wall for 1 or 2 hr walls, respectively. If voids develops after the fill material cures, the voids shall be sealed with additional fill material.
HILTI CONSTRUCTION CHEMICALS, DIV OF
HILTI INC - FS-One Sealant
*Bearing the UL Classification Mark

Hilti Firestop Systems

Reproduced by HILTI, Inc. Courtesy of Underwriters Laboratories, Inc. March 21, 2001

CLASSIFIED C UL US

Page: 1 of 2

WL 1054

## System No. W-L-1054

F Ratings - 1 and 2 Hr (See Items 1 and 3)
T Rating - 0 Hr
L Rating At Ambient - Less Than 1 CFM/Sq Ft
L Rating At 400 F - 4 CFM/Sq Ft

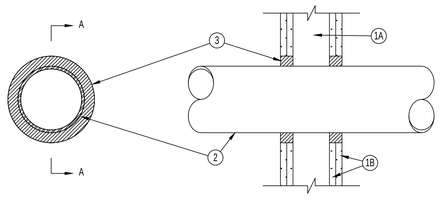


SECTION A-A

1. Wall Assembly -- The 1 or 2 hr fire-rated gypsum wallboard/stud wall assembly shall be constructed of the materials and in the manner specified in the individual U300 or U400 Series Wall and Partition Designs in the UL Fire Resistance Directory and shall include the following construction features:
A. Studs -- Wall framing may consist of either wood studs or steel channel studs. Wood studs to consist of nom 2 by 4 in. lumber spaced 16 in. OC. Steel studs to be min 2-1/2 in. wide and spaced max 24 in. OC. When steel studs are used and the diam of opening exceeds the width of stud cavity, the opening shall be framed on all sides using lengths of steel stud installed between the vertical studs and screw-attached to the steel studs at each end. The framed opening in the wall shall be 4 to 6 in. wider and 4 to 6 in. higher than the diam of the penetrating item such that, when the penetrating item is installed in the opening, a 2 to 3 in. clearance is present between the penetrating item and the framing on all four sides.
B. Gypsum Board* -- 5/8 in. thick, 4 ft wide with square or tapered edges. The gypsum board type, thickness, number of layers, fastener type and sheet orientation shall be as specified in the individual U300 or U400 Series Design in the UL Fire Resistance Directory. Max diam of opening is 32-1/4 in. for steel stud walls. Max diam of opening is 14-1/2 in. for wood stud walls.
The F Rating of the firestop system is equal to the fire rating of the wall assembly.

2. Through-Penetrants -- One metallic pipe, conduit or tubing to be installed either concentrically or eccentrically within the firestop system. The annular space shall be min 0 in. to max 2-1/4 in. Pipe may be installed with continuous point contact. Pipe, conduit or tubing may be installed at an angle not greater than 45 degrees from perpendicular. Pipe, conduit or tubing to be rigidly supported on both sides of wall assembly. The following types and sizes of metallic pipes, conduits or tubing may be used:
A. Steel Pipe -- Nom 30 in diam (or smaller) Schedule 10 (or heavier) steel pipe.
B. Iron Pipe -- Nom 30 in. diam (or smaller) cast or ductile iron pipe.
C. Conduit -- Nom 4 in diam (or smaller) steel electrical metallic tubing or 6 in. diam steel conduit.
D. Copper Tubing -- Nom 6 in. diam (or smaller) Type L (or heavier) copper tubing.
E. Copper Pipe -- Nom 6 in. diam (or smaller) regular (or heavier) copper pipe.
3. Fill, Void or Cavity Material* -- Sealant -- Min 5/8 in. thickness of fill material applied within the annulus, flush with both surfaces of wall. At the point or continuous contact locations between pipe and wall, a min 1/2 in. diam bead of fill material shall be applied at the pipe wall interface on both surfaces of wall .
HILTI CONSTRUCTION CHEMICALS, DIV OF
HILTI INC -- FS-One Sealant
*Bearing the UL Classification Mark

Hilti Firestop Systems

Reproduced by HILTI, Inc. Courtesy of Underwriters Laboratories, Inc. December 4, 2002

CLASSIFIED C UL US

Page: 1 of 2

WL 7068

## System No. W-L-7068

F Ratings - 1 and 2 Hr (See Items 1 and 4)
T Rating - 0 Hr

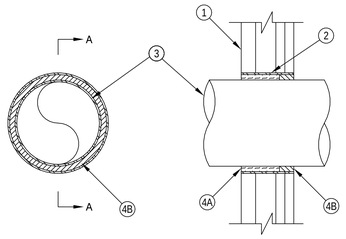


SECTION A-A

1. Wall Assembly — The 1 or 2 hr fire-rated gypsum board/stud wall assembly shall be constructed of of the materials and in the manner described in the individual U400 or V400 Series Wall and Partition Design in the UL Fire Resistance Directory and shall include the following construction features:

A. Studs — "C-T" shaped studs -1-5/8 in. wide by 2-1/2 in. deep, fabricated from 25 MSG galv steel, spaced max 24 in. OC.
B. Gypsum Board* — One layer of nom 1in. thick, 24 in. wide gypsum liner and one or two layers of nom 5/8 in. thick, 4 ft. wide gypsum board with square or tapered edges. The gypsum board type, number of layers, fastener type and sheet orientation shall be as specified in the individual Wall and Partition Design. Max diam of opening is 7 in.

1A. Wall Assembly — As an alternate to the above wall assembly, the 1 or 2 Hr fire rated gypsum board/stud wall assembly shall be constructed of the materials and in the manner specified in the individual U300, U400 or V400 Series Wall and Partition Designs in the UL Fire Resistance Directory and shall include the following construction features:

A. Studs — Wall framing may consist of either wood studs or steel channel studs. Steel studs to be min 2-1/2 in. wide and spaced max 24 in. OC. Wood studs to consist of nom 2 by 4 in. lumber spaced 16 in. OC.
B. Gypsum Board* — Thickness, type, number of layers and fasteners as required in the individual Wall and Partition Design. Max diam of opening is 7 in.

The hourly F Rating of the firestop system is equal to the hourly fire rating of the wall assembly in which it is installed.

2. Metallic Sleeve — Max 7 in. diam cylindrical sleeve fabricated from min 0.016 in. thick (28 gauge) galv sheet steel and having a min 1 in. lap along the longitudinal seam. Length of steel sleeve to be equal to thickness of wall. Sleeve installed by coiling the sheet steel to a diam smaller than the through opening, inserting the coil through the opening and releasing the coil to let it uncoil against the circular cutouts in the gypsum board layers. Sleeve may also be formed of No. 8 steel wire mesh having a min 1 in. lap along the longitudinal seam.

3. Steel Duct — Nom 6 in. diam (or smaller) No. 28 gauge (or heavier) galv steel duct to be installed either concentrically or eccentrically within the firestop system. The annular space shall be min 1/4 in. to max 3/4 in. Duct to be rigidly supported on both sides of the wall assembly.

4. Firestop System — The firestop system shall consist of the following:

A. Packing Material — Min 2-1/8 or 2-3/4 in. thickness of min 4 pcf mineral wool batt insulation firmly packed into sleeve on one side of the wall as a permanent form for 1 and 2 hr walls, respectively. Packing material to be recessed from the room side of wall as required to accommodate the required thickness of fill material. In alternate wall assembly, packing material to be flush with either side of the wall and recessed from the other side of the wall to accommodate the required thickness of fill material.
B. Fill, Void or Cavity Material — Sealant* -- Min 1 in. thickness of fill material applied within opening, flush with one surface of wall.
HILTI CONSTRUCTION CHEMICALS, DIV OF
HILTI INC — FS-ONE Sealant

*Bearing the UL Classification Mark

Hilti Firestop Systems

Reproduced by HILTI, Inc. Courtesy of Underwriters Laboratories, Inc. September 01, 2005

CLASSIFIED C UL US

Page: 1 of 2


MHTN ARCHITECTS
MHTN Architects, Inc.
420 East South Temple
Suite 100
Salt Lake City, Utah 84111
Telephone (801) 595-6700
Telefax (801) 595-6717
www.mhtn.com

Hastings+Chivetta
ARCHITECTURE • PLANNING • ENGINEERING
622 Emerson, Suite 200
St. Louis, MO 63141
Tel. 314.863.5717
Fax. 314.863.2823
www.hastingschivetta.com

VAN BOERUM & FRANK ASSOCIATES, INC.
CONSULTING ENGINEERS
Salt Lake City • Logan • St. George • Tempe
330 South 300 East 801.530.3148 T
Salt lake City, UT 84111 801.530.3150 F


UNIVERSITY OF UTAH
STUDENT LIFE CENTER
1836 E. BALLIF ROAD
SALT LAKE CITY, UTAH 84112


©2007 MHTN ARCHITECTS, INC.
Drawings, written material, and design concepts shall not be used or reproduced in whole or part in any form or format without prior written consent of MHTN Architects, Inc. Do not scale drawings. Use given dimensions only. If not shown, verify correct dimensions with the Architect. Contractor shall check and verify all dimensions and conditions at job site.


SEAL

MHTN PROJECT NO.

DRAWN BY: CHECKED BY:

ISSUED:

| NO. | DATE | DESCRIPTION |
|---|---|---|

CONTRACTOR TO VERIFY DRAWINGS IN FIELD.USE REFLECT LAST REVISION DATE.

| NO. | DATE | DESCRIPTION |
|---|---|---|

SHEET NAME

MECHANICAL DETAILS

BID DOCUMENTS
MAY 15, 2013

SHEET NUMBER

MH505

D:__Bim\Local\Mechanical_Central_JRobker.rvt
5/14/2013 12:53:38 PM

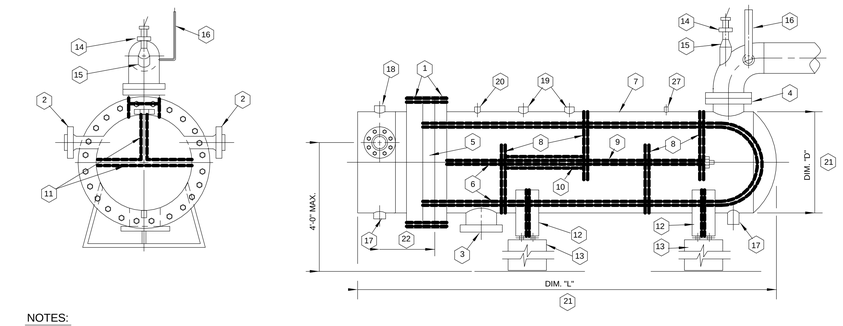


NOTES:

1. BONNET FLANGES 600 LB. ANSI.
2. RADIAL FLANGE HTW SUPPLY & RETURN 600 LBS. ANSI.
3. INLET FLANGE
4. OUTLET FLANGE
5. TUBE SHEET
6. TUBE BUNDLE
7. SHELL
8. BAFFLES
9. STAY RODS
10. SPACER
11. TUBE PASS PARTITIONS AS REQUIRED.
12. CRADLE. (MAKE PROVISIONS FOR EXPANSION OF UNIT)
13. CONCRETE OR STRUCTURAL SUPPORT PIER.
14. THERMOMETER WELL FOR CONTROL ELEMENT. ARRANGE PIPING TO PROVIDE WELL IMMEDIATELY ADJACENT TO CONVERTER OUTLET.
15. SOCKET WELDED ELBOWLETS. LOCATE AS NEAR TO SHELL OUTLET AS POSSIBLE.
16. THERMOMETER WITH SEPARABLE SOCKET. BACK WELD FITTING.
17. DRAIN CONNECTION. BACK WELD FITTING.
18. VENT CONNECTIONS AS REQUIRED.
19. RELIEF VALVE CONNECTIONS
20. VENT
21. DIMENSION "L" NOT TO BE GREATER THAN 5 TIMES DIMENSION "D".
22. SHOW DIMENSION FOR SPACE REQUIRED TO REMOVE BUNDLE.
23. FOR MATERIAL TO BE USED, SEE SPECIFICATIONS.
24. FOR INSULATION OF UNIT, SEE SPECIFICATIONS.
25. FOR PAINT, SEE SPECIFICATIONS.
26. FOR REQUIRED DESIGN & TEST PRESSURES & DESIGN TEMPERATURES, SEE SPECIFICATIONS. LEAVE EQUIPMENT IDENTIFICATION TAGS EXPOSED THROUGH INSULATION.
27. COUPLING FOR PRESSURE GAGE.

## 7 HTW HEATING WATER HEAT EXCHANGER DETAIL

MH506 NO SCALE

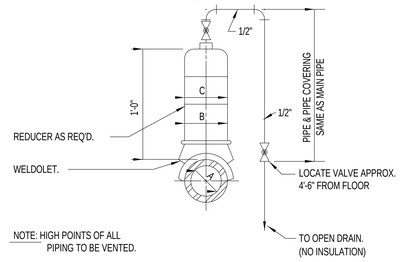


| PIPE SIZE (NOM.) A | DIAMETER | |
|---|---|---|
| | B | C |
| 1-1/2" & 1-1/4" | 1-1/2" & 1-1/4" | 2" |
| 2" | 2" | 3" |
| 2-1/2" | 2-1/2" | 3" |
| 3" | 3" | 3" |
| 4" | 4" | 4" |
| 6" | 6" | 6" |
| 8" | 6" | 6" |
| 10" | 6" | 6" |

## 4 HIGH TEMPERATURE WATER AIR VENT DETAIL

MH506 NO SCALE

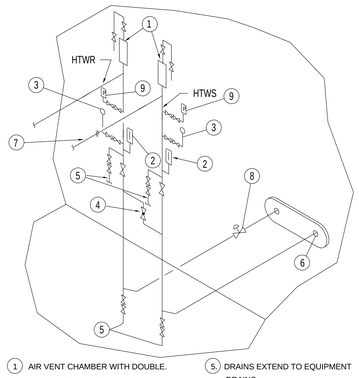


1. AIR VENT CHAMBER WITH DOUBLE. 1/2" GLOBE VALVES
2. THERMOMETER W/SEPARABLE SOCKET
3. PRESSURE GAGE ASSEMBLY WITH DOUBLE 1/2" GLOBE VALVES MOUNT GAGES ON BRACKETS
4. BY-PASS GLOBE VALVE. PROVIDE OFFSETS OR LOOPS IN BY-PASS PIPING TO PERMIT FREE AND UNRESTRICTED PIPE MOVEMENT DUE TO TEMPERATURE CHANGES. 1" FOR LINES TO 3" 1-1/4" FOR LINES 4" TO 6"
5. DRAINS EXTEND TO EQUIPMENT DRAINS.
6. HIGH TEMPERATURE WATER SUPPLY AND RETURN IN CONDUIT WITH END SEAL.
7. ORIFICE AND FLANGES FOR FLOW MEASUREMENT. PROVIDE REQUIRED STRAIGHT RUN OF PIPE OF PROPER MEASUREMENT FOR NEW OR FUTURE INSTALLATIONS.
8. EMERGENCY SHUT OFF VALVE, N.C. FULL LINE SIZE.
9. PRESSURE SENSOR WITH DOUBLE 1/2" 1/2" GLOBE VALVES.

## 1 HIGH TEMPERATURE WATER ENTRANCE PIPING DETAIL

MH506 NO SCALE

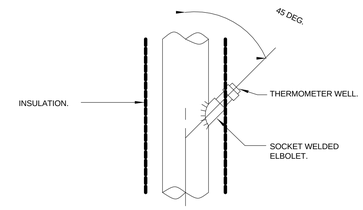


THERMOMETER WELL

INSTALLATION IN VERTICAL PIPE

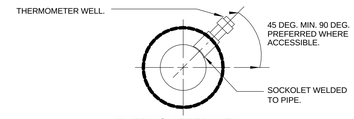


THERMOMETER WELL

INSTALLATION IN HORIZONTAL PIPE

## 5 THERMOMETER WELL DETAIL

MH506 NO SCALE

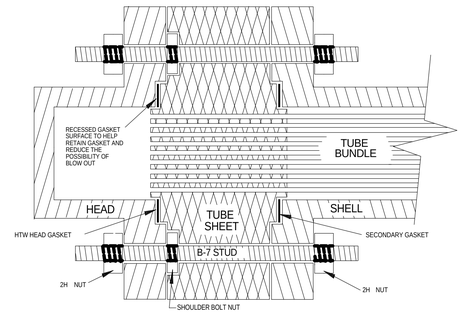


## 2 CROSS SECTION TYPICAL HTW CONVERTER

MH506 NO SCALE

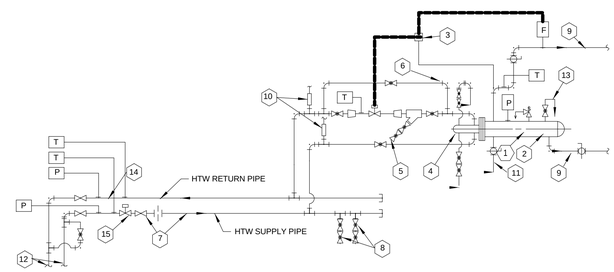


NOTES:

1. TYPCIAL HTW DOMESTIC HOT WATER GENERATOR.
2. TYPICAL HTW SPACE HEATER CONVERTER.
3. TEMPERATURE CONTROLLER INSTRUMENT.
4. DOUBLE VALVED VENTS & DRAINS INSTALLED ON ALL CONVERTER HEADS AS REQUIRED FOR PROPER DRAINING & VENTING.
5. DOUBLE VALVED. EXTEND TO DRAIN FUNNEL.
6. THREE VALVE BY-PASS.
7. PROVIDE REQUIRED STRAIGHT RUN OF PIPE FOR PROPER FLOW MEASUREMENT AT DOPPLER FLOW SENSOR.
8. DOUBLE VALVED DRAIN. EXTEND TO DRAIN FUNNEL OR FLOOR DRAIN. PROVIDE AT ALL LOW POINTS. (DRAWING NO. HTW-8).
9. SECONDARY SYSTEM LINES.
10. VENT AT HIGH POINT OF LINES. GRADE LINES TO HIGH POINT. TYPICAL ALL HTW SUPPLY & RETURN LINES.
11. VALVED DRAIN. EXTEND TO DRAIN OR FLOOR.
12. TYPICAL HTW SERVICE ENTRANCE. (SEE DETAIL F5-ME507).
13. VENT. EXTEND TO FLOOR.
14. PROVIDE TEMPERATURE WELLS & OTHER SENSING POINTS FOR CENTRAL CONTROL SYSTEM.
15. EMERGENCY FAIL CLOSED SHUT-OFF VALVE WIRE TO EMERGENCY SWITCH OUTSIDE HTW ROOM

VALVES:

- GATE VALVE
- GLOBE VALVE
- PLUG VALVE
- CHECK VALVE (ARROW INDICATES DIRECTION OF FLOW)
- ANGLE VALVE
- ANGLE SAFETY OR RELIEF VALVE
- SAFETY OR RELIEF VALVE
- SOLENOID OPERATED VALVE
- CONTROL VALVE OR SPECIAL VALVE
- THREE-WAY VALVE
- PRESSURE REGULATING VALVE
- BALL OR BUTTERFLY VALVE
- REDUCED PRESSURE BACKFLOW PREVENTER

MISCELLANEOUS:

- REDUCER
- STRAINER
- ORIFICE OR FLOW NOZZLE
- PLUG, CAP OR BLIND FLANGE
- FLANGE OR UNION
- OPEN DRAIN FUNNEL
- HOSE BIBB
- T — THERMOMETER
- P — PRESSURE GAGE (SEE DETAIL)
- DRIP PAN
- M — METER
- VENT (SEE DETAIL)
- VTR — VENT THRU ROOF
- F — FLOW SENSOR

## 8 HTW HEAT EXCHANGE SYSTEM SCHEMATIC

MH506 NO SCALE

UTILITY ROOM PIPING SCHEMATIC FOR HTW SPACE HEATING CONVERTER & HTW DOMESTIC HOT WATER GENERATOR

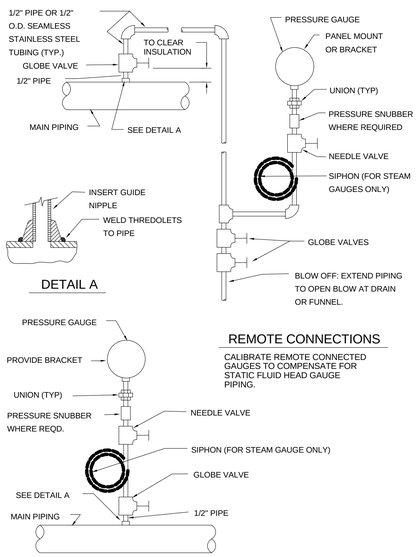


REMOTE CONNECTIONS

CALIBRATE REMOTE CONNECTED GAUGES TO COMPENSATE FOR STATIC FLUID HEAD GAUGE PIPING.

DIRECT CONNECTION

## 6 HIGH TEMPERATURE WATER PRESSURE GAUGE INSTALLATION DETAIL

MH506 NO SCALE

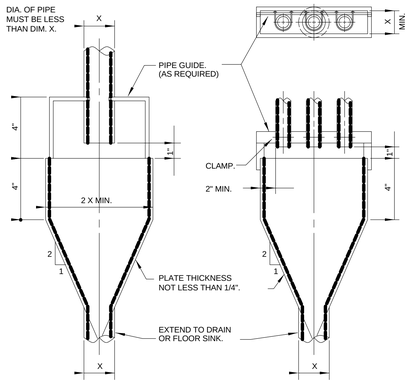


FUNNEL TYPE "A"
(FOR SINGLE VISIBLE DRAIN)

FUNNEL TYPE "B"
(FOR MORE THAN ONE VISIBLE DRAIN)

## 3 VISIBLE DRAIN FUNNELS

MH506 NO SCALE


MHTN ARCHITECTS
MHTN Architects, Inc.
420 East South Temple
Suite 100
Salt Lake City, Utah 84111
Telephone (801) 595-6700
Telefax (801) 595-6717
www.mhtn.com

Hastings+Chivetta
ARCHITECTURE • PLANNING • ENGINEERING
622 Emerson, Suite 200
St. Louis, MO 63141
Tel. 314.863.5717
Fax. 314.863.2823
www.hastingschivetta.com

VAN BOERUM & FRANK ASSOCIATES, INC.
CONSULTING ENGINEERS
Salt Lake City • Logan • St. George • Tempe
330 South 300 East 801.530.3148 T
Salt lake City, UT 84111 801.530.3150 F


# UNIVERSITY OF UTAH
# STUDENT LIFE CENTER
1836 E. BALLIF ROAD
SALT LAKE CITY, UTAH 84112


©2007 MHTN ARCHITECTS, INC.
Drawings, written material, and design concepts shall not be used or reproduced in whole or part in any form or format without prior written consent of MHTN ARCHITECTS, INC. Do not scale drawings - use given dimensions only. If not shown, verify correct dimensions with the Architect. Contractor shall check and verify all dimensions and conditions at job site.


PROJECT

SEAL

MHTN PROJECT NO.

DRAWN BY: CHECKED BY:

ISSUED:

| NO. | DATE | DESCRIPTION |
|---|---|---|

CONTRACTOR TO VERIFY DRAWINGS IN FIELD USE REFLECT LAST REVISION DATE:

| NO. | DATE | DESCRIPTION |
|---|---|---|

SHEET NAME

MECHANICAL DETAILS

BID DOCUMENTS
MAY 15, 2013

SHEET NUMBER

MH506

D:__Bim\Local\Mechanical_Central_JRobker.rvt
5/14/2013 12:53:40 PM

ECM 48"X29" EVAP MEDIA MODULE
CC 54"X30" COOLING COILS
PC 54"X30" PRE HEAT COILS
SF (2)-14" DIRECT DRIVE 5 HP SUPPLY PLENUM FANS
FLT (2)-24"X24"X2" - (2)-24"x12"x2" FILTERS
RD 12"X38" RETURN AIR DAMPER
OSA 12"X38" OUTSIDE AIR OPENING WITH DAMPER
EF (2)-15.75" DIRECT DRIVE 1-1/2 HP SUPPLY PLENUM FANS
EA 20"X32" EXHAUST AIR OPENING WITH DAMPER
LFT MOTOR REMOVAL BEAM

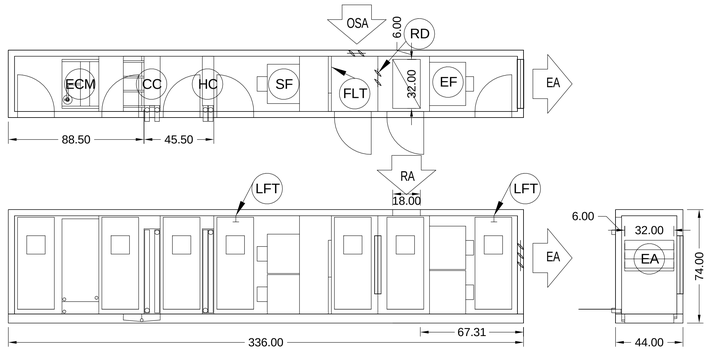


1 MH507 AH-1
NO SCALE

ECM 59"X64" EVAP MEDIA MODULE
CC (2)-45"X60" COOLING COILS
PC (2)-45"X60" PRE HEAT COILS
SF (4)-18.25" DIRECT DRIVE 5 HP SUPPLY PLENUM FANS
FLT (8)-24"X24"X2" / (4)-12"X24" FILTERS
RD 20"X76" RETURN AIR DAMPER
OSA 20"X76" OUTSIDE AIR OPENING WITH DAMPER
EF (4)-18.25" DIRECT DRIVE 2 HP SUPPLY PLENUM FANS
EA 36"X62" EXHAUST AIR OPENING WITH DAMPER
LFT MOTOR REMOVAL BEAM
BPD EVAP BYPASS DAMPER

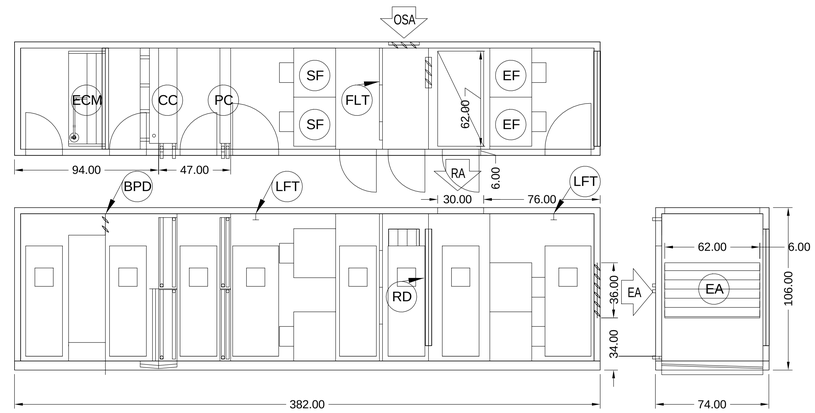


2 MH507 AH-2
NO SCALE

ECM 48"X29" EVAP MEDIA MODULE
CC 54"X30" COOLING COILS
PC 54"X30" PRE HEAT COILS
SF (2)-14" DIRECT DRIVE 5 HP SUPPLY PLENUM FANS
FLT (2)-24"X24"X2" - (2)-24"x12"x2" FILTERS
RD 12"X38" RETURN AIR DAMPER
OSA 12"X38" OUTSIDE AIR OPENING WITH DAMPER
EF (2)-15.75" DIRECT DRIVE 1-1/2 HP SUPPLY PLENUM FANS
EA 20"X32" EXHAUST AIR OPENING WITH DAMPER
LFT MOTOR REMOVAL BEAM

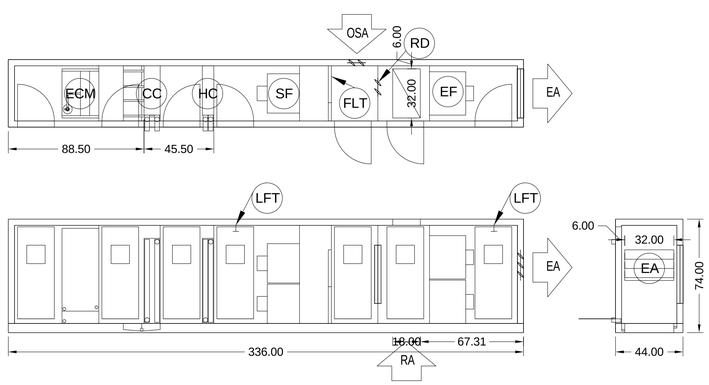


3 MH507 AH-3
NO SCALE

ECM 58"X81" EVAP MEDIA MODULE
CC (2)-40.5"X80" COOLING COILS
RC (2)-40.5"X80" RECOVERY COILS
PC (2)-40.5"X80" PRE HEAT COILS
SF (4)-22" DIRECT DRIVE 7-1/2 HP SUPPLY PLENUM FANS
FLT (9)-24"X24"X2" - (6)-24"X12"x2" FILTERS
OSA 36"X80" OUTSIDE AIR OPENING
LFT MOTOR REMOVAL BEAM

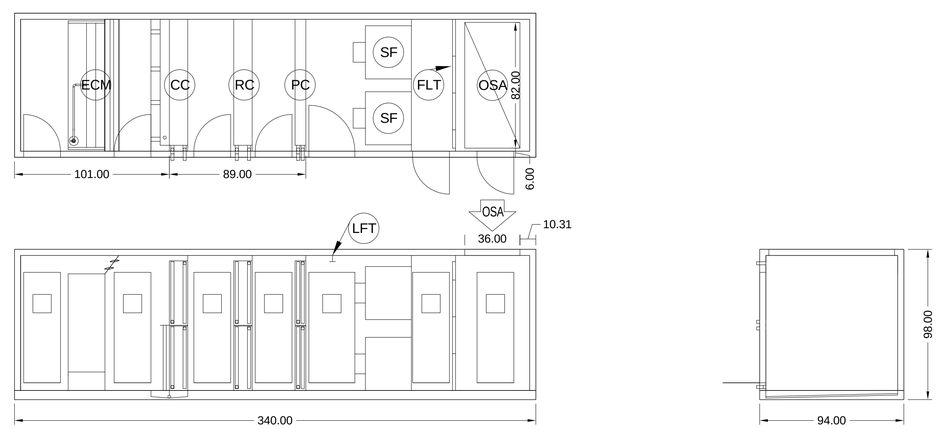


4 MH507 AH-4
NO SCALE


MHTN
ARCHITECTS
MHTN Architects, Inc.
420 East South Temple
Suite 100
Salt Lake City, Utah 84111
Telephone (801) 595-6700
Telefax (801) 595-6717
www.mhtn.com

Hastings+Chivetta
ARCHITECTURE • PLANNING • ENGINEERING
622 Emerson, Suite 200
St. Louis, MO 63141
Tel. 314.863.5717
Fax. 314.863.2823
www.hastingschivetta.com

VAN BOERUM & FRANK ASSOCIATES, INC.
CONSULTING ENGINEERS
Salt Lake City • Logan • St. George • Tempe
330 South 300 East 801.530.3148 T
Salt lake City, UT 84111 801.530.3150 F


REGISTERED PROFESSIONAL ENGINEER
No. 324030
BRADLY W. ROSENHAN
STATE OF UTAH

# UNIVERSITY OF UTAH
## STUDENT LIFE CENTER
1836 E. BALLIF ROAD
SALT LAKE CITY, UTAH 84112


©2007 MHTN ARCHITECTS, INC.
Drawings, written material, and design concepts shall not be used or reproduced without the consent of MHTN Architects, Inc. Written dimensions have the consent of MHTN Architects, Inc. Do not scale drawings. Use given dimensions only. If not shown, verify correct dimensions with the Architect. Contractor shall check and verify all dimensions and conditions at job site.


SEAL

MHTN PROJECT NO.
DRAWN BY: CHECKED BY:
ISSUED:

| NO. | DATE | DESCRIPTION |
|---|---|---|

CONTRACTOR TO VERIFY DRAWINGS IN FIELD USE REFLECT LAST REVISION DATE:

| NO. | DATE | DESCRIPTION |
|---|---|---|

SHEET NAME
MECHANICAL DETAILS

BID DOCUMENTS
MAY 15, 2013

SHEET NUMBER
MH507

D:_Bim\Local\Mechanical_Central_JRobker.rvt
5/14/2013 12:53:41 PM

ECM 69"X177" EVAP MEDIA MODULE
CC (2)-40.5"X176" COOLING COILS
PC (2)-40.5"X176" PRE HEAT COILS
SF (8)-20" DIRECT DRIVE 7-1/2 HP SUPPLY PLENUM FANS
FLT (21)-24"X24"X2" - (10)-24"x12"x2" FILTERS
RD 26"X90" RETURN AIR DAMPER
OSA (2)-84"X86" OUTSIDE AIR OPENING WITH DAMPER
EF (8)-22.25" DIRECT DRIVE 3 HP SUPPLY PLENUM FANS
EA 48"X138" EXHAUST AIR OPENING WITH DAMPER
LFT MOTOR REMOVAL BEAM

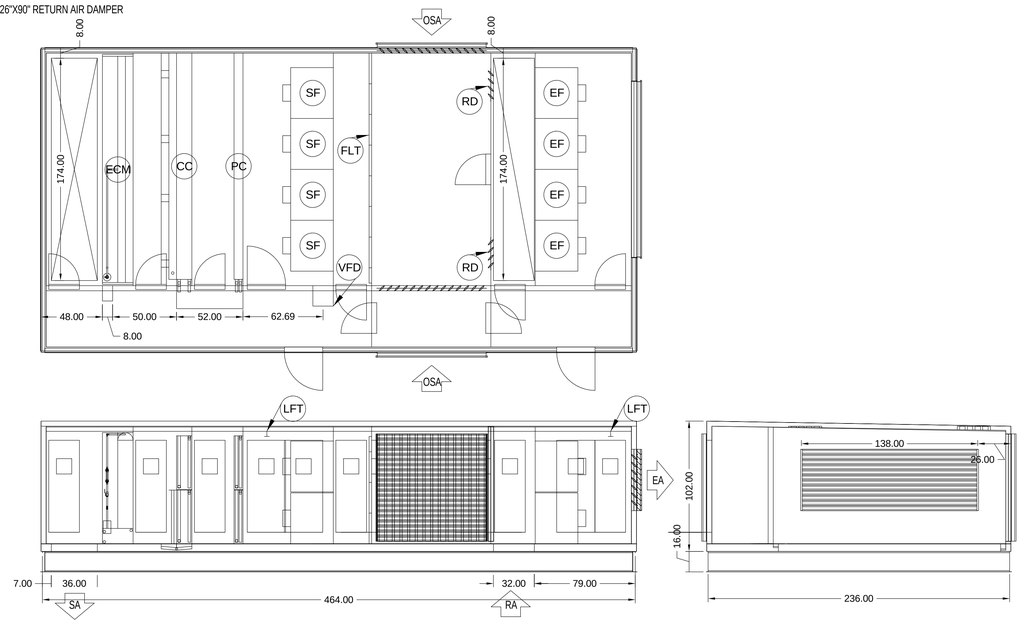


1 MH508 AH-5
NO SCALE

ECM 84"X177" EVAP MEDIA MODULE
CC (2)-51"X176" COOLING COILS
PC (2)-51"X176" PRE HEAT COILS
SF (4)-22" DIRECT DRIVE 7-1/2 HP SUPPLY PLENUM FANS
FLT (9)-24"X24"X2" - (6)-24"x12"x2" FILTERS
RD 40"X80" RETURN AIR DAMPER
OSA 24"X80" OUTSIDE AIR OPENING WITH DAMPER
EF (4)-22.25" DIRECT DRIVE 3 HP SUPPLY PLENUM FANS
EA 36"X72" EXHAUST AIR OPENING WITH DAMPER
LFT MOTOR REMOVAL BEAM

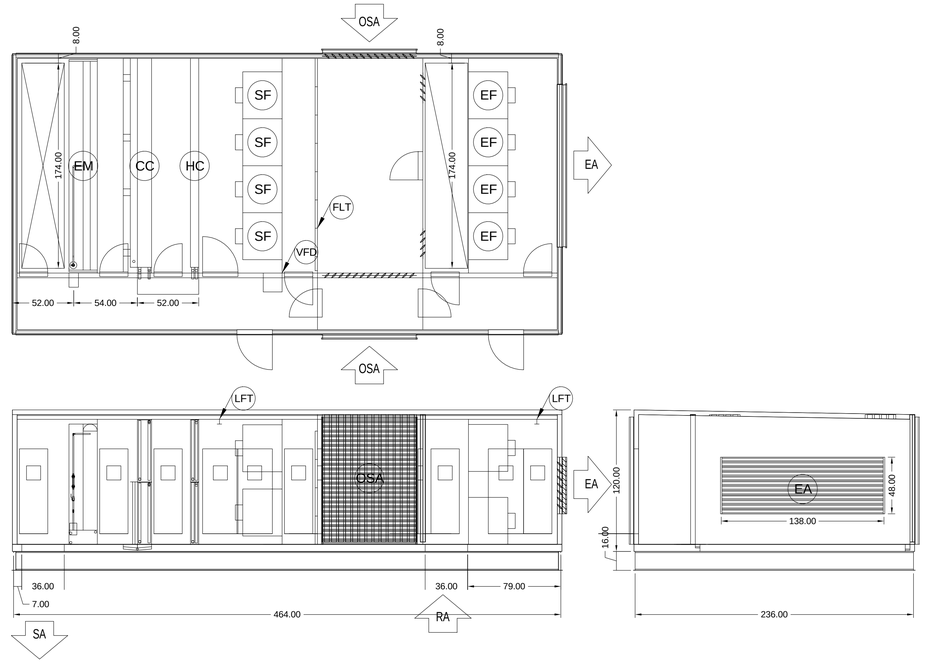


2 MH508 AH-6
NO SCALE

ECM 80"X95" EVAP MEDIA MODULE
CC (2)-52.5"X98" COOLING COILS
PC (2)-52.5"X98" PRE HEAT COILS
SF (6)-20" DIRECT DRIVE 7-1/2 HP SUPPLY PLENUM FANS
FLT (16)-24"X24"X2" - (4)-24"x12"x2" FILTERS
RD 40"X92" RETURN AIR DAMPER
OSA 32"X92" OUTSIDE AIR OPENING WITH DAMPER
EF (4)-27" DIRECT DRIVE 5 HP SUPPLY PLENUM FANS
EA 42"X92" EXHAUST AIR OPENING WITH DAMPER
LFT MOTOR REMOVAL BEAM
BPD 18"X104" EVAP BYPASS DAMPER

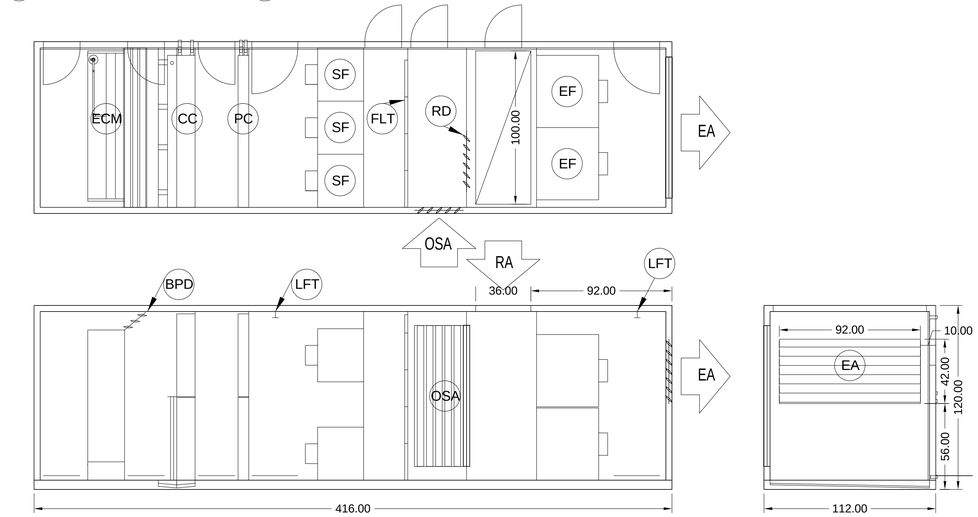


3 MH508 AH-7
NO SCALE

ECM 51"X52" EVAP MEDIA MODULE
CC 39"X50" COOLING COILS
PC 39"X50" PRE HEAT COILS
SF (2)-20" DIRECT DRIVE 7-1/2 HP SUPPLY PLENUM FANS
FLT (6)-24"X24"X2" FILTERS
RD 14"X76" RETURN AIR DAMPER
OSA 14"X76" OUTSIDE AIR OPENING WITH DAMPER
EF (2)-22.25" DIRECT DRIVE 5 HP SUPPLY PLENUM FANS
EA 26"X52" EXHAUST AIR OPENING WITH DAMPER
LFT MOTOR REMOVAL BEAM
BPD 12"X56" AIRWASHER BYPASS DAMPER

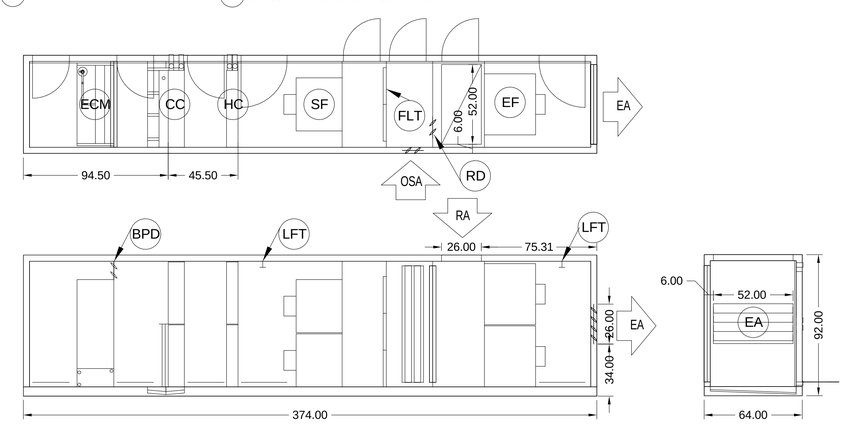


4 MH508 AH-8
NO SCALE


MHTN ARCHITECTS
MHTN Architects, Inc.
420 East South Temple
Suite 100
Salt Lake City, Utah 84111
Telephone (801) 595-6700
Telefax (801) 595-6717
www.mhtn.com

Hastings+Chivetta
ARCHITECTURE • PLANNING • ENGINEERING
622 Emerson, Suite 200
St. Louis, MO 63141
Tel. 314.863.5717
Fax. 314.863.2823
www.hastingschivetta.com

VAN BOERUM & FRANK ASSOCIATES, INC.
CONSULTING ENGINEERS
Salt Lake City • Logan • St. George • Tempe
330 South 300 East 801.530.3148 T
Salt lake City, UT 84111 801.530.3150 F


REGISTERED PROFESSIONAL ENGINEER
No. 324030
BRADLY W. ROSENHAN
STATE OF UTAH

# UNIVERSITY OF UTAH
## STUDENT LIFE CENTER
1836 E. BALLIF ROAD
SALT LAKE CITY, UTAH 84112


©2007 MHTN ARCHITECTS, INC.
Drawings, written material, and design concepts shall not be used or reproduced in whole or part in any form or format without prior written consent of MHTN Architects, Inc. Do not scale drawings. Use given dimensions only. If not shown, verify correct dimensions with the Architect. Contractor shall check and verify all dimensions and conditions at job site.


SEAL

MHTN PROJECT NO.
DRAWN BY: CHECKED BY:

ISSUED:

| NO. | DATE | DESCRIPTION |
|---|---|---|

CONTRACTOR TO VERIFY DRAWINGS IN FIELD USE REFLECT LAST REVISION DATE.

| NO. | DATE | DESCRIPTION |
|---|---|---|

SHEET NAME
MECHANICAL DETAILS

BID DOCUMENTS
MAY 15, 2013

SHEET NUMBER
MH508

D:__Bim\Local\Mechanical_Central_JRobker.rvt
5/14/2013 12:53:44 PM

ECM 42"X29" EVAP MEDIA MODULE
CC 54"X30" COOLING COILS
PC 54"X30" PRE HEAT COILS
SF (2)-14" DIRECT DRIVE 5 HP SUPPLY PLENUM FANS
FLT (2)-24"X24"X2" - (2)-24"x12"x2" FILTERS
RD 12"X38" RETURN AIR DAMPER
OSA 12"X38" OUTSIDE AIR OPENING WITH DAMPER
EF (2)-15.75" DIRECT DRIVE 1-1/2 HP SUPPLY PLENUM FANS
EA 20"X32" EXHAUST AIR OPENING WITH DAMPER
LFT MOTOR REMOVAL BEAM
BPD 8"X36" AIRWASHER BYPASS DAMPER

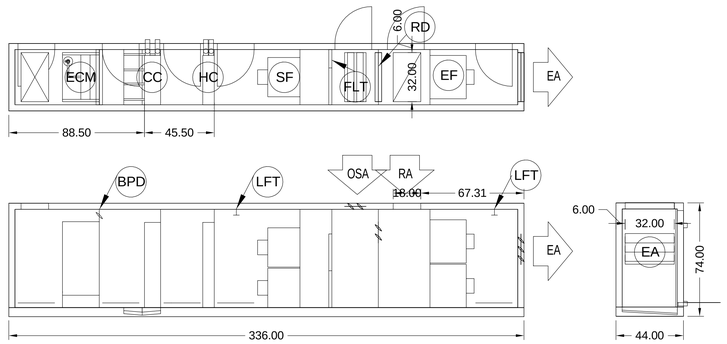


1 MH509 AH-9
NO SCALE

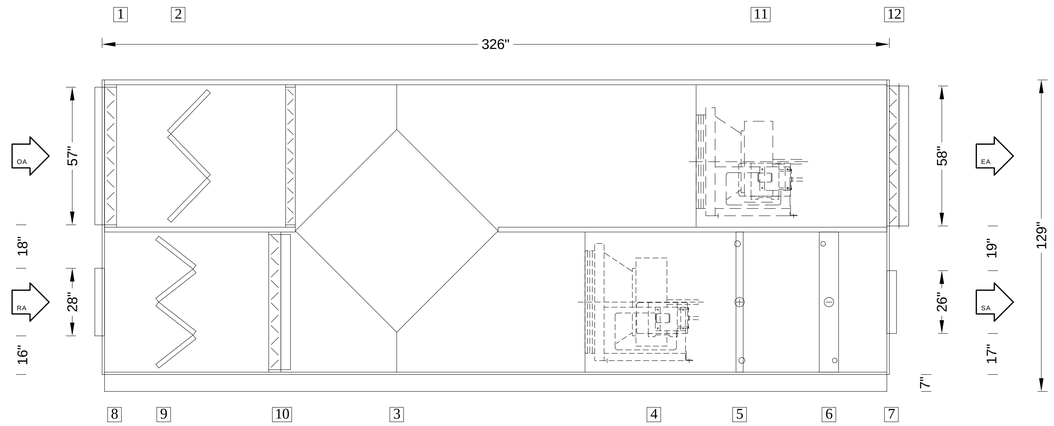


COMPONENTS
1 INLET
(LxH):91 x 57
2 V-BANK FILTER
3 HEAT EXCHANGER
4 FAN
5 HOT WATER COIL
6 CHILLED WATER COIL
7 OUTLET
(LxH):91 x 26
8 INLET
(LxH):91 x 28
9 V-BANK FILTER
10 OUTLET
(LxH):20 x 56
11 FAN
12 OUTLET
(LxH):55 x 58
13 CONTROL PANEL

UNIT WEIGHT 13,400 LBS

CLEARANCES:
ACCCESS DOORS - 30 in

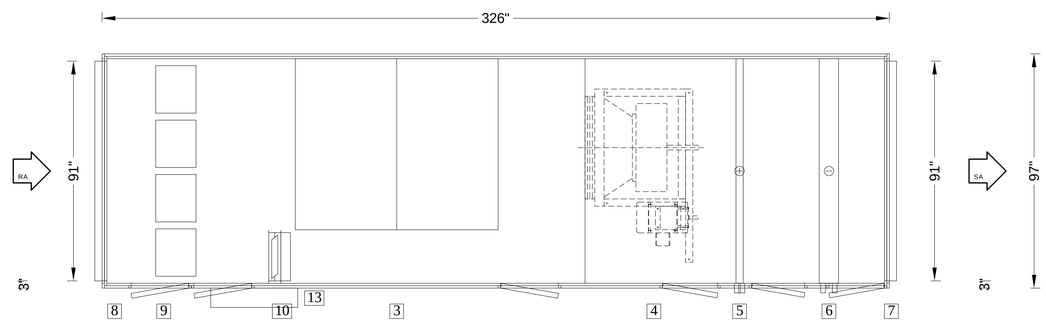


COMPONENTS
1 INLET
(LxH):91 x 57
2 V-BANK FILTER
3 HEAT EXCHANGER
4 FAN
5 HOT WATER COIL
6 CHILLED WATER COIL
7 OUTLET
(LxH):91 x 26
8 INLET
(LxH):91 x 28
9 V-BANK FILTER
10 OUTLET
(LxH):20 x 56
11 FAN
12 OUTLET
(LxH):55 x 58
13 CONTROL PANEL

UNIT WEIGHT 13,400 LBS

CLEARANCES:
ACCCESS DOORS - 30 in

24D 24"X72" ACCESS DOOR
FLT (9)-24"X24" / (3)-12"X24" FILTERS
SF (4)-18.25" DIA DIRECT DRIVE SUPPLY FANS 5 HP EACH
30D 30"X72" ACCESS DOOR WITH WINDOW
HRC 39"X70" FIN DIMENSION HEAT RECOVERY COIL
SA 62"X30" SUPPLY AIR OPENING

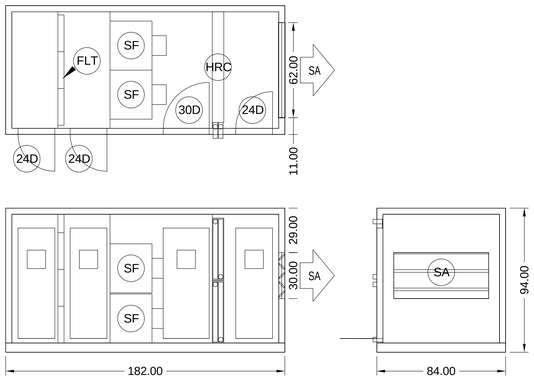


3 MH517 EAH-4
NO SCALE

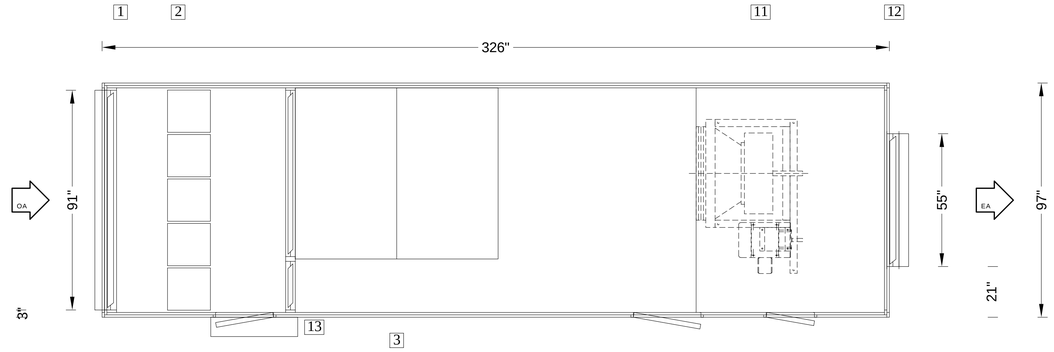


COMPONENTS
1 INLET
(LxH):91 x 57
2 V-BANK FILTER
3 HEAT EXCHANGER
4 FAN
5 HOT WATER COIL
6 CHILLED WATER COIL
7 OUTLET
(LxH):91 x 26
8 INLET
(LxH):91 x 28
9 V-BANK FILTER
10 OUTLET
(LxH):20 x 56
11 FAN
12 OUTLET
(LxH):55 x 58
13 CONTROL PANEL

UNIT WEIGHT 13,400 LBS

CLEARANCES:
ACCCESS DOORS - 30 in

2 MH509 AH-10
NO SCALE


MHTN
ARCHITECTS
MHTN Architects, Inc.
420 East South Temple
Suite 100
Salt Lake City, Utah 84111
Telephone (801) 595-6700
Telefax (801) 595-6717
www.mhtn.com

Hastings+Chivetta
ARCHITECTURE • PLANNING • ENGINEERING
622 Emerson, Suite 200
St. Louis, MO 63141
Tel. 314.863.5717
Fax. 314.863.2823
www.hastingschivetta.com

VAN BOERUM & FRANK ASSOCIATES, INC.
CONSULTING ENGINEERS
Salt Lake City • Logan • St. George • Tempe
330 South 300 East 801.530.3148 T
Salt lake City, UT 84111 801.530.3150 F


REGISTERED PROFESSIONAL ENGINEER
No. 324030
BRADLY W. ROSENHAN
STATE OF UTAH

# UNIVERSITY OF UTAH
## STUDENT LIFE CENTER
1836 E. BALLIF ROAD
SALT LAKE CITY, UTAH 84112


©2007 MHTN ARCHITECTS, INC.
Drawings, written material, and design concepts shall not be used or reproduced in whole or part in any form or format without prior written consent of MHTN Architects, Inc. Do not scale drawings. Use given dimensions only. If not shown, verify correct dimensions with the Architect. Contractor shall check and verify all dimensions and conditions at job site.


SEAL

MHTN PROJECT NO.
DRAWN BY: CHECKED BY:
ISSUED:

| NO. | DATE | DESCRIPTION |
|---|---|---|

CONTRACTOR TO VERIFY DRAWINGS IN FIELD USE REFLECT LAST REVISION DATE.

| NO. | DATE | DESCRIPTION |
|---|---|---|

SHEET NAME
MECHANICAL DETAILS

BID DOCUMENTS
MAY 15, 2013

SHEET NUMBER
MH509

D:_BimLocal\Mechanical_Central_JRobker.rvt
5/14/2013 12:53:46 PM

## FAN SCHEDULE

| ID | MANUFACTURER AND MODEL NUMBER | LOCATION | TYPE | AIR TYPE | AIR: MAXIMUM AIRFLOW RATE (CFM) | AIR: STATIC PRESSURE (IN. H2O) | FAN: FAN SPEED (RPM) | FAN: FAN WHEEL DIAMETER (IN) | FAN: STATIC EFFICIENCY (%) | ELECTRICAL: MOTOR SIZE (HP) | ELECTRICAL: MOTOR BHP (HP) | ELECTRICAL: MOTOR SPEED (RPM) | ELECTRICAL: VOLT/PH/HZ | PHYSICAL: LENGTH/ WIDTH/ HEIGHT (IN) | NOTES |
|---|---|---|---|---|---|---|---|---|---|---|---|---|---|---|---|
| DOF-1 | TWIN CITY TSL 182 | HIGH TEMP ROOM | TUBULAR INLINE, CENTRIF | OUTSIDE AIR | 1500 | 0.53 | 807 | 18.25 | 64.6 | 0.25 | 0.194 | 1800 | 120/1/60 | 31.25/28/48.45 | 1 |
| EF-EAH-4.1 | TWIN CITY EPQN 222 | EAH-4 | PLENUM, CENTRIFUGAL | EXHAUST AIR | 3750 | 2.1 | 1223 | 22.25 | 67.5 | 3 | 1.835 | 1800 | 460/3/60 | 43.5/32/32 | |
| EF-EAH-4.2 | TWIN CITY EPQN 222 | EAH-4 | PLENUM, CENTRIFUGAL | EXHAUST AIR | 3750 | 2.1 | 1223 | 22.25 | 67.5 | 3 | 1.835 | 1800 | 460/3/60 | 43.5/32/32 | |
| EF-EAH-4.3 | TWIN CITY EPQN 222 | EAH-4 | PLENUM, CENTRIFUGAL | EXHAUST AIR | 3750 | 2.1 | 1223 | 22.25 | 67.5 | 3 | 1.835 | 1800 | 460/3/60 | 43.5/32/32 | |
| EF-EAH-4.4 | TWIN CITY EPQN 222 | EAH-4 | PLENUM, CENTRIFUGAL | EXHAUST AIR | 3750 | 2.1 | 1223 | 22.25 | 67.5 | 3 | 1.835 | 1800 | 460/3/60 | 43.5/32/32 | |
| EF-1 | TWIN CITY BCRD 085D | ROOF | ROOF DOWNBLAST, DOME | EXHAUST AIR | 300 | 0.7 | 1542 | 10.5 | 54.8 | 0.25 | 0.06 | 1800 | 120/1/60 | 27.88/27.88/28 | |
| EF-2 | TWIN CITY BCRD 085D | ROOF | ROOF DOWNBLAST, DOME | EXHAUST AIR | 200 | 0.7 | 1514 | 10.5 | 46.7 | 0.25 | 0.047 | 1800 | 120/1/60 | 27.88/27.88/28 | |
| EF-3 | TWIN CITY BCRD 160D | ROOF | ROOF DOWNBLAST, DOME | EXHAUST AIR | 2900 | 1.08 | 1440 | 16.5 | 59.6 | 1 | 0.828 | 1800 | 460/3/60 | 33.81/33.81/35.25 | |
| RLF-AH-1.1 | TWIN CITY EPQN 245 | AH-1 | PLENUM, CENTRIFUGAL | RELIEF AIR | 3000 | 1.25 | 902 | 24.25 | 72 | 1 | 0.815 | 950 | 460/3/60 | 46.38/34/34 | 1 |
| RLF-AH-1.2 | TWIN CITY EPQN 245 | AH-1 | PLENUM, CENTRIFUGAL | RELIEF AIR | 3000 | 1.25 | 902 | 24.25 | 72 | 1 | 0.815 | 950 | 460/3/60 | 46.38/34/34 | 1 |
| RLF-AH-1.3 | TWIN CITY EPQN 245 | AH-1 | PLENUM, CENTRIFUGAL | RELIEF AIR | 3000 | 1.25 | 902 | 24.25 | 72 | 1 | 0.815 | 950 | 460/3/60 | 46.38/34/34 | 1 |
| RLF-AH-1.4 | TWIN CITY EPQN 245 | AH-1 | PLENUM, CENTRIFUGAL | RELIEF AIR | 3000 | 1.25 | 902 | 24.25 | 72 | 1 | 0.815 | 950 | 460/3/60 | 46.38/34/34 | 1 |
| RLF-AH-2.1 | TWIN CITY EPQN 245 | AH-2 | PLENUM, CENTRIFUGAL | RELIEF AIR | 3250 | 1.25 | 900 | 24.5 | 71.9 | 1 | 0.884 | 900 | 460/3/60 | 46.38/34/34 | 1 |
| RLF-AH-2.2 | TWIN CITY EPQN 245 | AH-2 | PLENUM, CENTRIFUGAL | RELIEF AIR | 3250 | 1.25 | 900 | 24.5 | 71.9 | 1 | 0.884 | 900 | 460/3/60 | 46.38/34/34 | 1 |
| RLF-AH-2.3 | TWIN CITY EPQN 245 | AH-2 | PLENUM, CENTRIFUGAL | RELIEF AIR | 3250 | 1.25 | 900 | 24.5 | 71.9 | 1 | 0.884 | 900 | 460/3/60 | 46.38/34/34 | 1 |
| RLF-AH-2.4 | TWIN CITY EPQN 245 | AH-2 | PLENUM, CENTRIFUGAL | RELIEF AIR | 3250 | 1.25 | 900 | 24.5 | 71.9 | 1 | 0.884 | 900 | 460/3/60 | 46.38/34/34 | 1 |
| RLF-AH-3.1 | TWIN CITY EPQN 270 | AH-3 | PLENUM, CENTRIFUGAL | RELIEF AIR | 16500 | 3.5 | 1765 | 27 | 64.5 | 25 | 14.065 | 1800 | 460/3/60 | 50.63/38/38 | 1-2 |
| RLF-AH-3.2 | TWIN CITY EPQN 270 | AH-3 | PLENUM, CENTRIFUGAL | RELIEF AIR | 16500 | 3.5 | 1765 | 27 | 64.5 | 25 | 14.065 | 1800 | 460/3/60 | 50.63/38/38 | 1-2 |
| RLF-AH-5.1 | TWIN CITY EPQN 270 | AH-5 | PLENUM, CENTRIFUGAL | RELIEF AIR | 5625 | 1.3 | 850 | 27 | 71.4 | 2 | 1.612 | 850 | 460/3/60 | 50.63/38/38 | 1 |
| RLF-AH-5.2 | TWIN CITY EPQN 270 | AH-5 | PLENUM, CENTRIFUGAL | RELIEF AIR | 5625 | 1.3 | 850 | 27 | 71.4 | 2 | 1.612 | 850 | 460/3/60 | 50.63/38/38 | 1 |
| RLF-AH-5.3 | TWIN CITY EPQN 270 | AH-5 | PLENUM, CENTRIFUGAL | RELIEF AIR | 5625 | 1.3 | 850 | 27 | 71.4 | 2 | 1.612 | 850 | 460/3/60 | 50.63/38/38 | 1 |
| RLF-AH-5.4 | TWIN CITY EPQN 270 | AH-5 | PLENUM, CENTRIFUGAL | RELIEF AIR | 5625 | 1.3 | 850 | 27 | 71.4 | 2 | 1.612 | 850 | 460/3/60 | 50.63/38/38 | 1 |
| RLF-AH-5.5 | TWIN CITY EPQN 270 | AH-5 | PLENUM, CENTRIFUGAL | RELIEF AIR | 5625 | 1.3 | 850 | 27 | 71.4 | 2 | 1.612 | 850 | 460/3/60 | 50.63/38/38 | 1 |
| RLF-AH-5.6 | TWIN CITY EPQN 270 | AH-5 | PLENUM, CENTRIFUGAL | RELIEF AIR | 5625 | 1.3 | 850 | 27 | 71.4 | 2 | 1.612 | 850 | 460/3/60 | 50.63/38/38 | 1 |
| RLF-AH-5.7 | TWIN CITY EPQN 270 | AH-5 | PLENUM, CENTRIFUGAL | RELIEF AIR | 5625 | 1.3 | 850 | 27 | 71.4 | 2 | 1.612 | 850 | 460/3/60 | 50.63/38/38 | 1 |
| RLF-AH-5.8 | TWIN CITY EPQN 270 | AH-5 | PLENUM, CENTRIFUGAL | RELIEF AIR | 5625 | 1.3 | 850 | 27 | 71.4 | 2 | 1.612 | 850 | 460/3/60 | 50.63/38/38 | 1 |
| RLF-AH-6.1 | TWIN CITY EPQN 270 | AH-6 | PLENUM, CENTRIFUGAL | RELIEF AIR | 6250 | 1.4 | 872 | 27 | 71.3 | 2 | 1.924 | 900 | 460/3/60 | 50.63/38/38 | 1 |
| RLF-AH-6.2 | TWIN CITY EPQN 270 | AH-6 | PLENUM, CENTRIFUGAL | RELIEF AIR | 6250 | 1.4 | 872 | 27 | 71.3 | 2 | 1.924 | 900 | 460/3/60 | 50.63/38/38 | 1 |
| RLF-AH-6.3 | TWIN CITY EPQN 270 | AH-6 | PLENUM, CENTRIFUGAL | RELIEF AIR | 6250 | 1.4 | 872 | 27 | 71.3 | 2 | 1.924 | 900 | 460/3/60 | 50.63/38/38 | 1 |
| RLF-AH-6.4 | TWIN CITY EPQN 270 | AH-6 | PLENUM, CENTRIFUGAL | RELIEF AIR | 6250 | 1.4 | 872 | 27 | 71.3 | 2 | 1.924 | 900 | 460/3/60 | 50.63/38/38 | 1 |
| RLF-AH-6.5 | TWIN CITY EPQN 270 | AH-6 | PLENUM, CENTRIFUGAL | RELIEF AIR | 6250 | 1.4 | 872 | 27 | 71.3 | 2 | 1.924 | 900 | 460/3/60 | 50.63/38/38 | 1 |
| RLF-AH-6.6 | TWIN CITY EPQN 270 | AH-6 | PLENUM, CENTRIFUGAL | RELIEF AIR | 6250 | 1.4 | 872 | 27 | 71.3 | 2 | 1.924 | 900 | 460/3/60 | 50.63/38/38 | 1 |
| RLF-AH-6.7 | TWIN CITY EPQN 270 | AH-6 | PLENUM, CENTRIFUGAL | RELIEF AIR | 6250 | 1.4 | 872 | 27 | 71.3 | 2 | 1.924 | 900 | 460/3/60 | 50.63/38/38 | 1 |
| RLF-AH-6.8 | TWIN CITY EPQN 270 | AH-6 | PLENUM, CENTRIFUGAL | RELIEF AIR | 6250 | 1.4 | 872 | 27 | 71.3 | 2 | 1.924 | 900 | 460/3/60 | 50.63/38/38 | 1 |
| RLF-AH-7.1 | TWIN CITY EPQN 300 | AH-7 | PLENUM, CENTRIFUGAL | RELIEF AIR | 7275 | 1.55 | 877 | 29.406 | 71.3 | 3 | 2.478 | 900 | 460/3/60 | 53.25/42/42 | 1 |
| RLF-AH-7.2 | TWIN CITY EPQN 300 | AH-7 | PLENUM, CENTRIFUGAL | RELIEF AIR | 7275 | 1.55 | 877 | 29.406 | 71.3 | 3 | 2.478 | 900 | 460/3/60 | 53.25/42/42 | 1 |
| RLF-AH-7.3 | TWIN CITY EPQN 300 | AH-7 | PLENUM, CENTRIFUGAL | RELIEF AIR | 7275 | 1.55 | 877 | 29.406 | 71.3 | 3 | 2.478 | 900 | 460/3/60 | 53.25/42/42 | 1 |
| RLF-AH-7.4 | TWIN CITY EPQN 300 | AH-7 | PLENUM, CENTRIFUGAL | RELIEF AIR | 7275 | 1.55 | 877 | 29.406 | 71.3 | 3 | 2.478 | 900 | 460/3/60 | 53.25/42/42 | 1 |
| RLF-AH-8.1 | TWIN CITY EPQN 270 | AH-8 | PLENUM, CENTRIFUGAL | RELIEF AIR | 5000 | 1.27 | 851 | 26.469 | 71.2 | 1.5 | 1.404 | 900 | 460/3/60 | 50.63/38/38 | 1 |
| RLF-AH-8.2 | TWIN CITY EPQN 270 | AH-8 | PLENUM, CENTRIFUGAL | RELIEF AIR | 5000 | 1.27 | 851 | 26.469 | 71.2 | 1.5 | 1.404 | 900 | 460/3/60 | 50.63/38/38 | 1 |
| RLF-AH-9.1 | TWIN CITY EPQN 245 | AH-9 | PLENUM, CENTRIFUGAL | RELIEF AIR | 2500 | 1.27 | 900 | 24.5 | 72.1 | 0.75 | 0.694 | 900 | 460/3/60 | 46.38/34/34 | 1 |
| RLF-AH-9.2 | TWIN CITY EPQN 245 | AH-9 | PLENUM, CENTRIFUGAL | RELIEF AIR | 2500 | 1.27 | 900 | 24.5 | 72.1 | 0.75 | 0.694 | 900 | 460/3/60 | 46.38/34/34 | 1 |
| RLF-AH-10.1 | TWIN CITY EPQN 330 | AH-10 | PLENUM, CENTRIFUGAL | RELIEF AIR | 7500 | 3.35 | 1145 | 33 | 71.3 | 7.5 | 5.538 | 1150 | 460/3/60 | 59.01/46/46 | 1 |
| RLF-AH-10.2 | TWIN CITY EPQN 330 | AH-10 | PLENUM, CENTRIFUGAL | RELIEF AIR | 7500 | 3.35 | 1145 | 33 | 71.3 | 7.5 | 5.538 | 1150 | 460/3/60 | 59.01/46/46 | 1 |
| SF-AH-1.1 | TWIN CITY EPQN 222 | AH-1 | PLENUM, CENTRIFUGAL | SUPPLY AIR | 3000 | 3.4 | 1798 | 22.031 | 70.1 | 3 | 2.826 | 1800 | 460/3/60 | 44.5/32/32 | 1 |
| SF-AH-1.2 | TWIN CITY EPQN 222 | AH-1 | PLENUM, CENTRIFUGAL | SUPPLY AIR | 3000 | 3.4 | 1798 | 22.031 | 70.1 | 3 | 2.826 | 1800 | 460/3/60 | 44.5/32/32 | 1 |
| SF-AH-1.3 | TWIN CITY EPQN 222 | AH-1 | PLENUM, CENTRIFUGAL | SUPPLY AIR | 3000 | 3.4 | 1798 | 22.031 | 70.1 | 3 | 2.826 | 1800 | 460/3/60 | 44.5/32/32 | 1 |
| SF-AH-1.4 | TWIN CITY EPQN 222 | AH-1 | PLENUM, CENTRIFUGAL | SUPPLY AIR | 3000 | 3.4 | 1798 | 22.031 | 70.1 | 3 | 2.826 | 1800 | 460/3/60 | 44.5/32/32 | 1 |
| SF-AH-2.1 | TWIN CITY EPQN 182 | AH-2 | PLENUM, CENTRIFUGAL | SUPPLY AIR | 3750 | 4.95 | 2545 | 18.25 | 61.8 | 7.5 | 5.491 | 1800 | 460/3/60 | 35.88/26/26 | 1-2 |
| SF-AH-2.2 | TWIN CITY EPQN 182 | AH-2 | PLENUM, CENTRIFUGAL | SUPPLY AIR | 3750 | 4.95 | 2545 | 18.25 | 61.8 | 7.5 | 5.491 | 1800 | 460/3/60 | 35.88/26/26 | 1-2 |
| SF-AH-2.3 | TWIN CITY EPQN 182 | AH-2 | PLENUM, CENTRIFUGAL | SUPPLY AIR | 3750 | 4.95 | 2545 | 18.25 | 61.8 | 7.5 | 5.491 | 1800 | 460/3/60 | 35.88/26/26 | 1-2 |
| SF-AH-2.4 | TWIN CITY EPQN 182 | AH-2 | PLENUM, CENTRIFUGAL | SUPPLY AIR | 3750 | 4.95 | 2545 | 18.25 | 61.8 | 7.5 | 5.491 | 1800 | 460/3/60 | 35.88/26/26 | 1-2 |
| SF-AH-3.1 | TWIN CITY EPQN 330 | AH-3 | PLENUM, CENTRIFUGAL | SUPPLY AIR | 15000 | 3.65 | 1200 | 33 | 71.2 | 15 | 12.079 | 1200 | 460/3/60 | 59.01/46/46 | 1 |
| SF-AH-3.2 | TWIN CITY EPQN 330 | AH-3 | PLENUM, CENTRIFUGAL | SUPPLY AIR | 15000 | 3.65 | 1200 | 33 | 71.2 | 15 | 12.079 | 1200 | 460/3/60 | 59.01/46/46 | 1 |
| SF-AH-4.1 | TWIN CITY EPQN 270 | AH-4 | PLENUM, CENTRIFUGAL | SUPPLY AIR | 5000 | 5.14 | 1805 | 26.469 | 71 | 7.5 | 6.575 | 1850 | 460/3/60 | 50.63/38/38 | 1-2 |
| SF-AH-4.2 | TWIN CITY EPQN 270 | AH-4 | PLENUM, CENTRIFUGAL | SUPPLY AIR | 5000 | 5.14 | 1805 | 26.469 | 71 | 7.5 | 6.575 | 1850 | 460/3/60 | 50.63/38/38 | 1-2 |
| SF-AH-4.3 | TWIN CITY EPQN 270 | AH-4 | PLENUM, CENTRIFUGAL | SUPPLY AIR | 5000 | 5.14 | 1805 | 26.469 | 71 | 7.5 | 6.575 | 1850 | 460/3/60 | 50.63/38/38 | 1-2 |
| SF-AH-4.4 | TWIN CITY EPQN 270 | AH-4 | PLENUM, CENTRIFUGAL | SUPPLY AIR | 5000 | 5.14 | 1805 | 26.469 | 71 | 7.5 | 6.575 | 1850 | 460/3/60 | 50.63/38/38 | 1-2 |
| SF-AH-5.1 | TWIN CITY EPQN 245 | AH-5 | PLENUM, CENTRIFUGAL | SUPPLY AIR | 5625 | 3.38 | 1745 | 23.75 | 72.1 | 7.5 | 5.119 | 1750 | 460/3/60 | 46.38/34/34 | 1-2 |
| SF-AH-5.2 | TWIN CITY EPQN 245 | AH-5 | PLENUM, CENTRIFUGAL | SUPPLY AIR | 5625 | 3.38 | 1745 | 23.75 | 72.1 | 7.5 | 5.119 | 1750 | 460/3/60 | 46.38/34/34 | 1-2 |
| SF-AH-5.3 | TWIN CITY EPQN 245 | AH-5 | PLENUM, CENTRIFUGAL | SUPPLY AIR | 5625 | 3.38 | 1745 | 23.75 | 72.1 | 7.5 | 5.119 | 1750 | 460/3/60 | 46.38/34/34 | 1-2 |
| SF-AH-5.4 | TWIN CITY EPQN 245 | AH-5 | PLENUM, CENTRIFUGAL | SUPPLY AIR | 5625 | 3.38 | 1745 | 23.75 | 72.1 | 7.5 | 5.119 | 1750 | 460/3/60 | 46.38/34/34 | 1-2 |
| SF-AH-5.5 | TWIN CITY EPQN 245 | AH-5 | PLENUM, CENTRIFUGAL | SUPPLY AIR | 5625 | 3.38 | 1745 | 23.75 | 72.1 | 7.5 | 5.119 | 1750 | 460/3/60 | 46.38/34/34 | 1-2 |
| SF-AH-5.6 | TWIN CITY EPQN 245 | AH-5 | PLENUM, CENTRIFUGAL | SUPPLY AIR | 5625 | 3.38 | 1745 | 23.75 | 72.1 | 7.5 | 5.119 | 1750 | 460/3/60 | 46.38/34/34 | 1-2 |
| SF-AH-5.7 | TWIN CITY EPQN 245 | AH-5 | PLENUM, CENTRIFUGAL | SUPPLY AIR | 5625 | 3.38 | 1745 | 23.75 | 72.1 | 7.5 | 5.119 | 1750 | 460/3/60 | 46.38/34/34 | 1-2 |
| SF-AH-5.8 | TWIN CITY EPQN 245 | AH-5 | PLENUM, CENTRIFUGAL | SUPPLY AIR | 5625 | 3.38 | 1745 | 23.75 | 72.1 | 7.5 | 5.119 | 1750 | 460/3/60 | 46.38/34/34 | 1-2 |
| SF-AH-6.1 | TWIN CITY EPQN 245 | AH-6 | PLENUM, CENTRIFUGAL | SUPPLY AIR | 6750 | 3.53 | 1716 | 24.5 | 72.2 | 7.5 | 6.356 | 1750 | 460/3/60 | 46.38/34/34 | 1-2 |
| SF-AH-6.2 | TWIN CITY EPQN 245 | AH-6 | PLENUM, CENTRIFUGAL | SUPPLY AIR | 6750 | 3.53 | 1716 | 24.5 | 72.2 | 7.5 | 6.356 | 1750 | 460/3/60 | 46.38/34/34 | 1-2 |
| SF-AH-6.3 | TWIN CITY EPQN 245 | AH-6 | PLENUM, CENTRIFUGAL | SUPPLY AIR | 6750 | 3.53 | 1716 | 24.5 | 72.2 | 7.5 | 6.356 | 1750 | 460/3/60 | 46.38/34/34 | 1-2 |
| SF-AH-6.4 | TWIN CITY EPQN 245 | AH-6 | PLENUM, CENTRIFUGAL | SUPPLY AIR | 6750 | 3.53 | 1716 | 24.5 | 72.2 | 7.5 | 6.356 | 1750 | 460/3/60 | 46.38/34/34 | 1-2 |
| SF-AH-6.5 | TWIN CITY EPQN 245 | AH-6 | PLENUM, CENTRIFUGAL | SUPPLY AIR | 6750 | 3.53 | 1716 | 24.5 | 72.2 | 7.5 | 6.356 | 1750 | 460/3/60 | 46.38/34/34 | 1-2 |
| SF-AH-6.6 | TWIN CITY EPQN 245 | AH-6 | PLENUM, CENTRIFUGAL | SUPPLY AIR | 6750 | 3.53 | 1716 | 24.5 | 72.2 | 7.5 | 6.356 | 1750 | 460/3/60 | 46.38/34/34 | 1-2 |
| SF-AH-6.7 | TWIN CITY EPQN 245 | AH-6 | PLENUM, CENTRIFUGAL | SUPPLY AIR | 6750 | 3.53 | 1716 | 24.5 | 72.2 | 7.5 | 6.356 | 1750 | 460/3/60 | 46.38/34/34 | 1-2 |
| SF-AH-6.8 | TWIN CITY EPQN 245 | AH-6 | PLENUM, CENTRIFUGAL | SUPPLY AIR | 6750 | 3.53 | 1716 | 24.5 | 72.2 | 7.5 | 6.356 | 1750 | 460/3/60 | 46.38/34/34 | 1-2 |
| SF-AH-7.1 | TWIN CITY EPQN 270 | AH-7 | PLENUM, CENTRIFUGAL | SUPPLY AIR | 5333 | 4.93 | 1800 | 26.469 | 71.2 | 7.5 | 6.738 | 1800 | 460/3/60 | 50.63/38/38 | 1-2 |
| SF-AH-7.2 | TWIN CITY EPQN 270 | AH-7 | PLENUM, CENTRIFUGAL | SUPPLY AIR | 5333 | 4.93 | 1800 | 26.469 | 71.2 | 7.5 | 6.738 | 1800 | 460/3/60 | 50.63/38/38 | 1-2 |
| SF-AH-7.3 | TWIN CITY EPQN 270 | AH-7 | PLENUM, CENTRIFUGAL | SUPPLY AIR | 5333 | 4.93 | 1800 | 26.469 | 71.2 | 7.5 | 6.738 | 1800 | 460/3/60 | 50.63/38/38 | 1-2 |
| SF-AH-7.4 | TWIN CITY EPQN 270 | AH-7 | PLENUM, CENTRIFUGAL | SUPPLY AIR | 5333 | 4.93 | 1800 | 26.469 | 71.2 | 7.5 | 6.738 | 1800 | 460/3/60 | 50.63/38/38 | 1-2 |
| SF-AH-7.5 | TWIN CITY EPQN 270 | AH-7 | PLENUM, CENTRIFUGAL | SUPPLY AIR | 5344 | 4.93 | 1801 | 26.469 | 71.2 | 7.5 | 6.751 | 1850 | 460/3/60 | 50.63/38/38 | 1-2 |
| SF-AH-7.6 | TWIN CITY EPQN 270 | AH-7 | PLENUM, CENTRIFUGAL | SUPPLY AIR | 5344 | 4.93 | 1801 | 26.469 | 71.2 | 7.5 | 6.751 | 1850 | 460/3/60 | 50.63/38/38 | 1-2 |
| SF-AH-8.1 | TWIN CITY EPQN 245 | AH-8 | PLENUM, CENTRIFUGAL | SUPPLY AIR | 5000 | 3.55 | 1718 | 24.5 | 72.2 | 5 | 4.74 | 1750 | 460/3/60 | 46.38/34/34 | 1-2 |
| SF-AH-8.2 | TWIN CITY EPQN 245 | AH-8 | PLENUM, CENTRIFUGAL | SUPPLY AIR | 5000 | 3.55 | 1718 | 24.5 | 72.2 | 5 | 4.74 | 1750 | 460/3/60 | 46.38/34/34 | 1-2 |
| SF-AH-9.1 | TWIN CITY EPQN 222 | AH-9 | PLENUM, CENTRIFUGAL | SUPPLY AIR | 2500 | 3.33 | 1795 | 21.594 | 69.5 | 3 | 2.335 | 1800 | 460/3/60 | 44.5/32/32 | 1 |
| SF-AH-9.2 | TWIN CITY EPQN 222 | AH-9 | PLENUM, CENTRIFUGAL | SUPPLY AIR | 2500 | 3.33 | 1795 | 21.594 | 69.5 | 3 | 2.335 | 1800 | 460/3/60 | 44.5/32/32 | 1 |
| SF-AH-10.1 | TWIN CITY EPQN 330 | AH-10 | PLENUM, CENTRIFUGAL | SUPPLY AIR | 6818 | 3.27 | 1170 | 32.344 | 71.3 | 5 | 4.916 | 1200 | 460/3/60 | 59.01/46/46 | 1 |
| SF-AH-10.2 | TWIN CITY EPQN 330 | AH-10 | PLENUM, CENTRIFUGAL | SUPPLY AIR | 6818 | 3.27 | 1170 | 32.344 | 71.3 | 5 | 4.916 | 1200 | 460/3/60 | 59.01/46/46 | 1 |

1. FAN ON VFD
2. CLASS II FAN

## FILTER SCHEDULE

| ID | MANUFACTURER AND MODEL NUMBER | LOCATION | TYPE | EFFICIENCY (%) | AIR: CLEAN STATIC PRESSURE (IN. H2O) | AIR: DIRTY STATIC PRESSURE (IN. H2O) | PHYSICAL: NUMBER 24"X24" MODULES | PHYSICAL: NUMBER 12"X24" MODULES | NOTES |
|---|---|---|---|---|---|---|---|---|---|
| F-AH-1 | FARR DURAFIL 85% | AH-1 | FLAT | 90% | 0.7 | 1 | 4 | 5 | |
| F-AH-2 | FARR DURAFIL 85% | AH-2 | FLAT | 90% | 0.7 | 1 | 8 | 2 | |
| F-AH-3.1 | FARR 3030 | AH-3 | FLAT | 30% | 0.5 | 0.8 | 20 | 5 | |
| F-AH-3.2 | FARR 3030 | AH-3 | FLAT | 30% | 0.5 | 0.8 | 20 | 5 | |
| F-AH-4 | FARR DURAFIL 85% | AH-4 | FLAT | 90% | 0.7 | 1 | 8 | 6 | |
| F-AH-5 | FARR DURAFIL 85% | AH-5 | FLAT | 90% | 0.7 | 1 | 20 | 9 | |
| F-AH-6 | FARR DURAFIL 85% | AH-6 | FLAT | 90% | 0.7 | 1 | 24 | 10 | |
| F-AH-7 | FARR DURAFIL 85% | AH-7 | FLAT | 90% | 0.7 | 1 | 12 | 7 | |
| F-AH-8 | FARR DURAFIL 85% | AH-8 | FLAT | 90% | 0.7 | 1 | 4 | 1 | |
| F-AH-9 | FARR DURAFIL 85% | AH-9 | FLAT | 90% | 0.7 | 1 | 0 | 4 | |
| F-AH-10.1 | FARR 3030 | AH-10 | FLAT | 30% | 0.5 | 0.8 | 8 | 6 | |
| F-AH-10.2 | FARR 3030 | AH-10 | FLAT | 30% | 0.5 | 0.8 | 8 | 6 | |
| F-EAH-4 | FARR 30/30 | EAH-4 | FLAT | 30% | 0.5 | 0.8 | 8 | 2 | |

## GLYCOL FEED SYSTEM SCHEDULE

| ID | MANUFACTURER AND MODEL NUMBER | LOCATION | TYPE | FLUID: WORKING FLUID | COLD: TOTAL VOLUME (GAL) | COLD: STATIC FILL PRESSURE (PSIG) | COLD: PRESSURE RATING (PSIG) | ELECTRICAL: VOLT/PH/HZ | ELECTRICAL: ALARM PANEL | PHYSICAL: LENGTH/ WIDTH/ HEIGHT (IN) | PHYSICAL: NPT FITTING (IN) | PHYSICAL: TANK SIZE (GAL) | NOTES |
|---|---|---|---|---|---|---|---|---|---|---|---|---|---|
| SM GLY FEED | | WEST MECH ROOM | STANDARD | 40% P GLY | 279.5 | 4 | 0 | 120/1/60 | ----- | | | 0 | |

## PROJECT SCHEDULE

| NAME | LOCATION | OUTSIDE AIR: HEATING SEASON DB/RH (°F/%) | OUTSIDE AIR: COOLING SEASON DB/WB (°F) | ALTITUDE (FT) | NOTES |
|---|---|---|---|---|---|
| UOFU STUDENT LIFE | SALT LAKE CITY, UTAH | 0/10 | 97/62 | 4226 | |

## AIR HANDLER SCHEDULE

| ID | MANUFACTURER AND MODEL NUMBER | LOCATION | AIR: SUPPLY AIRFLOW (CFM) | COMPONENTS: FANS | COMPONENTS: COILS | COMPONENTS: FILTERS | COMPONENTS: OTHER | ELECTRICAL: SINGLE POINT VOLT/PH/HZ | PHYSICAL: CABINET LENGTH/ WIDTH/HEIGHT (IN) | PHYSICAL: WEIGHT (LB) | NOTES |
|---|---|---|---|---|---|---|---|---|---|---|---|
| AH-1 | UNITECH CUSTOM | NORTH LOWER LEVEL MECH RM | 12000 | RLF-AH-1.1, RLF-AH-1.2, RLF-AH-1.3, RLF-AH-1.4, SF-AH-1.1, SF-AH-1.2, SF-AH-1.3, SF-AH-1.4 | CC-AH-1, HC-AH-1 | F-AH-1 | | N/A | 480/47/128 | 42900 | 1-2 |
| AH-2 | UNITECH CUSTOM | NORTH LOWER LEVEL MECH RM | 15000 | RLF-AH-2.1, RLF-AH-2.2, RLF-AH-2.3, RLF-AH-2.4, SF-AH-2.1, SF-AH-2.2, SF-AH-2.3, SF-AH-2.4 | CC-AH-2, HC-AH-2 | F-AH-2 | | N/A | 472/57/120 | 42692 | 1-2 |
| AH-3 | INNOVENT | WEST ENTRY LEVEL MECH RM | 33000 | RLF-AH-3.1, RLF-AH-3.2, SF-AH-3.1, SF-AH-3.2 | CC-AH-3, HC-AH-3 | F-AH-3.1, F-AH-3.2 | ER-AH-3 | 460/3/60 | 293/143/129 | 1866 | 3 |
| AH-4 | UNITECH CUSTOM | WEST ENTRY LEVEL MECH RM | 20000 | SF-AH-4.1, SF-AH-4.2, SF-AH-4.3, SF-AH-4.4 | CC-AH-4, HC-AH-4, HCC-AH-4 | F-AH-4 | | N/A | 472/78/120 | 42496 | 1-2 |
| AH-5 | UNITECH CUSTOM | ROOF | 45000 | RLF-AH-5.1, RLF-AH-5.2, RLF-AH-5.3, RLF-AH-5.4, RLF-AH-5.5, RLF-AH-5.6, RLF-AH-5.7, RLF-AH-5.8, SF-AH-5.1, SF-AH-5.2, SF-AH-5.3, SF-AH-5.4, SF-AH-5.5, SF-AH-5.6, SF-AH-5.7, SF-AH-5.8 | CC-AH-5, HC-AH-5 | F-AH-5 | | N/A | 480/145/122 | 45928 | 1-2 |
| AH-6 | UNITECH CUSTOM | ROOF | 54000 | RLF-AH-6.1, RLF-AH-6.2, RLF-AH-6.3, RLF-AH-6.4, RLF-AH-6.5, RLF-AH-6.6, RLF-AH-6.7, RLF-AH-6.8, SF-AH-6.1, SF-AH-6.2, SF-AH-6.3, SF-AH-6.4, SF-AH-6.5, SF-AH-6.6, SF-AH-6.7, SF-AH-6.8 | CC-AH-6, HC-AH-6 | F-AH-6 | | N/A | 492/169/128 | 45928 | 1-2 |
| AH-7 | UNITECH CUSTOM | NORTH PENTHOUSE | 32022 | RLF-AH-7.1, RLF-AH-7.2, RLF-AH-7.3, RLF-AH-7.4, SF-AH-7.1, SF-AH-7.2, SF-AH-7.3, SF-AH-7.4, SF-AH-7.5, SF-AH-7.6 | CC-AH-7, HC-AH-7 | F-AH-7 | | N/A | 480/103/128 | 45052 | 1-2 |
| AH-8 | UNITECH CUSTOM | NORTH PENTHOUSE | 10000 | RLF-AH-8.1, RLF-AH-8.2, SF-AH-8.1, SF-AH-8.2 | CC-AH-8, HC-AH-8 | F-AH-8 | | N/A | 480/41/128 | 42232 | 1-2 |
| AH-9 | UNITECH CUSTOM | NORTH LOWER LEVEL MECH RM | 5000 | RLF-AH-9.1, RLF-AH-9.2, SF-AH-9.1, SF-AH-9.2 | CC-AH-9, HC-AH-9 | F-AH-9 | | N/A | 480/27/128 | 41950 | 1-2 |
| AH-10 | INNOVENT | 50 M ALT MECH RM | 15000 | RLF-AH-10.1, RLF-AH-10.2, SF-AH-10.1, SF-AH-10.2 | CC-AH-10, HC-AH-10 | F-AH-10.1, F-AH-10.2 | ER-AH-10 | 460/3/60 | 293/81/129 | 2236 | 3 |
| EAH-4 | UNITECH CUSTOM | WEST ENTRY LEVEL MECH RM | 15000 | EF-EAH-4.1, EF-EAH-4.2, EF-EAH-4.3, EF-EAH-4.4 | RPCC-EAH-4 | F-EAH-4 | | N/A | 56/59/128 | 968 | 4 |

1. UNIT TO HAVE REDUNDANT VFD FOR COMBINED SUPPLY FAN HORSEPOWER
2. UNIT TO HAVE REDUNDANT VFD FOR COMBINED RELIEF FAN HORSEPOWER
3. UNIT TO HAVE A STAINLESS STEEL DRAIN PAN ON RECOVERY SECTION
4. UNIT TO HAVE REDUNDANT VFD FOR COMBINED FAN HORSEPOWER

## AIR SEPARATOR SCHEDULE

| ID | MANUFACTURER AND MODEL NUMBER | LOCATION | TYPE | FLUID: FLOW RATE (GPM) | FLUID: WORKING FLUID | FLUID: HEAD LOSS (FT) | PHYSICAL: DIA./ HEIGHT (IN) | NOTES |
|---|---|---|---|---|---|---|---|---|
| AS-1 | TACO 4902AT-5 | MECH ROOM | TANK - HIGH EFFICIENCY | 23.1 | 30% P GLY | 3 | 11.563/17.75 | 1 |
| AS-2 | TACO 4908AH-5 | MECH ROOM | TANK - HIGH EFF, HIGH VELOCITY | 1095.2 | WATER | 3 | 34.625/63.125 | 1 |
| HWAS-1 | TACO 4908ADH-5 | BOIL RM | TANK - HIGH EFF, HIGH VEL (AIR/DIRT) | 1073.2 | WATER | 3 | 34.625/84.875 | 1 |
| SMAS-01 | SPIROVENT VSR5 | PRE- HEAT | TANK - HIGH EFF (AIR/DIRT) | 45 | 40% P GLY | 3 | 13/32 | 1 |

1. ASME CERTIFIED

## HYDRONIC COIL SCHEDULE

| ID | MANUFACTURER AND MODEL NUMBER | LOCATION | USAGE | AIR: AIRFLOW RATE (CFM) | AIR: LOAD (BTU/H) | AIR: SENSIBLE LOAD (BTU/H) | AIR: ENTERING TEMP. DB/WB (°F) | AIR: LEAVING TEMP. DB/WB (°F) | AIR: STATIC PRESSURE (IN. H2O) | HYDRONIC: FLOW RATE (GPM) | HYDRONIC: ENTERING/ LEAVING TEMP. (°F) | HYDRONIC: WORKING FLUID | HYDRONIC: HEAD LOSS (FT) | PHYSICAL: NO. COILS | PHYSICAL: EACH COIL FIN WIDTH/ HEIGHT (IN) | PHYSICAL: MINIMUM FACE AREA (FT²) | PHYSICAL: MINIMUM NO. ROWS/ FINS PER INCH | NOTES |
|---|---|---|---|---|---|---|---|---|---|---|---|---|---|---|---|---|---|---|
| CC-AH-1 | RAE CORP | AH-1 | COOLING | 12000 | 386800 | 381200 | 86.4/60.2 | 52/47.3 | 0.75 | 64.4 | 48/60 | WATER | 15 | 3 | 34/34.5 | 24.4 | 10/8 | 1 |
| CC-AH-2 | RAE CORP | AH-2 | COOLING | 15000 | 457800 | 440800 | 86.8/60.6 | 55/48.6 | 0.75 | 76.2 | 48/60 | WATER | 15 | 2 | 44/49.5 | 30.3 | 10/8 | 1 |
| CC-AH-3 | INNOVENT | AH-3 | COOLING | 33000 | 561800 | 1273700 | 97.8/62.1 | 56/55.8 | 0.14 | 93.5 | 48/60 | WATER | 15 | 2 | 114/52.5 | 83.1 | 8/8 | |
| CC-AH-4 | RAE CORP | AH-4 | COOLING | 20000 | 656700 | 702800 | 93/61.4 | 55/48.6 | 0.75 | 109.3 | 48/60 | WATER | 15 | 2 | 59/49.5 | 40.6 | 10/8 | 1 |
| CC-AH-5 | RAE CORP | AH-5 | COOLING | 45000 | 1406000 | 1363200 | 84.8/59.9 | 52/47.3 | 0.75 | 234 | 48/60 | WATER | 15 | 4 | 64/51 | 90.7 | 10/8 | 1 |
| CC-AH-6 | RAE CORP | AH-6 | COOLING | 54000 | 1554500 | 1422600 | 80.5/59 | 52/47.3 | 0.75 | 258.7 | 48/60 | WATER | 15 | 6 | 76/34.5 | 109.3 | 10/8 | 1 |
| CC-AH-7 | RAE CORP | AH-7 | COOLING | 32022 | 882200 | 810200 | 82.4/59.5 | 55/48.6 | 0.75 | 146.8 | 48/60 | WATER | 15 | 3 | 90/34.5 | 64.7 | 10/8 | 1 |
| CC-AH-8 | RAE CORP | AH-8 | COOLING | 10000 | 273100 | 240000 | 78/58.4 | 52/47.3 | 0.75 | 45.5 | 48/60 | WATER | 15 | 3 | 28/34.5 | 20.1 | 10/8 | 1 |
| CC-AH-9 | RAE CORP | AH-9 | COOLING | 5000 | 153000 | 145900 | 83.6/59.6 | 52/47.3 | 0.75 | 25.5 | 48/60 | WATER | 15 | 3 | 14/34.5 | 10.1 | 10/8 | 1 |
| CC-AH-10 | INNOVENT | AH-10 | COOLING | 15000 | 248500 | 572700 | 97.3/62 | 56/55.8 | 0.14 | 41.4 | 48/60 | WATER | 15 | 2 | 52/52.5 | 37.9 | 8/8 | |
| HC-AH-1 | RAE CORP | AH-1 | HEATING | 12000 | 518700 | 518700 | 43.2/36 | 90/56.2 | 0.25 | 26.6 | 180/140 | WATER | 5 | 3 | 34/34.5 | 24.4 | 2/6 | |
| HC-AH-2 | RAE CORP | AH-2 | HEATING | 10000 | 155500 | 155500 | 38.2/32.3 | 55/41 | 0.25 | 10.6 | 180/150 | WATER | 5 | 2 | 44/49.5 | 30.3 | 2/6 | |
| HC-AH-3 | INNOVENT | AH-3 | HEATING | 33000 | 2481300 | 2481300 | 19.4/12.1 | 100.8/54.5 | 0.18 | 129.5 | 170/130 | 30% P GLY | 5 | 2 | 114/52.5 | 83.1 | 2/6 | |
| HC-AH-4 | RAE CORP | AH-4 | HEATING | 12000 | 512200 | 512200 | 8.8/4.1 | 55/34 | 0.25 | 26.7 | 170/130 | 30% P GLY | 5 | 2 | 59/49.5 | 40.6 | 2/6 | |
| HC-AH-5 | RAE CORP | AH-5 | HEATING | 45000 | 1758800 | 1758800 | 47.7/39.1 | 90/56.8 | 0.25 | 90.2 | 180/140 | WATER | 5 | 4 | 64/51 | 90.7 | 2/6 | |
| HC-AH-6 | RAE CORP | AH-6 | HEATING | 32400 | 1063900 | 1063900 | 54.4/43.4 | 90/57.6 | 0.25 | 54.6 | 180/140 | WATER | 5 | 6 | 76/34.5 | 109.3 | 2/6 | |
| HC-AH-7 | RAE CORP | AH-7 | HEATING | 22015 | 13700 | 13700 | 54.3/43.4 | 55/43.7 | 0.25 | 2.8 | 180/170 | WATER | 5 | 3 | 90/34.5 | 64.7 | 2/6 | |
| HC-AH-8 | RAE CORP | AH-8 | HEATING | 10000 | 189500 | 189500 | 69.5/52 | 90/59.4 | 0.25 | 13 | 180/150 | WATER | 5 | 3 | 28/34.5 | 20.1 | 2/6 | |
| HC-AH-9 | RAE CORP | AH-9 | HEATING | 5000 | 176200 | 176200 | 51.8/41.8 | 90/57.3 | 0.25 | 12 | 180/150 | WATER | 5 | 3 | 14/34.5 | 10.1 | 2/6 | |
| HC-AH-10 | INNOVENT | AH-10 | HEATING | 15000 | 887900 | 887900 | 37.6/24.2 | 101.7/54.8 | 0.18 | 46.3 | 170/130 | 30% P GLY | 5 | 2 | 52/52.5 | 37.9 | 2/6 | |
| HCC-AH-4 | RAE CORP | AH-4 | HEAT DEL | 12000 | 97000 | 97000 | 0/-3.1 | 8.8/4.1 | 0.75 | 20.3 | 70/60 | 30% P GLY | 15 | 2 | 59/49.5 | 40.6 | 8/8 | |
| | | | COOL DEL | 20000 | 55000 | 54200 | 96/62.3 | 93/61.4 | 0.75 | 23.1 | 63/68 | | 15 | | | | | |
| RPCC-EAH-4 | RAE CORP | EAH-4 | HEAT REC | 15000 | 97000 | 97000 | 72/53.3 | 65/50.5 | 0.75 | 20.3 | 60/70 | 30% P GLY | 15 | 2 | 40/54 | 30 | 8/8 | |
| | | | COOL REC | 15000 | 55000 | 54200 | 76.1/57.9 | 80/59.2 | 0.75 | 23.1 | 68/63 | | 15 | | | | | |

1. COIL TO HAVE CAPACITY TO SUPPLY AT 52 F

## AIR-TO-AIR ENERGY RECOVERY SCHEDULE

| ID | MANUFACTURER AND MODEL NUMBER | LOCATION | TYPE | USAGE | RETURN/EXHAUST: TOTAL/ SENSIBLE LOAD (BTU/H) | RETURN/EXHAUST: AIRFLOW RATE (CFM) | RETURN/EXHAUST: ENTERING TEMP. DB/WB (°F) | RETURN/EXHAUST: LEAVING TEMP. DB/WB (°F) | RETURN/EXHAUST: STATIC PRESSURE (IN. H2O) | OUTSIDE/SUPPLY: AIRFLOW RATE (CFM) | OUTSIDE/SUPPLY: ENTERING TEMP. DB/WB (°F) | OUTSIDE/SUPPLY: LEAVING TEMP. DB/WB (°F) | OUTSIDE/SUPPLY: STATIC PRESSURE (IN. H2O) | ELECTRICAL: MOTOR SIZE (HP) | ELECTRICAL: MOTOR VOLT/PH/HZ | PHYSICAL: LENGTH/ WIDTH/ HEIGHT (IN) | NOTES |
|---|---|---|---|---|---|---|---|---|---|---|---|---|---|---|---|---|---|
| ER-AH-3 | HEATEX H-1-60C-2100 | AH-3 | FIXED, COUNTER | HEAT | 1894900/1203800 | 33000 | 88/68.8 | 48.5/48.5 | 1 | 11220 | 0/-3.1 | 57/35.1 | 1 | ----- | ----- | | |
| | | | | COOL | 188500/161500 | 33000 | 88/68.8 | 93.3/70.4 | 1 | 11220 | 97/62 | 91.7/59.9 | 1 | | | | |
| ER-AH-10 | HEATEX H-1-60C-2100 | AH-10 | FIXED, COUNTER | HEAT | 861300/547200 | 15000 | 88/68.8 | 48.5/48.5 | 1 | 9000 | 0/-3.1 | 57/35.1 | 1 | ----- | ----- | | |
| | | | | COOL | 85700/73400 | 15000 | 88/68.8 | 93.3/70.4 | 1 | 5100 | 97/62 | 91.7/59.9 | 1 | | | | |

## EXPANSION TANK SCHEDULE

| ID | MANUFACTURER AND MODEL NUMBER | LOCATION | TYPE | FLUID: WORKING FLUID | FLUID: MIN. TANK/ ACCEPTANCE (GAL) | PHYSICAL: TANK SIZE (GAL) | PHYSICAL: RELIEF VALVE (PSIG) | PHYSICAL: DIA./ HEIGHT (IN) | PHYSICAL: NPT FITTING (IN) | NOTES |
|---|---|---|---|---|---|---|---|---|---|---|
| CHET-1 | TACO CA-450 | CHILLED WATER MECH ROOM | VERT BLADDER FULL | WATER | 113.4/16.7 | 119 | 50 | 24/77.375 | 0.5 | 1 |
| DET-1 | TACO PAX-84 | BOILER ROOM | VERT BLADDER POTABLE | WATER | 13.8/9.7 | 22 | 70 | 16/41.25 | 0.5 | 1-3 |
| ET-1 | TACO CA-90 | WEST MECH ROOM | VERT BLADDER FULL | 30% P GLY | 3.4/1.2 | 37 | 30 | 20/29.125 | 0.5 | 1 |
| HET-01 | TACO CA-600 | NORTH MECH ROOM | VERT BLADDER FULL | WATER | 142.8/55.2 | 158 | 75 | 30/71.875 | 0.5 | 1 |
| HET-02 | TACO CA-600 | NORTH MECH ROOM | VERT BLADDER FULL | WATER | 142.8/55.2 | 158 | 75 | 30/71.875 | 0.5 | 1 |
| SMET-01 | TACO CA-90 | BOIL RM | VERT BLADDER FULL | 40% P GLY | 36.3/12.2 | 37 | 50 | 20/29.125 | 0.5 | 1 |

1. ASME CERTIFIED
2. TANK LINER SUITABLE FOR POTABLE WATER
3. ASME RATED TANK


MHTN ARCHITECTS
**MHTN Architects, Inc.**
420 East South Temple
Suite 100
Salt Lake City, Utah 84111
Telephone (801) 595-6700
Telefax (801) 595-6717
www.mhtn.com

**Hastings+Chivetta**
ARCHITECTURE • PLANNING • ENGINEERING
622 Emerson, Suite 200
St. Louis, MO 63141
Tel. 314.863.5717
Fax. 314.863.2823
www.hastingschivetta.com

VAN BOERUM & FRANK ASSOCIATES, INC.
CONSULTING ENGINEERS
www.vbfa.com
Salt Lake City • Logan • St. George • Tempe
330 South 300 East 801.530.3148 T
Salt lake City, UT 84111 801.530.3150 F
VBFA Project# 10452


UNIVERSITY OF UTAH
STUDENT LIFE CENTER
1836 E. BALLIF ROAD
SALT LAKE CITY, UTAH 84112


©2007 MHTN ARCHITECTS, INC.
Drawings, written material, and design concepts shall not be used or reproduced in whole or part in any form or format without prior written consent of MHTN Architects, Inc. Do not scale drawings. Use given dimensions only. If not shown, verify correct dimensions with the Architect. Contractor shall check and verify all dimensions and conditions at job site.


SEAL

MHTN PROJECT NO.

DRAWN BY: CHECKED BY:

ISSUED:

| NO. | DATE | DESCRIPTION |
|---|---|---|

CONTRACTOR TO VERIFY DRAWINGS IN FIELD USE REFLECT LAST REVISION DATE.

| NO. | DATE | DESCRIPTION |
|---|---|---|

SHEET NAME
MECHANICAL SCHEDULES

BID DOCUMENTS
MAY 15, 2013

SHEET NUMBER
MH601

D:__Bim\Local\Mechanical_Central_JRobker.rvt
5/14/2013 12:53:47 PM

1 2 3 4 5

## HYDRONIC SINGLE DUCT TERMINAL UNIT SCHEDULE

| | | | | | | AIR | | | | | | | FLUID | | | | PHYSICAL | SOUND | |
|---|---|---|---|---|---|---|---|---|---|---|---|---|---|---|---|---|---|---|---|
| ID | MANUFACTURER AND MODEL NUMBER | TYPE | LOCATION | INLET SIZE (IN) | USAGE | HEATING SEASON AIRFLOW RATE (CFM) | COOLING SEASON AIRFLOW RATE (CFM) | MINIMUM AIRFLOW (CFM) | LOAD (BTU/H) | ENTERING TEMP. DB (°F) | LEAVING TEMP. DB (°F) | STATIC PRESSURE (IN. H2O) | FLOW RATE (GPM) | ENTERING/ LEAVING TEMP. (°F) | WORKING FLUID | HEAD LOSS (FT) | MINIMUM NO. ROWS/ FINS PER INCH | NC LEVEL: RADIATED/ DISCHARGE | NOTES |
| 2-1 | TITUS DESV | STANDARD | FLOOR | 8 | HEATING | 410 | 480 | 140 | 19000 | 55 | 105.1 | 0.5 | 1.5 | 180/151.5 | WATER | 2 | 2/6 | 0/0 | 1-8 |
| 2-2 | TITUS DESV | STANDARD | FLOOR | 8 | HEATING | 410 | 530 | 140 | 19000 | 55 | 105.1 | 0.5 | 1.5 | 180/151.5 | WATER | 2 | 2/6 | 0/0 | 1-8 |
| 2-3 | TITUS DESV | STANDARD | FLOOR | 8 | HEATING | 410 | 420 | 140 | 19000 | 55 | 105.1 | 0.5 | 1.5 | 180/151.5 | WATER | 2 | 2/6 | 0/0 | 1-8 |
| 2-4 | TITUS DESV | STANDARD | FLOOR | 8 | HEATING | 410 | 430 | 140 | 19000 | 55 | 105.1 | 0.5 | 1.5 | 180/151.5 | WATER | 2 | 2/6 | 0/0 | 1-8 |
| 2-5 | TITUS DESV | STANDARD | FLOOR | 16 | HEATING | 1670 | 2640 | 559 | 77300 | 55 | 105.1 | 0.55 | 5.5 | 180/151.5 | WATER | 2 | 2/6 | 0/0 | 1-8 |
| 2-6 | TITUS DESV | STANDARD | FLOOR | 6 | HEATING | 230 | 280 | 79 | 10600 | 55 | 105.1 | 0.4 | 1 | 180/151.5 | WATER | 2 | 2/6 | 0/0 | 1-8 |
| 2-7 | TITUS DESV | STANDARD | FLOOR | 6 | HEATING | 230 | 270 | 79 | 10600 | 55 | 105.1 | 0.4 | 1 | 180/151.5 | WATER | 2 | 2/6 | 0/0 | 1-8 |
| 2-8 | TITUS DESV | STANDARD | FLOOR | 10 | HEATING | 650 | 870 | 219 | 30100 | 55 | 105.1 | 0.5 | 2.5 | 180/151.5 | WATER | 2 | 2/6 | 0/0 | 1-8 |
| 2-9 | TITUS DESV | STANDARD | FLOOR | 6 | HEATING | 230 | 105 | 79 | 10600 | 55 | 105.1 | 0.4 | 1 | 180/151.5 | WATER | 2 | 2/6 | 0/0 | 1-8 |
| 2-10 | TITUS DESV | STANDARD | FLOOR | 6 | HEATING | 230 | 105 | 79 | 10600 | 55 | 105.1 | 0.4 | 1 | 180/151.5 | WATER | 2 | 2/6 | 0/0 | 1-8 |
| 2-11 | TITUS DESV | STANDARD | FLOOR | 12 | HEATING | 940 | 900 | 315 | 43500 | 55 | 105.1 | 0.5 | 3 | 180/151.5 | WATER | 2 | 2/6 | 0/0 | 1-8 |
| 2-12 | TITUS DESV | STANDARD | FLOOR | 14 | HEATING | 1280 | 1980 | 428 | 59300 | 55 | 105.1 | 0.5 | 4.5 | 180/151.5 | WATER | 2 | 2/6 | 0/0 | 1-8 |
| 4-1 | TITUS DESV | STANDARD | FLOOR | 6 | HEATING | 230 | 270 | 79 | 10600 | 55 | 105.1 | 0.4 | 1 | 180/151.5 | WATER | 2 | 2/6 | 0/0 | 1-8 |
| 4-2 | TITUS DESV | STANDARD | FLOOR | 8 | HEATING | 410 | 630 | 140 | 19000 | 55 | 105.1 | 0.5 | 1.5 | 180/151.5 | WATER | 2 | 2/6 | 0/0 | 1-8 |
| 4-3 | TITUS DESV | STANDARD | FLOOR | 6 | HEATING | 230 | 100 | 79 | 10600 | 55 | 105.1 | 0.4 | 1 | 180/151.5 | WATER | 2 | 2/6 | 0/0 | 1-8 |
| 4-4 | TITUS DESV | STANDARD | FLOOR | 12 | HEATING | 940 | 620 | 315 | 43500 | 55 | 105.1 | 0.5 | 3 | 180/151.5 | WATER | 2 | 2/6 | 0/0 | 1-8 |
| 4-5 | TITUS DESV | STANDARD | FLOOR | 6 | HEATING | 230 | 100 | 79 | 10600 | 55 | 105.1 | 0.4 | 1 | 180/151.5 | WATER | 2 | 2/6 | 0/0 | 1-8 |
| 4-6 | TITUS DESV | STANDARD | FLOOR | 12 | HEATING | 940 | 600 | 315 | 43500 | 55 | 105.1 | 0.5 | 3 | 180/151.5 | WATER | 2 | 2/6 | 0/0 | 1-8 |
| 4-7 | TITUS DESV | STANDARD | FLOOR | 8 | HEATING | 410 | 440 | 140 | 19000 | 55 | 105.1 | 0.5 | 1.5 | 180/151.5 | WATER | 2 | 2/6 | 0/0 | 1-8 |
| 4-8 | TITUS DESV | STANDARD | FLOOR | 6 | HEATING | 230 | 120 | 79 | 10600 | 55 | 105.1 | 0.4 | 1 | 180/151.5 | WATER | 2 | 2/6 | 0/0 | 1-9 |
| 4-9 | TITUS DESV | STANDARD | FLOOR | 6 | HEATING | 230 | 105 | 79 | 10600 | 55 | 105.1 | 0.4 | 1 | 180/151.5 | WATER | 2 | 2/6 | 0/0 | 1-8 |
| 4-10 | TITUS DESV | STANDARD | FLOOR | 6 | HEATING | 230 | 80 | 79 | 10600 | 55 | 105.1 | 0.4 | 1 | 180/151.5 | WATER | 2 | 2/6 | 0/0 | 1-8 |
| 4-11 | TITUS DESV | STANDARD | FLOOR | 6 | HEATING | 230 | 80 | 79 | 10600 | 55 | 105.1 | 0.4 | 1 | 180/151.5 | WATER | 2 | 2/6 | 0/0 | 1-9 |
| 4-12 | TITUS DESV | STANDARD | FLOOR | 6 | HEATING | 230 | 80 | 79 | 10600 | 55 | 105.1 | 0.4 | 1 | 180/151.5 | WATER | 2 | 2/6 | 0/0 | 1-9 |
| 4-13 | TITUS DESV | STANDARD | FLOOR | 6 | HEATING | 230 | 215 | 79 | 10600 | 55 | 105.1 | 0.4 | 1 | 180/151.5 | WATER | 2 | 2/6 | 0/0 | 1-8 |
| 4-14 | TITUS DESV | STANDARD | FLOOR | 6 | HEATING | 230 | 300 | 79 | 10600 | 55 | 105.1 | 0.4 | 1 | 180/151.5 | WATER | 2 | 2/6 | 0/0 | 1-8 |
| 4-15 | TITUS DESV | STANDARD | FLOOR | 12 | HEATING | 940 | 1490 | 315 | 43500 | 55 | 105.1 | 0.5 | 3 | 180/151.5 | WATER | 2 | 2/6 | 0/0 | 1-9 |
| 4-16 | TITUS DESV | STANDARD | FLOOR | 12 | HEATING | 940 | 900 | 315 | 43500 | 55 | 105.1 | 0.5 | 3 | 180/151.5 | WATER | 2 | 2/6 | 0/0 | 1-8 |
| 4-17 | TITUS DESV | STANDARD | FLOOR | 12 | HEATING | 940 | 1460 | 315 | 43500 | 55 | 105.1 | 0.5 | 3 | 180/151.5 | WATER | 2 | 2/6 | 0/0 | 1-9 |
| 4-18 | TITUS DESV | STANDARD | FLOOR | 8 | HEATING | 410 | 495 | 140 | 19000 | 55 | 105.1 | 0.5 | 1.5 | 180/151.5 | WATER | 2 | 2/6 | 0/0 | 1-8 |
| 4-19 | TITUS DESV | STANDARD | FLOOR | 10 | HEATING | 650 | 700 | 219 | 30100 | 55 | 105.1 | 0.5 | 2.5 | 180/151.5 | WATER | 2 | 2/6 | 0/0 | 1-9 |
| 4-20 | TITUS DESV | STANDARD | FLOOR | 6 | HEATING | 230 | 130 | 79 | 10600 | 55 | 105.1 | 0.4 | 1 | 180/151.5 | WATER | 2 | 2/6 | 0/0 | 1-8 |
| 4-21 | TITUS DESV | STANDARD | FLOOR | 10 | HEATING | 650 | 855 | 219 | 30100 | 55 | 105.1 | 0.5 | 2.5 | 180/151.5 | WATER | 2 | 2/6 | 0/0 | 1-9 |
| 4-22 | TITUS DESV | STANDARD | FLOOR | 8 | HEATING | 410 | 600 | 140 | 19000 | 55 | 105.1 | 0.5 | 1.5 | 180/151.5 | WATER | 2 | 2/6 | 0/0 | 1-9 |
| 4-23 | TITUS DESV | STANDARD | FLOOR | 8 | HEATING | 410 | 570 | 140 | 19000 | 55 | 105.1 | 0.5 | 1.5 | 180/151.5 | WATER | 2 | 2/6 | 0/0 | 1-9 |
| 4-24 | TITUS DESV | STANDARD | FLOOR | 10 | HEATING | 650 | 760 | 219 | 30100 | 55 | 105.1 | 0.5 | 2.5 | 180/151.5 | WATER | 2 | 2/6 | 0/0 | 1-8 |
| 4-25 | TITUS DESV | STANDARD | FLOOR | 8 | HEATING | 410 | 675 | 140 | 19000 | 55 | 105.1 | 0.5 | 1.5 | 180/151.5 | WATER | 2 | 2/6 | 0/0 | 1-8 |
| 4-26 | TITUS DESV | STANDARD | FLOOR | 22 | HEATING | 3760 | 2700 | 1257 | 174100 | 55 | 105.1 | 0.65 | 12 | 180/151.5 | WATER | 2 | 2/6 | 0/0 | 1-8 |
| 4-27 | TITUS DESV | STANDARD | FLOOR | 10 | HEATING | 650 | 800 | 219 | 30100 | 55 | 105.1 | 0.5 | 2.5 | 180/151.5 | WATER | 2 | 2/6 | 0/0 | 1-8 |
| 4-28 | TITUS DESV | STANDARD | FLOOR | 10 | HEATING | 650 | 800 | 219 | 30100 | 55 | 105.1 | 0.5 | 2.5 | 180/151.5 | WATER | 2 | 2/6 | 0/0 | 1-8 |
| 4-29 | TITUS DESV | STANDARD | FLOOR | 10 | HEATING | 650 | 750 | 219 | 30100 | 55 | 105.1 | 0.5 | 2.5 | 180/151.5 | WATER | 2 | 2/6 | 0/0 | 1-8 |
| 4-30 | TITUS DESV | STANDARD | FLOOR | 6 | HEATING | 230 | 105 | 79 | 10600 | 55 | 105.1 | 0.4 | 1 | 180/151.5 | WATER | 2 | 2/6 | 0/0 | 1-8 |
| 4-31 | TITUS DESV | STANDARD | FLOOR | 6 | HEATING | 230 | 105 | 79 | 10600 | 55 | 105.1 | 0.4 | 1 | 180/151.5 | WATER | 2 | 2/6 | 0/0 | 1-8 |
| 4-32 | TITUS DESV | STANDARD | FLOOR | 8 | HEATING | 410 | 585 | 140 | 19000 | 55 | 105.1 | 0.5 | 1.5 | 180/151.5 | WATER | 2 | 2/6 | 0/0 | 1-8 |
| 7-1 | TITUS DESV | STANDARD | FLOOR | 16 | HEATING | 1670 | 2040 | 559 | 77300 | 55 | 105.1 | 0.55 | 5.5 | 180/151.5 | WATER | 2 | 2/6 | 0/0 | 1-8 |
| 7-2 | TITUS DESV | STANDARD | FLOOR | 16 | HEATING | 1670 | 2280 | 559 | 77300 | 55 | 105.1 | 0.55 | 5.5 | 180/151.5 | WATER | 2 | 2/6 | 0/0 | 1-8 |
| 7-3 | TITUS DESV | STANDARD | FLOOR | 10 | HEATING | 650 | 920 | 219 | 30100 | 55 | 105.1 | 0.5 | 2.5 | 180/151.5 | WATER | 2 | 2/6 | 0/0 | 1-8 |
| 7-4 | TITUS DESV | STANDARD | FLOOR | 6 | HEATING | 230 | 150 | 79 | 10600 | 55 | 105.1 | 0.4 | 1 | 180/151.5 | WATER | 2 | 2/6 | 0/0 | 1-8 |
| 7-5 | TITUS DESV | STANDARD | FLOOR | 8 | HEATING | 410 | 495 | 140 | 19000 | 55 | 105.1 | 0.5 | 1.5 | 180/151.5 | WATER | 2 | 2/6 | 0/0 | 1-8 |
| 7-6 | TITUS DESV | STANDARD | FLOOR | 8 | HEATING | 410 | 450 | 140 | 19000 | 55 | 105.1 | 0.5 | 1.5 | 180/151.5 | WATER | 2 | 2/6 | 0/0 | 1-8 |
| 7-7 | TITUS DESV | STANDARD | FLOOR | 6 | HEATING | 230 | 115 | 79 | 10600 | 55 | 105.1 | 0.4 | 1 | 180/151.5 | WATER | 2 | 2/6 | 0/0 | 1-8 |
| 7-8 | TITUS DESV | STANDARD | FLOOR | 6 | HEATING | 230 | 90 | 79 | 10600 | 55 | 105.1 | 0.4 | 1 | 180/151.5 | WATER | 2 | 2/6 | 0/0 | 1-8 |
| 7-9 | TITUS DESV | STANDARD | FLOOR | 6 | HEATING | 230 | 155 | 79 | 10600 | 55 | 105.1 | 0.4 | 1 | 180/151.5 | WATER | 2 | 2/6 | 0/0 | 1-8 |
| 7-10 | TITUS DESV | STANDARD | FLOOR | 6 | HEATING | 230 | 100 | 79 | 10600 | 55 | 105.1 | 0.4 | 1 | 180/151.5 | WATER | 2 | 2/6 | 0/0 | 1-8 |
| 7-11 | TITUS DESV | STANDARD | FLOOR | 6 | HEATING | 230 | 115 | 79 | 10600 | 55 | 105.1 | 0.4 | 1 | 180/151.5 | WATER | 2 | 2/6 | 0/0 | 1-8 |
| 7-12 | TITUS DESV | STANDARD | FLOOR | 8 | HEATING | 410 | 600 | 140 | 19000 | 55 | 105.1 | 0.5 | 1.5 | 180/151.5 | WATER | 2 | 2/6 | 0/0 | 1-8 |
| 7-13 | TITUS DESV | STANDARD | FLOOR | 12 | HEATING | 940 | 1200 | 315 | 43500 | 55 | 105.1 | 0.5 | 3 | 180/151.5 | WATER | 2 | 2/6 | 0/0 | 1-8 |
| 7-14 | TITUS DESV | STANDARD | FLOOR | 6 | HEATING | 230 | 315 | 79 | 10600 | 55 | 105.1 | 0.4 | 1 | 180/151.5 | WATER | 2 | 2/6 | 0/0 | 1-8 |
| 7-15 | TITUS DESV | STANDARD | FLOOR | 6 | HEATING | 230 | 400 | 79 | 10600 | 55 | 105.1 | 0.4 | 1 | 180/151.5 | WATER | 2 | 2/6 | 0/0 | 1-8 |
| 7-16 | TITUS DESV | STANDARD | FLOOR | 8 | HEATING | 410 | 450 | 140 | 19000 | 55 | 105.1 | 0.5 | 1.5 | 180/151.5 | WATER | 2 | 2/6 | 0/0 | 1-8 |
| 7-17 | TITUS DESV | STANDARD | FLOOR | 6 | HEATING | 230 | 110 | 79 | 10600 | 55 | 105.1 | 0.4 | 1 | 180/151.5 | WATER | 2 | 2/6 | 0/0 | 1-8 |
| 7-18 | TITUS DESV | STANDARD | FLOOR | 6 | HEATING | 230 | 110 | 79 | 10600 | 55 | 105.1 | 0.4 | 1 | 180/151.5 | WATER | 2 | 2/6 | 0/0 | 1-8 |
| 7-19 | TITUS DESV | STANDARD | FLOOR | 6 | HEATING | 230 | 110 | 79 | 10600 | 55 | 105.1 | 0.4 | 1 | 180/151.5 | WATER | 2 | 2/6 | 0/0 | 1-8 |
| 7-20 | TITUS DESV | STANDARD | FLOOR | 8 | HEATING | 410 | 460 | 140 | 19000 | 55 | 105.1 | 0.5 | 1.5 | 180/151.5 | WATER | 2 | 2/6 | 0/0 | 1-8 |
| 7-21 | TITUS DESV | STANDARD | FLOOR | 6 | HEATING | 230 | 110 | 79 | 10600 | 55 | 105.1 | 0.4 | 1 | 180/151.5 | WATER | 2 | 2/6 | 0/0 | 1-8 |
| 7-22 | TITUS DESV | STANDARD | FLOOR | 6 | HEATING | 230 | 110 | 79 | 10600 | 55 | 105.1 | 0.4 | 1 | 180/151.5 | WATER | 2 | 2/6 | 0/0 | 1-8 |
| 7-23 | TITUS DESV | STANDARD | FLOOR | 6 | HEATING | 230 | 350 | 79 | 10600 | 55 | 105.1 | 0.4 | 1 | 180/151.5 | WATER | 2 | 2/6 | 0/0 | 1-8 |
| 7-24 | TITUS DESV | STANDARD | FLOOR | 6 | HEATING | 230 | 110 | 79 | 10600 | 55 | 105.1 | 0.4 | 1 | 180/151.5 | WATER | 2 | 2/6 | 0/0 | 1-8 |
| 7-25 | TITUS DESV | STANDARD | FLOOR | 6 | HEATING | 230 | 230 | 79 | 10600 | 55 | 105.1 | 0.4 | 1 | 180/151.5 | WATER | 2 | 2/6 | 0/0 | 1-8 |
| 7-26 | TITUS DESV | STANDARD | FLOOR | 8 | HEATING | 410 | 400 | 140 | 19000 | 55 | 105.1 | 0.5 | 1.5 | 180/151.5 | WATER | 2 | 2/6 | 0/0 | 1-8 |
| 7-27 | TITUS DESV | STANDARD | FLOOR | 22 | HEATING | 3760 | 2750 | 1257 | 174100 | 55 | 105.1 | 0.65 | 12 | 180/151.5 | WATER | 2 | 2/6 | 0/0 | 1-8 |
| 7-28 | TITUS DESV | STANDARD | FLOOR | 22 | HEATING | 3760 | 4020 | 1257 | 174100 | 55 | 105.1 | 0.65 | 12 | 180/151.5 | WATER | 2 | 2/6 | 0/0 | 1-8 |
| 7-29 | TITUS DESV | STANDARD | FLOOR | 22 | HEATING | 3760 | 4000 | 1257 | 174100 | 55 | 105.1 | 0.65 | 12 | 180/151.5 | WATER | 2 | 2/6 | 0/0 | 1-8 |
| 7-30 | TITUS DESV | STANDARD | FLOOR | 6 | HEATING | 230 | 100 | 79 | 10600 | 55 | 105.1 | 0.4 | 1 | 180/151.5 | WATER | 2 | 2/6 | 0/0 | 1-8 |
| 7-31 | TITUS DESV | STANDARD | FLOOR | 6 | HEATING | 230 | 300 | 79 | 10600 | 55 | 105.1 | 0.4 | 1 | 180/151.5 | WATER | 2 | 2/6 | 0/0 | 1-8 |

1. BOX COOLING AIRFLOW IS SUM OF CONNECTIONS SHOWN IN DRAWINGS
2. HEATING CAPACITY BASED ON HEATING MAX AIRFLOW (60% OF COOLING FOR INTERIOR BOXES, 100% OF COOLING FOR BOXES SERVING ROOMS WITH EXTERIOR ROOF OR WALLS)
3. MINIMUM AIRFLOW IS LOWEST CONTROLLABLE SETTING (BASED ON 400 FPM INLET)
4. NC AT 1" H2O SP TO BE LESS THAN 1" PER ARI STAND 880-89
5. SET BOX MINIMUM AIRFLOW AT 30% OF COOLING MAXIMUM
6. STATIC PRESSURE DROP IS AT MAX COOLING AIRFLOW
7. VAV BOX CIRCUIT SETTER SIZE (GPM/"): <1.5/.5, >1.5 TO 6.5/.75", >6.5 TO 14/1"
8. VAV BOX PIPING SIZES (GPM/"): TO 3.5/.75", >3.5 TO 6.5 /1", >6.5 TO 14 /1.25"
9. VAV BOX TO BE CONSTANT VOLUME.

## AIR WASHER SCHEDULE

| | | | | AIR | | ELECTRICAL | | PHYSICAL | | | | |
|---|---|---|---|---|---|---|---|---|---|---|---|---|
| ID | MANUFACTURER AND MODEL NUMBER | LOCATION | EFF | TOTAL AIR FLOW RATE (CFM) | STATIC PRESSURE DROP (IN H20) | PUMP QUAN./ SIZE (-/HP) | VOLT/PH | COOLING EFFICENCY (%) | THICKNESS (IN) | MEDIA AREA (FT^2) | MAXIMUM FACE VELOCITY (FPM) | NOTES |
| EC-1 | GLASDECK | AH-1 | 90% | 12,000 | 0.18 | 1/.5 | 120/1 | 90 | 12" | 100 | 500 | |
| EC-2 | GLASDECK | AH-2 | 90% | 13,000 | 0.18 | 1/.5 | 120/1 | 90 | 12" | 100 | 500 | |
| EC-4 | GLASDECK | AH-4 | 90% | 25,000 | 0.18 | 1/.5 | 120/1 | 90 | 12" | 100 | 500 | |
| EC-5 | GLASDECK | AH-5 | 90% | 40,000 | 0.18 | 1/.5 | 120/1 | 90 | 12" | 100 | 500 | |
| EC-6 | GLASDECK | AH-6 | 90% | 54,000 | 0.18 | 1/.5 | 120/1 | 90 | 12" | 100 | 500 | |
| EC-7 | GLASDECK | AH-7 | 90% | 30,000 | 0.18 | 1/.5 | 120/1 | 90 | 12" | 100 | 500 | |
| EC-8 | GLASDECK | AH-8 | 90% | 11,000 | 0.18 | 1/.5 | 120/1 | 90 | 12" | 100 | 500 | |
| EC-9 | GLASDECK | AH-9 | 90% | 9,000 | 0.18 | 1/.5 | 120/1 | 90 | 12" | 100 | 500 | |

## HYDRONIC-TO-HYDRONIC HEAT EXCHANGER SCHEDULE

| | | | | | | SOURCE MEDIUM (HYDRONIC) | | | | TRANSFER MEDIUM (HYDRONIC) | | | | PHYSICAL | | |
|---|---|---|---|---|---|---|---|---|---|---|---|---|---|---|---|---|
| ID | MANUFACTURER AND MODEL NUMBER | LOCATION | TYPE | USAGE | LOAD (BTU/H) | FLOW RATE (GPM) | ENTERING/ LEAVING TEMP. (°F) | WORKING FLUID | HEAD LOSS (FT) | FLOW RATE (GPM) | ENTERING/ LEAVING TEMP. (°F) | WORKING FLUID | HEAD LOSS (FT) | DIA./ LENGTH/ NO. PLATES (IN/IN) | SURFACE AREA (FT²) | NOTES |
| CHHX-1 | SONDEX S36-IS10-188-TMTL31-LIQUID | MECH ROOM 10N | PLATE & FRAME | COOLING | 3290200 | 656.2 | 44/54 | WATER | 15 | 547.6 | 60/48 | WATER | 15 | /54/188 | 710.74 | 1 |
| CHHX-2 | SONDEX S36-IS10-188-TMTL31-LIQUID | MECH ROOM 10N | PLATE & FRAME | COOLING | 3290200 | 656.2 | 44/54 | WATER | 15 | 547.6 | 60/48 | WATER | 15 | /54/188 | 710.74 | 1 |
| DHX-1 | PVI | BOIL RM | TANK HEATER, TUBE BUNDLE | HEATING | 300000 | 15.4 | 180/140 | WATER | 15 | 6.8 | 50/140 | WATER | 15 | 18/42/ | | 2-8 |
| DHX-2 | PVI | BOIL RM | TANK HEATER, TUBE BUNDLE | HEATING | 300000 | 15.4 | 180/140 | WATER | 15 | 6.8 | 50/140 | WATER | 15 | 18/42/ | | 2-8 |
| HTHX-01 | HOWARDS ENGINEERING BEU 20-6-84 6-PASS | MECH RM | SHELL & TUBE | HEATING | 7847800 | 86.5 | 390/195 | WATER | 15 | 606.4 | 153.5/180 | WATER | 10 | 20/96/ | 200 | 1 |
| HTHX-02 | HOWARDS ENGINEERING BEU 20-6-84 6-PASS | MECH RM | SHELL & TUBE | HEATING | 7847800 | 86.5 | 390/195 | WATER | 15 | 606.4 | 153.5/180 | WATER | 10 | 20/96/ | 200 | 1 |
| HX-3 | TACO TFP10X20-150(2-1/2"TMPT) | MECH ROOM | BRAZED PLATE | HEATING | 2481300 | 169.6 | 180/150 | WATER | 15 | 129.5 | 130/170 | 30% P GLY | 15 | /20.3/150 | 194.25 | |
| HX-4 | TACO TFP10X20-30(1-1/2"TMPT) | MECH ROOM | BRAZED PLATE | HEATING | 512200 | 35 | 180/150 | WATER | 15 | 26.7 | 130/170 | 30% P GLY | 15 | /20.3/30 | 36.75 | |
| HX-10 | TACO TFP10X20-60(2"TMPT) | MECH ROOM | BRAZED PLATE | HEATING | 887900 | 60.7 | 180/150 | WATER | 15 | 46.3 | 130/170 | 30% P GLY | 15 | /20.3/60 | 76.13 | |
| PLHX-1 | SONDEX S9A-IG10-18-TM-LIQUID | POOL EQUIP ROOM | PLATE & FRAME | HEATING | 500000 | 51.3 | 180/160 | WATER | 15 | 100.6 | 86/96 | WATER | 15 | /18/18 | 17.69 | 1 |
| PLHX-2 | SONDEX S9A-IG10-20-TM-LIQUID | POOL EQUIP ROOM | PLATE & FRAME | HEATING | 600000 | 61.5 | 180/160 | WATER | 15 | 121.1 | 104/114 | WATER | 15 | /18/20 | 19.9 | 1 |
| PLHX-3 | SONDEX S9A-IG10-18-TM-LIQUID | POOL EQUIP ROOM | PLATE & FRAME | HEATING | 500000 | 51.3 | 180/160 | WATER | 15 | 100.6 | 86/96 | WATER | 15 | /18/18 | 17.69 | 1 |
| PLHX-4 | SONDEX S22-IG10-48-TK-LIQUID | POOL EQUIP ROOM | PLATE & FRAME | HEATING | 2300000 | 235.9 | 180/160 | WATER | 15 | 462.7 | 86/96 | WATER | 15 | /26/48 | 128.74 | 1 |
| SMHX-01 | TACO G04404-2L | BOIL RM | SHELL & TUBE | HEATING | 105000 | 10.8 | 180/160 | WATER | 15 | 22.5 | 110/120 | 40% P GLY | 15 | 4.5/27.375/ | 4.6 | 1, 9 |
| SMHX-02 | TACO G04404-2L | BOIL RM | SHELL & TUBE | HEATING | 105000 | 10.8 | 180/160 | WATER | 15 | 22.5 | 110/120 | 40% P GLY | 15 | 4.5/27.375/ | 4.6 | 1, 9 |

1. ASME CERTIFIED
2. DOUBLE WALL TUBES
3. 10 YR NICKEL SHIELD LINING W/ 3 COATS POLY SHIELD OVERCOAT
4. BOILER TEMPERATURE GUAGE
5. UNIT ON STAND
6. CSBI CONTROL INTERFACE WITH BMS
7. LONG LIFE SERVICE POLICY
8. IN TANK CIRCULATOR
9. UNIT TOTAL LENGTH SHALL NOT EXCEEED 60"

## PUMP SCHEDULE

| | | | | FLUID | | | PUMP | | ELECTRICAL | | | | |
|---|---|---|---|---|---|---|---|---|---|---|---|---|---|
| ID | MANUFACTURER AND MODEL NUMBER | LOCATION | TYPE | FLOW RATE (GPM) | WORKING FLUID | HEAD LOSS (FT) | EFFICIENCY (%) | CONSTRUCTION | MOTOR SIZE (HP) | MOTOR BHP (HP) | MOTOR SPEED (RPM) | VOLT/PH/HZ | NOTES |
| CHWP-1 | TACO FI4013 | MECH ROOM 10N | HORIZ FRAME-MOUNT END-SUCTION | 547.6 | WATER | 111.4 | 78.3 | IRON | 30 | 20.099 | 1760 | 460/3/60 | 1 |
| CHWP-2 | TACO FI4013 | MECH ROOM 10N | HORIZ FRAME-MOUNT END-SUCTION | 547.6 | WATER | 111.4 | 78.3 | IRON | 30 | 20.099 | 1760 | 460/3/60 | 1 |
| CP-1 | TACO 2430 | HC-AH-1 | CIRCULATOR | 26.6 | WATER | 18 | N/A | IRON | 0.16 | N/A | 3450 | 120/1/60 | |
| CP-2 | TACO 0011 | HC-AH-2 | CIRCULATOR | 10.6 | WATER | 18 | N/A | IRON | 0.125 | N/A | 3250 | 120/1/60 | |
| CP-3 | TACO KV3007 | HC-AH-3 | VERTICAL CLOSE-COUPLED INLINE | 129.5 | 30% P GLY | 40 | 65 | IRON | 5 | 2.034 | 1760 | 460/3/60 | |
| CP-4 | TACO 2450 | HC-AH-4 | CIRCULATOR | 26.7 | 30% P GLY | 35.5 | N/A | IRON | 0.5 | N/A | 3450 | 460/3/60 | |
| CP-5 | TACO KV3006 | HC-AH-5 | VERTICAL CLOSE-COUPLED INLINE | 90.2 | WATER | 21 | 66.3 | IRON | 1 | 0.71 | 1760 | 460/3/60 | |
| CP-6 | TACO 2470 | HC-AH-6 | VERTICAL CLOSE-COUPLED INLINE | 54.6 | WATER | 18 | N/A | IRON | 0.5 | N/A | 3450 | 460/3/60 | |
| CP-7 | TACO 009 | HC-AH-7 | CIRCULATOR | 2.8 | WATER | 18 | N/A | IRON | 0.125 | N/A | 3250 | 120/1/60 | |
| CP-8 | TACO 0011 | HC-AH-8 | CIRCULATOR | 13 | WATER | 18 | N/A | IRON | 0.125 | N/A | 3250 | 120/1/60 | |
| CP-9 | TACO 0011 | HC-AH-9 | CIRCULATOR | 12 | WATER | 18 | N/A | IRON | 0.125 | N/A | 3250 | 120/1/60 | |
| CP-10 | TACO 1919 | HC-AH-10 | VERTICAL CLOSE-COUPLED INLINE | 46.3 | 30% P GLY | 40 | 51.7 | IRON | 1 | 0.914 | 1750 | 460/3/60 | |
| HWP-01 | TACO FI4013 | MECH ROOM 85 | HORIZ FRAME-MOUNT END-SUCTION | 496.6 | WATER | 136.4 | 77.3 | IRON | 40 | 21.679 | 1760 | 460/3/60 | 2 |
| HWP-02 | TACO FI4013 | MECH ROOM 85 | HORIZ FRAME-MOUNT END-SUCTION | 496.6 | WATER | 136.4 | 77.3 | IRON | 40 | 21.679 | 1760 | 460/3/60 | 2 |
| HWP-03 | TACO FI1206 | MECH ROOM 85 | HORIZ FRAME-MOUNT END-SUCTION | 40 | WATER | 91.8 | 46.9 | IRON | 3 | 1.948 | 3500 | 460/3/60 | 2 |
| HWP-04 | TACO FI1206 | MECH ROOM 85 | HORIZ FRAME-MOUNT END-SUCTION | 40 | WATER | 91.8 | 46.9 | IRON | 3 | 1.948 | 3500 | 460/3/60 | 2 |
| P-1 | TACO 1619 | MECH ROOM 120 | HORIZONTAL INLINE | 23.1 | 30% P GLY | 50.6 | 37.5 | IRON | 1.5 | 0.809 | 1750 | 460/3/60 | |
| RCP-01 | B & G PL55B | DOM RECIRC | VERTICAL INLINE | 8 | WATER | 53 | 0 | BRONZE FITTED | 0.5 | 0.5 | 3250 | 115/1/60 | |
| SMP-01 | TACO FI1206 | MECH ROOM 120 | HORIZ FRAME-MOUNT END-SUCTION | 45 | 40% P GLY | 118.1 | 50.7 | IRON | 5 | 2.709 | 3500 | 460/3/60 | 2 |
| SMP-02 | TACO FI1206 | MECH ROOM 120 | HORIZ FRAME-MOUNT END-SUCTION | 45 | 40% P GLY | 122.1 | 50.7 | IRON | 5 | 2.8 | 3500 | 460/3/60 | 2 |

1. SUCTION DIFFUSER MODEL (SUCTION SIDE): SD050050, NON-GROOVED
2. PUMP ON VFD

## CIRCULATING FAN SCHEDULE

| | | | AIR | | | ELECTRICAL | | PHYSICAL | | |
|---|---|---|---|---|---|---|---|---|---|---|
| ID | MANUFACTURER AND MODEL NUMBER | LOCATION | MAXIMUM AIRFLOW RATE (CFM) | FAN SPEED (RPM) | FAN WHEEL DIAMETER (IN) | MOTOR SIZE (HP) | VOLT/PH/HZ | DIAMETER/ HEIGHT (IN) | WEIGHT (LBS) | NOTES |
| BAF-1 | BIG ASS FANS PFX8 | ACTIVITY ROOM | 345,941 | 42 | 288 | 2 | 460/3/60 | 28X45 | 450 | 1,2 |
| BAF-2 | BIG ASS FANS PFX18 | FITNESS CENTER | 200,817 | 55 | 216 | 1.5 | 460/3/60 | 18/45 | 390 | 1,2 |

1. PROVIDE X-SERIES WALL KEYPAD
2. VFD MOUNTED ON FAN

## COMPUTER ROOM UNIT SCHEDULE

| | | | SUPPLY FAN | | COOLING | | | | HUMID | ELECTRICAL | | | |
|---|---|---|---|---|---|---|---|---|---|---|---|---|---|
| CU-1 | MANUFACTURER AND MODEL NUMBER | LOCATION | AIR FLOW RATE (CFM) | EXTERNAL STATIC PRESSURE DROP (IN H20) | SENSIBLE MINIMUM COOLING LOAD (BTUH) | ROOM AIR TEMPERATURE DB/% RH (DEG. F) | LEAVING AIR TEMPERATURE DB (DEG. F) | WORKING FLUID | STEAM LOAD (LB/HR) | FLA / WSA / OPD | TOTAL FAN MOTOR (HP) | V/PH | NOTES |
| FC-1 | LIEBERT DME037EPC | IT ROOM | 1320 | 0 | 33,100 | 72 | 50 | DX | - | 2.2/2.8/15 | 0.27 | 208/1 | 1,2,3,6,7 |

1. SELECTION BASED ON 4500 FT
2. PROVIDE WITH VIBRATION ISOLATORS, MOUNTING BRACKET AND 30% EFF FILTER BOX
3. UNIT WITH CONDENSATE PUMP, PIPE TO NEAREST FLOOR DRAIN
4. SEE SPECIFICATIONS FOR REQUIRED COMPONENTS, STEAM CANISTER HUMIDIFIER
5. RACK MOUNTED
6. UNIT ON EMERGENCY POWER
7. PROVIDE DRAIN PAN UNDER ENTIRE UNIT WITH WATER DETECTOR TO SHUT OFF UNIT

## AIR COOLED CONDENSING UNIT SCHEDULE

| ID | MANUFACTURER AND MODEL NUMBER | REFRIGERANT | TOTAL CAPACITY (BTUH) | CONDENSER FAN FULL LOAD AMPS (FLA) | WSA/ OPD | MINIMUM CIRCUIT AMPACITY (MCA) | MOCP | EER | VOLT / PH | HEIGHT / WIDTH / DEPTH (IN) | NOMINAL TONS | WEIGHT (LBS) | NOTES |
|---|---|---|---|---|---|---|---|---|---|---|---|---|---|
| CU-1 | LEIBERT PFH037A-PH | 407C | 33,100 | 21.3 | 25.8/40 | - | - | - | 208/1/60 | 36/18/53 | 3 | 700 | 2,3,4,5,6 |

1. UNIT REFRIGERANT TO BE 410A, NO EXCEPTIONS.
2. PROVIDE 4" CONCRETE HOUSEKEEPING PAD.
3. CAPACITIES AT SEA LEVEL.
4. PROVIDE WITH LOW AMBIENT KIT TO ALLOW COOLING OPERATION DOWN TO 0° F DB.
5. PROVIDE WITH HIGH AMBIENT UNIT TO ALLOW OPERATION UP TO 105° F DB.
6. UNIT TO BE ON EMERGENCY POWER

## FINNED TUBE RADIATION SCHEDULE

| ID | MANUFACTURER AND MODEL NUMBER | LOCATION | EFFECTIVE LENGTH (FT) | TUBE SIZE (IN) | FIN SIZE (INxIN) | MIN. HEATING LOAD/FT (BTUH/FT) | MINIMUM TUBE VELOCITY (FT/S) | FLUID FLOW PER SECTION (GPM) | AVE WATER TEMP (DEG. F) | NOTES |
|---|---|---|---|---|---|---|---|---|---|---|
| FT-1 | RITTLING 1C-3.25 X 3.25 -32 | STAIRWELL | SEE DWGS | 3/4 | 3.25 X 3.25 | 820 | 3 | 4 | 170 | 1-2 |

1. COPPER ELEMENT.
2. DERATED BTUH OUTPUT SHOWN IN SCHEDULE.

MHTN ARCHITECTS
MHTN Architects, Inc.
420 East South Temple
Suite 100
Salt Lake City, Utah 84111
Telephone (801) 595-6700
Telefax (801) 595-6717
www.mhtn.com

Hastings+Chivetta
ARCHITECTURE • PLANNING • ENGINEERING
622 Emerson, Suite 200
St. Louis, MO 63141
Tel. 314.863.5717
Fax. 314.863.2823
www.hastingschivetta.com

VAN BOERUM & FRANK ASSOCIATES, INC.
CONSULTING ENGINEERS
www.vbfa.com
Salt Lake City • Logan • St. George • Tempe
330 South 300 East 801.530.3148 T
Salt lake City, UT 84111 801.530.3150 F
VBFA Project# 10452

UNIVERSITY OF UTAH
STUDENT LIFE CENTER
1836 E. BALLIF ROAD
SALT LAKE CITY, UTAH 84112

©2007 MHTN ARCHITECTS, INC.
Drawings, written material, and design concepts shall not be used or reproduced in whole or part in any form or format without prior written consent of MHTN Architects, Inc. Do not scale drawings. Use given dimensions only. If not shown, verify correct dimensions with the Architect. Contractor shall check and verify all dimensions and conditions at job site.

SEAL

MHTN PROJECT NO.
DRAWN BY: CHECKED BY:

ISSUED:

| NO. | DATE | DESCRIPTION |
|---|---|---|

CONTRACTOR TO VERIFY DRAWINGS IN FIELD USE REFLECT LAST REVISION DATE.

| NO. | DATE | DESCRIPTION |
|---|---|---|

SHEET NAME
MECHANICAL SCHEDULES

BID DOCUMENTS
MAY 15, 2013

SHEET NUMBER
MH602

D:__Bim\Local\Mechanical_Central_JRobker.rvt
5/14/2013 12:53:48 PM

## GRILLES, REGISTERS AND DIFFUSERS

| ID | MANUFACTURER | MODEL | MAX NC | DESCRIPTION |
|---|---|---|---|---|
| RG-1 | TITUS | PAR | 30 | PERFORATED FACE RETURN AIR UNIT, REMOVABLE FACE & CORE. FRAME SHALL BE FOR SURFACE OR LAY-IN MOUNTING AS REQUIRED BY CEILING TYPE. LAY-IN FRAMES HSLL BE 24" x 24", 24" x 12" OR 12" x 12" AS REQUIRED TO FIT CEILING TILE SPACE AVAILABLE. AIR QUANTITY SHALL MATCH ROOM SUPPLY OR EXHAUST AIR QUANTITY. |
| RG-2<br>RG-4 | TITUS | 350 | 30 | SIDEWALL RETURN GRILL. 45 DEGREE DEFLECTION. |
| EG-1<br>EG-2 | TITUS | PAR | 20 | PERFORATED FACE EXHAUST AIR UNIT, REMOVABLE FACE & CORE. FRAME SHALL BE FOR SURFACE OR LAY-IN MOUNTING AS REQUIRED BY CEILING TYPE. LAY-IN FRAMES HSLL BE 24" x 24", 24" x 12" OR 12" x 12" AS REQUIRED TO FIT CEILING TILE SPACE AVAILABLE. |
| CD-4 | TITUS | DL | 30 | DRUM LOUVER SUPPLY GRILLE WITH ADJUSTABLE VANES WITH A ROTATABLE DRUM. DRUM SHALL HAVE MECHANISM TO FIX DRUM ANGLE AND BE ADJUSTABLE THROUGH 60 DEGREES. MOUNTING FRAME C/W COUNTER SUNK HOLES FOR DUCT MOUNTING |
| CD-1 | TITUS | OMNI | 30 | SQUARE PLAQUE FACE CEILING DIFFUSERS. REMOVABLE FACE, C.W./O.B.D. FRAME SHALL BE FOR SURFACE OR LAY-IN MOUNTING AS REQUIRED BY CEILING TYPE. LAY-IN FRAMES SHALL BE 24" x 24" OR 12" x 12" AS REQUIRED TO FIT CEILING TILE SPACE AVAILABLE. |
| CD-2 | TITUS | ML-38 | 30 | 4 SLOT LINEAR CEILING DIFFUSER WITH FULLY ADJUSTABLE AIR PATTERN AND FLOW CONTROL VANES FOR ONE OR TWO WAY THROW PATTERN. UNITS SHALL HAVE 1" SLOTS. UNIT SHALL BE FOR DUCT MOUNTING. |
| CD-3 | TITUS | TMRA | 30 | ROUND CONE CEILING DIFFUSERS, FULLY ADJUSTABLE AIR PATTERN. CW/ OBD. FRAME SHALL BE FOR SURFACE OR LAY-IN MOUNTING AS REQUIRED BY CEILING TYPE. LAY-IN ADAPTER FRAMES SHALL BE USED AS REQUIRED TO FIT CEILING TILE SPACE AVAILABLE. |
| CD-5<br>CD-6 | TITUS | FL | 30 | 1 SLOT LINEAR CEILING DIFFUSER WITH FULLY ADJUSTABLE AIR PATTERN AND FLOW CONTROL VANES FOR ONE OR TWO WAY THROW PATTERN. UNITS SHALL HAVE 1" SLOTS AND INSULATED PLENUM WITH ROUND DUCT CONNECTION. FOR SURFACE OR LAY-IN MOUNTING AS REQUIRED. UNIT SHALL BE CURVED FACE FOR EXPOSED DUCT MOUNTING AS REQUIED. |
| RG-4 | TITUS | 33RL | 30 | HEAVY DUTY SIDE WALL RETURN AIR GRILLE. STATIONARY HORIZONTAL 38° DEFLECTION VANES SPACED AT 1/2 INCH O.C. 1 1/4 INCH FLANGE. FRAME MADE OF 16 GAUGE STEEL. INSTALL INTERMEDIATE SUPPORT CHANNELS AS REQUIRED. |
| CD-8 | TITUS | 300 | 30 | STEEL DOUBLE DEFLECTION SIDE WALL GRILLE. 3/4" BLADE SPACING. |
| CD-7 | TITUS | CT-541 | NA | LINEAR BAR GRILLE. TYPE 5 HEAVY DUTY MOUNTING FRAME FOR FLOOR APPLICATIONS. HALF INCH SPACING, 15 DEGREE DEFLECTION. |

## DOMESTIC EXPANSION TANK SCHEDULE

| ID | MANUFACTURER AND MODEL NUMBER | LOCATION | TYPE | FLUID: WORKING FLUID | FLUID: MIN. TANK/ ACCEPTANCE (GAL) | PHYSICAL: TANK SIZE (GAL) | PHYSICAL: RELIEF VALVE (PSIG) | PHYSICAL: DIA./ HEIGHT (IN) | PHYSICAL: NPT FITTING (IN) | NOTES |
|---|---|---|---|---|---|---|---|---|---|---|
| DET-1 | B&G PTA-30 | MECH RM | BLADDER | WATER | 11 | 13 | NA | 16/24 | 1 | 1,2 |
| DET-2 | B&G PTA-30 | MECH RM | BLADDER | WATER | 11 | 13 | NA | 16/24 | 1 | 1,2 |

1. TANK LINER SUITABLE FOR POTABLE WATER
2. ASME RATED TANK

## WATER SOFTENER SCHEDULE

| SYMBOL | MANUF. AND MODEL NO. | LOCATION | TYPE | TOTAL (GRAINS) | NORMAL/MAX WATER FLOW/UNIT @ 15/25 PSI LOSS | BACKWASH FLOW RATE (GPM) | RESIN QUANTITY (FT^3) | RESIN TANK HGHT/DIA (IN) | ELECTRICAL (VOLT/PH) | REMARKS |
|---|---|---|---|---|---|---|---|---|---|---|
| WS-1 | CSI CAT150-15WS | MECH ROOM | DUPLEX | 150000 | 39/53 | 7.5 | 10 | 65/18 | 120/1 | |

## MIXING STATION SCHEDULE

| ID | MANUFACTURER AND MODEL NUMBER | LOCATION | TYPE | BODY CONSTRUCTION | CONTROL TYPE | ACTUATOR TYPE | FLUID: MAX FLOW RATE (GPM) | FLUID: HEAD LOSS (PSI) | ELECTRICAL: VOLT/PH | PHYSICAL: CONNECT SIZE (IN) | NOTES |
|---|---|---|---|---|---|---|---|---|---|---|---|
| DMV-1 | ARMSTRONG DMC40 | MECH ROOM | THERMOSTATIC | BRONZE | MANIFOLD | -.- | 70 | 10 | 120 / 1 | 1.5 | 1 |
| | | | | | | | | | | | |

1. PREASSEMBLED MANIFOLD WITH RECIRCULATION CONNECTIONS

## DOMESTIC PRV SCHEDULE

| SYMBOL | MANUF. AND MODEL NO. | LOCATION | SERVICE | TYPE | CAPACITY (GPM) | INLET PRESSURE (PSIG) | OUTLET PRESSURE (PSIG) | SIZE (IN) | REMARKS |
|---|---|---|---|---|---|---|---|---|---|
| DPRV-1 | WATTS ACV | MECH RM | DOMESTIC WATER | PILOT | 50 | - | 70 | 2 | 2 |
| DPRV-2 | WATTS ACV | MECH RM | DOMESTIC WATER | PILOT | 100 | - | 70 | 4 | 1 |

1. PRV SIZED FOR 2/3 TOTAL SYSTEM CAPACITY
2. PRV SIZED FOR 1/3 TOTAL SYSTEM CAPACITY

## PLUMBING FIXTURE SCHEDULE

| ID | FIXTURE | CW (IN) | HW (IN) | W (IN) | V (IN) | NOTES | SPECIFICATION |
|---|---|---|---|---|---|---|---|
| DSN-1 | DOWN SPOUT NOZZLE | -.- | -.- | -.- | -.- | SEE PLANS FOR SIZE | DOWNSPOUT NOZZLE: SMITH 1770 DOWNSPOUT NOZZLE WITH CAST BRONZE BODY AND FLANGE. |
| EWC-1 | ELECTRIC WATER COOLER | 1/2 | -.- | 1 1/2 | 1 1/2 | ADA, DUAL STATION | ELECTRIC WATER COOLER: ELKAY ERPBGRNM28RAK HIGH/LOW RECESSED DUAL STATION, WALL MOUNTED, BARRIER FREE, ADA ELECTRIC WATER COOLER WITH FLEXIBLE BUBBLER GUARD AND STAINLESS STEEL BOWLS. COMPRESSOR TO BE 115V, 60 HZ WITH CAPACITY TO DELIVER AT LEAST 8.0 GPH |
| FD-1 | FLOOR DRAIN | -.- | -.- | 2 | 1 1/2 | RESTROOM | FLOOR DRAIN (RESTROOM): SMITH FIGURE 2005Y-P050 FLOOR DRAIN WITH CAST IRON BODY AND FLASHING COLLAR WITH 6" ROUND NICKEL BRONZE ADJUSTABLE STRAINER HEAD WITH SECURED GRATE AND TRAP PRIMER CONNECTION. |
| FD-2 | FLOOR DRAIN | -.- | -.- | 2 | 2 | MECHANICAL ROOM | FLOOR DRAIN (MECHANICAL ROOM): SMITH 2220Y-P050 FLOOR DRAIN WITH CAST IRON BODY AND FLASHING COLLAR WITH 8" CAST IRON GRATE AND SEDIMENT BUCKET, 3" OUTLET, NO-HUB CONNECTION; PROVIDE P-TRAP WITH TRAP PRIMER CONNECTION. |
| DD-1 | POOL DECK DRAIN | -.- | -.- | 2 | 2 | POOL DECK AREA | STEGMEIER FRONTIER DECK DRAIN WITH DOUBLE WALL BONDED PVC DRAIN SYSTEM WITH TREADMASTER COMMERCIAL ALUMINUM TOP CAP. 2" OUTLET NO HUB CONNECTION, PROVIDE P-TRAP. |
| TD-1 | TRENCH DRAIN | -.- | -.- | 3 | 2 | SHOWERS | SMITH ENVIROFLO 9930-SS SLOPED TRANCH DRAIN, WITH SLOTTED STAINLESS STEEL GRATE. NO HUB CONNECTION, PROVIDE P-TRAP WITH TRAP PRIMER CONNECTION. |
| FS-1 | FLOOR SINK | -.- | -.- | 3 | 2 | -.- | FLOOR SINK: SMITH FIGURE 3100Y CAST IRON FLANGED RECEPTOR WITH ACID RESISTANT INTERIOR COATING, NICKEL BRONZE RIM AND SECURED GRATE AND ALUMINUM DOME BOTTOM STRAINER. PROVIDE P-TRAP WITH TRAP PRIMER CONNECTION. |
| HB-1 | HOSE BIBB | 3/4 | -.- | -.- | -.- | -.- | CHICAGO FAUCET 387-E27CP HOSE VALVE WITH VACUUM BREAKER, 3/4" MALE HOSE THREAD AND LOOSE KEY HANDLE. PROVIDE KEY TO OWNER. |
| HY-1 | WATER HAMMER ARRESTOR | -.- | -.- | -.- | -.- | -.- | WATER HAMMER ARRESTOR: SMITH FIGURE 5010 "HYDROTROL" RATED AT 12-32 F.U., SMITH FIGURE 5020 "HYDROTROL" RATED AT 33-60 F.U., SMITH FIGURE 5030 "HYDROTROL" RATED AT 61-113 F.U. OR SMITH 5040 "HYDROTROL" RATED AT 114-154 F.U. LOCATE WERE SHOWN ON PLANS OR |
| L-1 | LAVATORY | 1/2 | 1/2 | 1 1/2 | 1 1/2 | COUNTER MOUNTED, MANUAL FAUCET | LAVATORY (UNDERCOUNTER MOUNTED): KOHLER K-2211 CAXTON UNDERCOUNTER VITREOUS CHINA OVAL LAVATORY WITH OVERFLOW AND CLAMPS. CHICAGO 420-ABCP SINGLE LEVER FAUCET WITH .5 GPM NON-AERATING SPRAY. SYMMONS MAXLINE 5-210 THERMOSTATIC MIXING VALVE WITH WATTS # 7 |
| L-2 | LAVATORY | 1/2 | 1/2 | 1 1/2 | 1 1/2 | WALL MOUNTED, MANUAL FAUCET | LAVATORY: KOHLER K2030, GREENWICH, 20" X 18", VITREOUS CHINA, WITH FRONT OVERFLOW, WITH 4" CENTER DRILLING. CHICAGO 420-ABCP SINGLE LEVER FAUCET WITH .5 GPM NON-AERATING SPRAY. SYMMONS MAXLINE 5-210 THERMOSTATIC MIXING VALVE WITH WATTS # 7 DUAL CHECK VA |
| L-3 | LAVATORY | 1/2 | 1/2 | 1 1/2 | 1 1/2 | COUNTER MOUNTED, MANUAL GOOSENECK FAUCET | LAVATORY (UNDERCOUNTER MOUNTED): KOHLER K-2211 CAXTON UNDERCOUNTER VITREOUS CHINA OVAL LAVATORY WITH OVERFLOW AND CLAMPS. CHICAGO 895-GN2AE3ABCP-E2605-5 FACUET WITH .5 GPM NON-AERATING SPRAY. SYMMONS MAXLINE 5-210 THERMOSTATIC MIXING VALVE WITH WATTS # |
| NFH-1 | NON FREEZE WALL HYDRANT | 3/4 | -.- | -.- | -.- | -.- | NON-FREEZE HYDRANT: SMITH 5609QT NON-FREEZE WALL HYDRANT FOR WALL THICKNESS SHOWN ON PLAN. BRONZE HYDRANT, 3/4-INCH CONNECTION WITH BRASS CASING, INTEGRAL SELF-DRAINING VACUUM BREAKER, AND LOOSE KEY. |
| RD-1 | ROOF DRAIN | -.- | -.- | -.- | -.- | SEE PLANS FOR SIZE | ROOF DRAIN: SMITH FIGURE 1010Y CAST IRON BODY WITH COMBINED FLASHING CLAMP AND CAST IRON GRAVEL STOP, CAST IRON DOME, EXTENSION, SUMP RECEIVER AND UNDERDECK CLAMP. |
| RDO-1 | ROOF DRAIN OVERFLOW | -.- | -.- | -.- | -.- | SEE PLANS FOR SIZE | ROOF DRAIN OVERFLOW: SMITH FIGURE 1080Y CAST IRON BODY WITH COMBINED FLASHING CLAMP AND CAST IRON GRAVEL STOP, CAST IRON DOME, 2" HIGH WATER COLLAR, EXTENSION, SUMP RECEIVER AND UNDERDECK CLAMP. |
| RD-2 | ROOF CANOPY DRAIN | | | | | SEE PLANS FOR SIZE | ROOF DRAIN: SMITH FIGURE 1680T, SIDE OUTLET GUTTER DRAIN, CAST IRON DOME, FLASHING CLAMP. |
| S-1 | WORK SINK | 1/2 | 1/2 | 2 | 1 1/2 | COUNTER MOUNTED, SINGLE COMPARTMENT | SINK: JUST SL-2017-A-GR 14" X 14" X 7-1/2" DEEP, 18-GAUGE, TYPE 304 STAINLESS STEEL, COUNTER MOUNTED SINK WITH 8" CENTERS DRILLING; CHICAGO 786-GN2FC FAUCET, NO. 317 4" WRIST BLADES, GN2 RIGID/SWING CONVERTIBLE GOOSE NECK WITH 1.6 GPM FC LAMINAR FLOW CONT |
| S-2 | BREAKROOM SINK | 1/2 | 1/2 | 2 | 1 1/2 | COUNTER MOUNTED, DOUBLE COMPARTMENT | SINK: JUST DL-1933-A-GR TWO 14" X 14" X 7-1/2" DEEP BOWLS, 18-GAUGE, TYPE 304 STAINLESS STEEL, COUNTER MOUNTED SINK WITH 8" CENTERS DRILLING; CHICAGO 786-GN2FC FAUCET, NO. 317 4" WRIST BLADES, GN2 RIGID/SWING CONVERTIBLE GOOSE NECK WITH 1.6 GPM FC LAMINAR |
| S-3 | WORK SINK | 1/2 | 1/2 | 1 1/2 | 1 1/2 | STAND ALONE, TRIPLE COMPARTMENT | SINK: JUST NSFB-360 (3) 20"X24"X12" DEEP BOWLS, 14-GAUGE, TYPE 304 STAINLESS STEEL, STAND ALONE SINK WITH 8" CENTERS DRILLING IN BACKSPLASH CENTER OF SINK; CHICAGO 445-DJ24ABCP FAUCET WITH DOUBLE JOINTED SWING SPOUT, E1 FULL FLOW OUTLET; FLEXIBLE STAINLES |
| S-4 | CRS STORAGE SINK | 1/2 | 1/2 | 2 | 1 1/2 | COUNTER MOUNTED, SINGLE COMPARTMENT | SINK: JUST NSFB-345-24RL 15" X 24" X 12" DEEP, 14-GAUGE, TYPE 304 STAINLESS STEEL, STAND ALONE SINK WITH 8" CENTERS DRILLING IN BACKSPLASH CENTER OF SINK; CHICAGO 445-DJ24ABCP FAUCET WITH DOUBLE JOINTED SWING SPOUT, E1 FULL FLOW OUTLET; FLEXIBLE STAINLESS |
| S-5 | LAUNDRY SINK | 1/2 | 1/2 | 2 | 1 1/2 | STAND ALONE, DOUBLE COMPARTMENT | SINK: FIAT FLTD II, FLOOR MOUNTED SERV-A-SINK, MOLDED STONE, DOUBLE COMPARTMENT, 40"X24"X14", A-1 DECK TYPE FAUCET, WITH CUP STRAINER, CAST BRASS P-TRAP WITH CLEANOUT PLUG, FLEXIBLE STAINLESS STEEL SUPPLIES, LOOSE KEY ANGLE QUARTER TURN STOPS. |
| S-6 | | | | | | | SINK: SIGNATURE HARDWARE MODEL 7867 WHITTINGTON, ABOVE DECK CLEAR 12" ROUND GLASS VESSEL SINK, WITH GRID STRAINER, AND CONTEMPORARY VESSEL FAUCET. http://www.signaturehardware.com/product7867. LOOSE KEY ANGLE STOPS, CAST BRASS P-TRAP W/CLEANOUT. |
| SH-1 | SHOWER | 1/2 | 1/2 | 2 | 2 | -.- | SHOWER: SYMMONS HYDAPIPE 1-903S-1.5 COMMERCIAL SHOWER SYSTEM WITH TEMPTROL PRESSURE BALANCING MIXING VALVE WITH LEVER HANDLE, ADJUSTBABLE STOP SCREW, INTEGRAL SERVICE STOPS, 1.5 GPM SHOWERHEAD. SMITH FIGURE 2005Y FLOOR DRAIN WITH CAST IRON BODY AND FLASHI |
| SH-2 | SHOWER | 1/2 | 1/2 | 2 | 2 | ADA | SHOWER: SYMMONS HYDAPIPE 1-902S-FS-1.5-QD COMMERCIAL SHOWER SYSTEM WITH TEMPTROL PRESSURE BALANCING MIXING VALVE WITH LEVER HANDLE, ADJUSTBABLE STOP SCREW, INTEGRAL SERVICE STOPS, 1.5 GPM SHOWER HEAD. LEVER OVERTER WITH INTEGRAL VOLUME CONTROL, HAND HELD |
| SS-1 | SERVICE SINK | 3/4 | 3/4 | 3 | 2 | -.- | JANITOR SINK (FLOOR MOUNTED, CORNER): KOHLER K6710, WHITBY, 28 X 28-INCH, ENAMELED CAST IRON FLOOR-MOUNTED CORNER MODEL, K9146-3" DRAIN WITH STRAINER, NO. K8940 REMOVABLE VINYL-COATED RIM GUARD; CHICAGO 897 FAUCET WITH VACUUM BREAKER, SCREWDRIVER STOPS IN |
| SS-2 | SERVICE SINK | 3/4 | 3/4 | 3 | 2 | -.- | FIAT FLL SINGLE COMPARTMENT STAND ALONE SINK, MOLDED PLASTIC, A-1 DECK TYPE FAUCET, WITH CUP STRAINER, CAST BRASS P-TRAP WITH CLEANOUT PLUG, FLEXIBLE STAINLESS STEEL SUPPLIES, LOOSE KEY ANGLE QUARTER TURN STOPS. |
| TP-1 | TRAP PRIMER | 3/4 | -.- | -.- | -.- | SOLINOID TYPE, 115V, UP TO 8 DRAINS | TRAP PRIMER: PRECISION PLUMBING PRODUCTS, INC. (PPP) PTS SERIES PRIME-TIME ELECTRONIC TRAP PRIMING MANIFOLD; FOR UP TO 8 FLOOR DRAINS OR "SOLO PRIME" FOR SINGLE DRAIN; 1/2" COPPER TUBE CONNECTION TO EACH FLOOR DRAIN P-TRAP, PRE-SET 24-HOUR CLOCK, MANUAL O |
| U-1 | URINAL | 3/4 | -.- | 2 | 2 | WALL HUNG, 1/8 GPF SENSOR FLUSH VALVE | URINAL: KOHLER MODEL K-4904-ET VITREOUS CHINA ADA URINAL WITH 3/4" TOP SPUD, EXPOSED SLOAN ECOS 8186-0.125-OR, 0.125 GPF BATTERY POWERED SENSOR FLUSH VALVE WITH OVERRIDE BUTTON; PROVIDE "DIRT GRABBER" FLUSH VALVE FILTER, COORDINATE SIZE WITH FLUSH VALVE; |
| WB-1 | WASHER BOX | 3/4 | 3/4 | 2 | 1 1/2 | -.- | WASHER BOX: WATER-TITE 82064 WASHING MACHINE OUTLET BOX WITH 2 CHROME QUARTER TURN BALL VALVES WITH 1/2" SWEAT CONNECTION AND 2" CENTER DRAIN. |
| WC-1 | PUBLIC WATER CLOSET | 1 | -.- | 4 | 2 | FLOOR MOUNT, DUAL FLUSH SENSOR VALVE, ADA | WATER CLOSET: KOHLER K-4325 KINGSTON VITREOUS CHINA, WALL MOUNTED, ELONGATED BOWL TOILET WITH K-4670-C LUSTRA OPEN FRONT SEAT; SLOAN WES-111 MANUAL DUAL FLUSH, 1.6 GPF AND 1.1 GPF FLUSH VALVE; PROVIDE "DIRT GRABBER" FLUSH VALVE FILTER, COORDINATE SIZE WIT |
| ICE | WATER OUTLET | 1/2 | -.- | -.- | -.- | -.- | WATER OUTLET: LSP OB-801 PLASTIC ICEMAKER BOX WITH QUARTER TURN BALL VALVE WITH 1/4" OUTLET. |

1. ALL UNDER GROUND WASTE AND VENT SHALL BE 2" OR GREATER PER DRAWINGS.


MHTN ARCHITECTS
MHTN Architects, Inc.
420 East South Temple
Suite 100
Salt Lake City, Utah 84111
Telephone (801) 595-6700
Telefax (801) 595-6717
www.mhtn.com

Hastings+Chivetta
ARCHITECTURE • PLANNING • ENGINEERING
622 Emerson, Suite 200
St. Louis, MO 63141
Tel. 314.863.5717
Fax. 314.863.2823
www.hastingschivetta.com

VAN BOERUM & FRANK ASSOCIATES, INC.
CONSULTING ENGINEERS
Salt Lake City • Logan • St. George • Tempe
330 South 300 East 801.530.3148 T
Salt lake City, UT 84111 801.530.3150 F


REGISTERED PROFESSIONAL ENGINEER
No. 324030
BRADLY W. ROSENHAN
STATE OF UTAH

# UNIVERSITY OF UTAH
# STUDENT LIFE CENTER
1836 E. BALLIF ROAD
SALT LAKE CITY, UTAH 84112


©2007 MHTN ARCHITECTS, INC.
Drawings, written material, and design concepts shall not be used or reproduced in whole or part in any form or format without prior written consent of MHTN Architects, Inc. Do not scale drawings. Use given dimensions only. If not shown, verify correct dimensions with the Architect. Contractor shall check and verify all dimensions and conditions at job site.


SEAL

MHTN PROJECT NO.

DRAWN BY: CHECKED BY:

ISSUED:

| NO. | DATE | DESCRIPTION |
|---|---|---|

CONTRACTOR TO VERIFY DRAWINGS IN FIELD USE REFLECT LAST REVISION DATE.

| NO. | DATE | DESCRIPTION |
|---|---|---|

SHEET NAME
MECHANICAL SCHEDULES

BID DOCUMENTS
MAY 15, 2013

SHEET NUMBER
MH603

D:_BimLocal\Mechanical_Central_JRooker.rvt
5/14/2013 12:53:49 PM

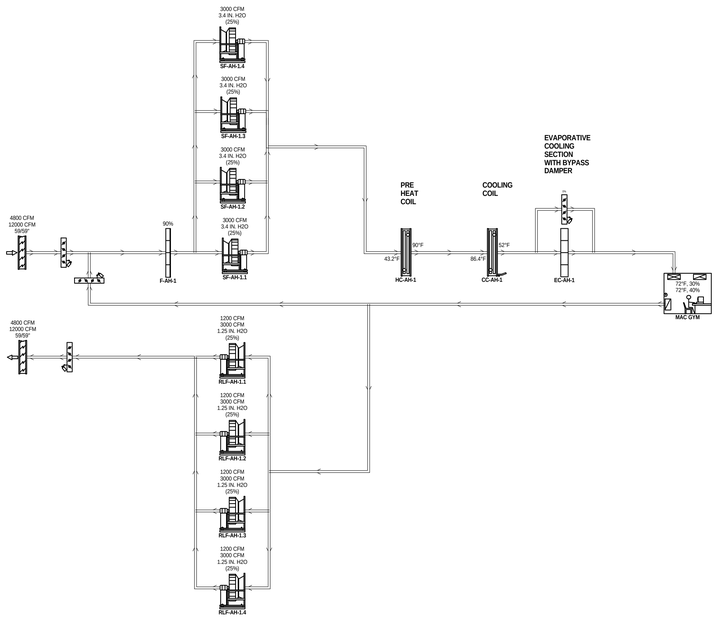


## AH-1, MAC GYM

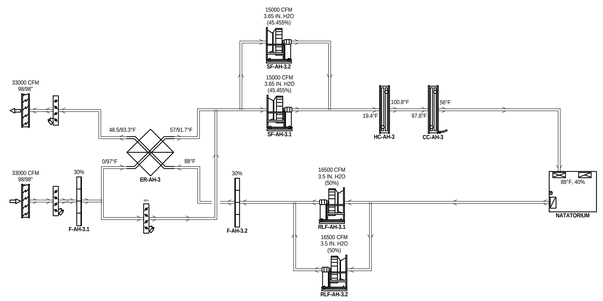


## AH-3, NATATORIUM

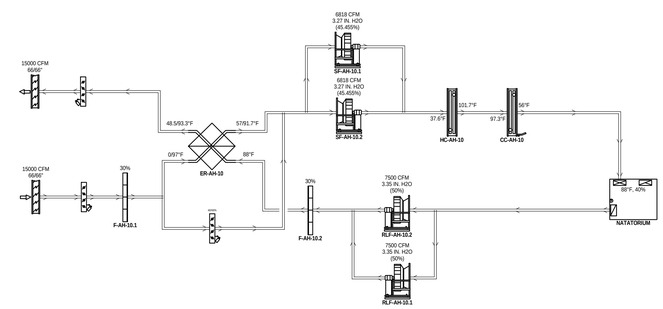


## AH-10, NATATORIUM

## BID ALTERNATE #1

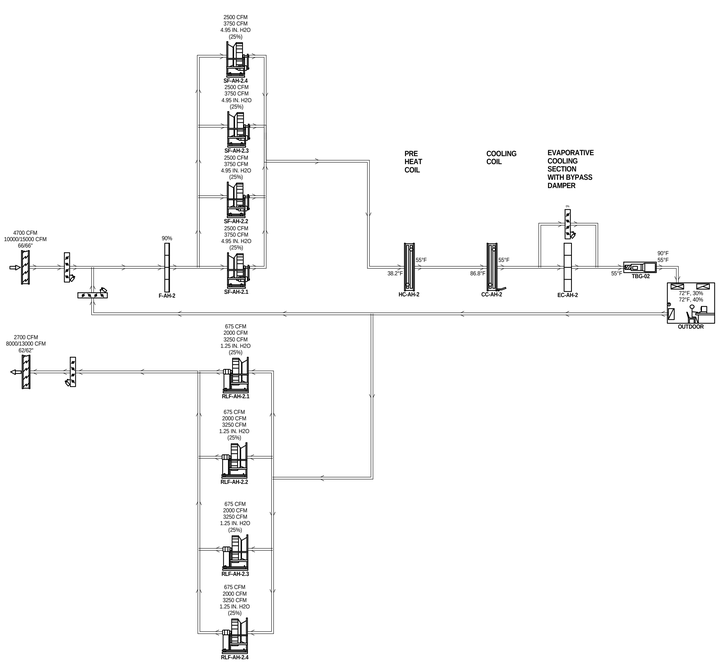


## AH-2, OUTDOOR

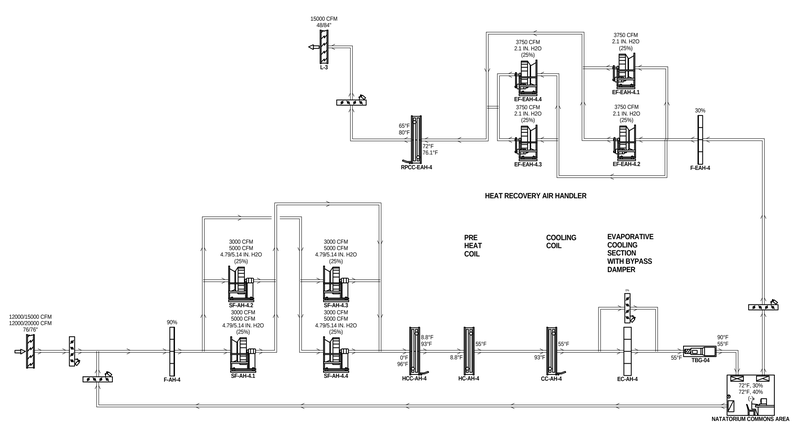


## AH-4, COMMON AREAS

# AIRFLOW SCHEMATICS

D:\...Bim\Local\Mechanical_Central_JRobker.rvt
5/14/2013 12:53:50 PM


MHTN
ARCHITECTS

**MHTN Architects, Inc.**
420 East South Temple
Suite 100
Salt Lake City, Utah 84111
Telephone (801) 595-6700
Telefax (801) 595-6717
www.mhtn.com

**Hastings+Chivetta**
ARCHITECTURE • PLANNING • ENGINEERING
622 Emerson, Suite 200
St. Louis, MO 63141
Tel. 314.863.5717
Fax. 314.863.2823
www.hastingschivetta.com

VAN BOERUM & FRANK ASSOCIATES, INC.
CONSULTING ENGINEERS
Salt Lake City • Logan • St. George • Tempe
330 South 300 East 801.530.3148 T
Salt lake City, UT 84111 801.530.3150 F


# UNIVERSITY OF UTAH
## STUDENT LIFE CENTER
1836 E. BALLIF ROAD
SALT LAKE CITY, UTAH 84112


©2007 MHTN ARCHITECTS, INC.
Drawings, written material, and design concepts shall not be used or reproduced in whole or part in any form or format without prior written consent of MHTN Architects, Inc. Do not scale drawings. Use given dimensions only. If not shown, verify correct dimensions with the Architect. Contractor shall check and verify all dimensions and conditions at job site.


SEAL

MHTN PROJECT NO.

DRAWN BY: CHECKED BY:

ISSUED:

| NO. | DATE | DESCRIPTION |
|---|---|---|

CONTRACTOR TO VERIFY DRAWINGS IN FIELD USE REFLECT LAST REVISION DATE:

| NO. | DATE | DESCRIPTION |
|---|---|---|

SHEET NAME
AIR FLOW SCHEMATICS

BID DOCUMENTS
MAY 15, 2013

SHEET NUMBER
MH701

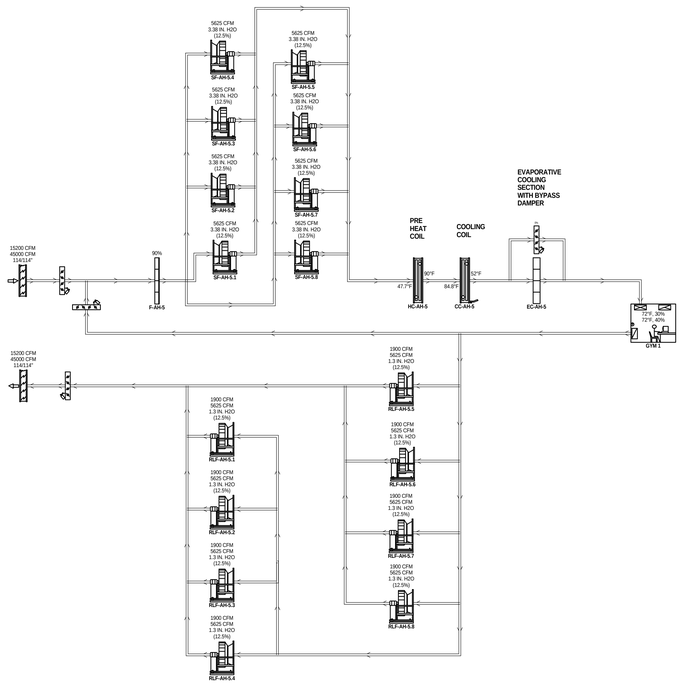


## AH-5, 3 COURT GYMS

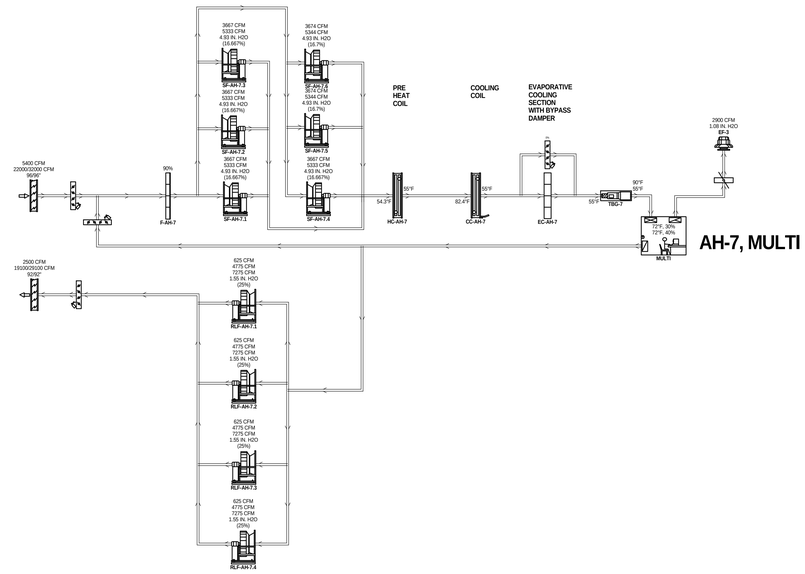


## AH-7, MULTI

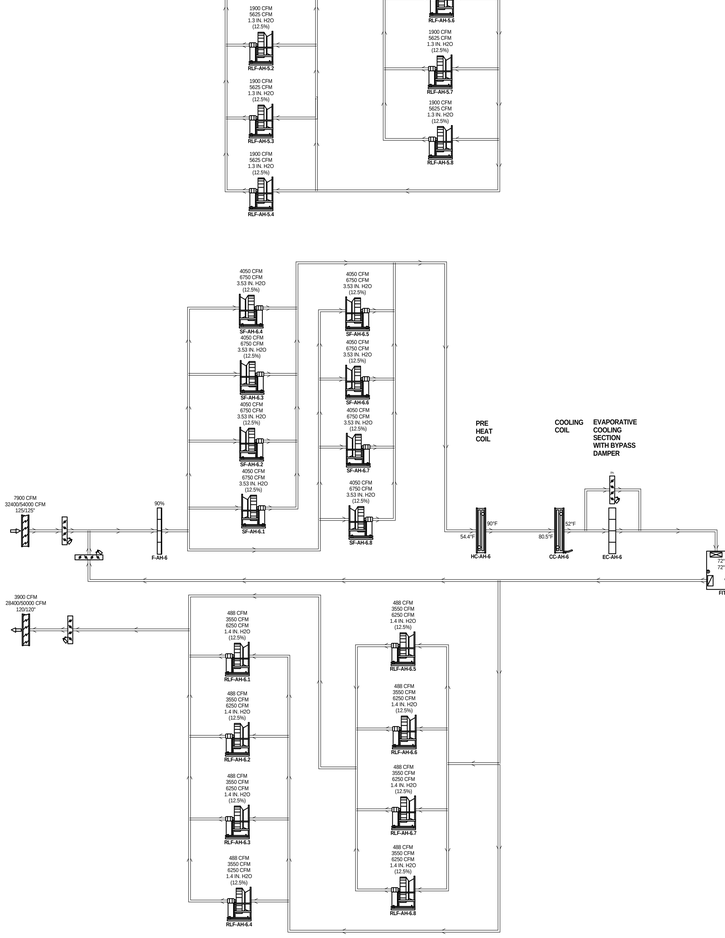


## AH-6, FITNESS

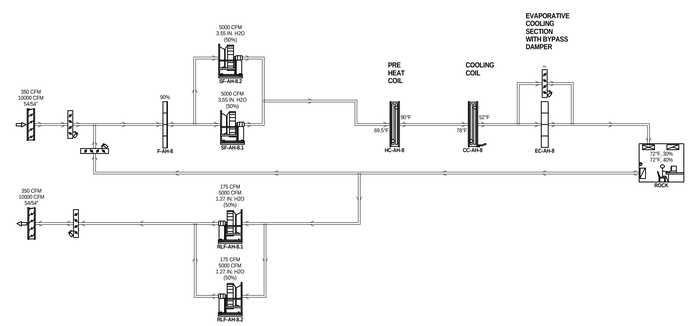


## AH-8, ROCK CLIMBING

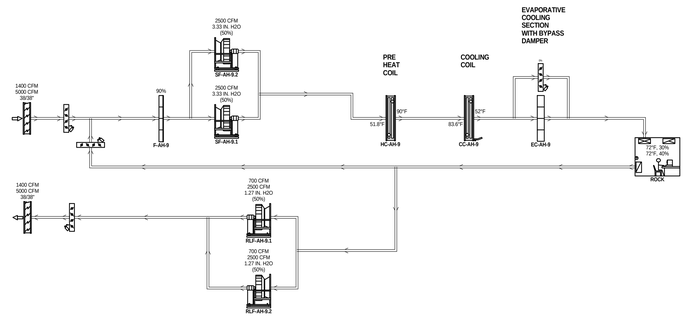


## AH-9, ROCK CLIMBING

# AIRFLOW SCHEMATICS

MHTN
ARCHITECTS
**MHTN Architects, Inc.**
420 East South Temple
Suite 100
Salt Lake City, Utah 84111
Telephone (801) 595-6700
Telefax (801) 595-6717
www.mhtn.com

**Hastings+Chivetta**
ARCHITECTURE • PLANNING • ENGINEERING
622 Emerson, Suite 200
St. Louis, MO 63141
Tel. 314.863.5717
Fax. 314.863.2823
www.hastingschivetta.com

VAN BOERUM & FRANK ASSOCIATES, INC.
CONSULTING ENGINEERS
Salt Lake City • Logan • St. George • Tempe
330 South 300 East 801.530.3148 T
Salt lake City, UT 84111 801.530.3150 F

# UNIVERSITY OF UTAH
## STUDENT LIFE CENTER
1836 E. BALLIF ROAD
SALT LAKE CITY, UTAH 84112

©2007 MHTN ARCHITECTS, INC.
Drawings, written material, and design concepts shall not be used or reproduced in whole or part in any form or format without prior written consent of MHTN Architects, Inc. Do not scale drawings. Use given dimensions only. If not shown, verify correct dimensions with the Architect. Contractor shall check and verify all dimensions and conditions at job site.

SEAL

MHTN PROJECT NO.

DRAWN BY: CHECKED BY:

ISSUED:

| NO. | DATE | DESCRIPTION |
|---|---|---|

CONTRACTOR TO VERIFY DRAWINGS IN FIELD USE REFLECT LAST REVISION DATE.

| NO. | DATE | DESCRIPTION |
|---|---|---|

SHEET NAME
AIR FLOW SCHEMATICS

BID DOCUMENTS
MAY 15, 2013

SHEET NUMBER
MH702

D:_BimLocal\Mechanical_Central_JRobker.rvt
5/14/2013 12:53:51 PM

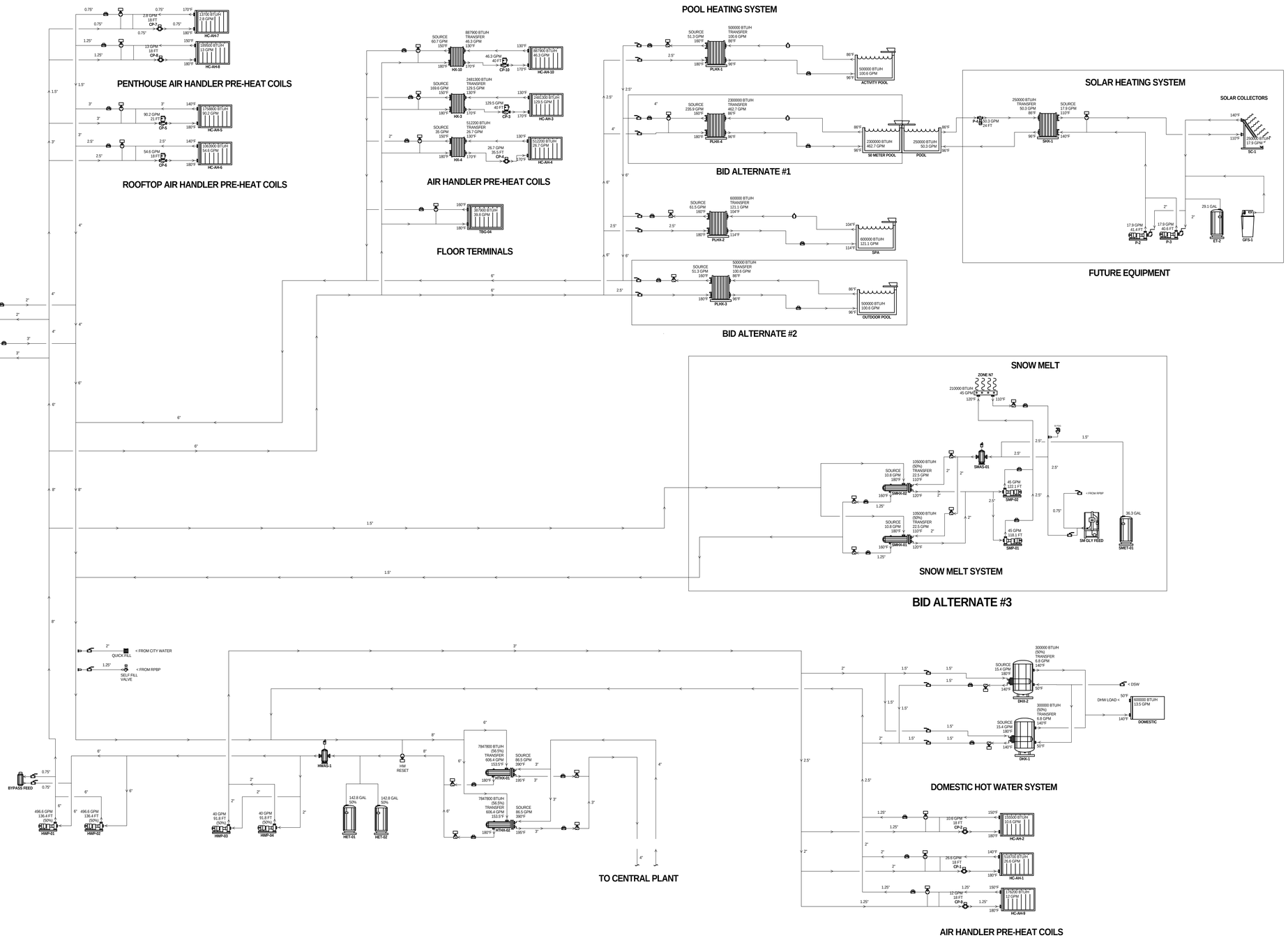



MHTN ARCHITECTS

**MHTN Architects, Inc.**
420 East South Temple
Suite 100
Salt Lake City, Utah 84111
Telephone (801) 595-6700
Telefax (801) 595-6717
www.mhtn.com

**Hastings+Chivetta**
ARCHITECTURE • PLANNING • ENGINEERING
622 Emerson, Suite 200
St. Louis, MO 63141
Tel. 314.863.5717
Fax. 314.863.2823
www.hastingschivetta.com

VAN BOERUM & FRANK ASSOCIATES, INC.
CONSULTING ENGINEERS
Salt Lake City • Logan • St. George • Tempe
330 South 300 East 801.530.3148 T
Salt lake City, UT 84111 801.530.3150 F


# UNIVERSITY OF UTAH
## STUDENT LIFE CENTER
1836 E. BALLIF ROAD
SALT LAKE CITY, UTAH 84112


©2007 MHTN ARCHITECTS, INC.
Drawings, written material, and design concepts shall not be used or reproduced in whole or part in any form or format without prior written consent of MHTN Architects, Inc. Do not scale drawings. Use given dimensions only. If not shown, verify correct dimensions with the Architect. Contractor shall check and verify all dimensions and conditions at job site.


SEAL

MHTN PROJECT NO.

DRAWN BY: CHECKED BY:

ISSUED:

| NO. | DATE | DESCRIPTION |
|---|---|---|
| | | |

CONTRACTOR TO VERIFY DRAWINGS IN FIELD USE REFLECT LAST REVISION DATE.

| NO. | DATE | DESCRIPTION |
|---|---|---|
| | | |

SHEET NAME
# HEATING SCHEMATICS

BID DOCUMENTS
MAY 15, 2013

SHEET NUMBER
# MH703

D:_BimLocal\Mechanical_Central_JRobker.rvt
5/14/2013 12:53:52 PM

## COOLING COILS

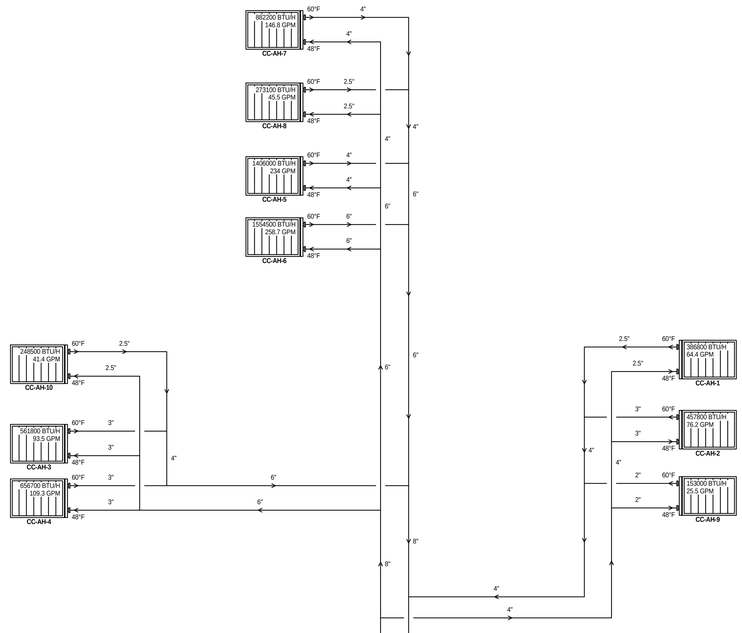


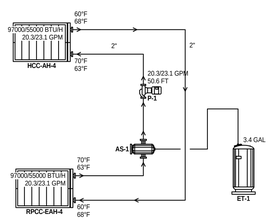


## EXHAUST AIR HEAT RECOVERY SCHEMATIC

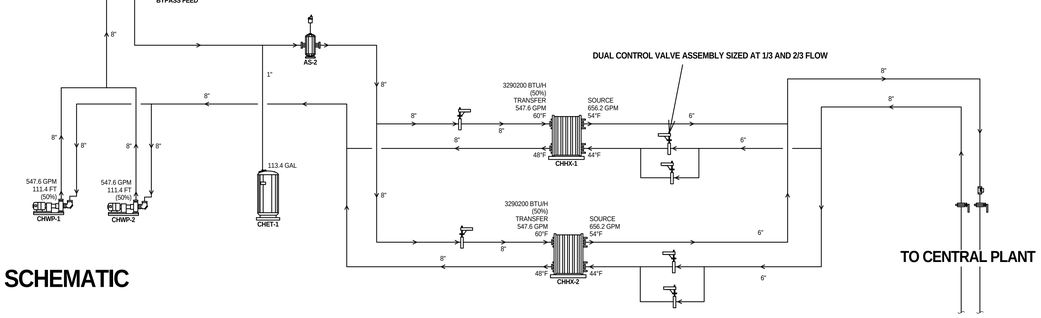


## COOLING SCHEMATIC


MHTN
ARCHITECTS
**MHTN Architects, Inc.**
420 East South Temple
Suite 100
Salt Lake City, Utah 84111
Telephone (801) 595-6700
Telefax (801) 595-6717
www.mhtn.com

**Hastings+Chivetta**
ARCHITECTURE • PLANNING • ENGINEERING
622 Emerson, Suite 200
St. Louis, MO 63141
Tel. 314.863.5717
Fax. 314.863.2823
www.hastingschivetta.com

VAN BOERUM & FRANK ASSOCIATES, INC.
CONSULTING ENGINEERS
Salt Lake City • Logan • St. George • Tempe
330 South 300 East 801.530.3148 T
Salt lake City, UT 84111 801.530.3150 F


# UNIVERSITY OF UTAH
## STUDENT LIFE CENTER
1836 E. BALLIF ROAD
SALT LAKE CITY, UTAH 84112


©2007 MHTN ARCHITECTS, INC.
Drawings, written material, and design concepts shall not be used or reproduced in whole or part in any form or format without prior written consent of MHTN Architects, Inc. Do not scale drawings. Use given dimensions only. If not shown, verify correct dimensions with the Architect. Contractor shall check and verify all dimensions and conditions at job site.


SEAL

MHTN PROJECT NO.

DRAWN BY: CHECKED BY:

ISSUED:

| NO. | DATE | DESCRIPTION |
|---|---|---|

CONTRACTOR TO VERIFY DRAWINGS IN FIELD USE REFLECT LAST REVISION DATE.

| NO. | DATE | DESCRIPTION |
|---|---|---|

SHEET NAME
COOLING SCHEMATICS

BID DOCUMENTS
MAY 15, 2013

SHEET NUMBER
MH704

D:__Bim\Local\Mechanical_Central_JRobker.rvt
5/14/2013 12:53:53 PM

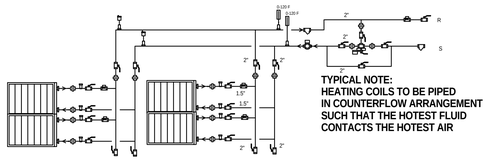


HEATING COIL (4) BANK STAGGERED CONNECTION BANK PIPING DETAIL

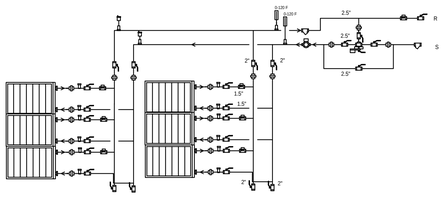


HEATING (6) BANK STAGGERED CONNECTION BANK PIPING DETAIL

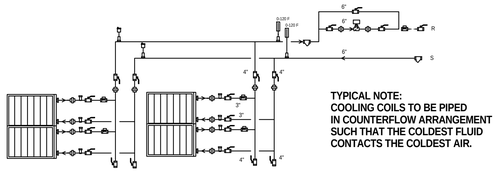


COOLING COIL (4) BANK STAGGERED CONNECTION BANK PIPING DETAIL

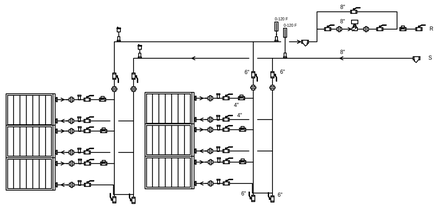


COOLING COIL (6) BANK STAGGERED CONNECTION BANK PIPING DETAIL

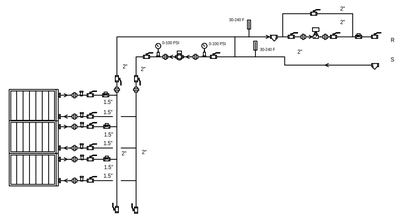


HEATING COIL BANK PIPING DETAIL

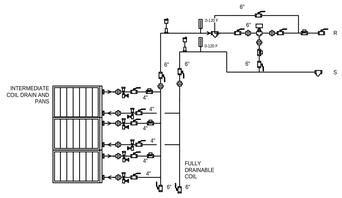


COOLING COIL BANK PIPING DETAIL

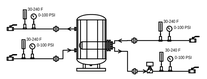


DOMSETIC WATER HEAT EXCHANGER DETAIL

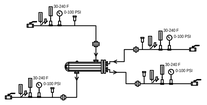


HEAT EXCHANGER DETAIL

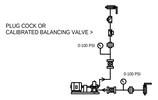


SPLIT CASE
PUMP DETAIL

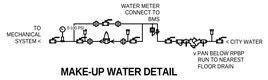


MAKE-UP WATER DETAIL

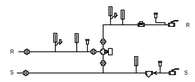


3-WAY CONTROL VALVE DETAIL

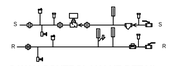


2-WAY CONTROL VALVE DETAIL

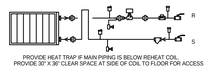


VAV/CV REHEAT BOX WITH
2-WAY VALVE DETAIL

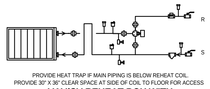


VAV/CV REHEAT BOX WITH
3-WAY VALVE DETAIL

FAN COIL/UNIT HEATER WITH
2-WAY VALVE DETAIL

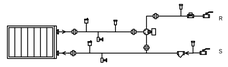


FAN COIL WITH
3-WAY VALVE DETAIL

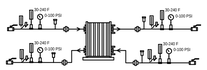


PLATE AND FRAME HEAT EXCHANGER DETAIL

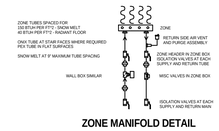


ZONE MANIFOLD DETAIL

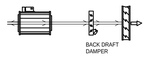


EXHAUST FAN DETAIL

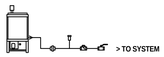


CHEMICAL FEEDER DETAIL

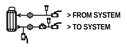


BYPASS FEEDER DETAIL

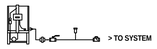


GLYCOL FEEDER DETAIL

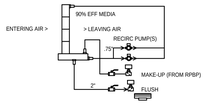


AIR WASHER DETAIL

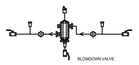


AIR SEPARATOR TANK DETAIL

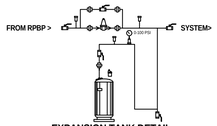


EXPANSION TANK DETAIL

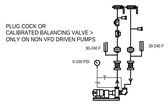


FRAME MOUNT END SUCTION
PUMP DETAIL

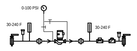


INLINE PUMP DETAIL

PARTIAL LEGEND

- VALVE (<2"=BALL, >2"=BUTTERFLY)
- GATE VALVE
- PLUG COCK
- BUTTERFLY VALVE
- GLOBE VALVE
- CHECK VALVE
- TEMPERATURE AND PRESSURE TEST PORT - TTE, PTE
- FLANGE
- UNION
- STRAINER WITH BLOWDOWN VALVE
- BALANCING VALVE
- PRESSURE RELIEF VALVE
- VACUUM RELIEF VALVE
- MANUAL AIR VENT
- 3-WAY CONTROL VALVE - CV
- 2-WAY CONTROL VALVE - CV
- PRESSURE GUAGE WITH SHUT-OFF COCK
- TEMPERATURE INDICATOR
- FLEXIBLE CONNECTOR
- RPBP
- EQUIPMENT
- DRAIN VALVE
- RELIEF VALVE
- PUMP W/ SUCTION DIFFUSER
- MAKE-UP — MAKE-UP WATER SELF FILL VALVE
- DRAIN VALVE WITH HOSE END
- RELIEF VALVE
- F&T TRAP
- PRESSURE REDUCING VALVE
- REMOVABLE FLEXIBLE CONNECTION FOR QUICK FILL
- FLOOR DRAIN/SINK
- FLUID LEVEL SENSOR
- FLUID FLOW METER / SENSOR
- FLUID FLOW INDICATING SENSOR
- FLUID PRESSURE SENSOR
- FLUID TEMPERATURE SENSOR
- FLEXIBLE CONNECTION
- MANUAL BALANCING DAMPER
- ATC DAMPER
- WINTER AIRFLOW / SUMMER AIRFLOW / STATIC PRESSURE
- EQUIPMENT ID
- LEAVING AIR TEMPERATURE

COIL BRANCH PIPE SIZES
(SEE SCHEDULE FOR FLOW):

| | | | | |
|---|---|---|---|---|
| .75" | = | | < | 3.5 GPM |
| 1" | = 3.6 | TO | | 6.3 GPM |
| 1.25" | = 6.7 | TO | | 14 GPM |
| 1.5" | = 14.1 | TO | | 21 GPM |
| 2" | = 21.1 | TO | | 42 GPM |
| 2.5" | = 42.1 | TO | | 66 GPM |
| 3" | = 66.1 | TO | | 120 GPM |
| 4" | = 120.1 | TO | | 240 GPM |
| 6" | = 240.1 | TO | | 600 GPM |
| 8" | = 600.1 | TO | | 1000 GPM |


MHTN
ARCHITECTS
**MHTN Architects, Inc.**
420 East South Temple
Suite 100
Salt Lake City, Utah 84111
Telephone (801) 595-6700
Telefax (801) 595-6717
www.mhtn.com

**Hastings+Chivetta**
ARCHITECTURE • PLANNING • ENGINEERING
622 Emerson, Suite 200
St. Louis, MO 63141
Tel. 314.863.5717
Fax. 314.863.2823
www.hastingschivetta.com

VAN BOERUM & FRANK ASSOCIATES, INC.
CONSULTING ENGINEERS
Salt Lake City • Logan • St. George • Tempe
330 South 300 East 801.530.3148 T
Salt lake City, UT 84111 801.530.3150 F


# UNIVERSITY OF UTAH
## STUDENT LIFE CENTER
1836 E. BALLIF ROAD
SALT LAKE CITY, UTAH 84112


©2007 MHTN ARCHITECTS, INC.
Drawings, written material, and design concepts shall not be used or reproduced in whole or part in any form or format without prior written consent of MHTN Architects, Inc. Do not scale drawings. Use given dimensions only. If not shown, verify correct dimensions with the Architect. Contractor shall check and verify all dimensions and conditions at job site.


SEAL

MHTN PROJECT NO.

DRAWN BY: CHECKED BY:

ISSUED:

| NO. | DATE | DESCRIPTION |
|---|---|---|

CONTRACTOR TO VERIFY DRAWINGS IN FIELD USE REFLECT LAST REVISION DATE.

| NO. | DATE | DESCRIPTION |
|---|---|---|

SHEET NAME
SCHEMATIC DETAILS

BID DOCUMENTS
MAY 15, 2013

SHEET NUMBER
MH705

D:_BimLocal\Mechanical_Central_JRobker.rvt
5/14/2013 12:53:55 PM

## SHEET KEYNOTES

| | |
|---|---|
| 1 | PROVIDE 3-WAY VALVE TO HOT WATER COIL. |
| 2 | CHWS/CHWR/HWS/HWR UP TO FIRST LEVEL. |

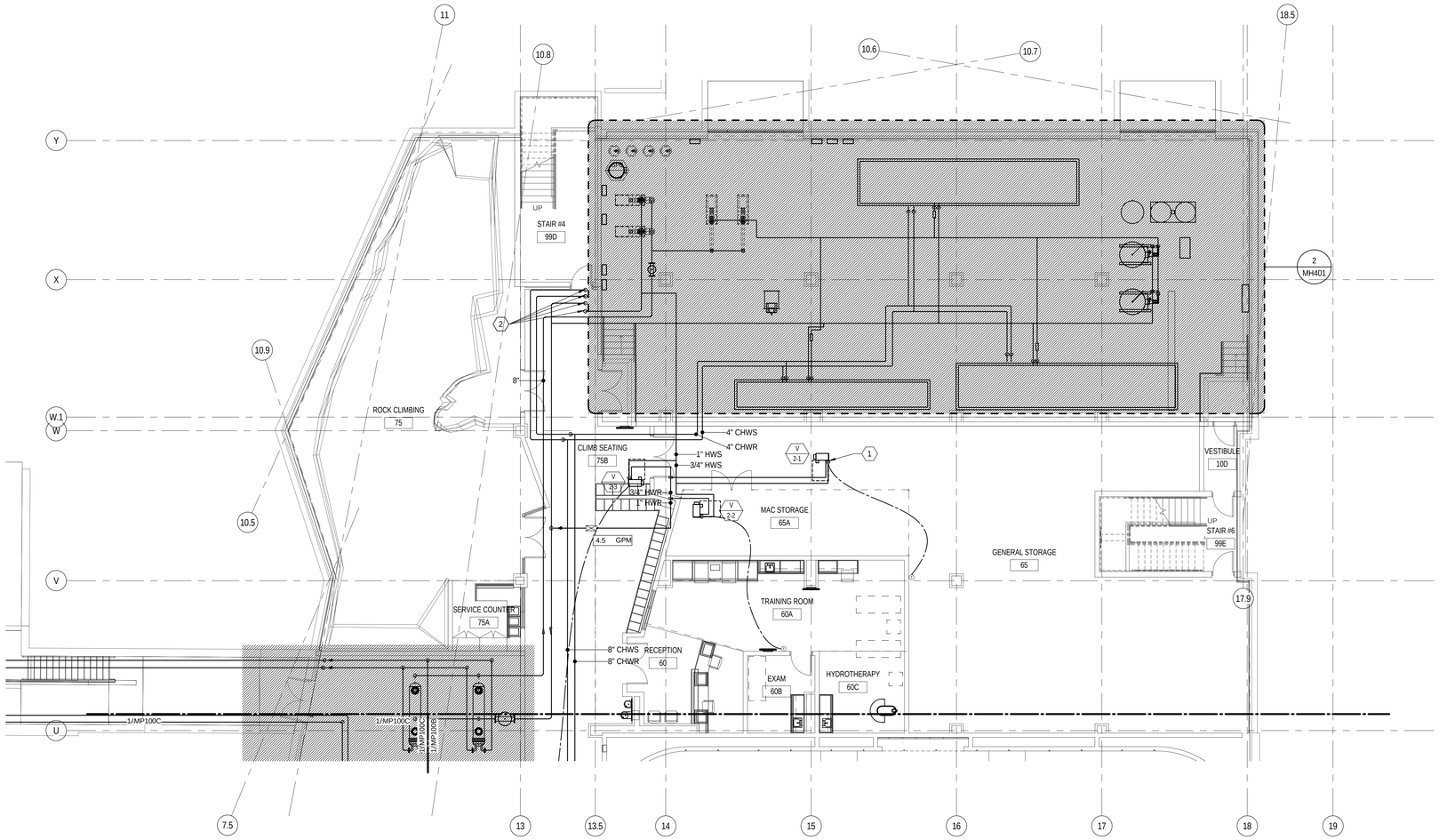


## LOWER LEVEL MECHANICAL PIPING PLAN A

0 4' - 0" 8' - 0" 16' - 0"

SCALE: 1/8" = 1'-0"

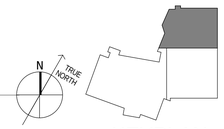


KEYPLAN


MHTN
ARCHITECTS
**MHTN Architects, Inc.**
420 East South Temple
Suite 100
Salt Lake City, Utah 84111
Telephone (801) 595-6700
Telefax (801) 595-6717
www.mhtn.com

**Hastings+Chivetta**
ARCHITECTURE • PLANNING • ENGINEERING
622 Emerson, Suite 200
St. Louis, MO 63141
Tel. 314.863.5717
Fax. 314.863.2823
www.hastingschivetta.com

VAN BOERUM & FRANK ASSOCIATES, INC.
CONSULTING ENGINEERS
Salt Lake City • Logan • St. George • Tempe
330 South 300 East 801.530.3148 T
Salt lake City, UT 84111 801.530.3150 F


# UNIVERSITY OF UTAH
## STUDENT LIFE CENTER
1836 E. BALLIF ROAD
SALT LAKE CITY, UTAH 84112


©2007 MHTN ARCHITECTS, INC.
Drawings, written material, and design concepts shall not be used or reproduced in whole or in part in any form or format without prior written consent of MHTN Architects, Inc. Do not scale drawings. Use given dimensions only. If not shown, verify correct dimensions with the Architect. Contractor shall check and verify all dimensions and conditions at job site.


SEAL

MHTN PROJECT NO.

DRAWN BY: CHECKED BY:

ISSUED:

| NO. | DATE | DESCRIPTION |
|---|---|---|

CONTRACTOR TO VERIFY DRAWINGS IN FIELD-USE REFLECT LAST REVISION DATE.

| NO. | DATE | DESCRIPTION |
|---|---|---|

SHEET NAME
PARTIAL MECHANICAL PIPING PLAN
BID DOCUMENTS
MAY 15, 2013

SHEET NUMBER
MP100A

D:_Bim\Local\Mechanical_Central_JRoldeker.rvt
5/14/2013 12:53:59 PM

## SHEET KEYNOTES

1 PROVIDE 3-WAY VALVE TO HOT WATER COIL.

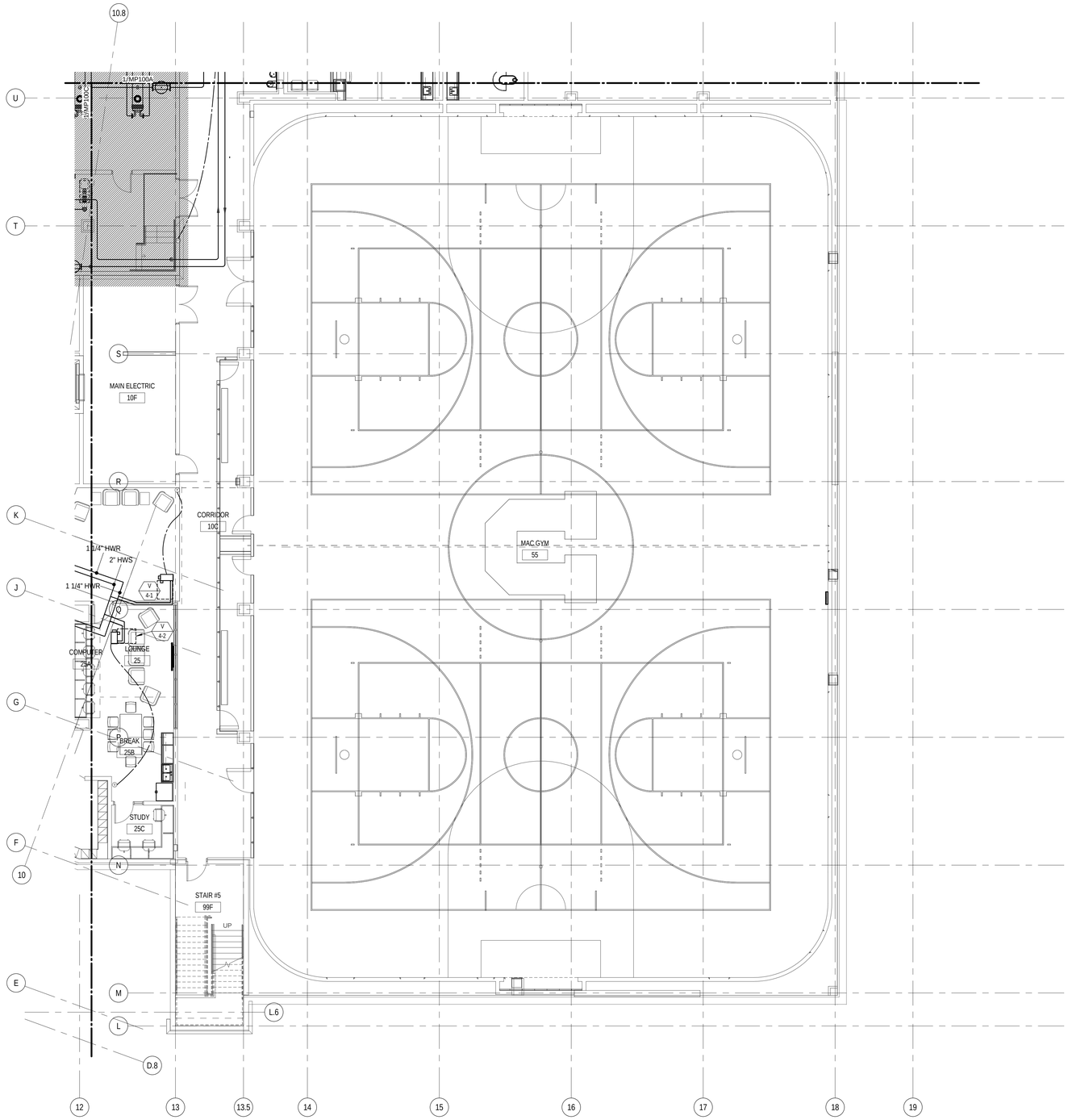


LOWER LEVEL MECHANICAL PIPING PLAN B

0 4' - 0" 8' - 0" 16' - 0"

SCALE: 1/8" = 1'-0"

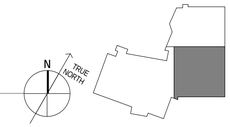


KEYPLAN


MHTN ARCHITECTS

**MHTN Architects, Inc.**
420 East South Temple
Suite 100
Salt Lake City, Utah 84111
Telephone (801) 595-6700
Telefax (801) 595-6717
www.mhtn.com

**Hastings+Chivetta**
ARCHITECTURE • PLANNING • ENGINEERING
622 Emerson, Suite 200
St. Louis, MO 63141
Tel. 314.863.5717
Fax. 314.863.2823
www.hastingschivetta.com

VAN BOERUM & FRANK ASSOCIATES, INC.
CONSULTING ENGINEERS
Salt Lake City • Logan • St. George • Tempe
330 South 300 East 801.530.3148 T
Salt lake City, UT 84111 801.530.3150 F
VBF# Project 1002


# UNIVERSITY OF UTAH

## STUDENT LIFE CENTER

1836 E. BALLIF ROAD
SALT LAKE CITY, UTAH 84112


©2007 MHTN ARCHITECTS, INC.
Drawings, written material, and design concepts shall not be used or reproduced in whole or part in any form or format without prior written consent of MHTN Architects, Inc. Do not scale drawings. Use given dimensions only. If not shown, verify correct dimensions with the Architect. Contractor shall check and verify all dimensions and conditions at job site.


SEAL

MHTN PROJECT NO.

DRAWN BY: CHECKED BY:

ISSUED:

| NO. | DATE | DESCRIPTION |
|---|---|---|

CONTRACTOR TO VERIFY DRAWINGS IN FIELD USE REFLECT LAST REVISION DATE.

| NO. | DATE | DESCRIPTION |
|---|---|---|

SHEET NAME

PARTIAL MECHANICAL PIPING PLAN
BID DOCUMENTS
MAY 15, 2013

SHEET NUMBER

MP100B

D:__Bim\Local\Mechanical_Central_JRobker.rvt
5/14/2013 12:54:02 PM

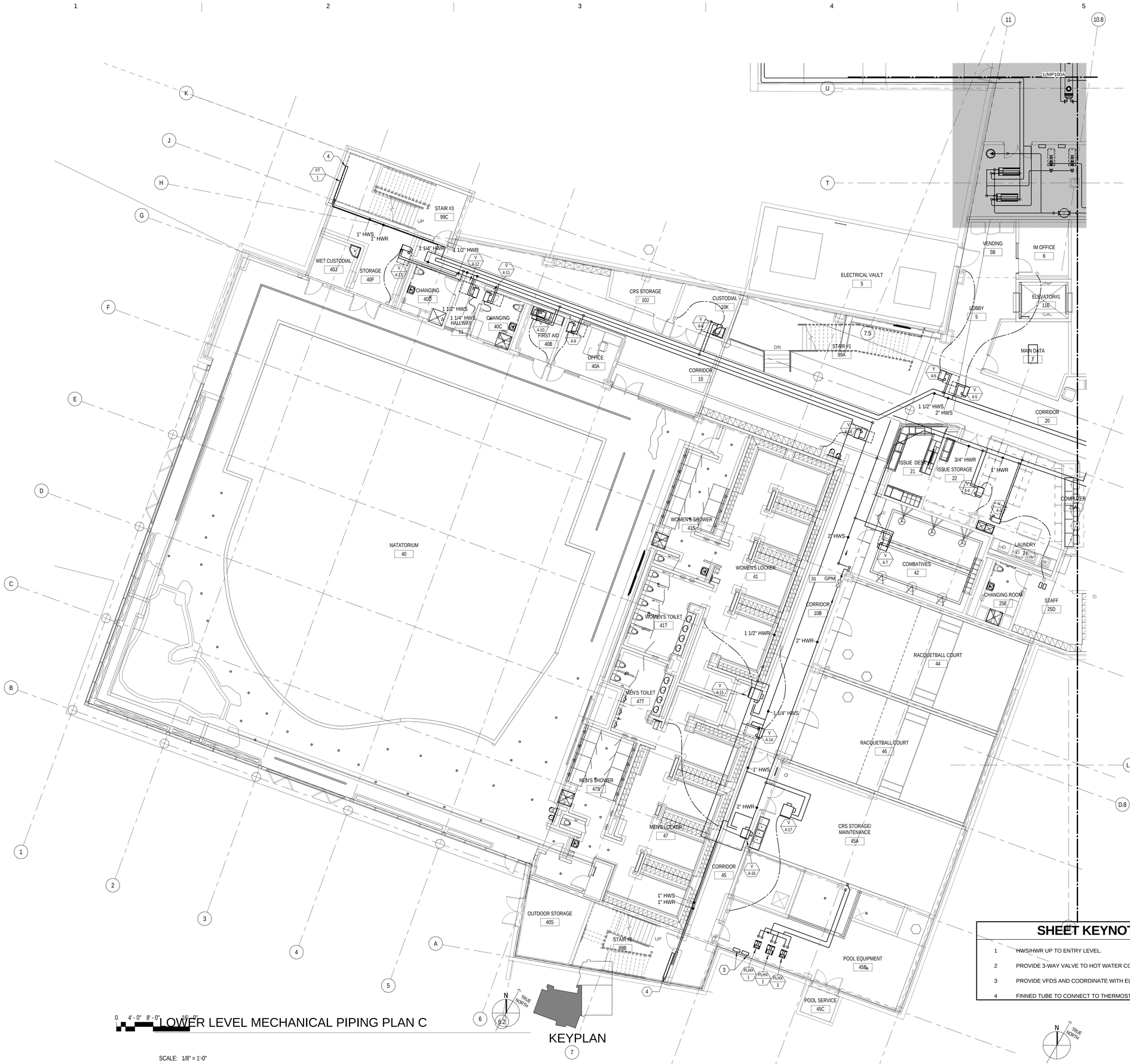


# LOWER LEVEL MECHANICAL PIPING PLAN C

## SHEET KEYNOTES

1. HWS/HWR UP TO ENTRY LEVEL.
2. PROVIDE 3-WAY VALVE TO HOT WATER COIL.
3. PROVIDE VFDS AND COORDINATE WITH ELECTRICAL.
4. FINNED TUBE TO CONNECT TO THERMOSTAT SHOWN ON LEVEL 2.

D:_Bim\Local\Mechanical_Central_JRobker.rvt
5/14/2013 12:54:07 PM

MHTN
ARCHITECTS
**MHTN Architects, Inc.**
420 East South Temple
Suite 100
Salt Lake City, Utah 84111
Telephone (801) 595-6700
Telefax (801) 595-6717
www.mhtn.com

**Hastings+Chivetta**
ARCHITECTURE • PLANNING • ENGINEERING
622 Emerson, Suite 200
St. Louis, MO 63141
Tel. 314.863.5717
Fax. 314.863.2823
www.hastingschivetta.com

VAN BOERUM & FRANK ASSOCIATES, INC.
CONSULTING ENGINEERS
Salt Lake City • Logan • St. George • Tempe
330 South 300 East 801.530.3148 T
Salt lake City, UT 84111 801.530.3150 F
VBF# Project 1002

# UNIVERSITY OF UTAH
## STUDENT LIFE CENTER
1836 E. BALLIF ROAD
SALT LAKE CITY, UTAH 84112

©2007 MHTN ARCHITECTS, INC.
Drawings, written material, and design concepts shall not be used or reproduced in whole or part in any form or format without prior written consent of MHTN Architects, Inc. Do not scale drawings. Use given dimensions only. If not shown, verify correct dimensions with the Architect. Contractor shall check and verify all dimensions and conditions at job site.

SEAL

MHTN PROJECT NO.

DRAWN BY: CHECKED BY:

ISSUED:

| NO. | DATE | DESCRIPTION |
|---|---|---|
| | | |

CONTRACTOR TO VERIFY DRAWINGS IN FIELD USE REFLECT LAST REVISION DATE.

| NO. | DATE | DESCRIPTION |
|---|---|---|
| | | |

SHEET NAME
PARTIAL MECHANICAL PIPING PLAN
BID DOCUMENTS
MAY 15, 2013

SHEET NUMBER
MP100C

## SHEET KEYNOTES

1 PROVIDE 3-WAY VALVE TO HOT WATER COIL.

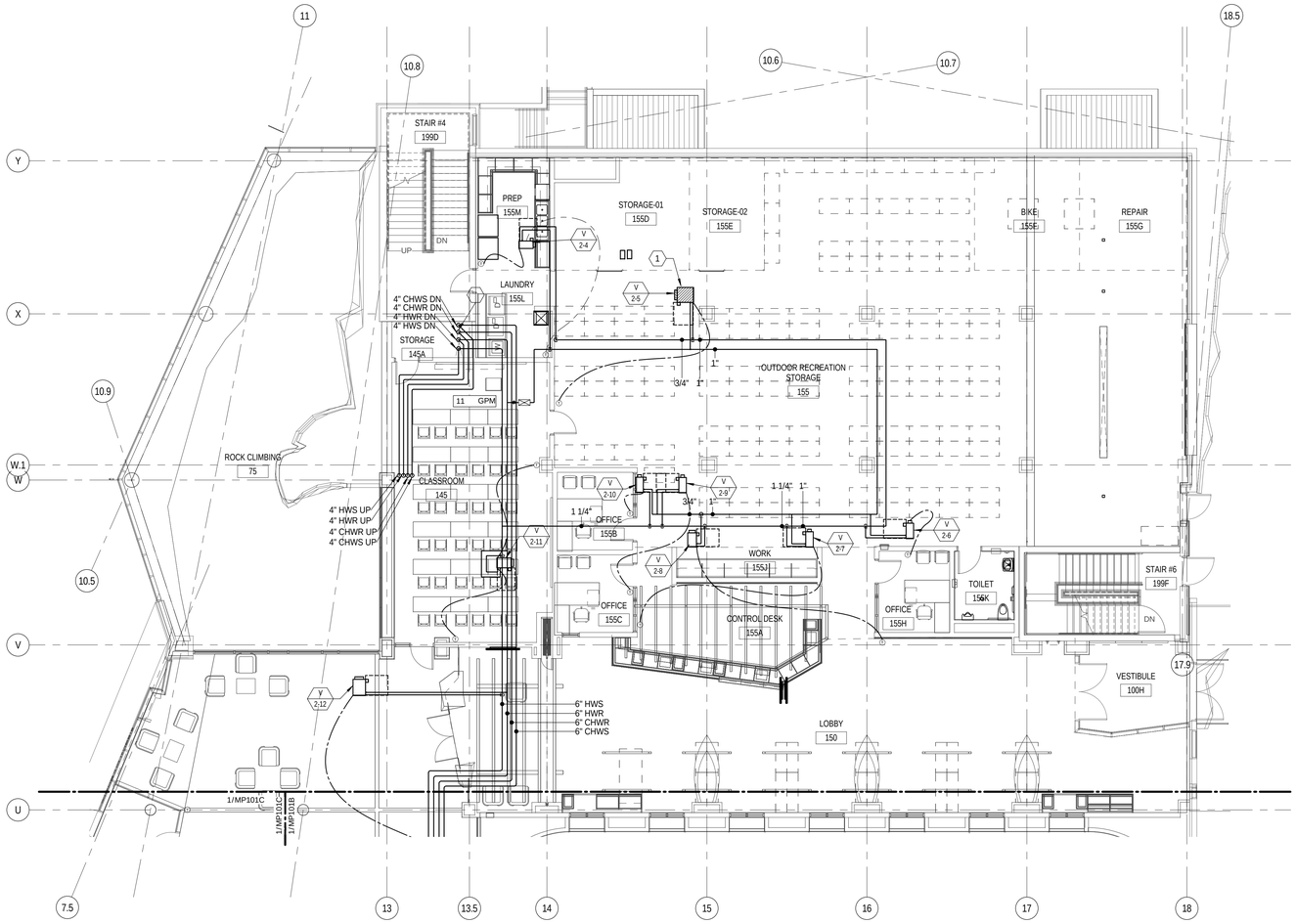


# FIRST LEVEL MECHANICAL PIPING PLAN A

0 4' - 0" 8' - 0" 16' - 0"

SCALE: 1/8" = 1'-0"

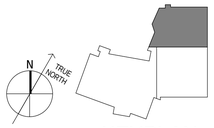


KEYPLAN


MHTN ARCHITECTS

**MHTN Architects, Inc.**
420 East South Temple
Suite 100
Salt Lake City, Utah 84111
Telephone (801) 595-6700
Telefax (801) 595-6717
www.mhtn.com

**Hastings+Chivetta**
ARCHITECTURE • PLANNING • ENGINEERING
622 Emerson, Suite 200
St. Louis, MO 63141
Tel. 314.863.5717
Fax. 314.863.2823
www.hastingschivetta.com

VAN BOERUM & FRANK ASSOCIATES, INC.
CONSULTING ENGINEERS
Salt Lake City • Logan • St. George • Tempe
330 South 300 East 801.530.3148 T
Salt lake City, UT 84111 801.530.3150 F


# UNIVERSITY OF UTAH
## STUDENT LIFE CENTER
1836 E. BALLIF ROAD
SALT LAKE CITY, UTAH 84112


©2007 MHTN ARCHITECTS, INC.
Drawings, written material, and design concepts shall not be used or reproduced in whole or in part without the express written and visual consent of MHTN Architects, Inc. Do not scale drawings. Use given dimensions only. If not shown, verify correct dimensions with the Architect. Contractor shall check and verify all dimensions and conditions at job site.


SEAL

MHTN PROJECT NO.

DRAWN BY: CHECKED BY:

ISSUED:

| NO. | DATE | DESCRIPTION |
|---|---|---|
| | | |

CONTRACTOR TO VERIFY DRAWINGS IN FIELD USE REFLECT LAST REVISION DATE:

| NO. | DATE | DESCRIPTION |
|---|---|---|
| | | |

SHEET NAME

PARTIAL MECHANICAL PIPING PLAN
BID DOCUMENTS
MAY 15, 2013

SHEET NUMBER

MP101A

D:_Bim\Local\Mechanical_Central_JRobker.rvt
5/14/2013 12:54:11 PM

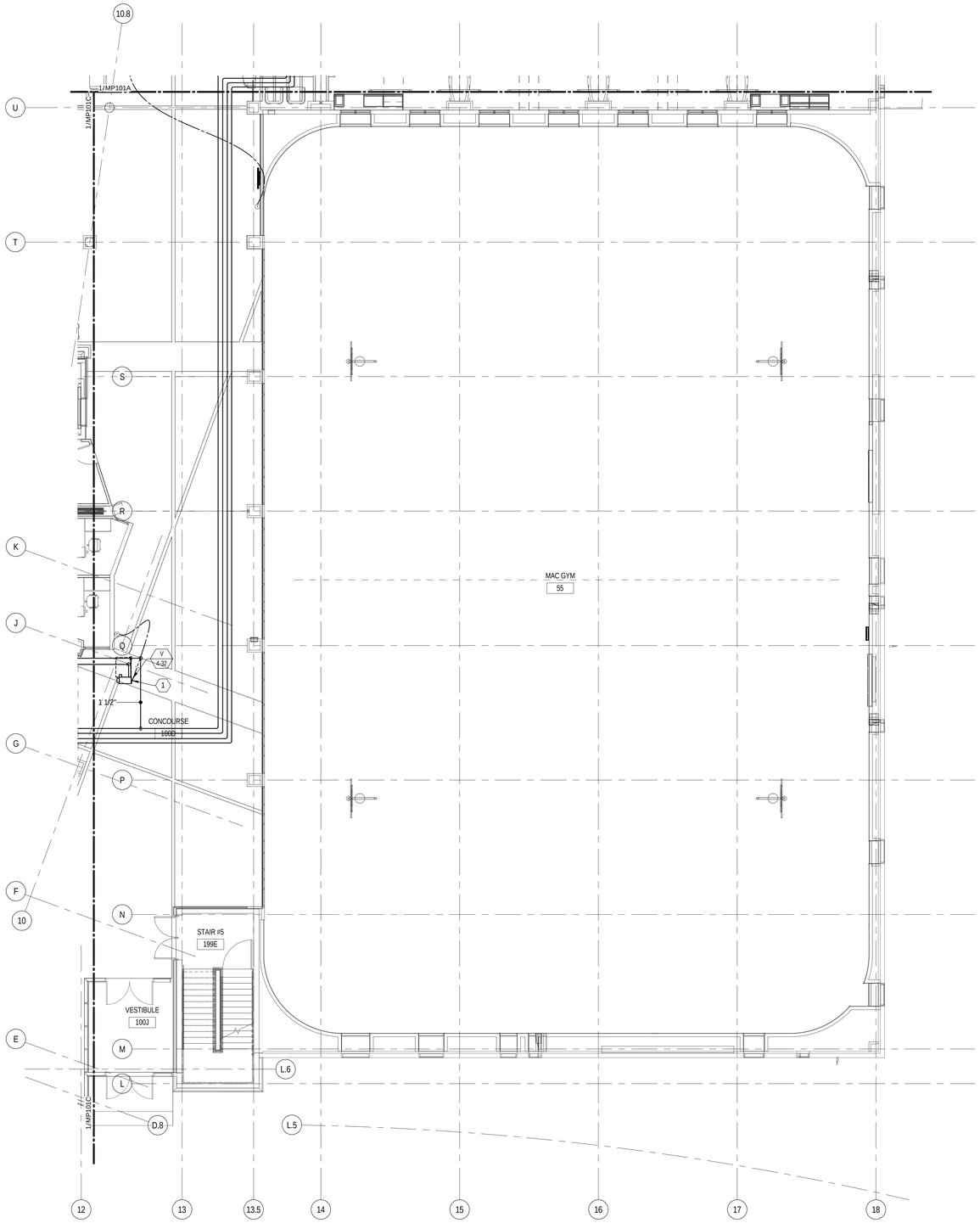


# FIRST LEVEL MECHANICAL PIPING PLAN B

0 4' - 0" 8' - 0" 16' - 0"

SCALE: 1/8" = 1'-0"

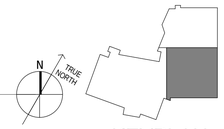


KEYPLAN


MHTN
ARCHITECTS

**MHTN Architects, Inc.**
420 East South Temple
Suite 100
Salt Lake City, Utah 84111
Telephone (801) 595-6700
Telefax (801) 595-6717
www.mhtn.com

**Hastings+Chivetta**
ARCHITECTURE • PLANNING • ENGINEERING
622 Emerson, Suite 200
St. Louis, MO 63141
Tel. 314.863.5717
Fax. 314.863.2823
www.hastingschivetta.com

VAN BOERUM & FRANK ASSOCIATES, INC.
CONSULTING ENGINEERS
Salt Lake City • Logan • St. George • Tempe
330 South 300 East 801.530.3148 T
Salt lake City, UT 84111 801.530.3150 F


# UNIVERSITY OF UTAH
## STUDENT LIFE CENTER
1836 E. BALLIF ROAD
SALT LAKE CITY, UTAH 84112


©2007 MHTN ARCHITECTS, INC.
Drawings, written material, and design concepts shall not be used or reproduced in whole or part in any form or format without prior written consent of MHTN Architects, Inc. Do not scale drawings. Use given dimensions only. If not shown, verify correct dimensions with the Architect. Contractor shall check and verify all dimensions and conditions at job site.


SEAL

MHTN PROJECT NO.

DRAWN BY: CHECKED BY:

ISSUED:

| NO. | DATE | DESCRIPTION |
|---|---|---|

CONTRACTOR TO VERIFY DRAWINGS IN FIELD USE REFLECT LAST REVISION DATE.

| NO. | DATE | DESCRIPTION |
|---|---|---|

SHEET NAME

PARTIAL MECHANICAL PIPING PLAN
BID DOCUMENTS
MAY 15, 2013

SHEET NUMBER

MP101B

D:_Bim\Local\Mechanical_Central_jRobker.rvt
5/14/2013 12:54:14 PM

## SHEET KEYNOTES

| | |
|---|---|
| 1 | HWS/HWR PIPING DOWN TO LOWER LEVEL. |
| 2 | FINNED TUBE TO CONNECT TO THERMOSTAT SHOWN ON LEVEL 2. |
| 3 | FINNED TUBE TO BE INSTALLED ON INTERMEDIATE STAIR LANDING. |

# FIRST LEVEL MECHANICAL PIPING PLAN C

0 4' - 0" 8' - 0" 16' - 0"

SCALE: 1/8" = 1'-0"

KEYPLAN

D:__Bim\Local\Mechanical_Central_JRobke.rvt
5/14/2013 12:54:21 PM


MHTN
ARCHITECTS

**MHTN Architects, Inc.**
420 East South Temple
Suite 100
Salt Lake City, Utah 84111
Telephone (801) 595-6700
Telefax (801) 595-6717
www.mhtn.com

**Hastings+Chivetta**
ARCHITECTURE • PLANNING • ENGINEERING
622 Emerson, Suite 200
St. Louis, MO 63141
Tel. 314.863.5717
Fax. 314.863.2823
www.hastingschivetta.com

VAN BOERUM & FRANK ASSOCIATES, INC.
CONSULTING ENGINEERS
Salt Lake City • Logan • St. George • Tempe
330 South 300 East 801.530.3148 T
Salt lake City, UT 84111 801.530.3150 F
VBF# Project 1002


# UNIVERSITY OF UTAH

## STUDENT LIFE CENTER

1836 E. BALLIF ROAD
SALT LAKE CITY, UTAH 84112


©2007 MHTN ARCHITECTS, INC.
Drawings, written material, and design concepts shall not be used or reproduced in whole or part in any form or format without prior written consent of MHTN Architects, Inc. Do not scale drawings. Use given dimensions only. If not shown, verify correct dimensions with the Architect. Contractor shall check and verify all dimensions and conditions at job site.


SEAL

MHTN PROJECT NO.

DRAWN BY: CHECKED BY:

ISSUED:

| NO. | DATE | DESCRIPTION |
|---|---|---|

CONTRACTOR TO VERIFY DRAWINGS IN FIELD USE REFLECT LAST REVISION DATE.

| NO. | DATE | DESCRIPTION |
|---|---|---|

SHEET NAME

PARTIAL MECHANICAL PIPING PLAN

BID DOCUMENTS

MAY 15, 2013

SHEET NUMBER

MP101C

## SHEET KEYNOTES

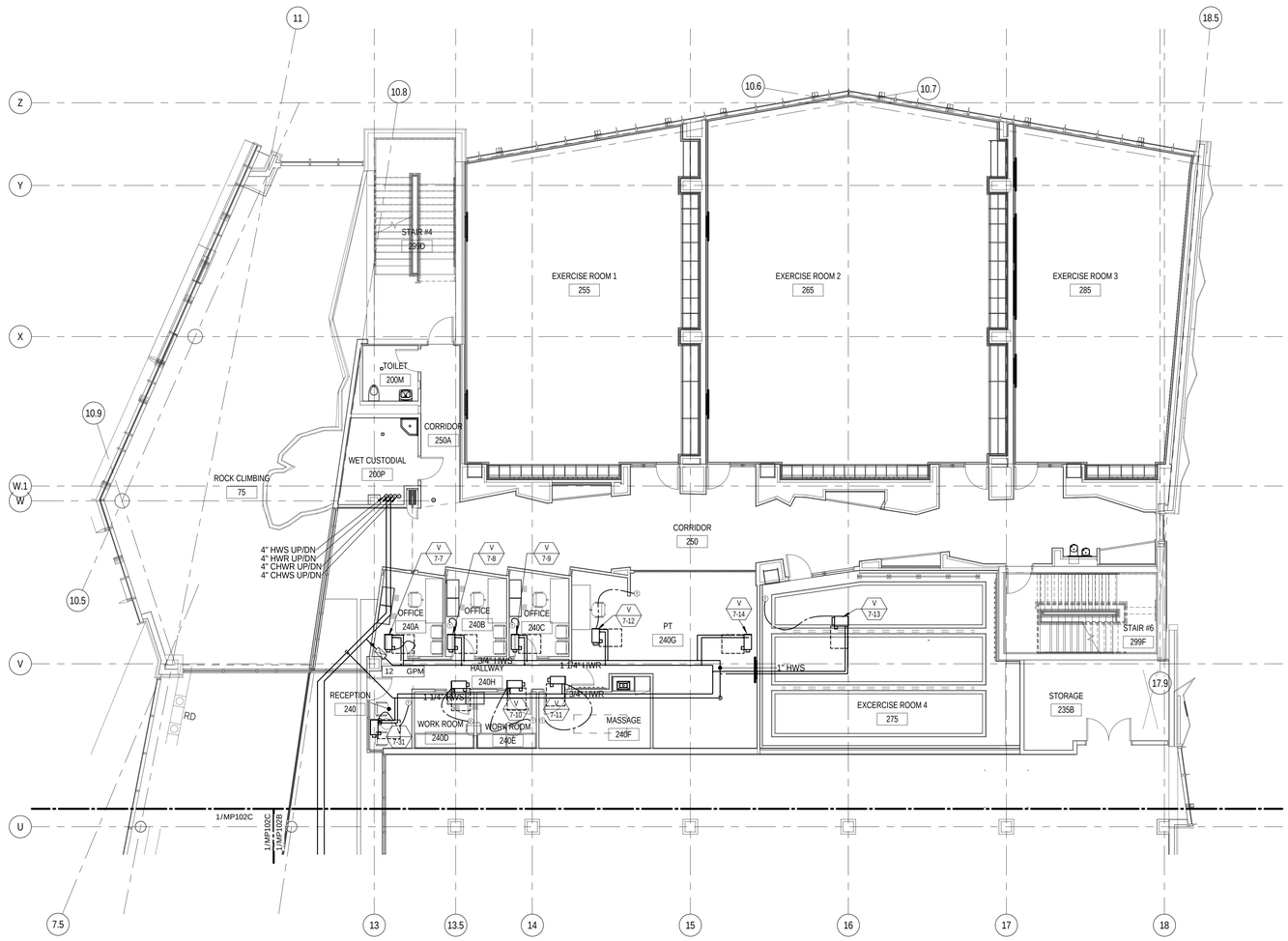


## SECOND LEVEL MECHANICAL PIPING PLAN A

0 4' - 0" 8' - 0" 16' - 0"

SCALE: 1/8" = 1'-0"

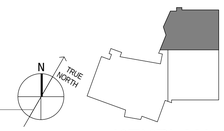


KEYPLAN

MHTN
ARCHITECTS
**MHTN Architects, Inc.**
420 East South Temple
Suite 100
Salt Lake City, Utah 84111
Telephone (801) 595-6700
Telefax (801) 595-6717
www.mhtn.com

**Hastings+Chivetta**
ARCHITECTURE • PLANNING • ENGINEERING
622 Emerson, Suite 200
St. Louis, MO 63141
Tel. 314.863.5717
Fax. 314.863.2823
www.hastingschivetta.com

VAN BOERUM & FRANK ASSOCIATES, INC.
CONSULTING ENGINEERS
Salt Lake City • Logan • St. George • Tempe
330 South 300 East 801.530.3148 T
Salt lake City, UT 84111 801.530.3150 F
VBF# Project 1002

# UNIVERSITY OF UTAH
## STUDENT LIFE CENTER
1836 E. BALLIF ROAD
SALT LAKE CITY, UTAH 84112

©2007 MHTN ARCHITECTS, INC.
Drawings, written material, and design concepts shall not be used or reproduced in whole or in part in any form or format without prior written consent of MHTN Architects, Inc. Do not scale drawings. Use given dimensions only. If not shown, verify correct dimensions with the Architect. Contractor shall check and verify all dimensions and conditions at job site.

SEAL

MHTN PROJECT NO.

DRAWN BY: CHECKED BY:

ISSUED:

| NO. | DATE | DESCRIPTION |
|---|---|---|

CONTRACTOR TO VERIFY DRAWINGS IN FIELD-USE REFLECT LAST REVISION DATE.

| NO. | DATE | DESCRIPTION |
|---|---|---|

SHEET NAME
PARTIAL MECHANICAL PIPING PLAN
BID DOCUMENTS
MAY 15, 2013

SHEET NUMBER
MP102A

D:_Bim\Local\Mechanical_Central_JRoeker.rvt
5/14/2013 12:54:26 PM

## SHEET KEYNOTES

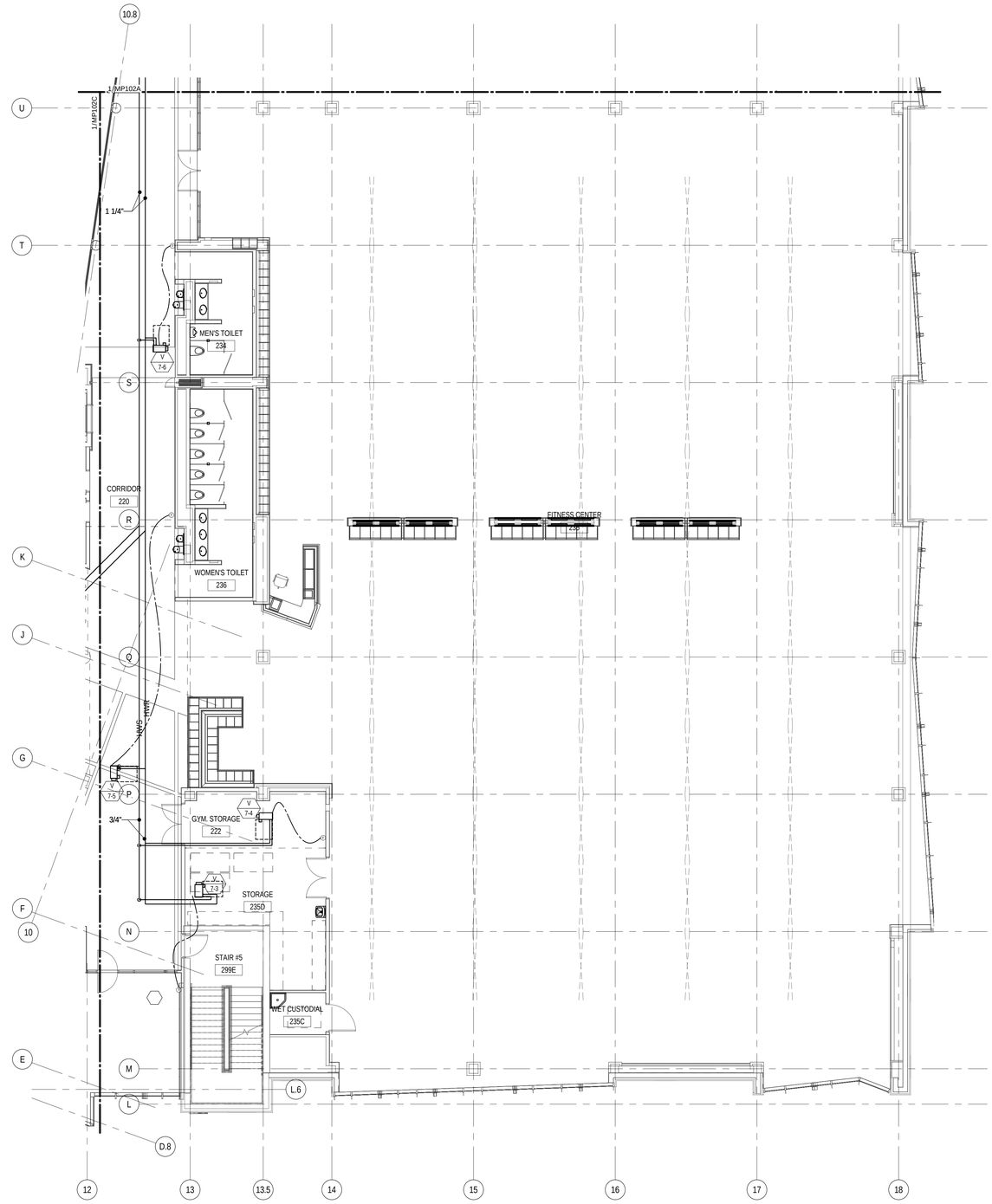


SECOND LEVEL MECHANICAL PIPING PLAN B

0 4' - 0" 8' - 0" 16' - 0"

SCALE: 1/8" = 1'-0"

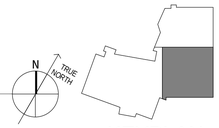


KEYPLAN


MHTN ARCHITECTS

**MHTN Architects, Inc.**
420 East South Temple
Suite 100
Salt Lake City, Utah 84111
Telephone (801) 595-6700
Telefax (801) 595-6717
www.mhtn.com

**Hastings+Chivetta**
ARCHITECTURE • PLANNING • ENGINEERING
622 Emerson, Suite 200
St. Louis, MO 63141
Tel. 314.863.5717
Fax. 314.863.2823
www.hastingschivetta.com

VAN BOERUM & FRANK ASSOCIATES, INC.
CONSULTING ENGINEERS
Salt Lake City • Logan • St. George • Tempe
330 South 300 East 801.530.3148 T
Salt lake City, UT 84111 801.530.3150 F


# UNIVERSITY OF UTAH

## STUDENT LIFE CENTER

1836 E. BALLIF ROAD
SALT LAKE CITY, UTAH 84112


©2007 MHTN ARCHITECTS, INC.
Drawings, written material, and design concepts shall not be used or reproduced in whole or in part without the written and dated permission consent of MHTN Architects, Inc. Do not scale drawings. Use given dimensions only. If not shown, verify correct dimensions with the Architect. Contractor shall check and verify all dimensions and conditions at job site.


SEAL

MHTN PROJECT NO.

DRAWN BY: CHECKED BY:

ISSUED:

| NO. | DATE | DESCRIPTION |
|---|---|---|
| | | |

CONTRACTOR TO VERIFY DRAWINGS IN FIELD USE REFLECT LAST REVISION DATE:

| NO. | DATE | DESCRIPTION |
|---|---|---|
| | | |

SHEET NAME

PARTIAL MECHANICAL PIPING PLAN

BID DOCUMENTS

MAY 15, 2013

SHEET NUMBER

MP102B

D:_Bim\Local\Mechanical_Central_JRobker.rvt
5/14/2013 12:54:29 PM

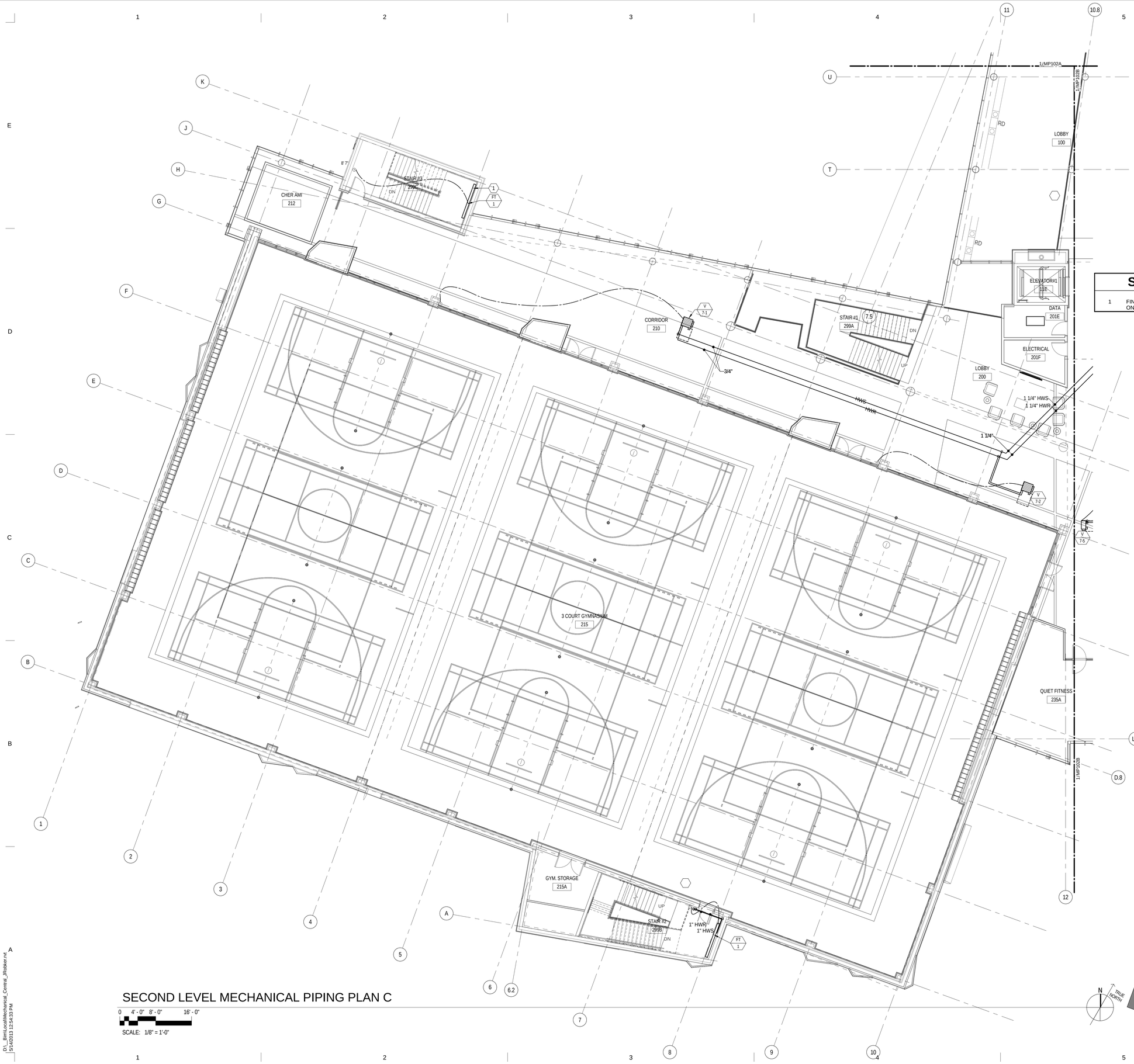


## SHEET KEYNOTES

1 FINNED TUBE TO CONNECT TO THERMOSTAT SHOWN ON LEVEL 2.

# SECOND LEVEL MECHANICAL PIPING PLAN C

0 4' - 0" 8' - 0" 16' - 0"

SCALE: 1/8" = 1'-0"

KEYPLAN


MHTN ARCHITECTS

**MHTN Architects, Inc.**
420 East South Temple
Suite 100
Salt Lake City, Utah 84111
Telephone (801) 595-6700
Telefax (801) 595-6717
www.mhtn.com

**Hastings+Chivetta**
ARCHITECTURE • PLANNING • ENGINEERING
622 Emerson, Suite 200
St. Louis, MO 63141
Tel. 314.863.5717
Fax. 314.863.2823
www.hastingschivetta.com

VAN BOERUM & FRANK ASSOCIATES, INC.
CONSULTING ENGINEERS
Salt Lake City • Logan • St. George • Tempe
330 South 300 East 801.530.3148 T
Salt lake City, UT 84111 801.530.3150 F
VBFA Project 1002


# UNIVERSITY OF UTAH
## STUDENT LIFE CENTER
1836 E. BALLIF ROAD
SALT LAKE CITY, UTAH 84112


©2007 MHTN ARCHITECTS, INC.
Drawings, written material, and design concepts shall not be used or reproduced in whole or part in any form or format without prior written consent of MHTN Architects, Inc. Do not scale drawings. Use given dimensions only. If not shown, verify correct dimensions with the Architect. Contractor shall check and verify all dimensions and conditions at job site.


SEAL

MHTN PROJECT NO.

DRAWN BY: CHECKED BY:

ISSUED:

| NO. | DATE | DESCRIPTION |
|---|---|---|
| | | |

CONTRACTOR TO VERIFY DRAWINGS IN FIELD USE REFLECT LAST REVISION DATE.

| NO. | DATE | DESCRIPTION |
|---|---|---|
| | | |

SHEET NAME

PARTIAL MECHANICAL PIPING PLAN
BID DOCUMENTS
MAY 15, 2013

SHEET NUMBER

MP102C

D:_Bim\Local\Mechanical_Central_JRobker.rvt
5/14/2013 12:54:33 PM

## SHEET KEYNOTES

1 CHWS/CHWR/GHWS/GHWR UP TO PENTHOUSE.

2 MOUNT THERMOSTAT ON WALL IN ACCESSIBLE LOCATION BELOW.

3 SEE SHEET MH403 FOR CONTINUATION.

## MECHANICAL PIPING GENERAL NOTES

1. PROVIDE ALL MATERIALS AND EQUIPMENT AND PERFORM ALL LABOR REQUIRED TO INSTALL COMPLETE AND OPERABLE PIPING SYSTEMS AS INDICATED ON THE DRAWINGS, AS SPECIFIED AND AS REQUIRED BY CODE.

2. UNLESS OTHERWISE NOTED: ALL MECHANICAL PIPING IS OVERHEAD TO RUN ABOVE DUCTWORK AND TIGHT TO UNDERSIDE OF STRUCTURE.

3. WHERE VALVING OR EQUIPMENT IS LOCATED ABOVE HARD CEILINGS PROVIDE AN ACCESS DOOR IN CEILING. MINIMUM ACCESS DOOR SIZE OF 24"X24".

4. NO PIPING TO RUN OVER ELECTRICAL PANELS, VFD'S OR MCC'S. PROTECT EQUIPMENT WITH A 42" DEEP ZONE IN FRONT OF PANELS, VFD'S, AND MCC'S.

5. SLEEVE PIPING THRU WALLS/FOUNDATIONS WHERE REQUIRED.

6. INSTALL PIPING SO THAT ALL VALVES, STRAINERS, UNIONS, TRAPS, FLANGES, AND OTHER APPURTENANCES REQUIRING ACCESS ARE ACCESSIBLE.

7. ALL VALVES SHALL BE INSTALLED SO THAT VALVE REMAINS IN SERVICE WHEN EQUIPMENT OR PIPING ON EQUIPMENT SIDE OF VALVE IS REMOVED.

8. PROVIDE AN AIR VENT AT THE HIGH POINT OF EACH DROP IN THE HEATING AND CHILLED WATER PIPING SYSTEM.

9. INSTALL ALL PIPING WITHOUT FORCING OR SPRINGING.

10. ALL VALVES SHALL BE ADJUSTED FOR SMOOTH AND EASY OPERATION.

11. PROVIDE ISOLATION VALVES AT EACH EXIT/ENTRANCE INTO SHAFT WHETHER OR NOT SHOWN.

12. ALL PIPE AND DUCT SIZES SHALL REMAIN THE SAME SIZE SHOWN, IN THE DIRECTION OF FLOW, UNTIL SHOWN OTHERWISE.

13. COORDINATE LOCATION OF THERMOSTAT WITH ARCHITECTURAL FURNISHING PLANS. MOUNT THERMOSTAT AT HEIGHT AS SPECIFIED ON ARCHITECTURAL.

14. CONTRACTOR TO PROVIDE VALVE IDENTIFICATION AND LOCATION ON ALL CEILING TILES WHERE VALVES ARE LOCATED.

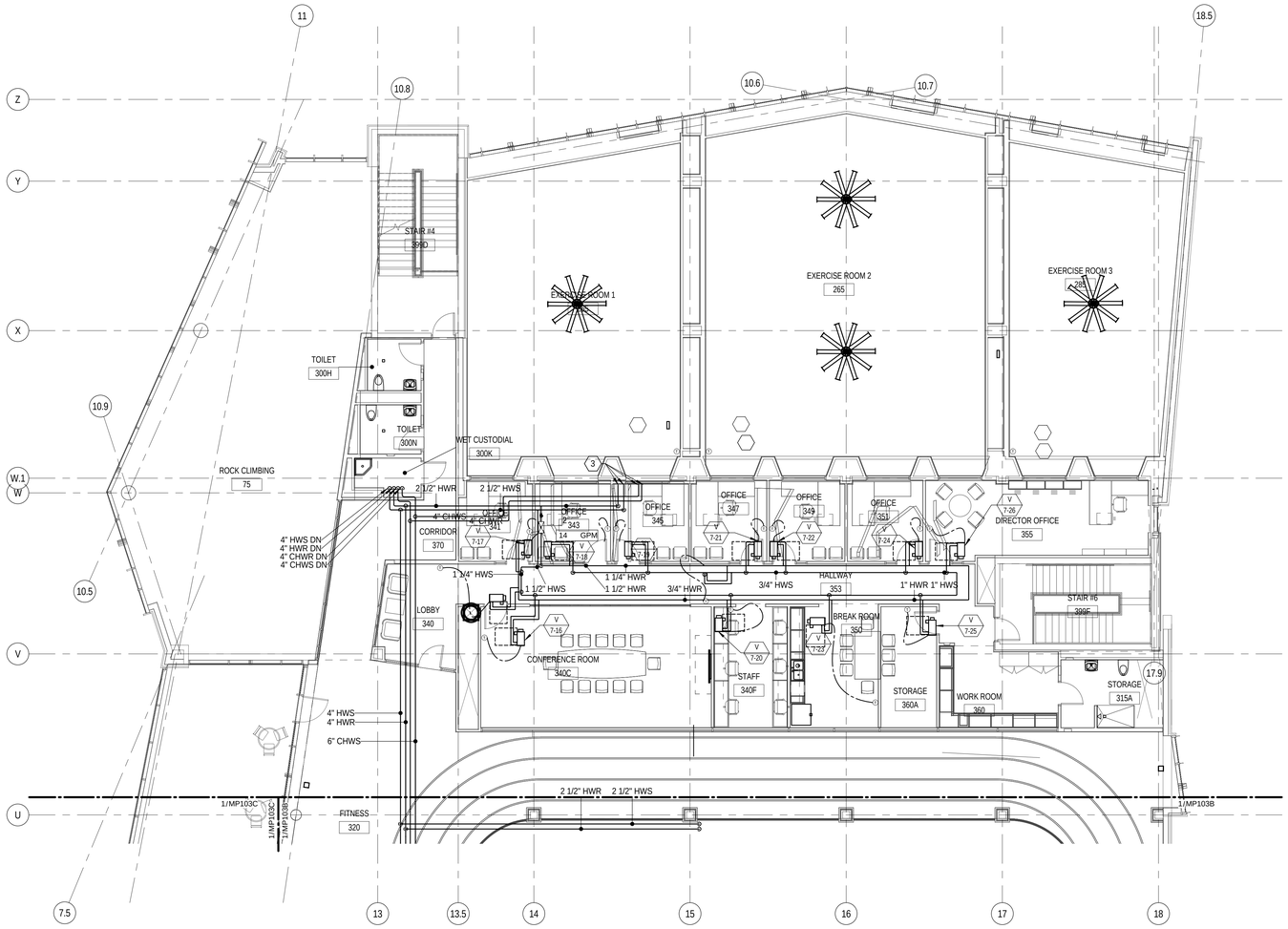


## THIRD LEVEL MECHANICAL PIPING PLAN A

0 4' - 0" 8' - 0" 16' - 0"

SCALE: 1/8" = 1'-0"

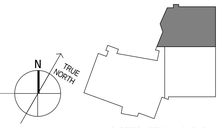


KEYPLAN


MHTN ARCHITECTS

**MHTN Architects, Inc.**
420 East South Temple
Suite 100
Salt Lake City, Utah 84111
Telephone (801) 595-6700
Telefax (801) 595-6717
www.mhtn.com

**Hastings+Chivetta**
ARCHITECTURE • PLANNING • ENGINEERING
622 Emerson, Suite 200
St. Louis, MO 63141
Tel. 314.863.5717
Fax. 314.863.2823
www.hastingschivetta.com

VAN BOERUM & FRANK ASSOCIATES, INC.
CONSULTING ENGINEERS
Salt Lake City • Logan • St. George • Tempe
330 South 300 East 801.530.3148 T
Salt lake City, UT 84111 801.530.3150 F


# UNIVERSITY OF UTAH
# STUDENT LIFE CENTER
1836 E. BALLIF ROAD
SALT LAKE CITY, UTAH 84112


©2007 MHTN ARCHITECTS, INC.
Drawings, written material, and design concepts shall not be used or reproduced in whole or part in any form or format without prior written consent of MHTN Architects, Inc. Do not scale drawings. Use given dimensions only. If not shown, verify correct dimensions with the Architect. Contractor shall check and verify all dimensions and conditions at job site.


SEAL

MHTN PROJECT NO.

DRAWN BY: CHECKED BY:

ISSUED:

| NO. | DATE | DESCRIPTION |
|---|---|---|

CONTRACTOR TO VERIFY DRAWINGS IN FIELD USE REFLECT LAST REVISION DATE.

| NO. | DATE | DESCRIPTION |
|---|---|---|

SHEET NAME

PARTIAL MECHANICAL PIPING PLAN

BID DOCUMENTS

MAY 15, 2013

SHEET NUMBER

MP103A

D:_BimLocal\Mechanical_Central_JRobker.rvt
5/14/2013 12:54:39 PM

## SHEET KEYNOTES

1 CHWS/CHWR/GHWS/GHWR UP TO AH-6.

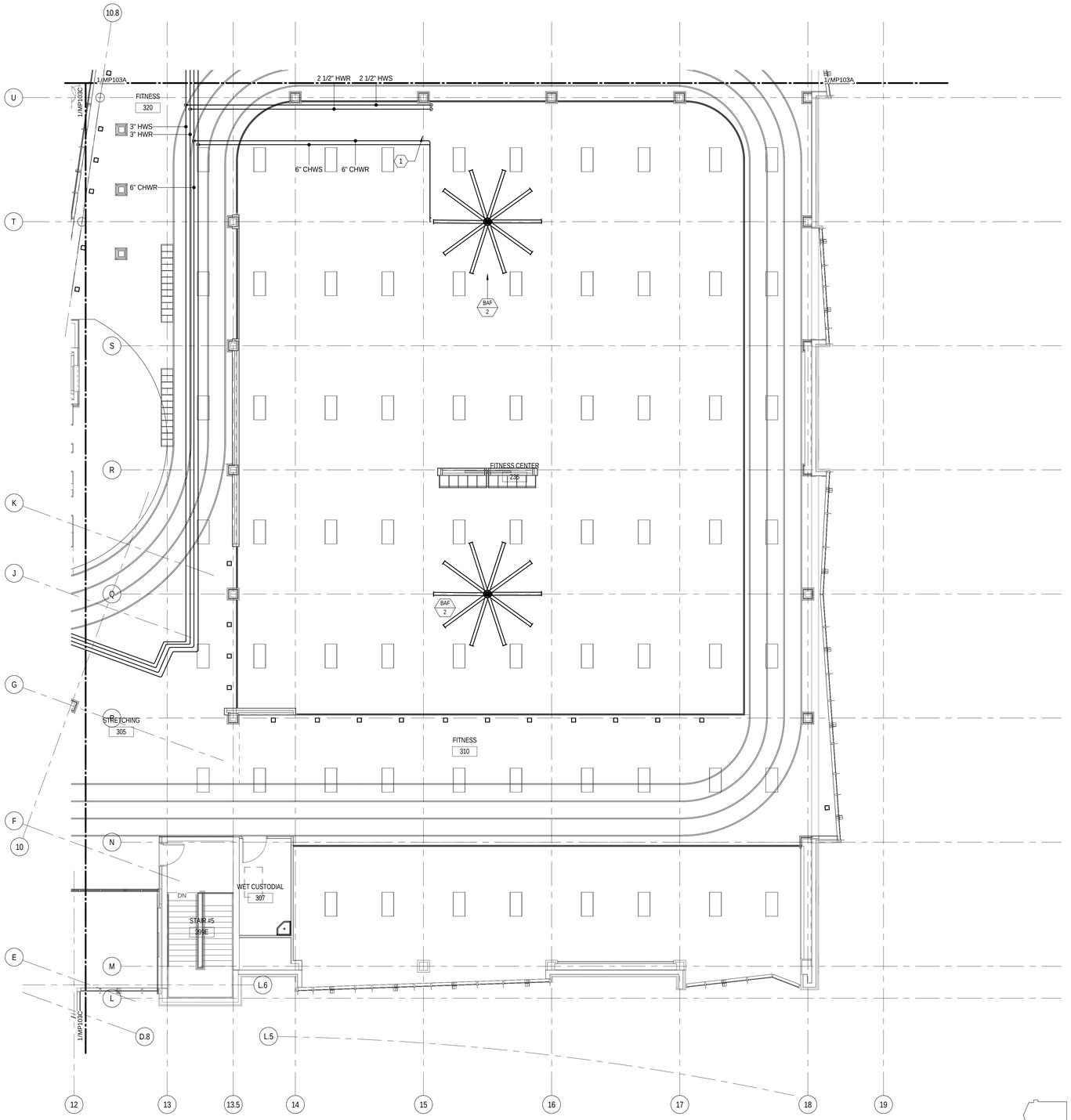


THIRD LEVEL MECHANICAL PIPING PLAN B

0 4' - 0" 8' - 0" 16' - 0"

SCALE: 1/8" = 1'-0"

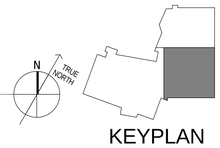


KEYPLAN


MHTN ARCHITECTS

**MHTN Architects, Inc.**
420 East South Temple
Suite 100
Salt Lake City, Utah 84111
Telephone (801) 595-6700
Telefax (801) 595-6717
www.mhtn.com

**Hastings+Chivetta**
ARCHITECTURE • PLANNING • ENGINEERING
622 Emerson, Suite 200
St. Louis, MO 63141
Tel. 314.863.5717
Fax. 314.863.2823
www.hastingschivetta.com

VAN BOERUM & FRANK ASSOCIATES, INC.
CONSULTING ENGINEERS
Salt Lake City • Logan • St. George • Tempe
330 South 300 East 801.530.3148 T
Salt lake City, UT 84111 801.530.3150 F


# UNIVERSITY OF UTAH
## STUDENT LIFE CENTER
1836 E. BALLIF ROAD
SALT LAKE CITY, UTAH 84112


©2007 MHTN ARCHITECTS, INC.

Drawings, written material, and design concepts shall not be used or reproduced in whole or part in any form or format without prior written consent of MHTN Architects, Inc. Do not scale drawings. Use given dimensions only. If not shown, verify correct dimensions with the Architect. Contractor shall check and verify all dimensions and conditions at job site.


SEAL

MHTN PROJECT NO.

DRAWN BY: CHECKED BY:

ISSUED:

| NO. | DATE | DESCRIPTION |
|---|---|---|

CONTRACTOR TO VERIFY DRAWINGS IN FIELD USE REFLECT LAST REVISION DATE.

| NO. | DATE | DESCRIPTION |
|---|---|---|

SHEET NAME

PARTIAL MECHANICAL PIPING PLAN

BID DOCUMENTS

MAY 15, 2013

SHEET NUMBER

MP103B

D:_BimLocal\Mechanical_Central_JRobker.rvt
5/14/2013 12:54:43 PM

## SHEET KEYNOTES

1. CHWS/CHWR/GHWS/GHWR UP TO AH-5.
2. 1/MP103A PATCH TOUC TO CONNECT TO THERMOSTAT SHOWN ON LEVEL 2.

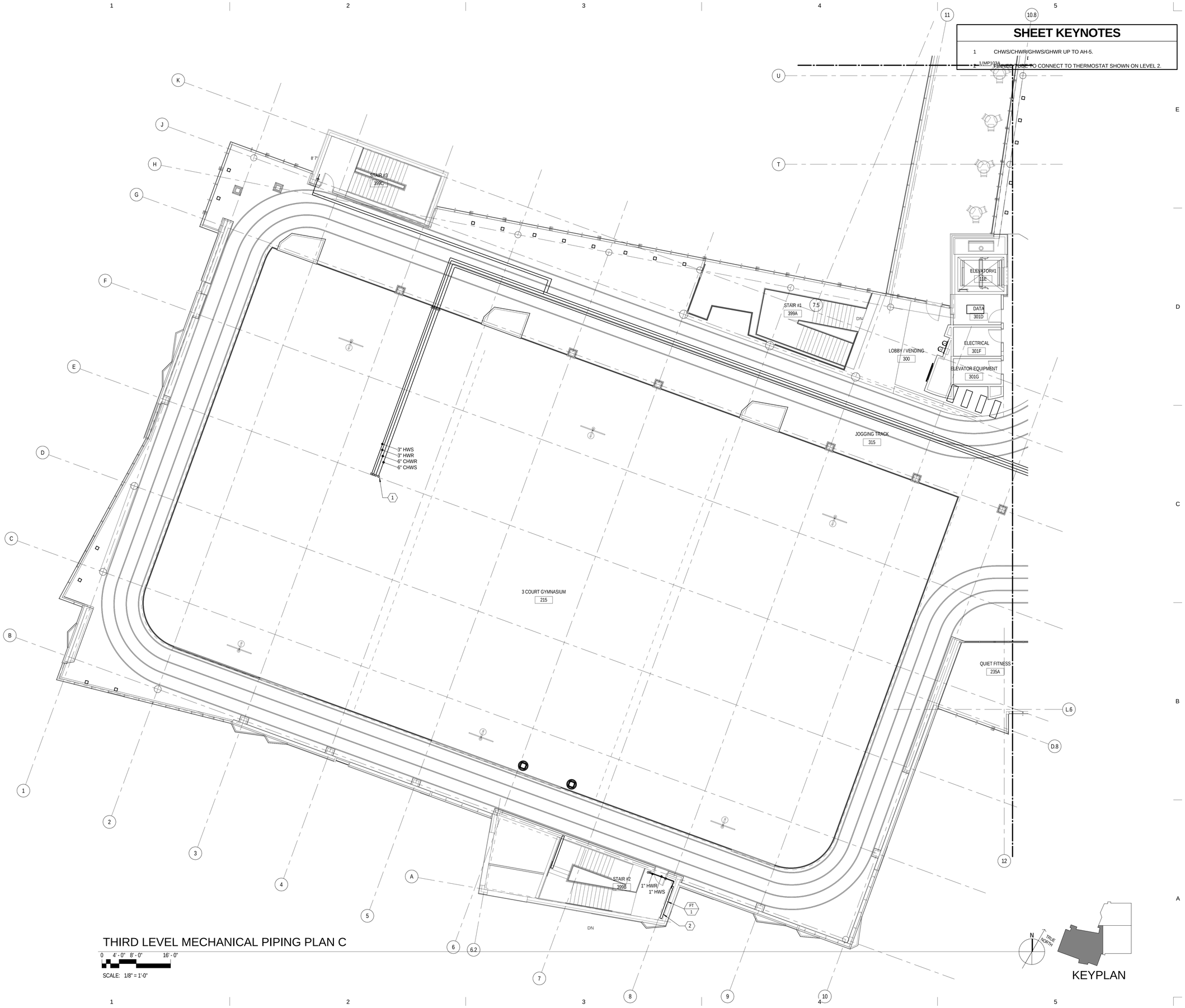


# THIRD LEVEL MECHANICAL PIPING PLAN C

0 4' - 0" 8' - 0" 16' - 0"

SCALE: 1/8" = 1'-0"

KEYPLAN


MHTN ARCHITECTS

**MHTN Architects, Inc.**
420 East South Temple
Suite 100
Salt Lake City, Utah 84111
Telephone (801) 595-6700
Telefax (801) 595-6717
www.mhtn.com

**Hastings+Chivetta**
ARCHITECTURE • PLANNING • ENGINEERING
622 Emerson, Suite 200
St. Louis, MO 63141
Tel. 314.863.5717
Fax. 314.863.2823
www.hastingschivetta.com

VAN BOERUM & FRANK ASSOCIATES, INC.
CONSULTING ENGINEERS
Salt Lake City • Logan • St. George • Tempe
330 South 300 East 801.530.3148 T
Salt lake City, UT 84111 801.530.3150 F


# UNIVERSITY OF UTAH
## STUDENT LIFE CENTER
1836 E. BALLIF ROAD
SALT LAKE CITY, UTAH 84112


©2007 MHTN ARCHITECTS, INC.
Drawings, written material, and design concepts shall not be used or reproduced in whole or part in any form or format without prior written consent of MHTN Architects, Inc. Do not scale drawings. Use given dimensions only. If not shown, verify correct dimensions with the Architect. Contractor shall check and verify all dimensions and conditions at job site.


SEAL

MHTN PROJECT NO.

DRAWN BY: CHECKED BY:

ISSUED:

| NO. | DATE | DESCRIPTION |
|---|---|---|
| | | |

CONTRACTOR TO VERIFY DRAWINGS IN FIELD USE REFLECT LAST REVISION DATE.

| NO. | DATE | DESCRIPTION |
|---|---|---|
| | | |

SHEET NAME

PARTIAL MECHANICAL PIPING PLAN
BID DOCUMENTS
MAY 15, 2013

SHEET NUMBER

MP103C

D:__BimLocal\Mechanical_Central_JRobker.rvt
5/14/2013 12:54:47 PM

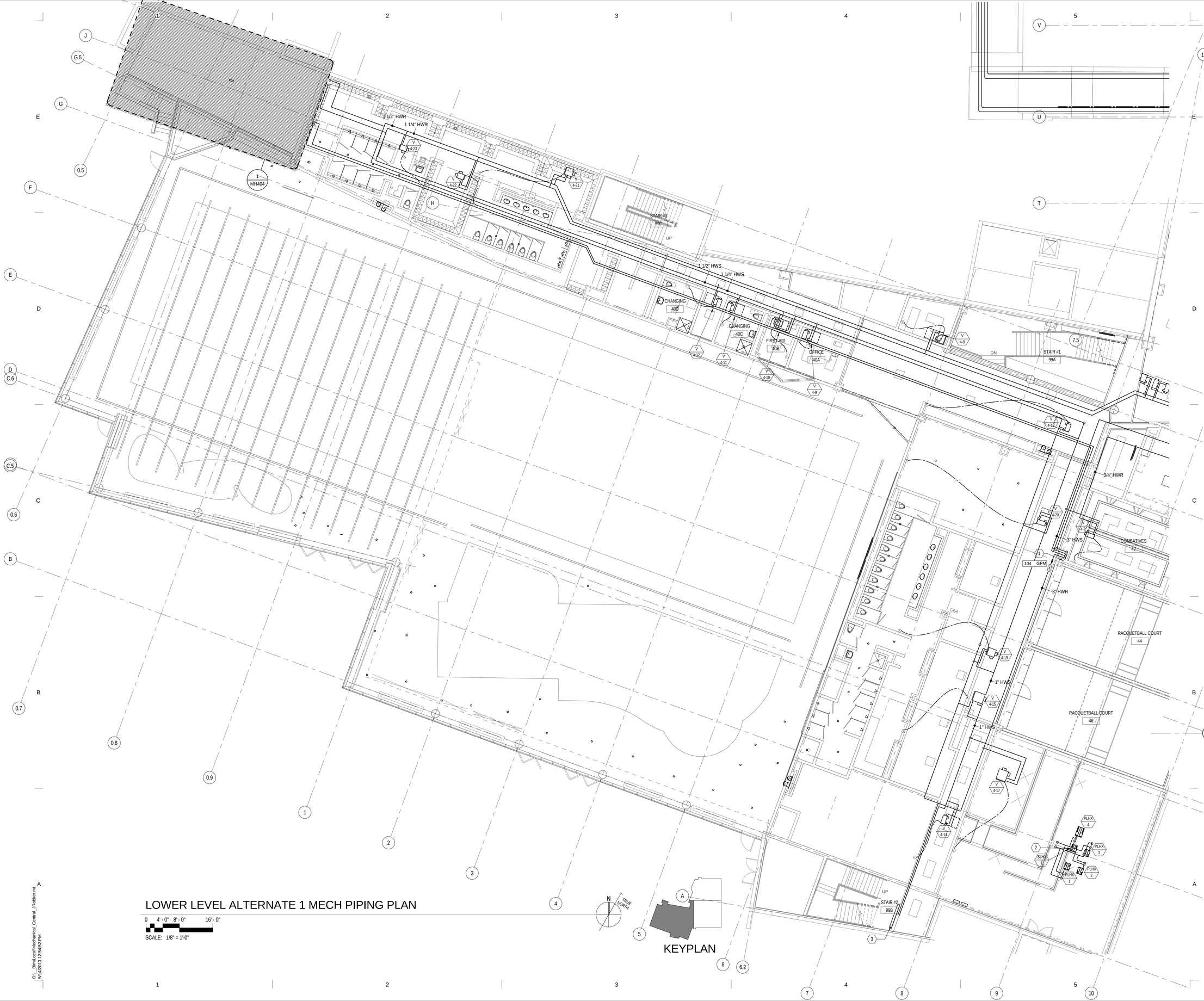


MHTN
ARCHITECTS
**MHTN Architects, Inc.**
420 East South Temple
Suite 100
Salt Lake City, Utah 84111
Telephone (801) 595-6700
Telefax (801) 595-6717
www.mhtn.com

**Hastings+Chivetta**
ARCHITECTURE • PLANNING • ENGINEERING
622 Emerson, Suite 200
St. Louis, MO 63141
Tel. 314.863.5717
Fax. 314.863.2823
www.hastingschivetta.com

VAN BOERUM & FRANK ASSOCIATES, INC.
CONSULTING ENGINEERS
Salt Lake City • Logan • St. George • Tempe
330 South 300 East 801.530.3148 T
Salt lake City, UT 84111 801.530.3150 F
VBF# Project 1002

# UNIVERSITY OF UTAH

## STUDENT LIFE CENTER

1836 E. BALLIF ROAD
SALT LAKE CITY, UTAH 84112

©2007 MHTN ARCHITECTS, INC.
Drawings, written material, and design concepts shall not be used or reproduced in whole or part in any form or format without prior written consent of MHTN Architects, Inc. Do not scale drawings. Use given dimensions only. If not shown, verify correct dimensions with the Architect. Contractor shall check and verify all dimensions and conditions at job site.

SEAL

MHTN PROJECT NO.

DRAWN BY: CHECKED BY:

| NO. | DATE | DESCRIPTION |
|---|---|---|
| | | |

CONTRACTOR TO VERIFY DRAWINGS IN FIELD USE REFLECT LAST REVISION DATE.

| NO. | DATE | DESCRIPTION |
|---|---|---|
| | | |

SHEET NAME

LOWER LEVEL ALTERNATE 1 MECH PIPE PLAN
BID DOCUMENTS
MAY 15, 2013

SHEET NUMBER

MP105

## SHEET KEYNOTES

| | |
|---|---|
| 1 | HWS/HWR PIPING DOWN TO LOWER LEVEL. |
| 2 | PROVIDE 3-WAY VALVE TO HOT WATER COIL. |
| 3 | DROP GHWS/GHWR PIPES BELOW GRADE AND TO BRIDGE COLUMN. |
| 4 | PIPING TO RUN UP COLUMN. |

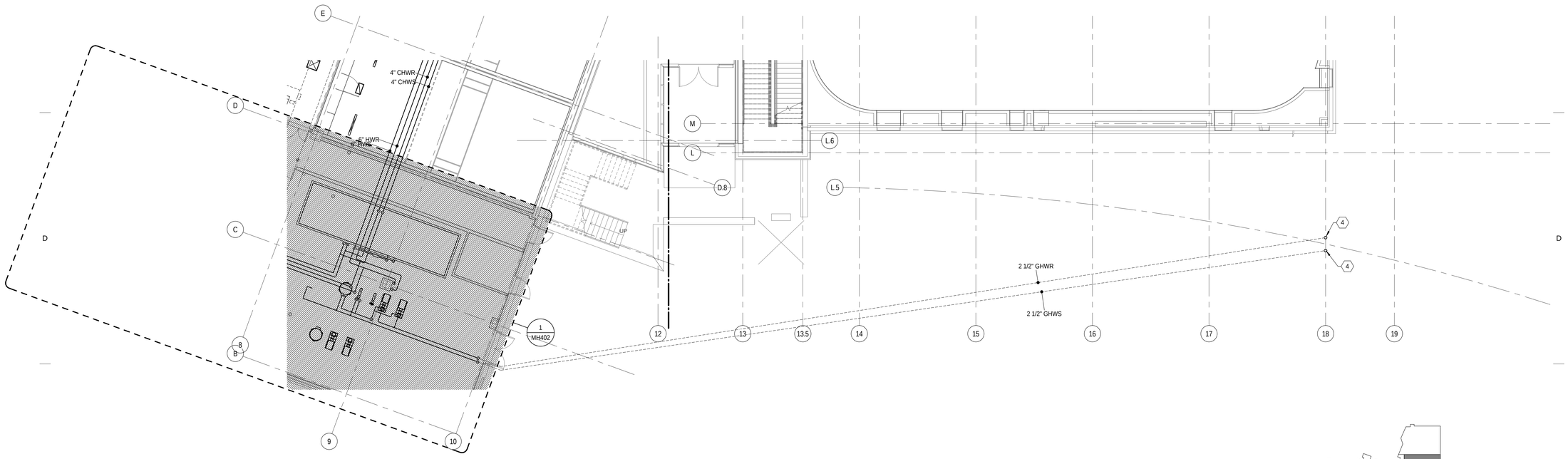


FIRST LEVEL ALTERNATE 3 MECHANICAL PIPING PLAN

0 4' - 0" 8' - 0" 16' - 0"

SCALE: 1/8" = 1'-0"

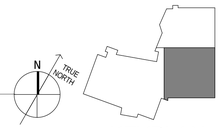


KEYPLAN

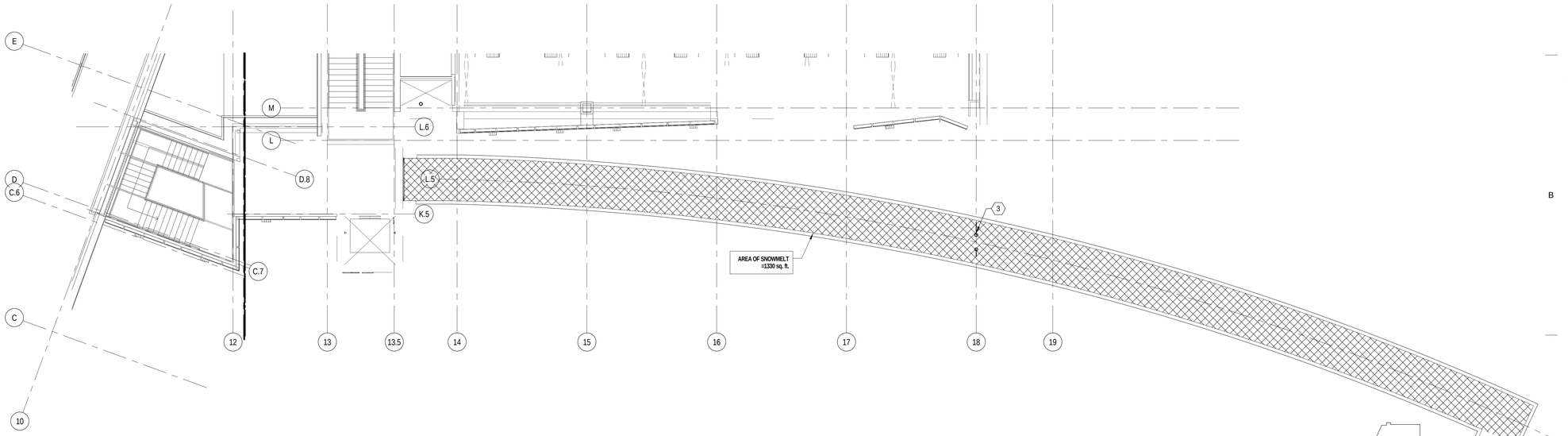


THIRD LEVEL ALTERNATE 3 MECH PIPING PLAN

0 4' - 0" 8' - 0" 16' - 0"

SCALE: 1/8" = 1'-0"

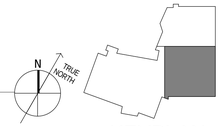


KEYPLAN


MHTN
ARCHITECTS
**MHTN Architects, Inc.**
420 East South Temple
Suite 100
Salt Lake City, Utah 84111
Telephone (801) 595-6700
Telefax (801) 595-6717
www.mhtn.com

**Hastings+Chivetta**
ARCHITECTURE • PLANNING • ENGINEERING
622 Emerson, Suite 200
St. Louis, MO 63141
Tel. 314.863.5717
Fax. 314.863.2823
www.hastingschivetta.com

VAN BOERUM & FRANK ASSOCIATES, INC.
CONSULTING ENGINEERS
Salt Lake City • Logan • St. George • Tempe
330 South 300 East 801.530.3148 T
Salt lake City, UT 84111 801.530.3150 F


# UNIVERSITY OF UTAH
## STUDENT LIFE CENTER
1836 E. BALLIF ROAD
SALT LAKE CITY, UTAH 84112


©2007 MHTN ARCHITECTS, INC.
Drawings, written material, and design concepts shall not be used or reproduced in whole or part in any form or format without prior written consent of MHTN Architects, Inc. Do not scale drawings. Use given dimensions only. If not shown, verify correct dimensions with the Architect. Contractor shall check and verify all dimensions and conditions at job site.


SEAL

MHTN PROJECT NO.

DRAWN BY: CHECKED BY:

ISSUED:

| NO. | DATE | DESCRIPTION |
|---|---|---|
| | | |

CONTRACTOR TO VERIFY DRAWINGS IN FIELD USE REFLECT LAST REVISION DATE.

| NO. | DATE | DESCRIPTION |
|---|---|---|
| | | |

SHEET NAME

ALTERNATE 3 MECHANICAL PIPING PLANS
BID DOCUMENTS
MAY 15, 2013

SHEET NUMBER

MP106

D:__Bim\Local\Mechanical_Central_JRobker.rvt
5/14/2013 12:54:59 PM

## SHEET KEYNOTES

| | |
|---|---|
| 1 | COORDINATE WITH LOCAL UTILITY TO PROVIDE NEW GAS METER. PROVIDE CAPACITY FOR 200,000 BTUH. |
| 2 | SEE CIVIL SITE UTILITY PLAN FOR CONTINUATION. |
| 3 | WATER HEADER. |
| 4 | COORDINATE WITH LOCAL UTILITY TO PROVIDE GAS METER. PROVIDE FOR 200 CFH AT 2 PSIG. COORDINATE WITH GENERAL CONTRACTOR TO PROVIDE 20'-0" X 5'-0" CONCRETE PAD WITH A MINIMUM THICKNESS OF 6 INCHES. |
| 5 | NATURAL GAS UP TO FIRST LEVEL. |
| 6 | DROP AND CONNECT 2" PIPE TO WATER SOFTENER. |
| 7 | 3" VENT STACK UP. |
| 8 | DCW/DHW/DHWR UP TO FIRST FLOOR. |
| 9 | 4" WASTE STACK UP. |
| 10 | 24" X 24" X 12" HIGH CONCRETE SUMP. |
| 11 | ROUGH-IN AND CONNECT TO OWNER PROVIDED EQUIPMENT. |
| 12 | EVAPORATIVE SECTION AND COILS TO DRAIN TO FLOOR SINK. |
| 13 | CONNECT TO FOUNDATION DRAIN. |

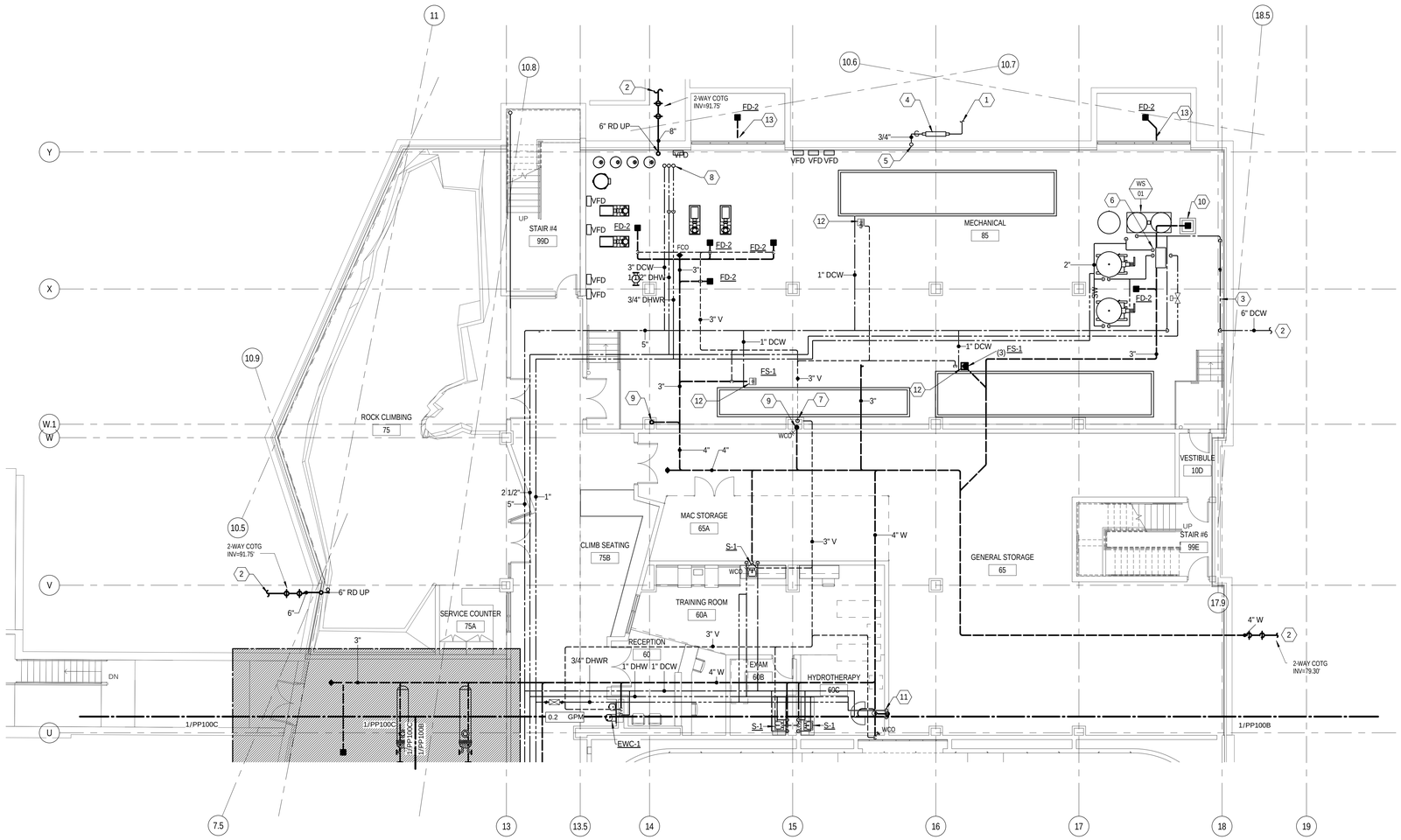


# LOWER LEVEL PLUMBING PLAN A

0 4' - 0" 8' - 0" 16' - 0"

SCALE: 1/8" = 1'-0"

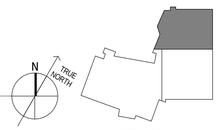


KEYPLAN


MHTN ARCHITECTS

**MHTN Architects, Inc.**
420 East South Temple
Suite 100
Salt Lake City, Utah 84111
Telephone (801) 595-6700
Telefax (801) 595-6717
www.mhtn.com

**Hastings+Chivetta**
ARCHITECTURE • PLANNING • ENGINEERING
622 Emerson, Suite 200
St. Louis, MO 63141
Tel. 314.863.5717
Fax. 314.863.2823
www.hastingschivetta.com

VAN BOERUM & FRANK ASSOCIATES, INC.
CONSULTING ENGINEERS
Salt Lake City • Logan • St. George • Tempe
330 South 300 East 801.530.3148 T
Salt lake City, UT 84111 801.530.3150 F


# UNIVERSITY OF UTAH
## STUDENT LIFE CENTER
1836 E. BALLIF ROAD
SALT LAKE CITY, UTAH 84112


©2007 MHTN ARCHITECTS, INC.
Drawings, written material, and design concepts shall not be used or reproduced in whole or part in any form or format without prior written consent of MHTN Architects, Inc. Do not scale drawings. Use given dimensions only. If not shown, verify correct dimensions with the Architect. Contractor shall check and verify all dimensions and conditions at job site.


SEAL

MHTN PROJECT NO.

DRAWN BY: CHECKED BY:

ISSUED:

| NO. | DATE | DESCRIPTION |
|---|---|---|

CONTRACTOR TO VERIFY DRAWINGS IN FIELD USE REFLECT LAST REVISION DATE.

| NO. | DATE | DESCRIPTION |
|---|---|---|

SHEET NAME

PARTIAL PLUMBING PLAN

BID DOCUMENTS
MAY 15, 2013

SHEET NUMBER

PP100A

D:__Bim\Local\Mechanical_Central_JRobker.rvt
5/14/2013 12:55:03 PM

## SHEET KEYNOTES

| | |
|---|---|
| 1 | SEE CIVIL SITE UTILITY PLAN FOR CONTINUATION. |
| 2 | 3" WASTE STACK UP TO FIRST LEVEL. |
| 3 | CONDENSATE LINE TO DROP DOWN WALL AND DRAIN TO FLOOR SINK. |

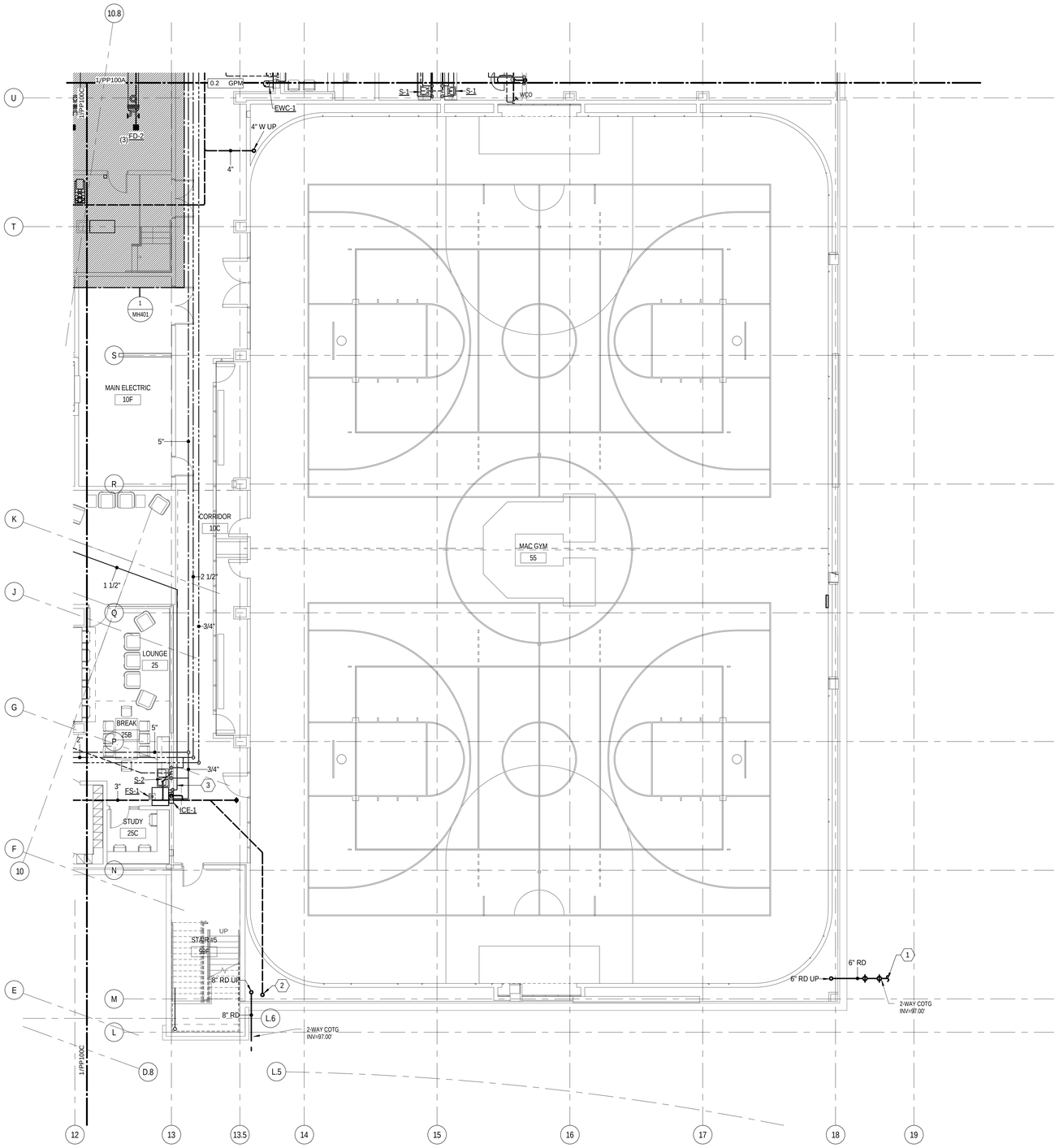


## LOWER LEVEL PLUMBING PLAN B

0 4' - 0" 8' - 0" 16' - 0"

SCALE: 1/8" = 1'-0"

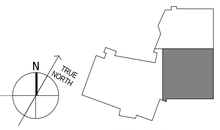


KEYPLAN


MHTN
ARCHITECTS

**MHTN Architects, Inc.**
420 East South Temple
Suite 100
Salt Lake City, Utah 84111
Telephone (801) 595-6700
Telefax (801) 595-6717
www.mhtn.com

**Hastings+Chivetta**
ARCHITECTURE • PLANNING • ENGINEERING
622 Emerson, Suite 200
St. Louis, MO 63141
Tel. 314.863.5717
Fax. 314.863.2823
www.hastingschivetta.com

VAN BOERUM & FRANK ASSOCIATES, INC.
CONSULTING ENGINEERS
Salt Lake City • Logan • St. George • Tempe
330 South 300 East 801.530.3148 T
Salt lake City, UT 84111 801.530.3150 F


# UNIVERSITY OF UTAH
## STUDENT LIFE CENTER
1836 E. BALLIF ROAD
SALT LAKE CITY, UTAH 84112


©2007 MHTN ARCHITECTS, INC.
Drawings, written material, and design concepts shall not be used or reproduced in whole or part in any form or format without prior written consent of MHTN Architects, Inc. Do not scale drawings. Use given dimensions only. Verify all dimensions and conditions before proceeding. Contractor shall check and verify all dimensions and conditions at job site.


SEAL

MHTN PROJECT NO.

DRAWN BY: CHECKED BY:

ISSUED:

| NO. | DATE | DESCRIPTION |
|---|---|---|
| | | |

CONTRACTOR TO VERIFY DRAWINGS IN FIELD USE REFLECT LAST REVISION DATE:

| NO. | DATE | DESCRIPTION |
|---|---|---|
| | | |

SHEET NAME

PARTIAL PLUMBING PLAN

BID DOCUMENTS
MAY 15, 2013

SHEET NUMBER

PP100B

D:_Bim\Local\Mechanical_Central_JRobker.rvt
5/14/2013 12:55:06 PM

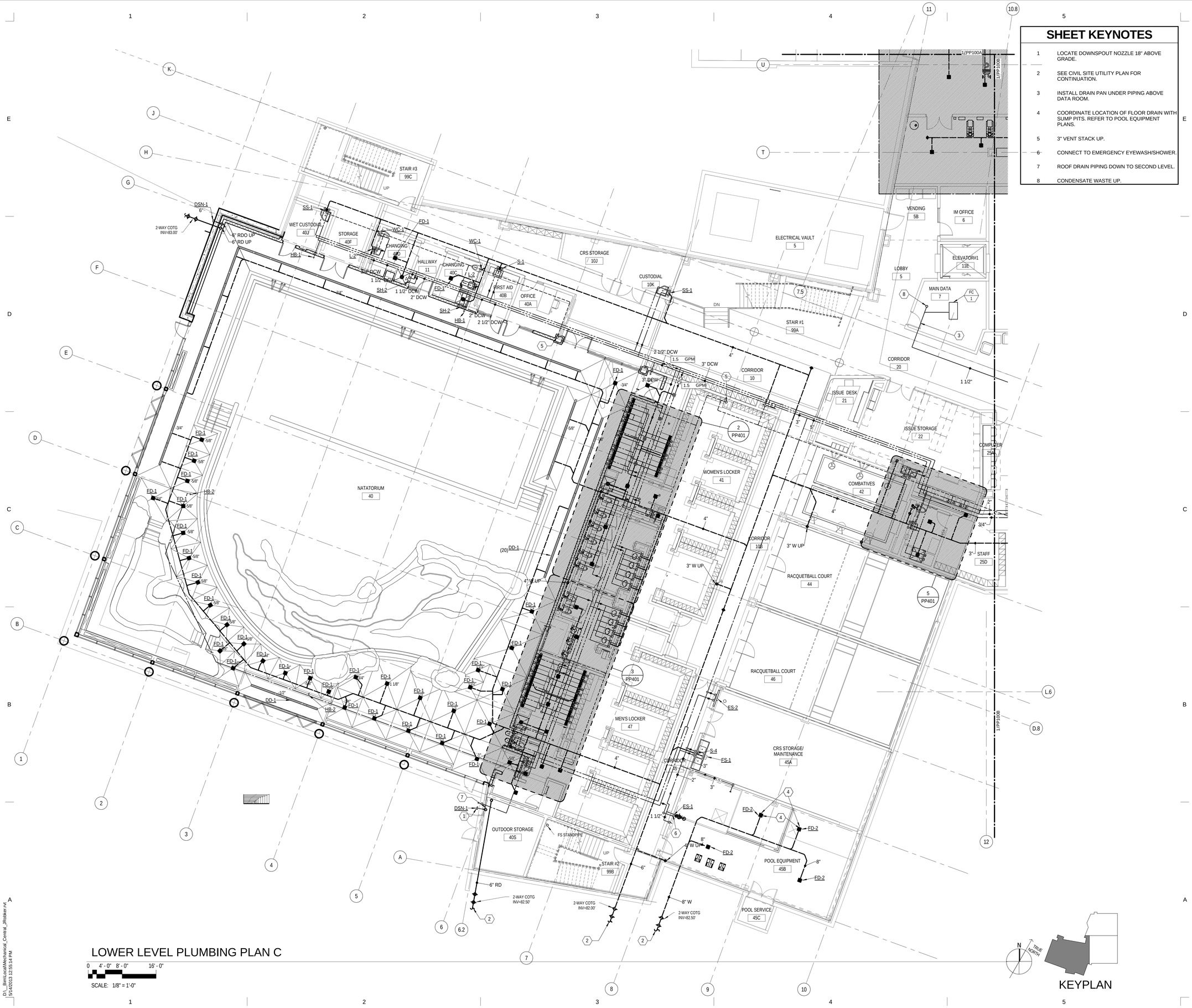


## LOWER LEVEL PLUMBING PLAN C

0 4' - 0" 8' - 0" 16' - 0"

SCALE: 1/8" = 1'-0"




KEYPLAN

## SHEET KEYNOTES

1. LOCATE DOWNSPOUT NOZZLE 18" ABOVE GRADE.
2. SEE CIVIL SITE UTILITY PLAN FOR CONTINUATION.
3. INSTALL DRAIN PAN UNDER PIPING ABOVE DATA ROOM.
4. COORDINATE LOCATION OF FLOOR DRAIN WITH SUMP PITS. REFER TO POOL EQUIPMENT PLANS.
5. 3" VENT STACK UP.
6. CONNECT TO EMERGENCY EYEWASH/SHOWER.
7. ROOF DRAIN PIPING DOWN TO SECOND LEVEL.
8. CONDENSATE WASTE UP.


MHTN ARCHITECTS

**MHTN Architects, Inc.**
420 East South Temple
Suite 100
Salt Lake City, Utah 84111
Telephone (801) 595-6700
Telefax (801) 595-6717
www.mhtn.com

**Hastings+Chivetta**
ARCHITECTURE • PLANNING • ENGINEERING
622 Emerson, Suite 200
St. Louis, MO 63141
Tel. 314.863.5717
Fax. 314.863.2823
www.hastingschivetta.com

VAN BOERUM & FRANK ASSOCIATES, INC.
CONSULTING ENGINEERS
Salt Lake City • Logan • St. George • Tempe
330 South 300 East 801.530.3148 T
Salt lake City, UT 84111 801.530.3150 F


# UNIVERSITY OF UTAH
## STUDENT LIFE CENTER
1836 E. BALLIF ROAD
SALT LAKE CITY, UTAH 84112


©2007 MHTN ARCHITECTS, INC.
Drawings, written material, and design concepts shall not be used or reproduced in whole or part in any form or format without prior written consent of MHTN Architects, Inc. Do not scale drawings. Use given dimensions only. If not shown, verify correct dimensions with the Architect. Contractor shall check and verify all dimensions and conditions at job site.


SEAL

MHTN PROJECT NO.

DRAWN BY: CHECKED BY:

ISSUED:

| NO. | DATE | DESCRIPTION |
|---|---|---|
| | | |

CONTRACTOR TO VERIFY DRAWINGS IN FIELD USE REFLECT LAST REVISION DATE.

| NO. | DATE | DESCRIPTION |
|---|---|---|
| | | |

SHEET NAME
PARTIAL PLUMBING PLAN

BID DOCUMENTS
MAY 15, 2013

SHEET NUMBER
PP100C

D:_Bim\Local\Mechanical_Central_jRotkeer.rvt
5/14/2013 12:55:14 PM

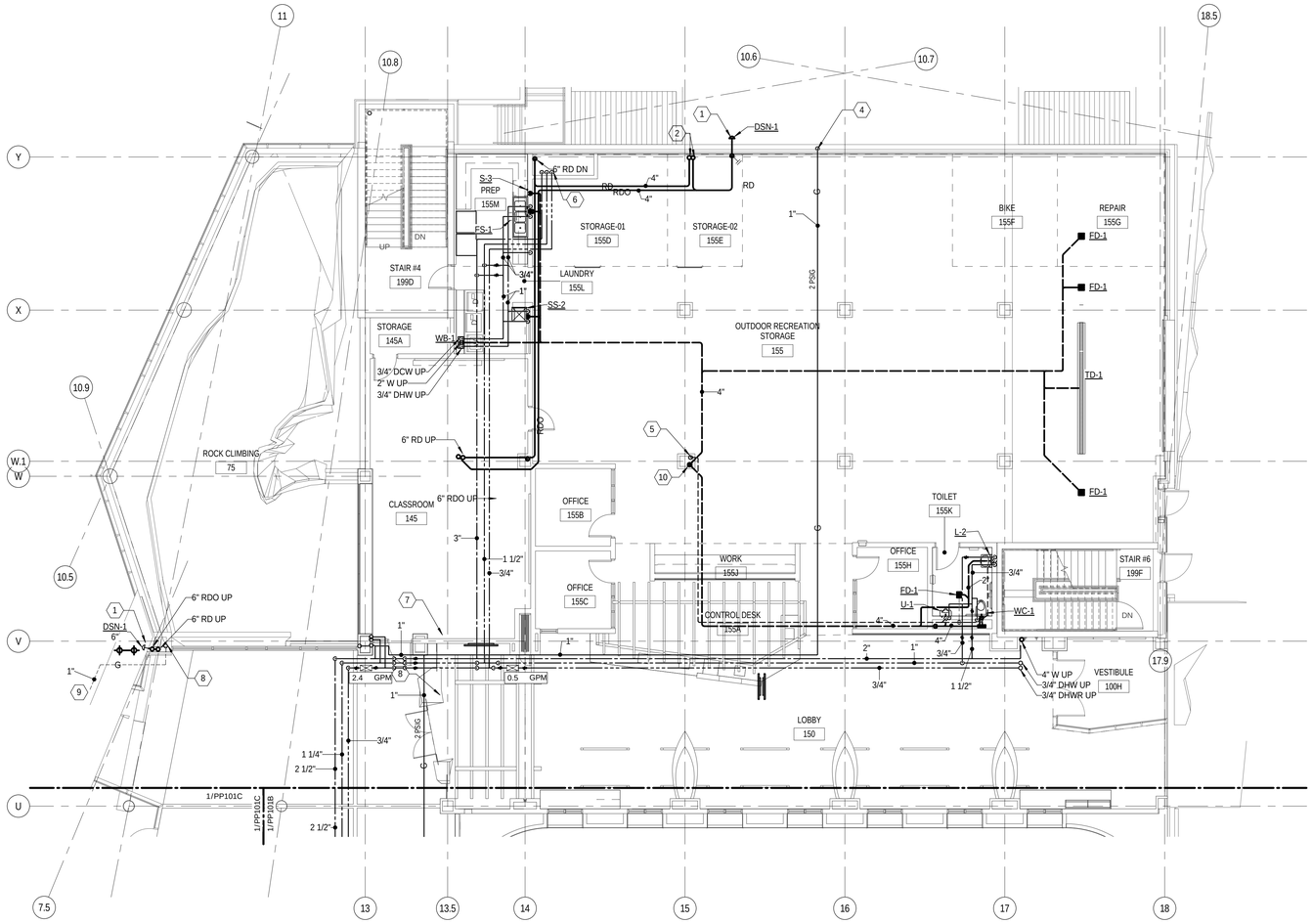


## FIRST LEVEL PLUMBING PLAN A

0 4' - 0" 8' - 0" 16' - 0"

SCALE: 1/8" = 1'-0"

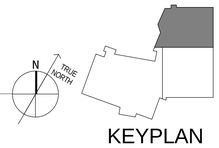


KEYPLAN

## SHEET KEYNOTES

| | |
|---|---|
| 1 | LOCATE DOWNSPOUT NOZZLE 18" ABOVE GRADE. |
| 2 | ROOF DRAIN PIPING UP TO SECOND LEVEL. |
| 3 | SEE CIVIL SITE UTILITY PLAN FOR CONTINUATION. |
| 4 | GAS PIPING TO GAS METER. |
| 5 | 4" VENT STACK UP AND DOWN. |
| 6 | DCW/DHW/DHWR DOWN TO LOWER LEVEL. |
| 7 | DCW/DHW/DHWR UP TO SECOND LEVEL. |
| 8 | ROUGH-IN AND CONNECT TO OWNER PROVIDED EQUIPMENT. |
| 9 | RISE DCW/DHW UP TO SS-1 ON LEVEL ABOVE. |
| 10 | 4" WASTE STACK UP AND DOWN. |

MHTN
ARCHITECTS
**MHTN Architects, Inc.**
420 East South Temple
Suite 100
Salt Lake City, Utah 84111
Telephone (801) 595-6700
Telefax (801) 595-6717
www.mhtn.com

**Hastings+Chivetta**
ARCHITECTURE • PLANNING • ENGINEERING
622 Emerson, Suite 200
St. Louis, MO 63141
Tel. 314.863.5717
Fax. 314.863.2823
www.hastingschivetta.com

VAN BOERUM & FRANK ASSOCIATES, INC.
CONSULTING ENGINEERS
Salt Lake City • Logan • St. George • Tempe
330 South 300 East 801.530.3148 T
Salt lake City, UT 84111 801.530.3150 F
VBF# Project 1002

# UNIVERSITY OF UTAH
## STUDENT LIFE CENTER
1836 E. BALLIF ROAD
SALT LAKE CITY, UTAH 84112

©2007 MHTN ARCHITECTS, INC.
Drawings, written material, and design concepts shall not be used or reproduced in whole or part in any form or format without prior written consent of MHTN Architects, Inc. Do not scale drawings. Use given dimensions only. If not shown, verify correct dimensions with the Architect. Contractor shall check and verify all dimensions and conditions at job site.

SEAL

MHTN PROJECT NO.

DRAWN BY: CHECKED BY:

ISSUED:

| NO. | DATE | DESCRIPTION |
|---|---|---|

CONTRACTOR TO VERIFY DRAWINGS IN FIELD USE REFLECT LAST REVISION DATE.

| NO. | DATE | DESCRIPTION |
|---|---|---|

SHEET NAME

PARTIAL PLUMBING PLAN

BID DOCUMENTS
MAY 15, 2013

SHEET NUMBER

PP101A

D:_Bim\Local\Mechanical_Central_JRobker.rvt
5/14/2013 12:55:18 PM

## SHEET KEYNOTES

| | |
|---|---|
| 1 | LOCATE DOWNSPOUT NOZZLE 18" ABOVE GRADE. |
| 2 | SEE CIVIL SITE UTILITY PLAN FOR CONTINUATION. |
| 3 | 4" WASTE STACK UP. |
| 4 | RISE DCW UP TO EWC-1 ON LEVEL ABOVE. |
| 5 | ROOF DRAIN INCLUDED IN BID ALTERNATE #3 AS WELL. PROVIDE HEAT TRACING ON PIPE. |

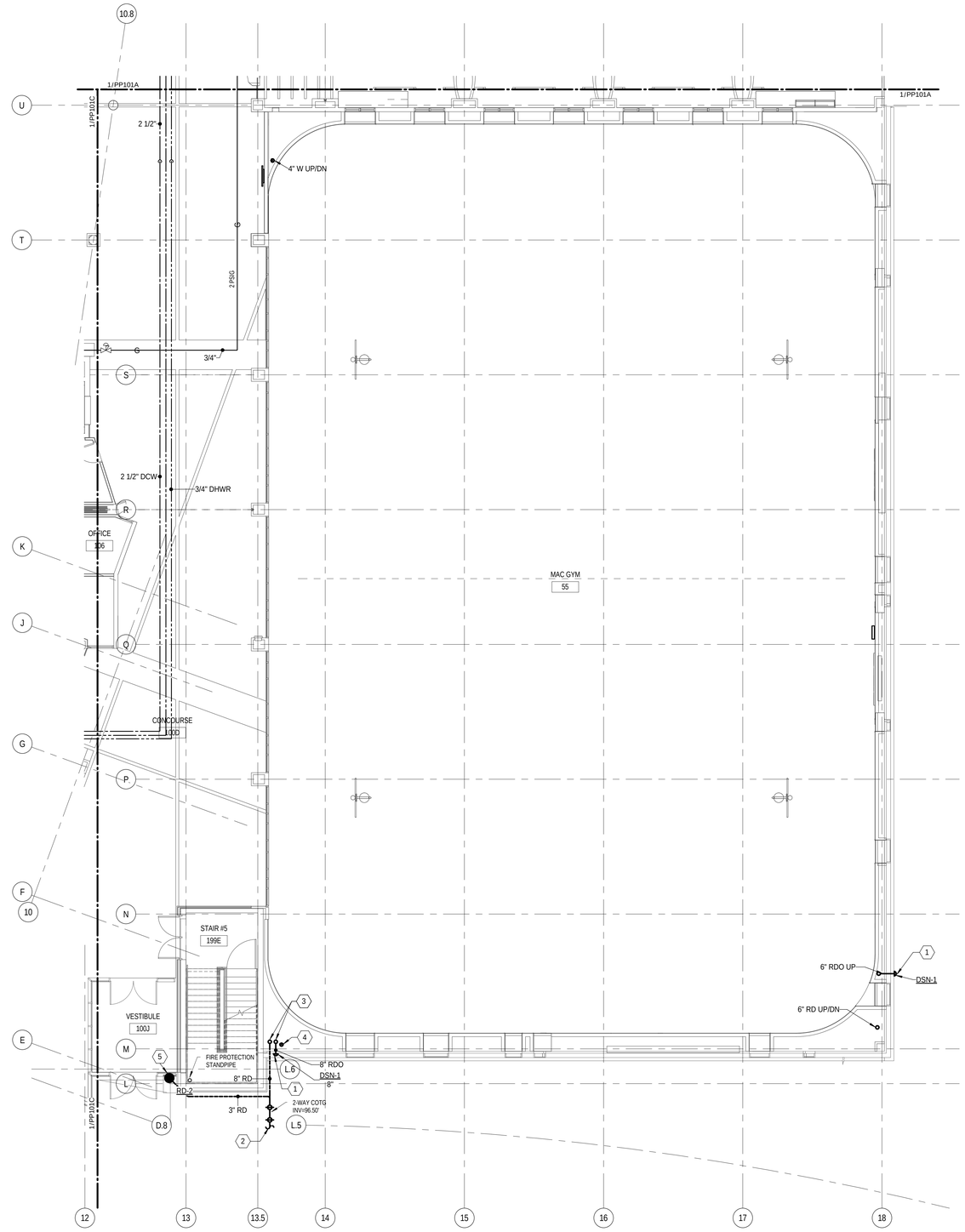


# FIRST LEVEL PLUMBING PLAN B

0 4' - 0" 8' - 0" 16' - 0"

SCALE: 1/8" = 1'-0"

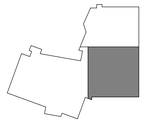

KEYPLAN

MHTN ARCHITECTS

**MHTN Architects, Inc.**
420 East South Temple
Suite 100
Salt Lake City, Utah 84111
Telephone (801) 595-6700
Telefax (801) 595-6717
www.mhtn.com

**Hastings+Chivetta**
ARCHITECTURE • PLANNING • ENGINEERING
622 Emerson, Suite 200
St. Louis, MO 63141
Tel. 314.863.5717
Fax. 314.863.2823
www.hastingschivetta.com

VAN BOERUM & FRANK ASSOCIATES, INC.
CONSULTING ENGINEERS
Salt Lake City • Logan • St. George • Tempe
330 South 300 East 801.530.3148 T
Salt lake City, UT 84111 801.530.3150 F


# UNIVERSITY OF UTAH

## STUDENT LIFE CENTER

1836 E. BALLIF ROAD
SALT LAKE CITY, UTAH 84112


©2007 MHTN ARCHITECTS, INC.
Drawings, written material, and design concepts shall not be used or reproduced in whole or part in any form or format without prior written consent of MHTN Architects, Inc. Do not scale drawings. Use given dimensions only. If not shown, verify correct dimensions with the Architect. Contractor shall check and verify all dimensions and conditions at job site.


SEAL

MHTN PROJECT NO.

DRAWN BY: CHECKED BY:

ISSUED:

| NO. | DATE | DESCRIPTION |
|---|---|---|
| | | |

CONTRACTOR TO VERIFY DRAWINGS IN FIELD USE REFLECT LAST REVISION DATE.

| NO. | DATE | DESCRIPTION |
|---|---|---|
| | | |

SHEET NAME

PARTIAL PLUMBING PLAN

BID DOCUMENTS
MAY 15, 2013

SHEET NUMBER

# PP101B

D:__Bim\Local\Mechanical_Central_JRobker.rvt
5/14/2013 12:55:22 PM

## FIRST LEVEL PLUMBING PLAN C

0 4' - 0" 8' - 0" 16' - 0"

SCALE: 1/8" = 1'-0"

## SHEET KEYNOTES

| | |
|---|---|
| 1 | 4" WASTE STACK UP. |
| 2 | ROOF DRAIN PIPING DOWN TO LOWER LEVEL. |
| 3 | CONNECT TO EMERGENCY EYEWASH/SHOWER. |
| 4 | PROVIDE 2 PSIG TO 7 INWG GAS PRESSURE REGULATOR WITH VENT LIMITING DEVICE. |
| 5 | RUN AND CONNECT TO FIREPLACE. |
| 6 | 2" WASTE UP AND DOWN. |
| 7 | PROVIDE VALVE BOX FOR GAS CONNECTION FLUSH MOUNTED TO GRADE. |
| 8 | RUN GAS PIPING BELOW GRADE. |
| 9 | ROOF DRAIN AND OVERFLOW PIPING CONTINUED FROM LEVEL BELOW. |
| 10 | ROUGH IN AND CONNECT TO KITCHEN EQUIPMENT. COORDINATE WITH KITCHEN EQUIPMENT DRAWINGS. |
| 11 | 1 1/2" CONDENSATE DOWN FROM FAN COIL UNITS, 1" UP. |


MHTN ARCHITECTS

**MHTN Architects, Inc.**
420 East South Temple
Suite 100
Salt Lake City, Utah 84111
Telephone (801) 595-6700
Telefax (801) 595-6717
www.mhtn.com

**Hastings+Chivetta**
ARCHITECTURE • PLANNING • ENGINEERING
622 Emerson, Suite 200
St. Louis, MO 63141
Tel. 314.863.5717
Fax. 314.863.2823
www.hastingschivetta.com

VAN BOERUM & FRANK ASSOCIATES, INC.
CONSULTING ENGINEERS
Salt Lake City • Logan • St. George • Tempe
330 South 300 East 801.530.3148 T
Salt lake City, UT 84111 801.530.3150 F


# UNIVERSITY OF UTAH

## STUDENT LIFE CENTER

1836 E. BALLIF ROAD
SALT LAKE CITY, UTAH 84112


©2007 MHTN ARCHITECTS, INC.
Drawings, written material, and design concepts shall not be used or reproduced in whole or part in any form or format without prior written consent of MHTN Architects, Inc. Do not scale drawings. Use given dimensions only. If not shown, verify correct dimensions with the Architect. Contractor shall check and verify all dimensions and conditions at job site.


SEAL

MHTN PROJECT NO.

DRAWN BY: CHECKED BY:

ISSUED:

| NO. | DATE | DESCRIPTION |
|---|---|---|

CONTRACTOR TO VERIFY DRAWINGS IN FIELD USE REFLECT LAST REVISION DATE.

| NO. | DATE | DESCRIPTION |
|---|---|---|

SHEET NAME

PARTIAL PLUMBING PLAN

BID DOCUMENTS
MAY 15, 2013

SHEET NUMBER

# PP101C

KEYPLAN

D:__Bim\Local\Mechanical_Central_JRobker.rvt
5/14/2013 12:55:28 PM

## SHEET KEYNOTES

| | |
|---|---|
| 1 | ROOF DRAIN PIPING UP TO THIRD LEVEL AND DOWN TO FIRST LEVEL. |
| 2 | VENT PIPING UP. |
| 3 | 4" WASTE STACK UP. |
| 4 | 4" WASTE DOWN. |

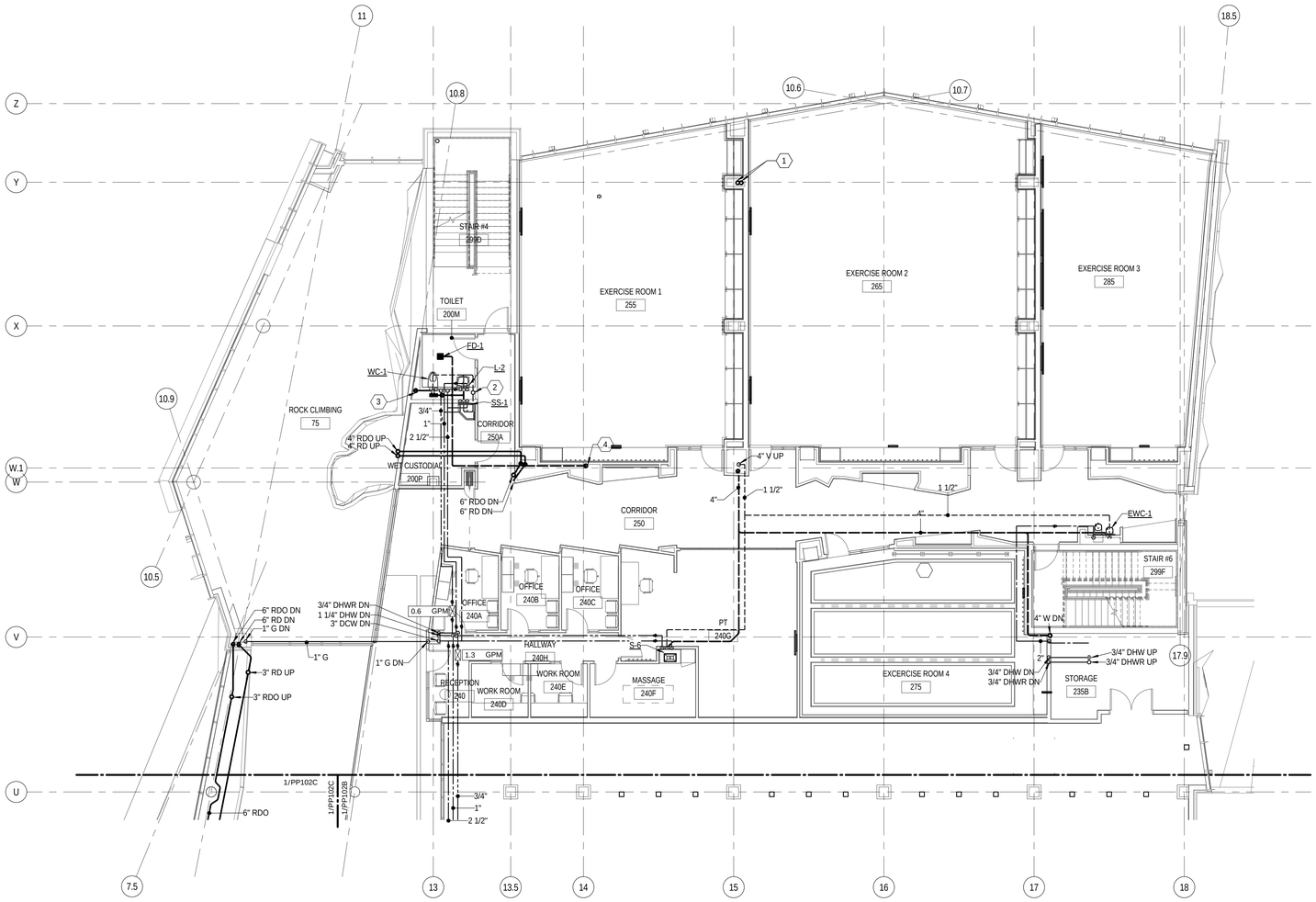


## SECOND LEVEL PLUMBING PLAN A

0 4' - 0" 8' - 0" 16' - 0"

SCALE: 1/8" = 1'-0"

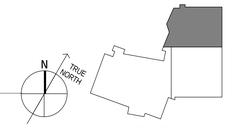


KEYPLAN


MHTN ARCHITECTS

**MHTN Architects, Inc.**
420 East South Temple
Suite 100
Salt Lake City, Utah 84111
Telephone (801) 595-6700
Telefax (801) 595-6717
www.mhtn.com

**Hastings+Chivetta**
ARCHITECTURE • PLANNING • ENGINEERING
622 Emerson, Suite 200
St. Louis, MO 63141
Tel. 314.863.5717
Fax. 314.863.2823
www.hastingschivetta.com

VAN BOERUM & FRANK ASSOCIATES, INC.
CONSULTING ENGINEERS
Salt Lake City • Logan • St. George • Tempe
330 South 300 East 801.530.3148 T
Salt lake City, UT 84111 801.530.3150 F


# UNIVERSITY OF UTAH
## STUDENT LIFE CENTER
1836 E. BALLIF ROAD
SALT LAKE CITY, UTAH 84112


©2007 MHTN ARCHITECTS, INC.
Drawings, written material, and design concepts shall not be used or reproduced without the written consent of MHTN Architects, Inc. Permission to use with written consent of MHTN Architects, Inc. Do not scale drawings. Use given dimensions only. If not shown, verify correct dimensions with the Architect. Contractor shall check and verify all dimensions and conditions at job site.


SEAL

MHTN PROJECT NO.

DRAWN BY: CHECKED BY:

ISSUED:

| NO. | DATE | DESCRIPTION |
|---|---|---|
| | | |

CONTRACTOR TO VERIFY DRAWINGS IN FIELD USE REFLECT LAST REVISION DATE:

| NO. | DATE | DESCRIPTION |
|---|---|---|
| | | |

SHEET NAME

PARTIAL PLUMBING PLAN

BID DOCUMENTS
MAY 15, 2013

SHEET NUMBER

PP102A

D:_Bim\Local\Mechanical_Central_JRobker.rvt
5/14/2013 12:55:33 PM

## SHEET KEYNOTES

| | |
|---|---|
| 1 | ROOF DRAIN PIPING UP TO THIRD LEVEL AND DOWN TO FIRST LEVEL. |
| 2 | 3" VENT UP. |
| 3 | 3" WASTE STACK DOWN. |
| 4 | RISE DCW/DHW UP TO SS-1 ON LEVEL ABOVE. |

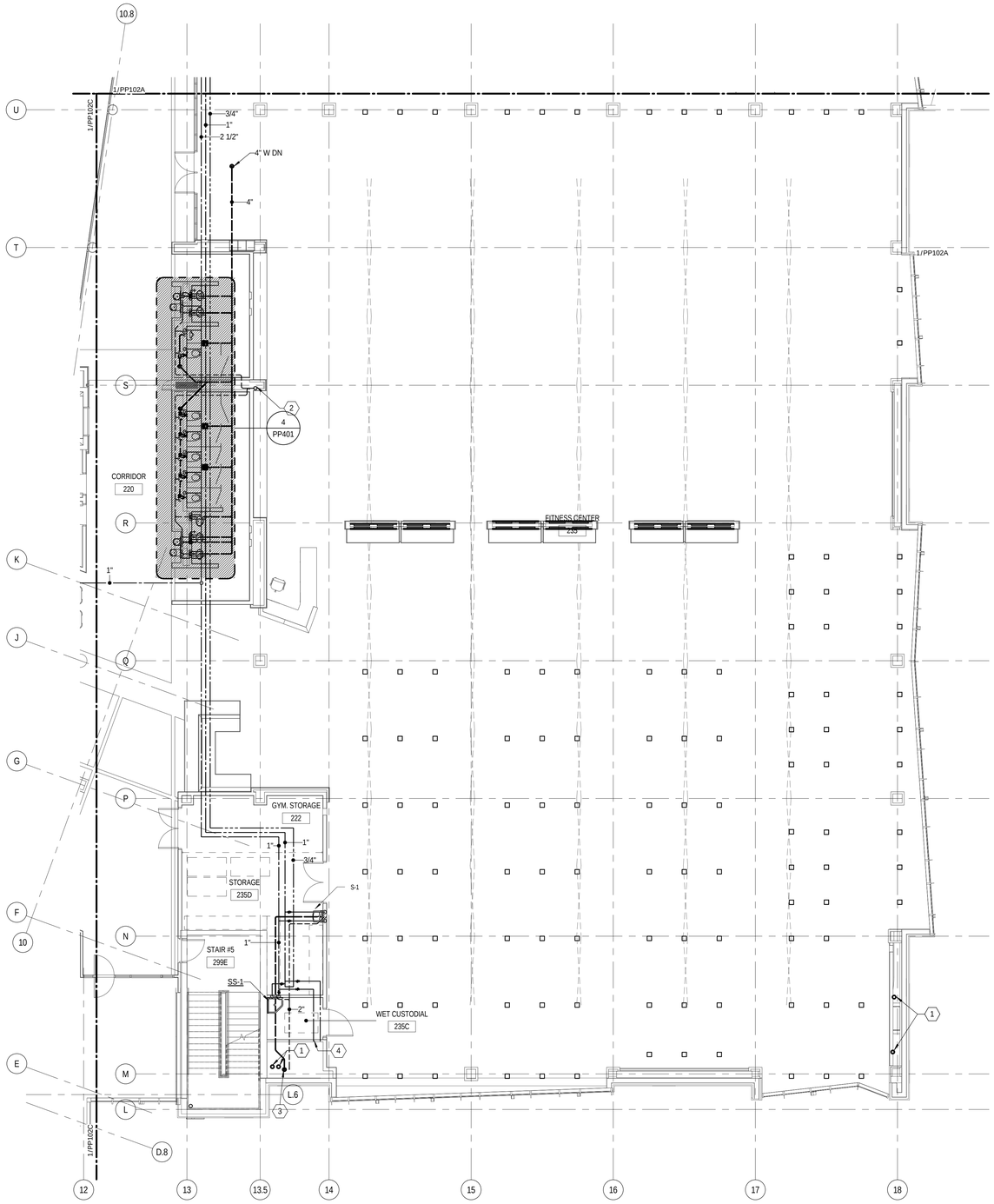


## SECOND LEVEL PLUMBING PLAN B

0 4' - 0" 8' - 0" 16' - 0"

SCALE: 1/8" = 1'-0"

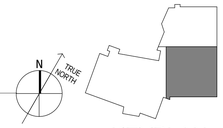


KEYPLAN


MHTN ARCHITECTS

**MHTN Architects, Inc.**
420 East South Temple
Suite 100
Salt Lake City, Utah 84111
Telephone (801) 595-6700
Telefax (801) 595-6717
www.mhtn.com

**Hastings+Chivetta**
ARCHITECTURE • PLANNING • ENGINEERING
622 Emerson, Suite 200
St. Louis, MO 63141
Tel. 314.863.5717
Fax. 314.863.2823
www.hastingschivetta.com

VAN BOERUM & FRANK ASSOCIATES, INC.
CONSULTING ENGINEERS
Salt Lake City • Logan • St. George • Tempe
330 South 300 East 801.530.3148 T
Salt lake City, UT 84111 801.530.3150 F


# UNIVERSITY OF UTAH
## STUDENT LIFE CENTER
1836 E. BALLIF ROAD
SALT LAKE CITY, UTAH 84112


©2007 MHTN ARCHITECTS, INC.
Drawings, written material, and design concepts shall not be used or reproduced in whole or part in any form or format without prior written consent of MHTN Architects, Inc. Do not scale drawings. Use given dimensions only. If not shown, verify correct dimensions with the Architect. Contractor shall check and verify all dimensions and conditions at job site.


SEAL

MHTN PROJECT NO.

DRAWN BY: CHECKED BY:

ISSUED:

| NO. | DATE | DESCRIPTION |
|---|---|---|
| | | |

CONTRACTOR TO VERIFY DRAWINGS IN FIELD USE REFLECT LAST REVISION DATE.

| NO. | DATE | DESCRIPTION |
|---|---|---|
| | | |

SHEET NAME

PARTIAL PLUMBING PLAN

BID DOCUMENTS
MAY 15, 2013

SHEET NUMBER

PP102B

D:__Bim\Local\Mechanical_Central_JRobker.rvt
5/14/2013 12:55:37 PM

SECOND LEVEL PLUMBING PLAN C

0 4' - 0" 8' - 0" 16' - 0"

SCALE: 1/8" = 1'-0"

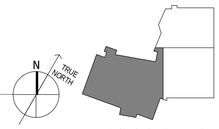


KEYPLAN

## SHEET KEYNOTES

| | |
|---|---|
| 1 | ROOF DRAIN PIPING UP TO THIRD LEVEL AND DOWN TO FIRST LEVEL. |
| 2 | 2" WASTE DOWN. |
| 3 | 1-1/2" WASTE UP. |
| 4 | RISE DCW UP TO EWC-1 ON LEVEL ABOVE. |
| 5 | 1" CONDENSATE WASTE DOWN, 3/4" UP. |

MHTN ARCHITECTS
**MHTN Architects, Inc.**
420 East South Temple
Suite 100
Salt Lake City, Utah 84111
Telephone (801) 595-6700
Telefax (801) 595-6717
www.mhtn.com

**Hastings+Chivetta**
ARCHITECTURE • PLANNING • ENGINEERING
622 Emerson, Suite 200
St. Louis, MO 63141
Tel. 314.863.5717
Fax. 314.863.2823
www.hastingschivetta.com

VAN BOERUM & FRANK ASSOCIATES, INC.
CONSULTING ENGINEERS
Salt Lake City • Logan • St. George • Tempe
330 South 300 East 801.530.3148 T
Salt lake City, UT 84111 801.530.3150 F

# UNIVERSITY OF UTAH
## STUDENT LIFE CENTER
1836 E. BALLIF ROAD
SALT LAKE CITY, UTAH 84112

©2007 MHTN ARCHITECTS, INC.
Drawings, written material, and design concepts shall not be used or reproduced in whole or part in any form or format without prior written consent of MHTN ARCHITECTS, INC. Do not scale drawings, use only given dimensions only. If not shown, verify correct dimensions with the Architect. Contractor shall check and verify all dimensions and conditions at job site.

SEAL

MHTN PROJECT NO.

DRAWN BY: CHECKED BY:

ISSUED:

| NO. | DATE | DESCRIPTION |
|---|---|---|

CONTRACTOR TO VERIFY DRAWINGS IN FIELD USE REFLECT LAST REVISION DATE:

| NO. | DATE | DESCRIPTION |
|---|---|---|

SHEET NAME
PARTIAL PLUMBING PLAN

BID DOCUMENTS
MAY 15, 2013

SHEET NUMBER
PP102C

D:__Bim\Local\Mechanical_Central_JRobker.rvt
5/14/2013 12:55:41 PM

## SHEET KEYNOTES

| | |
|---|---|
| 1 | ROOF DRAIN PIPING UP TO ROOF. |
| 2 | ROOF DRAIN PIPING DOWN TO SECOND LEVEL. |
| 3 | ROOF DRAIN PIPING BELOW DECK, ROOF DRAINS LOCATED BELOW DECK PAVERS. |
| 4 | DCW/DHW/DHWR DOWN TO SECOND LEVEL. OFFSET HORIZONTALLY BETWEEN LEVELS AS REQUIRED. |
| 5 | 3" VTR. |
| 6 | 4" VTR. |
| 7 | ROUGH-IN PLUMBING CONNECTIONS. DO NOT INSTALL PLUMBING FIXTURES. |

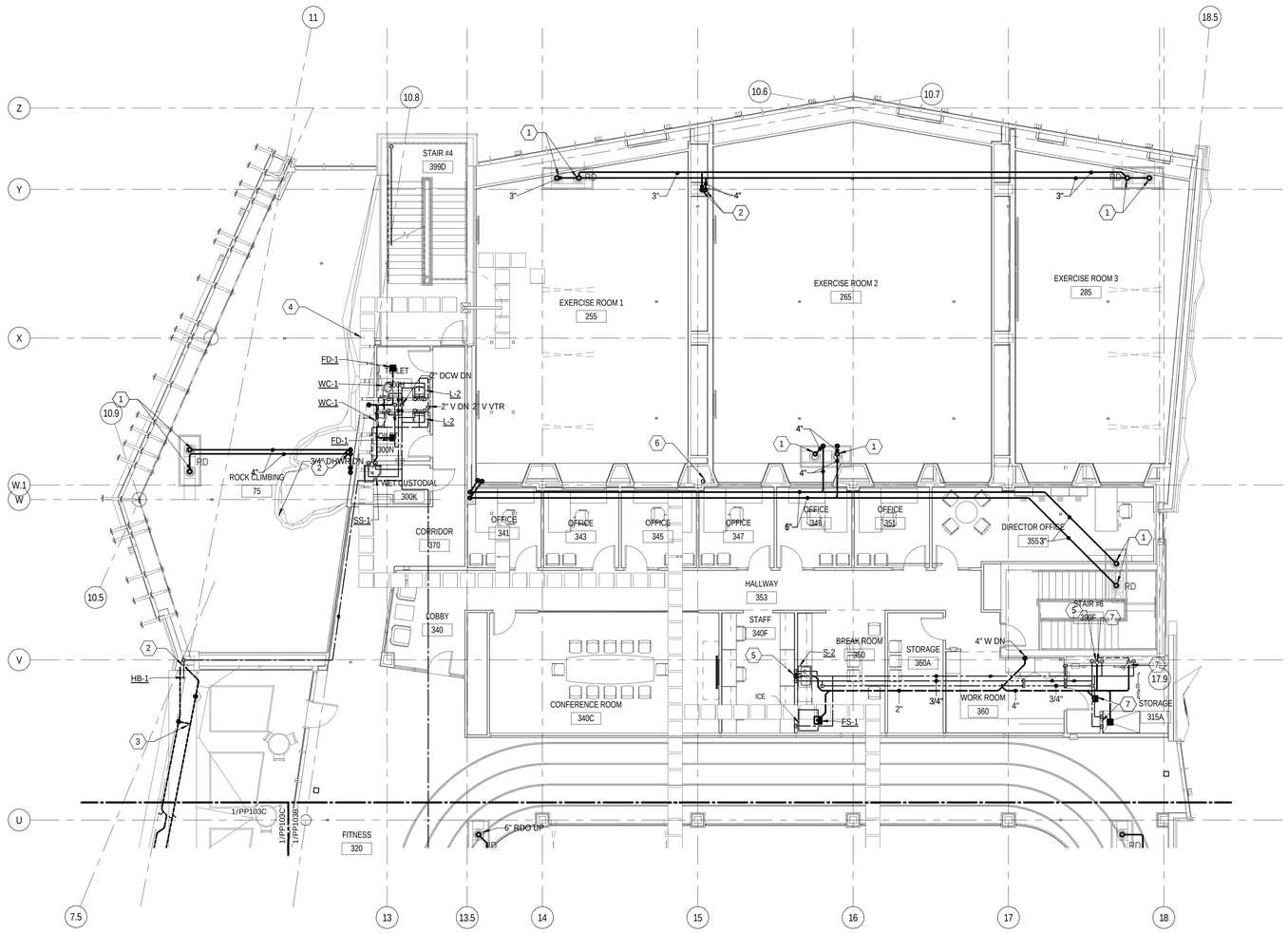


# THIRD LEVEL PLUMBING PLAN A

0 4' - 0" 8' - 0" 16' - 0"

SCALE: 1/8" = 1'-0"

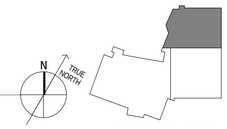


KEYPLAN


MHTN
ARCHITECTS
**MHTN Architects, Inc.**
420 East South Temple
Suite 100
Salt Lake City, Utah 84111
Telephone (801) 595-6700
Telefax (801) 595-6717
www.mhtn.com

**Hastings+Chivetta**
ARCHITECTURE • PLANNING • ENGINEERING
622 Emerson, Suite 200
St. Louis, MO 63141
Tel. 314.863.5717
Fax. 314.863.2823
www.hastingschivetta.com

VAN BOERUM & FRANK ASSOCIATES, INC.
CONSULTING ENGINEERS
Salt Lake City • Logan • St. George • Tempe
330 South 300 East 801.530.3148 T
Salt lake City, UT 84111 801.530.3150 F


# UNIVERSITY OF UTAH
## STUDENT LIFE CENTER
1836 E. BALLIF ROAD
SALT LAKE CITY, UTAH 84112


©2007 MHTN ARCHITECTS, INC.
Drawings, written material, and design concepts shall not be used or reproduced in whole or part in any form or format without prior written consent of MHTN Architects, Inc. Do not scale drawings. Use given dimensions only. If not shown, verify correct dimensions with the Architect. Contractor shall check and verify all dimensions and conditions at job site.


SEAL

MHTN PROJECT NO.

DRAWN BY: CHECKED BY:

ISSUED:

| NO. | DATE | DESCRIPTION |
|---|---|---|

CONTRACTOR TO VERIFY DRAWINGS IN FIELD USE REFLECT LAST REVISION DATE.

| NO. | DATE | DESCRIPTION |
|---|---|---|

SHEET NAME

PARTIAL PLUMBING PLAN

BID DOCUMENTS
MAY 15, 2013

SHEET NUMBER

PP103A

D:_BimLocal\Mechanical_Central_JRobker.rvt
5/14/2013 12:55:49 PM

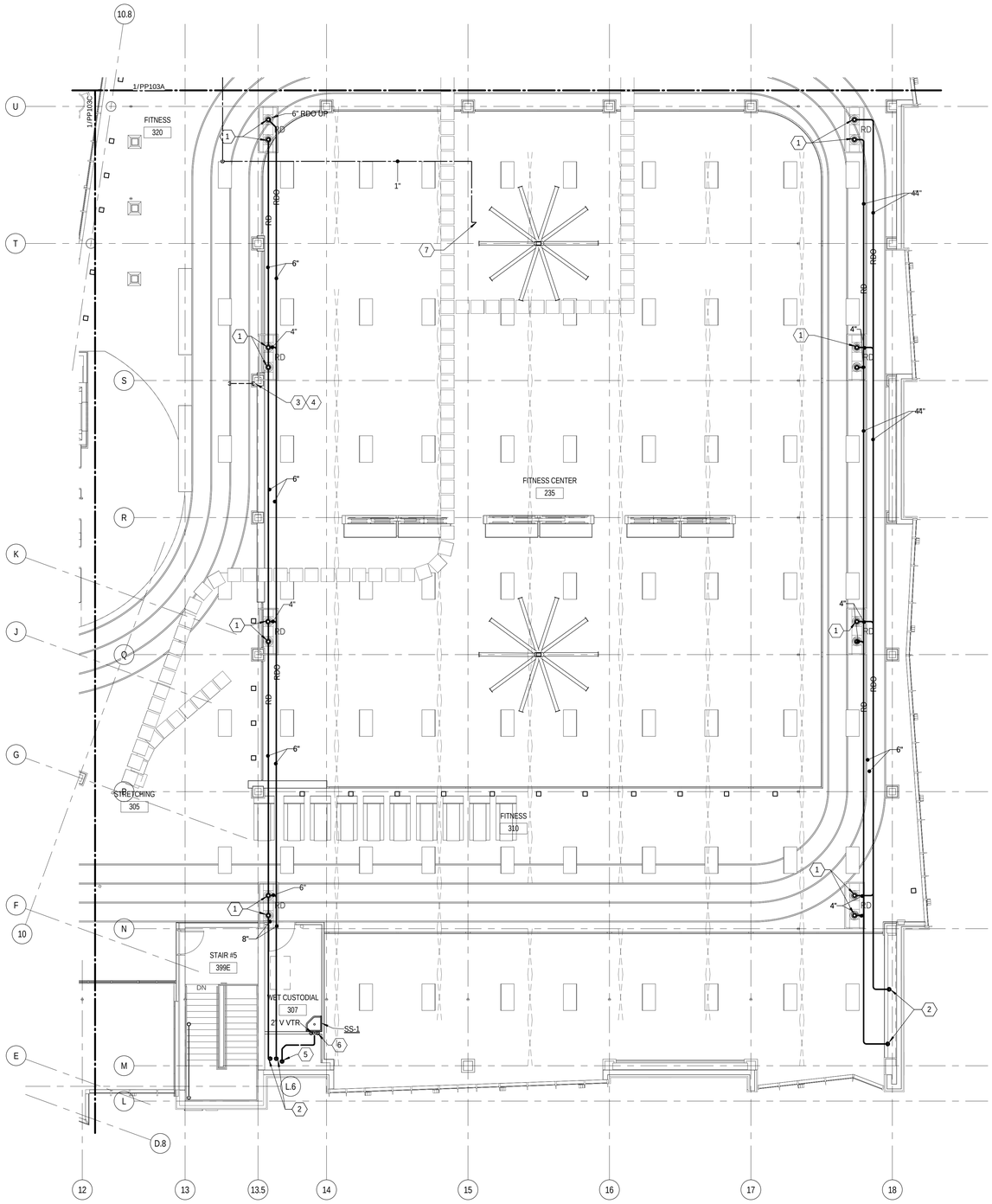


THIRD LEVEL PLUMBING PLAN B

0 4' - 0" 8' - 0" 16' - 0"

SCALE: 1/8" = 1'-0"

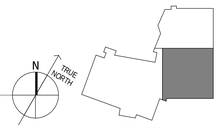


KEYPLAN

## SHEET KEYNOTES

| | |
|---|---|
| 1 | ROOF DRAIN PIPING UP TO ROOF. |
| 2 | ROOF DRAIN PIPING DOWN TO SECOND LEVEL. |
| 3 | 3" VTR. |
| 4 | 3" VENT PIPING DOWN TO SECOND LEVEL. |
| 5 | 3" WASTE DOWN. |
| 6 | DOMESTIC WATER SERVING FIXTURE FROM BELOW. |
| 7 | WATER TO CONNECT TO EVAPORATIVE SECTION IN AIR HANDLER. |

MHTN ARCHITECTS

**MHTN Architects, Inc.**
420 East South Temple
Suite 100
Salt Lake City, Utah 84111
Telephone (801) 595-6700
Telefax (801) 595-6717
www.mhtn.com

**Hastings+Chivetta**
ARCHITECTURE • PLANNING • ENGINEERING
622 Emerson, Suite 200
St. Louis, MO 63141
Tel. 314.863.5717
Fax. 314.863.2823
www.hastingschivetta.com

VAN BOERUM & FRANK ASSOCIATES, INC.
CONSULTING ENGINEERS
Salt Lake City • Logan • St. George • Tempe
330 South 300 East 801.530.3148 T
Salt lake City, UT 84111 801.530.3150 F

# UNIVERSITY OF UTAH
## STUDENT LIFE CENTER
1836 E. BALLIF ROAD
SALT LAKE CITY, UTAH 84112

©2007 MHTN ARCHITECTS, INC.
Drawings, written material, and design concepts shall not be used or developed in other projects in any form or format without prior written consent of MHTN Architects, Inc. Do not scale drawings. Use given dimensions only. If not shown, verify correct dimensions with the Architect. Contractor shall check and verify all dimensions and conditions at job site.

SEAL

MHTN PROJECT NO.

DRAWN BY: CHECKED BY:

ISSUED:

| NO. | DATE | DESCRIPTION |
|---|---|---|

CONTRACTOR TO VERIFY DRAWINGS IN FIELD USE REFLECT LAST REVISION DATE.

| NO. | DATE | DESCRIPTION |
|---|---|---|

SHEET NAME

PARTIAL PLUMBING PLAN

BID DOCUMENTS
MAY 15, 2013

SHEET NUMBER

PP103B

D:__Bim\Local\Mechanical_Central_JRoiker.rvt
5/14/2013 12:55:53 PM

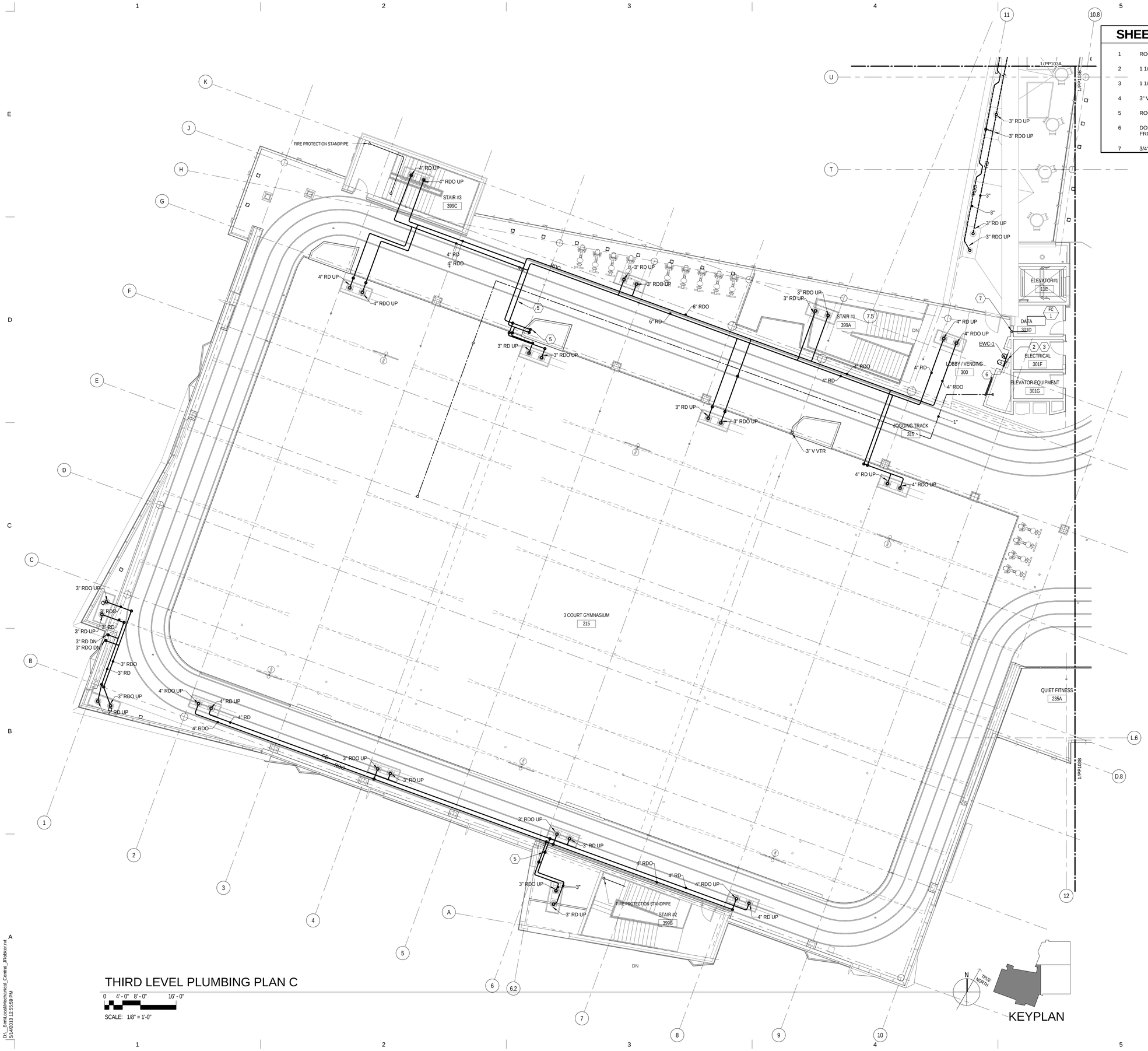


# THIRD LEVEL PLUMBING PLAN C

0 4' - 0" 8' - 0" 16' - 0"

SCALE: 1/8" = 1'-0"

KEYPLAN

## SHEET KEYNOTES

| | |
|---|---|
| 1 | ROOF DRAIN PIPING UP TO ROOF. |
| 2 | 1 1/2" WASTE DOWN. |
| 3 | 1 1/2" VTR. |
| 4 | 3" VTR. |
| 5 | ROOF DRAIN PIPING DOWN. |
| 6 | DOMESTIC WATER SERVING FIXTURE FROM BELOW. |
| 7 | 3/4" CONDENSATE WASTE DOWN. |


MHTN ARCHITECTS

**MHTN Architects, Inc.**
420 East South Temple
Suite 100
Salt Lake City, Utah 84111
Telephone (801) 595-6700
Telefax (801) 595-6717
www.mhtn.com

**Hastings+Chivetta**
ARCHITECTURE • PLANNING • ENGINEERING
622 Emerson, Suite 200
St. Louis, MO 63141
Tel. 314.863.5717
Fax. 314.863.2823
www.hastingschivetta.com

VAN BOERUM & FRANK ASSOCIATES, INC.
CONSULTING ENGINEERS
Salt Lake City • Logan • St. George • Tempe
330 South 300 East 801.530.3148 T
Salt lake City, UT 84111 801.530.3150 F


# UNIVERSITY OF UTAH
## STUDENT LIFE CENTER
1836 E. BALLIF ROAD
SALT LAKE CITY, UTAH 84112


©2007 MHTN ARCHITECTS, INC.
Drawings, written material, and design concepts shall not be used or reproduced in whole or part in any form or format without prior written consent of MHTN Architects, Inc. Do not scale drawings. Use given dimensions only. If not shown, verify correct dimensions with the Architect. Contractor shall check and verify all dimensions and conditions at job site.


SEAL

MHTN PROJECT NO.

DRAWN BY: CHECKED BY:

ISSUED:

| NO. | DATE | DESCRIPTION |
|---|---|---|
| | | |

CONTRACTOR TO VERIFY DRAWINGS IN FIELD USE REFLECT LAST REVISION DATE.

| NO. | DATE | DESCRIPTION |
|---|---|---|
| | | |

SHEET NAME

PARTIAL PLUMBING PLAN

BID DOCUMENTS
MAY 15, 2013

SHEET NUMBER

PP103C

D:__Bim\Local\Mechanical_Central_JRobker.rvt
5/14/2013 12:55:59 PM

## SHEET KEYNOTES

1 ROOF DRAIN PIPING DOWN TO THIRD LEVEL.

2 DOUBLE HOSE VALVE. 2 1/2" WITH 1 1/2" REDUCER AND CAP ON ROOF.

3 POST INDCICATOR VALVE WITH TAMPER SWITCH (NORMALLY CLOSED POSITION). VALVE TO BE LOCATED IN HEATED SPACE. OPERATOR ON THE ROOF.

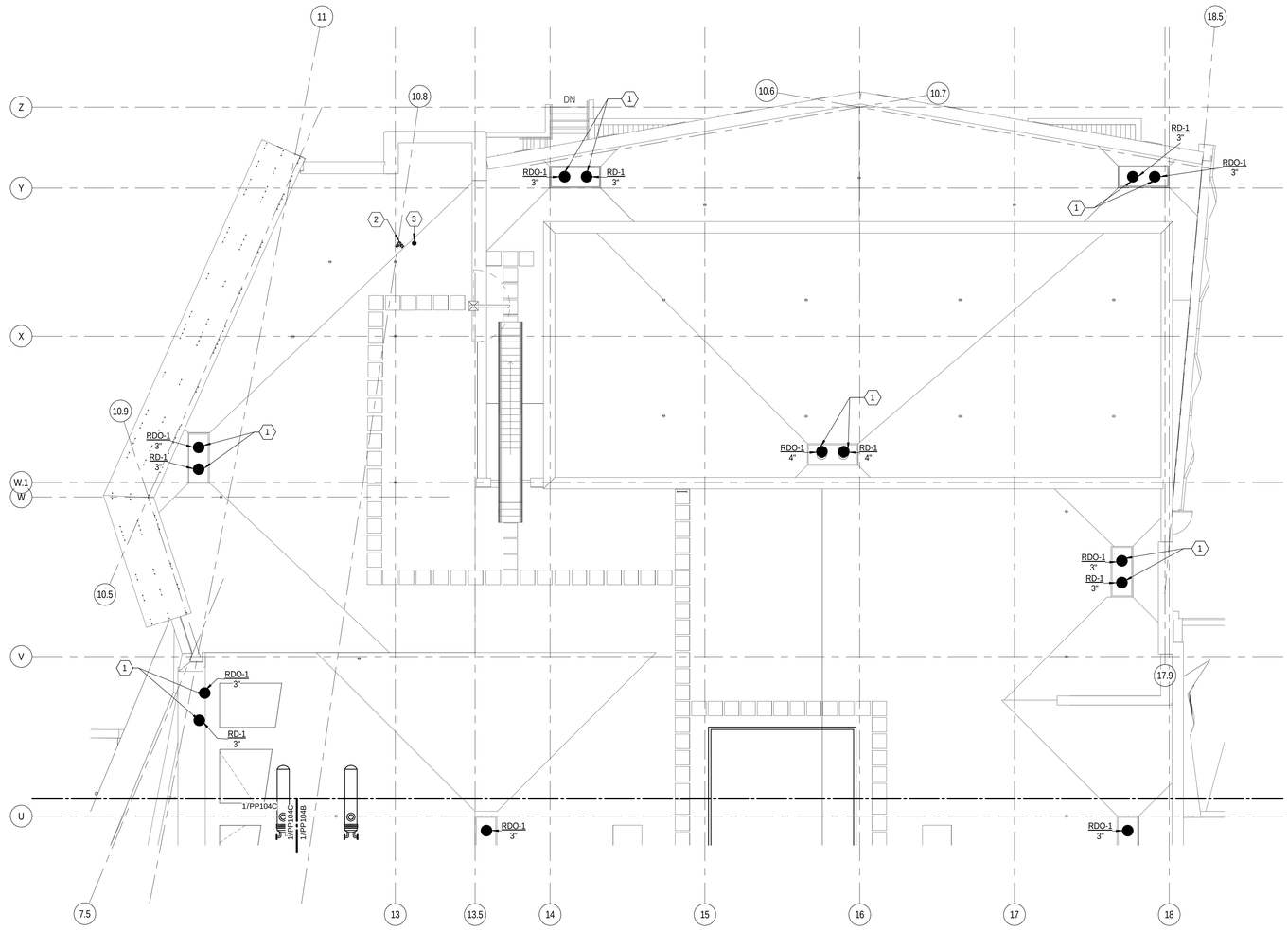


ROOF PLUMBING PLAN A

0 4' - 0" 8' - 0" 16' - 0"

SCALE: 1/8" = 1'-0"

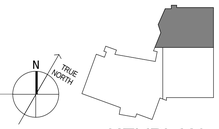


KEYPLAN


MHTN
ARCHITECTS
**MHTN Architects, Inc.**
420 East South Temple
Suite 100
Salt Lake City, Utah 84111
Telephone (801) 595-6700
Telefax (801) 595-6717
www.mhtn.com

**Hastings+Chivetta**
ARCHITECTURE • PLANNING • ENGINEERING
622 Emerson, Suite 200
St. Louis, MO 63141
Tel. 314.863.5717
Fax. 314.863.2823
www.hastingschivetta.com

VAN BOERUM & FRANK ASSOCIATES, INC.
CONSULTING ENGINEERS
Salt Lake City • Logan • St. George • Tempe
330 South 300 East 801.530.3148 T
Salt lake City, UT 84111 801.530.3150 F


# UNIVERSITY OF UTAH
## STUDENT LIFE CENTER
1836 E. BALLIF ROAD
SALT LAKE CITY, UTAH 84112


©2007 MHTN ARCHITECTS, INC.
Drawings, written material, and design concepts shall not be used or reproduced in whole or part in any form or format without prior written consent of MHTN Architects, Inc. Do not scale drawings. Use given dimensions only. If not shown, verify correct dimensions with the Architect. Contractor shall check and verify all dimensions and conditions at job site.


SEAL

MHTN PROJECT NO.

DRAWN BY: CHECKED BY:

ISSUED:

| NO. | DATE | DESCRIPTION |
|---|---|---|

CONTRACTOR TO VERIFY DRAWINGS IN FIELD USE REFLECT LAST REVISION DATE.

| NO. | DATE | DESCRIPTION |
|---|---|---|

SHEET NAME

PARTIAL PLUMBING PLAN

BID DOCUMENTS
MAY 15, 2013

SHEET NUMBER

PP104A

D:__Bim\Local\Mechanical_Central_JRobker.rvt
5/14/2013 12:56:05 PM

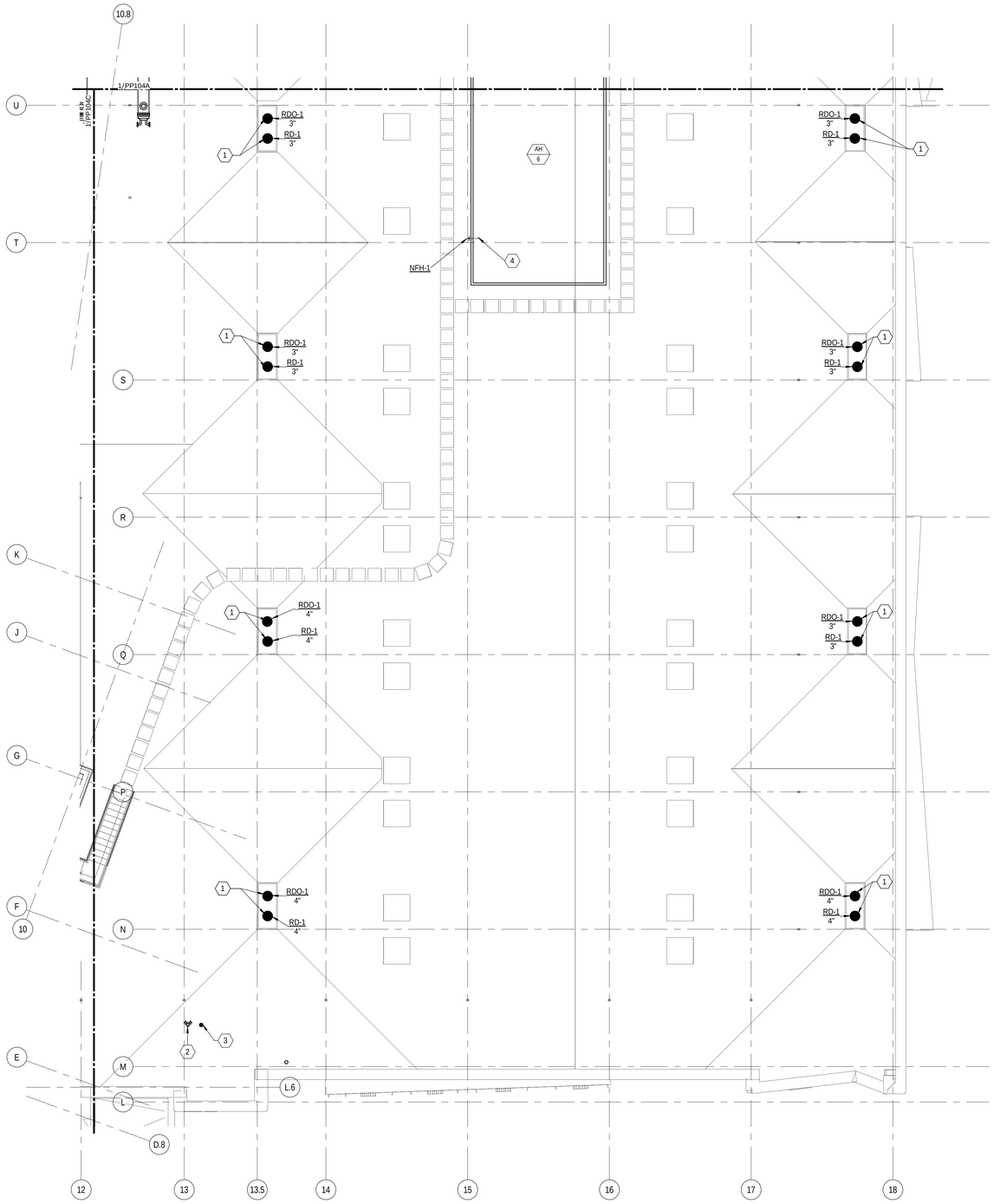


## ROOF PLUMBING PLAN B

0 4' - 0" 8' - 0" 16' - 0"

SCALE: 1/8" = 1'-0"

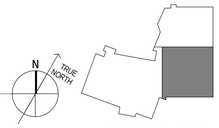


KEYPLAN

## SHEET KEYNOTES

1 ROOF DRAIN PIPING DOWN TO THIRD LEVEL.

2 DOUBLE HOSE VALVE. 2 1/2" WITH 1 1/2" REDUCER AND CAP ON ROOF.

3 POST INDCICATOR VALVE WITH TAMPER SWITCH (NORMALLY CLOSED POSITION). VALVE TO BE LOCATED IN HEATED SPACE. OPERATOR ON THE ROOF.

4 DCW FROM LINE TO EVAPORATIVE SECTION OF AIR HANDLER.

MHTN
ARCHITECTS
**MHTN Architects, Inc.**
420 East South Temple
Suite 100
Salt Lake City, Utah 84111
Telephone (801) 595-6700
Telefax (801) 595-6717
www.mhtn.com

**Hastings+Chivetta**
ARCHITECTURE • PLANNING • ENGINEERING
622 Emerson, Suite 200
St. Louis, MO 63141
Tel. 314.863.5717
Fax. 314.863.2823
www.hastingschivetta.com

VAN BOERUM & FRANK ASSOCIATES, INC.
CONSULTING ENGINEERS
Salt Lake City • Logan • St. George • Tempe
330 South 300 East 801.530.3148 T
Salt lake City, UT 84111 801.530.3150 F

# UNIVERSITY OF UTAH
## STUDENT LIFE CENTER
1836 E. BALLIF ROAD
SALT LAKE CITY, UTAH 84112

©2007 MHTN ARCHITECTS, INC.
Drawings, written material, and design concepts shall not be used or reproduced in whole or part in any form or format without prior written consent of MHTN Architects, Inc. Do not scale drawings. Use given dimensions only. If not shown, verify correct dimensions with the Architect. Contractor shall check and verify all dimensions and conditions at job site.

SEAL

MHTN PROJECT NO.

DRAWN BY: CHECKED BY:

ISSUED:

| NO. | DATE | DESCRIPTION |
|---|---|---|
| | | |

CONTRACTOR TO VERIFY DRAWINGS IN FIELD USE REFLECT LAST REVISION DATE.

| NO. | DATE | DESCRIPTION |
|---|---|---|
| | | |

SHEET NAME

PARTIAL PLUMBING PLAN

BID DOCUMENTS
MAY 15, 2013

SHEET NUMBER

PP104B

D:__Bim\Local\Mechanical_Central_JRobker.rvt
5/14/2013 12:56:10 PM

## SHEET KEYNOTES

1. ROOF DRAIN PIPING DOWN TO THIRD LEVEL.
2. DOUBLE HOSE VALVE. 2 1/2" WITH 1 1/2" REDUCER AND CAP ON ROOF.
3. POST INDCICATOR VALVE WITH TAMPER SWITCH (NORMALLY CLOSED POSITION). VALVE TO BE LOCATED IN HEATED SPACE. OPERATOR ON THE ROOF.
4. DCW FROM LINE TO EVAPORATIVE SECTION OF AIR HANDLER.

ROOF PLUMBING PLAN C

0 4' - 0" 8' - 0" 16' - 0"

SCALE: 1/8" = 1'-0"

KEYPLAN


MHTN ARCHITECTS

**MHTN Architects, Inc.**
420 East South Temple
Suite 100
Salt Lake City, Utah 84111
Telephone (801) 595-6700
Telefax (801) 595-6717
www.mhtn.com

**Hastings+Chivetta**
ARCHITECTURE • PLANNING • ENGINEERING
622 Emerson, Suite 200
St. Louis, MO 63141
Tel. 314.863.5717
Fax. 314.863.2823
www.hastingschivetta.com

VAN BOERUM & FRANK ASSOCIATES, INC.
CONSULTING ENGINEERS
Salt Lake City • Logan • St. George • Tempe
330 South 300 East 801.530.3148 T
Salt lake City, UT 84111 801.530.3150 F


# UNIVERSITY OF UTAH
## STUDENT LIFE CENTER
1836 E. BALLIF ROAD
SALT LAKE CITY, UTAH 84112


©2007 MHTN ARCHITECTS, INC.
Drawings, written material, and design concepts shall not be used or reproduced in whole or part in any form or format without prior written consent of MHTN Architects, Inc. Do not scale drawings. Use given dimensions only. If not shown, verify correct dimensions with the Architect. Contractor shall check and verify all dimensions and conditions at job site.


SEAL

MHTN PROJECT NO.

DRAWN BY: CHECKED BY:

ISSUED:

| NO. | DATE | DESCRIPTION |
|---|---|---|
| | | |

CONTRACTOR TO VERIFY DRAWINGS IN FIELD USE REFLECT LAST REVISION DATE:

| NO. | DATE | DESCRIPTION |
|---|---|---|
| | | |

SHEET NAME
PARTIAL PLUMBING PLAN

BID DOCUMENTS
MAY 15, 2013

SHEET NUMBER
PP104C

D:_Bim\Local\Mechanical_Central_JRoeker.rvt
5/14/2013 12:56:18 PM

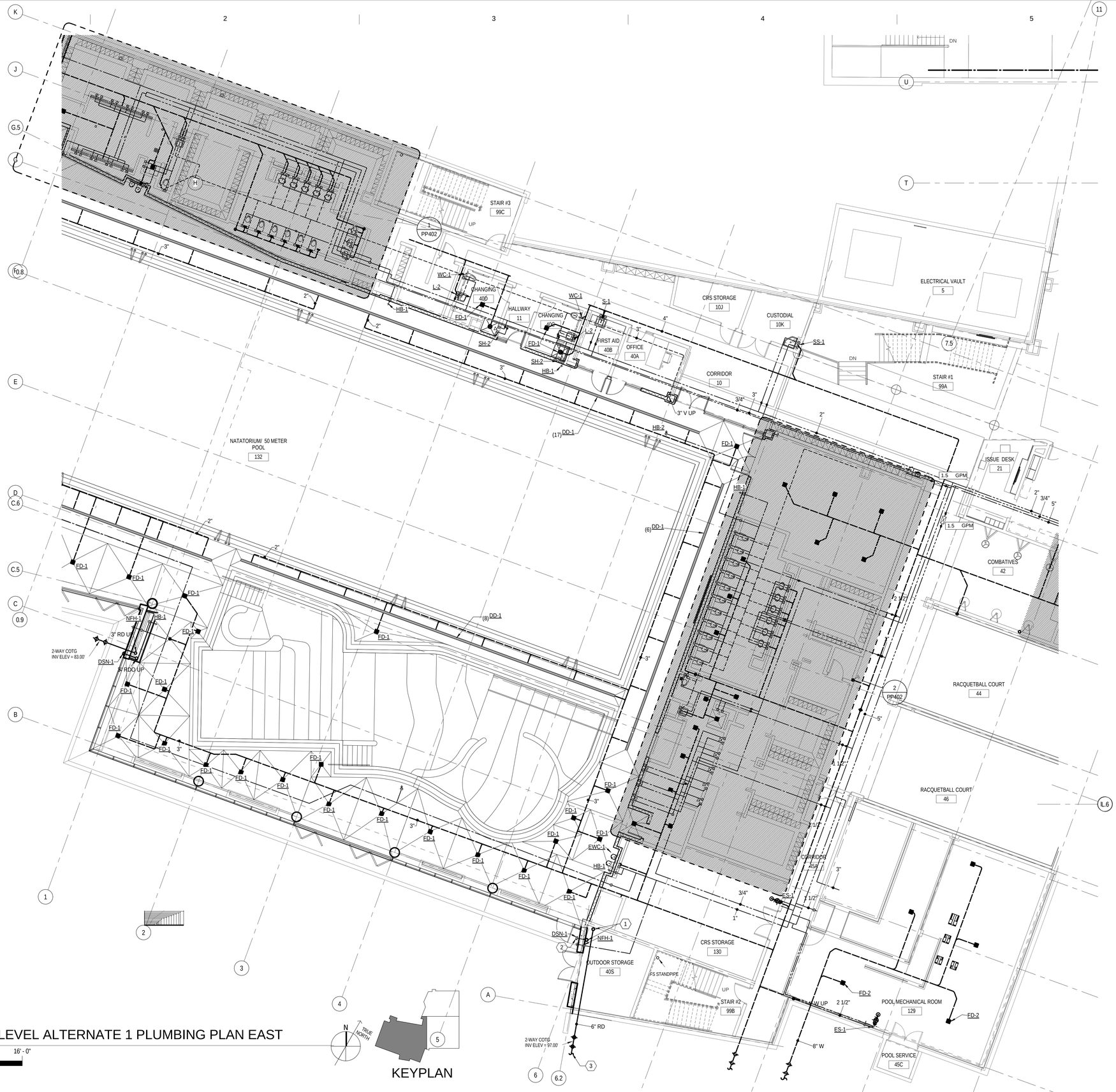


# LOWER LEVEL ALTERNATE 1 PLUMBING PLAN EAST

0 4' - 0" 8' - 0" 16' - 0"

SCALE: 1/8" = 1'-0"




KEYPLAN


MHTN
ARCHITECTS

**MHTN Architects, Inc.**
420 East South Temple
Suite 100
Salt Lake City, Utah 84111
Telephone (801) 595-6700
Telefax (801) 595-6717
www.mhtn.com

**Hastings+Chivetta**
ARCHITECTURE • PLANNING • ENGINEERING
622 Emerson, Suite 200
St. Louis, MO 63141
Tel. 314.863.5717
Fax. 314.863.2823
www.hastingschivetta.com

VAN BOERUM & FRANK ASSOCIATES, INC.
CONSULTING ENGINEERS
Salt Lake City • Logan • St. George • Tempe
330 South 300 East 801.530.3148 T
Salt lake City, UT 84111 801.530.3150 F
VBFA Project 1002


# UNIVERSITY OF UTAH
## STUDENT LIFE CENTER
1836 E. BALLIF ROAD
SALT LAKE CITY, UTAH 84112


©2007 MHTN ARCHITECTS, INC.
Drawings, written material, and design concepts shall not be used or reproduced in whole or part in any form or format without prior written consent of MHTN Architects, Inc. Do not scale drawings. Use given dimensions only. If not shown, verify correct dimensions with the Architect. Contractor shall check and verify all dimensions and conditions at job site.


SEAL

MHTN PROJECT NO.

DRAWN BY: CHECKED BY:

ISSUED:

| NO. | DATE | DESCRIPTION |
|---|---|---|
| | | |

CONTRACTOR TO VERIFY DRAWINGS IN FIELD USE REFLECT LAST REVISION DATE.

| NO. | DATE | DESCRIPTION |
|---|---|---|
| | | |

SHEET NAME

LOWER LEVEL ALTERNATE 1 PLUMBING PLAN

BID DOCUMENTS

MAY 15, 2013

SHEET NUMBER

PP105

D:_Bim\Local\Mechanical_Central_JRoeker.rvt
5/14/2013 12:56:25 PM

## SHEET KEYNOTES

| | |
|---|---|
| 1 | ROOF DRAIN PIPING CONTINUED FROM DRAWING PP106. |
| 2 | SEE CIVIL SITE UTILITY PLAN FOR CONTINUATION. |
| 3 | ROOF DRAIN PIPING RUNNING IN STRUCTURE. |
| 4 | CONNECT TO FOUNDATION DRAINAGE PIPE. |

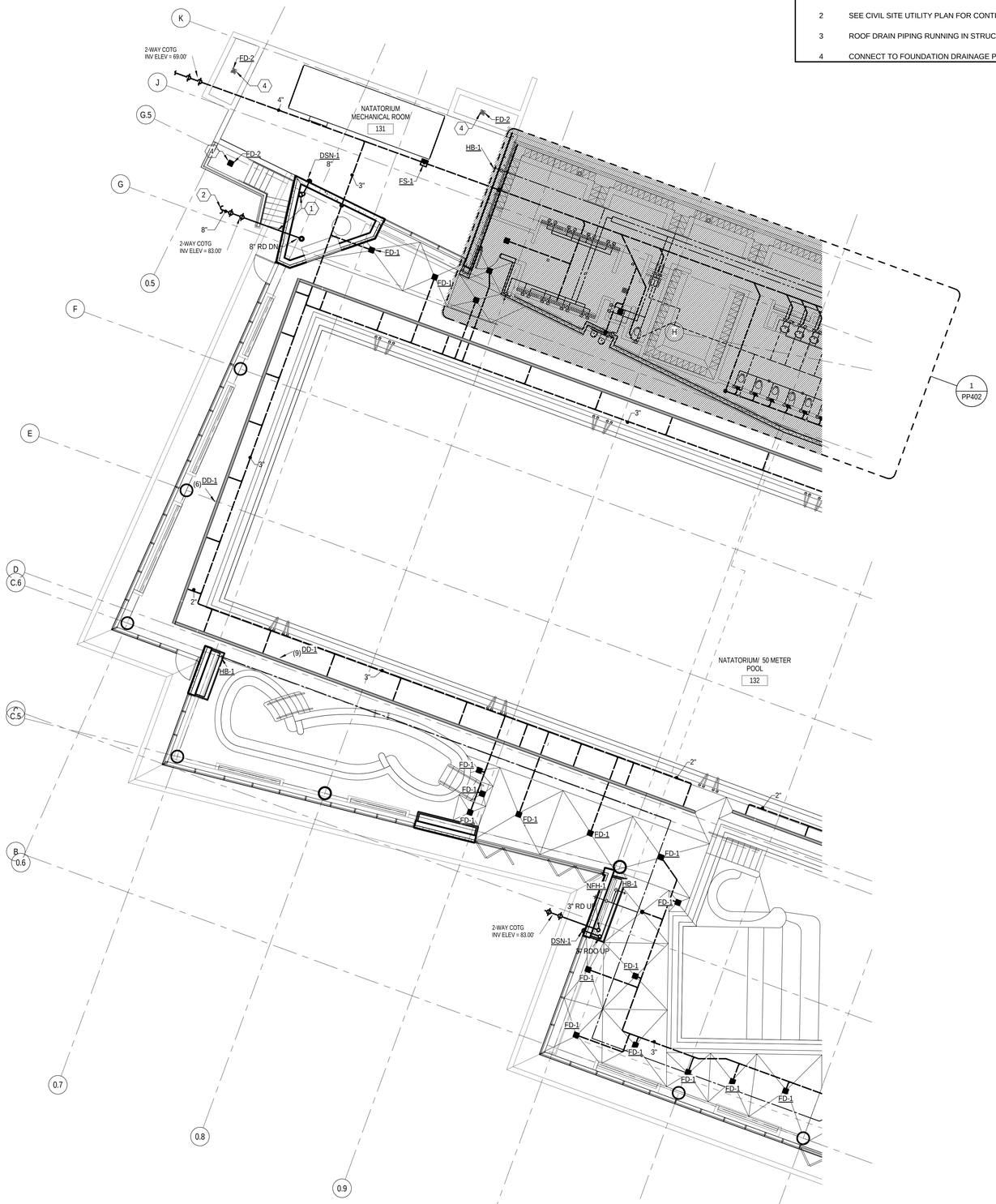


LOWER LEVEL ALTERNATE 1 PLUMBING PLAN WEST

0 4' - 0" 8' - 0" 16' - 0"

SCALE: 1/8" = 1'-0"

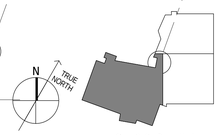


KEYPLAN


MHTN ARCHITECTS

**MHTN Architects, Inc.**
420 East South Temple
Suite 100
Salt Lake City, Utah 84111
Telephone (801) 595-6700
Telefax (801) 595-6717
www.mhtn.com

**Hastings+Chivetta**
ARCHITECTURE • PLANNING • ENGINEERING
622 Emerson, Suite 200
St. Louis, MO 63141
Tel. 314.863.5717
Fax. 314.863.2823
www.hastingschivetta.com

VAN BOERUM & FRANK ASSOCIATES, INC.
CONSULTING ENGINEERS
Salt Lake City • Logan • St. George • Tempe
330 South 300 East 801.530.3148 T
Salt lake City, UT 84111 801.530.3150 F


REGISTERED PROFESSIONAL ENGINEER
No. 324030
BRADLY W. ROSENHAN
STATE OF UTAH

# UNIVERSITY OF UTAH
## STUDENT LIFE CENTER
1836 E. BALLIF ROAD
SALT LAKE CITY, UTAH 84112


©2007 MHTN ARCHITECTS, INC.
Drawings, written material, and design concepts shall not be used or reproduced in whole or part in any form or format without prior written consent of MHTN Architects, Inc. Do not scale drawings. Use given dimensions only. If not shown, verify correct dimensions with the Architect. Contractor shall check and verify all dimensions and conditions at job site.


SEAL

MHTN PROJECT NO.

DRAWN BY: CHECKED BY:

ISSUED:

| NO. | DATE | DESCRIPTION |
|---|---|---|

CONTRACTOR TO VERIFY DRAWINGS IN FIELD USE REFLECT LAST REVISION DATE.

| NO. | DATE | DESCRIPTION |
|---|---|---|

SHEET NAME

LOWER LEVEL ALTERNATE 1 PLUMBING PLAN
BID DOCUMENTS
MAY 15, 2013

SHEET NUMBER

PP106

D:__Bim\Local\Mechanical_Central_JRobker.rvt
5/14/2013 12:56:29 PM

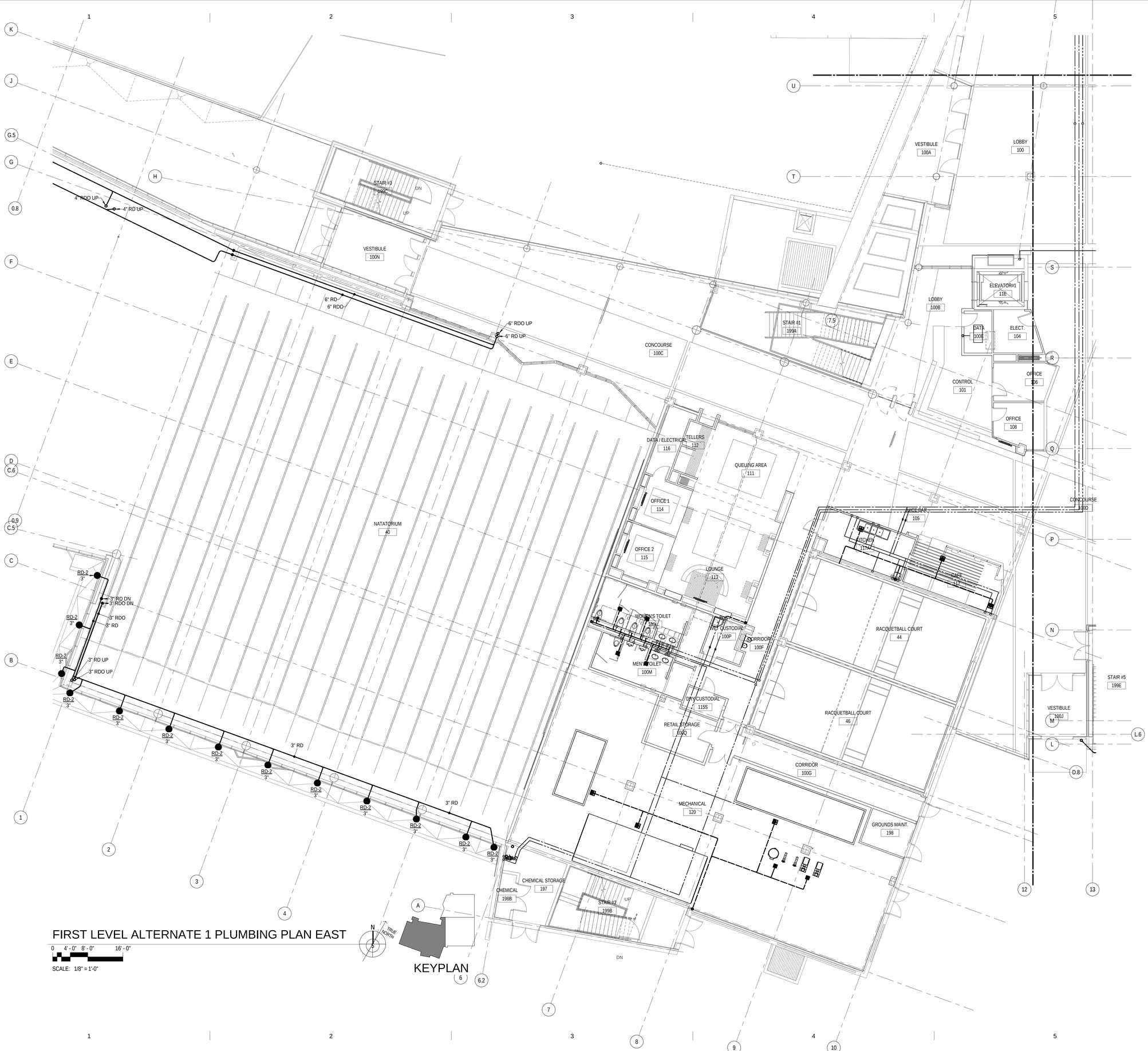


# FIRST LEVEL ALTERNATE 1 PLUMBING PLAN EAST

0 4' - 0" 8' - 0" 16' - 0"

SCALE: 1/8" = 1'-0"

KEYPLAN


MHTN ARCHITECTS

**MHTN Architects, Inc.**
420 East South Temple
Suite 100
Salt Lake City, Utah 84111
Telephone (801) 595-6700
Telefax (801) 595-6717
www.mhtn.com

**Hastings+Chivetta**
ARCHITECTURE • PLANNING • ENGINEERING
622 Emerson, Suite 200
St. Louis, MO 63141
Tel. 314.863.5717
Fax. 314.863.2823
www.hastingschivetta.com

VAN BOERUM & FRANK ASSOCIATES, INC.
CONSULTING ENGINEERS
Salt Lake City • Logan • St. George • Tempe
330 South 300 East 801.530.3148 T
Salt lake City, UT 84111 801.530.3150 F
VBF# Project 1002


# UNIVERSITY OF UTAH

## STUDENT LIFE CENTER

1836 E. BALLIF ROAD
SALT LAKE CITY, UTAH 84112


©2007 MHTN ARCHITECTS, INC.
Drawings, written material, and design concepts shall not be used or reproduced in whole or part in any form or format without prior written consent of MHTN Architects, Inc. Do not scale drawings. Use given dimensions only. If not shown, verify correct dimensions with the Architect. Contractor shall check and verify all dimensions and conditions at job site.


SEAL

MHTN PROJECT NO.

DRAWN BY: CHECKED BY:

ISSUED:

| NO. | DATE | DESCRIPTION |
|---|---|---|

CONTRACTOR TO VERIFY DRAWINGS IN FIELD USE REFLECT LAST REVISION DATE.

| NO. | DATE | DESCRIPTION |
|---|---|---|

SHEET NAME

FIRST LEVEL ALTERNATE 1 PLUMBING PLAN

BID DOCUMENTS

MAY 15, 2013

SHEET NUMBER

PP107

D:_BimLocal\Mechanical_Central_JRoiker.rvt
5/14/2013 12:56:38 PM

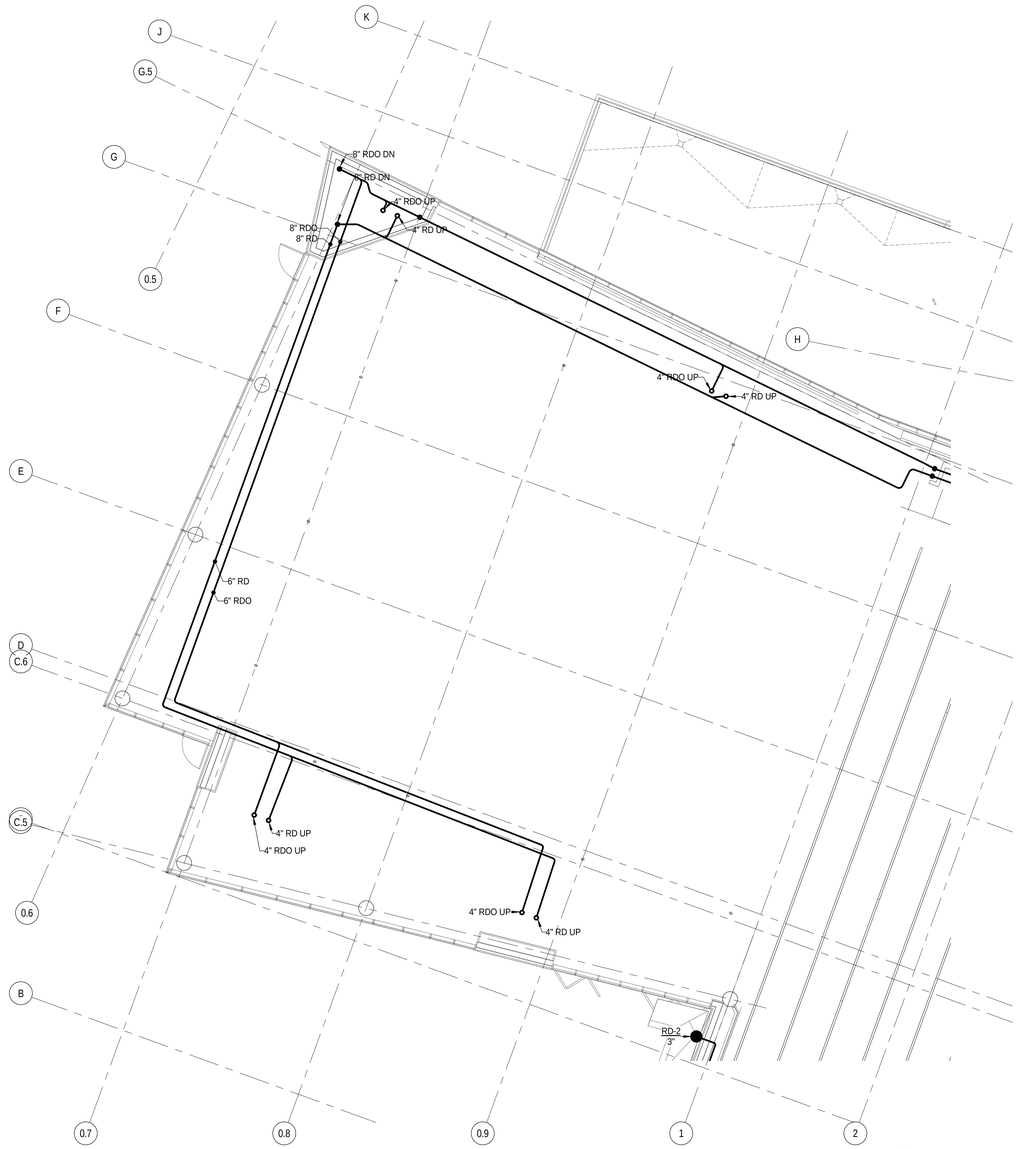


## FIRST LEVEL ALTERNATE 1 PLUMBING PLAN WEST

0' 2'-0" 4'-0" 8'-0" 1/4" =1'-0"

SCALE: 1/8" = 1'-0"

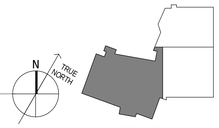


KEYPLAN

MHTN
ARCHITECTS
**MHTN Architects, Inc.**
420 East South Temple
Suite 100
Salt Lake City, Utah 84111
Telephone (801) 595-6700
Telefax (801) 595-6717
www.mhtn.com

**Hastings+Chivetta**
ARCHITECTURE • PLANNING • ENGINEERING
622 Emerson, Suite 200
St. Louis, MO 63141
Tel. 314.863.5717
Fax. 314.863.2823
www.hastingschivetta.com

VAN BOERUM & FRANK ASSOCIATES, INC.
CONSULTING ENGINEERS
Salt Lake City • Logan • St. George • Tempe
330 South 300 East 801.530.3148 T
Salt lake City, UT 84111 801.530.3150 F
VBFA Project 1002

REGISTERED PROFESSIONAL ENGINEER
No. 324030
BRADLY W. ROSENHAN
STATE OF UTAH

# UNIVERSITY OF UTAH
## STUDENT LIFE CENTER
1836 E. BALLIF ROAD
SALT LAKE CITY, UTAH 84112

©2007 MHTN ARCHITECTS, INC.
Drawings, written material, and design concepts shall not be used or reproduced in whole or part in any form or format without prior written consent of MHTN Architects, Inc. Do not scale drawings. Use given dimensions only. If not shown, verify correct dimensions with the Architect. Contractor shall check and verify all dimensions and conditions at job site.

SEAL

MHTN PROJECT NO.

DRAWN BY: CHECKED BY:

ISSUED:

| NO. | DATE | DESCRIPTION |
|---|---|---|
| | | |

CONTRACTOR TO VERIFY DRAWINGS IN FIELD USE REFLECT LAST REVISION DATE.

| NO. | DATE | DESCRIPTION |
|---|---|---|
| | | |

SHEET NAME

FIRST LEVEL ALTERNATE 1 PLUMBING PLAN
BID DOCUMENTS
MAY 15, 2013

SHEET NUMBER

PP108

D:__Bim\Local\Mechanical_Central_JRobker.rvt
5/14/2013 12:56:41 PM

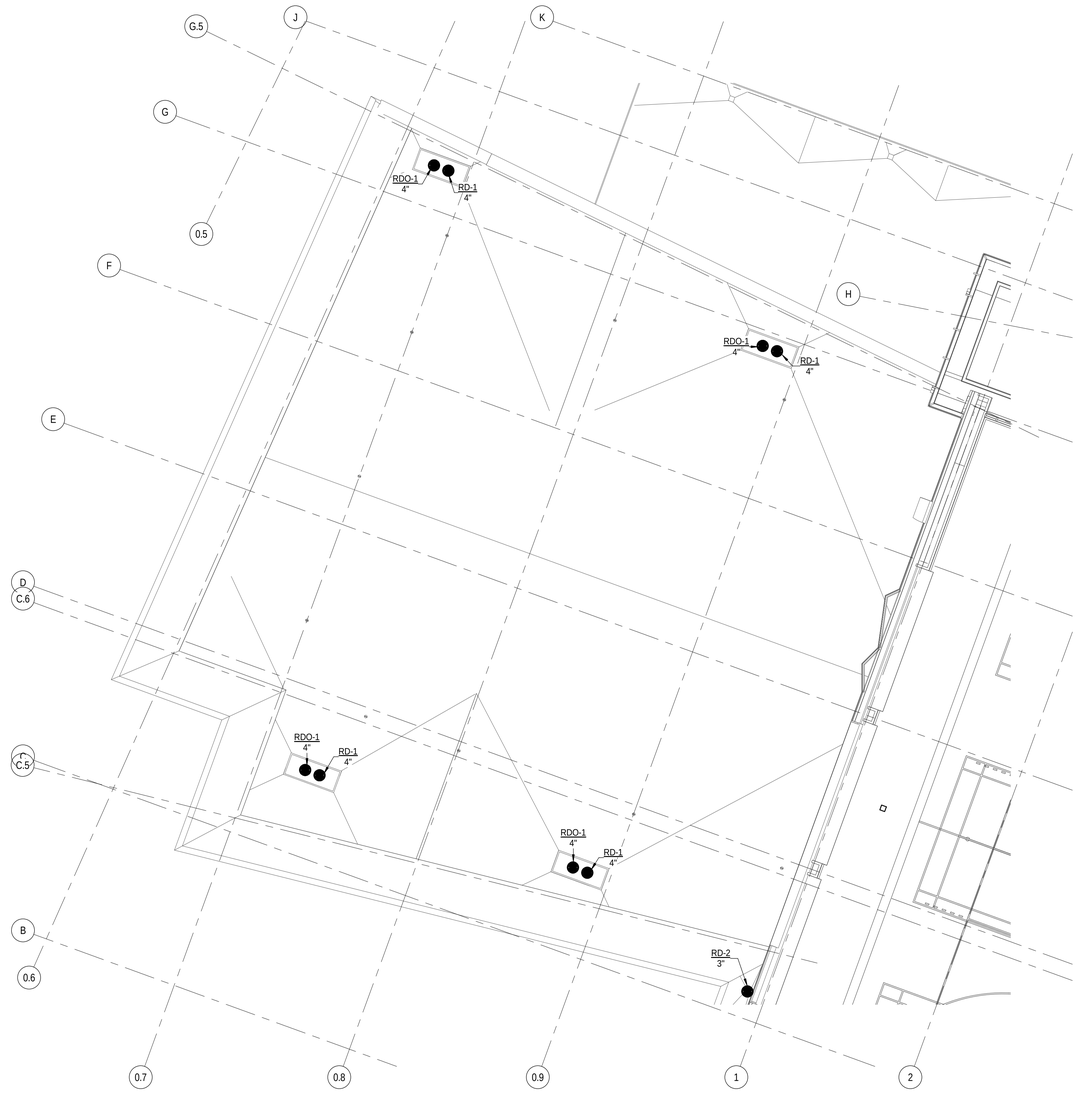


## ROOF ALTERNATE 1 PLUMBING PLAN

0 4' - 0" 8' - 0" 16' - 0"

SCALE: 1/8" = 1'-0"

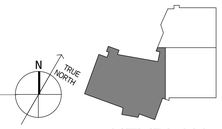


KEYPLAN

MHTN
ARCHITECTS
**MHTN Architects, Inc.**
420 East South Temple
Suite 100
Salt Lake City, Utah 84111
Telephone (801) 595-6700
Telefax (801) 595-6717
www.mhtn.com

**Hastings+Chivetta**
ARCHITECTURE • PLANNING • ENGINEERING
622 Emerson, Suite 200
St. Louis, MO 63141
Tel. 314.863.5717
Fax. 314.863.2823
www.hastingschivetta.com

VAN BOERUM & FRANK ASSOCIATES, INC.
CONSULTING ENGINEERS
Salt Lake City • Logan • St. George • Tempe
330 South 300 East 801.530.3148 T
Salt lake City, UT 84111 801.530.3150 F
VBFA Project 1002

# UNIVERSITY OF UTAH
## STUDENT LIFE CENTER
1836 E. BALLIF ROAD
SALT LAKE CITY, UTAH 84112

©2007 MHTN ARCHITECTS, INC.
Drawings, written material, and design concepts shall not be used or reproduced in whole or part in any form or format without prior written consent of MHTN Architects, Inc. Do not scale drawings. Use given dimensions only. If not shown, verify correct dimensions with the Architect. Contractor shall check and verify all dimensions and conditions at job site.

SEAL

MHTN PROJECT NO.

DRAWN BY: CHECKED BY:

ISSUED:

| NO. | DATE | DESCRIPTION |
|---|---|---|
| | | |

CONTRACTOR TO VERIFY DRAWINGS IN FIELD USE REFLECT LAST REVISION DATE.

| NO. | DATE | DESCRIPTION |
|---|---|---|
| | | |

SHEET NAME

ROOF ALTERNATE 1 PLUMBING PLAN
BID DOCUMENTS
MAY 15, 2013

SHEET NUMBER

PP109

D:__Bim\Local\Mechanical_Central_JRobker.rvt
5/14/2013 12:56:45 PM

## SHEET KEYNOTES

| | |
|---|---|
| 1 | 2" WASTE UP. |

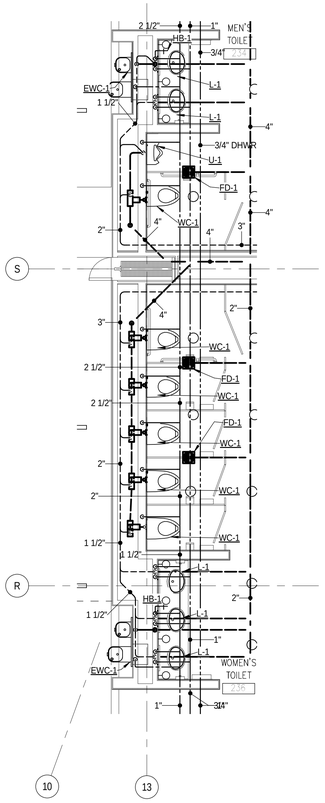


ENLARGED LEVEL 2 PLUMBING PLAN

4

SCALE: 1/4" = 1'-0"

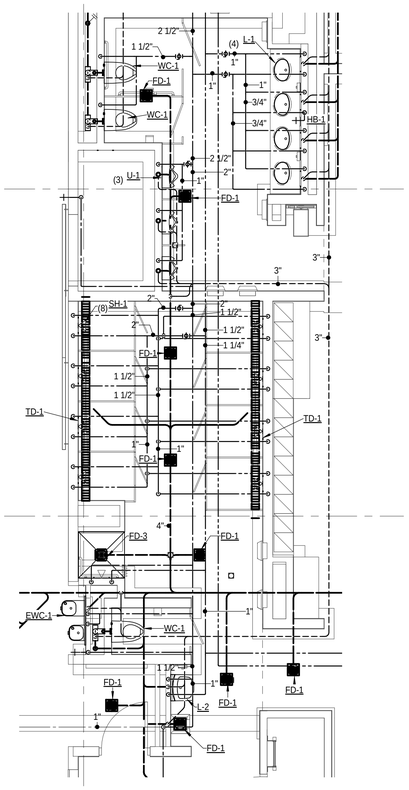


ENLARGED MEN'S SHOWER PLUMBING PLAN

3

SCALE: 1/4" = 1'-0"

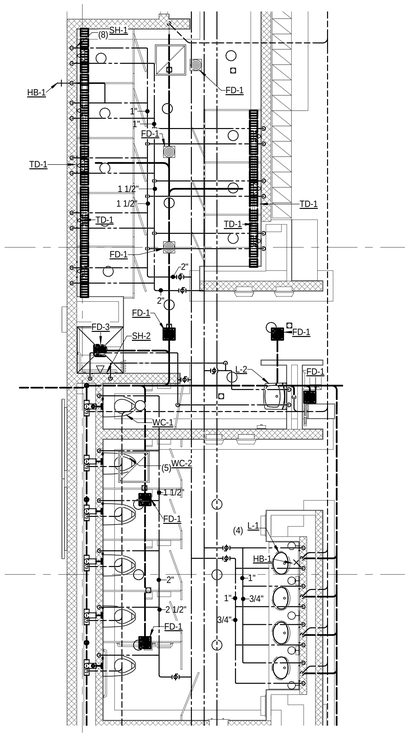


ENLARGED WOMENS SHOWER PLUMBING PLAN

2

SCALE: 1/4" = 1'-0"

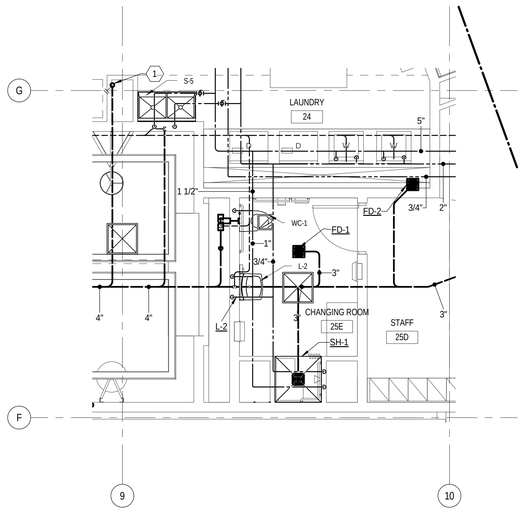


ENLARGED LOWER LEVEL CHANGING ROOM

5

SCALE: 1/4" = 1'-0"

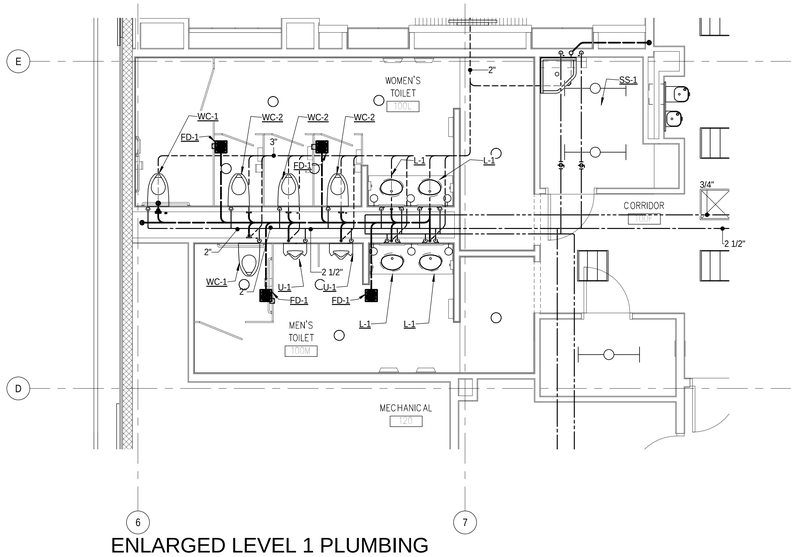


ENLARGED LEVEL 1 PLUMBING PLAN

1

SCALE: 1/4" = 1'-0"


MHTN ARCHITECTS

**MHTN Architects, Inc.**
420 East South Temple
Suite 100
Salt Lake City, Utah 84111
Telephone (801) 595-6700
Telefax (801) 595-6717
www.mhtn.com

**Hastings+Chivetta**
ARCHITECTURE • PLANNING • ENGINEERING
622 Emerson, Suite 200
St. Louis, MO 63141
Tel. 314.863.5717
Fax. 314.863.2823
www.hastingschivetta.com

VAN BOERUM & FRANK ASSOCIATES, INC.
CONSULTING ENGINEERS
Salt Lake City • Logan • St. George • Tempe
330 South 300 East 801.530.3148 T
Salt lake City, UT 84111 801.530.3150 F


# UNIVERSITY OF UTAH
## STUDENT LIFE CENTER
1836 E. BALLIF ROAD
SALT LAKE CITY, UTAH 84112


©2007 MHTN ARCHITECTS, INC.
Drawings, written material, and design concepts shall not be used or reproduced in whole or part in any form or format without prior written consent of MHTN Architects, Inc. Do not scale drawings. Use given dimensions only. If not shown, verify correct dimensions with the Architect. Contractor shall check and verify all dimensions and conditions at job site.


SEAL

MHTN PROJECT NO.

DRAWN BY: CHECKED BY:

ISSUED:

| NO. | DATE | DESCRIPTION |
|---|---|---|

CONTRACTOR TO VERIFY DRAWINGS IN FIELD USE REFLECT LAST REVISION DATE.

| NO. | DATE | DESCRIPTION |
|---|---|---|

SHEET NAME

ENLARGED PLUMBING PLANS

BID DOCUMENTS

MAY 15, 2013

SHEET NUMBER

PP401

D:_BimLocal\Mechanical_Central_JRobker.rvt
5/14/2013 12:56:55 PM

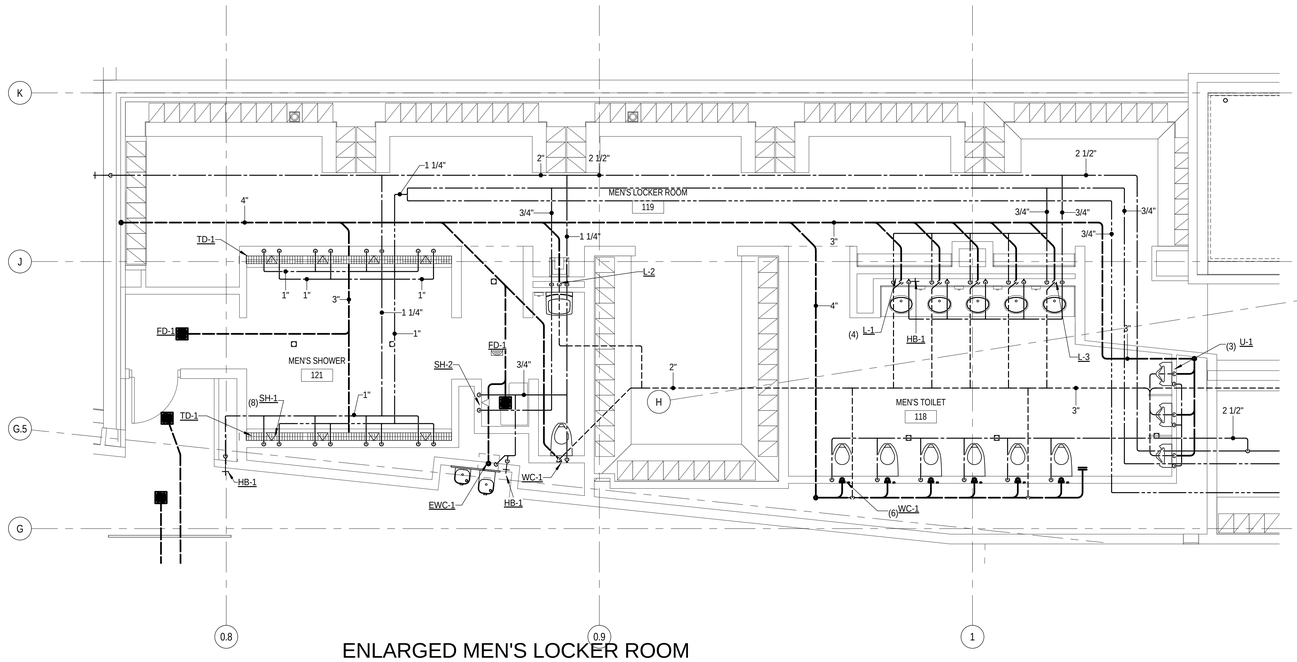


ENLARGED MEN'S LOCKER ROOM PLUMBING ALT #1

1

0' 2'-0" 4'-0" 8'-0"
1/4" =1'-0"

SCALE: 1/4" = 1'-0"

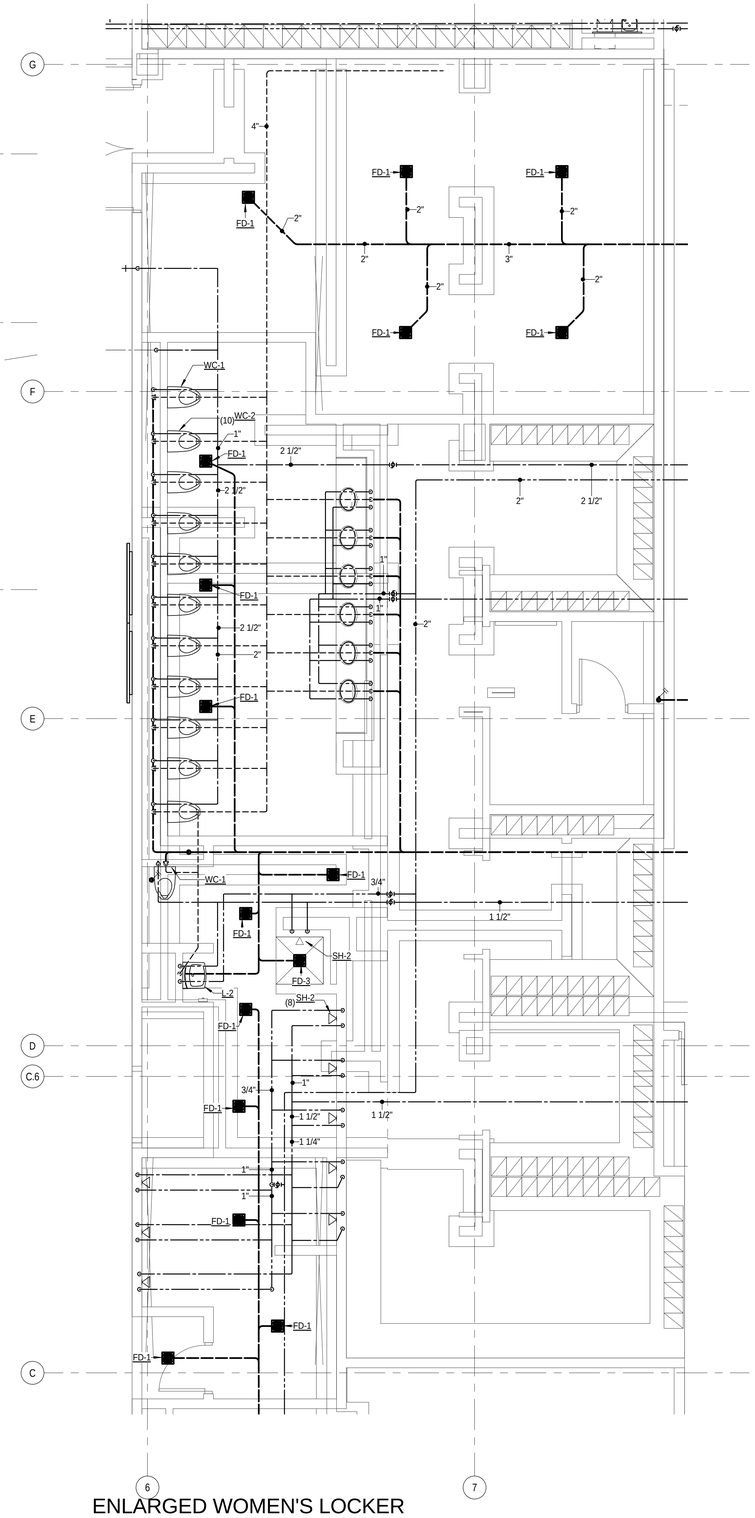


ENLARGED WOMEN'S LOCKER ROOM PLUMBING ALT #1

2

0' 2'-0" 4'-0" 8'-0"
1/4" =1'-0"

SCALE: 1/4" = 1'-0"

MHTN
ARCHITECTS
**MHTN Architects, Inc.**
420 East South Temple
Suite 100
Salt Lake City, Utah 84111
Telephone (801) 595-6700
Telefax (801) 595-6717
www.mhtn.com

**Hastings+Chivetta**
ARCHITECTURE • PLANNING • ENGINEERING
622 Emerson, Suite 200
St. Louis, MO 63141
Tel. 314.863.5717
Fax. 314.863.2823
www.hastingschivetta.com

VAN BOERUM & FRANK ASSOCIATES, INC.
CONSULTING ENGINEERS
Salt Lake City • Logan • St. George • Tempe
330 South 300 East 801.530.3148 T
Salt lake City, UT 84111 801.530.3150 F
VBFA Project 1002

REGISTERED PROFESSIONAL ENGINEER
No. 324030
BRADLY W. ROSENHAN
STATE OF UTAH

# UNIVERSITY OF UTAH
## STUDENT LIFE CENTER
1836 E. BALLIF ROAD
SALT LAKE CITY, UTAH 84112

©2007 MHTN ARCHITECTS, INC.
Drawings, written material, and design concepts shall not be used or reproduced in whole or part in any form or format without prior written consent of MHTN Architects, Inc. Do not scale drawings. Use given dimensions only. If not shown, verify correct dimensions with the Architect. Contractor shall check and verify all dimensions and conditions at job site.

SEAL

MHTN PROJECT NO.

DRAWN BY: CHECKED BY:

ISSUED:

| NO. | DATE | DESCRIPTION |
|---|---|---|

CONTRACTOR TO VERIFY DRAWINGS IN FIELD USE REFLECT LAST REVISION DATE:

| NO. | DATE | DESCRIPTION |
|---|---|---|

SHEET NAME
ENLARGED ALTERNATE 1 PLUMB PLANS
BID DOCUMENTS
MAY 15, 2013

SHEET NUMBER
PP402

D:_Bim\Local\Mechanical_Central_JRobker.rvt
5/14/2013 12:57:00 PM

# SYMBOL LIST

- CEILING SURFACE / PENDANT SUSPENDED FIXTURE
- LINEAR SUSPENDED PENDANT FIXTURE
- LINEAR SUSPENDED PENDANT FIXTURE (EMERGENCY POWER)
- RECESSED DOWNLIGHT
- RECESSED DOWNLIGHT (EMERGENCY POWER)
- WALL MOUNTED LIGHT FIXTURE
- RECESSED WALL MOUNTED LIGHT FIXTURE
- WALL MOUNTED LIGHT FIXTURE (EMERGENCY POWER)
- WALL MOUNTED FLOODLIGHT
- EXIT LIGHT CEILING
- WALL MOUNTED EXIT LIGHT
- GROUND MOUNTED LIGHT FIXTURE
- POLE MOUNTED LIGHT FIXTURE
- DUAL POLE MOUNTED LIGHT FIXTURE
- POLE TOP MOUNTED LIGHT FIXTURE
- RECESSED FLUORESCENT LIGHT FIXTURE
- RECESSED FLUORESCENT LIGHT FIXTURE (EMERGENCY POWER)
- FLUORESCENT STRIP LIGHT FIXTURE
- WALL MOUNTED FLUORESCENT LIGHT FIXTURE
- WALL MOUNTED LIGHT FIXTURE (EMERGENCY POWER)
- EMERGENCY BATTERY LIGHT FIXTURE
- SURFACE FLUORESCENT LIGHT FIXTURE
- SURFACE FLUORESCENT LIGHT FIXTURE (EMERGENCY POWER)
- LIGHT TRACK WITH LIGHT FIXTURES
- S — SINGLE POLE SWITCH
- $^{K}$ — KEY SWITCH
- $^{M}$ — MOMENTARY CONTACT SWITCH
- $^{MK}$ — MOMENTARY CONTACT KEY SWITCH
- $^{3K}$ — 3 - WAY KEY SWITCH
- $^{3}$ — 3 - WAY SWITCH
- $^{PB}$ — PUSHBUTTON SWITCH
- $^{RC}$ — REMOTE CONTROL
- $^{LV}$ — LOW VOLTAGE SWITCH
- $^{LM}$ — LOW VOLTAGE MASTER
- $^{VR}$ — SWITCH WITH VANDAL RESISTANT COVER PLATE
- $^{X}$ — EXPLOSION PROOF
- $^{L}$ — LINE VOLTAGE SENTRY SWITCH
- $^{P}$ — PILOT LIGHT
- $^{T}$ — THERMAL SWITCH
- TS — DIGITAL TIME SWITCH
- D — DIMMER
- OS — OCCUPANCY SENSOR, CEILING MOUNT
- OS — OCCUPANCY SENSOR, WALL MOUNT
- PP — POWER PACK
- SP — SLAVE POWER PACK
- ECU — EMERGENCY CONTROL RELAY UNIT
- DUPLEX RECEPTACLE
- USB — SINGLE RECEPTACLE WITH USB
- DUPLEX RECEPTACLE ISOLATED GROUND
- DUPLEX RECEPTACLE (EMERGENCY POWER)
- DUPLEX RECEPTACLE GFI
- SINGLE RECEPTACLE
- DUPLEX RECEPTACLE, FLUSH CEILING
- DUPLEX RECEPTACLE, FLUSH CEILING ISO GROUND
- QUADRAPLEX RECEPTACLE
- QUADRAPLEX RECEPTACLE ISOLATED GROUND
- QUADRAPLEX RECEPTACLE GFI
- DUPLEX RECEPTACLE, FLUSH IN FLOOR
- COMBO FLOORBOX WITH QUADRAPLEX RECEPT. AND DATA
- COMBO QUADRAPLEX FLUSH IN FLOOR WITH INTERCOM
- COMBO FLOORBOX WITH DUP. RECEPT. AND DATA
- DUPLEX RECEPTACLE, PEDESTAL MOUNTED
- QUADRAPLEX RECEPTACLE, PEDESTAL MOUNTED
- POKE-THRU DEVICE
- RANGE RECEPTACLE
- SPECIAL OUTLET TO MATCH EQUIPMENT PLUG
- SPECIAL OUTLET TO MATCH EQUIPMENT PLUG, FLUSH IN FLOOR
- J — JUNCTION BOX
- J — JUNCTION BOX, FLUSH FLOOR MOUNTED
- 3 — MULTI OUTLET ASSEMBLY
- SURFACE EQUIPMENT CABINET AS NOTED
- RECESSED EQUIPMENT CABINET AS NOTED
- SURFACE ELECTRICAL PANELBOARD
- RECESSED ELECTRICAL PANELBOARD
- R — RELAY
- LIGHTNING ARRESTER
- SB — SPLICEBOX
- PB — PULLBOX

- PC — PHOTO CONTROL
- PS — POWER SUPPLY
- T — TRANSFORMER (FLOOR PLAN)
- T — THERMOSTAT
- M — METER BASE
- NON-FUSED DISCONNECT SWITCH
- F — FUSED DISCONNECT SWITCH
- MANUAL STARTER
- MAGNETIC STARTER
- C — CONTACTOR
- COMBINATION STARTER/NON-FUSED DISCONNECT SWITCH
- F — COMBINATION STARTER/FUSED DISCONNECT SWITCH
- MOTOR CONNECTION
- PUSH BUTTON
- EMERGENCY POWER OFF BUTTON, 46" AFF
- START-STOP BUTTON
- UP-DOWN-STOP BUTTON
- 3 — DATA OUTLET: # INDICATES QTY.; NO DESIGNATION =(2) DATA OUTLET
- 3 — DATA OUTLET - ABOVE COUNTER: # INDICATES QTY.; NO DESIGNATION =(2) DATA OUTLET
- 3 — DATA OUTLET - FLUSH IN FLOOR: # INDICATES QTY.; NO DESIGNATION =(2) DATA OUTLET
- 3 — TELEPHONE OUTLET: # INDICATES QTY.; NO DESIGNATION =(1) TELEPHONE OUTLET
- 3 — TELEPHONE OUTLET - ABOVE COUNTER: # INDICATES QTY.; NO DESIGNATION =(1) TELEPHONE OUTLET
- 3 — TELEPHONE OUTLET - FLUSH IN FLOOR: # INDICATES QTY.; NO DESIGNATION =(1) TELEPHONE OUTLET
- 3D,1P — COMMUNICATIONS OUTLET: D=DATA, P=TELEPHONE, F=FIBER, # INDICATES QTY. NO DESIGNATION=(2) DATA OUTLET, (1) TELEPHONE OUTLET
- 3D,1P — COMMUNICATIONS OUTLET - ABOVE COUNTER D=DATA, P=TELEPHONE, F=FIBER, # INDICATES QTY. NO DESIGNATION=(2) DATA OUTLET, (1) TELEPHONE OUTLET
- 3D,1P — COMMUNICATIONS OUTLET - FLUSH IN FLOOR D=DATA, P=TELEPHONE, F=FIBER, # INDICATES QTY. NO DESIGNATION=(2) DATA OUTLET, (1) TELEPHONE OUTLET
- WIRELESS LAN TRANSMITTER
- 19" TELECOM EQUIPMENT RACK WITH VERTICAL WIRE MGMT.
- 19" TELECOM EQUIPMENT RACK
- S# — CEILING SPEAKER, RECESSED (# INDICATES TYPE)
- #S — WALL SPEAKER (# INDICATES TYPE)
- #M — MICROPHONE RECEPTACLE, WALL (# INDICATES TYPE)
- M — MICROPHONE RECEPTACLE, FLUSH FLOOR
- TV — T.V. OUTLET
- # — T.V.SECURITY CAMERA (# INDICATES TYPE)
- # — ROUND T.V.SECURITY CAMERA (# INDICATES TYPE)
- CLOCK
- WALL MOUNTED CLOCK
- PROGRAM HORN
- BUZZER
- BELL
- CHIME
- IC — INTERCOM STATION, SECURITY
- CR — CARD READER
- K — KEYPAD
- MS — MOTION SENSOR, CEILING MOUNTED
- MS — MOTION SENSOR, WALL MOUNTED

- FACP — FIRE ALARM CONTROL PANEL
- FAVE — FIRE ALARM VOICE EVACUATION PANEL
- ANN — FIRE ALARM ANNUNCIATOR
- FV — FIRE ALARM VISUAL SIGNAL
- F — FIRE ALARM HORN
- FV — FIRE ALARM VISUAL SIGNAL WITH HORN
- SS — FIRE ALARM VISUAL SIGNAL WITH SPEAKER
- F — FIRE ALARM MANUAL PULL STATION
- Z — FIRE ALARM FSD CONTROL RELAY
- F — FIRE ALARM CHIME
- FV — FIRE ALARM CHIME / VISUAL
- F — FIRE ALARM BELL
- S — DUCT DETECTOR
- S — PHOTO ELECTRIC SMOKE DETECTOR
- R — RATE OF RISE/THERMAL DETECTOR
- H — HEAT DETECTOR
- FS — FLOW SWITCH
- PS — FIRE ALARM PRESSURE SWITCH
- TS — O.S. & Y. VALVE TAMPER SWITCH
- CM — FIRE ALARM CONTROL MODULE
- MM — FIRE ALARM MONITOR MODULE
- FSD — FIRE SMOKE DAMPER
- DC — DOOR CONTACT
- ES — ELECTRIC STRIKE
- GA — GENERATOR ANNUNCIATOR
- NAC — NOTIFICATION APPLIANCE CIRCUIT EXTENDER
- RFCC — REMOTE FIRE COMMAND CENTER
- ML — MAGNETIC LOCK
- RA — RESCUE ANNUNCIATOR STATION
- RC — RESCUE CALL STATION
- RX — SECURITY REQUEST TO EXIT
- MAGNETIC DOOR HOLDER (WALL OR FLOOR MOUNTED)
- # — DRAWING NOTE DESIGNATION
- # — LIGHT FIXTURE DESIGNATION
- FLEXIBLE CONDUIT
- CONDUIT CONCEALED IN WALLS, CEILING OR FLOOR
- CONDUIT CONCEALED IN SLAB, UNDERGROUND OR UNDERFLOOR
- EXISTING CONDUIT
- GROUND WIRE
- STUB UP
- STUB DOWN
- STUB OUT
- ISOLATED GROUND CONDUCTOR / EQUIPMENT GROUND CONDUCTOR
- PHASE CONDUCTOR / NEUTRAL CONDUCTOR
- PHASE CONDUCTOR / NEUTRAL CONDUCTOR / PROVIDE GREEN GROUND WIRE / SIZED PER NEC IN ALL RACEWAYS
- AHU-1 — MECHANICAL EQUIPMENT DESIGNATION
- CABLE TRAY FOR DATA TELEPHONE AND SOUND/PAGING ONLY (NO CONTROL WIRING)
- TRANSFORMER (ONE-LINES)
- BREAKER
- MANHOLE
- 600A DEADBREAK MOLDED PRODUCT TERMINATION (15KV)
- 600A DEADBREAK MOLDED PRODUCT SPLICE (15KV)
- G&W UNIVERSAL CE TERMINATION (15KV)
- G&W UNIVERSAL CE SPLICE (15KV)
- 200A LOADBREAK MOLDED PRODUCT TERMINATION (15KV)
- MEDIUM VOLTAGE SPLICE (15KV HEATSHRINK OR LOADSHRINK)

# ABBREVIATIONS

| | |
|---|---|
| AFF | ABOVE FINISHED FLOOR |
| AIC | AMP INTERRUPTING CURRENT (SYMMETRICAL) |
| AL | ALUMINUM |
| BG | BELOW GRADE |
| C | CONDUIT |
| CFCI | CONTRACTOR FURNISHED CONTRACTOR INSTALLED |
| CLG | CEILING |
| CTR | ABOVE COUNTER DEVICE |
| CKT | CIRCUIT |
| CO | CONDUIT ONLY |
| CU | COPPER |
| EM | EMERGENCY |
| (E) | EXISTING |
| EWC | ELECTRIC WATER COOLER |
| EWH | ELECTRIC WATER HEATER |
| (F) | FUTURE |
| FA | FIRE ALARM |
| FACP | FIRE ALARM CONTROL PANEL |
| FLA | FULL LOAD AMPS |
| GFI | GROUND FAULT INTERRUPTER |
| GFP | GROUND FAULT PROTECTOR |
| GND | GROUND |
| GRC | GALVANIZED RIGID CONDUIT |
| IG | ISOLATED GROUND |
| LTG | LIGHTING |
| MCB | MAIN CIRCUIT BREAKER |
| MCC | MOTOR CONTROL CENTER |
| MLO | MAIN LUGS ONLY |
| (N) | NEW |
| NAC | NOTIFICATION APPLIANCE CIRCUIT |
| NIC | NOT IN CONTRACT |
| NL | NIGHT LIGHT |
| NTS | NOT TO SCALE |
| OFCI | OWNER FURNISHED CONTRACTOR INSTALLED |
| OFOI | OWNER FURNISHED OWNER INSTALLED |
| PNL | PANEL |
| (R) | RELOCATE |
| S | SWITCHED |
| SPD | SURGE PROTECTIVE DEVICE |
| ST | SHUNT TRIP |
| TYP | TYPICAL |
| UNO | UNLESS NOTED OTHERWISE |
| VR | VANDAL RESISTANT |
| WG | WIRE GUARD |
| WP | WEATHER PROOF |
| (X) | DEMOLISH/DELETE |
| XFMR | TRANSFORMER |

# AUDIO VISUAL SYMBOLS

- EQUIPMENT CABINET (# INDICATES TYPE)
- MV# — MASTER VOLUME (# INDICATES TYPE)
- VC# — VOLUME CONTROL (# INDICATES TYPE)
- PROGRAM HORN
- H — HDMI INPUT
- V — VGA INPUT
- VH — VGA/HDMI INPUT COMBO
- A — AMPLIFIER (FLOOR PLAN)
- S — SPLITTER (FLOOR PLAN)
- C — CAMERA INPUT
- DC — DIRECTIONAL COUPLER
- AP — AMPLIFIER(ONE-LINE)
- SP — SPLITTER(ONE-LINE)
- CP1 — CUSTOM PLATE (# INDICATES TYPE)
- -RG8- — ANTENNA CABLE
- -CAT5- — CAT5 CABLE
- -CAT6- — CAT6 CABLE
- -S- — SPEAKER CABLE
- -M- — MICROPHONE CABLE
- -IC- — INTERCOM CABLE

NOTE: NOT ALL SYMBOLS USED ON DRAWINGS.

SHEET INDEX


| SHEET # | SHEET NAME |
|---|---|
| EG100 | SYMBOLS, ABBREVIATIONS AND SHEET INDEX |
| ED100.1 | ELECTRICAL SITE DEMOLITION |
| ES100.2 | ENLARGED ELECTRICAL SITE PLAN |
| ES100.3 | ENLARGED ELECTRICAL SITE PLAN |
| ES100.4 | LIGHTNING PROTECTION PLAN |
| ES100 | SITE LIGHTING PLAN BASE BID |
| ES100.5 | ENLARGED ELECTRICAL TUNNEL PLAN |
| ES100A | SITE LIGHTING PLAN ALTERNATE |
| ES500 | MANHOLE DETAILS |
| ES501 | ELECTRICAL SITE DETAILS |
| EL100.A | LOWER LEVEL LIGHTING AREA A |
| EL100.B | LOWER LEVEL LIGHTING AREA B |
| EL100.C | LOWER LEVEL LIGHTING AREA C |
| EL200.C1 | LOWER LEVEL LIGHTING - ALTERNATE 1A |
| EL200.C2 | LOWER LEVEL LIGHTING - ALTERNATE 1B |
| EL101.A | LEVEL 1 LIGHTING AREA A |
| EL101.B | LEVEL 1 LIGHTING AREA B |
| EL101.C | LEVEL 1 LIGHTING AREA C |
| EL201.B | ALTERNATE 3 LIGHTING AREA B |
| EL201.C1 | LEVEL 1 LIGHTING ATERNATE 1A |
| EL201.C2 | LEVEL 1 LIGHTING ALTERNATE 1B |
| EL102.A | LEVEL 2 LIGHTING AREA A |
| EL102.B | LEVEL 2 LIGHTING AREA B |
| EL102.C | LEVEL 2 LIGHTING AREA C |
| EL103.A | LEVEL 3 LIGHTING AREA A |
| EL103.B | LEVEL 3 LIGHTING AREA B |
| EL103.C | LEVEL 3 LIGHTING AREA C |
| EL501 | ELEVATION STAIRWELL LIGHTING |
| EL601 | LUMINARE SCHEDULE |
| EL602 | LUMINARE SCHEDULE |
| EL701 | LIGHTING DETAILS |
| EL702 | LIGHTING DETAILS |
| EL703 | LIGHTING CONTROL SYSTEM RISER DIAGRAM |
| EL704 | LIGHTING CONTROL DETAILS |
| EP100.A | LOWER LEVEL POWER PLAN AREA A |
| EP100.B | LOWER LEVEL POWER PLAN AREA B |
| EP100.C | LOWER LEVEL POWER PLAN AREA C |
| EP200.C1 | LOWER LEVEL POWER PLAN ALTERNATE 1A |
| EP200.C2 | LOWER LEVEL POWER PLAN ALTERNATE 1B |
| EP101.A | LEVEL 1 POWER PLAN AREA A |
| EP101.B | LEVEL 1 POWER PLAN AREA B |
| EP101.C | LEVEL 1 POWER PLAN AREA C |
| EP201.B | POWER PLAN AREA B ALTERNATE 3 |
| EP102.A | LEVEL 2 POWER PLAN AREA A |
| EP102.B | LEVEL 2 POWER PLAN AREA B |
| EP102.C | LEVEL 2 POWER PLAN AREA C |
| EP103.A | LEVEL 3 POWER PLAN AREA A |
| EP103.B | LEVEL 3 POWER PLAN AREA B |
| EP103.C | LEVEL 3 POWER PLAN AREA C |
| EP104.A | ROOF POWER PLAN AREA A |
| EP104.B | ROOF POWER PLAN AREA B |
| EP104.C | ROOF POWER PLAN AREA C |
| EP130 | STORAGE SHED ELECTRICAL PLANS |
| EP201.C | LEVEL 1 POWER ATERNATE 1 |
| EP204.C | ROOF POWER PLAN AREA C ALT 1 |
| EP501 | ENLARGED ELECTRICAL AND DATA ROOMS |
| EP502 | ENLARGED LOWER LEVEL ROOMS |
| EP503 | POWER PLANS ENLARGED VIEWS |
| EP504 | ENLARGED U. OF U. CREDIT UNION |
| EP600 | ONE-LINE DIAGRAM - 480V |
| EP602 | EMERGENCY ONE-LINE DIAGRAM |
| EP603 | PANEL SCHEDULES LOWER LEVEL |
| EP604 | PANEL SCHEDULES LOWER LEVEL |
| EP605 | PANEL SCHEDULES LEVEL 1 |
| EP606 | PANEL SCHEDULES LEVEL 2 |
| EP607 | PANEL SCHEDULES LEVEL 3 |
| EP609 | ELECTRICAL SCHEDULES |
| EP608 | PANEL SCHEDULES ROOF |
| EP601 | ONE LINE DIAGRAM - 208V |
| EP701 | ELECTRICAL DETAILS |
| EY100.A | LOWER LEVEL SYSTEMS PLAN AREA A |
| EY100.B | LOWER LEVEL SYSTEMS PLAN AREA B |
| EY100.C | LOWER LEVEL SYSTEMS PLAN AREA C |
| EY200.C1 | LOWER LEVEL SYSTEMS PLAN ALTERNATE 1A |
| EY200.C2 | LOWER LEVEL SYSTEMS PLAN ALTERNATE 1B |
| EY101.A | LEVEL 1 SYSTEMS PLAN AREA A |
| EY101.B | LEVEL 1 SYSTEMS PLAN AREA B |
| EY101.C | LEVEL 1 SYSTEMS PLAN AREA C |
| EY201.B | SYSTEMS PLAN AREA B ALTERNATE 3 |
| EY102.A | LEVEL 2 SYSTEMS PLAN AREA A |
| EY102.B | LEVEL 2 SYSTEMS PLAN AREA B |
| EY102.C | LEVEL 2 SYSTEMS PLAN AREA C |
| EY103.A | LEVEL 3 SYSTEMS PLAN AREA A |
| EY103.B | LEVEL 3 SYSTEMS PLAN AREA B |
| EY103.C | LEVEL 3 SYSTEMS PLAN AREA C |
| EY500 | ENLARGED SYSTEMS FLOOR PLANS |
| EY201.C | LEVEL 1 SYSTEMS ATERNATE 1 |
| EY300 | LOWER LEVEL CABLETRAY PLAN |
| EY301 | LEVEL 1 CABLETRAY PLAN |
| EY302 | LEVEL 2 CABLETRAY PLAN |
| EY303 | LEVEL 3 CABLETRAY PLAN |
| EY601 | TELECOM RISER DIAGRAM |
| EY602 | MDF AND IDF ROOM LAYOUTS |
| EY603 | FIRE ALARM RISER DIAGRAM |
| EY604 | SECURITY RISER DIAGRAM |
| EY605 | ACCESS CONTROL DETAIL |
| EY705 | A/V DETAILS |
| EY706 | A/V DETAILS |
| EY707 | A/V DETAILS |
| EY709 | A/V EQUIPMENT SCHEDULES |
| EY710 | A/V EQUIPMENT SCHEDULES |
| EY711 | A/V EQUIPMENT SCHEDULES |
| EY712 | A/V EQUIPMENT SCHEDULES |
| EY713 | A/V EQUIPMENT SCHEDULES |
| EY714 | A/V EQUIPMENT SCHEDULES |
| EY715 | A/V EQUIPMENT SCHEDULES |



MHTN ARCHITECTS
**MHTN Architects, Inc.**
420 East South Temple
Suite 100
Salt Lake City, Utah 84111
Telephone (801) 595-6700
Telefax (801) 595-6717
www.mhtn.com

**Hastings+Chivetta**
ARCHITECTURE • PLANNING • ENGINEERING
622 Emerson, Suite 200
St. Louis, MO 63141
Tel. 314.863.5717
Fax. 314.863.2823
www.hastingschivetta.com

BUILDING OFFICIAL STAMP

Ken Garner Engineering, Inc.
Electrical Engineering Consultants, Inc.
102 West 500 South, Suite 225
Salt Lake City, Utah 84101
P. 801.328.8800
F. 801.328.8802
Contact: Paris LeLaCheur
Project #: 2010-117.00


UNIVERSITY OF UTAH
STUDENT LIFE CENTER
1836 E. BALLIF ROAD
SALT LAKE CITY, UTAH 84112

SEAL

MHTN PROJECT NO. 2010562.00
DRAWN BY: Author CHECKED BY: Checker

ISSUED:

| NO. | DATE | DESCRIPTION |
|---|---|---|

CONTRACTOR TO VERIFY DRAWINGS IN FIELD USE REFLECT LAST REVISION DATE.

| NO. | DATE | DESCRIPTION |
|---|---|---|

SHEET NAME
SYMBOLS, ABBREVIATIONS AND SHEET
BID DOCUMENTS
May 15, 2013

SHEET NUMBER
EG100

C:\Users\brown.KGE\Documents\2010-117.00_KGE_STUDENT LIFE_ELECTRICAL_CENTERAL_2012_brown.rvt
5/14/2013 5:44:24 PM

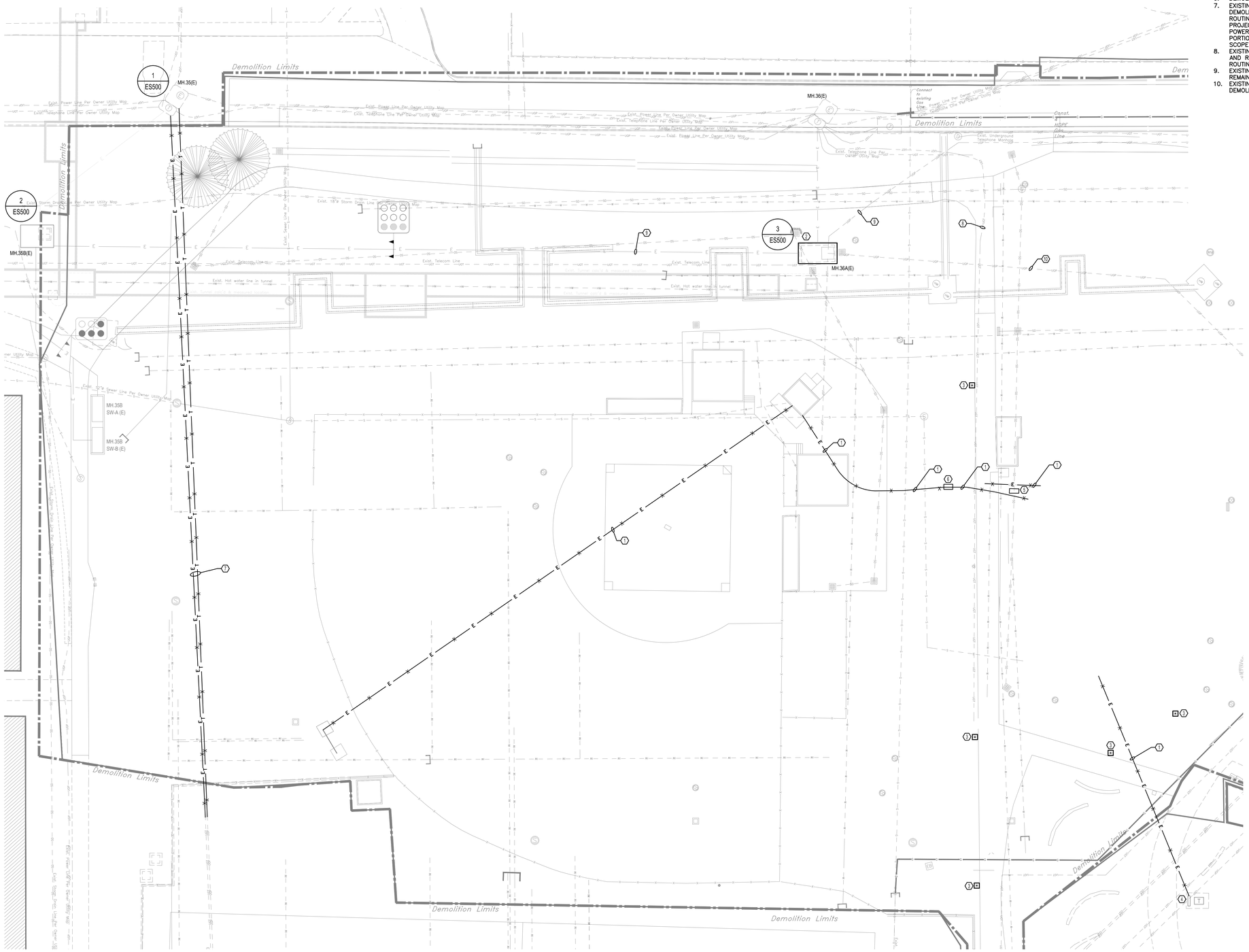


1 ED100.1 DEMOLITION ELECTRICAL SITE PLAN

SCALE: 1" = 20'

KEYED NOTES:

1. EXCAVATE AND DEMOLISH ABANDONED UNDERGROUND CONDUIT.
2. SEE ONE LINE DIAGRAM ON SHEET EP600 FOR 600 MU SPLICE LOCATIONS.
3. DEMOLISH EXISTING LIGHT POLE, BASE, FIXTURE, CONDUIT AND WIRE BACK TO NEAREST FIXTURE TO REMAIN. IF NO FIXTURES REMAIN. DEMOLISH BACK TO SOURCE.
4. TRANSFORMER AND BREAKER ENCLOSURE TO BE DEMOLISHED UNDER ANOTHER PROJECT SCOPE.
5. EXISTING IRRIGATION CONTROLLERS TO BE RELOCATED. COORDINATE WITH LANDSCAPE ARCHITECT FOR EXACT LOCATION.
6. DEMOLISH EXISTING ELECTRICAL BOX.
7. EXISTING TELECOM/POWER DUCT BANK TO BE DEMOLISHED AND RELOCATED. LOCATION AND ROUTING SHALL BE DECIDED UNDER ANOTHER PROJECT. COST OF RELOCATING DUCT BANK AND POWER ALSO UNDER OTHER PROJECT. TELECOM PORTION SHALL BE COORDINATED UNDER THIS SCOPE AND USE SAME TRENCHING AS POWER.
8. EXISTING TELECOM DUCT BANK TO BE DEMOLISHED AND RELOCATED. SEE SHEET ES100.2 FOR NEW ROUTING.
9. EXISTING DUCT BANK AND 600MV FEEDER TO REMAIN AND BE PROTECTED. FEEDS FROM MH.36B.
10. EXISTING ABANDONED ELECTRICAL DUCT BANK TO BE DEMOLISHED.

MHTN
ARCHITECTS
**MHTN Architects, Inc.**
420 East South Temple
Suite 100
Salt Lake City, Utah 84111
Telephone (801) 595-6700
Telefax (801) 595-6717
www.mhtn.com

622 Emerson, Suite 200
St. Louis, MO 63141
Tel. 314.863.5717
Fax. 314.863.2823
www.hastingschivetta.com

Ken Garner Engineering, Inc.
Electrical Engineering Consultants, Inc.
102 West 500 South, Suite 225
Salt Lake City, Utah 84101
P. 801.328.8800
F. 801.328.8802
Contact: Paris LeLaCheur
Project #:2010-117.00

# UNIVERSITY OF UTAH
## STUDENT LIFE CENTER
1836 E. BALLIF ROAD
SALT LAKE CITY, UTAH 84112

SEAL

MHTN PROJECT NO. 2010562.00

DRAWN BY: KGE CHECKED BY: KGE

ISSUED:

| NO. | DATE | DESCRIPTION |
|---|---|---|

CONTRACTOR TO VERIFY DRAWINGS IN FIELD USE REFLECT LAST REVISION DATE.

| NO. | DATE | DESCRIPTION |
|---|---|---|

SHEET NAME

ELECTRICAL DEMOLITION SITE PLAN
BID DOCUMENTS
MAY 15, 2013

SHEET NUMBER

ED100.1

C:\Users\hunzaga.KGE\Documents\2010-117.00_KGE_STUDENT LIFE_ELECTRICAL_CENTERAL_2012_hunzaga.rvt
2/22/2013 1:47:36 PM

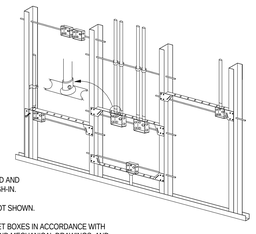

NOTES:

1. TYPICAL FOR WOOD AND METAL STUD ROUGH-IN.
2. PLASTER RINGS NOT SHOWN.
3. LOCATE ALL OUTLET BOXES IN ACCORDANCE WITH ARCHITECTURAL AND MECHANICAL DRAWINGS, AND WITH ALL APPLICABLE SHOP DRAWINGS.
4. IN ACCORDANCE WITH UBC 4303 OUTLETS ON OPPOSITE SIDES OF WALLS OR PARTITIONS IN THE SAME STUD SPACE MUST BE SEPARATED BY A MINIMUM OF 24" HORIZONTAL DISTANCE.

## 1 EP701 TYPICAL ROUGH IN REQUIREMENTS

SCALE | NTS

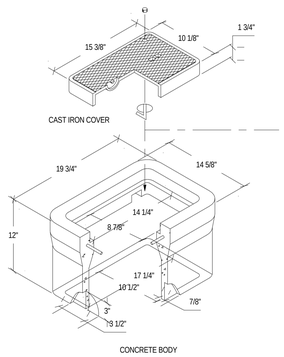


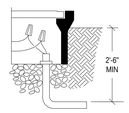


## 2 EP701 CONCRETE J-BOX DETAIL

SCALE | NTS

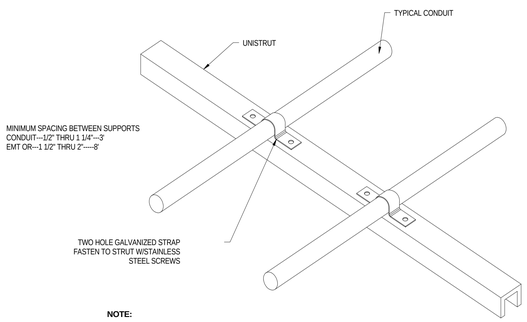


**NOTE:**

1. IF CONDUIT PIPING LAYOUT IS NOT SHOWN, GROUP CONDUIT/PIPE ROUTE
2. FOR MINIMUM SUPPORTS UNDER ROOF COORDINATE WITH ALL TRADES

## 3 EP701 CONDUIT \ PIPE SUPPORT

SCALE | NTS

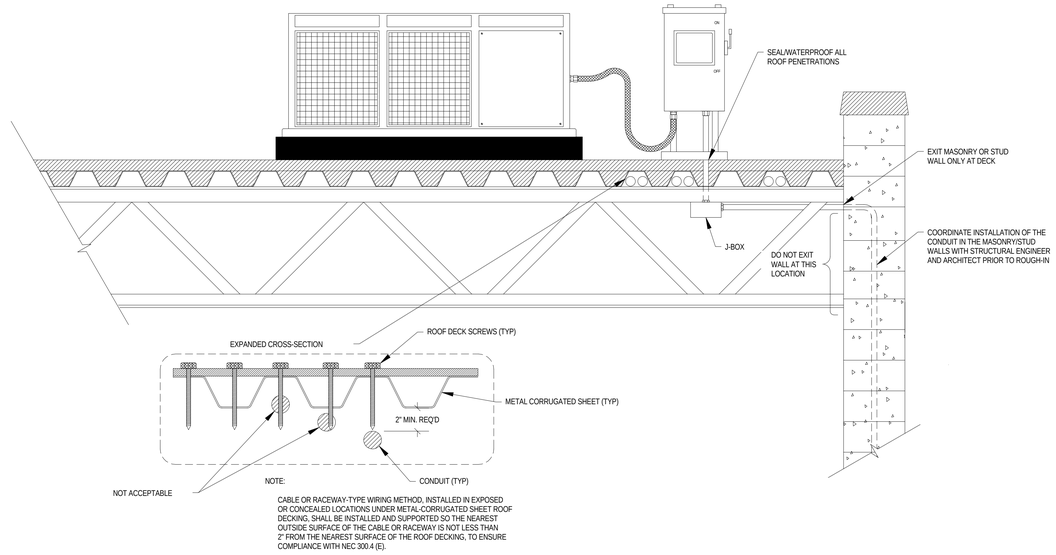


CABLE OR RACEWAY-TYPE WIRING METHOD, INSTALLED IN EXPOSED OR CONCEALED LOCATIONS UNDER METAL-CORRUGATED SHEET ROOF DECKING, SHALL BE INSTALLED AND SUPPORTED SO THE NEAREST OUTSIDE SURFACE OF THE CABLE OR RACEWAY IS NOT LESS THAN 2" FROM THE NEAREST SURFACE OF THE ROOF DECKING, TO ENSURE COMPLIANCE WITH NEC 300.4 (E).

## 4 EP701 RACEWAYS INSTALLED UNDER ROOF DECKING TYPICAL INSTALLATION

SCALE | NTS

(OPEN STRUCTURE, LAY IN CEILING, HARD CEILING)

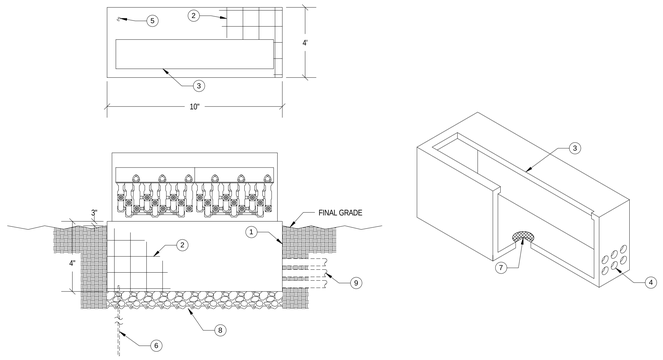


1. CONCRETE VAULT TO BE 4" THICK ON ALL SIDES. DIMENSIONS ARE TO BE 48" X 48" x THE LENGTH NECESSARY TO ACCOMMODATE SWITCH. TOP OF SLAB IS TO PROJECT 3" ABOVE FINISHED GRADE.
2. #4 REBAR AT 12" ON CENTER MAXIMUM SPACING AND PLACED IN THE CENTER OF CONCRETE SLAB.
3. KNOCKOUT IS TO BE 20" X FULL LENGTH OF SWITCH.
4. 5" KNOCKOUT(S) FOR FEEDER ENTRANCE INTO VAULT. TO BE LOCATED TOWARD THE MIDDLE AND BOTTOM OF THE WALL. QUANTITY AS REQUIRED.
5. 2 1/2" KNOCKOUT FOR GROUND ROD TO BE LOCATED IN CORNER
6. 10' GROUND ROD
7. 12" DRAIN WITH GRATE
8. 12" MINIMUM OF 3/4" MINUS GRAVEL BENEATH VAULT
9. 5" CONDUIT(S) FOR FEEDER(S). QUANTITY AS REQUIRED

## 5 EP701 ELECTRICAL SWITCH CONCRETE VAULT

SCALE | NTS

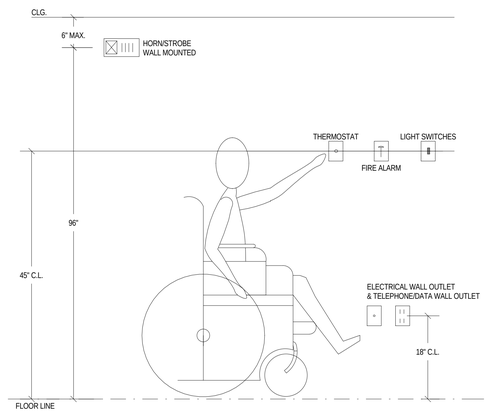


## 6 EP701 HANICAPPED MOUNTING HEIGHTS FOR ELECTRICAL DEVICES

SCALE | NTS


MHTN
ARCHITECTS
**MHTN Architects, Inc.**
420 East South Temple
Suite 100
Salt Lake City, Utah 84111
Telephone (801) 595-6700
Telefax (801) 595-6717
www.mhtn.com

**Hastings+Chivetta**
ARCHITECTURE • PLANNING • ENGINEERING
622 Emerson, Suite 200
St. Louis, MO 63141
Tel. 314.863.5717
Fax. 314.863.2623
www.hastingschivetta.com

BUILDING OFFICIAL STAMP
Ken Garner
Engineering, Inc.
Electrical Engineering Consultants, Inc.
102 West 500 South, Suite 225
Salt Lake City, Utah 84101
P. 801.328.8800
F. 801.328.8802
Contact: Paris LeLaCheur
Project #: 2010-117.00


# UNIVERSITY OF UTAH
# STUDENT LIFE CENTER
1836 E. BALLIF ROAD
SALT LAKE CITY, UTAH 84112

SEAL

MHTN PROJECT NO. 2010562.00

DRAWN BY: KGE CHECKED BY: KGE

ISSUED:

| NO. | DATE | DESCRIPTION |
|---|---|---|
| | | |

CONTRACTOR TO VERIFY DRAWINGS IN FIELD USE REFLECT LAST REVISION DATE.

| NO. | DATE | DESCRIPTION |
|---|---|---|
| | | |

SHEET NAME
ELECTRICAL DETAILS

BID DOCUMENTS
May 15, 2013

SHEET NUMBER
EP701

C:\Users\tbrown.KGE\Documents\2010-117.00_KGE_STUDENT LIFE_ELECTRICAL_CENTERAL_2012_tbrown.rvt
5/14/2013 5:57:09 PM

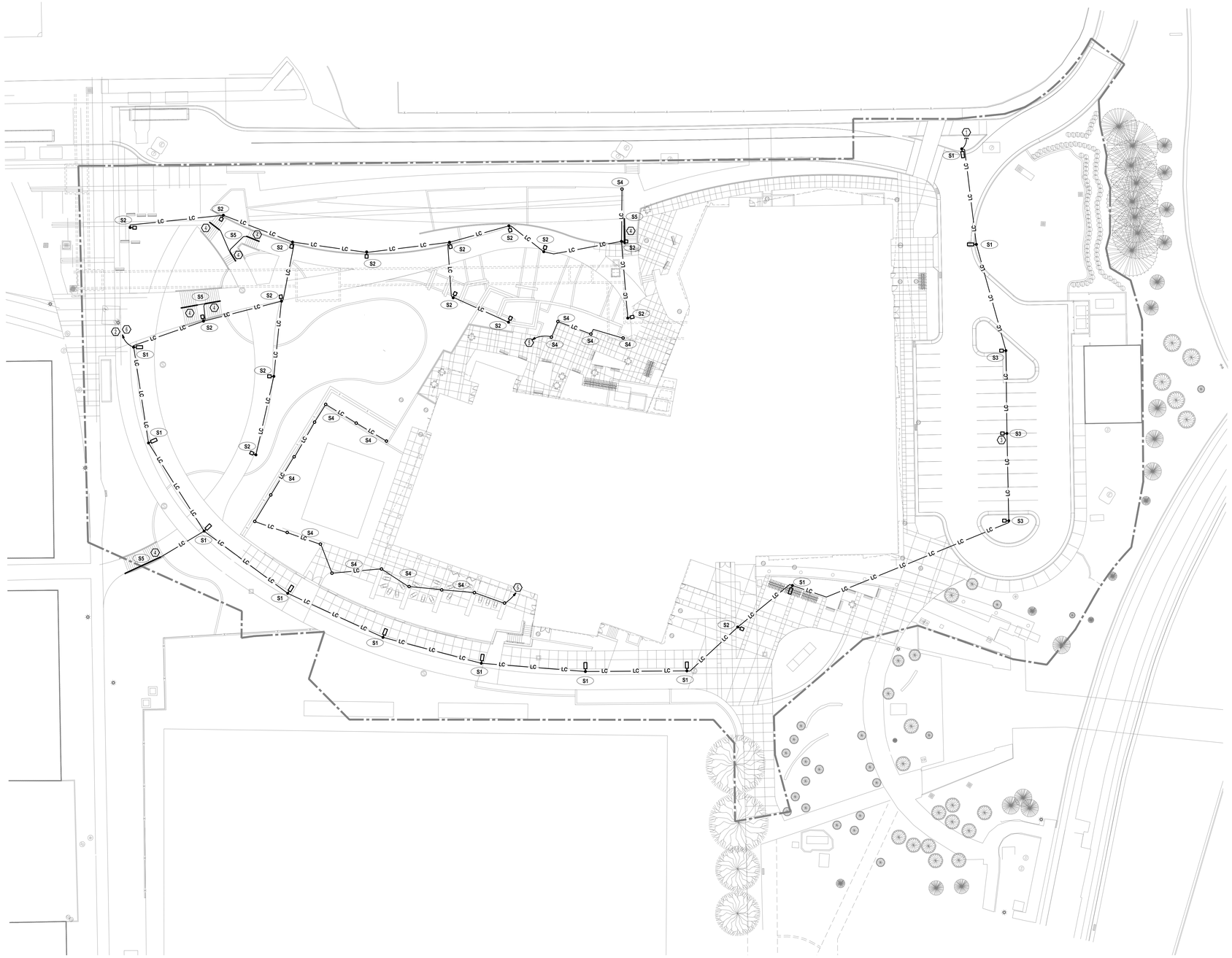

1 ELECTRICAL SITE PLAN BASE BID

0 15' 30' 60'

SCALE: 1" = 30'-0"

**KEYED NOTES - SHEET ES101**

1. PROVIDE 1-1/4" CONDUIT FROM POLE BASE STUBBED OUT A MINIMUM OF 5' IN DIRECTION SHOWN FOR CIRCUITING TO FUTURE LIGHT POLE. PROVIDE CAP ON END OF CONDUIT.
2. PROVIDE 1-1/4" CONDUIT FROM POLE BASE RUN BENEATH SIDEWALK AND CONNECT TO EXISTING HPER LIGHTING CIRCUITS AT EXISTING SITE FIXTURE POLE BASE. EXTEND EXISTING 1-1/4" CONDUIT AND #6 CONDUCTORS TO NEW SITE LIGHTING FIXTURES.
3. PROVIDE AND INSTALL POLE BASES FOR ALL SITE LIGHTING FIXTURES. SEE POLE BASE DETAILS FOR WALKWAY, PARKING AND BOLLARD LIGHTING FIXTURE BASES (TYPICAL)
4. LED LIGHTED HANDRAILS WITH REMOTE ELECTRONIC DRIVERS INSTALLED IN FLUSH WP ENCLOSURE. PROVIDE ALL NECESSARY CONDUIT, WIRE AND ACCESSORIES FOR A COMPLETE INSTALLATION. SEE ARCHITECTURAL DRAWINGS FOR EXACT LOCATIONS, LENGTHS AND REQUIREMENTS.
5. CONNECT TO BUILDING LIGHTING CONTROL PANEL.
6. EXISTING HPER MALL SITE FIXTURE WITH EXISTING SITE LIGHTING CIRCUITS.

**GENERAL NOTES - SHEET ES101**

A. INFORMATION SHOWN COMES FROM MULTIPLE SOURCES. IT SHALL BE THE RESPONSIBILITY OF THE CONTRACTOR TO FIELD VERIFY ALL EXISTING CONDITIONS.
B. SITE LIGHTING SHALL BE CONNECTED TO EXISTING HPER MALL LIGHTING DISTRIBUTION PANEL PH1 THROUGH EXISTING LIGHTING CONTACTOR LC-2.
C. SITE LIGHTING FIXTURES ARE TO BE CONNECTED TO ALTERNATE PHASES AND THE LOAD IS TO BE BALANCED ACROSS ALL THREE PHASES. SEE SITE LIGHTING CIRCUIT DETAIL FOR ADDITIONAL REQUIREMENTS.

| | | |
|---|---|---|
| 1. | PARKING AREA | 24974.46 SF |
| 2. | WALKWAY AREA | 48076.17SF |
| 3. | ILLUMINATED LENGTH OF FACADE WALL | 862'-2 $\frac{1}{16}$" |

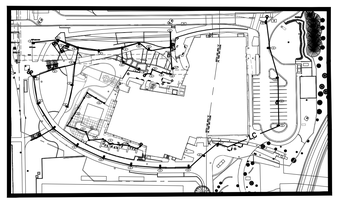

KEY PLAN


MHTN ARCHITECTS
**MHTN Architects, Inc.**
420 East South Temple
Suite 100
Salt Lake City, Utah 84111
Telephone (801) 595-6700
Telefax (801) 595-6717
www.mhtn.com

622 Emerson, Suite 200
St. Louis, MO 63141
Tel. 314.863.5717
Fax. 314.863.2823
www.hastingschivetta.com

Ken Garner Engineering, Inc.
Electrical Engineering Consultants, Inc.
102 West 500 South, Suite 225
Salt Lake City, Utah 84101
P. 801.328.8800
F. 801.328.8802
Contact: Paris LeLaCheur
Project #:2010-117.00


# UNIVERSITY OF UTAH
## STUDENT LIFE CENTER
1836 E. BALLIF ROAD
SALT LAKE CITY, UTAH 84112

SEAL

MHTN PROJECT NO. 2010562.00

DRAWN BY: KGE CHECKED BY: KGE

ISSUED:

| NO. | DATE | DESCRIPTION |
|---|---|---|
| | | |

CONTRACTOR TO VERIFY DRAWINGS IN FIELD USE REFLECT LAST REVISION DATE:

| NO. | DATE | DESCRIPTION |
|---|---|---|
| | | |

SHEET NAME

SITE LIGHTING PLAN BASE BID

BID DOCUMENTS
MAY 15, 2013

SHEET NUMBER

ES100


C:\Users\hurzaga.KGE\Documents\2010-117.00_KGE_STUDENT LIFE_ELECTRICAL_CENTERAL_2012_hurzaga.rvt
C:\Users\hurzaga.KGE\Documents\A11-2010562_UofU_StudentLifeCenter_Central_RuiM.rvt
5/10/2011 8:37:33 AM

**KEYED NOTES - SHEET ES100.2**

1. PROVIDE AND INSTALL NEW CONCRETE ENCASED DUCT BANK FROM MH 36A TO NEW XFMR VAULT. DUCT BANK SHALL BE INSTALLED OVER TOP OF TUNNEL EXTENSION TO BUILDING. COORDINATE WITH OTHER TRADES FOR EXACT ROUTING.
2. PROVIDE AND INSTALL NEW MEDIUM VOLTAGE CABLING IN DUCT BANK BETWEEN MH 36A AND XFMR VAULT. SEE ONE LINE DIAGRAM SHEET EP600
3. EXISTING DUCTBANK AND MEDIUM VOLTAGE CABLE TO REMAIN AND BE PROTECTED DURING CONSTRUCTION. CONTRACTOR RESPONSIBLE FOR SHORING DUCT BANK DURING BUILDING EXCAVATION. CONTRACTOR SHALL VERIFY EXACT ROUTING OF DUCTBANK BEFORE ANY WORK BEGINS. COORDINATE ANY DISCREPANCIES WITH ENGINEER.

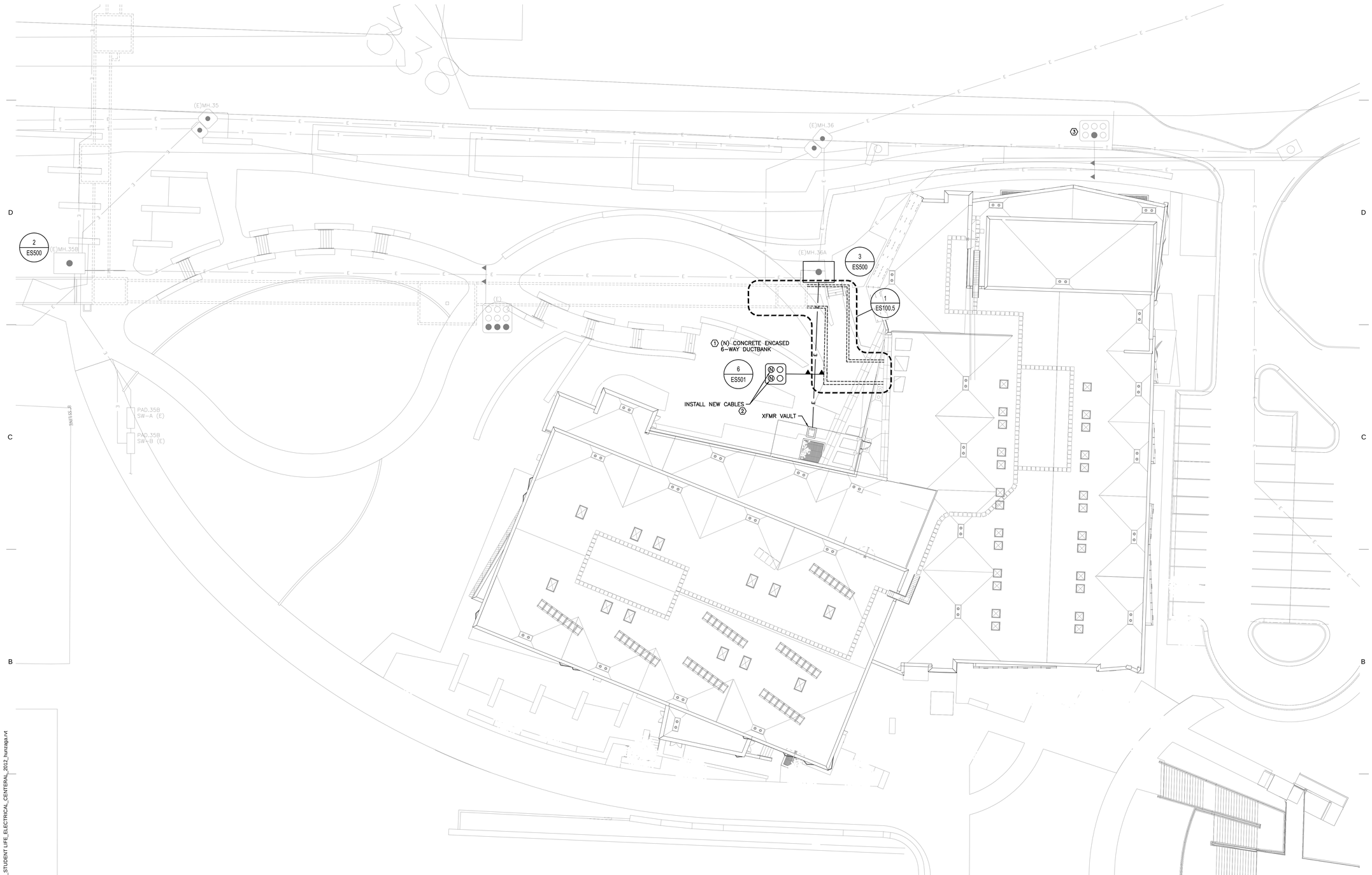


1 ES100.2 ENLARGED ELECTRICAL SITE PLAN

SCALE: 1" = 20'


MHTN ARCHITECTS

**MHTN Architects, Inc.**
420 East South Temple
Suite 100
Salt Lake City, Utah 84111
Telephone (801) 595-6700
Telefax (801) 595-6717
www.mhtn.com

622 Emerson, Suite 200
St. Louis, MO 63141
Tel. 314.863.5717
Fax. 314.863.2823
www.hastingschivetta.com

Ken Garner Engineering, Inc.
Electrical Engineering Consultants, Inc.
102 West 500 South, Suite 225
Salt Lake City, Utah 84101
P. 801.328.8800
F. 801.328.8802
Contact: Paris LeLaCheur
Project #:2010-117.00


# UNIVERSITY OF UTAH

## STUDENT LIFE CENTER

1836 E. BALLIF ROAD
SALT LAKE CITY, UTAH 84112

SEAL

MHTN PROJECT NO. 2010562.00

DRAWN BY: KGE CHECKED BY: KGE

ISSUED:

| NO. | DATE | DESCRIPTION |
|---|---|---|

CONTRACTOR TO VERIFY DRAWINGS IN FIELD USE REFLECT LAST REVISION DATE.

| NO. | DATE | DESCRIPTION |
|---|---|---|

SHEET NAME

ENLARGED ELECTRICAL SITE PLAN
BID DOCUMENTS
MAY 15, 2013

SHEET NUMBER

ES100.2

C:\Users\hunzaga.KGE\Documents\2010-117.00_KGE_STUDENT LIFE_ELECTRICAL_CENTERAL_2012_hunzaga.rvt
2/22/2013 1:47:36 PM

KEYED NOTES:

1. STUB UP TO PANEL 'EMDH' IN MAIN ELECTRICAL ROOM 10F
2. EXACT ROUTING OF EXISTING DUCTBANK UNKNOWN. CONTRACTOR SHALL VERIFY ROUTING AND IF NECESSARY REROUTE DUCTBANK TO WORK WITH NEW GRADING PLAN.
3. STUB UP TO PANEL IN STORAGE SHED. SEE SHEETS EP601 AND EP130.
4. (1) 2"C FROM 'LMDP' AND (2) ¾"C FROM NEAREST NAC PANEL. MAINTAIN NEC SEPARATION OF CONDUIT.

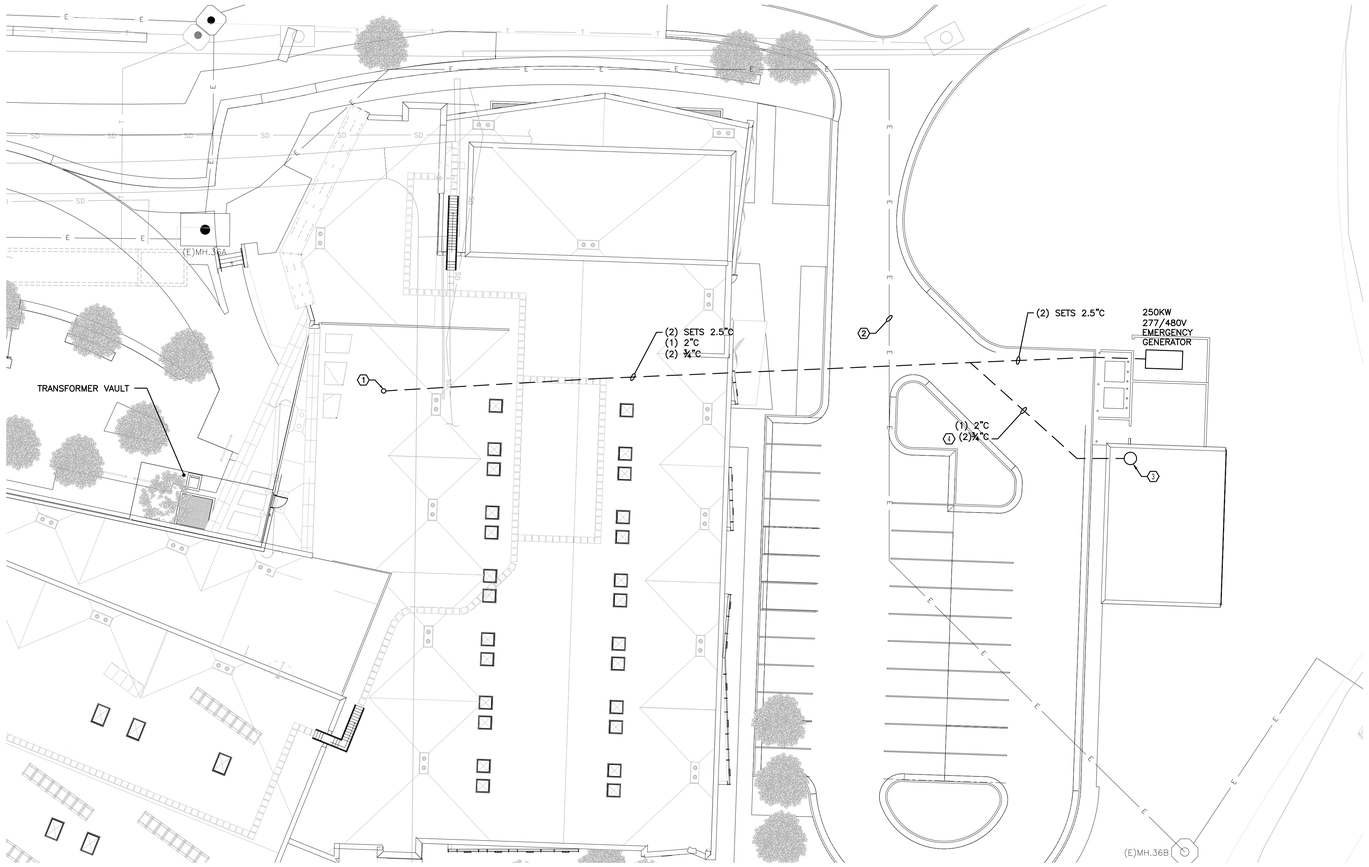


1 ES100.3 ENLARGED ELECTRICAL SITE PLAN

SCALE: 1" = 20'


MHTN ARCHITECTS

**MHTN Architects, Inc.**
420 East South Temple
Suite 100
Salt Lake City, Utah 84111
Telephone (801) 595-6700
Telefax (801) 595-6717
www.mhtn.com

622 Emerson, Suite 200
St. Louis, MO 63141
Tel. 314.863.5717
Fax. 314.863.2823
www.hastingschivetta.com

Ken Garner Engineering, Inc.
Electrical Engineering Consultants, Inc.
102 West 500 South, Suite 225
Salt Lake City, Utah 84101
P. 801.328.8800
F. 801.328.8802
Contact: Paris LeLaCheur
Project #:2010-117.00


# UNIVERSITY OF UTAH

## STUDENT LIFE CENTER

1836 E. BALLIF ROAD
SALT LAKE CITY, UTAH 84112

SEAL

MHTN PROJECT NO. 2010562.00

DRAWN BY: KGE CHECKED BY: KGE

ISSUED:

| NO. | DATE | DESCRIPTION |
|---|---|---|

CONTRACTOR TO VERIFY DRAWINGS IN FIELD USE REFLECT LAST REVISION DATE.

| NO. | DATE | DESCRIPTION |
|---|---|---|

SHEET NAME

ENLARGED ELECTRICAL SITE PLAN
BID DOCUMENTS
MAY 15, 2013

SHEET NUMBER

ES100.3

C:\Users\hunzaga.KGE\Documents\2010-117.00_KGE_STUDENT LIFE_ELECTRICAL_CENTERAL_2012_hunzaga.rvt
2/22/2013 1:47:36 PM

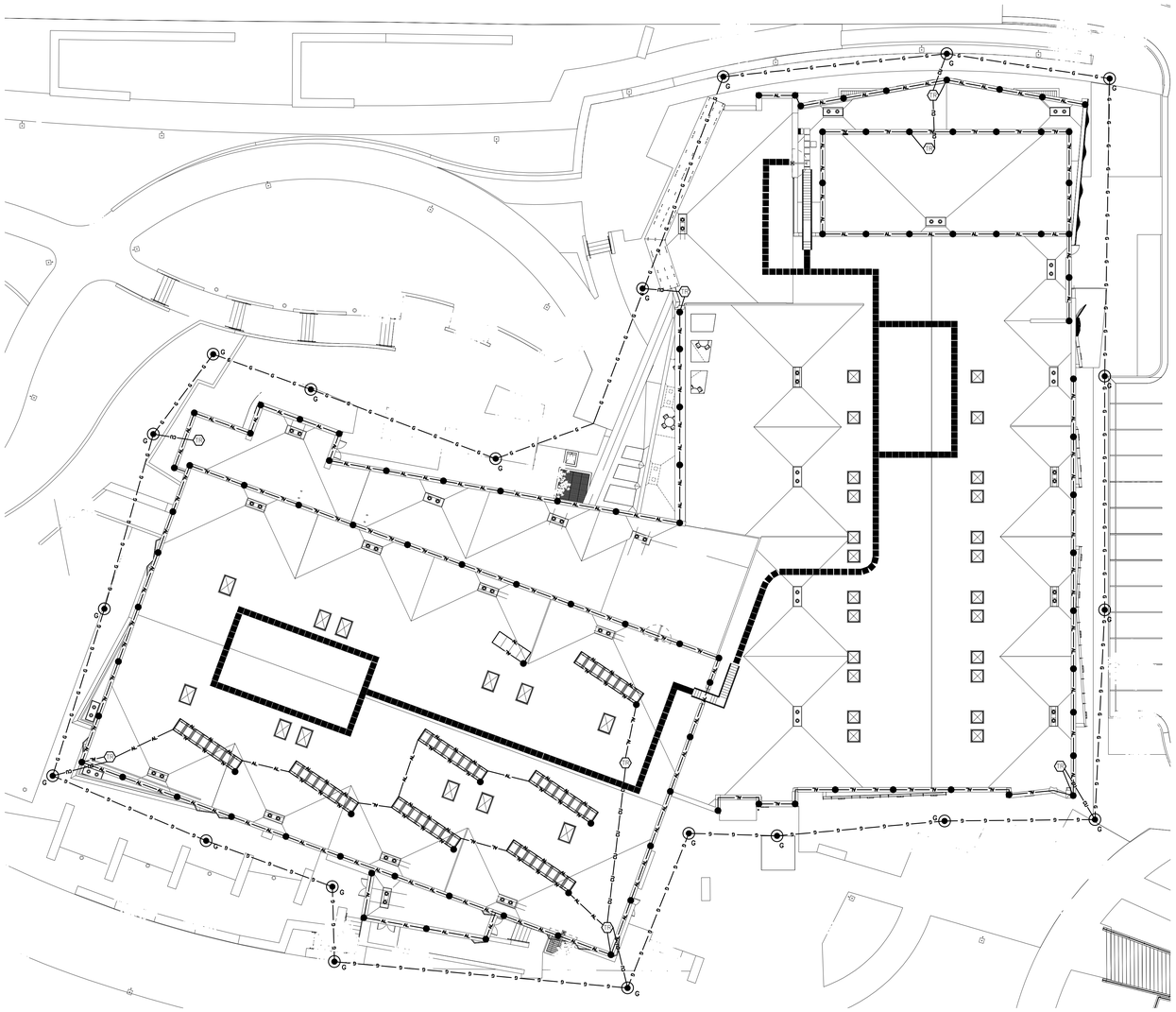

1 ES100.4 LIGHTNING PROTECTION PLAN
SCALE: 1" = 20'

## KEYED BONDING NOTES-ES100.4

1. TYPICAL BODIES OF CONDUCTANCE AS NOTED BELOW. USE FULL SIZE CONDUCTORS AND APPROPRIATE FITTING SHOWN FOR CONNECTION.
2. (PLUMBING STACK) REQUIRES BONDING WITH MAIN SIZE CABLE ONLY IF WITHIN 6'-0" (1,828 mm) OF LIGHTNING PROTECTION SYSTEM.
3. TYPICAL BODIES OF INDUCTANCE AS NOTED BELOW. USE SECONDARY SIZE (SMALLER) CONDUCTOR AND APPROPRIATE FITTING SHOWN FOR CONNECTION.
4. BONDING CONNECTIONS AND FITTINGS SHOWN ARE TYPICAL EXAMPLES. MAKE ALL CONNECTIONS REQUIRED TO MEET CODES AS NOTED BELOW. ADJUST FITTINGS TYPE AS REQUIRED TO SUIT FIELD CONDITIONS.

## GENERAL INSTALLATION NOTES-ES100.4

A. LOCATE AIR TERMINALS AS SHOWN. TAKE CARE TO INSURE THAT ALL POINTS ARE WITHIN 2'-0" (609 mm) OF OUTSIDE BUILDING EDGE, OUTSIDE CORNERS, RIDGE ENDS, AND THAT MAX SPACING DOES NOT EXCEED 20'-0" (6,096 mm), AND THAT MIN PROJECTION ABOVE OBJECT PROTECTED IS 10' (254mm); POINTS PROJECTION 24" (609 mm) MAY BE SPACED AT 25'-0" (7,520mm) MAX.
B. MAINTAIN HORIZONTAL OF DOWNWARD COURSING OF MAIN CONDUCTOR. INSURE THAT ALL BENDS HAVE AT LEAST AN 8" (203 mm) RADIUS AND DO NOT EXCEED 90 DEGREES.
C. ATTACH ALL EXPOSED ROOF, DOWN LEAD AND BONDING CABLES AT 3'-0" (914 mm) ON CENTER MAX. VERIFY COMPATIBILITY OF ADHESIVE ON MEMBRANE ROOF APPLICATION PRIOR TO INSTALLATION.
D. GROUND ELECTRODES SHALL BE INSTALLED AS SHOWN, BUT IN NO INSTANCE SHALL THEY BE LESS THAN 1'-0" (304 mm) BELOW GRADE AND 2'-0" (609 mm) FROM FOUNDATION WALL DRIVEN RODS SHALL PENETRATE THE EARTH AT LEAST 10'-0" 3,048 mm).
E. BOND TO WATER SERVICE AND OTHER PIPING SYSTEMS AS SHOWN AND AS REQUIRED BY CODE.
F. MAIN SIZE LIGHTNING CONDUCTOR BONDED TO MAIN GROUND BUS FIELD VERIFY LOCATION 1" CONDUIT FOR ACCESS, INSTALLED BY OTHERS. INTERCONNECT LIGHTNING PROTECTION GROUND TO TELEPHONE AND OTHER BUILDING GROUND SYSTEMS LOCATION FIELD DETERMINED OR AS REQUIRED BY CODE.
G. SYSTEM SHALL BE INSTALLED AS SHOWN TO INSURE PROPER CODE COMPLIANCE AND SYSTEM CERTIFICATION. ANY MAJOR VARIANCE SHALL BE RESUBMITTED FOR APPROVAL.
H. "AS-BUILT" DRAWINGS SHALL BE SUBMITTED IN ACCORDANCE WITH CERTIFICATION PROCEDURES.
I. ALL MATERIALS TO BE UNDERWRITER'S LABORATORIES APPROVED WITH "A" LABELS ON CONDUCTORS @ 10'-0' (3,048 mm) INTERVALS AND "B" LABELS ON ALL AIR TERMINALS.
J. COMPLETE INSTALLED AS SHOWN SHALL BEAR THE APPROPRIATE UL CERTIFICATION.
K. INSTALLATION SHALL COMPLY IN ALL RESPECTS TO L.P.I. CODE 175. INSTALLATION SHALL BE MADE UNDER THE SUPERVISION OF AN L.P.I. CERTIFIED MASTERS INSTALLER.

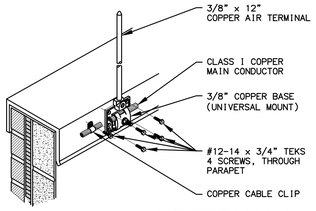


A AIR TERMINAL
SCALE: NTS

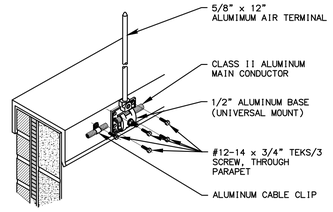


B AIR TERMINAL
SCALE: NTS

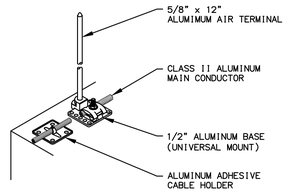


C AIR TERMINAL
SCALE: NTS

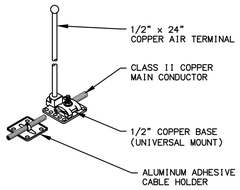


D AIR TERMINAL
SCALE: NTS

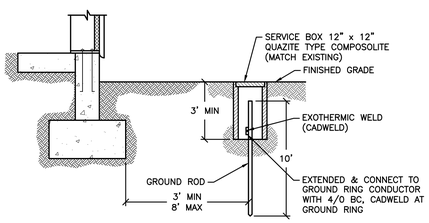


2 EX602 TYPICAL LIGHTNING PROTECTION GROUND ROD DETAIL
SCALE: NTS

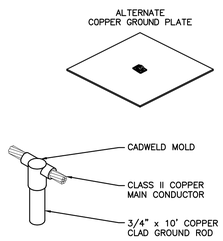


G CADWELD MOLD - GT
SCALE: NTS

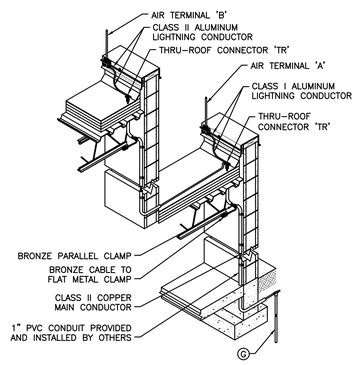


- TYPICAL DOWNLEAD DETAIL
SCALE: NTS

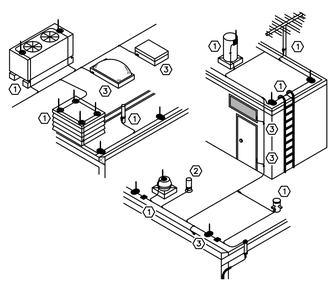


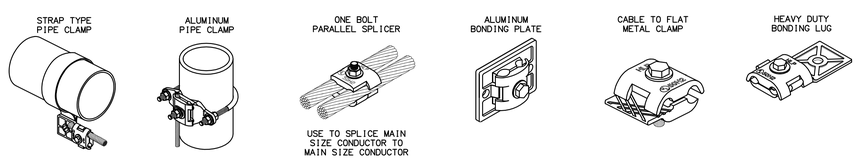


- MISCELLANEOUS
SCALE: NTS

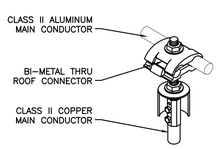


TR THRU-ROOF CONNECTION
SCALE: NTS

NOTE:
AS PER UL96A (FUII)
INSTALLATION SYSTEM REQUIREMENTS L12.

MATERIALS' SECTION OF UL96A (SECTION 5) REQUIRES THAT METALS SHALL BE USED IN COMBINATIONS THAT ARE GALVANICALLY COMPATIBLE. THEREFORE, ALUMINUM COMPONENTS SHALL NOT BE INSTALLED IN DIRECT CONTACT WITH BARE COPPER ROOFING MATERIALS/SURFACES, AND COPPER MATERIALS SHALL NOT BE INSTALLED IN DIRECT CONTACT WITH BARE ALUMINUM ROOFING MATERIALS/ SURFACES. METALS ACCEPTABLE FOR USE WITH COPPER AND ALUMINUM ARE USE FOLLOWS:

METALS ACCEPTABLE FOR USE WITH COPPER:
NICKEL, BRASS, TIN, LEAD, STAINLESS STEEL, AND MONEL.

METALS ACCEPTABLE FOR USE WITH ALIMINUM:
MAGNESIUM, ZINC, GALVANIZED STEEL, STAINLESS STEEL, LEAD, AND WROUGHT IRON.

## LEGEND

- AIR TERMINAL
- MECHANICAL CONNESTION
- MISC. BONDING
- TR THRU-ROOF CONNECTOR
- CLASS I ALUMINUM MAIN CONDUCTOR
- SLASS I COPPER MAIN CONDUCTOR
- COPPER GROUNDING CONDUCTOR
- G COPPER CLAD GROUND ROD WITH ULTRAWELD CONNECTION


MHTN ARCHITECTS
MHTN Architects, Inc.
420 East South Temple
Suite 100
Salt Lake City, Utah 84111
Telephone (801) 595-6700
Telefax (801) 595-6717
www.mhtn.com

622 Emerson, Suite 200
St. Louis, MO 63141
Tel. 314.863.5717
Fax. 314.863.2823
www.hastingschivetta.com

Ken Garner Engineering, Inc.
Electrical Engineering Consultants, Inc.
102 West 500 South, Suite 225
Salt Lake City, Utah 84101
P. 801.328.8800
F. 801.328.8802
Contact: Paris LeLaCheur
Project #:2010-117.00


# UNIVERSITY OF UTAH
# STUDENT LIFE CENTER
1836 E. BALLIF ROAD
SALT LAKE CITY, UTAH 84112

SEAL

MHTN PROJECT NO. 2010562.00

DRAWN BY: KGE CHECKED BY: KGE

ISSUED:

| NO. | DATE | DESCRIPTION |
|---|---|---|

CONTRACTOR TO VERIFY DRAWINGS IN FIELD USE REFLECT LAST REVISION DATE.

| NO. | DATE | DESCRIPTION |
|---|---|---|

SHEET NAME
LIGHTNING PROTECTION PLAN
BID DOCUMENTS
MAY 15, 2013

SHEET NUMBER
ES100.4

C:\Users\hunzaga.KGE\Documents\2010-117.00_KGE_STUDENT LIFE_ELECTRICAL_CENTERAL_2012_hunzaga.rvt
2/22/2013 1:47:36 PM

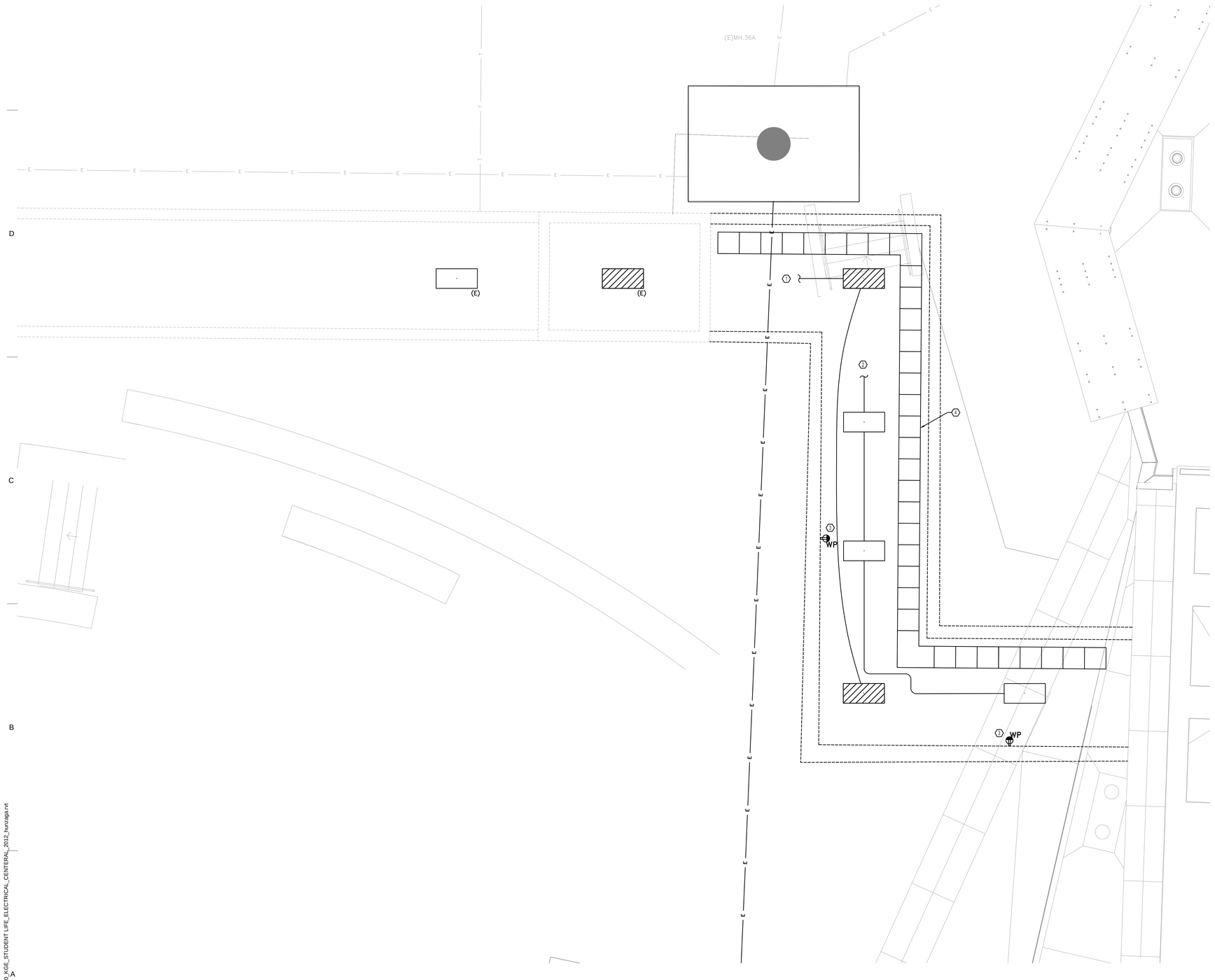


1 ES100.5 ENLARGED ELECTRICAL TUNNEL PLAN

SCALE: 1/4" =1'-0"

N

**KEYED NOTES - SHEET ES100.5**

1. TIE NEW EMERGENCY LIGHTING INTO EXISTING EMERGENCY CIRCUIT IN TUNNEL.
2. TIE NEW LIGHTING INTO EXISTING LIGHTING CIRCUIT IN TUNNEL.
3. EXTEND EXISTING RECEPTACLE CIRCUIT IN TUNNEL TO INCLUDE THESE RECEPTACLES.
4. PROVIDE AND INSTALL 24"x4" ALUMINUM LADDER TRAY. COORDINATE INSTALL WITH WATER PIPE AND RACK PRIOR TO ROUGH IN.

**GENERAL NOTES - SHEET ES100.5**

A. PROVIDE ALL REQUIRED CONDUIT, WIRE AND DEVICES TO TIE IN NEW LIGHTING AND RECEPTACLES. CONTRACTOR SHALL VERIFY TOTAL LOAD ON CIRCUIT.

MHTN
ARCHITECTS
**MHTN Architects, Inc.**
420 East South Temple
Suite 100
Salt Lake City, Utah 84111
Telephone (801) 595-6700
Telefax (801) 595-6717
www.mhtn.com

622 Emerson, Suite 200
St. Louis, MO 63141
Tel. 314.863.5717
Fax. 314.863.2823
www.hastingschivetta.com

Ken Garner
Engineering, Inc.
Electrical Engineering Consultants, Inc.
102 West 500 South, Suite 225
Salt Lake City, Utah 84101
P. 801.328.8800
F. 801.328.8802
Contact: Paris LeLaCheur
Project #:2010-117.00

# UNIVERSITY OF UTAH

## STUDENT LIFE CENTER

1836 E. BALLIF ROAD
SALT LAKE CITY, UTAH 84112

SEAL

MHTN PROJECT NO. 2010562.00

DRAWN BY: KGE CHECKED BY: KGE

ISSUED:

| NO. | DATE | DESCRIPTION |
|---|---|---|

CONTRACTOR TO VERIFY DRAWINGS IN FIELD USE REFLECT LAST REVISION DATE.

| NO. | DATE | DESCRIPTION |
|---|---|---|

SHEET NAME

ENLARGED ELECTRICAL TUNNEL PLAN
BID DOCUMENTS
MAY 15, 2013

SHEET NUMBER

ES100.5

C:\Users\hurzaga.KGE\Documents\2010-117.00_KGE_STUDENT LIFE_ELECTRICAL_CENTERAL_2012_hurzaga.rvt
2/22/2013 1:47:36 PM

1 ELECTRICAL SITE PLAN ALTERNATE

0 15' 30' 60'

SCALE: 1' = 30'-0"

**KEYED NOTES - SHEET ES101**

1. PROVIDE 1-1/4" CONDUIT FROM POLE BASE STUBBED OUT A MINIMUM OF 5' IN DIRECTION SHOWN FOR CIRCUITING TO FUTURE LIGHT POLE. PROVIDE CAP ON END OF CONDUIT.
2. PROVIDE 1-1/4" CONDUIT FROM POLE BASE RUN BENEATH SIDEWALK AND CONNECT TO EXISTING HPER LIGHTING CIRCUITS AT EXISTING SITE FIXTURE POLE BASE. EXTEND EXISTING 1-1/4" CONDUIT AND #6 CONDUCTORS TO NEW SITE LIGHTING FIXTURES.
3. PROVIDE AND INSTALL POLE BASES FOR ALL SITE LIGHTING FIXTURES. SEE POLE BASE DETAILS FOR WALKWAY, PARKING AND BOLLARD LIGHTING FIXTURE BASES (TYPICAL)
4. LED LIGHTED HANDRAILS WITH REMOTE ELECTRONIC DRIVERS INSTALLED IN FLUSH WP ENCLOSURE. PROVIDE ALL NECESSARY CONDUIT, WIRE AND ACCESSORIES FOR A COMPLETE INSTALLATION. SEE ARCHITECTURAL DRAWINGS FOR EXACT LOCATIONS, LENGTHS AND REQUIREMENTS.
5. CONNECT TO BUILDING LIGHTING CONTROL PANEL.
6. EXISTING HPER MALL SITE FIXTURE WITH EXISTING SITE LIGHTING CIRCUITS.

**GENERAL NOTES - SHEET ES101**

A. INFORMATION SHOWN COMES FROM MULTIPLE SOURCES. IT SHALL BE THE RESPONSIBILITY OF THE CONTRACTOR TO FIELD VERIFY ALL EXISTING CONDITIONS.
B. SITE LIGHTING SHALL BE CONNECTED TO EXISTING HPER MALL LIGHTING DISTRIBUTION PANEL PH1 THROUGH EXISTING LIGHTING CONTACTOR LC-2.
C. SITE LIGHTING FIXTURES ARE TO BE CONNECTED TO ALTERNATE PHASES AND THE LOAD IS TO BE BALANCED ACROSS ALL THREE PHASES. SEE SITE LIGHTING CIRCUIT DETAIL FOR ADDITIONAL REQUIREMENTS.

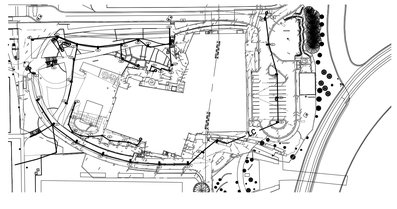

KEY PLAN

MHTN ARCHITECTS
**MHTN Architects, Inc.**
420 East South Temple
Suite 100
Salt Lake City, Utah 84111
Telephone (801) 595-6700
Telefax (801) 595-6717
www.mhtn.com

622 Emerson, Suite 200
St. Louis, MO 63141
Tel. 314.863.5717
Fax. 314.863.2823
www.hastingschivetta.com

Ken Garner Engineering, Inc.
Electrical Engineering Consultants, Inc.
102 West 500 South, Suite 225
Salt Lake City, Utah 84101
P. 801.328.8800
F. 801.328.8802
Contact: Paris LeLaCheur
Project #:2010-117.00

# UNIVERSITY OF UTAH
## STUDENT LIFE CENTER
1836 E. BALLIF ROAD
SALT LAKE CITY, UTAH 84112

SEAL

MHTN PROJECT NO. 2010562.00

DRAWN BY: KGE CHECKED BY: KGE

ISSUED:

| NO. | DATE | DESCRIPTION |
|---|---|---|

CONTRACTOR TO VERIFY DRAWINGS IN FIELD USE REFLECT LAST REVISION DATE:

| NO. | DATE | DESCRIPTION |
|---|---|---|

SHEET NAME
SITE LIGHTING PLAN ALTERNATE
CON DOC
MAY 13, 2013

SHEET NUMBER
ES100A

C:\Users\hunzinger\AppData\Local\Temp\AcPublish_1320\{5DD2-1A70-FC5A-04E1-B3F7-DEAF-C9E6-EB_R2013\KGE_CENTERAL_2012_hunzinger.rvt
8/22/2013 8:37:39 PM

**KEYED NOTES - SHEET ES500**

1. CUT 600 MV CABLE AT THIS LOCATION IN PREPARATION FOR SPLICE.
2. NEW 600 MV CABLE TO STUDENT LIFE XFMR VAULT VFI SWITCH.
3. NEW 600 MV CABLE FROM STUDENT LIFE XFMR VAULT VFI SWITCH.
4. NEW MEDIUM VOLTAGE SPLICE. SEE ONE LINE DIAGRAM SHEET EP600 FOR TYPE.

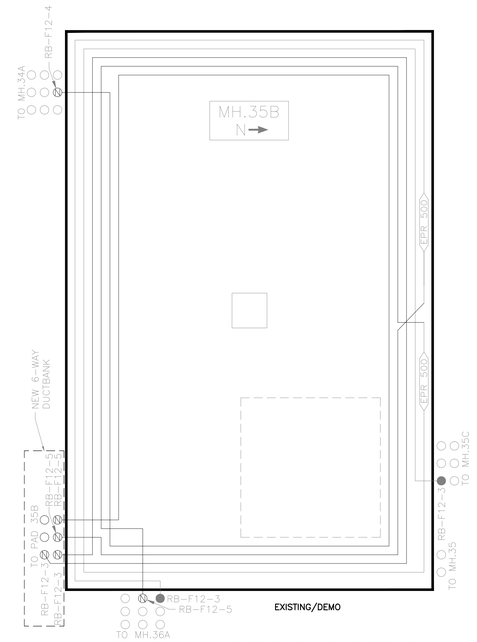


2 ES500 MH.35B - EXISTING CONDITIONS

SCALE: 1" = 20'

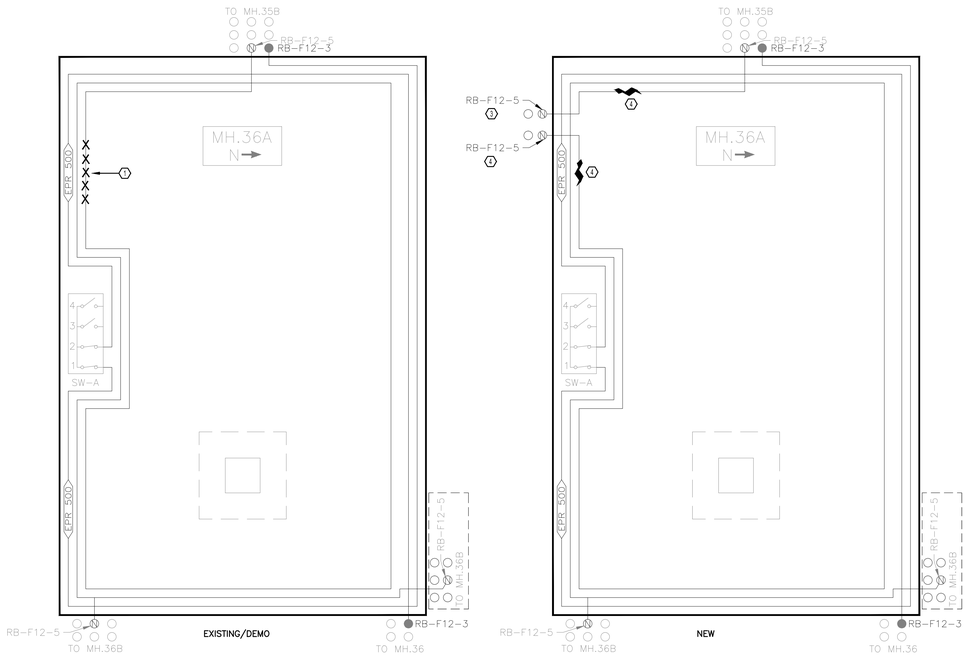


3 ES500 MH.36A - EXISTING/DEMO/NEW

SCALE: 1" = 20'

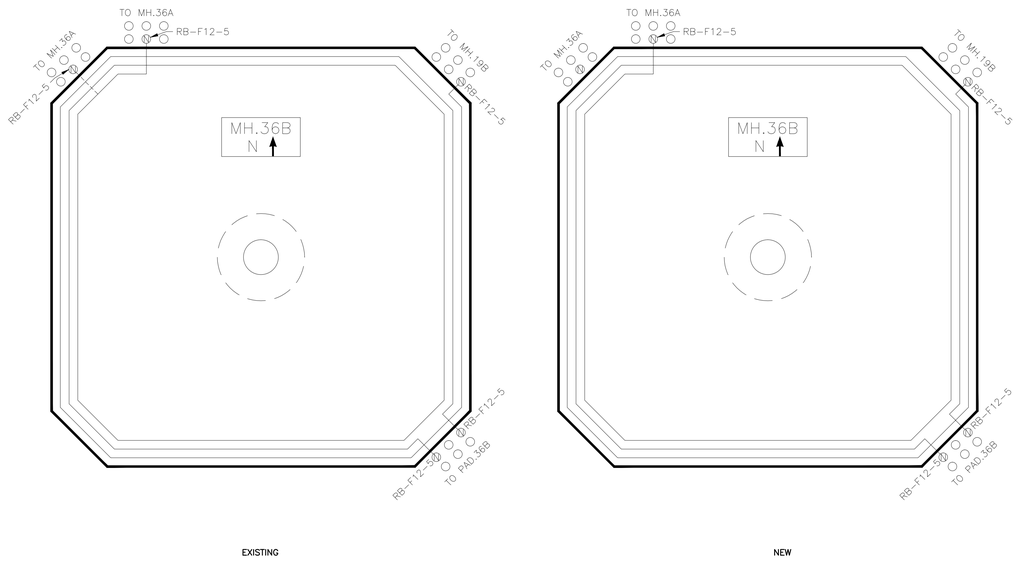


4 ES500 MH.36B DEMO/NEW

SCALE: 1" = 20'


MHTN ARCHITECTS
**MHTN Architects, Inc.**
420 East South Temple
Suite 100
Salt Lake City, Utah 84111
Telephone (801) 595-6700
Telefax (801) 595-6717
www.mhtn.com

622 Emerson, Suite 200
St. Louis, MO 63141
Tel. 314.863.5717
Fax. 314.863.2823
www.hastingschivetta.com

Ken Garner Engineering, Inc.
Electrical Engineering Consultants, Inc.
102 West 500 South, Suite 225
Salt Lake City, Utah 84101
P. 801.328.8800
F. 801.328.8802
Contact: Paris LeLaCheur
Project #:2010-117.00


UNIVERSITY OF UTAH

STUDENT LIFE CENTER

1836 E. BALLIF ROAD
SALT LAKE CITY, UTAH 84112

SEAL

MHTN PROJECT NO. 2010562.00

DRAWN BY: KGE CHECKED BY: KGE

ISSUED:

| NO. | DATE | DESCRIPTION |
|---|---|---|

CONTRACTOR TO VERIFY DRAWINGS IN FIELD-USE REFLECT LAST REVISION DATE:

| NO. | DATE | DESCRIPTION |
|---|---|---|

SHEET NAME

MANHOLE DETAILS

BID DOCUMENTS
MAY 15, 2013

SHEET NUMBER

ES500

C:\Users\hurzaga.KGE\Documents\2010-117.00_KGE_STUDENT LIFE_ELECTRICAL_CENTERAL_2012_hurzaga.rvt
2/22/2013 1:47:36 PM

1. FEEDER LABELS ARE TO BE PROVIDED FOR EACH FEEDER. LABEL IS TO BE 2 1/2" X 2 1/2" X 1/16" LAMINATED 2-PLY PLASTIC LAMACOID. LETTERS SHALL BE FORMED BY ENGRAVING OUTER YELLOW PLY, EXPOSING BLACK PLY BENEATH. LABELS ARE TO BE PROVIDE IN MANHOLES NEAR EACH DUCTBANK ENTRANCE THE FEEDER PASSES THROUGH, AND NEAR EACH SWITCH SECTION THE FEEDER CONNECTS TO. LABELS ARE ALSO TO BE PROVIDED ON THE FEEDERS OF SWITCHES AT EACH PAD OR VAULT, AND INSIDE THE PRIMARY COMPARTMENT OF EACH TRANSFORMER.
2. TAG IS TO BE ATTACHED TO PHASE B OF EACH FEEDER USING A BLACK WEATHER RESISTANT ZIP TIE. TAG IS TO BE FIXED SUCH THAT THE LETTERING IS VISIBLE AND NOT PULLED SO TIGHT THAT IT CAN NOT BE ADJUSTED.
3. LETTERING IS TO BE 3/8" HIGH, CENTERED AND FORMATTED AS SHOWN. FEEDERS ORIGINATING AT RED BUTE SUBSTATION SHALL BE DESIGNATED AS SHOWN IN THE TOP DETAIL. ALL OTHER FEEDERS SHALL BE DESIGNATED AS SHOWN IN THE BOTTOM FIGURE. REFER TO PLANS FOR FEEDER NUMBERS.

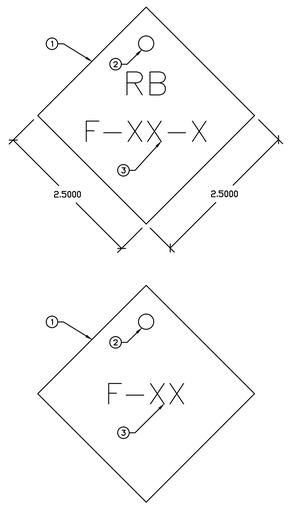


1 ES501 MEDIUM VOLTAGE FEEDER LABEL
SCALE: 1" = 1"

1. DUCTBANK LABEL TO BE PROVIDED AT EACH DUCTBANK. LABEL IS TO BE 3" X 5" X 1/16" LAMINATED 2-PLY PLASTIC LAMACOID. LETTERS SHALL BE FORMED BY ENGRAVING OUTER YELLOW PLY, EXPOSING BLACK PLY BENEATH.
2. LABEL IS TO BE MOUNTED USING 1/4" PLASTIC ANCHORS. LABEL IS TO BE LOCATED DIRECTLY ADJACENT TO THE DUCTBANK.
3. LETTERING IS TO BE 1/2" HIGH, CENTERED, AND FORMATTED AS SHOWN. XXX IS TO BE REPLACE WITH THE DESTINATION OF THE DUCTBANK, SUCH AS THE NEXT MANHOLE, A VAULT, OR A PAD. IF THE DESTINATION IS A VAULT OR PAD, THE XXX IS TO INDICATE THE BUILDING NUMBER. REFER TO PLANS FOR NUMBERING.

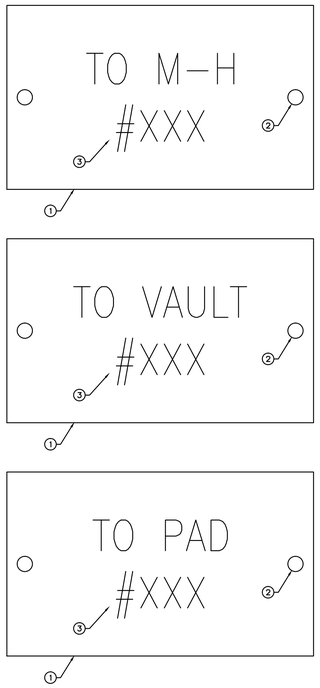


2 ES501 DUCTBANK LABEL
SCALE: 1:1

1. H-V SWITCH LABEL TO BE PROVIDED AT EACH SWITCH AND ITS CABINET. LABEL IS TO BE 3" X 5" X 1/16" LAMINATED 2-PLY PLASTIC LAMACOID. LETTERS SHALL BE FORMED BY ENGRAVING OUTER YELLOW PLY, EXPOSING BLACK PLY BENEATH.
2. LABEL IS TO BE MOUNTED USING DOUBLE SIDED ADHESIVE TAPE COVERING THE BACK OF THE LABEL.
3. FIRST LINE. LETTERING IS TO BE 1/2" HIGH, CENTERED, AND FORMATTED AS SHOWN. XXX IS TO BE REPLACE WITH THE DESTINATION OF THE SWITCH, SUCH AS THE MANHOLE, A VAULT, OR A PAD. IF THE IF THE DESTINATION IS A VAULT OR PAD, THE XXX IS TO INDICATE THE BUILDING NUMBER. REFER TO PLANS FOR NUMBERING.
4. SECOND LINE, H-V SWITCH. LETTERING IS TO BE 1/2" HIGH, CENTERED, AND FORMATTED AS SHOWN. THE X IS TO INDICATE THE SWITCH IDENTIFICATION LETTER: A, B, C, ETC. REFER TO PLANS FOR LETTER.
5. THIRD LINE, VOLTAGE. LETTERING IS TO BE 1/2" HIGH, CENTERED, AND FORMATTED AS SHOWN. INDICATE THE SECTION VOLTAGE: 12470, 7200, OR 4160.

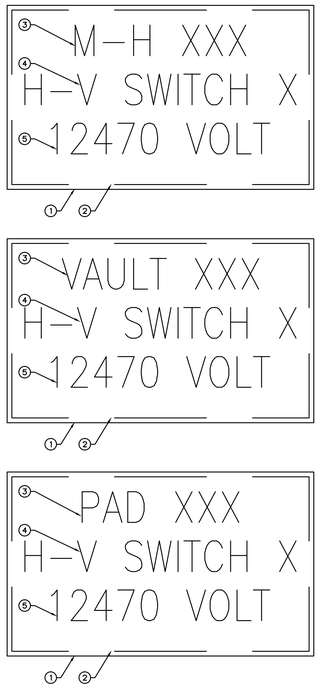


3 ES501 H-V SWITCH CABINET LABEL
SCALE: 1:1

1. H-V SWITCH SECTION LABEL TO BE PROVIDED AT EACH SWITCH SECTION. LABEL IS TO BE 3" X 5" X 1/16" LAMINATED 2-PLY PLASTIC LAMACOID. LETTERS SHALL BE FORMED BY ENGRAVING OUTER YELLOW PLY, EXPOSING BLACK PLY BENEATH.
2. LABEL IS TO BE MOUNTED USING DOUBLE SIDED ADHESIVE TAPE COVERING THE BACK OF THE LABEL.
3. FIRST LINE. LETTERING IS TO BE 1/2" HIGH, CENTERED, AND FORMATTED AS SHOWN. XXX IS TO BE REPLACE WITH THE DESTINATION OF THE DEVICE BEING SERVED, SUCH AS THE MANHOLE, A VAULT, OR A PAD. IF THE IF THE DESTINATION IS A VAULT OR PAD, THE XXX IS TO INDICATE THE BUILDING NUMBER. REFER TO PLANS FOR NUMBERING.
4. SECOND LINE, DEVICE BEING SERVED. LETTERING IS TO BE 1/2" HIGH, CENTERED, AND FORMATTED AS SHOWN. SWITCH OR TRANSFORMER, INCLUDE DESIGNATION FOR SWITCHES: A, B, C, ETC.
5. THIRD LINE, SECTION. LETTERING IS TO BE 1/2" HIGH, CENTERED, AND FORMATTED AS SHOWN. INDICATE THE SWITCH SECTION BEING SERVED. ELIMINATE LINE IF TRANSFORMER IS BEING SERVED.

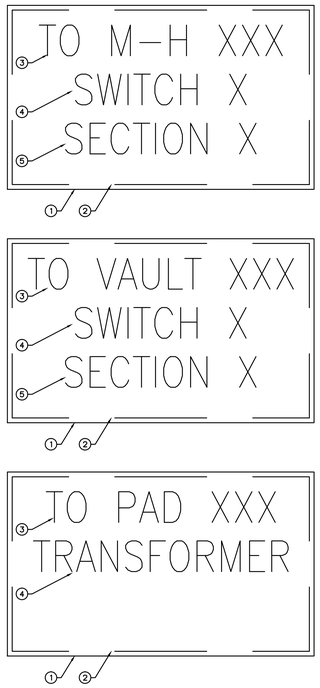


4 ES501 H-V SWITCH SECTION LABEL
SCALE: 1:1

1. ELECTRIC MANHOLE LABEL IS TO BE 5" X 8" X 1/16" LAMINATED 2-PLY PLASTIC LAMACOID. LETTERS SHALL BE FORMED BY ENGRAVING OUTER RED PLY, EXPOSING YELLOW PLY BENEATH.
2. MOUNT LABEL USING 1/4" PLASTIC ANCHORS. LABEL IS TO BE ORIENTATED ON THE NORTH SIDE OF MANHOLE ACCESS AND BE VIEWABLE FROM INSIDE AND OUTSIDE THE MANHOLE.
3. LETTERING IS TO BE 1" HIGH, CENTERED AND FORMATTED AS SHOWN. XXX IS TO BE REPLACE WITH THE MANHOLE NUMBER AS INDICATED ON PLANS.

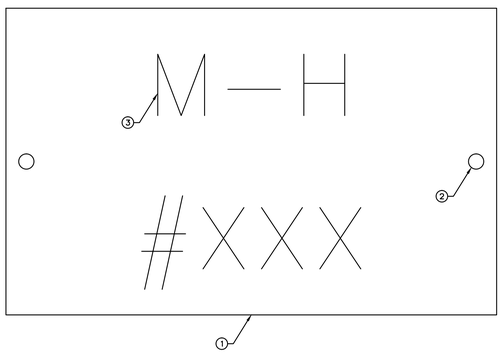


5 ES501 MANHOLE LABEL
SCALE: 1:1

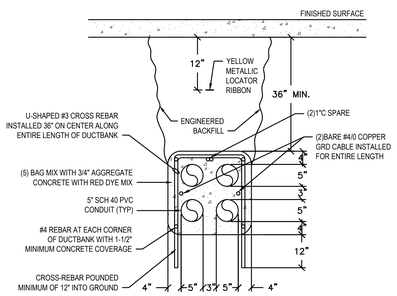


6 ES501 4-WAY 2 X 2 DUCTBANK DETAIL
SCALE: N.T.S.


MHTN ARCHITECTS
MHTN Architects, Inc.
420 East South Temple
Suite 100
Salt Lake City, Utah 84111
Telephone (801) 595-6700
Telefax (801) 595-6717
www.mhtn.com

622 Emerson, Suite 200
St. Louis, MO 63141
Tel. 314.863.5717
Fax. 314.863.2823
www.hastingschivetta.com

Ken Garner Engineering, Inc.
Electrical Engineering Consultants, Inc.
102 West 500 South, Suite 225
Salt Lake City, Utah 84101
P. 801.328.8800
F. 801.328.8802
Contact: Paris LeLaCheur
Project #:2010-117.00


UNIVERSITY OF UTAH
STUDENT LIFE CENTER
1836 E. BALLIF ROAD
SALT LAKE CITY, UTAH 84112

SEAL

MHTN PROJECT NO. 2010562.00
DRAWN BY: KGE CHECKED BY: KGE

ISSUED:

| NO. | DATE | DESCRIPTION |
|---|---|---|

CONTRACTOR TO VERIFY DRAWINGS IN FIELD USE REFLECT LAST REVISION DATE.

| NO. | DATE | DESCRIPTION |
|---|---|---|

SHEET NAME
ELECTRICAL SITE DETAILS

BID DOCUMENTS
MAY 15, 2013

SHEET NUMBER
ES501

C:\Users\hunzaga.KGE\Documents\2010-117.00_KGE_STUDENT LIFE_ELECTRICAL_CENTERAL_2012_hunzaga.rvt
2/22/2013 1:47:36 PM

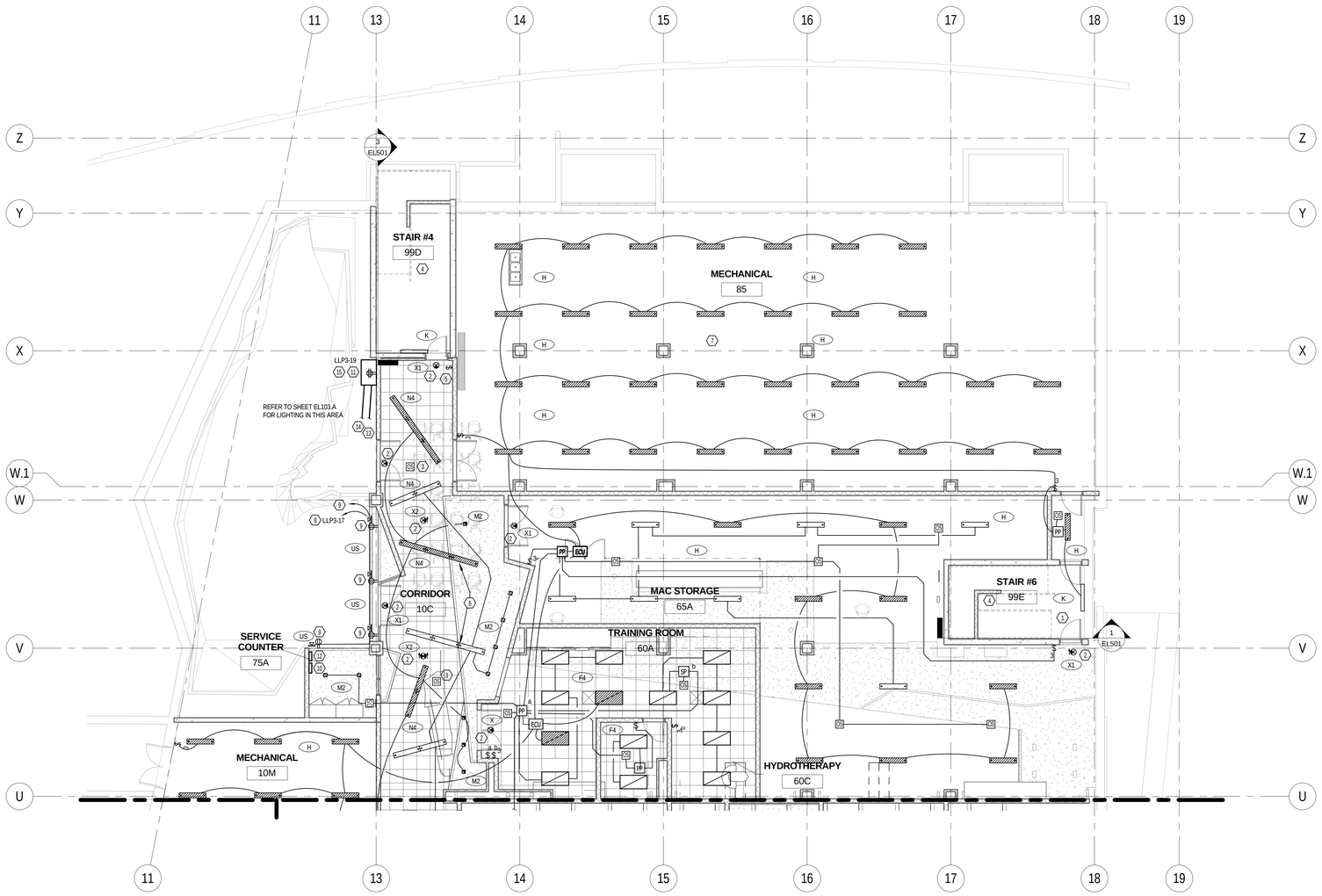


1 EL100.A A ENLARGED LOWER LEVEL RCP PLAN NORTH
SCALE |1/8" = 1'-0"

0' 4'-0" 8'-0" 16'-0"
1/8" =1'-0"

KEYED NOTES - SHEET EL100.A

1. CONTINUATION ON LEVEL ONE
2. CONNECT ALL EXIT SIGNS TO UNSWITCHED EM. CIRCUIT.
3. CORRIDOR OCCUPANCY SENSORS SHALL BE CONNECTED TO THE RELAY CONTROL PANEL ON THIS FLOOR TO CONTROL CORRIDOR LIGHTING. DURING DAYTIME (OCCUPIED) MODE, THE OCCUPANCY SENSORS SHALL CONTROL THE NORMAL LIGHTING IN ZONES AND EMERGENCY LIGHTING SHALL REMAIN ON DURING NIGHT TIME (UNOCCUPIED) MODE. NORMAL LIGHTING SHALL REMAIN OFF. EMERGENCY LIGHTING SHALL BE TURNED OFF BY LIGHTING CONTROL SYSTEM'S TIME CLOCK. DURING OFF HOURS AND UPON SENSING OCCUPANCY, ALL EMERGENCY LIGHTS SHALL TURN ON.
4. STAIRWELL LIGHTING FIXTURES SHALL HAVE 2 BALLASTS AND 2 LAMPS WITH INTEGRATED OCCUPANCY SENSOR: ONE LAMP CONSTANTLY ON, ONE LAMP SENSORED.
5. LOW VOLTAGE 2 BUTTON OVERRIDE SWITCH SHALL BE CONNECTED TO THE RELAY CONTROL SYSTEM TO TURN CORRIDOR LIGHTS ON/OFF AFTER HOURS.
6. ELECTRICAL CONTRACTOR TO COORDINATE WITH THE FRAMING CONTRACTOR FOR AREAS WHERE LINEAR FIXTURES TRANSITION FROM PENDANT MOUNT TO RECESS MOUNT. FIXTURE IS TO BE CONTINUOUS WITH NO SECTION BREAK. FRAMING AND GYP BOARD IS TO BE INSTALLED TO ACCOMODATE THE LIGHTING FIXTURE. ELECTRICAL CONTRACTOR TO COORDINATE THE FRAMING OPENING WITH THE FIXTURE SUBMITTED, NOT THE DIMENSION SHOWN ON THE LUMINAIRE SCHEDULE. ACTUAL FIXTURE WIDTHS MAY VARY FROM MANUFACTURER TO MANUFACTURER.
7. ADJUST LIGHTING AS NEEDED TO ACCOMMODATE MECHANICAL UNITS.
8. 120V CIRCUIT FOR LIGHTING.
9. PROVIDE DUPLEX RECEPTACLE RECESSED IN COLUMN BUILDOUT FOR FIXTURE. PROVIDE DATA JACK WITH 4 JACKS IN ONE PLATE. PROVIDE CAT6 CABLING FROM THE ROCK WALL LIGHTING CONTROLLER TO JACK LOCATION. CAT6 CABLING IS FOR THE DMX SIGNAL AND DOES NOT CONNECT TO THE FACILITY NETWORK. ALL CABLING IN THIS INSTANCE IS PROVIDED AND TERMINATED BY THE CONTRACTOR.
10. ROCKWALL LIGHTING HOIST CONTROLLER. INSTALL IN A LOCATION SO USER HAS LINE OF SIGHT TO THE HOISTS.
11. LIGHTING CONTROL CABINET.
12. TOUCH SCREAN LIGHTING SCENE CONTROLLER.
13. DMX CABLING TO LIGHTING SCENE CONTROLEER.
14. DMX TO EACH LIGHTING HOIST AND EACH SET OF LIGHTING ON WALLS/COLUMNS.
15. SET THE STANDARD SCENE TO START METER 3200K STARTING AT SUNRISE, INCRESSING TO 5200K BY NOON, FADING TO 4200K BY MID AFTERNOON THEN BACK TO 3200K BY DUSK. MAINTAIN 3200K UNTIL THE FACILITY CLOSES. SET A SECOND SCENE TO WASH THE WALL RED TO BE USED WHEN DESIRED. USER MUST CHANGE WALL TO RED BY THE SCORE CONTROLLER. INCLUDE THE SERVICES OF THE FACTORY TRAINED CREATIVE PROGRAMMER TO WORK WITH THE OWNER FOR ADDITIONAL SCENE PROGRAMMING, MAXIMUM OF AREA DAY OF SERVICE. COORDINATE WITH THE OWNER TO HAVE IDEAS AND CONCEPTS PREPARED PRIOR TO THE WORK DAY WITH THE CREATIVE PROGRAMMER.

GENERAL NOTES - SHEET EL100.A

A. COORDINATE MOUNTING HEIGHT OF ALL LIGHT FIXTURES WITH ARCHITECTURAL PLANS/ DRAWINGS.
B. MAKE SMOOTH TRANSITION FOR LIGHT FIXTURES WITH RESPECT TO CEILING TRANSITION. COORDINATE THIS WITH ARCHITECT.

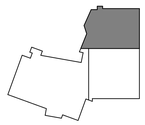

KEYPLAN

MHTN
ARCHITECTS
MHTN Architects, Inc.
420 East South Temple
Suite 100
Salt Lake City, Utah 84111
Telephone (801) 595-6700
Telefax (801) 595-6717
www.mhtn.com

Hastings+Chivetta
ARCHITECTURE • PLANNING • ENGINEERING
622 Emerson, Suite 200
St. Louis, MO 63141
Tel. 314.863.5717
Fax. 314.863.2823
www.hastingschivetta.com

BUILDING OFFICIAL STAMP

Ken Garner
Engineering, Inc.
Electrical Engineering Consultants, Inc.
102 West 500 South, Suite 225
Salt Lake City, Utah 84101
P. 801.328.8800
F. 801.328.8802
Contact: Paris LeLaCheur
Project #: 2010-117.00

# UNIVERSITY OF UTAH
## STUDENT LIFE CENTER
1836 E. BALLIF ROAD
SALT LAKE CITY, UTAH 84112

SEAL

MHTN PROJECT NO. 2010562.00

DRAWN BY: KGE CHECKED BY: KGE

ISSUED:

| NO. | DATE | DESCRIPTION |
|---|---|---|

CONTRACTOR TO VERIFY DRAWINGS IN FIELD USE REFLECT LAST REVISION DATE.

| NO. | DATE | DESCRIPTION |
|---|---|---|

SHEET NAME
LOWER LEVEL LIGHTING AREA A
BID DOCUMENTS
May 15, 2013

SHEET NUMBER
EL100.A

C:\Users\brown.KGE\Documents\2010-117.00_KGE_STUDENT LIFE_ELECTRICAL_CENTERAL_2012_brown.rvt
5/14/2013 5:45:02 PM

KEYED NOTES - SHEET EL100.B

1. CONTINUATION ON LEVEL ONE.
2. CONNECT ALL EXIT SIGNS TO UNSWITCHED EM. CIRCUIT.
3. CORRIDOR OCCUPANCY SENSORS SHALL BE CONNECTED TO THE RELAY CONTROL PANEL ON THIS FLOOR TO CONTROL CORRIDOR LIGHTING. DURING DAYTIME (OCCUPIED) MODE, THE OCCUPANCY SENSORS SHALL CONTROL NORMAL LIGHTING IN ZONES AND EMERGENCY LIGHTING SHALL REMAIN ON. DURING NIGHT TIME (UNOCCUPIED) MODE, NORMAL LIGHTING SHALL REMAIN OFF. EMERGENCY LIGHTING SHALL BE TURNED OFF BY THE LIGHTING CONTROL SYSTEM'S TIME CLOCK. DURING OFF HOURS AND UPON SENSING OCCUPANCY, ALL EMERGENCY LIGHTS SHALL TURN ON.
4. STAIRWELL LIGHTING FIXTURES SHALL HAVE 2 BALLASTS AND 2 LAMPS WITH INTEGRATED OCCUPANCY SENSOR: ONE LAMP CONSTANTLY ON, ONE LAMP SENSORED.
5. LOW VOLTAGE 2 BUTTON OVERRIDE SWITCH SHALL BE CONNECTED TO THE RELAY CONTROL SYSTEM TO TURN CORRIDOR LIGHTS ON/OFF AFTER HOURS.
6. LOW VOLTAGE 8 BUTTON SWITCHING FOR CONTROL OF BASKETBALL COURT LIGHTING. CONTROL IS TO BE MANUAL ON/ MANUAL OFF WITH A PRESET TIME OFF AT THE END OF THE DAY.

GENERAL NOTES - SHEET EL100.B

A. COORDINATE MOUNTING HEIGHT OF ALL LIGHT FIXTURES WITH ARCHITECTURAL PLANS/ DRAWINGS.
B. MAKE SMOOTH TRANSITION FOR LIGHT FIXTURES WITH RESPECT TO CEILING TRANSITION. COORDINATE THIS WITH ARCHITECT.

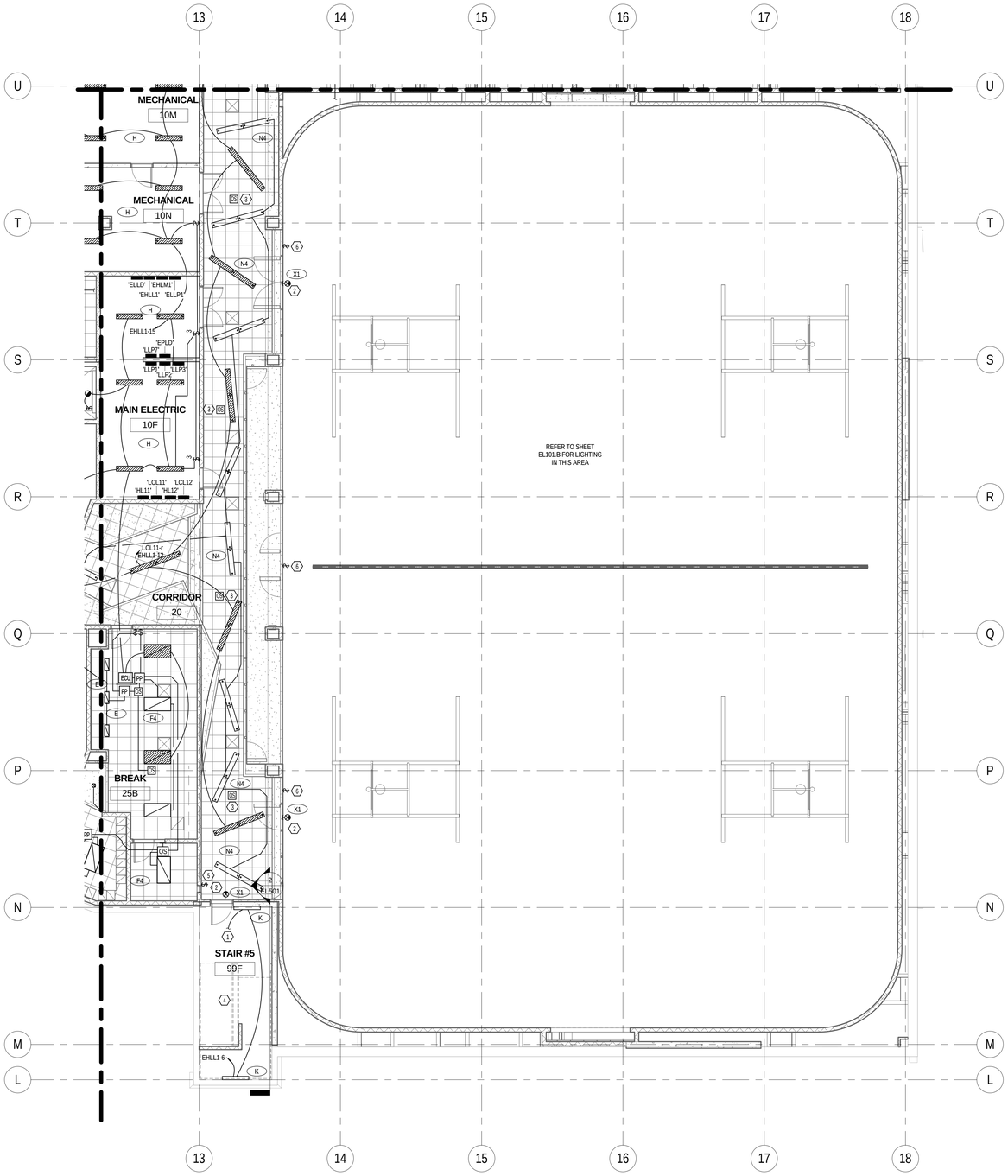


1 EL100.B B ENLARGED LOWER LEVEL RCP PLAN SOUTH
SCALE |1/8" = 1'-0"

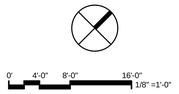


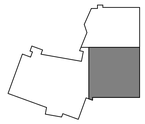

KEYPLAN


MHTN
ARCHITECTS
MHTN Architects, Inc.
420 East South Temple
Suite 100
Salt Lake City, Utah 84111
Telephone (801) 595-6700
Telefax (801) 595-6717
www.mhtn.com

Hastings+Chivetta
ARCHITECTURE • PLANNING • ENGINEERING
622 Emerson, Suite 200
St. Louis, MO 63141
Tel. 314.863.5717
Fax. 314.863.2823
www.hastingschivetta.com


BUILDING OFFICIAL STAMP


Ken Garner
Engineering, Inc.
Electrical Engineering Consultants, Inc.
102 West 500 South, Suite 225
Salt Lake City, Utah 84101
P. 801.328.8800
F. 801.328.8802
Contact: Paris LeLaCheur
Project #: 2010-117.00


# UNIVERSITY OF UTAH

## STUDENT LIFE CENTER

1836 E. BALLIF ROAD
SALT LAKE CITY, UTAH 84112

SEAL

MHTN PROJECT NO. 2010562.00

DRAWN BY: KGE CHECKED BY: KGE

ISSUED:

| NO. | DATE | DESCRIPTION |
|---|---|---|

CONTRACTOR TO VERIFY DRAWINGS IN FIELD USE REFLECT LAST REVISION DATE.

| NO. | DATE | DESCRIPTION |
|---|---|---|

SHEET NAME

LOWER LEVEL
LIGHTING AREA
B

BID DOCUMENTS
May 15, 2013

SHEET NUMBER

EL100.B

C:\Users\ftrown\KGE\Documents\2010-117.00_KGE_STUDENT LIFE_ELECTRICAL_CENTERAL_2012_ftrown.rvt
5/14/2013 5:45:19 PM

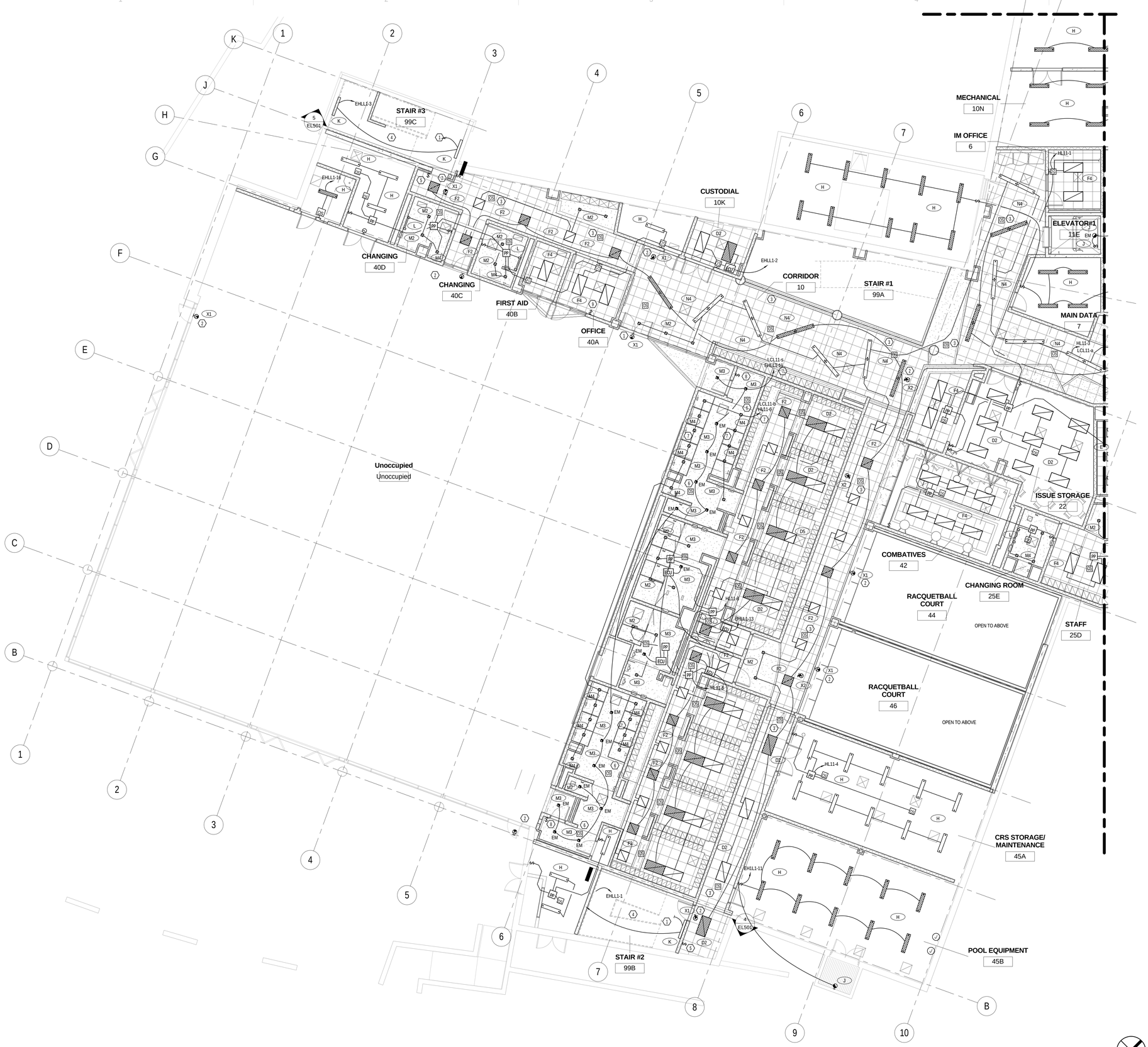


1 C ENLARGED LOWER LEVEL RCP PLAN WEST
EL100.C SCALE |1/8" = 1'-0"

KEYED NOTES - SHEET EL100.C

1. CONTINUATION ON LEVEL ONE.
2. CONNECT ALL EXIT SIGNS TO UNSWITCHED EM CIRCUIT.
3. CORRIDOR OCCUPANCY SENSORS SHALL BE CONNECTED TO THE RELAY CONTROL PANEL ON THIS FLOOR TO CONTROL CORRIDOR LIGHTING. DURING DAYTIME (OCCUPIED) MODE, THE OCCUPANCY SENSORS SHALL CONTROL NORMAL LIGHTING IN ZONES AND EMERGENCY LIGHTING SHALL REMAIN ON. DURING NIGHT TIME (UNOCCUPIED) MODE, NORMAL LIGHTING SHALL REMAIN OFF. EMERGENCY LIGHTING SHALL BE TURNED OFF BY THE LIGHTING CONTROL SYSTEM'S TIME CLOCK. DURING OFF HOURS AND UPON SENSING OCCUPANCY, ALL EMERGENCY LIGHTS SHALL TURN ON.
4. STAIRWELL LIGHTING FIXTURES SHALL HAVE 2 BALLASTS AND 2 LAMPS WITH INTEGRATED OCCUPANCY SENSORS: ONE LAMP CONSTANTLY ON, ONE LAMP SENSORED.
5. LOW VOLTAGE 2 BUTTON OVERRIDE SWITCH SHALL BE CONNECTED TO THE RELAY CONTROL SYSTEM TO TURN CORRIDOR LIGHTS ON/OFF AFTER HOURS. LOCKER OCCUPANCY SENSORS SHALL BE CONNECTED TO THE RELAY CONTROL PANEL ON THIS FLOOR TO CONTROL LOCKER/ TOILET LIGHTING.
6. SHOWER AREA OCCUPANCY SENSORS SHALL BE CONNECTED TO THE RELAY CONTROL PANEL ON THIS FLOOR TO CONTROL SHOWER AREA LIGHTING. DURING DAYTIME (OCCUPIED) MODE, THE OCCUPANCY SENSORS SHALL CONTROL NORMAL LIGHTING IN ZONES AND EMERGENCY LIGHTING SHALL REMAIN ON. DURING NIGHT TIME (UNOCCUPIED) MODE, NORMAL LIGHTING SHALL REMAIN OFF. EMERGENCY LIGHTING SHALL BE TURNED OFF BY THE LIGHTING CONTROL SYSTEM'S TIME CLOCK. DURING OFF HOURS AND UPON SENSING OCCUPANCY, ALL EMERGENCY LIGHTS SHALL TURN ON.
7. SHOWER AREA LIGHTING SHALL BE CONNECTED TO THE RELAY CONTROL PANEL ON THIS FLOOR TO CONTROL LIGHTING IN THIS ZONE BY LIGHTING CONTROL SYSTEM'S TIME CLOCK.
8. LOW VOLTAGE 2 BUTTON OVERRIDE SWITCH SHALL BE CONNECTED TO THE RELAY CONTROL SYSTEM TO TURN SHOWER LIGHTS ON/OFF AFTER HOURS.
9. LOW VOLTAGE 8 BUTTON SWITCHING TO CONTROL POOL LIGHTING. CONTROL TO BE MANUAL ON/ MANUAL OFF WITH A PRESET TIME OFF AT THE END OF THE DAY.

GENERAL NOTES - EL100.C

A. COORDINATE MOUNTING HEIGHT OF ALL LIGHT FIXTURES WITH ARCHITECTURAL PLANS/ DRAWINGS.
B. MAKE SMOOTH TRANSITION FOR LIGHT FIXTURES WITH RESPECT TO CEILING TRANSITION. COORDINATE THIS WITH ARCHITECT.


MHTN ARCHITECTS
MHTN Architects, Inc.
420 East South Temple
Suite 100
Salt Lake City, Utah 84111
Telephone (801) 595-6700
Telefax (801) 595-6717
www.mhtn.com

Hastings+Chivetta
ARCHITECTURE • PLANNING • ENGINEERING
622 Emerson, Suite 200
St. Louis, MO 63141
Tel. 314.863.5717
Fax. 314.863.2823
www.hastingschivetta.com

BUILDING OFFICIAL STAMP
Ken Garner Engineering, Inc.
Electrical Engineering Consultants, Inc.
102 West 500 South, Suite 225
Salt Lake City, Utah 84101
P. 801.328.8800
F. 801.328.8802
Contact: Paris LeLaCheur
Project #: 2010-117.00


# UNIVERSITY OF UTAH
## STUDENT LIFE CENTER
1836 E. BALLIF ROAD
SALT LAKE CITY, UTAH 84112

SEAL

MHTN PROJECT NO. 2010562.00
DRAWN BY: KGE CHECKED BY: KGE

ISSUED:

| NO. | DATE | DESCRIPTION |
|---|---|---|

CONTRACTOR TO VERIFY DRAWINGS IN FIELD USE REFLECT LAST REVISION DATE.

| NO. | DATE | DESCRIPTION |
|---|---|---|

SHEET NAME
LOWER LEVEL LIGHTING AREA C
BID DOCUMENTS
May 15, 2013

SHEET NUMBER
EL100.C

0' 4'-0" 8'-0" 16'-0"
1/8" =1'-0"

KEYPLAN

C:\Users\brown.KGE\Documents\2010-117.00_KGE_STUDENT LIFE_ELECTRICAL_CENTERAL_2012_drawn.rvt
5/14/2013 5:45:35 PM

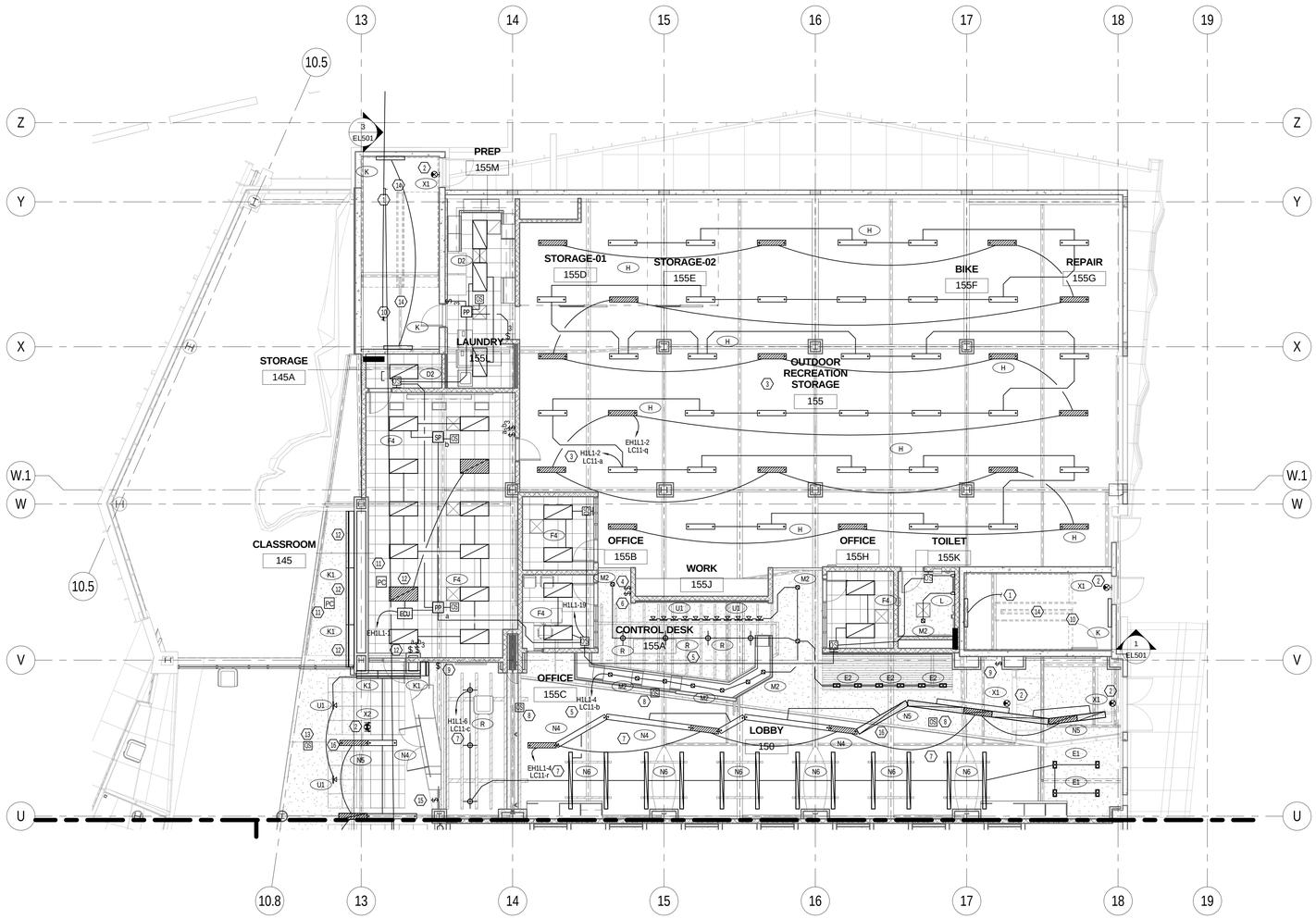


1 EL101.A A ENLARGED LEVEL 1 RCP PLAN NORTH
SCALE |1/8" = 1'-0"

KEYED NOTES - SHEET EL101.A

1. CONTINUATION ON LEVEL 2.
2. CONNECT ALL EXIT SIGNS TO UNSWITCHED EM. CIRCUIT.
3. OUTDOOR RECREATION STORAGE LIGHTING SHALL BE CONNECTED TO RELAY CONTROL PANEL ON THIS FLOOR TO CONTROL THE LIGHTING IN THIS ZONE BY LIGHTING CONTROL SYSTEM'S TIME CLOCK.
4. LOW VOLTAGE 2 BUTTON OVERRIDE SWITCH SHALL BE CONNECTED TO THE RELAY CONTROL SYSTEM TO TURN RECREATION STORAGE LIGHTS ON/OFF AFTER HOURS.
5. CONTROL DEST LIGHTING SHALL BE CONNECTED TO RELAY CONTROL PANEL ON THIS FLOOR TO CONTROL LIGHTING IN THIS ZONE BY LIGHTING CONTROL SYSTEM'S TIME CLOCK.
6. LOW VOLTAGE 2 BUTTON OVERRIDE SWITCH SHALL BE CONNECTED TO THE RELAY CONTROL SYSTEM TO TURN CONTROL DESK LIGHTS ON/OFF AFTER HOURS.
7. LOBBY LIGHTING SHALL BE CONNECTED TO RELAY CONTROL PANEL ON THIS FLOOR TO CONTROL LIGHTING IN THIS ZONE BY LIGHTING CONTROL SYSTEM'S TIME CLOCK.
8. LOBBY OCCUPANCY SENSORS SHALL BE CONNECTED TO THE RELAY CONTROL PANEL ON THIS FLOOR SUCH THAT DURING OFF HOURS AND UPON SENSING OCCUPANCY SHALL TURN ON ALL EMERGENCY LIGHTS.
9. LOW VOLTAGE 2 BUTTON OVERRIDE SWITCH SHALL BE CONNECTED TO THE RELAY CONTROL SYSTEM TO TURN LOBBY LIGHTS ON/OFF AFTER HOURS.
10. CONTINUATION ON LEVEL 1.
11. DIMMING PHOTO SENSOR TO OPERATE A STANDARD 0-10V DC ELECTRONIC DIMMING BALLAST.
12. FIXTURES TO BE CONTROLLED BY PHOTOSENSOR.
13. CORRIDOR OCCUPANCY SENSORS SHALL BE CONNECTED TO RELAY CONTROL PANEL ON THIS FLOOR TO CONTROL CORRIDOR LIGHTING. DURING DAYTIME (OCCUPIED) MODE, THE OCCUPANCY SENSORS SHALL CONTROL THE NORMAL LIGHTING IN ZONES AND THE EMERGENCY LIGHTING SHALL REMAIN ON.DURING NIGHT TIME (UNOCCUPIED) MODE. NORMAL LIGHTING SHALL REMAIN OFF. EMERGENCY LIGHTING SHALL BE TURNED OFF BY LIGHTING CONTROL SYSTEM'S TIME CLOCK.DURING OFF-HOURS AND UPON SENSING OCCUPANCY , ALL EMERGENCY LIGHTS SHALL TURN ON.
14. STAIRWELL LIGHTING FIXTURES SHALL HAVE 2 BALLASTS AND 2 LAMPS WITH INTEGRATED OCCUPANCY SENSOR; ONE LAMP CONSTANTLY ON, ONE LAMP SENSORED.
15. LOW VOLTAGE 2 BUTTON OVERRIDE SWITCH SHALL BE CONNECTED TO THE RELAY CONTROL SYSTEM TO TURN CORRIDOR LIGHTS ON/OFF AFTER HOURS.
16. ELECTRICAL CONTRACTOR TO COORDINATE WITH THE FRAMING CONTRACTOR FOR AREAS WHERE LINEAR FIXTURES TRANSITION FROM PENDANT MOUNT TO RECESS MOUNT. FIXTURE IS TO BE CONTINUOUS WITHNO SECTION BREAK. FRAMING AND GYP BOARD IS TO BE INSTALLED TO ACCOMODATE THE LIGHTING FIXTURE. ELECTRICAL CONTRACTOR TO COORDINATE THE FRAMING OPENING WITH THE FIXTURE SUBMITTED, NOT THE DIMENSION SHOWN ON THE LUMINAIRE SCHEDULE. ACTUAL FIXTURE WIDTHS MAY VARY FROM MANUFACTURER TO MANUFACTURER.

GENERAL NOTES - SHEET EL101.A

A. COORDINATE MOUNTING HEIGHT OF ALL LIGHT FIXTURES WITH ARCHITECTURAL PLANS/ DRAWINGS.
B. MAKE SMOOTH TRANSITION FOR LIGHT FIXTURES WITH RESPECT TO CEILING TRANSITION. COORDINATE THIS WITH ARCHITECTURAL PLAN DRAWINGS.

MHTN ARCHITECTS
MHTN Architects, Inc.
420 East South Temple
Suite 100
Salt Lake City, Utah 84111
Telephone (801) 595-6700
Telefax (801) 595-6717
www.mhtn.com

Hastings+Chivetta
ARCHITECTURE • PLANNING • ENGINEERING
622 Emerson, Suite 200
St. Louis, MO 63141
Tel. 314.863.5717
Fax. 314.863.2823
www.hastingschivetta.com

BUILDING OFFICIAL STAMP
Ken Garner Engineering, Inc.
Electrical Engineering Consultants, Inc.
102 West 500 South, Suite 225
Salt Lake City, Utah 84101
P. 801.328.8800
F. 801.328.8802
Contact: Paris LeLaCheur
Project #: 2010-117.00

# UNIVERSITY OF UTAH
## STUDENT LIFE CENTER
1836 E. BALLIF ROAD
SALT LAKE CITY, UTAH 84112

SEAL

MHTN PROJECT NO. 2010562.00
DRAWN BY: KGE CHECKED BY: KGE

ISSUED:

| NO. | DATE | DESCRIPTION |
|---|---|---|

CONTRACTOR TO VERIFY DRAWINGS IN FIELD.USE REFLECT LAST REVISION DATE.

| NO. | DATE | DESCRIPTION |
|---|---|---|

SHEET NAME
LEVEL 1
LIGHTING AREA
A
BID DOCUMENTS
May 15, 2013

SHEET NUMBER
EL101.A

KEYPLAN

C:\Users\rbrown.KGE\Documents\2010-117.00_KGE_STUDENT LIFE_ELECTRICAL_CENTERAL_2012_rbrown.rvt
5/14/2013 5:46:02 PM

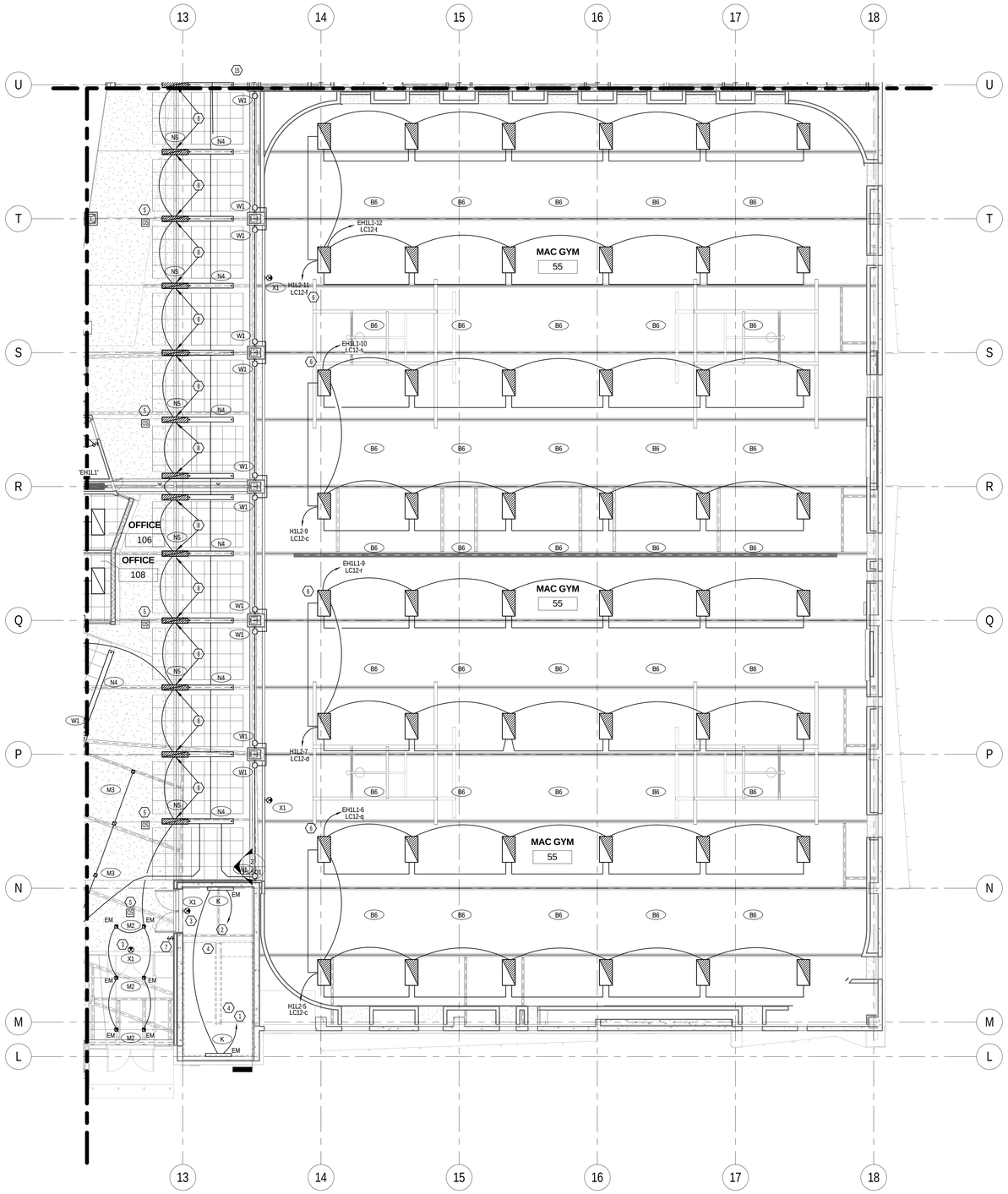


1 EL101.B B ENLARGED LEVEL 1 RCP PLAN SOUTH

SCALE |1/8" = 1'-0"

0' 4'-0" 8'-0" 16'-0"
1/8" =1'-0"

KEYED NOTES - SHEET EL101.B

1. CONTINUATION ON LEVEL 2.
2. CONTINUATION ON LEVEL 1.
3. CONNECT ALL EXIT SIGNS TO UNSWITCHED EM. CIRCUIT.
4. STAIRWELL LIGHTING FIXTURES SHALL HAVE 2 BALLASTS AND 2 LAMPS WITH INTEGRATED OCCUPANCY SENSOR; ONE LAMP CONSTANTLY ON, ONE LAMP SENSORED.
5. CORRIDOR OCCUPANCY SENSORS SHALL BE CONNECTED TO THE RELAY CONTROL PANEL ON THIS FLOOR TO CONTROL THE CORRIDOR LIGHTING. DURING DAYTIME (OCCUPIED) MODE, THE OCCUPANCY SENSORS SHALL CONTROL THE NORMAL LIGHTING IN ZONES AND THE EMERGENCY LIGHTING SHALL REMAIN ON DURING NIGHT TIME (UNOCCUPIED) MODE. NORMAL LIGHTING SHALL REMAIN OFF. EMERGENCY LIGHTING SHALL BE TURNED OFF BY LIGHTING CONTROL SYSTEM'S TIME CLOCK. DURING OFF HOURS AND UPON SENSING OCCUPANCY, ALL EMERGENCY LIGHTS SHALL TURN ON.
6. MAC GYM BASKETBALL LIGHTING SHALL BE CONNECTED TO RELAY CONTROL PANEL ON THIS FLOOR TO CONTROL THE LIGHTING IN THIS ZONE BY LIGHTING CONTROL SYSTEM'S TIME CLOCK. EACH HIGH BAY FIXTURE SHALL HAVE 2 BALLASTS, ONE FOR 2-LAMPS TIED TO EMERGENCY CIRCUIT, THE OTHER FOR 4-LAMPS IN THE FIXTURE TIED TO NORMAL CIRCUIT. SWITCHING SHOWN ON SHEET EL100.B.
7. LOW VOLTAGE 2 BUTTON OVERRIDE SWITCH SHALL BE CONNECTED TO THE RELAY CONTROL SYSTEM TO TURN CORRIDOR LIGHTS ON/OFF AFTER HOURS.
8. ELECTRICAL CONTRACTOR TO COORDINATE WITH THE FRAMING CONTRACTOR FOR AREAS WHERE LINEAR FIXTURES TRANSITION FROM PENDANT MOUNT TO RECESS MOUNT. FIXTURE IS TO BE CONTINUOUS WITH NO SECTION BREAK. FRAMING AND GYP BOARD IS TO BE INSTALLED TO ACCOMODATE THE LIGHTING FIXTURE. ELECTRICAL CONTRACTOR TO COORDINATE THE FRAMING OPENING WITH THE FIXTURE SUBMITTED. NOT THE DIMENSION SHOWN ON THE LUMINAIRE SCHEDULE. ACTUAL FIXTURE WIDTHS MAY VARY FROM MANUFACTURER TO MANUFACTURER.

GENERAL NOTES - SHEET EL101.B

A. COORDINATE MOUNTING HEIGHT OF ALL LIGHT FIXTURES WITH ARCHITECTURAL PLANS/DRAWINGS.
B. MAKE SMOOTH TRANSITION FOR LIGHT FIXTURES WITH RESPECT TO CEILING TRANSITION. COORDINATE THIS WITH ARCHITECTURAL PLANS/DRAWINGS

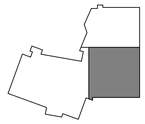

KEYPLAN


MHTN
ARCHITECTS
**MHTN Architects, Inc.**
420 East South Temple
Suite 100
Salt Lake City, Utah 84111
Telephone (801) 595-6700
Telefax (801) 595-6717
www.mhtn.com

**Hastings+Chivetta**
ARCHITECTURE • PLANNING • ENGINEERING
622 Emerson, Suite 200
St. Louis, MO 63141
Tel. 314.863.5717
Fax. 314.863.2823
www.hastingschivetta.com


BUILDING OFFICIAL STAMP


Ken Garner
Engineering, Inc.
Electrical Engineering Consultants, Inc.
102 West 500 South, Suite 225
Salt Lake City, Utah 84101
P. 801.328.8800
F. 801.328.8802
Contact: Paris LeLaCheur
Project #: 2010-117.00


# UNIVERSITY OF UTAH
## STUDENT LIFE CENTER
1836 E. BALLIF ROAD
SALT LAKE CITY, UTAH 84112

SEAL

MHTN PROJECT NO. 2010562.00

DRAWN BY: KGE CHECKED BY: KGE

ISSUED:

| NO. | DATE | DESCRIPTION |
|---|---|---|

CONTRACTOR TO VERIFY DRAWINGS IN FIELD USE REFLECT LAST REVISION DATE.

| NO. | DATE | DESCRIPTION |
|---|---|---|

SHEET NAME
LEVEL 1
LIGHTING AREA
B
BID DOCUMENTS
May 15, 2013

SHEET NUMBER
EL101.B

C:\Users\drown.KGE\Documents\2010-117.00_KGE_STUDENT LIFE_ELECTRICAL_CENTERAL_2012_drown.rvt
5/14/2013 5:46:17 PM

KEYED NOTES - SHEET EL101.C

1. CONTINUATION ON LEVEL 2.
2. CONTINUATION ON LEVEL 1.
3. CONNECT ALL EXIT SIGNS TO UNSWITCHED EM. CIRCUIT.
4. STAIRWELL LIGHTING FIXTURES SHALL HAVE 2 BALLASTS AND 2 LAMPS WITH INTEGRATED OCCUPANCY SENSOR; ONE LAMP CONSTANTLY ON, ONE LAMP SENSORED.
5. CORRIDOR OCCUPANCY SENSORS SHALL BE CONNECTED TO THE RELAY CONTROL PANEL ON THIS FLOOR TO CONTROL CORRIDOR LIGHTING. DURING DAYTIME (OCCUPIED) MODE THE OCCUPANCY SENSORS SHALL CONTROL THE NORMAL LIGHTING IN ZONES AND EMERGENCY LIGHTING SHALL REMAIN ON.DURING NIGHT TIME (UNOCCUPIED) MODE: NORMAL LIGHTING SHALL REMAIN OFF. EMERGENCY LIGHTING SHALL BE TURNED OFF BY LIGHTING CONTROL SYSTEM'S TIME CLOCK. DURING OFF HOURS AND UPON SENSING OCCUPANCY, ALL EMERGENCY LIGHTS SHALL TURN ON.
6. POOL LIGHTING SHALL BE CONNECTED TO RELAY CONTROL PANEL ON THIS FLOOR TO CONTROL THE LIGHTING IN THIS ZONE BY LIGHTING CONTROL SYSTEM'S TIME CLOCK. PROVIDE GFCI BREAKER FOR POOL LIGHTINGS.
7. RACQUETBALL LIGHTING SHALL BE CONNECTED TO RELAY CONTROL PANEL ON THIS FLOOR TO CONTROL THE LIGHTING IN THIS ZONE BY LIGHTING CONTROL SYSTEM'S TIME CLOCK.
8. LOW VOLTAGE 2 BUTTON OVERRIDE SWITCH SHALL BE CONNECTED TO THE RELAY CONTROL SYSTEM TO TURN CORRIDOR LIGHTS ON/OFF AFTER HOURS.
9. ELECTRICAL CONTRACTOR TO COORDINATE WITH THE FRAMING CONTRACTOR FOR THE AREAS WHERE LINEAR FIXTURES TRANSITION FROM PENDANT MOUNT TO RECESS MOUNT. FIXTURE IS TO BE CONTINUOUS WITH NO SECTION BREAK, THE FRAMING AND GYP. BOARD IS TO BE INSTALLED TO ACCOMMODATE THE LIGHTING FIXTURE. ELECTRICAL CONTRACTOR IS TO COORDINATE THE FRAMING OPENING WITH THE FIXTURE SUBMITTED, NOT THE DIMENSION SHOWN ON THE LUMINAIRE SCHEDULE. ACTUAL FIXTURE WIDTHS MAY VARY FROM MANUFACTURER TO MANUFACTURER.
10. ADJUST LIGHTING AS NEEDED TO ACCOMMODATE MECHANICAL UNITS.
11. DIMMING PHOTOSENSOR TO OPERATE A STANDARD 0-10 VDC ELECTRONIC DIMMING DRIVER. COORDINATE THE PROPER HEIGHT AN LOCATION WITH MANUFACTURER AND ARCHETECTURAL PLANS.
12. FIXTURES TO BE CONTROLLED BY PHOTOSENSOR. CONTROL SCHEMS. WILL BE SET THROUGH PROGRAMING.

GENERAL NOTES - SHEET EL101.C

A. COORDINATE MOUNTING HEIGHT OF ALL LIGHT FIXTURES WITH ARCHITECTURAL PLANS/ DRAWINGS.
B. MAKE SMOOTH TRANSITION FOR LIGHT FIXTURES WITH RESPECT TO CEILING TRANSITION. COORDINATE THIS WITH ARCHITECTURAL PLANS/DRAWINGS.

1 EL101.C C ENLARGED LEVEL 1 RCP PLAN WEST
SCALE |1/8" = 1'-0"

0' 4'-0" 8'-0" 16'-0"
1/8" =1'-0"

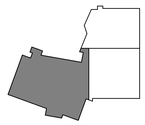

KEYPLAN

C:\Users\drown.KGE\Documents\2010-117.00_KGE_STUDENT LIFE_ELECTRICAL_CENTERAL_2012_drown.rvt
5/14/2013 5:46:39 PM

MHTN
ARCHITECTS
MHTN Architects, Inc.
420 East South Temple
Suite 100
Salt Lake City, Utah 84111
Telephone (801) 595-6700
Telefax (801) 595-6717
www.mhtn.com

Hastings+Chivetta
ARCHITECTURE • PLANNING • ENGINEERING
622 Emerson, Suite 200
St. Louis, MO 63141
Tel. 314.863.5717
Fax. 314.863.2823
www.hastingschivetta.com

BUILDING OFFICIAL STAMP
Ken Garner
Engineering, Inc.
Electrical Engineering Consultants, Inc.
102 West 500 South, Suite 225
Salt Lake City, Utah 84101
P. 801.328.8800
F. 801.328.8802
Contact: Paris LeLaCheur
Project #: 2010-117.00

# UNIVERSITY OF UTAH
## STUDENT LIFE CENTER
1836 E. BALLIF ROAD
SALT LAKE CITY, UTAH 84112

SEAL

MHTN PROJECT NO. 2010562.00

DRAWN BY: KGE CHECKED BY: KGE

ISSUED:

| NO. | DATE | DESCRIPTION |
|---|---|---|

CONTRACTOR TO VERIFY DRAWINGS IN FIELD USE REFLECT LAST REVISION DATE:

| NO. | DATE | DESCRIPTION |
|---|---|---|
| 1 | Date 1 | Revision 1 |

SHEET NAME
LEVEL 1
LIGHTING AREA
C
BID DOCUMENTS
May 15, 2013

SHEET NUMBER
EL101.C

KEYED NOTES - SHEET EL102.A

1. DIMMING PHOTO SENSOR TO OPERATE A STANDARD 0-10 VCD ELECTRONIC DIMMING DRIVER. COORDINATE THE PROPER HEIGHT AND LOCATION WITH MANUFACTURER AND ARCHITECT PLANS.
2. FIXTURES TO BE CONTROLLED BY PHOTOSENSOR. CONTROL SCHEMES WILL BE SET THROUGH PROGRAMMING.
3. CONNECT EXIST SIGNS TO UNSWITCHED EM CIRCUITS.
4. CORRIDOR PHOTO SENSOR AND OCCUPANCY SENSORS SHALL BE CONNECTED TO THE RELAY CONTROL PANEL ON THIS FLOOR TO CONTROL THE CORRIDOR LIGHTING. DURING DAY TIME (OCCUPIED) MODE, THE OCCUPANCY SENSORS SHALL CONTROL THE NORMAL LIGHTING IN ZONES AND THE EMERGENCY LIGHTING SHALL REMAIN ON DURING NIGHT TIME (UNOCUPIED) MODE. THE NORMAL LIGHTING SHALL REMAIN OFF. EMERGENCY LIGHTING SHALL BE TURNED OFF BY LIGHTING CONTROL SYSTEM'S TIME CLOCK. DURING OFF HOURS AND UPON SENSING OCCUPANCY ALL EMERGENCY LIGHTS SHALL TURN ON.
5. CONTINUATION ON LEVEL 3.
6. CONTINUATION ON LEVEL 2.
7. STAIR WELL LIGHT FIXTURES SHALL HAVE 2 BALLASTS AND 2 LAMPS WITH INTEGRATED OCCUPANCY SENSOR; ONE LAMP CONSTANTLY ON, ONE LAMP SENSORED.
8. LOW VOLTAGE SCENE SWITCH FOR CONTROL OF THE EXERCISE ROOMS. WATTSTOPPER LMSW-105 OR EQUAL APPROVED.
9. LOW VOLTAGE 2 BUTTON OVERRIDE SWITCH SHALL BE CONNECTED TO THE RELAY CONTROL SYSTEM TO TURN CORRIDOR LIGHTS ON/OFF AFTER HOURS.

GENERAL NOTES - EL102.A

A. COORDINATE THE MOUNTING HEIGHT OF ALL LIGHT FIXTURES WITH ARCHITECTURAL PLANS/DRAWINGS.
B. MAKE SMOOTH TRANSITION FOR LIGHT FIXTURES WITH RESPECT TO CEILING TRANSITION, COORDINATE THIS WITH ARCHITECTURAL PLANS/DRAWINGS.

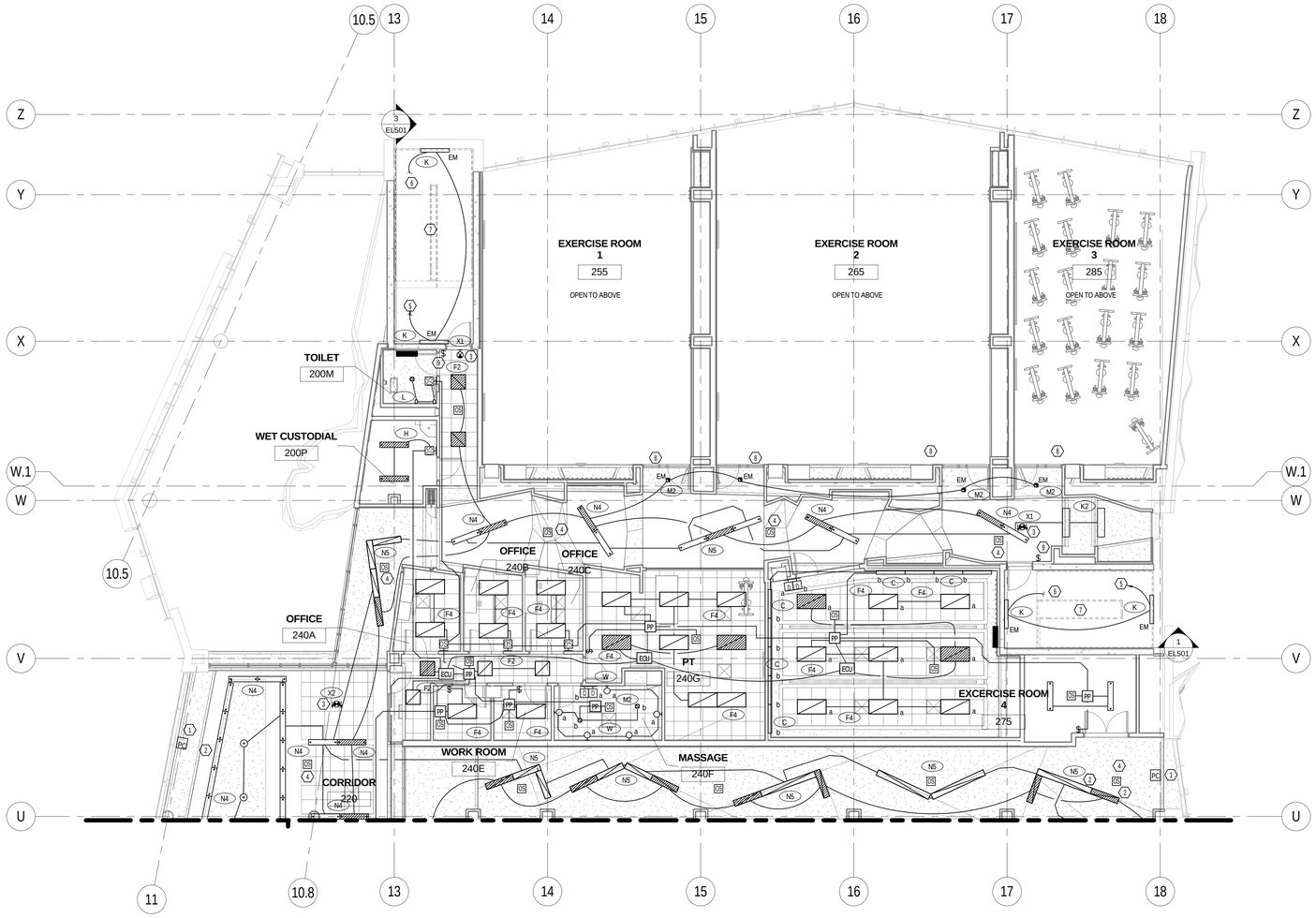


1 EL102.A A ENLARGED LEVEL 2 RCP PLAN NORTH
SCALE | 1/8" = 1'-0"

0' 4'-0" 8'-0" 16'-0"
1/8" =1'-0"

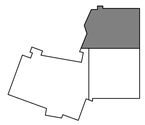

KEYPLAN


MHTN ARCHITECTS
MHTN Architects, Inc.
420 East South Temple
Suite 100
Salt Lake City, Utah 84111
Telephone (801) 595-6700
Telefax (801) 595-6717
www.mhtn.com

Hastings+Chivetta
ARCHITECTURE • PLANNING • ENGINEERING
622 Emerson, Suite 200
St. Louis, MO 63141
Tel. 314.863.5717
Fax. 314.863.2823
www.hastingschivetta.com

BUILDING OFFICIAL STAMP
Ken Garner Engineering, Inc.
Electrical Engineering Consultants, Inc.
102 West 500 South, Suite 225
Salt Lake City, Utah 84101
P. 801.328.8800
F. 801.328.8802
Contact: Paris LeLaCheur
Project #: 2010-117.00


# UNIVERSITY OF UTAH
## STUDENT LIFE CENTER
1836 E. BALLIF ROAD
SALT LAKE CITY, UTAH 84112

SEAL

MHTN PROJECT NO. 2010562.00
DRAWN BY: KGE CHECKED BY: KGE

ISSUED:

| NO. | DATE | DESCRIPTION |
|---|---|---|

CONTRACTOR TO VERIFY DRAWINGS IN FIELD USE REFLECT LAST REVISION DATE:

| NO. | DATE | DESCRIPTION |
|---|---|---|

SHEET NAME
LEVEL 2
LIGHTING AREA
A
BID DOCUMENTS
May 15, 2013

SHEET NUMBER
EL102.A

C:\Users\ttrown.KGE\Documents\2010-117.00_KGE_STUDENT LIFE_ELECTRICAL_CENTERAL_2012_ttrown.rvt
5/14/2013 5:46:52 PM

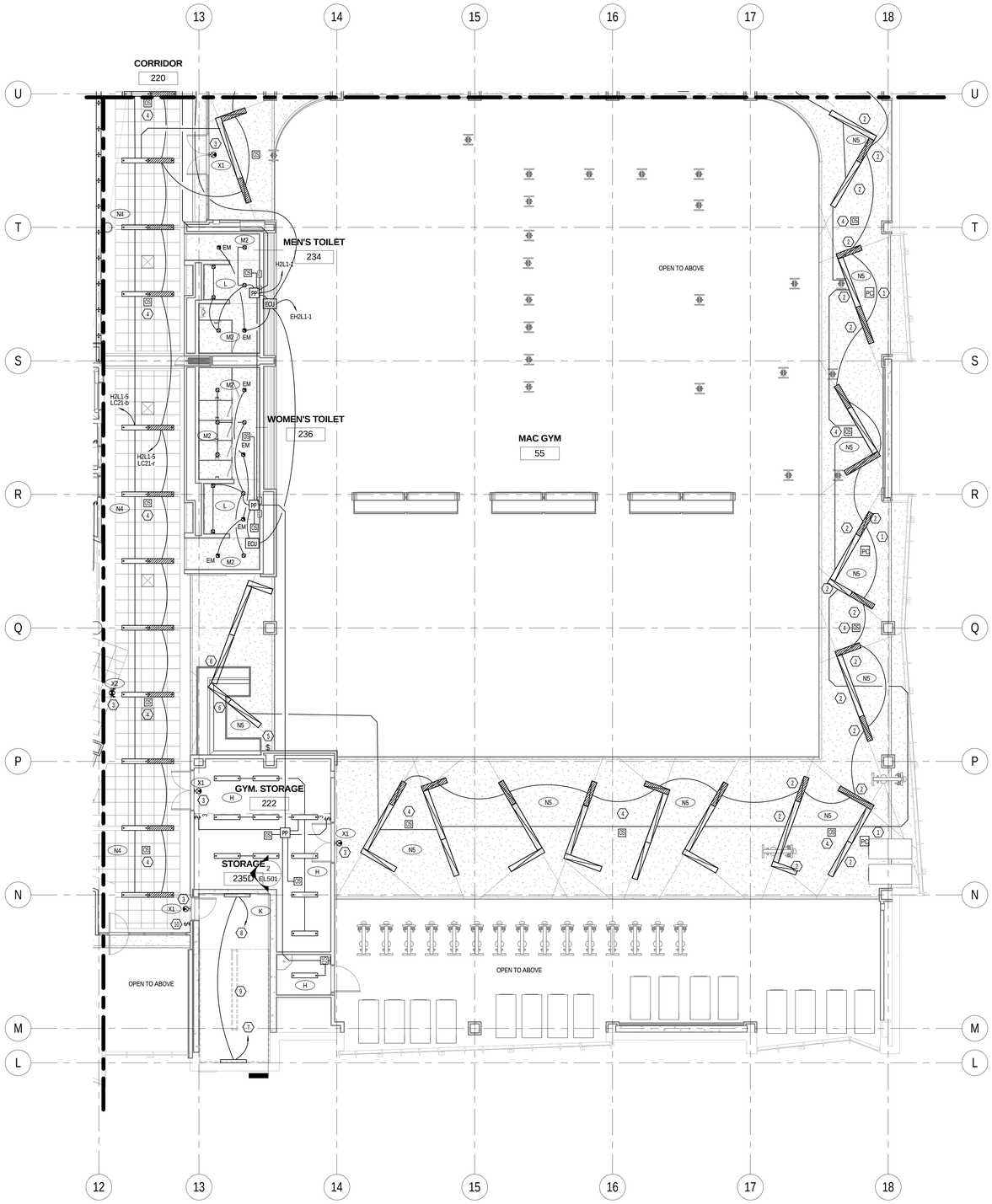


1 EL102.B B ENLARGED LEVEL 2 RCP PLAN SOUTH

SCALE | 1/8" = 1'-0"

0' 4'-0" 8'-0" 16'-0"
1/8" =1'-0"

KEYED NOTES - SHEET EL102.B

1. DIMMING PHOTOSENSOR TO OPERATE A STANDARD 0-10 VDC ELECTRONIC DIMMING DRIVER. COORDINATE THE PROPER HEIGHT AND LOCATION WITH MANUFACTURER AND ARCHITECT PLANS.
2. FIXTURES TO BE CONTROLLED BY PHOTOSENSOR.
3. CONNECT EXIT SIGNS TO UNSWITCHED EM. CIRCUITS.
4. CORRIDOR PHOTOSENSORS AND OCCUPANCY SENSORS SHALL BE CONNECTED TO RELAY CONTROL PANEL ON THIS FLOOR TO CONTROL CORRIDOR LIGHTING. DURING DAYTIME (OCCUPIED) MODE, THE OCCUPANCY SENSORS SHALL CONTROL NORMAL LIGHTING IN ZONES AND EMERGENCY LIGHTING SHALL REMAIN ON DURING NIGHT TIME (UNOCCUPIED) MODE. NORMAL LIGHTING SHALL REMAIN OFF. EMERGENCY LIGHTING SHALL BE TURNED OFF BY LIGHTING CONTROL SYSTEM'S TIME CLOCK. DURING OFF HOURS AND UPON SENSING OCCUPANCY, ALL EMERGENCY LIGHTS SHALL TURN ON.
5. LOW VOLTAGE 4 BUTTON (X3) SWITCHING FOR CONTROL OF FITNESS CENTER LIGHTING. CONTROL IS TO BE MANUAL ON/ MANUAL OFF WITH A PRESET TIME OFF AT THE END OF THE DAY.
6. ELECTRICAL CONTRACTOR TO COORDINATE WITH THE FRAMING CONTRACTOR FOR AREAS WHERE LINEAR FIXTURES TRANSITION FROM PENDANT MOUNT TO RECESS MOUNT. FIXTURE IS TO BE CONTINUOUS WITH NO SECTION BREAK. FRAMING AND GYP BOARD IS TO BE INSTALLED TO ACCOMODATE THE LIGHTING FIXTURE. ELECTRICAL CONTRACTOR IS TO COORDINATE THE FRAMING OPENING WITH THE FIXTURE SUBMITTED, NOT THE DIMENSION SHOWN ON THE LUMINAIRE SCHEDULE. ACTUAL FIXTURE WIDTHS MAY VARY FROM MANUFACTURER TO MANUFACTURER.
7. CONTINUATION ON LEVEL 1.
8. CONTINUATION ON LEVEL 2.
9. STAIRWELL LIGHTING FIXTURES SHALL HAVE 2 BALLASTS AND 2 LAMPS WITH INTEGRATED OCCUPANCY SENSOR; ONE LAMP CONSTANTLY ON, ONE LAMP SENSORED.
10. LOW VOLTAGE 2-BUTTON OVERRIDE SWITCH SHALL BE CONNECTED TO THE RELAY CONTROL SYSTEM TO TURN CORRIDOR LIGHTS ON/OFF AFTER HOURS.

GENERAL NOTES - SHEET EL102.B

A. COORDINATE MOUNTING HEIGHT OF ALL LIGHT FIXTURES WITH ARCHITECTURAL PLANS/ DRAWINGS.
B. MAKE SMOOTH TRANSITION FOR LIGHT FIXTURES WITH RESPECT TO CEILING TRANSITION. COORDINATE THIS WITH ARCHITECT.

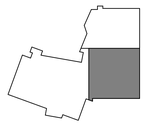

KEYPLAN

MHTN
ARCHITECTS
MHTN Architects, Inc.
420 East South Temple
Suite 100
Salt Lake City, Utah 84111
Telephone (801) 595-6700
Telefax (801) 595-6717
www.mhtn.com

Hastings+Chivetta
ARCHITECTURE • PLANNING • ENGINEERING
622 Emerson, Suite 200
St. Louis, MO 63141
Tel. 314.863.5717
Fax. 314.863.2823
www.hastingschivetta.com

BUILDING OFFICIAL STAMP
Ken Garner Engineering, Inc.
Electrical Engineering Consultants, Inc.
102 West 500 South, Suite 225
Salt Lake City, Utah 84101
P. 801.328.8800
F. 801.328.8802
Contact: Paris LeLaCheur
Project #: 2010-117.00

# UNIVERSITY OF UTAH
## STUDENT LIFE CENTER
1836 E. BALLIF ROAD
SALT LAKE CITY, UTAH 84112

SEAL

MHTN PROJECT NO. 2010562.00

DRAWN BY: KGE CHECKED BY: KGE

ISSUED:

| NO. | DATE | DESCRIPTION |
|---|---|---|

CONTRACTOR TO VERIFY DRAWINGS IN FIELD USE REFLECT LAST REVISION DATE:

| NO. | DATE | DESCRIPTION |
|---|---|---|

SHEET NAME
LEVEL 2
LIGHTING AREA
B
BID DOCUMENTS
May 15, 2013

SHEET NUMBER
EL102.B

C:\Users\ttrown.KGE\Documents\2010-117.00_KGE_STUDENT LIFE_ELECTRICAL_CENTERAL_2012_ttrown.rvt
5/14/2013 5:47:07 PM

1 C ENLARGED LEVEL 2 RCP PLAN WEST
EL102.C SCALE [1/8" = 1'-0"

KEYED NOTES - SHEET EL102.C

1. DIMMING PHOTOSENSOR TO OPERATE A STANDARD 0-10 VDC ELECTRONIC DIMMING DRIVER. COORDINATE THE PROPER HEIGHT AND LOCATION WITH MANUFACTURER AND ARCHITECT PLANS.
2. FIXTURES TO BE CONTROLLED BY PHOTOSENSOR.
3. CONNECT EXIT SIGNS TO UNSWITCHED EM CIRCUITS.
4. CORRIDOR PHOTOSENSOR AND OCCUPANCY SENSORS SHALL BE CONNECTED TO THE RELAY CONTROL PANEL ON THIS FLOOR TO CONTROL CORRIDOR LIGHTING. DURING DAYTIME (OCCUPIED) MODE, THE OCCUPANCY SENSORS SHALL CONTROL THE NORMAL LIGHTING IN ZONES AND EMERGENCY LIGHTING SHALL REMAIN ON DURING NIGHT TIME (UNOCCUPIED) MODE. NORMAL LIGHTING SHALL REMAIN OFF EMERGENCY LIGHTING SHALL BE TURNED OFF BY LIGHTING CONTROL SYSTEMS TIME CLOCK DURING OFF HOURS AND UPON SENSING OCCUPANCY, ALL EMERGENCY LIGHTS SHALL TURN ON.
5. ELECTRICAL CONTRACTOR TO COORDINATE WITH THE FRAMING CONTRACTOR FOR THE AREAS WHERE THE LINEAR FIXTURES TRANSITION FROM PENDANT MOUNT TO RECESS MOUNT. THE FIXTURE IS TO BE CONTINUOUS WITH NO SECTION BREAK, THE FRAMING AND G/P BOARD IS TO BE INSTALLED TO ACCOMMODATE THE LIGHTING FIXTURE. THE ELECTRICAL CONTRACTOR IS TO COORDINATE THE FRAMING OPENING WITH THE FIXTURE SUBMITTED, NOT THE DIMENSION SHOWN ON THE LUMINAIRE SCHEDULE, ACTUAL FIXTURE WIDTHS MAY VARY FROM MANUFACTURER TO MANUFACTURER.
6. LOW VOLTAGE 4-BUTTON (X3) SWITCHING FOR CONTROL OF THE 3 COURT GYMNASIUM CONTROL IS TO BE MANUAL ON/ MANUAL OFF WITH A PRESET TIME OFF AT THE END OF THE DAY.
7. CONTINUATION ON LEVEL 1.
8. CONTINUATION ON LEVEL 3.
9. STAIR WELL LIGHT FIXTURES SHALL HAVAE 2 BALLAST AND 2 LAMPS WITH INTEGRATED OCCUPANCY SENSOR; ONE LAMP CONSTANTLY ON, ONE LAMP SENSORED.
10. LOW VOLTAGE 2 BUTTON OVERRIDE SWITCH SHALL BE CONNECTED TO THE RELAY CONTROL SYSTEM TO TURN CORRIDOR LIGHTS ON/OFF AFTER HOURS.

GENERAL NOTES - SHEET E.102 C

A. COORDINATE MOUNTING HEIGHT OF ALL LIGHT FIXTURES WITH ARCHITECTURAL PLANS/DRAWINGS. MAKE SMOOTH TRANSITION FOR LIGHT FIXTURES WITH RESPECT TO CEILING TRANSITIOIN. COORDINATE THIS WITH ARCHITECT.

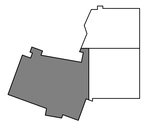

KEYPLAN


MHTN ARCHITECTS
**MHTN Architects, Inc.**
420 East South Temple
Suite 100
Salt Lake City, Utah 84111
Telephone (801) 595-6700
Telefax (801) 595-6717
www.mhtn.com

**Hastings+Chivetta**
ARCHITECTURE • PLANNING • ENGINEERING
622 Emerson, Suite 200
St. Louis, MO 63141
Tel. 314.863.5717
Fax. 314.863.2823
www.hastingschivetta.com

BUILDING OFFICIAL STAMP
Ken Garner Engineering, Inc.
Electrical Engineering Consultants, Inc.
102 West 500 South, Suite 225
Salt Lake City, Utah 84101
P. 801.328.8800
F. 801.328.8802
Contact: Paris LeLaCheur
Project #: 2010-117.00


# UNIVERSITY OF UTAH
## STUDENT LIFE CENTER
1836 E. BALLIF ROAD
SALT LAKE CITY, UTAH 84112

SEAL

MHTN PROJECT NO. 2010562.00
DRAWN BY: KGE CHECKED BY: KGE

ISSUED:

| NO. | DATE | DESCRIPTION |
|---|---|---|

CONTRACTOR TO VERIFY DRAWINGS IN FIELD USE REFLECT LAST REVISION DATE:

| NO. | DATE | DESCRIPTION |
|---|---|---|

SHEET NAME
LEVEL 2
LIGHTING AREA
C
BID DOCUMENTS
May 15, 2013

SHEET NUMBER
EL102.C

C:\Users\tbrown.KGE\Documents\2010-117.00_KGE_STUDENT LIFE_ELECTRICAL_CENTERAL_2012_tbrown.rvt
5/14/2013 5:47:23 PM

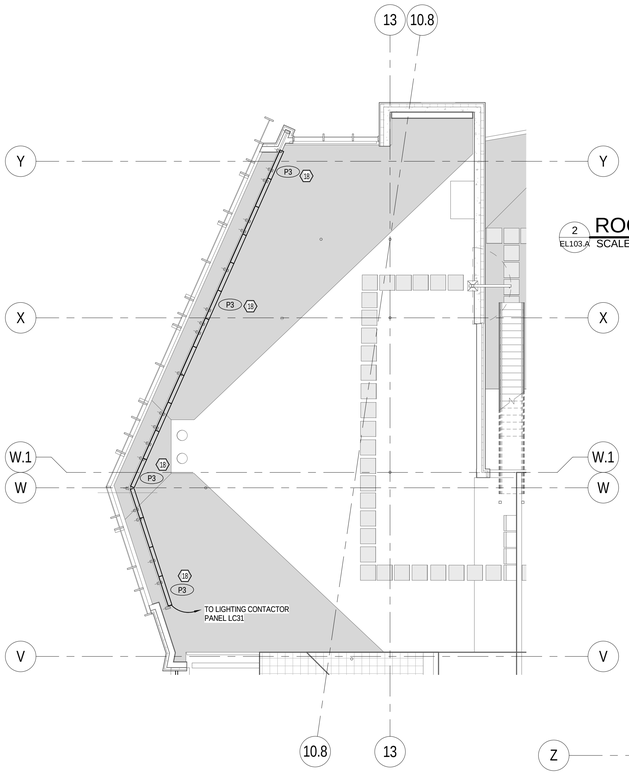


2 EL103.A ROOF LIGHTING PLAN - AREA A
SCALE |1/8" = 1'-0"

KEYED NOTES - SHEET EL103.A

1. DIMMING PHOTOSENSOR TO OPERATE A STANDARD 0-10 VCD ELECTRONIC DIMMING DRIVER. COORDINATE THE PROPER HEIGHT AND LOCATION WITH MANUFACTURER AND ARCHITECT PLANS.
2. FIXTURES TO BE CONTROLLED BY PHOTOSENSOR. CONTROL SCHEMES WILL BE SET THROUGH PROGRAMMING.
3. CONNECT EXIT SIGNS TO UNSWITCHED EM. CIRCUITS.
4. CORRIDOR PHOTOSENSORS AND OCCUPANCY SENSORS SHALL BE CONNECTED TO THE RELAY CONTROL PANEL ON THIS FLOOR TO CONTROL CORRIDOR LIGHTING. DURING DAYTIME (OCCUPIED) MODE, OCCUPANCY SENSORS SHALL CONTROL NORMAL LIGHTING IN ZONES AND EMERGENCY LIGHTING SHALL REMAIN ON. DURING NIGHT TIME (UNOCCUPIED) MODE, NORMAL LIGHTING SHALL REMAIN OFF. EMERGENCY LIGHTING SHALL BE TURNED OFF BY LIGHTING CONTROL SYSTEM'S TIME CLOCK. DURING OFF HOURS AND UPON SENSING OCCUPANCY, ALL EMERGENCY LIGHTS SHALL TURN ON.
5. CONTINUATION ON LEVEL 2.
6. STAIRWELL LIGHT FIXTURES SHALL HAVE 2 BALLASTS AND 2 LAMPS WITH INTEGRATED OCCUPANCY SENSOR: ONE LAMP CONSTANTLY ON, ONE LAMP SENSORED.
7. DIMMING ROOM CONTROLLER WATTSTOPPER LMRC-212-U OR EQUAL APPROVED.
8. FOR LOCATION OF LOW VOLTAGE SCENE SWITCH REFER TO SHEET EL102.A.
9. LOW VOLTAGE 2 BUTTON OVERRIDE SWITCH SHALL BE CONNECTED TO THE RELAY CONTROL SYSTEM TO TURN CORRIDOR LIGHTS ON/OFF AFTER HOURS.
10. 208V CIRCUIT FOR HOIST MOTOR.
11. 120V CIRCUIT FOR LIGHTING.
12. PROVIDE DUPLEX RECEPTACLE RECESSED IN COLUMN BUILDOUT FOR FIXTURE. PROVIDE DATA JACK WITH 4 JACKS IN ONE PLATE. PROVIDE CAT6 CABLING FROM THE ROCK WALL LIGHTING CONTROLLER TO JACK LOCATION. CAT6 CABLING IS FOR THE DMX SIGNAL AND DOES NOT CONNECT TO THE FACILITY NETWORK. ALL CABLING IN THS INSTANCE IS PROVIDED AND TERMINATED BY THE CONTRACTOR.
13. CAT6 CABLING TO ROCK WALL LIGHTING CONTROLLER. CAT6 CABLING IS FOR THE DMX SIGNAL AND DOES NOT CONNECT TO THE FACILITY NETWORK. ALL CABLING IN THIS INSTANCE IS PROVIDED AND TERMINATED BY THE CONTRACTOR.
14. CAT6 CABLE TO BE ROUTED FROM FIXTURE TO FIXTURE AND FASTENED TO BAR VELCRO STRAPS.
15. PROVIDE PHOTOCELL TIED TO ROCK WALL LIGHTING CONTROLLER. SET TO TURN OFF LIGHTING AT 75FC.
16. REELS FOR POWER AND DATA CABLING. COORDINATE WITH LIGHTING LIFT MANUFACTURER FOR ASSOCIATED REELS THAT ARE COMPATIBLE WITH LIFT MANUFACTURER.
17. COORDINATE WITH STRUCTURAL DRAWINGS FOR DIRECTION OF TRUSS STEEL. PROVIDE MOUNTING PLATE THAT ADJUSTS SO THAT THE LIFT MOUNTING WILL BE PARALLEL TO WINDOWS FOR THE LONG RUN. SHORT RUN IS TO BE ADJUSTED IN THE FIELD BASED ON ACTUAL WALL DESIGN AND SHAPE.
18. FIXTURE TO BE MOUNTED SO THAT THE LENS IS CENTERED ON THE GLASS CANOPY. FIXTURE TO BE MOUNTED PER DETAIL X/XXX. REFER TO DETAIL FOR REQUIRED FABRICATED SHIELD.

GENERAL NOTES - EL103.A

A. COORDINATE MOUNTING HEIGHT OF ALL LIGHT FIXTURES WITH ARCHITECTURAL PLANS/ DRAWINGS.
B. MAKE SMOOTH TRANSITION FOR LIGHT FIXTURES WITH RESPECT TO CEILING TRANSITION. COORDINATE THIS WITH ARCHITECT.

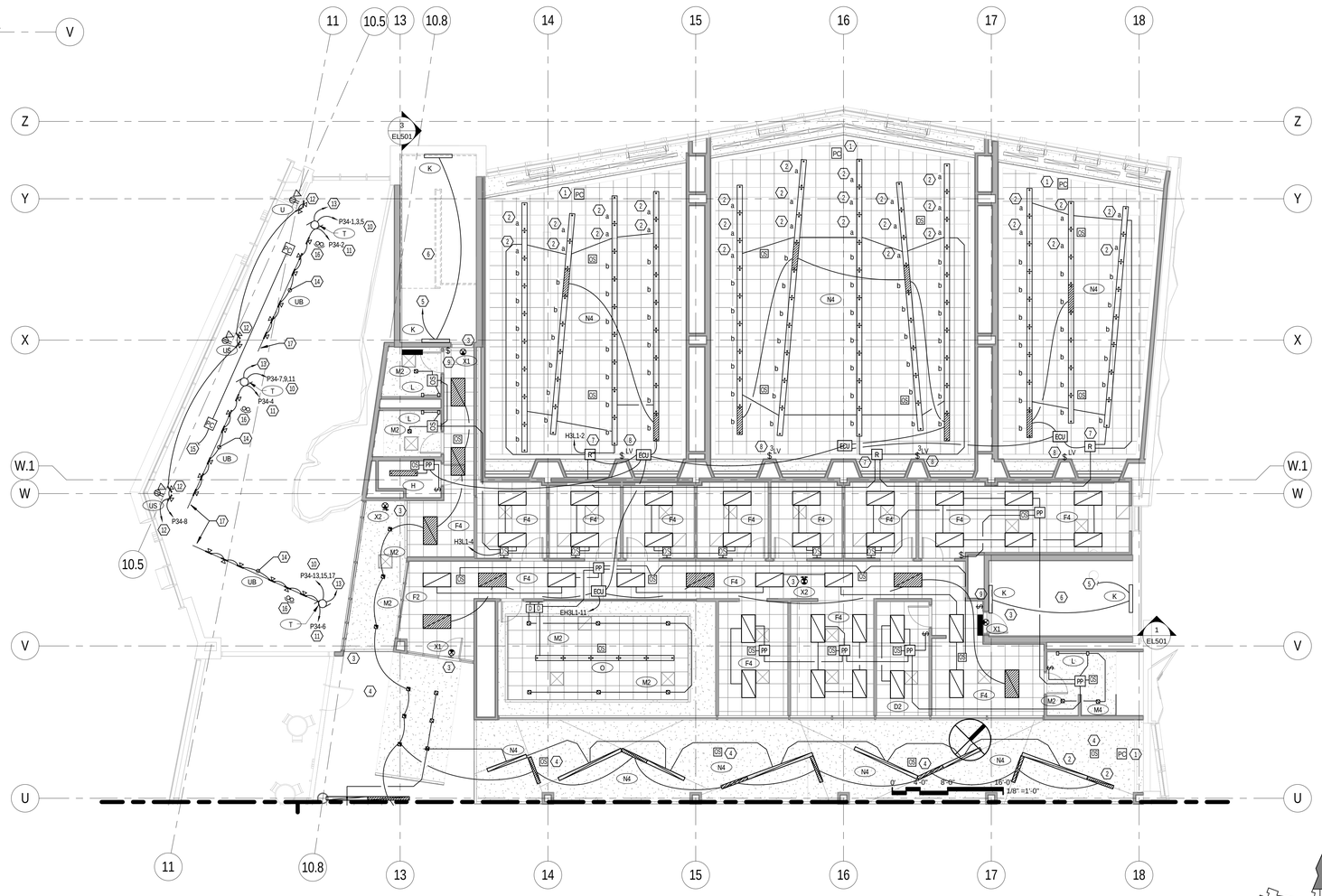


1 EL103.A A ENLARGED LEVEL 3 RCP PLAN NORTH
SCALE |1/8" = 1'-0"

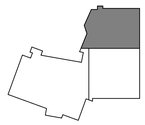

KEYPLAN

MHTN ARCHITECTS
MHTN Architects, Inc.
420 East South Temple
Suite 100
Salt Lake City, Utah 84111
Telephone (801) 595-6700
Telefax (801) 595-6717
www.mhtn.com

Hastings+Chivetta
ARCHITECTURE • PLANNING • ENGINEERING
622 Emerson, Suite 200
St. Louis, MO 63141
Tel. 314.863.5717
Fax. 314.863.2823
www.hastingschivetta.com

BUILDING OFFICIAL STAMP
Ken Garner Engineering, Inc.
Electrical Engineering Consultants, Inc.
102 West 500 South, Suite 225
Salt Lake City, Utah 84101
P. 801.328.8800
F. 801.328.8802
Contact: Paris LeLaCheur
Project #: 2010-117.00

# UNIVERSITY OF UTAH
## STUDENT LIFE CENTER
1836 E. BALLIF ROAD
SALT LAKE CITY, UTAH 84112

SEAL

MHTN PROJECT NO. 2010562.00
DRAWN BY: KGE CHECKED BY: KGE

ISSUED:

| NO. | DATE | DESCRIPTION |
|---|---|---|

CONTRACTOR TO VERIFY DRAWINGS IN FIELD USE REFLECT LAST REVISION DATE.

| NO. | DATE | DESCRIPTION |
|---|---|---|

SHEET NAME
LEVEL 3 LIGHTING AREA A
BID DOCUMENTS
May 15, 2013

SHEET NUMBER
EL103.A

C:\Users\brown.KGE\Documents\2010-117.00_KGE_STUDENT LIFE_ELECTRICAL_CENTERAL_2012_brown.rvt
5/14/2013 5:47:34 PM

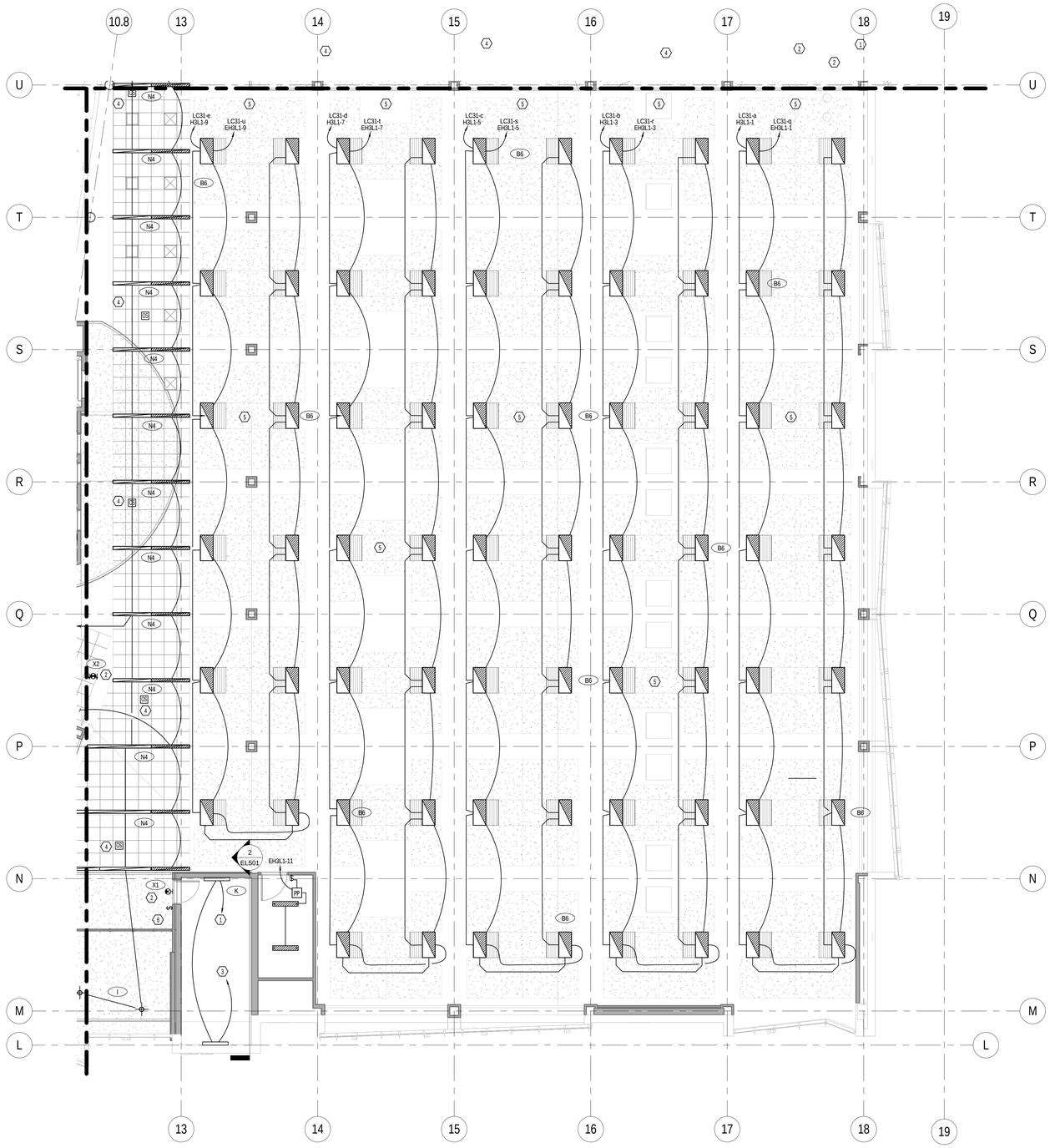


1 EL103.B B ENLARGED LEVEL 3 RCP PLAN SOUTH
SCALE |1/8" = 1'-0"

0' 4'-0" 8'-0" 16'-0"
1/8" =1'-0"

KEYNOTES - SHEET EL103.B

1. CONTINUATION ON LEVEL 2.
2. CONNECT ALL EXIT SIGNS TO UNSWITCHED EM. CIRCUIT.
3. STAIRWELL LIGHT FIXTURES SHALL HAVE TWO BALLASTS AND TWO LAMPS WITH INTEGRATED OCCUPANCY SENSOR; ONE LAMP CONSTANTLY ON, ONE LAMP SENSORED.
4. COORDIDOR OCCUPANCY SENSORS SHALL BE CONNECTED TO THE RELAY CONTROL PANEL ON THIS FLOOR TO CONTROL THE COORIDOR LIGHTING. DURING DAY TIME (OCCUPIED) MODE, THE OCCUPANCY SENSORS SHALL CONTROL THE NORMAL LIGHTING IN ZONES AND THE EMERGENCY LIGHTING SHALL REMAIN ON DURINNIGHT TIME (UNOCCUPIED) MODE. THE NORMAL LIGHTING SHALL REMAIN OFF. EMERGENCY LIGHTING SHALL BE TURNED OFF BY LIGHTING CONTROL SYSTEM'S TIME CLOCK. DURING OFF HOURS AND UPON SENSING OCCUPANCY, ALL EMERGENCY LIGHTS SHALL TURN ON.
5. FITNESS CENTER LIGHTING SHALL BE CONNECTED TO RELAY CONTROL PANEL ON THIS FLOOR TO CONTROL THE LIGHTING IN THIS ZONE BY LIGHTING CONTROL SYSTEM'S TIME CLOCK. EACH HIGH BAY FIXTURE SHALL HAVE TWO BALLASTS, ONE FOR TWO LAMPS TIED TO EMERGENCY CIRCUIT. THE OTHER BALLAST FOR FOUR LAMPS IN THE FIXTURE TIED TO NORMAL CIRCUIT SWITCHING SHOWN ON SHEET EL102.B.
6. LOW VOLTAGE TWO BUTTON OVERRIDE SWITCH SHALL BE CONNECTED TO THE RELAY CONTROL SYSTEM TO TURN COORIDOR LIGHTS ON/OFF AFTER HOURS.

GENERAL NOTES - SHEET EL103.B

A. COORDINATE MOUNTING HEIGHT OF ALL LIGHT FIXTURES WITH ARCHITECTURAL PLANS/ DRAWINGS.
B. MAKE SMOOTH TRANSITION FOR LIGHT FIXTURES WITH RESPECT TO CEILING TRANSITION. COORDINATE THIS WITH ARCHITECT.

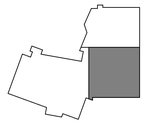

KEYPLAN

MHTN
ARCHITECTS
**MHTN Architects, Inc.**
420 East South Temple
Suite 100
Salt Lake City, Utah 84111
Telephone (801) 595-6700
Telefax (801) 595-6717
www.mhtn.com

**Hastings+Chivetta**
ARCHITECTURE • PLANNING • ENGINEERING
622 Emerson, Suite 200
St. Louis, MO 63141
Tel. 314.863.5717
Fax. 314.863.2623
www.hastingschivetta.com

BUILDING OFFICIAL STAMP

Ken Garner
Engineering, Inc.
Electrical Engineering Consultants, Inc.
102 West 500 South, Suite 225
Salt Lake City, Utah 84101
P. 801.328.8800
F. 801.328.8802
Contact: Paris LeLaCheur
Project #: 2010-117.00

# UNIVERSITY OF UTAH
## STUDENT LIFE CENTER
1836 E. BALLIF ROAD
SALT LAKE CITY, UTAH 84112

SEAL

MHTN PROJECT NO. 2010562.00

DRAWN BY: KGE CHECKED BY: KGE

ISSUED:

| NO. | DATE | DESCRIPTION |
|---|---|---|

CONTRACTOR TO VERIFY DRAWINGS IN FIELD USE REFLECT LAST REVISION DATE.

| NO. | DATE | DESCRIPTION |
|---|---|---|

SHEET NAME
LEVEL 3
LIGHTING AREA
B
BID DOCUMENTS
May 15, 2013

SHEET NUMBER
EL103.B

C:\Users\drown.KGE\Documents\2010-117.00_KGE_STUDENT LIFE_ELECTRICAL_CENTERAL_2012_drown.rvt
5/14/2013 5:47:45 PM

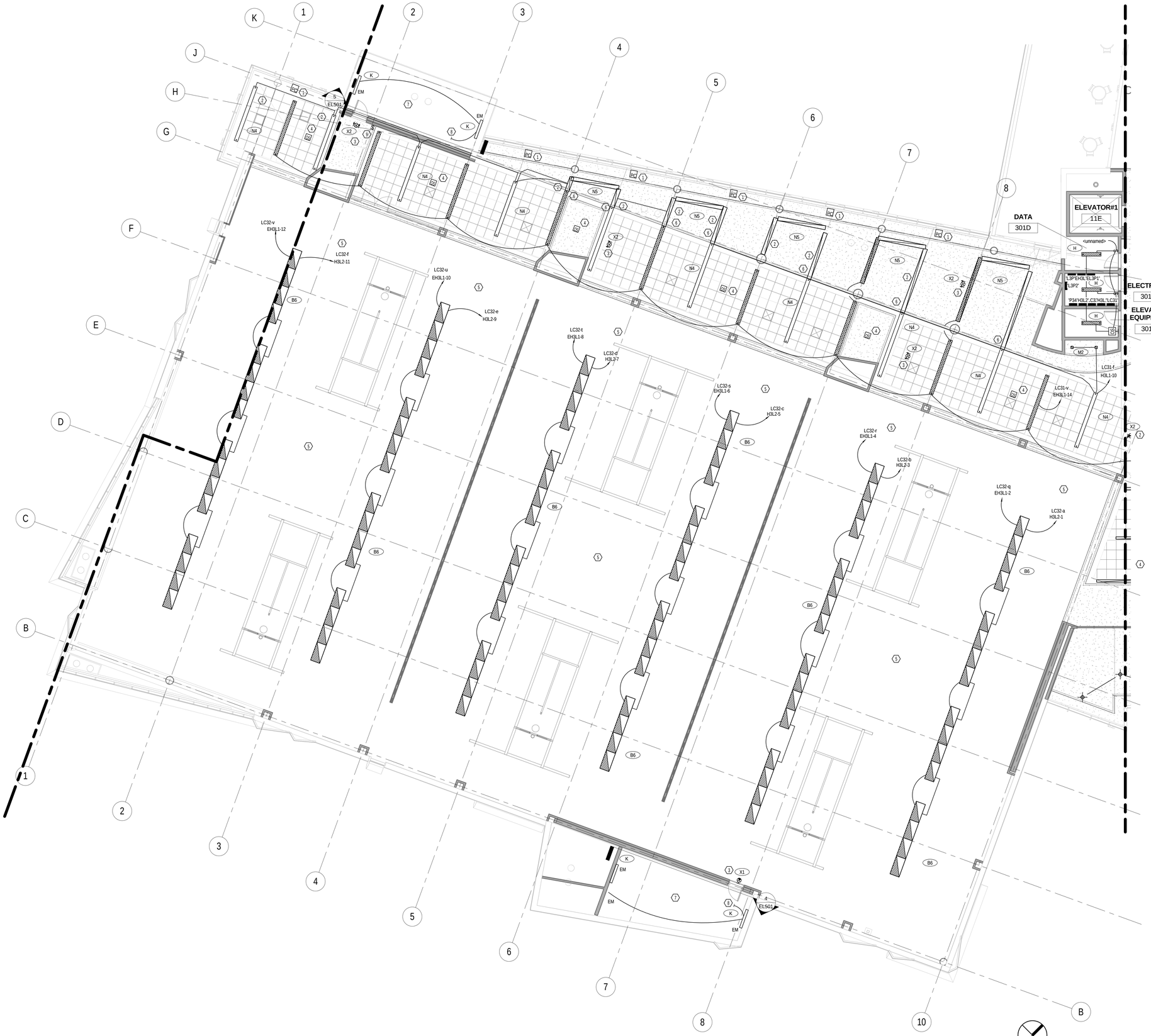


1 EL103.C C ENLARGED LEVEL 3 RCP PLAN WEST
SCALE |1/8" = 1'-0"

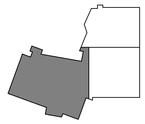

KEYPLAN

KEYED NOTES - SHEET EL103.C

1. DIMMING PHOTOSENSOR TO OPERATE A STANDARD 0-10 VDC ELECTRONIC DIMMING DRIVER. COORDINATE THE PROPER HEIGHT AND LOCATION WITH MANUFACTURER AND ARCHITECT PLANS.
2. FIXTURES TO BE CONTROLLED BY PHOTOSENSOR.
3. CONNECT EXIT SIGNS TO UNSWITCHED EM CIRCUIT.
4. CORRIDOR PHOTOSENSOR AND OCCUPANCY SENSORS SHALL BE CONNECTED TO THE RELAY CONTROL PANEL ON THIS FLOOR TO CONTROL CORRIDOR LIGHTING. DURING DAYTIME (OCCUPIED) MODE, THE OCCUPANCY SENSOR SHALL CONTROL THE NORMAL LIGHTING IN ZONE AND EMERGENCY LIGHTING SHALL REMAIN ON DURING NIGHT TIME (UNOCCUPIED) MODE. NORMAL LIGHTING SHALL REMAIN OFF. EMERGENCY LIGHTING SHALL BE TURNED OFF BY LIGHTING CONTROL SYSTEMS TIME CLOCK DURING OFF HOURS AND UPON SENSING OCCUPANCY. ALL EMERGENCY LIGHTS SHALL TURN ON.
5. 3 COURT GYMNASIUM LIGHTING SHALL BE CONNECTED TO RELAY CONTROL PANEL ON THIS FLOOR TO CONTROL THE LIGHTING IN THIS ZONE BY LIGHTING CONTROL SYSTEM'S TIME CLOCK. EACH HIGHBAY FIXTURE SHALL HAVE 2 BALLASTS, ONE FOR 2-LAMPS TIED TO EMERGENCY CIRCUIT. THE OTHER BALLAST FOR 4 LAMPS IN THE FIXTURE TIED TO NORMAL CIRCUIT SWITCHING SHOWN ON SHEET EL102.C.
6. ELECTRICAL CONTRACTOR TO COORDINATE WITH THE FRAMING CONTRACTOR FOR THE AREAS WHERE THE LINEAR FIXTURES TRANSITION FROM PENDANT MOUNT TO RECESS MOUNT. THE FIXTURE IS TO BE CONTINOUS WITH NO SECTION BREAK, THE FRAMING AND GYP BOARD IS TO BE INSTALLED TO ACCOMMODATE THE LIGHTING FIXTURE. THE ELECTRICAL CONTRACTOR IS TO COORDIANTE THE FRAMING OPENING WITH THE FIXTURE SUBMITTED, NOT THE DIMENSION SHOWN ON THE LUMINAIRE SCHEDULE. ACTUAL FIXTURE WIDTHS MAY VARY FROM MANUFACTURER TO MANUFACTURER.
7. STAIR WELL LIGHT FIXTURES SHALL HAVE 2 BALLASTS AND 2 LAMPS WITH INTEGRATED OCCUPACY SENSOR; ONE LAMP CONSTANTLY ON, ONE LAMP SENSORED.
8. CONTINUATION ON LEVEL 2.
9. LOW VOLTAGE 2 BUTTON OVERIDE SWITCH SHALL BE CONNECTED TO THE RELAY CONTROL SYSTEM TO TURN CORRIDOR LIGHTS ON/OFF AFTER HOURS.


MHTN ARCHITECTS
**MHTN Architects, Inc.**
420 East South Temple
Suite 100
Salt Lake City, Utah 84111
Telephone (801) 595-6700
Telefax (801) 595-6717
www.mhtn.com

**Hastings+Chivetta**
ARCHITECTURE • PLANNING • ENGINEERING
622 Emerson, Suite 200
St. Louis, MO 63141
Tel. 314.863.5717
Fax. 314.863.2623
www.hastingschivetta.com

BUILDING OFFICIAL STAMP
Ken Garner Engineering, Inc.
Electrical Engineering Consultants, Inc.
102 West 500 South, Suite 225
Salt Lake City, Utah 84101
P. 801.328.8800
F. 801.328.8802
Contact: Paris LeLaCheur
Project #: 2010-117.00


# UNIVERSITY OF UTAH
## STUDENT LIFE CENTER
1836 E. BALLIF ROAD
SALT LAKE CITY, UTAH 84112

SEAL

MHTN PROJECT NO. 2010562.00
DRAWN BY: KGE CHECKED BY: KGE

ISSUED:

| NO. | DATE | DESCRIPTION |
|---|---|---|
| | | |

CONTRACTOR TO VERIFY DRAWINGS IN FIELD USE REFLECT LAST REVISION DATE.

| NO. | DATE | DESCRIPTION |
|---|---|---|
| | | |

SHEET NAME
LEVEL 3
LIGHTING AREA
C
BID DOCUMENTS
May 15, 2013

SHEET NUMBER
EL103.C

C:\Users\drown.KGE\Documents\2010-117.00_KGE_STUDENT LIFE_ELECTRICAL_CENTERAL_2012_drown.rvt
5/14/2013 5:47:58 PM

KEYED NOTES - SHEET EL200.C1

1. SHOWER OCCUPANCY SENSORS SHALL BE CONNECTED TO THE RELAY CONTROL PANEL ON THIS FLOOR TO CONTROL THE SHOWER/TOILET LIGHTING. DURING DAYTIME (OCCUPIED) MODE, THE OCCUPANCY SENSORS SHALL CONTROL NORMAL LIGHTING IN ZONES AND EMERGENCY LIGHTING SHALL REMAIN ON. DURING NIGHT TIME (UNOCCUPIED) MODE, NORMAL LIGHTING SHALL REMAIN OFF. EMERGENCY LIGHTING SHALL BE TURNED OFF BY LIGHTING CONTROL SYSTEM'S TIME CLOCK. DURING OFF HOURS AND UPON SENSING OCCUPANCY, ALL EMERGENCY LIGHTS SHALL TURN ON.
2. LOW VOLTAGE 2 BUTTON OVERRIDE SWITCH SHALL BE CONNECTED TO THE RELAY CONTROL SYSTEM TO TURN SHOWER LIGHTS ON/OFF AFTER HOURS.

GENERAL NOTES - SHEET EL200.C1

A. COORDINATE MOUNTING HEIGHT OF ALL LIGHT FIXTURES WITH ARCHITECTURAL PLANS/ DRAWINGS.
B. MAKE SMOOTH TRANSITION FOR LIGHT FIXTURES WITH RESPECT TO CEILING TRANSITION. COORDINATE THIS WITH ARCHITECT.
C. BOTTOM OF SUSPENDED LIGHT FIXTURES IN CORRIDORS SHALL BE AT THE SAME HEIGHT AS ACOUSTICAL CEILING CLOUDS AND G.B. CEILINGS. COORDINATE MOUNTING HEIGHT OF FIXTURES WITH ARCHITECTURAL PLANS.

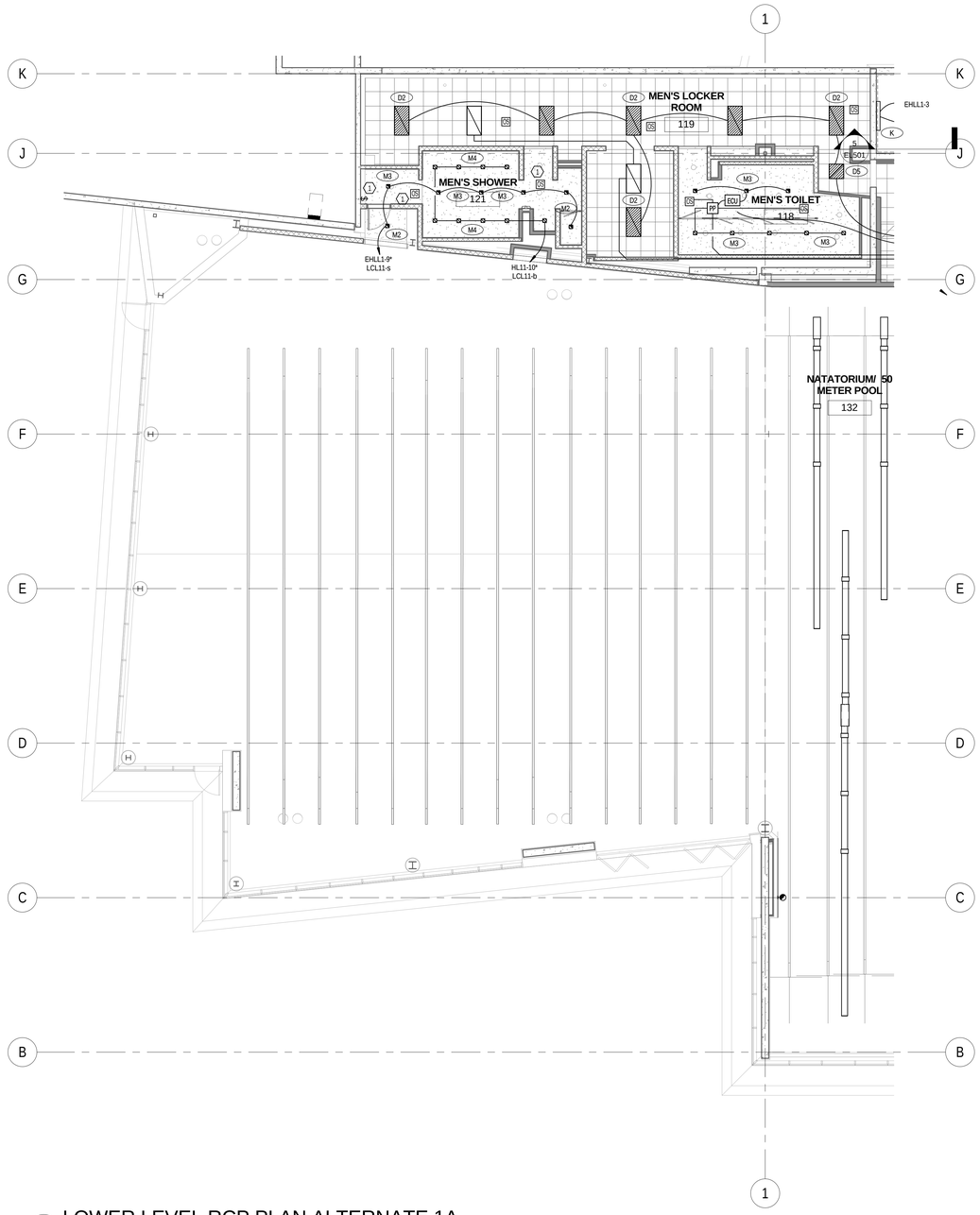


1 EL200.C1 LOWER LEVEL RCP PLAN ALTERNATE 1A
SCALE | 1/8" = 1'-0"


MHTN ARCHITECTS
MHTN Architects, Inc.
420 East South Temple
Suite 100
Salt Lake City, Utah 84111
Telephone (801) 595-6700
Telefax (801) 595-6717
www.mhtn.com

Hastings+Chivetta
ARCHITECTURE • PLANNING • ENGINEERING
622 Emerson, Suite 200
St. Louis, MO 63141
Tel. 314.863.5717
Fax. 314.863.2823
www.hastingschivetta.com

BUILDING OFFICIAL STAMP
Ken Garner Engineering, Inc.
Electrical Engineering Consultants, Inc.
102 West 500 South, Suite 225
Salt Lake City, Utah 84101
P. 801.328.8800
F. 801.328.8802
Contact: Paris LeLaCheur
Project #: 2010-117.00


# UNIVERSITY OF UTAH
## STUDENT LIFE CENTER
1836 E. BALLIF ROAD
SALT LAKE CITY, UTAH 84112

SEAL

MHTN PROJECT NO. 2010562.00
DRAWN BY: KGE CHECKED BY: KGE

ISSUED:

| NO. | DATE | DESCRIPTION |
|---|---|---|

CONTRACTOR TO VERIFY DRAWINGS IN FIELD USE REFLECT LAST REVISION DATE:

| NO. | DATE | DESCRIPTION |
|---|---|---|

SHEET NAME
LOWER LEVEL LIGHTING - ALTERNATE 1A
BID DOCUMENTS
May 15, 2013

SHEET NUMBER
EL200.C1

C:\Users\ttrown.KGE\Documents\2010-117.00_KGE_STUDENT LIFE_ELECTRICAL_CENTERAL_2012_ttrown.rvt
5/14/2013 5:48:07 PM

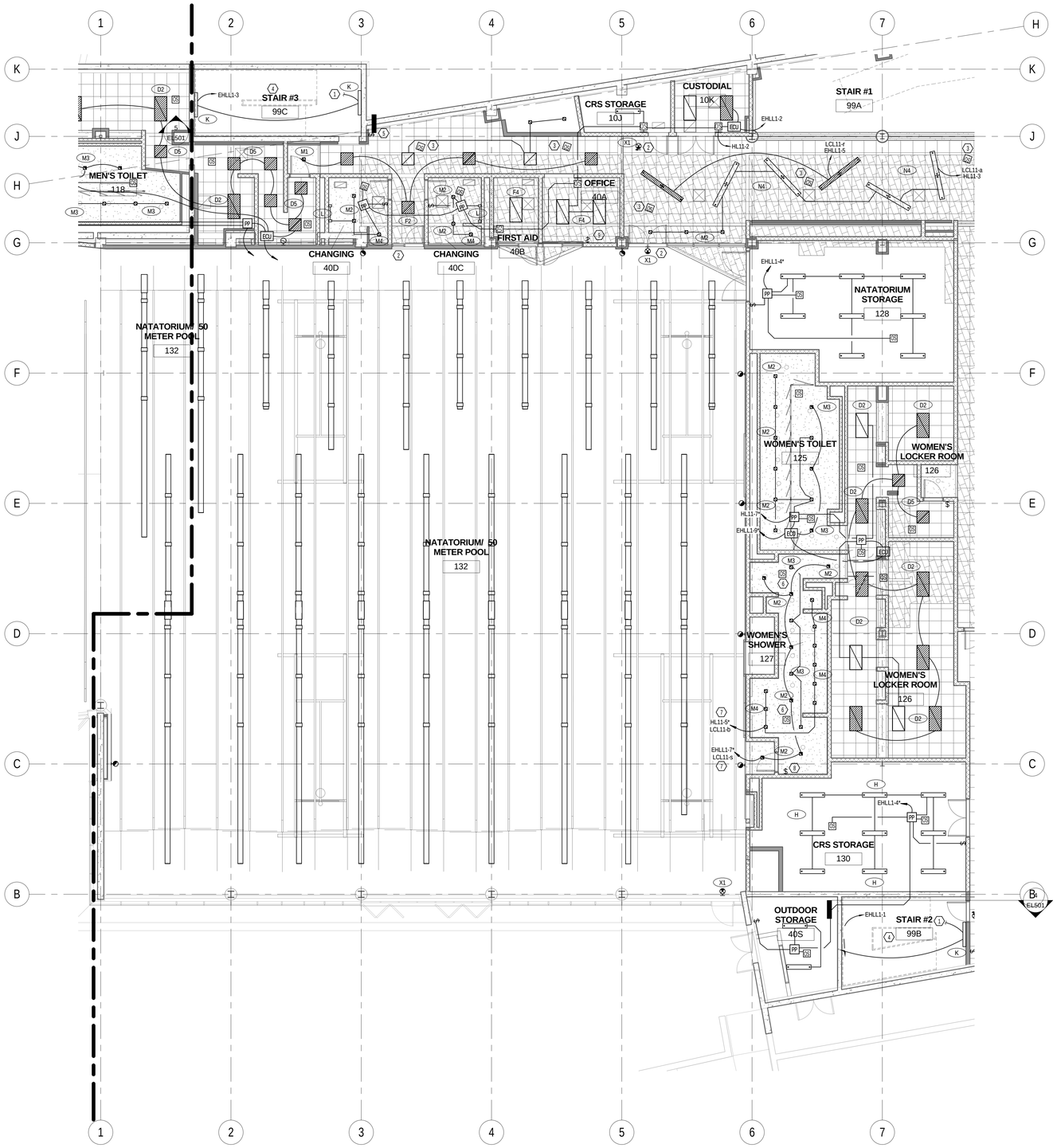


1 EL200.C2 LOWER LEVEL RCP PLAN ALTERNATE 1B

SCALE | 1/8" = 1'-0"

KEYED NOTES - SHEET EL200.C

1. CONTINUATION ON LEVEL ONE.
2. CONNECT ALL EXIT SIGNS TO UNSWITCHED CIRCUIT.
3. CORRIDOR OCCUPANCY SENSORS SHALL BE CONNECTED TO THE RELAY CONTROL PANEL ON THIS FLOOR TO CONTROL CORRIDOR LIGHTING. DURING DAYTIME (OCCUPIED) MODE, THE OCCUPANCY SENSORS SHALL CONTROL THE NORMAL LIGHTING IN ZONES AND EMERGENCY LIGHTING SHALL REMAIN ON DURING NIGHT TIME (UNOCCUPIED) MODE. NORMAL LIGHTING SHALL REMAIN OFF. EMERGENCY LIGHTING SHALL BE TURNED OFF BY LIGHTING CONTROL SYSTEM'S TIME CLOCK. DURING OFF HOURS AND UPON SENSING OCCUPANCY, ALL EMERGENCY LIGHTS SHALL TURN ON.
4. STAIRWELL LIGHTING FIXTURES SHALL HAVE 2 BALLASTS AND 2 LAMPS WITH INTEGRATED OCCUPANCY SENSOR: ONE LAMP CONSTANTLY ON, ONE LAMP SENSORED.
5. LOW VOLTAGE 2 BUTTON OVERRIDE SWITCH SHALL BE CONNECTED TO THE RELAY CONTROL SYSTEM TO TURN CORRIDOR LIGHTS ON/OFF AFTER HOURS.
6. SHOWER OCCUPANCY SENSORS SHALL BE CONNECTED TO THE RELAY CONTROL PANEL ON THIS FLOOR TO CONTROL THE SHOWER AREA LIGHTING.
7. SHOWER LIGHTING SHALL BE CONNECTED TO RELAY CONTROL PANEL ON THIS FLOOR TO CONTROL THE LIGHTING IN THIS ZONE BY LIGHTING CONTROL SYSTEM'S TIME CLOCK.
8. LOW VOLTAGE 2 BUTTON OVERRIDE SWITCH SHALL BE CONNECTED TO THE RELAY CONTROL SYSTEM TO TURN SHOWER LIGHTS ON/OFF AFTER HOURS.
9. LOW VOLTAGE 8 BUTTON SWITCHING FOR CONTROL OF THE POOL LIGHTING. CONTROL IS TO BE MANUAL ON/ MANUAL OFF WITH A PRESET TIME OFF AT THE END OF THE DAY.

GENERAL NOTES - SHEET EL200.C

A. COORDINATE MOUNTING HEIGHT OF ALL LIGHT FIXTURES WITH ARCHITECTURAL PLANS/ DRAWINGS.
B. MAKE SMOOTH TRANSITION FOR LIGHT FIXTURES WITH RESPECT TO CEILING TRANSITION. COORDINATE THIS WITH ARCHITECT.
C. BOTTOM OF SUSPENDED LIGHT FIXTURES IN CORRIDORS SHALL BE AT THE SAME HEIGHT AS ACOUSTICAL CEILING CLOUDS AND G.B. CEILINGS. COORDINATE MOUNTING HEIGHT OF FIXTURES WITH ARCHITECTURAL PLANS.

MHTN ARCHITECTS
MHTN Architects, Inc.
420 East South Temple
Suite 100
Salt Lake City, Utah 84111
Telephone (801) 595-6700
Telefax (801) 595-6717
www.mhtn.com

Hastings+Chivetta
ARCHITECTURE • PLANNING • ENGINEERING
622 Emerson, Suite 200
St. Louis, MO 63141
Tel. 314.863.5717
Fax. 314.863.2823
www.hastingschivetta.com

BUILDING OFFICIAL STAMP
Ken Garner Engineering, Inc.
Electrical Engineering Consultants, Inc.
102 West 500 South, Suite 225
Salt Lake City, Utah 84101
P. 801.328.8800
F. 801.328.8802
Contact: Paris LeLaCheur
Project #: 2010-117.00

# UNIVERSITY OF UTAH
## STUDENT LIFE CENTER
1836 E. BALLIF ROAD
SALT LAKE CITY, UTAH 84112

SEAL

MHTN PROJECT NO. 2010562.00

DRAWN BY: RJB CHECKED BY: Checker

ISSUED:

| NO. | DATE | DESCRIPTION |
|---|---|---|

CONTRACTOR TO VERIFY DRAWINGS IN FIELD USE REFLECT LAST REVISION DATE.

| NO. | DATE | DESCRIPTION |
|---|---|---|

SHEET NAME
LOWER LEVEL LIGHTING - ALTERNATE 1B
BID DOCUMENTS
May 15, 2013

SHEET NUMBER
EL200.C2

C:\Users\rdrown.KGE\Documents\2010-117.00_KGE_STUDENT LIFE_ELECTRICAL_CENTERAL_2012_rbrown.rvt
5/14/2013 5:48:18 PM

KEYED NOTES - SHEET EL201.B

1. CONNECT ALL EXIT SIGNS TO UNSWITCHED EM. CIRCUIT.
2. STAIRWELL LIGHTING FIXTURES SHALL HAVE 2 BALLASTS AND 2 LAMPS WITH INTEGRATED OCCUPANCY SENSOR: ONE LAMP CONSTANTLY ON, ONE LAMP SENSORED.
3. CORRIDOR OCCUPANCY SENSORS SHALL BE CONNECTED TO THE RELAY CONTROL PANEL ON THIS FLOOR TO CONTROL CORRIDOR LIGHTING. DURING DAYTIME (OCCUPIED) MODE, THE OCCUPANCY SENSORS SHALL CONTROL NORMAL LIGHTING IN ZONES AND EMERGENCY LIGHTING SHALL REMAIN ON. DURING NIGHT TIME (UNOCCUPIED) MODE, NORMAL LIGHTING SHALL REMAIN OFF. EMERGENCY LIGHTING SHALL BE TURNED OFF BY LIGHTING CONTROL SYSTEM'S TIME CLOCK. DURING OFF HOURS AND UPON SENSING OCCUPANCY, ALL EMERGENCY LIGHTS SHALL TURN ON.

GENERAL NOTES - SHEET EL201.B

A. COORDINATE MOUNTING HEIGHT OF ALL LIGHT FIXTURES WITH ARCHITECTURAL PLANS/ DRAWINGS.
B. MAKE SMOOTH TRANSITION FOR LIGHT FIXTURES WITH RESPECT TO CEILING TRANSITION. COORDINATE THIS WITH ARCHITECT.

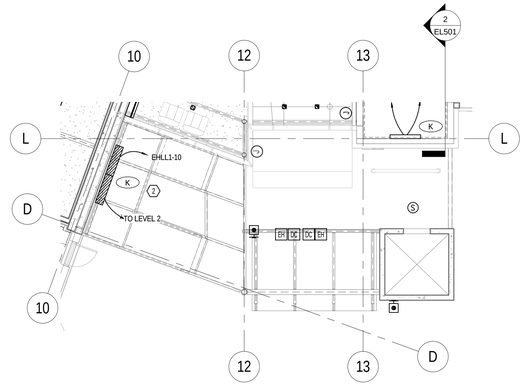


1 EL201.B LEVEL 1 RCP PLAN ALTERNATE 3
SCALE |1/8" = 1'-0"

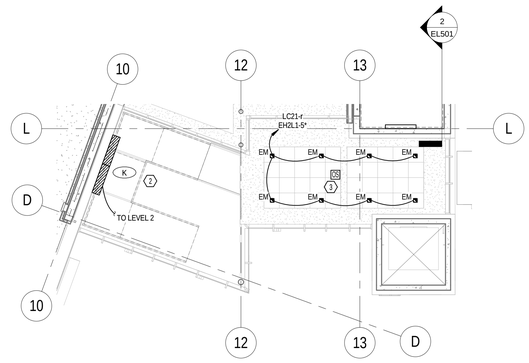


2 EL201.B LEVEL 2 RCP PLAN ALTERNATE 3
SCALE |1/8" = 1'-0"

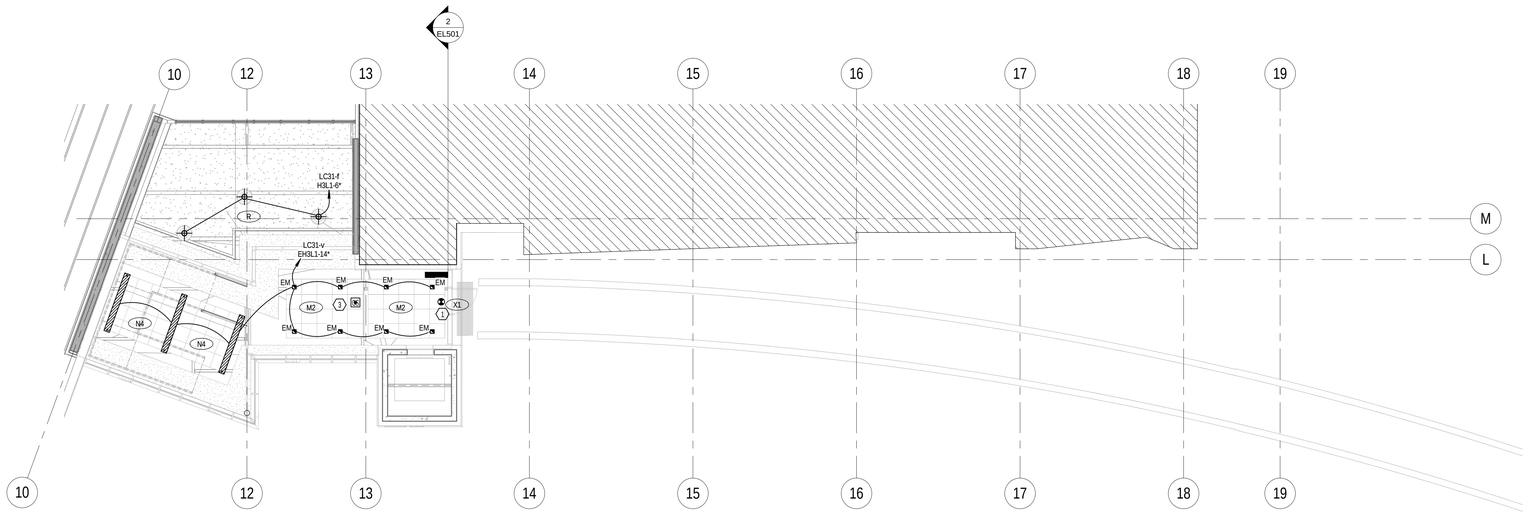


3 EL201.B LEVEL 3 RCP PLAN ALTERNATE 3
SCALE |1/8" = 1'-0"


MHTN
ARCHITECTS
**MHTN Architects, Inc.**
420 East South Temple
Suite 100
Salt Lake City, Utah 84111
Telephone (801) 595-6700
Telefax (801) 595-6717
www.mhtn.com

**Hastings+Chivetta**
ARCHITECTURE • PLANNING • ENGINEERING
622 Emerson, Suite 200
St. Louis, MO 63141
Tel. 314.863.5717
Fax. 314.863.2823
www.hastingschivetta.com

BUILDING OFFICIAL STAMP
Ken Garner Engineering, Inc.
Electrical Engineering Consultants, Inc.
102 West 500 South, Suite 225
Salt Lake City, Utah 84101
P. 801.328.8800
F. 801.328.8802
Contact: Paris LeLaCheur
Project #: 2010-117.00


# UNIVERSITY OF UTAH
## STUDENT LIFE CENTER
1836 E. BALLIF ROAD
SALT LAKE CITY, UTAH 84112

SEAL

MHTN PROJECT NO. 2010562.00
DRAWN BY: KGE CHECKED BY: KGE

ISSUED:

| NO. | DATE | DESCRIPTION |
|---|---|---|

CONTRACTOR TO VERIFY DRAWINGS IN FIELD USE REFLECT LAST REVISION DATE.

| NO. | DATE | DESCRIPTION |
|---|---|---|

SHEET NAME
ALTERNATE 3
LIGHTING AREA
B
BID DOCUMENTS
May 15, 2013

SHEET NUMBER
EL201.B

C:\Users\tbrown.KGE\Documents\2010-117.00_KGE_STUDENT LIFE_ELECTRICAL_CENTERAL_2012_tbrown.rvt
5/14/2013 5:48:31 PM

KEYED NOTES - SHEET EL201.C1

1. POOL LIGHTING SHALL BE CONNECTED TO RELAY CONTROL PANEL ON THIS FLOOR TO CONTROL LIGHTING IN THIS ZONE BY LIGHTING CONTROL SYSTEM'S TIME CLOCK. REFER TO SHEET EL100.C FOR LOCATION OF LOW VOLTAGE SWITCHING. PROVIDE GFCI BREAKER FOR POOL LIGHTING.

GENERAL NOTES - SHEET EL201.C1

A. COORDINATE MOUNTING HEIGHT OF ALL LIGHT FIXTURES WITH ARCHITECTURAL PLANS/ DRAWINGS.
B. MAKE SMOOTH TRANSITION FOR LIGHT FIXTURES WITH RESPECT TO CEILING TRANSITION. COORDINATE THIS WITH ARCHITECTURAL PLANS/DRAWINGS.

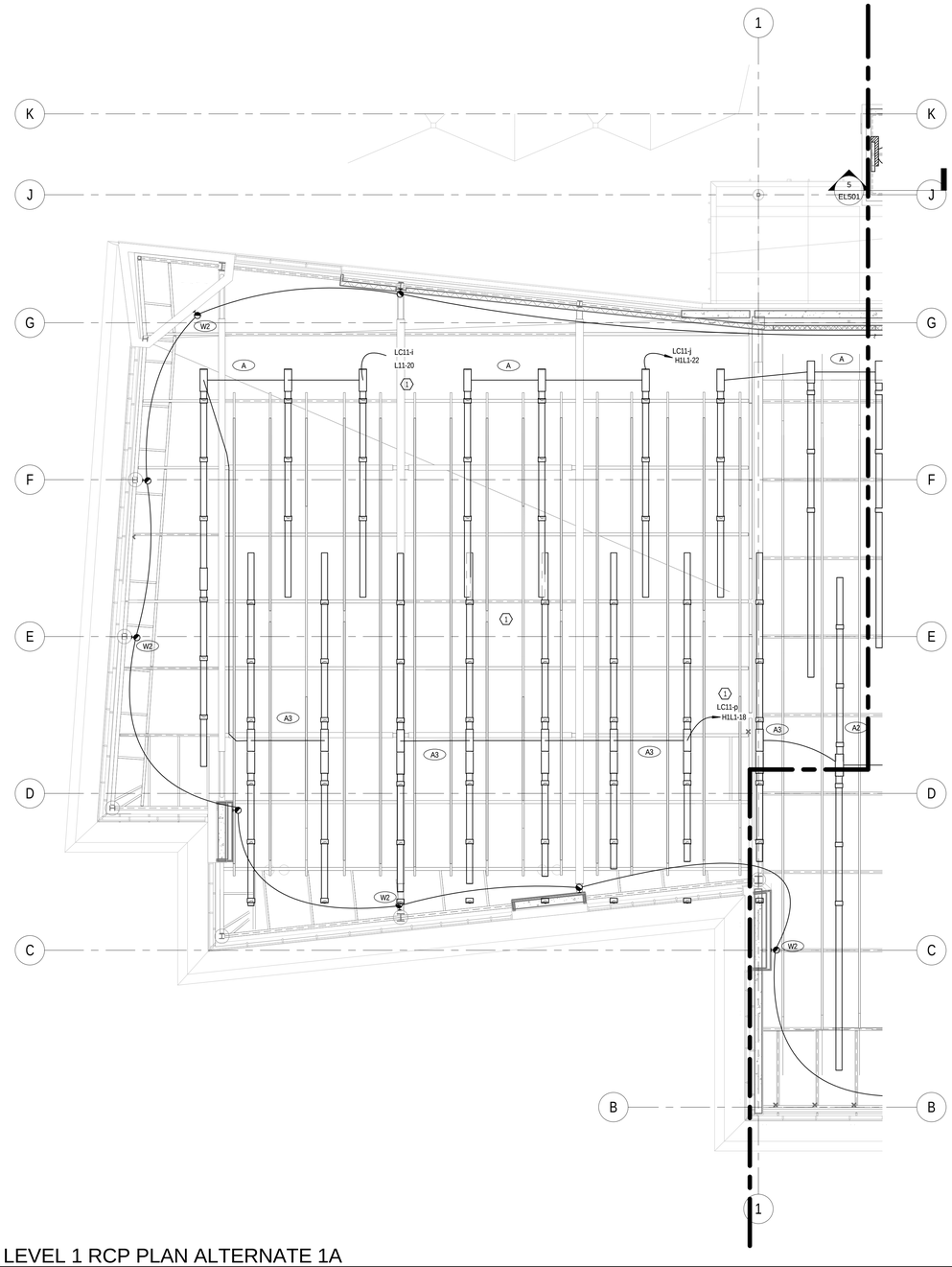


1 LEVEL 1 RCP PLAN ALTERNATE 1A
EL201.C1 SCALE |1/8" = 1'-0"


MHTN
ARCHITECTS
**MHTN Architects, Inc.**
420 East South Temple
Suite 100
Salt Lake City, Utah 84111
Telephone (801) 595-6700
Telefax (801) 595-6717
www.mhtn.com

**Hastings+Chivetta**
ARCHITECTURE • PLANNING • ENGINEERING
622 Emerson, Suite 200
St. Louis, MO 63141
Tel. 314.863.5717
Fax. 314.863.2823
www.hastingschivetta.com

BUILDING OFFICIAL STAMP
Ken Garner
Engineering, Inc.
Electrical Engineering Consultants, Inc.
102 West 500 South, Suite 225
Salt Lake City, Utah 84101
P. 801.328.8800
F. 801.328.8802
Contact: Paris LeLaCheur
Project #: 2010-117.00


# UNIVERSITY OF UTAH
## STUDENT LIFE CENTER
1836 E. BALLIF ROAD
SALT LAKE CITY, UTAH 84112

SEAL

MHTN PROJECT NO. 2010562.00

DRAWN BY: Author CHECKED BY: Checker

ISSUED:

| NO. | DATE | DESCRIPTION |
|---|---|---|

CONTRACTOR TO VERIFY DRAWINGS IN FIELD USE REFLECT LAST REVISION DATE:

| NO. | DATE | DESCRIPTION |
|---|---|---|

SHEET NAME
LEVEL 1
LIGHTING
ATERNATE 1A
BID DOCUMENTS
May 15, 2013

SHEET NUMBER
EL201.C1

C:\Users\drown.KGE\Documents\2010-117.00_KGE_STUDENT LIFE_ELECTRICAL_CENTERAL_2012_rbrown.rvt
5/14/2013 5:48:42 PM

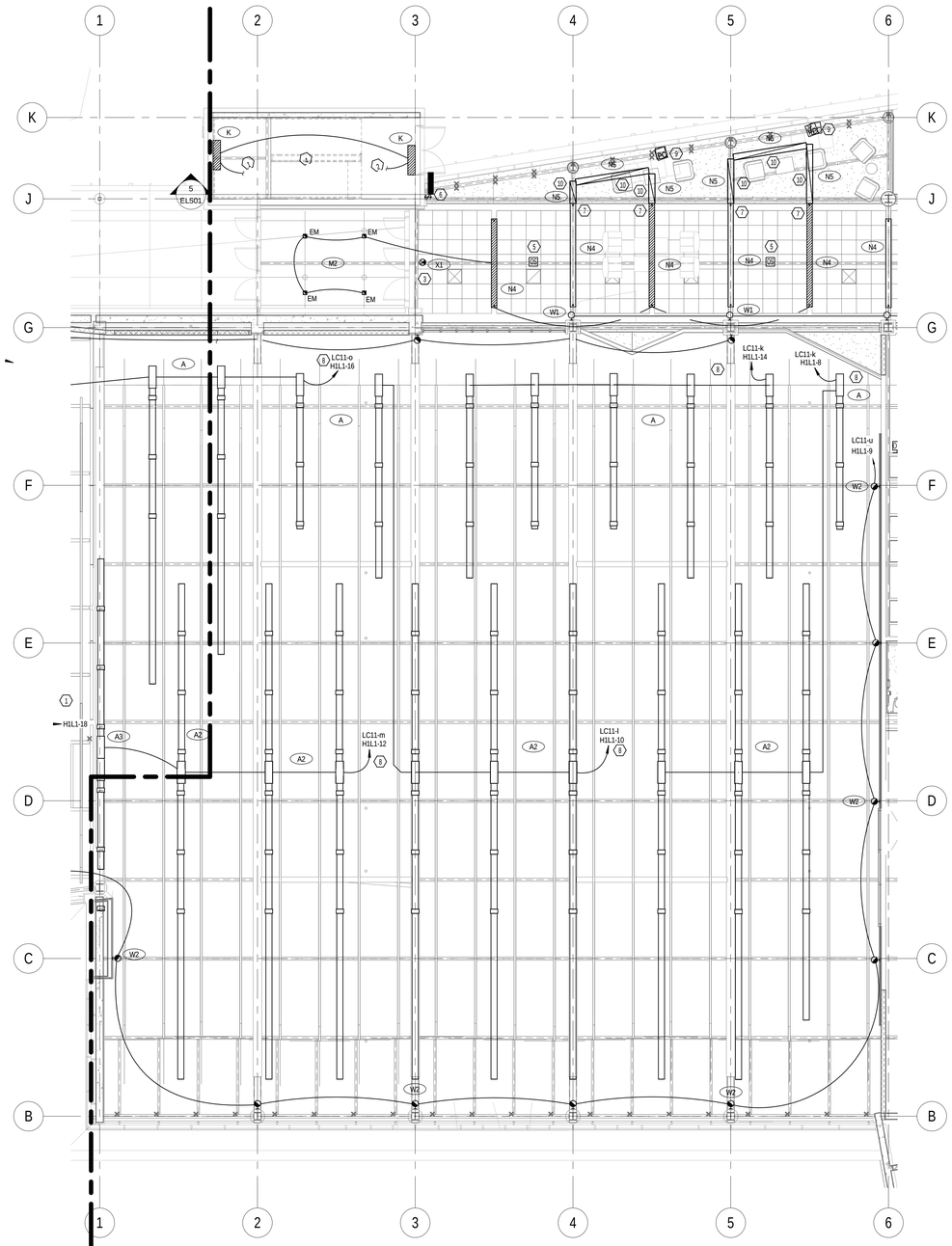


1 EL201.C2 LEVEL 1 RCP PLAN ALTERNATE 1B

SCALE | 1/8" = 1'-0"

KEYED NOTES - SHEET EL201.C2

1. CONTINUATION ON LEVEL 2.
2. CONTINUATION ON LEVEL 1.
3. CONNECT ALL EXIT SIGNS TO UNSWITCHED EM CIRCUIT.
4. STAIRWELL LIGHT FIXTURES SHALL HAVE TWO BALLASTS AND TWO LAMPS WITH INTEGRATED OCCUPANCY SENSOR; ONE LAMP CONSTANTLY ON, ONE LAMP SENSORED.
5. CORRIDOR OCCUPANCY SENSORS SHALL BE CONNECTED TO THE RELAY CONTROL PANEL ON THIS FLOOR TO CONTROL THE CORRIDOR LIGHTING. DURING DAYTIME (OCCUPIED) MODE, THE OCCUPANCY SENSORS SHALL CONTROL THE NORMAL LIGHTING IN THE ZONES AND THE EMERGENCY LIGHTING SHALL REMAIN ON DURING THE (UNOCCUPIED) MODE. THE NORMAL LIGHTING SHALL REMAIN OFF. EMERGENCY LIGHTING SHALL BE TURNED OFF BY LIGHTING CONTROL SYSTEM'S TIME CLOCK. DURING OFF HOURS AND UPON SENSING OCCUPANCY, ALL EMERGENCY, LIGHTS SHALL TURN ON.
6. LOW VOLTAGE TWO BUTTON OVERRIDE SWITCH SHALL BE CONNECTED TO THE RELAY CONTROL SYSTEM TO TURN CORRIDOR LIGHTS ON/OFF AFTER
7. ELECTRICAL CONTRACTOR TO COORDINATE WITH THE FRAMING CONTRACTOR FOR THE AREAS WHERE TH LINEAR FIXTURES TRANSITION FROM PENDANT MOUNT TO RECESS MOUNT. THE FIXTURE IS TO BE CONTINUOUS WITH NO SECTION BREAK. THE FRAMING AND GYP BOARD IS TO BE INSTALLED TO ACCOMODATE THE LIGHTING FIXTURE. THE ELECTRICAL CONTRACTOR IS TO COORDINATE THE FRAMING OPENING WITH THE FIXTURE SUBMITTED, NOT THE DIMENSION SHOWN ON THE LUMINARE SCHEDULE. ACTUAL FIXTUREWIDTHS MAY VARY FROM MANUFACTURER TO MANUFACTURER.
8. POOL LIGHTING SHALL BE CONNECTED TO RELAY CONTROL PANEL ON THIS FLOOR TO CONTROL THE LIGHTING IN THIS ZONE BY LIGHTING CONTROL SYSTEM'S TIME CLOCK. PROVIDE GFCI BREAKER FOR POOL LIGHTING. REFER TO SHEET EL100C FOR LOCATION OF LOW VOLTAGE SWITCHING.
9. DIMMING PHOTOSENSOR TO OPERATE A STANDARD 0-10 VDC ELECTRONIC DIMMING DRIVER. COORDINATE THE PROPER HEIGHT AND LOCATION WITH MANUFACTURER AND ARCHITECTURAL PLANS.
10. FIXTURES TO BE CONTROLLED BY PHOTOSENSOR. CONTROL SCHEMS WILL BE SET THROUGH PROGRAMING.

GENERAL NOTES - SHEET EL201.C2

A. COORDINATE MOUNTING HEIGHT OF ALL LIGHT FIXTURES WITH ARCHITECTURAL PLANS/ DRAWINGS.
B. MAKE SMOOTH TRANSITION FOR LIGHT FIXTURES WITH RESPECT TO CEILING TRANSITION. COORDINATE THIS WITH ARCHITECTURAL PLANS/DRAWINGS.

MHTN
ARCHITECTS

**MHTN Architects, Inc.**
420 East South Temple
Suite 100
Salt Lake City, Utah 84111
Telephone (801) 595-6700
Telefax (801) 595-6717
www.mhtn.com

**Hastings+Chivetta**
ARCHITECTURE • PLANNING • ENGINEERING
622 Emerson, Suite 200
St. Louis, MO 63141
Tel. 314.863.5717
Fax. 314.863.2823
www.hastingschivetta.com

BUILDING OFFICIAL STAMP

Ken Garner
Engineering, Inc.
Electrical Engineering Consultants, Inc.
102 West 500 South, Suite 225
Salt Lake City, Utah 84101
P. 801.328.8800
F. 801.328.8802
Contact: Paris LeLaCheur
Project #: 2010-117.00

# UNIVERSITY OF UTAH

## STUDENT LIFE CENTER

1836 E. BALLIF ROAD
SALT LAKE CITY, UTAH 84112

SEAL

MHTN PROJECT NO. 2010562.00

DRAWN BY: Author CHECKED BY: Checker

ISSUED:

| NO. | DATE | DESCRIPTION |
|---|---|---|
| | | |

CONTRACTOR TO VERIFY DRAWINGS IN FIELD USE REFLECT LAST REVISION DATE.

| NO. | DATE | DESCRIPTION |
|---|---|---|
| | | |

SHEET NAME

LEVEL 1
LIGHTING
ALTERNATE 1B
BID DOCUMENTS
May 15, 2013

SHEET NUMBER

EL201.C2

C:\Users\tbrown.KGE\Documents\2010-117.00_KGE_STUDENT LIFE_ELECTRICAL_CENTERAL_2012_tbrown.rvt
5/14/2013 5:48:54 PM

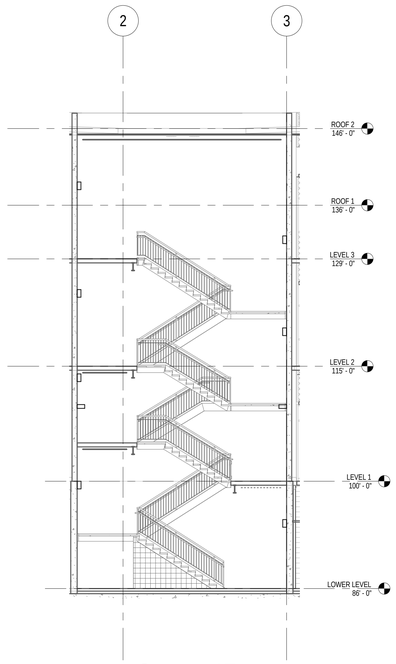


5 EL501 Section 17
SCALE |1/8" = 1'-0"

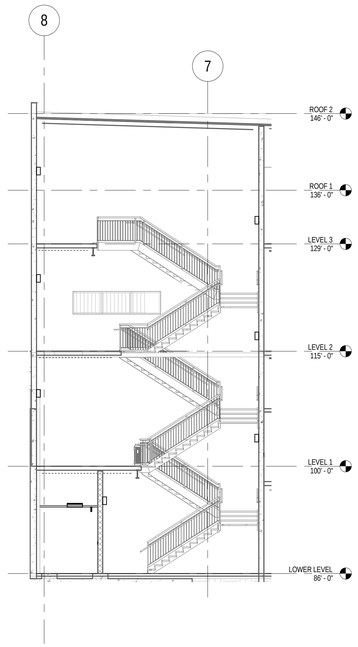


4 EL501 Section 16
SCALE |1/8" = 1'-0"

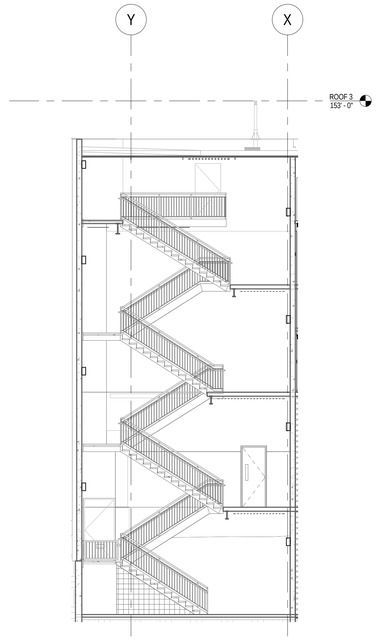


3 EL501 Section 1
SCALE |1/8" = 1'-0"

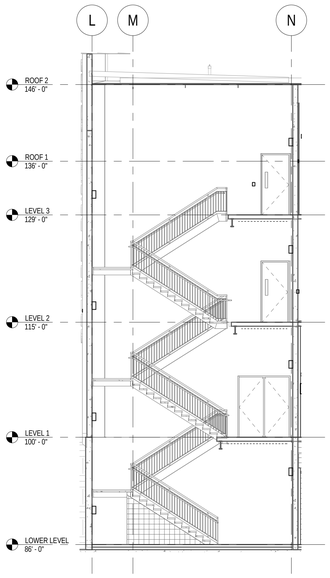


2 EL501 Section 15
SCALE |1/8" = 1'-0"

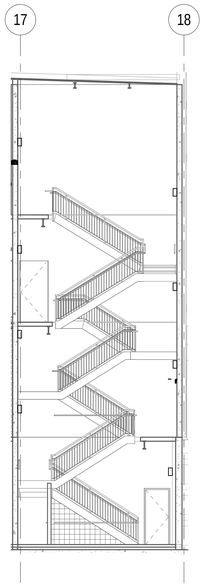


1 EL501 STAIR #6 ELEVATION
SCALE |1/8" = 1'-0"

C:\Users\rdrawn.KGE\Documents\2010-117.00_KGE_STUDENT LIFE_ELECTRICAL_CENTERAL_2012_rdrawn.rvt
5/14/2013 5:49:09 PM

MHTN
ARCHITECTS
**MHTN Architects, Inc.**
420 East South Temple
Suite 100
Salt Lake City, Utah 84111
Telephone (801) 595-6700
Telefax (801) 595-6717
www.mhtn.com

**Hastings+Chivetta**
ARCHITECTURE • PLANNING • ENGINEERING
622 Emerson, Suite 200
St. Louis, MO 63141
Tel. 314.863.5717
Fax. 314.863.2823
www.hastingschivetta.com

BUILDING OFFICIAL STAMP

Ken Garner
Engineering, Inc.
Electrical Engineering Consultants, Inc.
102 West 500 South, Suite 225
Salt Lake City, Utah 84101
P. 801.328.8800
F. 801.328.8802
Contact: Paris LeLaCheur
Project #: 2010-117.00

# UNIVERSITY OF UTAH
## STUDENT LIFE CENTER
1836 E. BALLIF ROAD
SALT LAKE CITY, UTAH 84112

SEAL

MHTN PROJECT NO. 2010562.00

DRAWN BY: KGE CHECKED BY: KGE

ISSUED:

| NO. | DATE | DESCRIPTION |
|---|---|---|

CONTRACTOR TO VERIFY DRAWINGS IN FIELD USE REFLECT LAST REVISION DATE.

| NO. | DATE | DESCRIPTION |
|---|---|---|

SHEET NAME
ELEVATION
STAIRWELL
LIGHTING
BID DOCUMENTS
May 15, 2013

SHEET NUMBER
EL501

## LUMINAIRE SCHEDULE

| TYPE | DESCRIPTION | | LAMP(S) AND BALLASTS | INPUT (VA) | MANUFACTURER(S) |
|---|---|---|---|---|---|
| A | DESCRIPTION: | SUSPENDED LIGHTING STRUCTURE - LINEAR TUBE LUMINOUS | METAL HALIDE | 818.000000 | INSIGHT LIGHTING ILLUSIONS ALC 10S |
| | SIZE: | TRIANGULAR FRAME 2' 1-1/4" WIDE x 1' 1-/8" TALL x LENGTH x SUSPENSION | 775 MPSH | | ALC 10S - 775 MPSH - 90 AC-X - 277 SF TIL |
| | HOUSING: | CAST ALUMINUM ENDPLATE WITH EXTRUDED ALUMINUM CHANNELS | 277V | | |
| | FINISH: | OUTDOOR GRADE POLYESTER POWDER PAINT WITH UV INHIBITORS | | | |
| | LENS: | N/A | | | |
| | REFLECTOR: | 90° | | | |
| | MOUNTING: | AIRCRAFT CABLE FROM STRUCTURE | | | |
| | SECTIONS PER RUN: | SEE PLAN FOR RUN DIMENSION | | | |
| A1 | DESCRIPTION: | SAME AS 'A' ABOVE BUT WITH 1000MPSH LAMP | METAL HALIDE | 1080.000000 | INSIGHT LIGHTING ILLUSIONS ALC 10S |
| | SIZE: | | 1000 MPSH | | ALC 10S - 1000 MPSH - 90 AC-X - 277 SF TIL |
| | HOUSING: | | 277V | | |
| | FINISH: | | | | |
| | LENS: | | | | |
| | REFLECTOR: | | | | |
| | MOUNTING: | | | | |
| | NOMINAL RUN: | | | | |
| | SECTIONS PER RUN: | | | | |
| A2 | DESCRIPTION: | SAME AS A1 BUT DOUBLE ENDED | METAL HALIDE | 1080.000000 | INSIGHT LIGHTING ILLUSIONS ALC 10S |
| | SIZE: | | 1000 MPSH | | ALC 10S - 1000 MPSH - 90 AC-X - 277 SF TEX |
| | HOUSING: | | 277V | | |
| | FINISH: | | | | |
| | LENS: | | | | |
| | REFLECTOR: | | | | |
| | MOUNTING: | | | | |
| | NOMINAL RUN: | | | | |
| | SECTIONS PER RUN: | | | | |
| A3 | DESCRIPTION: | SAME AS A2 BUT WITH 775 MPSH LAMP | METAL HALIDE | 818.000000 | INSIGHT LIGHTING ILLUSIONS ALC 10S |
| | SIZE: | | 775 MPSH | | ALC 10S - 775 MPSH - 90 AC-X - 277 SF TEX |
| | HOUSING: | | 277V | | |
| | FINISH: | | | | |
| | LENS: | | | | |
| | REFLECTOR: | | | | |
| | MOUNTING: | | | | |
| | NOMINAL RUN: | | | | |
| | SECTIONS PER RUN: | | | | |
| B6 | DESCRIPTION: | ARCHITECTURAL HIGH BAY FLUORESCENT | FLUORESCENT | 360.000000 | H.E. WILLIAMS |
| | SIZE: | 23-11/16" WIDE x 48" LENGTH x 4-1/8" TALL | (6) F54T5/841/HO/ALTO | (1) 2-LAMP | GLA SERIES |
| | HOUSING: | CODE GAUGE STEEL CONSTRUCTION | BALLAST FACTOR 1.00 | (1) 4-LAMP | |
| | FINISH: | WHITE POWDER COAT | 277V | BALLASTS | |
| | REFLECTOR: | 95% REFLECTIVE SPECULAR ALUMINUM, 4 ROWS OF UPLIGHT APERTURES | | | |
| | LENS DOOR: | POWDER COATED, WIRE GUARD | | | |
| | MOUNTING: | AIRCRAFT CABLE OR TONG HANGER. REFER TO PLANS FOR MOUNTING | | | |
| | | HEIGHTS. | | | |
| | OPTIONS: | CLEAR HIGH-IMPACT POLYCARBONATE LENS | | | |
| C | DESCRIPTION: | LED TAPE | LED | 2.5W/FT | MODA LITE |
| | SIZE: | 1/10"H x 3/10"W x UP TO 16'-4 4/5"L | 62.33 LUMENS/FOOT | | |
| | HOUSING: | NA | 3000K | | |
| | FINISH: | NA | 277V | | |
| | LENS: | NA | | | |
| | BALLAST: | NA | | | |
| | MOUNTING: | SURFACE | | | |
| D2 | DESCRIPTION: | 2 X 4 RECESSED LENSED TROFFER | FLUORESCENT | 47.000000 | COLUMBIA |
| | SIZE: | 24" WIDE x 48" LENGTH x 4-1/4" TALL | (2) F32T8/ADV841/ALTO | | 4PS24-232G-FSA12125-EPU |
| | HOUSING: | DIE FORMED STEEL | 3100 INITIAL LUMENSS | | |
| | FINISH: | BAKED WHITE ENAMEL | BALLAST FACTOR 0.71 | | |
| | LENS: | PRISMATIC PATTERN 12, .125" THICK LENS | 277V | | |
| | LENS DOOR: | WHITE FLUSH STEEL | | | |
| | MOUNTING: | LAY-IN | | | |
| D5 | DESCRIPTION: | 2 X 2 RECESSED LENSED TROFFER | FLUORESCENT | 25.000000 | COLUMBIA |
| | SIZE: | 24" WIDE x 24" LENGTH x 4-1/4" TALL | (2) F17T8/ADV841/ALTO | | 4PS22-217G-FSA12125-EPU |
| | HOUSING: | DIE FORMED STEEL | 2850 INITIAL LUMENS | | |
| | FINISH: | BAKED WHITE ENAMEL | BALLAST FACTOR 0.71 | | |
| | LENS: | PRISMATIC PATTERN 12, .125" THICK LENS | 277V | | |
| | LENS DOOR: | WHITE FLUSH STEEL | | | |
| | MOUNTING: | LAY-IN | | | |
| D6 | DESCRIPTION: | PENDANT ARCHITECTURAL CYLINDER | LED | 27.000000 | DAYBRITE |
| | SIZE: | 7-9/16" x 14-15/16" | 1400 LUMENS | | OM6LED27 PC 35K WD CSS U WL |
| | HOUSING: | EXTRUDED ALUMINUM | 3500K | | |
| | FINISH: | WHITE | | | |
| | REFLECTOR: | CLEAR SEMI-SPECULAR | | | |
| | MOUNTING: | | | | |
| E | DESCRIPTION: | RECESSED DOWNLIGHT / MULTIPLE SPOTS | LED | 33.000000 | WAC LIGHTING |
| | SIZE: | 8 5/8" X 21 1/4" | 764 LUMENS | | MT-LED 318 |
| | HOUSING: | AIRTIGHT WITH NAIL BAR HANGER | 3500K | | |
| | FINISH: | WHITE TRIM | 277V | | |
| | MOUNTING: | FLANGE OR LAY-IN | | | |
| E1 | DESCRIPTION: | SAME AS 'E' ABOVE BUT 2 HEAD | LED | 22.000000 | WAC LIGHTING |
| | SIZE: | | 764 LUMENS | | MT-LED 218 |
| | HOUSING: | | 3500K | | |
| | FINISH: | | | | |
| | MOUNTING: | | | | |
| E2 | DESCRIPTION: | SURFACE ARCHITECTURAL TRACK HEAD | LED | 33.000000 | WAC LIGHTING |
| | SIZE: | 1-3/4" x 1-3/4" x 9-3/4" | 764 LUMENS | | MT-LED 318 |
| | HOUSING: | POWDER COATED ALUMINUM | 3500K | | |
| | FINISH: | WHITE | 277V | | |
| | MOUNTING: | | | | |
| F2 | DESCRIPTION: | 2 X 2 RECESSED LED TROFFER | LED | 8.000000 | DELTA LIGHT |
| | SIZE: | 24" WIDE x 24" LENGTH x 3-1/8" TALL | 277V | | RAND 2 RED 3033 |
| | HOUSING: | COLD ROLLED STEEL | | | |
| | FINISH: | POLYESTER POWDER COAT | | | |
| | OPTICS: | IMPACT-MODIFIED ACRYLIC REFRACTOR. LINEAR FACETED REFLECTOR | | | |
| | MOUNTING: | LAY-IN | | | |
| F4 | DESCRIPTION: | 2 X 4 RECESSED LED TROFFER | LED | 49.000000 | LITHONIA |
| | SIZE: | 24" WIDE x 48" LENGTH x 3-1/8" TALL | 4800 LUMENS | | 2RTL4-48L-D49-LP840-N100 |
| | HOUSING: | COLD ROLLED STEEL | 4000K | | |
| | FINISH: | POLYESTER POWDER COAT | | | |
| | OPTICS: | IMPACT-MODIFIED ACRYLIC REFRACTOR. LINEAR FACETED REFLECTOR | | | |
| | MOUNTING: | LAY-IN | | | |
| G | DESCRIPTION: | 2 x 2 FLANGE MOUNT RACQUETBALL COURT FIXTURE | METAL HALIDE | 454.000000 | ESCO LIGHTING |
| | SIZE: | 24" x 24" x 12" | (1) 400PSMH | | R17240CC-400-PS-4 |
| | HOUSING: | COLD ROLLED STEEL | 277V | | |
| | FINISH: | POLYESTER POWDER COAT | | | |
| | LENS: | CORNING #73 PRISMATIC TEMPERED GLASS | | | |
| | LENS DOOR: | GASKETED COUNTERSUNK FASTENERS AND STAINLESS STEEL HINGES | | | |
| | MOUNTING: | FLANGE MOUNT | | | |
| H | DESCRIPTION: | SUSPENDED INDUSTRIAL WITH WIRE GUARD | FLUORESCENT | 47.000000 | COLUMBIA |
| | SIZE: | 11" WIDE x 48" LENGTH x 3-5/8" TALL | (2) F32T8/ADV841/ALTO | | CSR4-32-U-E PROGRAM START-CSRWG4 |
| | HOUSING: | DIE FORMED STEEL | 3100 INITIAL LUMENSS | | |
| | FINISH: | BAKED WHITE ENAMEL | BALLAST FACTOR 0.71 | | |
| | REFLECTOR: | SYMMETRIC REFLECTOR 5% UPLIGHT | | | |
| | MOUNTING: | SUSPENDED, CHAIN HUNG, SURFACE | | | |
| | OPTIONS: | WIRE GUARD | | | |
| I | DESCRIPTION: | DIRECT / INDIRECT SUSPENDED DISK FIXTURE | INCANDESCENT | 200.000000 | LOUIS POULSEN |
| | SIZE: | 19.7" DIAMETER X 11.1" | | | PH 50 |
| | FINISH: | BY ARCHITECT | | | |
| | MOUNTING: | CEILING SUSPENDED | | | |
| | OTHER: | SUSPENSION, AIRCRAFT CABLE, LENGTH BY ARCHITECT PLANS | | | |
| J | DESCRIPTION: | GLASS GLOBE AND GUARD | FLUORESCENT | 36.000000 | LDPI = 387-B-32-DT-SG-DC |
| | HOUSING: | DIE-CAST ALUMINUM | (1) 32TRT/835/ALTO | | LITHONIA = VW42L M6 |
| | FINISH: | NATURAL | | | GUTH = VPW-32PL |
| | MOUNTING: | WALL MOUNT | | | RIG-A-LITE = VP-WB-2-03-F-MT-WG |
| | LENS: | CLEAR GLASS PROTECTIVE GLOBE | | | DURAGUARD = D-32W-CFL-VW43-MT |
| | GLOBE: | WATER TIGHT GASKETED | | | |
| | MOUNTING: | WALL MOUNT | | | |
| K | DESCRIPTION: | WALL MOUNT LINEAR FLUORESCENT | FLUORESCENT | 47.000000 | LUMINAIRE LIGHTING |
| | SIZE: | 9.40" WIDE x 49" LENGTH x 3.46" DEEP | (2) F32T8 | | TSL 94 - 232 - 2B - 277 - CP - WHT |
| | HOUSING: | COLD ROLLED STEEL | 4000K | | |
| | FINISH: | POLYESTER POWDER COAT | | | |
| | OPTICS: | HIGH IMPACT ACRYLIC DIFFUSER WITH LIGHT DIFFUSING FILM | | | |
| | MOUNTING: | WALL | | | |
| | OTHER: | PROVIDE OCCUPANCY SENSORS FOR LIGHTING CONTROL | | | |
| K1 | DESCRIPTION: | PENTAL FLEX | FLUORESCENT | 62/4' | LIGHT CONTROL - WALL SLOT 2100 |
| | SIZE: | 11 15/16 "X 9 1/32" X 48" | (1) F-54T5HO | | 21 1X T5H0 - CWM - DL/ECO - 277 |
| | HOUSING: | DIE FORMED | 4100K | | |
| | FINISH: | WHITE | | | |
| | MOUNTING: | RECESSED | | | |
| K2 | DESCRIPTION: | LAM COVE | FLUORESCENT | 43.000000 | DAY-BRITE |
| | SIZE: | 5-3/4"X2-7/8" | (1) F-54T5 | | HPE-A-1-T5-CM-X-UNV-X |
| | HOUSING: | 20-GAUGE STEEL HOUSING | 4100K | | |
| | FINISH: | NATURAL | | | |
| | MOUNTING: | SURFACE COVE | | | |
| L | DESCRIPTION: | DIRECT / INDIRECT WALL MOUNT VANITY | LED | 14.000000 | TEGANLIGHTING - KORE LED LINEAR |
| | SIZE: | 1" WIDE x 46" LENGTH x 3" DEEP | 90 CRI | | TG KLS - 25 - AL LED - 277V OSO - LUT |
| | HOUSING: | EXTRUDED ALUMINUM | 4000K | | |
| | FINISH: | BY ARCHITECT | | | |
| | LENS: | TRANSLUCENT SHIELD | | | |
| | MOUNTING: | WALL MOUNTED VERTICALLY BY MIRRORS | | | |
| M2 | DESCRIPTION: | RECESSED LED DOWNLIGHT | LED | 15.000000 | PRESCOLITE |
| | SIZE: | 6 IN. DIA. | 700 LUMENS | | D6LED3-277V-6D9LED3-40K-9-WT |
| | HOUSING: | WITH INTEGRAL BAR HANGERS | 4000K | | |
| | FINISH: | WHITE TRIM RING | | | |
| | REFLECTOR: | CLEAR ALZAK REFLECTOR | | | |
| | MOUNTING: | LAY-IN OR FLANGE | | | |
| | OTHER: | | | | |
| M3 | DESCRIPTION: | RECESSED LED DOWNLIGHT | LED | 42.000000 | PRESCOLITE |
| | SIZE: | 8 IN. DIA. | 3000 LUMENS | | MD8LED_3L_40K_8_277_3L - WFL45 - WT |
| | HOUSING: | WITH INTEGRAL BAR HANGERS | 4000K | | |
| | FINISH: | WHITE TRIM RING | | | |
| | REFLECTOR: | CLEAR ALZAK REFLECTOR | | | |
| | MOUNTING: | LAY-IN OR FLANGE | | | |
| | OTHER: | | | | |
| M4 | DESCRIPTION: | RECESSED LED SHOWER LIGHT | LED | 15.000000 | HALO H750TCP ML712830 493PS06 |
| | SIZE: | 4.5 IN. NOMINAL APERTURE | 952 LUMENS | | SERIES |
| | TRIM FINISH: | WHITE | 4100K | | |
| | REFLECTOR: | WHITE WITH SOLITE REGRESSED LENS | | | |
| | MOUNTING: | RECESSED | ELECTRONIC, 277v | | |
| | OTHER: | | | | |
| N3 | DESCRIPTION: | SURFACED ARCHITECTURAL LINEAR LED (DIRECT) | LED | 21W LED | AXIS LIGHTING BEAM 3 SERIES LED |
| | SIZE: | 3-13/32" X 4" X REFER TO PLANS FOR LENGTH | 1779 LUMENS | | BMSLED B1 500 40 S#C UNV D+E#+GTD# |
| | HOUSING: | ALUMINUM | 4000K | | FC |
| | FINISH: | BY ARCHITECT | | | |
| | LENS: | FROSTED | | | |
| | OPTICS: | PENDANT DIRECT | | | |
| | MOUNTING: | SURFACE MOUNT | | | |
| | OTHER: | PROVIDE CONTINUOUS RUNS AND LIT CORNERS | | | |
| N4 | DESCRIPTION: | SUSPENDED ARCHITECTURAL LINEAR LED (DIRECT) | LED | 29.000000 | AXIS LIGHTING BEAM 3 SERIES LED |
| | SIZE: | 3-13/32" X 4" X REFER TO PLANS FOR LENGTH | 1779 LUMENS | | BMD LED B1 500 40 S#C UNV D+E#+GTD# |
| | HOUSING: | ALUMINUM | 4000K | | |
| | FINISH: | BY ARCHITECT | | | |
| | LENS: | FROSTED | | | |
| | OPTICS: | PENDANT DIRECT | | | |
| | MOUNTING: | AIRCRAFT CABLE | | | |
| | OTHER: | PROVIDE CONTINUOUS RUNS AND LIT CORNERS | | | |
| N5 | DESCRIPTION: | RECESSED ARCHITECTURAL LINEAR LED (DIRECT) | LED | 29.000000 | AXIS LIGHTING BEAM 3 SERIES LED |
| | SIZE: | 3-13/32" X 4" X REFER TO PLANS FOR LENGTH | 1779 LUMENS | | BMR LED B1 500 40 S#C UNV D+E#+GTD# |
| | HOUSING: | ALUMINUM | 4000K | | |
| | FINISH: | BY ARCHITECT | | | |
| | LENS: | FROSTED | | | |
| | OPTICS: | PENDANT DIRECT | | | |
| | MOUNTING: | AIRCRAFT CABLE | | | |
| | OTHER: | PROVIDE CONTINUOUS RUNS AND LIT CORNERS | | | |


MHTN ARCHITECTS
**MHTN Architects, Inc.**
420 East South Temple
Suite 100
Salt Lake City, Utah 84111
Telephone (801) 595-6700
Telefax (801) 595-6717
www.mhtn.com

**Hastings+Chivetta**
ARCHITECTURE • PLANNING • ENGINEERING
622 Emerson, Suite 200
St. Louis, MO 63141
Tel. 314.863.5717
Fax. 314.863.2823
www.hastingschivetta.com

BUILDING OFFICIAL STAMP

Ken Garner Engineering, Inc.
Electrical Engineering Consultants, Inc.
102 West 500 South, Suite 225
Salt Lake City, Utah 84101
P. 801.328.8800
F. 801.328.8802
Contact: Paris LeLaCheur
Project #: 2010-117.00


# UNIVERSITY OF UTAH
# STUDENT LIFE CENTER
1836 E. BALLIF ROAD
SALT LAKE CITY, UTAH 84112

SEAL

MHTN PROJECT NO. 2010562.00

DRAWN BY: Author CHECKED BY: Checker

ISSUED:

| NO. | DATE | DESCRIPTION |
|---|---|---|

CONTRACTOR TO VERIFY DRAWINGS IN FIELD USE REFLECT LAST REVISION DATE.

| NO. | DATE | DESCRIPTION |
|---|---|---|

SHEET NAME
LUMINARE SCHEDULE

BID DOCUMENTS
May 15, 2013

SHEET NUMBER
EL601

C:\Users\ttrown.KGE\Documents\2010-117.00_KGE_STUDENT LIFE_ELECTRICAL_CENTERAL_2012_ttrown.rvt
5/14/2013 5:49:19 PM

| | | | | | |
|---|---|---|---|---|---|
| N6 | DESCRIPTION: | SURFACE MOUNT ARCHITECTURAL LINEAR LED | LED | 44.400000 | AXIS LIGHTING PRIME LED |
| | SIZE: | 3-13/32" X 4" X REFER TO PLANS FOR LENGTH | 4200 LUMENS | | PWSLED B1 500 40 S SH C UNV LT 1 SC F |
| | HOUSING: | ALUMINUM | 4000K | | |
| | FINISH: | BY ARCHITECT | | | |
| | LENS: | FROSTED | | | |
| | OPTICS: | PENDANT DIRECT | | | |
| | MOUNTING: | AIRCRAFT CABLE | | | |
| | OTHER: | PROVIDE CONTINUOUS RUNS AND LIT CORNERS | | | |
| O | DESCRIPTION: | SUSPENDED ARCHITECTURAL LINEAR LED | LED | 47.000000 | PHILIPS LEDALITE |
| | SIZE: | 4-1/8IN. X 3-3/4 IN. X REFER TO PLANS FOR LENGTH | 9534 LUMENS | | BOLDPLAY LED 7806-LA-C-QN-X-7-X-C |
| | HOUSING: | 20 GAUGE STEEL, PERFORATED | 4000K | | |
| | FINISH: | BY ARCHITECT | | | |
| | BAFFLES: | WHITE SOLID | | | |
| | MOUNTING: | AIRCRAFT CABLE | | | |
| P1 | DESCRIPTION: | LINEAR LED (DONOR WALL) | LED | 7W/FT | i2SYSTEMS |
| | SIZE: | | 4000K | | V2355B-XX1BBD |
| | HOUSING: | | | | |
| | FINISH: | | | | |
| | MOUNTING: | | | | |
| P2 | DESCRIPTION: | LINEAR LED (DONOR WALL) | LED | 3W/FT | ACCLAIM LIGHTING |
| | SIZE: | | 4000K | | FLEX2H4 |
| | HOUSING: | | | | |
| | FINISH: | | | | |
| | MOUNTING: | | | | |
| P3 | DESCRIPTION: | LINEAR LED (EXTERIOR CANOPY) | LED | 80.000000 | ACCLAIM LIGHTING |
| | SIZE: | 2.9 IN X 3.6 IN X 48 IN (OR 12") | 4570 LUMENS | | DGB.141.A or D.B.E.E/CA-CBF-03050/CA-CBL-00000 |
| | HOUSING: | ALUMINUM | 4000K | | |
| | LENS: | POLYCARBONATE LENS | 277 VOLT | | |
| | BEAM ANGLE: | 10 DEGREES | | | |
| | MOUNTING: | SURFACE | | | |
| | OTHER: | IP66 WET LOCATION | | | |
| Q | DESCRIPTION: | WALL MOUNTED EXTERIOR, EXIT DISCHARGE LIGHT | LED | 16.000000 | LUMINAIRE LIGHTING |
| | SIZE: | 5.4" WIDE x 3.6" TALL x 43.29" LENGTH | 1016 LUMENS | | AEL36-277-DP-CBA-TX/SD |
| | HOUSING: | EXTRUDED ALUMINUM | 4000K | | |
| | FINISH: | POLYESTER POWDER COAT - COLOR BY ARCHITECT | | | |
| | LENS: | UV STABILIZED DIFFUSED EXTRUDED POLYCARBONATE | | | |
| | OTHER: | UL LISTED FOR WET LOCATIONS | | | |
| | MOUNTING: | WALL | | | |
| R | DESCRIPTION: | SUSPENDED ARCHITECTURAL CYNDRICAL LED | LED | 26.000000 | |
| | SIZE: | 25" HEIGHT X 10.5" WIDTH | (1) FL 4F24 | | |
| | HOUSING: | | | | |
| | FINISH: | BY ARCHITECT | | | |
| | MOUNTING: | | | | |
| S | DESCRIPTION: | WALL MOUNTED EXTERIOR, EXIT DISCHARGE LIGHT | LED | 24.000000 | LITHONIA |
| | SIZE: | 16.25" WIDE x 7.25" TALL x 9" LENGTH | 10 LEDS | | WSR LED 1 10A700/40K SR4 MVOLT DBLXD |
| | HOUSING: | ALUMINUM | 4000K | | |
| | FINISH: | POLYESTER POWDER COAT - COLOR BY ARCHITECT | | | |
| | LENS: | NA | | | |
| | OTHER: | UL LISTED FOR WET LOCATIONS | | | |
| | MOUNTING: | WALL | | | |
| SE | DESCRIPTION: | WALL MOUNTED EXTERIOR, EXIT DISCHARGE LIGHT | LED | 24.000000 | LITHONIA |
| | SIZE: | 16.25" WIDE x 7.25" TALL x 9" LENGTH | 10 LEDS | | WSR LED 1 10A700/40K SR4 MVOLT ELCW DBLXD |
| | HOUSING: | ALUMINUM | 4000K | | |
| | FINISH: | POLYESTER POWDER COAT - COLOR BY ARCHITECT | | | |
| | LENS: | NA | | | |
| | OTHER: | UL LISTED FOR WET LOCATIONS | | | |
| | MOUNTING: | WALL | EMERGENCY BATTERY | | |
| S1 | **FIXTURE:** | | | | |
| | DESCRIPTION: | HID WALKWAY FIXTURE (U OF U STANDARD) | METAL HALIDE | 130.000000 | LSI (HEAD) |
| | SIZE: | 20" X 20" X 28" | (1) 100 W | | SPL-ENS-PT-H-2-100MH-F-MT-BLK-TE-0450SFTR |
| | HOUSING: | DIE CAST ALUMINUM | PULSE START | | |
| | FIXTURE FINISH: | BLACK POWDER COAT. (SEE UNIVERSITY STANDARD) | BALLAST | | NO ALTERNATES |
| | LENS: | FLAT TEMPERED GLASS | 277V | | |
| | REFLECTOR: | ANODIZED ALUMINUM, TYPE II | | | |
| | MOUNTING: | POST TOP MOUNT, 4.5" SLIP FITTER | | | |
| | OTHER: | TOOL-LESS ACCESS | | | |
| | **POLE:** | | | | |
| | DESCRIPTION: | ROUND, STRAIGHT, ALUMINUM POLE | | | STERNER (POLE) |
| | SIZE: | 10' X 4.5" DIAMETER | | | RSA10/4.5/0.125/10/C/BK |
| | FINISH: | NATURAL ALUMINUM | | | |
| | BASE: | SURFACE HINGED | | | NO ALTERNATES |
| | OTHER: | FULL-BASE COVER AND POLE BASE | | | |
| S2 | **FIXTURE:** | | | | |
| | DESCRIPTION: | HID WALKWAY FIXTURE (U OF U STANDARD) | METAL HALIDE | 130.000000 | LSI (HEAD) |
| | SIZE: | 20" X 20" X 28" | (1) 100 W | | SPL-ENS-PT-H-5-100MH-F-MT-BLK-TE-0450SFTR |
| | HOUSING: | DIE CAST ALUMINUM | PULSE START | | |
| | FIXTURE FINISH: | BLACK POWDER COAT. (SEE UNIVERSITY STANDARD) | BALLAST | | NO ALTERNATES |
| | LENS: | FLAT TEMPERED GLASS | 277V | | |
| | REFLECTOR: | ANODIZED ALUMINUM, TYPE V | | | |
| | MOUNTING: | POST TOP MOUNT, 4.5" SLIP FITTER | | | |
| | OTHER: | TOOL-LESS ACCESS | | | |
| | **POLE:** | | | | |
| | DESCRIPTION: | ROUND, STRAIGHT, ALUMINUM POLE | | | STERNER (POLE) |
| | SIZE: | 10' X 4.5" DIAMETER | | | RSA10/4.5/0.125/10/C/BK |
| | FINISH: | NATURAL ALUMINUM | | | |
| | BASE: | SURFACE HINGED | | | NO ALTERNATES |
| | OTHER: | FULL-BASE COVER AND POLE BASE | | | |
| S3 | **FIXTURE:** | | | | |
| | DESCRIPTION: | ARCHITECTURAL ROUND PARKING LOT FIXTURE | HPS ED18 | 310.000000 | LITHONIA |
| | SIZE: | 24" X 25" DIAMETER | (1) C250S50/ALTO | | KVR2 250S SR3FL TB RPF20 TLS DBL |
| | DISTRIBUTION: | TYPE III | (1) 1-LAMP ADVANCE | | |
| | HOUSING: | HEAVY-GAUGE SPUN ALUMINUM | 71A8291 | | NO ALTERNATES |
| | LENS: | FLAT, CLEAR, 3/16", TEMPERED, IMPACT-RESISTANT | MULTI-VOLT | | |
| | FIXTURE FINISH: | BLACK | | | |
| | REFLECTOR: | SEGMENTED | | | |
| | MOUNTING: | POLE TOP TENNON MOUNTING | | | |
| | OTHER: | TOOL-LESS ACCESS | | | |
| | **POLE:** | | | | |
| | DESCRIPTION: | ROUND, STRAIGHT, ALUMINUM POLE | | | STERNER |
| | SIZE: | 20' X 5" DIAMETER | | | RSA20/5/0.188/10/C/ABK |
| | FINISH: | BLACK | | | |
| | BASE: | SURFACE HINGED | | | NO ALTERNATES |
| | OTHER: | FULL-BASE COVER AND POLE BASE | | | |

| | | | | | |
|---|---|---|---|---|---|
| S4 | DESCRIPTION: | HID BOLLARD | METAL HALIDE | 90.000000 | LSI |
| | SIZE: | 8.6 IN. DIA. X 39.6 IN. HIGH. | (1) CMH70U830MED/O | | HYPR-70CMH-MT-OPTX-BLK-FT |
| | HOUSING: | CAST ALUMINUM TOP WTH EXTRUDED ALUM. BOTTOM | | | |
| | FIXTURE FINISH: | BLACK | | | |
| | LENS: | HEAVY-WALLED BOROSILICATE WITH CAST BIBS | HPF | | OR APPROVED |
| | REFLECTOR: | ANODIZED ALUMINUM. | | | |
| | MOUNTING: | CONCRETE BASE FLUSH WITH GRADE | | | |
| S5 | DESCRIPTION: | WALL OR POST MOUNTED LINEAR LIGHTED LED HANDRAIL | LED | 1.58 W/FT | io LIGHTING |
| | SIZE: | 1.66" DIA IN LENGTHS AS SHOWN ON THE ARCHITECTURAL DRAWINGS | STANDARD OUTPUT | | LUXRAIL 0-06-SSS-1-XXX-NR-ASYM-3K-277 SERIES |
| | HOUSING: | STAINLESS STEEL | 3000K | | |
| | FIXTURE FINISH: | SATIN STAINLESS STEEL | | | |
| | LENS: | ASYMMETRIC WP LENS | | | |
| | OTHER: | REMOTE ELECTRONIC DRIVER | | | |
| | MOUNTING: | WALL OR POST MOUNTED | | | |
| T | DESCRIPTION: | AUTOMATED RIGGING HOIST | N/A | | ETC RIGGING |
| | SIZE: | 20 FOOT BATTEN | | | ETC PRODIGY P800G |
| | ELECTRICAL: | (8) SINGLE EDISON FLUSH RECEPTACLES WIRED ON (1) 20A 120V CIRCUIT | | | |
| | | MOTOR END SINGLE TROLLEY CABLE MANAGEMENT SYSTEM | | | |
| | SPEED: | 30FPM | | | |
| | HORSE POWER: | 1.5HP | | | |
| | INRUSH CURRENT: | 16.8 AMPS | | | |
| | OPT. CURRENT: | 5.0 AMPS | | | |
| | RIGGING CONTROL: | QUICKTOUCH 4 (FOUR CHANNEL) | | | |
| U | DESCRIPTION: | SUSPENDED FLOURESCENT | (2) F32T8/ADV841/ALTO | 55.000000 | LITHONIA |
| | SIZE: | 12" X 4" X 8' | | | L 1 96 MVOLT GEB10PS |
| | HOUSING: | ALUMINUM | ADVANCE BALLAST | | |
| | FINISH: | FACTORY | | | |
| | LENS: | NA | | | |
| | OTHER: | NA | | | |
| | MOUNTING: | CELING SUSPENDED | | | |
| UE | DESCRIPTION: | SUSPENDED FLOURESCENT | (2) F32T8/ADV841/ALTO | 55.000000 | LITHONIA |
| | SIZE: | 12" X 4" X 8' | | | L 1 96 MVOLT GEB10PS EL |
| | HOUSING: | ALUMINUM | ADVANCE BALLAST | | |
| | FINISH: | FACTORY | | | |
| | LENS: | NA | | | |
| | OTHER: | NA | EMGERGENCY BATTERY | | |
| | MOUNTING: | CELING SUSPENDED | 90 MIN. MINIMUM | | |
| UB | DESCRIPTION: | THEATRICAL LIGHTING | LED | 161.000000 | ETC |
| | HOUSING: | DIE CAST METAL | 60 LED COLOR MIXING | | SELD60LI DPA-A 400CC 400SC PROVIDE 2 LENSES PER FIXTURE – |
| | FINISH: | BLACK | | | BEAM SPREAD TBD |
| | CONTROL: | DMX512 IN AND THRU VIA FIVE-PIN XLR CONNECTOR | | | |
| US | DESCRIPTION: | THEATRICAL LIGHTING | LED | 161.000000 | ETC |
| | HOUSING: | DIE CAST METAL | 60 LED COLOR MIXING | | SELD60LI DPA-A 400CC 400SC PROVIDE 2 LENSES PER FIXTURE – |
| | FINISH: | SILVER | | | BEAM SPREAD TBD |
| | CONTROL: | DMX512 IN AND THRU VIA FIVE-PIN XLR CONNECTOR | | | |
| U1 | DESCRIPTION: | TRACK LIGHTING | LED | 17.500000 | WAC LIGHTING |
| | FINISH: | BY ARCHITECT | 1017 LUMENS | | L-LEDS-WW-XX |
| | LENS: | MOLDED CLEAR ACRYLIC PLAQUE | 3000K | | |
| | MOUNTING: | L TRACK | | | |
| V | DESCRIPTION: | ENCLOSED AND GASKETED FIBERGLASS INDUSTRIAL | FLUORESCENT | 47.000000 | COLUMBIA LUN SERIES |
| | SIZE: | 7-9/16" WIDE x 50" LENGTH x 5-9/16" TALL | (2) F32T8/ADV841/ALTO | | |
| | HOUSING: | ONE PIECE HIGH IMPACT MOLDED POLYESTER FIBERGLASS | 4100K | | |
| | FINISH: | BAKED WHITE ENAMEL - CREAM TONE FIBERGLASS | | | |
| | DIFFUSER: | ONE PIECE IMPACT RESISTANT MOLDED ACRYLIC | | | |
| | MOUNTING: | SURFACE | | | |
| | OPTIONS: | WIRE GUARD | | | |
| W | DESCRIPTION: | ARCHITECTURAL SCONCE | LED | 17.000000 | DALSLIGHTING |
| | SIZE: | 30"H x 10"W x 5"D | 1050 LUMENS | | 1LEDB 277 BBG ASB DB |
| | FINISH: | BY ARCHITECT | 4000K | | |
| | MOUNTING: | WALL | | | |
| W1 | DESCRIPTION: | ARCHITECTURAL SCONCE | LED | 9.600000 | REBELLE LIGHTING |
| | SIZE: | 9.8"H x 9.5"W x 2.9"D | - LUMENS | | 6030U 35 277 RAL |
| | FINISH: | BY ARCHITECT | 3500K | | |
| | MOUNTING: | WALL | | | |
| W2 | DESCRIPTION: | ARCHITECTURAL SCONCE | FLUORESCENT | 26.000000 | SPI LIGHTING ADVENT HARBOR |
| | SIZE: | 14.5"H x 7.0"W x 4.0"D | - LUMENS | | AIW 8266 L25.6W 277 BRUSHED BRASS |
| | FINISH: | BY ARCHITECT | 3500K | | |
| | MOUNTING: | WALL | | | |
| X1 | DESCRIPTION: | EDGE LIT LED EXIT SIGN, CORRIDORS, PATHS OF EGRESS SINGLE FACE | LED | 5.000000 | DUAL LITE LE SERIES |
| | TEXT COLOR | GREEN | | | |
| | HOUSING: | EDGE LIT LED EXIT SIGN | | | |
| | FINISH: | WHITE FINISH | | | |
| | LENS: | MOLDED CLEAR ACRYLIC PLAQUE | | | |
| | OTHER: | AC OPERATION ONLY, LIFE SAFETY CIRCUIT | | | |
| | MOUNTING: | UNIVERSAL (SEE DRAWING FOR APPLICATION) | | | |
| X2 | DESCRIPTION: | EDGE LIT LED EXIT SIGN, CORRIDORS, PATHS OF EGRESS DOUBLE FACE | LED | 5.000000 | DUAL LITE LE SERIES |
| | TEXT COLOR | GREEN | | | |
| | HOUSING: | EDGE LIT LED EXIT SIGN | | | |
| | FINISH: | WHITE FINISH | | | |
| | LENS: | MOLDED CLEAR ACRYLIC PLAQUE | | | |
| | OTHER: | AC OPERATION ONLY, LIFE SAFETY CIRCUIT | | | |
| | MOUNTING: | UNIVERSAL (SEE DRAWING FOR APPLICATION) | | | |

C:\Users\drown.KGE\Documents\2010-117.00_KGE_STUDENT LIFE_ELECTRICAL_CENTERAL_2012_drown.rvt
5/14/2013 5:49:25 PM


MHTN ARCHITECTS
**MHTN Architects, Inc.**
420 East South Temple
Suite 100
Salt Lake City, Utah 84111
Telephone (801) 595-6700
Telefax (801) 595-6717
www.mhtn.com

**Hastings+Chivetta**
ARCHITECTURE • PLANNING • ENGINEERING
622 Emerson, Suite 200
St. Louis, MO 63141
Tel. 314.863.5717
Fax. 314.863.2823
www.hastingschivetta.com

BUILDING OFFICIAL STAMP

Ken Garner Engineering, Inc.
Electrical Engineering Consultants, Inc.
102 West 500 South, Suite 225
Salt Lake City, Utah 84101
P. 801.328.8800
F. 801.328.8802
Contact: Paris LeLaCheur
Project #: 2010-117.00


UNIVERSITY OF UTAH

STUDENT LIFE CENTER
1836 E. BALLIF ROAD
SALT LAKE CITY, UTAH 84112

SEAL

MHTN PROJECT NO. 2010562.00

DRAWN BY: Author CHECKED BY: Checker

ISSUED:

| NO. | DATE | DESCRIPTION |
|---|---|---|

CONTRACTOR TO VERIFY DRAWINGS IN FIELD USE REFLECT LAST REVISION DATE.

| NO. | DATE | DESCRIPTION |
|---|---|---|

SHEET NAME
LUMINARE SCHEDULE

BID DOCUMENTS
May 15, 2013

SHEET NUMBER
EL602

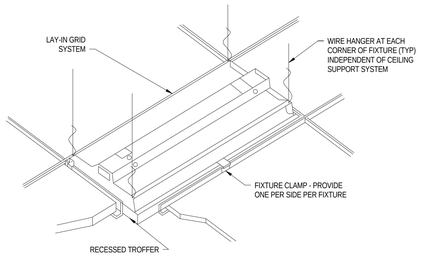


C1 EL701 TYPICAL RECESSED FIXTURE MOUNTING DETAIL
SCALE | NTS

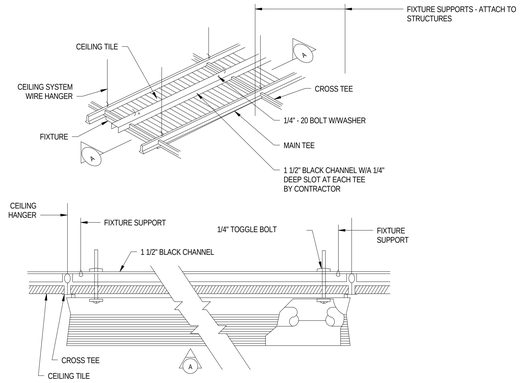


C2 EL701 TYPICAL SURFACE FIXTURE MOUNTING DETAIL
SCALE | NTS

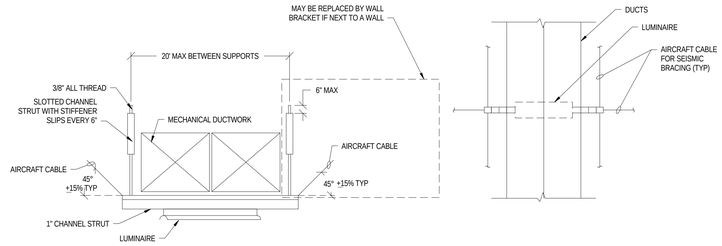


FRONT VIEW TOP VIEW

C4 EL701 TYPICAL SUSPENDED LUMINAIRE SUPPORT BELOW DUCT WORK
SCALE | NTS

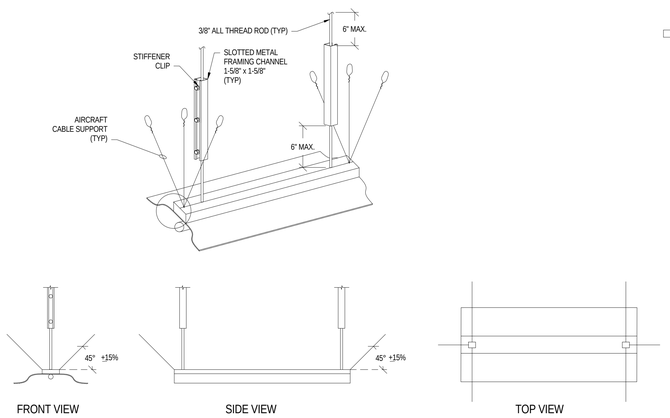


FRONT VIEW SIDE VIEW TOP VIEW

A1 EL701 SUSPENDED LIGHT FIXTURE SEISMIC BRACING DETAIL
SCALE | NTS

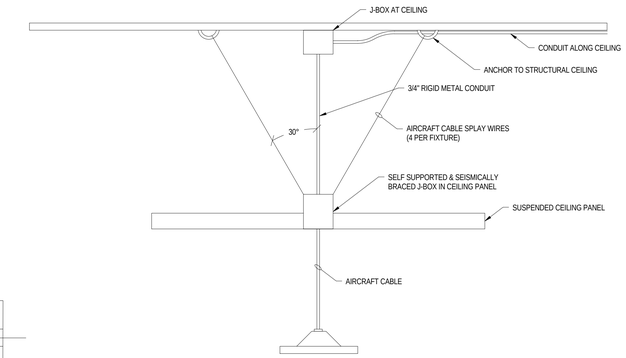


A3 EL701 TYPICAL SUSPENDED FIXTURE BELOW SUSPENDED CEILING MOUNTING DETAIL
SCALE | NTS

C:\Users\tbrown.KGE\Documents\2010-117.00_KGE_STUDENT LIFE_ELECTRICAL_CENTERAL_2012_tbrown.rvt
5/14/2013 5:49:34 PM

MHTN
ARCHITECTS
**MHTN Architects, Inc.**
420 East South Temple
Suite 100
Salt Lake City, Utah 84111
Telephone (801) 595-6700
Telefax (801) 595-6717
www.mhtn.com

**Hastings+Chivetta**
ARCHITECTURE • PLANNING • ENGINEERING
622 Emerson, Suite 200
St. Louis, MO 63141
Tel. 314.863.5717
Fax. 314.863.2623
www.hastingschivetta.com

BUILDING OFFICIAL STAMP
Ken Garner Engineering, Inc.
Electrical Engineering Consultants, Inc.
102 West 500 South, Suite 225
Salt Lake City, Utah 84101
P. 801.328.8800
F. 801.328.8802
Contact: Paris LeLaCheur
Project #: 2010-117.00

UNIVERSITY OF UTAH
STUDENT LIFE CENTER
1836 E. BALLIF ROAD
SALT LAKE CITY, UTAH 84112

SEAL

MHTN PROJECT NO. 2010562.00
DRAWN BY: Author CHECKED BY: Checker

ISSUED:

| NO. | DATE | DESCRIPTION |
|---|---|---|

CONTRACTOR TO VERIFY DRAWINGS IN FIELD USE REFLECT LAST REVISION DATE.

| NO. | DATE | DESCRIPTION |
|---|---|---|

SHEET NAME
LIGHTING DETAILS

BID DOCUMENTS
May 15, 2013

SHEET NUMBER
EL701

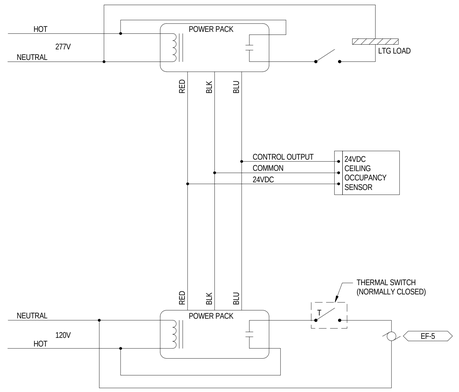


C4 EL702 RESTROOM LIGHTING/EXHAUST FAN CONTROL DETAIL
SCALE | NTS

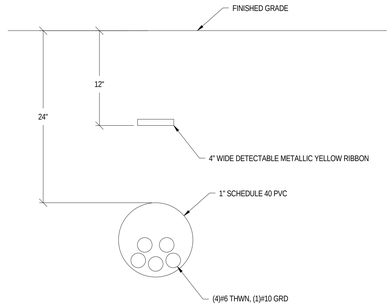


A4 EL702 EXTERIOR LIGHTING RACEWAY & CABLE DETAIL
SCALE | NTS

MHTN
ARCHITECTS
**MHTN Architects, Inc.**
420 East South Temple
Suite 100
Salt Lake City, Utah 84111
Telephone (801) 595-6700
Telefax (801) 595-6717
www.mhtn.com

**Hastings+Chivetta**
ARCHITECTURE • PLANNING • ENGINEERING
622 Emerson, Suite 200
St. Louis, MO 63141
Tel. 314.863.5717
Fax. 314.863.2823
www.hastingschivetta.com

BUILDING OFFICIAL STAMP

Ken Garner
Engineering, Inc.
Electrical Engineering Consultants, Inc.
102 West 500 South, Suite 225
Salt Lake City, Utah 84101
P. 801.328.8800
F. 801.328.8802
Contact: Paris LeLaCheur
Project #: 2010-117.00

# UNIVERSITY OF UTAH
# STUDENT LIFE CENTER
1836 E. BALLIF ROAD
SALT LAKE CITY, UTAH 84112

SEAL

MHTN PROJECT NO. 2010562.00

DRAWN BY: KGE CHECKED BY: KGE

ISSUED:

| NO. | DATE | DESCRIPTION |
|---|---|---|
| | | |

CONTRACTOR TO VERIFY DRAWINGS IN FIELD USE REFLECT LAST REVISION DATE.

| NO. | DATE | DESCRIPTION |
|---|---|---|
| | | |

SHEET NAME
LIGHTING DETAILS

BID DOCUMENTS
May 15, 2013

SHEET NUMBER
EL702

C:\Users\tbrown.KGE\Documents\2010-117.00_KGE_STUDENT LIFE_ELECTRICAL_CENTERAL_2012_tbrown.rvt
5/14/2013 5:49:40 PM

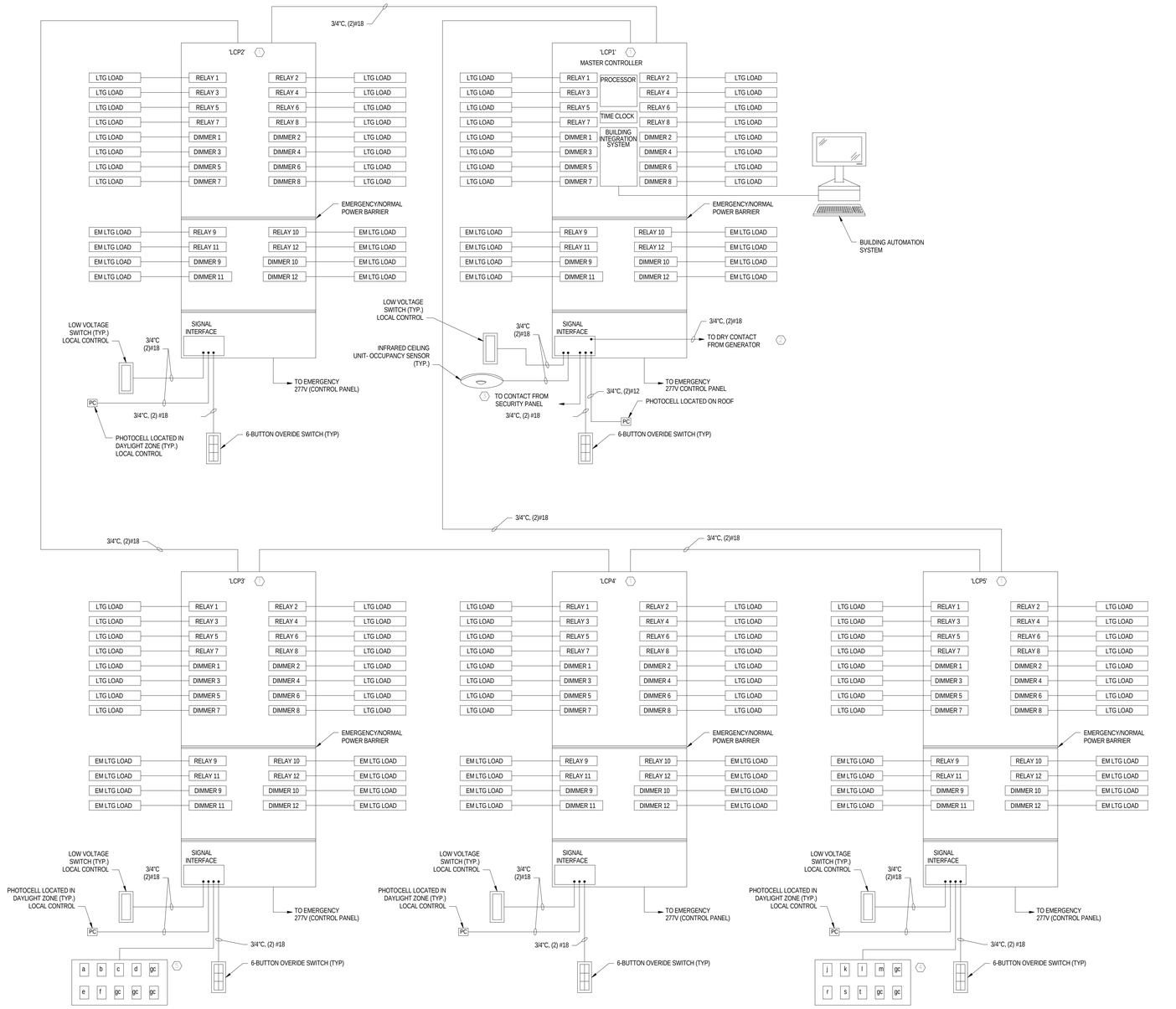


A2 EL703 LIGHTING CONTROL PANEL SYSTEM RISER DIAGRAM

NOT TO SCALE

C:\Users\ttrown.KGE\Documents\2010-117.00_KGE_STUDENT LIFE_ELECTRICAL_CENTERAL_2012_ttrown.rvt
5/14/2013 5:49:48 PM


MHTN ARCHITECTS

**MHTN Architects, Inc.**
420 East South Temple
Suite 100
Salt Lake City, Utah 84111
Telephone (801) 595-6700
Telefax (801) 595-6717
www.mhtn.com

**Hastings+Chivetta**
ARCHITECTURE • PLANNING • ENGINEERING
622 Emerson, Suite 200
St. Louis, MO 63141
Tel. 314.863.5717
Fax. 314.863.2823
www.hastingschivetta.com

BUILDING OFFICIAL STAMP

Ken Garner Engineering, Inc.
Electrical Engineering Consultants, Inc.
102 West 500 South, Suite 225
Salt Lake City, Utah 84101
P. 801.328.8800
F. 801.328.8802
Contact: Paris LeLaCheur
Project #: 2010-117.00


# UNIVERSITY OF UTAH

## STUDENT LIFE CENTER

1836 E. BALLIF ROAD
SALT LAKE CITY, UTAH 84112

SEAL

MHTN PROJECT NO. 2010562.00

DRAWN BY: KGE CHECKED BY: KGE

ISSUED:

| NO. | DATE | DESCRIPTION |
|---|---|---|

CONTRACTOR TO VERIFY DRAWINGS IN FIELD USE REFLECT LAST REVISION DATE:

| NO. | DATE | DESCRIPTION |
|---|---|---|

SHEET NAME

LIGHTING CONTROL SYSTEM RISER

BID DOCUMENTS
May 15, 2013

SHEET NUMBER

EL703

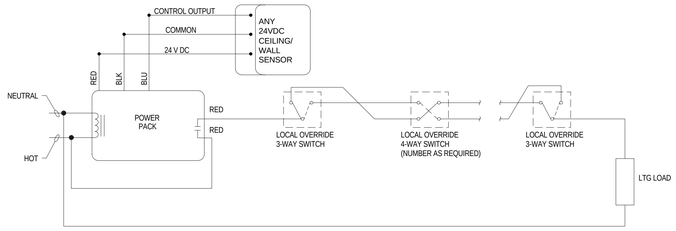


1 EL704 SENSOR CONTROLLING W/3-WAY & 4-WAY SWITCHING DETAIL (TYP)
SCALE | NTS

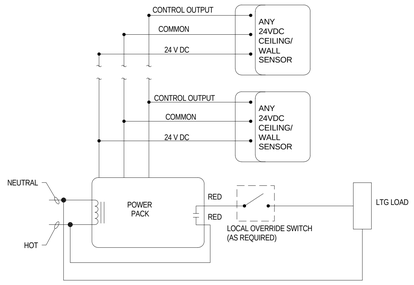


2 EL704 MULTIPLE OCCUPANCY SENSORS W/ ONE POWER PACK DETAIL (TYP)
SCALE |NTS

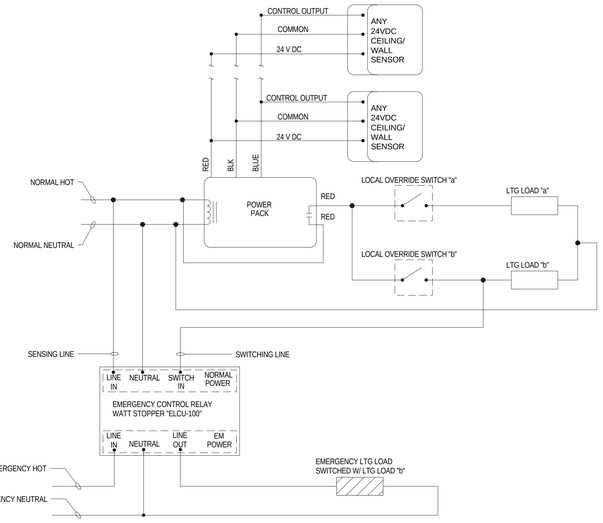


3 EL704 NORMAL/EMERGENCY LIGHTING CONTROL (TYP)
SCALE |NTS

MHTN
ARCHITECTS
**MHTN Architects, Inc.**
420 East South Temple
Suite 100
Salt Lake City, Utah 84111
Telephone (801) 595-6700
Telefax (801) 595-6717
www.mhtn.com

**Hastings+Chivetta**
ARCHITECTURE • PLANNING • ENGINEERING
622 Emerson, Suite 200
St. Louis, MO 63141
Tel. 314.863.5717
Fax. 314.863.2823
www.hastingschivetta.com

BUILDING OFFICIAL STAMP

Ken Garner Engineering, Inc.
Electrical Engineering Consultants, Inc.
102 West 500 South, Suite 225
Salt Lake City, Utah 84101
P. 801.328.8800
F. 801.328.8802
Contact: Paris LeLaCheur
Project #: 2010-117.00

# UNIVERSITY OF UTAH
## STUDENT LIFE CENTER
1836 E. BALLIF ROAD
SALT LAKE CITY, UTAH 84112

SEAL

MHTN PROJECT NO. 2010562.00

DRAWN BY: KGE CHECKED BY: KGE

ISSUED:

| NO. | DATE | DESCRIPTION |
|---|---|---|
| | | |

CONTRACTOR TO VERIFY DRAWINGS IN FIELD USE REFLECT LAST REVISION DATE.

| NO. | DATE | DESCRIPTION |
|---|---|---|
| | | |

SHEET NAME
LIGHTING CONTROL DETAILS
BID DOCUMENTS
May 15, 2013

SHEET NUMBER
EL704

C:\Users\drown.KGE\Documents\2010-117.00_KGE_STUDENT LIFE_ELECTRICAL_CENTERAL_2012_drown.rvt
5/14/2013 5:49:56 PM

KEYED NOTES - SHEET EP100.A

1. COORDINATE WITH OWNER AND ARCHITECT FOR EXACT LOCATION OF OWNER PROVIDED EQUIPMENT.
2. J-BOX MOUNTED IN CEILING FOR 120V POWER TO MECHANICAL VAV BOX. COORDINATE WITH MECHANICAL FOR EXACT LOCATION.
3. POWER FOR ICE MAKER.
4. INSTALL A LCD TV HERE. SEE EQUIPMENT LIST FOR MANUFACTURER AND MODEL. (TV DISTRIBUTION SYSTEM, SHEET EY710)
5. MOUNT CLOCK ABOVE DESK ON FRONT OF HEADER.

GENERAL NOTES - SHEET EP100.A

A. PROVIDE (2) 3/4" CONDUITS TO EACH DATA LOCATION. EACH CONDUIT SHALL RUN FROM NEAREST CABLE TRAY TO OUTLET LOCATION AND SHALLHAVE A PULL STRING INSTALLED. ALL WIRING IS TO BE DONE BY UNIVERSITY OF UTAH NETCOM DEPARTMENT.
B. UNIVERSITY OF UTAH NET COM SHALL PROVIDE ALL 19" TELECOM RACKS AND MAKE ALL FINAL CONNECTIONS.

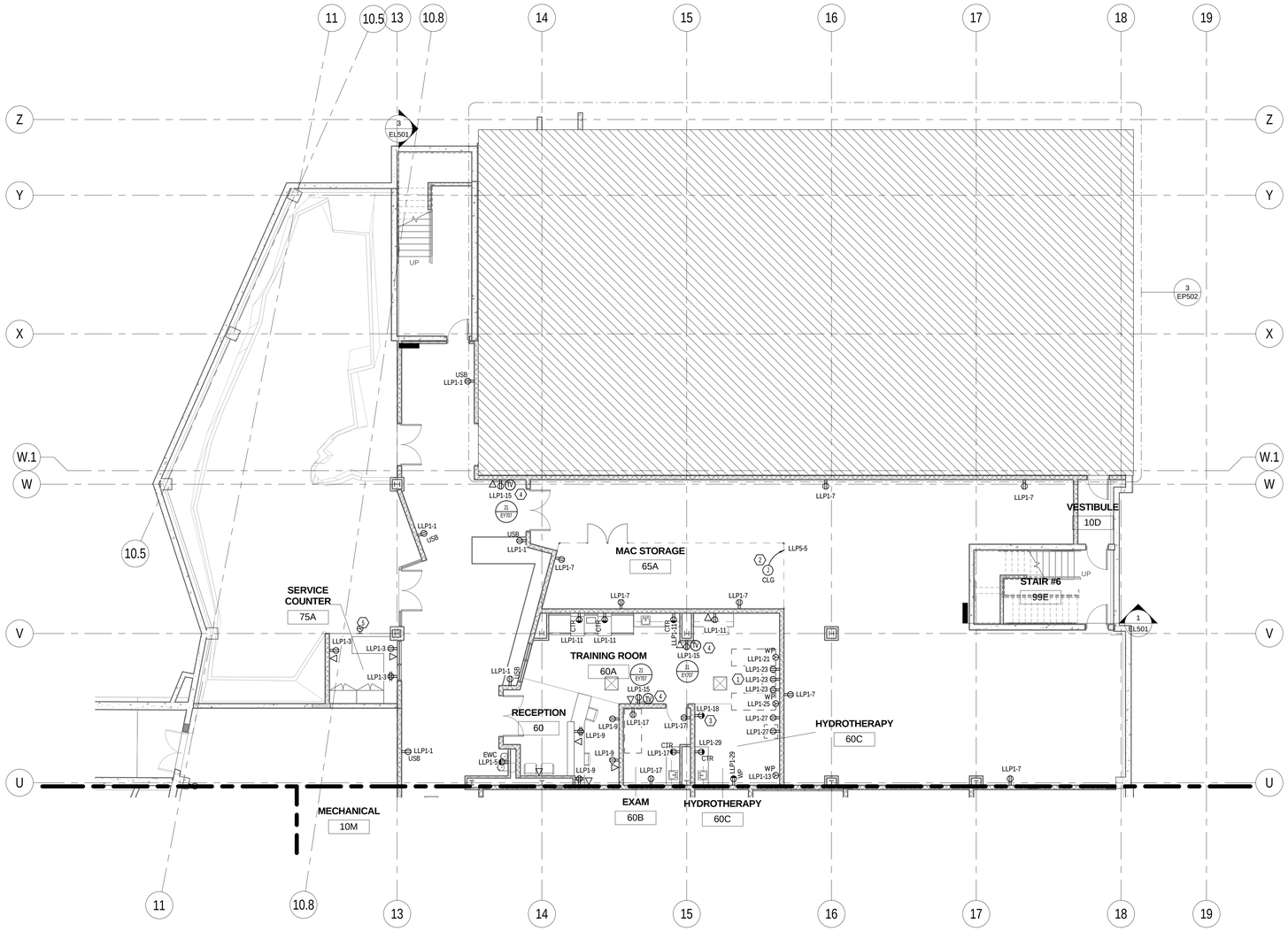


1 EP100.A A ENLARGED LOWER LEVEL POWER PLAN NORTH
SCALE [1/8" = 1'-0"

0' 4'-0" 8'-0" 16'-0"
1/8" =1'-0"

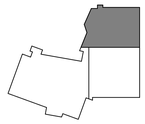

KEYPLAN


MHTN ARCHITECTS
MHTN Architects, Inc.
420 East South Temple
Suite 100
Salt Lake City, Utah 84111
Telephone (801) 595-6700
Telefax (801) 595-6717
www.mhtn.com

Hastings+Chivetta
ARCHITECTURE • PLANNING • ENGINEERING
622 Emerson, Suite 200
St. Louis, MO 63141
Tel. 314.863.5717
Fax. 314.863.2623
www.hastingschivetta.com

BUILDING OFFICIAL STAMP

Ken Garner Engineering, Inc.
Electrical Engineering Consultants, Inc.
102 West 500 South, Suite 225
Salt Lake City, Utah 84101
P. 801.328.8800
F. 801.328.8802
Contact: Paris LeLaCheur
Project #: 2010-117.00


# UNIVERSITY OF UTAH
## STUDENT LIFE CENTER
1836 E. BALLIF ROAD
SALT LAKE CITY, UTAH 84112

SEAL

MHTN PROJECT NO. 2010562.00

DRAWN BY: KGE CHECKED BY: KGE

ISSUED:

| NO. | DATE | DESCRIPTION |
|---|---|---|

CONTRACTOR TO VERIFY DRAWINGS IN FIELD USE REFLECT LAST REVISION DATE.

| NO. | DATE | DESCRIPTION |
|---|---|---|

SHEET NAME
LOWER LEVEL POWER PLAN AREA A
BID DOCUMENTS
May 15, 2013

SHEET NUMBER
EP100.A

C:\Users\drown.KGE\Documents\2010-117.00_KGE_STUDENT LIFE_ELECTRICAL_CENTERAL_2012_drown.rvt
5/14/2013 5:50:06 PM

KEYED NOTES - SHEET EP100.B

1. POWER FOR SCOREBOARD CONTROLLER. COORDINATE WITH ARCHITECT FOR EXACT LOCATION.
2. J-BOX MOUNTED IN CEILING FOR 120V POWER TO MECHANICAL VAV BOX. COORDINATE WITH MECHANICAL FOR EXACT LOCATION.
3. RECEPTACLE FOR POWER TO SCOREBOARD. COORDINATE WITH ARCHITECT FOR EXACT LOCATION.
4. INSTALL A LCD TV HERE. SEE EQUIPMENT LIST FOR MANUFACTURER AND MODEL. (TV DISTRIBUTION SYSTEM, SHEET EY710)
5. PROVIDE THERMAL SWITCH FOR MOTORIZED BACKBOARD DISCONNECT.
6. PROVIDE LOCKABLE CABINET FOR LIGHTING SWITCHES AND MOTORIZED EQUIPMENT MOMENTARY KEYED SWITCHES. CABINET SHALL BE RECESSED IN COLUMN WALL.
7. DEDICATED RECEPTACLE FOR MICROWAVE OVEN. COORDINATE EXACT LOCATION PRIOR TO ROUGHIN.
8. COORDINATE WITH ARCHITECT FOR EXACT MOUNTING LOCATION AND HEIGHT. PROVIDE WIRE GUARD.

GENERAL NOTES - SHEET EP100.B

A. PROVIDE (2) 3/4" CONDUITS TO EACH DATA LOCATION. EACH CONDUIT SHALL RUN FROM NEAREST CABLE TRAY TO OUTLET LOCATION AND SHALLHAVE A PULL STRING INSTALLED. ALL WIRING IS TO BE DONE BY UNIVERSITY OF UTAH NETCOM DEPARTYMENT.
B. UNIVERSITY OF UTAH NET COM SHALL PROVIDE ALL 19" TELECOM RACKS AND MAKE ALL FINAL CONNECTIONS.

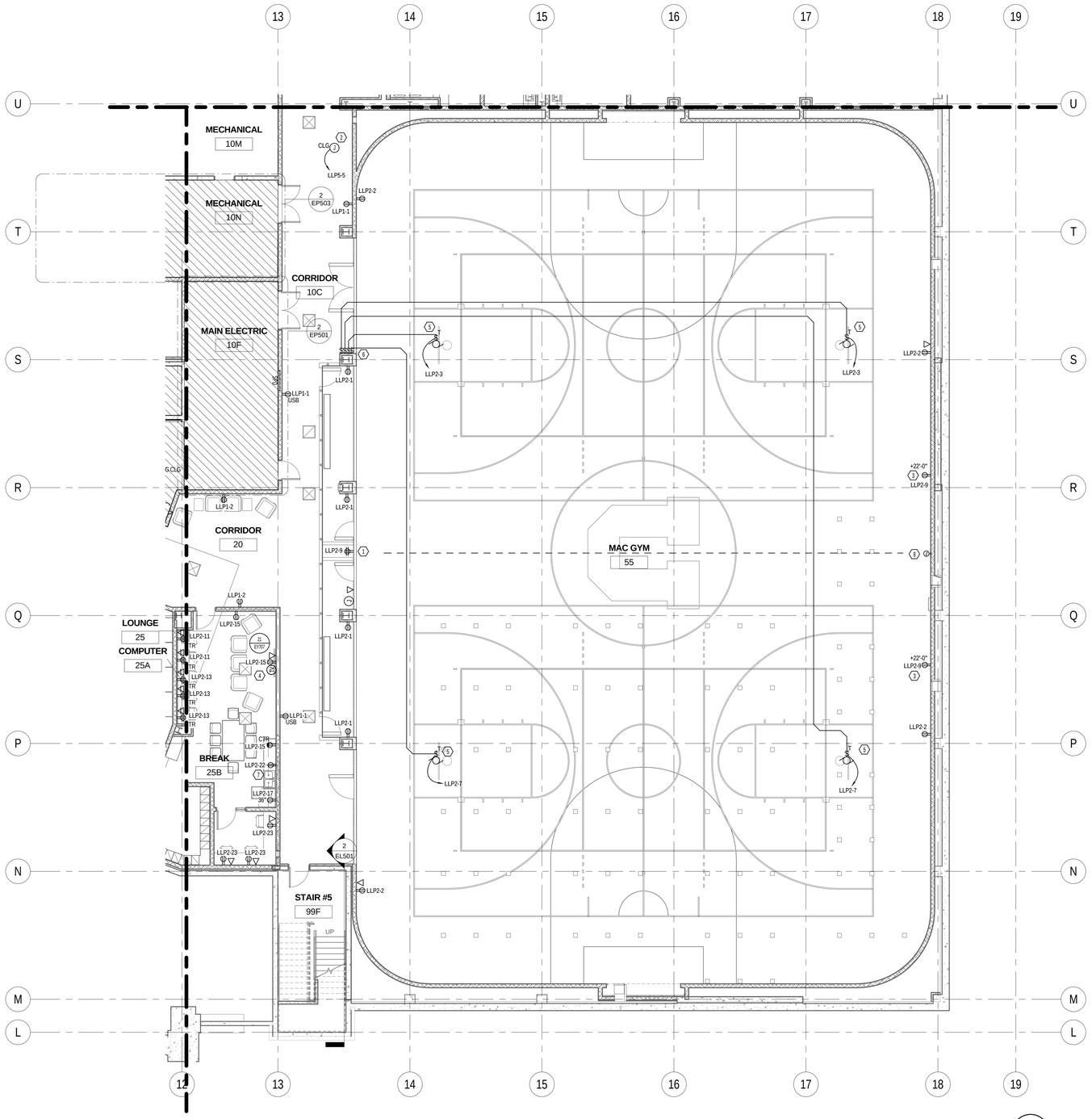


1 EP100.B B ENLARGED LOWER LEVEL POWER PLAN SOUTH
SCALE | 1/8" = 1'-0"

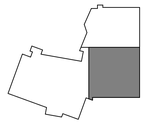

KEYPLAN


MHTN ARCHITECTS
MHTN Architects, Inc.
420 East South Temple
Suite 100
Salt Lake City, Utah 84111
Telephone (801) 595-6700
Telefax (801) 595-6717
www.mhtn.com

Hastings+Chivetta
ARCHITECTURE • PLANNING • ENGINEERING
622 Emerson, Suite 200
St. Louis, MO 63141
Tel. 314.863.5717
Fax. 314.863.2823
www.hastingschivetta.com

BUILDING OFFICIAL STAMP

Ken Garner Engineering, Inc.
Electrical Engineering Consultants, Inc.
102 West 500 South, Suite 225
Salt Lake City, Utah 84101
P. 801.328.8800
F. 801.328.8802
Contact: Paris LeLaCheur
Project #: 2010-117.00


# UNIVERSITY OF UTAH
## STUDENT LIFE CENTER
1836 E. BALLIF ROAD
SALT LAKE CITY, UTAH 84112

SEAL

MHTN PROJECT NO. 2010562.00

DRAWN BY: KGE CHECKED BY: KGE

ISSUED:

| NO. | DATE | DESCRIPTION |
|---|---|---|

CONTRACTOR TO VERIFY DRAWINGS IN FIELD USE REFLECT LAST REVISION DATE.

| NO. | DATE | DESCRIPTION |
|---|---|---|

SHEET NAME
LOWER LEVEL POWER PLAN AREA B
BID DOCUMENTS
May 15, 2013

SHEET NUMBER
EP100.B

C:\Users\rbrown.KGE\Documents\2010-117.00_KGE_STUDENT LIFE_ELECTRICAL_CENTERAL_2012_rbrown.rvt
5/14/2013 5:50:16 PM

KEYED NOTES - SHEET EP100.C

1. VFD PROVIDED BY OTHERS. COORDINATE WITH MECHANICAL FOR EXACT LOCATION.
2. J-BOX MOUNTED IN CEILING FOR 120V POWER TO MECHANICAL VAV BOX. COORDINATE WITH MECHANICAL FOR EXACT LOCATION.
3. CIRCUIT CONTINUES TO LIGHT FIXTURE IN PIT. SEE LIGHTING SHEET FOR CONTINUATION.
4. INSTALL A LCD TV HERE. SEE EQUIPMENT LIST FOR MANUFACTURER AND MODEL. (TV DISTRIBUTION SYSTEM, SHEET EY710)
5. INSTALL TOUCH PANEL INTERFACE HERE.
6. INSTALL LAN DROPS AND TV DROPS INSIDE THE EQUIPMENT CABINET #2.
7. DEDICATED 20A CIRCUITS FOR A/V EQUIPMENT CABINET.
8. J-BOX FOR CONTROL WIRING BETWEEN EMERGENCY SHUT OFF AND TIMER PUSH BUTTONS. PUSH BUTTONS PROVIDED BY POOL MANUFACTURER, INSTALLED BY DIV 26.
9. INSTALL RECEPTACLES HORIZONTALLY ABOVE COUNTER AND BELOW MIRROR. COORDINATE HEIGHT WITH MILLWORK.
10. POWER FOR RADIO CHARGING STATIONS.
11. POWER FOR OWNER PROVIDED TIME CLOCK.
12. ELEVATOR 2-WAY COMMUNICATION PER 2009 IBC 1007.8. COORDINATE WITH ELEVATOR MANUFACTURER FOR EXACT LOCATION.
13. 120V 20A DEDICATED DIRCUIT FOR ELEVATOR CAB LIGHTS.
14. J-BOX FOR ELEVATOR RECALL.
15. J-BOX FOR POWER TO DIGITAL CLOCK. COORDINATE WITH ARCHITECT FOR EXACT LOCATION.

GENERAL NOTES - SHEET EP100.C

A. PROVIDE (2) 3/4" CONDUITS TO EACH DATA LOCATION. EACH CONDUIT SHALL RUN FROM NEAREST CABLE TRAY TO OUTLET LOCATION AND SHALLHAVE A PULL STRING INSTALLED. ALL WIRING IS TO BE DONE BY UNIVERSITY OF UTAH NETCOM DEPARTYMENT.
B. UNIVERSITY OF UTAH NET COM SHALL PROVIDE ALL 19" TELECOM RACKS AND MAKE ALL FINAL CONNECTIONS.

1 EP100.C C ENLARGED LOWER LEVEL POWER PLAN WEST
SCALE |1/8" = 1'-0"

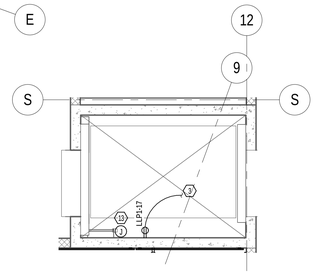

2 EP100.C ENLARGED ELEVATOR #1
SCALE |1/4" = 1'-0"

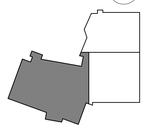

KEYPLAN


MHTN ARCHITECTS
MHTN Architects, Inc.
420 East South Temple
Suite 100
Salt Lake City, Utah 84111
Telephone (801) 595-6700
Telefax (801) 595-6717
www.mhtn.com

Hastings+Chivetta
ARCHITECTURE • PLANNING • ENGINEERING
622 Emerson, Suite 200
St. Louis, MO 63141
Tel. 314.863.5717
Fax. 314.863.2623
www.hastingschivetta.com

BUILDING OFFICIAL STAMP

Ken Garner Engineering, Inc.
Electrical Engineering Consultants, Inc.
102 West 500 South, Suite 225
Salt Lake City, Utah 84101
P. 801.328.8800
F. 801.328.8802
Contact: Paris LeLaCheur
Project #: 2010-117.00


# UNIVERSITY OF UTAH

## STUDENT LIFE CENTER

1836 E. BALLIF ROAD
SALT LAKE CITY, UTAH 84112

SEAL

MHTN PROJECT NO. 2010562.00

DRAWN BY: KGE CHECKED BY: KGE

ISSUED:

| NO. | DATE | DESCRIPTION |
|---|---|---|

CONTRACTOR TO VERIFY DRAWINGS IN FIELD USE REFLECT LAST REVISION DATE.

| NO. | DATE | DESCRIPTION |
|---|---|---|

SHEET NAME

LOWER LEVEL POWER PLAN AREA C
BID DOCUMENTS
May 15, 2013

SHEET NUMBER

EP100.C

C:\Users\ttrown.KGE\Documents\2010-117.00_KGE_STUDENT LIFE_ELECTRICAL_CENTERAL_2012_ttrown.rvt
5/14/2013 5:50:44 PM

KEYED NOTES - SHEET EP101.A

1. J-BOX MOUNTED IN CEILING FOR 120V POWER TO MECHANICAL VAV BOX. COORDINATE WITH MECHANICAL FOR EXACT LOCATION.
2. INSTALL ONE TV DROP AND TWO LAN DROPS INSIDE THE EQUIPMENT CABINET.
3. INSTALL A LCD TV HERE. SEE EQUIPMENT LIST FOR MANUFACTURER AND MODEL. (TV DISTRIBUTION SYSTEM, SHEET EY710)
4. DEDICATED 20A CIRCUITS FOR A/V EQUIPMENT CABINET.
5. POWER FOR DISHWASHER. COORDINATE CONNECTION TYPE WITH EQUIPMENT PRIOR TO ROUGH-IN.
6. J-BOX FOR POWER TO FOLDING DOOR MOTOR. MOTOR AND DOOR CONTROL BY OTHERS. DIV.26 TO PROVIDE ALL REQUIRED CONDUIT, DISCONNECTS AND WIRING BETWEEN DOOR, MOTOR AND CONTROL LOCATIONS.
7. CEILING MOUNT TV OUTLET AND LCD TVS.

GENERAL NOTES - SHEET EP101.A

A. PROVIDE (2) 3/4" CONDUITS TO EACH DATA LOCATION. EACH CONDUIT SHALL RUN FROM NEAREST CABLE TRAY TO OUTLET LOCATION AND SHALL HAVE A PULL STRING INSTALLED. ALL WIRING IS TO BE DONE BY UNIVERSITY OF UTAH NETCOM DEPARTYMENT.
B. UNIVERSITY OF UTAH NET COM SHALL PROVIDE ALL 19" TELECOM RACKS AND MAKE ALL FINAL CONNECTIONS.

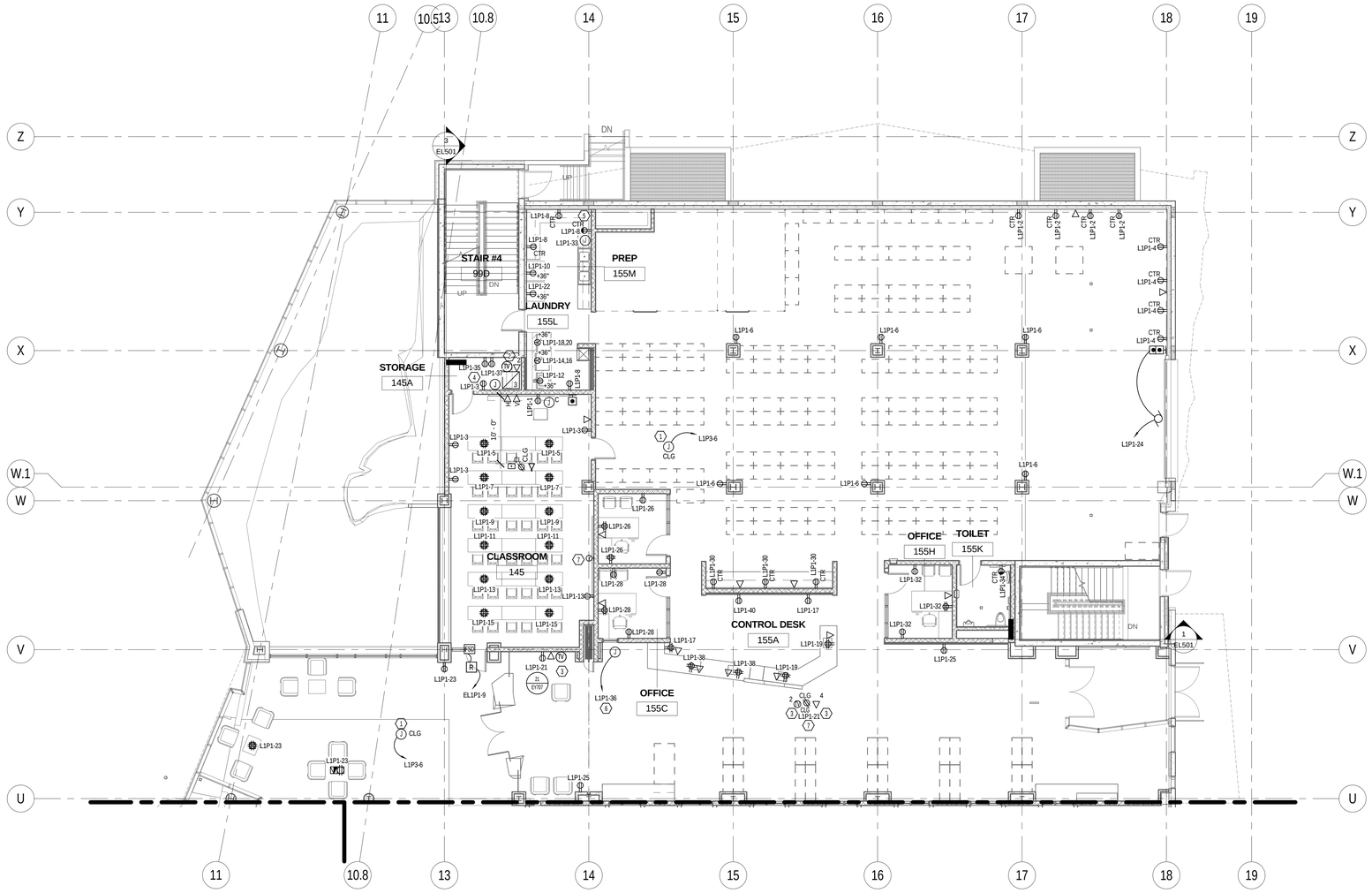


1 EP101.A A ENLARGED LEVEL 1 POWER PLAN NORTH
SCALE | 1/8" = 1'-0"

0' 4'-0" 8'-0" 16'-0"
1/8" =1'-0"

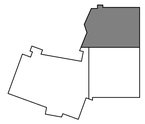

KEYPLAN


MHTN ARCHITECTS
MHTN Architects, Inc.
420 East South Temple
Suite 100
Salt Lake City, Utah 84111
Telephone (801) 595-6700
Telefax (801) 595-6717
www.mhtn.com

Hastings+Chivetta
ARCHITECTURE • PLANNING • ENGINEERING
622 Emerson, Suite 200
St. Louis, MO 63141
Tel. 314.863.5717
Fax. 314.863.2823
www.hastingschivetta.com

BUILDING OFFICIAL STAMP
Ken Garner Engineering, Inc.
Electrical Engineering Consultants, Inc.
102 West 500 South, Suite 225
Salt Lake City, Utah 84101
P. 801.328.8800
F. 801.328.8802
Contact: Paris LeLaCheur
Project #: 2010-117.00


# UNIVERSITY OF UTAH
## STUDENT LIFE CENTER
1836 E. BALLIF ROAD
SALT LAKE CITY, UTAH 84112

SEAL

MHTN PROJECT NO. 2010562.00
DRAWN BY: KGE CHECKED BY: KGE

ISSUED:

| NO. | DATE | DESCRIPTION |
|---|---|---|

CONTRACTOR TO VERIFY DRAWINGS IN FIELD USE REFLECT LAST REVISION DATE.

| NO. | DATE | DESCRIPTION |
|---|---|---|

SHEET NAME
LEVEL 1 POWER PLAN AREA A

BID DOCUMENTS
May 15, 2013

SHEET NUMBER
EP101.A

C:\Users\drown.KGE\Documents\2010-117.00_KGE_STUDENT LIFE_ELECTRICAL_CENTERAL_2012_drown.rvt
5/14/2013 5:50:53 PM

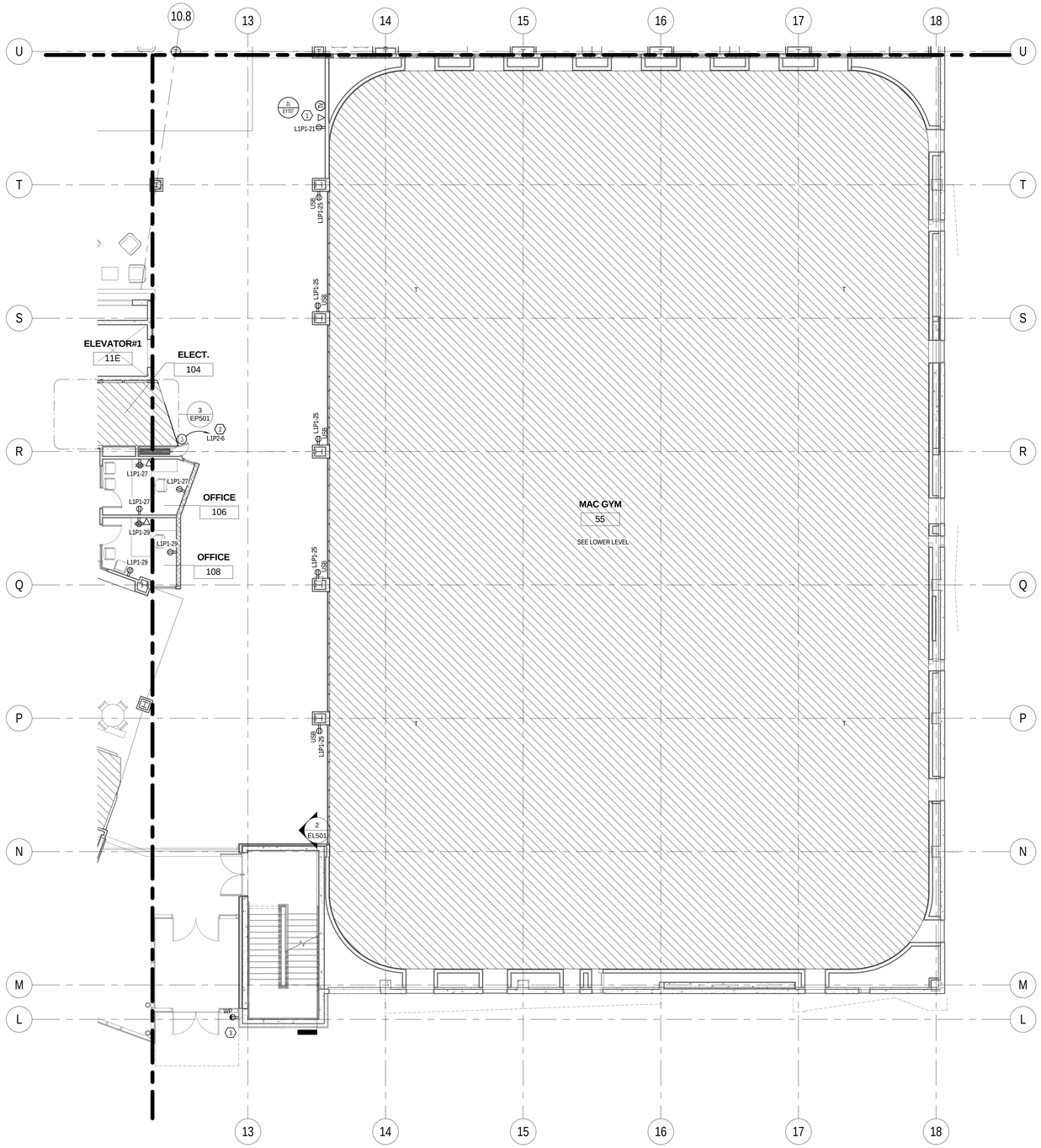


1 EP101.B B ENLARGED LEVEL 1 POWER PLAN SOUTH
SCALE |1/8" = 1'-0"

0' 4'-0" 8'-0" 16'-0"
1/8" =1'-0"

KEYPLAN

KEYED NOTES - SHEET EP101.B

1. INSTALL A LCD TV HERE. SEE EQUIPMENT LIST FOR MANUFACTURER AND MODEL. (TV DISTRIBUTION SYSTEM, SHEET EY710)
2. JUNCTION BOX FOR POWER TO FOLDING DOOR MOTOR. MOTOR AND DOOR CONTROL BY OTHERS. DIV. 26 TO PROVIDE ALL REQUIRED CONDUIT, DISCONNECTS AND WIRING BETWEEN DOOR, MOTOR AND CONTROL LOCATIONS.
3. RECEPTACLE ON CANOPY FOR SNOW MELT. PROVIDE A 120V DEDICATED DIRCUIT. PROVIDE A 30MA BREAKER IN PANEL.

GENERAL NOTES - SHEET EP101.B

A. PROVIDE (2) 3/4" CONDUITS TO EACH DATA LOCATION. EACH CONDUIT SHALL RUN FROM NEAREST CABLE TRAY TO OUTLET LOCATION AND SHALL HAVE A PULL STRING INSTALLED. ALL WIRING IS TO BE DONE BY UNIVERSITY OF UTAH NETCOM DEPARTMENT.
B. UNIVERSITY OF UTAH NET COM SHALL PROVIDE ALL 19" TELECOM RACKS AND MAKE ALL FINAL CONNECTIONS.

MHTN
ARCHITECTS
MHTN Architects, Inc.
420 East South Temple
Suite 100
Salt Lake City, Utah 84111
Telephone (801) 595-6700
Telefax (801) 595-6717
www.mhtn.com

Hastings+Chivetta
ARCHITECTURE • PLANNING • ENGINEERING
622 Emerson, Suite 200
St. Louis, MO 63141
Tel. 314.863.5717
Fax. 314.863.2823
www.hastingschivetta.com

BUILDING OFFICIAL STAMP
Ken Garner Engineering, Inc.
Electrical Engineering Consultants, Inc.
102 West 500 South, Suite 225
Salt Lake City, Utah 84101
P. 801.328.8800
F. 801.328.8802
Contact: Paris LeLaCheur
Project #: 2010-117.00

# UNIVERSITY OF UTAH
## STUDENT LIFE CENTER
1836 E. BALLIF ROAD
SALT LAKE CITY, UTAH 84112

SEAL

MHTN PROJECT NO. 2010562.00
DRAWN BY: KGE CHECKED BY: KGE

ISSUED:

| NO. | DATE | DESCRIPTION |
|---|---|---|

CONTRACTOR TO VERIFY DRAWINGS IN FIELD USE REFLECT LAST REVISION DATE.

| NO. | DATE | DESCRIPTION |
|---|---|---|

SHEET NAME
LEVEL 1 POWER PLAN AREA B

BID DOCUMENTS
May 15, 2013

SHEET NUMBER
EP101.B

C:\Users\drown.KGE\Documents\2010-117.00_KGE_STUDENT LIFE_ELECTRICAL_CENTERAL_2012_drown.rvt
5/14/2013 6:26:09 PM

KEYED NOTES - SHEET EP101.C

1. COORDINATE LOCATION OF FLOOR BOX WITH ARCHITECTURAL DRAWINGS.
2. JUNCTION BOX MOUNTED IN CEILING FOR 120V POWER TO MECHANICAL VAV BOX. COORDINATE WITH MECHANICAL FOR EXACT LOCATION.
3. RECEPTACLES FOR FUTURE MOVEABLE CART. CART BY OTHERS.
4. INSTALL A LCD TV HERE. SEE EQUIPMENT LIST FOR MANUFACTURER AND MODEL. (TV DISTRIBUTION SYSTEM, SHEET EY710)
5. ELEVATOR 2-WAY COMMUNICATION PER 2009 IBC 1007.8. COORDINATE WITH ELEVATOR MANUFACTURER FOR EXACT LOCATION.
6. POWER FOR FIREPLACE BLOWER/EXHAUST.
7. RECEPTACLE ON CANOPY FOR SNOW MELT. PROVIDE A 120V DEDICATED CIRCUIT. PROVIDE A 30MA BREAKER IN PANEL.

GENERAL NOTES - SHEET EP101.C

A. CONTRACTOR TO FIELD VERIFY ALL EXISTING CONDITIONS, MATERIALS, FINISHES, AND DIMENSIONS BEFORE ANY WORK BEGINS.
B. CONTRACTOR TO ENSURE THAT ALL CORRIDORS OUTSIDE OF CONSTRUCTION AREA ARE KEPT CLEAN AND CLEAR OF DEBRIS AND OBSTRUCTIONS AT ALL TIMES.
C. PROTECT ALL ITEMS TO REMAIN FROM DAMAGE.

1 EP101.C C ENLARGED LEVEL 1 POWER PLAN WEST
SCALE | 1/8" = 1'-0"

0' 4'-0" 8'-0" 16'-0"
1/8" =1'-0"

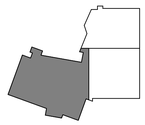

KEYPLAN

C:\Users\drown.KGE\Documents\2010-117.00_KGE_STUDENT LIFE_ELECTRICAL_CENTERAL_2012_rbrown.rvt
5/14/2013 6:27:27 PM


MHTN ARCHITECTS
MHTN Architects, Inc.
420 East South Temple
Suite 100
Salt Lake City, Utah 84111
Telephone (801) 595-6700
Telefax (801) 595-6717
www.mhtn.com

Hastings+Chivetta
ARCHITECTURE • PLANNING • ENGINEERING
622 Emerson, Suite 200
St. Louis, MO 63141
Tel. 314.863.5717
Fax. 314.863.2823
www.hastingschivetta.com

BUILDING OFFICIAL STAMP
Ken Garner Engineering, Inc.
Electrical Engineering Consultants, Inc.
102 West 500 South, Suite 225
Salt Lake City, Utah 84101
P. 801.328.8800
F. 801.328.8802
Contact: Paris LeLaCheur
Project #: 2010-117.00


# UNIVERSITY OF UTAH
## STUDENT LIFE CENTER
1836 E. BALLIF ROAD
SALT LAKE CITY, UTAH 84112

SEAL

MHTN PROJECT NO. 2010562.00
DRAWN BY: KGE CHECKED BY: KGE

ISSUED:

| NO. | DATE | DESCRIPTION |
|---|---|---|

CONTRACTOR TO VERIFY DRAWINGS IN FIELD USE REFLECT LAST REVISION DATE:

| NO. | DATE | DESCRIPTION |
|---|---|---|

SHEET NAME
LEVEL 1 POWER PLAN AREA C

BID DOCUMENTS
May 15, 2013

SHEET NUMBER
EP101.C

KEYED NOTES - SHEET EP102.A

1. J-BOX MOUNTED IN CEILING FOR 120V POWER TO MECHANICAL VAV BOX. COORDINATE WITH MECHANICAL FOR EXACT LOCATION.
2. BAF FANS WITH BUILT IN VFD. FANS CONTROLLED BY MANUFACTURER PROVIDED CONTROLLER. COORDINATE WITH MECH DWGS FOR LOCATION OF CONTROLLER. PROVIDE ALL REQUIRED CONDUIT AND J-BOXES FROM CONTROL LOCATION TO FAN VFD.
3. INSTALL A LCD TV HERE. SEE EQUIPMENT LIST FOR MANUFACTURER AND MODEL. (TV DISTRIBUTION SYSTEM, SHEET EY710)
4. DEDICATED 20A CIRCUITS FOR A/V EQUIPMENT CABINET.
5. CONTRACTOR SHALL COORDINATE RECEPTACLE HEIGHTS AND LOCATIONS WITH MIRRORS.
6. J-BOXFOR POWER TO FOLDING DOOR MOTOR. MOTOR AND DOOR CONTROL BY OTHERS. DIV. 26 TO PROVIDE ALL REQUIRED CONDUIT, DISCONNECTS AND WIRING BETWEEN DOOR, MOTOR AND CONTROL LOCATIONS.
7. MOUNT ABOVE DOOR.
8. MOUNT ABOVE COAT HOOK AT APPROXIMATLY 7'-0" A.F.F..

GENERAL NOTES - SHEET EP102.A

A. PROVIDE (2) 3/4" CONDUITS TO EACH DATA LOCATION. EACH CONDUIT SHALL RUN FROM NEAREST CABLE TRAY TO OUTLET LOCATION AND SHALLHAVE A PULL STRING INSTALLED. ALL WIRING IS TO BE DONE BY UNIVERSITY OF UTAH NETCOM DEPARTYMENT.
B. UNIVERSITY OF UTAH NET COM SHALL PROVIDE ALL 19" TELECOM RACKS AND MAKE ALL FINAL CONNECTIONS.

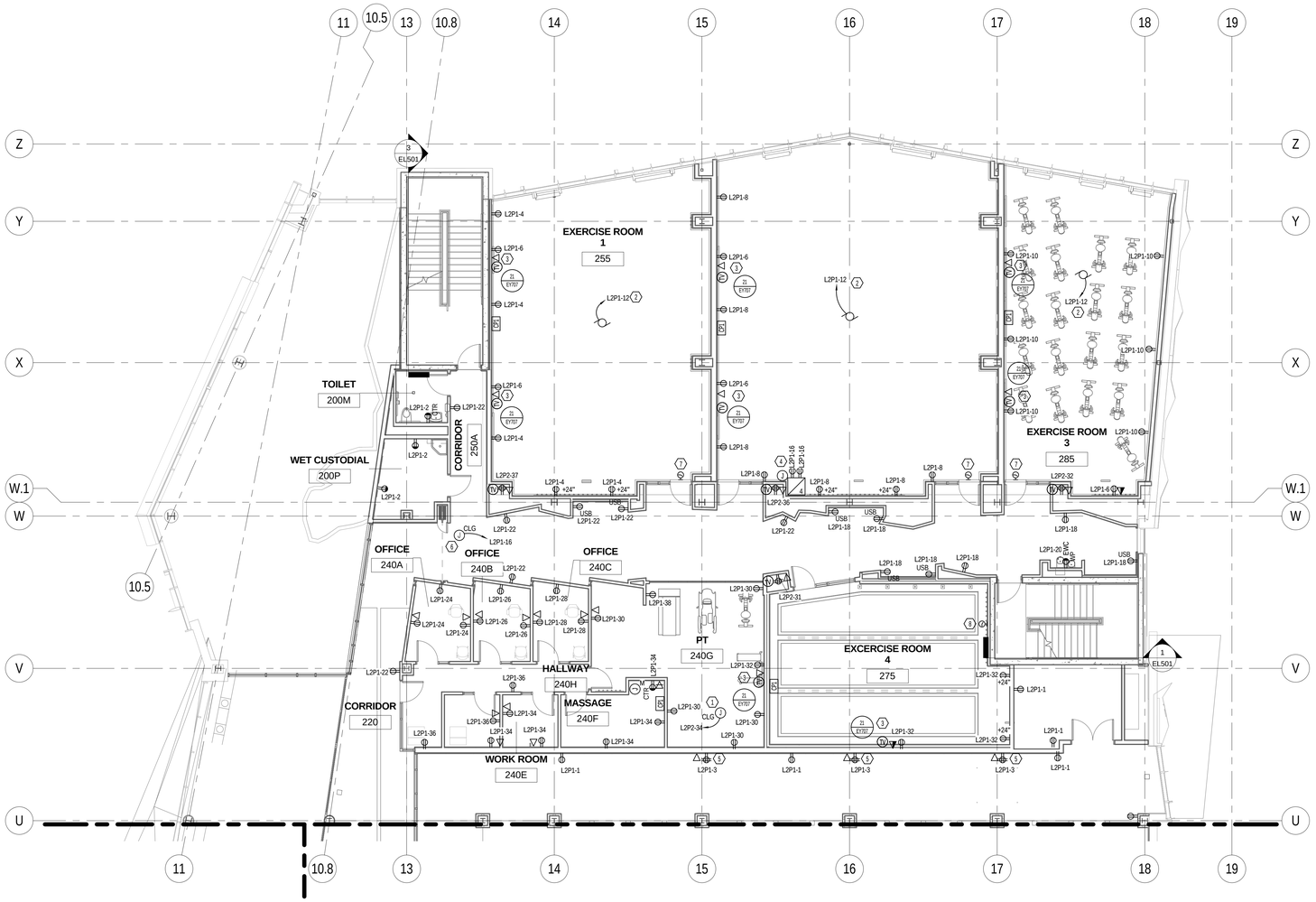


1 EP102.A A ENLARGED LEVEL 2 POWER PLAN NORTH
SCALE |1/8" = 1'-0"

0' 4'-0" 8'-0" 16'-0"
1/8" =1'-0"

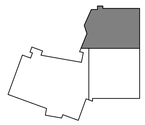

KEYPLAN


MHTN ARCHITECTS
MHTN Architects, Inc.
420 East South Temple
Suite 100
Salt Lake City, Utah 84111
Telephone (801) 595-6700
Telefax (801) 595-6717
www.mhtn.com

Hastings+Chivetta
ARCHITECTURE • PLANNING • ENGINEERING
622 Emerson, Suite 200
St. Louis, MO 63141
Tel. 314.863.5717
Fax. 314.863.2823
www.hastingschivetta.com

BUILDING OFFICIAL STAMP
Ken Garner Engineering, Inc.
Electrical Engineering Consultants, Inc.
102 West 500 South, Suite 225
Salt Lake City, Utah 84101
P. 801.328.8800
F. 801.328.8802
Contact: Paris LeLaCheur
Project #: 2010-117.00


# UNIVERSITY OF UTAH
## STUDENT LIFE CENTER
1836 E. BALLIF ROAD
SALT LAKE CITY, UTAH 84112

SEAL

MHTN PROJECT NO. 2010562.00
DRAWN BY: KGE CHECKED BY: KGE

ISSUED:

| NO. | DATE | DESCRIPTION |
|---|---|---|

CONTRACTOR TO VERIFY DRAWINGS IN FIELD USE REFLECT LAST REVISION DATE.

| NO. | DATE | DESCRIPTION |
|---|---|---|

SHEET NAME
LEVEL 2 POWER PLAN AREA A

BID DOCUMENTS
May 15, 2013

SHEET NUMBER
EP102.A

C:\Users\brown.KGE\Documents\2010-117.00_KGE_STUDENT LIFE_ELECTRICAL_CENTERAL_2012_brown.rvt
5/14/2013 5:51:23 PM

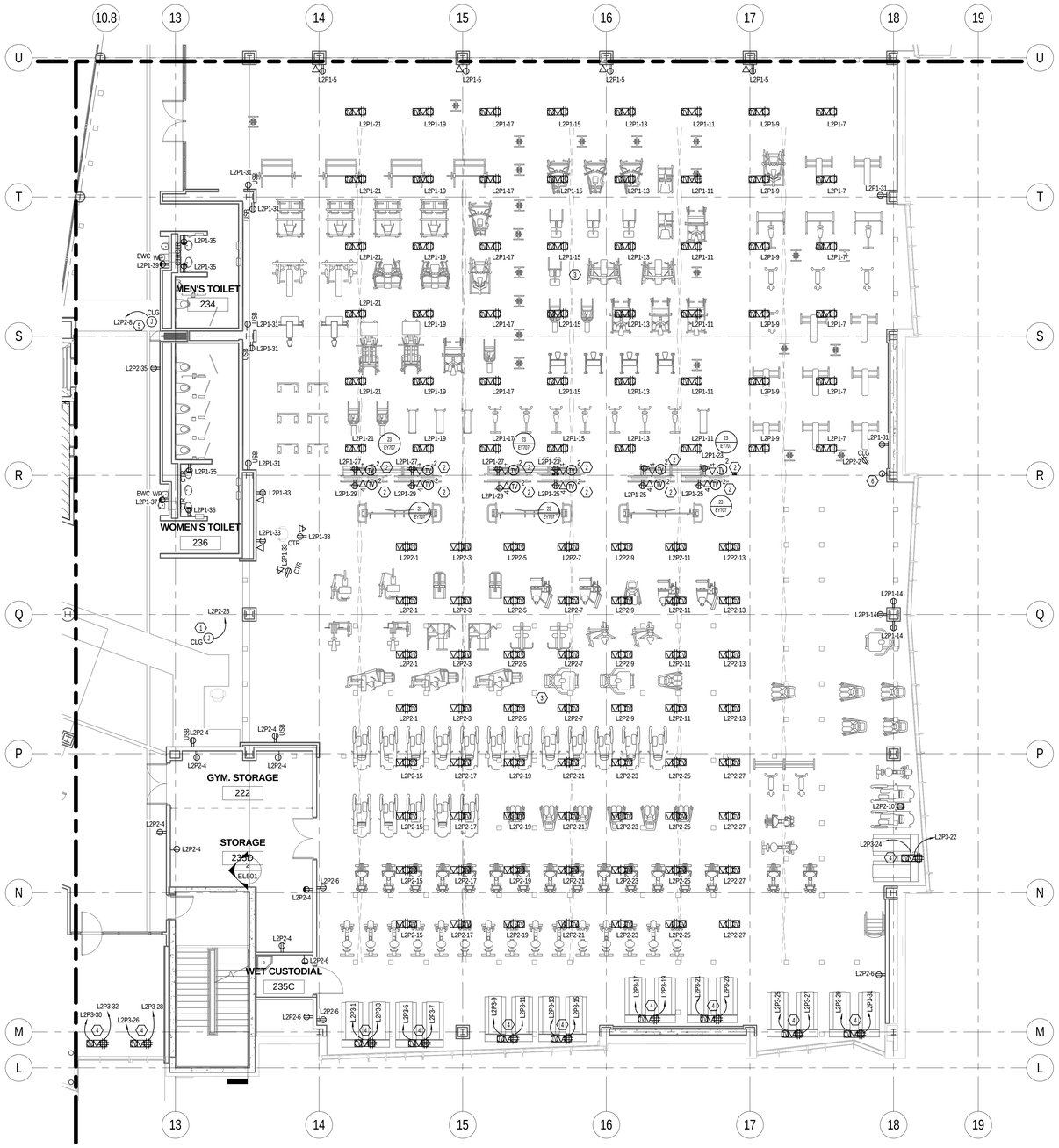


1 B ENLARGED LEVEL 2 POWER PLAN SOUTH
EP102.B SCALE | 1/8" = 1'-0"

0' 4'-0" 8'-0" 16'-0"
1/8" = 1'-0"

KEYED NOTES - SHEET EP102.B

1. J-BOX MOUNTED IN CEILING FOR 120V POWER TO MECHANICAL VAV BOX. COORDINATE WITH MECHANICAL FOR EXACT LOCATION.
2. INSTALL (2) LCD TVS HERE. SEE EQUIPMENT LIST FOR MANUFACTURER AND MODEL. (TV DISTRIBUTION SYSTEM. SHEET EY710).
3. ALL FLOOR BOXES IN FITTNESS ROOM SHALL BE INSTALLED SO COVER PLATE IS FLUSH WITH FLOOR FINISH. COORDINATE WITH ARCHITECTURAL FOR FINISHES.
4. TREADMILL RECEPTACLES SHALL BE A NEMA 5-20R. ALL TREADMILLS ARE DEDICATED 20A CIRCUITS AND CANNOT SHARE NEUTRAL.
5. J-BOX FOR POWER TO FOLDING DOOR MOTOR. MOTOR AND DOOR CONTROL BY OTHERS. DIV. 26 TO PROVIDE ALL REQUIRED CONDUIT, DISCONNECTS AND WIRING BETWEEN DOOR, MOTOR AND CONTROL LOCATIONS.
6. COORDINATE EXACT LOCATION AND HEIGHT WITH ARCHITECT FOR MOUNTING

GENERAL NOTES - SHEET EP102.B

A. PROVIDE (2) 3/4" CONDUITS TO EACH DATA LOCATION. EACH CONDUIT SHALL RUN FROM NEAREST CABLE TRAY TO OUTLET LOCATION AND SHALLHAVE A PULL STRING INSTALLED. ALL WIRING IS TO BE DONE BY UNIVERSITY OF UTAH NETCOM DEPARTYMENT.
B. UNIVERSITY OF UTAH NET COM SHALL PROVIDE ALL 19" TELECOM RACKS AND MAKE ALL FINAL CONNECTIONS.

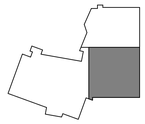

KEYPLAN

MHTN
ARCHITECTS
MHTN Architects, Inc.
420 East South Temple
Suite 100
Salt Lake City, Utah 84111
Telephone (801) 595-6700
Telefax (801) 595-6717
www.mhtn.com

Hastings+Chivetta
ARCHITECTURE • PLANNING • ENGINEERING
622 Emerson, Suite 200
St. Louis, MO 63141
Tel. 314.863.5717
Fax. 314.863.2823
www.hastingschivetta.com

BUILDING OFFICIAL STAMP
Ken Garner Engineering, Inc.
Electrical Engineering Consultants, Inc.
102 West 500 South, Suite 225
Salt Lake City, Utah 84101
P. 801.328.8800
F. 801.328.8802
Contact: Paris LeLaCheur
Project #: 2010-117.00

# UNIVERSITY OF UTAH
## STUDENT LIFE CENTER
1836 E. BALLIF ROAD
SALT LAKE CITY, UTAH 84112

SEAL

MHTN PROJECT NO. 2010562.00
DRAWN BY: KGE CHECKED BY: KGE

ISSUED:

| NO. | DATE | DESCRIPTION |
|---|---|---|

CONTRACTOR TO VERIFY DRAWINGS IN FIELD USE REFLECT LAST REVISION DATE.

| NO. | DATE | DESCRIPTION |
|---|---|---|

SHEET NAME
LEVEL 2 POWER PLAN AREA B

BID DOCUMENTS
May 15, 2013

SHEET NUMBER
EP102.B

C:\Users\ftrown.KGE\Documents\2010-117.00_KGE_STUDENT LIFE_ELECTRICAL_CENTERAL_2012_ftrown.rvt
5/14/2013 5:51:35 PM

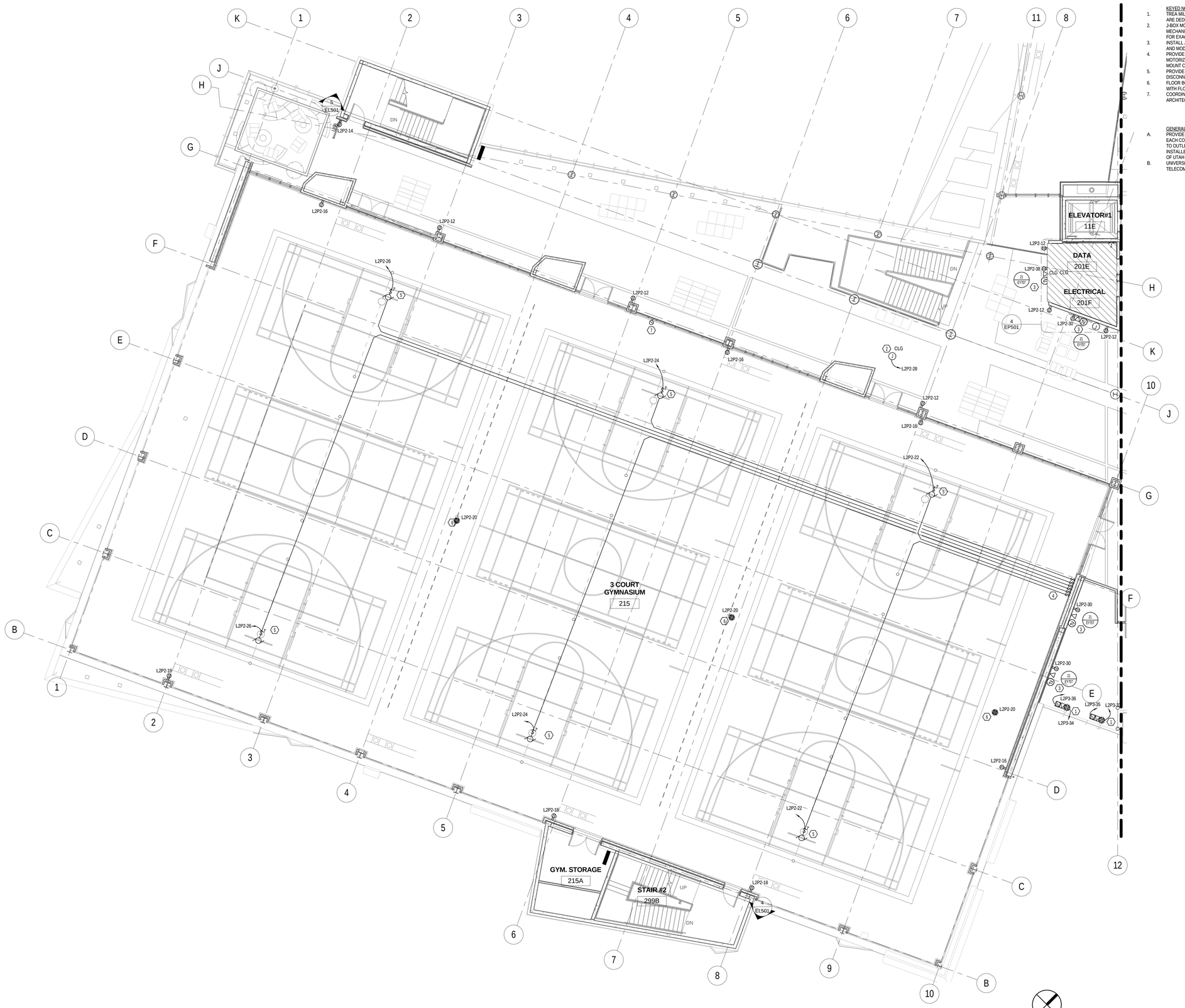


1 C ENLARGED LEVEL 2 POWER PLAN WEST
EP102.C SCALE | 1/8" = 1'-0"

0' 4'-0" 8'-0" 16'-0"
1/8" =1'-0"

KEYED NOTES - SHEET EP102.C

1. TREA MILL RECEPTACLES SHALL BE A NEMA 5-20R. ALL TREAD MILLS ARE DEDICATED 20A CIRCUITS AND CANNOT SHARE NEUTRAL.
2. J-BOX MOUNTED IN CEILING FOR 120V POWER TO MECHANICAL VAV BOX. COORDINATE WITH MECHANICAL FOR EXACT LOCATION.
3. INSTALL A LCD TV HERE. SEE EQUIPMENT LIST FOR MANUFACTURER AND MODEL. (TV DISTRIBUTION SYSTEM, SHEET EY710).
4. PROVIDE LOCKABLE CABINET FOR LIGHTING SWITCHES AND MOTORIZED EQUIPMENT MOMENTARY KEYED SWITCHES. SURFACE MOUNT CABINET
5. PROVIDE THERMAL SWITCH FOR MOTORIZED BACKBOARD DISCONNECT.
6. FLOOR BOXES SHALL BE MOUNTED SO COVER PLATES ARE FLUSH WITH FLOOR FINISH. PULL (1) 3/4"C AS SPARE FOR FUTURE.
7. COORDINATE EXACT LOCATION AND HEIGHT FOR MOUNTING WITH ARCHITECT.

GENERAL NOTES - SHEET EP102.C

A. PROVIDE (2) 3/4" CONDUITS TO EACH DATA LOCATION. EACH CONDUIT SHALL RUN FROM NEAREST CABLE TRAY TO OUTLET LOCATION AND SHALLHAVE A PULL STRING INSTALLED. ALL WIRING IS TO BE DONE BY UNIVERSITY OF UTAH NETCOM DEPARTYMENT.
B. UNIVERSITY OF UTAH NET COM SHALL PROVIDE ALL 19" TELECOM RACKS AND MAKE ALL FINAL CONNECTIONS.

MHTN
ARCHITECTS
**MHTN Architects, Inc.**
420 East South Temple
Suite 100
Salt Lake City, Utah 84111
Telephone (801) 595-6700
Telefax (801) 595-6717
www.mhtn.com

**Hastings+Chivetta**
ARCHITECTURE • PLANNING • ENGINEERING
622 Emerson, Suite 200
St. Louis, MO 63141
Tel. 314.863.5717
Fax. 314.863.2823
www.hastingschivetta.com

BUILDING OFFICIAL STAMP

Ken Garner
Engineering, Inc.
Electrical Engineering Consultants, Inc.
102 West 500 South, Suite 225
Salt Lake City, Utah 84101
P. 801.328.8800
F. 801.328.8802
Contact: Paris LeLaCheur
Project #: 2010-117.00

# UNIVERSITY OF UTAH
## STUDENT LIFE CENTER
1836 E. BALLIF ROAD
SALT LAKE CITY, UTAH 84112

SEAL

MHTN PROJECT NO. 2010562.00
DRAWN BY: KGE CHECKED BY: KGE

ISSUED:

| NO. | DATE | DESCRIPTION |
|---|---|---|

CONTRACTOR TO VERIFY DRAWINGS IN FIELD USE REFLECT LAST REVISION DATE.

| NO. | DATE | DESCRIPTION |
|---|---|---|

SHEET NAME
LEVEL 2 POWER PLAN AREA C

BID DOCUMENTS
May 15, 2013

SHEET NUMBER
EP102.C

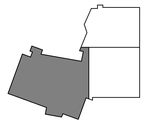
KEYPLAN

C:\Users\drown.KGE\Documents\2010-117.00_KGE_STUDENT LIFE_ELECTRICAL_CENTERAL_2012_drown.rvt
5/14/2013 5:51:47 PM

KEYED NOTES - SHEET EP103.A

1. INSTALL A LCD TV HERE. SEE EQUIPMENT LIST FOR MANUFACTURER AND MODEL. (TV DISTRIBUTION SYSTEM, SHEET EY710).
2. SEE DETAIL 1/EP702 FOR TYPICAL LAYOUT OF CONFERENCE ROOM.
3. MOTORIZED SCREEN. COORDINATE WITH SCREEN MANUFACTURER FOR EXACT REQUIRMENTS.
4. COORDINATE WITH ARCHITECT FOR MOUNTING HEIGHT.

GENERAL NOTES - SHEET EP103.A

A. PROVIDE (2) 3/4" CONDUITS TO EACH DATA LOCATION. EACH CONDUIT SHALL RUN FROM NEAREST CABLE TRAY TO OUTLET LOCATION AND SHALL HAVE A PULL STRING INSTALLED. ALL WIRING IS TO BE DONE BY UNIVERSITY OF UTAH NETCOM DEPARTYMENT.
B. UNIVERSITY OF UTAH NET COM SHALL PROVIDE ALL 19" TELECOM RACKS AND MAKE ALL FINAL CONNECTIONS.

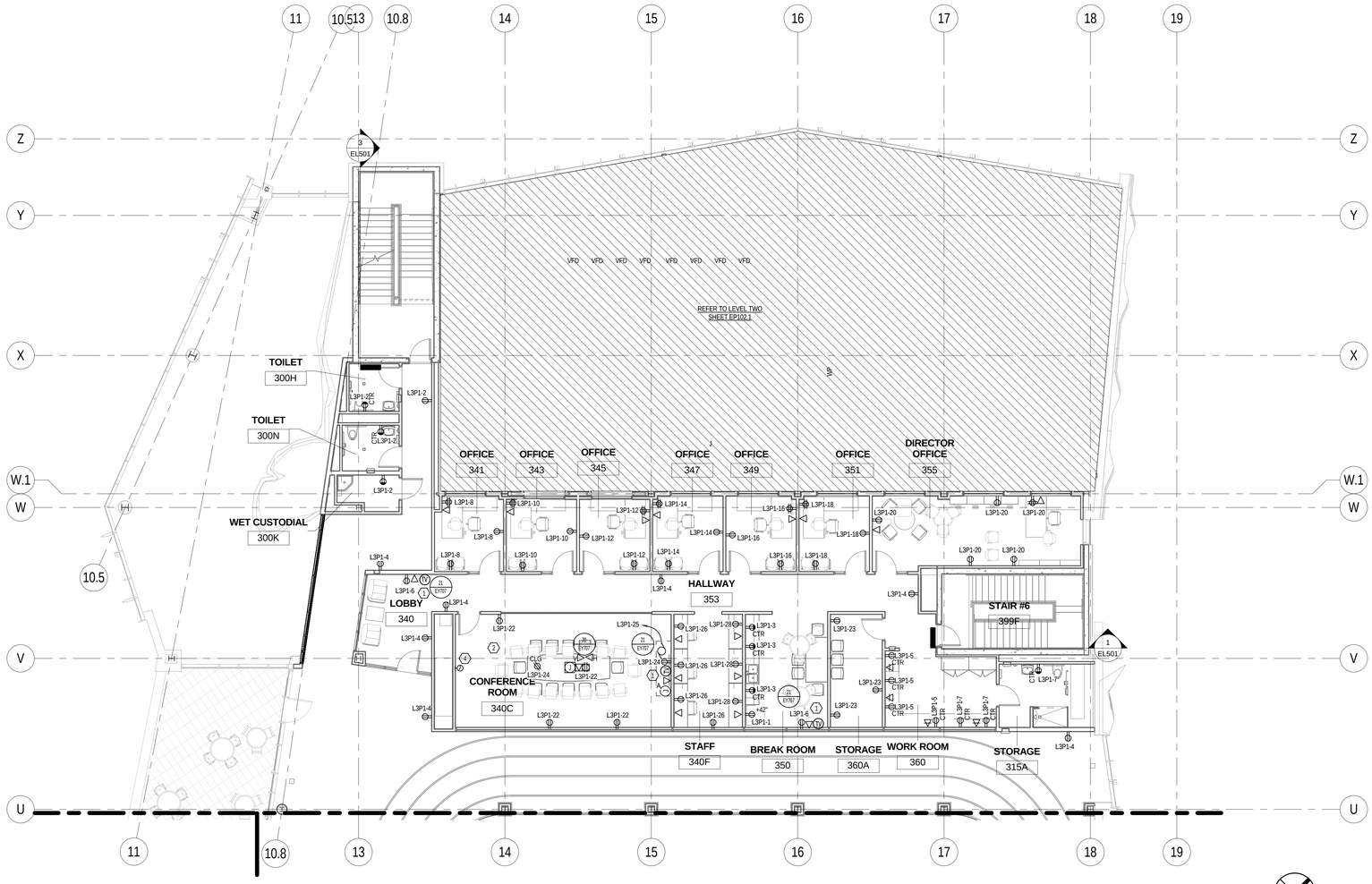


1 EP103.A A ENLARGED LEVEL 3 POWER PLAN NORTH
SCALE |1/8" = 1'-0"

0' 4'-0" 8'-0" 16'-0"
1/8" =1'-0"

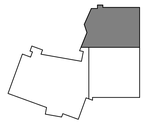

KEYPLAN


MHTN ARCHITECTS
MHTN Architects, Inc.
420 East South Temple
Suite 100
Salt Lake City, Utah 84111
Telephone (801) 595-6700
Telefax (801) 595-6717
www.mhtn.com

Hastings+Chivetta
ARCHITECTURE • PLANNING • ENGINEERING
622 Emerson, Suite 200
St. Louis, MO 63141
Tel. 314.863.5717
Fax. 314.863.2623
www.hastingschivetta.com

BUILDING OFFICIAL STAMP

Ken Garner Engineering, Inc.
Electrical Engineering Consultants, Inc.
102 West 500 South, Suite 225
Salt Lake City, Utah 84101
P. 801.328.8800
F. 801.328.8802
Contact: Paris LeLaCheur
Project #: 2010-117.00


# UNIVERSITY OF UTAH
## STUDENT LIFE CENTER
1836 E. BALLIF ROAD
SALT LAKE CITY, UTAH 84112

SEAL

MHTN PROJECT NO. 2010562.00

DRAWN BY: KGE CHECKED BY: KGE

ISSUED:

| NO. | DATE | DESCRIPTION |
|---|---|---|

CONTRACTOR TO VERIFY DRAWINGS IN FIELD USE REFLECT LAST REVISION DATE.

| NO. | DATE | DESCRIPTION |
|---|---|---|

SHEET NAME
LEVEL 3 POWER PLAN AREA A

BID DOCUMENTS
May 15, 2013

SHEET NUMBER
EP103.A

C:\Users\brown.KGE\Documents\2010-117.00_KGE_STUDENT LIFE_ELECTRICAL_CENTERAL_2012_drown.rvt
5/14/2013 5:51:57 PM

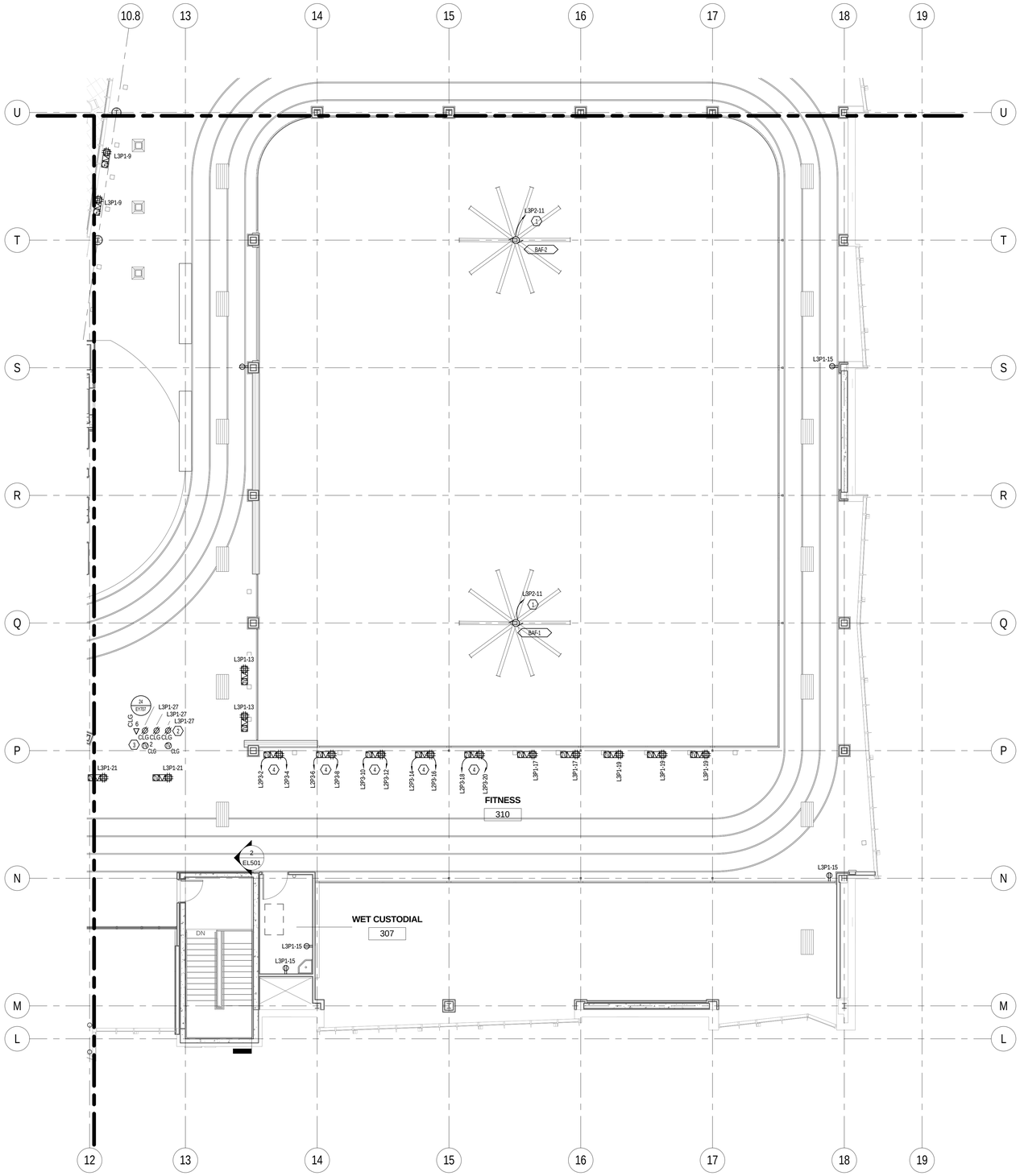


1 EP103.B B ENLARGED LEVEL 3 POWER PLAN SOUTH
SCALE | 1/8" = 1'-0"

0' 4'-0" 8'-0" 16'-0"
1/8" =1'-0"

KEYED NOTES - SHEET EP103.B

1. BAF FANS WITH BUILT IN VFD. FANS CONTROLLED BY MANUFACTURER PROVIDED CONTROLLER. COORDINATE WITH MECHANICAL DRAWINGS FOR LOCATION OF CONTROLLER LOCATION TO FAN VFD.
2. CEILING MOUNTED NETWORK CONNECTIONS, POWER OUTLETS AND TV OTPUTS.
3. CEILING MOUNT (3) TVS FACING (3) DIFFERENT DIRECTIONS TO DISPLAY CURRENT TIME AND CURRENT RUNNING DIRECTION.
4. TREADMILL RECEPTACLES SHALL BE A NEMA 5-20R. ALL TREAD MILLS ARE DEDICATED 20A CIRCUITS AND CANNOT SHARE NEUTRAL.

GENERAL NOTES - SHEET EP103.B

A. PROVIDE (2) 3/4" CONDUITS TO EACH DATA LOCATION. EACH CONDUIT SHALL RUN FROM NEAREST CABLE TRAY TO OUTLET LOCATION AND SHALL HAVE A PULL STRING INSTALLED. ALL WIRING IS TO BE DONE BY UNIVERSITY OF UTAH NETCOM DEPARTYMENT.
B. UNIVERSITY OF UTAH NET COM SHALL PROVIDE ALL 19" TELECOM RACKS AND MAKE ALL FINAL CONNECTIONS.


MHTN ARCHITECTS
MHTN Architects, Inc.
420 East South Temple
Suite 100
Salt Lake City, Utah 84111
Telephone (801) 595-6700
Telefax (801) 595-6717
www.mhtn.com

Hastings+Chivetta
ARCHITECTURE • PLANNING • ENGINEERING
622 Emerson, Suite 200
St. Louis, MO 63141
Tel. 314.863.5717
Fax. 314.863.2823
www.hastingschivetta.com

BUILDING OFFICIAL STAMP

Ken Garner Engineering, Inc.
Electrical Engineering Consultants, Inc.
102 West 500 South, Suite 225
Salt Lake City, Utah 84101
P. 801.328.8800
F. 801.328.8802
Contact: Paris LeLaCheur
Project #: 2010-117.00


# UNIVERSITY OF UTAH
## STUDENT LIFE CENTER
1836 E. BALLIF ROAD
SALT LAKE CITY, UTAH 84112

SEAL

MHTN PROJECT NO. 2010562.00
DRAWN BY: KGE CHECKED BY: KGE

ISSUED:

| NO. | DATE | DESCRIPTION |
|---|---|---|

CONTRACTOR TO VERIFY DRAWINGS IN FIELD USE REFLECT LAST REVISION DATE.

| NO. | DATE | DESCRIPTION |
|---|---|---|

SHEET NAME
LEVEL 3 POWER PLAN AREA B

BID DOCUMENTS
May 15, 2013

SHEET NUMBER
EP103.B

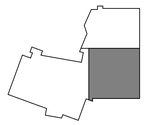
KEYPLAN

C:\Users\brown.KGE\Documents\2010-117.00_KGE_STUDENT LIFE_ELECTRICAL_CENTERAL_2012_brown.rvt
5/14/2013 5:52:07 PM

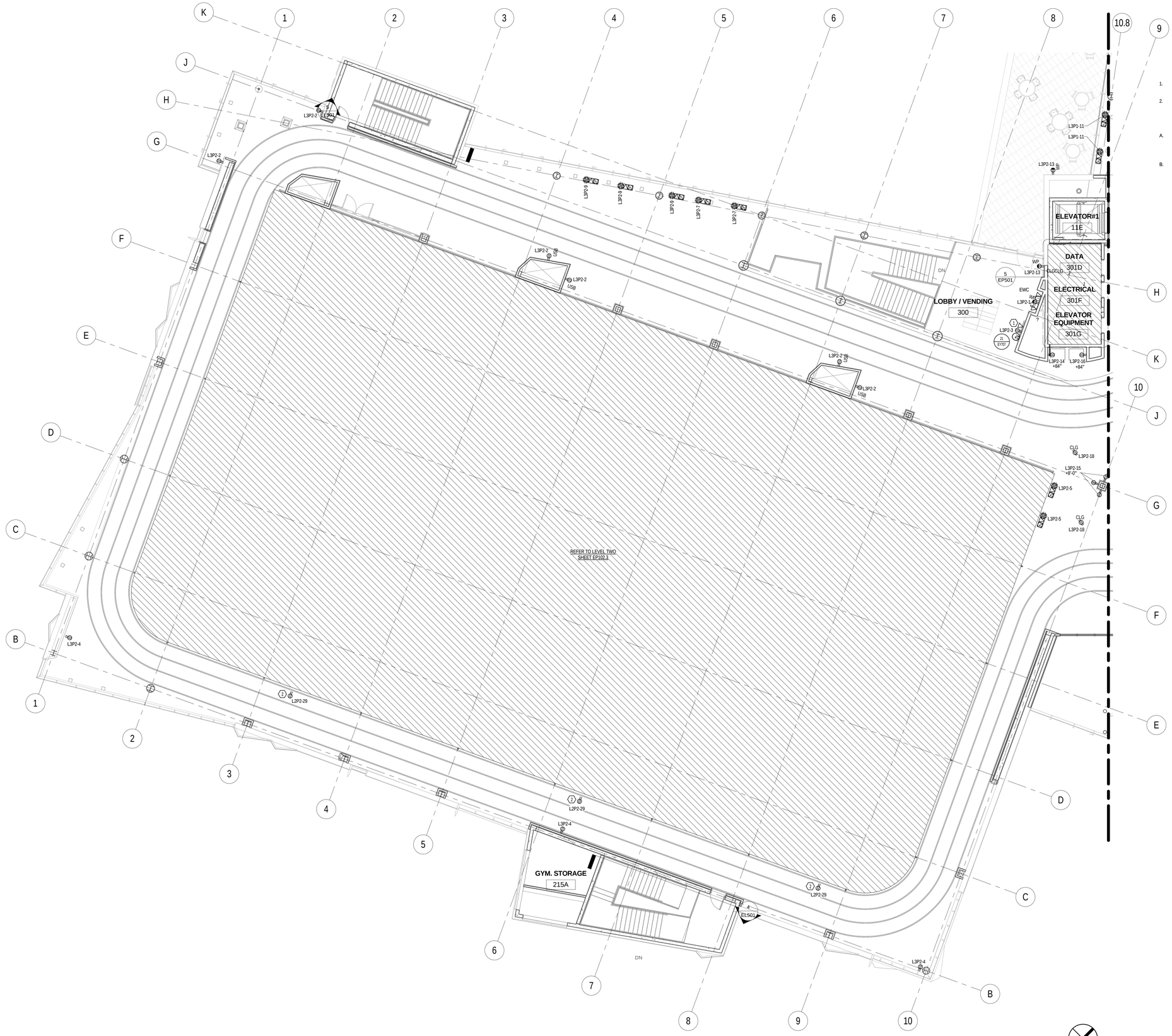


1 C ENLARGED LEVEL 3 POWER PLAN WEST
EP103.C SCALE |1/8" = 1'-0"

0' 4'-0" 8'-0" 16'-0"
1/8" =1'-0"

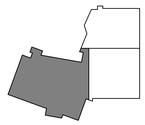

KEYPLAN

KEYED NOTES - SHEET EP103.C

1. INSTALL A LCD TV HERE. SEE EQUIPMENT LIST FOR MANUFACTURER AND MODEL. (TV DISTRIBUTION SYSTEM, SHEET EY710).
2. RECEPTACLES MOUNTED TO SUSPENDED TRACK FOR POWER TO SCORBOARDS. COORDINATE EXACT LOCATION WITH OTHER TRADES. RUN CONDUIT TIGHT AGAINS UNDER SIDE OF TRACK.

GENERAL NOTES - SHEET EP104.A

A. PROVIDE (2) 3/4" CONDUITS TO EACH DATA LOCATION. EACH CONDUIT SHALL RUN FROM NEAREST CABLE TRAY TO OUTLET LOCATION AND SHALLHAVE A PULL STRING INSTALLED. ALL WIRING IS TO BE DONE BY UNIVERSITY OF UTAH NETCOM DEPARTYMENT.
B. UNIVERSITY OF UTAH NET COM SHALL PROVIDE ALL 19" TELECOM RACKS AND MAKE ALL FINAL CONNECTIONS.

MHTN
ARCHITECTS
**MHTN Architects, Inc.**
420 East South Temple
Suite 100
Salt Lake City, Utah 84111
Telephone (801) 595-6700
Telefax (801) 595-6717
www.mhtn.com

**Hastings+Chivetta**
ARCHITECTURE • PLANNING • ENGINEERING
622 Emerson, Suite 200
St. Louis, MO 63141
Tel. 314.863.5717
Fax. 314.863.2823
www.hastingschivetta.com

BUILDING OFFICIAL STAMP

Ken Garner
Engineering, Inc.
Electrical Engineering Consultants, Inc.
102 West 500 South, Suite 225
Salt Lake City, Utah 84101
P. 801.328.8800
F. 801.328.8802
Contact: Paris LeLaCheur
Project #: 2010-117.00

# UNIVERSITY OF UTAH

## STUDENT LIFE CENTER

1836 E. BALLIF ROAD
SALT LAKE CITY, UTAH 84112

SEAL

MHTN PROJECT NO. 2010562.00
DRAWN BY: KGE CHECKED BY: KGE

ISSUED:

| NO. | DATE | DESCRIPTION |
|---|---|---|

CONTRACTOR TO VERIFY DRAWINGS IN FIELD USE REFLECT LAST REVISION DATE:

| NO. | DATE | DESCRIPTION |
|---|---|---|

SHEET NAME
LEVEL 3 POWER PLAN AREA C

BID DOCUMENTS
May 15, 2013

SHEET NUMBER
EP103.C

C:\Users\ttrown.KGE\Documents\2010-117.00_KGE_STUDENT LIFE_ELECTRICAL_CENTERAL_2012_ttrown.rvt
5/14/2013 5:52:16 PM

KEYED NOTES - SHEET EP104.A

1. VFD PROVIDED BY MECHANICAL. COORDINATE WITH MECHANICAL FOR EXACT LOCATION.
2. AIR HANDLER REDUNDANT VFD BY MECHANICAL.
3. CIRCUIT FOR 120V MARINE LIGHTS.
4. RELIEF FANS POWER. SEE MECHANICAL SCHEDULE AND MECHANICAL DRAWINGS FOR COORDINATION.
5. SUPPLY FANS POWER. SEE MECHANICAL SCHEDULE AND MECHANICAL DRAWINGS FOR COORDINATION.
6. RECEPTACLE FOR NOW MELT ON CANOPY. PROVIDE DEDICATED 120V CIRCUIT. PROVIDE A 30MA BREAKER IN PANEL

GENERAL NOTES - SHEET EP104.A

A. PROVIDE (2) 3/4" CONDUITS TO EACH DATA LOCATION. EACH CONDUIT SHALL RUN FROM NEAREST CABLE TRAY TO OUTLET LOCATION AND SHALLHAVE A PULL STRING INSTALLED. ALL WIRING IS TO BE DONE BY UNIVERSITY OF UTAH NETCOM DEPARTYMENT.
B. UNIVERSITY OF UTAH NET COM SHALL PROVIDE ALL 19" TELECOM RACKS AND MAKE ALL FINAL CONNECTIONS.

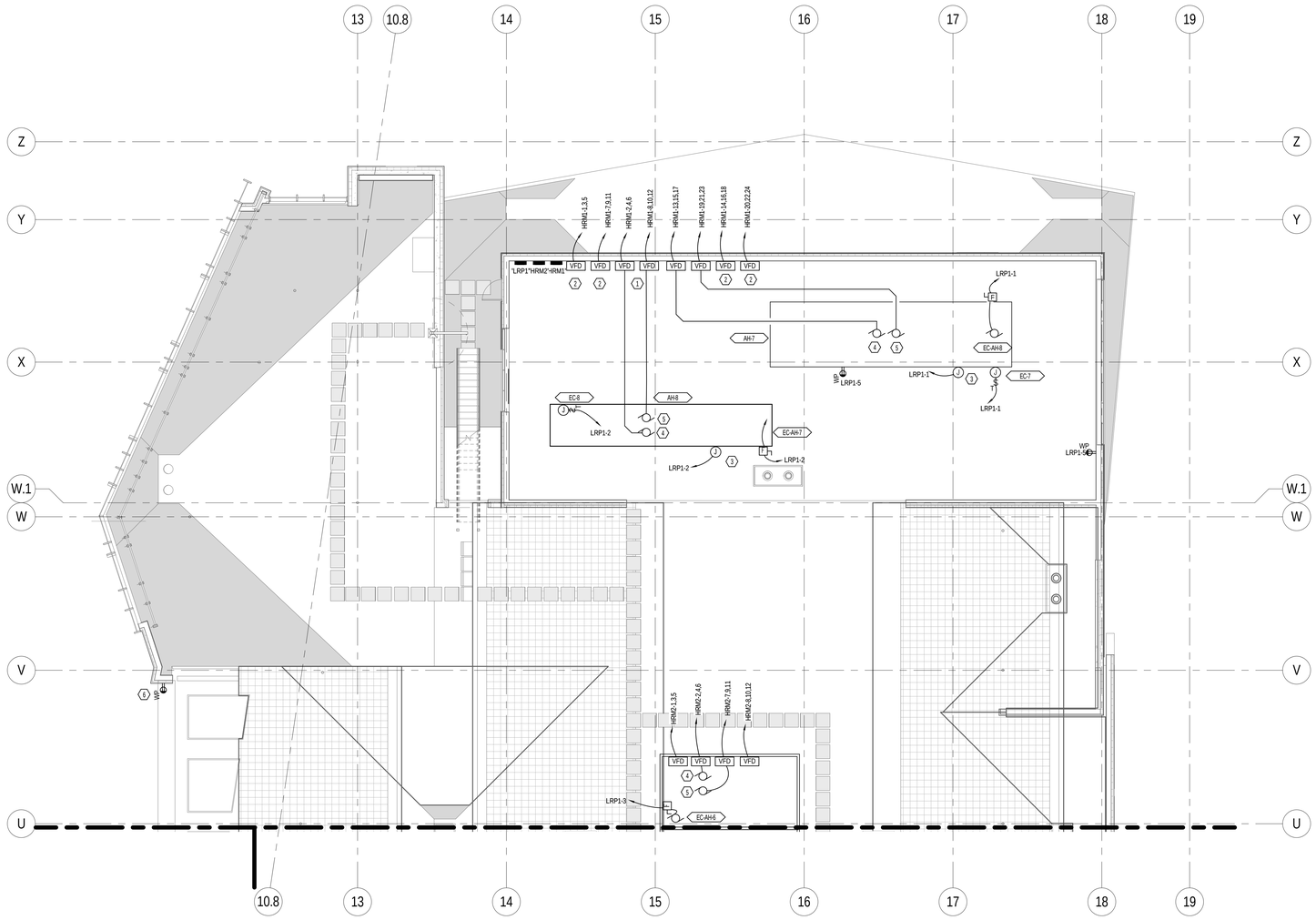


1 EP104.A A ENLARGED ROOF POWER PLAN NORTH
SCALE |1/8" = 1'-0"

0' 4'-0" 8'-0" 16'-0"
1/8" =1'-0"

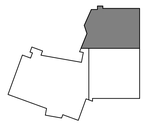

KEYPLAN


MHTN ARCHITECTS
MHTN Architects, Inc.
420 East South Temple
Suite 100
Salt Lake City, Utah 84111
Telephone (801) 595-6700
Telefax (801) 595-6717
www.mhtn.com

Hastings+Chivetta
ARCHITECTURE • PLANNING • ENGINEERING
622 Emerson, Suite 200
St. Louis, MO 63141
Tel. 314.863.5717
Fax. 314.863.2823
www.hastingschivetta.com


BUILDING OFFICIAL STAMP


Ken Garner Engineering, Inc.
Electrical Engineering Consultants, Inc.
102 West 500 South, Suite 225
Salt Lake City, Utah 84101
P. 801.328.8800
F. 801.328.8802
Contact: Paris LeLaCheur
Project #: 2010-117.00


# UNIVERSITY OF UTAH
## STUDENT LIFE CENTER
1836 E. BALLIF ROAD
SALT LAKE CITY, UTAH 84112

SEAL

MHTN PROJECT NO. 2010562.00

DRAWN BY: KGE CHECKED BY: KGE

ISSUED:

| NO. | DATE | DESCRIPTION |
|---|---|---|

CONTRACTOR TO VERIFY DRAWINGS IN FIELD USE REFLECT LAST REVISION DATE.

| NO. | DATE | DESCRIPTION |
|---|---|---|

SHEET NAME
ROOF POWER PLAN AREA A

BID DOCUMENTS
May 15, 2013

SHEET NUMBER
EP104.A

C:\Users\brown.KGE\Documents\2010-117.00_KGE_STUDENT LIFE_ELECTRICAL_CENTERAL_2012_brown.rvt
5/14/2013 5:52:38 PM

KEYED NOTES - SHEET EP104.B

1. CIRCUIT FOR 120V MARINE LIGHTS.

GENERAL NOTES - SHEET EP104.B

A. PROVIDE (2) 3/4" CONDUITS TO EACH DATA LOCATION. EACH CONDUIT SHALL RUN FROM NEAREST CABLE TRAY TO OUTLET LOCATION AND SHALLHAVE A PULL STRING INSTALLED. ALL WIRING IS TO BE DONE BY UNIVERSITY OF UTAH NETCOM DEPARTYMENT.

B. UNIVERSITY OF UTAH NET COM SHALL PROVIDE ALL 19" TELECOM RACKS AND MAKE ALL FINAL CONNECTIONS.

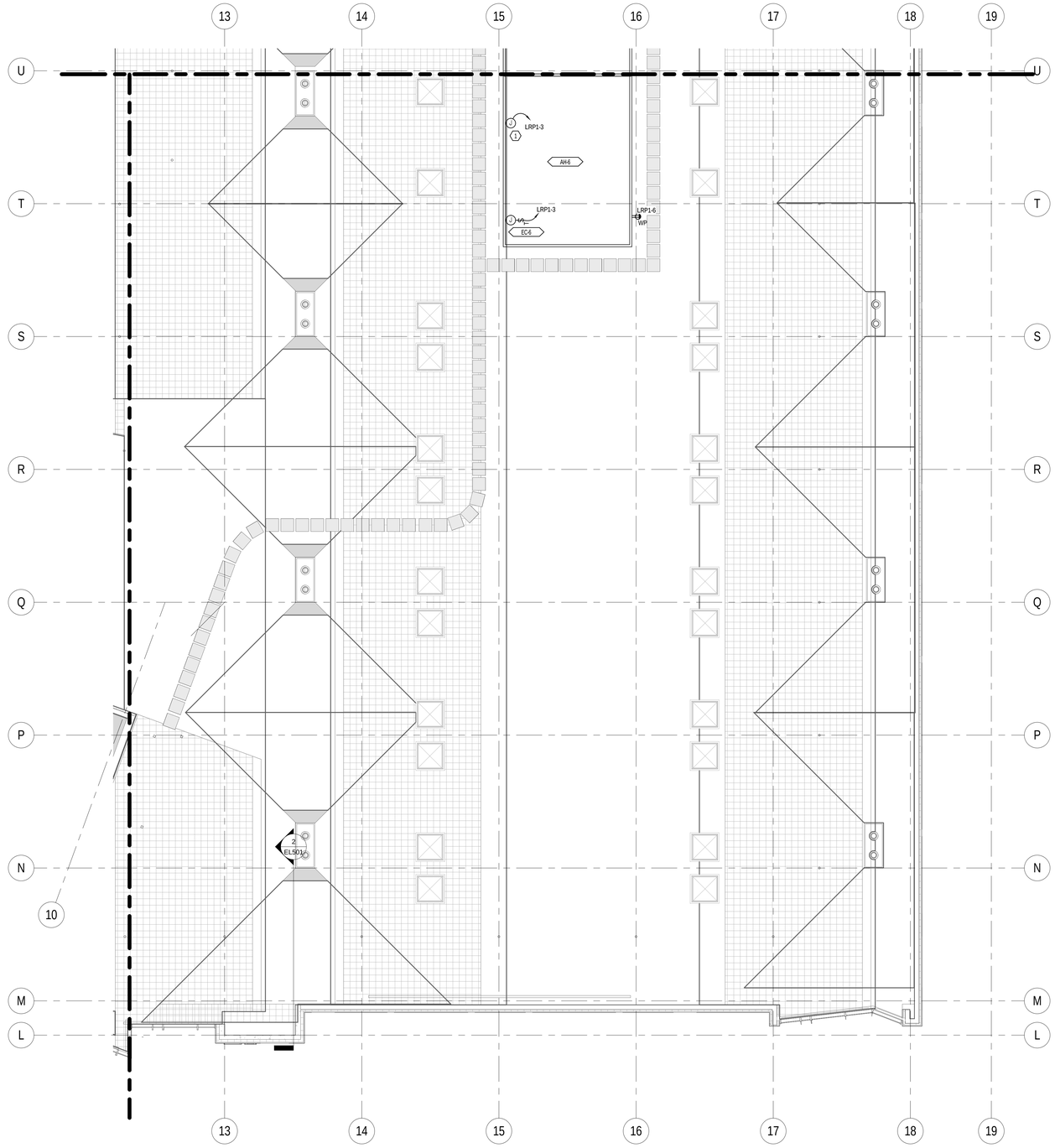


1 EP104.B B ENLARGED ROOF POWER PLAN SOUTH

SCALE |1/8" = 1'-0"

0' 4'-0" 8'-0" 16'-0"
1/8" =1'-0"

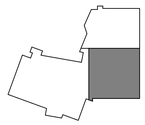

KEYPLAN


MHTN ARCHITECTS

**MHTN Architects, Inc.**
420 East South Temple
Suite 100
Salt Lake City, Utah 84111
Telephone (801) 595-6700
Telefax (801) 595-6717
www.mhtn.com

**Hastings+Chivetta**
ARCHITECTURE • PLANNING • ENGINEERING
622 Emerson, Suite 200
St. Louis, MO 63141
Tel. 314.863.5717
Fax. 314.863.2823
www.hastingschivetta.com

BUILDING OFFICIAL STAMP

Ken Garner Engineering, Inc.
Electrical Engineering Consultants, Inc.
102 West 500 South, Suite 225
Salt Lake City, Utah 84101
P. 801.328.8800
F. 801.328.8802
Contact: Paris LeLaCheur
Project #: 2010-117.00


# UNIVERSITY OF UTAH

## STUDENT LIFE CENTER

1836 E. BALLIF ROAD
SALT LAKE CITY, UTAH 84112

SEAL

MHTN PROJECT NO. 2010562.00

DRAWN BY: KGE CHECKED BY: KGE

ISSUED:

| NO. | DATE | DESCRIPTION |
|---|---|---|

CONTRACTOR TO VERIFY DRAWINGS IN FIELD USE REFLECT LAST REVISION DATE:

| NO. | DATE | DESCRIPTION |
|---|---|---|

SHEET NAME

ROOF POWER PLAN AREA B

BID DOCUMENTS
May 15, 2013

SHEET NUMBER

EP104.B

C:\Users\ttrown.KGE\Documents\2010-117.00_KGE_STUDENT LIFE_ELECTRICAL_CENTERAL_2012_ttrown.rvt
5/14/2013 5:52:46 PM

KEYED NOTES - SHEET EP104.C

1. VFD PROVIDED BY MECHANICAL. COORDINATE WITH MECHANICAL FOR EXACT LOCATION.
2. AIR HANDLER REDUNDANT VFD BY MECHANICAL.
3. CIRCUIT FOR 120V MARINE LIGHTS.
4. RELIEF FANS POWER. SEE MECHANICAL SCHEDULE AND MECHANICAL DRAWINGS FOR COORDINATION.
5. SUPPLY FANS POWER. SEE MECHANICAL SCHEDULE AND MECHANICAL DRAWINGS FOR COORDINATION.

GENERAL NOTES - SHEET EP104.C

A. PROVIDE (2) 3/4" CONDUITS TO EACH DATA LOCATION. EACH CONDUIT SHALL RUN FROM NEAREST CABLE TRAY TO OUTLET LOCATION AND SHALLHAVE A PULL STRING INSTALLED. ALL WIRING IS TO BE DONE BY UNIVERSITY OF UTAH NETCOM DEPARTYMENT.
B. UNIVERSITY OF UTAH NET COM SHALL PROVIDE ALL 19" TELECOM RACKS AND MAKE ALL FINAL CONNECTIONS.

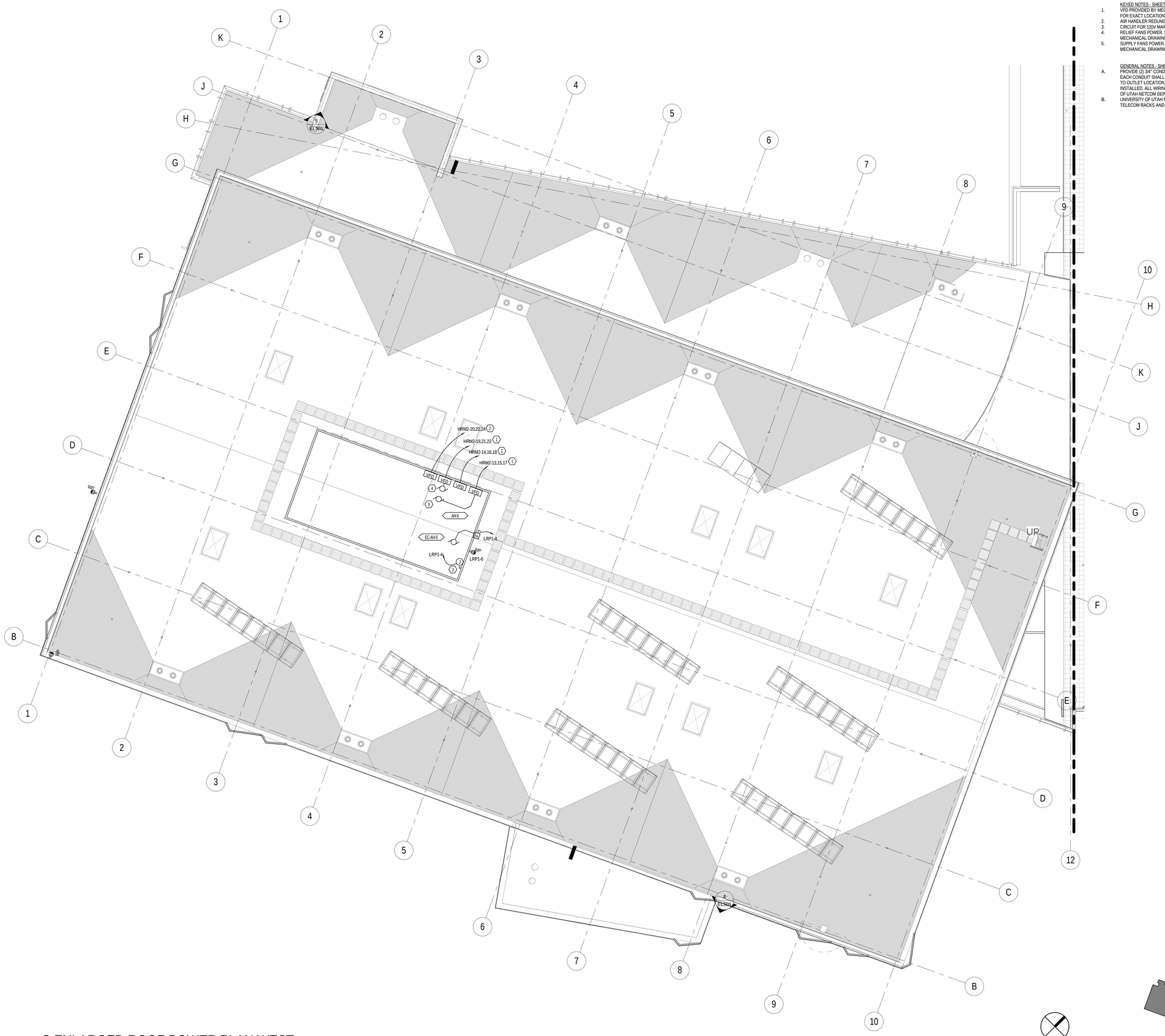


1 EP104.C C ENLARGED ROOF POWER PLAN WEST
SCALE |1/8" = 1'-0"

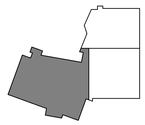

KEYPLAN


MHTN ARCHITECTS
MHTN Architects, Inc.
420 East South Temple
Suite 100
Salt Lake City, Utah 84111
Telephone (801) 595-6700
Telefax (801) 595-6717
www.mhtn.com

Hastings+Chivetta
ARCHITECTURE • PLANNING • ENGINEERING
622 Emerson, Suite 200
St. Louis, MO 63141
Tel. 314.863.5717
Fax. 314.863.2823
www.hastingschivetta.com

BUILDING OFFICIAL STAMP

Ken Garner Engineering, Inc.
Electrical Engineering Consultants, Inc.
102 West 500 South, Suite 225
Salt Lake City, Utah 84101
P. 801.328.8800
F. 801.328.8802
Contact: Paris LeLaCheur
Project #: 2010-117.00


# UNIVERSITY OF UTAH
## STUDENT LIFE CENTER
1836 E. BALLIF ROAD
SALT LAKE CITY, UTAH 84112

SEAL

MHTN PROJECT NO. 2010562.00

DRAWN BY: KGE CHECKED BY: KGE

ISSUED:

| NO. | DATE | DESCRIPTION |
|---|---|---|
| | | |

CONTRACTOR TO VERIFY DRAWINGS IN FIELD USE REFLECT LAST REVISION DATE:

| NO. | DATE | DESCRIPTION |
|---|---|---|
| | | |

SHEET NAME
ROOF POWER PLAN AREA C

BID DOCUMENTS
May 15, 2013

SHEET NUMBER
EP104.C

C:\Users\drown.KGE\Documents\2010-117.00_KGE_STUDENT LIFE_ELECTRICAL_CENTERAL_2012_rbrown.rvt
5/14/2013 5:52:58 PM

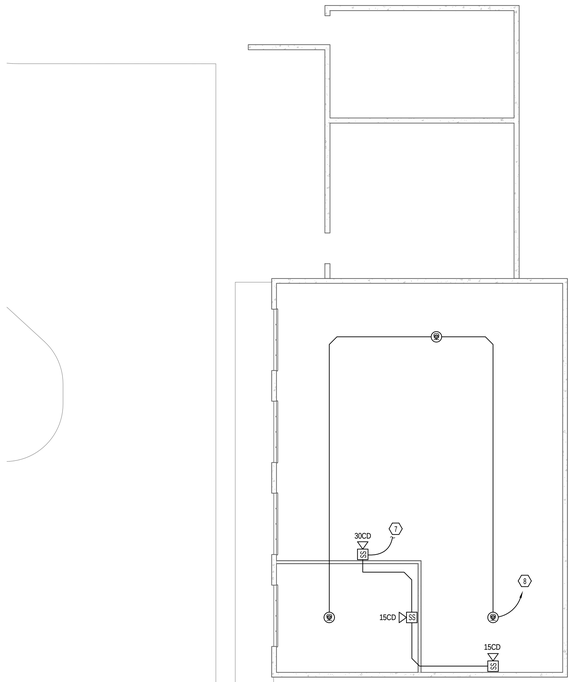


2 EP130 ENLARGED STORAGE SHED SYSTEMS
SCALE |1/8" = 1'-0"

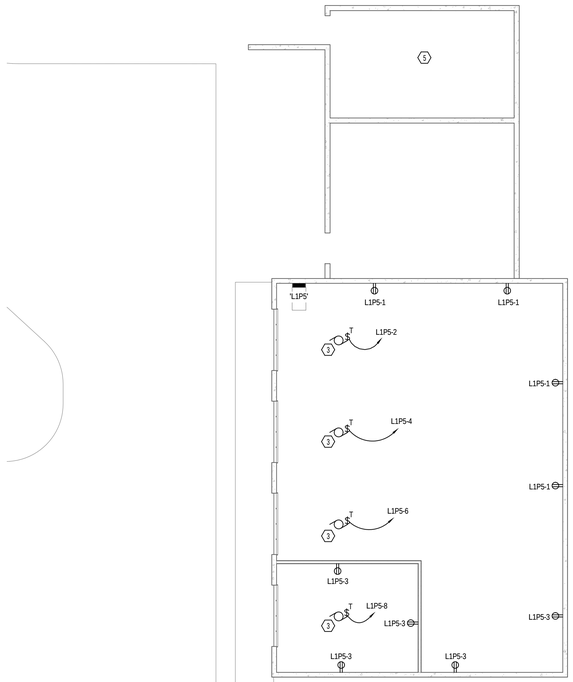


1 EP130 ENLARGED STORAGE SHED POWER
SCALE |1/8" = 1'-0"

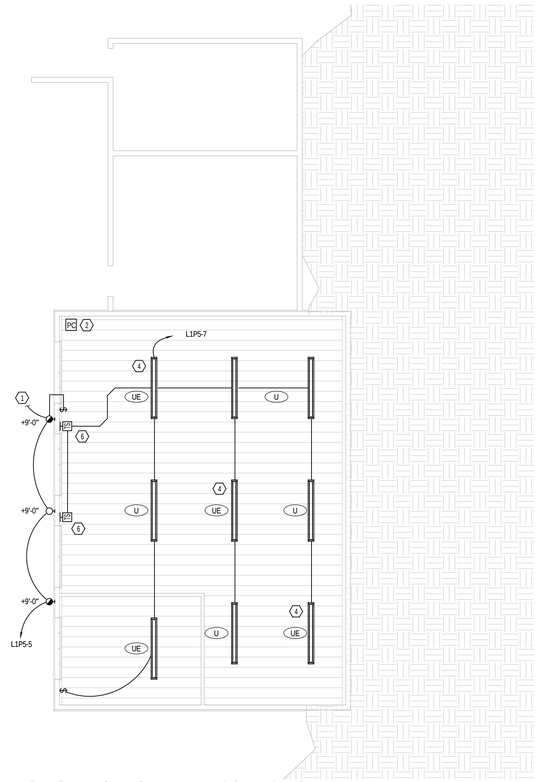


3 EP130 ENLARGED RCP PLAN STORAGE SHED - LIGHTING
SCALE |1/8" = 1'-0"

KEYED NOTES - SHEET EL100.A

1. TIE CIRCUIT INTO PHOTO CELL ON ROOF FOR CONTROL. PROVIDEA CONSTANT HOT TO BATTERY PACK AHEAD OF SWITCH.
2. PHOTO CELL LOCATED ON ROOF.
3. MOTOR FOR ROLLUP DOORS. COORDINATE WITH ARCHITECT FOR TYPE AND MANUFACTURER.
4. PROVIDE A CONTANT HOT TO BATTERY PACK AHEAD OF SWITCH.
5. GENERATOR ENCLOSURE. SEE SHEETS ES100.3 AND EP602 FOR MORE INFORMATION.
6. TIME SWITCH CIRCUITED AS 3-WAY SWITCH.
7. TIE INTO NOTIFICATION LOOP OF MAIN BUILDING.
8. TIE INTO INITIATION LOOP OF MAIN BUILDING.

MHTN
ARCHITECTS
**MHTN Architects, Inc.**
420 East South Temple
Suite 100
Salt Lake City, Utah 84111
Telephone (801) 595-6700
Telefax (801) 595-6717
www.mhtn.com

**Hastings+Chivetta**
ARCHITECTURE • PLANNING • ENGINEERING
622 Emerson, Suite 200
St. Louis, MO 63141
Tel. 314.863.5717
Fax. 314.863.2623
www.hastingschivetta.com

BUILDING OFFICIAL STAMP
Ken Garner
Engineering, Inc.
Electrical Engineering Consultants, Inc.
102 West 500 South, Suite 225
Salt Lake City, Utah 84101
P. 801.328.8800
F. 801.328.8802
Contact: Paris LeLaCheur
Project #: 2010-117.00

# UNIVERSITY OF UTAH
## STUDENT LIFE CENTER
1836 E. BALLIF ROAD
SALT LAKE CITY, UTAH 84112

SEAL

MHTN PROJECT NO. 2010562.00
DRAWN BY: Author CHECKED BY: KGE

ISSUED:

| NO. | DATE | DESCRIPTION |
|---|---|---|

CONTRACTOR TO VERIFY DRAWINGS IN FIELD USE REFLECT LAST REVISION DATE.

| NO. | DATE | DESCRIPTION |
|---|---|---|

SHEET NAME
STORAGE SHED ELECTRICAL PLANS
BID DOCUMENTS
May 15, 2013

SHEET NUMBER
EP130

C:\Users\tbrown.KGE\Documents\2010-117.00_KGE_STUDENT LIFE_ELECTRICAL_CENTERAL_2012_tbrown.rvt
5/14/2013 5:53:06 PM

KEYED NOTES - SHEET EP200.C1

1. RELIEF FANS POWER. SEE MECHANICAL SCHEDULE AND DRAWINGS FOR COORDINATION.
2. SUPPLY FANS POWER. SEE MECHANICAL SCHEDULE AND DRAWINGS FOR COORDINATION.
3. VFD'S PROVIDED BY MECHANICAL.
4. PROVIDE 120V POWER TO AIR HANDLER MARINE LIGHTS. DIV.26 TO INSTALL LIGHTS AND MAKE ALL FINAL CONNECTION.
5. J-BOX FOR CONTROL WIRING BETWEEN EMERGENCY SHUTOFF AND TIMER PUSH BUTTONS. PUSH BUTTONS PROVIDED BY POOL MANUFACTURER. INSTALLED BY DIV.26

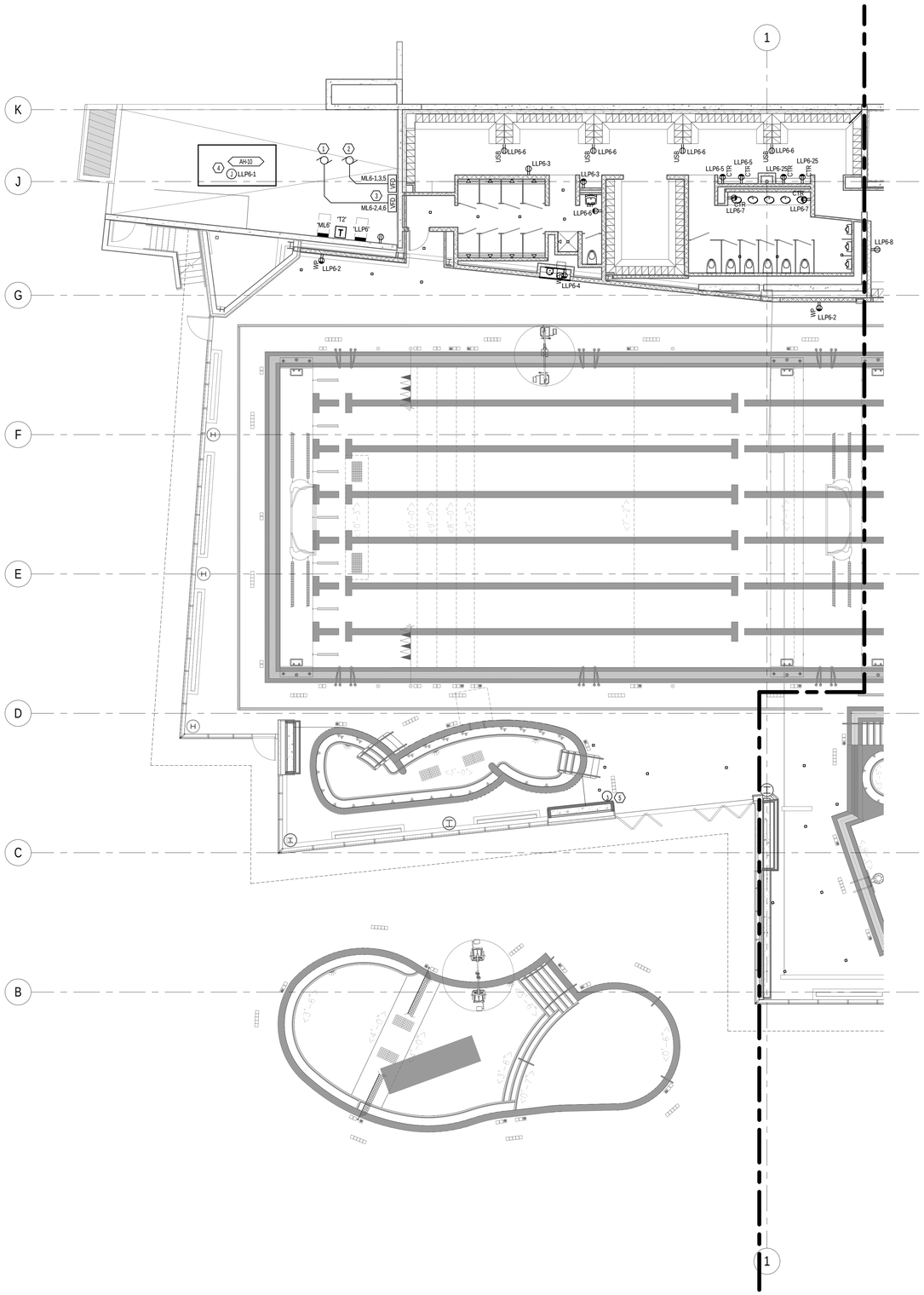


1 LOWER LEVEL POWER PLAN ALTERNATE 1A
EP200.C1 SCALE | 1/8" = 1'-0"


MHTN
ARCHITECTS
**MHTN Architects, Inc.**
420 East South Temple
Suite 100
Salt Lake City, Utah 84111
Telephone (801) 595-6700
Telefax (801) 595-6717
www.mhtn.com

**Hastings+Chivetta**
ARCHITECTURE • PLANNING • ENGINEERING
622 Emerson, Suite 200
St. Louis, MO 63141
Tel. 314.863.5717
Fax. 314.863.2823
www.hastingschivetta.com

BUILDING OFFICIAL STAMP

Ken Garner
Engineering, Inc.
Electrical Engineering Consultants, Inc.
102 West 500 South, Suite 225
Salt Lake City, Utah 84101
P. 801.328.8800
F. 801.328.8802
Contact: Paris LeLaCheur
Project #: 2010-117.00


# UNIVERSITY OF UTAH
## STUDENT LIFE CENTER
1836 E. BALLIF ROAD
SALT LAKE CITY, UTAH 84112

SEAL

MHTN PROJECT NO. 2010562.00

DRAWN BY: Author CHECKED BY: KGE

ISSUED:

| NO. | DATE | DESCRIPTION |
|---|---|---|

CONTRACTOR TO VERIFY DRAWINGS IN FIELD USE REFLECT LAST REVISION DATE.

| NO. | DATE | DESCRIPTION |
|---|---|---|

SHEET NAME
LOWER LEVEL POWER PLAN ALTERNATE 1A
BID DOCUMENTS
May 15, 2013

SHEET NUMBER
EP200.C1

C:\Users\brown.KGE\Documents\2010-117.00_KGE_STUDENT LIFE_ELECTRICAL_CENTERAL_2012_brown.rvt
5/14/2013 5:53:19 PM

KEYED NOTES - SHEET EP200.C2

1. ALL ELECTRICAL PANELS, TRANSFORMERS, J-BOXES, AND RECEPTACLE ENCLOSURES IN POOL EQUIPMENT ROOM SHALL BE NEMA 4X RATED.
2. PROVIDE A 20A GFCI CIRCUIT BREAKER.
3. VFD'S PROVIDED BY MECHANICAL.
4. BASE BID AND ALTERNATE ARE THE SAME IN THIS AREA. SEE BASE BID SHEETS.
5. COORDINATE EXACT LOCATION WITH ARCHITECT.

GENERAL NOTES - SHEET EP200.C2

A. SEE POOL DRAWINGS SHEET WF406.0 FOR POOL EQUIPMENT INTERLOCKING. PROVIDE ALL REQUIRED CONTROL WIRING IN 3/4" PVC COATED RIGID CONDUIT.
B. ALL CONDUIT INSIDE POOL EQUIPMENT ROOM SHALL BE A PVC COATED RIGID CONDUIT.

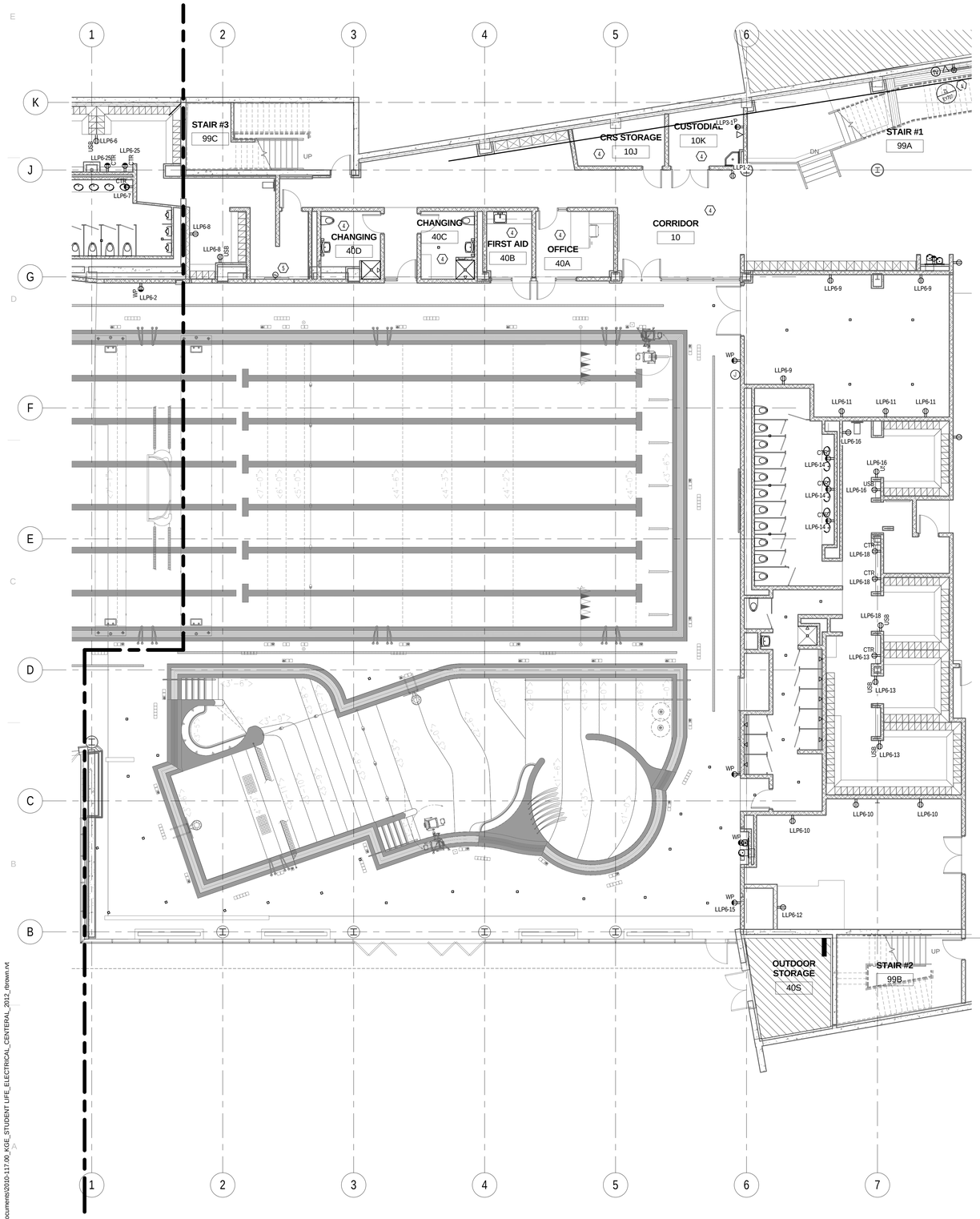


1 LOWER LEVEL POWER PLAN ALTERNATE 1B
EP200.C2 SCALE |1/8" = 1'-0"

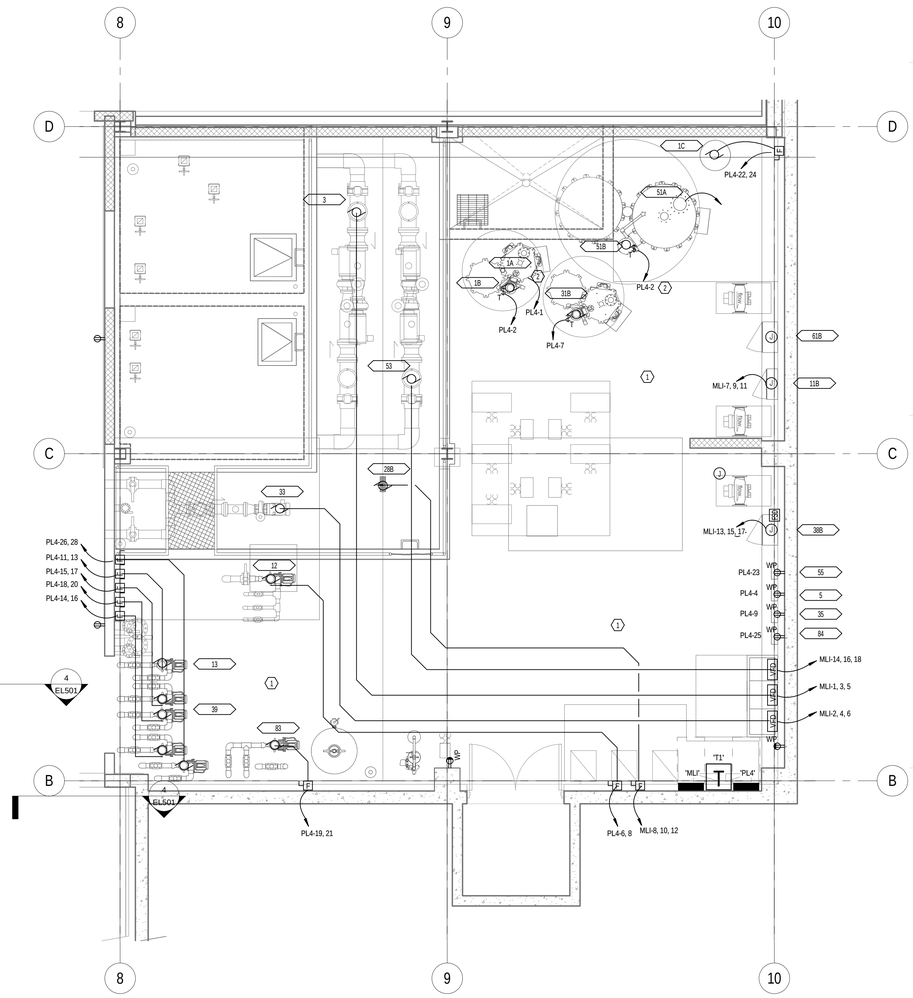

2 ENLARGED POOL EQUIPMENT ROOM - ALTERNATE 1
EP200.C2 SCALE |1/4" = 1'-0"


MHTN ARCHITECTS
MHTN Architects, Inc.
420 East South Temple
Suite 100
Salt Lake City, Utah 84111
Telephone (801) 595-6700
Telefax (801) 595-6717
www.mhtn.com

Hastings+Chivetta
ARCHITECTURE • PLANNING • ENGINEERING
622 Emerson, Suite 200
St. Louis, MO 63141
Tel. 314.863.5717
Fax. 314.863.2823
www.hastingschivetta.com

BUILDING OFFICIAL STAMP

Ken Garner Engineering, Inc.
Electrical Engineering Consultants, Inc.
102 West 500 South, Suite 225
Salt Lake City, Utah 84101
P. 801.328.8800
F. 801.328.8802
Contact: Paris LeLaCheur
Project #: 2010-117.00


# UNIVERSITY OF UTAH
## STUDENT LIFE CENTER
1836 E. BALLIF ROAD
SALT LAKE CITY, UTAH 84112

SEAL

MHTN PROJECT NO. 2010562.00
DRAWN BY: KGE CHECKED BY: KGE

ISSUED:

| NO. | DATE | DESCRIPTION |
|---|---|---|

CONTRACTOR TO VERIFY DRAWINGS IN FIELD USE REFLECT LAST REVISION DATE.

| NO. | DATE | DESCRIPTION |
|---|---|---|

SHEET NAME
LOWER LEVEL POWER PLAN ALTERNATE 1B
BID DOCUMENTS
May 15, 2013

SHEET NUMBER
EP200.C2

C:\Users\brown.KGE\Documents\2010-117.00_KGE_STUDENT LIFE_ELECTRICAL_CENTERAL_2012_brown.rvt
5/14/2013 5:53:36 PM

KEYED NOTES - SHEET EP101.BA

1. ELEVATOR 2-WAY COMMUNICATION PER 2009 IBC 1007.8. COORDINATE WITH ELEVATOR MANUFACTURER FOR EXACT LOCATION.
2. J-BOX FOR ELEVATOR RECALL.
3. CIRCUIT CONTINUES TO LIGHT SWITCH. SEE EL101.BA FOR CONTINUATION.

GENERAL NOTES - SHEET EP101.BA

A. PROVIDE (2) 3/4" CONDUITS TO EACH DATA LOCATION. EACH CONDUIT SHALL RUN FROM NEAREST CABLE TRAY TO OUTLET LOCATION AND SHALLHAVE A PULL STRING INSTALLED. ALL WIRING IS TO BE DONE BY UNIVERSITY OF UTAH NETCOM DEPARTYMENT.
B. UNIVERSITY OF UTAH NET COM SHALL PROVIDE ALL 19" TELECOM RACKS AND MAKE ALL FINAL CONNECTIONS.

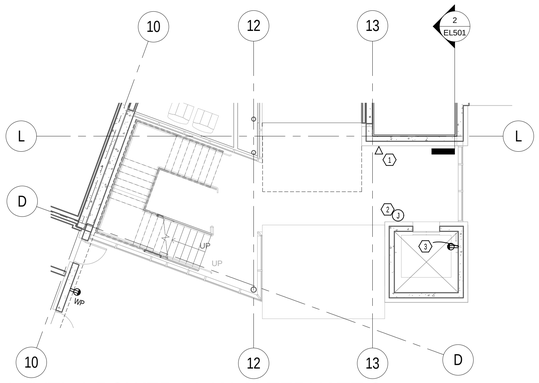


LEVEL 1 POWER PLAN ALTERNATE 3

SCALE |1/8" = 1'-0"

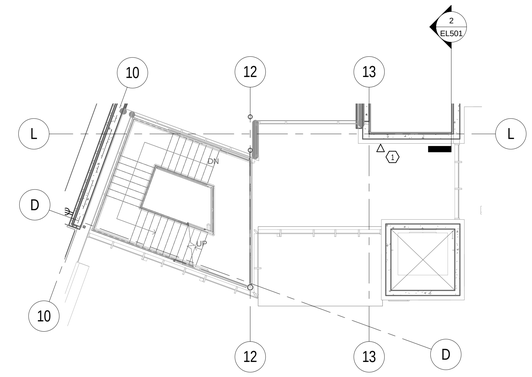


2 EP201.B LEVEL 2 POWER PLAN ALTERNATE 3

SCALE |1/8" = 1'-0"

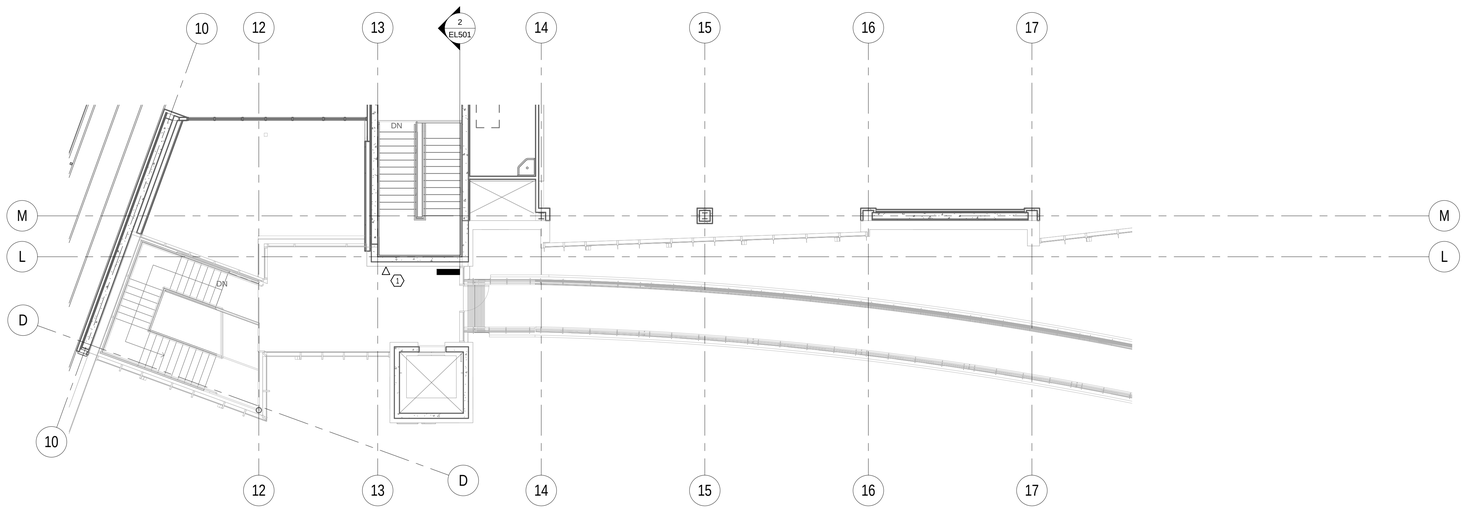


3 EP201.B LEVEL 3 POWER PLAN ALTERNATE 3

SCALE |1/8" = 1'-0"


MHTN ARCHITECTS

**MHTN Architects, Inc.**
420 East South Temple
Suite 100
Salt Lake City, Utah 84111
Telephone (801) 595-6700
Telefax (801) 595-6717
www.mhtn.com

**Hastings+Chivetta**
ARCHITECTURE • PLANNING • ENGINEERING
622 Emerson, Suite 200
St. Louis, MO 63141
Tel. 314.863.5717
Fax. 314.863.2823
www.hastingschivetta.com


BUILDING OFFICIAL STAMP


Ken Garner Engineering, Inc.
Electrical Engineering Consultants, Inc.
102 West 500 South, Suite 225
Salt Lake City, Utah 84101
P. 801.328.8800
F. 801.328.8802
Contact: Paris LeLaCheur
Project #: 2010-117.00


# UNIVERSITY OF UTAH

## STUDENT LIFE CENTER

1836 E. BALLIF ROAD
SALT LAKE CITY, UTAH 84112

SEAL

MHTN PROJECT NO. 2010562.00

DRAWN BY: KGE CHECKED BY: KGE

ISSUED:

| NO. | DATE | DESCRIPTION |
|---|---|---|
| | | |

CONTRACTOR TO VERIFY DRAWINGS IN FIELD USE REFLECT LAST REVISION DATE.

| NO. | DATE | DESCRIPTION |
|---|---|---|
| | | |

SHEET NAME

POWER PLAN
AREA B
ALTERNATE 3
BID DOCUMENTS
May 15, 2013

SHEET NUMBER

EP201.B

C:\Users\brown.KGE\Documents\2010-117.00_KGE_STUDENT LIFE_ELECTRICAL_CENTERAL_2012_brown.rvt
5/14/2013 5:53:48 PM

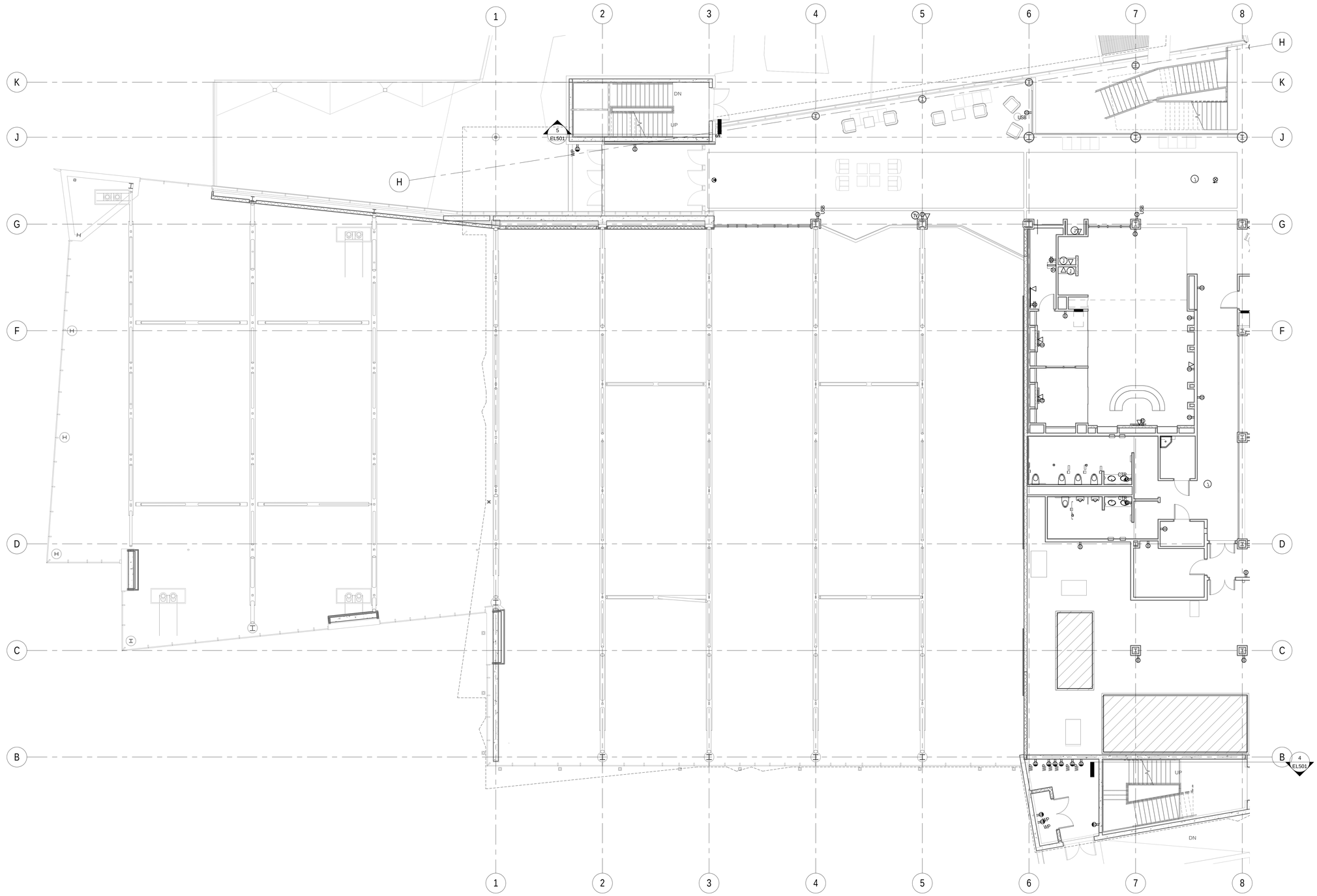



MHTN
ARCHITECTS

**MHTN Architects, Inc.**
420 East South Temple
Suite 100
Salt Lake City, Utah 84111
Telephone (801) 595-6700
Telefax (801) 595-6717
www.mhtn.com

**Hastings+Chivetta**
ARCHITECTURE • PLANNING • ENGINEERING
622 Emerson, Suite 200
St. Louis, MO 63141
Tel. 314.863.5717
Fax. 314.863.2823
www.hastingschivetta.com


BUILDING OFFICIAL STAMP


Ken Garner
Engineering, Inc.
Electrical Engineering Consultants, Inc.
102 West 500 South, Suite 225
Salt Lake City, Utah 84101
P. 801.328.8800
F. 801.328.8802
Contact: Paris LeLaCheur
Project #: 2010-117.00


# UNIVERSITY OF UTAH

## STUDENT LIFE CENTER

1836 E. BALLIF ROAD
SALT LAKE CITY, UTAH 84112

SEAL

MHTN PROJECT NO. 2010562.00

DRAWN BY: Author CHECKED BY: Checker

ISSUED:

| NO. | DATE | DESCRIPTION |
|---|---|---|
| | | |

CONTRACTOR TO VERIFY DRAWINGS IN FIELD USE REFLECT LAST REVISION DATE.

| NO. | DATE | DESCRIPTION |
|---|---|---|
| | | |

SHEET NAME

LEVEL 1 POWER
ATERNATE 1

BID DOCUMENTS
May 15, 2013

SHEET NUMBER

EP201.C

C:\Users\drown.KGE\Documents\2010-117.00_KGE_STUDENT LIFE_ELECTRICAL_CENTERAL_2012_drown.rvt
5/14/2013 5:54:11 PM

KEYED NOTES - SHEET EP204.C

1. RECEPTACLE FOR SNOW MELT ON CANOPY. PROVIDE A DEDICATED 120V CIRCUIT TO EACH RECEPTACLE. PROVIDE A 30MA BREAKER IN PANEL.

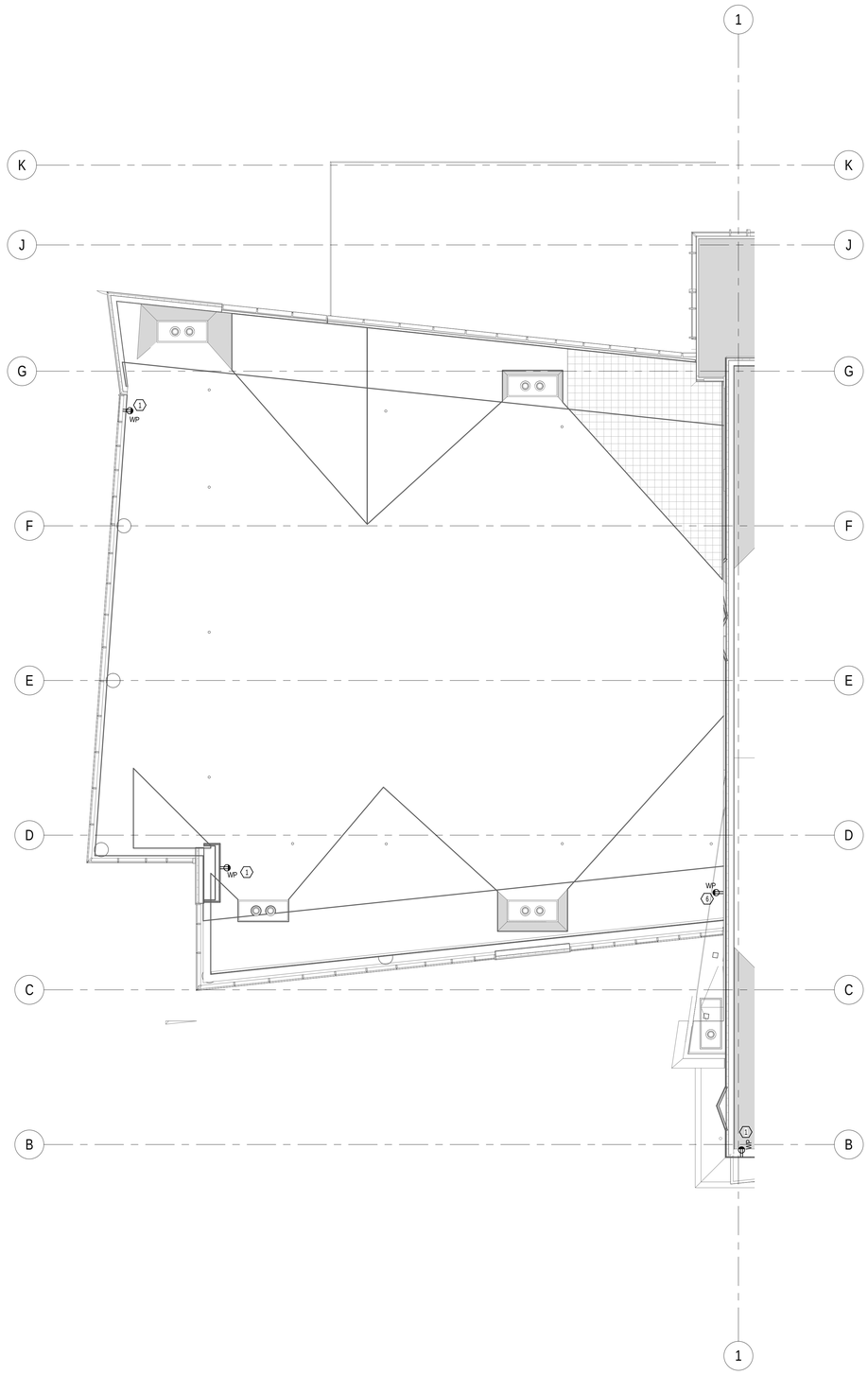



MHTN
ARCHITECTS

**MHTN Architects, Inc.**
420 East South Temple
Suite 100
Salt Lake City, Utah 84111
Telephone (801) 595-6700
Telefax (801) 595-6717
www.mhtn.com

**Hastings+Chivetta**
ARCHITECTURE • PLANNING • ENGINEERING
622 Emerson, Suite 200
St. Louis, MO 63141
Tel. 314.863.5717
Fax. 314.863.2823
www.hastingschivetta.com


BUILDING OFFICIAL STAMP


Ken Garner
Engineering, Inc.
Electrical Engineering Consultants, Inc.
102 West 500 South, Suite 225
Salt Lake City, Utah 84101
P. 801.328.8800
F. 801.328.8802
Contact: Paris LeLaCheur
Project #: 2010-117.00


# UNIVERSITY OF UTAH
## STUDENT LIFE CENTER
1836 E. BALLIF ROAD
SALT LAKE CITY, UTAH 84112

SEAL

MHTN PROJECT NO. 2010562.00

DRAWN BY: Author CHECKED BY: Checker

ISSUED:

| NO. | DATE | DESCRIPTION |
|---|---|---|
| | | |

CONTRACTOR TO VERIFY DRAWINGS IN FIELD USE REFLECT LAST REVISION DATE.

| NO. | DATE | DESCRIPTION |
|---|---|---|
| | | |

SHEET NAME
ROOF POWER PLAN AREA C ALT 1
BID DOCUMENTS
May 15, 2013

SHEET NUMBER
EP204.C

C:\Users\drown.KGE\Documents\2010-117.00_KGE_STUDENT LIFE_ELECTRICAL_CENTERAL_2012_drown.rvt
5/14/2013 5:54:18 PM

KEYED NOTES - SHEET EP501

1. STUB UP (4) 4"C TO NEXT LEVEL IDF ROOM.
2. 19" TELECOM RACK, PROVIDED BY CAMPUS NETCOM.
3. PROVIDE 3/4" PAINTED AND FIRE TREATED PLYWOOD BACKBOARD. BACK BOARD SHALL COVER THE ENTIRE WALL WHERE SHOWN FROM A HEIGHT OF 6" AFF TO 8'-6" AFF.
4. STUB UP (3) 4"C FROM TUNNEL CABLE TRAY. (1) 4" INNER DUCT EXTENDING FIBER INTO BUILDING. (2) 4" C FOR COMMUNICATIONS.
5. PROVIDE AN L6-30 RECEPTACLE FOR UPS POWER AT THIS LOCATION.
6. (4) 4" C STUBBED UP FROM TELECOM ROOM BELOW.
7. JUNCTION BOX FOR EQUIPMENT CABINET #1.
8. JUNCTION BOX FOR TV DISTRIBUTION SYSTEM. (12"X12"X4").
9. DEDICATED 20A CIRCUITS FOR A/V EQUIPMENT CABINET.
10. INSTALL RECEPTACLE FOR TELECOM RACK ON LADDER TRAY ABOVE RACKS. COORDINATE EXACT LOCATION WITH U OF U NETCOM.
11. SEE SHEETS EY200-EY203 FOR CABLE TRAY LAYOUTS.
12. LADDER TRAY INSTALLED ON TOP OF TELECOM RACKS.
13. 120V 20A DEDICATED CIRCUIT FOR ELEVATOR CAB LIGHTS.
14. DEDICATED PHONE OUTLET FOR ELEVATOR EQUIPMENT.
15. LOCABLE SHUNT TRIP FUSED DISCONNECT FOR ELEVATOR CONTROL.
16. LOCABLE SHUNT TRIP ELEVATOR POWER MODULE. (REFER TO SPECIFICATION 260500.2.2 FOR DETAILS.)
17. EQUIPMENT PART OF ALTERNATE #3.

GENERAL NOTES - SHEET EP501

A. PROVIDE (2) 3/4" CONDUITS TO EACH DATA LOCATION. EACH CONDUIT SHALL RUN FROM NEAREST CABLE TRAY TO OUTLET LOCATION AND SHALLHAVE A PULL STRING INSTALLED. ALL WIRING IS TO BE DONE BY UNIVERSITY OF UTAH NETCOM DEPARTYMENT.
B. UNIVERSITY OF UTAH NET COM SHALL PROVIDE ALL 19" TELECOM RACKS AND MAKE ALL FINAL CONNECTIONS.

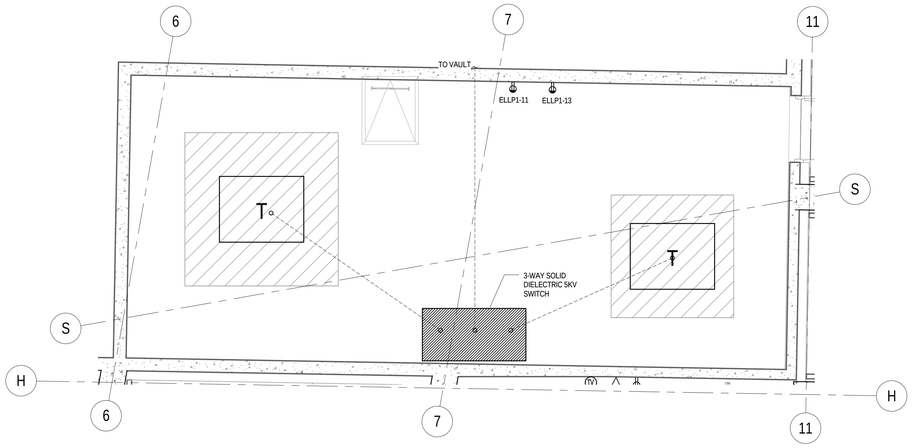


6 EP501 ENLARGED LOWER LEVEL POWER PLAN TRANSFORMER VAULT
SCALE | 1/4" = 1'-0"

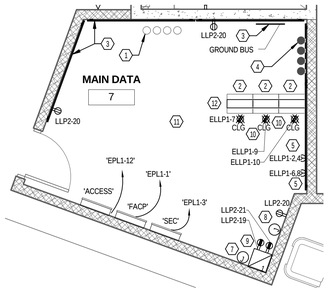


1 EP501 ENLARGED LOWER LEVEL POWER PLAN MAIN DATA ROOM
SCALE | 1/4" = 1'-0"

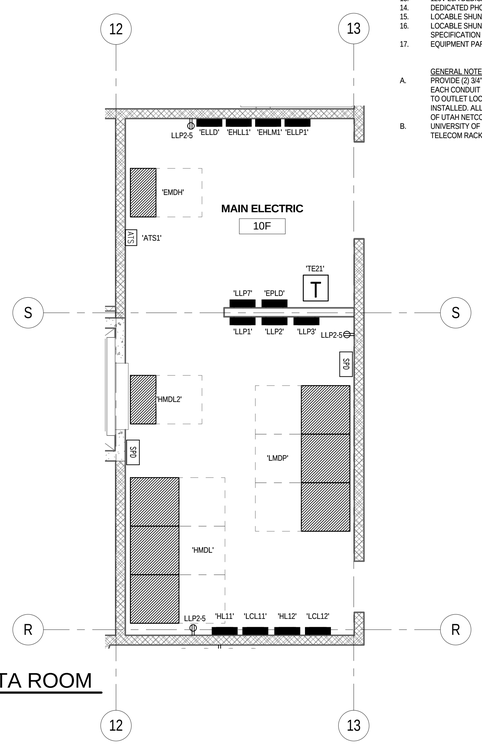


2 EP501 ENLARGED LOWER LEVEL POWER PLAN ELECTRICAL ROOM 10F
SCALE | 1/4" = 1'-0"

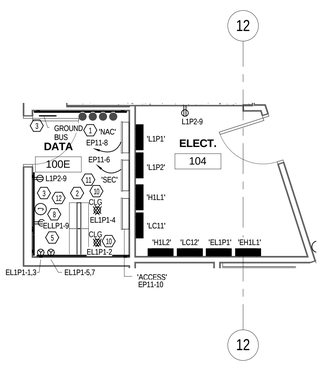


3 EP501 ENLARGED LEVEL 1 DATA & ELECT. ROOMS
SCALE | 1/4" = 1'-0"

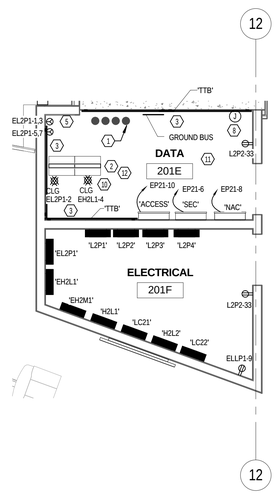


4 EP501 ENLARGED LEVEL 2 DATA & ELECT. ROOMS
SCALE | 1/4" = 1'-0"

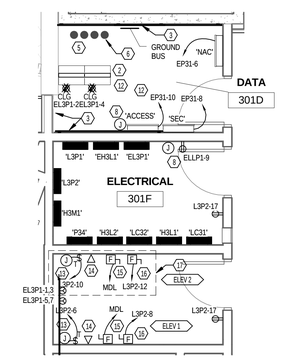


5 EP501 ENLARGED LEVEL 3 DATA & ELECT. ROOMS
SCALE | 1/4" = 1'-0"


MHTN ARCHITECTS
MHTN Architects, Inc.
420 East South Temple
Suite 100
Salt Lake City, Utah 84111
Telephone (801) 595-6700
Telefax (801) 595-6717
www.mhtn.com

Hastings+Chivetta
ARCHITECTURE • PLANNING • ENGINEERING
622 Emerson, Suite 200
St. Louis, MO 63141
Tel. 314.863.5717
Fax. 314.863.2823
www.hastingschivetta.com

BUILDING OFFICIAL STAMP

Ken Garner Engineering, Inc.
Electrical Engineering Consultants, Inc.
102 West 500 South, Suite 225
Salt Lake City, Utah 84101
P. 801.328.8800
F. 801.328.8802
Contact: Paris LeLaCheur
Project #: 2010-117.00


# UNIVERSITY OF UTAH
## STUDENT LIFE CENTER
1836 E. BALLIF ROAD
SALT LAKE CITY, UTAH 84112

SEAL

MHTN PROJECT NO. 2010562.00
DRAWN BY: Author CHECKED BY: Checker

ISSUED:

| NO. | DATE | DESCRIPTION |
|---|---|---|

CONTRACTOR TO VERIFY DRAWINGS IN FIELD USE REFLECT LAST REVISION DATE.

| NO. | DATE | DESCRIPTION |
|---|---|---|

SHEET NAME
ENLARGED ELECTRICAL AND DATA ROOMS
BID DOCUMENTS
May 15, 2013

SHEET NUMBER
EP501

C:\Users\drown.KGE\Documents\2010-117.00_KGE_STUDENT LIFE_ELECTRICAL_CENTERAL_2012_drown.rvt
5/14/2013 5:54:34 PM

KEYED NOTES - SHEET EP502

1. PROVIDE POWER TO 120V MARINE LIGHTS IN EACH AIR HANDLER. DIV. 26 TO INSTALL LIGHTS AND MAKE FINAL CONNECTIONS. PROVIDE SWITCH AND COORDINATE LOCATION.
2. VFD's PROVIDEED BY MECHANICAL. COORDEINATE EXACT LOCATION PRIOR TO ROUGH-IN.
3. REDUNDANT VFD PROVIDED BY MECHANICAL.
4. RELIEF FANS POWER. SEE MECHANICAL SCHEDULE AND MECHANICAL DRAWINGS FOR COORDINATION.
5. SUPPLY FANS POWER. SEE MECHANICAL SCHEDULE AND MECHANICAL DRAWINGS FOR COORDINATION.
6. PROVIDE A 20A GFCI CIRCUIT BREAKER.
7. VFD BY MECHANICAL.
8. ALL PANELS, TRANSFORMERS, J-BOXES AND RECEPTACLE ENCLOSURES INTHIS ROOM SHALL BE NEMA 4X.

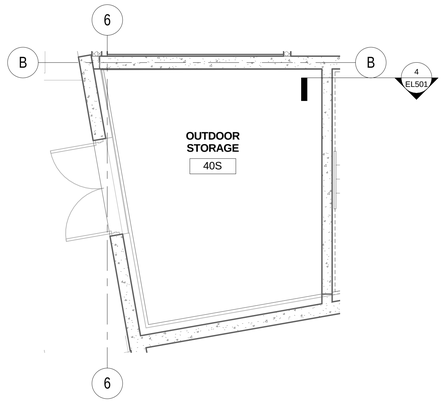


2 EP502 ENLARGED STORAGE ROOM 40S
SCALE |1/4" = 1'-0"

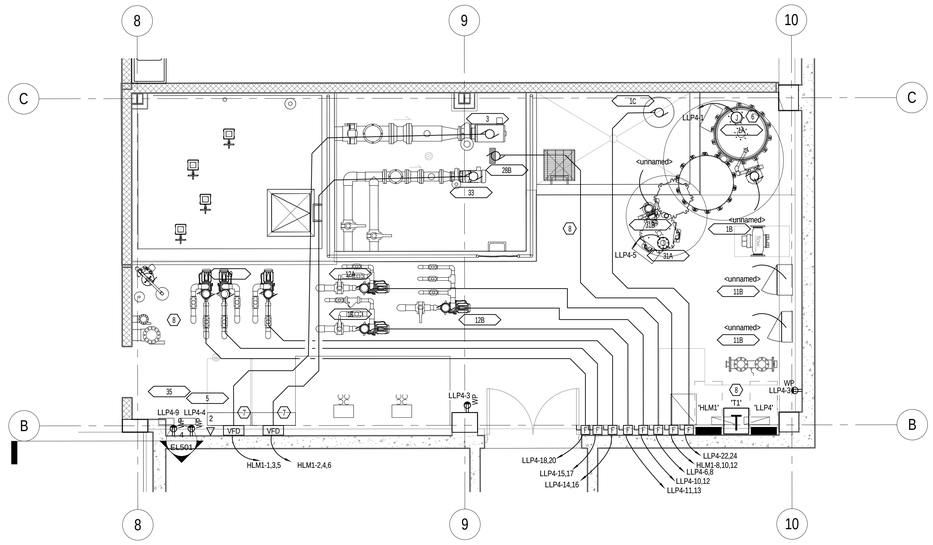


1 EP502 ENLARGED POOL EQUIPMENT ROOM 45B
SCALE |1/4" = 1'-0"

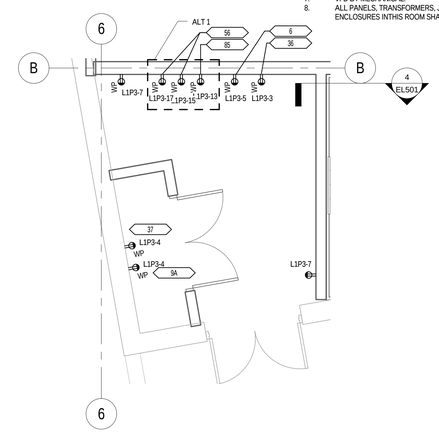


4 EP502 ENLARGED CHEMICAL ROOM
SCALE |1/4" = 1'-0"

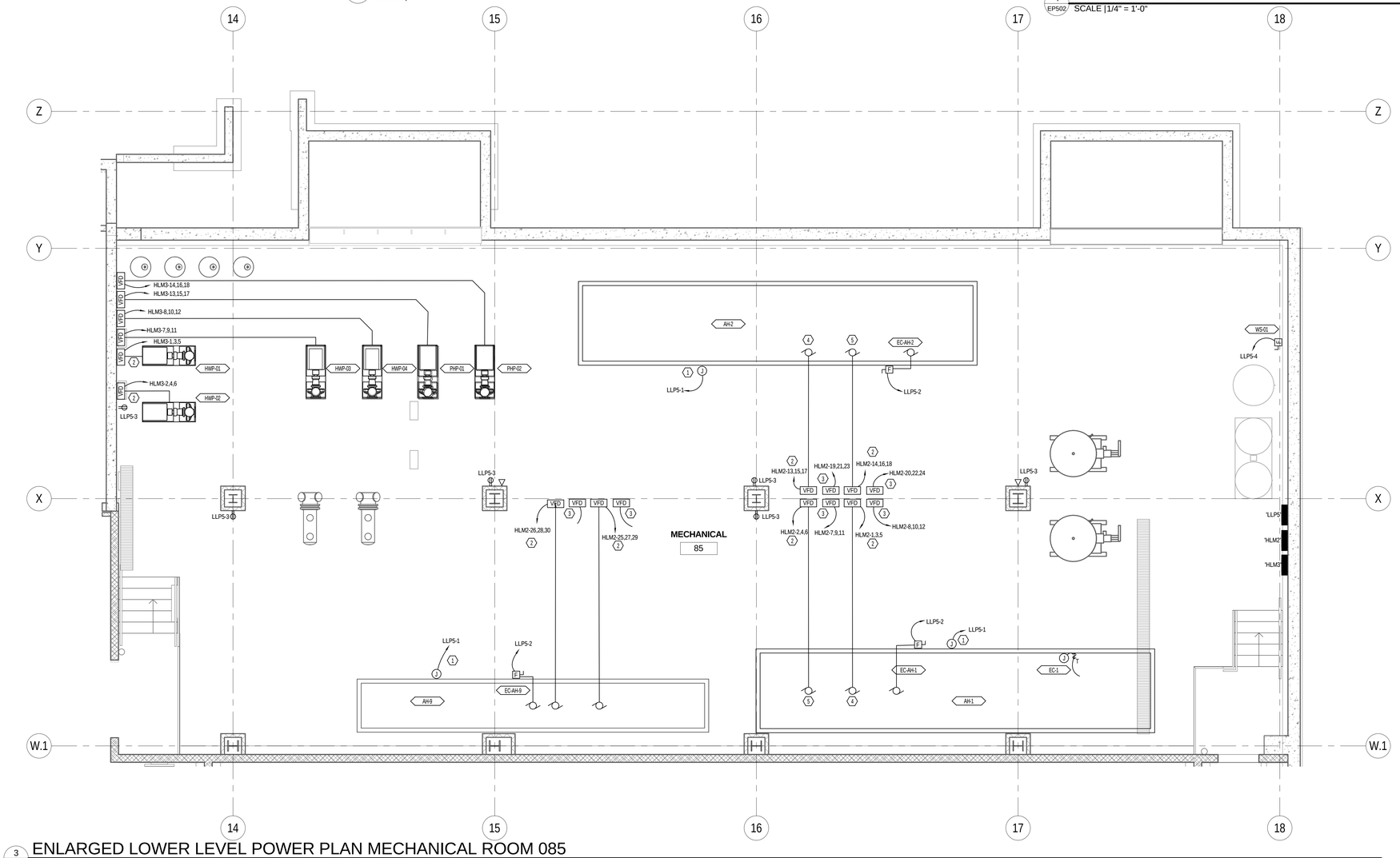


3 EP502 ENLARGED LOWER LEVEL POWER PLAN MECHANICAL ROOM 085
SCALE |1/4" = 1'-0"

C:\Users\drown.KGE\Documents\2010-117.00_KGE_STUDENT LIFE_ELECTRICAL_CENTERAL_2012_rbrown.rvt
5/14/2013 5:54:48 PM


MHTN ARCHITECTS
**MHTN Architects, Inc.**
420 East South Temple
Suite 100
Salt Lake City, Utah 84111
Telephone (801) 595-6700
Telefax (801) 595-6717
www.mhtn.com

**Hastings+Chivetta**
ARCHITECTURE • PLANNING • ENGINEERING
622 Emerson, Suite 200
St. Louis, MO 63141
Tel. 314.863.5717
Fax. 314.863.2823
www.hastingschivetta.com

BUILDING OFFICIAL STAMP
Ken Garner Engineering, Inc.
Electrical Engineering Consultants, Inc.
102 West 500 South, Suite 225
Salt Lake City, Utah 84101
P. 801.328.8800
F. 801.328.8802
Contact: Paris LeLaCheur
Project #: 2010-117.00


# UNIVERSITY OF UTAH
## STUDENT LIFE CENTER
1836 E. BALLIF ROAD
SALT LAKE CITY, UTAH 84112

SEAL

MHTN PROJECT NO. 2010562.00
DRAWN BY: Author CHECKED BY: Checker

ISSUED:

| NO. | DATE | DESCRIPTION |
|---|---|---|

CONTRACTOR TO VERIFY DRAWINGS IN FIELD USE REFLECT LAST REVISION DATE:

| NO. | DATE | DESCRIPTION |
|---|---|---|

SHEET NAME
ENLARGED LOWER LEVEL ROOMS
BID DOCUMENTS
May 15, 2013

SHEET NUMBER
EP502

KEYED NOTES - SHEET EP503

1. MENU BOARDS. SEE DETAIL 4-EP503 FOR ELECTRICAL LAYOUT.
2. VFD'S PROVIDED BY MECHANICAL. COORDINATE EXACT LOCATION PRIOR TO ROUGH IN.
3. REDUNDANT VFD PROVIDED BY MECHANICAL.
4. COORDINATE HEIGHT AND FINAL LOCATION FOR MOUNTING WITH OWNER AND ARCHITECT.
5. DISCONNECTING MEAN SHALL BE MOUNTED SO IT IS ACCESIBLE.
6. MOUNT RECEPTACLES UNDER COUNTER FOR POWER TO OWNER PROVIDED POS EQUIPMENT.

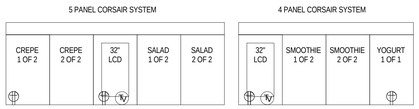


4 EP503 4 AND 5 PANEL MENU SCHEMATIC
SCALE | NTS

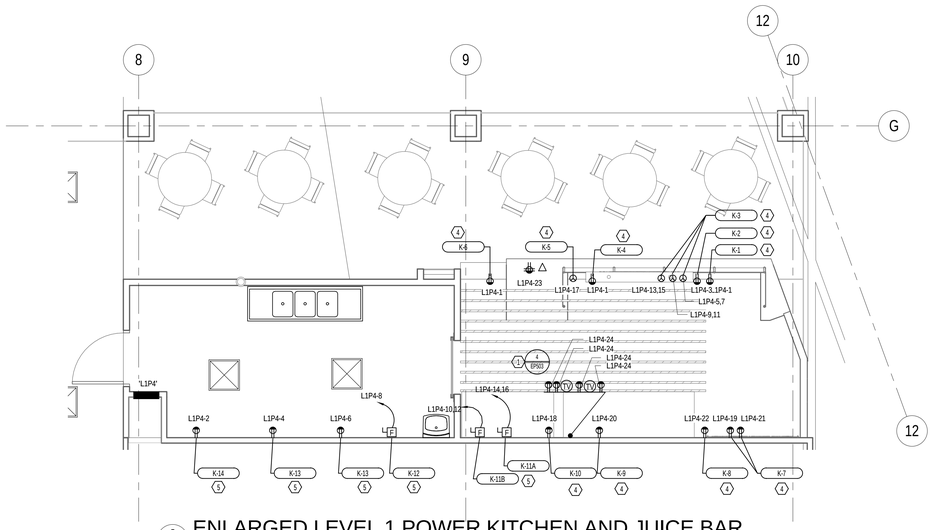


3 EP503 ENLARGED LEVEL 1 POWER KITCHEN AND JUICE BAR
SCALE |1/4" = 1'-0"

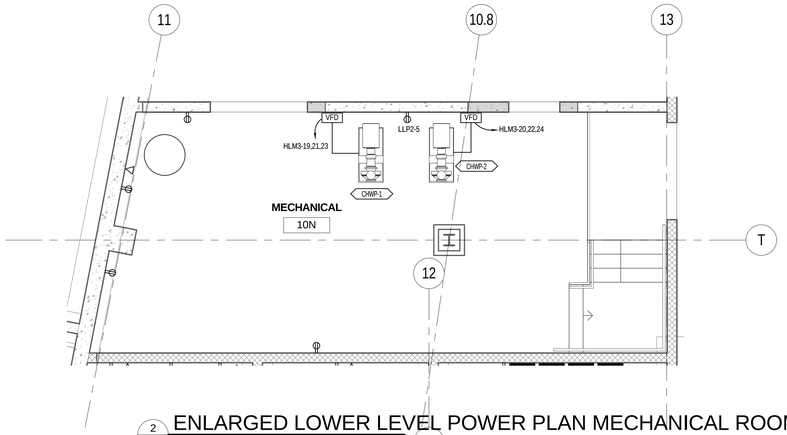


2 EP503 ENLARGED LOWER LEVEL POWER PLAN MECHANICAL ROOM 10N
SCALE |1/4" = 1'-0"

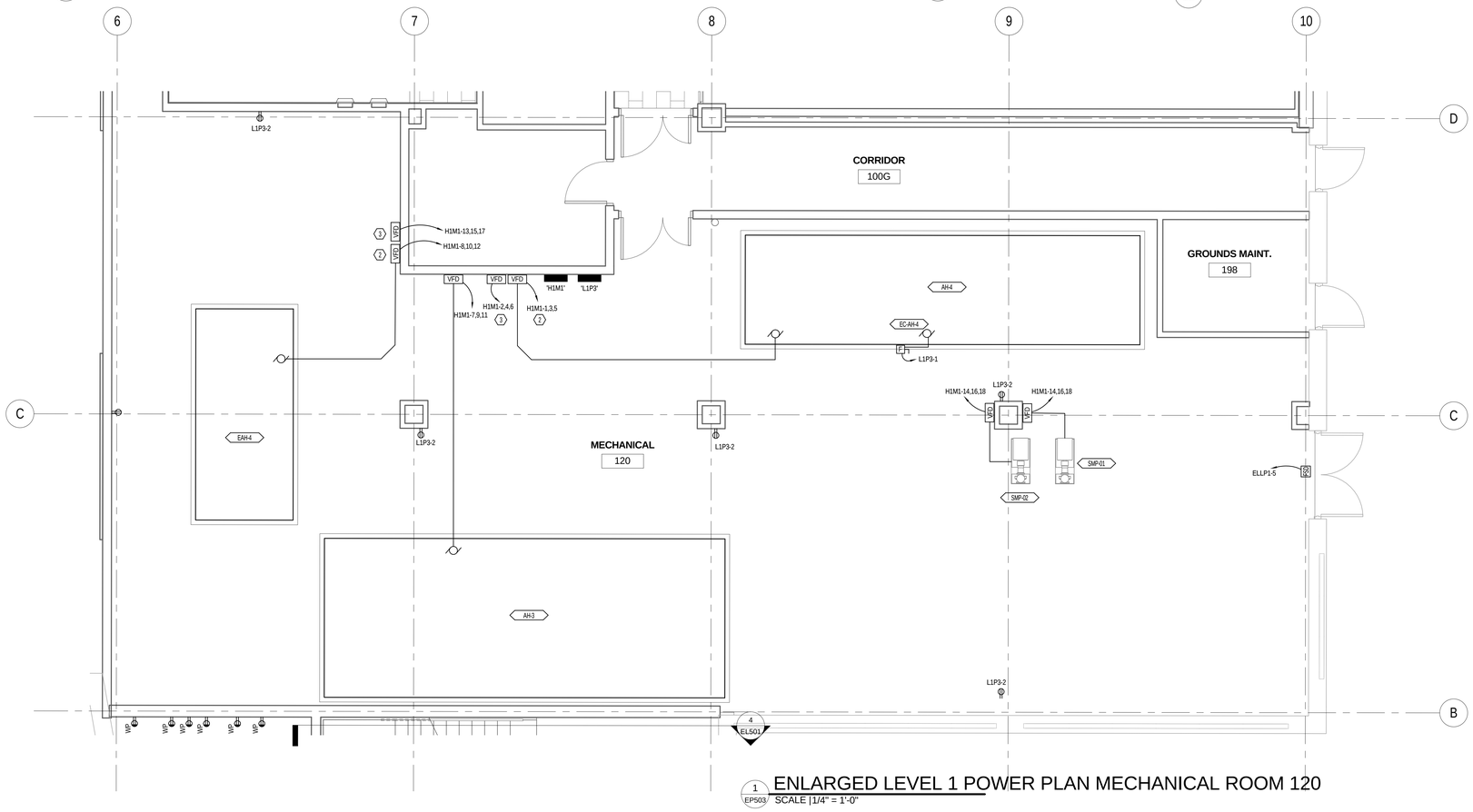


1 EP503 ENLARGED LEVEL 1 POWER PLAN MECHANICAL ROOM 120
SCALE |1/4" = 1'-0"


MHTN ARCHITECTS
MHTN Architects, Inc.
420 East South Temple
Suite 100
Salt Lake City, Utah 84111
Telephone (801) 595-6700
Telefax (801) 595-6717
www.mhtn.com

Hastings+Chivetta
ARCHITECTURE • PLANNING • ENGINEERING
622 Emerson, Suite 200
St. Louis, MO 63141
Tel. 314.863.5717
Fax. 314.863.2823
www.hastingschivetta.com

BUILDING OFFICIAL STAMP
Ken Garner Engineering, Inc.
Electrical Engineering Consultants, Inc.
102 West 500 South, Suite 225
Salt Lake City, Utah 84101
P. 801.328.8800
F. 801.328.8802
Contact: Paris LeLaCheur
Project #: 2010-117.00


# UNIVERSITY OF UTAH
## STUDENT LIFE CENTER
1836 E. BALLIF ROAD
SALT LAKE CITY, UTAH 84112

SEAL

MHTN PROJECT NO. 2010562.00
DRAWN BY: Author CHECKED BY: KGE

ISSUED:

| NO. | DATE | DESCRIPTION |
|---|---|---|

CONTRACTOR TO VERIFY DRAWINGS IN FIELD USE REFLECT LAST REVISION DATE:

| NO. | DATE | DESCRIPTION |
|---|---|---|

SHEET NAME
POWER PLANS
ENLARGED
VIEWS
BID DOCUMENTS
May 15, 2013

SHEET NUMBER
EP503

C:\Users\drown.KGE\Documents\2010-117.00_KGE_STUDENT LIFE_ELECTRICAL_CENTERAL_2012_drown.rvt
5/14/2013 5:55:09 PM

KEYED NOTES - SHEET EP504

1. COORDINATE EXACT LOCATION OF JUNCTION BOX AND DATA FOR EACH KIOSK PRIOR TO ROUGH-IN.
2. PROVIDE AND INSTALL (1) 1" INNER DUCT WITH (1) 12 STRAND FIBER FROM IDF ROOM ON THIS LEVEL.
3. COORDINATE EXACT LOCATION OF J-BOX AND DATA FOR ATM MACHINE PRIOR TO ROUGHIN.
4. 19" TELECOM RACK PROVIDED BY UNIVERSITY NETCOM. LIVE EQUIPMENT BY CREDIT UNIOIN. FINAL CONNECTIONS BY CREDIT UNION.
5. PROVIDE A 96" H X 48" W X 3/4" D FIRE TREATED PLYWOOD BACKBOARD. MOUNT 6" AFF.

GENERAL NOTES - SHEET EP504

A. PROVIDE (2) 3/4" CONDUITS TO EACH DATA LOCATION. EACH CONDUIT SHALL RUN FROM NEAREST CABLE TRAY TO OUTLET LOCATION AND SHALLHAVE A PULL STRING INSTALLED. ALL WIRING IS TO BE DONE BY UNIVERSITY OF UTAH NETCOM DEPARTYMENT.
B. UNIVERSITY OF UTAH NET COM SHALL PROVIDE ALL 19" TELECOM RACKS AND MAKE ALL FINAL CONNECTIONS.

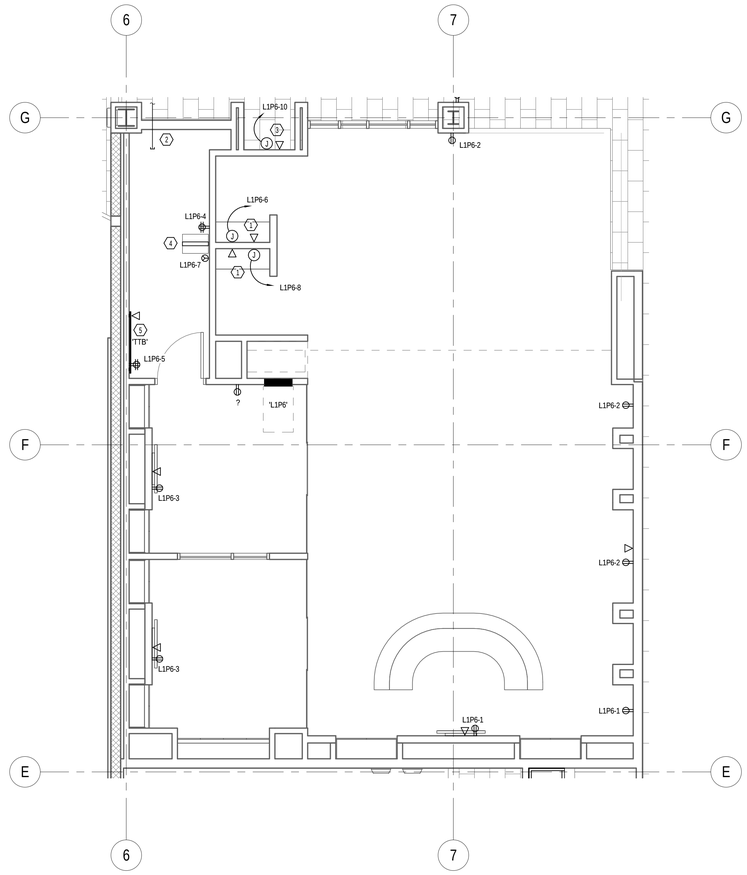


1 EP504 ENLARGED LEVEL 1 POWER PLAN UOFUCU
SCALE |1/4" = 1'-0"


MHTN ARCHITECTS
**MHTN Architects, Inc.**
420 East South Temple
Suite 100
Salt Lake City, Utah 84111
Telephone (801) 595-6700
Telefax (801) 595-6717
www.mhtn.com

**Hastings+Chivetta**
ARCHITECTURE • PLANNING • ENGINEERING
622 Emerson, Suite 200
St. Louis, MO 63141
Tel. 314.863.5717
Fax. 314.863.2823
www.hastingschivetta.com


BUILDING OFFICIAL STAMP


Ken Garner Engineering, Inc.
Electrical Engineering Consultants, Inc.
102 West 500 South, Suite 225
Salt Lake City, Utah 84101
P. 801.328.8800
F. 801.328.8802
Contact: Paris LeLaCheur
Project #: 2010-117.00


# UNIVERSITY OF UTAH
## STUDENT LIFE CENTER
1836 E. BALLIF ROAD
SALT LAKE CITY, UTAH 84112

SEAL

MHTN PROJECT NO. 2010562.00

DRAWN BY: Author CHECKED BY: KGE

ISSUED:

| NO. | DATE | DESCRIPTION |
|---|---|---|

CONTRACTOR TO VERIFY DRAWINGS IN FIELD USE REFLECT LAST REVISION DATE.

| NO. | DATE | DESCRIPTION |
|---|---|---|

SHEET NAME
ENLARGED U. OF U. CREDIT UNION

BID DOCUMENTS
May 15, 2013

SHEET NUMBER
EP504

C:\Users\rdrown.KGE\Documents\2010-117.00_KGE_STUDENT LIFE_ELECTRICAL_CENTERAL_2012_rbrown.rvt
5/14/2013 5:55:19 PM

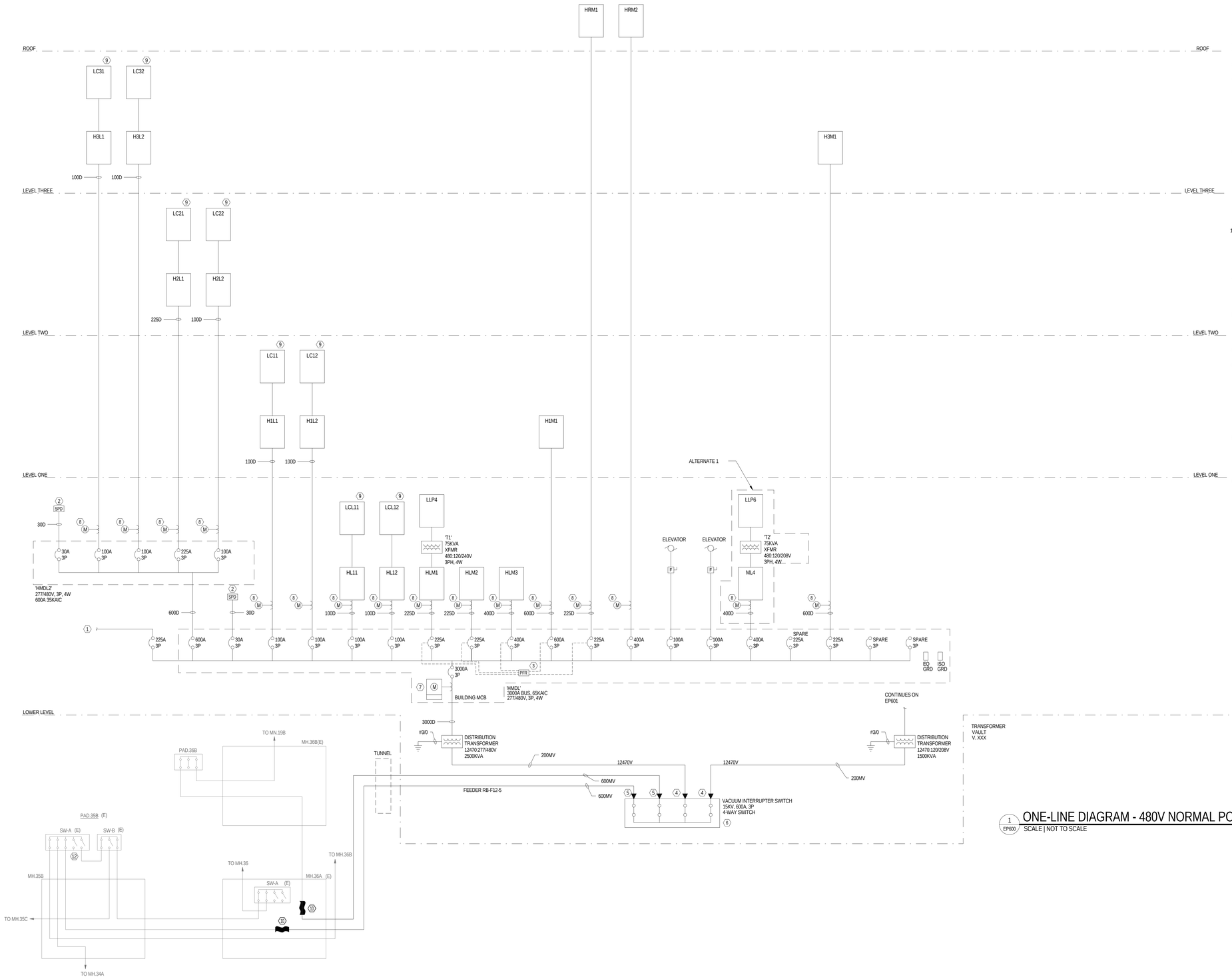


1 EP600 ONE-LINE DIAGRAM - 480V NORMAL POWER DISTRIBUTION
SCALE | NOT TO SCALE

## KEYED NOTES - EP600

1. SEE SHEET EP602 FOR CONTINUATION TO EMERGENCY DISTRIBUTION SYSTEM.
2. TVSS: 277/480V.
3. PHASE FAILURE RELAY.
4. PROVIDE AND INSTALL 200A MOLDED PRODUCT LOADBREAK TERMINATIONS.
5. PROVIDE AND INSTALL 600A MOLDED PRODUCT DEADBREAK TERMINATIONS.
6. PROVIDE AND INSTALL NEW 15.5KV SOLID DIELECTRIC VFI SWITCH. SWITCH IS TO BE SINGLE SIDED. SWITCH IS ONLY AND INSTALLED ON STAINLESS STEEL MOUNTING FRAME.
7. METERING AT MAIN SWITCHBOARDS (SERVICE ENTRANCE). PROVIDE SQUARE D POWER LOGIC CIRCUIT MONITOR, CLASS 3000, MODEL CM-3350. PROVIDE METERS, CURRENT AND POTENTIAL TRANSFORMERS, SELECTOR SWITCHES, WIRING , ETC. AS REQUIRED FOR COMPLETE METERING SYSTEM WITH THE CAPABILITY TO CONNECT BY ETHERNET TO THE MAIN CAMPUS UTILITY MANAGEMENT SYSTEM.
8. PROVIDE POWER METERING FOR LEED MEASUREMENT AND VERIFICATION. PROVIDE ONE GROUP OF THE METERS TO MEASURE ALL MECHANICAL LOADS. PROVIDE SECOND GROUP OF METERS TO MEASURE ALL LIGHTING LOADS. PROVIDE THIRD GROUP OF METERS TO MEASURE ALL OTHER ELECTRICAL LOADS. PROVIDE CURRENT AND POTENTIAL TRANSFORMERS AS REQUIRED. PROVIDE DATA RECORDER AND SOFTWARE FOR DATA RECORDING AND PROCESSING PROVIDE INTERFACE BETWEEN LEED METERING EQUIPMENT AND BUILDING MANAGEMENT SYSTEM.
9. LIGHTING CONTROL PANEL.
10. PROVIDE NEW MEDIUM VOLTAGE 15KV COLD SHRINK CABLE SPLICE IN MH.36A. SEE SHEET ES500 FOR MANHOLE DETAILS AND SPLICE LOCATIONS.

## GENERAL NOTES - SHEET EP600

A. ALL SWITCHING RESULTING IN A BUILDING OUTAGE SHALL BE COMPLETED AT NIGHT AND ON WEEKENDS. OUTAGES ARE TO BE COORDINATED THROUGH UNIVERSITY ELECTRIC SHOP TWO WEEKS PRIOR TO THE DESIRED OUTAGE DATE.
B. DIVISION 26 SHALL COMPLETE THE FOLLOWING IN EACH MANHOLE WHERE ANY DEMOLITION OR NEW WORK OCCURS: REMOVE ALL DEBRIS, SWEEP OUT MANHOLE, CLEAN UP OF OLD OIL SPILLS, CLEAN UP OF NEW OIL SPILLS, LEAVE MANHOLE IN CLEAN CONDITION.
C. EACH FEEDER IS TO BE LOOPED INSIDE EACH MANHOLE FOR AT LEAST 360°.
D. CONTRACTOR IS TO PROVIDE AND INSTALL MEDIUM VOLTAGE CABLE SPLICES AS NECESSARY TO ENSURE PROPER CABLE PULLING TENSIONS ARE MAINTAINED THROUGHOUT THE ENTIRE LENGTH OF THE CABLE PULL. MINIMIZE THE USE OF CABLE SPLICES THROUGHOUT THE PROJECT. ALL CABLE TO CABLE MEDIUM VOLTAGE SPLICES ARE TO BE 1583 RAYCHEM HEATSHRINK SPLICES OR 3M COLDSHRINK SPLICES UNLESS NOTED OTHERWISE. PROVIDE ONE SPLICE KIT PER PHASE AND SUPPORT CABLES TO MANHOLE WALL WITHIN 12" ON EITHER SIDE OF THE SPLICE.
E. ALL MEDIUM VOLTAGE CABLING IS TO CONSIST OF (3)#500KCM COPPER EPR (15KV) SINGLE CONDUCTOR CABLES WITH (1)#4/0 (THWN) 600V GRND FOR MAIN DISTRIBUTION LINES AND (3)#4/0 COPPER EPR (15KV) SINGLE CONDUCTOR CABLES WITH (1)#4 (THWN) 600V GRND FOR RUNS FROM VFI SWITCHES TO TRANSFORMERS.
F. MEDIUM VOLTAGE CABLING IN VAULTS IS TO BE BUNDLED AND RUN IN EITHER RIGID METAL CONDUIT OR SUPPORTED BY HOOKS FROM SWITCH TO TRANSFORMER(S). CABLES WILL NOT BE RUN ALONG THE FLOOR IN THE VAULTS.

MHTN
ARCHITECTS
**MHTN Architects, Inc.**
420 East South Temple
Suite 100
Salt Lake City, Utah 84111
Telephone (801) 595-6700
Telefax (801) 595-6717
www.mhtn.com

**Hastings+Chivetta**
ARCHITECTURE • PLANNING • ENGINEERING
622 Emerson, Suite 200
St. Louis, MO 63141
Tel. 314.863.5717
Fax. 314.863.2823
www.hastingschivetta.com

BUILDING OFFICIAL STAMP
Ken Garner
Engineering, Inc.
Electrical Engineering Consultants, Inc.
102 West 500 South, Suite 225
Salt Lake City, Utah 84101
P. 801.328.8800
F. 801.328.8802
Contact: Paris LeLaCheur
Project #: 2010-117.00

# UNIVERSITY OF UTAH
# STUDENT LIFE CENTER
1836 E. BALLIF ROAD
SALT LAKE CITY, UTAH 84112

SEAL

MHTN PROJECT NO. 2010562.00
DRAWN BY: Author CHECKED BY: Checker

ISSUED:

| NO. | DATE | DESCRIPTION |
|---|---|---|

CONTRACTOR TO VERIFY DRAWINGS IN FIELD USE REFLECT LAST REVISION DATE.

| NO. | DATE | DESCRIPTION |
|---|---|---|

SHEET NAME
ONE-LINE DIAGRAM - 480V

BID DOCUMENTS
May 15, 2013

SHEET NUMBER
EP600

C:\Users\brown.KGE\Documents\2010-117.00_KGE_STUDENT LIFE_ELECTRICAL_CENTERAL_2012_brown.rvt
5/14/2013 5:55:38 PM

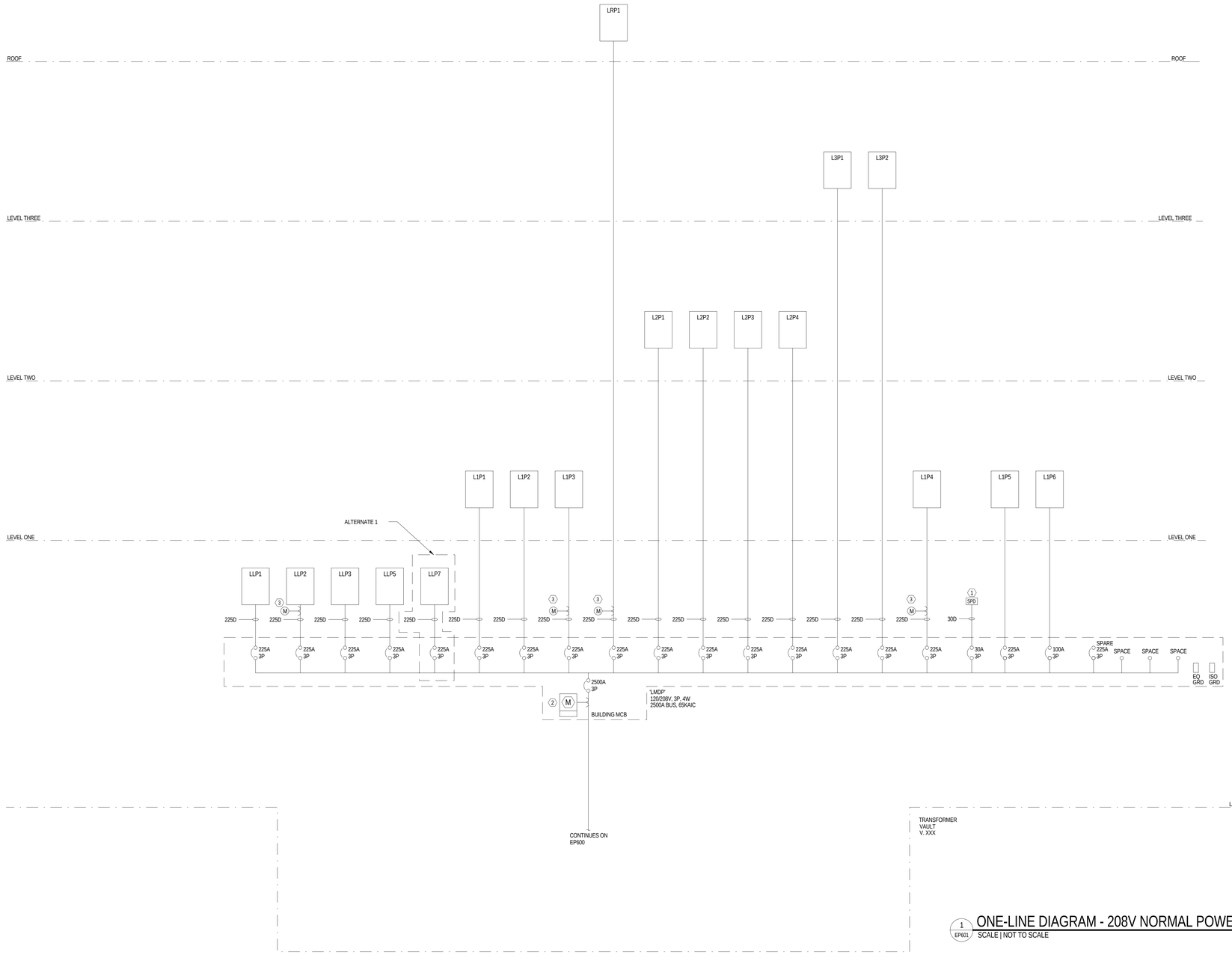


1 EP601 ONE-LINE DIAGRAM - 208V NORMAL POWER DISTRIBUTION

SCALE | NOT TO SCALE

## KEYED NOTES - EP601

1. TVSS 120/208V
2. METERING MAIN SWITCHBOARDS (CERVICE ENTRANCE). PROVIDE SQUARE D POWER LOGIC CIRCUIT MONITOR. ALASS 3000.MODEL CM3350. PROVIDE METERS CURRENT AND POTENTIAL TRANSFORMERS, SELECTOR SWITCHES WIRING , ETC. AS REQUIRED FOR COMPLETE METERING SYSTEM WITH THE CAPABILITY TO CONNECT BY ETHERNET TO THE MAION CAMPUS UTILITY MANAGEMENT SYSTEM.
3. PROVIDE POWER METERING FOR LEED MEASUREMENT AND VERIFICATION. PROVIDE ONE GROUP OF THE METERS TO MEASURE ALL MECHANICAL LOADS. PROVIDE SECOND GROUP OF METERS TO MEASURE ALL LIGHTING LOADS. PROVIDE THIRD GROUP OF METERS TO MEASURE ALL OTHER ELECTRICAL LOADS. PROVIDE CURRENT AND POTENTIAL TRANSFORMERS AS REQUIRED. PROVIDE DATA RECORDER AND SOFTWARE FOR DATA RECORDING AND PROCESSING PROVIDE INTERFACE BETWEEN LEED METERING EQUIPMENT AND BUILDING MANAGEMENT SYSTEM.

## GENERAL NOTES - SHEET EP601

A. ALL SWITCHING RESULTING IN A BUILDING OUTAGE SHALL BE COMPLETED AT NIGHT AND ON WEEKENDS. OUTAGES ARE TO BE COORDINATED THROUGH UNIVERSITY ELECTRIC SHOP TWO WEEKS PRIOR TO THE DESIRED OUTAGE DATE.
B. DIVISION 26 SHALL COMPLETE THE FOLLOWING IN EACH MANHOLE WHERE ANY DEMOLITION OR NEW WORK OCCURS: REMOVE ALL DEBRIS, SWEEP OUT MANHOLE, CLEAN UP OF OLD OIL SPILLS, CLEAN UP OF NEW OIL SPILLS, LEAVE MANHOLE IN CLEAN CONDITION.
C. EACH FEEDER IS TO BE LOOPED INSIDE EACH MANHOLE FOR AT LEAST 360°.
D. CONTRACTOR IS TO PROVIDE AND INSTALL MEDIUM VOLTAGE CABLE SPLICES AS NECESSARY TO ENSURE PROPER CABLE PULLING TENSIONS ARE MAINTAINED THROUGHOUT THE ENTIRE LENGTH OF THE CABLE PULL. MINIMIZE THE USE OF CABLE SPLICES THROUGHOUT THE PROJECT. ALL CABLE TO CABLE MEDIUM VOLTAGE SPLICES ARE TO BE 1583 RAYCHEM HEATSHRINK SPLICES OR 3M COLDSHRINK SPLICES UNLESS NOTED OTHERWISE. PROVIDE ONE SPLICE KIT PER PHASE AND SUPPORT CABLES TO MANHOLE WALL WITHIN 12" ON EITHER SIDE OF THE SPLICE.
E. ALL MEDIUM VOLTAGE CABLING IS TO CONSIST OF (3)#500KCM COPPER EPR (15KV) SINGLE CONDUCTOR CABLES WITH (1)#4/0 (THWN) 600V GRND FOR MAIN DISTRIBUTION LINES AND (3)#4/0 COPPER EPR (15KV) SINGLE CONDUCTOR CABLES WITH (1)#4 (THWN) 600V GRND FOR RUNS FROM VFI SWITCHES TO TRANSFORMERS.
F. MEDIUM VOLTAGE CABLING IN VAULTS IS TO BE BUNDLED AND RUN IN EITHER RIGID METAL CONDUIT OR SUPPORTED BY HOOKS FROM SWITCH TO TRANSFORMER(S). CABLES WILL NOT BE RUN ALONG THE FLOOR IN THE VAULTS.
G. ALL 120/208V POWER PANELS AND DISTRIBUTION BOARDS TO HAVE EQUIPMENT AND ISOLATED GROUND BUS PER UNIVERSITY STANDARDS.
H. ALL CONDUITS ABOVE GRADE SHOULD BE EMT OR RGC METAL CONDUITS. MINIMUM CONDUIT SIZE SHOULD BE 3/4". INSTALLATION OF THE MC CABLE IS NOT ALLOWED.
I. FLEXIBLE CONDUITS IN LENGTHS GREATER THAN 6 FEET SHOULD NOT BE USED.
J. ALL CONDUCTORS SHOULD BE COPPER WITH CODE APPROVED INSULATION SUITABLE FOR THE INTENDED LOCATION. THE MINIMUM CONDUCTOR SIZE FOR POWER AND LIGHT CIRCUITS TO BE #12. ALUMINUM CONDUCTORS ARE NOT ALLOWED.
K. ALL DISTRIBUTION AND BRANCH PANELS TO BE PROVIDED WITH MINIMUM 50% SPARE CAPACITY FOR FUTURE LOADS. ALL PANELS TO BE PROVIDED WITH COPPER BUS AND COPPER RATED LUGS. ALUMINUM BUS AND COPPER-ALUMINUM RATED LUGS ARE NOT ALLOWED.
L. ALL DISTRIBUTION AND BRANCH PANELS TO BE PROVIDED WITH MINIMUM 50% SPARE CIRCUIT BREAKER SPACE.
M. ALL DISTRIBUTION TRANSFORMERS TO BE OIL-FILLED WITH FR3 FLUID AND TO HAVE COPPER WINDINGS. REFER TO THE UNIVERSITY OF UTAH SPECIFICATION STANDARDS FOR ADDITIONAL INFORMATION REGARDING IMPEDANCE, TAPS, LOAD-BREAK SWITCHES, AND ALL OTHER ACCESSORIES.

MHTN ARCHITECTS
MHTN Architects, Inc.
420 East South Temple
Suite 100
Salt Lake City, Utah 84111
Telephone (801) 595-6700
Telefax (801) 595-6717
www.mhtn.com

Hastings+Chivetta
ARCHITECTURE • PLANNING • ENGINEERING
622 Emerson, Suite 200
St. Louis, MO 63141
Tel. 314.863.5717
Fax. 314.863.2823
www.hastingschivetta.com

BUILDING OFFICIAL STAMP
Ken Garner Engineering, Inc.
Electrical Engineering Consultants, Inc.
102 West 500 South, Suite 225
Salt Lake City, Utah 84101
P. 801.328.8800
F. 801.328.8802
Contact: Paris LeLaCheur
Project #: 2010-117.00

# UNIVERSITY OF UTAH
## STUDENT LIFE CENTER
1836 E. BALLIF ROAD
SALT LAKE CITY, UTAH 84112

SEAL

MHTN PROJECT NO. 2010562.00
DRAWN BY: Author CHECKED BY: Checker

ISSUED:

| NO. | DATE | DESCRIPTION |
|---|---|---|

CONTRACTOR TO VERIFY DRAWINGS IN FIELD USE REFLECT LAST REVISION DATE.

| NO. | DATE | DESCRIPTION |
|---|---|---|

SHEET NAME
ONE LINE DIAGRAM - 208V

BID DOCUMENTS
May 15, 2013

SHEET NUMBER
EP601

C:\Users\brown.KGE\Documents\2010-117.00_KGE_STUDENT LIFE_ELECTRICAL_CENTERAL_2012_drown.rvt
5/14/2013 5:55:45 PM

## FEEDER SCHEDULE
## SYMBOL CONDUIT & WIRE SIZE

| | |
|---|---|
| 20A | 0.75"C 3#12 |
| 20C | 0.75"C 3"12, 1#12 GRD |
| 20D | 0.75"C 4"12, 1#12 GRD |
| 20E | 0.75"C 4"12, 1#12 GRD, 1#12 ISOLATED GRD |
| 30A | 0.75"C 3#10 |
| 30B | 0.75"C 4#10 |
| 30C | 0.75"C 3#10, 1#10 GRD |
| 30D | 0.75"C 4#10, 1#10 GRD |
| 30E | 0.75"C 4#10, 1#10 GRD, 1#10 ISOLATED GRD |
| 40C | 0.75"C 3#8, 1#10 GRD |
| 40D | 0.75"C 4#8, 1#10 GRD |
| 40E | 0.75"C 4#8, 1#10 GRD, 1#10 ISOLATED GRD |
| 60C | 0.75"C 3#6, 1#10 GRD |
| 60D | 1"C 4#6, 1#10 GRD |
| 60E | 1"C 4#6, 1#10 GRD, 1#10 ISOLATED GRD |
| 70C | 1"C 3#4, 1#8 GRD |
| 70D | 1.25"C 4#4, 1#8 GRD |
| 70E | 1.25"C 4#4, 1#8 GRD, 1#8 ISOLATED GRD |
| 80C | 1.25"C 3#3, 1#8 GRD |
| 80D | 1.25"C 4#3, 1#8 GRD |
| 80E | 1.25"C 4#3, 1#8 GRD, 1#8 ISOLATED GRD |
| 100C | 1.25"C 3#2, 1#8 GRD |
| 100D | 1.25"C 4#2, 1#8 GRD |
| 100E | 1.25"C 4#2, 1#8 GRD, 1#8 ISOLATED GRD |
| 125A | 1.25"C 3#1 |
| 125B | 1.5"C 4#1 |
| 125C | 1.5"C 3#1, 1#6 GRD |
| 125D | 2"C 4#1, 1#6 GRD |
| 125E | 2"C 4#1, 1#6 GRD, 1#6 ISOLATED GRD |
| 150C | 2"C 3#1/0, 1#6 GRD |
| 150D | 2"C 4#1/0, 1#6 GRD |
| 150E | 2"C 4#1/0, 1#6 GRD, 1#6 ISOLATED GRD |
| 175C | 2"C 3#2/0, 1#6 GRD |
| 175D | 2"C 4#2/0, 1#6 GRD |
| 175E | 2"C 4#2/0, 1#6 GRD, 1#6 ISOLATED GRD |
| 200C | 2"C 3#3/0, 1#6 GRD |
| 200D | 2.5"C 4#3/0, 1#6 GRD |
| 200E | 2.5"C 4#3/0, 1#6 GRD, 1#6 ISOLATED GRD |
| 225A | 2"C 3#4/0 |
| 225B | 2.5"C 4#4/0 |
| 225C | 2.5"C 3#4/0, 1#4 GRD |
| 225D | 2.5"C 4#4/0, 1#4 GRD |
| 225E | 2.5"C 4#4/0, 1#4 GRD, 1#4 ISOLATED GRD |
| 250C | 2.5"C 3#250KCM, 1#4 GRD |
| 250D | 3"C 4#250KCM, 1#4 GRD |
| 250E | 3"C 4#250KCM, 1#4 GRD, 1#4 ISOLATED GRD |
| 300C | 3"C 3#350KCM, 1#4 GRD |
| 300D | 3"C 4#350KCM, 1#4 GRD |
| 300E | 3"C 4#350KCM, 1#4 GRD, 1#4 ISOLATED GRD |
| 400C | (2) SETS 2.5"C 3#4/0, 1#3 GRD |
| 400D | (2) SETS 2.5"C 4#4/0, 1#3 GRD |
| 400E | (2) SETS 2.5"C 4#4/0, 1#3 GRD, 1#3 ISOLATED GRD |
| 500C | (2) SETS 2.5"C 3#250KCM, 1#2 GRD |
| 500D | (2) SETS 3"C 4#250KCM, 1#2 GRD |
| 500E | (2) SETS 3"C 4#250KCM, 1#2 GRD, 1#2 ISOLATED GRD |
| 600C | (2) SETS 3"C 3#350KCM, 1#1 GRD |
| 600D | (2) SETS 3.5"C 4#350KCM, 1#1 GRD |
| 600E | (2) SETS 3.5"C 4#350KCM, 1#1 GRD, 1#1 ISOLATED GRD |
| 800C | (3) SETS 3"C 3#350KCM, 1#1/0 GRD |
| 800D | (3) SETS 3.5"C 4#350KCM, 1#1/0 GRD |
| 800E | (3) SETS 3.5"C 4#350KCM, 1#1/0 GRD, 1#1/0 ISOLATED GRD |
| 1000C | (3) SETS 3"C 3#500KCM, 1#2/0 GRD |
| 1000D | (3) SETS 3.5"C 4#500KCM, 1#2/0 GRD |
| 1000E | (3) SETS 3.5"C 4#500KCM, 1#2/0 GRD, 1#2/0 ISOLATED GRD |
| 1200C | (4) SETS 3"C 3#400KCM, 1#3/0 GRD |
| 1200D | (4) SETS 3"C 4#400KCM, 1#3/0 GRD |
| 1200E | (4) SETS 3.5"C 4#400KCM, 1#3/0 GRD, 1#3/0 ISOLATED GRD |
| 1600C | (5) SETS 3"C 3#500KCM, 1#4/0 GRD |
| 1600D | (5) SETS 3.5"C 4#500KCM, 1#4/0 GRD |
| 1600E | (5) SETS 3.5"C 4#500KCM, 1#4/0 GRD, 1#4/0 ISOLATED GRD |
| 2000C | (6) SETS 3"C 3#500KCM, 1#250 GRD |
| 2000D | (6) SETS 3.5"C 4#500KCM, 1#250 GRD |
| 2000E | (6) SETS 3.5"C 4#500KCM, 1#250 GRD, 1#250 ISOLATED GRD |
| 2500D | (8) SETS 3.5"C 4#500KCM, 1#350 GRD |
| 2500E | (8) SETS 4"C 4#500KCM, 1#350 GRD, 1#350 ISOLATED GRD |
| 3000D | (9) SETS 3.5"C 4#500KCM, 1#400 GRD |

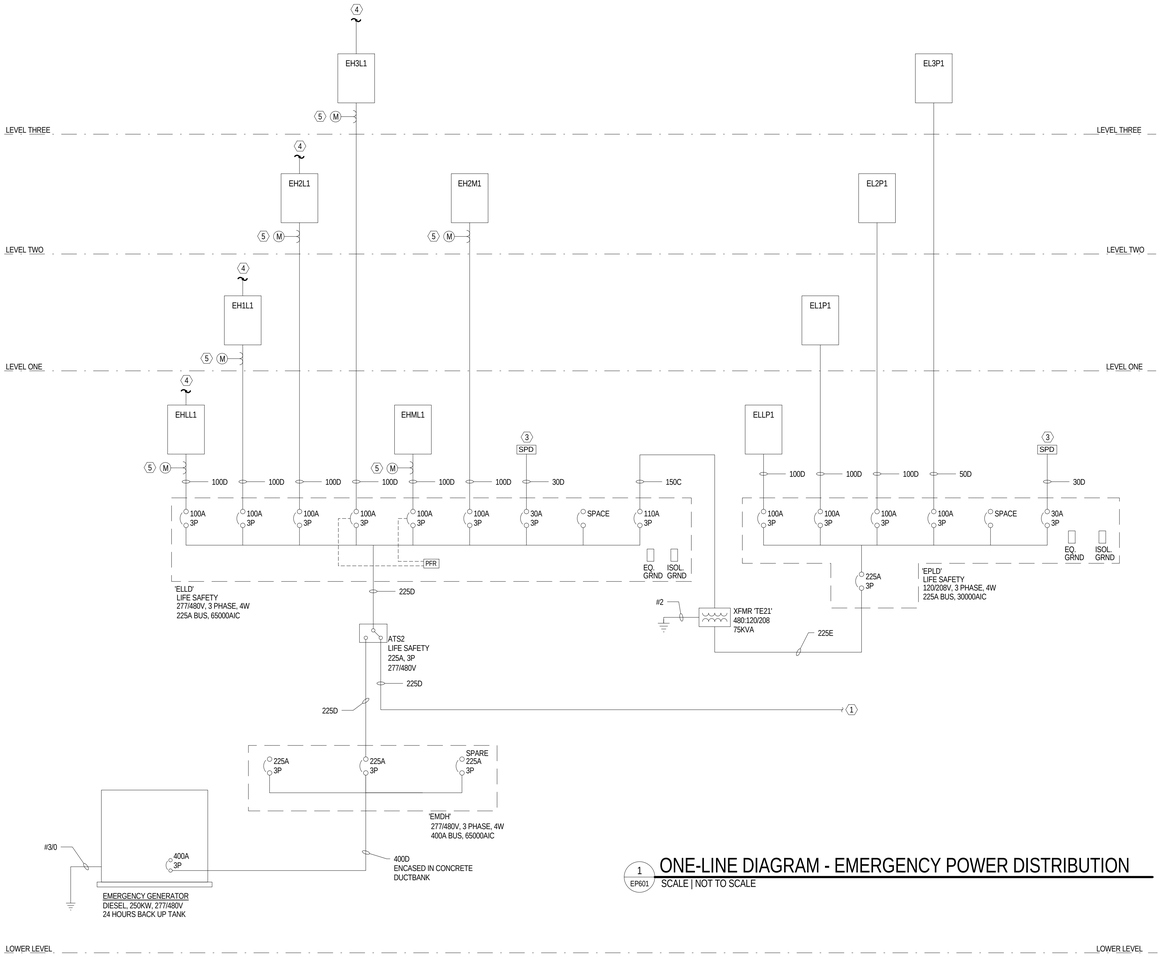


1 EP601 ONE-LINE DIAGRAM - EMERGENCY POWER DISTRIBUTION
SCALE | NOT TO SCALE

## KEYED NOTES - EP602

1. SEE SHEET EP600 FOR CONTINUATION TO NORMAL POWER DISTRIBUTION.
2. SURGE PROTECTION 120/208V.
3. SURGE PROTECTION 277/480V.
4. LIGHTING CONTROL PANEL.
5. PROVIDE POWER METERING FOR LEED MEASUREMENT AND VERIFICATION. PROVIDE ONE GROUP OF THE METERS TO MEASURE ALL MECHANICAL LOADS. PROVIDE SECOND GROUP OF METERS TO MEASURE ALL LIGHTING LOADS. PROVIDE THIRD GROUP OF METERS TO MEASURE ALL OTHER ELECTRICAL LOADS. PROVIDE CURRENT AND POTENTIAL TRANSFORMERS AS REQUIRED. PROVIDE DATA RECORDER AND SOFTWARE FOR DATA RECORDING AND PROCESSING PROVIDE INTERFACE BETWEEN LEED METERING EQUIPMENT AND BUILDING MANAGEMENT SYSTEM.

## GENERAL NOTES - SHEET EP602

A. CONTRACTOR TO ENSURE THAT ALL CORRIDORS OUTSIDE OF CONSTRUCTION AREA ARE KEPT CLEAN AND CLEAR OF DEBRIS AND OBSTRUCTIONS AT ALL TIMES.
B. ALL 120/208V POWER PANELS AND DISTRIBUTION BOARDS TO HAVE EQUIPMENT AND ISOLATED GROUND BUS PER UNIVERSITY STANDARDS.
C. ALL CONDUITS ABOVE GRADE SHOULD BE EMT OR RGC METAL CONDUITS. MINIMUM CONDUIT SIZE SHOULD BE 3/4". INSTALLATION OF THE MC CABLE IS NOT ALLOWED.
D. FLEXIBLE CONDUITS IN LENGTHS GREATER THAN 6 FEET SHOULD NOT BE USED.
E. ALL CONDUCTORS SHOULD BE COPPER WITH CODE APPROVED INSULATION SUITABLE FOR THE INTENDED LOCATION. THE MINIMUM CONDUCTOR SIZE FOR POWER AND LIGHT CIRCUITS TO BE #12. ALUMINUM CONDUCTORS ARE NOT ALLOWED.
F. ALL DISTRIBUTION AND BRANCH PANELS TO BE PROVIDED WITH MINIMUM 50% SPARE CAPACITY FOR FUTURE LOADS. ALL PANELS TO BE PROVIDED WITH COPPER BUS AND COPPER RATED LUGS. ALUMINUM BUS AND COPPER-ALUMINUM RATED LUGS ARE NOT ALLOWED.
G. ALL DISTRIBUTION AND BRANCH PANELS TO BE PROVIDED WITH MINIMUM 50% SPARE CIRCUIT BREAKER SPACE.
H. ALL DISTRIBUTION TRANSFORMERS TO BE OIL-FILLED WITH FR3 FLUID AND TO HAVE COPPER WINDINGS. REFER TO THE UNIVERSITY OF UTAH SPECIFICATION STANDARDS FOR ADDITIONAL INFORMATION REGARDING IMPEDANCE, TAPS, LOAD-BREAK SWITCHES, AND ALL OTHER ACCESSORIES.

## 480V ELECTRICAL LOAD CALCULATION

| | | | |
|---|---|---|---|
| PROJECT NAME: | STUDENT LIFE CENTER | SERVICE VOLTAGE: | 480 |
| PROJECT NUMBER: | 10117 | PHASE & WIRE: | 3Ø-4W |
| SERVICE DESIGNATION: | CS | SERVICE SIZE (AMPS): | 3,000 |

| LOAD DESCRIPTION | CALCULATIONS | | | | CONNECTED LOAD (VA) | DEMAND FACTOR | DEMAND LOAD (VA) |
|---|---|---|---|---|---|---|---|
| BUILDING INTERIOR LIGHTING | 158,922 | FT2 @ | 0.9 | VA/FT2 | 143,030 | 1.25 | 178,787 |
| EXTERIOR SITE LIGHTING | 100,000 | FT2 @ | 0.3 | VA/FT3 | 30,000 | 1.25 | 37,500 |
| POOL EQUIPMENT | 10,812 | FT2 @ | 10 | VA/FT2 | 108,120 | 1.00 | 108,120 |
| MISC POWER | 158,922 | FT2 @ | 2 | VA/FT2 | 317,844 | 1.00 | 317,844 |
| HVAC EQUIPMENT | | | | | | | |
| AIR HANDLERS | 9 | UNIT(S) | 53,000 | VA EACH | 477,000 | 1.00 | 477,000 |
| PUMPS | 15 | UNIT(S) | 19,273 | VA EACH | 289,095 | 1.00 | 289,095 |
| OTHER MISC LOADS | | | | | | | |
| MECH MISC LOAD | 1 | EQUIPMENT | 20,000 | VA EACH | 20,000 | 1.00 | 20,000 |
| KITCHEN | 1 | EQUIPMENT | 10,000 | VA EACH | 10,000 | 1.00 | 10,000 |
| | | | | VA/CKT | 0 | 1.25 | 0 |
| LARGEST MOTOR (25%) | 1 | 50HP | 54,015 | VA | 54,015 | 0.25 | 13,504 |

| | | | | |
|---|---|---|---|---|
| TOTAL DEMAND LOAD | | 1,452 KVA | 1,746 A | |
| FUTURE CAPACITY | 50% | 726 KVA | 873 A | |
| TOTAL CALCULATED LOAD | | 2,178 KVA | 2,619 A | |

## 208V ELECTRICAL LOAD CALCULATION

| | | | |
|---|---|---|---|
| PROJECT NAME: | STUDENT LIFE CENTER | SERVICE VOLTAGE: | 208 |
| PROJECT NUMBER: | 10117 | PHASE & WIRE: | 3Ø-4W |
| SERVICE DESIGNATION: | CS | SERVICE SIZE (AMPS): | 2,500 |

| LOAD DESCRIPTION | CALCULATIONS | | | | CONNECTED LOAD (VA) | DEMAND FACTOR | DEMAND LOAD (VA) |
|---|---|---|---|---|---|---|---|
| BUILDING INTERIOR LIGHTING | 158,922 | FT2 @ | 0.1 | VA/FT2 | 15,892 | 1.25 | 19,865 |
| RECEPTACLES | 158,922 | FT2 @ | 1.5 | VA/FT2 | 238,383 | | |
| | | FIRST | 10,000 | VA | | 1.00 | 10,000 |
| | | REMAINDER | 228,383 | VA | | 0.50 | 114,192 |
| POOL EQUIPMENT | 10,812 | FT2 @ | 1 | VA/FT2 | 10,812 | 1.00 | 10,812 |
| MISC POWER | 158,922 | FT2 @ | 2 | VA/FT2 | 317,844 | 1.00 | 317,844 |
| HVAC EQUIPMENT | | | | | | | |
| AIR HANDLERS | 9 | UNIT(S) | 618 | VA EACH | 5,562 | 1.00 | 5,562 |
| PUMPS | 7 | UNIT(S) | 693 | VA EACH | 4,851 | 1.00 | 4,851 |
| OTHER MISC LOADS | | | | | | | |
| MECH MISC LOAD | 1 | EQUIPMENT | 10,000 | VA EACH | 10,000 | 1.00 | 10,000 |
| KITCHEN | 1 | EQUIPMENT | | VA EACH | 0 | 1.00 | 0 |
| LARGEST MOTOR (25%) | 1 | 1/2HP | 1,176 | VA | 1,176 | 0.25 | 294 |

| | | | | |
|---|---|---|---|---|
| TOTAL DEMAND LOAD | | 493 KVA | 1,370 A | |
| FUTURE CAPACITY | 50% | 247 KVA | 685 A | |
| TOTAL CALCULATED LOAD | | 740 KVA | 2,054 A | |


MHTN ARCHITECTS
MHTN Architects, Inc.
420 East South Temple
Suite 100
Salt Lake City, Utah 84111
Telephone (801) 595-6700
Telefax (801) 595-6717
www.mhtn.com

Hastings+Chivetta
ARCHITECTURE • PLANNING • ENGINEERING
622 Emerson, Suite 200
St. Louis, MO 63141
Tel. 314.863.5717
Fax. 314.863.2823
www.hastingschivetta.com

BUILDING OFFICIAL STAMP
Ken Garner Engineering, Inc.
Electrical Engineering Consultants, Inc.
102 West 500 South, Suite 225
Salt Lake City, Utah 84101
P. 801.328.8800
F. 801.328.8802
Contact: Paris LeLaCheur
Project #: 2010-117.00


UNIVERSITY OF UTAH
STUDENT LIFE CENTER
1836 E. BALLIF ROAD
SALT LAKE CITY, UTAH 84112

SEAL

MHTN PROJECT NO. 2010562.00
DRAWN BY: Author CHECKED BY: Checker

ISSUED:

| NO. | DATE | DESCRIPTION |
|---|---|---|

CONTRACTOR TO VERIFY DRAWINGS IN FIELD USE REFLECT LAST REVISION DATE:

| NO. | DATE | DESCRIPTION |
|---|---|---|

SHEET NAME
EMERGENCY ONE-LINE DIAGRAM
BID DOCUMENTS
May 15, 2013

SHEET NUMBER
EP602

C:\Users\ttrown.KGE\Documents\2010-117.00_KGE_STUDENT LIFE_ELECTRICAL_CENTERAL_2012_ttrown.rvt
5/14/2013 5:55:53 PM

## Branch Panel: EHLL1

**Location:** MAIN ELECTRIC 10F
**Supply From:**
**Mounting:** SURFACE
**Enclosure:** TYPE 1
**Volts:** 480/277 Wye
**Phases:** 3
**Wires:** 4
**A.I.C. Rating:**
**Mains Type:** MB
**Mains Rating:** 225 A
**MCB Rating:**

| CKT | Circuit Description | DF | LOAD | BKR | P | A | | B | | C | | P | BKR | LOAD | DF | Circuit Description | CKT |
|---|---|---|---|---|---|---|---|---|---|---|---|---|---|---|---|---|---|
| 1 | L STAIR #2-2 99B-2 | L | 86 | 20 A | 1 | 86 | 0 | | | | | 1 | 20 A | 0 | L | CUSTODIAL CLOSET | 2 |
| 3 | L STAIR #3 99C | L | 86 | 20 A | 1 | | | 86 | 0 | | | 1 | 0 A | 0 | -- | Spare - ALT. 1B | 4 |
| 5 | CORRIDOR 10 | L | 340 | 20 A | 1 | | | | | 340 | 43 | 1 | 20 A | 43 | L | L | 6 |
| 7 | Spare - ALT. 1B | -- | 0 | 0 A | 1 | 0 | 215 | | | | | 1 | 20 A | 215 | L | L | 8 |
| 9 | Spare - ALT. 1A | -- | 0 | 0 A | 1 | | | 0 | 86 | | | 1 | 20 A | 86 | L | L | 10 |
| 11 | LOCKER ROOM | L | 603 | 20 A | 1 | | | | | 603 | 756 | 1 | 20 A | 753 | L | L | 12 |
| 13 | L | L | 624 | 20 A | 1 | 628 | 2279 | | | | | 1 | 20 A | 2279 | L | CORRIDOR 20 | 14 |
| 15 | L | L | 974 | 20 A | 1 | | | 976 | 47 | | | 1 | 20 A | 47 | L | L | 16 |
| 17 | | | | | | | | | | | | | | | | | 18 |
| 19 | | | | | | | | | | | | | | | | | 20 |
| 21 | | | | | | | | | | | | | | | | | 22 |
| 23 | | | | | | | | | | | | | | | | | 24 |
| 25 | | | | | | | | | | | | | | | | | 26 |
| 27 | | | | | | | | | | | | | | | | | 28 |
| 29 | | | | | | | | | | | | | | | | | 30 |
| 31 | | | | | | | | | | | | | | | | | 32 |
| 33 | | | | | | | | | | | | | | | | | 34 |
| 35 | | | | | | | | | | | | | | | | | 36 |
| 37 | | | | | | | | | | | | | | | | | 38 |
| 39 | | | | | | | | | | | | | | | | | 40 |
| 41 | | | | | | | | | | | | | | | | | 42 |
| | | | | | Total | 3208 | | 1195 | | 1742 | | | | | | | |
| | | | | | Total | 12 A | | 4 A | | 7 A | | | | | | | |

**Legend:**
DEMAND FACTORS: (R-RECEPTACLES 100%<10,000VA, 50%>10,000VA) (L-LIGHTING 125%) (M-MECHANICAL 100%) (C-CONTINUOUS 125%) (K-KITCHEN PER NEC TABLE 220.56) (L-LIGHTING 125%)

| Load Classification | Connected Load | Demand Factor | Estimated | Panel Totals | |
|---|---|---|---|---|---|
| L | 6145 | 125.00% | 7681 | | |
| | | | | Total Conn. Load: | 6145 |
| | | | | Total Est. Demand: | 7681 |
| | | | | Total Conn. Current: | 7 A |
| | | | | Total Est. Demand | 9 A |

**Notes:**

## Branch Panel: ELLP1

**Location:** MAIN ELECTRIC 10F
**Supply From:**
**Mounting:** SURFACE
**Enclosure:** TYPE 1
**Volts:** 120/208 Wye
**Phases:** 3
**Wires:** 4
**A.I.C. Rating:**
**Mains Type:** MB
**Mains Rating:** 225 A
**MCB Rating:**

| CKT | Circuit Description | DF | LOAD | BKR | P | A | | B | | C | | P | BKR | LOAD | DF | Circuit Description | CKT |
|---|---|---|---|---|---|---|---|---|---|---|---|---|---|---|---|---|---|
| 1 | 'FACP' RM 7 | -- | 500 | 20 A | 1 | 500 | 1000 | | | | | 2 | 20 A | 2000 | R | UPS BACKUP | 2 |
| 3 | 'SEC' RM 7 | -- | 500 | 20 A | 1 | | | 500 | 1000 | | | | | | | | 4 |
| 5 | FIRE SMOKE DAMPER | M | 560 | 20 A | 1 | | | | | 560 | 1000 | 2 | 20 A | 2000 | R | UPS BACKUP | 6 |
| 7 | RECEPTACLES | R | 180 | 20 A | 1 | 180 | 1000 | | | | | | | | | | 8 |
| 9 | RECEPTACLES | R | 720 | 20 A | 1 | | | 720 | 180 | | | 1 | 20 A | 180 | R | RECEPTACLES | 10 |
| 11 | RECEPT. TRANS. | R | 180 | 20 A | 1 | | | | | 180 | | | | | | | 12 |
| 13 | RECEPT. TRANS. | R | 180 | 20 A | 1 | 180 | | | | | | | | | | | 14 |
| 15 | | | | | | | | | | | | | | | | | 16 |
| 17 | | | | | | | | | | | | | | | | | 18 |
| 19 | | | | | | | | | | | | | | | | | 20 |
| 21 | | | | | | | | | | | | | | | | | 22 |
| 23 | | | | | | | | | | | | | | | | | 24 |
| 25 | | | | | | | | | | | | | | | | | 26 |
| 27 | | | | | | | | | | | | | | | | | 28 |
| 29 | | | | | | | | | | | | | | | | | 30 |
| 31 | | | | | | | | | | | | | | | | | 32 |
| 33 | | | | | | | | | | | | | | | | | 34 |
| 35 | | | | | | | | | | | | | | | | | 36 |
| 37 | | | | | | | | | | | | | | | | | 38 |
| 39 | | | | | | | | | | | | | | | | | 40 |
| 41 | | | | | | | | | | | | | | | | | 42 |
| | | | | | Total | 2860 | | 2400 | | 1740 | | | | | | | |
| | | | | | Total | 25 A | | 21 A | | 15 A | | | | | | | |

**Legend:**
DEMAND FACTORS: (R-RECEPTACLES 100%<10,000VA, 50%>10,000VA) (L-LIGHTING 125%) (M-MECHANICAL 100%) (C-CONTINUOUS 125%) (K-KITCHEN PER NEC TABLE 220.56) (L-LIGHTING 125%)

| Load Classification | Connected Load | Demand Factor | Estimated | Panel Totals | |
|---|---|---|---|---|---|
| R | 5440 | 100.00% | 5440 | | |
| M | 560 | 100.00% | 560 | | |
| | | | | Total Conn. Load: | 7000 |
| | | | | Total Est. Demand: | 7000 |
| | | | | Total Conn. Current: | 19 A |
| | | | | Total Est. Demand | 19 A |

**Notes:**

## Branch Panel: HL11

**Location:** MAIN ELECTRIC 10F
**Supply From:**
**Mounting:** SURFACE
**Enclosure:** TYPE 1
**Volts:** 480/277 Wye
**Phases:** 3
**Wires:** 4
**A.I.C. Rating:**
**Mains Type:** MB
**Mains Rating:** 225 A
**MCB Rating:**

| CKT | Circuit Description | DF | LOAD | BKR | P | A | | B | | C | | P | BKR | LOAD | DF | Circuit Description | CKT |
|---|---|---|---|---|---|---|---|---|---|---|---|---|---|---|---|---|---|
| 1 | L IM OFFICE-1 6-1 | L | 0 | 20 A | 1 | 0 | 0 | | | | | 1 | 20 A | 0 | L | LOWER LEVEL ROOMS | 2 |
| 3 | CORRIDOR LIGHTING | L | 1579 | 20 A | 1 | | | 1585 | 470 | | | 1 | 20 A | 470 | L | CRS STORAGE 45A | 4 |
| 5 | Spare - ALT. 1B | -- | 0 | 0 A | 1 | | | | | 0 | 327 | 1 | 20 A | 327 | L | SHOWERS | 6 |
| 7 | Spare - ALT. 1B | -- | 0 | 0 A | 1 | 0 | 669 | | | | | 1 | 20 A | 665 | L | L | 8 |
| 9 | Spare - ALT. 1B | -- | 0 | 0 A | 1 | | | 0 | 0 | | | 1 | 0 A | 0 | -- | Spare - ALT. 1A | 10 |
| 11 | | | | | | | | | | | | | | | | | 12 |
| 13 | | | | | | | | | | | | | | | | | 14 |
| 15 | | | | | | | | | | | | | | | | | 16 |
| 17 | | | | | | | | | | | | | | | | | 18 |
| 19 | | | | | | | | | | | | | | | | | 20 |
| 21 | | | | | | | | | | | | | | | | | 22 |
| 23 | | | | | | | | | | | | | | | | | 24 |
| 25 | | | | | | | | | | | | | | | | | 26 |
| 27 | | | | | | | | | | | | | | | | | 28 |
| 29 | | | | | | | | | | | | | | | | | 30 |
| 31 | | | | | | | | | | | | | | | | | 32 |
| 33 | | | | | | | | | | | | | | | | | 34 |
| 35 | | | | | | | | | | | | | | | | | 36 |
| 37 | | | | | | | | | | | | | | | | | 38 |
| 39 | | | | | | | | | | | | | | | | | 40 |
| 41 | | | | | | | | | | | | | | | | | 42 |
| | | | | | Total | 669 | | 2055 | | 327 | | | | | | | |
| | | | | | Total | 3 A | | 8 A | | 1 A | | | | | | | |

**Legend:**
DEMAND FACTORS: (R-RECEPTACLES 100%<10,000VA, 50%>10,000VA) (L-LIGHTING 125%) (M-MECHANICAL 100%) (C-CONTINUOUS 125%) (K-KITCHEN PER NEC TABLE 220.56) (L-LIGHTING 125%)

| Load Classification | Connected Load | Demand Factor | Estimated | Panel Totals | |
|---|---|---|---|---|---|
| L | 3051 | 125.00% | 3814 | | |
| | | | | Total Conn. Load: | 3051 |
| | | | | Total Est. Demand: | 3814 |
| | | | | Total Conn. Current: | 4 A |
| | | | | Total Est. Demand | 5 A |

**Notes:**

## Branch Panel: HL12

**Location:** MAIN ELECTRIC 10F
**Supply From:**
**Mounting:** SURFACE
**Enclosure:** TYPE 1
**Volts:** 120/208 Wye
**Phases:** 3
**Wires:** 4
**A.I.C. Rating:**
**Mains Type:** MB
**Mains Rating:** 225 A
**MCB Rating:**

| CKT | Circuit Description | DF | LOAD | BKR | P | A | | B | | C | | P | BKR | LOAD | DF | Circuit Description | CKT |
|---|---|---|---|---|---|---|---|---|---|---|---|---|---|---|---|---|---|
| 1 | | | | | | | | | | | | | | | | | 2 |
| 3 | | | | | | | | | | | | | | | | | 4 |
| 5 | | | | | | | | | | | | | | | | | 6 |
| 7 | | | | | | | | | | | | | | | | | 8 |
| 9 | | | | | | | | | | | | | | | | | 10 |
| 11 | | | | | | | | | | | | | | | | | 12 |
| 13 | | | | | | | | | | | | | | | | | 14 |
| 15 | | | | | | | | | | | | | | | | | 16 |
| 17 | | | | | | | | | | | | | | | | | 18 |
| 19 | | | | | | | | | | | | | | | | | 20 |
| 21 | | | | | | | | | | | | | | | | | 22 |
| 23 | | | | | | | | | | | | | | | | | 24 |
| 25 | | | | | | | | | | | | | | | | | 26 |
| 27 | | | | | | | | | | | | | | | | | 28 |
| 29 | | | | | | | | | | | | | | | | | 30 |
| 31 | | | | | | | | | | | | | | | | | 32 |
| 33 | | | | | | | | | | | | | | | | | 34 |
| 35 | | | | | | | | | | | | | | | | | 36 |
| 37 | | | | | | | | | | | | | | | | | 38 |
| 39 | | | | | | | | | | | | | | | | | 40 |
| 41 | | | | | | | | | | | | | | | | | 42 |
| | | | | | Total | 0 | | 0 | | 0 | | | | | | | |
| | | | | | Total | 0 A | | 0 A | | 0 A | | | | | | | |

**Legend:**
DEMAND FACTORS: (R-RECEPTACLES 100%<10,000VA, 50%>10,000VA) (L-LIGHTING 125%) (M-MECHANICAL 100%) (C-CONTINUOUS 125%) (K-KITCHEN PER NEC TABLE 220.56) (L-LIGHTING 125%)

| Load Classification | Connected Load | Demand Factor | Estimated | Panel Totals | |
|---|---|---|---|---|---|
| | | | | Total Conn. Load: | 0 |
| | | | | Total Est. Demand: | 0 |
| | | | | Total Conn. Current: | 0 A |
| | | | | Total Est. Demand | 0 A |

**Notes:**

## Branch Panel: HLM1

**Location:**
**Supply From:**
**Mounting:** SURFACE
**Enclosure:** TYPE 1
**Volts:** 480/277 Wye
**Phases:** 3
**Wires:** 4
**A.I.C. Rating:**
**Mains Type:** MB
**Mains Rating:** 225 A
**MCB Rating:**

| CKT | Circuit Description | DF | LOAD | BKR | P | A | | B | | C | | P | BKR | LOAD | DF | Circuit Description | CKT |
|---|---|---|---|---|---|---|---|---|---|---|---|---|---|---|---|---|---|
| 1 | | | | | | 3047 | 3047 | | | | | | | | | | 2 |
| 3 | M | M | 9141 | 20 A | 3 | | | 3047 | 3047 | | | 3 | 20 A | 9141 | M | M | 4 |
| 5 | | | | | | | | | | 3047 | 3047 | | | | | | 6 |
| 7 | | | | | | 0 | 582 | | | | | | | | | | 8 |
| 9 | J-BOX | M | 0 | 20 A | 3 | | | 0 | 582 | | | 3 | 20 A | 1745 | M | 28B 8,10,12 | 10 |
| 11 | | | | | | | | | | 0 | 582 | | | | | | 12 |
| 13 | | | | | | 0 | | | | | | | | | | | 14 |
| 15 | J-BOX | M | 0 | 20 A | 3 | | | 0 | | | | | | | | | 16 |
| 17 | | | | | | | | | | 0 | | | | | | | 18 |
| 19 | | | | | | | | | | | | | | | | | 20 |
| 21 | | | | | | | | | | | | | | | | | 22 |
| 23 | | | | | | | | | | | | | | | | | 24 |
| 25 | | | | | | | | | | | | | | | | | 26 |
| 27 | | | | | | | | | | | | | | | | | 28 |
| 29 | | | | | | | | | | | | | | | | | 30 |
| 31 | | | | | | | | | | | | | | | | | 32 |
| 33 | | | | | | | | | | | | | | | | | 34 |
| 35 | | | | | | | | | | | | | | | | | 36 |
| 37 | | | | | | | | | | | | | | | | | 38 |
| 39 | | | | | | | | | | | | | | | | | 40 |
| 41 | | | | | | | | | | | | | | | | | 42 |
| | | | | | Total | 6676 | | 6676 | | 6676 | | | | | | | |
| | | | | | Total | 24 A | | 24 A | | 24 A | | | | | | | |

**Legend:**
DEMAND FACTORS: (R-RECEPTACLES 100%<10,000VA, 50%>10,000VA) (L-LIGHTING 125%) (M-MECHANICAL 100%) (C-CONTINUOUS 125%) (K-KITCHEN PER NEC TABLE 220.56) (L-LIGHTING 125%)

| Load Classification | Connected Load | Demand Factor | Estimated | Panel Totals | |
|---|---|---|---|---|---|
| M | 20027 | 100.00% | 20027 | | |
| | | | | Total Conn. Load: | 20027 |
| | | | | Total Est. Demand: | 20027 |
| | | | | Total Conn. Current: | 24 A |
| | | | | Total Est. Demand | 24 A |

**Notes:**

## Branch Panel: HLM2

**Location:** MECHANICAL 85
**Supply From:**
**Mounting:** SURFACE
**Enclosure:** TYPE 1
**Volts:** 480/277 Wye
**Phases:** 3
**Wires:** 4
**A.I.C. Rating:**
**Mains Type:** ML
**Mains Rating:** 225 A
**MCB Rating:**

| CKT | Circuit Description | DF | LOAD | BKR | P | A | | B | | C | | P | BKR | LOAD | DF | Circuit Description | CKT |
|---|---|---|---|---|---|---|---|---|---|---|---|---|---|---|---|---|---|
| 1 | | | | | | 2327 | 8421 | | | | | | | | | | 2 |
| 3 | AH-1 RELIEF FANS | M | 6980 | 20 A | 3 | | | 2327 | 8421 | | | 3 | 20 A | 25264 | M | AH-1 SUPPLY FANS | 4 |
| 5 | | | | | | | | | | 2327 | 8421 | | | | | | 6 |
| 7 | | | | | | 0 | 0 | | | | | | | | | | 8 |
| 9 | AH-1 REDUNDANT VFD | M | 0 | 20 A | 3 | | | 0 | 0 | | | 3 | 20 A | 0 | M | AH-1 REDUNDANT VFD | 10 |
| 11 | | | | | | | | | | 0 | 0 | | | | | | 12 |
| 13 | | | | | | 2642 | 12632 | | | | | | | | | | 14 |
| 15 | AH-2 RELIEF FANS | M | 7926 | 20 A | 3 | | | 2642 | 12632 | | | 3 | 60 A | 37896 | M | AH-2 SUPPLY FANS | 16 |
| 17 | | | | | | | | | | 2642 | 12632 | | | | | | 18 |
| 19 | | | | | | 0 | 0 | | | | | | | | | | 20 |
| 21 | AH-2 REDUNDANT VFD | M | 0 | 20 A | 3 | | | 0 | 0 | | | 3 | 20 A | 0 | M | AH-2 REDUNDANT VFD | 22 |
| 23 | | | | | | | | | | 0 | 0 | | | | | | 24 |
| 25 | | | | | | 887 | 2659 | | | | | | | | | | 26 |
| 27 | AH-9 RELIEF FANS | M | 2660 | 20 A | 3 | | | 887 | 2659 | | | 3 | 20 A | 7976 | M | AH-9 SUPPLY FANS | 28 |
| 29 | | | | | | | | | | 887 | 2659 | | | | | | 30 |
| 31 | | | | | | | | | | | | | | | | | 32 |
| 33 | | | | | | | | | | | | | | | | | 34 |
| 35 | | | | | | | | | | | | | | | | | 36 |
| 37 | | | | | | | | | | | | | | | | | 38 |
| 39 | | | | | | | | | | | | | | | | | 40 |
| 41 | | | | | | | | | | | | | | | | | 42 |
| | | | | | Total | 29567 | | 29567 | | 29567 | | | | | | | |
| | | | | | Total | 107 A | | 107 A | | 107 A | | | | | | | |

**Legend:**
DEMAND FACTORS: (R-RECEPTACLES 100%<10,000VA, 50%>10,000VA) (L-LIGHTING 125%) (M-MECHANICAL 100%) (C-CONTINUOUS 125%) (K-KITCHEN PER NEC TABLE 220.56) (L-LIGHTING 125%)

| Load Classification | Connected Load | Demand Factor | Estimated | Panel Totals | |
|---|---|---|---|---|---|
| M | 88702 | 100.00% | 88702 | | |
| | | | | Total Conn. Load: | 88702 |
| | | | | Total Est. Demand: | 88702 |
| | | | | Total Conn. Current: | 107 A |
| | | | | Total Est. Demand | 107 A |

**Notes:**

## Branch Panel: HLM3

**Location:** MECHANICAL 85
**Supply From:**
**Mounting:** SURFACE
**Enclosure:** TYPE 1
**Volts:** 480/277 Wye
**Phases:** 3
**Wires:** 4
**A.I.C. Rating:**
**Mains Type:** ML
**Mains Rating:** 600 A
**MCB Rating:**

| CKT | Circuit Description | DF | LOAD | BKR | P | A | | B | | C | | P | BKR | LOAD | DF | Circuit Description | CKT |
|---|---|---|---|---|---|---|---|---|---|---|---|---|---|---|---|---|---|
| 1 | | | | | | 18005 | 18005 | | | | | | | | | | 2 |
| 3 | HWP-01 | M | 54015 | 100 A | 3 | | | 18005 | 18005 | | | 3 | 100 A | 54015 | M | HWP-02 | 4 |
| 5 | | | | | | | | | | 18005 | 18005 | | | | | | 6 |
| 7 | | | | | | 5817 | 5817 | | | | | | | | | | 8 |
| 9 | HWP-03 | M | 17451 | 60 A | 3 | | | 5817 | 5817 | | | 3 | 60 A | 17451 | M | HWP-04 | 10 |
| 11 | | | | | | | | | | 5817 | 5817 | | | | | | 12 |
| 13 | | | | | | 7479 | 7479 | | | | | | | | | | 14 |
| 15 | HWP-05 | M | 22437 | 20 A | 3 | | | 7479 | 7479 | | | 3 | 20 A | 22437 | M | HWP-06 | 16 |
| 17 | | | | | | | | | | 7479 | 7479 | | | | | | 18 |
| 19 | | | | | | 22437 | 22437 | | | | | | | | | | 20 |
| 21 | CHWP-1 | M | 67311 | 40 A | 3 | | | 22437 | 22437 | | | 3 | 40 A | 67311 | M | CHWP-02 | 22 |
| 23 | | | | | | | | | | 22437 | 22437 | | | | | | 24 |
| 25 | | | | | | | | | | | | | | | | | 26 |
| 27 | | | | | | | | | | | | | | | | | 28 |
| 29 | | | | | | | | | | | | | | | | | 30 |
| 31 | | | | | | | | | | | | | | | | | 32 |
| 33 | | | | | | | | | | | | | | | | | 34 |
| 35 | | | | | | | | | | | | | | | | | 36 |
| 37 | | | | | | | | | | | | | | | | | 38 |
| 39 | | | | | | | | | | | | | | | | | 40 |
| 41 | | | | | | | | | | | | | | | | | 42 |
| | | | | | Total | 107476 | | 107476 | | 107476 | | | | | | | |
| | | | | | Total | 388 A | | 388 A | | 388 A | | | | | | | |

**Legend:**
DEMAND FACTORS: (R-RECEPTACLES 100%<10,000VA, 50%>10,000VA) (L-LIGHTING 125%) (M-MECHANICAL 100%) (C-CONTINUOUS 125%) (K-KITCHEN PER NEC TABLE 220.56) (L-LIGHTING 125%)

| Load Classification | Connected Load | Demand Factor | Estimated | Panel Totals | |
|---|---|---|---|---|---|
| M | 322428 | 100.00% | 322428 | | |
| | | | | Total Conn. Load: | 322428 |
| | | | | Total Est. Demand: | 322428 |
| | | | | Total Conn. Current: | 388 A |
| | | | | Total Est. Demand | 388 A |

**Notes:**

## Branch Panel: LLP1

**Location:** MAIN ELECTRIC 10F
**Supply From:**
**Mounting:** SURFACE
**Enclosure:** TYPE 1
**Volts:** 120/208 Wye
**Phases:** 3
**Wires:** 4
**A.I.C. Rating:**
**Mains Type:** ML
**Mains Rating:** 250 A
**MCB Rating:**

| CKT | Circuit Description | DF | LOAD | BKR | P | A | | B | | C | | P | BKR | LOAD | DF | Circuit Description | CKT |
|---|---|---|---|---|---|---|---|---|---|---|---|---|---|---|---|---|---|
| 1 | RECEPTACLES | R | 1440 | 20 A | 1 | 1440 | 1440 | | | | | 1 | 20 A | 1440 | R | R CORRIDOR 20 | 2 |
| 3 | RECEPTACLES | R | 720 | 20 A | 1 | | | 720 | | | | | | | | | 4 |
| 5 | RECEPTACLES | R | 540 | 20 A | 1 | | | | | 540 | 180 | 1 | 20 A | 180 | R | VENDING 5B | 6 |
| 7 | RECEPTACLES | R | 1260 | 20 A | 1 | 1260 | 180 | | | | | 1 | 20 A | 180 | R | VENDING 5B | 8 |
| 9 | RECEPTACLES | R | 1080 | 20 A | 1 | | | 1080 | 180 | | | 1 | 20 A | 180 | R | VENDING 5B | 10 |
| 11 | RECEPTACLES TR | R | 720 | 20 A | 1 | | | | | 720 | 540 | 1 | 20 A | 540 | R | RECEPTACLES | 12 |
| 13 | HYDRO EQUIPMENT | R | 180 | 20 A | 1 | 180 | 1080 | | | | | 1 | 20 A | 1080 | R | RECEPTACLES | 14 |
| 15 | RECEPTACLES | R | 540 | 20 A | 1 | | | 540 | 360 | | | 1 | 20 A | 360 | R | RADIO CHARGER | 16 |
| 17 | RECEPTACLES | R | 900 | 20 A | 1 | | | | | 900 | 720 | 1 | 20 A | 720 | R | RADIOTIME CLOCK | 18 |
| 19 | | | | | | | | | | | | | | | | | 20 |
| 21 | TR ROOM EQUIPMENT | R | 180 | 20 A | 1 | | | 180 | | | | | | | | | 22 |
| 23 | TR ROOM EQUIPMENT | R | 540 | 20 A | 1 | | | | | 540 | | | | | | | 24 |
| 25 | TR ROOM EQUIPMENT | R | 180 | 20 A | 1 | 180 | | | | | | | | | | | 26 |
| 27 | TR ROOM EQUIPMENT | R | 360 | 20 A | 1 | | | 360 | | | | | | | | | 28 |
| 29 | TR ROOM EQUIPMENT | R | 360 | 20 A | 1 | | | | | 360 | | | | | | | 30 |
| 31 | | | | | | | | | | | | | | | | | 32 |
| 33 | | | | | | | | | | | | | | | | | 34 |
| 35 | | | | | | | | | | | | | | | | | 36 |
| 37 | | | | | | | | | | | | | | | | | 38 |
| 39 | | | | | | | | | | | | | | | | | 40 |
| 41 | | | | | | | | | | | | | | | | | 42 |
| | | | | | Total | 5760 | | 3420 | | 4500 | | | | | | | |
| | | | | | Total | 49 A | | 29 A | | 39 A | | | | | | | |

**Legend:**
DEMAND FACTORS: (R-RECEPTACLES 100%<10,000VA, 50%>10,000VA) (L-LIGHTING 125%) (M-MECHANICAL 100%) (C-CONTINUOUS 125%) (K-KITCHEN PER NEC TABLE 220.56) (L-LIGHTING 125%)

| Load Classification | Connected Load | Demand Factor | Estimated | Panel Totals | |
|---|---|---|---|---|---|
| R | 13680 | 86.55% | 11840 | | |
| | | | | Total Conn. Load: | 13680 |
| | | | | Total Est. Demand: | 11840 |
| | | | | Total Conn. Current: | 38 A |
| | | | | Total Est. Demand | 33 A |

**Notes:**

## Branch Panel: LLP2

**Location:** MAIN ELECTRIC 10F
**Supply From:**
**Mounting:** SURFACE
**Enclosure:** TYPE 1
**Volts:** 120/208 Wye
**Phases:** 3
**Wires:** 4
**A.I.C. Rating:**
**Mains Type:** ML
**Mains Rating:** 250 A
**MCB Rating:**

| CKT | Circuit Description | DF | LOAD | BKR | P | A | | B | | C | | P | BKR | LOAD | DF | Circuit Description | CKT |
|---|---|---|---|---|---|---|---|---|---|---|---|---|---|---|---|---|---|
| 1 | TEAM BOX RECEPT | R | 720 | 20 A | 1 | 720 | 720 | | | | | 1 | 20 A | 720 | R | RECEPTACLES | 2 |
| 3 | BACKBOARD MOTOR | M | 0 | 20 A | 1 | | | 0 | 540 | | | 1 | 20 A | 540 | R | RECEPTACLES | 4 |
| 5 | RECEPTACLES | R | 1080 | 20 A | 1 | | | | | 1080 | 180 | 1 | 20 A | 180 | R | WASHER | 6 |
| 7 | BACKBOARD MOTOR | M | 0 | 20 A | 1 | 0 | 180 | | | | | 1 | 20 A | 180 | R | WASHER | 8 |
| 9 | SCOREBOARD POWER | R | 720 | 20 A | 1 | | | 720 | 180 | | | 2 | 20 A | 360 | R | DRYER | 10 |
| 11 | COMPUTERS | R | 720 | 20 A | 1 | | | | | 720 | 180 | | | | | | 12 |
| 13 | COMPUTERS | R | 1080 | 20 A | 1 | 1080 | 180 | | | | | 2 | 20 A | 360 | R | DRYER | 14 |
| 15 | T.V. RECEPTACLES | R | 540 | 20 A | 1 | | | 540 | 180 | | | | | | | | 16 |
| 17 | REFRIDGERATOR | R | 180 | 20 A | 1 | | | | | 180 | 180 | 1 | 20 A | 180 | R | T.V. RECEPTACLE | 18 |
| 19 | A/V EQUIPMENT | R | 180 | 20 A | 1 | 180 | 540 | | | | | 1 | 20 A | 540 | R | RECEPTACLES | 20 |
| 21 | A/V EQUIPMENT | R | 180 | 20 A | 1 | | | 180 | 180 | | | 1 | 20 A | 180 | R | MICROWAVE | 22 |
| 23 | RECEPTACLES | R | 540 | 20 A | 1 | | | | | 540 | | | | | | | 24 |
| 25 | | | | | | | 1080 | | | | | 1 | 20 A | 1080 | R | RECEPTACLES | 26 |
| 27 | | | | | | | | | 720 | | | 1 | 20 A | 720 | R | RECEPTACLES | 28 |
| 29 | | | | | | | | | | | | | | | | | 30 |
| 31 | | | | | | | | | | | | | | | | | 32 |
| 33 | | | | | | | | | | | | | | | | | 34 |
| 35 | | | | | | | | | | | | | | | | | 36 |
| 37 | | | | | | | | | | | | | | | | | 38 |
| 39 | | | | | | | | | | | | | | | | | 40 |
| 41 | | | | | | | | | | | | | | | | | 42 |
| | | | | | Total | 4680 | | 3240 | | 3060 | | | | | | | |
| | | | | | Total | 39 A | | 27 A | | 26 A | | | | | | | |

**Legend:**
DEMAND FACTORS: (R-RECEPTACLES 100%<10,000VA, 50%>10,000VA) (L-LIGHTING 125%) (M-MECHANICAL 100%) (C-CONTINUOUS 125%) (K-KITCHEN PER NEC TABLE 220.56) (L-LIGHTING 125%)

| Load Classification | Connected Load | Demand Factor | Estimated | Panel Totals | |
|---|---|---|---|---|---|
| R | 10980 | 95.54% | 10490 | | |
| M | 0 | 0.00% | 0 | Total Conn. Load: | 10980 |
| | | | | Total Est. Demand: | 10490 |
| | | | | Total Conn. Current: | 30 A |
| | | | | Total Est. Demand | 29 A |

**Notes:**


MHTN ARCHITECTS
**MHTN Architects, Inc.**
420 East South Temple
Suite 100
Salt Lake City, Utah 84111
Telephone (801) 595-6700
Telefax (801) 595-6717
www.mhtn.com

**Hastings+Chivetta**
ARCHITECTURE • PLANNING • ENGINEERING
622 Emerson, Suite 200
St. Louis, MO 63141
Tel. 314.863.5717
Fax. 314.863.2823
www.hastingschivetta.com

BUILDING OFFICIAL STAMP
Ken Garner Engineering, Inc.
Electrical Engineering Consultants, Inc.
102 West 500 South, Suite 225
Salt Lake City, Utah 84101
P. 801.328.8800
F. 801.328.8802
Contact: Paris LeLaCheur
Project #: 2010-117.00


UNIVERSITY OF UTAH
STUDENT LIFE CENTER
1836 E. BALLIF ROAD
SALT LAKE CITY, UTAH 84112

SEAL

MHTN PROJECT NO. 2010562.00
DRAWN BY: KGE CHECKED BY: KGE

ISSUED

| NO. | DATE | DESCRIPTION |
|---|---|---|

CONTRACTOR TO VERIFY DRAWINGS IN FIELD USE REFLECT LAST REVISION DATE.

| NO. | DATE | DESCRIPTION |
|---|---|---|

SHEET NAME
PANEL SCHEDULES
LOWER LEVEL
BID DOCUMENTS
May 15, 2013

SHEET NUMBER
EP603

C:\Users\lbrown\KGE\Documents\2010-117.00_KGE_STUDENT LIFE_ELECTRICAL_CENTERAL_2012_rbrown.rvt
5/14/2013 5:56:01 PM

## Branch Panel: LLP3

**Location:** MAIN ELECTRIC 10F
**Supply From:**
**Mounting:** SURFACE
**Enclosure:** TYPE 1
**Volts:** 120/208 Wye
**Phases:** 3
**Wires:** 4
**A.I.C. Rating:**
**Mains Type:** ML
**Mains Rating:** 250 A
**MCB Rating:**

| CKT | Circuit Description | DF | LOAD | BKR | P | A | | B | | C | | P | BKR | LOAD | DF | Circuit Description | CKT |
|---|---|---|---|---|---|---|---|---|---|---|---|---|---|---|---|---|---|
| 1 | RECEPTACLES | R | 540 | 20 A | 1 | 540 | 900 | | | | | 1 | 20 A | 900 | R | RECEPTACLES | 2 |
| 3 | RECEPTACLES | R | 720 | 20 A | 1 | | | 720 | 720 | | | 1 | 20 A | 720 | R | RECEPTACLES | 4 |
| 5 | RECEPTACLES | R | 1080 | 20 A | 1 | | | | | 1080 | 540 | 1 | 20 A | 540 | R | RECEPTACLES | 6 |
| 7 | RECEPTACLES | R | 360 | 20 A | 1 | 360 | 360 | | | | | 1 | 20 A | 360 | R | RECEPTACLES | 8 |
| 9 | RECEPTACLES | R | 1080 | 20 A | 1 | | | 1080 | 900 | | | 1 | 20 A | 900 | R | RECEPTACLES | 10 |
| 11 | RECEPTACLES | R | 360 | 20 A | 1 | | | | | 360 | 180 | 1 | 20 A | 180 | R | EWC | 12 |
| 13 | RECEPTACLES | R | 720 | 20 A | 1 | 720 | | | | | | | | | | | 14 |
| 15 | CLOCK | C | 500 | 20 A | 1 | | | 500 | | | | | | | | | 16 |
| 17 | L | L | 0 | 20 A | 1 | | | | | 18 | 360 | 1 | 20 A | 360 | R | RECEPTACLES | 18 |
| 19 | R | R | 360 | 20 A | 1 | 360 | | | | | | | | | | | 20 |
| 21 | | | | | | | | | | | | | | | | | 22 |
| 23 | | | | | | | | | | | | | | | | | 24 |
| 25 | | | | | | | | | | | | | | | | | 26 |
| 27 | | | | | | | | | | | | | | | | | 28 |
| 29 | | | | | | | | | | | | | | | | | 30 |
| 31 | | | | | | | | | | | | | | | | | 32 |
| 33 | | | | | | | | | | | | | | | | | 34 |
| 35 | | | | | | | | | | | | | | | | | 36 |
| 37 | | | | | | | | | | | | | | | | | 38 |
| 39 | | | | | | | | | | | | | | | | | 40 |
| 41 | | | | | | | | | | | | | | | | | 42 |
| | | | | | **Total** | 3240 | | 3920 | | 2538 | | | | | | | |
| | | | | | **Total** | 28 A | | 34 A | | 21 A | | | | | | | |

**Legend:**
DEMAND FACTORS: (R-RECEPTACLES 100%<10,000VA, 50%>10,000VA) (L-LIGHTING 125%) (M-MECHANICAL 100%) (C-CONTINUOUS 125%) (K-KITCHEN PER NEC TABLE 220.56) (L-LIGHTING 125%)

| Load Classification | Connected Load | Demand Factor | Estimated | Panel Totals | |
|---|---|---|---|---|---|
| R | 9180 | 100.00% | 9180 | | |
| L | 18 | 125.00% | 22 | **Total Conn. Load:** | 9698 |
| C | 500 | 100.00% | 500 | **Total Est. Demand:** | 9702 |
| | | | | **Total Conn. Current:** | 27 A |
| | | | | **Total Est. Demand** | 27 A |

**Notes:**

## Branch Panel: LLP4

**Location:**
**Supply From:**
**Mounting:** SURFACE
**Enclosure:** TYPE 1
**Volts:** 120/240 Single
**Phases:** 1
**Wires:** 3
**A.I.C. Rating:**
**Mains Type:** MB
**Mains Rating:** 100 A
**MCB Rating:**

| CKT | Circuit Description | DF | LOAD | BKR | P | A | | B | | P | BKR | LOAD | DF | Circuit Description | CKT |
|---|---|---|---|---|---|---|---|---|---|---|---|---|---|---|---|
| 1 | 1A | R | 1000 | 20 A | 1 | 1000 | | | | | | | | | 2 |
| 3 | RECEPTACLES RM 45B | R | 360 | 20 A | 1 | | | 360 | 180 | 1 | 20 A | 180 | R | RECEPTACLES RM 45B | 4 |
| 5 | 31A 5 | R | 0 | 20 A | 1 | 0 | 2040 | | | 2 | 30 A | 4080 | M | 12A 6,8 | 6 |
| 7 | | | | | | | | | 2040 | | | | | | 8 |
| 9 | RECEPTACLES RM 45B | R | 180 | 20 A | 1 | 180 | 2040 | | | 2 | 30 A | 4080 | M | 12B 10,12 | 10 |
| 11 | 13 11,13 | M | 4080 | 30 A | 2 | | | 2040 | 2040 | | | | | | 12 |
| 13 | | | | | | 2040 | 506 | | | 2 | 30 A | 1012 | M | 39 14,16 | 14 |
| 15 | 39 15,17 | M | 1012 | 30 A | 2 | | | 506 | 506 | | | | | | 16 |
| 17 | | | | | | 506 | 506 | | | 2 | 30 A | 1012 | M | 39 18,20 | 18 |
| 19 | | | | | | | | | 506 | | | | | | 20 |
| 21 | | | | | | | 1440 | | | 2 | 20 A | 2880 | M | 1C 24,26 | 22 |
| 23 | | | | | | | | | 1440 | | | | | | 24 |
| 25 | | | | | | | | | | | | | | | 26 |
| 27 | | | | | | | | | | | | | | | 28 |
| 29 | | | | | | | | | | | | | | | 30 |
| 31 | | | | | | | | | | | | | | | 32 |
| 33 | | | | | | | | | | | | | | | 34 |
| 35 | | | | | | | | | | | | | | | 36 |
| 37 | | | | | | | | | | | | | | | 38 |
| 39 | | | | | | | | | | | | | | | 40 |
| 41 | | | | | | | | | | | | | | | 42 |
| | | | | | **Total** | 10258 | | 9618 | | | | | | | |
| | | | | | **Total** | 85 A | | 80 A | | | | | | | |

**Legend:**
DEMAND FACTORS: (R-RECEPTACLES 100%<10,000VA, 50%>10,000VA) (L-LIGHTING 125%) (M-MECHANICAL 100%) (C-CONTINUOUS 125%) (K-KITCHEN PER NEC TABLE 220.56) (L-LIGHTING 125%)

| Load Classification | Connected Load | Demand Factor | Estimated | Panel Totals | |
|---|---|---|---|---|---|
| R | 1720 | 100.00% | 1720 | | |
| M | 18156 | 100.00% | 18156 | **Total Conn. Load:** | 19876 |
| | | | | **Total Est. Demand:** | 19876 |
| | | | | **Total Conn. Current:** | 83 A |
| | | | | **Total Est. Demand** | 83 A |

**Notes:**

## Branch Panel: LLP5

**Location:** MECHANICAL 85
**Supply From:**
**Mounting:** SURFACE
**Enclosure:** TYPE 1
**Volts:** 120/208 Wye
**Phases:** 3
**Wires:** 4
**A.I.C. Rating:**
**Mains Type:** MB
**Mains Rating:** 250 A
**MCB Rating:**

| CKT | Circuit Description | DF | LOAD | BKR | P | A | | B | | C | | P | BKR | LOAD | DF | Circuit Description | CKT |
|---|---|---|---|---|---|---|---|---|---|---|---|---|---|---|---|---|---|
| 1 | AH-1, 2, 9 MARINE | M | 0 | 20 A | 1 | 0 | 2256 | | | | | 1 | 20 A | 2256 | M | EC-AH-1,2,9 | 2 |
| 3 | RECEPTACLES | R | 1080 | 20 A | 1 | | | 1080 | 1000 | | | 1 | 20 A | 1000 | M | WS-01 | 4 |
| 5 | CEILING J-BOX | R | 900 | 20 A | 1 | | | | | 900 | | | | | | | 6 |
| 7 | | | | | | | | | | | | | | | | | 8 |
| 9 | | | | | | | | | | | | | | | | | 10 |
| 11 | | | | | | | | | | | | | | | | | 12 |
| 13 | | | | | | | | | | | | | | | | | 14 |
| 15 | | | | | | | | | | | | | | | | | 16 |
| 17 | | | | | | | | | | | | | | | | | 18 |
| 19 | | | | | | | | | | | | | | | | | 20 |
| 21 | | | | | | | | | | | | | | | | | 22 |
| 23 | | | | | | | | | | | | | | | | | 24 |
| 25 | | | | | | | | | | | | | | | | | 26 |
| 27 | | | | | | | | | | | | | | | | | 28 |
| 29 | | | | | | | | | | | | | | | | | 30 |
| 31 | | | | | | | | | | | | | | | | | 32 |
| 33 | | | | | | | | | | | | | | | | | 34 |
| 35 | | | | | | | | | | | | | | | | | 36 |
| 37 | | | | | | | | | | | | | | | | | 38 |
| 39 | | | | | | | | | | | | | | | | | 40 |
| 41 | | | | | | | | | | | | | | | | | 42 |
| | | | | | **Total** | 2256 | | 2080 | | 900 | | | | | | | |
| | | | | | **Total** | 20 A | | 19 A | | 8 A | | | | | | | |

**Legend:**
DEMAND FACTORS: (R-RECEPTACLES 100%<10,000VA, 50%>10,000VA) (L-LIGHTING 125%) (M-MECHANICAL 100%) (C-CONTINUOUS 125%) (K-KITCHEN PER NEC TABLE 220.56) (L-LIGHTING 125%)

| Load Classification | Connected Load | Demand Factor | Estimated | Panel Totals | |
|---|---|---|---|---|---|
| R | 1980 | 100.00% | 1980 | | |
| M | 3256 | 100.00% | 3256 | **Total Conn. Load:** | 5236 |
| | | | | **Total Est. Demand:** | 5236 |
| | | | | **Total Conn. Current:** | 15 A |
| | | | | **Total Est. Demand** | 15 A |

**Notes:**

## Branch Panel: LLP6

**Location:**
**Supply From:**
**Mounting:** SURFACE
**Enclosure:** TYPE 1
**Volts:** 120/208 Wye
**Phases:** 3
**Wires:** 4
**A.I.C. Rating:**
**Mains Type:** MB
**Mains Rating:** 225 A
**MCB Rating:**

| CKT | Circuit Description | DF | LOAD | BKR | P | A | | B | | C | | P | BKR | LOAD | DF | Circuit Description | CKT |
|---|---|---|---|---|---|---|---|---|---|---|---|---|---|---|---|---|---|
| 1 | R | R | 180 | 20 A | 1 | 180 | 360 | | | | | 1 | 20 A | 360 | R | R | 2 |
| 3 | R | R | 360 | 20 A | 1 | | | 360 | 180 | | | 1 | 20 A | 180 | R | R | 4 |
| 5 | R | R | 360 | 20 A | 1 | | | | | 360 | 900 | 1 | 20 A | 900 | R | R | 6 |
| 7 | R | R | 360 | 20 A | 1 | 360 | 360 | | | | | 1 | 20 A | 360 | R | 50 M POOL REC. | 8 |
| 9 | ALT 1 NAT STORAGE | R | 540 | 20 A | 1 | | | 540 | 540 | | | 1 | 20 A | 540 | R | ALT 1 CRS STORAGE | 10 |
| 11 | ALT 1 NAT STORAGE | R | 540 | 20 A | 1 | | | | | 540 | 180 | 1 | 20 A | 180 | R | ALT 1 CRS STORAGE | 12 |
| 13 | ALT 1 REC. | R | 540 | 20 A | 1 | 540 | 540 | | | | | 1 | 20 A | 540 | R | ALT 1 REC. | 14 |
| 15 | 50 M POOL REC. | R | 180 | 20 A | 1 | | | 180 | 540 | | | 1 | 20 A | 540 | R | ALT 1 REC. | 16 |
| 17 | | | | | | | | | | | 540 | 1 | 20 A | 540 | R | ALT 1 REC. | 18 |
| 19 | | | | | | | | | | | | | | | | | 20 |
| 21 | | | | | | | | | | | | | | | | | 22 |
| 23 | | | | | | | | | | | | | | | | | 24 |
| 25 | R | R | 360 | 20 A | 1 | 360 | | | | | | | | | | | 26 |
| 27 | | | | | | | | | | | | | | | | | 28 |
| 29 | | | | | | | | | | | | | | | | | 30 |
| 31 | | | | | | | | | | | | | | | | | 32 |
| 33 | | | | | | | | | | | | | | | | | 34 |
| 35 | | | | | | | | | | | | | | | | | 36 |
| 37 | | | | | | | | | | | | | | | | | 38 |
| 39 | | | | | | | | | | | | | | | | | 40 |
| 41 | | | | | | | | | | | | | | | | | 42 |
| | | | | | **Total** | 2700 | | 2340 | | 2520 | | | | | | | |
| | | | | | **Total** | 23 A | | 20 A | | 21 A | | | | | | | |

**Legend:**
DEMAND FACTORS: (R-RECEPTACLES 100%<10,000VA, 50%>10,000VA) (L-LIGHTING 125%) (M-MECHANICAL 100%) (C-CONTINUOUS 125%) (K-KITCHEN PER NEC TABLE 220.56) (L-LIGHTING 125%)

| Load Classification | Connected Load | Demand Factor | Estimated | Panel Totals | |
|---|---|---|---|---|---|
| R | 7560 | 100.00% | 7560 | | |
| | | | | **Total Conn. Load:** | 7560 |
| | | | | **Total Est. Demand:** | 7560 |
| | | | | **Total Conn. Current:** | 21 A |
| | | | | **Total Est. Demand** | 21 A |

**Notes:**

## Branch Panel: LLP7

**Location:** MAIN ELECTRIC 10F
**Supply From:**
**Mounting:** SURFACE
**Enclosure:** TYPE 1
**Volts:** 120/208 Wye
**Phases:** 3
**Wires:** 4
**A.I.C. Rating:**
**Mains Type:** MB
**Mains Rating:** 225 A
**MCB Rating:**

| CKT | Circuit Description | DF | LOAD | BKR | P | A | | B | | C | | P | BKR | LOAD | DF | Circuit Description | CKT |
|---|---|---|---|---|---|---|---|---|---|---|---|---|---|---|---|---|---|
| 1 | | | | | | | | | | | | | | | | | 2 |
| 3 | | | | | | | | | | | | | | | | | 4 |
| 5 | | | | | | | | | | | | | | | | | 6 |
| 7 | | | | | | | | | | | | | | | | | 8 |
| 9 | | | | | | | | | | | | | | | | | 10 |
| 11 | | | | | | | | | | | | | | | | | 12 |
| 13 | | | | | | | | | | | | | | | | | 14 |
| 15 | | | | | | | | | | | | | | | | | 16 |
| 17 | | | | | | | | | | | | | | | | | 18 |
| 19 | | | | | | | | | | | | | | | | | 20 |
| 21 | | | | | | | | | | | | | | | | | 22 |
| 23 | | | | | | | | | | | | | | | | | 24 |
| 25 | | | | | | | | | | | | | | | | | 26 |
| 27 | | | | | | | | | | | | | | | | | 28 |
| 29 | | | | | | | | | | | | | | | | | 30 |
| 31 | | | | | | | | | | | | | | | | | 32 |
| 33 | | | | | | | | | | | | | | | | | 34 |
| 35 | | | | | | | | | | | | | | | | | 36 |
| 37 | | | | | | | | | | | | | | | | | 38 |
| 39 | | | | | | | | | | | | | | | | | 40 |
| 41 | | | | | | | | | | | | | | | | | 42 |
| | | | | | **Total** | 0 | | 0 | | 0 | | | | | | | |
| | | | | | **Total** | 0 A | | 0 A | | 0 A | | | | | | | |

**Legend:**
DEMAND FACTORS: (R-RECEPTACLES 100%<10,000VA, 50%>10,000VA) (L-LIGHTING 125%) (M-MECHANICAL 100%) (C-CONTINUOUS 125%) (K-KITCHEN PER NEC TABLE 220.56) (L-LIGHTING 125%)

| Load Classification | Connected Load | Demand Factor | Estimated | Panel Totals | |
|---|---|---|---|---|---|
| | | | | **Total Conn. Load:** | 0 |
| | | | | **Total Est. Demand:** | 0 |
| | | | | **Total Conn. Current:** | 0 A |
| | | | | **Total Est. Demand** | 0 A |

**Notes:**

## Branch Panel: ML6

**Location:**
**Supply From:**
**Mounting:** SURFACE
**Enclosure:** TYPE 1
**Volts:** 480/277 Wye
**Phases:** 3
**Wires:** 4
**A.I.C. Rating:**
**Mains Type:** MB
**Mains Rating:** 225 A
**MCB Rating:**

| CKT | Circuit Description | DF | LOAD | BKR | P | A | | B | | C | | P | BKR | LOAD | DF | Circuit Description | CKT |
|---|---|---|---|---|---|---|---|---|---|---|---|---|---|---|---|---|---|
| 1 | | | | | | 987 | 987 | | | | | | | | | | 2 |
| 3 | M | M | 2960 | 20 A | 3 | | | 987 | 987 | | | 3 | 20 A | 2960 | M | M | 4 |
| 5 | | | | | | | | | | 987 | 987 | | | | | | 6 |
| 7 | | | | | | | | | | | | | | | | | 8 |
| 9 | | | | | | | | | | | | | | | | | 10 |
| 11 | | | | | | | | | | | | | | | | | 12 |
| 13 | | | | | | | | | | | | | | | | | 14 |
| 15 | | | | | | | | | | | | | | | | | 16 |
| 17 | | | | | | | | | | | | | | | | | 18 |
| 19 | | | | | | | | | | | | | | | | | 20 |
| 21 | | | | | | | | | | | | | | | | | 22 |
| 23 | | | | | | | | | | | | | | | | | 24 |
| 25 | | | | | | | | | | | | | | | | | 26 |
| 27 | | | | | | | | | | | | | | | | | 28 |
| 29 | | | | | | | | | | | | | | | | | 30 |
| 31 | | | | | | | | | | | | | | | | | 32 |
| 33 | | | | | | | | | | | | | | | | | 34 |
| 35 | | | | | | | | | | | | | | | | | 36 |
| 37 | | | | | | | | | | | | | | | | | 38 |
| 39 | | | | | | | | | | | | | | | | | 40 |
| 41 | | | | | | | | | | | | | | | | | 42 |
| | | | | | **Total** | 1973 | | 1973 | | 1973 | | | | | | | |
| | | | | | **Total** | 7 A | | 7 A | | 7 A | | | | | | | |

**Legend:**
DEMAND FACTORS: (R-RECEPTACLES 100%<10,000VA, 50%>10,000VA) (L-LIGHTING 125%) (M-MECHANICAL 100%) (C-CONTINUOUS 125%) (K-KITCHEN PER NEC TABLE 220.56) (L-LIGHTING 125%)

| Load Classification | Connected Load | Demand Factor | Estimated | Panel Totals | |
|---|---|---|---|---|---|
| M | 5920 | 100.00% | 5920 | | |
| | | | | **Total Conn. Load:** | 5920 |
| | | | | **Total Est. Demand:** | 5920 |
| | | | | **Total Conn. Current:** | 7 A |
| | | | | **Total Est. Demand** | 7 A |

**Notes:**


MHTN ARCHITECTS
**MHTN Architects, Inc.**
420 East South Temple
Suite 100
Salt Lake City, Utah 84111
Telephone (801) 595-6700
Telefax (801) 595-6717
www.mhtn.com

**Hastings+Chivetta**
ARCHITECTURE • PLANNING • ENGINEERING
622 Emerson, Suite 200
St. Louis, MO 63141
Tel. 314.863.5717
Fax. 314.863.2823
www.hastingschivetta.com

BUILDING OFFICIAL STAMP
Ken Garner Engineering, Inc.
Electrical Engineering Consultants, Inc.
102 West 500 South, Suite 225
Salt Lake City, Utah 84101
P. 801.328.8800
F. 801.328.8802
Contact: Paris LeLaCheur
Project #: 2010-117.00


UNIVERSITY OF UTAH
STUDENT LIFE CENTER
1836 E. BALLIF ROAD
SALT LAKE CITY, UTAH 84112

SEAL

MHTN PROJECT NO. 2010562.00
DRAWN BY: KGE CHECKED BY: KGE

ISSUED:

| NO. | DATE | DESCRIPTION |
|---|---|---|

CONTRACTOR TO VERIFY DRAWINGS IN FIELD USE REFLECT LAST REVISION DATE.

| NO. | DATE | DESCRIPTION |
|---|---|---|

SHEET NAME
PANEL SCHEDULES
LOWER LEVEL
BID DOCUMENTS
May 15, 2013

SHEET NUMBER
EP604

C:\Users\rbrown.KGE\Documents\2010-117.00_KGE_STUDENT LIFE_ELECTRICAL_CENTERAL_2012_rbrown.rvt
5/14/2013 5:56:13 PM

## Branch Panel: EH1L1

**Location:** ELECT. 104 **Volts:** 480/277 Wye **A.I.C. Rating:**
**Supply From:** **Phases:** 3 **Mains Type:** MB
**Mounting:** SURFACE **Wires:** 4 **Mains Rating:** 225 A
**Enclosure:** TYPE 1 **MCB Rating:**

| CKT | Circuit Description | DF | LOAD | BKR | P | A | | B | | C | | P | BKR | LOAD | DF | Circuit Description | CKT |
|---|---|---|---|---|---|---|---|---|---|---|---|---|---|---|---|---|---|
| 1 | CLASSROOM 145 | L | 0 | 20 A | 1 | 0 | 752 | | | | | 1 | 20 A | 752 | L | OUTDOOR REC 155 | 2 |
| 3 | | | | | | | | | 145 | | | 1 | 20 A | 145 | L | L LOBBY 150 | 4 |
| 5 | CONCOURSE LIGHTING | L | 985 | 20 A | 1 | | | | | 996 | 0 | 1 | 20 A | 0 | L | L MAC GYM-1 55-1 | 6 |
| 7 | LIGHTING MAIN | L | 282 | 20 A | 1 | 282 | 390 | | | | | 1 | 20 A | 390 | L | L | 8 |
| 9 | L MAC GYM-1 55-1 | L | 0 | 20 A | 1 | | | 0 | 0 | | | 1 | 20 A | 0 | L | L MAC GYM-1 55-1 | 10 |
| 11 | POOL EQUIP 45B | L | 504 | 20 A | 1 | | | | | 506 | 0 | 1 | 20 A | 0 | L | Other MAC GYM-1 55-1 | 12 |
| 13 | | | | | | | | | | | | | | | | | 14 |
| 15 | | | | | | | | | | | | | | | | | 16 |
| 17 | | | | | | | | | | | | | | | | | 18 |
| 19 | | | | | | | | | | | | | | | | | 20 |
| 21 | | | | | | | | | | | | | | | | | 22 |
| 23 | | | | | | | | | | | | | | | | | 24 |
| 25 | | | | | | | | | | | | | | | | | 26 |
| 27 | | | | | | | | | | | | | | | | | 28 |
| 29 | | | | | | | | | | | | | | | | | 30 |
| 31 | | | | | | | | | | | | | | | | | 32 |
| 33 | | | | | | | | | | | | | | | | | 34 |
| 35 | | | | | | | | | | | | | | | | | 36 |
| 37 | | | | | | | | | | | | | | | | | 38 |
| 39 | | | | | | | | | | | | | | | | | 40 |
| 41 | | | | | | | | | | | | | | | | | 42 |
| | | | | | **Total** | 1424 | | 145 | | 1502 | | | | | | | |
| | | | | | **Total** | 6 A | | 1 A | | 6 A | | | | | | | |

**Legend:**
DEMAND FACTORS: (R-RECEPTACLES 100%<10,000VA, 50%>10,000VA) (L-LIGHTING 125%) (M-MECHANICAL 100%) (C-CONTINUOUS 125%) (K-KITCHEN PER NEC TABLE 220.56) (L-LIGHTING 125%)

| Load Classification | Connected Load | Demand Factor | Estimated | Panel Totals | |
|---|---|---|---|---|---|
| L | 3071 | 125.00% | 3839 | | |
| | | | | **Total Conn. Load:** | 3071 |
| | | | | **Total Est. Demand:** | 3839 |
| | | | | **Total Conn. Current:** | 4 A |
| | | | | **Total Est. Demand** | 5 A |

**Notes:**

## Branch Panel: EL1P1

**Location:** ELECT. 104 **Volts:** 120/208 Wye **A.I.C. Rating:**
**Supply From:** **Phases:** 3 **Mains Type:** MB
**Mounting:** SURFACE **Wires:** 4 **Mains Rating:** 225 A
**Enclosure:** TYPE 1 **MCB Rating:**

| CKT | Circuit Description | DF | LOAD | BKR | P | A | | B | | C | | P | BKR | LOAD | DF | Circuit Description | CKT |
|---|---|---|---|---|---|---|---|---|---|---|---|---|---|---|---|---|---|
| 1 | UPS POWER | R | 360 | 20 A | 2 | 180 | 360 | | | | | 1 | 20 A | 360 | R | RECEPTACLES | 2 |
| 3 | | | | | | | | 180 | 360 | | | 1 | 20 A | 360 | R | RECEPTACLES | 4 |
| 5 | UPS POWER\ | R | 360 | 20 A | 2 | | | | | 180 | 500 | 1 | 20 A | 500 | -- | 'NAC' | 6 |
| 7 | | | | | | 180 | 500 | | | | | 1 | 20 A | 500 | -- | 'SEC' | 8 |
| 9 | FIRE SMOKE DAMPER | M | 500 | 20 A | 1 | | | 500 | | | | | | | | | 10 |
| 11 | | | | | | | | | | | | | | | | | 12 |
| 13 | | | | | | | | | | | | | | | | | 14 |
| 15 | | | | | | | | | | | | | | | | | 16 |
| 17 | | | | | | | | | | | | | | | | | 18 |
| 19 | | | | | | | | | | | | | | | | | 20 |
| 21 | | | | | | | | | | | | | | | | | 22 |
| 23 | | | | | | | | | | | | | | | | | 24 |
| 25 | | | | | | | | | | | | | | | | | 26 |
| 27 | | | | | | | | | | | | | | | | | 28 |
| 29 | | | | | | | | | | | | | | | | | 30 |
| 31 | | | | | | | | | | | | | | | | | 32 |
| 33 | | | | | | | | | | | | | | | | | 34 |
| 35 | | | | | | | | | | | | | | | | | 36 |
| 37 | | | | | | | | | | | | | | | | | 38 |
| 39 | | | | | | | | | | | | | | | | | 40 |
| 41 | | | | | | | | | | | | | | | | | 42 |
| | | | | | **Total** | 1220 | | 1040 | | 680 | | | | | | | |
| | | | | | **Total** | 11 A | | 9 A | | 6 A | | | | | | | |

**Legend:**
DEMAND FACTORS: (R-RECEPTACLES 100%<10,000VA, 50%>10,000VA) (L-LIGHTING 125%) (M-MECHANICAL 100%) (C-CONTINUOUS 125%) (K-KITCHEN PER NEC TABLE 220.56) (L-LIGHTING 125%)

| Load Classification | Connected Load | Demand Factor | Estimated | Panel Totals | |
|---|---|---|---|---|---|
| R | 1440 | 100.00% | 1440 | | |
| M | 500 | 100.00% | 500 | **Total Conn. Load:** | 2940 |
| | | | | **Total Est. Demand:** | 2940 |
| | | | | **Total Conn. Current:** | 8 A |
| | | | | **Total Est. Demand** | 8 A |

**Notes:**

## Branch Panel: H1L1

**Location:** ELECT. 104 **Volts:** 480/277 Wye **A.I.C. Rating:**
**Supply From:** **Phases:** 3 **Mains Type:** MB
**Mounting:** SURFACE **Wires:** 4 **Mains Rating:** 225 A
**Enclosure:** TYPE 1 **MCB Rating:**

| CKT | Circuit Description | DF | LOAD | BKR | P | A | | B | | C | | P | BKR | LOAD | DF | Circuit Description | CKT |
|---|---|---|---|---|---|---|---|---|---|---|---|---|---|---|---|---|---|
| 1 | L | L | 29 | 20 A | 1 | 29 | 1457 | | | | | 1 | 20 A | 1457 | L | OUT DOOR REC 155 | 2 |
| 3 | L OFFICE 108 | L | 1001 | 20 A | 1 | | | 1014 | 150 | | | 1 | 20 A | 150 | L | L | 4 |
| 5 | L DATA 100E | L | 94 | 20 A | 1 | | | | | 94 | 765 | 1 | 20 A | 765 | L | L | 6 |
| 7 | NATATORIUM | L | 0 | 20 A | 1 | 0 | 0 | | | | | 1 | 20 A | 0 | L | L Space 100N | 8 |
| 9 | NATATORIUM | L | 0 | 20 A | 1 | | | 0 | 10 | | | 1 | 20 A | 10 | -- | L | 10 |
| 11 | NATATORIUM | L | 0 | 20 A | 1 | | | | | 0 | 0 | 1 | 20 A | 0 | -- | L | 12 |
| 13 | NATATORIUM | L | 0 | 20 A | 1 | 0 | 0 | | | | | 1 | 20 A | 0 | -- | L | 14 |
| 15 | NATATORIUM | L | 0 | 20 A | 1 | | | 0 | 0 | | | 1 | 20 A | 0 | -- | L | 16 |
| 17 | | | | | | | | | | | 0 | 1 | 20 A | 0 | -- | L | 18 |
| 19 | L OFFICE 155C | L | 188 | 20 A | 1 | 188 | | | | | | | | | | | 20 |
| 21 | | | | | | | | | 0 | | | 1 | 20 A | 0 | -- | L | 22 |
| 23 | | | | | | | | | | | | | | | | | 24 |
| 25 | | | | | | | | | | | | | | | | | 26 |
| 27 | | | | | | | | | | | | | | | | | 28 |
| 29 | | | | | | | | | | | | | | | | | 30 |
| 31 | | | | | | | | | | | | | | | | | 32 |
| 33 | | | | | | | | | | | | | | | | | 34 |
| 35 | | | | | | | | | | | | | | | | | 36 |
| 37 | | | | | | | | | | | | | | | | | 38 |
| 39 | | | | | | | | | | | | | | | | | 40 |
| 41 | | | | | | | | | | | | | | | | | 42 |
| | | | | | **Total** | 1674 | | 1174 | | 859 | | | | | | | |
| | | | | | **Total** | 6 A | | 4 A | | 3 A | | | | | | | |

**Legend:**
DEMAND FACTORS: (R-RECEPTACLES 100%<10,000VA, 50%>10,000VA) (L-LIGHTING 125%) (M-MECHANICAL 100%) (C-CONTINUOUS 125%) (K-KITCHEN PER NEC TABLE 220.56) (L-LIGHTING 125%)

| Load Classification | Connected Load | Demand Factor | Estimated | Panel Totals | |
|---|---|---|---|---|---|
| L | 3697 | 125.00% | 4621 | | |
| | | | | **Total Conn. Load:** | 3707 |
| | | | | **Total Est. Demand:** | 4631 |
| | | | | **Total Conn. Current:** | 4 A |
| | | | | **Total Est. Demand** | 6 A |

**Notes:**
* PROVIDE GFCI BREAKER

## Branch Panel: H1L2

**Location:** ELECT. 104 **Volts:** 480/277 Wye **A.I.C. Rating:**
**Supply From:** **Phases:** 3 **Mains Type:** MB
**Mounting:** SURFACE **Wires:** 4 **Mains Rating:** 225 A
**Enclosure:** TYPE 1 **MCB Rating:**

| CKT | Circuit Description | DF | LOAD | BKR | P | A | | B | | C | | P | BKR | LOAD | DF | Circuit Description | CKT |
|---|---|---|---|---|---|---|---|---|---|---|---|---|---|---|---|---|---|
| 1 | L RACQUETBALL | L | 2724 | 20 A | 1 | 2724 | | | | | | | | | | | 2 |
| 3 | L RACQUETBALL | L | 2724 | 20 A | 1 | | | 2724 | | | | | | | | | 4 |
| 5 | Other MAC GYM-1 55-1 | L | 360 | 20 A | 1 | | | | | 360 | | | | | | | 6 |
| 7 | Other MAC GYM-1 55-1 | L | 360 | 20 A | 1 | 360 | | | | | | | | | | | 8 |
| 9 | Other MAC GYM-1 55-1 | L | 360 | 20 A | 1 | | | 360 | | | | | | | | | 10 |
| 11 | Other MAC GYM-1 55-1 | L | 4320 | 20 A | 1 | | | | | 4320 | | | | | | | 12 |
| 13 | | | | | | | | | | | | | | | | | 14 |
| 15 | | | | | | | | | | | | | | | | | 16 |
| 17 | | | | | | | | | | | | | | | | | 18 |
| 19 | | | | | | | | | | | | | | | | | 20 |
| 21 | | | | | | | | | | | | | | | | | 22 |
| 23 | | | | | | | | | | | | | | | | | 24 |
| 25 | | | | | | | | | | | | | | | | | 26 |
| 27 | | | | | | | | | | | | | | | | | 28 |
| 29 | | | | | | | | | | | | | | | | | 30 |
| 31 | | | | | | | | | | | | | | | | | 32 |
| 33 | | | | | | | | | | | | | | | | | 34 |
| 35 | | | | | | | | | | | | | | | | | 36 |
| 37 | | | | | | | | | | | | | | | | | 38 |
| 39 | | | | | | | | | | | | | | | | | 40 |
| 41 | | | | | | | | | | | | | | | | | 42 |
| | | | | | **Total** | 3084 | | 3084 | | 4680 | | | | | | | |
| | | | | | **Total** | 11 A | | 11 A | | 17 A | | | | | | | |

**Legend:**
DEMAND FACTORS: (R-RECEPTACLES 100%<10,000VA, 50%>10,000VA) (L-LIGHTING 125%) (M-MECHANICAL 100%) (C-CONTINUOUS 125%) (K-KITCHEN PER NEC TABLE 220.56) (L-LIGHTING 125%)

| Load Classification | Connected Load | Demand Factor | Estimated | Panel Totals | |
|---|---|---|---|---|---|
| L | 10848 | 125.00% | 13560 | | |
| | | | | **Total Conn. Load:** | 10848 |
| | | | | **Total Est. Demand:** | 13560 |
| | | | | **Total Conn. Current:** | 13 A |
| | | | | **Total Est. Demand** | 16 A |

**Notes:**

## Branch Panel: H1M1

**Location:** MECHANICAL 120 **Volts:** 480/277 Wye **A.I.C. Rating:**
**Supply From:** **Phases:** 3 **Mains Type:** MB
**Mounting:** SURFACE **Wires:** 4 **Mains Rating:** 225 A
**Enclosure:** TYPE 1 **MCB Rating:**

| CKT | Circuit Description | DF | LOAD | BKR | P | A | | B | | C | | P | BKR | LOAD | DF | Circuit Description | CKT |
|---|---|---|---|---|---|---|---|---|---|---|---|---|---|---|---|---|---|
| 1 | | | | | | 48752 | 0 | | | | | | | | | | 2 |
| 3 | AH-4 RELIEF FANS | M | 146256 | 60 A | 3 | | | 48752 | 0 | | | 3 | 20 A | 0 | M | AH-4 REDUNDANT VFD | 4 |
| 5 | | | | | | | | | | 48752 | 0 | | | | | | 6 |
| 7 | | | | | | 91410 | 21269 | | | | | | | | | | 8 |
| 9 | AH-3 | M | 274230 | 150 A | 3 | | | 91410 | 21269 | | | 3 | 20 A | 63808 | M | EAH-4 | 10 |
| 11 | | | | | | | | | | 91410 | 21269 | | | | | | 12 |
| 13 | | | | | | 0 | 12632 | | | | | | | | | | 14 |
| 15 | EAH-4 REDUNDANT VFD | M | 0 | 20 A | 3 | | | 0 | 12632 | | | 3 | 20 A | 37896 | M | SMP-01, SMP-02 | 16 |
| 17 | | | | | | | | | | 0 | 12632 | | | | | | 18 |
| 19 | | | | | | | | | | | | | | | | | 20 |
| 21 | | | | | | | | | | | | | | | | | 22 |
| 23 | Spare | -- | 0 | 20 A | 1 | | | | | 0 | 0 | 1 | 30 A | 0 | -- | Spare | 24 |
| 25 | Spare | -- | 0 | 30 A | 1 | 0 | 0 | | | | | 1 | 20 A | 0 | -- | Spare | 26 |
| 27 | Spare | -- | 0 | 20 A | 1 | | | 0 | 0 | | | 1 | 20 A | 0 | -- | Spare | 28 |
| 29 | Spare | -- | 0 | 20 A | 1 | | | | | 0 | 0 | 1 | 20 A | 0 | -- | Spare | 30 |
| 31 | Space | -- | 0 | 20 A | 1 | 0 | 0 | | | | | 1 | 20 A | 0 | -- | Space | 32 |
| 33 | Space | -- | 0 | 20 A | 1 | | | 0 | 0 | | | 1 | 20 A | 0 | -- | Space | 34 |
| 35 | Space | -- | 0 | 20 A | 1 | | | | | 0 | 0 | 1 | 20 A | 0 | -- | Space | 36 |
| 37 | Space | -- | -- | -- | -- | 0 | 0 | | | | | -- | -- | -- | -- | Space | 38 |
| 39 | Space | -- | -- | -- | -- | | | 0 | 0 | | | -- | -- | -- | -- | Space | 40 |
| 41 | Space | -- | -- | -- | -- | | | | | 0 | 0 | -- | -- | -- | -- | Space | 42 |
| | | | | | **Total** | 174063 | | 174063 | | 174063 | | | | | | | |
| | | | | | **Total** | 628 A | | 628 A | | 628 A | | | | | | | |

**Legend:**
DEMAND FACTORS: (R-RECEPTACLES 100%<10,000VA, 50%>10,000VA) (L-LIGHTING 125%) (M-MECHANICAL 100%) (C-CONTINUOUS 125%) (K-KITCHEN PER NEC TABLE 220.56) (L-LIGHTING 125%)

| Load Classification | Connected Load | Demand Factor | Estimated | Panel Totals | |
|---|---|---|---|---|---|
| M | 522190 | 100.00% | 522190 | | |
| | | | | **Total Conn. Load:** | 522190 |
| | | | | **Total Est. Demand:** | 522190 |
| | | | | **Total Conn. Current:** | 628 A |
| | | | | **Total Est. Demand** | 628 A |

**Notes:**

## Branch Panel: L1P1

**Location:** ELECT. 104 **Volts:** 120/208 Wye **A.I.C. Rating:**
**Supply From:** **Phases:** 3 **Mains Type:** ML
**Mounting:** SURFACE **Wires:** 4 **Mains Rating:** 250 A
**Enclosure:** TYPE 1 **MCB Rating:**

| CKT | Circuit Description | DF | LOAD | BKR | P | A | | B | | C | | P | BKR | LOAD | DF | Circuit Description | CKT |
|---|---|---|---|---|---|---|---|---|---|---|---|---|---|---|---|---|---|
| 1 | PROJECTOR | R | 180 | 20 A | 1 | 180 | 720 | | | | | 1 | 20 A | 720 | R | RECEPTACLES | 2 |
| 3 | RECEPTACLES | R | 720 | 20 A | 1 | | | 720 | 720 | | | 1 | 20 A | 720 | R | RECEPTACLES | 4 |
| 5 | RECEPTACLES | R | 360 | 20 A | 1 | | | | | 360 | 1080 | 1 | 20 A | 1080 | R | RECEPTACLES | 6 |
| 7 | RECEPTACLES | R | 360 | 20 A | 1 | 360 | 720 | | | | | 1 | 20 A | 720 | R | RECEPTACLES | 8 |
| 9 | RECEPTACLES | R | 360 | 20 A | 1 | | | 360 | 180 | | | 1 | 20 A | 180 | R | REFRIGERATOR | 10 |
| 11 | RECEPTACLES | R | 360 | 20 A | 1 | | | | | 360 | 180 | 1 | 20 A | 180 | R | WASHER | 12 |
| 13 | RECEPTACLES | R | 540 | 20 A | 1 | 540 | 180 | | | | | 2 | 20 A | 360 | R | DRYER | 14 |
| 15 | RECEPTACLES | R | 360 | 20 A | 1 | | | 360 | 180 | | | | | | | | 16 |
| 17 | RECEPTACLES | R | 540 | 20 A | 1 | | | | | 540 | 180 | 2 | 20 A | 360 | R | DRYER | 18 |
| 19 | RECEPTACLES | R | 720 | 20 A | 1 | 720 | 180 | | | | | | | | | | 20 |
| 21 | T.V. CEILING | R | 540 | 20 A | 1 | | | 540 | 180 | | | 1 | 20 A | 180 | R | REFRIGERATOR | 22 |
| 23 | RECEPTACLES | R | 720 | 20 A | 1 | | | | | 720 | 500 | 1 | 20 A | 500 | M | ROLL UP DOOR | 24 |
| 25 | RECEPTACLES | R | 1260 | 20 A | 1 | 1260 | 900 | | | | | 1 | 20 A | 900 | R | RECEPTACLES | 26 |
| 27 | R OFFICE | R | 720 | 20 A | 1 | | | 720 | 900 | | | 1 | 20 A | 900 | R | RECEPTACLES | 28 |
| 29 | RECEPTACLES | R | 720 | 20 A | 1 | | | | | 720 | 540 | 1 | 20 A | 540 | R | RECEPTACLES | 30 |
| 31 | RECEPTACLES | R | 180 | 20 A | 1 | 180 | 720 | | | | | 1 | 20 A | 720 | R | RECEPTACLES | 32 |
| 33 | DISHWASHER | M | 0 | 20 A | 1 | | | 0 | 180 | | | 1 | 20 A | 180 | R | RECEPTACLES | 34 |
| 35 | AV EQUIP | R | 1000 | 20 A | 1 | | | | | 1000 | 1000 | 1 | 20 A | 1000 | M | WON DOOR | 36 |
| 37 | AV EQUIP | R | 1000 | 20 A | 1 | 1000 | 720 | | | | | 1 | 20 A | 720 | R | R CONTROL DESK 155A | 38 |
| 39 | Spare | -- | 0 | 20 A | 1 | | | 0 | 180 | | | 1 | 20 A | 180 | R | R CONTROL DESK 155A | 40 |
| 41 | Spare | -- | 0 | 20 A | 1 | | | | | 0 | 0 | 1 | 20 A | 0 | -- | Spare | 42 |
| | | | | | **Total** | 8380 | | 5220 | | 7180 | | | | | | | |
| | | | | | **Total** | 72 A | | 44 A | | 62 A | | | | | | | |

**Legend:**
DEMAND FACTORS: (R-RECEPTACLES 100%<10,000VA, 50%>10,000VA) (L-LIGHTING 125%) (M-MECHANICAL 100%) (C-CONTINUOUS 125%) (K-KITCHEN PER NEC TABLE 220.56) (L-LIGHTING 125%)

| Load Classification | Connected Load | Demand Factor | Estimated | Panel Totals | |
|---|---|---|---|---|---|
| R | 19280 | 75.93% | 14640 | | |
| M | 1500 | 100.00% | 1500 | **Total Conn. Load:** | 20780 |
| | | | | **Total Est. Demand:** | 16140 |
| | | | | **Total Conn. Current:** | 58 A |
| | | | | **Total Est. Demand** | 45 A |

**Notes:**

## Branch Panel: L1P2

**Location:** ELECT. 104 **Volts:** 120/208 Wye **A.I.C. Rating:**
**Supply From:** **Phases:** 3 **Mains Type:** ML
**Mounting:** SURFACE **Wires:** 4 **Mains Rating:** 250 A
**Enclosure:** TYPE 1 **MCB Rating:**

| CKT | Circuit Description | DF | LOAD | BKR | P | A | | B | | C | | P | BKR | LOAD | DF | Circuit Description | CKT |
|---|---|---|---|---|---|---|---|---|---|---|---|---|---|---|---|---|---|
| 1 | RECEPTACLES | R | 720 | 20 A | 1 | 720 | 540 | | | | | 1 | 20 A | 540 | R | RECEPTACLES | 2 |
| 3 | RECEPTACLES | R | 1440 | 20 A | 1 | | | 1440 | 180 | | | 1 | 20 A | 180 | R | R CONTROL-1 101-1 | 4 |
| 5 | RECEPTACLES | R | 360 | 20 A | 1 | | | | | 360 | 1000 | 1 | 20 A | 1000 | M | DOOR POWER | 6 |
| 7 | RECEPTACLES | R | 720 | 20 A | 1 | 720 | 1000 | | | | | 1 | 20 A | 1000 | M | JUNCTION BOX | 8 |
| 9 | RECEPTACLES | R | 360 | 20 A | 1 | | | 360 | 360 | | | 1 | 20 A | 360 | R | R CONTROL-1 101-1 | 10 |
| 11 | R LOBBY 100B | R | 360 | 20 A | 1 | | | | | 360 | 540 | 1 | 20 A | 540 | R | RECEPTACLES | 12 |
| 13 | | | | | | | | | | | | | | | | | 14 |
| 15 | | | | | | | | | | | | | | | | | 16 |
| 17 | | | | | | | | | | | 360 | 1 | 20 A | 360 | R | R Room 101-1, 100C | 18 |
| 19 | | | | | | | | | | | | | | | | | 20 |
| 21 | | | | | | | | | | | | | | | | | 22 |
| 23 | | | | | | | | | | | | | | | | | 24 |
| 25 | Spare | -- | 0 | 20 A | 1 | 0 | 0 | | | | | 1 | 20 A | 0 | -- | Spare | 26 |
| 27 | Spare | -- | 0 | 20 A | 1 | | | 0 | 0 | | | 1 | 20 A | 0 | -- | Spare | 28 |
| 29 | Spare | -- | 0 | 20 A | 1 | | | | | 0 | 0 | 1 | 20 A | 0 | -- | Spare | 30 |
| 31 | Spare | -- | 0 | 20 A | 1 | 0 | 0 | | | | | 1 | 20 A | 0 | -- | Spare | 32 |
| 33 | Spare | -- | 0 | 20 A | 1 | | | 0 | 0 | | | 1 | 20 A | 0 | -- | Spare | 34 |
| 35 | Spare | -- | 0 | 20 A | 1 | | | | | 0 | 0 | 1 | 20 A | 0 | -- | Spare | 36 |
| 37 | Space | -- | -- | -- | -- | 0 | 0 | | | | | -- | -- | -- | -- | Space | 38 |
| 39 | Space | -- | -- | -- | -- | | | 0 | 0 | | | -- | -- | -- | -- | Space | 40 |
| 41 | Space | -- | -- | -- | -- | | | | | 0 | 0 | -- | -- | -- | -- | Space | 42 |
| | | | | | **Total** | 2980 | | 2340 | | 2620 | | | | | | | |
| | | | | | **Total** | 25 A | | 20 A | | 22 A | | | | | | | |

**Legend:**
DEMAND FACTORS: (R-RECEPTACLES 100%<10,000VA, 50%>10,000VA) (L-LIGHTING 125%) (M-MECHANICAL 100%) (C-CONTINUOUS 125%) (K-KITCHEN PER NEC TABLE 220.56) (L-LIGHTING 125%)

| Load Classification | Connected Load | Demand Factor | Estimated | Panel Totals | |
|---|---|---|---|---|---|
| R | 5940 | 100.00% | 5940 | | |
| M | 2000 | 100.00% | 2000 | **Total Conn. Load:** | 7940 |
| | | | | **Total Est. Demand:** | 7940 |
| | | | | **Total Conn. Current:** | 22 A |
| | | | | **Total Est. Demand** | 22 A |

**Notes:**

## Branch Panel: L1P3

**Location:** MECHANICAL 120 **Volts:** 120/208 Wye **A.I.C. Rating:**
**Supply From:** **Phases:** 3 **Mains Type:** ML
**Mounting:** SURFACE **Wires:** 4 **Mains Rating:** 250 A
**Enclosure:** TYPE 1 **MCB Rating:**

| CKT | Circuit Description | DF | LOAD | BKR | P | A | | B | | C | | P | BKR | LOAD | DF | Circuit Description | CKT |
|---|---|---|---|---|---|---|---|---|---|---|---|---|---|---|---|---|---|
| 1 | EC-AH-4 | M | 864 | 20 A | 1 | 864 | 900 | | | | | 1 | 20 A | 900 | R | RECEPTACLES | 2 |
| 3 | POOL EQUIP 6 | R | 180 | 20 A | 1 | | | 180 | 360 | | | 1 | 20 A | 360 | R | POOL EQIUP 37,9A | 4 |
| 5 | POOL EQUIP 36 | R | 180 | 20 A | 1 | | | | | 180 | 498 | 1 | 20 A | 498 | M | VAV BOXES | 6 |
| 7 | RECEPTACLES | R | 360 | 20 A | 1 | 360 | | | | | | | | | | | 8 |
| 9 | | | | | | | | | | | | | | | | | 10 |
| 11 | | | | | | | | | | | | | | | | | 12 |
| 13 | RECEPTACLE CHEM | R | 180 | 20 A | 1 | 180 | | | | | | | | | | | 14 |
| 15 | RECEPTACLE CHEM | R | 180 | 20 A | 1 | | | 180 | | | | | | | | | 16 |
| 17 | RECEPTACLE CHEM | R | 180 | 20 A | 1 | | | | | 180 | | | | | | | 18 |
| 19 | | | | | | | | | | | | | | | | | 20 |
| 21 | | | | | | | | | | | | | | | | | 22 |
| 23 | | | | | | | | | | | | | | | | | 24 |
| 25 | | | | | | | | | | | | | | | | | 26 |
| 27 | | | | | | | | | | | | | | | | | 28 |
| 29 | | | | | | | | | | | | | | | | | 30 |
| 31 | | | | | | | | | | | | | | | | | 32 |
| 33 | | | | | | | | | | | | | | | | | 34 |
| 35 | | | | | | | | | | | | | | | | | 36 |
| 37 | | | | | | | | | | | | | | | | | 38 |
| 39 | | | | | | | | | | | | | | | | | 40 |
| 41 | | | | | | | | | | | | | | | | | 42 |
| | | | | | **Total** | 2304 | | 720 | | 858 | | | | | | | |
| | | | | | **Total** | 19 A | | 6 A | | 7 A | | | | | | | |

**Legend:**
DEMAND FACTORS: (R-RECEPTACLES 100%<10,000VA, 50%>10,000VA) (L-LIGHTING 125%) (M-MECHANICAL 100%) (C-CONTINUOUS 125%) (K-KITCHEN PER NEC TABLE 220.56) (L-LIGHTING 125%)

| Load Classification | Connected Load | Demand Factor | Estimated | Panel Totals | |
|---|---|---|---|---|---|
| R | 2520 | 100.00% | 2520 | | |
| M | 1362 | 100.00% | 1362 | **Total Conn. Load:** | 3882 |
| | | | | **Total Est. Demand:** | 3882 |
| | | | | **Total Conn. Current:** | 11 A |
| | | | | **Total Est. Demand** | 11 A |

**Notes:**

## Branch Panel: L1P4

**Location:** KITCHEN-2 117-2 **Volts:** 120/208 Wye **A.I.C. Rating:**
**Supply From:** **Phases:** 3 **Mains Type:** MB
**Mounting:** RECESSED **Wires:** 4 **Mains Rating:** 225 A
**Enclosure:** TYPE 1 **MCB Rating:**

| CKT | Circuit Description | DF | LOAD | BKR | P | A | | B | | C | | P | BKR | LOAD | DF | Circuit Description | CKT |
|---|---|---|---|---|---|---|---|---|---|---|---|---|---|---|---|---|---|
| 1 | EQUIP K-1,K4,K6 | R | 540 | 20 A | 1 | 540 | 180 | | | | | 1 | 20 A | 180 | R | EQUIP K-14 | 2 |
| 3 | EQUIP K-2 | R | 180 | 20 A | 1 | | | 180 | 180 | | | 1 | 20 A | 180 | R | EQUIP K-13 | 4 |
| 5 | EQUIP K-3 | R | 360 | 20 A | 2 | | | | | 180 | 180 | 1 | 20 A | 180 | R | EQUIP K-13 | 6 |
| 7 | | | | | | 180 | 0 | | | | | 1 | 20 A | 0 | M | EQUIP K-12 | 8 |
| 9 | EQUIP K-3 | R | 360 | 20 A | 2 | | | 180 | 0 | | | 2 | 20 A | 0 | M | EQUIP K-11B | 10 |
| 11 | | | | | | | | | | 180 | 0 | | | | | | 12 |
| 13 | EQUIP K-3 | R | 360 | 20 A | 2 | 180 | 0 | | | | | 2 | 20 A | 0 | M | EQUIP K-11A | 14 |
| 15 | | | | | | | | 180 | 0 | | | | | | | | 16 |
| 17 | EQUIP K-5 | R | 1000 | 20 A | 1 | | | | | 1000 | 180 | 1 | 20 A | 180 | R | EQUIP K-10 | 18 |
| 19 | EQUIP K-7 | R | 180 | 20 A | 1 | 180 | 180 | | | | | 1 | 20 A | 180 | R | EQUIP K-10 | 20 |
| 21 | EQUIP K-7 | R | 180 | 20 A | 1 | | | 180 | 180 | | | 1 | 20 A | 180 | R | EQUIP K-8 | 22 |
| 23 | P.O.S. STATION | R | 360 | 20 A | 1 | | | | | 360 | 720 | 1 | 20 A | 720 | R | MENU BOARDS | 24 |
| 25 | | | | | | | | | | | | | | | | | 26 |
| 27 | | | | | | | | | | | | | | | | | 28 |
| 29 | | | | | | | | | | | | | | | | | 30 |
| 31 | | | | | | | | | | | | | | | | | 32 |
| 33 | | | | | | | | | | | | | | | | | 34 |
| 35 | | | | | | | | | | | | | | | | | 36 |
| 37 | | | | | | | | | | | | | | | | | 38 |
| 39 | | | | | | | | | | | | | | | | | 40 |
| 41 | | | | | | | | | | | | | | | | | 42 |
| | | | | | **Total** | 1440 | | 1080 | | 2800 | | | | | | | |
| | | | | | **Total** | 12 A | | 9 A | | 24 A | | | | | | | |

**Legend:**
DEMAND FACTORS: (R-RECEPTACLES 100%<10,000VA, 50%>10,000VA) (L-LIGHTING 125%) (M-MECHANICAL 100%) (C-CONTINUOUS 125%) (K-KITCHEN PER NEC TABLE 220.56) (L-LIGHTING 125%)

| Load Classification | Connected Load | Demand Factor | Estimated | Panel Totals | |
|---|---|---|---|---|---|
| R | 5320 | 100.00% | 5320 | | |
| M | 0 | 0.00% | 0 | **Total Conn. Load:** | 5320 |
| | | | | **Total Est. Demand:** | 5320 |
| | | | | **Total Conn. Current:** | 15 A |
| | | | | **Total Est. Demand** | 15 A |

**Notes:**


MHTN ARCHITECTS
**MHTN Architects, Inc.**
420 East South Temple
Suite 100
Salt Lake City, Utah 84111
Telephone (801) 595-6700
Telefax (801) 595-6717
www.mhtn.com

**Hastings+Chivetta**
ARCHITECTURE • PLANNING • ENGINEERING
622 Emerson, Suite 200
St. Louis, MO 63141
Tel. 314.863.5717
Fax. 314.863.2823
www.hastingschivetta.com


BUILDING OFFICIAL STAMP


Ken Garner Engineering, Inc.
Electrical Engineering Consultants, Inc.
102 West 500 South, Suite 225
Salt Lake City, Utah 84101
P. 801.328.8800
F. 801.328.8802
Contact: Paris LeLaCheur
Project #: 2010-117.00


# UNIVERSITY OF UTAH
# STUDENT LIFE CENTER
1836 E. BALLIF ROAD
SALT LAKE CITY, UTAH 84112

SEAL

MHTN PROJECT NO. 2010562.00
DRAWN BY: KGE CHECKED BY: KGE

ISSUED:

| NO. | DATE | DESCRIPTION |
|---|---|---|

CONTRACTOR TO VERIFY DRAWINGS IN FIELD.USE REFLECT LAST REVISION DATE.

| NO. | DATE | DESCRIPTION |
|---|---|---|

SHEET NAME
PANEL SCHEDULES LEVEL 1
BID DOCUMENTS
May 15, 2013

SHEET NUMBER
EP605

C:\Users\brown.KGE\Documents\2010-117.00_KGE_STUDENT LIFE_ELECTRICAL_CENTERAL_2012_brown.rvt
5/14/2013 5:56:21 PM

## Branch Panel: EH2L1

**Location:** ELECTRICAL 201F
**Supply From:**
**Mounting:** SURFACE
**Enclosure:** TYPE 1
**Volts:** 480/277 Wye
**Phases:** 3
**Wires:** 4
**A.I.C. Rating:**
**Mains Type:** MB
**Mains Rating:** 225 A
**MCB Rating:**

| CKT | Circuit Description | DF | LOAD | BKR | P | A | | B | | C | | P | BKR | LOAD | DF | Circuit Description | CKT |
|---|---|---|---|---|---|---|---|---|---|---|---|---|---|---|---|---|---|
| 1 | L | L | 0 | 20 A | 1 | 0 | | | | | | | | | | | 2 |
| 3 | L | L | 348 | 20 A | 1 | | | 348 | 360 | | | 1 | 20 A | 360 | R | RECEPTACLES | 4 |
| 5 | Spare - ALT. 3 | -- | 0 | 0 A | 1 | | | | | 0 | | | | | | | 6 |
| 7 | | | | | | | | | | | | | | | | | 8 |
| 9 | | | | | | | | | | | | | | | | | 10 |
| 11 | | | | | | | | | | | | | | | | | 12 |
| 13 | | | | | | | | | | | | | | | | | 14 |
| 15 | | | | | | | | | | | | | | | | | 16 |
| 17 | | | | | | | | | | | | | | | | | 18 |
| 19 | | | | | | | | | | | | | | | | | 20 |
| 21 | | | | | | | | | | | | | | | | | 22 |
| 23 | | | | | | | | | | | | | | | | | 24 |
| 25 | | | | | | | | | | | | | | | | | 26 |
| 27 | | | | | | | | | | | | | | | | | 28 |
| 29 | | | | | | | | | | | | | | | | | 30 |
| 31 | | | | | | | | | | | | | | | | | 32 |
| 33 | | | | | | | | | | | | | | | | | 34 |
| 35 | | | | | | | | | | | | | | | | | 36 |
| 37 | | | | | | | | | | | | | | | | | 38 |
| 39 | | | | | | | | | | | | | | | | | 40 |
| 41 | | | | | | | | | | | | | | | | | 42 |
| | | | | | Total | 0 | | 708 | | 0 | | | | | | | |
| | | | | | Total | 0 A | | 3 A | | 0 A | | | | | | | |

**Legend:**
DEMAND FACTORS: (R-RECEPTACLES 100%<10,000VA, 50%>10,000VA) (L-LIGHTING 125%) (M-MECHANICAL 100%) (C-CONTINUOUS 125%) (K-KITCHEN PER NEC TABLE 220.56) (L-LIGHTING 125%)

| Load Classification | Connected Load | Demand Factor | Estimated | Panel Totals | |
|---|---|---|---|---|---|
| R | 360 | 100.00% | 360 | | |
| L | 348 | 125.00% | 435 | Total Conn. Load: | 708 |
| | | | | Total Est. Demand: | 795 |
| | | | | Total Conn. Current: | 1 A |
| | | | | Total Est. Demand | 1 A |

**Notes:**

## Branch Panel: EL2P1

**Location:** ELECTRICAL 201F
**Supply From:**
**Mounting:** SURFACE
**Enclosure:** TYPE 1
**Volts:** 120/208 Wye
**Phases:** 3
**Wires:** 4
**A.I.C. Rating:**
**Mains Type:** MB
**Mains Rating:** 225 A
**MCB Rating:**

| CKT | Circuit Description | DF | LOAD | BKR | P | A | | B | | C | | P | BKR | LOAD | DF | Circuit Description | CKT |
|---|---|---|---|---|---|---|---|---|---|---|---|---|---|---|---|---|---|
| 1 | UPS POWER | R | 360 | 20 A | 2 | 180 | 360 | | | | | 1 | 20 A | 360 | R | RECEPTACLES | 2 |
| 3 | | | | | | | | 180 | | | | | | | | | 4 |
| 5 | UPS POWER | R | 360 | 20 A | 2 | | | | | 180 | 0 | -- | -- | -- | -- | 'SEC' | 6 |
| 7 | | | | | | 180 | 0 | | | | | -- | -- | -- | -- | 'NAC' | 8 |
| 9 | | | | | | | | | | | | | | | | | 10 |
| 11 | | | | | | | | | | | | | | | | | 12 |
| 13 | | | | | | | | | | | | | | | | | 14 |
| 15 | | | | | | | | | | | | | | | | | 16 |
| 17 | | | | | | | | | | | | | | | | | 18 |
| 19 | | | | | | | | | | | | | | | | | 20 |
| 21 | | | | | | | | | | | | | | | | | 22 |
| 23 | | | | | | | | | | | | | | | | | 24 |
| 25 | | | | | | | | | | | | | | | | | 26 |
| 27 | | | | | | | | | | | | | | | | | 28 |
| 29 | | | | | | | | | | | | | | | | | 30 |
| 31 | | | | | | | | | | | | | | | | | 32 |
| 33 | | | | | | | | | | | | | | | | | 34 |
| 35 | | | | | | | | | | | | | | | | | 36 |
| 37 | | | | | | | | | | | | | | | | | 38 |
| 39 | | | | | | | | | | | | | | | | | 40 |
| 41 | | | | | | | | | | | | | | | | | 42 |
| | | | | | Total | 720 | | 180 | | 180 | | | | | | | |
| | | | | | Total | 6 A | | 2 A | | 2 A | | | | | | | |

**Legend:**
DEMAND FACTORS: (R-RECEPTACLES 100%<10,000VA, 50%>10,000VA) (L-LIGHTING 125%) (M-MECHANICAL 100%) (C-CONTINUOUS 125%) (K-KITCHEN PER NEC TABLE 220.56) (L-LIGHTING 125%)

| Load Classification | Connected Load | Demand Factor | Estimated | Panel Totals | |
|---|---|---|---|---|---|
| R | 1080 | 100.00% | 1080 | | |
| | | | | Total Conn. Load: | 1080 |
| | | | | Total Est. Demand: | 1080 |
| | | | | Total Conn. Current: | 3 A |
| | | | | Total Est. Demand | 3 A |

**Notes:**

## Branch Panel: H2L1

**Location:** ELECTRICAL 201F
**Supply From:**
**Mounting:** SURFACE
**Enclosure:** TYPE 1
**Volts:** 480/277 Wye
**Phases:** 3
**Wires:** 4
**A.I.C. Rating:**
**Mains Type:** MB
**Mains Rating:** 225 A
**MCB Rating:**

| CKT | Circuit Description | DF | LOAD | BKR | P | A | | B | | C | | P | BKR | LOAD | DF | Circuit Description | CKT |
|---|---|---|---|---|---|---|---|---|---|---|---|---|---|---|---|---|---|
| 1 | L | L | 282 | 20 A | 1 | 282 | | | | | | | | | | | 2 |
| 3 | L | L | 406 | 20 A | 1 | | | 406 | | | | | | | | | 4 |
| 5 | L CORRIDOR 220 | L | 2601 | 20 A | 1 | | | | | 2601 | | | | | | | 6 |
| 7 | | | | | | | | | | | | | | | | | 8 |
| 9 | | | | | | | | | | | | | | | | | 10 |
| 11 | | | | | | | | | | | | | | | | | 12 |
| 13 | | | | | | | | | | | | | | | | | 14 |
| 15 | | | | | | | | | | | | | | | | | 16 |
| 17 | | | | | | | | | | | | | | | | | 18 |
| 19 | | | | | | | | | | | | | | | | | 20 |
| 21 | | | | | | | | | | | | | | | | | 22 |
| 23 | | | | | | | | | | | | | | | | | 24 |
| 25 | | | | | | | | | | | | | | | | | 26 |
| 27 | | | | | | | | | | | | | | | | | 28 |
| 29 | | | | | | | | | | | | | | | | | 30 |
| 31 | | | | | | | | | | | | | | | | | 32 |
| 33 | | | | | | | | | | | | | | | | | 34 |
| 35 | | | | | | | | | | | | | | | | | 36 |
| 37 | | | | | | | | | | | | | | | | | 38 |
| 39 | | | | | | | | | | | | | | | | | 40 |
| 41 | | | | | | | | | | | | | | | | | 42 |
| | | | | | Total | 282 | | 406 | | 2601 | | | | | | | |
| | | | | | Total | 1 A | | 2 A | | 9 A | | | | | | | |

**Legend:**
DEMAND FACTORS: (R-RECEPTACLES 100%<10,000VA, 50%>10,000VA) (L-LIGHTING 125%) (M-MECHANICAL 100%) (C-CONTINUOUS 125%) (K-KITCHEN PER NEC TABLE 220.56) (L-LIGHTING 125%)

| Load Classification | Connected Load | Demand Factor | Estimated | Panel Totals | |
|---|---|---|---|---|---|
| L | 3289 | 125.00% | 4111 | | |
| | | | | Total Conn. Load: | 3289 |
| | | | | Total Est. Demand: | 4111 |
| | | | | Total Conn. Current: | 4 A |
| | | | | Total Est. Demand | 5 A |

**Notes:**

## Branch Panel: H2L2

**Location:** ELECTRICAL 201F
**Supply From:**
**Mounting:** SURFACE
**Enclosure:** TYPE 1
**Volts:** 480/277 Wye
**Phases:** 3
**Wires:** 4
**A.I.C. Rating:**
**Mains Type:** MB
**Mains Rating:** 100 A
**MCB Rating:**

| CKT | Circuit Description | DF | LOAD | BKR | P | A | | B | | C | | P | BKR | LOAD | DF | Circuit Description | CKT |
|---|---|---|---|---|---|---|---|---|---|---|---|---|---|---|---|---|---|
| 1 | | | | | | | | | | | | | | | | | 2 |
| 3 | | | | | | | | | | | | | | | | | 4 |
| 5 | | | | | | | | | | | | | | | | | 6 |
| 7 | | | | | | | | | | | | | | | | | 8 |
| 9 | | | | | | | | | | | | | | | | | 10 |
| 11 | | | | | | | | | | | | | | | | | 12 |
| 13 | | | | | | | | | | | | | | | | | 14 |
| 15 | | | | | | | | | | | | | | | | | 16 |
| 17 | | | | | | | | | | | | | | | | | 18 |
| 19 | | | | | | | | | | | | | | | | | 20 |
| 21 | | | | | | | | | | | | | | | | | 22 |
| 23 | | | | | | | | | | | | | | | | | 24 |
| 25 | | | | | | | | | | | | | | | | | 26 |
| 27 | | | | | | | | | | | | | | | | | 28 |
| 29 | | | | | | | | | | | | | | | | | 30 |
| 31 | | | | | | | | | | | | | | | | | 32 |
| 33 | | | | | | | | | | | | | | | | | 34 |
| 35 | | | | | | | | | | | | | | | | | 36 |
| 37 | | | | | | | | | | | | | | | | | 38 |
| 39 | | | | | | | | | | | | | | | | | 40 |
| 41 | | | | | | | | | | | | | | | | | 42 |
| | | | | | Total | 0 | | 0 | | 0 | | | | | | | |
| | | | | | Total | 0 A | | 0 A | | 0 A | | | | | | | |

**Legend:**
DEMAND FACTORS: (R-RECEPTACLES 100%<10,000VA, 50%>10,000VA) (L-LIGHTING 125%) (M-MECHANICAL 100%) (C-CONTINUOUS 125%) (K-KITCHEN PER NEC TABLE 220.56) (L-LIGHTING 125%)

| Load Classification | Connected Load | Demand Factor | Estimated | Panel Totals | |
|---|---|---|---|---|---|
| | | | | | |
| | | | | Total Conn. Load: | 0 |
| | | | | Total Est. Demand: | 0 |
| | | | | Total Conn. Current: | 0 A |
| | | | | Total Est. Demand | 0 A |

**Notes:**

## Branch Panel: L2P1

**Location:** ELECTRICAL 201F
**Supply From:**
**Mounting:** SURFACE
**Enclosure:** TYPE 1
**Volts:** 120/208 Wye
**Phases:** 3
**Wires:** 4
**A.I.C. Rating:**
**Mains Type:** ML
**Mains Rating:** 250 A
**MCB Rating:**

| CKT | Circuit Description | DF | LOAD | BKR | P | A | | B | | C | | P | BKR | LOAD | DF | Circuit Description | CKT |
|---|---|---|---|---|---|---|---|---|---|---|---|---|---|---|---|---|---|
| 1 | RECEPTACLES | R | 900 | 20 A | 1 | 900 | 540 | | | | | 1 | 20 A | 540 | R | RECEPTACLES | 2 |
| 3 | RECEPTACLES | R | 1080 | 20 A | 1 | | | 1080 | 900 | | | 1 | 20 A | 900 | R | RECEPTACLES | 4 |
| 5 | RECEPTACLES | R | 720 | 20 A | 1 | | | | | 720 | 900 | 1 | 20 A | 900 | R | RECEPTACLES | 6 |
| 7 | FITNESS EQUIP. | R | 2160 | 20 A | 1 | 2160 | 1260 | | | | | 1 | 20 A | 1260 | R | RECEPTACLES | 8 |
| 9 | FITNESS EQUIP. | R | 2160 | 20 A | 1 | | | 2160 | 1080 | | | 1 | 20 A | 1080 | R | RECEPTACLES | 10 |
| 11 | FITNESS EQUIP. | R | 2160 | 20 A | 1 | | | | | 2160 | 1404 | 1 | 20 A | 1404 | M | BAF FANS | 12 |
| 13 | FITNESS EQUIP. | R | 2160 | 20 A | 1 | 2160 | 540 | | | | | 1 | 20 A | 540 | R | RECEPTACLES | 14 |
| 15 | FITNESS EQUIP. | R | 2160 | 20 A | 1 | | | 2160 | 360 | | | 1 | 20 A | 360 | R; | M | 16 |
| 17 | FITNESS EQUIP. | R | 2160 | 20 A | 1 | | | | | 2160 | 1260 | 1 | 20 A | 1260 | R | FITNESS EQUIP. | 18 |
| 19 | FITNESS EQUIP. | R | 2160 | 20 A | 1 | 2160 | 180 | | | | | 1 | 20 A | 180 | R | FITNESS EQUIP. | 20 |
| 21 | FITNESS EQUIP. | R | 2160 | 20 A | 1 | | | 2160 | 1260 | | | 1 | 20 A | 1260 | R | RECEPTACLES | 22 |
| 23 | FITNESS T.V. | R | 1080 | 20 A | 1 | | | | | 1080 | 540 | 1 | 20 A | 540 | R | RECEPTACLES | 24 |
| 25 | FITNESS T.V. | R | 1080 | 20 A | 1 | 1080 | 540 | | | | | 1 | 20 A | 540 | R | RECEPTACLES | 26 |
| 27 | FITNESS T.V. | R | 1080 | 20 A | 1 | | | 1080 | 540 | | | 1 | 20 A | 540 | R | RECEPTACLES | 28 |
| 29 | FITNESS T.V. | R | 1080 | 20 A | 1 | | | | | 1080 | 900 | 1 | 20 A | 900 | R | RECEPTACLES | 30 |
| 31 | RECEPTACLES | R | 1260 | 20 A | 1 | 1260 | 720 | | | | | 1 | 20 A | 720 | R | RECEPTACLES | 32 |
| 33 | RECEPTACLES | R | 720 | 20 A | 1 | | | 720 | 1080 | | | 1 | 20 A | 1080 | R | RECEPTACLES | 34 |
| 35 | RECEPTACLES | R | 720 | 20 A | 1 | | | | | 720 | 540 | 1 | 20 A | 540 | R | RECEPTACLES | 36 |
| 37 | RECEPTACLES | R | 180 | 20 A | 1 | 180 | 180 | | | | | 1 | 20 A | 180 | R | TREADMILL | 38 |
| 39 | RECEPTACLES | R | 180 | 20 A | 1 | | | 180 | | | | | | | | | 40 |
| 41 | | | | | | | | | | | | | | | | | 42 |
| | | | | | Total | 13860 | | 14760 | | 13464 | | | | | | | |
| | | | | | Total | 116 A | | 124 A | | 112 A | | | | | | | |

**Legend:**
DEMAND FACTORS: (R-RECEPTACLES 100%<10,000VA, 50%>10,000VA) (L-LIGHTING 125%) (M-MECHANICAL 100%) (C-CONTINUOUS 125%) (K-KITCHEN PER NEC TABLE 220.56) (L-LIGHTING 125%)

| Load Classification | Connected Load | Demand Factor | Estimated | Panel Totals | |
|---|---|---|---|---|---|
| R | 40680 | 62.29% | 25340 | | |
| M | 1404 | 100.00% | 1404 | Total Conn. Load: | 42084 |
| | | | | Total Est. Demand: | 26744 |
| | | | | Total Conn. Current: | 117 A |
| | | | | Total Est. Demand | 74 A |

**Notes:**

## Branch Panel: L2P2

**Location:** ELECTRICAL 201F
**Supply From:**
**Mounting:** SURFACE
**Enclosure:** TYPE 1
**Volts:** 120/208 Wye
**Phases:** 3
**Wires:** 4
**A.I.C. Rating:**
**Mains Type:** ML
**Mains Rating:** 250 A
**MCB Rating:**

| CKT | Circuit Description | DF | LOAD | BKR | P | A | | B | | C | | P | BKR | LOAD | DF | Circuit Description | CKT |
|---|---|---|---|---|---|---|---|---|---|---|---|---|---|---|---|---|---|
| 1 | FITNESS EQUIP. | R | 1440 | 20 A | 1 | 1440 | 180 | | | | | 1 | 20 A | 180 | R | RECEPTACLES | 2 |
| 3 | FITNESS EQUIP. | R | 1440 | 20 A | 1 | | | 1440 | 1440 | | | 1 | 20 A | 1440 | R | RECEPTACLES | 4 |
| 5 | FITNESS EQUIP. | R | 1440 | 20 A | 1 | | | | | 1440 | 900 | 1 | 20 A | 900 | R | RECEPTACLES | 6 |
| 7 | FITNESS EQUIP. | R | 1440 | 20 A | 1 | 1440 | 1000 | | | | | 1 | 20 A | 1000 | R | WON DOOR | 8 |
| 9 | FITNESS EQUIP. | R | 1440 | 20 A | 1 | | | 1440 | 180 | | | 1 | 20 A | 180 | R | RECEPTACLES | 10 |
| 11 | FITNESS EQUIP. | R | 1440 | 20 A | 1 | | | | | 1440 | 1080 | 1 | 20 A | 1080 | R | RECEPTACLES | 12 |
| 13 | FITNESS EQUIP. | R | 1440 | 20 A | 1 | 1440 | 540 | | | | | 1 | 20 A | 540 | R | RECEPTACLES | 14 |
| 15 | FITNESS EQUIP. | R | 1440 | 20 A | 1 | | | 1440 | 720 | | | 1 | 20 A | 720 | R | RECEPTACLES | 16 |
| 17 | FITNESS EQUIP. | R | 1440 | 20 A | 1 | | | | | 1440 | 720 | 1 | 20 A | 720 | R | RECEPTACLES | 18 |
| 19 | FITNESS EQUIP. | R | 1440 | 20 A | 1 | 1440 | 720 | | | | | 1 | 20 A | 720 | R | RECEPTACLES | 20 |
| 21 | FITNESS EQUIP. | R | 1440 | 20 A | 1 | | | 1440 | 2000 | | | 1 | 20 A | 2000 | M | BACKBOARDS | 22 |
| 23 | FITNESS EQUIP. | R | 1440 | 20 A | 1 | | | | | 1440 | 2000 | 1 | 20 A | 2000 | M | BACKBOARDS | 24 |
| 25 | FITNESS EQUIP. | R | 1440 | 20 A | 1 | 1440 | 2000 | | | | | 1 | 20 A | 2000 | M | BACKBOARDS | 26 |
| 27 | FITNESS EQUIP. | R | 1440 | 20 A | 1 | | | 1440 | 360 | | | 1 | 20 A | 360 | R | RECEPTACLES | 28 |
| 29 | SCOREBOARDS REC. | R | 540 | 20 A | 1 | | | | | 540 | 540 | 1 | 20 A | 540 | R | T.V. POWER | 30 |
| 31 | RECEPTACLE | R | 360 | 20 A | 1 | 360 | 360 | | | | | 1 | 20 A | 360 | R | RECEPTACLE | 32 |
| 33 | R Room 201E, 201F | R | 360 | 20 A | 1 | | | 360 | 500 | | | 1 | 20 A | 500 | R | R PT 240F | 34 |
| 35 | R CORRIDOR 220 | R | 180 | 20 A | 1 | | | | | 180 | 360 | 1 | 20 A | 360 | R | RECEPTACLE | 36 |
| 37 | RECEPTACLE | R | 360 | 20 A | 1 | 360 | 180 | | | | | 1 | 20 A | 180 | R | RECEPTACLE | 38 |
| 39 | | | | | | | | | | | | | | | | | 40 |
| 41 | | | | | | | | | | | | | | | | | 42 |
| | | | | | Total | 12900 | | 12760 | | 12080 | | | | | | | |
| | | | | | Total | 108 A | | 107 A | | 101 A | | | | | | | |

**Legend:**
DEMAND FACTORS: (R-RECEPTACLES 100%<10,000VA, 50%>10,000VA) (L-LIGHTING 125%) (M-MECHANICAL 100%) (C-CONTINUOUS 125%) (K-KITCHEN PER NEC TABLE 220.56) (L-LIGHTING 125%)

| Load Classification | Connected Load | Demand Factor | Estimated | Panel Totals | |
|---|---|---|---|---|---|
| R | 31740 | 65.75% | 20870 | | |
| M | 6000 | 100.00% | 6000 | Total Conn. Load: | 37740 |
| | | | | Total Est. Demand: | 26870 |
| | | | | Total Conn. Current: | 105 A |
| | | | | Total Est. Demand | 75 A |

**Notes:**

## Branch Panel: L2P3

**Location:** ELECTRICAL 201F
**Supply From:**
**Mounting:** SURFACE
**Enclosure:** TYPE 1
**Volts:** 120/208 Wye
**Phases:** 3
**Wires:** 4
**A.I.C. Rating:**
**Mains Type:** ML
**Mains Rating:** 250 A
**MCB Rating:**

| CKT | Circuit Description | DF | LOAD | BKR | P | A | | B | | C | | P | BKR | LOAD | DF | Circuit Description | CKT |
|---|---|---|---|---|---|---|---|---|---|---|---|---|---|---|---|---|---|
| 1 | TREADMILL | R | 360 | 20 A | 1 | 360 | 360 | | | | | 1 | 20 A | 360 | R | TREADMILL | 2 |
| 3 | TREADMILL | R | 360 | 20 A | 1 | | | 360 | 360 | | | 1 | 20 A | 360 | R | TREADMILL | 4 |
| 5 | TREADMILL | R | 360 | 20 A | 1 | | | | | 360 | 360 | 1 | 20 A | 360 | R | TREADMILL | 6 |
| 7 | TREADMILL | R | 360 | 20 A | 1 | 360 | 360 | | | | | 1 | 20 A | 360 | R | TREADMILL | 8 |
| 9 | TREADMILL | R | 360 | 20 A | 1 | | | 360 | 360 | | | 1 | 20 A | 360 | R | TREADMILL | 10 |
| 11 | TREADMILL | R | 360 | 20 A | 1 | | | | | 360 | 360 | 1 | 20 A | 360 | R | TREADMILL | 12 |
| 13 | TREADMILL | R | 360 | 20 A | 1 | 360 | 360 | | | | | 1 | 20 A | 360 | R | TREADMILL | 14 |
| 15 | TREADMILL | R | 360 | 20 A | 1 | | | 360 | 360 | | | 1 | 20 A | 360 | R | TREADMILL | 16 |
| 17 | TREADMILL | R | 360 | 20 A | 1 | | | | | 360 | 360 | 1 | 20 A | 360 | R | TREADMILL | 18 |
| 19 | TREADMILL | R | 360 | 20 A | 1 | 360 | 360 | | | | | 1 | 20 A | 360 | R | TREADMILL | 20 |
| 21 | TREADMILL | R | 360 | 20 A | 1 | | | 360 | 360 | | | 1 | 20 A | 360 | R | TREADMILL | 22 |
| 23 | TREADMILL | R | 360 | 20 A | 1 | | | | | 360 | 360 | 1 | 20 A | 360 | R | TREADMILL | 24 |
| 25 | TREADMILL | R | 360 | 20 A | 1 | 360 | 360 | | | | | 1 | 20 A | 360 | R | TREADMILL | 26 |
| 27 | TREADMILL | R | 360 | 20 A | 1 | | | 360 | 360 | | | 1 | 20 A | 360 | R | TREADMILL | 28 |
| 29 | TREADMILL | R | 360 | 20 A | 1 | | | | | 360 | 360 | 1 | 20 A | 360 | R | TREADMILL | 30 |
| 31 | TREADMILL | R | 360 | 20 A | 1 | 360 | 360 | | | | | 1 | 20 A | 360 | R | TREADMILL | 32 |
| 33 | TREADMILL | R | 360 | 20 A | 1 | | | 360 | 360 | | | 1 | 20 A | 360 | R | TREADMILL | 34 |
| 35 | TREADMILL | R | 360 | 20 A | 1 | | | | | 360 | 360 | 1 | 20 A | 360 | R | TREADMILL | 36 |
| 37 | | | | | | | | | | | | | | | | | 38 |
| 39 | | | | | | | | | | | | | | | | | 40 |
| 41 | | | | | | | | | | | | | | | | | 42 |
| | | | | | Total | 4320 | | 4320 | | 4320 | | | | | | | |
| | | | | | Total | 36 A | | 36 A | | 36 A | | | | | | | |

**Legend:**
DEMAND FACTORS: (R-RECEPTACLES 100%<10,000VA, 50%>10,000VA) (L-LIGHTING 125%) (M-MECHANICAL 100%) (C-CONTINUOUS 125%) (K-KITCHEN PER NEC TABLE 220.56) (L-LIGHTING 125%)

| Load Classification | Connected Load | Demand Factor | Estimated | Panel Totals | |
|---|---|---|---|---|---|
| R | 12960 | 88.58% | 11480 | | |
| | | | | Total Conn. Load: | 12960 |
| | | | | Total Est. Demand: | 11480 |
| | | | | Total Conn. Current: | 36 A |
| | | | | Total Est. Demand | 32 A |

**Notes:**

## Branch Panel: L2P4

**Location:** ELECTRICAL 201F
**Supply From:**
**Mounting:** SURFACE
**Enclosure:** TYPE 1
**Volts:** 120/208 Wye
**Phases:** 3
**Wires:** 4
**A.I.C. Rating:**
**Mains Type:** ML
**Mains Rating:** 250 A
**MCB Rating:**

| CKT | Circuit Description | DF | LOAD | BKR | P | A | | B | | C | | P | BKR | LOAD | DF | Circuit Description | CKT |
|---|---|---|---|---|---|---|---|---|---|---|---|---|---|---|---|---|---|
| 1 | | | | | | | | | | | | | | | | | 2 |
| 3 | | | | | | | | | | | | | | | | | 4 |
| 5 | | | | | | | | | | | | | | | | | 6 |
| 7 | | | | | | | | | | | | | | | | | 8 |
| 9 | | | | | | | | | | | | | | | | | 10 |
| 11 | | | | | | | | | | | | | | | | | 12 |
| 13 | | | | | | | | | | | | | | | | | 14 |
| 15 | | | | | | | | | | | | | | | | | 16 |
| 17 | | | | | | | | | | | | | | | | | 18 |
| 19 | | | | | | | | | | | | | | | | | 20 |
| 21 | | | | | | | | | | | | | | | | | 22 |
| 23 | | | | | | | | | | | | | | | | | 24 |
| 25 | | | | | | | | | | | | | | | | | 26 |
| 27 | | | | | | | | | | | | | | | | | 28 |
| 29 | | | | | | | | | | | | | | | | | 30 |
| 31 | | | | | | | | | | | | | | | | | 32 |
| 33 | | | | | | | | | | | | | | | | | 34 |
| 35 | | | | | | | | | | | | | | | | | 36 |
| 37 | | | | | | | | | | | | | | | | | 38 |
| 39 | | | | | | | | | | | | | | | | | 40 |
| 41 | | | | | | | | | | | | | | | | | 42 |
| | | | | | Total | 0 | | 0 | | 0 | | | | | | | |
| | | | | | Total | 0 A | | 0 A | | 0 A | | | | | | | |

**Legend:**
DEMAND FACTORS: (R-RECEPTACLES 100%<10,000VA, 50%>10,000VA) (L-LIGHTING 125%) (M-MECHANICAL 100%) (C-CONTINUOUS 125%) (K-KITCHEN PER NEC TABLE 220.56) (L-LIGHTING 125%)

| Load Classification | Connected Load | Demand Factor | Estimated | Panel Totals | |
|---|---|---|---|---|---|
| | | | | | |
| | | | | Total Conn. Load: | 0 |
| | | | | Total Est. Demand: | 0 |
| | | | | Total Conn. Current: | 0 A |
| | | | | Total Est. Demand | 0 A |

**Notes:**


MHTN ARCHITECTS
**MHTN Architects, Inc.**
420 East South Temple
Suite 100
Salt Lake City, Utah 84111
Telephone (801) 595-6700
Telefax (801) 595-6717
www.mhtn.com

**Hastings+Chivetta**
ARCHITECTURE • PLANNING • ENGINEERING
622 Emerson, Suite 200
St. Louis, MO 63141
Tel. 314.863.5717
Fax. 314.863.2823
www.hastingschivetta.com

BUILDING OFFICIAL STAMP
Ken Garner Engineering, Inc.
Electrical Engineering Consultants, Inc.
102 West 500 South, Suite 225
Salt Lake City, Utah 84101
P. 801.328.8800
F. 801.328.8802
Contact: Paris LeLaCheur
Project #: 2010-117.00


UNIVERSITY OF UTAH
STUDENT LIFE CENTER
1836 E. BALLIF ROAD
SALT LAKE CITY, UTAH 84112

SEAL

MHTN PROJECT NO. 2010562.00
DRAWN BY: KGE CHECKED BY: KGE

ISSUED:

| NO. | DATE | DESCRIPTION |
|---|---|---|

CONTRACTOR TO VERIFY DRAWINGS IN FIELD USE REFLECT LAST REVISION DATE

| NO. | DATE | DESCRIPTION |
|---|---|---|

SHEET NAME
PANEL SCHEDULES LEVEL 2
BID DOCUMENTS
May 15, 2013

SHEET NUMBER
EP606

C:\Users\drown.KGE\Documents\2010-117.00_KGE_STUDENT LIFE_ELECTRICAL_CENTERAL_2012_drown.rvt
5/14/2013 5:56:31 PM

## Branch Panel: EH3L1

**Location:** ELECTRICAL 301F
**Supply From:**
**Mounting:** SURFACE
**Enclosure:** TYPE 1

**Volts:** 480/277 Wye
**Phases:** 3
**Wires:** 4

**A.I.C. Rating:**
**Mains Type:** MB
**Mains Rating:** 225 A
**MCB Rating:**

| CKT | Circuit Description | DF | LOAD | BKR | P | A | | B | | C | | P | BKR | LOAD | DF | Circuit Description | CKT |
|---|---|---|---|---|---|---|---|---|---|---|---|---|---|---|---|---|---|
| 1 | L | L | 0 | 20 A | 1 | 0 | 0 | | | | | 1 | 20 A | 0 | L | L | 2 |
| 3 | L | L | 0 | 20 A | 1 | | | 0 | 0 | | | 1 | 20 A | 0 | L | L | 4 |
| 5 | L | L | 0 | 20 A | 1 | | | | | 0 | 0 | 1 | 20 A | 0 | L | L | 6 |
| 7 | L | L | 0 | 20 A | 1 | 0 | 0 | | | | | 1 | 20 A | 0 | L | L | 8 |
| 9 | L | L | 0 | 20 A | 1 | | | 0 | 0 | | | 1 | 20 A | 0 | L | L | 10 |
| 11 | L | L | 94 | 20 A | 1 | | | | | 94 | 0 | 1 | 20 A | 0 | L | L | 12 |
| 13 | | | | | | | 29 | | | | | 1 | 20 A | 29 | L | L | 14 |
| 15 | | | | | | | | | | | | | | | | | 16 |
| 17 | | | | | | | | | | | | | | | | | 18 |
| 19 | | | | | | | | | | | | | | | | | 20 |
| 21 | | | | | | | | | | | | | | | | | 22 |
| 23 | | | | | | | | | | | | | | | | | 24 |
| 25 | | | | | | | | | | | | | | | | | 26 |
| 27 | | | | | | | | | | | | | | | | | 28 |
| 29 | | | | | | | | | | | | | | | | | 30 |
| 31 | | | | | | | | | | | | | | | | | 32 |
| 33 | | | | | | | | | | | | | | | | | 34 |
| 35 | | | | | | | | | | | | | | | | | 36 |
| 37 | | | | | | | | | | | | | | | | | 38 |
| 39 | | | | | | | | | | | | | | | | | 40 |
| 41 | | | | | | | | | | | | | | | | | 42 |
| | | | | | Total | 29 | | 0 | | 94 | | | | | | | |
| | | | | | Total | 0 A | | 0 A | | 0 A | | | | | | | |

**Legend:**
DEMAND FACTORS: (R-RECEPTACLES 100%<10,000VA, 50%>10,000VA) (L-LIGHTING 125%) (M-MECHANICAL 100%) (C-CONTINUOUS 125%) (K-KITCHEN PER NEC TABLE 220.56) (L-LIGHTING 125%)

| Load Classification | Connected Load | Demand Factor | Estimated | Panel Totals | |
|---|---|---|---|---|---|
| L | 123 | 125.00% | 154 | | |
| | | | | Total Conn. Load: | 123 |
| | | | | Total Est. Demand: | 154 |
| | | | | Total Conn. Current: | 0 A |
| | | | | Total Est. Demand | 0 A |

**Notes:**

## Branch Panel: EL3P1

**Location:** ELECTRICAL 301F
**Supply From:**
**Mounting:** SURFACE
**Enclosure:** TYPE 1

**Volts:** 120/208 Wye
**Phases:** 3
**Wires:** 4

**A.I.C. Rating:**
**Mains Type:** MB
**Mains Rating:** 225 A
**MCB Rating:**

| CKT | Circuit Description | DF | LOAD | BKR | P | A | | B | | C | | P | BKR | LOAD | DF | Circuit Description | CKT |
|---|---|---|---|---|---|---|---|---|---|---|---|---|---|---|---|---|---|
| 1 | R DATA 301D | R | 360 | 20 A | 2 | 180 | 180 | | | | | 1 | 20 A | 180 | R | R DATA 301D | 2 |
| 3 | | | | | | | | 180 | 180 | | | 1 | 20 A | 180 | R | R DATA 301D | 4 |
| 5 | R DATA 301D | R | 360 | 20 A | 2 | | | | | 180 | 0 | -- | -- | -- | -- | 'NAC' | 6 |
| 7 | | | | | | 180 | 0 | | | | | -- | -- | -- | -- | 'SEC' | 8 |
| 9 | | | | | | | | | | | | | | | | | 10 |
| 11 | | | | | | | | | | | | | | | | | 12 |
| 13 | | | | | | | | | | | | | | | | | 14 |
| 15 | | | | | | | | | | | | | | | | | 16 |
| 17 | | | | | | | | | | | | | | | | | 18 |
| 19 | | | | | | | | | | | | | | | | | 20 |
| 21 | | | | | | | | | | | | | | | | | 22 |
| 23 | | | | | | | | | | | | | | | | | 24 |
| 25 | | | | | | | | | | | | | | | | | 26 |
| 27 | | | | | | | | | | | | | | | | | 28 |
| 29 | | | | | | | | | | | | | | | | | 30 |
| 31 | | | | | | | | | | | | | | | | | 32 |
| 33 | | | | | | | | | | | | | | | | | 34 |
| 35 | | | | | | | | | | | | | | | | | 36 |
| 37 | | | | | | | | | | | | | | | | | 38 |
| 39 | | | | | | | | | | | | | | | | | 40 |
| 41 | | | | | | | | | | | | | | | | | 42 |
| | | | | | Total | 540 | | 360 | | 180 | | | | | | | |
| | | | | | Total | 5 A | | 3 A | | 2 A | | | | | | | |

**Legend:**
DEMAND FACTORS: (R-RECEPTACLES 100%<10,000VA, 50%>10,000VA) (L-LIGHTING 125%) (M-MECHANICAL 100%) (C-CONTINUOUS 125%) (K-KITCHEN PER NEC TABLE 220.56) (L-LIGHTING 125%)

| Load Classification | Connected Load | Demand Factor | Estimated | Panel Totals | |
|---|---|---|---|---|---|
| R | 1080 | 100.00% | 1080 | | |
| | | | | Total Conn. Load: | 1080 |
| | | | | Total Est. Demand: | 1080 |
| | | | | Total Conn. Current: | 3 A |
| | | | | Total Est. Demand | 3 A |

**Notes:**

## Branch Panel: H3L1

**Location:** ELECTRICAL 301F
**Supply From:**
**Mounting:** SURFACE
**Enclosure:** TYPE 1

**Volts:** 480/277 Wye
**Phases:** 3
**Wires:** 4

**A.I.C. Rating:**
**Mains Type:** MB
**Mains Rating:** 225 A
**MCB Rating:**

| CKT | Circuit Description | DF | LOAD | BKR | P | A | | B | | C | | P | BKR | LOAD | DF | Circuit Description | CKT |
|---|---|---|---|---|---|---|---|---|---|---|---|---|---|---|---|---|---|
| 1 | L | L | 360 | 20 A | 1 | 360 | 29 | | | | | 1 | 20 A | 29 | L | L EXERCISE ROOM 1 | 2 |
| 3 | L | L | 360 | 20 A | 1 | | | 360 | 0 | | | 1 | 20 A | 0 | L | L OFFICE 341 | 4 |
| 5 | L | L | 360 | 20 A | 1 | | | | | 360 | 0 | 1 | 0 A | 0 | -- | Spare - ALT. 3 | 6 |
| 7 | L | L | 360 | 20 A | 1 | 360 | 580 | | | | | 1 | 20 A | 580 | L | L | 8 |
| 9 | L | L | 360 | 20 A | 1 | | | 360 | 29 | | | 1 | 20 A | 29 | L | L | 10 |
| 11 | | | | | | | | | | | | | | | | | 12 |
| 13 | | | | | | | | | | | | | | | | | 14 |
| 15 | | | | | | | | | | | | | | | | | 16 |
| 17 | | | | | | | | | | | | | | | | | 18 |
| 19 | | | | | | | | | | | | | | | | | 20 |
| 21 | | | | | | | | | | | | | | | | | 22 |
| 23 | | | | | | | | | | | | | | | | | 24 |
| 25 | | | | | | | | | | | | | | | | | 26 |
| 27 | | | | | | | | | | | | | | | | | 28 |
| 29 | | | | | | | | | | | | | | | | | 30 |
| 31 | | | | | | | | | | | | | | | | | 32 |
| 33 | | | | | | | | | | | | | | | | | 34 |
| 35 | | | | | | | | | | | | | | | | | 36 |
| 37 | | | | | | | | | | | | | | | | | 38 |
| 39 | | | | | | | | | | | | | | | | | 40 |
| 41 | | | | | | | | | | | | | | | | | 42 |
| | | | | | Total | 1329 | | 749 | | 360 | | | | | | | |
| | | | | | Total | 5 A | | 3 A | | 1 A | | | | | | | |

**Legend:**
DEMAND FACTORS: (R-RECEPTACLES 100%<10,000VA, 50%>10,000VA) (L-LIGHTING 125%) (M-MECHANICAL 100%) (C-CONTINUOUS 125%) (K-KITCHEN PER NEC TABLE 220.56) (L-LIGHTING 125%)

| Load Classification | Connected Load | Demand Factor | Estimated | Panel Totals | |
|---|---|---|---|---|---|
| L | 2438 | 125.00% | 3048 | | |
| | | | | Total Conn. Load: | 2438 |
| | | | | Total Est. Demand: | 3048 |
| | | | | Total Conn. Current: | 3 A |
| | | | | Total Est. Demand | 4 A |

**Notes:**

## Branch Panel: L3P1

**Location:** ELECTRICAL 301F
**Supply From:**
**Mounting:** SURFACE
**Enclosure:** TYPE 1

**Volts:** 120/208 Wye
**Phases:** 3
**Wires:** 4

**A.I.C. Rating:**
**Mains Type:** ML
**Mains Rating:** 250 A
**MCB Rating:**

| CKT | Circuit Description | DF | LOAD | BKR | P | A | | B | | C | | P | BKR | LOAD | DF | Circuit Description | CKT |
|---|---|---|---|---|---|---|---|---|---|---|---|---|---|---|---|---|---|
| 1 | R BREAK ROOM 350 | R | 180 | 20 A | 1 | 180 | 720 | | | | | 1 | 20 A | 720 | R | R Room 300H, 300N, | 2 |
| 3 | R BREAK ROOM 350 | R | 540 | 20 A | 1 | | | 540 | 1260 | | | 1 | 20 A | 1260 | R | R Room 320, 353 | 4 |
| 5 | R WORK ROOM 360 | R | 720 | 20 A | 1 | | | | | 720 | 360 | 1 | 20 A | 360 | R | R BREAK ROOM 350 | 6 |
| 7 | R Room 360 | R | 540 | 20 A | 1 | 540 | 720 | | | | | 1 | 20 A | 720 | R | R OFFICE 341 | 8 |
| 9 | R FITNESS 320 | R | 720 | 20 A | 1 | | | 720 | 720 | | | 1 | 20 A | 720 | R | R OFFICE 343 | 10 |
| 11 | R FITNESS 320 | R | 720 | 20 A | 1 | | | | | 720 | 720 | 1 | 20 A | 720 | R | R OFFICE 345 | 12 |
| 13 | R STRETCHING-2 305-2 | R | 720 | 20 A | 1 | 720 | 720 | | | | | 1 | 20 A | 720 | R | R OFFICE 347 | 14 |
| 15 | R Room 307 | R | 720 | 20 A | 1 | | | 720 | 720 | | | 1 | 20 A | 720 | R | R OFFICE 349 | 16 |
| 17 | R Space 40G | R | 720 | 20 A | 1 | | | | | 720 | 720 | 1 | 20 A | 720 | R | R OFFICE 351 | 18 |
| 19 | R Space 40G | R | 1080 | 20 A | 1 | 1080 | 1080 | | | | | 1 | 20 A | 1080 | R | R DIRECTOR OFFICE | 20 |
| 21 | R STRETCHING-2 305-2 | R | 720 | 20 A | 1 | | | 720 | 720 | | | 1 | 20 A | 720 | R | R CONFERENCE ROOM | 22 |
| 23 | R Space 100R | R | 540 | 20 A | 1 | | | | | 540 | 360 | 1 | 20 A | 360 | R | R CONFERENCE ROOM | 24 |
| 25 | M CONFERENCE ROOM | M | 1012 | 20 A | 1 | 1012 | 720 | | | | | 1 | 20 A | 720 | R | R STAFF 340F | 26 |
| 27 | R | R | 540 | 20 A | 1 | | | 540 | 540 | | | 1 | 20 A | 540 | R | R STAFF 340F | 28 |
| 29 | | | | | | | | | | | | | | | | | 30 |
| 31 | | | | | | | | | | | | | | | | | 32 |
| 33 | | | | | | | | | | | | | | | | | 34 |
| 35 | | | | | | | | | | | | | | | | | 36 |
| 37 | | | | | | | | | | | | | | | | | 38 |
| 39 | | | | | | | | | | | | | | | | | 40 |
| 41 | | | | | | | | | | | | | | | | | 42 |
| | | | | | Total | 7492 | | 7200 | | 4860 | | | | | | | |
| | | | | | Total | 65 A | | 63 A | | 41 A | | | | | | | |

**Legend:**
DEMAND FACTORS: (R-RECEPTACLES 100%<10,000VA, 50%>10,000VA) (L-LIGHTING 125%) (M-MECHANICAL 100%) (C-CONTINUOUS 125%) (K-KITCHEN PER NEC TABLE 220.56) (L-LIGHTING 125%)

| Load Classification | Connected Load | Demand Factor | Estimated | Panel Totals | |
|---|---|---|---|---|---|
| R | 18540 | 76.97% | 14270 | | |
| M | 1012 | 100.00% | 1012 | Total Conn. Load: | 19552 |
| | | | | Total Est. Demand: | 15282 |
| | | | | Total Conn. Current: | 54 A |
| | | | | Total Est. Demand | 42 A |

**Notes:**

## Branch Panel: L3P2

**Location:** ELECTRICAL 301F
**Supply From:**
**Mounting:** SURFACE
**Enclosure:** TYPE 1

**Volts:** 120/208 Wye
**Phases:** 3
**Wires:** 4

**A.I.C. Rating:**
**Mains Type:** ML
**Mains Rating:** 250 A
**MCB Rating:**

| CKT | Circuit Description | DF | LOAD | BKR | P | A | | B | | C | | P | BKR | LOAD | DF | Circuit Description | CKT |
|---|---|---|---|---|---|---|---|---|---|---|---|---|---|---|---|---|---|
| 1 | R LOBBY/ VENDING 300 | R | 180 | 20 A | 1 | 180 | 1080 | | | | | 1 | 20 A | 1080 | R | RECEPTACLES | 2 |
| 3 | R LOBBY/ VENDING 300 | R | 180 | 20 A | 1 | | | 180 | 540 | | | 1 | 20 A | 540 | R | RECEPTACLES | 4 |
| 5 | R STRETCHING-2 305-2 | R | 720 | 20 A | 1 | | | | | 720 | 500 | 1 | 20 A | 500 | M | ELEVATOR LIGHTS | 6 |
| 7 | RECEPTACLES | R | 720 | 20 A | 1 | 720 | 1500 | | | | | 1 | 20 A | 1500 | M | ELEVATOR CONTROLS | 8 |
| 9 | RECEPTACLES | R | 1080 | 20 A | 1 | | | 1080 | 500 | | | 1 | 20 A | 500 | M | ELEVATOR LIGHTS | 10 |
| 11 | M | M | 936 | 20 A | 1 | | | | | 936 | 1500 | 1 | 20 A | 1500 | M | ELEVATOR CONTROLS | 12 |
| 13 | RECEPTACLES | R | 360 | 20 A | 1 | 360 | 180 | | | | | 1 | 20 A | 180 | R | R LOBBY / VENDING | 14 |
| 15 | R STRETCHING 305 | R | 540 | 20 A | 1 | | | 540 | 180 | | | 1 | 20 A | 180 | R | R LOBBY / VENDING | 16 |
| 17 | R Room 301G, 301F | R | 360 | 20 A | 1 | | | | | 360 | 360 | 1 | 20 A | 360 | R | R STRETCHING 305 | 18 |
| 19 | | | | | | | | | | | | | | | | | 20 |
| 21 | | | | | | | | | | | | | | | | | 22 |
| 23 | | | | | | | | | | | | | | | | | 24 |
| 25 | | | | | | | | | | | | | | | | | 26 |
| 27 | | | | | | | | | | | | | | | | | 28 |
| 29 | | | | | | | | | | | | | | | | | 30 |
| 31 | | | | | | | | | | | | | | | | | 32 |
| 33 | | | | | | | | | | | | | | | | | 34 |
| 35 | | | | | | | | | | | | | | | | | 36 |
| 37 | | | | | | | | | | | | | | | | | 38 |
| 39 | | | | | | | | | | | | | | | | | 40 |
| 41 | | | | | | | | | | | | | | | | | 42 |
| | | | | | Total | 4020 | | 3020 | | 4376 | | | | | | | |
| | | | | | Total | 35 A | | 25 A | | 38 A | | | | | | | |

**Legend:**
DEMAND FACTORS: (R-RECEPTACLES 100%<10,000VA, 50%>10,000VA) (L-LIGHTING 125%) (M-MECHANICAL 100%) (C-CONTINUOUS 125%) (K-KITCHEN PER NEC TABLE 220.56) (L-LIGHTING 125%)

| Load Classification | Connected Load | Demand Factor | Estimated | Panel Totals | |
|---|---|---|---|---|---|
| R | 6480 | 100.00% | 6480 | | |
| M | 4936 | 100.00% | 4936 | Total Conn. Load: | 11416 |
| | | | | Total Est. Demand: | 11416 |
| | | | | Total Conn. Current: | 32 A |
| | | | | Total Est. Demand | 32 A |

**Notes:**

## Branch Panel: P34

**Location:** ELECTRICAL 301F
**Supply From:**
**Mounting:** SURFACE
**Enclosure:** TYPE 1

**Volts:** 120/208 Wye
**Phases:** 3
**Wires:** 4

**A.I.C. Rating:**
**Mains Type:** ML
**Mains Rating:** 250 A
**MCB Rating:**

| CKT | Circuit Description | DF | LOAD | BKR | P | A | | B | | C | | P | BKR | LOAD | DF | Circuit Description | CKT |
|---|---|---|---|---|---|---|---|---|---|---|---|---|---|---|---|---|---|
| 1 | ROCK WALL LIGHT HOIST | M | 1800 | 20 A | 3 | 600 | 105 | | | | | 1 | 20 A | 0 | L | ROCK WALL LIGHTING | 2 |
| 3 | | | | | | | | 600 | 105 | | | 1 | 20 A | 0 | L | ROCK WALL LIGHTING | 4 |
| 5 | | | | | | | | | | 600 | 105 | 1 | 20 A | 0 | L | ROCK WALL LIGHTING | 6 |
| 7 | ROCK WALL LIGHT HOIST | M | 1800 | 20 A | 3 | 600 | 18 | | | | | 1 | 20 A | 0 | L | ROCK WALL LIGHTING | 8 |
| 9 | | | | | | | | 600 | | | | | | | | | 10 |
| 11 | | | | | | | | | | 600 | | | | | | | 12 |
| 13 | ROCK WALL LIGHT HOIST | M | 1800 | 20 A | 3 | 600 | | | | | | | | | | | 14 |
| 15 | | | | | | | | 600 | | | | | | | | | 16 |
| 17 | | | | | | | | | | 600 | | | | | | | 18 |
| 19 | | | | | | | | | | | | | | | | | 20 |
| 21 | | | | | | | | | | | | | | | | | 22 |
| 23 | | | | | | | | | | | | | | | | | 24 |
| 25 | | | | | | | | | | | | | | | | | 26 |
| 27 | | | | | | | | | | | | | | | | | 28 |
| 29 | | | | | | | | | | | | | | | | | 30 |
| 31 | | | | | | | | | | | | | | | | | 32 |
| 33 | | | | | | | | | | | | | | | | | 34 |
| 35 | | | | | | | | | | | | | | | | | 36 |
| 37 | | | | | | | | | | | | | | | | | 38 |
| 39 | | | | | | | | | | | | | | | | | 40 |
| 41 | | | | | | | | | | | | | | | | | 42 |
| | | | | | Total | 1923 | | 1905 | | 1905 | | | | | | | |
| | | | | | Total | 16 A | | 16 A | | 16 A | | | | | | | |

**Legend:**
DEMAND FACTORS: (R-RECEPTACLES 100%<10,000VA, 50%>10,000VA) (L-LIGHTING 125%) (M-MECHANICAL 100%) (C-CONTINUOUS 125%) (K-KITCHEN PER NEC TABLE 220.56) (L-LIGHTING 125%)

| Load Classification | Connected Load | Demand Factor | Estimated | Panel Totals | |
|---|---|---|---|---|---|
| M | 5400 | 100.00% | 5400 | | |
| L | 333 | 125.00% | 416 | Total Conn. Load: | 5733 |
| | | | | Total Est. Demand: | 5816 |
| | | | | Total Conn. Current: | 16 A |
| | | | | Total Est. Demand | 16 A |

**Notes:**


MHTN ARCHITECTS
**MHTN Architects, Inc.**
420 East South Temple
Suite 100
Salt Lake City, Utah 84111
Telephone (801) 595-6700
Telefax (801) 595-6717
www.mhtn.com

**Hastings+Chivetta**
ARCHITECTURE • PLANNING • ENGINEERING
622 Emerson, Suite 200
St. Louis, MO 63141
Tel. 314.863.5717
Fax. 314.863.2823
www.hastingschivetta.com

BUILDING OFFICIAL STAMP

Ken Garner Engineering, Inc.
Electrical Engineering Consultants, Inc.
102 West 500 South, Suite 225
Salt Lake City, Utah 84101
P. 801.328.8800
F. 801.328.8802
Contact: Paris LeLaCheur
Project #: 2010-117.00


# UNIVERSITY OF UTAH
# STUDENT LIFE CENTER
1836 E. BALLIF ROAD
SALT LAKE CITY, UTAH 84112

SEAL

MHTN PROJECT NO. 2010562.00

DRAWN BY: KGE CHECKED BY: KGE

ISSUED:

| NO. | DATE | DESCRIPTION |
|---|---|---|

CONTRACTOR TO VERIFY DRAWINGS IN FIELD USE REFLECT LAST REVISION DATE:

| NO. | DATE | DESCRIPTION |
|---|---|---|

SHEET NAME
PANEL SCHEDULES LEVEL 3
BID DOCUMENTS
May 15, 2013

SHEET NUMBER
EP607


C:\Users\tbrown.KGE\Documents\2010-117.00_KGE_STUDENT LIFE_ELECTRICAL_CENTERAL_2012_tbrown.rvt
5/14/2013 5:56:39 PM

## Branch Panel: HRM1

**Location:**
**Supply From:**
**Mounting:** SURFACE
**Enclosure:** TYPE 1

**Volts:** 480/277 Wye
**Phases:** 3
**Wires:** 4

**A.I.C. Rating:**
**Mains Type:** MB
**Mains Rating:** 225 A
**MCB Rating:**

| CKT | Circuit Description | DF | LOAD | BKR | P | A | | B | | C | | P | BKR | LOAD | DF | Circuit Description | CKT |
|---|---|---|---|---|---|---|---|---|---|---|---|---|---|---|---|---|---|
| 1 | | | | | | 0 | 5317 | | | | | | | | | | 2 |
| 3 | M | M | 0 | 20 A | 3 | | | 0 | 5317 | | | 3 | 20 A | 15951 | M | AH-7, RELIEF FANS | 4 |
| 5 | | | | | | | | | | 0 | 5317 | | | | | | 6 |
| 7 | | | | | | 0 | 18282 | | | | | | | | | | 8 |
| 9 | M | M | 0 | 60 A | 3 | | | 0 | 18282 | | | 3 | 60 A | 54846 | M | AH-7, SUPPLY FANS | 10 |
| 11 | | | | | | | | | | 0 | 18282 | | | | | | 12 |
| 13 | | | | | | 0 | 0 | | | | | | | | | | 14 |
| 15 | AH-8, RELIEF FANS | M | 0 | 20 A | 3 | | | 0 | 0 | | | 3 | 20 A | 0 | M | M | 16 |
| 17 | | | | | | | | | | 0 | 0 | | | | | | 18 |
| 19 | | | | | | 0 | 0 | | | | | | | | | | 20 |
| 21 | AH-8, SUPPLY FANS | M | 0 | 20 A | 3 | | | 0 | 0 | | | 3 | 20 A | 0 | M | M | 22 |
| 23 | | | | | | | | | | 0 | 0 | | | | | | 24 |
| 25 | | | | | | | | | | | | | | | | | 26 |
| 27 | | | | | | | | | | | | | | | | | 28 |
| 29 | | | | | | | | | | | | | | | | | 30 |
| 31 | | | | | | | | | | | | | | | | | 32 |
| 33 | | | | | | | | | | | | | | | | | 34 |
| 35 | | | | | | | | | | | | | | | | | 36 |
| 37 | | | | | | | | | | | | | | | | | 38 |
| 39 | | | | | | | | | | | | | | | | | 40 |
| 41 | | | | | | | | | | | | | | | | | 42 |
| | | | | | **Total** | 23599 | | 23599 | | 23599 | | | | | | | |
| | | | | | **Total** | 85 A | | 85 A | | 85 A | | | | | | | |

**Legend:**
DEMAND FACTORS: (R-RECEPTACLES 100%<10,000VA, 50%>10,000VA) (L-LIGHTING 125%) (M-MECHANICAL 100%) (C-CONTINUOUS 125%) (K-KITCHEN PER NEC TABLE 220.56) (L-LIGHTING 125%)

| Load Classification | Connected Load | Demand Factor | Estimated | Panel Totals | |
|---|---|---|---|---|---|
| M | 70797 | 100.00% | 70797 | | |
| | | | | **Total Conn. Load:** | 70797 |
| | | | | **Total Est. Demand:** | 70797 |
| | | | | **Total Conn. Current:** | 85 A |
| | | | | **Total Est. Demand** | 85 A |

**Notes:**

## Branch Panel: HRM2

**Location:**
**Supply From:**
**Mounting:** SURFACE
**Enclosure:** TYPE 1

**Volts:** 480/277 Wye
**Phases:** 3
**Wires:** 4

**A.I.C. Rating:**
**Mains Type:** MB
**Mains Rating:** 225 A
**MCB Rating:**

| CKT | Circuit Description | DF | LOAD | BKR | P | A | | B | | C | | P | BKR | LOAD | DF | Circuit Description | CKT |
|---|---|---|---|---|---|---|---|---|---|---|---|---|---|---|---|---|---|
| 1 | | | | | | 0 | 7533 | | | | | | | | | | 2 |
| 3 | M | M | 0 | 40 A | 3 | | | 0 | 7533 | | | 3 | 40 A | 22599 | M | AH-6, RELIEF FANS | 4 |
| 5 | | | | | | | | | | 0 | 7533 | | | | | | 6 |
| 7 | | | | | | 0 | 0 | | | | | | | | | | 8 |
| 9 | M | M | 0 | 20 A | 3 | | | 0 | 0 | | | 3 | 125 A | 0 | M | M | 10 |
| 11 | | | | | | | | | | 0 | 0 | | | | | | 12 |
| 13 | | | | | | 12852 | 0 | | | | | | | | | | 14 |
| 15 | AH-5, RELIEF FANS | M | 38555 | 125 A | 3 | | | 12852 | 0 | | | 3 | 125 A | 0 | M | M | 16 |
| 17 | | | | | | | | | | 12852 | 0 | | | | | | 18 |
| 19 | | | | | | 47644 | 0 | | | | | | | | | | 20 |
| 21 | AH-5, SUPPLY FANS | M | 142932 | 40 A | 3 | | | 47644 | 0 | | | 3 | 40 A | 0 | M | M | 22 |
| 23 | | | | | | | | | | 47644 | 0 | | | | | | 24 |
| 25 | | | | | | 24376 | | | | | | | | | | | 26 |
| 27 | AH-6, SUPPLY FANS | M | 73128 | 125 A | 3 | | | 24376 | | | | | | | | | 28 |
| 29 | | | | | | | | | | 24376 | | | | | | | 30 |
| 31 | | | | | | | | | | | | | | | | | 32 |
| 33 | | | | | | | | | | | | | | | | | 34 |
| 35 | | | | | | | | | | | | | | | | | 36 |
| 37 | | | | | | | | | | | | | | | | | 38 |
| 39 | | | | | | | | | | | | | | | | | 40 |
| 41 | | | | | | | | | | | | | | | | | 42 |
| | | | | | **Total** | 92405 | | 92405 | | 92405 | | | | | | | |
| | | | | | **Total** | 334 A | | 334 A | | 334 A | | | | | | | |

**Legend:**
DEMAND FACTORS: (R-RECEPTACLES 100%<10,000VA, 50%>10,000VA) (L-LIGHTING 125%) (M-MECHANICAL 100%) (C-CONTINUOUS 125%) (K-KITCHEN PER NEC TABLE 220.56) (L-LIGHTING 125%)

| Load Classification | Connected Load | Demand Factor | Estimated | Panel Totals | |
|---|---|---|---|---|---|
| M | 277214 | 100.00% | 277214 | | |
| | | | | **Total Conn. Load:** | 277214 |
| | | | | **Total Est. Demand:** | 277214 |
| | | | | **Total Conn. Current:** | 333 A |
| | | | | **Total Est. Demand** | 333 A |

**Notes:**

## Branch Panel: LRP1

**Location:**
**Supply From:**
**Mounting:** SURFACE
**Enclosure:** TYPE 1

**Volts:** 120/208 Wye
**Phases:** 3
**Wires:** 4

**A.I.C. Rating:**
**Mains Type:** MB
**Mains Rating:** 225 A
**MCB Rating:**

| CKT | Circuit Description | DF | LOAD | BKR | P | A | | B | | C | | P | BKR | LOAD | DF | Circuit Description | CKT |
|---|---|---|---|---|---|---|---|---|---|---|---|---|---|---|---|---|---|
| 1 | M | M | 696 | 20 A | 1 | 696 | 0 | | | | | 1 | 20 A | 0 | Ot | M | 2 |
| 3 | M | M | 696 | 20 A | 1 | | | 696 | 696 | | | 1 | 20 A | 696 | Ot | Other | 4 |
| 5 | RECEPTACLES | R | 540 | 20 A | 1 | | | | | 540 | 360 | 1 | 20 A | 360 | R | RECEPTACLES | 6 |
| 7 | | | | | | | | | | | | | | | | | 8 |
| 9 | | | | | | | | | | | | | | | | | 10 |
| 11 | | | | | | | | | | | | | | | | | 12 |
| 13 | | | | | | | | | | | | | | | | | 14 |
| 15 | | | | | | | | | | | | | | | | | 16 |
| 17 | | | | | | | | | | | | | | | | | 18 |
| 19 | | | | | | | | | | | | | | | | | 20 |
| 21 | | | | | | | | | | | | | | | | | 22 |
| 23 | | | | | | | | | | | | | | | | | 24 |
| 25 | | | | | | | | | | | | | | | | | 26 |
| 27 | | | | | | | | | | | | | | | | | 28 |
| 29 | | | | | | | | | | | | | | | | | 30 |
| 31 | | | | | | | | | | | | | | | | | 32 |
| 33 | | | | | | | | | | | | | | | | | 34 |
| 35 | | | | | | | | | | | | | | | | | 36 |
| 37 | | | | | | | | | | | | | | | | | 38 |
| 39 | | | | | | | | | | | | | | | | | 40 |
| 41 | | | | | | | | | | | | | | | | | 42 |
| | | | | | **Total** | 696 | | 1392 | | 900 | | | | | | | |
| | | | | | **Total** | 6 A | | 12 A | | 8 A | | | | | | | |

**Legend:**
DEMAND FACTORS: (R-RECEPTACLES 100%<10,000VA, 50%>10,000VA) (L-LIGHTING 125%) (M-MECHANICAL 100%) (C-CONTINUOUS 125%) (K-KITCHEN PER NEC TABLE 220.56) (L-LIGHTING 125%)

| Load Classification | Connected Load | Demand Factor | Estimated | Panel Totals | |
|---|---|---|---|---|---|
| Other | 0 | 0.00% | 0 | | |
| R | 900 | 100.00% | 900 | **Total Conn. Load:** | 2988 |
| M | 2088 | 100.00% | 2088 | **Total Est. Demand:** | 2988 |
| | | | | **Total Conn. Current:** | 8 A |
| | | | | **Total Est. Demand** | 8 A |

**Notes:**


MHTN ARCHITECTS
**MHTN Architects, Inc.**
420 East South Temple
Suite 100
Salt Lake City, Utah 84111
Telephone (801) 595-6700
Telefax (801) 595-6717
www.mhtn.com

**Hastings+Chivetta**
ARCHITECTURE • PLANNING • ENGINEERING
622 Emerson, Suite 200
St. Louis, MO 63141
Tel. 314.863.5717
Fax. 314.863.2823
www.hastingschivetta.com

BUILDING OFFICIAL STAMP
Ken Garner Engineering, Inc.
Electrical Engineering Consultants, Inc.
102 West 500 South, Suite 225
Salt Lake City, Utah 84101
P. 801.328.8800
F. 801.328.8802
Contact: Paris LeLaCheur
Project #: 2010-117.00


UNIVERSITY OF UTAH
STUDENT LIFE CENTER
1836 E. BALLIF ROAD
SALT LAKE CITY, UTAH 84112

SEAL

MHTN PROJECT NO. 2010562.00
DRAWN BY: Author CHECKED BY: Checker

ISSUED:

| NO. | DATE | DESCRIPTION |
|---|---|---|

CONTRACTOR TO VERIFY DRAWINGS IN FIELD USE REFLECT LAST REVISION DATE.

| NO. | DATE | DESCRIPTION |
|---|---|---|

SHEET NAME
PANEL SCHEDULES ROOF
BID DOCUMENTS
May 15, 2013

SHEET NUMBER
EP608

C:\Users\tbrown.KGE\Documents\2010-117.00_KGE_STUDENT LIFE_ELECTRICAL_CENTERAL_2012_tbrown.rvt
5/14/2013 5:56:50 PM

## MECHANICAL EQUIPMENT LIST

| ID | DESCRIPTION | V | PH | HP | VA | MCA | AMPS | DISCONNECT SIZE | DISCONNECT FUSED | STARTER | FEEDER | LOCATION | REMARKS |
|---|---|---|---|---|---|---|---|---|---|---|---|---|---|
| DOF-1 | OUTSIDE AIR | 460 | 3 | 1/2 | 841 | | 1.10 | | | | 20D | | |
| AH-1 | AIR HANDLER | | | | | | | | | | | NORTH LOWER LEVEL MECH ROOM | 1,2,3 |
| EC-AH-1 | EVAPORATIVE COOLER PUMP | 120 | 1 | 0.25 | 696 | | 7.20 | 30 | 20.00 | DIV. 26 | 20A | AH-1 | |
| EC-1 | AIR WASH | 120 | 1 | 0.2 | 528 | | 4.40 | THERMAL | SWITCH | | 20A | AH-1 | |
| RLF-AH-1.1 | RELIEF AIR FAN | 460 | 3 | 1 | 1745 | | 2.10 | VFD | | | 20D | AH-1 | 2,3 |
| RLF-AH-1.2 | RELIEF AIR FAN | 460 | 3 | 1 | 1745 | | 2.10 | VFD | | | 20D | AH-1 | 2,3 |
| RLF-AH-1.3 | RELIEF AIR FAN | 460 | 3 | 1 | 1745 | | 2.10 | VFD | | | 20D | AH-1 | 2,3 |
| RLF-AH-1.4 | RELIEF AIR FAN | 460 | 3 | 1 | 1745 | | 2.10 | VFD | | | 20D | AH-1 | 2,3 |
| SF-AH-1.1 | SUPPLY AIR FAN | 460 | 3 | 5 | 6316 | | 7.60 | VFD | | | 20D | AH-1 | 2,3 |
| SF-AH-1.2 | SUPPLY AIR FAN | 460 | 3 | 5 | 6316 | | 7.60 | VFD | | | 20D | AH-1 | 2,3 |
| SF-AH-1.3 | SUPPLY AIR FAN | 460 | 3 | 5 | 6316 | | 7.60 | VFD | | | 20D | AH-1 | 2,3 |
| SF-AH-1.4 | SUPPLY AIR FAN | 460 | 3 | 5 | 6316 | | 7.60 | VFD | | | 20D | AH-1 | 2,3 |
| AH-2 | AIR HANDLER | | | | | | | | | | | NORTH LOWER LEVEL MECH ROOM | 1,2,3 |
| EC-AH-2 | EVAPORATIVE COOLER PUMP | 120 | 1 | 0.25 | 696 | | 7.20 | 30 | 20.00 | DIV. 26 | 20A | AH-2 | |
| EC-2 | AIR WASH | 120 | 1 | 0.2 | 528 | | 4.40 | THERMAL | SWITCH | | 20A | AH-2 | |
| RLF-AH-2.1 | RELIEF AIR FAN | 460 | 3 | 0.75 | 1321 | | 1.60 | VFD | | | 20D | AH-2 | 2,3 |
| RLF-AH-2.2 | RELIEF AIR FAN | 460 | 3 | 0.75 | 1321 | | 1.60 | VFD | | | 20D | AH-2 | 2,3 |
| RLF-AH-2.3 | RELIEF AIR FAN | 460 | 3 | 0.75 | 1321 | | 1.60 | VFD | | | 20D | AH-2 | 2,3 |
| RLF-AH-2.4 | RELIEF AIR FAN | 460 | 3 | 0.75 | 1321 | | 1.60 | VFD | | | 20D | AH-2 | 2,3 |
| RLF-AH-2.5 | RELIEF AIR FAN | 460 | 3 | 0.75 | 1321 | | 1.60 | VFD | | | 20D | AH-2 | 2,3 |
| RLF-AH-2.6 | RELIEF AIR FAN | 460 | 3 | 0.75 | 1321 | | 1.60 | VFD | | | 20D | AH-2 | 2,3 |
| SF-AH-2.1 | SUPPLY AIR FAN | 460 | 3 | 5 | 6316 | | 7.60 | VFD | | | 20D | AH-2 | 2,3 |
| SF-AH-2.2 | SUPPLY AIR FAN | 460 | 3 | 5 | 6316 | | 7.60 | VFD | | | 20D | AH-2 | 2,3 |
| SF-AH-2.3 | SUPPLY AIR FAN | 460 | 3 | 5 | 6316 | | 7.60 | VFD | | | 20D | AH-2 | 2,3 |
| SF-AH-2.4 | SUPPLY AIR FAN | 460 | 3 | 5 | 6316 | | 7.60 | VFD | | | 20D | AH-2 | 2,3 |
| SF-AH-2.5 | SUPPLY AIR FAN | 460 | 3 | 5 | 6316 | | 7.60 | VFD | | | 20D | AH-2 | 2,3 |
| SF-AH-2.6 | SUPPLY AIR FAN | 460 | 3 | 5 | 6316 | | 7.60 | VFD | | | 20D | AH-2 | 2,3 |
| AH-3 | AIR HANDLER | | | | | | | | | | | WEST ENTRY LEVEL MECH ROOM | 1,2,3 |
| RLF-AH-3.1 | RELIEF AIR FAN | 460 | 3 | 25 | 28254 | | 34.00 | VFD | | | 50D | AH-3 | 3 |
| RLF-AH-3.2 | RELIEF AIR FAN | 460 | 3 | 25 | 28254 | | 34.00 | VFD | | | 50D | AH-3 | 3 |
| SF-AH-3.1 | SUPPLY AIR FAN | 460 | 3 | 15 | 17451 | | 21.00 | VFD | | | 30D | AH-3 | 3 |
| SF-AH-3.2 | SUPPLY AIR FAN | 460 | 3 | 15 | 17451 | | 21.00 | VFD | | | 30D | AH-3 | 3 |
| ER-AH-3 | RECOVERY | | | | | | | | | | | | |
| AH-4 | AIR HANDLER | | | | | | | | | | | WEST ENTRY LEVEL MECH ROOM | 1,2,3 |
| EC-AH-4 | EVAPORATIVE COOLER PUMP | 120 | 1 | 0.25 | 696 | | 7.20 | 30 | 20.00 | DIV. 26 | 20A | AH-4 | |
| EC-4 | AIR WASH | 120 | 1 | 0.2 | 528 | | 4.40 | THERMAL | SWITCH | | 20A | AH-4 | |
| RLF-AH-4.1 | RELIEF AIR FAN | 460 | 3 | 7.5 | 9141 | | 11.00 | VFD | | | 20D | AH-4 | 2,3 |
| RLF-AH-4.2 | RELIEF AIR FAN | 460 | 3 | 7.5 | 9141 | | 11.00 | VFD | | | 20D | AH-4 | 2,3 |
| RLF-AH-4.3 | RELIEF AIR FAN | 460 | 3 | 7.5 | 9141 | | 11.00 | VFD | | | 20D | AH-4 | 2,3 |
| RLF-AH-4.4 | RELIEF AIR FAN | 460 | 3 | 7.5 | 9141 | | 11.00 | VFD | | | 20D | AH-4 | 2,3 |
| SF-AH-4.1 | SUPPLY AIR FAN | 460 | 3 | 10 | 11634 | | 14.00 | VFD | | | 20D | AH-4 | 2,3 |
| SF-AH-4.2 | SUPPLY AIR FAN | 460 | 3 | 10 | 11634 | | 14.00 | VFD | | | 20D | AH-4 | 2,3 |
| SF-AH-4.3 | SUPPLY AIR FAN | 460 | 3 | 10 | 11634 | | 14.00 | VFD | | | 20D | AH-4 | 2,3 |
| SF-AH-4.4 | SUPPLY AIR FAN | 460 | 3 | 10 | 11634 | | 14.00 | VFD | | | 20D | AH-4 | 2,3 |
| AH-5 | AIR HANDLER | | | | | | | | | | | ROOF | 1,2,3 |
| EC-AH-5 | EVAPORATIVE COOLER PUMP | 120 | 1 | 0.25 | 696 | | 7.20 | 30 | 20.00 | DIV. 26 | 20A | AH-5 | |
| EC-5 | AIR WASH | 120 | 1 | 0.2 | 528 | | 4.40 | THERMAL | SWITCH | | 20A | AH-5 | |
| RLF-AH-5.1 | RELIEF AIR FAN | 460 | 3 | 3 | 3989 | | 4.80 | VFD | | | 20D | AH-5 | 2,3 |
| RLF-AH-5.2 | RELIEF AIR FAN | 460 | 3 | 3 | 3989 | | 4.80 | VFD | | | 20D | AH-5 | 2,3 |
| RLF-AH-5.3 | RELIEF AIR FAN | 460 | 3 | 3 | 3989 | | 4.80 | VFD | | | 20D | AH-5 | 2,3 |
| RLF-AH-5.4 | RELIEF AIR FAN | 460 | 3 | 3 | 3989 | | 4.80 | VFD | | | 20D | AH-5 | 2,3 |
| SF-AH-5.1 | SUPPLY AIR FAN | 460 | 3 | 15 | 17451 | | 21.00 | VFD | | | 30D | AH-5 | 2,3 |
| SF-AH-5.2 | SUPPLY AIR FAN | 460 | 3 | 15 | 17451 | | 21.00 | VFD | | | 30D | AH-5 | 2,3 |
| SF-AH-5.3 | SUPPLY AIR FAN | 460 | 3 | 15 | 17451 | | 21.00 | VFD | | | 30D | AH-5 | 2,3 |
| SF-AH-5.4 | SUPPLY AIR FAN | 460 | 3 | 15 | 17451 | | 21.00 | VFD | | | 30D | AH-5 | 2,3 |
| AH-6 | AIR HANDLER | | | | | | | | | | | ROOF | 1,2,3 |
| EC-AH-6 | EVAPORATIVE COOLER PUMP | 120 | 1 | 0.25 | 696 | | 7.20 | 30 | 20.00 | DIV. 26 | 20A | AH-6 | |
| EC-6 | AIR WASH | 120 | 1 | 0.2 | 528 | | 4.40 | THERMAL | SWITCH | | 20A | AH-6 | |
| RLF-AH-6.1 | RELIEF AIR FAN | 460 | 3 | 1.5 | 2493 | | 3.00 | VFD | | | 20D | AH-6 | 2,3 |
| RLF-AH-6.2 | RELIEF AIR FAN | 460 | 3 | 1.5 | 2493 | | 3.00 | VFD | | | 20D | AH-6 | 2,3 |
| RLF-AH-6.3 | RELIEF AIR FAN | 460 | 3 | 1.5 | 2493 | | 3.00 | VFD | | | 20D | AH-6 | 2,3 |
| RLF-AH-6.4 | RELIEF AIR FAN | 460 | 3 | 1.5 | 2493 | | 3.00 | VFD | | | 20D | AH-6 | 2,3 |
| RLF-AH-6.5 | RELIEF AIR FAN | 460 | 3 | 1.5 | 2493 | | 3.00 | VFD | | | 20D | AH-6 | 2,3 |
| RLF-AH-6.6 | RELIEF AIR FAN | 460 | 3 | 1.5 | 2493 | | 3.00 | VFD | | | 20D | AH-6 | 2,3 |
| RLF-AH-6.7 | RELIEF AIR FAN | 460 | 3 | 1.5 | 2493 | | 3.00 | VFD | | | 20D | AH-6 | 2,3 |
| RLF-AH-6.8 | RELIEF AIR FAN | 460 | 3 | 1.5 | 2493 | | 3.00 | VFD | | | 20D | AH-6 | 2,3 |
| RLF-AH-6.9 | RELIEF AIR FAN | 460 | 3 | 1.5 | 2493 | | 3.00 | VFD | | | 20D | AH-6 | 2,3 |
| RLF-AH-6.10 | RELIEF AIR FAN | 460 | 3 | 1.5 | 2493 | | 3.00 | VFD | | | 20D | AH-6 | 2,3 |
| RLF-AH-6.11 | RELIEF AIR FAN | 460 | 3 | 1.5 | 2493 | | 3.00 | VFD | | | 20D | AH-6 | 2,3 |
| RLF-AH-6.12 | RELIEF AIR FAN | 460 | 3 | 1.5 | 2493 | | 3.00 | VFD | | | 20D | AH-6 | 2,3 |
| SF-AH-6.1 | SUPPLY AIR FAN | 460 | 3 | 7.5 | 9141 | | 11.00 | VFD | | | 20D | AH-6 | 2,3 |
| SF-AH-6.2 | SUPPLY AIR FAN | 460 | 3 | 7.5 | 9141 | | 11.00 | VFD | | | 20D | AH-6 | 2,3 |
| SF-AH-6.3 | SUPPLY AIR FAN | 460 | 3 | 7.5 | 9141 | | 11.00 | VFD | | | 20D | AH-6 | 2,3 |
| SF-AH-6.4 | SUPPLY AIR FAN | 460 | 3 | 7.5 | 9141 | | 11.00 | VFD | | | 20D | AH-6 | 2,3 |
| SF-AH-6.5 | SUPPLY AIR FAN | 460 | 3 | 7.5 | 9141 | | 11.00 | VFD | | | 20D | AH-6 | 2,3 |
| SF-AH-6.6 | SUPPLY AIR FAN | 460 | 3 | 7.5 | 9141 | | 11.00 | VFD | | | 20D | AH-6 | 2,3 |
| SF-AH-6.7 | SUPPLY AIR FAN | 460 | 3 | 7.5 | 9141 | | 11.00 | VFD | | | 20D | AH-6 | 2,3 |
| SF-AH-6.8 | SUPPLY AIR FAN | 460 | 3 | 7.5 | 9141 | | 11.00 | VFD | | | 20D | AH-6 | 2,3 |
| SF-AH-6.9 | SUPPLY AIR FAN | 460 | 3 | 7.5 | 9141 | | 11.00 | VFD | | | 20D | AH-6 | 2,3 |
| SF-AH-6.10 | SUPPLY AIR FAN | 460 | 3 | 7.5 | 9141 | | 11.00 | VFD | | | 20D | AH-6 | 2,3 |
| SF-AH-6.11 | SUPPLY AIR FAN | 460 | 3 | 7.5 | 9141 | | 11.00 | VFD | | | 20D | AH-6 | 2,3 |
| SF-AH-6.12 | SUPPLY AIR FAN | 460 | 3 | 7.5 | 9141 | | 11.00 | VFD | | | 20D | AH-6 | 2,3 |
| AH-7 | AIR HANDLER | | | | | | | | | | | NORTH PENTHOUSE | 1,2,3 |
| EC-AH-7 | EVAPORATIVE COOLER PUMP | 120 | 1 | 0.25 | 696 | | 7.20 | 30 | 20.00 | DIV. 26 | 20A | AH-7 | |
| EC-7 | AIR WASH | 120 | 1 | 0.2 | 528 | | 4.40 | THERMAL | SWITCH | | 20A | AH-7 | |
| RLF-AH-7.1 | RELIEF AIR FAN | 460 | 3 | 1.5 | 2493 | | 3.00 | VFD | | | 20D | AH-7 | 2,3 |
| RLF-AH-7.2 | RELIEF AIR FAN | 460 | 3 | 1.5 | 2493 | | 3.00 | VFD | | | 20D | AH-7 | 2,3 |
| RLF-AH-7.3 | RELIEF AIR FAN | 460 | 3 | 1.5 | 2493 | | 3.00 | VFD | | | 20D | AH-7 | 2,3 |
| RLF-AH-7.4 | RELIEF AIR FAN | 460 | 3 | 1.5 | 2493 | | 3.00 | VFD | | | 20D | AH-7 | 2,3 |
| RLF-AH-7.5 | RELIEF AIR FAN | 460 | 3 | 1.5 | 2493 | | 3.00 | VFD | | | 20D | AH-7 | 2,3 |
| RLF-AH-7.6 | RELIEF AIR FAN | 460 | 3 | 1.5 | 2493 | | 3.00 | VFD | | | 20D | AH-7 | 2,3 |
| SF-AH-7.1 | SUPPLY AIR FAN | 460 | 3 | 10 | 11634 | | 14.00 | VFD | | | 20D | AH-7 | 2,3 |
| SF-AH-7.2 | SUPPLY AIR FAN | 460 | 3 | 10 | 11634 | | 14.00 | VFD | | | 20D | AH-7 | 2,3 |
| SF-AH-7.3 | SUPPLY AIR FAN | 460 | 3 | 10 | 11634 | | 14.00 | VFD | | | 20D | AH-7 | 2,3 |
| SF-AH-7.4 | SUPPLY AIR FAN | 460 | 3 | 10 | 11634 | | 14.00 | VFD | | | 20D | AH-7 | 2,3 |
| SF-AH-7.5 | SUPPLY AIR FAN | 460 | 3 | 10 | 11634 | | 14.00 | VFD | | | 20D | AH-7 | 2,3 |
| SF-AH-7.6 | SUPPLY AIR FAN | 460 | 3 | 10 | 11634 | | 14.00 | VFD | | | 20D | AH-7 | 2,3 |
| AH-8 | AIR HANDLER | | | | | | | | | | | NORTH PENTHOUSE | 1,2,3 |
| EC-AH-8 | EVAPORATIVE COOLER PUMP | 120 | 1 | 0.25 | 696 | | 7.20 | 30 | 20.00 | DIV. 26 | 20A | AH-8 | |
| EC-8 | AIR WASH | 120 | 1 | 0.2 | 528 | | 4.40 | THERMAL | SWITCH | | 20A | AH-8 | |
| RLF-AH-8.1 | RELIEF AIR FAN | 460 | 3 | 1 | 1745 | | 2.10 | VFD | | | 20D | AH-8 | 2,3 |
| RLF-AH-8.2 | RELIEF AIR FAN | 460 | 3 | 1 | 1745 | | 2.10 | VFD | | | 20D | AH-8 | 2,3 |
| RLF-AH-8.3 | RELIEF AIR FAN | 460 | 3 | 1 | 1745 | | 2.10 | VFD | | | 20D | AH-8 | 2,3 |
| RLF-AH-8.4 | RELIEF AIR FAN | 460 | 3 | 1 | 1745 | | 2.10 | VFD | | | 20D | AH-8 | 2,3 |
| SF-AH-8.1 | SUPPLY AIR FAN | 460 | 3 | 5 | 6316 | | 7.60 | VFD | | | 20D | AH-8 | 2,3 |
| SF-AH-8.2 | SUPPLY AIR FAN | 460 | 3 | 5 | 6316 | | 7.60 | VFD | | | 20D | AH-8 | 2,3 |
| SF-AH-8.3 | SUPPLY AIR FAN | 460 | 3 | 5 | 6316 | | 7.60 | VFD | | | 20D | AH-8 | 2,3 |
| SF-AH-8.4 | SUPPLY AIR FAN | 460 | 3 | 5 | 6316 | | 7.60 | VFD | | | 20D | AH-8 | 2,3 |
| AH-9 | AIR HANDLER | | | | | | | | | | | NORTH LOWER LEVEL MECH ROOM | 1,2,3 |
| EC-AH-9 | EVAPORATIVE COOLER PUMP | 120 | 1 | 0.25 | 696 | | 7.20 | 30 | 20.00 | DIV. 26 | 20A | AH-9 | |
| EC-9 | AIR WASH | 120 | 1 | 0.2 | 528 | | 4.40 | THERMAL | SWITCH | | 20A | AH-9 | |
| RLF-AH-9.1 | RELIEF AIR FAN | 460 | 3 | 0.75 | 1330 | | 1.60 | VFD | | | 20D | AH-9 | 2,3 |
| RLF-AH-9.2 | RELIEF AIR FAN | 460 | 3 | 0.75 | 1330 | | 1.60 | VFD | | | 20D | AH-9 | 2,3 |
| RLF-AH-9.3 | RELIEF AIR FAN | 460 | 3 | 0.75 | 1330 | | 1.60 | VFD | | | 20D | AH-9 | 2,3 |
| RLF-AH-9.4 | RELIEF AIR FAN | 460 | 3 | 0.75 | 1330 | | 1.60 | VFD | | | 20D | AH-9 | 2,3 |
| SF-AH-9.1 | SUPPLY AIR FAN | 460 | 3 | 3 | 3988 | | 4.80 | VFD | | | 20D | AH-9 | 2,3 |
| SF-AH-9.2 | SUPPLY AIR FAN | 460 | 3 | 3 | 3988 | | 4.80 | VFD | | | 20D | AH-9 | 2,3 |
| SF-AH-9.3 | SUPPLY AIR FAN | 460 | 3 | 3 | 3988 | | 4.80 | VFD | | | 20D | AH-9 | 2,3 |
| SF-AH-9.4 | SUPPLY AIR FAN | 460 | 3 | 3 | 3988 | | 4.80 | VFD | | | 20D | AH-9 | 2,3 |
| EAH-4 | AIR HANDLER | | | | | | | | | | | WEST ENTRY LEVEL MECH ROOM | 2,3 |
| EF-EAH-4.1 | EXHAUST AIR FAN | 460 | 3 | 3 | 3988 | | 3.00 | VFD | | | 20D | EAH-4 | 2,3 |
| EF-EAH-4.2 | EXHAUST AIR FAN | 460 | 3 | 3 | 3988 | | 3.00 | VFD | | | 20D | EAH-4 | 2,3 |
| EF-EAH-4.3 | EXHAUST AIR FAN | 460 | 3 | 3 | 3988 | | 3.00 | VFD | | | 20D | EAH-4 | 2,3 |
| EF-EAH-4.4 | EXHAUST AIR FAN | 460 | 3 | 3 | 3988 | | 3.00 | VFD | | | 20D | EAH-4 | 2,3 |
| DEF-1 | EXHAUST AIR FAN | 460 | 3 | 1 | 1745 | | 2.10 | 30 | 5.00 | DIV. 26 | 20D | SEE PLANS | |
| DEF-2 | EXHAUST AIR FAN | 460 | 3 | 0.5 | 914 | | 1.10 | 30 | 5.00 | DIV. 26 | 20D | SEE PLANS | |
| DEF-3 | EXHAUST AIR FAN | 460 | 3 | 1 | 1745 | | 2.10 | 30 | 5.00 | DIV. 26 | 20D | SEE PLANS | |
| DEF-4 | EXHAUST AIR FAN | 460 | 3 | 0.75 | 1330 | | 1.60 | 30 | 5.00 | DIV. 26 | 20D | SEE PLANS | |
| DEF-5 | EXHAUST AIR FAN | 460 | 3 | 2 | 2825 | | 3.40 | 30 | 10.00 | DIV. 26 | 20D | SEE PLANS | |
| DEF-6 | EXHAUST AIR FAN | 460 | 3 | 2 | 2825 | | 3.40 | 30 | 10.00 | DIV. 26 | 20D | SEE PLANS | |
| ATC | ATC CONTROL | 120 | 1 | | 500 | | 4.10 | 30 | 10.00 | | 20A | SEE PLANS | 5 |
| EWC-1 | ELECTRIC WATER COOLER | 120 | 1 | | | | | | | | 20A | SEE PLANS | |
| CHWP-1 | PUMP | 460 | 3 | 20 | 22437 | | 27.00 | 60 | 40.00 | DIV. 26 | 40D | MECH ROOM 10N | |
| CHWP-2 | PUMP | 460 | 3 | 20 | 22437 | | 27.00 | 60 | 40.00 | DIV. 26 | 40D | MECH ROOM 10N | |
| CP-01 | PUMP | 460 | 3 | 0.5 | 914 | | 1.10 | 30 | 5.00 | DIV. 26 | 20D | HC-01 | |
| CP-03 | PUMP | 460 | 3 | 3 | 3988 | | 3.00 | 30 | 10.00 | DIV. 26 | 20D | HC-03 | |
| CP-04 | PUMP | 460 | 3 | 0.5 | 914 | | 1.10 | 30 | 5.00 | DIV. 26 | 20D | HC-04 | |
| CP-05 | PUMP | 120 | 1 | 0.125 | 500 | | 4.10 | 30 | 10.00 | DIV. 26 | 20A | HC-05 | |
| CP-06 | PUMP | 120 | 1 | | | | | | | | | HC-6 | |
| CP-09 | PUMP | 460 | 3 | 0.5 | 914 | | 1.10 | 30 | 5.00 | DIV. 26 | 20D | HC-09 | |
| CP-9 | PUMP | 120 | 1 | 0.125 | 500 | | 4.10 | 30 | 10.00 | DIV. 26 | 20A | HC-9 | |
| CP-10 | PUMP | 120 | 1 | 0.125 | 500 | | 4.10 | 30 | 10.00 | DIV. 26 | 20A | HC-10 | |
| CP-12 | PUMP | 120 | 1 | 0.125 | 500 | | 4.10 | 30 | 10.00 | DIV. 26 | 20A | HC-12 | |
| HWP-01 | PUMP | 460 | 3 | 50 | 54015 | | 65.00 | VFD | | | 100D | BOIL ROOM | |
| HWP-02 | PUMP | 460 | 3 | 50 | 54015 | | 65.00 | VFD | | | 100D | BOIL ROOM | |
| HWP-03 | PUMP | 460 | 3 | 15 | 17451 | | 21.00 | VFD | | | 40D | BOIL ROOM | |
| HWP-04 | PUMP | 460 | 3 | 15 | 17451 | | 21.00 | VFD | | | 40D | BOIL ROOM | |
| P-1 | PUMP | 460 | 3 | 20 | 22437 | | 27.00 | 30 | 10.00 | DIV. 26 | 40D | SW MECH ROOM | |
| P-2 | PUMP | 460 | 3 | 20 | 22437 | | 27.00 | 30 | 10.00 | DIV. 26 | 40D | SW MECH ROOM | |
| P-1 | PUMP | 460 | 3 | | | | | | | DIV. 26 | | SW MECH ROOM | |
| PHP-01 | PUMP | 460 | 3 | 20 | 22437 | | 27.00 | VFD | | | 40D | BOIL ROOM | |
| PHP-02 | PUMP | 460 | 3 | 20 | 22437 | | 27.00 | VFD | | | 40D | BOIL ROOM | |
| SMP-01 | PUMP | 460 | 3 | 5 | 6316 | | 7.60 | VFD | | | 20D | BOIL ROOM | |
| SMP-02 | PUMP | 460 | 3 | 5 | 6316 | | 7.60 | VFD | | | 20D | BOIL ROOM | |
| RCP-1 | RECIRCULATING PUMP | 120 | 1 | 0.75 | 1656 | | 13.80 | 30 | 20.00 | DIV. 26 | 20A | BOIL ROOM | |
| RCP-2 | RECIRCULATING PUMP | 120 | 1 | 0.75 | 1656 | | 13.80 | 30 | 20.00 | DIV. 26 | 20A | BOIL ROOM | |
| WS-1 | WATER SOFTENER | 120 | 1 | | | | | | | | | | |
| SCF-01 | ROOF UPBLAST DOME | 460 | 3 | 7.5 | 8141 | | 11.00 | 30 | 20.00 | DIV. 26 | 20D | ROOF | |
| SCF-02 | ROOF UPBLAST DOME | 460 | 3 | 7.5 | 8141 | | 11.00 | 30 | 20.00 | DIV. 26 | 20D | ROOF | |
| DMV-1 | MIXING STATION | 120 | 1 | | | | | | | | | | |

NOTES:
1. VERIFY ELECTRICAL REQUIREMENTS WITH MANUFACTURER
2. VFD BY MECHANICAL. COORDINATE LOCAITONS.
3. PROVIDE A 120V CIRCUIT FOR MARINE LIGHTS.
4. SINGLE POINT CONNECTION
5. ON EMERGENCY POWER. SEE PANEL SCHEDULES AND PLANS

## POOL EQUIPMENT LIST

| ID | DESCRIPTION | V | PH | HP | VA | MCA | AMPS | DISCONNECT SIZE | DISCONNECT FUSED | STARTER | FEEDER | LOCATION | REMARKS |
|---|---|---|---|---|---|---|---|---|---|---|---|---|---|
| 1A | RMF CONTROLLER | 120 | 1 | | 1800 | | 15.00 | GFCI PLUG | | | 20A | POOL EQUIPMENT ROOM | |
| 1B | FILTER VACUUM SYSTEM | 120 | 1 | | 2400 | | 20.00 | THERMAL | SWITCH | | 30A | POOL EQUIPMENT ROOM | |
| 1C | FILTER AIR COMPRESSOR | 120 | 1 | 2 | 500 | | 15.00 | GFCI PLUG | | | 20A | POOL EQUIPMENT ROOM | |
| 3 | CIRCULATION PUMP | 460 | 3 | 3 | | | 34.00 | VFD | | | 60C | POOL EQUIPMENT ROOM | |
| 5 | CHEMICAL CONTROLLER | 120 | 1 | | 500 | | 1.00 | GFCI PLUG | | | 20A | POOL EQUIPMENT ROOM | |
| 6 | LIQUID CHLORINE FEED PUMP | 120 | 1 | | 1000 | | | GFCI PLUG | | | 20A | CHEMICAL ROOM | |
| 9A | CO2 FEED SYSTEM | 120 | 1 | | 500 | | | GFCI PLUG | | | 20A | CHEMICAL ROOM | |
| 11B | UV SYSTEM CONTROL PANEL | 480 | 3 | | 26592 | | 32.00 | BREAKER | | | 40C | POOL EQUIPMENT ROOM | |
| 12A | FEATURES PUMP | 230 | 1 | 3 | | | 9.60 | 30 | 20.00 | | 20C | POOL EQUIPMENT ROOM | |
| 12B | FEATURES PUMP | 230 | 1 | 3 | | | 9.60 | 30 | 20.00 | | 20C | POOL EQUIPMENT ROOM | |
| 13 | FEATURES PUMP | 230 | 1 | 3 | | | 9.60 | 30 | 20.00 | | 20C | POOL EQUIPMENT ROOM | |
| 28B | CHAIN HOIST | 460 | 3 | 1 | | | 2.10 | 30 | 15.00 | | 20C | POOL EQUIPMENT ROOM | |
| 31A | RMF CONTROLLER | 120 | 1 | | 1800 | | 15.00 | GFCI PLUG | | | 20A | POOL EQUIPMENT ROOM | |
| 31B | FILTER VACUUM SYSTEM | 120 | 1 | | 2400 | | 20.00 | THERMAL | SWITCH | | 30A | POOL EQUIPMENT ROOM | |
| 33 | CIRCULATION PUMP | 460 | 3 | 3 | | | 14.00 | VFD | | | 60C | POOL EQUIPMENT ROOM | |
| 35 | CHEMICAL CONTROLLER | 120 | 1 | | 500 | | 1.00 | GFCI PLUG | | | 20A | POOL EQUIPMENT ROOM | |
| 36 | LIQUID CHLORINE FEED PUMP | 120 | 1 | | 1000 | | | | | | | CHEMICAL ROOM | |
| 37 | CO2 FEED SYSTEM | 120 | 1 | | 1000 | | | GFCI PLUG | | | 20A | CHEMICAL ROOM | |
| 38B | UV SYSTEM CONTROL PANEL | 480 | 3 | | 26592 | | 32.00 | BREAKER | | | 40C | POOL EQUIPMENT ROOM | |
| 39 | HYDRO-THERAPY PUMP | 230 | 1 | | | | 8.00 | 30 | 20.00 | | 20C | POOL EQUIPMENT ROOM | |

## 50M POOL EQUIPMENT LIST - ALTERNATE 1

| ID | DESCRIPTION | V | PH | HP | VA | MCA | AMPS | DISCONNECT SIZE | DISCONNECT FUSED | STARTER | FEEDER | LOCATION | REMARKS |
|---|---|---|---|---|---|---|---|---|---|---|---|---|---|
| 51A | RMF CONTROLLER | 120 | 1 | | 1800 | | 15.00 | GFCI PLUG | | | 20A | POOL EQUIPMENT ROOM | |
| 51B | FILTER VACUUM SYSTEM | 120 | 1 | | 2400 | | 20.00 | THERMAL | SWITCH | | 30A | POOL EQUIPMENT ROOM | |
| 53 | CIRCULATION PUMP | 460 | 3 | 25 | | | 34.00 | VFD | | | 60C | POOL EQUIPMENT ROOM | |
| 55 | CHEMICAL CONTROLLER | 120 | 1 | | 500 | | 1.00 | GFCI PLUG | | | 20A | POOL EQUIPMENT ROOM | |
| 61B | UV SYSTEM CONTROL PANEL | 480 | 3 | | 26592 | | 32.00 | BREAKER | | | 40C | POOL EQUIPMENT ROOM | |
| 83 | CIRCULATION PUMP | 460 | 3 | 3 | | | 14.00 | VFD | | | 20C | POOL EQUIPMENT ROOM | |
| 84 | CHEMICAL CONTROLLER | 120 | 1 | | 500 | | 1.00 | GFCI PLUG | | | 20A | POOL EQUIPMENT ROOM | |

## KITCHEN EQUIPMENT SCHEDULE - FRESHENS

| | DESCRIPTION | V | PH | HP | KW | AMPS | DISCONNECT SIZE | DISCONNECT FUSE SIZE | FURN. BY | WIRES | CONDUIT | QUANTITY | REMARKS |
|---|---|---|---|---|---|---|---|---|---|---|---|---|---|
| K-1 | TWO-WELL DROP IN REFRIG COLD PAN | 120 | 1 | 1/5 | | 3.9 | | | DIV 16 | | | 1 | |
| K-2 | REFRIGERATED CREPE STATION | | | | | | | | DIV 16 | | | 1 | |
| K-3 | CREPE MAKERS | 277 | 3 | | 3.7 | | | 20A | DIV 16 | | | 3 | |
| K-4 | DROP-IN REFRIG COLD PAN | 120 | 1 | 1/5 | | 2.4 | NEMA 5-15P | | DIV 16 | | | 1 | |
| K-5 | MICROWAVE OVEN | 120 | 1 | | | 13.4 | NEMA 5-15R | | DIV 16 | | | 1 | |
| K-6 | DROP-IN REFRIG COLD PAN | 120 | 1 | 1/5 | | 2.4 | NEMA 5-15P | | DIV 16 | | | 1 | |
| K-7 | BLENDER | 120 | 1 | | | 13.0 | | | DIV 16 | | | 2 | |
| K-8 | DROP-IN 3 WELL COLD PAN | 120 | 1 | 1/5 | | 3.9 | NEMA 5-15P | | DIV 16 | | | 1 | |
| K-9 | AIR SCREEN - SALAD GREENS | 120 | 1 | 3/4 | | 13.0 | NEMA L14-20 | | DIV 16 | | | 1 | |
| K-10 | AIR SCREEN - BEVERAGES | 120 | 1 | 3/4 | | 13.0 | NEMA L14-20 | | DIV 16 | | | 1 | |
| K-11A | SOFT SERVE MACHINE | 208 | 3 | 1.5 | | 19.0 | | 25A | DIV 16 | | | 1 | LEFT AIR COOLED |
| K-11B | SOFT SERVE MACHINE | 208 | 3 | 1.5 | | 15.0 | | 20A | DIV 16 | | | 1 | RIGHT AIR COOLED |
| K-12 | ICE MAKER | 120 | 1 | | | 9.7 | | 20A | DIV 16 | | | 1 | |
| K-13 | TWO DOOR REFRIGERATORS | 120 | 1 | | | 9.0 | NEMA 5-15P | 15A | DIV 16 | | | 2 | |
| K-14 | TWO DOOR REACH-IN FREEZER | 120 | 1 | | | 11.0 | NEMA 5-20P | 15A | DIV 16 | | | 1 | |


MHTN ARCHITECTS
MHTN Architects, Inc.
420 East South Temple
Suite 100
Salt Lake City, Utah 84111
Telephone (801) 595-6700
Telefax (801) 595-6717
www.mhtn.com

Hastings+Chivetta
ARCHITECTURE • PLANNING • ENGINEERING
622 Emerson, Suite 200
St. Louis, MO 63141
Tel. 314.863.5717
Fax. 314.863.2823
www.hastingschivetta.com

BUILDING OFFICIAL STAMP

Ken Garner Engineering, Inc.
Electrical Engineering Consultants, Inc.
102 West 500 South, Suite 225
Salt Lake City, Utah 84101
P. 801.328.8800
F. 801.328.8802
Contact: Paris LeLaCheur
Project #: 2010-117.00


UNIVERSITY OF UTAH
STUDENT LIFE CENTER
1836 E. BALLIF ROAD
SALT LAKE CITY, UTAH 84112

SEAL

MHTN PROJECT NO. 2010562.00
DRAWN BY: KGE CHECKED BY: KGE

ISSUED:

| NO. | DATE | DESCRIPTION |
|---|---|---|

CONTRACTOR TO VERIFY DRAWINGS IN FIELD USE REFLECT LAST REVISION DATE.

| NO. | DATE | DESCRIPTION |
|---|---|---|

SHEET NAME
ELECTRICAL SCHEDULES

BID DOCUMENTS
May 15, 2013

SHEET NUMBER
EP609

C:\Users\tbrown.KGE\Documents\2010-117.00_KGE_STUDENT LIFE_ELECTRICAL_CENTERAL_2012_tbrown.rvt
5/14/2013 5:57:01 PM

KEYED NOTES - SHEET EY100.A

1. DIV .26 TO PULL CONDUIT ONLY TO LOCATION OF CCTV CAMERA AND PROVIDE JUNCTION BOX AND PULLSTRING CAMERA AND WIRE BY OTHERS.
2. PROVIDE A 12"x12"x6" PULLBOX IN CEILING. LABEL BOX FOR USE AS FIRST RESPONDER ANTENNA BOOST.
3. 1" CONDUIT BACK TO MDF ROOM. ROUTE THROUGH ACCESSIBLE CEILING. PROVIDE GROMMET AT CONDUIT STUB-OUT IN MDF ROOM.

GENERAL NOTES - SHEET EY100.A

A. ALL FIRE ALARM CONDUIT COUPLINGS AND JUNCTION BOX COVERS ARE TO BE RED.
B. ALL BACKBOXES FOR SPEAKER-STROBE DEVICES MUST BE DEEP OR EXTRA DEEP.
C. SPEAKER CIRCUITS AND ADDRESSABLE LOOPS SHALL BE INSTALLED IN SEPARATE RACEWAYS. SPEAKER CIRCUIT AND STROBE CIRCUIT MAY BE RUN IN THE SAME RACEWAY.
D. CONTRACTOR IS TO PROVIDE COMPLETE CONDUIT HOMERUNS WITH PULLSTRINGS FOR ALL LOW VOLTAGE SYSTEMS INCLUDING SECURITY, AUDIOVISUAL, TELECOMMUNICATIONS, FIRE ALARM, ETC.
E. ALL WALL MOUNTED FIRE ALARM AND SECURITY DEVICES IN GYMS SHALL BE PROVIDED WITH WIRE GUARDS FOR PROTECTION.

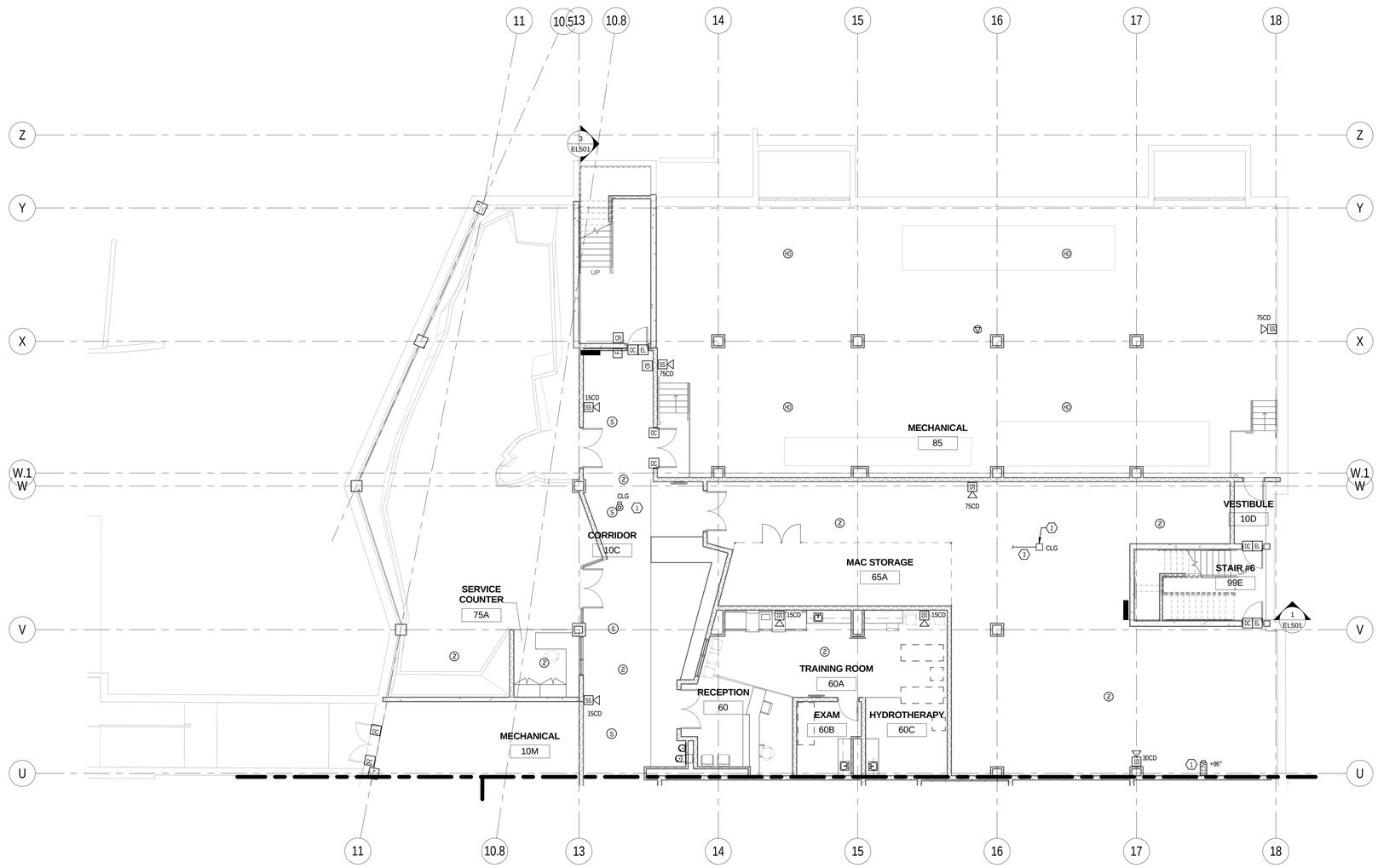


1 EY100.A A ENLARGED LOWER LEVEL SYSTEMS PLAN NORTH
SCALE | 1/8" = 1'-0"

0' 4'-0" 8'-0" 16'-0"
1/8" =1'-0"

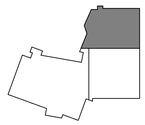

KEYPLAN


MHTN ARCHITECTS
MHTN Architects, Inc.
420 East South Temple
Suite 100
Salt Lake City, Utah 84111
Telephone (801) 595-6700
Telefax (801) 595-6717
www.mhtn.com

Hastings+Chivetta
ARCHITECTURE • PLANNING • ENGINEERING
622 Emerson, Suite 200
St. Louis, MO 63141
Tel. 314.863.5717
Fax. 314.863.2823
www.hastingschivetta.com

BUILDING OFFICIAL STAMP
Ken Garner Engineering, Inc.
Electrical Engineering Consultants, Inc.
102 West 500 South, Suite 225
Salt Lake City, Utah 84101
P. 801.328.8800
F. 801.328.8802
Contact: Paris LeLaCheur
Project #: 2010-117.00


# UNIVERSITY OF UTAH
## STUDENT LIFE CENTER
1836 E. BALLIF ROAD
SALT LAKE CITY, UTAH 84112

SEAL

MHTN PROJECT NO. 2010562.00
DRAWN BY: KGE CHECKED BY: KGE

ISSUED:

| NO. | DATE | DESCRIPTION |
|---|---|---|

CONTRACTOR TO VERIFY DRAWINGS IN FIELD USE REFLECT LAST REVISION DATE:

| NO. | DATE | DESCRIPTION |
|---|---|---|

SHEET NAME
LOWER LEVEL SYSTEMS PLAN AREA A
BID DOCUMENTS
May 15, 2013

SHEET NUMBER
EY100.A

C:\Users\ttrown.KGE\Documents\2010-117.00_KGE_STUDENT LIFE_ELECTRICAL_CENTERAL_2012_ttrown.rvt
5/14/2013 5:58:49 PM

KEYED NOTES - SHEET EY100.B

1. PROVIDE FINAL ELECTRICAL CONNECTION TO ELECTRONIC SCORE BOARD PER MANUFACTURERS REQUIREMENTS.
2. INSTALL THE WIRELESS ACCESS POINT AND THE GUARD ON THE WALL. CHOOSE THE WIRE GUARD TO FIT.
3. DIV. 26 TO PULL CONDUIT ONLY TO LOCATION OF CCTV CAMERA AND PROVIDE JUNCTION BOX AND PULLSTRING CAMERA AND WIRE BY OTHERS.
4. PROVIDE A 12"x12"x8" PULLBOX IN CEILING. LABEL BOX FOR USE AS FIRST RESPONDER ANTENNA BOOST.
5. 1" CONDUIT BACK TO MDF ROOM. ROUTE THROUGH ACCESSIBLE CEILING. PROVIDE GROMMET AT CONDUIT STUB-OUT IN MDF ROOM.

GENERAL NOTES - SHEET EY100.B

A. ALL FIRE ALARM CONDUIT COUPLINGS AND JUNCTION BOX COVERS ARE TO BE RED.
B. ALL BACKBOXES FOR SPEAKER-STROBE DEVICES MUST BE DEEP OR EXTRA DEEP.
C. SPEAKER CIRCUITS AND ADDRESSABLE LOOPS SHALL BE INSTALLED IN SEPARATE RACEWAYS. SPEAKER CIRCUIT AND STROBE CIRCUIT MAY BE RUN IN THE SAME RACEWAY.
D. CONTRACTOR IS TO PROVIDE COMPLETE CONDUIT HOMERUNS WITH PULLSTRINGS FOR ALL LOW VOLTAGE SYSTEMS INCLUDING SECURITY, AUDIO/VISUAL, TELECOMMUNICATIONS, FIRE ALARM, ETC.
E. ALL WALL-MOUNTED FIRE ALARM AND SECURITY DEVICES IN GYMS SHALL BE PROVIDED WITH WIREGUARDS FOR PROTECTION.

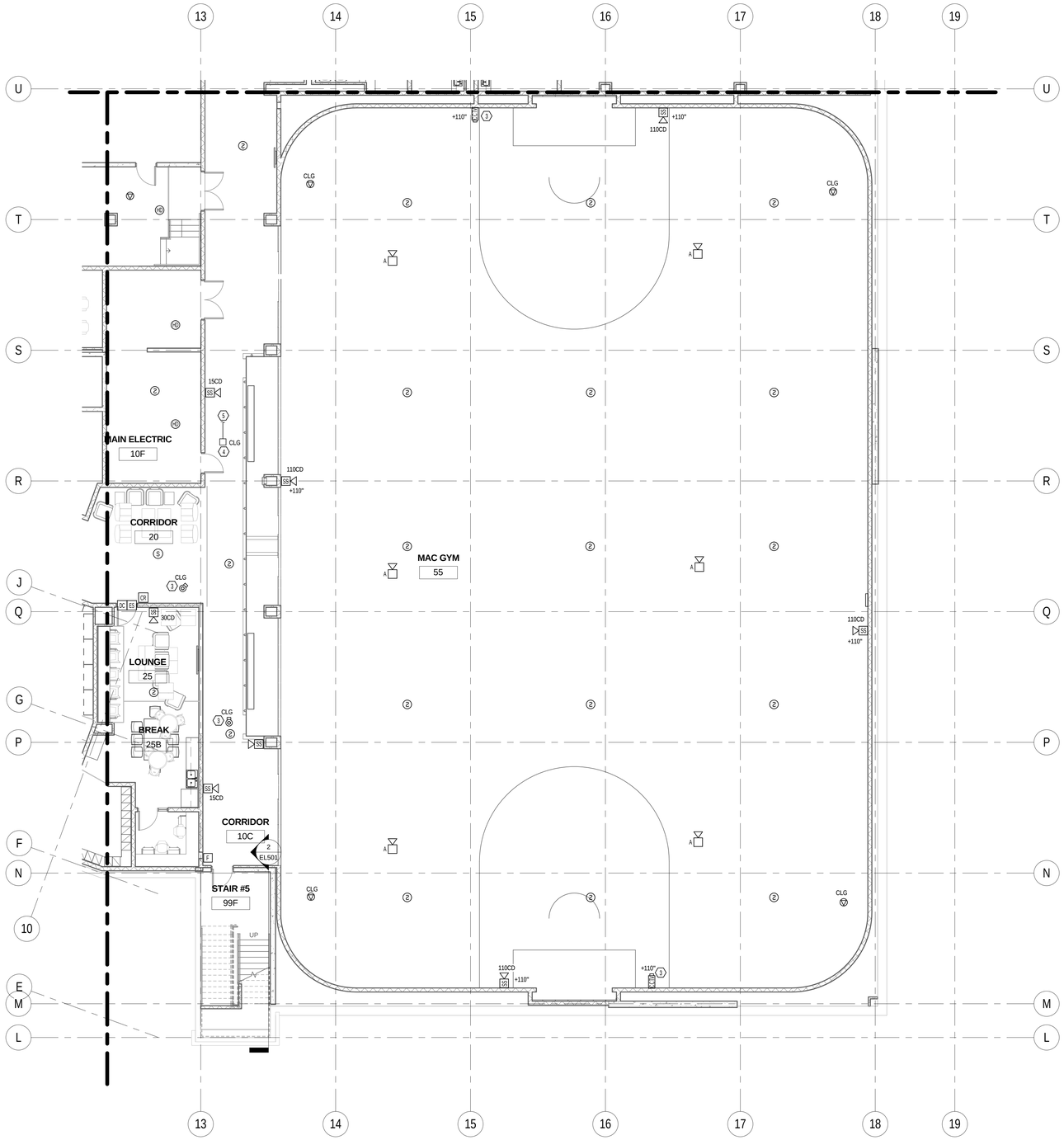


1 EY100.B B ENLARGED LOWER LEVEL SYSTEMS PLAN SOUTH
SCALE | 1/8" = 1'-0"

0' 4'-0" 8'-0" 16'-0"
1/8" =1'-0"

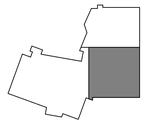

KEYPLAN


MHTN ARCHITECTS
MHTN Architects, Inc.
420 East South Temple
Suite 100
Salt Lake City, Utah 84111
Telephone (801) 595-6700
Telefax (801) 595-6717
www.mhtn.com

Hastings+Chivetta
ARCHITECTURE • PLANNING • ENGINEERING
622 Emerson, Suite 200
St. Louis, MO 63141
Tel. 314.863.5717
Fax. 314.863.2823
www.hastingschivetta.com

BUILDING OFFICIAL STAMP
Ken Garner Engineering, Inc.
Electrical Engineering Consultants, Inc.
102 West 500 South, Suite 225
Salt Lake City, Utah 84101
P. 801.328.8800
F. 801.328.8802
Contact: Paris LeLaCheur
Project #: 2010-117.00


# UNIVERSITY OF UTAH
## STUDENT LIFE CENTER
1836 E. BALLIF ROAD
SALT LAKE CITY, UTAH 84112

SEAL

MHTN PROJECT NO. 2010562.00
DRAWN BY: KGE CHECKED BY: KGE

ISSUED:

| NO. | DATE | DESCRIPTION |
|---|---|---|

CONTRACTOR TO VERIFY DRAWINGS IN FIELD USE REFLECT LAST REVISION DATE.

| NO. | DATE | DESCRIPTION |
|---|---|---|

SHEET NAME
LOWER LEVEL SYSTEMS PLAN AREA B
BID DOCUMENTS
May 15, 2013

SHEET NUMBER
EY100.B

C:\Users\tbrown.KGE\Documents\2010-117.00_KGE_STUDENT LIFE_ELECTRICAL_CENTERAL_2012_tbrown.rvt
5/14/2013 5:58:59 PM

KEYED NOTES - SHEET EY100.C

1. DIV. 26 TO PULL CONDUIT ONLY TO LOCATION OF CCTV CAMERA AND PROVIDE JUNCTION BOX AND PULLSTRING CAMERA AND WIRE BY OTHERS.
2. PROVIDE A 12"x12"x8" PULLBOX IN CEILING. LABEL BOX FOR USE AS FIRST RESPONDER ANTENNA BOOST.
3. 1" CONDUIT BACK TO MDF ROOM. ROUTE THROUGH ACCESSIBLE CEILING. PROVIDE GROMMET AT CONDUIT STUB-OUT IN MDF ROOM.
4. PROVIDE CONDUIT AND J-BOXES FOR FUTURE ADA ACCESS. STUB CONDUIT INTO ACCESSIBLE CEILING SPACE. PROVIDE A STAINLESS STEEL BLANK COVER PLATE FOR J-BOXES.

GENERAL NOTES - SHEET EY100.C

A. ALL FIRE ALARM CONDUIT COUPLINGS AND JUNCTION BOX COVERS ARE TO BE RED.
B. ALL BACKBOXES FOR SPEAKER-STROBE DEVICES MUST BE DEEP OR EXTRA DEEP.
C. SPEAKER CIRCUITS AND ADDRESSABLE LOOPS SHALL BE INSTALLED IN SEPARATE RACEWAYS. SPEAKER CIRCUIT AND STROBE CIRCUIT MAY BE RUN IN THE SAME RACEWAY.
D. CONTRACTOR IS TO PROVIDE COMPLETE CONDUIT HOMERUNS WITH PULLSTRINGS FOR ALL LOW VOLTAGE SYSTEMS INCLUDING SECURITY, AUDIOVISUAL, TELECOMMUNICATIONS, FIRE ALARM, ETC.

## C ENLARGED LOWER LEVEL SYSTEMS PLAN WEST

EY100.C SCALE |1/8" = 1'-0"

0' 4'-0" 8'-0" 16'-0"
1/8" =1'-0"

KEYPLAN

MHTN ARCHITECTS
**MHTN Architects, Inc.**
420 East South Temple
Suite 100
Salt Lake City, Utah 84111
Telephone (801) 595-6700
Telefax (801) 595-6717
www.mhtn.com

**Hastings+Chivetta**
ARCHITECTURE • PLANNING • ENGINEERING
622 Emerson, Suite 200
St. Louis, MO 63141
Tel. 314.863.5717
Fax. 314.863.2823
www.hastingschivetta.com

BUILDING OFFICIAL STAMP
Ken Garner Engineering, Inc.
Electrical Engineering Consultants, Inc.
102 West 500 South, Suite 225
Salt Lake City, Utah 84101
P. 801.328.8800
F. 801.328.8802
Contact: Paris LeLaCheur
Project #: 2010-117.00

# UNIVERSITY OF UTAH
## STUDENT LIFE CENTER
1836 E. BALLIF ROAD
SALT LAKE CITY, UTAH 84112

SEAL

MHTN PROJECT NO. 2010562.00
DRAWN BY: KGE CHECKED BY: KGE

ISSUED:

| NO. | DATE | DESCRIPTION |
|---|---|---|
| | | |

CONTRACTOR TO VERIFY DRAWINGS IN FIELD USE REFLECT LAST REVISION DATE.

| NO. | DATE | DESCRIPTION |
|---|---|---|
| | | |

SHEET NAME
LOWER LEVEL SYSTEMS PLAN AREA C
BID DOCUMENTS
May 15, 2013

SHEET NUMBER
EY100.C

C:\Users\drown.KGE\Documents\2010-117.00_KGE_STUDENT LIFE_ELECTRICAL_CENTERAL_2012_drown.rvt
5/14/2013 5:59:13 PM

KEYED NOTES - SHEET EY101.A

1. INSTALL THE DATA, POWER, AND WIRELESS ACCESS POINT ABOVE THE DROP-TILE CEILING.
2. DIV. 26 TO PULL CONDUIT ONLY TO LOCATION OF CCTV CAMERA AND PROVIDE JUNCTION BOX AND PULLSTRING CAMERA AND WIRE BY OTHERS.
3. PROVIDE ALL REQUIRED CONDUIT AND WIRING FOR A FULLY FUNCTIONAL SYSTEM TO ADA DOOR ACTUATORS AND CARD READERS.
4. PROVIDE A 12"X12"X6" PULLBOX IN CEILING. LABEL BOX FOR USE AS FIRST RESPONDER ANTENNA BOOST.
5. 1" CONDUIT BACK TO MDF ROOM. ROUTE THROUGH ACCESSIBLE CEILING. PROVIDE GROMMET AT CONDUIT STUB-OUT IN MDF ROOM.
6. J-BOX FOR POWER TO DOOR POWER SUPPLY. PROVIDE 120V CIRCUIT. POWER SUPPLY BY DOOR MANUFACTURER.

GENERAL NOTES - SHEET EY101.A

A. ALL FIRE ALARM CONDUIT COUPLINGS AND JUNCTION BOX COVERS ARE TO BE RED.
B. ALL BACKBOXES FOR SPEAKER-STROBE DEVICES MUST BE DEEP OR EXTRA DEEP.
C. SPEAKER CIRCUITS AND ADDRESSABLE LOOPS SHALL BE INSTALLED IN SEPARATE RACEWAYS. SPEAKER CIRCUIT AND STROBE CIRCUIT MAY BE RUN IN THE SAME RACEWAY.
D. CONTRACTOR IS TO PROVIDE COMPLETE CONDUIT HOMERUNS WITH PULLSTRINGS FOR ALL LOW VOLTAGE SYSTEMS INCLUDING SECURITY, AUDIO/VISUAL, TELECOMMUNICATIONS, FIRE ALARM, ETC.

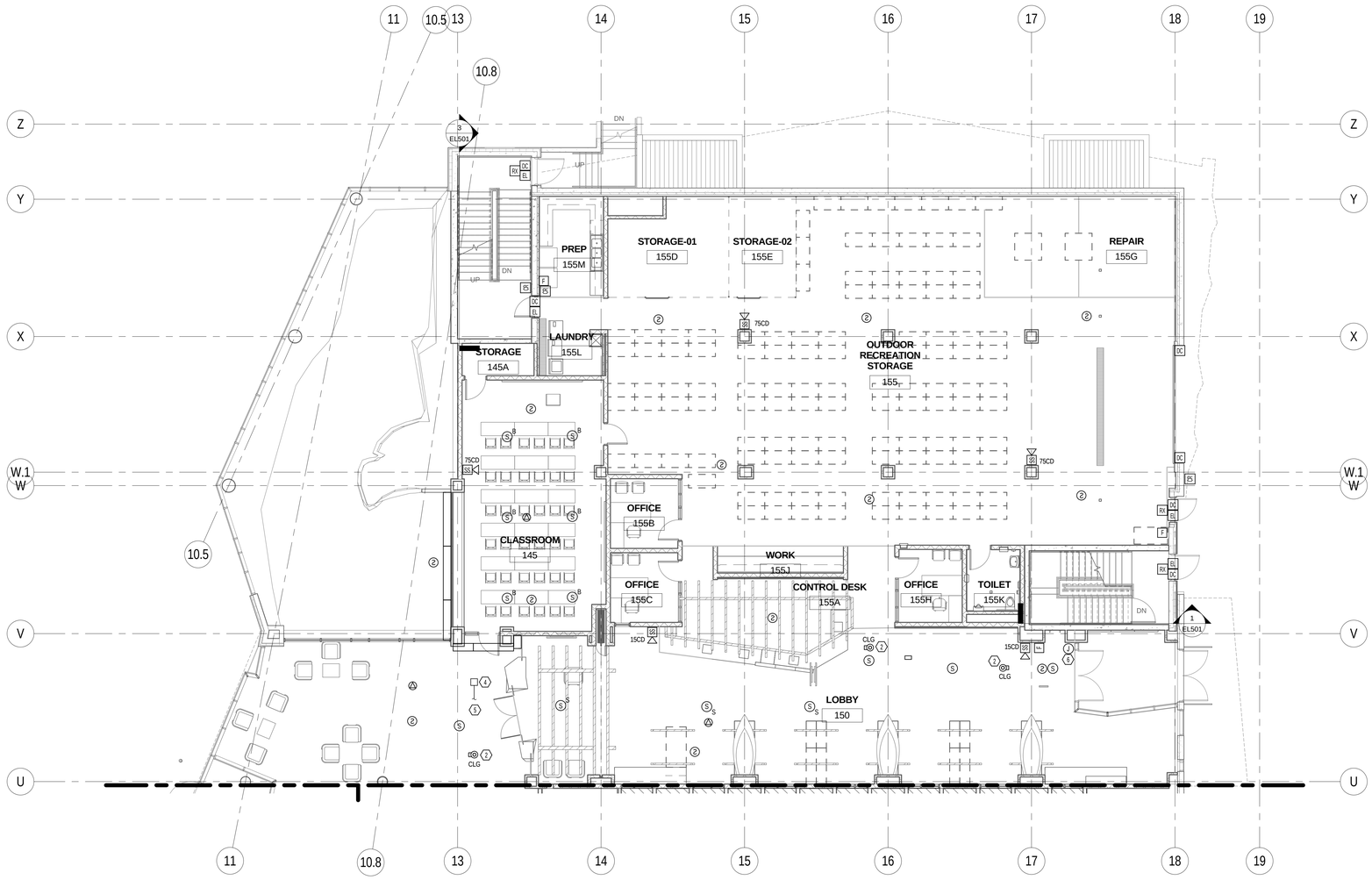


1 EY101.A A ENLARGED LEVEL 1 SYSTEMS PLAN NORTH
SCALE |1/8" = 1'-0"

0' 4'-0" 8'-0" 16'-0"
1/8" =1'-0"

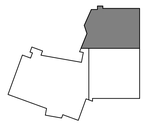

KEYPLAN


MHTN ARCHITECTS
MHTN Architects, Inc.
420 East South Temple
Suite 100
Salt Lake City, Utah 84111
Telephone (801) 595-6700
Telefax (801) 595-6717
www.mhtn.com

Hastings+Chivetta
ARCHITECTURE • PLANNING • ENGINEERING
622 Emerson, Suite 200
St. Louis, MO 63141
Tel. 314.863.5717
Fax. 314.863.2823
www.hastingschivetta.com

BUILDING OFFICIAL STAMP
Ken Garner Engineering, Inc.
Electrical Engineering Consultants, Inc.
102 West 500 South, Suite 225
Salt Lake City, Utah 84101
P. 801.328.8800
F. 801.328.8802
Contact: Paris LeLaCheur
Project #: 2010-117.00


# UNIVERSITY OF UTAH
## STUDENT LIFE CENTER
1836 E. BALLIF ROAD
SALT LAKE CITY, UTAH 84112

SEAL

MHTN PROJECT NO. 2010562.00

DRAWN BY: KGE CHECKED BY: KGE

ISSUED:

| NO. | DATE | DESCRIPTION |
|---|---|---|

CONTRACTOR TO VERIFY DRAWINGS IN FIELD USE REFLECT LAST REVISION DATE.

| NO. | DATE | DESCRIPTION |
|---|---|---|

SHEET NAME
LEVEL 1
SYSTEMS PLAN
AREA A
BID DOCUMENTS
May 15, 2013

SHEET NUMBER
EY101.A

C:\Users\rdrown.KGE\Documents\2010-117.00_KGE_STUDENT LIFE_ELECTRICAL_CENTERAL_2012_rbrown.rvt
5/14/2013 5:59:22 PM

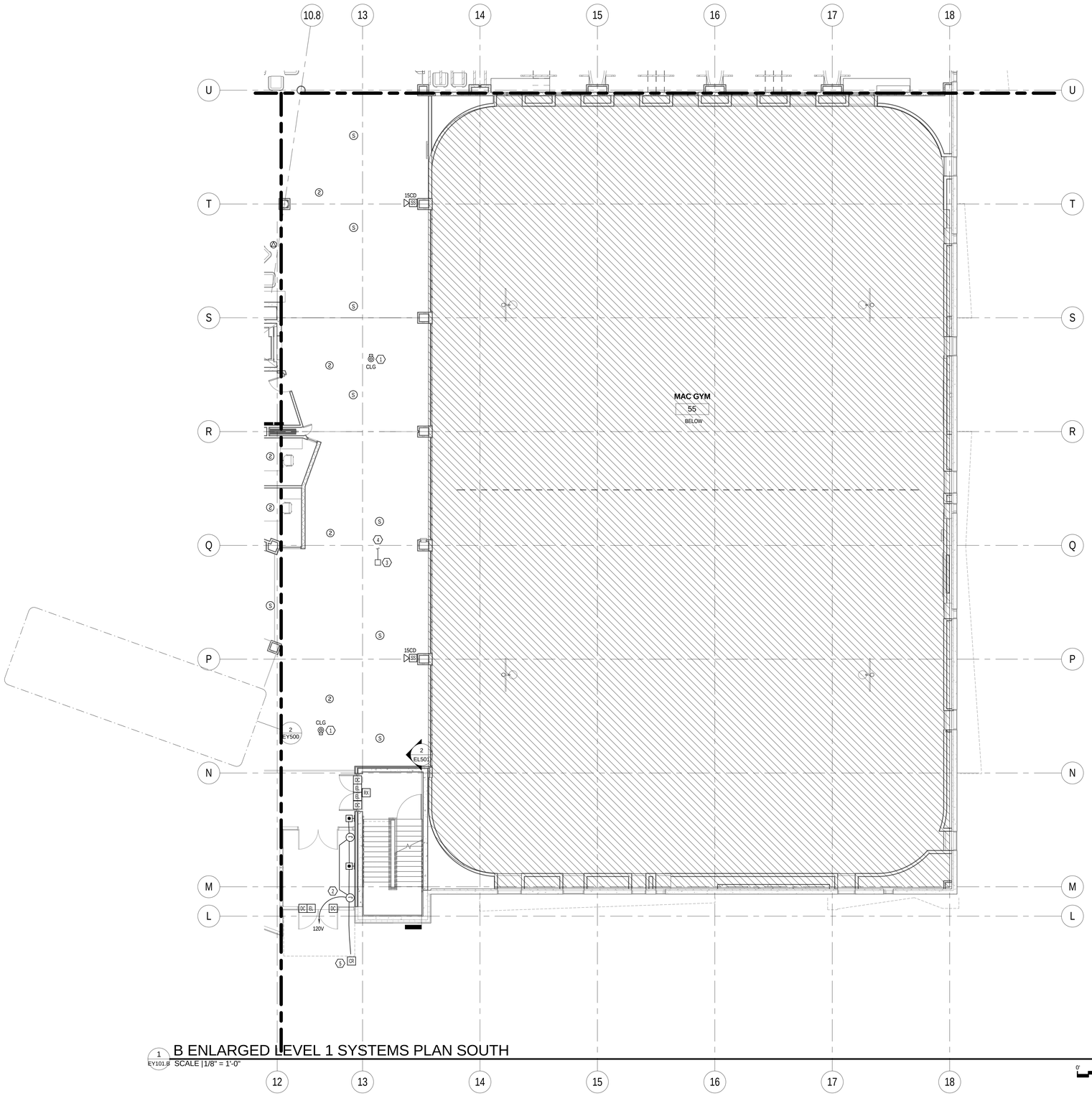


1 EY101.B B ENLARGED LEVEL 1 SYSTEMS PLAN SOUTH
SCALE |1/8" = 1'-0"

0' 4'-0" 8'-0" 16'-0"
1/8" =1'-0"

KEYED NOTES - SHEET EY101.B

1. DIV. 26 TO PULL CONDUIT ONLY TO LOCATION OF CCTV CAMERA AND PROVIDE JUNCTION BOX AND PULLSTRING CAMERA AND WIRE BY OTHERS.
2. PROVIDE ALL REQUIRED CONDUIT AND WIRING FOR A FULLY FUNCTIONAL SYSTEM TO ADA DOOR ACTUATORS AND CARD READERS.
3. PROVIDE A 12"x12"x6" PULLBOX IN CEILING. LABEL BOX FOR USE AS FIRST RESPONDER ANTENNA BOOST.
4. 1" CONDUIT BACK TO MDF ROOM. ROUTE THROUGH ACCESSIBLE CEILING. PROVIDE GROMMET AT CONDUIT STUB-OUT IN MDF ROOM.
5. COORDINATE EXACT LOCATION OF PEDESTAL WITH ARCHITECT.

GENERAL NOTES - SHEET EY101.B

A. ALL FIRE ALARM CONDUIT COUPLINGS AND JUNCTION BOX COVERS ARE TO BE RED.
B. ALL BACKBOXES FOR SPEAKER-STROBE DEVICES MUST BE DEEP OR EXTRA DEEP.
C. SPEAKER CIRCUITS AND ADDRESSABLE LOOPS SHALL BE INSTALLED IN SEPARATE RACEWAYS. SPEAKER CIRCUIT AND STROBE CIRCUIT MAY BE RUN IN THE SAME RACEWAY.
D. CONTRACTOR IS TO PROVIDE COMPLETE CONDUIT HOMERUNS WITH PULLSTRINGS FOR ALL LOW VOLTAGE SYSTEMS INCLUDING SECURITY, AUDIO/VISUAL, TELECOMMUNICATIONS, FIRE ALARM, ETC.

MHTN
ARCHITECTS
**MHTN Architects, Inc.**
420 East South Temple
Suite 100
Salt Lake City, Utah 84111
Telephone (801) 595-6700
Telefax (801) 595-6717
www.mhtn.com

**Hastings+Chivetta**
ARCHITECTURE • PLANNING • ENGINEERING
622 Emerson, Suite 200
St. Louis, MO 63141
Tel. 314.863.5717
Fax. 314.863.2823
www.hastingschivetta.com

BUILDING OFFICIAL STAMP

Ken Garner
Engineering, Inc.
Electrical Engineering Consultants, Inc.
102 West 500 South, Suite 225
Salt Lake City, Utah 84101
P. 801.328.8800
F. 801.328.8802
Contact: Paris LeLaCheur
Project #: 2010-117.00

# UNIVERSITY OF UTAH
## STUDENT LIFE CENTER
1836 E. BALLIF ROAD
SALT LAKE CITY, UTAH 84112

SEAL

MHTN PROJECT NO. 2010562.00
DRAWN BY: KGE CHECKED BY: KGE

ISSUED:

| NO. | DATE | DESCRIPTION |
|---|---|---|

CONTRACTOR TO VERIFY DRAWINGS IN FIELD USE REFLECT LAST REVISION DATE.

| NO. | DATE | DESCRIPTION |
|---|---|---|

SHEET NAME
LEVEL 1
SYSTEMS PLAN
AREA B
BID DOCUMENTS
May 15, 2013

SHEET NUMBER
EY101.B

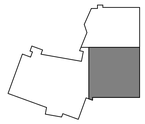
KEYPLAN

C:\Users\brown.KGE\Documents\2010-117.00_KGE_STUDENT LIFE_ELECTRICAL_CENTERAL_2012_brown.rvt
5/14/2013 5:59:31 PM

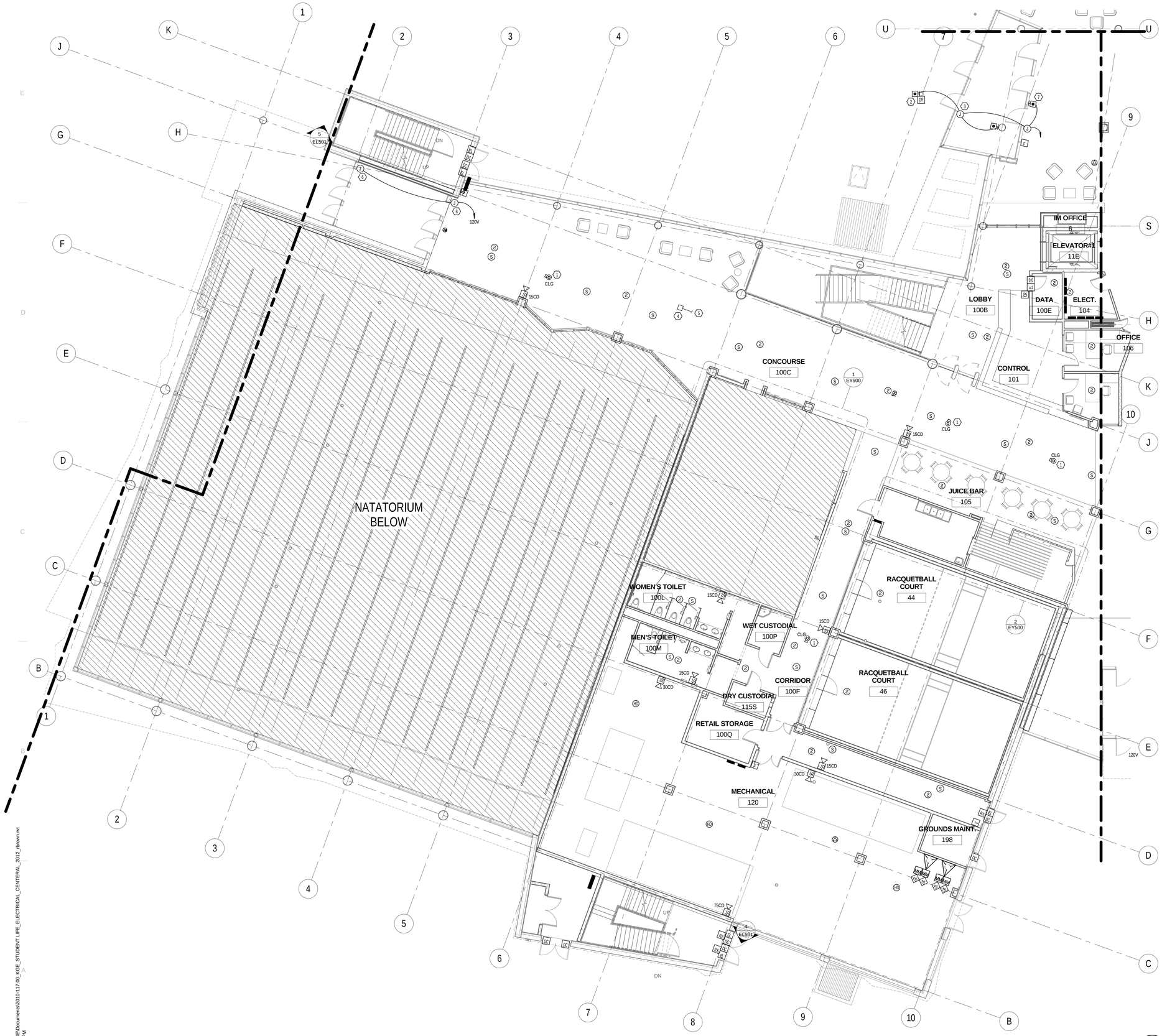


1 EY101.C C ENLARGED LEVEL 1 SYSTEMS PLAN WEST
SCALE |1/8" = 1'-0"

0' 4'-0" 8'-0" 16'-0"
1/8" =1'-0"

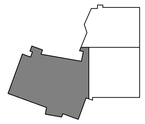

KEYPLAN

KEYED NOTES - SHEET EY101.C

1. DIV. 26 TO PULL CONDUIT ONLY TO LOCATION OF CCTV CAMERA AND PROVIDE JUNCTION BOX AND PULLSTRING CAMERA AND WIRE BY OTHERS.
2. COORDINATE WITH ARCHITECT FOR SPECIFICATIONS ON PEDESTAL. PEDESTAL SHALL HAVE A CARD READER AND AN ADA PUSH BUTTON.
3. PROVIDE ALL REQUIRED CONDUIT AND WIRING FOR A FULLY FUNCTIONAL SYSTEM TO ADA DOOR ACTUATORS AND CARD READERS.
4. PROVIDE A 12"x12"x8" PULLBOX IN CEILING. LABEL BOX FOR USE AS FIRST RESPONDER ANTENNA BOOST.
5. 1" CONDUIT BACK TO MDF ROOM. ROUTE THROUGH ACCESSIBLE CEILING. PROVIDE GROMMET AT CONDUIT STUB-OUT IN MDF ROOM.
6. J-BOX FOR POWER TO DOOR POWER SUPPLY. PROVIDE 120V CIRCUIT. POWER SUPPLY BY DOOR MANUFACTURER.
7. MOUNT ADA PUSH BUTTON ON STOREFRONT FRAME. RUN LOW VOLTAGE WIRES THROUGH FRAME TO CONTROL ACTUATORS.

GENERAL NOTES - SHEET EY101.C

A. ALL FIRE ALARM CONDUIT COUPLINGS AND JUNCTION BOX COVERS ARE TO BE RED.
B. ALL BACKBOXES FOR SPEAKER-STROBE DEVICES MUST BE DEEP OR EXTRA DEEP.
C. SPEAKER CIRCUITS AND ADDRESSABLE LOOPS SHALL BE INSTALLED IN SEPARATE RACEWAYS. SPEAKER CIRCUIT AND STROBE CIRCUIT MAY BE RUN IN THE SAME RACEWAY.
D. CONTRACTOR IS TO PROVIDE COMPLETE CONDUIT HOMERUNS WITH PULLSTRINGS FOR ALL LOW VOLTAGE SYSTEMS INCLUDING SECURITY, AUDIO/VISUAL, TELECOMMUNICATIONS, FIRE ALARM, ETC.

MHTN
ARCHITECTS
**MHTN Architects, Inc.**
420 East South Temple
Suite 100
Salt Lake City, Utah 84111
Telephone (801) 595-6700
Telefax (801) 595-6717
www.mhtn.com

**Hastings+Chivetta**
ARCHITECTURE • PLANNING • ENGINEERING
622 Emerson, Suite 200
St. Louis, MO 63141
Tel. 314.863.5717
Fax. 314.863.2823
www.hastingschivetta.com

BUILDING OFFICIAL STAMP

Ken Garner
Engineering, Inc.
Electrical Engineering Consultants, Inc.
102 West 500 South, Suite 225
Salt Lake City, Utah 84101
P. 801.328.8800
F. 801.328.8802
Contact: Paris LeLaCheur
Project #: 2010-117.00

# UNIVERSITY OF UTAH

## STUDENT LIFE CENTER

1836 E. BALLIF ROAD
SALT LAKE CITY, UTAH 84112

SEAL

MHTN PROJECT NO. 2010562.00

DRAWN BY: KGE CHECKED BY: KGE

ISSUED:

| NO. | DATE | DESCRIPTION |
|---|---|---|

CONTRACTOR TO VERIFY DRAWINGS IN FIELD USE REFLECT LAST REVISION DATE:

| NO. | DATE | DESCRIPTION |
|---|---|---|

SHEET NAME

LEVEL 1
SYSTEMS PLAN
AREA C
BID DOCUMENTS
May 15, 2013

SHEET NUMBER

# EY101.C

C:\Users\tbrown.KGE\Documents\2010-117.00_KGE_STUDENT LIFE_ELECTRICAL_CENTERAL_2012_rbrown.rvt
5/14/2013 5:59:43 PM

KEYED NOTES - SHEET EY102.A

1. DIV. 26 TO PULL CONDUIT ONLY TO LOCATION OF CCTV CAMERA AND PROVIDE JUNCTION BOX AND PULLSTRING CAMERA AND WIRE BY OTHERS.
2. PROVIDE A 12"x12"x8" PULLBOX IN CEILING. LABEL BOX FOR USE AS FIRST RESPONDER ANTENNA BOOST.
3. 1" CONDUIT BACK TO MDF ROOM. ROUTE THROUGH ACCESSIBLE CEILING. PROVIDE GROMMET AT CONDUIT STUB-OUT IN IDF ROOM.

GENERAL NOTES - SHEET EY102.A

A. ALL FIRE ALARM CONDUIT COUPLINGS AND JUNCTION BOX COVERS ARE TO BE RED.
B. ALL BACKBOXES FOR SPEAKER-STROBE DEVICES MUST BE DEEP OR EXTRA DEEP.
C. SPEAKER CIRCUITS AND ADDRESSABLE LOOPS SHALL BE INSTALLED IN SEPARATE RACEWAYS. SPEAKER CIRCUIT AND STROBE CIRCUIT MAY BE RUN IN THE SAME RACEWAY.
D. CONTRACTOR IS TO PROVIDE COMPLETE CONDUIT HOMERUNS WITH PULLSTRINGS FOR ALL LOW VOLTAGE SYSTEMS INCLUDING SECURITY, AUDIOVISUAL, TELECOMMUNICATIONS, FIRE ALARM, ETC.

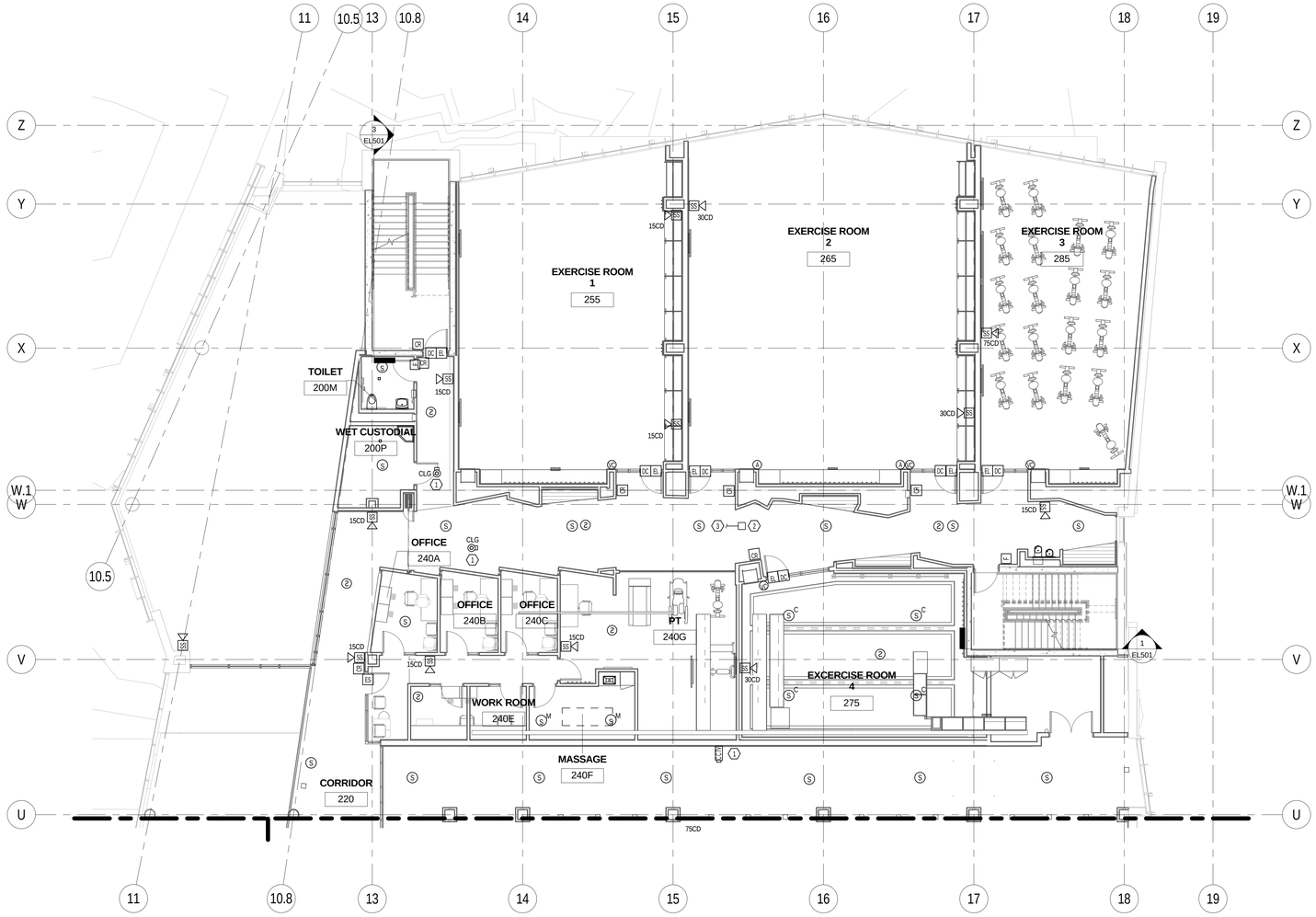


1 A ENLARGED LEVEL 2 SYSTEMS PLAN NORTH
EY102.A SCALE | 1/8" = 1'-0"

0' 4'-0" 8'-0" 16'-0"
1/8" =1'-0"

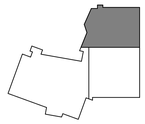

KEYPLAN


MHTN ARCHITECTS
MHTN Architects, Inc.
420 East South Temple
Suite 100
Salt Lake City, Utah 84111
Telephone (801) 595-6700
Telefax (801) 595-6717
www.mhtn.com

Hastings+Chivetta
ARCHITECTURE • PLANNING • ENGINEERING
622 Emerson, Suite 200
St. Louis, MO 63141
Tel. 314.863.5717
Fax. 314.863.2823
www.hastingschivetta.com


BUILDING OFFICIAL STAMP


Ken Garner Engineering, Inc.
Electrical Engineering Consultants, Inc.
102 West 500 South, Suite 225
Salt Lake City, Utah 84101
P. 801.328.8800
F. 801.328.8802
Contact: Paris LeLaCheur
Project #: 2010-117.00


# UNIVERSITY OF UTAH
## STUDENT LIFE CENTER
1836 E. BALLIF ROAD
SALT LAKE CITY, UTAH 84112

SEAL

MHTN PROJECT NO. 2010562.00

DRAWN BY: KGE CHECKED BY: KGE

ISSUED:

| NO. | DATE | DESCRIPTION |
|---|---|---|

CONTRACTOR TO VERIFY DRAWINGS IN FIELD USE REFLECT LAST REVISION DATE:

| NO. | DATE | DESCRIPTION |
|---|---|---|

SHEET NAME
LEVEL 2
SYSTEMS PLAN
AREA A
BID DOCUMENTS
May 15, 2013

SHEET NUMBER
EY102.A

C:\Users\ttrown.KGE\Documents\2010-117.00_KGE_STUDENT LIFE_ELECTRICAL_CENTERAL_2012_ttrown.rvt
5/14/2013 5:59:53 PM

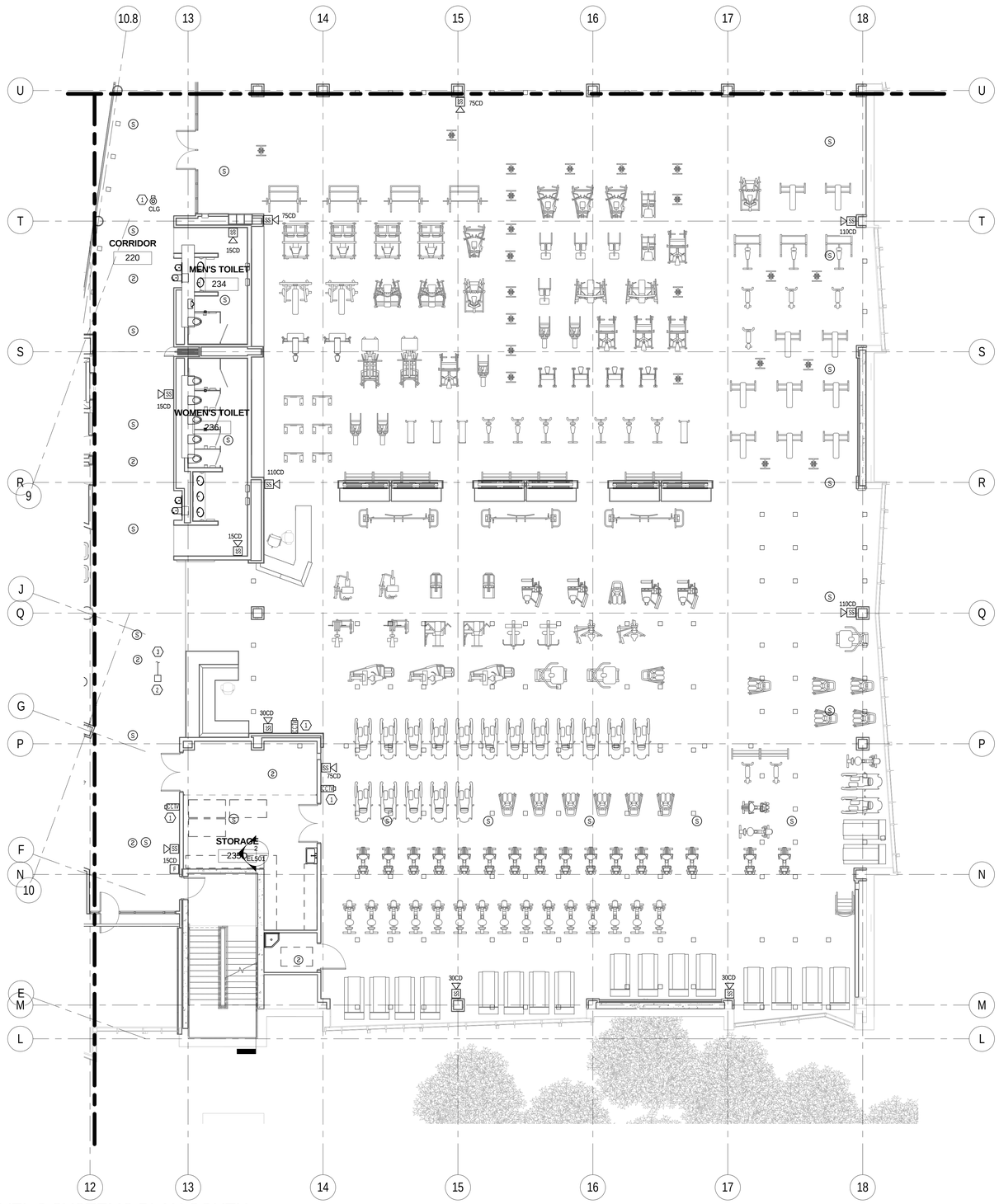


1 EY102.B B ENLARGED LEVEL 2 SYSTEMS PLAN SOUTH
SCALE | 1/8" = 1'-0"

KEYED NOTES - SHEET EY102.B

1. DIV. 26 TO PULL CONDUIT ONLY TO LOCATION OF CCTV CAMERA AND PROVIDE JUNCTION BOX AND PULLSTRING CAMERA AND WIRE BY OTHERS.
2. PROVIDE A 12"x12"x8" PULLBOX IN CEILING. LABEL BOX FOR USE AS FIRST RESPONDER ANTENNA BOOST.
3. 1" CONDUIT BACK TO MDF ROOM. ROUTE THROUGH ACCESSIBLE CEILING. PROVIDE GROMMET AT CONDUIT STUB-OUT IN IDF ROOM.

GENERAL NOTES - SHEET EY102.B

A. ALL FIRE ALARM CONDUIT COUPLINGS AND JUNCTION BOX COVERS ARE TO BE RED.
B. ALL BACKBOXES FOR SPEAKER-STROBE DEVICES MUST BE DEEP OR EXTRA DEEP.
C. SPEAKER CIRCUITS AND ADDRESSABLE LOOPS SHALL BE INSTALLED IN SEPARATE RACEWAYS. SPEAKER CIRCUIT AND STROBE CIRCUIT MAY BE RUN IN THE SAME RACEWAY.
D. CONTRACTOR IS TO PROVIDE COMPLETE CONDUIT HOMERUNS WITH PULLSTRINGS FOR ALL LOW VOLTAGE SYSTEMS INCLUDING SECURITY, AUDIOVISUAL, TELECOMMUNICATIONS, FIRE ALARM, ETC.

MHTN
ARCHITECTS
**MHTN Architects, Inc.**
420 East South Temple
Suite 100
Salt Lake City, Utah 84111
Telephone (801) 595-6700
Telefax (801) 595-6717
www.mhtn.com

**Hastings+Chivetta**
ARCHITECTURE • PLANNING • ENGINEERING
622 Emerson, Suite 200
St. Louis, MO 63141
Tel. 314.863.5717
Fax. 314.863.2623
www.hastingschivetta.com

BUILDING OFFICIAL STAMP

Ken Garner Engineering, Inc.
Electrical Engineering Consultants, Inc.
102 West 500 South, Suite 225
Salt Lake City, Utah 84101
P. 801.328.8800
F. 801.328.8802
Contact: Paris LeLaCheur
Project #: 2010-117.00

# UNIVERSITY OF UTAH
## STUDENT LIFE CENTER
1836 E. BALLIF ROAD
SALT LAKE CITY, UTAH 84112

SEAL

MHTN PROJECT NO. 2010562.00
DRAWN BY: KGE CHECKED BY: KGE

ISSUED:

| NO. | DATE | DESCRIPTION |
|---|---|---|

CONTRACTOR TO VERIFY DRAWINGS IN FIELD USE REFLECT LAST REVISION DATE.

| NO. | DATE | DESCRIPTION |
|---|---|---|

SHEET NAME
LEVEL 2
SYSTEMS PLAN
AREA B
BID DOCUMENTS
May 15, 2013

SHEET NUMBER
EY102.B

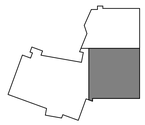
KEYPLAN

C:\Users\brown.KGE\Documents\2010-117.00_KGE_STUDENT LIFE_ELECTRICAL_CENTERAL_2012_brown.rvt
5/14/2013 6:00:07 PM

KEYED NOTES - SHEET EY102.C

1. DIV. 26 TO PULL CONDUIT ONLY TO LOCATION OF CCTV CAMERA AND PROVIDE JUNCTION BOX AND PULLSTRING CAMERA AND WIRE BY OTHERS.
2. PROVIDE A 12"x12"x8" PULLBOX IN CEILING. LABEL BOX FOR USE AS FIRST RESPONDER ANTENNA BOOST.
3. 1" CONDUIT BACK TO MDF ROOM. ROUTE THROUGH ACCESSIBLE CEILING. PROVIDE GROMMET AT CONDUIT STUB-OUT IN IDF ROOM.

GENERAL NOTES - SHEET EY102.C

A. ALL FIRE ALARM CONDUIT COUPLINGS AND JUNCTION BOX COVERS ARE TO BE RED.
B. ALL BACKBOXES FOR SPEAKER-STROBE DEVICES MUST BE DEEP OR EXTRA DEEP.
C. SPEAKER CIRCUITS AND ADDRESSABLE LOOPS SHALL BE INSTALLED IN SEPARATE RACEWAYS. SPEAKER CIRCUIT AND STROBE CIRCUIT MAY BE RUN IN THE SAME RACEWAY.
D. CONTRACTOR IS TO PROVIDE COMPLETE CONDUIT HOMERUNS WITH PULLSTRINGS FOR ALL LOW VOLTAGE SYSTEMS INCLUDING SECURITY, AUDIOVISUAL, TELECOMMUNICATIONS, FIRE ALARM, ETC.
E. ALL WALL-MOUNTED FIRE ALARM AND SECURITY DEVICES IN GYMS SHALL BE PROVIDED WITH CAGES FOR PROTECTION.
F. ALL WALL MOUNTED FIRE ALARM AND SECURITY DEVICES IN GYMS SHALL BE PROVIDED WITH WIRE GUARDS FOR PROTECTION.

MHTN ARCHITECTS
MHTN Architects, Inc.
420 East South Temple
Suite 100
Salt Lake City, Utah 84111
Telephone (801) 595-6700
Telefax (801) 595-6717
www.mhtn.com

Hastings+Chivetta
ARCHITECTURE • PLANNING • ENGINEERING
622 Emerson, Suite 200
St. Louis, MO 63141
Tel. 314.863.5717
Fax. 314.863.2823
www.hastingschivetta.com

BUILDING OFFICIAL STAMP
Ken Garner Engineering, Inc.
Electrical Engineering Consultants, Inc.
102 West 500 South, Suite 225
Salt Lake City, Utah 84101
P. 801.328.8800
F. 801.328.8802
Contact: Paris LeLaCheur
Project #: 2010-117.00

# UNIVERSITY OF UTAH
## STUDENT LIFE CENTER
1836 E. BALLIF ROAD
SALT LAKE CITY, UTAH 84112

SEAL

MHTN PROJECT NO. 2010562.00
DRAWN BY: KGE CHECKED BY: KGE

ISSUED:

| NO. | DATE | DESCRIPTION |
|---|---|---|

CONTRACTOR TO VERIFY DRAWINGS IN FIELD USE REFLECT LAST REVISION DATE.

| NO. | DATE | DESCRIPTION |
|---|---|---|

SHEET NAME
LEVEL 2
SYSTEMS PLAN
AREA C
BID DOCUMENTS
May 15, 2013

SHEET NUMBER
EY102.C

KEYPLAN

1 EY102.C C ENLARGED LEVEL 2 SYSTEMS PLAN WEST
SCALE |1/8" = 1'-0"

0' 4'-0" 8'-0" 16'-0"
1/8" =1'-0"

C:\Users\brown.KGE\Documents\2010-117.00_KGE_STUDENT LIFE_ELECTRICAL_CENTERAL_2012_brown.rvt
5/14/2013 6:00:36 PM

KEYED NOTES - SHEET EY103.A

1. INSTALL THE DATA, POWER AND WIRELESS ACCESS POINT ABOVE THE DROP-TILE CEILING.
2. DIV. 26 TO PULL CONDUIT ONLY TO LOCATION OF CCTV CAMERA AND PROVIDE JUNCTION BOX AND PULLSTRING CAMERA AND WIRE BY OTHERS.
3. PROVIDE A 12"x12"x6" PULLBOX IN CEILING. LABEL BOX FOR USE AS FIRST RESPONDER ANTENNA BOOST.
4. 1" CONDUIT BACK TO MDF ROOM. ROUTE THROUGH ACCESSIBLE CEILING. PROVIDE GROMMET AT CONDUIT STUB-OUT IN IDF ROOM.

GENERAL NOTES - SHEET EY103.A

A. ALL FIRE ALARM CONDUIT COUPLINGS AND JUNCTION BOX COVERS ARE TO BE RED.
B. ALL BACKBOXES FOR SPEAKER-STROBE DEVICES MUST BE DEEP OR EXTRA DEEP.
C. SPEAKER CIRCUITS AND ADDRESSABLE LOOPS SHALL BE INSTALLED IN SEPARATE RACEWAYS. SPEAKER CIRCUIT AND STROBE CIRCUIT MAY BE RUN IN THE SAME RACEWAY.
D. CONTRACTOR IS TO PROVIDE COMPLETE CONDUIT HOMERUNS WITH PULLSTRINGS FOR ALL LOW VOLTAGE SYSTEMS INCLUDING SECURITY, AUDIOVISUAL, TELECOMMUNICATIONS, FIRE ALARM, ETC.

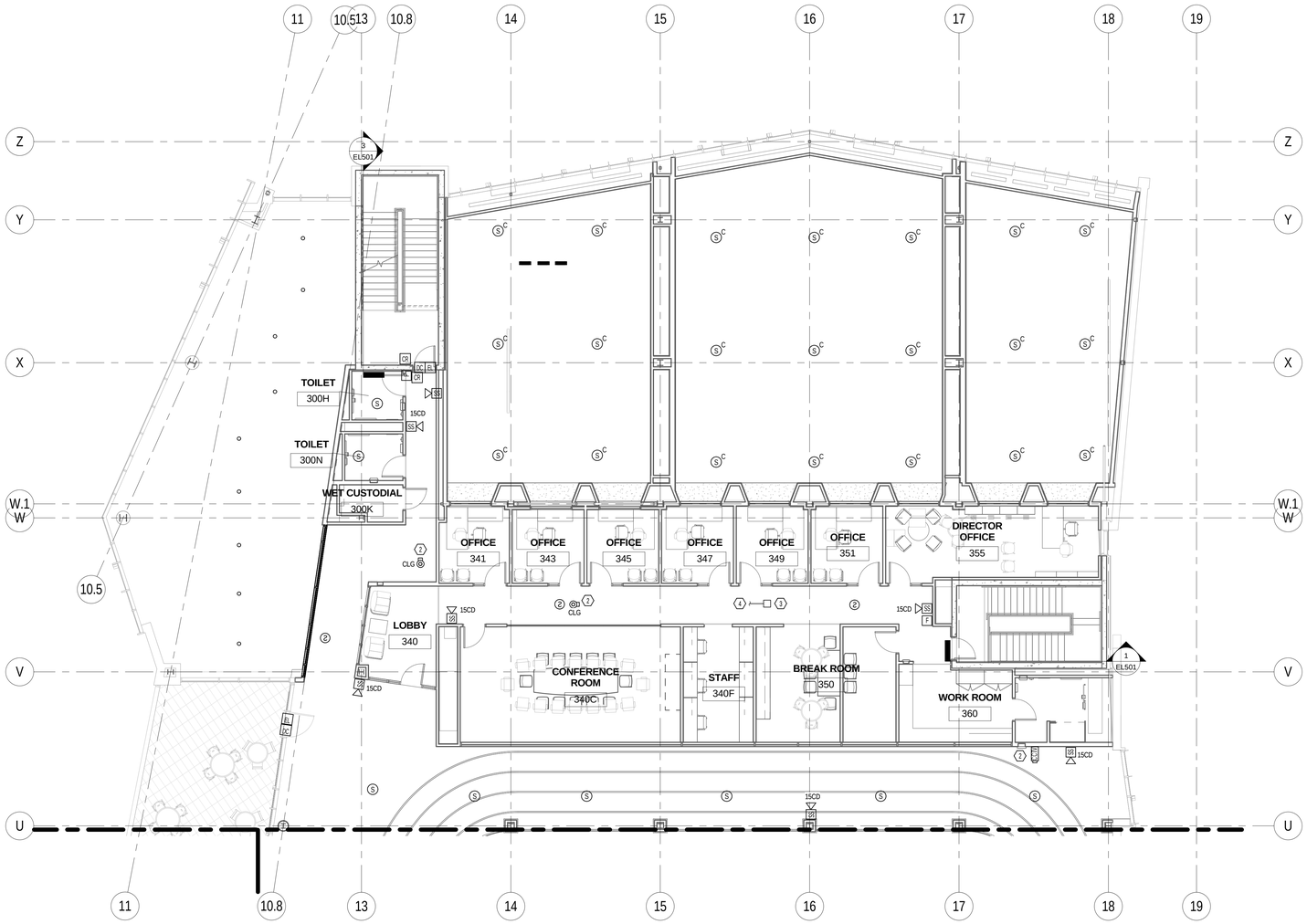


1 EY103.A A ENLARGED LEVEL 3 SYSTEMS PLAN NORTH
SCALE |1/8" = 1'-0"

0' 4'-0" 8'-0" 16'-0"
1/8" =1'-0"

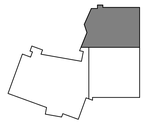

KEYPLAN


MHTN ARCHITECTS
MHTN Architects, Inc.
420 East South Temple
Suite 100
Salt Lake City, Utah 84111
Telephone (801) 595-6700
Telefax (801) 595-6717
www.mhtn.com

Hastings+Chivetta
ARCHITECTURE • PLANNING • ENGINEERING
622 Emerson, Suite 200
St. Louis, MO 63141
Tel. 314.863.5717
Fax. 314.863.2823
www.hastingschivetta.com

BUILDING OFFICIAL STAMP
Ken Garner Engineering, Inc.
Electrical Engineering Consultants, Inc.
102 West 500 South, Suite 225
Salt Lake City, Utah 84101
P. 801.328.8800
F. 801.328.8802
Contact: Paris LeLaCheur
Project #: 2010-117.00


# UNIVERSITY OF UTAH
## STUDENT LIFE CENTER
1836 E. BALLIF ROAD
SALT LAKE CITY, UTAH 84112

SEAL

MHTN PROJECT NO. 2010562.00
DRAWN BY: KGE CHECKED BY: KGE

ISSUED:

| NO. | DATE | DESCRIPTION |
|---|---|---|

CONTRACTOR TO VERIFY DRAWINGS IN FIELD USE REFLECT LAST REVISION DATE.

| NO. | DATE | DESCRIPTION |
|---|---|---|

SHEET NAME
LEVEL 3
SYSTEMS PLAN
AREA A
BID DOCUMENTS
May 15, 2013

SHEET NUMBER
EY103.A

C:\Users\drown.KGE\Documents\2010-117.00_KGE_STUDENT LIFE_ELECTRICAL_CENTERAL_2012_drown.rvt
5/14/2013 6:00:45 PM

KEYED NOTES - SHEET EY103.B

1. DIV. 26 TO PULL CONDUIT ONLY TO LOCATION OF CCTV CAMERA AND PROVIDE JUNCTION BOX AND PULLSTRING CAMERA AND WIRE BY OTHERS.
2. PROVIDE A 12"x12"x6" PULLBOX IN CEILING. LABEL BOX FOR USE AS FIRST RESPONDER ANTENNA BOOST.
3. 1" CONDUIT BACK TO MDF ROOM. ROUTE THROUGH ACCESSIBLE CEILING. PROVIDE GROMMET AT CONDUIT STUB-OUT IN IDF ROOM.

GENERAL NOTES - SHEET EY103.B

A. ALL FIRE ALARM CONDUIT COUPLINGS AND JUNCTION BOX COVERS ARE TO BE RED.
B. ALL BACKBOXES FOR SPEAKER-STROBE DEVICES MUST BE DEEP OR EXTRA DEEP.
C. SPEAKER CIRCUITS AND ADDRESSABLE LOOPS SHALL BE INSTALLED IN SEPARATE RACEWAYS. SPEAKER CIRCUIT AND STROBE CIRCUIT MAY BE RUN IN THE SAME RACEWAY.
D. CONTRACTOR IS TO PROVIDE COMPLETE CONDUIT HOMERUNS WITH PULLSTRINGS FOR ALL LOW VOLTAGE SYSTEMS INCLUDING SECURITY, AUDIOVISUAL, TELECOMMUNICATIONS, FIRE ALARM, ETC.

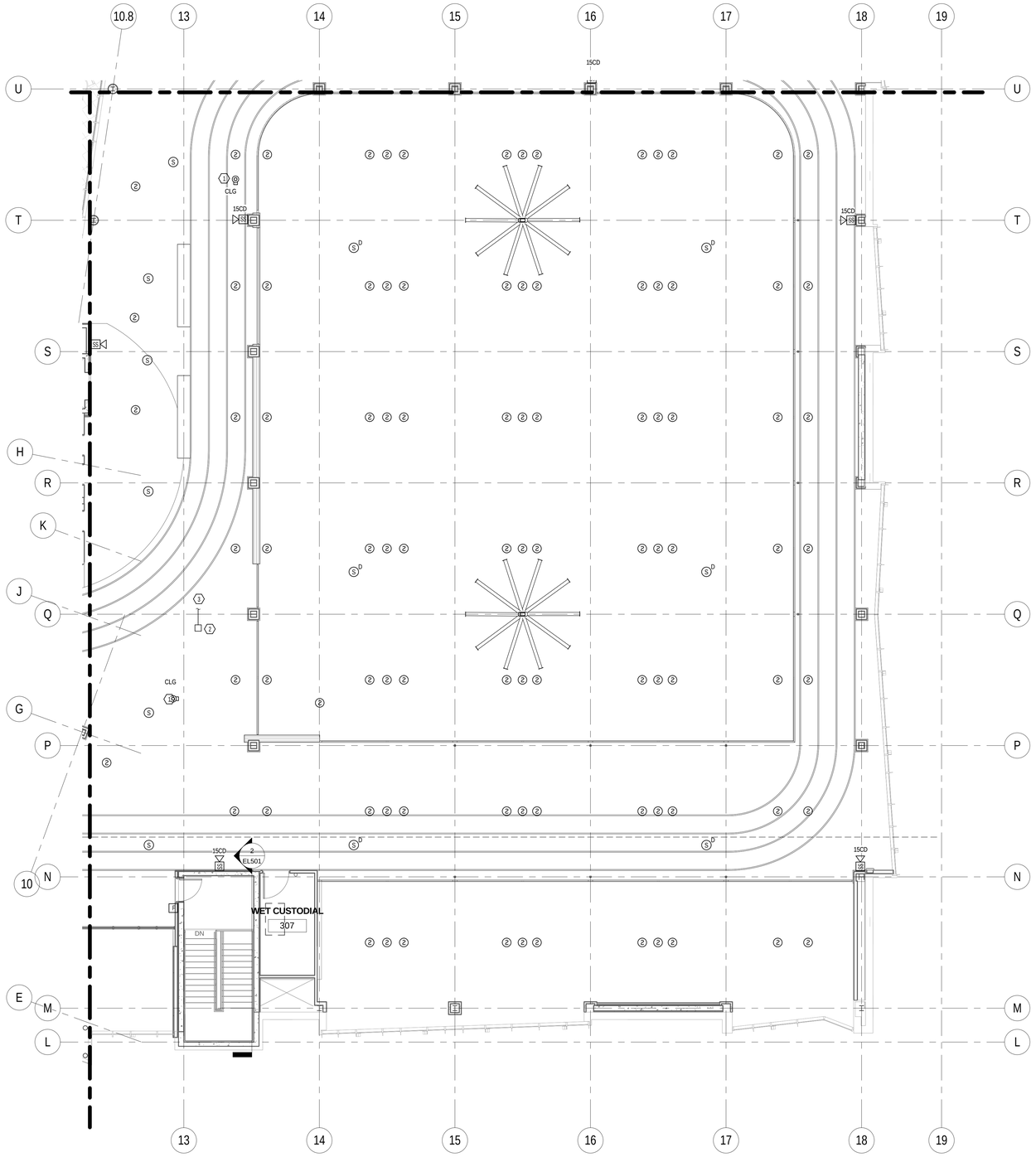


1 EY103.B B ENLARGED LEVEL 3 SYSTEMS PLAN SOUTH
SCALE | 1/8" = 1'-0"

0' 4'-0" 8'-0" 16'-0"
1/8" =1'-0"

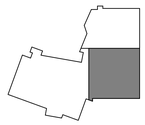

KEYPLAN


MHTN
ARCHITECTS
**MHTN Architects, Inc.**
420 East South Temple
Suite 100
Salt Lake City, Utah 84111
Telephone (801) 595-6700
Telefax (801) 595-6717
www.mhtn.com

**Hastings+Chivetta**
ARCHITECTURE • PLANNING • ENGINEERING
622 Emerson, Suite 200
St. Louis, MO 63141
Tel. 314.863.5717
Fax. 314.863.2823
www.hastingschivetta.com


BUILDING OFFICIAL STAMP


Ken Garner
Engineering, Inc.
Electrical Engineering Consultants, Inc.
102 West 500 South, Suite 225
Salt Lake City, Utah 84101
P. 801.328.8800
F. 801.328.8802
Contact: Paris LeLaCheur
Project #: 2010-117.00


# UNIVERSITY OF UTAH
## STUDENT LIFE CENTER
1836 E. BALLIF ROAD
SALT LAKE CITY, UTAH 84112

SEAL

MHTN PROJECT NO. 2010562.00

DRAWN BY: KGE CHECKED BY: KGE

ISSUED:

| NO. | DATE | DESCRIPTION |
|---|---|---|

CONTRACTOR TO VERIFY DRAWINGS IN FIELD USE REFLECT LAST REVISION DATE:

| NO. | DATE | DESCRIPTION |
|---|---|---|

SHEET NAME
LEVEL 3
SYSTEMS PLAN
AREA B
BID DOCUMENTS
May 15, 2013

SHEET NUMBER
EY103.B

C:\Users\drown.KGE\Documents\2010-117.00_KGE_STUDENT LIFE_ELECTRICAL_CENTERAL_2012_rbrown.rvt
5/14/2013 6:00:55 PM

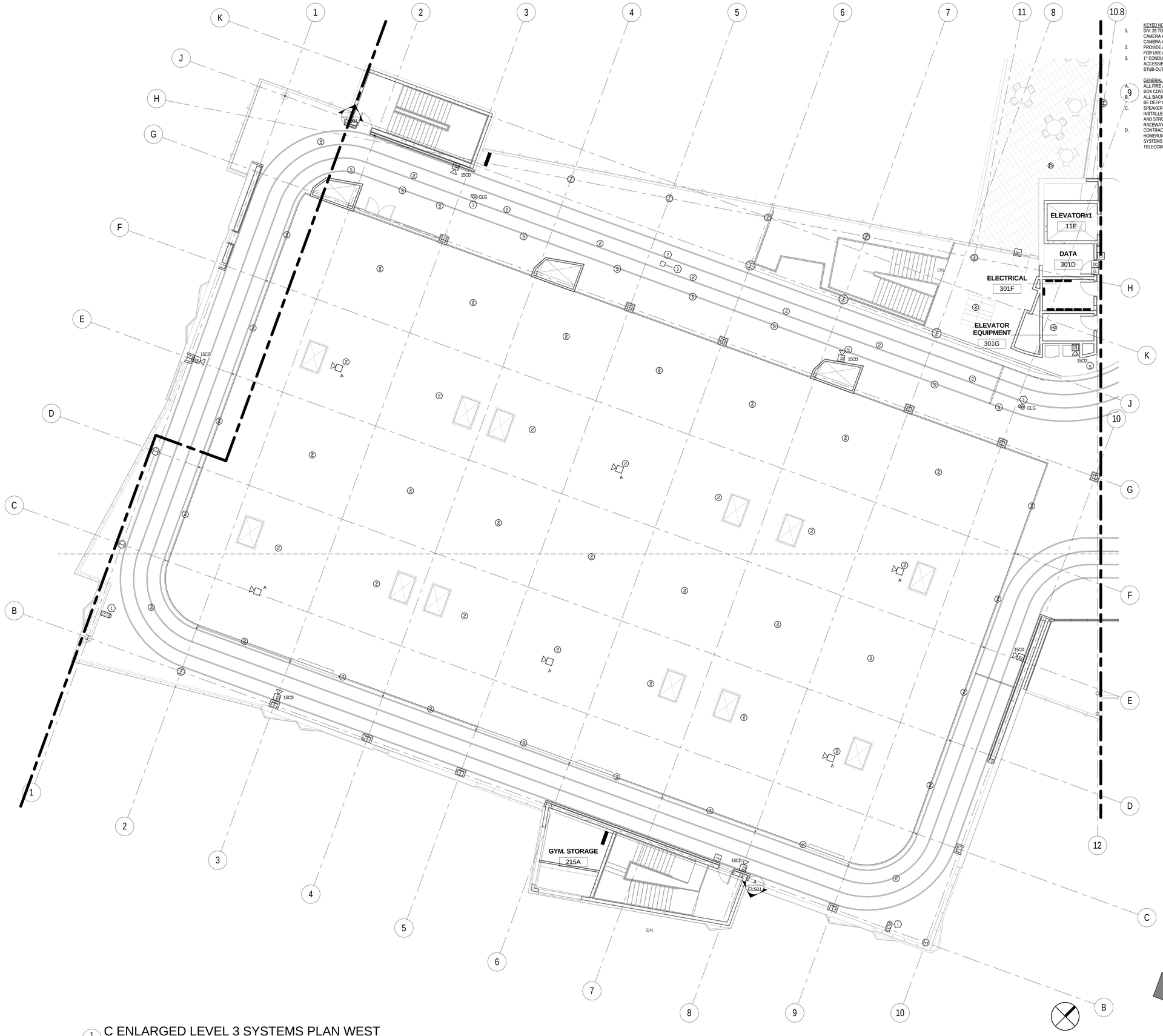


KEYED NOTES - SHEET EY103.C

1. DIV. 26 TO PULL CONDUIT ONLY TO LOCATION OF CCTV CAMERA AND PROVIDE JUNCTION BOX AND PULLSTRING CAMERA AND WIRE BY OTHERS.
2. PROVIDE A 12"x12"x8" PULLBOX IN CEILING. LABEL BOX FOR USE AS FIRST RESPONDER ANTENNA BOOST.
3. 1" CONDUIT BACK TO MDF ROOM. ROUTE THROUGH ACCESSIBLE CEILING. PROVIDE GROMMET AT CONDUIT STUB-OUT IN IDF ROOM.

GENERAL NOTES - SHEET EY103.C

A. ALL FIRE ALARM CONDUIT COUPLINGS AND JUNCTION BOX COVERS ARE TO BE RED.
B. ALL BACKBOXES FOR SPEAKER-STROBE DEVICES MUST BE DEEP OR EXTRA DEEP.
C. SPEAKER CIRCUITS AND ADDRESSABLE LOOPS SHALL BE INSTALLED IN SEPARATE RACEWAYS. SPEAKER CIRCUIT AND STROBE CIRCUIT MAY BE RUN IN THE SAME RACEWAY.
D. CONTRACTOR IS TO PROVIDE COMPLETE CONDUIT HOMERUNS WITH PULLSTRINGS FOR ALL LOW VOLTAGE SYSTEMS INCLUDING SECURITY, AUDIO/VISUAL, TELECOMMUNICATIONS, FIRE ALARM, ETC.

1 EY103.C C ENLARGED LEVEL 3 SYSTEMS PLAN WEST
SCALE | 1/8" = 1'-0"

0' 4'-0" 8'-0" 16'-0"
1/8" =1'-0"

KEYPLAN

MHTN ARCHITECTS
MHTN Architects, Inc.
420 East South Temple
Suite 100
Salt Lake City, Utah 84111
Telephone (801) 595-6700
Telefax (801) 595-6717
www.mhtn.com

Hastings+Chivetta
ARCHITECTURE • PLANNING • ENGINEERING
622 Emerson, Suite 200
St. Louis, MO 63141
Tel. 314.863.5717
Fax. 314.863.2823
www.hastingschivetta.com

BUILDING OFFICIAL STAMP
Ken Garner Engineering, Inc.
Electrical Engineering Consultants, Inc.
102 West 500 South, Suite 225
Salt Lake City, Utah 84101
P. 801.328.8800
F. 801.328.8802
Contact: Paris LeLaCheur
Project #: 2010-117.00

# UNIVERSITY OF UTAH
## STUDENT LIFE CENTER
1836 E. BALLIF ROAD
SALT LAKE CITY, UTAH 84112

SEAL

MHTN PROJECT NO. 2010562.00
DRAWN BY: KGE CHECKED BY: KGE

ISSUED:

| NO. | DATE | DESCRIPTION |
|---|---|---|

CONTRACTOR TO VERIFY DRAWINGS IN FIELD USE REFLECT LAST REVISION DATE:

| NO. | DATE | DESCRIPTION |
|---|---|---|

SHEET NAME
LEVEL 3
SYSTEMS PLAN
AREA C
BID DOCUMENTS
May 15, 2013

SHEET NUMBER
EY103.C

C:\Users\ttrown.KGE\Documents\2010-117.00_KGE_STUDENT LIFE_ELECTRICAL_CENTERAL_2012_ttrown.rvt
5/14/2013 6:01:04 PM

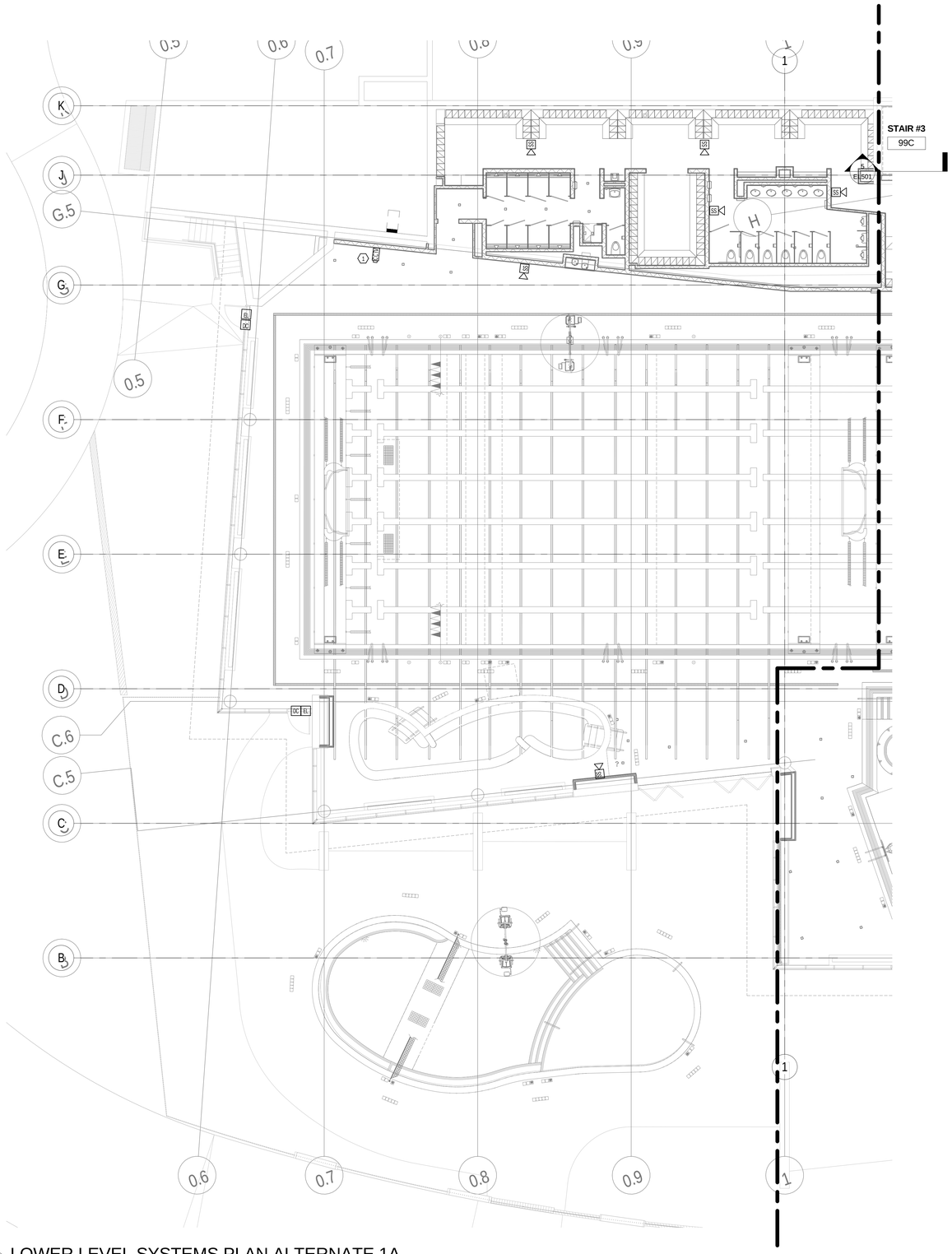


1 LOWER LEVEL SYSTEMS PLAN ALTERNATE 1A
EY200.C1 SCALE | 1/8" = 1'-0"

C:\Users\tbrown.KGE\Documents\2010-117.00_KGE_STUDENT LIFE_ELECTRICAL_CENTERAL_2012_tbrown.rvt
5/14/2013 6:01:18 PM

MHTN
ARCHITECTS
**MHTN Architects, Inc.**
420 East South Temple
Suite 100
Salt Lake City, Utah 84111
Telephone (801) 595-6700
Telefax (801) 595-6717
www.mhtn.com

**Hastings+Chivetta**
ARCHITECTURE • PLANNING • ENGINEERING
622 Emerson, Suite 200
St. Louis, MO 63141
Tel. 314.863.5717
Fax. 314.863.2823
www.hastingschivetta.com

BUILDING OFFICIAL STAMP

Ken Garner
Engineering, Inc.
Electrical Engineering Consultants, Inc.
102 West 500 South, Suite 225
Salt Lake City, Utah 84101
P. 801.328.8800
F. 801.328.8802
Contact: Paris LeLaCheur
Project #: 2010-117.00

# UNIVERSITY OF UTAH
## STUDENT LIFE CENTER
1836 E. BALLIF ROAD
SALT LAKE CITY, UTAH 84112

SEAL

MHTN PROJECT NO. 2010562.00

DRAWN BY: Author CHECKED BY: Checker

ISSUED:

| NO. | DATE | DESCRIPTION |
|---|---|---|
| | | |

CONTRACTOR TO VERIFY DRAWINGS IN FIELD USE REFLECT LAST REVISION DATE.

| NO. | DATE | DESCRIPTION |
|---|---|---|
| | | |

SHEET NAME
LOWER LEVEL SYSTEMS PLAN ALTERNATE 1A
BID DOCUMENTS
May 15, 2013

SHEET NUMBER
EY200.C1

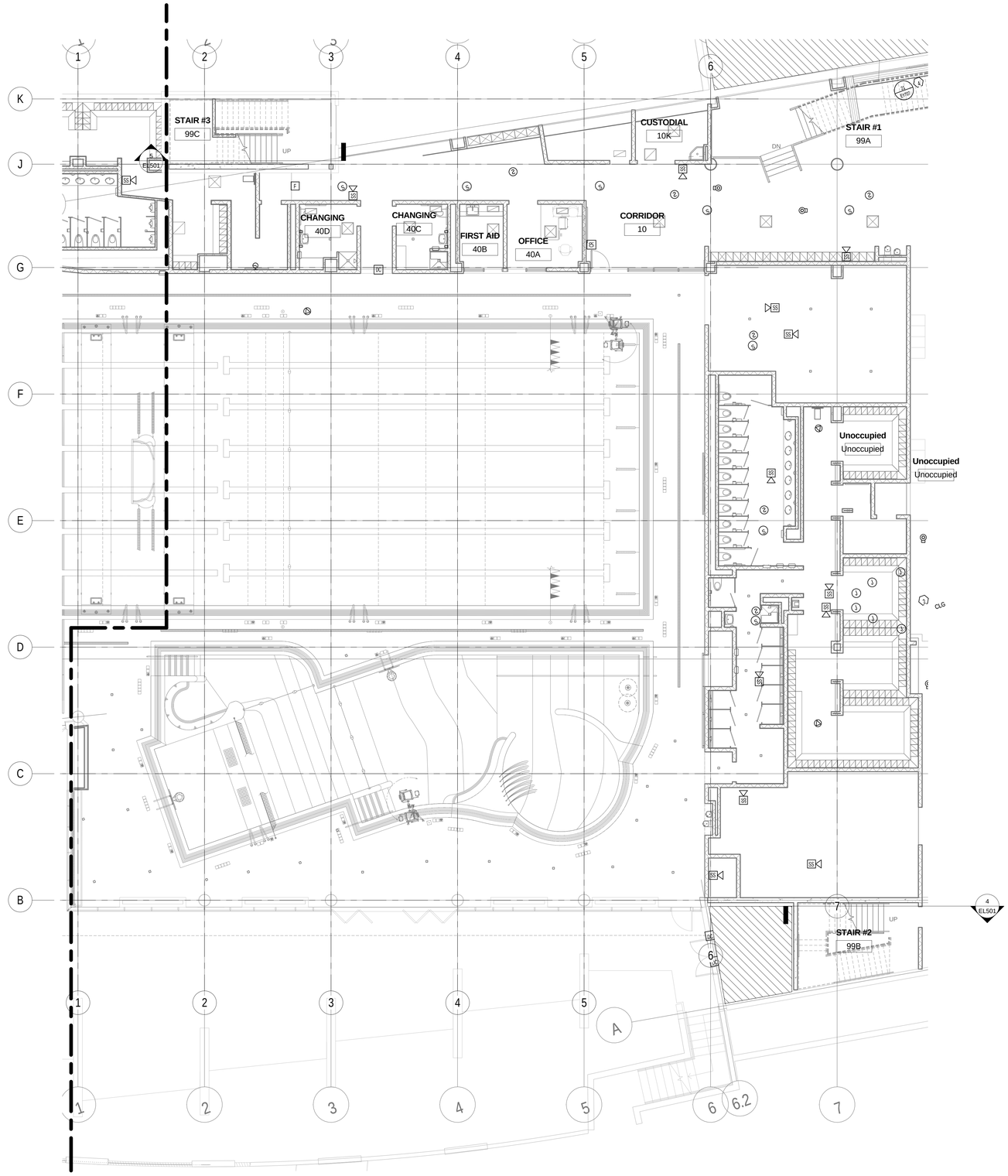


1 LOWER LEVEL SYSTEMS PLAN ALTERNATE 1B
EY200.C2 SCALE | 1/8" = 1'-0"

C:\Users\tbrown.KGE\Documents\2010-117.00_KGE_STUDENT LIFE_ELECTRICAL_CENTERAL_2012_rbrown.rvt
5/14/2013 6:01:34 PM

MHTN
ARCHITECTS
**MHTN Architects, Inc.**
420 East South Temple
Suite 100
Salt Lake City, Utah 84111
Telephone (801) 595-6700
Telefax (801) 595-6717
www.mhtn.com

**Hastings+Chivetta**
ARCHITECTURE • PLANNING • ENGINEERING
622 Emerson, Suite 200
St. Louis, MO 63141
Tel. 314.863.5717
Fax. 314.863.2823
www.hastingschivetta.com

BUILDING OFFICIAL STAMP

Ken Garner
Engineering, Inc.
Electrical Engineering Consultants, Inc.
102 West 500 South, Suite 225
Salt Lake City, Utah 84101
P. 801.328.8800
F. 801.328.8802
Contact: Paris LeLaCheur
Project #: 2010-117.00

# UNIVERSITY OF UTAH
## STUDENT LIFE CENTER
1836 E. BALLIF ROAD
SALT LAKE CITY, UTAH 84112

SEAL

MHTN PROJECT NO. 2010562.00

DRAWN BY: Author CHECKED BY: Checker

ISSUED:

| NO. | DATE | DESCRIPTION |
|---|---|---|
| | | |

CONTRACTOR TO VERIFY DRAWINGS IN FIELD USE REFLECT LAST REVISION DATE:

| NO. | DATE | DESCRIPTION |
|---|---|---|
| | | |

SHEET NAME
LOWER LEVEL
SYSTEMS PLAN
ALTERNATE 1B
BID DOCUMENTS
May 15, 2013

SHEET NUMBER
EY200.C2

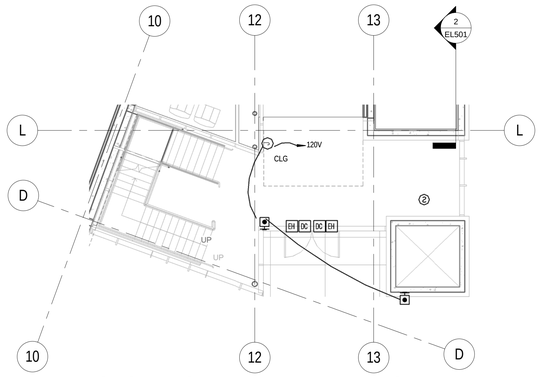


1 EY201.B LEVEL 1 SYSTEMS PLAN ALTERNATE 3
SCALE |1/8" = 1'-0"

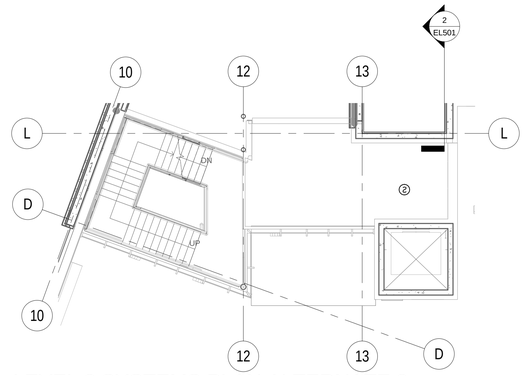


2 EY201.B LEVEL 2 SYSTEMS PLAN ALTERNATE 3
SCALE |1/8" = 1'-0"

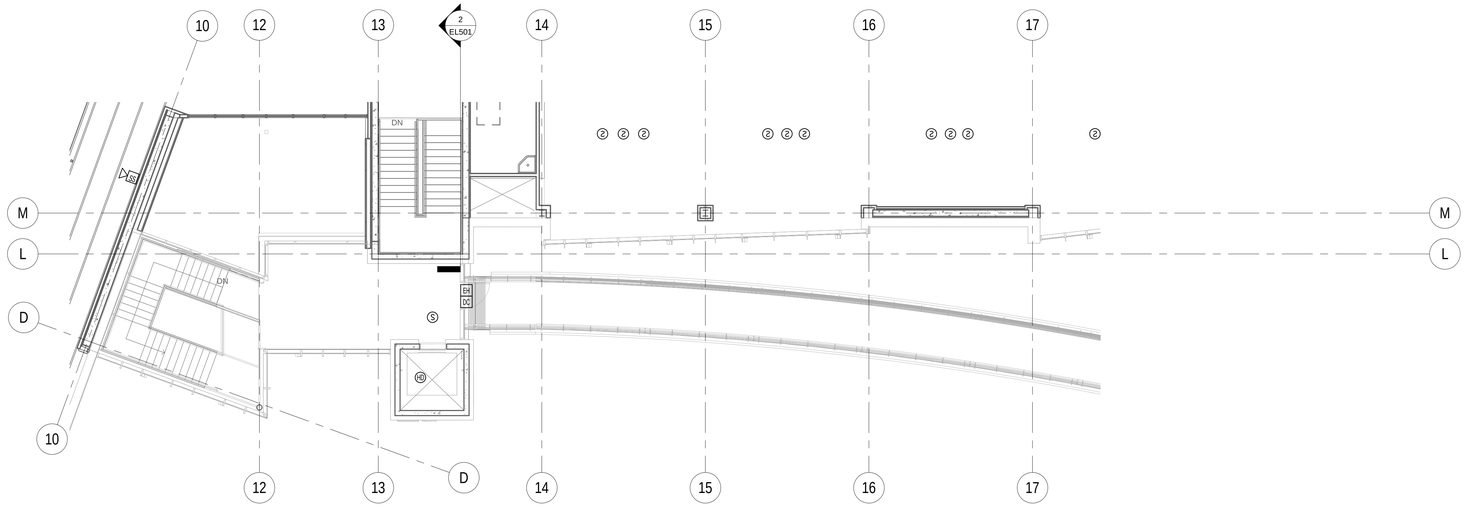


3 EY201.B LEVEL 3 SYSTEMS PLAN ALTERNATE 3
SCALE |1/8" = 1'-0"

C:\Users\tbrown.KGE\Documents\2010-117.00_KGE_STUDENT LIFE_ELECTRICAL_CENTERAL_2012_tbrown.rvt
5/14/2013 6:01:45 PM


MHTN
ARCHITECTS
**MHTN Architects, Inc.**
420 East South Temple
Suite 100
Salt Lake City, Utah 84111
Telephone (801) 595-6700
Telefax (801) 595-6717
www.mhtn.com

**Hastings+Chivetta**
ARCHITECTURE • PLANNING • ENGINEERING
622 Emerson, Suite 200
St. Louis, MO 63141
Tel. 314.863.5717
Fax. 314.863.2823
www.hastingschivetta.com

BUILDING OFFICIAL STAMP

Ken Garner
Engineering, Inc.
Electrical Engineering Consultants, Inc.
102 West 500 South, Suite 225
Salt Lake City, Utah 84101
P. 801.328.8800
F. 801.328.8802
Contact: Paris LeLaCheur
Project #: 2010-117.00


# UNIVERSITY OF UTAH
## STUDENT LIFE CENTER
1836 E. BALLIF ROAD
SALT LAKE CITY, UTAH 84112

SEAL

MHTN PROJECT NO. 2010562.00

DRAWN BY: Author CHECKED BY: Checker

ISSUED:

| NO. | DATE | DESCRIPTION |
|---|---|---|
| | | |

CONTRACTOR TO VERIFY DRAWINGS IN FIELD USE REFLECT LAST REVISION DATE.

| NO. | DATE | DESCRIPTION |
|---|---|---|
| | | |

SHEET NAME
SYSTEMS PLAN
AREA B
ALTERNATE 3
BID DOCUMENTS
May 15, 2013

SHEET NUMBER
EY201.B

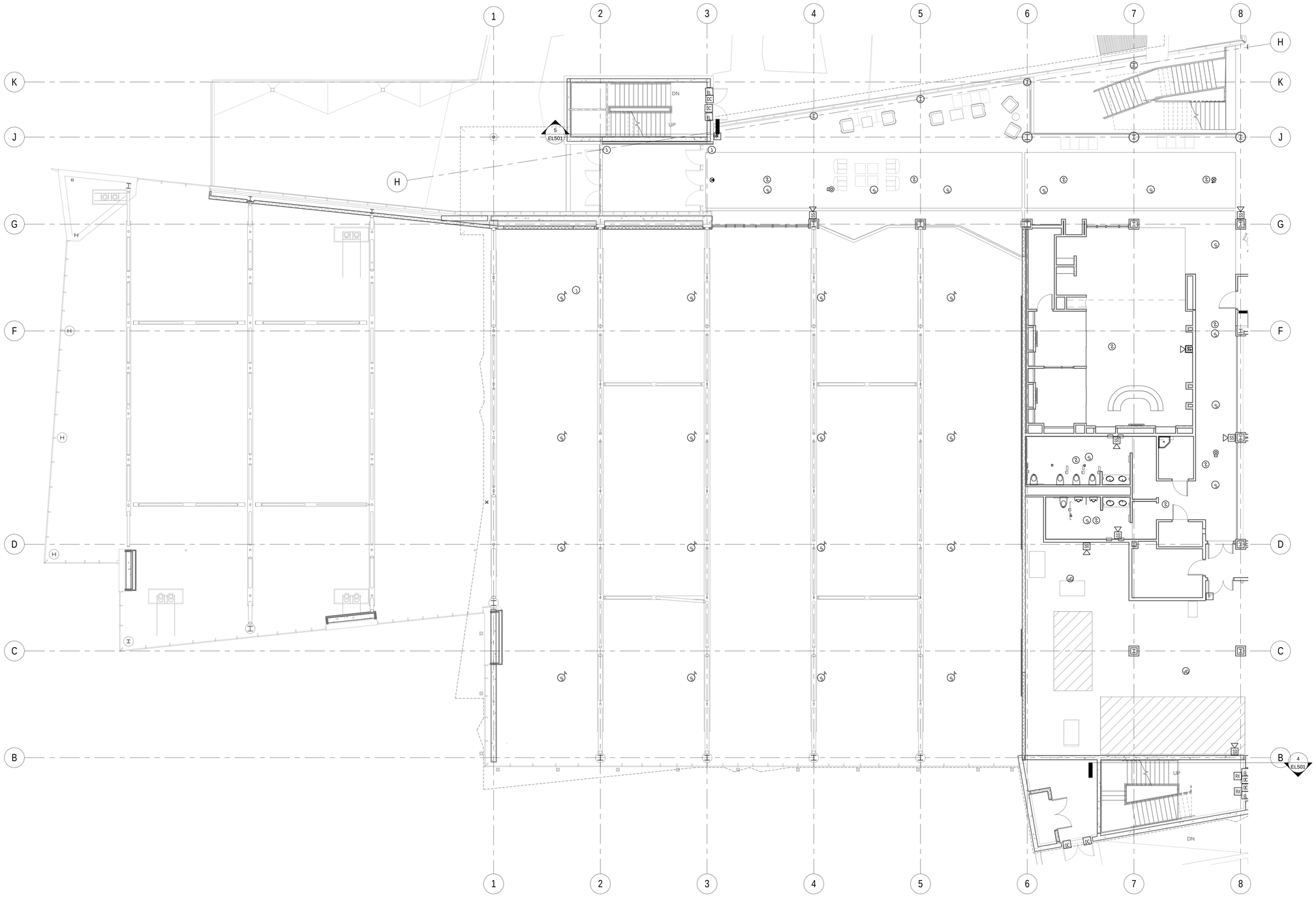



MHTN
ARCHITECTS

**MHTN Architects, Inc.**
420 East South Temple
Suite 100
Salt Lake City, Utah 84111
Telephone (801) 595-6700
Telefax (801) 595-6717
www.mhtn.com

**Hastings+Chivetta**
ARCHITECTURE • PLANNING • ENGINEERING
622 Emerson, Suite 200
St. Louis, MO 63141
Tel. 314.863.5717
Fax. 314.863.2823
www.hastingschivetta.com

BUILDING OFFICIAL STAMP

Ken Garner
Engineering, Inc.
Electrical Engineering Consultants, Inc.
102 West 500 South, Suite 225
Salt Lake City, Utah 84101
P. 801.328.8800
F. 801.328.8802
Contact: Paris LeLaCheur
Project #: 2010-117.00


# UNIVERSITY OF UTAH

## STUDENT LIFE CENTER

1836 E. BALLIF ROAD
SALT LAKE CITY, UTAH 84112

SEAL

MHTN PROJECT NO. 2010562.00

DRAWN BY: Author CHECKED BY: Checker

ISSUED:

| NO. | DATE | DESCRIPTION |
|---|---|---|
| | | |

CONTRACTOR TO VERIFY DRAWINGS IN FIELD USE REFLECT LAST REVISION DATE:

| NO. | DATE | DESCRIPTION |
|---|---|---|
| | | |

SHEET NAME

LEVEL 1
SYSTEMS
ATERNATE 1
BID DOCUMENTS
May 15, 2013

SHEET NUMBER

EY201.C

C:\Users\tbrown.KGE\Documents\2010-117.00_KGE_STUDENT LIFE_ELECTRICAL_CENTERAL_2012_tbrown.rvt
5/14/2013 6:01:56 PM

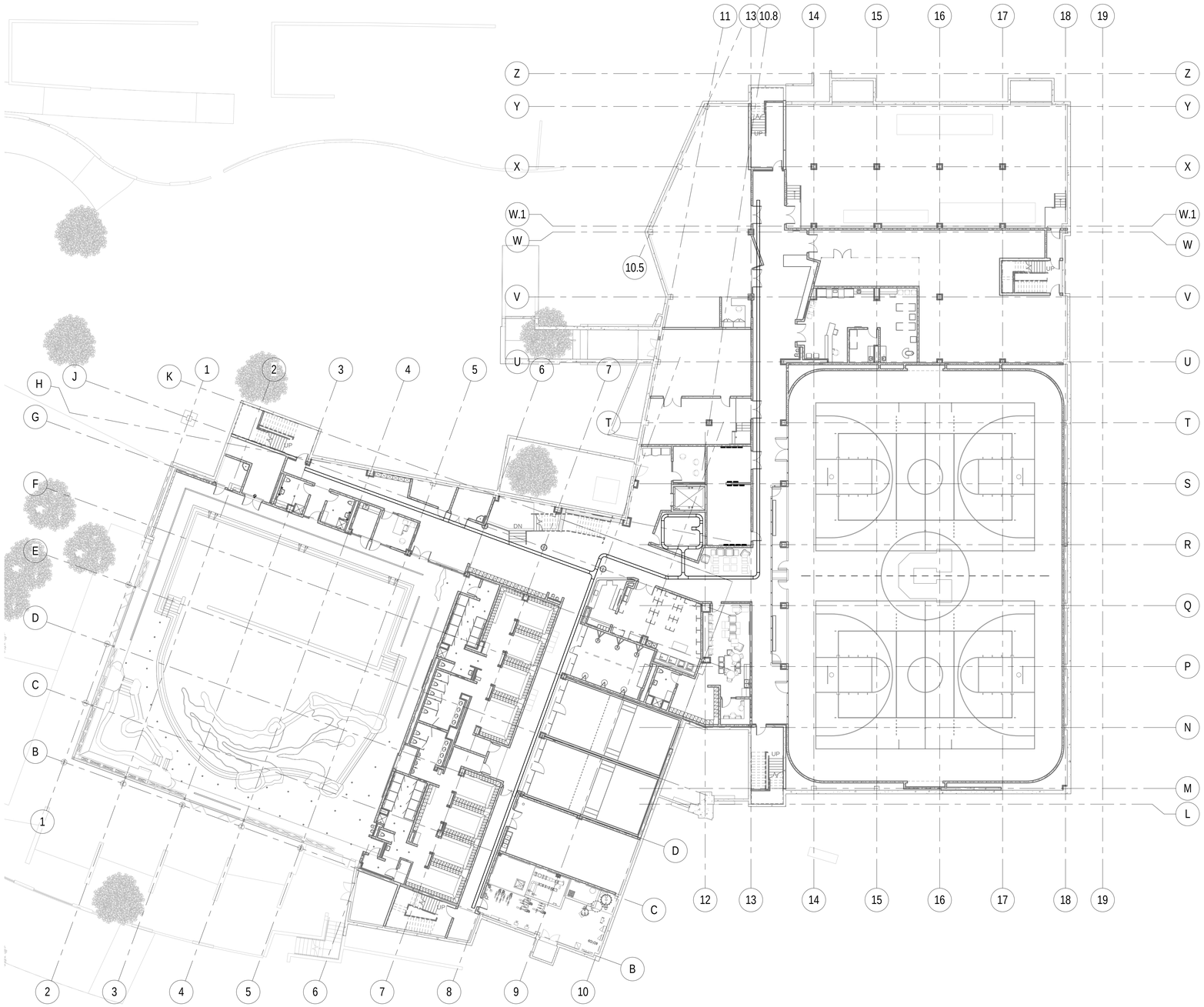


1 EY300 LOWER LEVEL CABLETRAY PLAN

SCALE |1/16" = 1'-0"

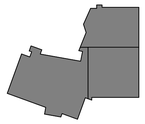

KEYPLAN

C:\Users\brown.KGE\Documents\2010-117.00_KGE_STUDENT LIFE_ELECTRICAL_CENTERAL_2012_brown.rvt
5/14/2013 6:02:18 PM

MHTN
ARCHITECTS
**MHTN Architects, Inc.**
420 East South Temple
Suite 100
Salt Lake City, Utah 84111
Telephone (801) 595-6700
Telefax (801) 595-6717
www.mhtn.com

**Hastings+Chivetta**
ARCHITECTURE • PLANNING • ENGINEERING
622 Emerson, Suite 200
St. Louis, MO 63141
Tel. 314.863.5717
Fax. 314.863.2823
www.hastingschivetta.com

BUILDING OFFICIAL STAMP

Ken Garner
Engineering, Inc.
Electrical Engineering Consultants, Inc.
102 West 500 South, Suite 225
Salt Lake City, Utah 84101
P. 801.328.8800
F. 801.328.8802
Contact: Paris LeLaCheur
Project #: 2010-117.00

# UNIVERSITY OF UTAH
## STUDENT LIFE CENTER
1836 E. BALLIF ROAD
SALT LAKE CITY, UTAH 84112

SEAL

MHTN PROJECT NO. 2010562.00

DRAWN BY: AuthorKGE CHECKED BY: KGE

ISSUED:

| NO. | DATE | DESCRIPTION |
|---|---|---|

CONTRACTOR TO VERIFY DRAWINGS IN FIELD USE REFLECT LAST REVISION DATE.

| NO. | DATE | DESCRIPTION |
|---|---|---|

SHEET NAME
LOWER LEVEL CABLETRAY PLAN
BID DOCUMENTS
May 15, 2013

SHEET NUMBER
EY300

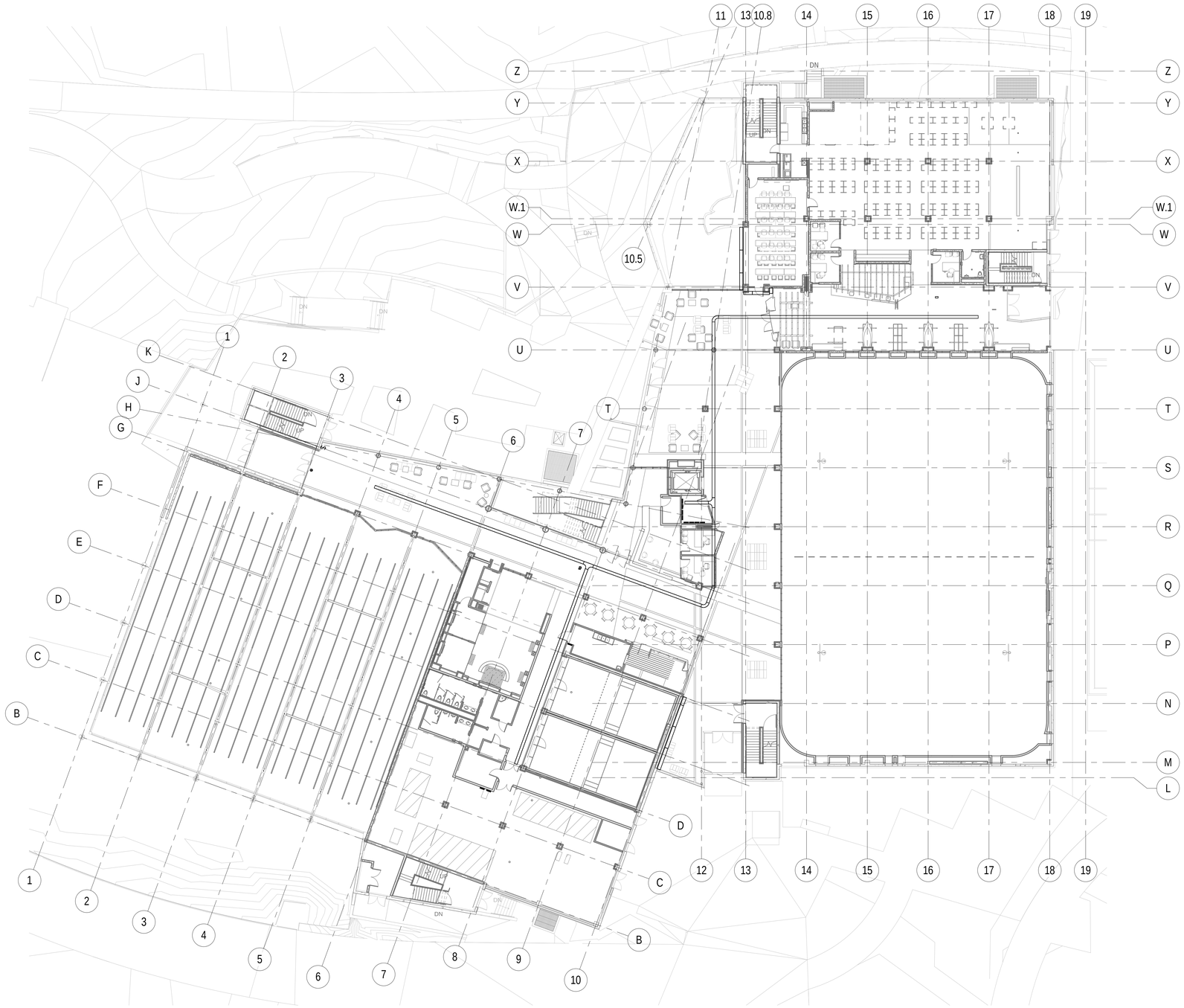

1 EY301 LEVEL 1 CABLETRAY PLAN
SCALE | 1/16" = 1'-0"

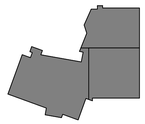

KEYPLAN

C:\Users\brown.KGE\Documents\2010-117.00_KGE_STUDENT LIFE_ELECTRICAL_CENTERAL_2012_brown.rvt
5/14/2013 6:02:52 PM


MHTN
ARCHITECTS
**MHTN Architects, Inc.**
420 East South Temple
Suite 100
Salt Lake City, Utah 84111
Telephone (801) 595-6700
Telefax (801) 595-6717
www.mhtn.com

**Hastings+Chivetta**
ARCHITECTURE • PLANNING • ENGINEERING
622 Emerson, Suite 200
St. Louis, MO 63141
Tel. 314.863.5717
Fax. 314.863.2823
www.hastingschivetta.com

BUILDING OFFICIAL STAMP

Ken Garner
Engineering, Inc.
Electrical Engineering Consultants, Inc.
102 West 500 South, Suite 225
Salt Lake City, Utah 84101
P. 801.328.8800
F. 801.328.8802
Contact: Paris LeLaCheur
Project #: 2010-117.00


# UNIVERSITY OF UTAH
## STUDENT LIFE CENTER
1836 E. BALLIF ROAD
SALT LAKE CITY, UTAH 84112

SEAL

MHTN PROJECT NO. 2010562.00
DRAWN BY: Author CHECKED BY: Checker

ISSUED:

| NO. | DATE | DESCRIPTION |
|---|---|---|

CONTRACTOR TO VERIFY DRAWINGS IN FIELD USE REFLECT LAST REVISION DATE.

| NO. | DATE | DESCRIPTION |
|---|---|---|

SHEET NAME
LEVEL 1 CABLETRAY PLAN
BID DOCUMENTS
May 15, 2013

SHEET NUMBER
EY301

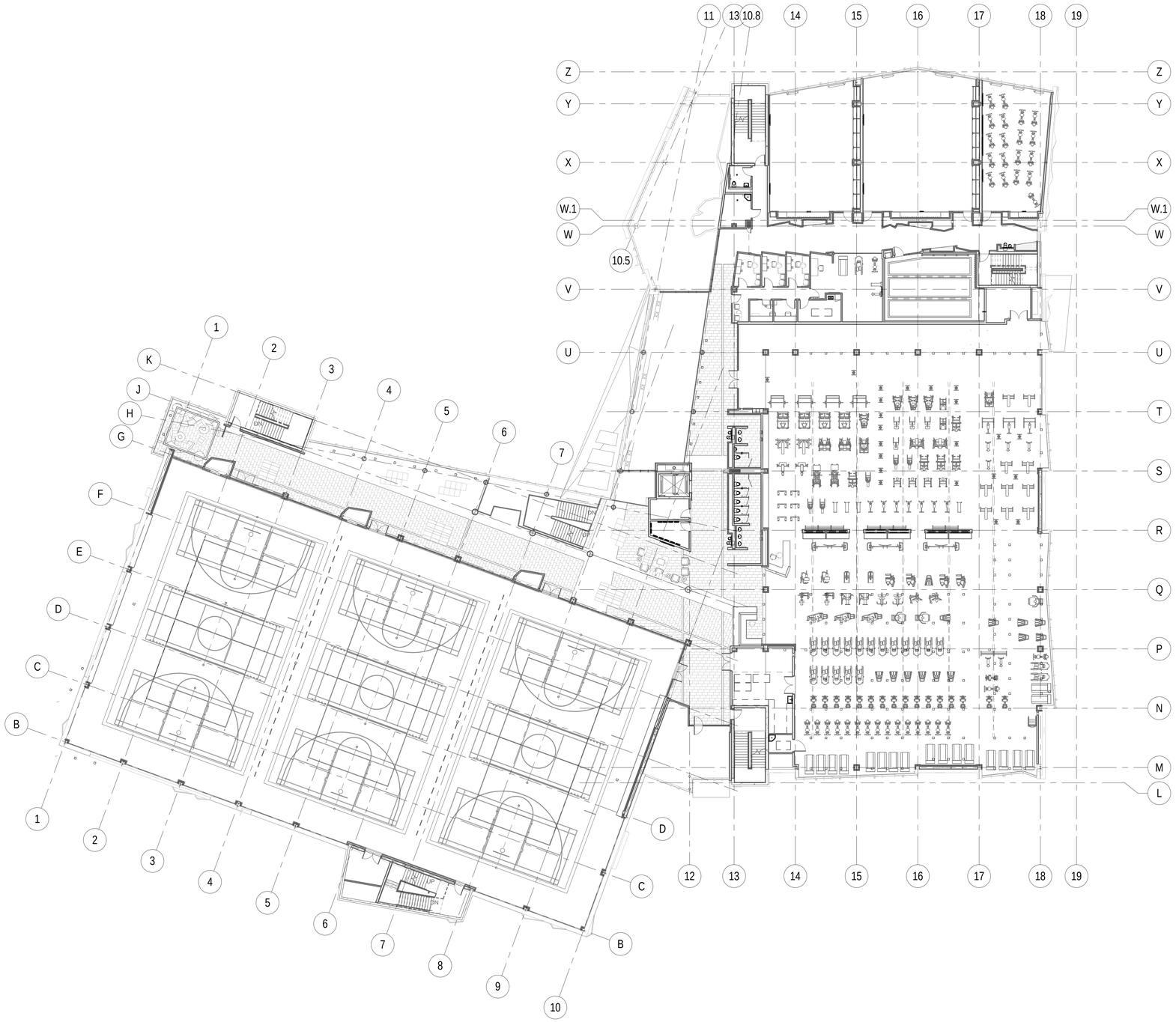

1 EY302 LEVEL 2 CABLETRAY PLAN
SCALE | 1/16" = 1'-0"

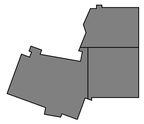

KEYPLAN

C:\Users\brown.KGE\Documents\2010-117.00_KGE_STUDENT LIFE_ELECTRICAL_CENTERAL_2012_brown.rvt
5/14/2013 6:03:07 PM


MHTN
ARCHITECTS
**MHTN Architects, Inc.**
420 East South Temple
Suite 100
Salt Lake City, Utah 84111
Telephone (801) 595-6700
Telefax (801) 595-6717
www.mhtn.com

**Hastings+Chivetta**
ARCHITECTURE • PLANNING • ENGINEERING
622 Emerson, Suite 200
St. Louis, MO 63141
Tel. 314.863.5717
Fax. 314.863.2823
www.hastingschivetta.com

BUILDING OFFICIAL STAMP

Ken Garner
Engineering, Inc.
Electrical Engineering Consultants, Inc.
102 West 500 South, Suite 225
Salt Lake City, Utah 84101
P. 801.328.8800
F. 801.328.8802
Contact: Paris LeLaCheur
Project #: 2010-117.00


# UNIVERSITY OF UTAH
## STUDENT LIFE CENTER
1836 E. BALLIF ROAD
SALT LAKE CITY, UTAH 84112

SEAL

MHTN PROJECT NO. 2010562.00
DRAWN BY: Author CHECKED BY: Checker

ISSUED:

| NO. | DATE | DESCRIPTION |
|---|---|---|

CONTRACTOR TO VERIFY DRAWINGS IN FIELD USE REFLECT LAST REVISION DATE.

| NO. | DATE | DESCRIPTION |
|---|---|---|

SHEET NAME
LEVEL 2 CABLETRAY PLAN
BID DOCUMENTS
May 15, 2013

SHEET NUMBER
EY302

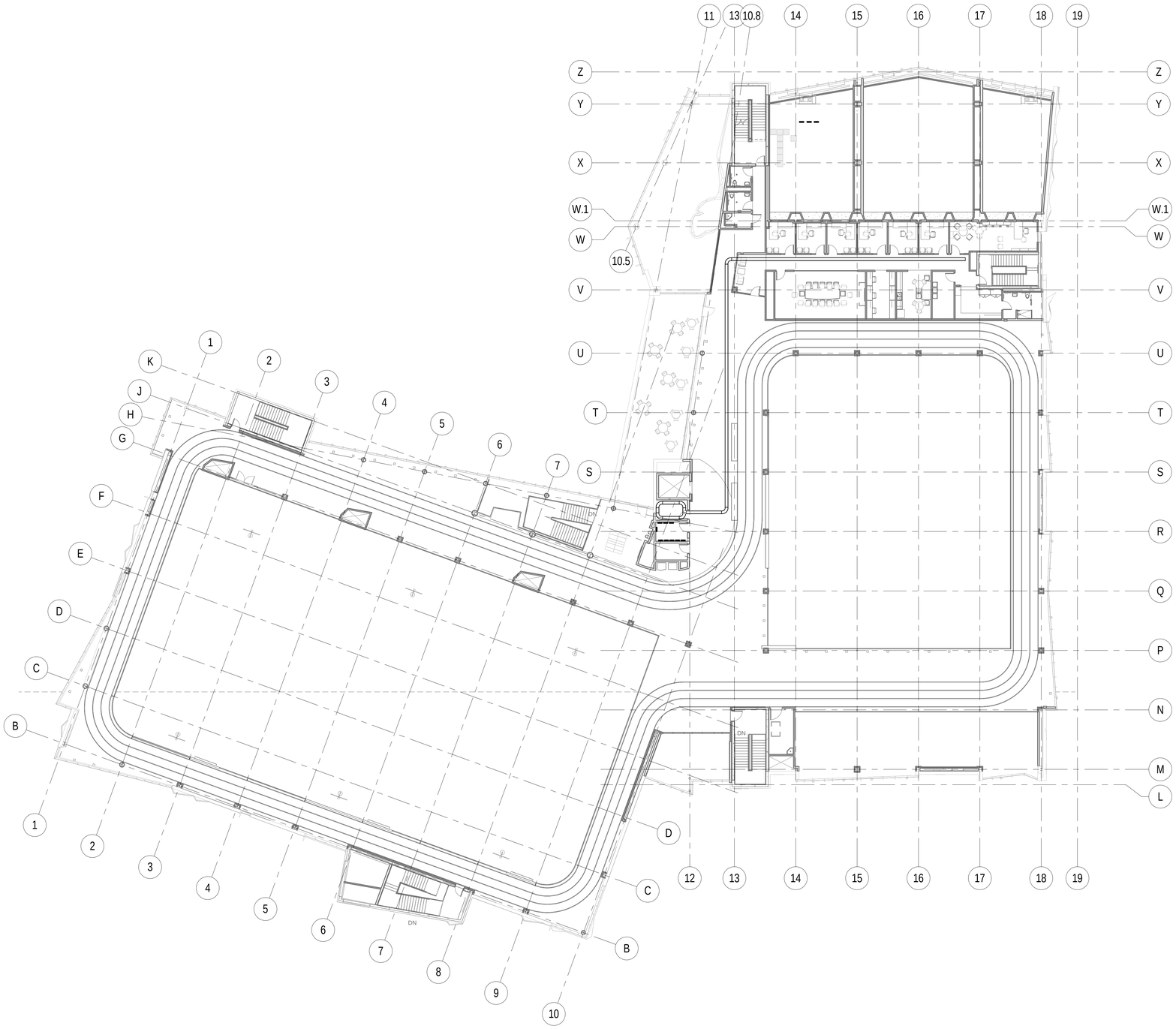


1 EY303 LEVEL 3 CABLETRAY PLAN
SCALE | 1/16" = 1'-0"

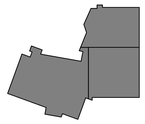

KEYPLAN

C:\Users\ftrown.KGE\Documents\2010-117.00_KGE_STUDENT LIFE_ELECTRICAL_CENTERAL_2012_ftrown.rvt
5/14/2013 6:03:18 PM

MHTN
ARCHITECTS
**MHTN Architects, Inc.**
420 East South Temple
Suite 100
Salt Lake City, Utah 84111
Telephone (801) 595-6700
Telefax (801) 595-6717
www.mhtn.com

**Hastings+Chivetta**
ARCHITECTURE • PLANNING • ENGINEERING
622 Emerson, Suite 200
St. Louis, MO 63141
Tel. 314.863.5717
Fax. 314.863.2823
www.hastingschivetta.com

BUILDING OFFICIAL STAMP

Ken Garner
Engineering, Inc.
Electrical Engineering Consultants, Inc.
102 West 500 South, Suite 225
Salt Lake City, Utah 84101
P. 801.328.8800
F. 801.328.8802
Contact: Paris LeLaCheur
Project #: 2010-117.00

# UNIVERSITY OF UTAH

## STUDENT LIFE CENTER

1836 E. BALLIF ROAD
SALT LAKE CITY, UTAH 84112

SEAL

MHTN PROJECT NO. 2010562.00

DRAWN BY: Author CHECKED BY: Checker

ISSUED:

| NO. | DATE | DESCRIPTION |
|---|---|---|

CONTRACTOR TO VERIFY DRAWINGS IN FIELD USE REFLECT LAST REVISION DATE:

| NO. | DATE | DESCRIPTION |
|---|---|---|

SHEET NAME

LEVEL 3 CABLETRAY PLAN
BID DOCUMENTS
May 15, 2013

SHEET NUMBER

EY303

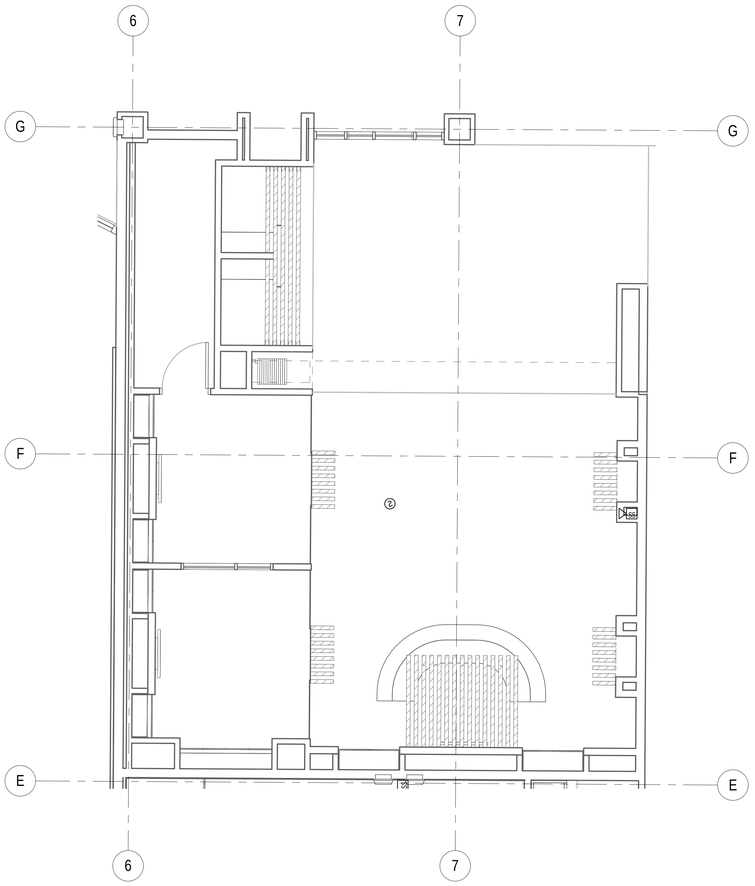


1 EY500 ENLARGED UOFU CREDIT UNION - SYSTEMS
SCALE |1/4" = 1'-0"

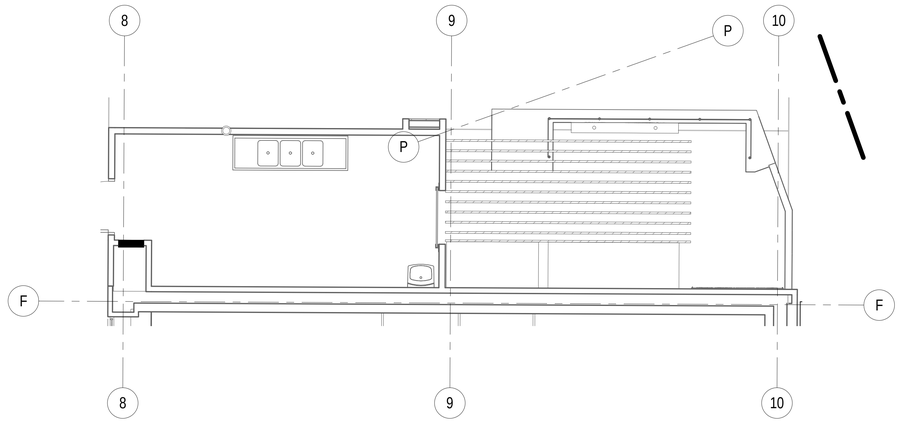


2 EY500 ENLARGED FRESHENS CAFE - SYSTEMS
SCALE |1/4" = 1'-0"

MHTN
ARCHITECTS
**MHTN Architects, Inc.**
420 East South Temple
Suite 100
Salt Lake City, Utah 84111
Telephone (801) 595-6700
Telefax (801) 595-6717
www.mhtn.com

**Hastings+Chivetta**
ARCHITECTURE • PLANNING • ENGINEERING
622 Emerson, Suite 200
St. Louis, MO 63141
Tel. 314.863.5717
Fax. 314.863.2823
www.hastingschivetta.com

BUILDING OFFICIAL STAMP

Ken Garner
Engineering, Inc.
Electrical Engineering Consultants, Inc.
102 West 500 South, Suite 225
Salt Lake City, Utah 84101
P. 801.328.8800
F. 801.328.8802
Contact: Paris LeLaCheur
Project #: 2010-117.00

# UNIVERSITY OF UTAH
## STUDENT LIFE CENTER
1836 E. BALLIF ROAD
SALT LAKE CITY, UTAH 84112

SEAL

MHTN PROJECT NO. 2010562.00

DRAWN BY: Author CHECKED BY: Checker

ISSUED:

| NO. | DATE | DESCRIPTION |
|---|---|---|

CONTRACTOR TO VERIFY DRAWINGS IN FIELD USE REFLECT LAST REVISION DATE.

| NO. | DATE | DESCRIPTION |
|---|---|---|

SHEET NAME
ENLARGED SYSTEMS FLOOR PLANS
BID DOCUMENTS
May 15, 2013

SHEET NUMBER
EY500

C:\Users\brown.KGE\Documents\2010-117.00_KGE_STUDENT LIFE_ELECTRICAL_CENTERAL_2012_drown.rvt
5/14/2013 6:03:27 PM

KEYED NOTES - SHEET EY701

1. EXTEND TO GROUND BUS IN MAIN ELECTRICAL ROOM.
2. FOR CONNECTION TO FUTURE TELECOM RACKS. ALL RACKS AND CABLING BY OTHERS.
3. FOR CONNECTION TO LADDER TYP CABLE TRAY COORDINATE HEIGHT OF CABLE TRAY IN TELECOM AREAS WITH OWNER. CONNECT TO WIRE BASKET TRAY WITH #6 AWG CU WHERE APPLICABLE.
4. GROUND BUS BAR. SIZE BUS BAR PER DRAWING.

GENERAL NOTES - SHEET EY701

A. CONTRACTOR TO FIELD VERIFY ALL EXISTING CONDITIONS, MATERIALS, FINISHES, AND DIMENSIONS BEFORE AND AFTER DEMOLITION.
B. CONTRACTOR TO ENSURE THAT ALL CORRIDORS OUTSIDE OF CONSTRUCTION AREA ARE KEPT CLEAN AND CLEAR OF DEBRIS AND OBSTRUCTIONS AT ALL TIMES.
C. PROTECT ALL ITEMS TO REMAIN FROM DAMAGE.

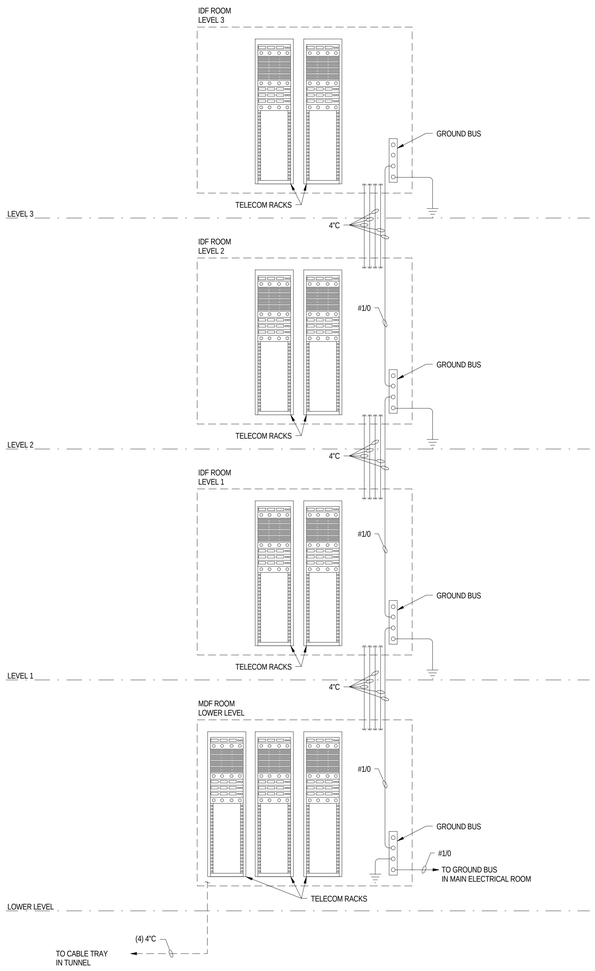


1 EY601 TELECOM RACEWAY AND GROUNDING RISER DIAGRAM
SCALE | NOT TO SCALE

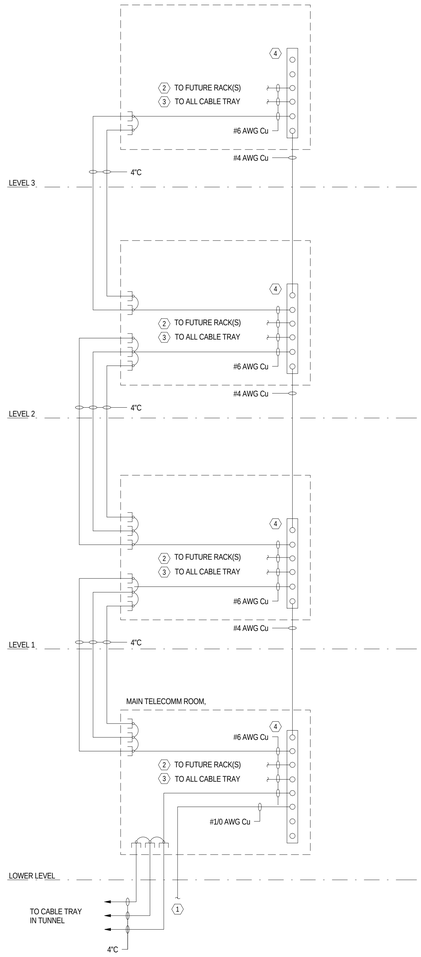


2 EY601 TELECOMM RISER DIAGRAM
SCALE | NOT TO SCALE


MHTN
ARCHITECTS
**MHTN Architects, Inc.**
420 East South Temple
Suite 100
Salt Lake City, Utah 84111
Telephone (801) 595-6700
Telefax (801) 595-6717
www.mhtn.com

**Hastings+Chivetta**
ARCHITECTURE • PLANNING • ENGINEERING
622 Emerson, Suite 200
St. Louis, MO 63141
Tel. 314.863.5717
Fax. 314.863.2823
www.hastingschivetta.com

BUILDING OFFICIAL STAMP

Ken Garner
Engineering, Inc.
Electrical Engineering Consultants, Inc.
102 West 500 South, Suite 225
Salt Lake City, Utah 84101
P. 801.328.8800
F. 801.328.8802
Contact: Paris LeLaCheur
Project #: 2010-117.00


# UNIVERSITY OF UTAH
## STUDENT LIFE CENTER
1836 E. BALLIF ROAD
SALT LAKE CITY, UTAH 84112

SEAL

MHTN PROJECT NO. 2010562.00

DRAWN BY: Author CHECKED BY: Checker

ISSUED:

| NO. | DATE | DESCRIPTION |
|---|---|---|

CONTRACTOR TO VERIFY DRAWINGS IN FIELD USE REFLECT LAST REVISION DATE:

| NO. | DATE | DESCRIPTION |
|---|---|---|

SHEET NAME
TELECOM RISER DIAGRAM

BID DOCUMENTS
May 15, 2013

SHEET NUMBER
EY601

C:\Users\ttrown.KGE\Documents\2010-117.00_KGE_STUDENT LIFE_ELECTRICAL_CENTERAL_2012_ttrown.rvt
5/14/2013 6:03:36 PM

| TELECOMMUNICATIONS BONDING BACKBONE TABLE | |
|---|---|
| | |
| LENGTH [FEET] | WIRE SIZE [AWG] |
| 1 - 13 | 6 |
| 14 - 20 | 4 |
| 21 - 26 | 3 |
| 27 - 33 | 2 |
| 34 - 41 | 1 |
| 42 - 52 | 1/0 |
| 53 - 66 | 2/0 |

KEYED NOTES - SHEET EY702

1. EQUIPMENT TELECOM RACK WITH 6" WIDE VERTICAL CABLE MANAGEMENT, PROVIDED BY OWNER.
2. ACTIVE EQUIPMENT, PROVIDED BY OWNER.
3. HORIZONTAL CABLE MANAGEMENT PROVIDED BY OWNER.
4. 48 PORT PATCH PANELS, PROVIDED BY OWNER.
5. LADDER TYPE CABLE TRAY, PROVIDED BY OWNER.
6. DROP FROM WIRE BASKET CABLE TRAY TO LADDER CABLE TRAY. PROVIDED BY OWNER.
7. WIRE BASKET TYPE CABLE TRAY. CABLE TRAY TO BE SIZED AS NEEDED FOR ALL NEW AND FUTURE CABLES. REFER TO PLAN DRAWINGS FOR CABLE TRAY SIZES. MINIMUM CABLE TRAY SIZE 12" X 3".
8. REFER TO TELECOMMUNICATIONS BONDING BACK BONE TABLE FOR WIRE SIZE.

GENERAL NOTES - SHEET EY702

A. CONTRACTOR TO FIELD VERIFY ALL EXISTING CONDITIONS, MATERIALS, FINISHES, AND DIMENSIONS BEFORE AND AFTER DEMOLITION.
B. CONTRACTOR TO ENSURE THAT ALL CORRIDORS OUTSIDE OF CONSTRUCTION AREA ARE KEPT CLEAN AND CLEAR OF DEBRIS AND OBSTRUCTIONS AT ALL TIMES.
C. PROTECT ALL ITEMS TO REMAIN FROM DAMAGE.

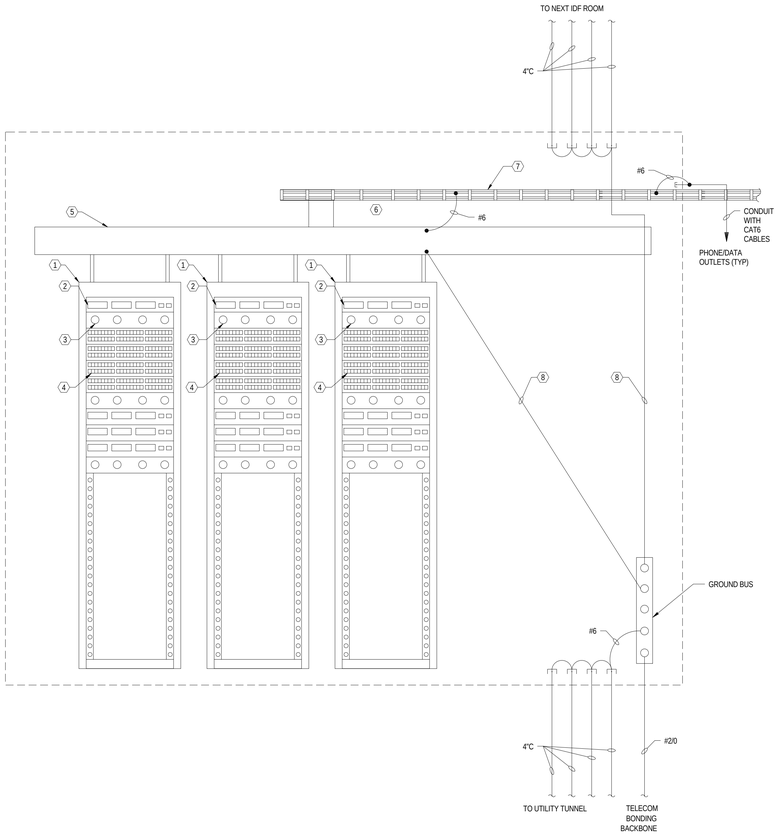


1 EY602 MDF ROOM LAYOUT
SCALE | NOT TO SCALE

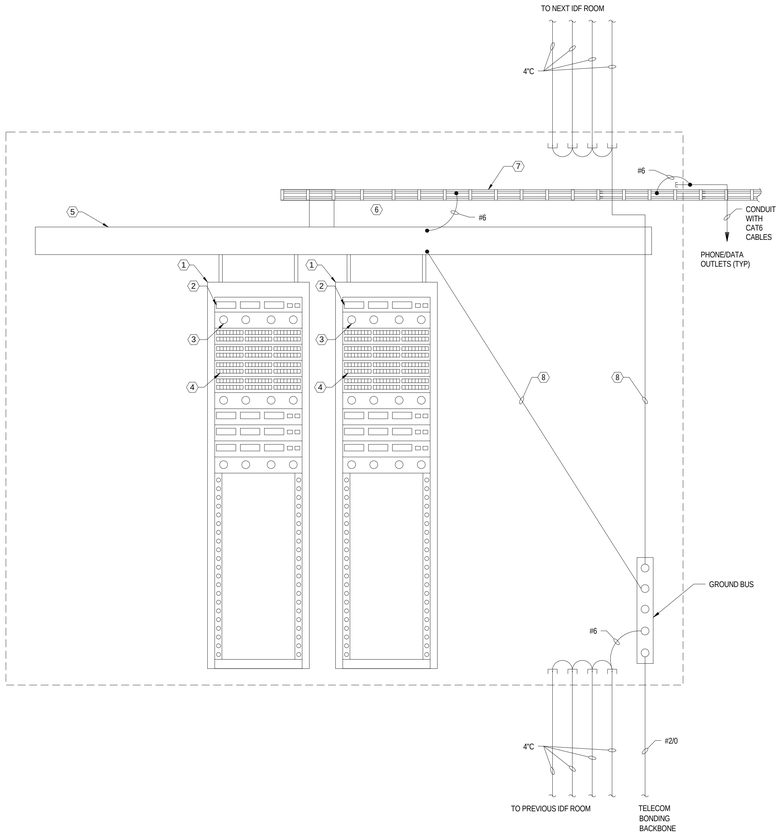


2 EY602 TYPICAL IDF ROOM LAYOUT
SCALE | NOT TO SCALE


MHTN ARCHITECTS
MHTN Architects, Inc.
420 East South Temple
Suite 100
Salt Lake City, Utah 84111
Telephone (801) 595-6700
Telefax (801) 595-6717
www.mhtn.com

Hastings+Chivetta
ARCHITECTURE • PLANNING • ENGINEERING
622 Emerson, Suite 200
St. Louis, MO 63141
Tel. 314.863.5717
Fax. 314.863.2823
www.hastingschivetta.com


BUILDING OFFICIAL STAMP


Ken Garner Engineering, Inc.
Electrical Engineering Consultants, Inc.
102 West 500 South, Suite 225
Salt Lake City, Utah 84101
P. 801.328.8800
F. 801.328.8802
Contact: Paris LeLaCheur
Project #: 2010-117.00


# UNIVERSITY OF UTAH
## STUDENT LIFE CENTER
1836 E. BALLIF ROAD
SALT LAKE CITY, UTAH 84112

SEAL

MHTN PROJECT NO. 2010562.00

DRAWN BY: Author CHECKED BY: Checker

ISSUED:

| NO. | DATE | DESCRIPTION |
|---|---|---|

CONTRACTOR TO VERIFY DRAWINGS IN FIELD USE REFLECT LAST REVISION DATE.

| NO. | DATE | DESCRIPTION |
|---|---|---|

SHEET NAME
MDF AND IDF ROOM LAYOUTS

BID DOCUMENTS
May 15, 2013

SHEET NUMBER
EY602

C:\Users\rbrown.KGE\Documents\2010-117.00_KGE_STUDENT LIFE_ELECTRICAL_CENTERAL_2012_rbrown.rvt
5/14/2013 6:03:46 PM

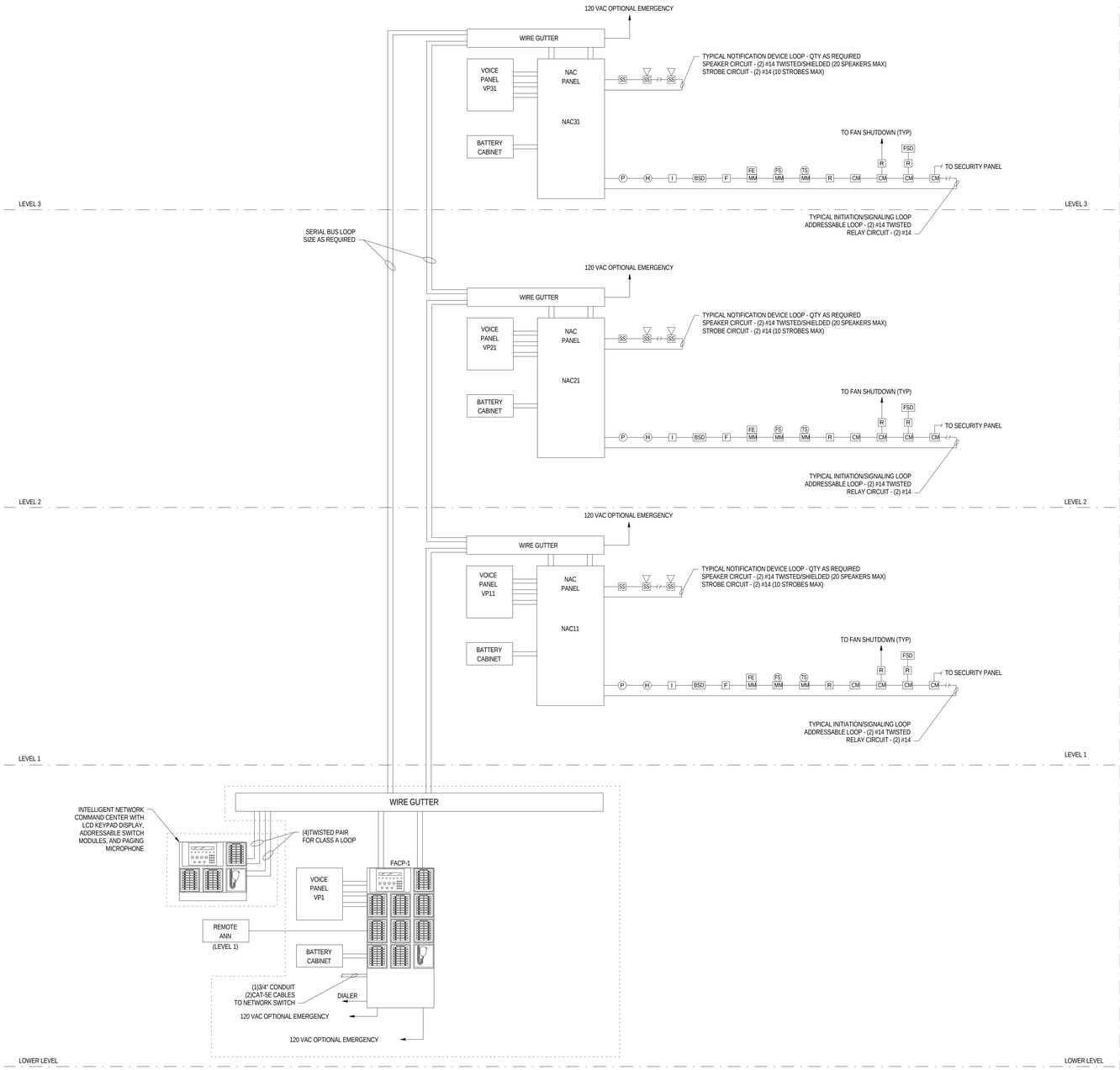


1 EY703 FIRE ALARM RISER DIAGRAM

NO SCALE

C:\Users\drown.KGE\Documents\2010-117.00_KGE_STUDENT LIFE_ELECTRICAL_CENTERAL_2012_drown.rvt
5/14/2013 6:03:55 PM


MHTN ARCHITECTS

**MHTN Architects, Inc.**
420 East South Temple
Suite 100
Salt Lake City, Utah 84111
Telephone (801) 595-6700
Telefax (801) 595-6717
www.mhtn.com

**Hastings+Chivetta**
ARCHITECTURE • PLANNING • ENGINEERING
622 Emerson, Suite 200
St. Louis, MO 63141
Tel. 314.863.5717
Fax. 314.863.2823
www.hastingschivetta.com

BUILDING OFFICIAL STAMP

Ken Garner Engineering, Inc.
Electrical Engineering Consultants, Inc.
102 West 500 South, Suite 225
Salt Lake City, Utah 84101
P. 801.328.8800
F. 801.328.8802
Contact: Paris LeLaCheur
Project #: 2010-117.00


# UNIVERSITY OF UTAH
## STUDENT LIFE CENTER
1836 E. BALLIF ROAD
SALT LAKE CITY, UTAH 84112

SEAL

MHTN PROJECT NO. 2010562.00

DRAWN BY: Author CHECKED BY: Checker

ISSUED:

| NO. | DATE | DESCRIPTION |
|---|---|---|

CONTRACTOR TO VERIFY DRAWINGS IN FIELD USE REFLECT LAST REVISION DATE.

| NO. | DATE | DESCRIPTION |
|---|---|---|

SHEET NAME
FIRE ALARM RISER DIAGRAM

BID DOCUMENTS
May 15, 2013

SHEET NUMBER
EY603

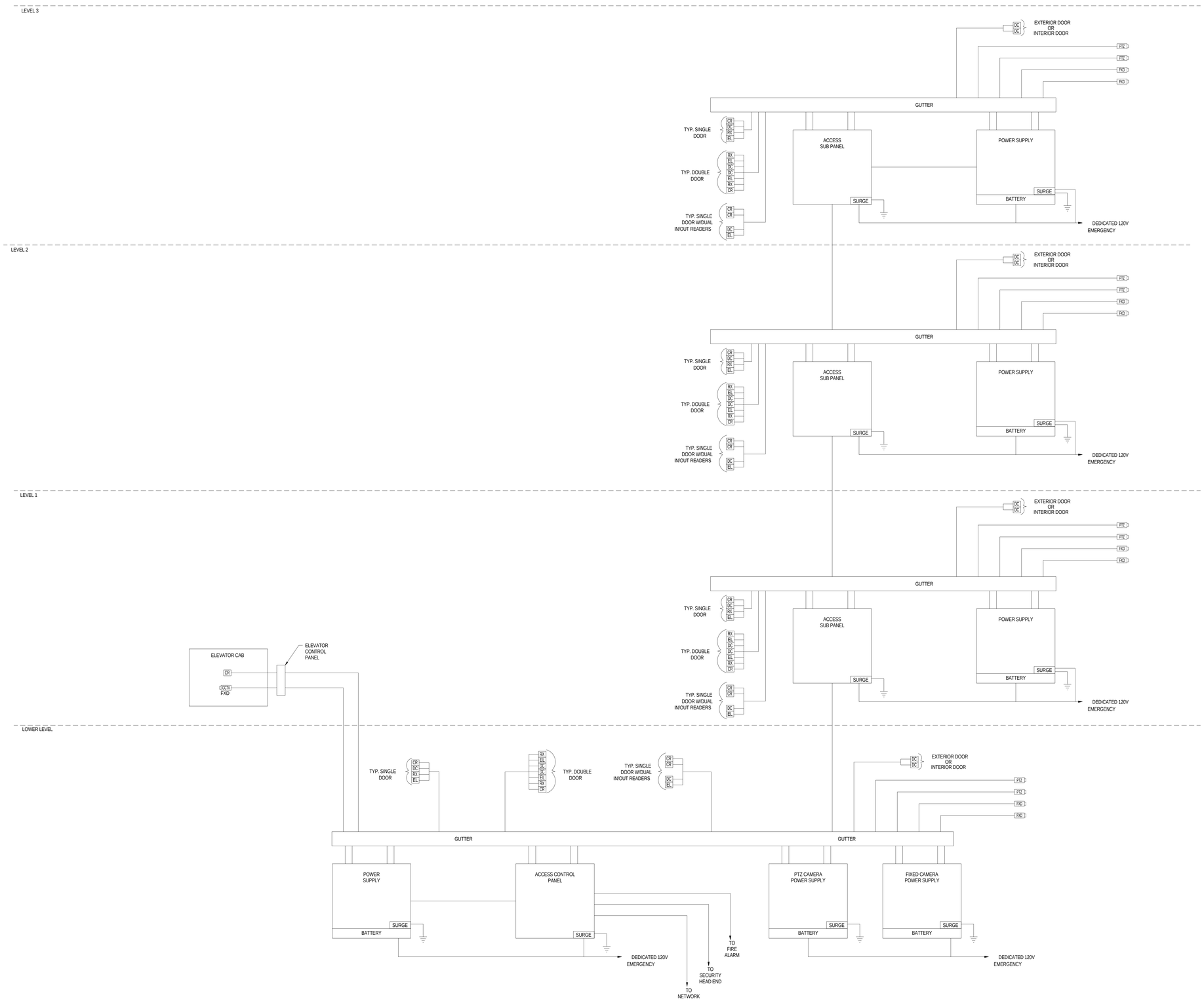


1
EX705

## SECURITY RISER DIAGRAM

SCALE: NTS

C:\Users\ttrown.KGE\Documents\2010-117.00_KGE_STUDENT LIFE_ELECTRICAL_CENTERAL_2012_ttrown.rvt
5/14/2013 6:04:04 PM

MHTN
ARCHITECTS
**MHTN Architects, Inc.**
420 East South Temple
Suite 100
Salt Lake City, Utah 84111
Telephone (801) 595-6700
Telefax (801) 595-6717
www.mhtn.com

**Hastings+Chivetta**
ARCHITECTURE • PLANNING • ENGINEERING
622 Emerson, Suite 200
St. Louis, MO 63141
Tel. 314.863.5717
Fax. 314.863.2823
www.hastingschivetta.com

BUILDING OFFICIAL STAMP

Ken Garner Engineering, Inc.
Electrical Engineering Consultants, Inc.
102 West 500 South, Suite 225
Salt Lake City, Utah 84101
P. 801.328.8800
F. 801.328.8802
Contact: Paris LeLaCheur
Project #: 2010-117.00

# UNIVERSITY OF UTAH
# STUDENT LIFE CENTER
1836 E. BALLIF ROAD
SALT LAKE CITY, UTAH 84112

SEAL

MHTN PROJECT NO. 2010562.00

DRAWN BY: Author CHECKED BY: Checker

ISSUED:

| NO. | DATE | DESCRIPTION |
|---|---|---|

CONTRACTOR TO VERIFY DRAWINGS IN FIELD USE REFLECT LAST REVISION DATE:

| NO. | DATE | DESCRIPTION |
|---|---|---|

SHEET NAME

SECURITY RISER DIAGRAM

BID DOCUMENTS
May 15, 2013

SHEET NUMBER

EY604

ELECTRIC DOOR AND CARD ACCESS SCHEDULE

| EQUIPMENT | PROVIDED BY | INSTALLED BY | RACEWAY BY | WIRING BY | FINAL CONNECTION BY |
|---|---|---|---|---|---|
| ELECTRIFIED HINGES (EH) | DOOR HARDWARE SUPPLIER | DOOR HARDWARE SUPPLIER | DIVISION 26 | OWNER | OWNER |
| ELECTRIC LATCH (EL) | DOOR HARDWARE SUPPLIER | DOOR HARDWARE SUPPLIER | DIVISION 26 | OWNER | OWNER |
| ELECTRIC STRIKES (ES) | DOOR HARDWARE SUPPLIER | DOOR HARDWARE SUPPLIER | DIVISION 26 | OWNER | OWNER |
| ADA COMPRESSORS | DOOR HARDWARE SUPPLIER | DIVISION 26 | DIVISION 26 | DIVISION 26 | DIVISION 26 |
| ADA OPERATORS | DOOR HARDWARE SUPPLIER | DIVISION 26 | DIVISION 26 | DIVISION 26 | DIVISION 26 |
| ADA PUSH BUTTONS | DOOR HARDWARE SUPPLIER | DIVISION 26 | DIVISION 26 | DIVISION 26 | DIVISION 26 |
| DOOR CONTACTS (DC) | DOOR HARDWARE SUPPLIER | DOOR HARDWARE SUPPLIER | DIVISION 26 | OWNER | OWNER |
| PROXIMITY/BIOMETRIC CARD READERS (CR) / (BC) | OWNER | OWNER | DIVISION 26 | OWNER | OWNER |
| ACCESS CONTROL PANEL | OWNER | OWNER | DIVISION 26 | OWNER | OWNER |
| ACCESS CONTROL PANEL | OWNER | OWNER | DIVISION 26 | OWNER | OWNER |

GENERAL NOTES:

A. DIVISION 26 TO FIELD COORDINATE ALL DEVICE LOCATIONS AND MOUNTING HEIGHTS WITH DOOR INSTALLER AND ARCHITECTURAL ELEVATIONS PRIOR TO ROUGH IN.

B. DIVISION 26 TO PROVIDE JUNCTION BOXES IN SIZES AND QUANTITIES AS REQUIRED.

C. REFER TO ARCHITECTURAL E800 SERIES SHEETS FOR DOOR HARDWARE SCHEDULE, TYPE OF DOOR LOCK DEVICE, AND TYPE OF REQUEST FOR EXIT.

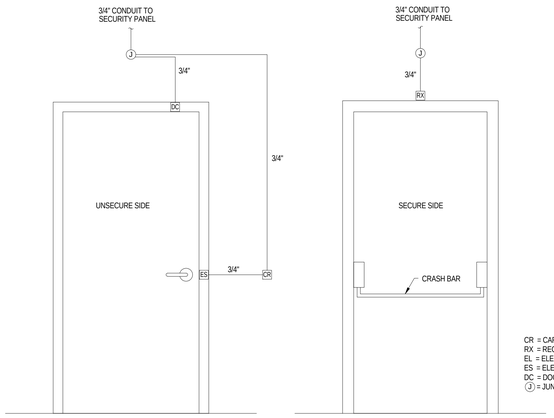


3 E806 SECURED DOOR WITH ELECTRIC STRIKE

SCALE:NTS

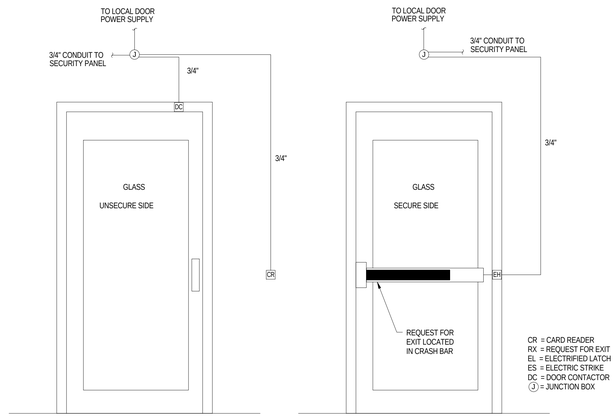


4 E806 SECURED DOOR WITH RETRACTABLE LATCH

SCALE:NTS

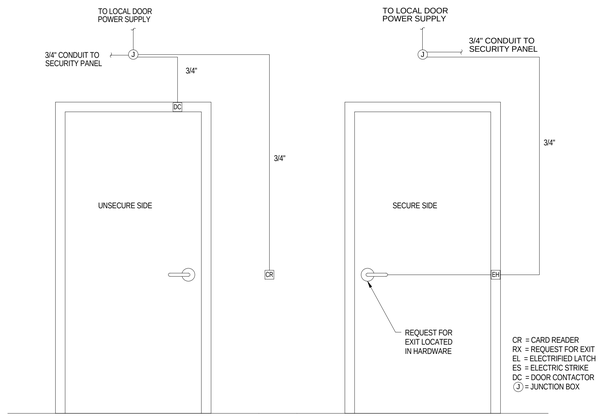


5 E806 SECURED DOOR WITH RETRACTABLE LATCH

SCALE:NTS

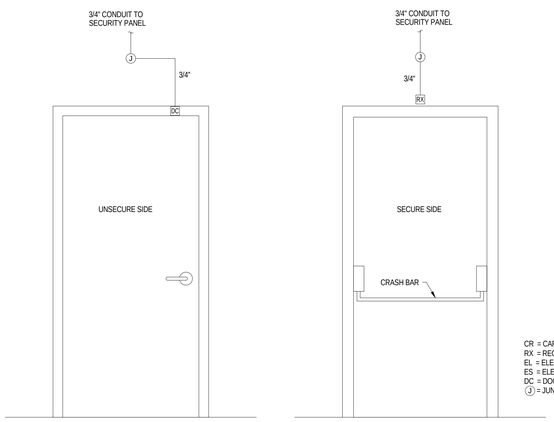


6 E806 MONITORED DOOR

SCALE:NTS

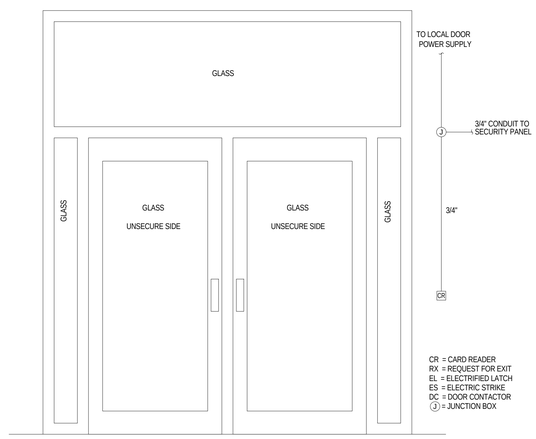


7 E806 SECURED GLASS DOORS WITH RETRACTABLE LATCHES

SCALE:NTS

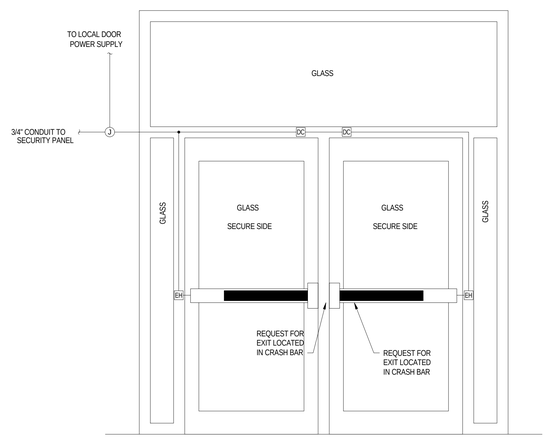



MHTN ARCHITECTS

**MHTN Architects, Inc.**
420 East South Temple
Suite 100
Salt Lake City, Utah 84111
Telephone (801) 595-6700
Telefax (801) 595-6717
www.mhtn.com

**Hastings+Chivetta**
ARCHITECTURE • PLANNING • ENGINEERING
622 Emerson, Suite 200
St. Louis, MO 63141
Tel. 314.863.5717
Fax. 314.863.2823
www.hastingschivetta.com


BUILDING OFFICIAL STAMP


Ken Garner Engineering, Inc.
Electrical Engineering Consultants, Inc.
102 West 500 South, Suite 225
Salt Lake City, Utah 84101
P. 801.328.8800
F. 801.328.8802
Contact: Paris LeLaCheur
Project #: 2010-117.00


UNIVERSITY OF UTAH

STUDENT LIFE CENTER

1836 E. BALLIF ROAD
SALT LAKE CITY, UTAH 84112

SEAL

MHTN PROJECT NO. 2010562.00

DRAWN BY: Author CHECKED BY: Checker

ISSUED:

| NO. | DATE | DESCRIPTION |
|---|---|---|

CONTRACTOR TO VERIFY DRAWINGS IN FIELD USE REFLECT LAST REVISION DATE:

| NO. | DATE | DESCRIPTION |
|---|---|---|

SHEET NAME

ACCESS CONTROL DETAIL

BID DOCUMENTS

May 15, 2013

SHEET NUMBER

EY605

C:\Users\drown.KGE\Documents\2010-117.00_KGE_STUDENT LIFE_ELECTRICAL_CENTERAL_2012_rbrown.rvt
5/14/2013 6:04:11 PM

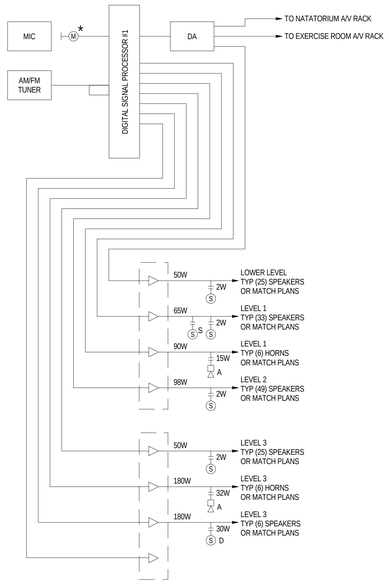


★ LOCATION TO BE DETERMINED BY OWNER

## 1 WHOLE BUILDING PAGING SYSTEM

SCALE: NTS

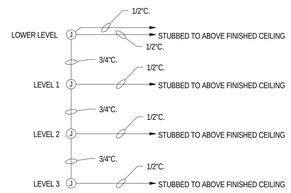


## 2 PAGING SYSTEM CONDUIT RISER

SCALE: NTS

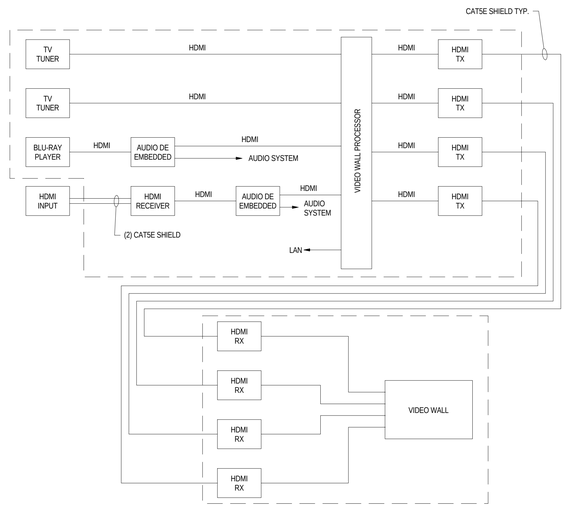


## 3 VIDEO SYSTEM (NATATORIUM)

SCALE: NTS

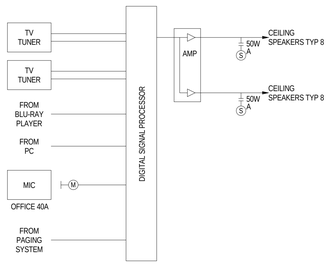


## 5 AUDIO SYSTEM RISER (NATATORIUM)

SCALE: NTS

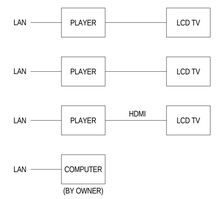


NOTES:
PROGRAM THE SYSTEM SO THAT:
1. LCD TVS SHOW CURRENT TIME AND CURRENT RUNNING DIRECTION.
2. USERS MAY SCHEDULE/CHANGE RUNNING DIRECTION.

## 6 AMX DIGITAL SIGNAGE SYSTEM

SCALE: NTS


MHTN ARCHITECTS
**MHTN Architects, Inc.**
420 East South Temple
Suite 100
Salt Lake City, Utah 84111
Telephone (801) 595-6700
Telefax (801) 595-6717
www.mhtn.com

**Hastings+Chivetta**
ARCHITECTURE • PLANNING • ENGINEERING
622 Emerson, Suite 200
St. Louis, MO 63141
Tel. 314.863.5717
Fax. 314.863.2823
www.hastingschivetta.com

BUILDING OFFICIAL STAMP
Ken Garner Engineering, Inc.
Electrical Engineering Consultants, Inc.
102 West 500 South, Suite 225
Salt Lake City, Utah 84101
P. 801.328.8800
F. 801.328.8802
Contact: Paris LeLaCheur
Project #: 2010-117.00


UNIVERSITY OF UTAH
STUDENT LIFE CENTER
1836 E. BALLIF ROAD
SALT LAKE CITY, UTAH 84112

SEAL

MHTN PROJECT NO. 2010562.00
DRAWN BY: AuthorKGE CHECKED BY: KGE

ISSUED:

| NO. | DATE | DESCRIPTION |
|---|---|---|

CONTRACTOR TO VERIFY DRAWINGS IN FIELD USE REFLECT LAST REVISION DATE.

| NO. | DATE | DESCRIPTION |
|---|---|---|

SHEET NAME
A/V DETAILS

BID DOCUMENTS
May 15, 2013

SHEET NUMBER
EY705

C:\Users\tbrown.KGE\Documents\2010-117.00_KGE_STUDENT LIFE_ELECTRICAL_CENTERAL_2012_tbrown.rvt
5/14/2013 6:04:19 PM

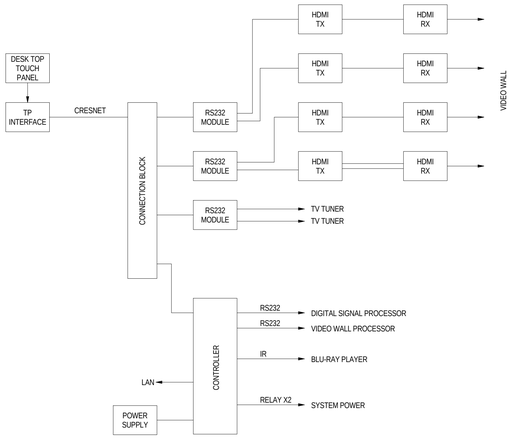


## 7 CONTROL SYSTEM (NATATORIUM)

SCALE: NTS

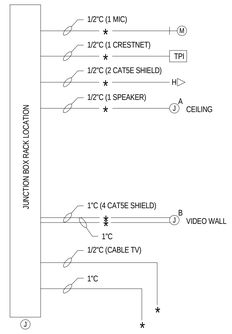


★ STUBBED THE CONDUIT TO ABOVE THE FINISHED CEILING.

## 8 CONDUIT RISER DIAGRAM (NATATORIUM)

SCALE: NTS

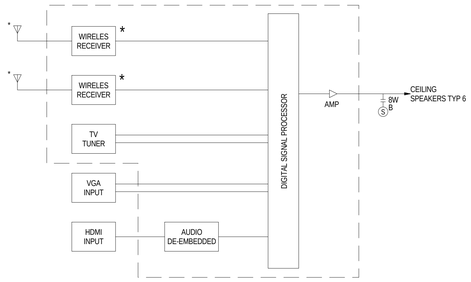


★ REMOTE MOUNT ANTENNA OUTSIDE EQUIPMENT CABINET.

## 9 AUDIO SYSTEM RISER (CLASSROOM 145)

SCALE: NTS

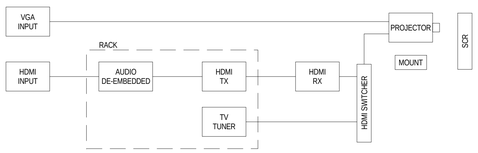


## 10 VIDEO SYSTEM RISER (CLASSROOM 145)

SCALE: NTS

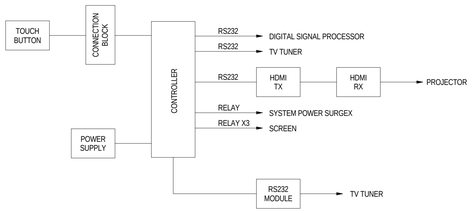


## 11 CONTROL SYSTEM RISER (CLASSROOM 145)

SCALE: NTS

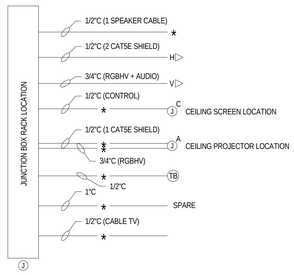


★ STUBBED TO ABOVE ACCESSIBLE CEILING.

## 12 CONDUIT RISER DIAGRAM (CLASSROOM 145)

SCALE: NTS

## 13 AUDIO SYSTEM (MASSAGE ROOM)

SCALE: NTS

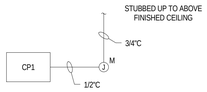


## 14 CONDUIT RISER (MASSAGE ROOM)

SCALE: NTS

MHTN
ARCHITECTS
**MHTN Architects, Inc.**
420 East South Temple
Suite 100
Salt Lake City, Utah 84111
Telephone (801) 595-6700
Telefax (801) 595-6717
www.mhtn.com

**Hastings+Chivetta**
ARCHITECTURE • PLANNING • ENGINEERING
622 Emerson, Suite 200
St. Louis, MO 63141
Tel. 314.863.5717
Fax. 314.863.2823
www.hastingschivetta.com

BUILDING OFFICIAL STAMP

Ken Garner Engineering, Inc.
Electrical Engineering Consultants, Inc.
102 West 500 South, Suite 225
Salt Lake City, Utah 84101
P. 801.328.8800
F. 801.328.8802
Contact: Paris LeLaCheur
Project #: 2010-117.00

# UNIVERSITY OF UTAH
## STUDENT LIFE CENTER
1836 E. BALLIF ROAD
SALT LAKE CITY, UTAH 84112

SEAL

MHTN PROJECT NO. 2010562.00

DRAWN BY: KGE CHECKED BY: KGE

ISSUED:

| NO. | DATE | DESCRIPTION |
|---|---|---|

CONTRACTOR TO VERIFY DRAWINGS IN FIELD USE REFLECT LAST REVISION DATE.

| NO. | DATE | DESCRIPTION |
|---|---|---|

SHEET NAME

A/V DETAILS

BID DOCUMENTS
May 15, 2013

SHEET NUMBER

EY706

C:\Users\tbrown.KGE\Documents\2010-117.00_KGE_STUDENT LIFE_ELECTRICAL_CENTERAL_2012_tbrown.rvt
5/14/2013 6:04:26 PM

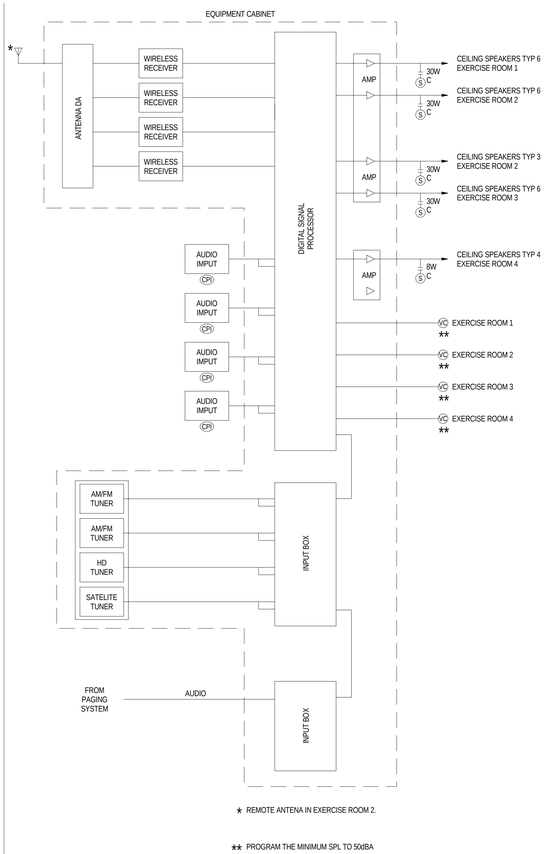


* REMOTE ANTENA IN EXERCISE ROOM 2.

** PROGRAM THE MINIMUM SPL TO 50dBA

## 16 AUDIO SYSTEM RISER DIAGRAM (EXERCISE ROOMS 1,2,3 (ROOM 255, 256,285) AND ROOM 4 (ROOM 275))

SCALE: NTS

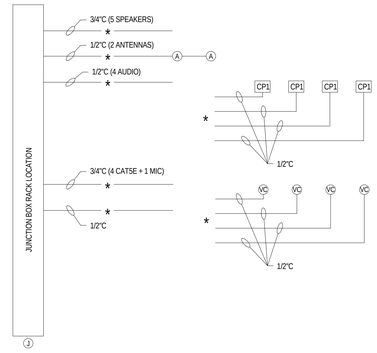


* STUBBED THE CONDUIT TO ABOVE THE FINISHED CEILING.

## 17 CONDUIT RISER DIAGRAM (EXERCISE ROOMS 1,2,3 (ROOM 255, 256, 285) AND ROOM 4 (ROOM 275))

SCALE: NTS

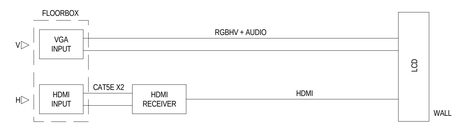


## 18 VIDEO SYSTEM RISER CONFERENCE ROOM 340C

SCALE: NTS

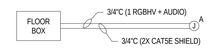


## 19 CONDUIT RISER CONFERENCE ROOM 340C

SCALE: NTS

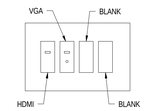


## 20 FLOOR BOX DETAILS CONFERENCE ROOM 340C

SCALE: NTS

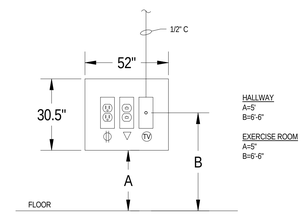


## 21 LCD MOUNTING DETAILS

SCALE: NTS

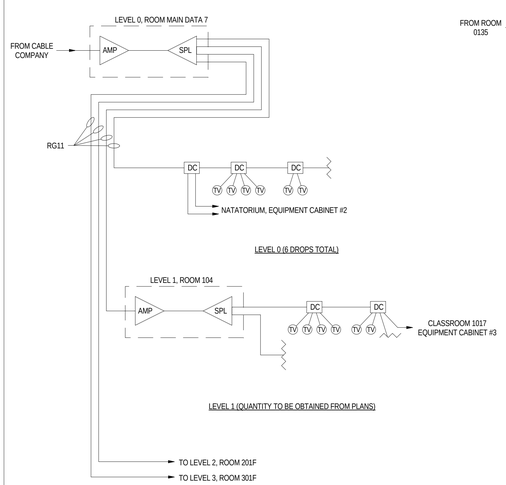


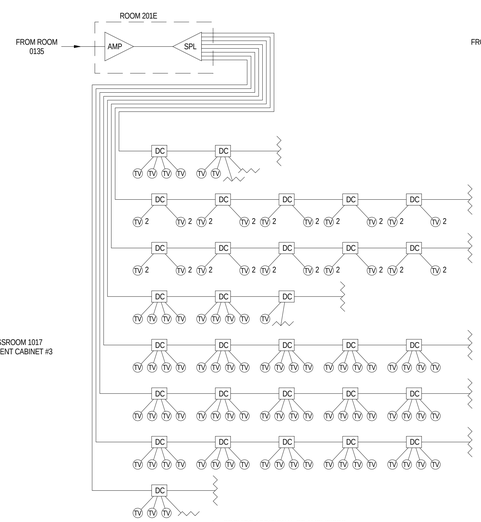


* PROVIDE ADDITIONAL RF AMPLIFIERS

LEVEL 2 (QUANTITY TO BE OBTAINED FROM PLANS)

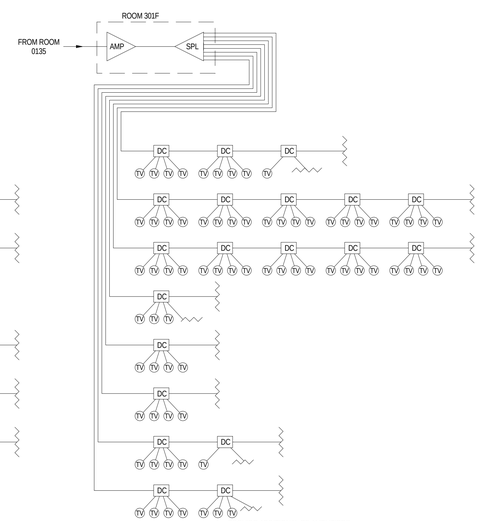


* PROVIDE ADDITIONAL RF AMPLIFIERS

LEVEL 3 (QUANTITY TO BE OBTAINED FROM PLANS)

## 22 TV DISTRIBUTION SYSTEM

SCALE: NTS

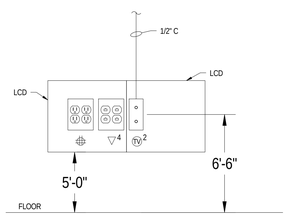


## 23 LCD MOUNTING DETAILS

SCALE: NTS

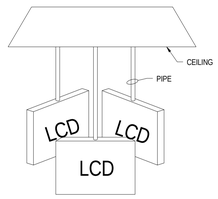


## 24 LCD MOUNTING DETAILS

SCALE: NTS

MHTN ARCHITECTS
MHTN Architects, Inc.
420 East South Temple
Suite 100
Salt Lake City, Utah 84111
Telephone (801) 595-6700
Telefax (801) 595-6717
www.mhtn.com

Hastings+Chivetta
ARCHITECTURE • PLANNING • ENGINEERING
622 Emerson, Suite 200
St. Louis, MO 63141
Tel. 314.863.5717
Fax. 314.863.2823
www.hastingschivetta.com

BUILDING OFFICIAL STAMP

Ken Garner Engineering, Inc.
Electrical Engineering Consultants, Inc.
102 West 500 South, Suite 225
Salt Lake City, Utah 84101
P. 801.328.8800
F. 801.328.8802
Contact: Paris LeLaCheur
Project #: 2010-117.00

# UNIVERSITY OF UTAH
# STUDENT LIFE CENTER
1836 E. BALLIF ROAD
SALT LAKE CITY, UTAH 84112

SEAL

MHTN PROJECT NO. 2010562.00

DRAWN BY: KGE CHECKED BY: KGE

ISSUED:

| NO. | DATE | DESCRIPTION |
|---|---|---|

CONTRACTOR TO VERIFY DRAWINGS IN FIELD USE REFLECT LAST REVISION DATE.

| NO. | DATE | DESCRIPTION |
|---|---|---|

SHEET NAME

A/V DETAILS

BID DOCUMENTS
May 15, 2013

SHEET NUMBER

EY707

C:\Users\drown.KGE\Documents\2010-117.00_KGE_STUDENT LIFE_ELECTRICAL_CENTERAL_2012_drown.rvt
5/14/2013 6:04:37 PM

## A/V EQUIPMENT LIST (PAGING SYSTEM WHOLE BUILDING)

SPEC XXX

| SYM | DESCRIPTION | MANUFACTURER | MODEL | QTY |
|---|---|---|---|---|
| 1 | EQUIPMENT CABINET<br>MAIN DATA 7 | ATLAS | WMA16-23 | 1 |
| | CABINET DOOR | ATLAS | SFD16 | 1 |
| M | MICROPHONE INPUT | SINGLE GANG BOX | OUTLET HEIGHT | 1 |
| | POWER CONDITIONER | FURMAN | PL-PRO C | 2 |
| -S- | SPEAKER CABLE | WEST PENN | 25225B | A/R |
| -M- | MICROPHONE CABLE | WEST PENN | 25291B | A/R |
| J | JUNCTION BOX 12"X12"X4" | | | A/R |
| MIC | PAGING MICROPHONE | BOGEN | DPM250 | 1 |
| M | MICROPHONE INPUT | RCI | CS131 | 1 |
| | AM/FM TUNER | TASCOM | TU-690 | 1 |
| | DSP | SYMETRIX | JUPITER 8 | 1 |
| DA | AUDIO DA | RDL | ST-DA3 | 1 |
| | POWER SUPPLY | RDL | PS-24A | 1 |
| AMP | AMPLIFIER, 4CH | QSC | CX204V | 2 |
| S | SPEAKER | LOWELL | R1810-72 | A/R |
| | BACKBOX | LOWELL | CP84 | A/R |
| | TILE BRIDGE | LOWELL | LBS8-CP | A/R |
| S S | SPEAKER SURFACE | LOWELL | R7810-72 | A/R |
| | BACKBOX | LOWELL | CB84-SC | A/R |
| A | HORN | BOGEN | SPT30A | A/R |
| S D | SPEAKER | COMMUNITY | D6 | A/R |
| | BLANK RACK PANEL, 1, 2, 3 RU | ATLAS | | A/R |

A/V EQUIPMENT LIST
(PAGING SYSTEM WHOLE BUILDING)
1 / EY602 SCALE | NOT TO SCALE


MHTN
ARCHITECTS
**MHTN Architects, Inc.**
420 East South Temple
Suite 100
Salt Lake City, Utah 84111
Telephone (801) 595-6700
Telefax (801) 595-6717
www.mhtn.com

**Hastings+Chivetta**
ARCHITECTURE • PLANNING • ENGINEERING
622 Emerson, Suite 200
St. Louis, MO 63141
Tel. 314.863.5717
Fax. 314.863.2823
www.hastingschivetta.com

BUILDING OFFICIAL STAMP

Ken Garner
Engineering, Inc.
Electrical Engineering Consultants, Inc.
102 West 500 South, Suite 225
Salt Lake City, Utah 84101
P. 801.328.8800
F. 801.328.8802
Contact: Paris LeLaCheur
Project #: 2010-117.00


UNIVERSITY OF UTAH
STUDENT LIFE CENTER
1836 E. BALLIF ROAD
SALT LAKE CITY, UTAH 84112

SEAL

MHTN PROJECT NO. 2010562.00
DRAWN BY: KGE CHECKED BY: KGE

ISSUED:

| NO. | DATE | DESCRIPTION |
|---|---|---|

CONTRACTOR TO VERIFY DRAWINGS IN FIELD USE REFLECT LAST REVISION DATE:

| NO. | DATE | DESCRIPTION |
|---|---|---|

SHEET NAME
A/V EQUIPMENT SCHEDULES

BID DOCUMENTS
May 15, 2013

SHEET NUMBER
EY709

C:\Users\rbrown.KGE\Documents\2010-117.00_KGE_STUDENT LIFE_ELECTRICAL_CENTERAL_2012_rbrown.rvt
5/14/2013 6:04:46 PM

## ELECTRICAL EQUIPMENT LIST (NATATORIUM)

SPEC XXX

| SYM | DESCRIPTION | MANUFACTURER | MODEL | QTY |
|---|---|---|---|---|
| 2 | EQUIPMENT CABINET | MIDDLE ATLANTIC | ERK-3525 | 1 |
| | CASTER BASE | MIDDLE ATLANTIC | CBS-ERK25 | 1 |
| | POWER STRIP | MIDDLE ATLANTIC | PD-1200C-NS | 1 |
| -M- | MICROPHONE CABLE | WEST PENN | 25291B | A/R |
| -S- | SPEAKER CABLE | WEST PENN | 25225B | A/R |
| -CAT5E- | CAT 5 E CABLE | WEST PENN | 254245 | A/R |
| | HDMI CABLE | WEST PENN | CN-40 HDMI-XX | A/R |
| | CRESNET CABLE | WEST PENN | 25359 B | A/R |
| | SHIELD CAT 5 E CABLE (FOR HDMI TX AND RX) | WEST PENN | M58144 | A/R |
| | CONTROL CABLE | WEST PENN | 25271B | A/R |
| M | MICROPHONE INPUT | | SINGLE GANG BOX OUTLET HEIGHT | 1 |
| H | HDMI INPUT | | SINGLE GANG BOX OUTLET HEIGHT | 1 |
| TPI | TOUCH PANEL INTERFACE | | SINGLE GANG BOX OUTLET HEIGHT | 1 |
| J | JUNCTION BOX RACK LOCATION SIZE TO FIT, SEE 8 EY706 | | CUSTOM | 1 |
| J B | JUNCTION BOX WALL VIDEO WALL LOCATION | | 4-GANG BOX | 1 |
| J A | JUNCTION BOX CEILING SPEAKER LOCATION | | 2-GANG BOX | A/R |

1 EY603 ELECTRICAL EQUIPMENT LIST (NATATORIUM)
SCALE | NOT TO SCALE

## VIDEO SYSTEM EQUIPMENT LIST (TV DISTRIBUTION SYSTEM)

SPEC XXX

| SYM | DESCRIPTION | MANUFACTURER | MODEL | QTY |
|---|---|---|---|---|
| AMP | AMPLIFIER | BLONDER TONGUE | BIDA100A-30 | A/R |
| SPL | SPLITTER | BLONDER TONGUE | SXRS-2 | A/R |
| | SPLITTER | BLONDER TONGUE | SXRS-4 | A/R |
| | SPLITTER | BLONER TONGUE | SXRS-8 | A/R |
| DC | DIRECTIONAL COUPLER | BLONDER TONGUE | STR-2A | A/R |
| | DIRECTIONAL COUPLER | BLONDER TONGUE | STR-4A | A/R |
| TV | TV OUTLET | BLONDER TONGUE | SINGLE GANG WITH F CONNECTOR | A/R |
| TV 2 | | | 2 F CONNECTORS | A/R |
| | 75 OHMS TERMINATOR | BLONDER TONGUE | 75 OHM TERMINATOR | A/R |
| LCD | 55" LCD | NEC | V551-AVT | A/R |
| | LCD MOUNT, WALL | CHIEF | LTMU | A/R |
| | LCD MOUNT, CEILING, PLATE | CHIEF | PCSU | A/R |
| | CEILING PLATE | CHIEF | | A/R |
| | EXTENSION COLUMN | CHIEF | | A/R |

2 EY603 VIDEO SYSTEM EQUIPMENT LIST
SCALE | NOT TO SCALE

## ELECTRICAL EQUIPMENT LIST (MASSAGE ROOM)

SPEC XXX

| SYM | DESCRIPTION | MANUFACTURER | MODEL | QTY |
|---|---|---|---|---|
| -S- | SPEAKER CABLE | WEST PENN | 25227B | A/R |
| -A- | AUDIO CABLE | WEST PENN | 25510B | A/R |
| CPI | IPOD INPUT | SINGLE GANG BOX | OUTLET HEIGHT | 1 |
| CPI | IPOD INPUT | CUSTOM | 3.5 STEREO MINI WITH SINGLE GANG PLATE | 1 |
| J M | JUNCTION BOX | SINGLE GANG BOX | OUTLET HEIGHT | 1 |
| AMP | AMPLIFIER SHELF | EXTRON | MPA 152 | 1 |
| S M | SPEAKER | ATLAS | FAP42T | 2 |

3 EY603 ELECTRICAL EQUIPMENT LIST (MASSAGE ROOM)
SCALE | NOT TO SCALE


MHTN ARCHITECTS
**MHTN Architects, Inc.**
420 East South Temple
Suite 100
Salt Lake City, Utah 84111
Telephone (801) 595-6700
Telefax (801) 595-6717
www.mhtn.com

**Hastings+Chivetta**
ARCHITECTURE • PLANNING • ENGINEERING
622 Emerson, Suite 200
St. Louis, MO 63141
Tel. 314.863.5717
Fax. 314.863.2823
www.hastingschivetta.com

BUILDING OFFICIAL STAMP
Ken Garner Engineering, Inc.
Electrical Engineering Consultants, Inc.
102 West 500 South, Suite 225
Salt Lake City, Utah 84101
P. 801.328.8800
F. 801.328.8802
Contact: Paris LeLaCheur
Project #: 2010-117.00


# UNIVERSITY OF UTAH
# STUDENT LIFE CENTER
1836 E. BALLIF ROAD
SALT LAKE CITY, UTAH 84112

SEAL

MHTN PROJECT NO. 2010562.00
DRAWN BY: KGE CHECKED BY: KGE

ISSUED:

| NO. | DATE | DESCRIPTION |
|---|---|---|

CONTRACTOR TO VERIFY DRAWINGS IN FIELD USE REFLECT LAST REVISION DATE.

| NO. | DATE | DESCRIPTION |
|---|---|---|

SHEET NAME
A/V EQUIPMENT SCHEDULES

BID DOCUMENTS
May 15, 2013

SHEET NUMBER
EY710

C:\Users\rbrown.KGE\Documents\2010-117.00_KGE_STUDENT LIFE_ELECTRICAL_CENTERAL_2012_rbrown.rvt
5/14/2013 6:04:58 PM

## A/V EQUIPMENT LIST (NATATORIUM)

SPEC XXX

| SYM | DESCRIPTION | MANUFACTURER | MODEL | QTY |
|---|---|---|---|---|
| | TV TUNER | CONTEMPORARY RESEARCH | 232-ATSC+1 | 2 |
| | RACK KIT | CONTEMPORARY RESEARCH | RK2EZ | 1 |
| MIC | MICROPHONE | SHURE | 522 | 1 |
| M | MICROPHONE INPUT | WEST PENN | CN-PL- 103 F | 1 |
| | SIGNAL PROCESSOR | BIAMP | NEXIA PM | 1 |
| | AMPLIFIER | CROWN | CTS 1200 | 1 |
| S A | SPEAKER | COMMUNITY | R.5-99TZ | 16 |
| | BLU RAY PLAYER | SONY | BDP-5580 | 1 |
| | RACK SHELF FOR BLU RAY PLAYER | | | 1 |
| H ▷ | HDMI INPUT AND RECEIVER | EXTRON | HDMI 201 RX | 1 |
| | | | HDMI 201 AD TX | 1 |
| | AUDIO- DE-EMBEDDED | EXTRON | HAE 100 | 2 |
| | VIDEO WALL PROCESSOR | EXTRON | QUANTUM CONNECT | 1 |
| | HDMI TX | EXTRON | DTP-HDMI 230 TX | 4 |
| | HDMI RX | EXTRON | DTP-HDMI 230 RX | 4 |
| | RACK KIT | EXTRON | | A/R |
| | VIDEO WALL | NEC | P552- TMX4D | 1 |
| TP | DESK TOP TOUCH PANEL | CRESTRON | TPS-6 | 1 |
| TPI | TP INTERFACE | CRESTRON | INCLUDED | 1 |
| | CONNECTION BLOCK | CRESTRON | ST-CNB | 1 |
| | R5232 MODULE | CRESTRON | ST-COM | 3 |
| | RACK KIT | CRESTRON | ST-RMK | A/R |
| | CONTROLLER | CRESTRON | CP2E | 1 |
| | POWER SUPPLY | CRESTRON | PW-2420 RU | 1 |
| | IR EMITTER | CRESTRON | IRP2 | 1 |
| | POWER CONDITIONER | FSR | SPC-20 | 1 |
| | POWER CONDITIONER EXTENDER | FSR | SPC-20X | 1 |
| | COMPUTER | OWNER FURNISHED | | 1 |
| | BLANK RACK PANEL | MIDDLE ATLANTIC | | A/R |

1 / EY604 A/V EQUIPEMENT LIST
SCALE | NOT TO SCALE

C:\Users\rbrown.KGE\Documents\2010-117.00_KGE_STUDENT LIFE_ELECTRICAL_CENTERAL_2012_rbrown.rvt
5/14/2013 6:05:07 PM


MHTN ARCHITECTS
**MHTN Architects, Inc.**
420 East South Temple
Suite 100
Salt Lake City, Utah 84111
Telephone (801) 595-6700
Telefax (801) 595-6717
www.mhtn.com

**Hastings+Chivetta**
ARCHITECTURE • PLANNING • ENGINEERING
622 Emerson, Suite 200
St. Louis, MO 63141
Tel. 314.863.5717
Fax. 314.863.2823
www.hastingschivetta.com

BUILDING OFFICIAL STAMP

Ken Garner Engineering, Inc.
Electrical Engineering Consultants, Inc.
102 West 500 South, Suite 225
Salt Lake City, Utah 84101
P. 801.328.8800
F. 801.328.8802
Contact: Paris LeLaCheur
Project #: 2010-117.00


# UNIVERSITY OF UTAH
# STUDENT LIFE CENTER
1836 E. BALLIF ROAD
SALT LAKE CITY, UTAH 84112

SEAL

MHTN PROJECT NO. 2010562.00

DRAWN BY: KGE CHECKED BY: KGE

ISSUED:

| NO. | DATE | DESCRIPTION |
|---|---|---|

CONTRACTOR TO VERIFY DRAWINGS IN FIELD USE REFLECT LAST REVISION DATE.

| NO. | DATE | DESCRIPTION |
|---|---|---|
| 1 | Date 1 | Revision 1 |

SHEET NAME
A/V EQUIPMENT SCHEDULES

BID DOCUMENTS
May 15, 2013

SHEET NUMBER
EY711

## ELECTRICAL AND A/V EQUIPMENT LIST (CLASSROOM 145)

SPEC XXX

| SYM | DESCRIPTION | MANUFACTURER | MODEL | QTY |
|---|---|---|---|---|
| 3 | EQUIPMENT CABINET | ATLAS | WMA 16-23 | 1 |
| | BLANK PANEL 1, 2, 3 RU | | | A/R |
| | FRONT DOOR | ATLAS | SFD16 | 1 |
| -M- | MICROPHONE CABLE | WEST PENN | 25291B | A/R |
| -S- | SPEAKER CABLE | WEST PENN | 25225B | A/R |
| -CAT5E- | CAT 5 E CABLE | WEST PENN | 254245 | A/R |
| | HDMI CABLE | WEST PENN | CN-40 HDMI-XX | A/R |
| | CRESTNET CABLE | WEST PENN | 25359B | A/R |
| | SHIELD CAT 5 E CABLE | WEST PENN | M58144 | A/R |
| | RGBHV CABLE | WEST PENN | 255CRGB | A/R |
| | AUDIO CABLE | WEST PENN | 25510B | A/R |
| | ANTENNA CABLE | WEST PENN | 25812 | A/R |
| | CONTROL CABLE | WEST PENN | 25271B | A/R |
| H | HDMI INPUT | | SINGLE GANG BOX OUTLET HEIGHT | 1 |
| V | VGA INPUT | | SINGLE GANG BOX OUTLET HEIGHT | 1 |
| J | JUNCTION BOX, RACK LOCATION SIZE TO FIT, SEE 12/EY706 | | | 1 |
| | TOUCH BUTTON | | SINGLE GANG BOX OUTLET HEIGHT | 1 |
| J C | JUNCTION BOX, ABOVE CEILING, SCREEN | | 1- GANG BOX | 1 |
| | VGA INPUT CABLE | WEST PENN | CN-HDVGA AP-10 | 1 |
| | WIRELESS COMBO, HANDHELD | SHURE | SLX24/SM58 | 1 |
| | WIRELESS COMBO, LAVALIER | SHURE | SLX14/85 | 1 |
| | TV TUNER | CONTEMPORARY RESEARCH | 232-ATSC + | 1 |
| | | | | 1 |
| | RACK KIT | CONTEMPORARY RESEARCH | | |

| | | | | |
|---|---|---|---|---|
| V | VGA INPUT | EXTRON | EXTENDER D | 1 |
| H | HDMI INPUT | HALL RESEARCH | GC-HDMI-DP | 1 |
| | AUDIO DE-EMBEDDED | EXTRON | HAE 100 | 1 |
| | DIGITAL SIGNAL PROCESSOR | BI AMP | NEXIA PM | 1 |
| AMP | AMPLIFIER, 200W | EXTRON | XPA 2001 | 1 |
| | RACK KIT | EXTRON | | 1 |
| S B | SPEAKER | ATLAS | FAP62T | 6 |
| | HDMI TX | EXTRON | DTP-HDMI 230 TX | 1 |
| | HDMI RX | EXTRON | DTP-HDMI 230 RX | 1 |
| | RACK KIT | EXTRON | | A/R |
| | PROJECTOR | PANASONIC | PT-DZ 6700 U | 1 |
| | PROJECTOR MOUNT | CHIEF | RPAU | 1 |
| | PIPE | CHIEF | | 1 |
| | CEILING MOUNT | CHIEF | CMA 440 | 1 |
| | SCREEN | | BY OTHERS | 1 |
| | LOW VOLTAGE CONTROLLER | DA LITE | | 1 |
| | TOUCH BUTTON, 12 | CRESTRON | CNX-B12-W-T | 1 |
| | CONNECTION BLOCK | CRESTRON | ST-CNB | 1 |
| | POWER SUPPLY | CRESTRON | PW-2420 RU | 1 |
| | CONTROLLER | CRESTRON | CP2E | 1 |
| | POWER CONDITIONER | SURGEX | SX 1115-RT | 1 |
| | HDMI SWITCHER | EXTRON | SW2 HDMI | 1 |
| | RACK MOUNT KIT | EXTRON | | AR |
| | RS232 MODULE | CRESTRON | ST-COM | 1 |
| | RACK MOUNT KIT | CRESTRON | ST-RMK | AR |
| | CONNECTION BLOCK | CRESTRON | ST-CNB | 1 |

1 / EY605 ELECTRICAL AND A/V EQUIPEMENT LIST
SCALE | NOT TO SCALE

C:\Users\rbrown.KGE\Documents\2010-117.00_KGE_STUDENT LIFE_ELECTRICAL_CENTERAL_2012_rbrown.rvt
5/14/2013 6:05:16 PM


MHTN ARCHITECTS
**MHTN Architects, Inc.**
420 East South Temple
Suite 100
Salt Lake City, Utah 84111
Telephone (801) 595-6700
Telefax (801) 595-6717
www.mhtn.com

**Hastings+Chivetta**
ARCHITECTURE • PLANNING • ENGINEERING
622 Emerson, Suite 200
St. Louis, MO 63141
Tel. 314.863.5717
Fax. 314.863.2823
www.hastingschivetta.com

BUILDING OFFICIAL STAMP
Ken Garner Engineering, Inc.
Electrical Engineering Consultants, Inc.
102 West 500 South, Suite 225
Salt Lake City, Utah 84101
P. 801.328.8800
F. 801.328.8802
Contact: Paris LeLaCheur
Project #: 2010-117.00


# UNIVERSITY OF UTAH
# STUDENT LIFE CENTER
1836 E. BALLIF ROAD
SALT LAKE CITY, UTAH 84112

SEAL

MHTN PROJECT NO. 2010562.00
DRAWN BY: Author CHECKED BY: Checker

ISSUED:

| NO. | DATE | DESCRIPTION |
|---|---|---|

CONTRACTOR TO VERIFY DRAWINGS IN FIELD USE REFLECT LAST REVISION DATE.

| NO. | DATE | DESCRIPTION |
|---|---|---|

SHEET NAME
A/V EQUIPMENT SCHEDULES

BID DOCUMENTS
May 15, 2013

SHEET NUMBER
EY712

## ELECTRICAL EQUIPMENT LIST (EXERCISE ROOM 1,2,3 AND 4)

SPEC XXX

| SYM | DESCRIPTION | MANUFACTURER | MODEL | QTY |
|---|---|---|---|---|
| 4 | EQUIPMENT CABINET | ATLAS | WMA 24-23 | 1 |
| | FRONT DOOR 24 RU | ATLAS | SFD-24 | A/R |
| | BLANK PANEL | ATLAS | | A/R |
| -M- | MICROPHONE CABLE | WEST PENN | 25291B | A/R |
| -S- | SPEAKER CABLE | WEST PENN | 25225B | A/R |
| -CAT5E- | CAT 5E CABLE | WEST PENN | 254245 | |
| | ANTENNA CABLE | WEST PENN | 25812 | A/R |
| CPI | AUDIO INPUT | | SINGLE GANG BOX OUTLET HEIGHT | A/R |
| | AUDIO CABLE | WESTPENN | 25510 | A/R |
| SV | VOLUME CONTROL | | SINGLE GANG BOX SWITCH HEIGHT | A/R |
| J | JUNCTION BOX RACK LOCATION SIZE TO FIT SEE 17/EY707 | | | A/R |
| A | ANTENNA WALL 9' AFF | | SINGLE GANG BOX | A/R |

1 / EY607 ELECTRICAL EQUIPEMENT LIST
SCALE | NOT TO SCALE

C:\Users\ttrown.KGE\Documents\2010-117.00_KGE_STUDENT LIFE_ELECTRICAL_CENTERAL_2012_ttrown.rvt
5/14/2013 6:05:24 PM


MHTN
ARCHITECTS
**MHTN Architects, Inc.**
420 East South Temple
Suite 100
Salt Lake City, Utah 84111
Telephone (801) 595-6700
Telefax (801) 595-6717
www.mhtn.com

**Hastings+Chivetta**
ARCHITECTURE • PLANNING • ENGINEERING
622 Emerson, Suite 200
St. Louis, MO 63141
Tel. 314.863.5717
Fax. 314.863.2823
www.hastingschivetta.com


BUILDING OFFICIAL STAMP


Ken Garner Engineering, Inc.
Electrical Engineering Consultants, Inc.
102 West 500 South, Suite 225
Salt Lake City, Utah 84101
P. 801.328.8800
F. 801.328.8802
Contact: Paris LeLaCheur
Project #: 2010-117.00


# UNIVERSITY OF UTAH
# STUDENT LIFE CENTER
1836 E. BALLIF ROAD
SALT LAKE CITY, UTAH 84112

SEAL

MHTN PROJECT NO. 2010562.00

DRAWN BY: KGE CHECKED BY: KGE

ISSUED:

| NO. | DATE | DESCRIPTION |
|---|---|---|

CONTRACTOR TO VERIFY DRAWINGS IN FIELD USE REFLECT LAST REVISION DATE:

| NO. | DATE | DESCRIPTION |
|---|---|---|

SHEET NAME
A/V EQUIPMENT SCHEDULES

BID DOCUMENTS
May 15, 2013

SHEET NUMBER
EY713

## AUDIO SYSTEM EQUIPMENT LIST (EXERCISE ROOM 1,2,3 AND 4)

SPEC XXX

| SYM | DESCRIPTION | MANUFACTURER | MODEL | QTY |
|---|---|---|---|---|
| | POWER CONDITIONER | FURMAN | PL-PRO C | 1 |
| | ANTENNA DA | SHURE | UA 844 SWB | 1 |
| | WIRELESS COMBO HANDHELD | SHURE | SLX 14/85 | 4 |
| CPI | AUDIO INPUT 3.5MM STEREO/SINGLE GANG | CUSTOM | | 4 |
| | AM/FM TUNER, HD RADIO, SATELLITE RADIO | DENON | TU-604CI | 1 |
| | | | ACD-HD | 1 |
| | | | ACD-XMSIR | 1 |
| | DIGITAL SIGNAL PROCESSOR | BSS | BLU 100 | 1 |
| | INPUT BOX 8 INPUTS | BSS | BLU-BIB | 2 |
| | AMPLIFIER | CROWN | CTS-4200 | 1 |
| | AMPLIFIER | CROWN | CTS-600 | 1 |
| S C | SPEAKERS | ATLAS | FAP82T | A/R |
| VC | VOLUME CONTROL | BSS | SW9015US | 4 |

1 EY608 AUDIO SYSTEM EQUIPEMENT LIST
SCALE | NOT TO SCALE

C:\Users\ttrown.KGE\Documents\2010-117.00_KGE_STUDENT LIFE_ELECTRICAL_CENTERAL_2012_ttrown.rvt
5/14/2013 6:05:32 PM


MHTN
ARCHITECTS
**MHTN Architects, Inc.**
420 East South Temple
Suite 100
Salt Lake City, Utah 84111
Telephone (801) 595-6700
Telefax (801) 595-6717
www.mhtn.com

**Hastings+Chivetta**
ARCHITECTURE • PLANNING • ENGINEERING
622 Emerson, Suite 200
St. Louis, MO 63141
Tel. 314.863.5717
Fax. 314.863.2823
www.hastingschivetta.com


BUILDING OFFICIAL STAMP


Ken Garner
Engineering, Inc.
Electrical Engineering Consultants, Inc.
102 West 500 South, Suite 225
Salt Lake City, Utah 84101
P. 801.328.8800
F. 801.328.8802
Contact: Paris LeLaCheur
Project #: 2010-117.00


# UNIVERSITY OF UTAH
# STUDENT LIFE CENTER
1836 E. BALLIF ROAD
SALT LAKE CITY, UTAH 84112

SEAL

MHTN PROJECT NO. 2010562.00

DRAWN BY: KGE CHECKED BY: KGE

ISSUED:

| NO. | DATE | DESCRIPTION |
|---|---|---|

CONTRACTOR TO VERIFY DRAWINGS IN FIELD USE REFLECT LAST REVISION DATE:

| NO. | DATE | DESCRIPTION |
|---|---|---|

SHEET NAME
A/V EQUIPMENT SCHEDULES

BID DOCUMENTS
May 15, 2013

SHEET NUMBER
EY714

## AV SYSTEM EQUIPMENT LIST (CONFERENCE ROOM 340C)

SPEC XXX

| SYM | DESCRIPTION | MANUFACTURER | MODEL | QTY |
|---|---|---|---|---|
| | VGA INPUT CABLE | WEST PENN | CN-HDVGA AP-10 | 1 |
| | HDMI INPUT CABLE | WEST PENN | CN-40 HDMI-10 | 1 |
| H ▷ | HDMI INPUT | WEST PENN | CN-R013 EXT-C6JT | 1 |
| | HDMI RECEIVER | WEST PENN | CN-R013 EXT-C6RX | 1 |
| | LCD AND MOUNT, SEE TV DISTRIBUTION SYSTEM EY710 | | | 1 |
| V ▷ | VGA INPUT | EXTRON | EXTENDER D | 1 |

1 EY609 AV SYSTEM EQUIPMENT LIST
SCALE | NOT TO SCALE

## ELECTRICAL EQUIPMENT LIST (CONFERENCE ROOM 340C)

SPEC XXX

| SYM | DESCRIPTION | MANUFACTURER | MODEL | QTY |
|---|---|---|---|---|
| (J) | FLOOR BOX | WALKER | RFB4 | 1 |
| (J)A | JUNCTION BOX 6'-6" AFF | | 2-GANG WALL | 1 |
| | RGBHV CABLE | WEST PENN | 255C RGB | A/R |
| | AUDIO CABLE | WEST PENN | 25510 | A/R |
| | CAT 5E SHIELD CABLE | WEST PENN | M58144 | A/R |

2 EY609 ELECTRICAL EQUIPMENT LIST
SCALE | NOT TO SCALE

## AMX DIGITAL SIGNAGE EQUIPMENT LIST (3RD FLOOR)

SPEC XXX

| SYM | DESCRIPTION | MANUFACTURER | MODEL | QTY |
|---|---|---|---|---|
| | SOFTWARE + ONE PLAYER | AMX | IS-SPX-1000K | 3 |

4 EY609 AMX DIGITAL SIGNAGE EQUIPMENT LIST
SCALE | NOT TO SCALE

## ELECTRICAL EQUIPMENT LIST (TV DISTRIBUTION SYSTEM)

SPEC XXX

| SYM | DESCRIPTION | MANUFACTURER | MODEL | QTY |
|---|---|---|---|---|
| (J) | JUNCTION BOX 12"X12"X4" | CUSTOM | | A/R |
| TV<br>TV2 | TV OUTLET | | SINGLE GANG BOX | A/R |
| | RG11 CABLE | WEST PENN | 25821 | A/R |
| | RG6 CABLE | WEST PENN | 25841 | A/R |

3 EY609 ELECTRICAL EQUIPMENT LIST
SCALE | NOT TO SCALE

C:\Users\tbrown.KGE\Documents\2010-117.00_KGE_STUDENT LIFE_ELECTRICAL_CENTERAL_2012_tbrown.rvt
5/14/2013 6:05:39 PM


MHTN
ARCHITECTS
**MHTN Architects, Inc.**
420 East South Temple
Suite 100
Salt Lake City, Utah 84111
Telephone (801) 595-6700
Telefax (801) 595-6717
www.mhtn.com

**Hastings+Chivetta**
ARCHITECTURE • PLANNING • ENGINEERING
622 Emerson, Suite 200
St. Louis, MO 63141
Tel. 314.863.5717
Fax. 314.863.2823
www.hastingschivetta.com

BUILDING OFFICIAL STAMP

Ken Garner
Engineering, Inc.
Electrical Engineering Consultants, Inc.
102 West 500 South, Suite 225
Salt Lake City, Utah 84101
P. 801.328.8800
F. 801.328.8802
Contact: Paris LeLaCheur
Project #: 2010-117.00


UNIVERSITY OF UTAH
STUDENT LIFE CENTER
1836 E. BALLIF ROAD
SALT LAKE CITY, UTAH 84112

SEAL

MHTN PROJECT NO. 2010562.00
DRAWN BY: KGE CHECKED BY: KGE

ISSUED:

| NO. | DATE | DESCRIPTION |
|---|---|---|

CONTRACTOR TO VERIFY DRAWINGS IN FIELD USE REFLECT LAST REVISION DATE.

| NO. | DATE | DESCRIPTION |
|---|---|---|

SHEET NAME
A/V EQUIPMENT SCHEDULES

BID DOCUMENTS
May 15, 2013

SHEET NUMBER
EY715

## POOL STRUCTURAL ITEMS:

1. POOLS AND SPAS BUILT USING THIS PLAN SHALL CONFORM TO APPLICABLE DESIGN CODES INCLUDING THE MOST CURRENT IBC AS ADOPTED BY THE CITY AND COUNTY WHERE THE POOL IS BEING INSTALLED.
2. ALL WORK SHALL BE IN STRICT ACCORDANCE WITH THE LATEST EDITION OF THE INTERNATIONAL BUILDING CODE, UNIFORM BUILDING CODE, ACI 318, ACI506R (GUIDE TO SHOTCRETE), ACI COMPILATION NO. 6, AND LOCAL ORDINANCES. THE MOST STRICT CODE SHALL TAKE PRECEDENCE.
3. POOL CONTRACTOR SHALL VERIFY ALL DIMENSIONS AND CONDITIONS ON SITE. THE ENGINEER SHALL BE CONSULTED IF ANY SURCHARGE OR CONDITIONS DIFFER FROM DETAILS SHOWN HEREIN.
4. POOL CONTRACTOR SHALL BE RESPONSIBLE TO ASSURE ALL DIMENSIONS AND SETBACKS OF THE POOL CONFORM TO THE REQUIREMENTS OF THE APPROVING BUILDING OFFICIALS FOR THE LOCATION WHERE THE POOL IS BEING BUILT. THIS INCLUDES BOTH EXISTING STRUCTURES AND PROPERTY LINES.
5. THE POOL MUST FOUNDED ENTIRELY IN ORIGINAL UNDISTURBED NATIVE SOIL OR FOUNDED ENTIRELY IN COMPACTED FILL SOIL WHICH HAS BEEN COMPACTED TO 95% RELATIVE DENSITY. COMPACTED FILL SOIL MUST BE CERTIFIED BY A LICENSED SOILS ENGINEER.
6. UP TO A LEVEL NOT MORE THAN 24 INCHES BELOW THE RIM OF THE POOL, EXCAVATIONS FOR POOL SHALL BE IN SUITABLE FIRM UNDISTURBED SOIL OR IN SOILS THAT HAVE BEEN COMPACTED TO 95% OF MAX. DENSITY AT OPTIMUM MOISTURE CONTENT UNDER QUALIFIED SUPERVISION AND HAVE BEEN APPROVED BY THE LOCAL BUILDING AUTHORITY. SOILS FOR POOLS SHALL HAVE A MINIMUM SOILS BEARING VALUE OF 2000 LBS. PER SQUARE FOOT. THE POOL CONTRACTOR IS RESPONSIBLE FOR SUBGRADE PREPARATION SO THAT SETTLEMENT IS NEGLIGIBLE TO AVOID UNANTICIPATED STRESS ON CONCRETE WHICH CAN CAUSE CRACKING.
7. POOL CONTRACTOR SHALL PROVIDE ALL SHORING AS REQUIRED.
8. POOL CONTRACTOR SHALL VERIFY ALL CONDITIONS AND DIMENSIONS PRIOR TO PLACING CONCRETE.
9. SHOTCRETE SHALL BE MACHINE MIXED SUCH THAT THE 28 DAY COMPRESSIVE STRENGTH IS 4000 PSI. SHOTCRETE SHALL BE KEPT CONSTANTLY WET FOR A MINIMUM PERIOD OF SEVEN DAYS, OR AS NECESSARY TO INSURE PROPER INITIAL CURE OR ADEQUATE COVERINGS WITH PLASTIC SHEETING THROUGH THE CURING PERIOD. NO CURING COMPOUND WILL BE ALLOWED. NOTE THAT PROVISIONS SHALL BE MADE TO HOLD THE REINFORCING BARS IN PLACE DURING PLACEMENT OF SHOTCRETE TO MAINTAIN CLEARANCE BETWEEN THE STEEL AND THE FACE OF CONCRETE IN ACCORDANCE WITH THE IBC CODE REQUIREMENTS.
10. REINFORCING BARS SHALL BE DEFORMED INTERMEDIATE GRADE AND CONFORM TO ASTM DESIGN, A615, GRADE AS INDICATED ON THE REINFORCING SCHEDULE. THE REINFORCING BARS SHALL BE LAPPED A MINIMUM OF 40 BAR DIAMETERS.
11. THE REINFORCING STEEL CALLED OUT IN ALL STEEL AND SHOTCRETE SCHEDULES IS FOR TOTAL STEEL.
12. DEFINITION OF "ALTERNATE STEEL" IS THE 1st, 2nd, AND 3rd VERTICAL REBARS ADDED TO EACH 12 INCH GRID SPACE.
13. ALL REINFORCING STEEL SHALL BE IN PLACE BEFORE CONCRETE PLACING IS COMMENCED AND SHALL BE NEW, FREE FROM DIRT, OIL, PAINT AND MILL SCALE AND SHALL BE POSITIONED AND OF THE SIZE INDICATED ON THE DRAWINGS, AND SHALL BE SECURED BY NOT LESS THAN 16 GAUGE ANNEALED TIE WIRE. ALL REINFORCEMENT BARS SHALL BE DETAILED, BOLSTERED AND SUPPORTED IN ACCORDANCE WITH ACI STANDARD 315. PROVIDE CONCRETE COVER FOR REBAR AS FOLLOWS:
CONCRETE CAST AGAINST AND PERMANENTLY EXPOSED TO EARTH – 3.00 INCHES
CONCRETE EXPOSED TO EARTH OR WEATHER, #5 BARS AND SMALLER – 1.50 INCHES
CONCRETE EXPOSED TO EARTH OR WEATHER, #5 BARS AND LARGER – 2.00 INCHES
CONCRETE NOT EXPOSED TO EARTH OR WEATHER, SLABS, WALLS AND JOISTS – 0.75 INCHES
CONCRETE NOT EXPOSED TO EARTH OR WEATHER – 1.50 INCHES
14. ALL PIPING SHALL MAINTAIN A MINIMUM ONE (1) INCH CLEARANCE FROM VERTICAL REINFORCING STEEL BARS.
15. ALL STEEL & ELECTRICAL ITEMS IN OR NEAR THE POOL SHALL BE BONDED & GROUNDED IN ACCORDANCE WITH THE MOST CURRENT NATIONAL ELECTRIC CODE (N.E.C.) ARTICLE 680 OR CURRENT ADOPTED N.E.C.
16. ALL CONCRETE PLACEMENT WORK SHALL BE IN ACCORDANCE WITH ACI–301 AND ACI–302. WHEN CONCRETE IS PLACED DURING HOT WEATHER CONFORM TO ACI 305R. WHEN PLACED DURING COLD WEATHER CONFORM TO ACI 306R.
17. IF ENGINEER'S STAMP OF SIGNATURE IS ON THE PLOT PLAN, IT IS INTENDED TO REFER ONLY TO THOSE STRUCTURAL FEATURES CONTAINED ON THIS PLAN.
18. POOLS SHALL NOT BE LOCATED WHERE GROUND WATER EXISTS ABOVE BOTTOM OF POOL DURING HIGH WATER TABLE OCCURRENCES UNLESS TWO (2) HYDROSTATIC RELIEF VALVES ARE INSTALLED AT THE LOW POINT IN THE POOL.
19. THE DESIGN CONTAINED ON THIS PLAN IS NOT APPROVED FOR AREAS WITH COLLAPSIBLE SOILS OR EXPANSIVE SOILS WITH EQUIVALENT FLUID PRESSURES ABOVE THE STATED EQUIVALENT FLUID PRESSURES ON THE STEEL SCHEDULE. IF THESE TYPES OF SOILS ARE PRESENT, ADDITIONAL SOILS ANALYSIS AND ENGINEERING IS REQUIRED.
20. EARTH SLOPES DRAINING TOWARD POOLS SHALL BE INTERCEPTED BY A DRAINAGE SYSTEM DESIGNED TO ASSURE ADEQUATE DRAINAGE OF WATER SO THAT HYDROSTATIC PRESSURES CAN'T BUILD UP BEHIND AND AROUND THE POOL WALLS.
21. ALL CEMENT FOR CONCRETE WORK SHALL CONFORM TO REQUIREMENTS OF THE STANDARD SPECIFICATIONS FOR THE "PORTLAND CEMENT", SERIAL DESIGNATION C–150 OF THE ASTM AND SHALL BE TYPE 1 OR AS OTHERWISE REQUIRED IN A SOILS REPORT.
22. WATER USED IN CONCRETE SHALL BE POTABLE. CALCIUM CHLORIDE, ALUMINUM CONDUIT, PRODUCTS CONTAINING ALUMINUM OR ANY OTHER MATERIAL INJURIOUS TO CONCRETE SHALL NOT BE USED IN CONCRETE.
23. SHOTCRETE SHALL COMPLY WITH SECTION 1913 OF THE 2009 IBC, INCLUDING AGGREGATE SIZE, REINFORCING SPLICES, REBOUND, CURING AND TESTING.
24. EXPOSURE CLASS PER IBC 1904.2 AND ACI3184.2 INCLUDES EXPOSURE TO FREEZE THAW FOR THE OUTDOOR POOL ONLY (ALTERNATE BID ITEM 2). SULFATE ATTACK IS NEGLIGIBLE. CONCRETE TO HAVE LOW PERMEABILITY WITH CONSTANT EXPOSURE TO WATER.

## PROJECT SPECIFIC POOL EARTHWORK REQUIREMENTS:

1. SUITABLE SOILS SHALL BE PROVIDED AND PREPARED PER ANY AND ALL SOILS REPORT AND SUBSEQUENT LETTERS OF RECOMMENDATIONS BY GORDON GEOTCHNICAL ENGINEERING INC., THE GEOTECHNICAL ENGINEERS FOR THIS PROJECT. (DATED OCT. 12, 2012 AND JAN 16, 2013)
2. SOILS DESIGN AND INSTALLATION SHALL PROVIDE SUPPORT FOR THE POOL STRUCTURE TO ACHIEVE A 1/16" MAXIMUM DIFFERENTIAL SETTLEMENT TOLERANCE ACROSS THE GUTTER POOL PERIMETER WALLS, WHEN THE POOL IS LOADED.
3. ALL NON–ENGINEERED FILL SOILS OR UNSUITABLE SOILS SHOULD BE COMPLETELY REMOVED.
4. SOFT, LOOSE OR DISTURBED SOILS ENCOUNTERED MUST BE REMOVED TO A MAXIMUM DEPTH OF TWO FEET AND REPLACED WITH STRUCTURAL FILL, PER THE RECOMMENDATIONS OF THE GEOTECHNICAL REPORT.
5. EXCAVATIONS SHALL BE PERFORMED PER THE RECOMMENDATIONS OF THE GEOTECHNICAL REPORT. ALL EXCAVATIONS SHALL BE INSPECTED PERIODICALLY BY QUALIFIED PERSONNAL. IF ANY SIGNS OF INSTABILITY OR EXCESSIVE SLOUGHING ARE NOTED, IMMEDIATE REMEDIAL ACTION MUST BE INITIATED.
6. POOL EXCAVATION TO BE INSPECTED BY GEOTECHNICAL ENGINEER AFTER EXCAVATION, PRIOR TO PLACEMENT OF STRUCTURAL FILL, PRIOR TO PLACEMENT OF FREE DRAINING GRAVEL AND PRIOR TO PLACEMENT OF SHOTCRETE.
7. ANY EXPOSED SUBGRADE, CONSISTING OF UNDISTURBED NATURAL SOILS, MUST BE PROOF–ROLLED BY PASSING MODERATE WEIGHT RUBBER TIRE–MOUNTED CONSTRUCTION EQUIPMENT OVER THE SURFACE AT LEAST TWICE.
8. STRUCTURE FILL SOILS SHALL BE PROVIDED PER THE DEFINITIONS AND REQUIREMENTS OF THE GEOTECHNICAL REPORT.
9. STRUCTURAL FILL SHOULD CONSIST OF GRANULAR MATERIALS COMPACTED TO AT LEAST 95% OF THE MAXIMUM DRY DENSITY AS DETERMINED BY THE AASHTO–T180 (ASTM D–1557) COMPACTION CRITERIA.
9A. NO CLAY SHALL BE INCLUDED IN FILL MATERIAL. UTILIZE GRANULAR SOILS ONLY.
10. ALL STRUCTURAL FILL SHOULD BE PLACED IN LIFTS NOT EXCEEDING EIGHT INCHES IN LOOSE THICKNESS.
11. A FABRIC FILTER SUCH AS MIRAFI 140 N OR EQUIVALENT SHALL BE PLACED BETWEEN GRANULAR FILL/DRAINS AND FINE GRAINED SOILS PER THE RECOMMENDATION OF THE GEOTECHNICAL REPORT.
12. PROVIDE MINIMUM SIX (6) INCHES OF PROPERLY DENSIFIED FREE DRAINING GRAVEL UNDER POOL STRUCTURES.
13. UNDER POOL GRAVELS SHALL SLOPE TO EXTERIOR DRAINAGE FIELD.
14. RAISED SPA SHALL BE SUPPORTED BY A STRUCTURAL SUPPORT SLAB. SEE STRUCTURAL DRAWINGS.
15. THE ACTIVITY POOL (GUTTER POOL) SHALL BE LOADED WITH WATER PRIOR TO SETTING THE GUTTER RIM COPING.
16. FOR ADDITIONAL INFORMATION ALSO SEE THE ARCHITECTURAL SPECIFICATIONS, INCLUDING THE GRADING, EXCAVATION, FILL AND BACKFILL SECTIONS.

## BASE BID:

- THE INDOOR ACTIVITY POOL AS SHOWN ON SHEET WF100.0
- THE INDOOR RAISED SPA AS SHOWN ON SHEET WF100.0

## ALTERNATE BID ITEM:

SEE ARCHITECTURAL SPECIFICATION FOR ALTERNATE BID ITEM NUMBER AND ADDITIONAL DESCRIPTION

PVC LAMINATED STAINLESS STEEL POOL SYSTEMS

PVC LAMINATED STAINLESS STEEL POOL SYSTEMS IN LIEU OF SHOTCRETE CONSTRUCTION.
FOR BASE BID POOLS:
- ACTIVITY POOL – CERAMIC 1 TYPE GUTTER SYSTEM WITH RADIUS AND STRAIGHT WALLS. FLOOR MEMBRANE – COMBINATION OF PADDED, ANTI–SLIP AND STANDARD.
- RAISED SPA – SKIMMER TYPE WALL SYSTEM – TILE LINED. COPING & FAUX ROCK AS SHOWN ON THE CONTRACT DOCUMENTS. (FAUX ROCK NOT IN POOL CONTRACT)

## REQUIRED SAFETY EQUIPMENT

THREE (3) UNITS OF LIFESAVING EQUIPMENT ARE REQUIRED FOR THE TOTAL FACILITY.
THE LIFESAVING EQUIPMENT SHALL CONSIST OF THE FOLLOWING:

TWO (2) RESCUE TUBES – 50 INCHES LONG WITH NYLON MESH – AMERICAN RED CROSS APPROVED

ONE (1) COAST GUARD APPROVED RING BUOY WITH AN ATTACHED ROPE EQUAL IN LENGTH TO THE MAXIMUM WIDTH OF THE POOL PLUS 10 FEET

THREE (3) LIFE POLES OR SHEPHERD'S CROOK TYPE POLES WITH BLUNTED ENDS – 12' LONG (MINIMUM)

PROVIDE ONE (1) – FIRST AID KIT – WHICH INCLUDES THE FOLLOWING:

EYE DRESSING PACKET (2 UNITS)
TRIANGULAR BANDAGE (2 UNITS)
CPR SHIELD (1 UNIT)
SCISSORS (1 UNIT)
TWEEZERS (1 UNIT)
LATEX GLOVES (6 PAIRS)
1 INCH ADHESIVE COMPRESS (2 UNITS)
2 INCH ADHESIVE COMPRESS (2 UNITS)
3 INCH ADHESIVE COMPRESS (2 UNITS)
4 INCH ADHESIVE COMPRESS (2 UNITS)
3 INCH SQUARE PLAIN GAUZE PAD (2 UNITS)
GAUZE ROLLER BANDAGE (2 UNITS)
PLAIN ABSORBENT GAUZE – 0.5 SQ YDS (1 UNIT)
PLAIN ABSORBENT GAUZE – 24 INCHES x 72 INCHES (1 UNIT)
BANDAGE TAPE (2 UNITS)
BUTTERFLY CLOSURES – 1 BOX (1 UNIT)
3 INCH ACE BANDAGE (1 UNIT)
ASSORTED ADHESIVE BAND–AIDS – 1 BOX (1 UNIT)

PROVIDE ONE (1):
CJ RESCUE 6 SPINEBOARD PACKAGE
100% HIGH DENSITY POLYETHYLENE SPINEBOARD
PROVIDE COMPLETE WITH STRAPS AND HEAD STABILIZATION CAPABILITY.

## DEFERRED SUBMITTALS:

PROVIDE THE DETAILS AND ENGINEERING CALCULATIONS (WET STAMPED AND SIGNED) FOR ALL NON–STRUCTURAL COMPONENTS PERMANENTLY ATTACHED TO STRUCTURES AND THEIR SUPPORTS AND ATTACHMENTS, DESIGNED TO RESIST THE EFFECTS OF EARTHQUAKE MOTIONS IN ACCORDANCE WITH ASCE 7–05. SUBMIT TO THE BUILDING DEPARTMENT AS A DEFERRED SUBMITTAL IF REQUIRED BY THE BUILDING DEPARTMENT / BUILDING INSPECTOR.

**FOR STEEL REINFORCING SCHEDULE SEE SHEET WF412.0**

The entire contents of the attached documents, including all sketches, plans, studies, drawings, schedules and specifications and all copyrights therein are, and shall remain the sole property of Water Design Incorporated. The documents and their contents may not be used, photocopied or reproduced digitally, electronically or in any other manner without the express prior written consent of Water Design Incorporated.

## REQUIRED SIGNS:

(SAFETY / HEALTH SIGN PACKAGE SHALL BE BY THE GENERAL CONTRACTOR)
(NOT IN POOL CONTRACT)
(SIGNS REQUIRED TO BE IN PLAIN VIEW)
(SEE ARCHITECTURAL SPECIFICATION FOR SIGN CONSTRUCTION AND MATERIAL REQUIREMENTS)

### POOL SAFETY SIGNS:

THE FOLLOWING SIGNS SHALL BE POSTED NEAR EACH POOL / SPA WITH LETTERS AT LEAST 4" HIGH WITH A STROKE WIDTH OF AT LEAST ONE–HALF INCH:

"NO RUNNING"
"NO DIVING"

### MAXIMUM BATHER LOAD SIGNS:

A) THE SIGN TITLE SHALL HAVE LETTERS, TWO INCHES IN HEIGHT.
B) MINIMUM ONE–HALF INCH HIGH LETTERS FOR REMAINING BODY OF TEXT.

"ACTIVITY POOL MAXIMUM BATHER LOAD: 222 PERSONS"
"SPA BATHER LOAD: 30 PERSONS"

### SPA CAUTION SIGN:

A SPA POOL MUST HAVE AN EASILY READABLE CAUTION SIGN MOUNTED ADJACENT TO THE ENTRANCE TO THE SPA WHICH CONTAINS THE FOLLOWING INFORMATION:

A) THE WORD "CAUTION" CENTERED AT THE TOP OF THE SIGN IN LARGE BOLD LETTERS, TWO INCHES IN HEIGHT.
B) MINIMUM ONE–HALF INCH HIGH LETTERS FOR REMAINING BODY OF TEXT.

- ELDERLY PERSONS AND THOSE SUFFERING FROM HEART DISEASE, DIABETES OR HIGH BLOOD PRESSURE SHOULD CONSULT A PHYSICIAN BEFORE USING THE SPA.
- PERSONS SUFFERING FROM A COMMUNICABLE DISEASE TRANSMISSIBLE VIA WATER MAY NOT USE THE SPA POOL. PERSONS USING PRESCRIPTION MEDICATIONS SHOULD CONSULT A PHYSICIAN BEFORE USING THE SPA.
- INDIVIDUALS UNDER THE INFLUENCE OF ALCOHOL OR OTHER IMPAIRING CHEMICAL SUBSTANCES SHOULD NOT USE THE SPA.
- BATHERS SHOULD NOT USE THE SPA ALONE.
- PREGNANT WOMEN SHOULD NOT USE THE SPA WITHOUT CONSULTING THEIR PHYSICIAN.
- PERSONS SHOULD NOT SPEND MORE THAN 15 MINUTES IN THE SPA IN ANY ONE SESSION.
- CHILDREN UNDER THE AGE OF 14 MUST BE ACCOMPANIED AND SUPERVISED BY AT LEAST ONE RESPONSIBLE ADULT OVER THE AGE OF 18 YEARS OLD.
- CHILDREN UNDER THE AGE OF 5 YEARS ARE PROHIBITED FROM BATHING IN A HOT TUB OR SPA.
- RUNNING OR ENGAGING IN UNSAFE ACTIVITIES OR HORSEPLAY IN OR AROUND THE SPA IS PROHIBITED.

### EMERGENCY TELEPHONE NUMBERS SIGN:

A SIGN WITH 2" HIGH CAPITAL LETTERING MUST BE POSTED IN THE IMMEDIATE VICINITY OF THE POOLS STATING THE LOCATION OF THE NEAREST TELEPHONE AND EMERGENCY TELEPHONE NUMBERS WHICH SHALL INCLUDE:

* 911 (OR OTHER LOCAL EMERGENCY NUMBER)

(IF A TELEPHONE IS NOT AVAILABLE AT POOLSIDE, EMERGENCY TELEPHONE NUMBERS MUST BE PROVIDED IN A FORM THAT CAN BE TAKEN TO A TELEPHONE.)

### PERSONAL HYGIENE AND BEHAVIOR RULES SIGN:

THE FACILITY OPERATOR AND STAFF IS RESPONSIBLE FOR THE ENFORCEMENT OF THE FOLLOWING PERSONAL HYGIENE AND BEHAVIOR RULES:

EASILY READABLE PLACARDS EMBODYING THE FOLLOWING RULES OF PERSONAL HYGIENE AND BEHAVIOR MUST BE CONSPICUOUSLY POSTED IN THE POOL ENCLOSURE AND IN THE DRESSING ROOMS AND LIFEGUARD ROOM. LETTERING SHALL BE MINIMUM ONE–HALF INCH HIGH. SIGN TITLE OF PERSONAL HYGIENE AND BEHAVIOR RULES SHALL HAVE 2 INCH HIGH LETTERING.

1) A BATHER USING THE FACILITY MUST TAKE A CLEANSING SHOWER BEFORE ENTERING THE POOL ENCLOSURE. A BATHER LEAVING THE POOL TO USE THE TOILET MUST TAKE A SECOND CLEANSING SHOWER BEFORE RETURNING TO THE POOL ENCLOSURE.
2) A PERSON HAVING A COMMUNICABLE DISEASE TRANSMISSIBLE BY WATER MUST BE EXCLUDED FROM PUBLIC POOLS. A PERSON HAVING ANY EXPOSED SUB–EPIDERMAL TISSUE, INCLUDING OPEN BLISTERS, CUTS, OR OTHER LESIONS MAY NOT USE A PUBLIC POOL. A PERSON WHO HAS OR HAS HAD DIARRHEA WITHIN THE LAST TWO WEEKS CAUSED BY AN UNKNOWN SOURCE OR FROM ANY COMMUNICABLE OR FECAL–BORNE DISEASE MAY NOT ENTER ANY PUBLIC POOL.
3) ANY CHILD UNDER THREE YEARS OLD, ANY CHILD NOT TOILET TRAINED, AND ANYONE WHO LACKS CONTROL OF DEFECATION SHALL WEAR A WATER RESISTANT SWIM DIAPER AND WATERPROOF SWIMWEAR. SWIM DIAPERS AND WATERPROOF SWIMWEAR SHALL HAVE WAIST AND LEG OPENINGS FITTED SUCH THAT THEY ARE IN CONTACT WITH THE WAIST OR LEG AROUND THE ENTIRE CIRCUMFERENCE.
4) RUNNING, BOISTEROUS PLAY OR ROUGH PLAY, EXCEPT SUPERVISED WATER SPORTS, ARE PROHIBITED.
5) DIAPERS SHALL BE CHANGED ONLY IN RESTROOMS OR CHANGING STATIONS AND SHALL NOT BE CHANGED AT POOLSIDE. THE PERSON OR PERSONS WHO CHANGE THE DIAPER MUST WASH THEIR HANDS THOROUGHLY WITH SOAP BEFORE RETURNING TO THE POOL. THE DIAPERED PERSON MUST UNDERGO A CLEANSING SHOWER BEFORE RETURNING TO THE POOL.

## CHEMICAL STORAGE ROOM DOOR SIGN:

(PROVIDED BY POOL CONTRACTOR)

PROVIDE AN NFPA 704 MARKING SYSTEM IDENTIFICATION PLACARD ON THE ENTRY DOOR TO THE STORAGE AREA OF EACH CHEMICAL STORAGE ROOM AS REQUIRED BY THE NFPA 704.

## SAFETY AND ACCESSIBILITY NOTES:

SAFETY ITEMS, REQUIRED SIGNS, HEALTH ISSUES, AND DRESSING ROOM REQUIREMENTS THAT ARE INDICATED ON THE DRAWINGS, OR IN THE SPECIFICATIONS ARE FOR GENERAL GUIDANCE ONLY. THE POOL CONTRACTOR, AND/OR THE OWNER/OPERATOR OF THE FACILITY SHALL BE RESPONSIBLE FOR FURNISHING AND MAINTAINING ALL ITEMS REQUIRED BY THE REGULATIONS FOR THE DESIGN, CONSTRUCTION, AND OPERATION OF PUBLIC SWIMMING POOLS.

THE AMERICANS WITH DISABILITIES ACT REQUIRES: WHEN COMMON–USE OR PUBLIC SWIMMING POOLS, HOT TUBS, SPAS AND SIMILAR FACILITIES ARE PROVIDED, THEY SHALL BE ACCESSIBLE.

## CLEANING EQUIPMENT

ONE (1) VACUUM:
SPECTRUM POOL PRODUCTS
SPECTRACLEAN SERIES MODEL – WILDCAT E 1
INCLUDES: 1.0 HP PUMP WIRED FOR 110 VAC (GFI PROTECTED), 100' ELECTRIC CORD, AND 155 SF CARTRIDGE FILTER IN STAINLESS STEEL CANISTER WITH STAINLESS STEEL CART.
PROVIDE COMPLETE WITH GFCI SHOCK PROTECTOR

ONE (1) – 24" VACUUM HEAD – "FLEX–O–VAC" W/2" HOSE CONNECTION

ONE (1) – 50' VACUUM HOSE 2"ø

ONE (1) – 20' VACUUM HOSE 2"ø

TWO (2) – HANDLE EXTENSION SECTIONS 12' LONG

TWO (2) – LEAF SKIMMERS W/16' LONG HANDLES

TWO (2) – WALL BRUSHES 24" LONG W/16' LONG HANDLE

## WATER QUALITY TEST KIT:

PROVIDE ONE (1) – TEST KIT THAT SHALL INCLUDE TESTING CAPABILITIES FOR:
UNSTABILIZED FREE CHLORINE, FREE RESIDUAL CHLORINE, TOTAL CHLORINE, BROMINE, IODINE, pH, ACID AND BASE DEMAND, TOTAL ALKALINITY AND CYANURIC ACID.
MANUFACTURER: TAYLOR (OR APPROVED EQUAL)

PROVIDE ONE (1) – TEST KIT FOR TOTAL DISSOLVED SOLIDS.

## ELECTRICAL NOTES:

ITEMS PROVIDED AND INSTALLED BY ELECTRICAL CONTRACTOR (NIPC):

1. PROVIDE ELECTRICAL SERVICE AND CONNECTIONS TO ALL PUMP MOTORS, CIRCUIT BREAKERS, DISCONNECTS, PANELS, RELAYS, CONTROLLERS, OR OTHER POOL EQUIPMENT IN EQUIPMENT ROOM.
2. ALL INSTALLATION OF ELECTRICAL EQUIPMENT SHALL COMPLY WITH THE APPLICABLE PROVISIONS SET FORTH IN THE NATIONAL ELECTRICAL CODE AND STATE AND LOCAL ELECTRICAL CODES.
3. PROVIDE ELECTRICAL CONNECTIONS TO HEAT EXCHANGERS AS REQUIRED.
4. PROVIDE BONDING AND GROUNDING OF POOL AND SPA TO EQUIPOTENTIAL BONDING GRID IN DECK (A BARE #8 COPPER WIRE SHALL BE USED UNDER THE SLAB PER THE 2011 NEC SECTION 680.) AT THE POOL/SPA AND MAKE THE FINAL CONNECTION TO THE POOL EQUIPMENT GROUNDING (MOTORS, ETC.) IN THE EQUIPMENT ROOM (INCLUDING G.F.I. PROTECTION PER THE 2011 NEC – ARTICLE 680, OR CURRENT ADOPTED ELECTRICAL CODE). SEE SCHEMATIC DETAIL 7/WF506.
5. PROVIDE POOL EQUIPMENT INTERLOCKING AS STATED IN THE INTERLOCKING NOTES (THIS SHEET).
6. PROVIDE MINIMUM 5 HORIZONTAL FOOT CANDLES OF DECK LIGHTING PER SQUARE FOOT OF POOL DECK AREA (PER SWIMMING POOL CODE).
7. ELECTRICAL WIRING OR POWER SUPPLY LINES SHALL NOT BE ROUTED UNDERGROUND BENEATH THE POOL OR SPA SHELL.
8. ELECTRICAL CONTRACTOR SHALL PROVIDE CONDUIT FROM J–BOX TO LIGHT NICHE AND PROVIDE J–BOX AND HOOK–UP. SEE UNDERWATER LIGHT AND J–BOX DETAILS. SEE ELECTRICAL PLAN (BY OTHERS). ALL ELECTRICAL WORK AND GROUNDING SHALL BE IN ACCORDANCE WITH THE 2011 NEC – ARTICLE 680, OR CURRENT ADOPTED ELECTRICAL CODE. ELECTRICAL COMPONENT SHALL BE IN COMPLIANCE WITH UL 1241, JUNCTION BOXES FOR SWIMMING POOL FIXTURES.
9. PROVIDE LIGHT SWITCHES FOR THE SPA UNDERWATER LIGHTS IN A LOCATION WHERE THEY ARE NOT ACCESSIBLE BY BATHERS. (SWITCH LOCATION DETERMINED BY OWNER/ARCHITECT).
10. NO OUTLETS WITHIN 10 FT. OF POOL. ALL OUTLETS 10 FT. TO 20 FT. FROM POOL TO BE G.F.I. PROTECTED. G.F.I. PROTECTION MUST BE PROVIDED IN ACCORDANCE WITH THE CURRENT NATIONAL ELECTRIC CODE (N.E.C.) AND IN COMPLIANCE WITH LOCAL CODES FOR ALL LIGHTING CIRCUITS, MOTORS, OUTLETS, & ELECTRICAL CIRCUITS IN THE POOL AREA.
11. INSTALL ELECTRICAL OUTLETS (GFI PROTECTED) FOR PORTABLE POOL CLEANING EQUIPMENT. OUTLETS SHALL BE PLACED EVERY 75 FT. AROUND PERIMETER OF EACH POOL (CLEANING EQUIPMENT GENERALLY HAS 75 FT. OF POWER CORD.). NO OUTLETS WITHIN 10' OF POOLS. (VACUUM: 1.0 HP PUMP, 115 VAC)
12. ELECTRICAL CONTRACTOR SHALL INSTALL THE EMERGENCY SHUT–OFF SWITCH AND 15 MINUTE MAXIMUM THERAPY PUMP TIMER INCLUDING WIRING, CONDUIT, AND CONNECTIONS IN ACCORDANCE WITH THE 2011 NEC – ARTICLE 680, OR CURRENT ADOPTED ELECTRICAL CODE. TIMER AND SHUT OFF SWITCH SHALL BE INSTALLED A MINIMUM OF 5' AWAY FROM THE SPA WATER'S EDGE, AND WHERE A BATHER MUST EXIT THE SPA TO RESET. TIMER AND SHUT OFF SWITCH SHALL BE PROVIDED BY THE POOL CONTRACTOR.

ITEMS PROVIDED AND INSTALLED BY POOL CONTRACTOR:

1. POOL CONTRACTOR SHALL BE RESPONSIBLE FOR BONDING OF ALL EQUIPMENT AND METAL ITEMS IN OR NEAR THE POOL, INCLUDING: LIGHTS, NICHES, RAILINGS, HANDICAP LIFT SLEEVE, REINFORCING STEEL, ETC. WITH A #8 BARE GROUND WIRE. ALL BONDING SHALL BE PER THE 2011 NEC – ARTICLE 680, OR CURRENT ADOPTED ELECTRICAL CODE.

2. POOL CONTRACTOR SHALL PROVIDE FIRST 4'–0" OF CONDUIT AND SUFFICIENT LENGTH OF CORD FROM EACH UNDERWATER LIGHT TO ITS J–BOX AND TO ALLOW FOR LIGHT TO REACH DECK FOR RE–LAMPING. SEE JUNCTION BOX DETAIL. SEE ELECTRICAL PLANS FOR J–BOX LOCATIONS (BY OTHERS).
3. POOL CONTRACTOR SHALL PROVIDE SPA TIMER.
4. POOL CONTRACTOR SHALL PROVIDE EMERGENCY SHUT–OFF SWITCH.

## ITEMS PROVIDED BY MECHANICAL AND PLUMBING CONTRACTORS:

(NOT IN POOL CONTRACT)

1. BUILDINGS CONTAINING INDOOR POOLS, POOL EQUIPMENT ROOMS, ACCESS SPACES, BATHHOUSES, DRESSING ROOMS, SHOWER ROOMS AND TOILET SPACES MUST BE VENTILATED IN ACCORDANCE WITH AMERICAN SOCIETY OF HEATING, REFRIGERATING AND AIR–CONDITIONING ENGINEERS STANDARD 62–1989 6.1.1. (MAXIMUM AMBIENT AIR TEMPERATURE OF THE EQUIPMENT ROOM IS 104° F).
2. PROVIDE HEAT EXCHANGERS AND REQUIRED BOILER SIDE CONNECTIONS PER MANUFACTURER'S SPECIFICATIONS AND LOCAL CODES. SEE EQUIPMENT ROOM SCHEDULE WITHIN THE POOL PORTION OF THE CONTRACT DOCUMENTS. MECHANICAL CONTRACTOR SHALL ALSO PROVIDE TEMPERATURE CONTROLS, CONTROL VALVES, HIGH LIMIT SWITCHES, AND OTHER NECESSARY MECHANICAL ITEMS REQUIRED FOR THE POOL HEAT EXCHANGERS. ALSO SEE POOL AND SPA CIRCULATION EQUIPMENT SCHEDULE SHEET FOR ADDITIONAL REQUIREMENTS.
3. PROVIDE FLOOR DRAINS AND SEWER CONNECTIONS AS REQUIRED BY LOCAL CODES AND AS SHOWN ON DRAWINGS (I.E. IN BOTTOM OF BACKWASH SUMP, PUMP PIT AND EQUIPMENT ROOM FLOOR). SIZE SEWER LINE TO HANDLE FILTER WATER EVACUATION RATES AS SHOWN ON PLANS OR AS REGULATED BY LOCAL CODES.
4. PROVIDE POTABLE WATER LINE (SIZED AS SPECIFIED ON DRAWINGS) WITH SHUT–OFF VALVES TO LOCATIONS SHOWN ON DRAWINGS OR AS DIRECTED BY POOL CONTRACTOR.
5. PROVIDE HOSE BIBS IN POOL AREA TO ALLOW FOR A COMPLETE WASH DOWN OF THE POOL DECK.
6. PROVIDE RECESSED HOSE BIB ADJACENT TO THE POOL HANDICAP LIFT, AS SHOWN ON THE HYDRAULIC LIFT DETAIL AND MANUFACTURER'S INSTALLATION INSTRUCTIONS. MINIMUM PRESSURE AT END OF HOSE SHALL BE 55 PSI MINIMUM (MAXIMUM 65 PSI). (HYDRAULIC LIFTS ONLY)
7. CHEMICAL STORAGE CLOSETS / ROOMS SHALL BE VENTILATED SEPARATELY TO AN OUTSIDE LOCATION.
8. PER OSHA AND ANSI REQUIREMENTS, MECHANICAL SHALL PROVIDE AND INSTALL EITHER PLUMBED EYE WASH AND EMERGENCY SHOWER STATION OR SELF CONTAINED GRAVITY FEED EYE WASH AND EMERGENCY SHOWER STATION, IN AREAS WHERE THE EYES OR BODY OF ANY PERSON MAY BE EXPOSED TO INJURIOUS CORROSIVE MATERIALS. STATIONS MUST HAVE TEPID WATER SUPPLY LINES AND DRAIN LINES.

## DRESSING ROOM REQUIREMENTS:

(NOT IN POOL CONTRACT)

1. ALL AREAS AND FIXTURES WITHIN DRESSING ROOMS MUST BE MAINTAINED IN A CLEAN AND SANITARY CONDITION. DRESSING ROOMS MUST BE EQUIPPED WITH MINIMUM FIXTURES AS REQUIRED IN THE SWIMMING POOL CODE.
2. A SEPARATE DRESSING ROOM MUST BE PROVIDED FOR EACH SEX. THE ENTRANCES AND EXITS MUST BE DESIGNED TO BREAK THE LINE OF SIGHT INTO THE DRESSING AREAS FROM OTHER LOCATIONS.
3. DRESSING ROOMS MUST BE CONSTRUCTED OF MATERIALS THAT HAVE SMOOTH, NON–SLIP SURFACES, AND ARE IMPERVIOUS TO MOISTURE.
4. FLOOR MUST SLOPE TO A DRAIN AND BE CONSTRUCTED TO PREVENT ACCUMULATION OF WATER.
5. CARPETING MAY NOT BE INSTALLED ON DRESSING ROOM FLOORS.
6. JUNCTIONS BETWEEN WALLS AND FLOORS MUST BE COVED.
7. PARTITIONS BETWEEN DRESSING CUBICLES MUST BE RAISED AT LEAST 10 INCHES ABOVE THE FLOOR OR MUST BE PLACED ON CONTINUOUS RAISED MASONRY OR CONCRETE BASES AT LEAST FOUR INCHES HIGH.
8. LOCKERS MUST BE SET EITHER ON SOLID MASONRY BASES FOUR INCHES HIGH OR ON LEGS ELEVATING THE BOTTOM LOCKER AT LEAST 10 INCHES ABOVE THE FLOOR.
(a) LOCKERS MUST HAVE LOUVERS FOR VENTILATION.
9. A DRESSING ROOM MUST EXIT TO THE SHALLOWEST AREA OF THE POOL. THE DRESSING ROOM EXIT DOOR AND THE POOL DECK MUST BE SEPARATED BY AT LEAST 10 FEET, 3.05 METERS, AND BE CONNECTED BY AN EASILY CLEANABLE WALKWAY.
10. POTABLE WATER MUST BE PROVIDED AT ALL SHOWER HEADS. WATER HEATERS AND THERMOSTATICALLY CONTROLLED MIXING VALVES MUST BE INACCESSIBLE TO BATHERS AND MUST BE CAPABLE OF PROVIDING 2 GPM OF 90 DEGREE F WATER TO EACH SHOWER HEAD FOR EACH BATHER.
11. SOAP MUST BE DISPENSED AT ALL LAVATORIES. SOAP DISPENSERS MUST BE CONSTRUCTED OF METAL OR PLASTIC. USE OF BAR SOAP IS PROHIBITED.
12. FIXTURES MUST BE DESIGNED SO THAT THEY MAY BE READILY CLEANED. FIXTURES MUST WITHSTAND FREQUENT CLEANING AND DISINFECTING.
13. AT LEAST ONE COVERED WASTE CAN MUST BE PROVIDED IN EACH RESTROOM.

## POOL LAYOUT ON SITE NOTE:

DIMENSIONS SHOWN ON THE POOL AND SPA PLANS ARE FOR REFERENCE ONLY. POOL CONTRACTOR SHALL HAVE POOLS LAID OUT ON SITE BY A PROFESSIONAL SURVEYOR PRIOR TO EXCAVATION. POOL CONTRACTOR IS RESPONSIBLE FOR POOL SPECIFIC SURVEY WORK. AN ELECTRONIC FILE OF THE POOL BASE MAY BE PROVIDED TO THE CONTRACTOR FOR SURVEYOR'S USE. SEE ARCHITECTURAL AND CIVIL DRAWINGS FOR REFERENCE POINTS AND ADDITIONAL SITE INFORMATION.

## DE–WATERING NOTE:

PROVIDE A GROUNDWATER DE–WATERING SYSTEM IF REQUIRED PER THE REQUIREMENTS OF THE GEOTECHNICAL REPORT. IF REQUIRED, THE DE–WATERING SYSTEM SHALL NOT BE IN THE POOL CONTRACT.

## GENERAL NOTES:

1. "POOL" MEANS ANY SWIMMING POOL, SPA POOL, WADING POOL, SPLASH PAD ETC. INCLUDED IN THIS PROJECT.
2. NIPC = NOT IN POOL CONTRACT.
3. ALL PLAN DIMENSIONS ARE POOL WALL TO POOL WALL. (U.O.N.)
4. POOL WATER TEMPERATURES FOR GENERAL USE MUST BE WITHIN THE RANGE OF 82°F TO 86°F.
5. THE MINIMUM WATER TEMPERATURE FOR A POOL IS 78°F. THE MAXIMUM WATER TEMPERATURE FOR A SPA IS 104°F.
6. A PUBLIC POOL MUST BE EQUIPPED WITH A FIRST AID KIT WHICH INCLUDES ALL THE ITEMS LISTED IN THE REQUIRED SAFETY EQUIPMENT NOTES. THE POOL CONTRACTOR SHALL PROVIDE THE OWNER WITH THE FIRST AID KIT.
7. ALL POOLS SHALL COMPLY WITH THE SALT LAKE VALLEY HEALTH DEPARTMENT HEALTH REGULATION #2 DESIGN, CONSTRUCTION AND OPERATION OF POOLS, THE STATE OF UTAH HEALTH REGULATION FOR DESIGN, CONSTRUCTION AND OPERATION OF PUBLIC POOLS, AS WELL AS THE ANSI/NSPI STANDARDS FOR PUBLIC POOLS.
8. ALL CORNERS PROTRUDING INTO POOLS OR SPAS SHALL BE A 2 INCH RADIUS OR LARGER.
9. POOLS SHALL NOT BE LOCATED WHERE GROUND WATER EXISTS ABOVE BOTTOM OF POOL DURING HIGH WATER TABLE OCCURRENCES UNLESS TWO (2) HYDROSTATIC RELIEF VALVES ARE INSTALLED AT THE LOW POINT IN THE POOL.
10. POOL FLOOR SHALL NOT EXCEED A 1'–0" DROP IN ELEVATION FOR EACH 10'–0" IN HORIZONTAL DISTANCE IN WATER DEPTHS LESS THAN 5 FEET AND MAXIMUM 1'–0" DROP IN ELEVATION FOR EACH 3'–0" IN HORIZONTAL DISTANCE IN WATER DEPTHS GREATER THAN 5 FEET.
11. A DIVING BOARD IS NOT PERMITTED ON THESE POOLS.
12. DEPTH MARKERS TO BE AT SIDES AND AT EACH END OF PERIMETER OF POOL.
13. ENGINEERING CONSULTANTS, ARCHITECT, AND POOL CONTRACTOR SHALL NOT BE HELD LIABLE, NOR RESPONSIBLE, FOR ANY LIFE SAFETY ISSUES REGARDING THE OPERATION OF THE POOL AND POOL FACILITIES.
14. PRIOR TO INSTALLATION OF THE POOL, A PLOT PLAN WILL BE SUBMITTED TO THE BUILDING INSPECTION DEPARTMENT FOR APPROVAL. THE FOLLOWING INFORMATION MUST APPEAR ON THE POOL PLOT PLAN:
A. THE DISTANCE FROM THE EDGE OF THE WATER TO ALL FOOTINGS, PROPERTY LINES, AND TOP AND TOES OF SLOPES.
B. THE DEPTH OF THE POOL.
C. THE LOCATION OF EXISTING OR PROPOSED FENCING, COMPLYING WITH FENCE ORDINANCES.
15. PRIOR TO BEGINNING CONSTRUCTION OF THE POOL, THE CONTRACTOR MUST SUBMIT PLANS TO THE LOCAL HEALTH DEPT. AND RECEIVE BACK A COPY OF THE APPROVED PLANS.
16. A DRESSING ROOM MUST EXIT TO THE SHALLOWEST AREA OF THE POOL. THE DRESSING ROOM EXIT DOOR AND THE POOL DECK MUST BE SEPARATED BY AT LEAST 10 FEET, 3.05 METERS, AND BE CONNECTED BY AN EASILY CLEANABLE WALKWAY.
17. A 15 MINUTE (MAXIMUM) TIMER FOR EACH JET PUMP MUST BE PROVIDED AT A LOCATION AWAY FROM THE SPA WATER'S EDGE WHERE BATHERS MUST EXIT SPA TO RESET (MINIMUM 5' FROM WATER'S EDGE). ELECTRICAL CONTRACTOR SHALL PROVIDE, CONDUIT, WIRING, AND SHALL CONNECT TIMER TO THERAPY JET PUMPS IN EQUIPMENT ROOM (NIPC).
18. AN EMERGENCY SHUT–OFF SWITCH MUST BE PROVIDED FOR THE SPA IN ACCORDANCE WITH N.E.C. ARTICLE 680 (MINIMUM 5' FROM WATER'S EDGE). ELECTRICAL CONTRACTOR SHALL PROVIDE CONDUIT, WIRING AND SHALL INTERLOCK SHUT–OFF SWITCH TO EACH SPA PUMP.
19. POOL COVERS AND POOL COVER REELS SHALL BE PROVIDED BY THE OWNER.

## ITEMS PROVIDED BY GENERAL CONTRACTOR:

(NOT IN POOL CONTRACT)

1. NIPC = NOT IN POOL CONTRACTORS CONTRACT.
2. ALL SITE PREPARATION BY GENERAL CONTRACTOR.
3. THE GENERAL CONTRACTOR SHALL VERIFY THE LOCATION OF CABLES, CONDUITS, PIPES, SEWERS AND OTHER UNDERGROUND UTILITIES AND SHALL TAKE PROPER PRECAUTIONS TO AVOID DAMAGE TO SUCH UTILITIES. IN THE EVENT OF A CONFLICT OR DISCREPANCIES, THE GENERAL CONTRACTOR SHALL PROMPTLY NOTIFY THE OWNER AND REQUEST FOR NECESSARY RELOCATION. FAILURE TO FOLLOW THIS PROCEDURE PLACES UPON THE GENERAL CONTRACTOR THE RESPONSIBILITY OF MAKING REPAIR OF REPLACE SUCH DAMAGE AT HIS OWN EXPENSE.
4. RESTROOM FACILITIES AND SHOWERS BY GENERAL CONTRACTOR.
5. FOR POOLS OR SPAS LOCATED OUTDOORS, A FENCE OR OTHER BARRIER IS REQUIRED AND MUST PROVIDE COMPLETE PERIMETER SECURITY OF THE FACILITY, AND BE AT LEAST 6 FEET IN HEIGHT. OPENINGS THROUGH THE FENCE OR BARRIER OTHER THAN ENTRY OR EXIT ACCESS WHEN THE ACCESS IS OPEN, MAY NOT PERMIT A SPHERE GREATER THAN 4 INCHES TO PASS THROUGH IT AT ANY LOCATION. HORIZONTAL MEMBERS SHALL BE EQUAL TO OR MORE THAN 45 INCHES APART. A FENCE OR BARRIER THAT HAS AN ENTRANCE TO THE FACILITY MUST BE EQUIPPED WITH A SELF–CLOSING AND SELF–LOCKING GATE OR DOOR. EXCEPT FOR SELF–LOCKING MECHANISMS, SELF–LATCHING MECHANISMS MUST BE AT LEAST 54 INCHES ABOVE THE GROUND AND MUST BE PROVIDED WITH HARDWARE FOR LOCKING THE GATE WHEN THE FACILITY IS NOT IN USE. A LOCK THAT IS SEPARATE FROM THE LATCH AND A SELF–LOCKING LATCH SHALL BE INSTALLED WITH THE LOCK'S OPERABLE MECHANISM (KEY HOLE, ELECTRONIC SENSOR, OR COMBINATION DIAL) BETWEEN 34 INCHES AND 48 INCHES ABOVE THE GROUND. ALL GATES FOR THE POOL ENCLOSURE SHALL OPEN OUTWARD FROM THE POOL. THE GATE OR DOOR SHALL HAVE NO OPENING GREATER THAN 1/2 INCHES WITHIN 18 INCHES OF THE LATCH RELEASE MECHANISM. POOL FENCE OR BARRIER SHALL ALSO MEET REQUIREMENTS OF LOCAL CODES WHERE THE POOL IS BEING BUILT. THE FENCE OR BARRIER MUST BE BUILT AND INSTALLED PER THE HEALTH DEPARTMENT AND/OR BUILDING DEPARTMENT REQUIREMENTS PRIOR TO FILLING THE POOL WITH WATER.
6. ENCLOSURES FOR INDOOR POOLS SHALL HAVE SELF CLOSING, SELF LATCHING HARDWARE.
7. GENERAL CONTRACTOR TO PROVIDE NECESSARY ELECTRICAL AND MECHANICAL WORK IN POOL AREAS AND EQUIPMENT ROOM INCLUDING: AREA LIGHTING, VENTILATION, DRAINAGE, ETC. ACCORDING TO LOCAL CODES (NIPC).
8. INDOOR AND OUTDOOR AREA DECK LIGHTING REQUIRED PER SWIMMING POOL CODE. SEE ELECTRICAL ITEMS.
9. GENERAL CONTRACTOR TO PROVIDE EQUIPOTENTIAL BONDING GRID FOR POOL DECKING PER THE 2011 NEC ARTICLE 680 OR CURRENT ADOPTED ELECTRICAL CODE, SEE ELECTRICAL NOTES. SEE SCHEMATIC DETAIL 7/WF506.
10. PROVIDE CONCRETE COVERED SURGE TANK, AND BACKWASH / EVACUATION SUMP WITH AN ACCESS COVER, PLASTIC LADDER RUNGS IN EQUIPMENT ROOM AS SHOWN ON PLANS.
11. ALL SURFACE DECK WATER FROM THE CREST OF THE ROLL–OUT DECK SHALL DRAIN AWAY FROM THE POOL 1/4" PER FOOT TO 3/8" PER FOOT TO DECK DRAINS.
11. ALL SURFACE DECK WATER SHALL DRAIN AWAY FROM THE RAISED SPA STRUCTURE 1/4" PER FOOT TO 3/8" PER FOOT TO DECK DRAINS.
12. SURFACE TREATMENT OF WET DECK AREAS SHALL BE IMPERVIOUS AND SLIP RESISTANT. WET DECK TREATMENT SHALL ALSO INCLUDE THE FIRST 15 FT. OF WALKWAYS TO THE SANITARY FACILITIES. SEE ARCHITECTURAL DRAWINGS AND SPECIFICATIONS.
12. POOL DECK AND REQUIRED DECK DRAINS ARE TO BE PROVIDED BY DECK CONTRACTOR PER LOCAL CODE REQUIREMENTS.
13. DECK DEPTH MARKERS, "NO DIVING" AND "NO RUNNING" TILES PROVIDED BY POOL CONTRACTOR AND INSTALLED BY DECK CONTRACTOR.
14. GENERAL CONTRACTOR/OWNER IS RESPONSIBLE FOR FILLING THE POOL WITH WATER.
15. THE FACILITY SHALL HAVE A READILY ACCESSIBLE AREA DESIGNATED AND EQUIPPED FOR EMERGENCY FIRST AID CARE. A SINK SHALL BE PROVIDED IN THIS ROOM
16. DECK CONTRACTOR SHALL THICKEN POOL DECKS AS REQUIRED FOR POOL EQUIPMENT ANCHORS, WHICH ARE SUPPLIED BY THE POOL CONTRACTOR AND INSTALLED BY THE DECK CONTRACTOR.
17. ALL CONCRETE FINISHING FOR THE ALTERNATE BID ITEM POOL SYSTEM FOOTINGS AND FLOOR SLABS SHALL BE PER THE POOL SYSTEM MANUFACTURER'S RECOMMENDATIONS AND TOLERANCES.

## CONFINED SPACE SAFETY NOTE:

THE GENERAL CONTRACTOR IS RESPONSIBLE FOR PROVIDING A CONFINED SPACE SAFETY PLAN PER OSHA REQUIREMENTS PRIOR TO WORK BEING PERFORMED WITHIN THE CONFINED SPACE OF CONCRETE COVERED SURGE TANK,BACKWASH PIT AND ANY OTHER CONFINED SPACES.

## PIPING FIRE PROTECTION NOTE:

PIPING LOCATED IN PLENUMS, FIRE RATED WALLS, OR OTHER AREAS RESTRICTED BY CODE SHALL BE OF THE MATERIAL TYPE REQUIRED OR SHALL BE PROTECTED PER CODE REQUIREMENTS. POOL CONTRACTOR TO COORDINATE WITH MECHANICAL AND GENERAL CONTRACTOR TO VERIFY REQUIREMENTS PRIOR TO INSTALLING PIPE. ALL PENETRATIONS THROUGH FIRE RATED WALLS AND FLOORS SHOULD BE SEALED PER THE REQUIREMENTS OF THE PROJECT SPECIFICATIONS.

## MAXIMUM BATHER LOAD:

ACTIVITY POOL: 222 PERSONS
RAISED SPA : 30 PERSONS

## SANITARY FIXTURES:

MINIMUM REQUIREMENTS (N.I.P.C.)

4 WATER CLOSETS: FEMALE
2 WATER CLOSETS: MALE
2 URINALS: MALE
4 LAVATORIES: FEMALE
4 LAVATORIES: MALE
3 SHOWERS: MALE
3 SHOWERS: FEMALE

MHTN ARCHITECTS
MHTN Architects, Inc.
420 East South Temple
Suite 100
Salt Lake City, Utah 84111
Telephone (801) 595-6700
Telefax (801) 595-6717
www.mhtn.com

Hastings+Chivetta
ARCHITECTURE • PLANNING • ENGINEERING
622 Emerson, Suite 200
St. Louis, MO 63141
Tel. 314.863.5717
Fax. 314.863.2823
www.hastingschivetta.com

Water Design Inc.
5047 S. Galleria Dr.
Murray, Utah 84123
Phone : (801) 261-4009
Fax : (801) 261-4069
www.waterdesigninc.com

BUILDING OFFICIAL STAMP

# UNIVERSITY OF UTAH

# STUDENT LIFE CENTER

1836 E. BALLIF ROAD
SALT LAKE CITY, UTAH 84112

SEAL

LICENSED PROFESSIONAL ENGINEER
CHARLES ROSS ANDERSON
145589-2202
5-15-13
STATE OF UTAH

MHTN PROJECT NO.

DRAWN BY: ACR CHECKED BY: BA

ISSUED:

| NO. | DATE | DESCRIPTION |
|---|---|---|

CONTRACTOR TO VERIFY DRAWINGS IN FIELD USE REFLECT LAST REVISION DATE.

| NO. | DATE | DESCRIPTION |
|---|---|---|

SHEET NAME

GENERAL NOTES

BID DOCUMENTS
MAY 15, 2013

SHEET NUMBER

WF010.0

## POOL STRUCTURAL ITEMS:

1. POOLS AND SPAS BUILT USING THIS PLAN SHALL CONFORM TO APPLICABLE DESIGN CODES INCLUDING THE MOST CURRENT IBC AS ADOPTED BY THE CITY AND COUNTY WHERE THE POOL IS BEING INSTALLED.
2. ALL WORK SHALL BE IN STRICT ACCORDANCE WITH THE LATEST EDITION OF THE INTERNATIONAL BUILDING CODE, UNIFORM BUILDING CODE, ACI 318, ACI506R (GUIDE TO SHOTCRETE), ACI COMPILATION NO. 6, AND LOCAL ORDINANCES. THE MOST STRICT CODE SHALL TAKE PRECEDENCE.
3. POOL CONTRACTOR SHALL VERIFY ALL DIMENSIONS AND CONDITIONS ON SITE. THE ENGINEER SHALL BE CONSULTED IF ANY SURCHARGE OR CONDITIONS DIFFER FROM DETAILS SHOWN HEREIN.
4. POOL CONTRACTOR SHALL BE RESPONSIBLE TO ASSURE ALL DIMENSIONS AND SETBACKS OF THE POOL CONFORM TO THE REQUIREMENTS OF THE APPROVING BUILDING OFFICIALS FOR THE LOCATION WHERE THE POOL IS BEING BUILT. THIS INCLUDES BOTH EXISTING STRUCTURES AND PROPERTY LINES.
5. THE POOL MUST FOUNDED ENTIRELY IN ORIGINAL UNDISTURBED NATIVE SOIL OR FOUNDED ENTIRELY IN COMPACTED FILL SOIL WHICH HAS BEEN COMPACTED TO 95% RELATIVE DENSITY. COMPACTED FILL SOIL MUST BE CERTIFIED BY A LICENSED SOILS ENGINEER.
6. UP TO A LEVEL NOT MORE THAN 24 INCHES BELOW THE RIM OF THE POOL, EXCAVATIONS FOR POOL SHALL BE IN SUITABLE FIRM UNDISTURBED SOIL OR IN SOILS THAT HAVE BEEN COMPACTED TO 95% OF MAX. DENSITY AT OPTIMUM MOISTURE CONTENT UNDER QUALIFIED SUPERVISION AND HAVE BEEN APPROVED BY THE LOCAL BUILDING AUTHORITY. SOILS FOR POOLS SHALL HAVE A MINIMUM SOILS BEARING VALUE OF 2000 LBS. PER SQUARE FOOT. THE POOL CONTRACTOR IS RESPONSIBLE FOR SUBGRADE PREPARATION SO THAT SETTLEMENT IS NEGLIGIBLE TO AVOID UNANTICIPATED STRESS ON CONCRETE WHICH CAN CAUSE CRACKING.
7. POOL CONTRACTOR SHALL PROVIDE ALL SHORING AS REQUIRED.
8. POOL CONTRACTOR SHALL VERIFY ALL CONDITIONS AND DIMENSIONS PRIOR TO PLACING CONCRETE.
9. SHOTCRETE SHALL BE MACHINE MIXED SUCH THAT THE 28 DAY COMPRESSIVE STRENGTH IS 4000 PSI. SHOTCRETE SHALL BE KEPT CONSTANTLY WET FOR A MINIMUM PERIOD OF SEVEN DAYS, OR AS NECESSARY TO INSURE PROPER INITIAL CURE OR ADEQUATE COVERINGS WITH PLASTIC SHEETING THROUGH THE CURING PERIOD. NO CURING COMPOUND WILL BE ALLOWED. NOTE THAT PROVISIONS SHALL BE MADE TO HOLD THE REINFORCING BARS IN PLACE DURING PLACEMENT OF SHOTCRETE TO MAINTAIN CLEARANCE BETWEEN THE STEEL AND THE FACE OF CONCRETE IN ACCORDANCE WITH THE IBC CODE REQUIREMENTS.
10. REINFORCING BARS SHALL BE DEFORMED INTERMEDIATE GRADE AND CONFORM TO ASTM DESIGN, A615, GRADE AS INDICATED ON THE REINFORCING SCHEDULE. THE REINFORCING BARS SHALL BE LAPPED A MINIMUM OF 40 BAR DIAMETERS.
11. THE REINFORCING STEEL CALLED OUT IN ALL STEEL AND SHOTCRETE SCHEDULES IS FOR TOTAL STEEL.
12. DEFINITION OF "ALTERNATE STEEL" IS THE 1st, 2nd, AND 3rd VERTICAL REBARS ADDED TO EACH 12 INCH GRID SPACE.
13. ALL REINFORCING STEEL SHALL BE IN PLACE BEFORE CONCRETE PLACING IS COMMENCED AND SHALL BE NEW, FREE FROM DIRT, OIL, PAINT AND MILL SCALE AND SHALL BE POSITIONED AND OF THE SIZE INDICATED ON THE DRAWINGS, AND SHALL BE SECURED BY NOT LESS THAN 16 GAUGE ANNEALED TIE WIRE. ALL REINFORCEMENT BARS SHALL BE DETAILED, BOLSTERED AND SUPPORTED IN ACCORDANCE WITH ACI STANDARD 315. PROVIDE CONCRETE COVER FOR REBAR AS FOLLOWS:
CONCRETE CAST AGAINST AND PERMANENTLY EXPOSED TO EARTH – 3.00 INCHES
CONCRETE EXPOSED TO EARTH OR WEATHER, #5 BARS AND SMALLER – 1.50 INCHES
CONCRETE EXPOSED TO EARTH OR WEATHER, #5 BARS AND LARGER – 2.00 INCHES
CONCRETE NOT EXPOSED TO EARTH OR WEATHER, SLABS, WALLS AND JOISTS – 0.75 INCHES
CONCRETE NOT EXPOSED TO EARTH OR WEATHER – 1.50 INCHES
14. ALL PIPING SHALL MAINTAIN A MINIMUM ONE (1) INCH CLEARANCE FROM VERTICAL REINFORCING STEEL BARS.
15. ALL STEEL & ELECTRICAL ITEMS IN OR NEAR THE POOL SHALL BE BONDED & GROUNDED IN ACCORDANCE WITH THE MOST CURRENT NATIONAL ELECTRIC CODE (N.E.C.) ARTICLE 680 OR CURRENT ADOPTED N.E.C.
16. ALL CONCRETE PLACEMENT WORK SHALL BE IN ACCORDANCE WITH ACI-301 AND ACI-302. WHEN CONCRETE IS PLACED DURING HOT WEATHER CONFORM TO ACI 305R. WHEN PLACED DURING COLD WEATHER CONFORM TO ACI 306R.
17. IF ENGINEER'S STAMP OF SIGNATURE IS ON THE PLOT PLAN, IT IS INTENDED TO REFER ONLY TO THOSE STRUCTURAL FEATURES CONTAINED ON THIS PLAN.
18. POOLS SHALL NOT BE LOCATED WHERE GROUND WATER EXISTS ABOVE BOTTOM OF POOL DURING HIGH WATER TABLE OCCURRENCES UNLESS TWO (2) HYDROSTATIC RELIEF VALVES ARE INSTALLED AT THE LOW POINT IN THE POOL.
19. THE DESIGN CONTAINED ON THIS PLAN IS NOT APPROVED FOR AREAS WITH COLLAPSIBLE SOILS OR EXPANSIVE SOILS WITH EQUIVALENT FLUID PRESSURES ABOVE THE STATED EQUIVALENT FLUID PRESSURES ON THE STEEL SCHEDULE. IF THESE TYPES OF SOILS ARE PRESENT, ADDITIONAL SOILS ANALYSIS AND ENGINEERING IS REQUIRED.
20. EARTH SLOPES DRAINING TOWARD POOLS SHALL BE INTERCEPTED BY A DRAINAGE SYSTEM DESIGNED TO ASSURE ADEQUATE DRAINAGE OF WATER SO THAT HYDROSTATIC PRESSURES CAN'T BUILD UP BEHIND AND AROUND THE POOL WALLS.
21. BOTTOM OF OUTDOOR POOL SHELL SHALL BE AT LEAST 2 FEET 6 INCHES BELOW GRADE AND BELOW FROST LEVEL.
22. ALL CEMENT FOR CONCRETE WORK SHALL CONFORM TO REQUIREMENTS OF THE STANDARD SPECIFICATIONS FOR THE "PORTLAND CEMENT", SERIAL DESIGNATION C-150 OF THE ASTM AND SHALL BE TYPE 1 OR AS OTHERWISE REQUIRED IN A SOILS REPORT.
23. WATER USED IN CONCRETE SHALL BE POTABLE. CALCIUM CHLORIDE, ALUMINUM CONDUIT, PRODUCTS CONTAINING ALUMINUM OR ANY OTHER MATERIAL INJURIOUS TO CONCRETE SHALL NOT BE USED IN CONCRETE.
24. SHOTCRETE SHALL COMPLY WITH SECTION 1913 OF THE 2009 IBC, INCLUDING AGGREGATE SIZE, REINFORCING SPLICES, REBOUND, CURING AND TESTING.
25. EXPOSURE CLASS PER IBC 1904.2 AND ACI-3184.2 INCLUDES EXPOSURE TO FREEZE THAW FOR THE OUTDOOR POOL ONLY (ALTERNATE BID ITEM 2). SULFATE ATTACK IS NEGLIGIBLE. CONCRETE TO HAVE LOW PERMEABILITY WITH CONSTANT EXPOSURE TO WATER.

## PROJECT SPECIFIC POOL EARTHWORK REQUIREMENTS:

1. SUITABLE SOILS SHALL BE PROVIDED AND PREPARED PER ANY AND ALL SOILS REPORT AND SUBSEQUENT LETTERS OF RECOMMENDATIONS BY GORDON GEOTCHNICAL ENGINEERING INC., THE GEOTECHNICAL ENGINEERS FOR THIS PROJECT. (DATED OCT. 12, 2012 AND JAN 16, 2013)
2. SOILS DESIGN AND INSTALLATION SHALL PROVIDE SUPPORT FOR THE POOL STRUCTURE TO ACHIEVE A 1/16" MAXIMUM DIFFERENTIAL SETTLEMENT TOLERANCE ACROSS THE GUTTER POOL PERIMETER WALLS, WHEN THE POOL IS LOADED.
3. ALL NON-ENGINEERED FILL SOILS OR UNSUITABLE SOILS SHOULD BE COMPLETELY REMOVED.
4. SOFT, LOOSE OR DISTURBED SOILS ENCOUNTERED MUST BE REMOVED TO A MAXIMUM DEPTH OF TWO FEET AND REPLACED WITH STRUCTURAL FILL, PER THE RECOMMENDATIONS OF THE GEOTECHNICAL REPORT.
5. EXCAVATIONS SHALL BE PERFORMED PER THE RECOMMENDATIONS OF THE GEOTECHNICAL REPORT. ALL EXCAVATIONS SHALL BE INSPECTED PERIODICALLY BY QUALIFIED PERSONNAL. IF ANY SIGNS OF INSTABILITY OR EXCESSIVE SLOUGHING ARE NOTED, IMMEDIATE REMEDIAL ACTION MUST BE INITIATED.
6. POOL EXCAVATION TO BE INSPECTED BY GEOTECHNICAL ENGINEER AFTER EXCAVATION, PRIOR TO PLACEMENT OF STRUCTURAL FILL, PRIOR TO PLACEMENT OF FREE DRAINING GRAVEL AND PRIOR TO PLACEMENT OF SHOTCRETE.
7. ANY EXPOSED SUBGRADE, CONSISTING OF UNDISTURBED NATURAL SOILS, MUST BE PROOF-ROLLED BY PASSING MODERATE WEIGHT RUBBER TIRE-MOUNTED CONSTRUCTION EQUIPMENT OVER THE SURFACE AT LEAST TWICE.
8. STRUCTURE FILL SOILS SHALL BE PROVIDED PER THE DEFINITIONS AND REQUIREMENTS OF THE GEOTECHNICAL REPORT.
9. STRUCTURAL FILL SHOULD CONSIST OF GRANULAR MATERIALS COMPACTED TO AT LEAST 95% OF THE MAXIMUM DRY DENSITY AS DETERMINED BY THE AASHTO-T180 (ASTM D-1557) COMPACTION CRITERIA.
9A. NO CLAY SHALL BE INCLUDED IN FILL MATERIAL. UTILIZE GRANULAR SOILS ONLY.
10. ALL STRUCTURAL FILL SHOULD BE PLACED IN LIFTS NOT EXCEEDING EIGHT INCHES IN LOOSE THICKNESS.
11. A FABRIC FILTER SUCH AS MIRAFI 140 N OR EQUIVALENT SHALL BE PLACED BETWEEN GRANULAR FILL/DRAINS AND FINE GRAINED SOILS PER THE RECOMMENDATION OF THE GEOTECHNICAL REPORT.
12. PROVIDE MINIMUM SIX (6) INCHES OF PROPERLY DENSIFIED FREE DRAINING GRAVEL UNDER POOL STRUCTURES.
13. UNDER POOL GRAVELS SHALL SLOPE TO EXTERIOR DRAINAGE FIELD.
14. RAISED SPA SHALL BE SUPPORTED BY A STRUCTURAL SUPPORT SLAB. SEE STRUCTURAL DRAWINGS.
15. THE ACTIVITY POOL AND 50 METER LAP POOL (GUTTER POOLS) SHALL BE LOADED WITH WATER PRIOR TO SETTING THE GUTTER RIM COPING.
16. FOR ADDITIONAL INFORMATION ALSO SEE THE ARCHITECTURAL SPECIFICATIONS, INCLUDING THE GRADING, EXCAVATION, FILL AND BACKFILL SECTIONS.

## ALTERNATE BID 1:

- DELETE BASE BID
- INDOOR ACTIVITY POOL AS SHOWN ON SHEET WF100.1
- INDOOR RAISED SPA AS SHOWN ON SHEET WF100.
- INDOOR 50 METER LAP POOL AS SHOWN ON SHEET WF100.1
- UNDERSLAB PIPING FOR OUTDOOR POOL (STUBBED OUT IN THE EQUIPMENT ROOM AND STUBBED OUT 5' PAST BUILDING AT OUTDOOR DECK)

## ADD ALTERNATE BID 2

- ADD ALTERNATE BID ITEM IN ADDITION TO ALTERNATE BID 1
- OUTDOOR POOL AS SHOWN ON WF100.1

## ALTERNATE BID ITEM:

SEE ARCHITECTURAL SPECIFICATION FOR ALTERNATE BID ITEM NUMBER AND ADDITIONAL DESCRIPTION

PVC LAMINATED STAINLESS STEEL POOL SYSTEMS

PVC LAMINATED STAINLESS STEEL POOL SYSTEMS IN LIEU OF SHOTCRETE CONSTRUCTION.

FOR ALTERNATE 1 POOLS:
- ACTIVITY POOL – CERAMIC 1 TYPE GUTTER SYSTEM WITH RADIUS AND STRAIGHT WALLS. FLOOR MEMBRANE – COMBINATION OF PADDED AND ANTI-SLIP.
- RAISED SPA – SKIMMER TYPE WALL SYSTEM – TILE LINED. PRE-CAST COPING AS SHOWN ON THE CONTRACT DOCUMENTS.
- 50 METER LAP POOL – CERAMIC 1 TYPE GUTTER SYSTEM. FLOOR MEMBRANE – COMBINATION OF ANTI-SLIP AND STANDARD. COMPATIBLE BULKHEAD.

FOR ALTERNATE 2 POOL:
- OUTDOOR LEISURE POOL – SKIMMER CERAMIC TYPE WALL SYSTEM WITH RADIUS AND STRAIGHT WALLS. FLOOR MEMBRANE – COMBINATION OF PADDED AND ANTI-SLIP. PRE-CAST COPING AS SHOWN ON THE CONTRACT DOCUMENTS.

## REQUIRED SAFETY EQUIPMENT

SIX (6) UNITS OF LIFESAVING EQUIPMENT ARE REQUIRED FOR THE TOTAL FACILITY. THE LIFESAVING EQUIPMENT SHALL CONSIST OF THE FOLLOWING:

| | |
|---|---|
| FIVE (5) | RESCUE TUBES – 50 INCHES LONG WITH NYLON MESH – AMERICAN RED CROSS APPROVED |
| ONE (1) | COAST GUARD APPROVED RING BUOY WITH AN ATTACHED ROPE EQUAL IN LENGTH TO THE MAXIMUM WIDTH OF THE POOL PLUS 10 FEET |
| SIX (6) | LIFE POLES OR SHEPHERD'S CROOK TYPE POLES WITH BLUNTED ENDS – 12' LONG (MINIMUM) |

PROVIDE ONE (1) – FIRST AID KIT – WHICH INCLUDES THE FOLLOWING:

EYE DRESSING PACKET (2 UNITS)
TRIANGULAR BANDAGE (2 UNITS)
CPR SHIELD (1 UNIT)
SCISSORS (1 UNIT)
TWEEZERS (1 UNIT)
LATEX GLOVES (6 PAIRS)
1 INCH ADHESIVE COMPRESS (2 UNITS)
2 INCH ADHESIVE COMPRESS (2 UNITS)
3 INCH ADHESIVE COMPRESS (2 UNITS)
4 INCH ADHESIVE COMPRESS (2 UNITS)
3 INCH SQUARE PLAIN GAUZE PAD (2 UNITS)
GAUZE ROLLER BANDAGE (2 UNITS)
PLAIN ABSORBENT GAUZE – 0.5 SQ YDS (1 UNIT)
PLAIN ABSORBENT GAUZE – 24 INCHES x 72 INCHES (1 UNIT)
BANDAGE TAPE (2 UNITS)
BUTTERFLY CLOSURES – 1 BOX (1 UNIT)
3 INCH ACE BANDAGE (1 UNIT)
ASSORTED ADHESIVE BAND-AIDS – 1 BOX (1 UNIT)

PROVIDE ONE (1):
CJ RESCUE 6 SPINEBOARD PACKAGE
100% HIGH DENSITY POLYETHYLENE SPINEBOARD
PROVIDE COMPLETE WITH STRAPS AND HEAD STABILIZATION CAPABILITY.

## DEFERRED SUBMITTALS:

PROVIDE THE DETAILS AND ENGINEERING CALCULATIONS (WET STAMPED AND SIGNED) FOR ALL NON-STRUCTURAL COMPONENTS PERMANENTLY ATTACHED TO STRUCTURES AND THEIR SUPPORTS AND ATTACHMENTS, DESIGNED TO RESIST THE EFFECTS OF EARTHQUAKE MOTIONS IN ACCORDANCE WITH ASCE 7-05. SUBMIT TO THE BUILDING DEPARTMENT AS A DEFERRED SUBMITTAL IF REQUIRED BY THE BUILDING DEPARTMENT / BUILDING INSPECTOR.

**FOR STEEL REINFORCING SCHEDULE SEE SHEET WF412.0**

The entire contents of the attached documents, including all sketches, plans, studies, drawings, schedules and specifications and all copyrights therein are, and shall remain the sole property of Water Design Incorporated. The documents and their contents may not be used, photocopied or reproduced digitally, electronically or in any other manner without the express prior written consent of Water Design Incorporated.

## REQUIRED SIGNS:

(SAFETY / HEALTH SIGN PACKAGE SHALL BE BY THE GENERAL CONTRACTOR)
(NOT IN POOL CONTRACT)
(SIGNS REQUIRED TO BE IN PLAIN VIEW)
(SEE ARCHITECTURAL SPECIFICATION FOR SIGN CONSTRUCTION AND MATERIAL REQUIREMENTS)

## POOL SAFETY SIGNS:

THE FOLLOWING SIGNS SHALL BE POSTED NEAR EACH POOL / SPA WITH LETTERS AT LEAST 4" HIGH WITH A STROKE WIDTH OF AT LEAST ONE-HALF INCH:

"NO RUNNING"
"NO DIVING"

AT 50 METER LAP POOL:
"NO DIVING IN WATER DEPTHS LESS THAN 9FT."

## MAXIMUM BATHER LOAD SIGNS:

A) THE SIGN TITLE SHALL HAVE LETTERS, TWO INCHES IN HEIGHT.
B) MINIMUM ONE-HALF INCH HIGH LETTERS FOR REMAINING BODY OF TEXT.

"50 METER LAP POOL MAXIMUM BATHER LOAD: 315 PERSONS"
"ACTIVITY POOL MAXIMUM BATHER LOAD: 82 PERSONS"
"SPA MAXIMUM BATHER LOAD: 33 PERSONS"
"OUTDOOR POOL MAXIMUM BATHER LOAD: 57 PERSONS" (INCLUDE IF ALT 2 ACCEPTED)

## SPA CAUTION SIGN:

A SPA POOL MUST HAVE AN EASILY READABLE CAUTION SIGN MOUNTED ADJACENT TO THE ENTRANCE TO THE SPA WHICH CONTAINS THE FOLLOWING INFORMATION:

A) THE WORD "CAUTION" CENTERED AT THE TOP OF THE SIGN IN LARGE BOLD LETTERS, TWO INCHES IN HEIGHT.
B) MINIMUM ONE-HALF INCH HIGH LETTERS FOR REMAINING BODY OF TEXT.

- ELDERLY PERSONS AND THOSE SUFFERING FROM HEART DISEASE, DIABETES OR HIGH BLOOD PRESSURE SHOULD CONSULT A PHYSICIAN BEFORE USING THE SPA.
- PERSONS SUFFERING FROM A COMMUNICABLE DISEASE TRANSMISSIBLE VIA WATER MAY NOT USE THE SPA POOL. PERSONS USING PRESCRIPTION MEDICATIONS SHOULD CONSULT A PHYSICIAN BEFORE USING THE SPA.
- INDIVIDUALS UNDER THE INFLUENCE OF ALCOHOL OR OTHER IMPAIRING CHEMICAL SUBSTANCES SHOULD NOT USE THE SPA.
- BATHERS SHOULD NOT USE THE SPA ALONE.
- PREGNANT WOMEN SHOULD NOT USE THE SPA WITHOUT CONSULTING THEIR PHYSICIAN.
- PERSONS SHOULD NOT SPEND MORE THAN 15 MINUTES IN THE SPA IN ANY ONE SESSION.
- CHILDREN UNDER THE AGE OF 14 MUST BE ACCOMPANIED AND SUPERVISED BY AT LEAST ONE RESPONSIBLE ADULT OVER THE AGE OF 18 YEARS OLD.
- CHILDREN UNDER THE AGE OF 5 YEARS ARE PROHIBITED FROM BATHING IN A HOT TUB OR SPA.
- RUNNING OR ENGAGING IN UNSAFE ACTIVITIES OR HORSEPLAY IN OR AROUND THE SPA IS PROHIBITED.

## EMERGENCY TELEPHONE NUMBERS SIGN:

A SIGN WITH 2" HIGH CAPITAL LETTERING MUST BE POSTED IN THE IMMEDIATE VICINITY OF THE POOLS STATING THE LOCATION OF THE NEAREST TELEPHONE AND EMERGENCY TELEPHONE NUMBERS WHICH SHALL INCLUDE:

* 911 (OR OTHER LOCAL EMERGENCY NUMBER)

(IF A TELEPHONE IS NOT AVAILABLE AT POOLSIDE, EMERGENCY TELEPHONE NUMBERS MUST BE PROVIDED IN A FORM THAT CAN BE TAKEN TO A TELEPHONE.)

## PERSONAL HYGIENE AND BEHAVIOR RULES SIGN:

THE FACILITY OPERATOR AND STAFF IS RESPONSIBLE FOR THE ENFORCEMENT OF THE FOLLOWING PERSONAL HYGIENE AND BEHAVIOR RULES:

EASILY READABLE PLACARDS EMBODYING THE FOLLOWING RULES OF PERSONAL HYGIENE AND BEHAVIOR MUST BE CONSPICUOUSLY POSTED IN THE POOL ENCLOSURE AND IN THE DRESSING ROOMS AND LIFEGUARD ROOM. LETTERING SHALL BE MINIMUM ONE-HALF INCH HIGH. SIGN TITLE OF PERSONAL HYGIENE AND BEHAVIOR RULES SHALL HAVE 2 INCH HIGH LETTERING.

1) A BATHER USING THE FACILITY MUST TAKE A CLEANSING SHOWER BEFORE ENTERING THE POOL ENCLOSURE. A BATHER LEAVING THE POOL TO USE THE TOILET MUST TAKE A SECOND CLEANSING SHOWER BEFORE RETURNING TO THE POOL ENCLOSURE.
2) A PERSON HAVING A COMMUNICABLE DISEASE TRANSMISSIBLE BY WATER MUST BE EXCLUDED FROM PUBLIC POOLS. A PERSON HAVING ANY EXPOSED SUB-EPIDERMAL TISSUE, INCLUDING OPEN BLISTERS, CUTS, OR OTHER LESIONS MAY NOT USE A PUBLIC POOL. A PERSON WHO HAS OR HAS HAD DIARRHEA WITHIN THE LAST TWO WEEKS CAUSED BY AN UNKNOWN SOURCE OR FROM ANY COMMUNICABLE OR FECAL-BORNE DISEASE MAY NOT ENTER ANY PUBLIC POOL.
3) ANY CHILD UNDER THREE YEARS OLD, ANY CHILD NOT TOILET TRAINED, AND ANYONE WHO LACKS CONTROL OF DEFECATION SHALL WEAR A WATER RESISTANT SWIM DIAPER AND WATERPROOF SWIMWEAR. SWIM DIAPERS AND WATERPROOF SWIMWEAR SHALL HAVE WAIST AND LEG OPENINGS FITTED SUCH THAT THEY ARE IN CONTACT WITH THE WAIST OR LEG AROUND THE ENTIRE CIRCUMFERENCE.
4) RUNNING, BOISTEROUS PLAY OR ROUGH PLAY, EXCEPT SUPERVISED WATER SPORTS, ARE PROHIBITED.
5) DIAPERS SHALL BE CHANGED ONLY IN RESTROOMS OR CHANGING STATIONS AND SHALL NOT BE CHANGED AT POOLSIDE. THE PERSON OR PERSONS WHO CHANGE THE DIAPER MUST WASH THEIR HANDS THOROUGHLY WITH SOAP BEFORE RETURNING TO THE POOL. THE DIAPERED PERSON MUST UNDERGO A CLEANSING SHOWER BEFORE RETURNING TO THE POOL.

## CHEMICAL STORAGE ROOM DOOR SIGN:

(PROVIDED BY POOL CONTRACTOR)

PROVIDE AN NFPA 704 MARKING SYSTEM IDENTIFICATION PLACARD ON THE ENTRY DOOR TO THE STORAGE AREA OF EACH CHEMICAL STORAGE ROOM AS REQUIRED BY THE NFPA 704.

## MAXIMUM BATHER LOAD:

ALTERNATE BID 1
50 M LAP POOL: 315 PERSONS
ACTIVITY POOL: 82 PERSONS
RAISED SPA : 33 PERSONS

ALTERNATE BID 2
OUTDOOR POOL : 56 PERSONS

## SANITARY FIXTURES:

MINIMUM REQUIREMENTS (N.I.P.C.)

5 WATER CLOSETS: FEMALE
3 WATER CLOSETS: MALE
2 URINALS: MALE
5 LAVATORIES: FEMALE
5 LAVATORIES: MALE
5 SHOWERS: MALE
5 SHOWERS: FEMALE

## CLEANING EQUIPMENT

TWO (2) VACUUMS:
SPECTRUM POOL PRODUCTS
SPECTRACLEAN SERIES MODEL – WILDCAT E 1
INCLUDES: 1.0 HP PUMP WIRED FOR 110 VAC (GFI PROTECTED), 100' ELECTRIC CORD, AND 155 SF CARTRIDGE FILTER IN STAINLESS STEEL CANISTER WITH STAINLESS STEEL CART.
PROVIDE COMPLETE WITH GFCI SHOCK PROTECTOR

TWO (2) – 24" VACUUM HEAD – "FLEX-O-VAC" W/2" HOSE CONNECTION

TWO (2) – 50' VACUUM HOSE 2"ø

TWO (2) – 20' VACUUM HOSE 2"ø

THREE (3) – HANDLE EXTENSION SECTIONS 12' LONG

THREE (3) – LEAF SKIMMERS W/16' LONG HANDLES

THREE (3) – WALL BRUSHES 24" LONG W/16' LONG HANDLE

## WATER QUALITY TEST KIT:

PROVIDE ONE (1) – TEST KIT THAT SHALL INCLUDE TESTING CAPABILITIES FOR:
UNSTABILIZED FREE CHLORINE, FREE RESIDUAL CHLORINE, TOTAL CHLORINE, BROMINE, IODINE, pH, ACID AND BASE DEMAND, TOTAL ALKALINITY AND CYANURIC ACID.
MANUFACTURER: TAYLOR (OR APPROVED EQUAL)

PROVIDE ONE (1) – TEST KIT FOR TOTAL DISSOLVED SOLIDS.

## ELECTRICAL NOTES:

ITEMS PROVIDED AND INSTALLED BY ELECTRICAL CONTRACTOR (NIPC):

1. PROVIDE ELECTRICAL SERVICE AND CONNECTIONS TO ALL PUMP MOTORS, CIRCUIT BREAKERS, DISCONNECTS, PANELS, RELAYS, CONTROLLERS, OR OTHER POOL EQUIPMENT IN EQUIPMENT ROOM.
2. ALL INSTALLATION OF ELECTRICAL EQUIPMENT SHALL COMPLY WITH THE APPLICABLE PROVISIONS SET FORTH IN THE NATIONAL ELECTRICAL CODE AND STATE AND LOCAL ELECTRICAL CODES.
3. PROVIDE ELECTRICAL CONNECTIONS TO HEAT EXCHANGERS AS REQUIRED.
4. PROVIDE BONDING AND GROUNDING OF POOL AND SPA TO EQUIPOTENTIAL BONDING GRID IN DECK (A BARE #8 COPPER WIRE SHALL BE USED UNDER THE SLAB PER THE 2011 NEC SECTION 680.) AT THE POOL/SPA AND MAKE THE FINAL CONNECTION TO THE POOL EQUIPMENT GROUNDING (MOTORS, ETC.) IN THE EQUIPMENT ROOM (INCLUDING G.F.I. PROTECTION PER THE 2011 NEC – ARTICLE 680, OR CURRENT ADOPTED ELECTRICAL CODE). SEE SCHEMATIC DETAIL 7/WF506.
5. PROVIDE POOL EQUIPMENT INTERLOCKING AS STATED IN THE INTERLOCKING NOTES (THIS SHEET).
6. PROVIDE MINIMUM 5 HORIZONTAL FOOT CANDLES OF DECK LIGHTING PER SQUARE FOOT OF POOL DECK AREA (PER SWIMMING POOL CODE).
7. ELECTRICAL WIRING OR POWER SUPPLY LINES SHALL NOT BE ROUTED UNDERGROUND BENEATH THE POOL OR SPA SHELL.
8. ELECTRICAL CONTRACTOR SHALL PROVIDE CONDUIT FROM J-BOX TO LIGHT NICHE AND PROVIDE J-BOX AND HOOK-UP. SEE UNDERWATER LIGHT AND J-BOX DETAILS. SEE ELECTRICAL PLAN (BY OTHERS). ALL ELECTRICAL WORK AND GROUNDING SHALL BE IN ACCORDANCE WITH THE 2011 NEC – ARTICLE 680, OR CURRENT ADOPTED ELECTRICAL CODE. ELECTRICAL COMPONENT SHALL BE IN COMPLIANCE WITH UL 1241, JUNCTION BOXES FOR SWIMMING POOL FIXTURES.
9. PROVIDE LIGHT SWITCHES FOR THE SPA UNDERWATER LIGHTS IN A LOCATION WHERE THEY ARE NOT ACCESSIBLE BY BATHERS. (SWITCH LOCATION DETERMINED BY OWNER/ARCHITECT).
10. NO OUTLETS WITHIN 10 FT. OF POOL. ALL OUTLETS 10 FT. TO 20 FT. FROM POOL TO BE G.F.I. PROTECTED. G.F.I. PROTECTION MUST BE PROVIDED IN ACCORDANCE WITH THE CURRENT NATIONAL ELECTRIC CODE (N.E.C.) AND IN COMPLIANCE WITH LOCAL CODES FOR ALL LIGHTING CIRCUITS, MOTORS, OUTLETS, & ELECTRICAL CIRCUITS IN THE POOL AREA.
11. INSTALL ELECTRICAL OUTLETS (GFI PROTECTED) FOR PORTABLE POOL CLEANING EQUIPMENT. OUTLETS SHALL BE PLACED EVERY 75 FT. AROUND PERIMETER OF EACH POOL (CLEANING EQUIPMENT GENERALLY HAS 75 FT. OF POWER CORD.). NO OUTLETS WITHIN 10' OF POOLS. (VACUUM: 1.0 HP PUMP, 115 VAC)
12. ELECTRICAL CONTRACTOR SHALL INSTALL THE EMERGENCY SHUT-OFF SWITCH AND 15 MINUTE MAXIMUM THERAPY PUMP TIMER INCLUDING WIRING, CONDUIT, AND CONNECTIONS IN ACCORDANCE WITH THE 2011 NEC – ARTICLE 680, OR CURRENT ADOPTED ELECTRICAL CODE. TIMER AND SHUT OFF SWITCH SHALL BE INSTALLED A MINIMUM OF 5' AWAY FROM THE SPA WATER'S EDGE, AND WHERE A BATHER MUST EXIT THE SPA TO RESET. TIMER AND SHUT OFF SWITCH SHALL BE PROVIDED BY THE POOL CONTRACTOR.

ITEMS PROVIDED AND INSTALLED BY POOL CONTRACTOR:

1. POOL CONTRACTOR SHALL BE RESPONSIBLE FOR BONDING OF ALL EQUIPMENT AND METAL ITEMS IN OR NEAR THE POOL, INCLUDING: LIGHTS, NICHES, RAILINGS, HANDICAP LIFT SLEEVE, REINFORCING STEEL, ETC. WITH A #8 BARE GROUND WIRE. ALL BONDING SHALL BE PER THE 2011 NEC – ARTICLE 680, OR CURRENT ADOPTED ELECTRICAL CODE.

2. POOL CONTRACTOR SHALL PROVIDE FIRST 4'-0" OF CONDUIT AND SUFFICIENT LENGTH OF CORD FROM EACH UNDERWATER LIGHT TO ITS J-BOX AND TO ALLOW FOR LIGHT TO REACH DECK FOR RE-LAMPING. SEE JUNCTION BOX DETAIL. SEE ELECTRICAL PLANS FOR J-BOX LOCATIONS (BY OTHERS).
3. POOL CONTRACTOR SHALL PROVIDE SPA TIMER.
4. POOL CONTRACTOR SHALL PROVIDE EMERGENCY SHUT-OFF SWITCH.

## ITEMS PROVIDED BY MECHANICAL AND PLUMBING CONTRACTORS:

(NOT IN POOL CONTRACT)

1. BUILDINGS CONTAINING INDOOR POOLS, POOL EQUIPMENT ROOMS, ACCESS SPACES, BATHHOUSES, DRESSING ROOMS, SHOWER ROOMS AND TOILET SPACES MUST BE VENTILATED IN ACCORDANCE WITH AMERICAN SOCIETY OF HEATING, REFRIGERATING AND AIR-CONDITIONING ENGINEERS STANDARD 62-1989 6.1.1. (MAXIMUM AMBIENT AIR TEMPERATURE OF THE EQUIPMENT ROOM IS 104° F).
2. PROVIDE HEAT EXCHANGERS AND REQUIRED BOILER SIDE CONNECTIONS PER MANUFACTURER'S SPECIFICATIONS AND LOCAL CODES. SEE EQUIPMENT ROOM SCHEDULE WITHIN THE POOL PORTION OF THE CONTRACT DOCUMENTS. MECHANICAL CONTRACTOR SHALL ALSO PROVIDE TEMPERATURE CONTROLS, CONTROL VALVES, HIGH LIMIT SWITCHES, AND OTHER NECESSARY MECHANICAL ITEMS REQUIRED FOR THE POOL HEAT EXCHANGERS. ALSO SEE POOL AND SPA CIRCULATION EQUIPMENT SCHEDULE SHEET FOR ADDITIONAL REQUIREMENTS.
3. PROVIDE FLOOR DRAINS AND SEWER CONNECTIONS AS REQUIRED BY LOCAL CODES AND AS SHOWN ON DRAWINGS (I.E. IN BOTTOM OF BACKWASH SUMP, PUMP PIT AND EQUIPMENT ROOM FLOOR). SIZE SEWER LINE TO HANDLE FILTER WATER EVACUATION RATES AS SHOWN ON PLANS OR AS REGULATED BY LOCAL CODES.
4. PROVIDE POTABLE WATER LINE (SIZED AS SPECIFIED ON DRAWINGS) WITH SHUT-OFF VALVES TO LOCATIONS SHOWN ON DRAWINGS OR AS DIRECTED BY POOL CONTRACTOR.
5. PROVIDE HOSE BIBS IN POOL AREA TO ALLOW FOR A COMPLETE WASH DOWN OF THE POOL DECK.
6. PROVIDE RECESSED HOSE BIB ADJACENT TO THE POOL HANDICAP LIFT, AS SHOWN ON THE HYDRAULIC LIFT DETAIL AND MANUFACTURER'S INSTALLATION INSTRUCTIONS. MINIMUM PRESSURE AT END OF HOSE SHALL BE 55 PSI MINIMUM (MAXIMUM 65 PSI). (HYDRAULIC LIFTS ONLY)
7. CHEMICAL STORAGE CLOSETS / ROOMS SHALL BE VENTILATED SEPARATELY TO AN OUTSIDE LOCATION.
8. PER OSHA AND ANSI REQUIREMENTS, MECHANICAL SHALL PROVIDE AND INSTALL EITHER PLUMBED EYE WASH AND EMERGENCY SHOWER STATION OR SELF CONTAINED GRAVITY FEED EYE WASH AND EMERGENCY SHOWER STATION, IN AREAS WHERE THE EYES OR BODY OF ANY PERSON MAY BE EXPOSED TO INJURIOUS CORROSIVE MATERIALS. STATIONS MUST HAVE TEPID WATER SUPPLY LINES AND DRAIN LINES.

## DRESSING ROOM REQUIREMENTS:

(NOT IN POOL CONTRACT)

1. ALL AREAS AND FIXTURES WITHIN DRESSING ROOMS MUST BE MAINTAINED IN A CLEAN AND SANITARY CONDITION. DRESSING ROOMS MUST BE EQUIPPED WITH MINIMUM FIXTURES AS REQUIRED IN THE SWIMMING POOL CODE.
2. A SEPARATE DRESSING ROOM MUST BE PROVIDED FOR EACH SEX. THE ENTRANCES AND EXITS MUST BE DESIGNED TO BREAK THE LINE OF SIGHT INTO THE DRESSING AREAS FROM OTHER LOCATIONS.
3. DRESSING ROOMS MUST BE CONSTRUCTED OF MATERIALS THAT HAVE SMOOTH, NON-SLIP SURFACES, AND ARE IMPERVIOUS TO MOISTURE.
4. FLOOR MUST SLOPE TO A DRAIN AND BE CONSTRUCTED TO PREVENT ACCUMULATION OF WATER.
5. CARPETING MAY NOT BE INSTALLED ON DRESSING ROOM FLOORS.
6. JUNCTIONS BETWEEN WALLS AND FLOORS MUST BE COVED.
7. PARTITIONS BETWEEN DRESSING CUBICLES MUST BE RAISED AT LEAST 10 INCHES ABOVE THE FLOOR OR MUST BE PLACED ON CONTINUOUS RAISED MASONRY OR CONCRETE BASES AT LEAST FOUR INCHES HIGH.
8. LOCKERS MUST BE SET EITHER ON SOLID MASONRY BASES FOUR INCHES HIGH OR ON LEGS ELEVATING THE BOTTOM LOCKER AT LEAST 10 INCHES ABOVE THE FLOOR.
   (a) LOCKERS MUST HAVE LOUVERS FOR VENTILATION.
9. A DRESSING ROOM MUST EXIT TO THE SHALLOWEST AREA OF THE POOL. THE DRESSING ROOM EXIT DOOR AND THE POOL DECK MUST BE SEPARATED BY AT LEAST 10 FEET, 3.05 METERS, AND BE CONNECTED BY AN EASILY CLEANABLE WALKWAY.
10. POTABLE WATER MUST BE PROVIDED AT ALL SHOWER HEADS. WATER HEATERS AND THERMOSTATICALLY CONTROLLED MIXING VALVES MUST BE INACCESSIBLE TO BATHERS AND MUST BE CAPABLE OF PROVIDING 2 GPM OF 90 DEGREE F WATER TO EACH SHOWER HEAD FOR EACH BATHER.
11. SOAP MUST BE DISPENSED AT ALL LAVATORIES. SOAP DISPENSERS MUST BE CONSTRUCTED OF METAL OR PLASTIC. USE OF BAR SOAP IS PROHIBITED.
12. FIXTURES MUST BE DESIGNED SO THAT THEY MAY BE READILY CLEANED. FIXTURES MUST WITHSTAND FREQUENT CLEANING AND DISINFECTING.
13. AT LEAST ONE COVERED WASTE CAN MUST BE PROVIDED IN EACH RESTROOM.

## POOL LAYOUT ON SITE NOTE:

DIMENSIONS SHOWN ON THE POOL AND SPA PLANS ARE FOR REFERENCE ONLY. POOL CONTRACTOR SHALL HAVE POOLS LAID OUT ON SITE BY A PROFESSIONAL SURVEYOR PRIOR TO EXCAVATION. POOL CONTRACTOR IS RESPONSIBLE FOR POOL SPECIFIC SURVEY WORK. AN ELECTRONIC FILE OF THE POOL BASE MAY BE PROVIDED TO THE CONTRACTOR FOR SURVEYOR'S USE. SEE ARCHITECTURAL AND CIVIL DRAWINGS FOR REFERENCE POINTS AND ADDITIONAL SITE INFORMATION.

## DE-WATERING NOTE:

PROVIDE A GROUNDWATER DE-WATERING SYSTEM IF REQUIRED PER THE REQUIREMENTS OF THE GEOTECHNICAL REPORT. IF REQUIRED, THE DE-WATERING SYSTEM SHALL NOT BE IN THE POOL CONTRACT.

## GENERAL NOTES:

1. "POOL" MEANS ANY SWIMMING POOL, SPA POOL, WADING POOL, SPLASH PAD ETC. INCLUDED IN THIS PROJECT.
2. NIPC = NOT IN POOL CONTRACT.
3. ALL PLAN DIMENSIONS ARE POOL WALL TO POOL WALL. (U.O.N.)
4. POOL WATER TEMPERATURES FOR GENERAL USE MUST BE WITHIN THE RANGE OF 82°F TO 86°F.
5. THE MINIMUM WATER TEMPERATURE FOR A POOL IS 78°F. THE MAXIMUM WATER TEMPERATURE FOR A SPA IS 104°F.
6. A PUBLIC POOL MUST BE EQUIPPED WITH A FIRST AID KIT WHICH INCLUDES ALL THE ITEMS LISTED IN THE REQUIRED SAFETY EQUIPMENT NOTES. THE POOL CONTRACTOR SHALL PROVIDE THE OWNER WITH THE FIRST AID KIT.
7. ALL POOLS SHALL COMPLY WITH THE SALT LAKE VALLEY HEALTH DEPARTMENT HEALTH REGULATION #2 DESIGN, CONSTRUCTION AND OPERATION OF POOLS, THE STATE OF UTAH HEALTH REGULATION FOR DESIGN, CONSTRUCTION AND OPERATION OF PUBLIC POOLS, AS WELL AS THE ANSI/NSPI STANDARDS FOR PUBLIC POOLS.
8. ALL CORNERS PROTRUDING INTO POOLS OR SPAS SHALL BE A 2 INCH RADIUS OR LARGER.
9. POOLS SHALL NOT BE LOCATED WHERE GROUND WATER EXISTS ABOVE BOTTOM OF POOL DURING HIGH WATER TABLE OCCURRENCES UNLESS TWO (2) HYDROSTATIC RELIEF VALVES ARE INSTALLED AT THE LOW POINT IN THE POOL.
10. POOL FLOOR SHALL NOT EXCEED A 1'-0" DROP IN ELEVATION FOR EACH 10'-0" IN HORIZONTAL DISTANCE IN WATER DEPTHS LESS THAN 5 FEET AND MAXIMUM 1'-0" DROP IN ELEVATION FOR EACH 3'-0" IN HORIZONTAL DISTANCE IN WATER DEPTHS GREATER THAN 5 FEET.
11. A DIVING BOARD IS NOT PERMITTED ON THESE POOLS.
12. DEPTH MARKERS TO BE AT SIDES AND AT EACH END OF PERIMETER OF POOL.
13. ENGINEERING CONSULTANTS, ARCHITECT, AND POOL CONTRACTOR SHALL NOT BE HELD LIABLE, NOR RESPONSIBLE, FOR ANY LIFE SAFETY ISSUES REGARDING THE OPERATION OF THE POOL AND POOL FACILITIES.
14. PRIOR TO INSTALLATION OF THE POOL, A PLOT PLAN WILL BE SUBMITTED TO THE BUILDING INSPECTION DEPARTMENT FOR APPROVAL. THE FOLLOWING INFORMATION MUST APPEAR ON THE POOL PLOT PLAN:
   A. THE DISTANCE FROM THE EDGE OF THE WATER TO ALL FOOTINGS, PROPERTY LINES, AND TOP AND TOES OF SLOPES.
   B. THE DEPTH OF THE POOL.
   C. THE LOCATION OF EXISTING OR PROPOSED FENCING, COMPLYING WITH FENCE ORDINANCES.
15. PRIOR TO BEGINNING CONSTRUCTION OF THE POOL, THE CONTRACTOR MUST SUBMIT PLANS TO THE LOCAL HEALTH DEPT. AND RECEIVE BACK A COPY OF THE APPROVED PLANS.
16. A DRESSING ROOM MUST EXIT TO THE SHALLOWEST AREA OF THE POOL. THE DRESSING ROOM EXIT DOOR AND THE POOL DECK MUST BE SEPARATED BY AT LEAST 10 FEET, 3.05 METERS, AND BE CONNECTED BY AN EASILY CLEANABLE WALKWAY.
17. A 15 MINUTE (MAXIMUM) TIMER FOR EACH JET PUMP MUST BE PROVIDED AT A LOCATION AWAY FROM THE SPA WATER'S EDGE WHERE BATHERS MUST EXIT SPA TO RESET (MINIMUM 5' FROM WATER'S EDGE). ELECTRICAL CONTRACTOR SHALL PROVIDE, CONDUIT, WIRING, AND SHALL CONNECT TIMER TO THERAPY JET PUMPS IN EQUIPMENT ROOM (NIPC).
18. AN EMERGENCY SHUT-OFF SWITCH MUST BE PROVIDED FOR THE SPA IN ACCORDANCE WITH N.E.C. ARTICLE 680 (MINIMUM 5' FROM WATER'S EDGE). ELECTRICAL CONTRACTOR SHALL PROVIDE CONDUIT, WIRING AND SHALL INTERLOCK SHUT-OFF SWITCH TO EACH SPA PUMP.
19. POOL COVERS AND POOL COVER REELS SHALL BE PROVIDED BY THE OWNER.

## ITEMS PROVIDED BY GENERAL CONTRACTOR:

(NOT IN POOL CONTRACT)

1. NIPC = NOT IN POOL CONTRACTORS CONTRACT.
2. ALL SITE PREPARATION BY GENERAL CONTRACTOR.
3. THE GENERAL CONTRACTOR SHALL VERIFY THE LOCATION OF CABLES, CONDUITS, PIPES, SEWERS AND OTHER UNDERGROUND UTILITIES AND SHALL TAKE PROPER PRECAUTIONS TO AVOID DAMAGE TO SUCH UTILITIES. IN THE EVENT OF A CONFLICT OR DISCREPANCIES, THE GENERAL CONTRACTOR SHALL PROMPTLY NOTIFY THE OWNER AND REQUEST FOR NECESSARY RELOCATION. FAILURE TO FOLLOW THIS PROCEDURE PLACES UPON THE GENERAL CONTRACTOR THE RESPONSIBILITY OF MAKING REPAIR OF REPLACE SUCH DAMAGE AT HIS OWN EXPENSE.
4. RESTROOM FACILITIES AND SHOWERS BY GENERAL CONTRACTOR.
5. FOR POOLS OR SPAS LOCATED OUTDOORS, A FENCE OR OTHER BARRIER IS REQUIRED AND MUST PROVIDE COMPLETE PERIMETER SECURITY OF THE FACILITY, AND BE AT LEAST 6 FEET IN HEIGHT. OPENINGS THROUGH THE FENCE OR BARRIER OTHER THAN ENTRY OR EXIT ACCESS WHEN THE ACCESS IS OPEN, MAY NOT PERMIT A SPHERE GREATER THAN 4 INCHES TO PASS THROUGH IT AT ANY LOCATION. HORIZONTAL MEMBERS SHALL BE EQUAL TO OR MORE THAN 45 INCHES APART. A FENCE OR BARRIER THAT HAS AN ENTRANCE TO THE FACILITY MUST BE EQUIPPED WITH A SELF-CLOSING AND SELF-LOCKING GATE OR DOOR. EXCEPT FOR SELF-LOCKING MECHANISMS, SELF-LATCHING MECHANISMS MUST BE AT LEAST 54 INCHES ABOVE THE GROUND AND MUST BE PROVIDED WITH HARDWARE FOR LOCKING THE GATE WHEN THE FACILITY IS NOT IN USE. A LOCK THAT IS SEPARATE FROM THE LATCH AND A SELF-LOCKING LATCH SHALL BE INSTALLED WITH THE LOCK'S OPERABLE MECHANISM (KEY HOLE, ELECTRONIC SENSOR, OR COMBINATION DIAL) BETWEEN 34 INCHES AND 48 INCHES ABOVE THE GROUND. ALL GATES FOR THE POOL ENCLOSURE SHALL OPEN OUTWARD FROM THE POOL. THE GATE OR DOOR SHALL HAVE NO OPENING GREATER THAN 1/2 INCHES WITHIN 18 INCHES OF THE LATCH RELEASE MECHANISM. POOL FENCE OR BARRIER SHALL ALSO MEET REQUIREMENTS OF LOCAL CODES WHERE THE POOL IS BEING BUILT. THE FENCE OR BARRIER MUST BE BUILT AND INSTALLED PER THE HEALTH DEPARTMENT AND/OR BUILDING DEPARTMENT REQUIREMENTS PRIOR TO FILLING THE POOL WITH WATER.
6. ENCLOSURES FOR INDOOR POOLS SHALL HAVE SELF CLOSING, SELF LATCHING HARDWARE.
7. GENERAL CONTRACTOR TO PROVIDE NECESSARY ELECTRICAL AND MECHANICAL WORK IN POOL AREAS AND EQUIPMENT ROOM INCLUDING: AREA LIGHTING, VENTILATION, DRAINAGE, ETC. ACCORDING TO LOCAL CODES (NIPC).
8. INDOOR AND OUTDOOR AREA DECK LIGHTING REQUIRED PER SWIMMING POOL CODE. SEE ELECTRICAL ITEMS.
9. GENERAL CONTRACTOR TO PROVIDE EQUIPOTENTIAL BONDING GRID FOR POOL DECKING PER THE 2011 NEC ARTICLE 680 OR CURRENT ADOPTED ELECTRICAL CODE, SEE ELECTRICAL NOTES. SEE SCHEMATIC DETAIL 7/WF506.
10. PROVIDE CONCRETE COVERED SURGE TANK, AND BACKWASH / EVACUATION SUMP WITH AN ACCESS COVER, PLASTIC LADDER RUNGS IN EQUIPMENT ROOM AS SHOWN ON PLANS.
11. ALL SURFACE DECK WATER FROM THE CREST OF THE ROLL-OUT DECK SHALL DRAIN AWAY FROM THE POOL 1/4" PER FOOT TO 3/8" PER FOOT TO DECK DRAINS.
11. ALL SURFACE DECK WATER SHALL DRAIN AWAY FROM THE RAISED SPA STRUCTURE 1/4" PER FOOT TO 3/8" PER FOOT TO DECK DRAINS.
12. SURFACE TREATMENT OF WET DECK AREAS SHALL BE IMPERVIOUS AND SLIP RESISTANT. WET DECK TREATMENT SHALL ALSO INCLUDE THE FIRST 15 FT. OF WALKWAYS TO THE SANITARY FACILITIES. SEE ARCHITECTURAL DRAWINGS AND SPECIFICATIONS.
12. POOL DECK AND REQUIRED DECK DRAINS ARE TO BE PROVIDED BY DECK CONTRACTOR PER LOCAL CODE REQUIREMENTS.
13. DECK DEPTH MARKERS, "NO DIVING" AND "NO RUNNING" TILES PROVIDED BY POOL CONTRACTOR AND INSTALLED BY DECK CONTRACTOR.
14. GENERAL CONTRACTOR/OWNER IS RESPONSIBLE FOR FILLING THE POOL WITH WATER.
15. THE FACILITY SHALL HAVE A READILY ACCESSIBLE AREA DESIGNATED AND EQUIPPED FOR EMERGENCY FIRST AID CARE. A SINK SHALL BE PROVIDED IN THIS ROOM
16. DECK CONTRACTOR SHALL THICKEN POOL DECKS AS REQUIRED FOR POOL EQUIPMENT ANCHORS, WHICH ARE SUPPLIED BY THE POOL CONTRACTOR AND INSTALLED BY THE DECK CONTRACTOR.
17. ALL CONCRETE FINISHING FOR THE ALTERNATE BID ITEM POOL SYSTEM FOOTINGS AND FLOOR SLABS SHALL BE PER THE POOL SYSTEM MANUFACTURER'S RECOMMENDATIONS AND TOLERANCES.

## CONFINED SPACE SAFETY NOTE:

THE GENERAL CONTRACTOR IS RESPONSIBLE FOR PROVIDING A CONFINED SPACE SAFETY PLAN PER OSHA REQUIREMENTS PRIOR TO WORK BEING PERFORMED WITHIN THE CONFINED SPACE OF CONCRETE COVERED SURGE TANK,BACKWASH PIT AND ANY OTHER CONFINED SPACES.

## PIPING FIRE PROTECTION NOTE:

PIPING LOCATED IN PLENUMS, FIRE RATED WALLS, OR OTHER AREAS RESTRICTED BY CODE SHALL BE OF THE MATERIAL TYPE REQUIRED OR SHALL BE PROTECTED PER CODE REQUIREMENTS. POOL CONTRACTOR TO COORDINATE WITH MECHANICAL AND GENERAL CONTRACTOR TO VERIFY REQUIREMENTS PRIOR TO INSTALLING PIPE. ALL PENETRATIONS THROUGH FIRE RATED WALLS AND FLOORS SHOULD BE SEALED PER THE REQUIREMENTS OF THE PROJECT SPECIFICATIONS.

## SAFETY AND ACCESSIBILITY NOTES:

SAFETY ITEMS, REQUIRED SIGNS, HEALTH ISSUES, AND DRESSING ROOM REQUIREMENTS THAT ARE INDICATED ON THE DRAWINGS, OR IN THE SPECIFICATIONS ARE FOR GENERAL GUIDANCE ONLY. THE POOL CONTRACTOR, AND/OR THE OWNER/OPERATOR OF THE FACILITY SHALL BE RESPONSIBLE FOR FURNISHING AND MAINTAINING ALL ITEMS REQUIRED BY THE REGULATIONS FOR THE DESIGN, CONSTRUCTION, AND OPERATION OF PUBLIC SWIMMING POOLS.

THE AMERICANS WITH DISABILITIES ACT REQUIRES: WHEN COMMON-USE OR PUBLIC SWIMMING POOLS, HOT TUBS, SPAS AND SIMILAR FACILITIES ARE PROVIDED, THEY SHALL BE ACCESSIBLE.

MHTN ARCHITECTS
MHTN Architects, Inc.
420 East South Temple
Suite 100
Salt Lake City, Utah 84111
Telephone (801) 595-6700
Telefax (801) 595-6717
www.mhtn.com

Hastings+Chivetta
ARCHITECTURE • PLANNING • ENGINEERING
622 Emerson, Suite 200
St. Louis, MO 63141
Tel. 314.863.5717
Fax. 314.863.2823
www.hastingschivetta.com

Water Design Inc.
5047 S. Galleria Dr.
Murray, Utah 84123
Phone : (801) 261-4009
Fax : (801) 261-4069
www.waterdesigninc.com

BUILDING OFFICIAL STAMP

UNIVERSITY OF UTAH
STUDENT LIFE CENTER
1836 E. BALLIF ROAD
SALT LAKE CITY, UTAH 84112

SEAL

LICENSED PROFESSIONAL ENGINEER
CHARLES ROSS ANDERSON
145589-2202
5-15-13
STATE OF UTAH

MHTN PROJECT NO.
DRAWN BY: ACR CHECKED BY: BA

ISSUED:

| NO. | DATE | DESCRIPTION |
|---|---|---|

CONTRACTOR TO VERIFY DRAWINGS IN FIELD USE REFLECT LAST REVISION DATE.

| NO. | DATE | DESCRIPTION |
|---|---|---|

SHEET NAME
GENERAL NOTES
ALTERNATE BID

BID DOCUMENTS
MAY 15, 2013

SHEET NUMBER
WF010.1

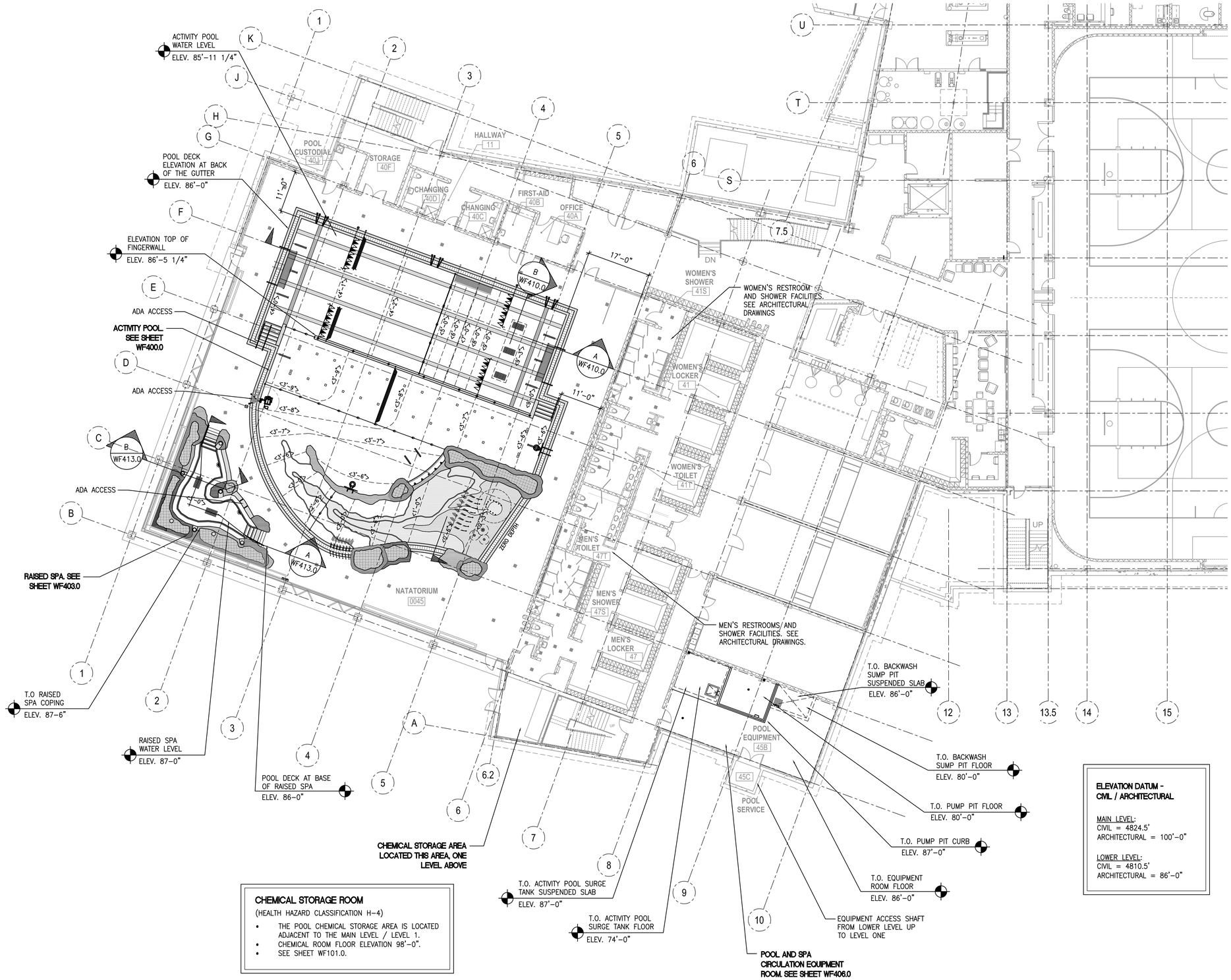


## CHEMICAL STORAGE ROOM

(HEALTH HAZARD CLASSIFICATION H-4)

- THE POOL CHEMICAL STORAGE AREA IS LOCATED ADJACENT TO THE MAIN LEVEL / LEVEL 1.
- CHEMICAL ROOM FLOOR ELEVATION 98'-0".
- SEE SHEET WF101.0.

## ELEVATION DATUM - CIVIL / ARCHITECTURAL

MAIN LEVEL:
CIVIL = 4824.5'
ARCHITECTURAL = 100'-0"

LOWER LEVEL:
CIVIL = 4810.5'
ARCHITECTURAL = 86'-0"

# OVERALL ACTIVITY POOL AND SPA PLAN - LOWER LEVEL

SCALE: 3/32" = 1'-0"

N TRUE NORTH

## BASE BID:

- THE INDOOR ACTIVITY POOL AS SHOWN ON THIS SHEET
- THE INDOOR RAISED SPA AS SHOWN ON THIS SHEET

The entire contents of the attached documents, including all sketches, plans, studies, drawings, schedules and specifications and all copyrights therein are, and shall remain the sole property of Water Design Incorporated. The documents and their contents may not be used, photocopied or reproduced digitally, electronically or in any other manner without the express prior written consent of Water Design Incorporated.

MHTN
ARCHITECTS
MHTN Architects, Inc.
420 East South Temple
Suite 100
Salt Lake City, Utah 84111
Telephone (801) 595-6700
Telefax (801) 595-6717
www.mhtn.com

Hastings+Chivetta
ARCHITECTURE • PLANNING • ENGINEERING
622 Emerson, Suite 200
St. Louis, MO 63141
Tel. 314.863.5717
Fax. 314.863.2823
www.hastingschivetta.com

Water Design Inc.
5047 S. Galleria Dr.
Murray, Utah 84123
Phone : (801) 261-4009
Fax : (801) 261-4069
www.waterdesigninc.com

BUILDING OFFICIAL STAMP

# UNIVERSITY OF UTAH
## STUDENT LIFE CENTER
1836 E. BALLIF ROAD
SALT LAKE CITY, UTAH 84112

SEAL

MHTN PROJECT NO.

DRAWN BY: ACR CHECKED BY: BA

ISSUED:

| NO. | DATE | DESCRIPTION |
|---|---|---|
| | | |

CONTRACTOR TO VERIFY DRAWINGS IN FIELD USE REFLECT LAST REVISION DATE.

| NO. | DATE | DESCRIPTION |
|---|---|---|
| | | |

SHEET NAME

LOWER LEVEL OVERALL POOL PLAN

BID DOCUMENTS
MAY 15, 2013

SHEET NUMBER

WF100.0

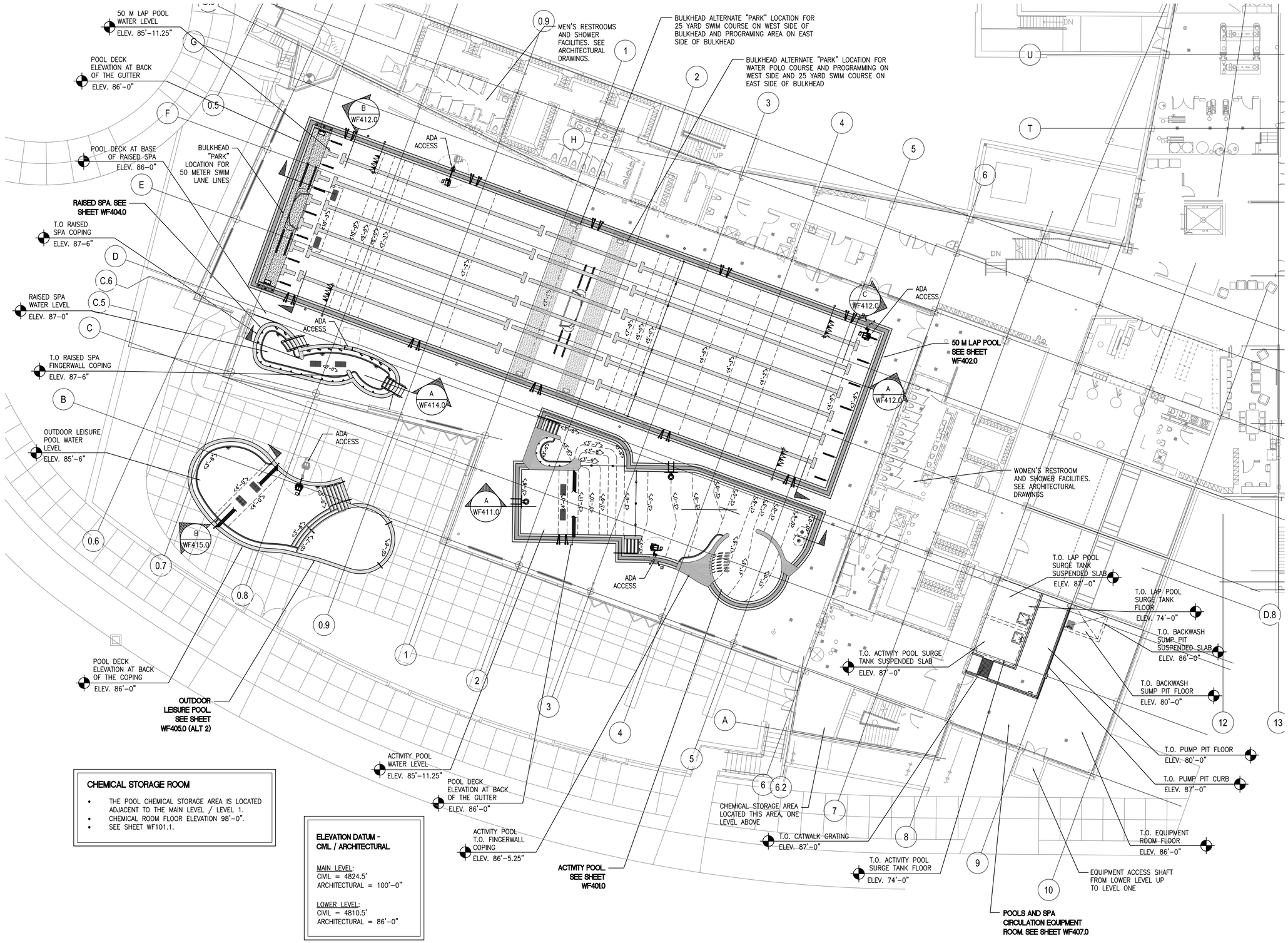


## CHEMICAL STORAGE ROOM

- THE POOL CHEMICAL STORAGE AREA IS LOCATED ADJACENT TO THE MAIN LEVEL / LEVEL 1.
- CHEMICAL ROOM FLOOR ELEVATION 98'-0".
- SEE SHEET WF101.1.

## ELEVATION DATUM - CIVIL / ARCHITECTURAL

MAIN LEVEL:
CIVIL = 4824.5'
ARCHITECTURAL = 100'-0"

LOWER LEVEL:
CIVIL = 4810.5'
ARCHITECTURAL = 86'-0"

# OVERALL POOLS AND SPA PLAN - LOWER LEVEL - ALTERNATE BID

SCALE: 3/32" = 1'-0"

## ALTERNATE BID ITEMS:

ALTERNATE BID 1:
- THE INDOOR POOLS, THEIR EQUIPMENT AND PIPING SHOWN ON THIS SHEET.
- THE OUTDOOR LEISURE POOL UNDER-DECK PIPING ONLY. (PIPING SHALL BE STUBBED INTO THE EQUIPMENT ROOM AND STUBBED OUT 5 FEET PAST THE EXTERIOR BUILDING WALL)

ALTERNATE BID 2:
- THE OUTDOOR LEISURE POOL, EQUIPMENT, EQUIPMENT ROOM PIPING, AND PIPING AT POOL.

The entire contents of the attached documents, including all sketches, plans, studies, drawings, schedules and specifications and all copyrights therein are, and shall remain the sole property of Water Design Incorporated. The documents and their contents may not be used, photocopied or reproduced digitally, electronically or in any other manner without the express prior written consent of Water Design Incorporated.

MHTN
ARCHITECTS
MHTN Architects, Inc.
420 East South Temple
Suite 100
Salt Lake City, Utah 84111
Telephone (801) 595-6700
Telefax (801) 595-6717
www.mhtn.com

Hastings+Chivetta
ARCHITECTURE • PLANNING • ENGINEERING
622 Emerson, Suite 200
St. Louis, MO 63141
Tel. 314.863.5717
Fax. 314.863.2823
www.hastingschivetta.com

Water Design Inc.
5047 S. Galleria Dr.
Murray, Utah 84123
Phone : (801) 261-4009
Fax : (801) 261-4069
www.waterdesigninc.com

BUILDING OFFICIAL STAMP

# UNIVERSITY OF UTAH
## STUDENT LIFE CENTER
1836 E. BALLIF ROAD
SALT LAKE CITY, UTAH 84112

SEAL

LICENSED PROFESSIONAL ENGINEER
CHARLES ROSS ANDERSON
145589-2202
5-15-13
STATE OF UTAH

MHTN PROJECT NO.

DRAWN BY: ACR CHECKED BY: BA

ISSUED:

| NO. | DATE | DESCRIPTION |
|---|---|---|
| | | |

CONTRACTOR TO VERIFY DRAWINGS IN FIELD USE REFLECT LAST REVISION DATE:

| NO. | DATE | DESCRIPTION |
|---|---|---|
| | | |

SHEET NAME
LOWER LEVEL OVERALL POOL PLAN - ALT BID

BID DOCUMENTS
MAY 15, 2013

SHEET NUMBER
WF100.1

## ACTIVITY POOL
## CHEMICAL FEED EQUIPMENT SCHEDULE

(VERIFY ALL ELECTRICAL REQUIREMENTS WITH ELECTRICAL CONSULTANT/CONTRACTOR)

| MARK | DESCRIPTION | QUANTITY | DETAIL | REQUIREMENT |
|---|---|---|---|---|
| FOR EQUIPMENT ITEMS: | 1 THROUGH 5 | | SEE THE PLAN AND SCHEDULE ON SHEET WF601 | |
| 6 | LIQUID CHLORINE FEED PUMP | | 3/WF502 7/WF502 | STENNER #85-M5 |
| REMARKS: 120 VAC, 60 Hz, 1.7 AMP, 1/30 FRACTIONAL HP. ALSO SEE EQUIPMENT SCHEMATIC. ELECTRICAL SHALL PROVIDE DEDICATED SINGLE PLUG OUTLET FOR POWER. PROVIDE CHECK VALVES ON FEED LINES. | | | | |
| 7 | LIQUID CHLORINE STORAGE CONTAINER | 3 | SEE CIRC. EQUIP. SCHEMATIC (WF500) 8/WF502 | CHEM-TAINER 200 GALLON |
| REMARKS: 31"ø x 6'-3" TALL, 200 GALLON CAPACITY. CROSS-LINK POLYETHYLENE CONSTRUCTION, TRANSLUCENT TANK. PROVIDE SEISMIC RESTRAINTS. PROVIDE ALL PIPING AND VALVES COMPLETE WITH CAMLOCK FITTING FOR FILL PIPE. GENERAL CONTRACTOR SHALL PROVIDE A 4" HIGH HOUSEKEEPING PAD. START UP CHEMICALS BY POOL CONTRACTOR. STORAGE CONTAINER SHALL BE MARKED WITH THE APPROPRIATE HAZARD IDENTIFICATION SIGNS PER REQUIREMENTS OF THE NFPA 704. | | | | |
| 8 A | CHLORINE STORAGE AREA | 1 | N/A | CONSTRUCTION N.I.P.C. |
| 8 B | CO2 STORAGE AREA | 1 | | |
| REMARKS: STORAGE / USE AREA SHALL BE CONSTRUCTED OF CORROSIVE RESISTANT MATERIALS. DOOR AND HARDWARE SHALL BE CORROSIVE RESISTANT. EACH STORAGE AREA SHALL BE VENTED SEPARATELY TO THE OUTSIDE, VENTING BY MECHANICAL CONTRACTOR. THE ROOM SHALL NOT HAVE A FLOOR DRAIN. PROVIDE FIRE SPRINKLERS FOR CHLORINE STORAGE AREA (NIPC). | | | | |
| 9 A | $CO_2$ FEED SYSTEM | 1 OF EACH | SEE CIRC. EQUIP. SCHEMATIC (WF500) | BECS #$CO_2$ FEEDER #2100299-D10 #$CO_2$ MANUAL SWITCHOVER #2210343 |
| REMARKS: FLOW CONTROL UNIT WITH FLOW ADJUSTMENTS FROM 20-200 SCFH. FEED SYSTEM SHALL INCLUDE 120 VAC SOLENOID OPERATED VALVE FOR REMOTE ON/OFF CONTROL. ELECTRICAL CONTRACTOR SHALL PROVIDE A 120V OUTLET ADJACENT TO UNIT FOR OPERATION OF FEEDER. FLOW CONTROL UNIT POWERED THROUGH CHEMICAL CONTROLLER. INTERLOCK OUTLET WITH THE CHEMICAL CONTROLLER RELAY FOR PH CONTROL. PROVIDE DUAL TANK PRESSURE REGULATOR. PROVIDE COMPLETE WITH TANK AND OUTPUT PRESSURE GAUGES. STORAGE CYLINDER SHALL BE MARKED WITH THE APPROPRIATE HAZARD IDENTIFICATION SIGNS PER REQUIREMENTS OF THE NFPA 704. | | | | |
| 9 B | $CO_2$ CONTAINERS | 1 EACH | SEE CIRC. EQUIP. SCHEMATIC (WF500) | US FILTER 450# STORAGE TANK (50# BACK UP TANK) |
| REMARKS: PROVIDE RESTRAINTS. CHAIN TANKS TO WALL. START UP CHEMICALS BY POOL CONTRACTOR. STORAGE CYLINDER SHALL BE MARKED WITH THE APPROPRIATE HAZARD IDENTIFICATION SIGNS PER REQUIREMENTS OF THE NFPA 704. | | | | |
| 9 C | $CO_2$ FILL BOX | 1 | N/A | CHART, INC OR EQUAL |
| REMARKS: BOX SHALL BE STAINLESS STEEL, FLUSH MOUNTED AND LOCKABLE. PROVIDE THE FILL BOX COMPLETE WITH 3/4" MALE FILL CONNECTION AND VENT HOSE CONNECTION. PROVIDE CARBON DIOXIDE FITTING AT FILL LINE. FILL BOX SHALL BE INSTALLED BY THE GENERAL CONTRACTOR. POOL CONTRACTOR SHALL PROVIDE FILL BOX AND COORDINATE WITH THE GC FOR INSTALLATION. | | | | |
| 10 A | EMERGENCY SHOWER AND EYE WASH SINK | 1 | N/A | SEE MECHANICAL / PLUMBING DRAWINGS |
| REMARKS: TEPID POTABLE WATER AND WASTE LINES REQUIRED. PLUMBING CONTRACTOR SHALL INSTALL ONE EYEWASH SINK IN THE CHEMICAL ROOM. SEE POOL EQUIPMENT ROOM DRAWING FOR SECOND EYEWASH SINK LOCATION. | | | | |
| FOR REMAINING SCHEDULE ITEMS: | | | SEE THE PLAN AND SCHEDULE ON SHEET WF405 | |

## RAISED SPA
## CHEMICAL FEED EQUIPMENT SCHEDULE

(VERIFY ALL ELECTRICAL REQUIREMENTS WITH ELECTRICAL CONSULTANT/CONTRACTOR)

| MARK | DESCRIPTION | QUANTITY | DETAIL | REQUIREMENT |
|---|---|---|---|---|
| FOR EQUIPMENT ITEMS: | 31 THROUGH 35 | | SEE THE PLAN AND SCHEDULE ON SHEET WF601 | |
| 36 | LIQUID CHLORINE FEED PUMP | | 3/WF502 7/WF502 | STENNER #45-M5 |
| REMARKS: 120 VAC, 60 Hz, 1.7 AMP, 1/30 FRACTIONAL HP. ALSO SEE EQUIPMENT SCHEMATIC. ELECTRICAL SHALL PROVIDE DEDICATED SINGLE PLUG OUTLET FOR POWER. PROVIDE CHECK VALVES ON FEED LINES. | | | | |
| 37 | $CO_2$ FEED SYSTEM | 1 | SEE CIRC. EQUIP. SCHEMATIC (WF500) | BECS #$CO_2$ FEEDER #2100298-D1 |
| REMARKS: FLOW CONTROL UNIT WITH FLOW ADJUSTMENTS FROM 4-30 SCFH. FEED SYSTEM SHALL INCLUDE 120 VAC SOLENOID OPERATED VALVE FOR REMOTE ON/OFF CONTROL. FLOW CONTROL UNIT POWERED THROUGH CHEMICAL CONTROLLER. | | | | |
| FOR REMAINING SCHEDULE ITEMS: | | | SEE THE PLAN AND SCHEDULE ON SHEET WF405 | |

## CHEMICAL STORAGE ROOM DOOR SIGNS:

(PROVIDED BY POOL CONTRACTOR)

PROVIDE AN NFPA 704 MARKING SYSTEM IDENTIFICATION PLACARD ON THE ENTRY DOOR TO THE STORAGE AREA OF EACH CHEMICAL STORAGE ROOM AS REQUIRED BY THE NFPA 704.

## FIRE PROTECTION NOTE:

PIPING LOCATED IN PLENUMS, FIRE RATED WALLS, OR OTHER AREAS RESTRICTED BY CODE SHALL BE OF THE MATERIAL TYPE REQUIRED OR SHALL BE PROTECTED PER CODE REQUIREMENTS. POOL CONTRACTOR TO COORDINATE WITH MECHANICAL AND GENERAL CONTRACTOR TO VERIFY REQUIREMENTS PRIOR TO INSTALLING PIPE. ALL PENETRATIONS THROUGH FIRE RATED WALLS AND FLOORS SHOULD BE SEALED PER THE REQUIREMENTS OF THE PROJECT SPECIFICATIONS.

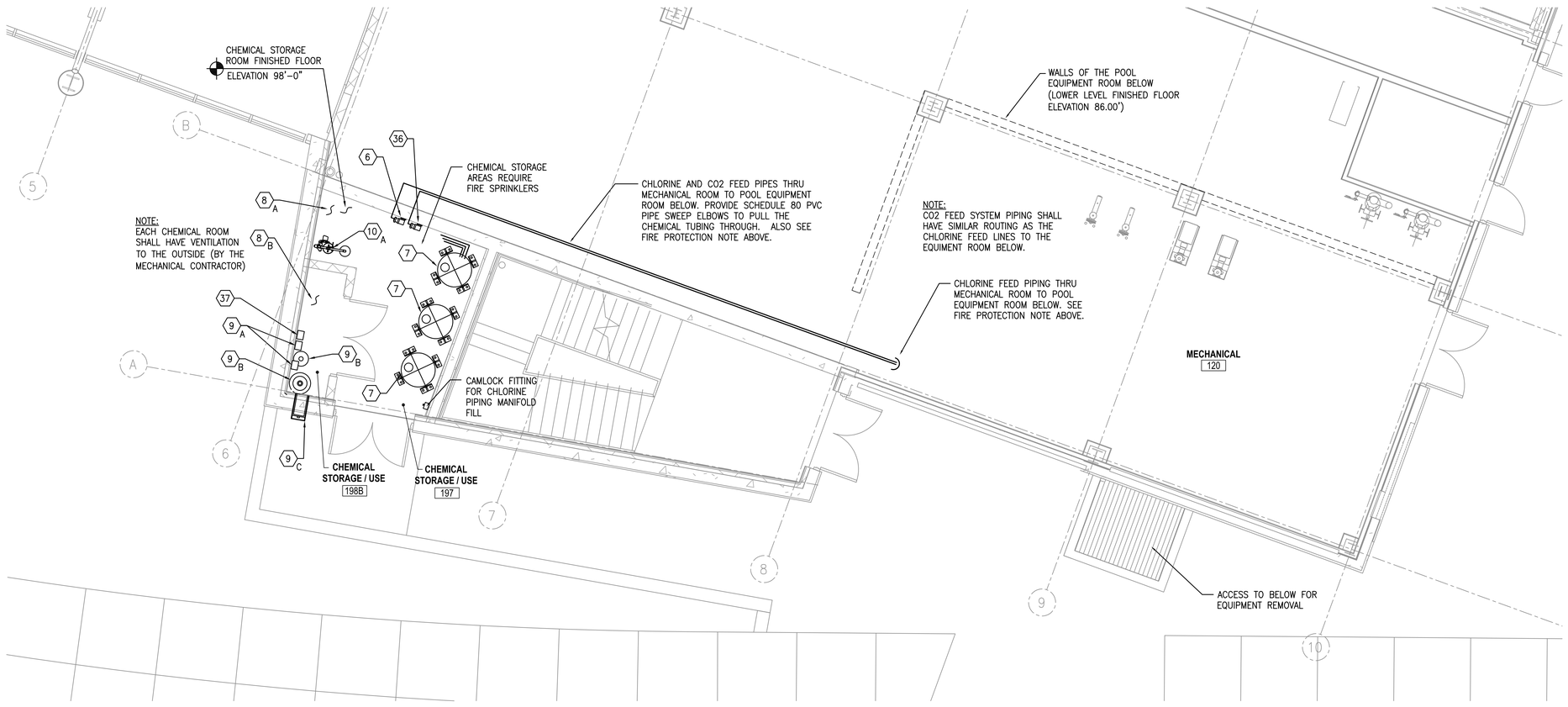


## LEVEL 1 CHEMICAL STORAGE ROOM PLAN

SCALE: 1/4" = 1'-0"

N TRUE NORTH

The entire contents of the attached documents, including all sketches, plans, studies, drawings, schedules and specifications and all copyrights therein are, and shall remain the sole property of Water Design Incorporated. The documents and their contents may not be used, photocopied or reproduced digitally, electronically or in any other manner without the express prior written consent of Water Design Incorporated.

MHTN ARCHITECTS
MHTN Architects, Inc.
420 East South Temple
Suite 100
Salt Lake City, Utah 84111
Telephone (801) 595-6700
Telefax (801) 595-6717
www.mhtn.com

Hastings+Chivetta
ARCHITECTURE • PLANNING • ENGINEERING
622 Emerson, Suite 200
St. Louis, MO 63141
Tel. 314.863.5717
Fax. 314.863.2823
www.hastingschivetta.com

Water Design Inc.
5047 S. Galleria Dr.
Murray, Utah 84123
Phone : (801) 261-4009
Fax : (801) 261-4069
www.waterdesigninc.com

BUILDING OFFICIAL STAMP

# UNIVERSITY OF UTAH
## STUDENT LIFE CENTER
1836 E. BALLIF ROAD
SALT LAKE CITY, UTAH 84112

SEAL

LICENSED PROFESSIONAL ENGINEER CHARLES ROSS ANDERSON 145580-2202 5-15-13 STATE OF UTAH

MHTN PROJECT NO.

DRAWN BY: ACR CHECKED BY: BA

ISSUED:

| NO. | DATE | DESCRIPTION |
|---|---|---|
| | | |

CONTRACTOR TO VERIFY DRAWINGS IN FIELD USE REFLECT LAST REVISION DATE.

| NO. | DATE | DESCRIPTION |
|---|---|---|
| | | |

SHEET NAME

FIRST FLOOR POOL CHEMICAL ROOM PLAN

BID DOCUMENTS
MAY 15, 2013

SHEET NUMBER

WF101.0

ALTERNATE 1

## ACTIVITY POOL CHEMICAL FEED EQUIPMENT SCHEDULE

(VERIFY ALL ELECTRICAL REQUIREMENTS WITH ELECTRICAL CONSULTANT/CONTRACTOR)

| MARK | DESCRIPTION | QUANTITY | DETAIL | REQUIREMENT |
|---|---|---|---|---|
| FOR EQUIPMENT ITEMS: | 1 THROUGH 5 | | SEE THE PLAN ON SHEET WF407 AND SCHEDULE ON SHEET WF601.2 | |
| 6 | LIQUID CHLORINE FEED PUMP | | 3/WF502 7/WF502 | STENNER #45-M5 |
| REMARKS: 120 VAC, 60 Hz, 1.7 AMP, 1/30 FRACTIONAL HP. ALSO SEE EQUIPMENT SCHEMATIC. ELECTRICAL SHALL PROVIDE DEDICATED SINGLE PLUG OUTLET FOR POWER. PROVIDE CHECK VALVES ON FEED LINES. | | | | |
| 7 | LIQUID CHLORINE STORAGE CONTAINER | 4 | SEE CIRC. EQUIP. SCHEMATIC (WF500.1) | 8/WF502 CHEM-TAINER 200 GALLON |
| REMARKS: 31"ø x 6'-3" TALL, 200 GALLON CAPACITY. CROSS-LINK POLYETHYLENE CONSTRUCTION, TRANSLUCENT TANK. PROVIDE SEISMIC RESTRAINTS. PROVIDE ALL PIPING AND VALVES COMPLETE WITH CAMLOCK FITTING FOR FILL PIPE. GENERAL CONTRACTOR SHALL PROVIDE A 4" HIGH HOUSEKEEPING PAD. START UP CHEMICALS BY POOL CONTRACTOR. STORAGE CONTAINER SHALL BE MARKED WITH THE APPROPRIATE HAZARD IDENTIFICATION SIGNS PER REQUIREMENTS OF THE NFPA 704. | | | | |
| 8 A | CHLORINE STORAGE AREA | 1 | N/A | CONSTRUCTION N.I.P.C. |
| 8 B | CO2 STORAGE AREA | 1 | | |
| REMARKS: STORAGE / USE AREA SHALL BE CONSTRUCTED OF CORROSIVE RESISTANT MATERIALS. DOOR AND HARDWARE SHALL BE CORROSIVE RESISTANT. EACH STORAGE AREA SHALL BE VENTED SEPARATELY TO THE OUTSIDE, VENTING BY MECHANICAL CONTRACTOR. THE ROOM SHALL NOT HAVE A FLOOR DRAIN. PROVIDE FIRE SPRINKLERS FOR CHLORINE STORAGE AREA (NIPC). | | | | |

| MARK | DESCRIPTION | QUANTITY | DETAIL | REQUIREMENT |
|---|---|---|---|---|
| 9 A | $CO_2$ FEED SYSTEM | 1 OF EACH | SEE CIRC. EQUIP. SCHEMATIC (WF500.1) | BECS #CO2 FEEDER #2100299-D10 #CO2 MANUAL SWITCHOVER #2210343 |
| REMARKS: FLOW CONTROL UNIT WITH FLOW ADJUSTMENTS FROM 20-200 SCFH. FEED SYSTEM SHALL INCLUDE 120 VAC SOLENOID OPERATED VALVE FOR REMOTE ON/OFF CONTROL. ELECTRICAL CONTRACTOR SHALL PROVIDE A 120V OUTLET ADJACENT TO UNIT FOR OPERATION OF FEEDER. FLOW CONTROL UNIT POWERED THROUGH CHEMICAL CONTROLLER. INTERLOCK OUTLET WITH THE CHEMICAL CONTROLLER RELAY FOR PH CONTROL. PROVIDE DUAL TANK PRESSURE REGULATOR. PROVIDE COMPLETE WITH TANK AND OUTPUT PRESSURE GAUGES. STORAGE CYLINDER SHALL BE MARKED WITH THE APPROPRIATE HAZARD IDENTIFICATION SIGNS PER REQUIREMENTS OF THE NFPA 704. | | | | |
| 9 B | $CO_2$ CONTAINERS | 1 EACH | SEE CIRC. EQUIP. SCHEMATIC (WF500.1) | CHART CARBO-MIZER 550 550# STORAGE TANK (50# BACK UP TANK) |
| REMARKS: PROVIDE RESTRAINTS. CHAIN TANKS TO WALL. START UP CHEMICALS BY POOL CONTRACTOR. STORAGE CYLINDER SHALL BE MARKED WITH THE APPROPRIATE HAZARD IDENTIFICATION SIGNS PER REQUIREMENTS OF THE NFPA 704. | | | | |
| 9 C | $CO_2$ FILL BOX | 1 | N/A | CHART, INC OR EQUAL |
| REMARKS: BOX SHALL BE STAINLESS STEEL, FLUSH MOUNTED AND LOCKABLE. PROVIDE THE FILL BOX COMPLETE WITH 3/4" MALE FILL CONNECTION AND VENT HOSE CONNECTION. PROVIDE CARBON DIOXIDE FITTING AT FILL LINE. FILL BOX SHALL BE INSTALLED BY THE GENERAL CONTRACTOR. POOL CONTRACTOR SHALL PROVIDE FILL BOX AND COORDINATE WITH THE GC FOR INSTALLATION. | | | | |
| 10 | EMERGENCY SHOWER AND EYE WASH SINK | 1 | N/A | SEE MECHANICAL / PLUMBING DRAWINGS |
| REMARKS: TEPID POTABLE WATER AND WASTE LINES REQUIRED. PLUMBING CONTRACTOR SHALL INSTALL ONE EYEWASH SINK. SEE POOL EQUIPMENT ROOM DRAWING FOR LOCATION. | | | | |
| FOR REMAINING SCHEDULE ITEMS: | | | SEE THE PLAN ON SHEET WF407 AND SCHEDULE ON SHEET WF601.2 | |

ALTERNATE 1

## RAISED SPA CHEMICAL FEED EQUIPMENT SCHEDULE

(VERIFY ALL ELECTRICAL REQUIREMENTS WITH ELECTRICAL CONSULTANT/CONTRACTOR)

| MARK | DESCRIPTION | QUANTITY | DETAIL | REQUIREMENT |
|---|---|---|---|---|
| FOR EQUIPMENT ITEMS: | 31 THROUGH 35 | | SEE THE PLAN ON SHEET WF407 AND SCHEDULE ON SHEET WF601.2 | |
| 36 | LIQUID CHLORINE FEED PUMP | 1 | 3/WF502 7/WF502 | STENNER #45-M5 |
| REMARKS: 120 VAC, 60 Hz, 1.7 AMP, 1/30 FRACTIONAL HP. ALSO SEE EQUIPMENT SCHEMATIC. ELECTRICAL SHALL PROVIDE DEDICATED SINGLE PLUG OUTLET FOR POWER. PROVIDE CHECK VALVES ON FEED LINES. | | | | |
| 37 | $CO_2$ FEED SYSTEM | 1 | SEE CIRC. EQUIP. SCHEMATIC (WF500.1) | BECS #$CO_2$ FEEDER #2100298-D1 |
| REMARKS: FLOW CONTROL UNIT WITH FLOW ADJUSTMENTS FROM 4-30 SCFH. FEED SYSTEM SHALL INCLUDE 120 VAC SOLENOID OPERATED VALVE FOR REMOTE ON/OFF CONTROL. FLOW CONTROL UNIT POWERED THROUGH CHEMICAL CONTROLLER. | | | | |
| FOR REMAINING SCHEDULE ITEMS: | | | SEE THE PLAN ON SHEET WF407 AND SCHEDULE ON SHEET WF601.2 | |

ALTERNATE 1

## 50 METER LAP POOL CHEMICAL FEED EQUIPMENT SCHEDULE

(VERIFY ALL ELECTRICAL REQUIREMENTS WITH ELECTRICAL CONSULTANT/CONTRACTOR)

| MARK | DESCRIPTION | QUANTITY | DETAIL | REQUIREMENT |
|---|---|---|---|---|
| FOR EQUIPMENT ITEMS: | 51 THROUGH 55 | | SEE THE PLAN ON SHEET WF407 AND SCHEDULE ON SHEET WF601.3 | |
| 56 | LIQUID CHLORINE FEED PUMP | 2 | 3/WF502 7/WF502 | STENNER #85-M5 |
| REMARKS: 120 VAC, 60 Hz, 1.7 AMP, 1/30 FRACTIONAL HP. ALSO SEE EQUIPMENT SCHEMATIC. ELECTRICAL SHALL PROVIDE DEDICATED SINGLE PLUG OUTLET FOR POWER. PROVIDE CHECK VALVES ON FEED LINES. | | | | |
| 57 | $CO_2$ FEED SYSTEM | 1 | SEE CIRC. EQUIP. SCHEMATIC (WF500.1) | BECS #$CO_2$ FEEDER #2100299-D10 |
| REMARKS: FLOW CONTROL UNIT WITH FLOW ADJUSTMENTS FROM 4-30 SCFH. FEED SYSTEM SHALL INCLUDE 120 VAC SOLENOID OPERATED VALVE FOR REMOTE ON/OFF CONTROL. FLOW CONTROL UNIT POWERED THROUGH CHEMICAL CONTROLLER. | | | | |
| FOR REMAINING SCHEDULE ITEMS: | | | SEE THE PLAN ON SHEET WF407 AND SCHEDULE ON SHEET WF601.3 | |

ALTERNATE 2

## OUTDOOR POOL CHEMICAL FEED EQUIPMENT SCHEDULE

(VERIFY ALL ELECTRICAL REQUIREMENTS WITH ELECTRICAL CONSULTANT/CONTRACTOR)

| MARK | DESCRIPTION | QUANTITY | DETAIL | REQUIREMENT |
|---|---|---|---|---|
| FOR EQUIPMENT ITEMS: | 81 THROUGH 84 | | SEE THE PLAN ON SHEET WF408 AND SCHEDULE ON SHEET WF601.3 | |
| 85 | LIQUID CHLORINE FEED PUMP | 1 | 3/WF502 7/WF502 | STENNER #45-M5 |
| REMARKS: 120 VAC, 60 Hz, 1.7 AMP, 1/30 FRACTIONAL HP. ALSO SEE EQUIPMENT SCHEMATIC. ELECTRICAL SHALL PROVIDE DEDICATED SINGLE PLUG OUTLET FOR POWER. PROVIDE CHECK VALVES ON FEED LINES. | | | | |
| 86 | $CO_2$ FEED SYSTEM | 1 | SEE CIRC. EQUIP. SCHEMATIC (WF500.1) | BECS #$CO_2$ FEEDER #2100299-D10 |
| REMARKS: FLOW CONTROL UNIT WITH FLOW ADJUSTMENTS FROM 4-30 SCFH. FEED SYSTEM SHALL INCLUDE 120 VAC SOLENOID OPERATED VALVE FOR REMOTE ON/OFF CONTROL. FLOW CONTROL UNIT POWERED THROUGH CHEMICAL CONTROLLER. | | | | |
| FOR REMAINING SCHEDULE ITEMS: | | | SEE THE PLAN ON SHEET WF408 AND SCHEDULE ON SHEET WF601.3 | |

## FIRE PROTECTION NOTE:

PIPING LOCATED IN PLENUMS, FIRE RATED WALLS, OR OTHER AREAS RESTRICTED BY CODE SHALL BE OF THE MATERIAL TYPE REQUIRED OR SHALL BE PROTECTED PER CODE REQUIREMENTS. POOL CONTRACTOR TO COORDINATE WITH MECHANICAL AND GENERAL CONTRACTOR TO VERIFY REQUIREMENTS PRIOR TO INSTALLING PIPE. ALL PENETRATIONS THROUGH FIRE RATED WALLS AND FLOORS SHOULD BE SEALED PER THE REQUIREMENTS OF THE PROJECT SPECIFICATIONS.

## CHEMICAL STORAGE ROOM DOOR SIGNS:

(PROVIDED BY POOL CONTRACTOR)

PROVIDE AN NFPA 704 MARKING SYSTEM IDENTIFICATION PLACARD ON THE ENTRY DOOR TO THE STORAGE AREA OF EACH CHEMICAL STORAGE ROOM AS REQUIRED BY THE NFPA 704.

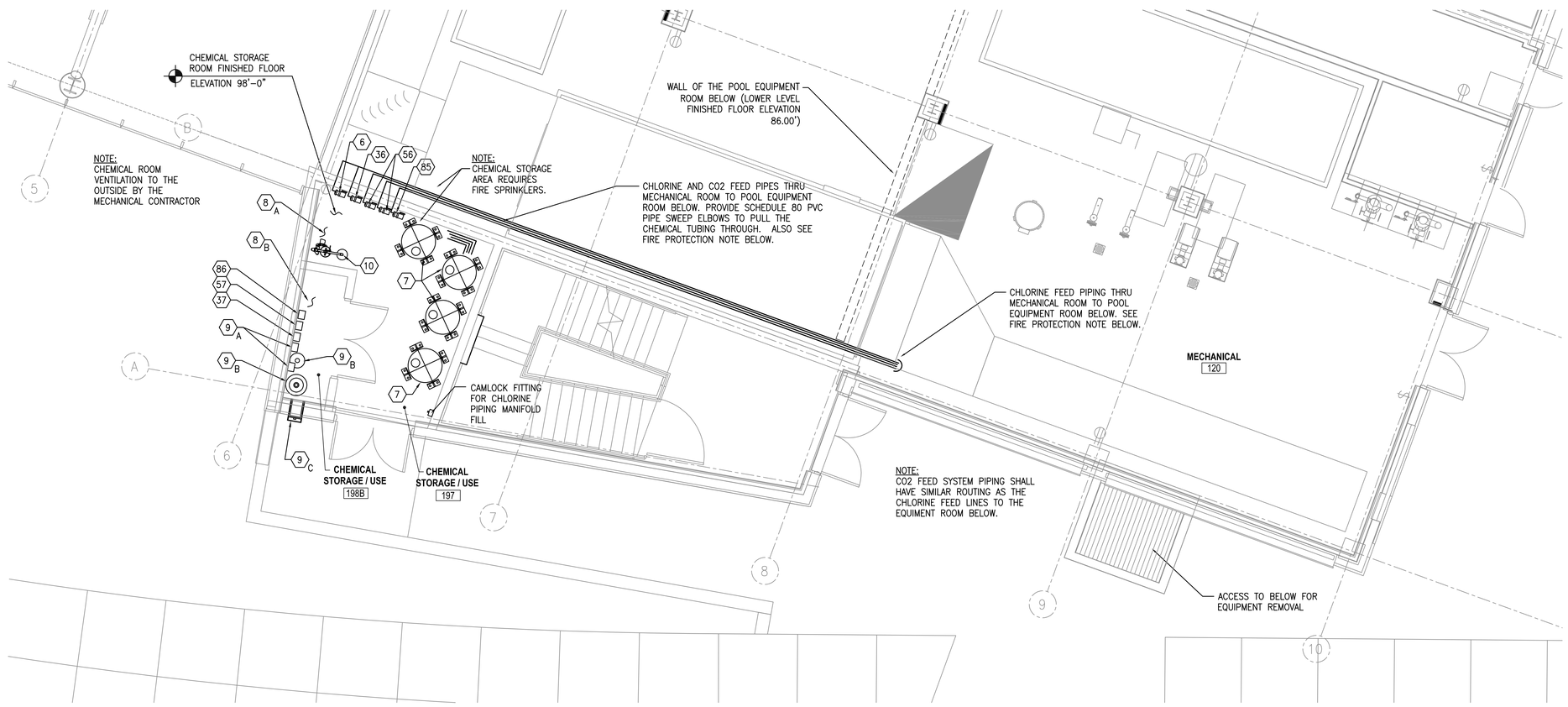


## LEVEL 1 CHEMICAL STORAGE ROOM PLAN - ALTERNATE 1 AND 2

SCALE: 1/16" = 1'-0"

The entire contents of the attached documents, including all sketches, plans, studies, drawings, schedules and specifications and all copyrights therein are, and shall remain the sole property of Water Design Incorporated. The documents and their contents may not be used, photocopied or reproduced digitally, electronically or in any other manner without the express prior written consent of Water Design Incorporated.

MHTN ARCHITECTS
MHTN Architects, Inc.
420 East South Temple
Suite 100
Salt Lake City, Utah 84111
Telephone (801) 595-6700
Telefax (801) 595-6717
www.mhtn.com

Hastings+Chivetta
ARCHITECTURE • PLANNING • ENGINEERING
622 Emerson, Suite 200
St. Louis, MO 63141
Tel. 314.863.5717
Fax. 314.863.2823
www.hastingschivetta.com

Water Design Inc.
5047 S. Galleria Dr.
Murray, Utah 84123
Phone : (801) 261-4009
Fax : (801) 261-4069
www.waterdesigninc.com

BUILDING OFFICIAL STAMP

# UNIVERSITY OF UTAH
# STUDENT LIFE CENTER
1836 E. BALLIF ROAD
SALT LAKE CITY, UTAH 84112

SEAL

MHTN PROJECT NO.

DRAWN BY: ACR CHECKED BY: BA

ISSUED:

| NO. | DATE | DESCRIPTION |
|---|---|---|
| | | |

CONTRACTOR TO VERIFY DRAWINGS IN FIELD USE REFLECT LAST REVISION DATE.

| NO. | DATE | DESCRIPTION |
|---|---|---|
| | | |

SHEET NAME

1ST FLOOR
POOL CHEM. ROOM
PLAN - ALT BID 1 & 2

BID DOCUMENTS
MAY 15, 2013

SHEET NUMBER

WF101.1

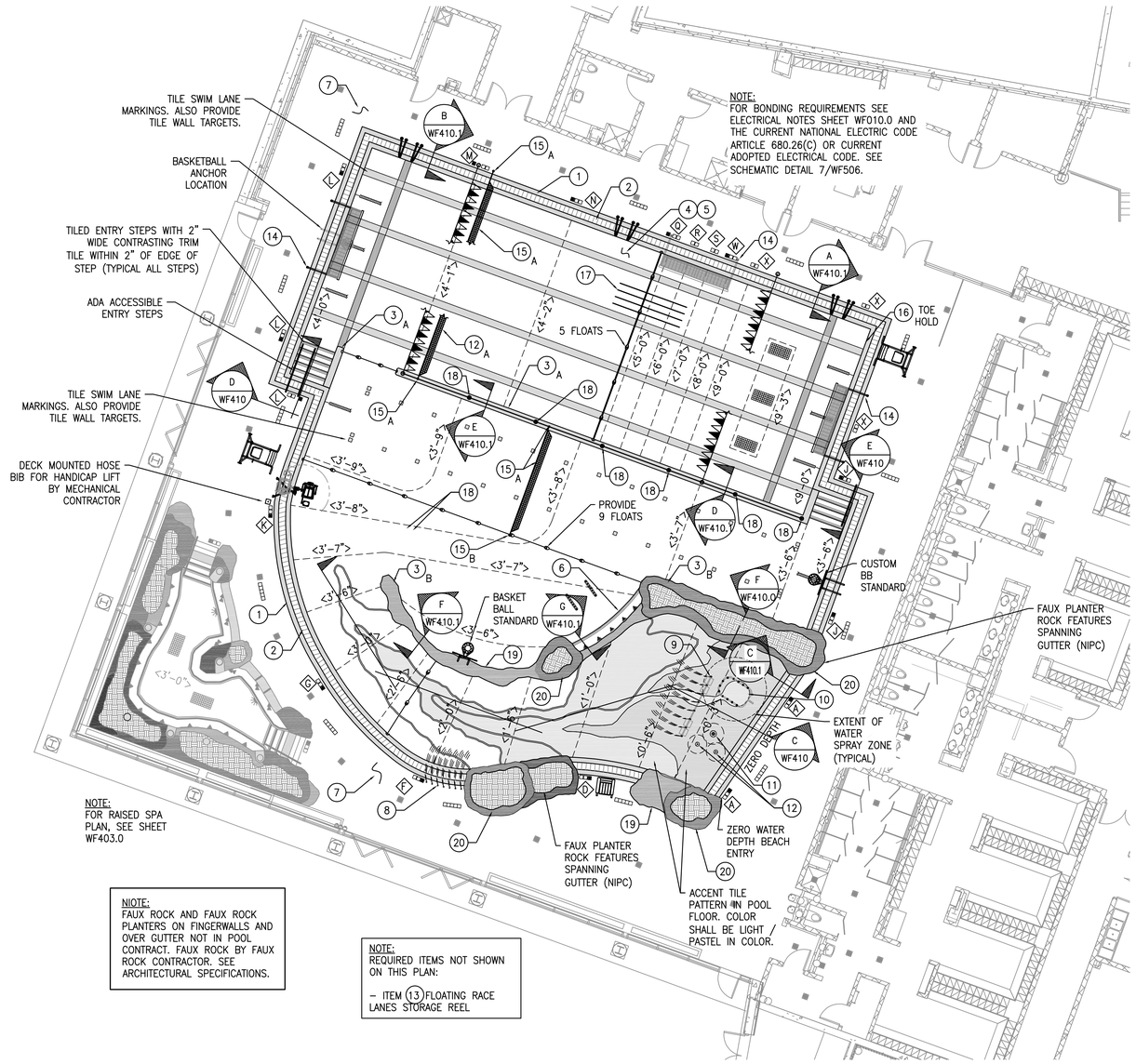


## ENLARGED ACTIVITY POOL PLAN

SCALE: 1/8" = 1'-0"

## ACTIVITY POOL DATA

| | |
|---|---|
| SIZE: | 75'-0" x 76'-10" |
| WATER DEPTH: | 0'-0" (ZERO) TO 9'-3" |
| SHAPE: | CUSTOM |
| CONSTRUCTION TYPE: | SHOTCRETE |
| PERIMETER AREA: | 5,343 SQ.FT. |
| WATER AREA: | 5,061 SQ.FT. |
| PERIMETER: | 292'-0" |
| VOLUME: | 155,023 GALLONS |
| MIN. FLOW: | 903 GPM |
| MAX. FLOW: | 1,125 GPM |
| TURNOVER AT MINIMUM FLOW: | 2 HOURS 52 MIN |

## ACTIVITY POOL DECK EQUIPMENT SCHEDULE

| MARK | DESCRIPTION | QUANTITY | DETAIL | REQUIREMENT |
|---|---|---|---|---|
| | ENTRY STEP HANDRAIL | 1 | E / WF410.0 | S.R. SMITH CUSTOM 3–BEND |
| REMARKS: STAINLESS STEEL RAIL 1.90" O.D. X 0.065" THICK WALL. PROVIDE WITH WEDGE ANCHORS & S.S. ESCUTCHEON PLATES (SEE DETAIL 4/WF503). DECK ANCHOR INSTALLED BY DECK CONTRACTOR. THICKEN DECKS AS REQUIRED. POOL CONTRACTOR SHALL VERIFY THAT ALL ANCHORS ARE SET AT THE CORRECT ELEVATION JUST PRIOR TO THE DECK PLACEMENT. SEE POOL PLAN FOR HANDRAIL LENGTH. FIELD VERIFY WITH SITE CONDITIONS THE REQUIRED HANDRAIL DIMENSIONS PRIOR TO ORDERING. | | | |
| | ADA ENTRY STEP HANDRAIL | 2 | D / WF410.0 | S.R. SMITH CUSTOM 3–BEND |
| REMARKS: STAINLESS STEEL RAIL 1.90" O.D. X 0.065" THICK WALL. PROVIDE WITH WEDGE ANCHORS & S.S. ESCUTCHEON PLATES (SEE DETAIL 4/WF503). DECK ANCHOR INSTALLED BY DECK CONTRACTOR. THICKEN DECK AS REQUIRED. POOL CONTRACTOR SHALL VERIFY THAT ALL ANCHORS ARE SET AT THE CORRECT ELEVATION JUST PRIOR TO THE DECK PLACEMENT. SEE POOL PLAN FOR HANDRAIL LENGTH. FIELD VERIFY WITH SITE CONDITIONS THE REQUIRED HANDRAIL DIMENSIONS PRIOR TO ORDERING. HANDRAILS SHALL BE INSTALLED TO COMPLY WITH ADA REGULATIONS. | | | |
| A | DEPTH MARKER TILES | SEE PLAN | 1 / WF503 | IN–LAYS, INC. OR EQUAL |
| REMARKS: FROST PROOF GLAZED TILE W/4" HIGH NUMBERS WITH CONTRASTING COLOR BACKGROUND ON VERTICAL WALL AT WATERLINE. PROVIDE 6" x 6" FROST PROOF NON–SKID TILE W/4" HIGH NUMBERS WITH CONTRASTING COLOR BACKGROUND IN THE POOL DECK. SEE DETAIL FOR DEPTH MARKER KEY. WATER DEPTH SHALL BE PLAINLY MARKED AT LOCATION OF MINIMUM AND MAXIMUM POOL WATER DEPTHS AND AT ONE FOOT INCREMENTS OF DEPTH. MARKERS SHALL BE SPACED AT MAX. 25'–0" C.C. TILES PROVIDED BY POOL CONTRACTOR AND INSTALLED BY DECK CONTRACTOR. | | | |
| | "NO DIVING" ICON TILES | SEE PLAN | 1 / WF503 | IN–LAYS, INC. OR EQUAL |
| REMARKS: 6" X 6" NON–SKID, FROSTPROOF, CERAMIC NO DIVING TILE WITH LETTERING AND ICON ON CONTRASTING COLOR BACKGROUND IN THE POOL DECK AT 25'–0" C.C. MAXIMUM ADJACENT TO DEPTH MARKERS IN LOCATIONS AS SHOWN ON THE PLAN. TILES PROVIDED BY POOL CONTRACTOR AND INSTALLED BY DECK CONTRACTOR. | | | |
| | "NO RUNNING" TILES | SEE PLAN | 3 / WF503 | IN–LAYS, INC. OR EQUAL |
| REMARKS: 6" x 6" NON–SKID, FROSTPROOF, CERAMIC "NO RUNNING" TILES WITH 4" HIGH RED LETTERING ON CONTRASTING COLOR BACKGROUND. PLACE ON DECK AT 25'–0" C.C. MAXIMUM. "NO RUNNING" TILES PROVIDED BY POOL CONTRACTOR AND INSTALLED BY DECK CONTRACTOR | | | |
| | ADA COMPLIANT LIFT AND ANCHOR | 1 | 5 / WF503 | SPECTRUM PRODUCTS GALLATIN WP400 BASE STAND CUSTOM ANCHORAGE |
| REMARKS: BECAUSE OF THE WIDE POOL BOND BEAM THE LIFT SHALL BE PROVIDED WITH A CUSTOM BASE STAND, LEVELER FOOT AND A CUSTOM SEAT POLE. POOL CONTRACTOR SHALL PROVIDE THE LIFT COMPLETE WITH ANCHOR, FLEXIBLE HOSE, AND LIFT COVER. ANCHOR SHALL BE INSTALLED BY DECK CONTRACTOR. PROVIDE CONCRETE FOOTING SIZED PER MANUFACTURER'S RECOMMENDATIONS. POOL CONTRACTOR SHALL VERIFY THAT ALL ANCHORS ARE SET AT THE CORRECT ELEVATION JUST PRIOR TO THE DECK POUR. THE WATER BOX SHALL BE MOUNTED IN THE DECK BY THE GENERAL CONTRACTOR AT THE LOCATION PER THE MANUFACTURER'S DETAIL. MECHANICAL CONTRACTOR SHALL PROVIDE THE SUPPLY LINE AND A HOSE SPIGOT WITH MINIMUM 55 PSI AND MAXIMUM 65 PSI FOR INSTALLATION INTO THE WATER BOX. HOSE BIB BOX SHALL HAVE DRAIN TO WASTE. | | | |
| | LIFEGUARD CHAIR – MOVABLE – 6' HIGH CHAIR | 2 | 7 / WF503 | SPECTRUM PRODUCTS DISCOVERY #20160 |
| REMARKS: PROVIDE LIFE GUARD CHAIRS COMPLETE WITH MOUNTED LIFE BUOY HOLDER AND RING GUIDE & SOCKET FOR SHEPHERD'S CROOK. LOCATE LIFE GUARD CHAIRS PER REQUIRED STATE AND LOCAL CODES, AND PER OWNER'S DIRECTIONS. | | | |
| | LIFEGUARD CHAIR SEAT HEIGHT 30" | 1 | 8 / WF503 | LINCOLN "CHAMPION" #38–057 OR APPROVED EQUAL |
| REMARKS: PROVIDE RECYCLED PLASTIC GUARD CHAIR WITH LIFETIME WARRANTY. PROVIDE COLOR CHOICES TO ARCHITECT FOR SELECTION. LOCATE LIFEGUARD CHAIRS PER REQUIRED STATE AND LOCAL CODES, AND PER OWNER'S DIRECTIONS. | | | |
| | OUTLET FRAME AND GRATE | SEE ACTIVITY POOL PIPING PLAN AND FITTING SCHEDULE SHEET WF400.3 | | |
| | BUBBLE COUCH OUTLET FRAME AND GRATE | SEE ACTIVITY POOL PIPING PLAN AND FITTING SCHEDULE SHEET WF400.3 | | |
| | "PRETZEL TYPE" GRABRAILS, ANCHORS AND RECESSED STEPS | 3 SETS | 6 / WF503 | SPECTRUM 30" BURSOT .065" THICKNESS CUSTOM LENGTH |
| REMARKS: PROVIDE STAINLESS STEEL PRETZEL STYLE GRABRAILS PROVIDE CUSTOM LENGTH TO ACCOMMODATE INSTALLATION BEHIND THE WIDE POOL WALL BOND BEAM. PROVIDE STAINLESS STEEL GRABRAILS WITH 4" BRONZE INSTITUTIONAL ANCHOR ASSEMBLY AND STAINLESS STEEL ROUND ESCUTCHEON PLATE (SPECTRUM #24097). FOUR ANCHORS AND FOUR ESCUTCHEON PLATES REQUIRED FOR EACH GRABRAIL SET. POOL CONTRACTOR SHALL VERIFY THAT ALL ANCHORS ARE SET AT THE CORRECT ELEVATION JUST PRIOR TO THE DECK PLACEMENT. PROVIDE THREE WHITE RECESSED STEPS PER GRABRAIL LOCATION (S.R. SMITH #62–209–4001). | | | |
| | FLOATING SWIM LANE LINES AND WALL ANCHORS | 4 LANES LINES 8 WALL ANCHORS | N/A | COMPETITOR 4" DIAMETER DISK 25 YARDS LONG |
| REMARKS: SUBMIT COLOR CHOICES OF LANE LINES TO ARCHITECT FOR SELECTION. THE LAST 15 FEET OF LANE LINE SHALL BE A CONTRASTING COLOR. POOL CONTRACTOR SHALL ALSO PROVIDE AND INSTALL ABS CUP ANCHORS WITH STAINLESS STEEL BAR. (STA–RITE OR APPROVED EQUAL. SEE DETAIL 10/WF503). | | | |
| | SWIM LANE FLOOR MARKERS AND WALL TARGETS | SEE PLAN | 1 / WF504 3 / WF504 | WATERPROOF CERAMIC TILE |
| REMARKS: USE UNGLAZED CERAMIC TILE. PROVIDE CONTRASTING COLOR. SUBMIT COLOR AND TILE SIZE CHOICES TO ARCHITECT. | | | | |
| | BACKSTROKE STANCHION POST | 4 | 11 / WF503 | PARAGON AQUATICS #38106 (8'–0") |
| REMARKS: STAINLESS STEEL POST 1.90" O.D.X 0.145" WALL. PROVIDE BRONZE SOCKETS WITH THREADED CAP (KOI PARAGON #38201TC). TWO ANCHORS SHALL BE INSTALLED IN THE POOL BOND BEAM AND TWO ANCHORS SHALL BE INSTALLED IN THE FINGER WALL. POOL CONTRACTOR SHALL VERIFY THAT ALL ANCHORS ARE SET AT THE CORRECT ELEVATION JUST PRIOR TO THE SHOTCRETE PLACEMENT. PROVIDE TWO SLIDING COLLARS WITH ONE EYEBOLT EACH COLLAR FOR EACH STANCHION POST. | | | |
| | BACKSTROKE LINE W/PENNANTS | 4 LOCATIONS | N/A | LINCOLN AQUATICS "CHAMPION" PENNANTS #53–020 |
| REMARKS: PROVIDE MINIMUM 46 PENNANTS (VERIFY). PROVIDE PENNANTS COMPLETE WITH CABLE (#50–175) AND HARDWARE PACKAGE (#50–030). PROVIDE SUBMITTAL FOR ARCHITECTS SELECTION OF CUSTOM NUMBERING AND/ OR LETTERING TO PROVIDE ON THE PENNANTS. ARCHITECT TO SELECT COLORS. SUBMIT ALL COLORS INCLUDING PREMIUM FOR SELECTION. VERIFY LENGTH OF CABLE REQUIRED TO REACH STANCHION POSTS. | | | |
| | SAFETY ROPE WITH FLOATS | 2 LOCATIONS | 9 / WF503 | LINCOLN AQUATICS |
| REMARKS: SPACE FLOATS MAXIMUM 7'–0" C.C. PROVIDE 3/4"ø ROPE (VERIFY LENGTH REQUIRED). PROVIDE FLOATS, FLOAT COLLARS AND HOOKS. FASTEN FLOATS TO ROPE WITH FLOAT COLLARS SO THAT FLOATS CANNOT SLIDE ON ROPE. PROVIDE NUMBER OF FLOATS AS SHOWN ON PLAN. PROVIDE ABS CUP ANCHORS WITH STAINLESS STEEL BAR. (STA RITE OR APPROVED EQUAL. SEE DETAIL 10/WF503). | | | |
| | POOL CUSTOM BASKETBALL AND ANCHORS | 1 STANDARD WITH 1 ADDITIONAL ANCHOR LOCATION | 1 / WF505 | SR SMITH COMMERCIAL DUAL–POST (CUSTOM LENGTH) BASKETBALL STANDARD AND ANCHOR ASSEMBLIES |
| | FINGERWALL BASKETBALL & ANCHORS | 1 STANDARD W–ANCHORS IN FINGERWALL | 1 / WF505 | SR SMITH COMMERCIAL DUAL–POST BASKETBALL STANDARD AND ANCHOR ASSEMBLY |
| REMARKS: PROVIDE CUSTOM LENGTH STANDARD TO ALLOW FOR INSTALLATION IN THE DECK BEHIND THE WIDE POOL BOND BEAM. PROVIDE 6" DEEP CAST BRONZE ANCHOR ASSEMBLY (#AS–1000). PROVIDE COMPLETE WITH BRASS CAPS TO PROVIDE FLUSH COVER FOR WHEN BASKETBALL STANDARD IS REMOVED. PROVIDE COMPLETE WITH SR SMITH BASKETBALL UPRIGHTS, BACKBOARD AND RIM (PART NUMBER #BASKC). | | | |
| 1 | POOL STRUCTURE | AROUND POOL PERIMETER | A / WF410.1 | STEEL REINFORCED SHOTCRETE |
| REMARKS: REINFORCED SHOTCRETE GUTTER POOL STRUCTURE. POOL SHELL SHALL BE BONDED PER THE REQUIRMENTS OF THE NATIONAL ELECTRIC CODE ARTICLE 680. | | | | |
| 19 | FAUX ROCK | SEE PLAN | N/A | BY FAUX ROCK CONTRACTOR |
| REMARKS: FAUX ROCK SHALL VARY IN HEIGHT. FAUX ROCK SHALL PROVIDE HANDHOLD AT POOL EDGE. PRIOR TO CONSTRUCTION PROVIDE SHOP DRAWING SUBMITTAL FOR REVIEW. SEE ARCHITECTURAL SPECIFICATIONS. ARCHITECT SHALL SELECT COLOR AND FINISH. THERE SHALL BE NO ROUGH EDGES. | | | |
| 20 | FAUX PLANT PLANTERS | SEE PLAN | N/A | BY FAUX PLANT CONTRACTOR |
| REMARKS: CONTRACTOR SHALL COORDINATE WITH POOL CONTRACTOR TO PROVIDE DRAINAGE LINES IN THE PLANTER TO REMOVE ANY ANCILLARY WATER THAT WOULD OTHERWISE COLLECT IN THE PLANTERS. SEE ARCHITECTURAL SPECIFICATIONS. | | | |

| MARK | DESCRIPTION | QUANTITY | DETAIL | REQUIREMENT |
|---|---|---|---|---|
| 2 | POOL GUTTER | AROUND POOL PERIMETER | 1 / 2 / WF410.0 | PRECAST STONE COPING WITH PARALLEL FLOW GRATING |
| REMARKS: PROVIDE PRECAST STONE GUTTER EDGE WITH HAND HOLD AROUND PERIMETER OF POOL. PROVIDE PARALLEL FLOW GRATING AROUND PERIMETER OF GUTTER. PROVIDE PRECAST COPING STONE BEHIND GRATING. SEAL INTERIOR OF GUTTER WITH AQUAFIN 2KM. | | | | |
| 3 A | FINGER WALL WITH COPING | SEE PLAN | 3 / WF410.0 | PRE–CAST COPING |
| REMARKS: STEEL REINFORCED CONCRETE WALLS WITH PRE–CAST CONCRETE COPING. TOP OF WALL SHALL BE ABOVE THE WATER LINE WITH STONE TILE ON WALLS. PROVIDE TILE AND COPING SAMPLES TO THE ARCHITECT FOR SELECTION. COLOR SELECTIONS BY ARCHITECT. | | | | |
| 3 B | FINGER WALL WITH FAUX ROCK AND COPING | SEE PLAN | 4 / WF410.0 | PRE–CAST COPING (BY PC) AND FAUX ROCK (BY FR CONTRACTOR) |
| REMARKS: STEEL REINFORCED CONCRETE WALLS WITH WATERPROOF TILE FINISH ON THE SIDE OF THE WALLS. TOP OF WALL SHALL BE ABOVE THE WATER LINE WITH A FAUX ROCK PLANTERS AND PRE–CAST CONCRETE COPING. FOR FAUX ROCK, SEE ARCHITECTURAL SPECIFICATIONS. PROVIDE COPING AND FAUX ROCK SAMPLES TO THE ARCHITECT FOR SELECTION. COLOR SELECTIONS BY ARCHITECT. | | | | |
| 4 | POOL WALL AND FLOOR INTERIOR FINISH | AS REQUIRED | N/A | NON–SLIP CERAMIC TILE |
| REMARKS: FINISH SHALL BE WATERPROOF AND FREE FROM DEFECTS. PROVIDE TILE SAMPLES TO ARCHITECT FOR SELECTION. COLOR SELECTION BY ARCHITECT. | | | | |
| 5 | POOL SHELL, FINGERWALL AND BENCH WATERPROOFING | AS REQUIRED | N/A | AQUAFIN 2K/M OR EQUAL |
| REMARKS: PRIOR TO THE TILE FINISH INSTALLATION, WATERPROOF INTERIOR OF POOL. PREPARE SURFACE PER MANUFACTURER'S SPECIFICATIONS. SEE WATERPROOFING SPECIFICATIONS AND MANUFACTURER'S INSTALLATION INSTRUCTIONS FOR ADDITIONAL INFORMATION AND REQUIREMENTS. | | | | |
| 6 | BUBBLE COUCH | SEE PLAN | 6 / WF410.1 12 / WF504 | REINFORCED CONCRETE |
| REMARKS: PROVIDE WITH WATERPROOF TILE FINISH. PROVIDE 2" WIDE NON–SLIP, FROST PROOF CERAMIC TILE 2" WITHIN EDGE OF BENCH. TILE COLOR SHALL BE CONTRASTING FORM THE FINISH COLOR. PROVIDE SAMPLES TO ARCHITECT FOR SELECTION. SEE SHEET WF402 FOR PIPING DETAILS. | | | | |
| 7 | POOL DECK | AS REQUIRED | CONTINUOUS AROUND POOL | NON–SLIP CONCRETE |
| REMARKS: MINIMUM 5' WIDE NON–SLIP CONCRETE DECK CONTINUOUS AROUND POOL PERIMETER. SLOPE DECK 1/4" PER FOOT AWAY FROM BACK OF BOND BEAM TO DECK DRAINS. DECK DRAINS BY GENERAL CONTRACTOR. INDOOR DECK DRAINS SHALL DRAIN TO SANITARY SEWER. | | | | |
| 8 | ANGLED DECK SPRAYS | 1 SET WITH 7 NOZZLES | 6 / WF505 | CRYSTAL FOUNTAINS STREAM JETS #WMD–100 (800) 779–0748 |
| REMARKS: SEVEN DIRECTIONAL WATER JETS ON CUSTOM PVC MANIFOLD. MAXIMUM WATER VELOCITY FOR INTERACTIVE PLAY IS 20 FT./SEC. INSTALL PER MANUFACTURER'S INSTRUCTIONS AND AT ANGLE AS SHOWN ON DETAIL. | | | | |
| 9 | "WATERWALL" FLOOR SPRAYS | 1 | 1 / WF505 | VORTEX WATER TUNNEL #1 #VOR–0304 |
| REMARKS: ADJUST NOZZLES TO PROVIDE FOR VERTICAL SPRAYS. STAINLESS STEEL CONSTRUCTION. INSTALL PER MANUFACTURER'S REQUIREMENTS. PROVIDE THICKENED SLAB AS REQUIRED. | | | | |
| 10 | "U" SHAPED FLOOR BUBBLERS | 1 | 2 / WF505 | VORTEX CUSTOM CYLINDER SPRAY #VOR–0307 – CUSTOM |
| REMARKS: STAINLESS STEEL CONSTRUCTION. INSTALL PER MANUFACTURER'S REQUIREMENTS. PROVIDE THICKENED SLAB AS REQUIRED. ADJUST NOZZLES TO PROVIDE FOR VERTICAL SPRAYS. | | | | |
| 11 | WATER LAVA | 1 | 7 / WF505 | WATER ODYSSEY #W058 |
| REMARKS: STAINLESS STEEL CONSTRUCTION. INSTALL PER MANUFACTURER'S REQUIREMENTS. PROVIDE LEVEL (HORIZONTAL) PLANE AT NOZZLE FOR VERTICAL WATER SPRAY. PROVIDE THICKENED FLOOR SLAB AND LEVELING PAD AS REQUIRED. PROVIDE COLOR CHOICES OF ACRYLIC TOP FOR SELECTION BY ARCHITECT. | | | | |
| 12 | BUBBLER | 2 | 8 / WF505 | WATER ODYSSEY #W091 |
| REMARKS: STAINLESS STEEL CONSTRUCTION. INSTALL PER MANUFACTURER'S REQUIREMENTS. PROVIDE LEVEL (HORIZONTAL) PLANE AT NOZZLE FOR VERTICAL WATER SPRAY. PROVIDE THICKENED FLOOR SLAB AND LEVELING PAD AS REQUIRED. PROVIDE COLOR CHOICES OF ACRYLIC TOP FOR SELECTION BY ARCHITECT. | | | | |
| 13 | FLOATING RACE LANE STORAGE REEL | 1 | N/A | PARAGON AQUATICS #75101–SS |
| REMARKS: 540' OF LANE CAPACITY WITH STAINLESS STEEL CASTERS. PROVIDE STORAGE REEL COVER. | | | | |
| 14 | WATER POLO WALL MOUNTED GOAL WITH DECK ANCHORS | 2 GOALS WITH 3 LOCATIONS (PROVIDE 1 ADDITIONAL ANCHOR KIT) | 3 / WF505 | LINCOLN AQUATICS ANTIWAVE UNIVERSAL WALL MOUNT GOALS #60–005 |
| REMARKS: PROVIDE WATER POLO GOALS COMPLETE WITH NETS, CANVAS GOAL BACKING AND TWO STAINLESS STEEL ANCHORS. WATER POLO ANCHORS SHALL BE INSTALLED IN THE DECK BY DECK CONTRACTOR (POOL CONTRACTOR SUPPLIED) | | | | |
| 15 A | VOLLEYBALL POSTS ANCHORS AND NET | 1 NET WITH WITH TWO POSTS WITH 1 ADDITIONAL ANCHOR LOCATION | 3 / 3 / WF505 | SR SMITH VOLLEYBALL GAME WITH CUSTOM WIDTH NET |
| REMARKS: PROVIDE CUSTOM WIDTH NETS (ONE FOR EACH LOCATION). FIELD MEASURE POST LOCATIONS PRIOR TO ORDERING NETS. PROVIDE 1.9" O.D. x .065" WALL STAINLESS STEEL VOLLEYBALL NET SUPPORT POSTS, WITH REMOVABLE STAINLESS STEEL EYEBOLTS WHICH ANCHOR THE NET. PROVIDE BRONZE ANCHORS WITH THREADED CAPS FOR WHEN POSTS ARE NOT INSTALLED. ANCHOR AND CAP SHALL BE INSTALLED FLUSH WITH POOL FINISH WITH NO EXPOSED EDGES. ANCHOR SHALL BE INSTALLED TO PROVIDE FOR VERTICAL INSTALLATION OF POSTS. ANCHOR SHALL BE INSTALLED IN THE POOL DECK AND IN THE POOL FINGER WALL (UNLESS OTHERWISE NOTED). | | | | |
| 15 B | CUSTOM VOLLEYBALL POST WITH ANCHOR AND COVER PLATE | 1 | 4 / WF505 | SR SMITH CUSTOM POOL FLOOR MOUNTED POST |
| REMARKS: PROVIDE CUSTOM LENGTH 1.9" O.D. x .065" WALL STAINLESS STEEL VOLLEYBALL NET SUPPORT POST, WITH REMOVABLE STAINLESS STEEL EYEBOLTS WHICH ANCHOR THE NET. PROVIDE BRONZE ANCHOR WITH THREADED CAP FOR WHEN POST IS NOT INSTALLED. ANCHOR AND CAP SHALL BE INSTALLED FLUSH WITH POOL FINISH WITH NO EXPOSED EDGES. ANCHOR SHALL BE INSTALLED TO PROVIDE FOR VERTICAL INSTALLATION OF POST. | | | | |
| 16 | DEEP END WALL TOE HOLD | 28 FT LONG | 6 / WF506 | PER ANSI, STATE AND LOCAL CODE REQUIREMENTS |
| REMARKS: PROVIDE A TOE HOLD IN THE END WALL OF THE LAP AREA. BOTTOM OF TOE HOLD SHALL SLOPE TOWARDS THE POOL TO ALLOW FOR COMPLETE DRAINAGE. NO PART OF THE TOE HOLD SHALL EXTEND PAST THE FACE OF THE WALL. BOTTOM OF TOE HOLD SHALL BE MIN. 3'–6" BELOW WATER LEVEL. POOL CONTRACTOR SHALL THICKEN THE POOL WALL BEHIND THE TOE HOLD. | | | | |
| 17 | ADDITIONAL STEEL AT BREAKLINE | 12" O.C. | 4 / WF413 | #4 REINFORCING BARS 10'–0" LONG EACH |
| 18 | POST ANCHORS FOR PROTECTIVE NETTING | 6 ANCHOR LOCATIONS | N/A | SPECTRUM PRODUCTS BRONZE 6" ANCHOR KIT #23638 & #36450 |
| REMARKS: POOL CONTRACTOR SHALL PROVIDE POST ANCHORS IN THE FINGERWALL. ANCHORS SHALL BE SUPPORTED FULLY IN THE SHOTCRETE WALL EXTENDING THRU THE FINGERWALL COPING. ANCHORS SHALL HAVE THREADED CLOSURE PLATES FOR WHEN THE POSTS ARE NOT IN PLACE. POSTS AND PROTECTIVE NETTING PROVIDED AND INSTALLED BY THE OWNER. | | | | |

The entire contents of the attached documents, including all sketches, plans, studies, drawings, schedules and specifications and all copyrights therein are, and shall remain the sole property of Water Design Incorporated. The documents and their contents may not be used, photocopied or reproduced digitally, electronically or in any other manner without the express prior written consent of Water Design Incorporated.

MHTN ARCHITECTS
MHTN Architects, Inc.
420 East South Temple
Suite 100
Salt Lake City, Utah 84111
Telephone (801) 595-6700
Telefax (801) 595-6717
www.mhtn.com

Hastings+Chivetta
ARCHITECTURE • PLANNING • ENGINEERING
622 Emerson, Suite 200
St. Louis, MO 63141
Tel. 314.863.5717
Fax. 314.863.2823
www.hastingschivetta.com

Water Design Inc.
5047 S. Galleria Dr.
Murray, Utah 84123
Phone: (801) 261-4009
Fax: (801) 261-4069
www.waterdesigninc.com

BUILDING OFFICIAL STAMP

# UNIVERSITY OF UTAH
# STUDENT LIFE CENTER
1836 E. BALLIF ROAD
SALT LAKE CITY, UTAH 84112

SEAL

LICENSED PROFESSIONAL ENGINEER
CHARLES ROSS ANDERSON
145589-2202
5-15-13
STATE OF UTAH

MHTN PROJECT NO.
DRAWN BY: ACR CHECKED BY: BA
ISSUED:

| NO. | DATE | DESCRIPTION |
|---|---|---|

CONTRACTOR TO VERIFY DRAWINGS IN FIELD USE REFLECT LAST REVISION DATE.

| NO. | DATE | DESCRIPTION |
|---|---|---|

SHEET NAME
ACTIVITY POOL PLAN

BID DOCUMENTS
MAY 15, 2013

SHEET NUMBER
WF400.0

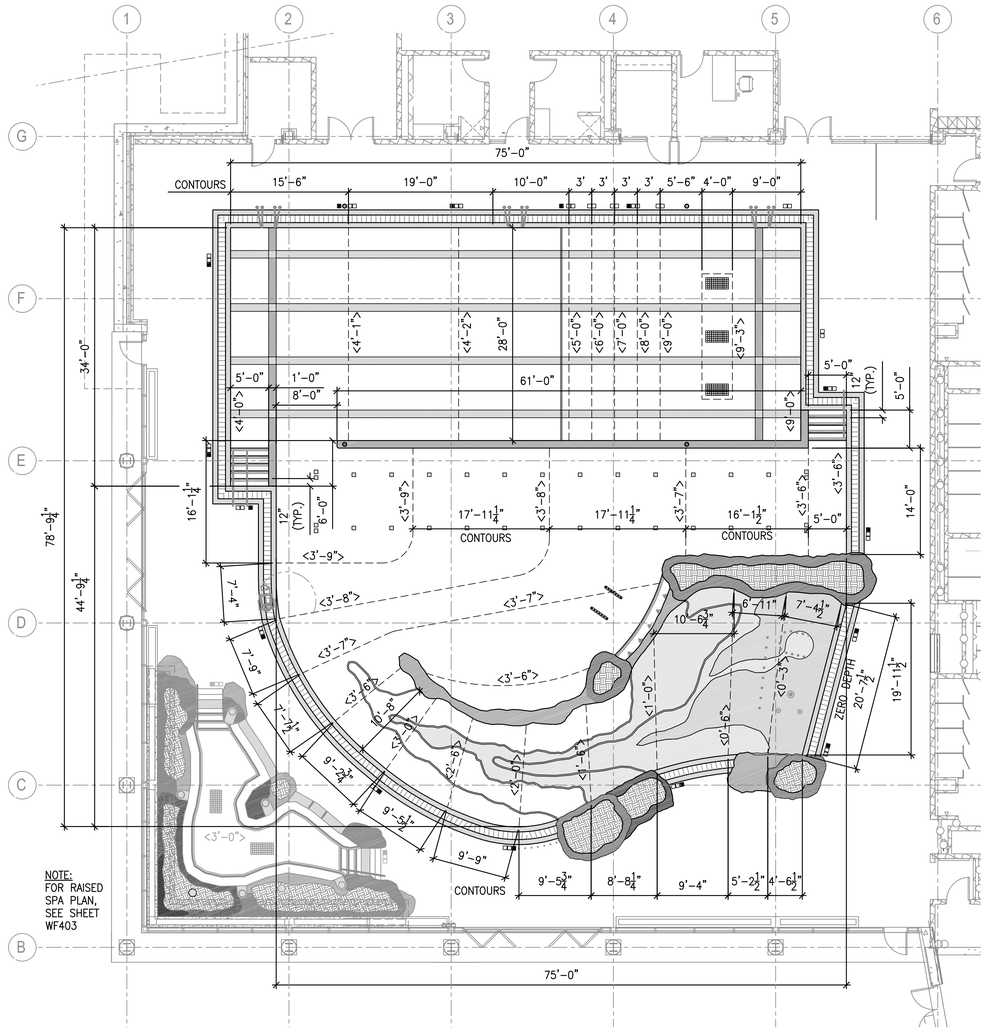


## ACTIVITY POOL DIMENSION PLAN

SCALE: 1/8" = 1'-0"

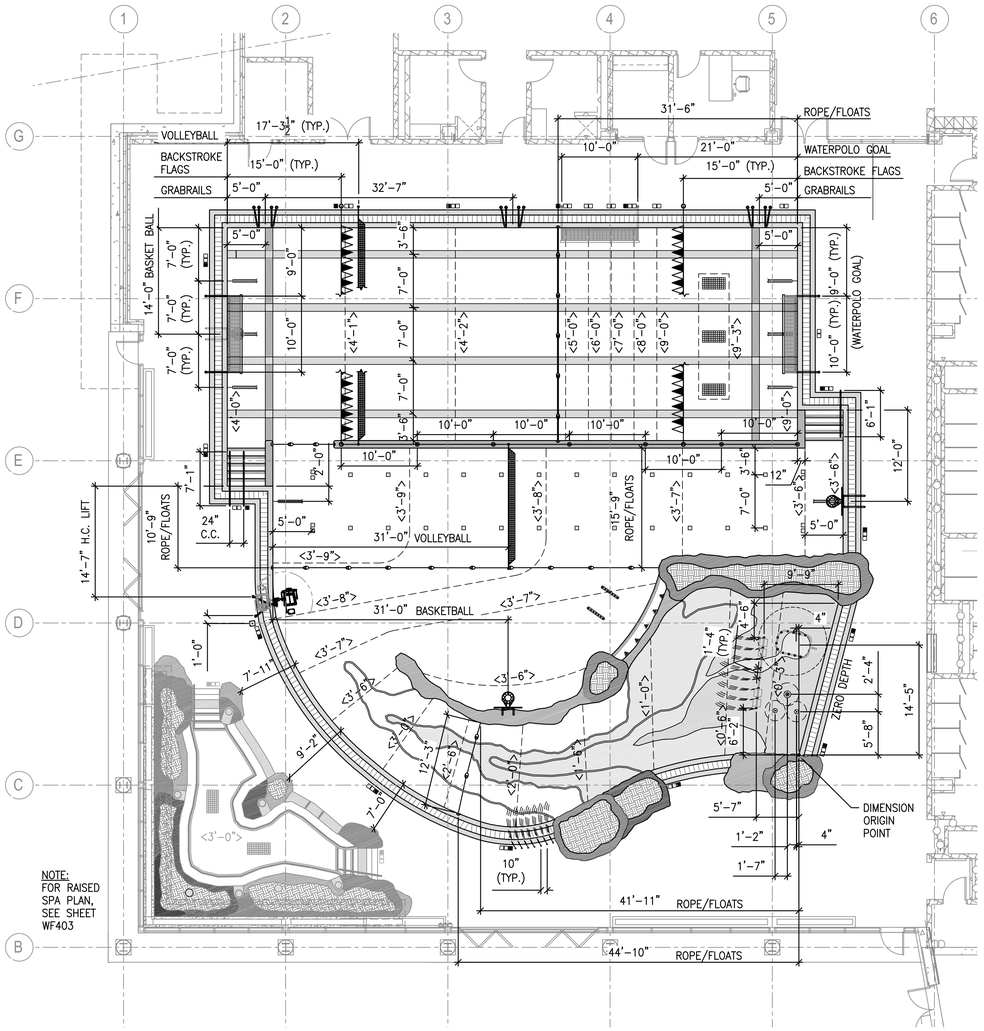


## ACTIVITY POOL DECK EQUIPMENT DIMENSION PLAN

SCALE: 1/8" = 1'-0"

**POOL LAYOUT ON SITE:**

DIMENSIONS SHOWN ARE FOR REFERENCE ONLY. POOL CONTRACTOR SHALL HAVE POOL LAYED OUT ON SITE BY A PROFESSIONAL SURVEYOR PRIOR TO EXCAVATION. POOL CONTRACTOR IS RESPONSIBLE FOR POOL SPECIFIC SURVEY WORK. AN ELECTRONIC FILE OF THE POOL BASE MAY BE PROVIDED TO THE CONTRACTOR FOR SURVEYOR'S USE. SEE CIVIL DRAWINGS FOR REFERENCE POINTS AND ADDITIONAL SITE INFORMATION.

The entire contents of the attached documents, including all sketches, plans, studies, drawings, schedules and specifications and all copyrights therein are, and shall remain the sole property of Water Design Incorporated. The documents and their contents may not be used, photocopied or reproduced digitally, electronically or in any other manner without the express prior written consent of Water Design Incorporated.

MHTN
ARCHITECTS
MHTN Architects, Inc.
420 East South Temple
Suite 100
Salt Lake City, Utah 84111
Telephone (801) 595-6700
Telefax (801) 595-6717
www.mhtn.com

Hastings+Chivetta
ARCHITECTURE • PLANNING • ENGINEERING
622 Emerson, Suite 200
St. Louis, MO 63141
Tel. 314.863.5717
Fax. 314.863.2823
www.hastingschivetta.com

Water Design Inc.
5047 S. Galleria Dr.
Murray, Utah 84123
Phone : (801) 261-4009
Fax : (801) 261-4069
www.waterdesigninc.com

BUILDING OFFICIAL STAMP

# UNIVERSITY OF UTAH
## STUDENT LIFE CENTER
1836 E. BALLIF ROAD
SALT LAKE CITY, UTAH 84112

SEAL

LICENSED PROFESSIONAL ENGINEER
CHARLES ROSS ANDERSON
145589-2202
5-15-13
STATE OF UTAH

MHTN PROJECT NO.

DRAWN BY: ACR CHECKED BY: BA

ISSUED:

| NO. | DATE | DESCRIPTION |
|---|---|---|
| | | |

CONTRACTOR TO VERIFY DRAWINGS IN FIELD USE REFLECT LAST REVISION DATE.

| NO. | DATE | DESCRIPTION |
|---|---|---|
| | | |

SHEET NAME
ACTIVITY POOL DIMENSION PLAN

BID DOCUMENTS
MAY 15, 2013

SHEET NUMBER
WF400.1

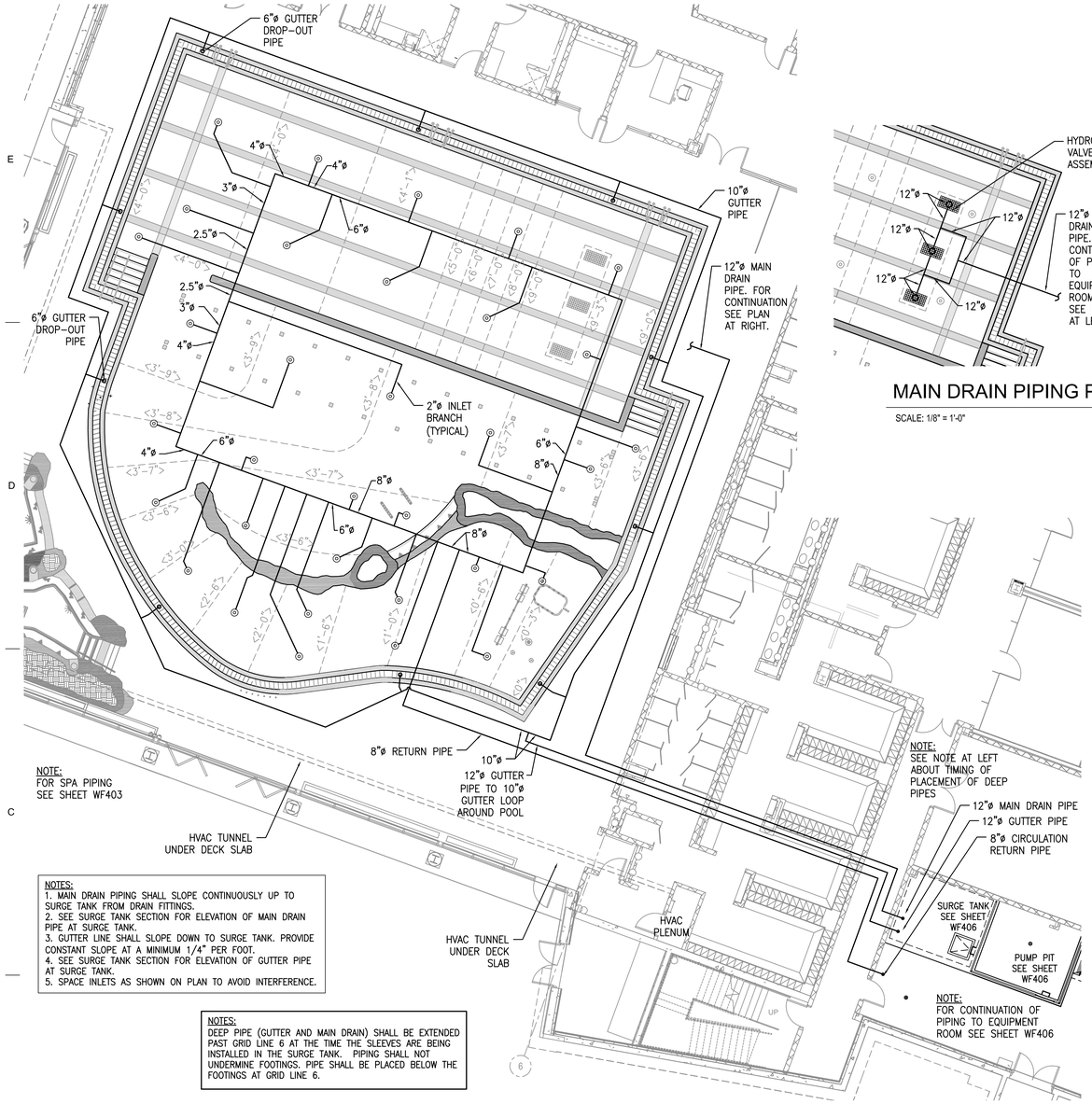


NOTES:
1. MAIN DRAIN PIPING SHALL SLOPE CONTINUOUSLY UP TO SURGE TANK FROM DRAIN FITTINGS.
2. SEE SURGE TANK SECTION FOR ELEVATION OF MAIN DRAIN PIPE AT SURGE TANK.
3. GUTTER LINE SHALL SLOPE DOWN TO SURGE TANK. PROVIDE CONSTANT SLOPE AT A MINIMUM 1/4" PER FOOT.
4. SEE SURGE TANK SECTION FOR ELEVATION OF GUTTER PIPE AT SURGE TANK.
5. SPACE INLETS AS SHOWN ON PLAN TO AVOID INTERFERENCE.

NOTES:
DEEP PIPE (GUTTER AND MAIN DRAIN) SHALL BE EXTENDED PAST GRID LINE 6 AT THE TIME THE SLEEVES ARE BEING INSTALLED IN THE SURGE TANK. PIPING SHALL NOT UNDERMINE FOOTINGS. PIPE SHALL BE PLACED BELOW THE FOOTINGS AT GRID LINE 6.

## POOL CIRCULATION PIPING PLAN

SCALE: 1/8" = 1'-0"

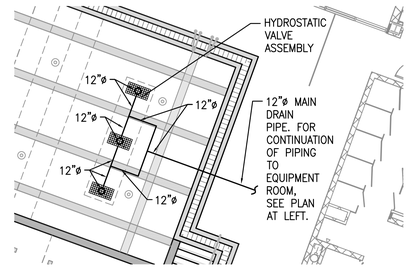


## MAIN DRAIN PIPING PLAN

SCALE: 1/8" = 1'-0"

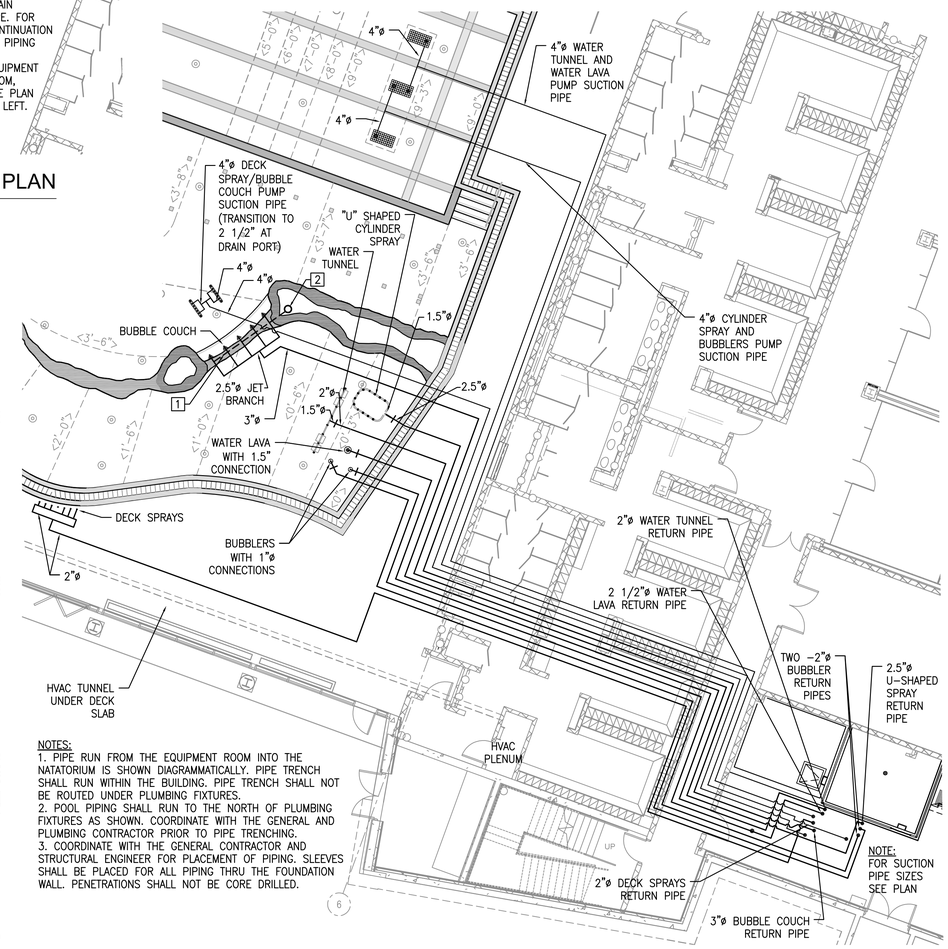


NOTES:
1. PIPE RUN FROM THE EQUIPMENT ROOM INTO THE NATATORIUM IS SHOWN DIAGRAMMATICALLY. PIPE TRENCH SHALL RUN WITHIN THE BUILDING. PIPE TRENCH SHALL NOT BE ROUTED UNDER PLUMBING FIXTURES.
2. POOL PIPING SHALL RUN TO THE NORTH OF PLUMBING FIXTURES AS SHOWN. COORDINATE WITH THE GENERAL AND PLUMBING CONTRACTOR PRIOR TO PIPE TRENCHING.
3. COORDINATE WITH THE GENERAL CONTRACTOR AND STRUCTURAL ENGINEER FOR PLACEMENT OF PIPING. SLEEVES SHALL BE PLACED FOR ALL PIPING THRU THE FOUNDATION WALL. PENETRATIONS SHALL NOT BE CORE DRILLED.

## ACTIVITY POOL FEATURE PIPING PLAN

SCALE: 1/8" = 1'-0"

N TRUE NORTH

## POOL LAYOUT ON SITE:

DIMENSIONS SHOWN ARE FOR REFERENCE ONLY. POOL CONTRACTOR SHALL HAVE POOL LAYED OUT ON SITE BY A PROFESSIONAL SURVEYOR PRIOR TO EXCAVATION. POOL CONTRACTOR IS RESPONSIBLE FOR POOL SPECIFIC SURVEY WORK. AN ELECTRONIC FILE OF THE POOL BASE MAY BE PROVIDED TO THE CONTRACTOR FOR SURVEYOR'S USE. SEE CIVIL AND ARCHITECTURAL DRAWINGS FOR REFERENCE POINTS AND ADDITIONAL SITE INFORMATION.

## GUTTER POOL PIPING NOTES:

1. ALL PIPING SHALL BE NSF APPROVED (ANSI/NSF 14), SCHEDULE 40 PVC (UNLESS OTHERWISE NOTED).
2. ALL PIPING SHALL BE IN ACCORDANCE WITH THE UTAH STATE PLUMBING CODE AND UTAH DEPARTMENT OF PUBLIC HEALTH CODE, THE A.S.T.M. DESIGNATION NUMBER D-1785, AND THE NSF SEAL FOR POTABLE WATER.
3. PVC PIPE INSTALLED SHALL CONFORM TO THE REQUIREMENT OF TECHNICAL REPORT PPI-TTR 13 (8/73). PLASTIC PIPE INSTITUTE.
4. POOL CONTRACTOR SHALL MAKE EVERY EFFORT TO CURTAIL THE USE OF FITTINGS TO REDUCE HEAD.
5. PIPING SHALL BE INSTALLED WITHOUT AIR ENTRAPPING HIGH POINTS OR REVERSE SLOPES, I.E. ON DISCHARGE LINES, NO DESCENDING RUNS BEYOND HORIZONTAL OR ASCENDING RUNS; ON SUCTION LINES, NO DESCENDING RUNS BEYOND ASCENDING RUNS.
6. ALL UNDERGROUND PRESSURE AND SUCTION PIPING SHALL SLOPE A MINIMUM OF 1%.
7. THE TEE FEEDING FROM THE COMMON LINE BETWEEN THE SUCTION OUTLETS, TO THE PUMP(S) SHALL BE LOCATED APPROXIMATELY MIDWAY BETWEEN THE OUTLETS (ANSI/APSP-7).
8. PIPING SHALL BE INSTALLED TO PREVENT FREEZING. WINTERIZE PIPING DURING WINTER MONTHS WHEN POOL IS NOT IN OPERATION.
9. ALL PIPING SHALL BE TESTED WITH AN INDUCED HYDRAULIC STATIC PRESSURE TEST AT MINIMUM 50 POUNDS PER SQUARE INCH (PSI) FOR 24 HOURS OR PER WRITTEN SPECIFICATIONS IF PROVIDED.
10. ALL DRAIN FITTINGS TO CARRY 100 % OF RECIRCULATION RATE AT A VELOCITY NOT TO EXCEED 1.5 FEET PER SECOND THROUGH THE CLEAR AREA OF THE GRATE WHEN ONE OUTLET FITTING IS COVERED.
11. MAIN DRAIN PIPING SHALL CARRY 100 % OF RECIRCULATION RATE AT A VELOCITY NOT TO EXCEED 6' PER SECOND.
12. ALL PIPING DESIGNED FOR 6' PER SECOND MAXIMUM SUCTION, 10' PER SECOND MAXIMUM PRESSURE, AND 3' PER SECOND MAXIMUM GRAVITY.
13. VERIFY PIPE SIZES WITH THE EQUIPMENT ROOM PLAN AND SCHEMATIC. IF THERE ARE ANY DISCREPANCIES, REPORT THEM TO THE ARCHITECT/ENGINEER IMMEDIATELY.
14. POOL CONTRACTOR SHALL COORDINATE ALL WORK WITH ARCHITECTURAL, MECHANICAL, ELECTRICAL AND STRUCTURAL DRAWINGS.
15. OVERALL PIPING IS SHOWN IN DIAGRAMMATIC FORM TO INDICATE WORK TO BE DONE RATHER THAN TO SHOW EXACT ROUTING & LOCATION. MAKE USE OF ALL DATA IN CONTRACT DOCUMENTS, VERIFY AGAINST DEVELOPED FIELD CONDITIONS, & INSTALL WORK IN AN ORDERLY ARRANGEMENT IN A MANNER TO OVERCOME STRUCTURAL, MECHANICAL & ELECTRICAL INTERFERENCE.
16. ALL GUTTER PIPING AND INLET RETURN PIPING MUST BE LAID SO IT WILL DRAIN TO THE SURGE TANK COMPLETELY BY GRAVITY.
17. MAIN DRAIN LINE PIPING MUST BE LAID SO THAT IF THE MAIN DRAIN FITTINGS ARE DEEPER THAN THE SURGE TANK, THEN THE MAIN DRAIN PIPING SHALL SLOPE TO CONTINUOUSLY PITCH TO DRAIN TO THE DRAIN FITTINGS. IF THE MAIN DRAIN FITTINGS ARE SHALLOWER THAN THE SURGE TANK, THEN THE MAIN DRAIN PIPING SHALL SLOPE TO CONTINUOUSLY PITCH TO DRAIN TO THE SURGE TANK.
18. IN ALL INSTANCES WHERE GRAVITY DRAINAGE IS NOT PROVIDED, THE POOL CONTRACTOR SHALL INSTALL DRAIN VALVES SO THAT ALL LINES CAN BE DRAINED COMPLETELY TO THE SURGE TANK OR ANOTHER APPROVED LOCATION.
19. DRAINAGE PLUGS SHALL BE PROVIDED IN THE PIPING SYSTEM TO ALLOW FOR DRAINING POOL PIPING.
20. POOL CONTRACTOR SHALL PROVIDE OPERATION AND DRAINING INSTRUCTION TO THE OWNER.
21. ALL ELEVATIONS TO BE FIELD VERIFIED TO ALLOW FOR PROPER PITCH AND DRAINAGE. PITCH APPROXIMATELY 1" IN 10'-0".

## ACTIVITY POOL CIRCULATION FITTING SCHEDULE

| MARK | DESCRIPTION | QUANTITY | DETAIL | REQUIREMENT |
|---|---|---|---|---|
| | CIRCULATION OUTLET FRAME AND GRATE WITH FIELD BUILT CONCRETE SUMP | 3 | 5 WF504 | LAWSON AQUATIC COVER 18" x 36" #MD-FG1836 UNBLOCKABLE |
| REMARKS: PROVIDE SIZE OF PIPE CONNECTION TO SUMP OUTLETS AS SHOWN ON PLAN. (CIRCULATION AND FEATURE) TAMPER PROOF STAINLESS STEEL FASTENERS REQUIRED. FRAME AND GRATE SHALL BE LISTED ACCORDING TO THE CURRENT ASME/ANSI A-112.19.8 STANDARD. ALLOWABLE FLOW PER GRATE PER NSF CERTIFICATION EQUALS 1606 GPM. PROVIDE HYDROSTATIC RELIEF VALVE ASSEMBLY IN THE BOTTOM OF EACH SUMP. | | | | |
| ● | HYDROSTATIC RELIEF VALVE ASSEMBLY | 3 | 6 WF504 | HAYWARD #SP1056 #SP1055 OR APPROVED EQUAL |
| REMARKS: PROVIDE ONE IN EACH MAIN DRAIN SUMP. | | | | |
| ◎ | FLOOR RETURN WATER INLET FITTING | 33 | 8 WF504 | STA-RITE OR APPROVED EQUAL |
| REMARKS: SEE DETAIL FOR ADJUSTMENT AMOUNT. SPACE INLETS PER PLAN DIMENSIONS. | | | | |
| ○ | GUTTER DROP OUTS | 10 | 7 WF504 | 6"ø PVC PIPE |

## ACTIVITY POOL FEATURE FITTING SCHEDULE

| MARK | DESCRIPTION | QUANTITY | DETAIL | REQUIREMENT |
|---|---|---|---|---|
| | BUBBLE COUCH & DECK SPRAY PUMP OUTLET FRAME AND GRATE | 2 | 4 WF504 | AQUASTAR CHANNEL DRAIN 4" x 32 1/2" |
| REMARKS: CAP MIDDLE PORT. UTILIZE TWO OUTSIDE PORTS. PROVIDE TRANSITION FROM 4"ø PIPE TO 2 1/2"ø PIPE. TAMPER PROOF STAINLESS STEEL FASTENERS REQUIRED. OUTLET COVERS SHALL COMPLY WITH ASME/ANSI A112.19.8 STANDARD. COLOR OF DRAIN COVER SHALL MATCH POOL FLOOR FINISH COLOR. PROVIDE COLOR SAMPLES TO ARCHITECT FOR SELECTION. | | | | |
| → | BUBBLE COUCH JET FITTING | 5 JETS | 12 WF504 | HYDRO-AIR #10-4325 OR EQUAL |
| REMARKS: SHOTCRETE EXTENDED VENTURI TEE ASSEMBLY. PROVIDE COMPLETE WITH THE VENTURI TEE. HEX REDUCER REDUCER TO PROVIDE 18 G.P.M./JET. PROVIDE COLOR OPTIONS TO ARCHITECT FOR SELECTION. | | | | |
| 1 | AIR LINE TO JETS | ONE AIR LINE FOR 5 JETS | 12 WF504 | SCH. 40 PVC PIPE FROM AIR INTAKE BOX |
| REMARKS: PROVIDE ONE AIR LINE FOR SET OF 5 JETS. PROVIDE FOUR AIR LINES TOTAL. SEE PLAN. PIPING SHALL SLOPE CONTINUOUSLY TO PORT WITH NO LOW SPOTS. | | | | |
| 2 | AIR INTAKE BOX (AIR PORT) | 1 | 5 WF506 SIMILAR | PARAMOUNT AIRPORT 004-252-8192-OX |
| REMARKS: PROVIDE MUFFLER FITTING, AND USE BOTTOM PORTS FOR AIR LINE CONNECTIONS. LOCATE IN FAUX ROCK AND PROVIDE POUR A LID FITTING TO CAMOUFLAGE. | | | | |

The entire contents of the attached documents, including all sketches, plans, studies, drawings, schedules and specifications and all copyrights therein are, and shall remain the sole property of Water Design Incorporated. The documents and their contents may not be used, photocopied or reproduced digitally, electronically or in any other manner without the express prior written consent of Water Design Incorporated.

MHTN
ARCHITECTS
MHTN Architects, Inc.
420 East South Temple
Suite 100
Salt Lake City, Utah 84111
Telephone (801) 595-6700
Telefax (801) 595-6717
www.mhtn.com

Hastings+Chivetta
ARCHITECTURE • PLANNING • ENGINEERING
622 Emerson, Suite 200
St. Louis, MO 63141
Tel. 314.863.5717
Fax. 314.863.2823
www.hastingschivetta.com

Water Design Inc.
5047 S. Galleria Dr.
Murray, Utah 84123
Phone : (801) 261-4009
Fax : (801) 261-4069
www.waterdesigninc.com

BUILDING OFFICIAL STAMP

# UNIVERSITY OF UTAH
# STUDENT LIFE CENTER
1836 E. BALLIF ROAD
SALT LAKE CITY, UTAH 84112

SEAL

LICENSED PROFESSIONAL ENGINEER
CHARLES ROSS ANDERSON
145589-2202
5-15-13
STATE OF UTAH

MHTN PROJECT NO.

DRAWN BY: ACR CHECKED BY: BA

ISSUED:

| NO. | DATE | DESCRIPTION |
|---|---|---|

CONTRACTOR TO VERIFY DRAWINGS IN FIELD USE REFLECT LAST REVISION DATE.

| NO. | DATE | DESCRIPTION |
|---|---|---|

SHEET NAME
ACTIVITY POOL PIPING PLANS

BID DOCUMENTS
MAY 15, 2013

SHEET NUMBER
WF400.2

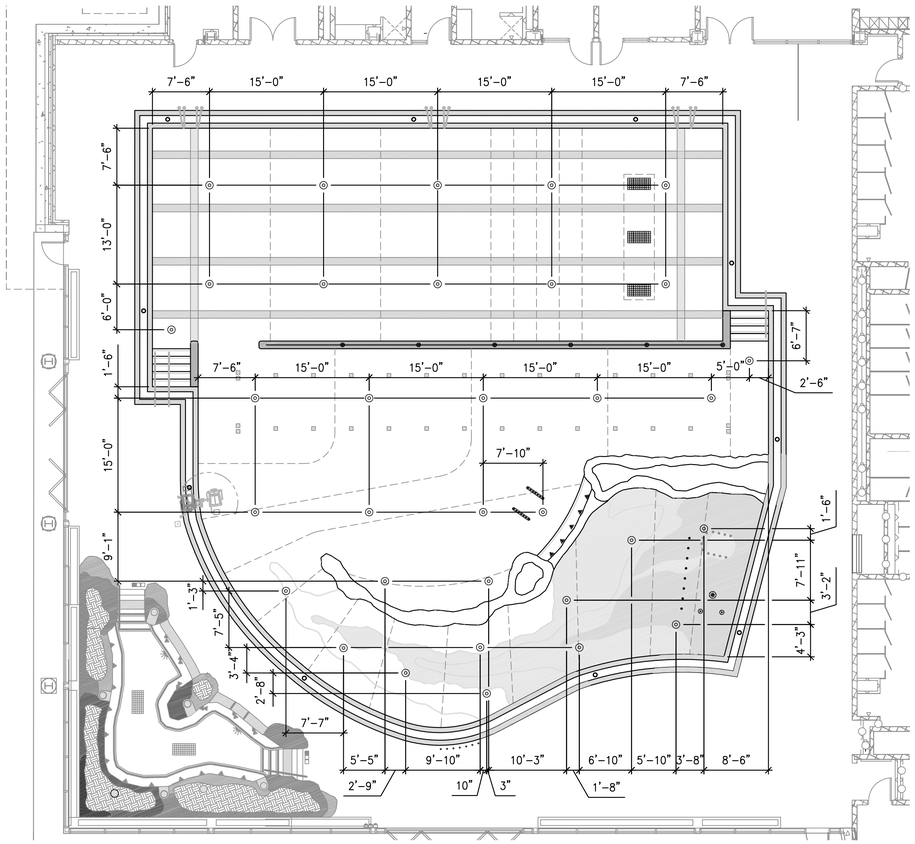


## ACTIVITY POOL FLOOR INLET DIMENSION PLAN

SCALE: 1/8" = 1'-0"

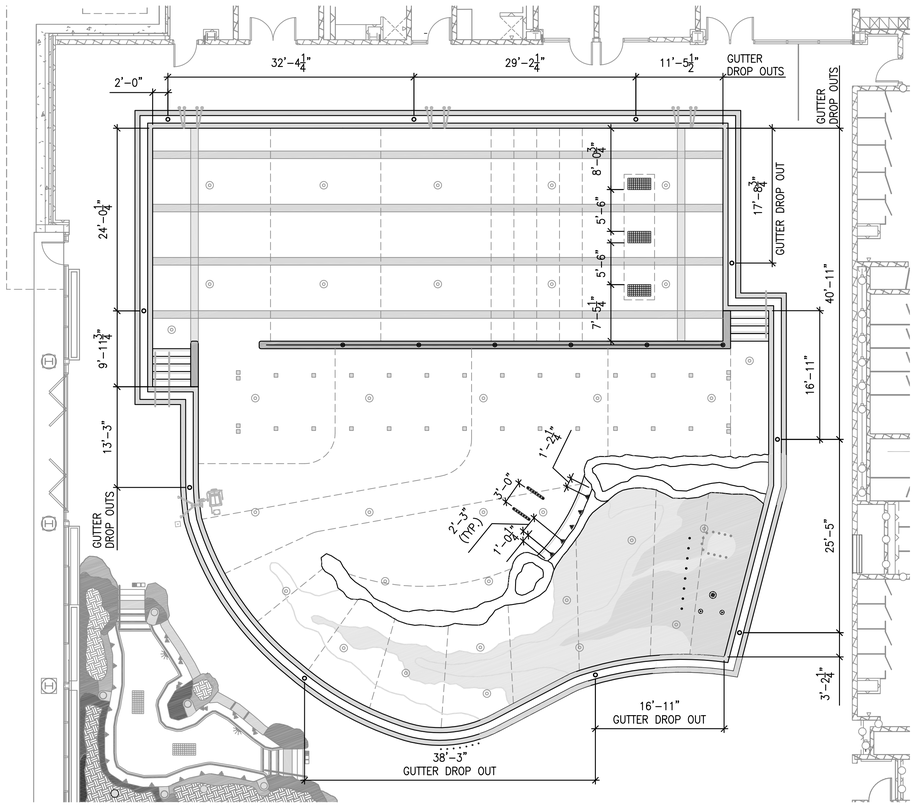


## ACTIVITY POOL GUTTER DROP OUT, DRAINS AND JET DIMENSION PLAN

SCALE: 1/8" = 1'-0"

**POOL LAYOUT ON SITE:**

DIMENSIONS SHOWN ARE FOR REFERENCE ONLY. POOL CONTRACTOR SHALL HAVE POOL LAYED OUT ON SITE BY A PROFESSIONAL SURVEYOR PRIOR TO EXCAVATION. POOL CONTRACTOR IS RESPONSIBLE FOR POOL SPECIFIC SURVEY WORK. AN ELECTRONIC FILE OF THE POOL BASE MAY BE PROVIDED TO THE CONTRACTOR FOR SURVEYOR'S USE. SEE CIVIL DRAWINGS FOR REFERENCE POINTS AND ADDITIONAL SITE INFORMATION.

The entire contents of the attached documents, including all sketches, plans, studies, drawings, schedules and specifications and all copyrights therein are, and shall remain the sole property of Water Design Incorporated. The documents and their contents may not be used, photocopied or reproduced digitally, electronically or in any other manner without the express prior written consent of Water Design Incorporated.

MHTN
ARCHITECTS
MHTN Architects, Inc.
420 East South Temple
Suite 100
Salt Lake City, Utah 84111
Telephone (801) 595-6700
Telefax (801) 595-6717
www.mhtn.com

Hastings+Chivetta
ARCHITECTURE • PLANNING • ENGINEERING
622 Emerson, Suite 200
St. Louis, MO 63141
Tel. 314.863.5717
Fax. 314.863.2823
www.hastingschivetta.com

Water Design Inc.
5047 S. Galleria Dr.
Murray, Utah 84123
Phone : (801) 261-4009
Fax : (801) 261-4069
www.waterdesigninc.com

BUILDING OFFICIAL STAMP

# UNIVERSITY OF UTAH
## STUDENT LIFE CENTER
1836 E. BALLIF ROAD
SALT LAKE CITY, UTAH 84112

SEAL

LICENSED PROFESSIONAL ENGINEER
CHARLES ROSS ANDERSON
145589-2202
5-15-13
STATE OF UTAH

MHTN PROJECT NO.

DRAWN BY: ACR CHECKED BY: BA

ISSUED:

| NO. | DATE | DESCRIPTION |
|---|---|---|
| | | |

CONTRACTOR TO VERIFY DRAWINGS IN FIELD USE REFLECT LAST REVISION DATE.

| NO. | DATE | DESCRIPTION |
|---|---|---|
| | | |

SHEET NAME

ACTIVITY POOL FITTING DIMENSION PLAN

BID DOCUMENTS
MAY 15, 2013

SHEET NUMBER

WF400.3

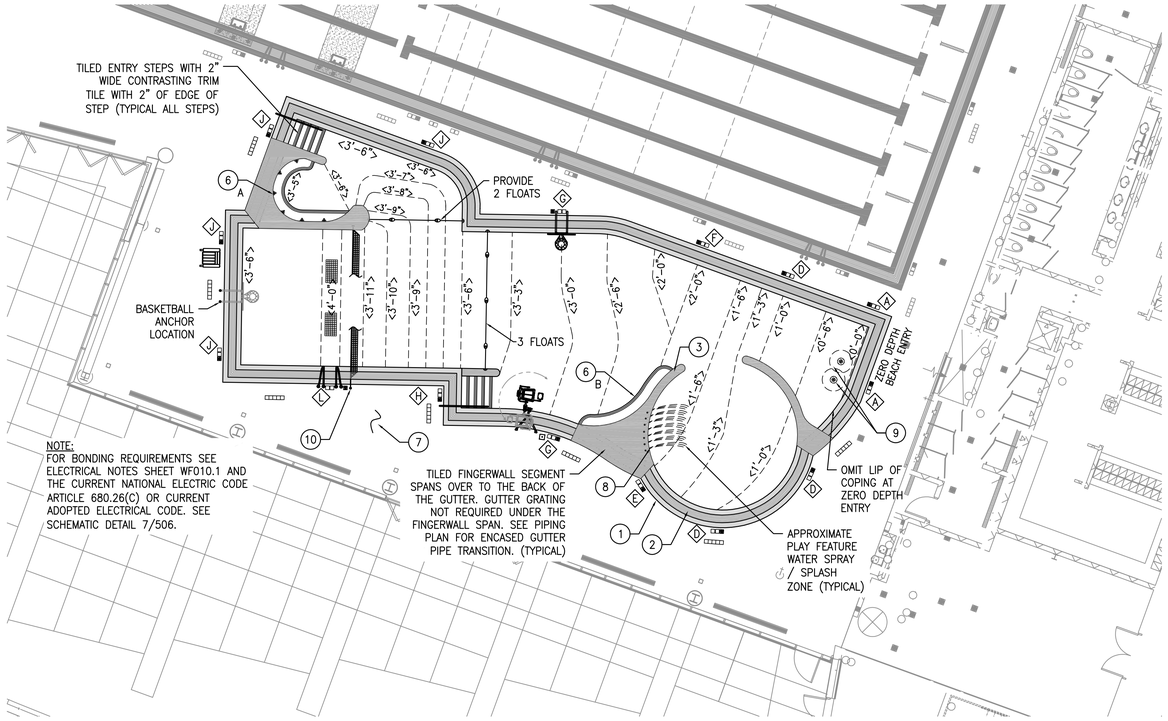


## ENLARGED ACTIVITY POOL PLAN - ALT BID

SCALE: 1/8" = 1'-0"

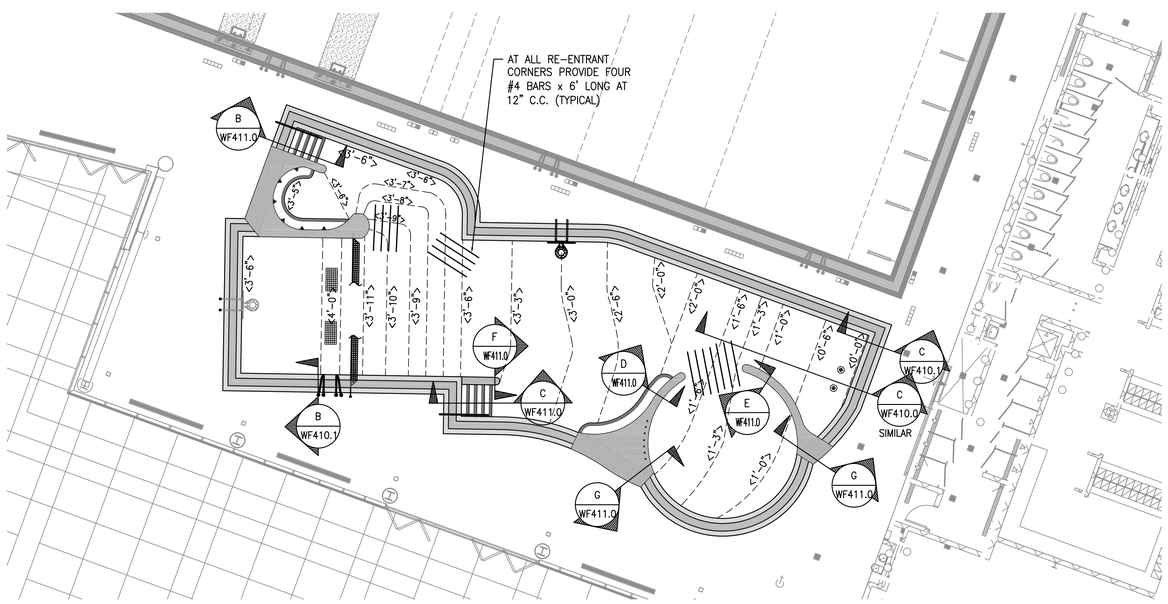


## ACTIVITY POOL PLAN WITH SECTION CUTS

SCALE: 1/8" = 1'-0"

# ACTIVITY POOL DECK EQUIPMENT SCHEDULE

| MARK | DESCRIPTION | QUANTITY | DETAIL | REQUIREMENT |
|---|---|---|---|---|
| | ENTRY STEP HANDRAIL | 2 LOCATIONS | B WF411.0 / C WF411.0 | S.R. SMITH CUSTOM 3-BEND |
| REMARKS: STAINLESS STEEL RAIL 1.90" O.D. X 0.065" THICK WALL. PROVIDE WITH WEDGE ANCHORS & S.S. ESCUTCHEON PLATES (SEE DETAIL 4/WF503). DECK ANCHOR INSTALLED BY DECK CONTRACTOR. THICKEN DECK AS REQUIRED. POOL CONTRACTOR SHALL VERIFY THAT ALL ANCHORS ARE SET AT THE CORRECT ELEVATION JUST PRIOR TO THE DECK PLACEMENT. SEE POOL PLAN FOR HANDRAIL LENGTH. FIELD VERIFY WITH SITE CONDITIONS THE REQUIRED HANDRAIL DIMENSIONS PRIOR TO ORDERING. | | | |
| A | DEPTH MARKER TILES | SEE PLAN | 1 WF503 | IN-LAYS, INC. OR EQUAL |
| REMARKS: FROST PROOF GLAZED TILE W/4" HIGH NUMBERS WITH CONTRASTING COLOR BACKGROUND ON VERTICAL WALL AT WATERLINE. PROVIDE 6" x 6" FROST PROOF NON-SKID TILE W/4" HIGH NUMBERS WITH CONTRASTING COLOR BACKGROUND ON POOL DECK. SEE DETAIL FOR DEPTH MARKER KEY. WATER DEPTH SHALL BE PLAINLY MARKED AT LOCATION OF MINIMUM AND MAXIMUM POOL WATER DEPTHS AND AT ONE FOOT INCREMENTS OF DEPTH. MARKERS SHALL BE SPACED AT MAX. 25'-0" C.C. DECK DEPTH MARKER TILES PROVIDED BY POOL CONTRACTOR AND INSTALLED BY DECK CONTRACTOR. | | | |
| | "NO DIVING" ICON TILES | SEE PLAN | 1 WF503 | IN-LAYS, INC. OR EQUAL |
| REMARKS: 6" X 6" NON-SKID, FROSTPROOF, CERAMIC NO DIVING TILE WITH LETTERING AND ICON ON CONTRASTING COLOR BACKGROUND. PLACE ON DECK AT 25'-0" C.C. MAXIMUM ADJACENT TO DEPTH MARKERS IN LOCATIONS AS SHOWN ON THE PLAN. NO DIVING TILES PROVIDED BY POOL CONTRACTOR AND INSTALLED BY DECK CONTRACTOR. | | | |
| | "NO RUNNING" TILES | SEE PLAN | 3 WF503 | IN-LAYS, INC. OR EQUAL |
| REMARKS: 6" x 6" NON-SKID, FROSTPROOF, CERAMIC "NO RUNNING" TILES WITH 4" HIGH RED LETTERING ON CONTRASTING COLOR BACKGROUND. PLACE ON DECK AT 25'-0" C.C. MAXIMUM. "NO RUNNING" TILES PROVIDED BY POOL CONTRACTOR AND INSTALLED BY DECK CONTRACTOR | | | |
| | LIFEGUARD CHAIR SEAT HEIGHT 30" | 1 | 8 WF503 | LINCOLN "CHAMPION" #38-057 OR APPROVED EQUAL |
| REMARKS: PROVIDE RECYCLED PLASTIC GUARD CHAIR WITH LIFETIME WARRANTY. PROVIDE COLOR CHOICES TO ARCHITECT FOR SELECTION. LOCATE LIFEGUARD CHAIRS PER REQUIRED STATE AND LOCAL CODES, AND PER OWNER'S DIRECTIONS. | | | | |
| | OUTLET FRAME AND GRATE | SEE ACTIVITY POOL PIPING PLAN AND FITTING SCHEDULE SHEET WF401.3 | | |
| | SAFETY ROPE WITH FLOATS | 2 LOCATIONS | 9 WF503 | LINCOLN AQUATICS |
| REMARKS: SPACE FLOATS MAXIMUM 7'-0" C.C. PROVIDE 3/4"ø ROPE (VERIFY LENGTH REQUIRED). PROVIDE FLOATS, FLOAT COLLARS AND HOOKS. FASTEN FLOATS TO ROPE WITH FLOAT COLLARS SO THAT FLOATS CANNOT SLIDE ON ROPE. PROVIDE NUMBER OF FLOATS AS SHOWN ON PLAN. PROVIDE ABS CUP ANCHORS WITH STAINLESS STEEL BAR. (STA RITE OR APPROVED EQUAL. SEE DETAIL 10/WF503). | | | |
| | POOL BASKETBALL DECK ANCHORS | 1 STANDARD WITH 2 ANCHOR SET LOCATIONS | 1 WF505 | SR SMITH COMMERCIAL DUAL-POST CUSTOM LENGTH BASKETBALL STANDARD AND ANCHOR ASSEMBLY |
| REMARKS: PROVIDE CUSTOM LENGTH STANDARD TO ALLOW FOR INSTALLATION IN THE DECK BEHIND THE WIDE POOL BOND BEAM. PROVIDE 6" DEEP CAST BRONZE ANCHOR ASSEMBLY (#AS-1000). PROVIDE COMPLETE WITH BRASS CAPS TO PROVIDE FLUSH COVER FOR WHEN BASKETBALL STANDARD IS REMOVED. ANCHORS SHALL BE INSTALLED IN THE POOL BOND BEAM BY THE POOL CONTRACTOR. PROVIDE COMPLETE WITH SR SMITH BASKETBALL UPRIGHTS, BACKBOARD AND RIM (PART NUMBER #BASKC). | | | |
| | "PRETZEL TYPE" GRABRAILS, ANCHORS AND RECESSED STEPS | 1 SET | 6 WF503 | SPECTRUM 30" BURBOT .065" THICKNESS CUSTOM LENGTH |
| REMARKS: PROVIDE STAINLESS STEEL PRETZEL STYLE GRABRAILS PROVIDE CUSTOM LENGTH TO ACCOMMODATE INSTALLATION BEHIND THE WIDE POOL WALL BOND BEAM. PROVIDE STAINLESS STEEL GRABRAILS WITH 4" BRONZE INSTITUTIONAL ANCHOR ASSEMBLY AND STAINLESS STEEL ROUND ESCUTCHEON PLATE (SPECTRUM #24097). FOUR ANCHORS AND FOUR ESCUTCHEON PLATES REQUIRED FOR EACH GRABRAIL SET. POOL CONTRACTOR SHALL VERIFY THAT ALL ANCHORS ARE SET AT THE CORRECT ELEVATION JUST PRIOR TO THE DECK PLACEMENT. PROVIDE THREE WHITE RECESSED STEPS PER GRABRAIL LOCATION (S.R. SMITH #62-209-4001). | | | |
| | HANDICAP LIFT AND ANCHOR | 1 | 5 WF503 | SPECTRUM PRODUCTS GALLATIN WP400 BASE STAND CUSTOM ANCHORAGE |
| REMARKS: WITH WIDE POOL BOND BEAM, PROVIDE THE LIFT WITH A CUSTOM BASE STAND, LEVELER FOOT AND A CUSTOM SEAT POLE. POOL CONTRACTOR SHALL PROVIDE THE LIFT COMPLETE WITH ANCHOR, FLEXIBLE HOSE, AND LIFT COVER. PROVIDE CONCRETE FOOTING SIZED PER MANUFACTURER'S RECOMMENDATIONS. POOL CONTRACTOR SHALL VERIFY THAT ALL ANCHORS ARE SET AT THE CORRECT ELEVATION JUST PRIOR TO THE DECK POUR. THE FLUSH MOUNTED WATER BOX SHALL BE MOUNTED IN THE DECK BY THE GENERAL CONTRACTOR AT THE LOCATION PER THE MANUFACTURER'S DETAIL. PLUMBING CONTRACTOR SHALL PROVIDE THE SUPPLY LINE, FLUSH MOUNTED HOSE BIB BOX AND A HOSE SPIGOT WITH MINIMUM 55 PSI AND MAXIMUM 65 PSI FOR INSTALLATION INTO THE WATER BOX. HOSE BIB BOXES SHALL HAVE DRAINS TO WASTE. | | | |

| MARK | DESCRIPTION | QUANTITY | DETAIL | REQUIREMENT |
|---|---|---|---|---|
| 1 | POOL STRUCTURE | AROUND POOL PERIMETER | B WF411.0 / C WF411.0 | STEEL REINFORCED SHOTCRETE |
| REMARKS: REINFORCED SHOTCRETE GUTTER POOL STRUCTURE. POOL SHELL SHALL BE BONDED PER THE REQUIRMENTS OF THE NATIONAL ELECTRIC CODE ARTICLE 680. | | | | |
| 2 | POOL GUTTER | AROUND POOL PERIMETER | 1 WF410.0 / 1 WF410.0 | PRECAST STONE GUTTER COPING W/LAWSON AQUATICS PARALLEL FLOW GRATING |
| REMARKS: PROVIDE PRECAST STONE GUTTER EDGE WITH HAND HOLD AROUND PERIMETER OF POOL. PROVIDE PARALLEL FLOW GRATING AROUND PERIMETER OF GUTTER. PROVIDE PRECAST COPING STONE BEHIND GRATING. SEAL INTERIOR OF GUTTER WITH AQUAFIN 2KM. | | | | |
| 3 | TILED FINGER WALL WITH COPING | SEE PLAN | 1 WF410.0 SIMILAR | PRE-CAST COPING |
| REMARKS: STEEL REINFORCED CONCRETE WALLS WITH PRE-CAST CONCRETE COPING. TOP OF WALL SHALL BE ABOVE THE WATER. PROVIDE TILE AND COPING SAMPLES TO THE ARCHITECT FOR SELECTION. COLOR SELECTIONS BY ARCHITECT. | | | | |
| 4 | POOL WALL AND FLOOR INTERIOR FINISH | AS REQUIRED | N/A | 2" X 2" NON-SLIP CERAMIC TILE |
| REMARKS: FINISH SHALL BE WATERPROOF AND FREE FROM DEFECTS. PROVIDE TILE SAMPLES TO ARCHITECT FOR SELECTION. COLOR SELECTION BY ARCHITECT. | | | | |
| 5 | POOL INTERIOR (POOL SHELL, FINGERWALL AND BENCH) WATERPROOFING | ENTIRE POOL SHELL | N/A | AQUAFIN 2K/M OR EQUAL |
| REMARKS: PRIOR TO THE TILE FINISH INSTALLATION, WATERPROOF INTERIOR OF POOL. PREPARE SURFACE PER MANUFACTURER'S SPECIFICATIONS. SEE WATERPROOFING SPECIFICATIONS AND MANUFACTURER'S INSTALLATION INSTRUCTIONS FOR ADDITIONAL INFORMATION AND REQUIREMENTS. | | | | |
| 6 A | BUBBLE COUCH | SEE PLAN | 6 WF410.0 / 12 WF504 SIMILAR | REINFORCED CONCRETE |
| REMARKS: PROVIDE WITH WATERPROOF TILE FINISH. PROVIDE 2" WIDE NON-SLIP, FROST PROOF CERAMIC TILE WITHIN 2" OF EDGE OF BENCH. TILE COLOR SHALL BE CONTRASTING FORM THE FINISH COLOR. PROVIDE SAMPLES TO ARCHITECT FOR SELECTION. SEE SHEET WF401.2 FOR PIPING DETAILS. | | | | |
| 6 B | SITTING BENCH | SEE PLAN | 8 WF410.0 | REINFORCED CONCRETE |
| REMARKS: PROVIDE WITH WATERPROOF TILE FINISH. PROVIDE 2" WIDE NON-SLIP, FROST PROOF CERAMIC TILE WITHIN 2" OF EDGE OF BENCH. TILE COLOR SHALL BE CONTRASTING FORM THE FINISH COLOR. PROVIDE SAMPLES TO ARCHITECT FOR SELECTION. | | | | |
| 7 | POOL DECK | AS REQUIRED | CONTINUOUS AROUND POOL | NON-SLIP CONCRETE |
| REMARKS: MINIMUM 5' WIDE NON-SLIP CONCRETE DECK CONTINUOUS AROUND POOL PERIMETER. SLOPE DECK 1/4" PER FOOT AWAY FROM BACK OF BOND BEAM TO DECK DRAINS. DECK AND DECK DRAINS BY GENERAL CONTRACTOR. INDOOR DECK DRAINS SHALL DRAIN TO SANITARY SEWER. | | | | |
| 8 | ANGLED DECK SPRAYS | 1 SET WITH 7 NOZZLES | 5 WF505 SIMILAR | CRYSTAL FOUNTAINS STREAM JETS #WMD-100 (800) 779-0748 |
| REMARKS: SEVEN DIRECTIONAL WATER JETS ON CUSTOM PVC MANIFOLD. MAXIMUM WATER VELOCITY FOR INTERACTIVE PLAY IS 20 FT./SEC. INSTALL PER MANUFACTURER'S INSTRUCTIONS AND AT ANGLE AS SHOWN ON DETAIL. | | | | |
| 9 | WATER LAVA | 2 | 5 WF505 | WATER ODYSSEY #W088 |
| REMARKS: PROVIDE LEVEL (HORIZONTAL) PLANE AT NOZZLE FOR VERTICAL WATER SPRAY. STAINLESS STEEL CONSTRUCTION. INSTALL PER MANUFACTURER'S REQUIREMENTS. PROVIDE THICKENED FLOOR SLAB AND LEVELING PAD AS REQUIRED. PROVIDE COLOR CHOICES OF ACRYLIC TOP FOR SELECTION BY ARCHITECT. | | | | |
| 10 | VOLLEYBALL POSTS ANCHORS AND NET | 1 NET WITH WITH TWO POSTS | 4 WF505 | SR SMITH COMMERCIAL VOLLEYBALL GAME WITH CUSTOM WIDTH NET |
| REMARKS: PROVIDE 1.9" O.D. x .065" WALL STAINLESS STEEL VOLLEYBALL NET SUPPORT POSTS, WITH REMOVABLE STAINLESS STEEL EYEBOLTS WHICH ANCHOR THE NET. PROVIDE BRONZE ANCHORS WITH THREADED CAPS FOR WHEN POSTS ARE NOT INSTALLED. ANCHOR SHALL BE INSTALLED TO PROVIDE FOR VERTICAL INSTALLATION OF POSTS. ONE ANCHOR SHALL BE INSTALLED IN THE POOL DECK AND ONE THROUGH THE POOL FINGER WALL COPING INTO THE POOL WALL. | | | | |

## ALTERNATE BID 1

THIS ACTIVITY POOL AND ALL ITS PIPING IS AN ALTERNATE BID ITEM

## ACTIVITY POOL DATA

| | |
|---|---|
| SIZE: | 32'-6 x 82'-6" |
| WATER DEPTH: | 0'-0" (ZERO) TO 4'-0" |
| SHAPE: | CUSTOM |
| CONSTRUCTION TYPE: | SHOTCRETE |
| PERIMETER AREA: | 2,076 SQ.FT. |
| WATER AREA: | 1,979 SQ.FT. |
| PERIMETER: | 225'-8" |
| VOLUME: | 38,416 GALLONS |
| MIN. FLOW: | 367 GPM |
| MAX. FLOW: | 500 GPM |
| TURNOVER AT MINIMUM FLOW: | 1 HOUR 45 MINUTES |

The entire contents of the attached documents, including all sketches, plans, studies, drawings, schedules and specifications and all copyrights therein are, and shall remain the sole property of Water Design Incorporated. The documents and their contents may not be used, photocopied or reproduced digitally, electronically or in any other manner without the express prior written consent of Water Design Incorporated.

MHTN
ARCHITECTS
MHTN Architects, Inc.
420 East South Temple
Suite 100
Salt Lake City, Utah 84111
Telephone (801) 595-6700
Telefax (801) 595-6717
www.mhtn.com

Hastings+Chivetta
ARCHITECTURE • PLANNING • ENGINEERING
622 Emerson, Suite 200
St. Louis, MO 63141
Tel. 314.863.5717
Fax. 314.863.2823
www.hastingschivetta.com

Water Design Inc.
5047 S. Galleria Dr.
Murray, Utah 84123
Phone : (801) 261-4009
Fax : (801) 261-4069
www.waterdesigninc.com

BUILDING OFFICIAL STAMP

# UNIVERSITY OF UTAH
# STUDENT LIFE CENTER
1836 E. BALLIF ROAD
SALT LAKE CITY, UTAH 84112

SEAL

LICENSED PROFESSIONAL ENGINEER
CHARLES INGRO ANDERSON
145580-2202
5-15-13
STATE OF UTAH

MHTN PROJECT NO.

DRAWN BY: ACR CHECKED BY: BA

ISSUED:

| NO. | DATE | DESCRIPTION |
|---|---|---|

CONTRACTOR TO VERIFY DRAWINGS IN FIELD USE REFLECT LAST REVISION DATE.

| NO. | DATE | DESCRIPTION |
|---|---|---|

SHEET NAME
ACTIVITY POOL PLAN - ALT1

BID DOCUMENTS
MAY 15, 2013

SHEET NUMBER
WF401.0

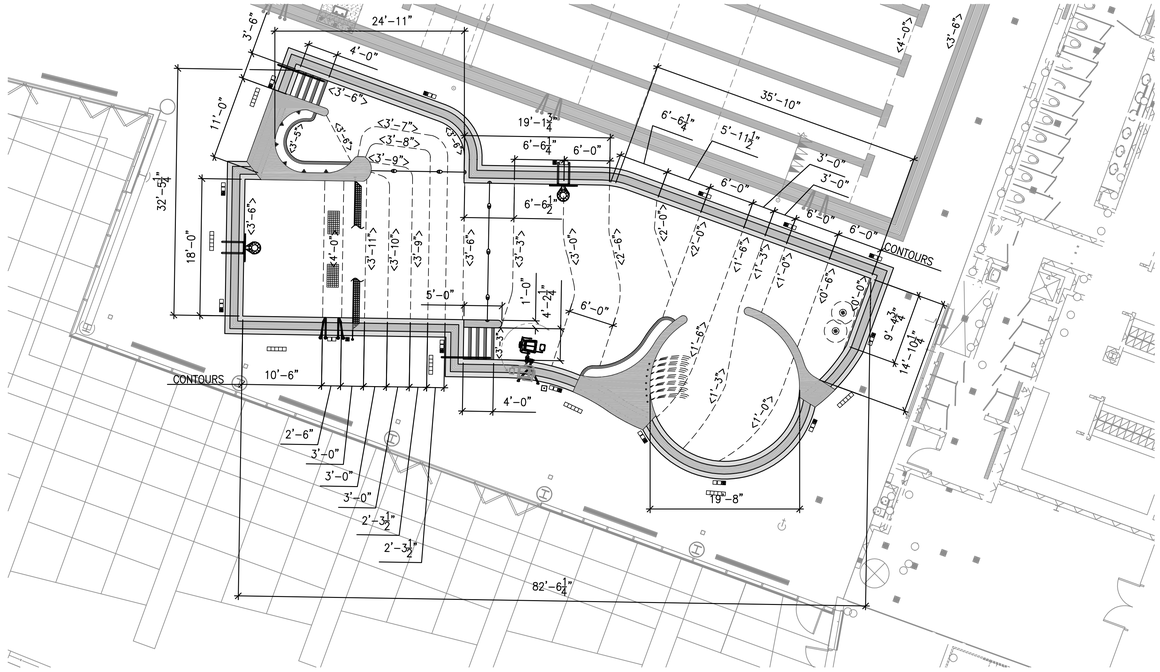


## ACTIVITY POOL DIMENSION PLAN

SCALE: 1/8" = 1'-0"

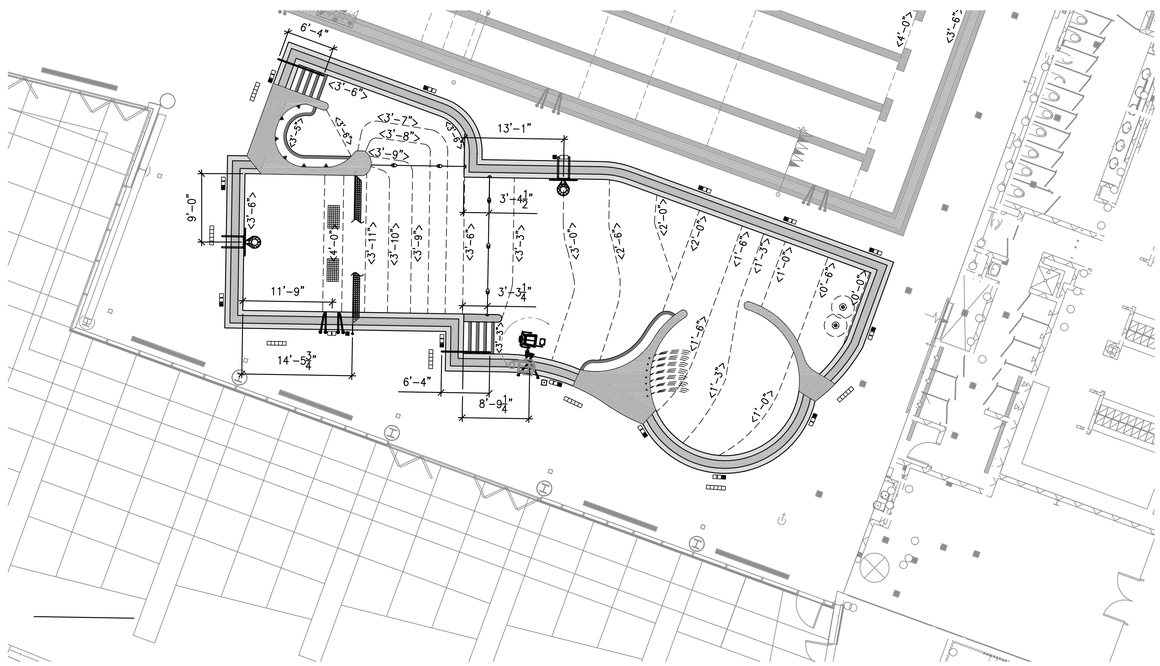


## ACTIVITY POOL DECK EQUIPMENT DIMENSION PLAN

SCALE: 1/8" = 1'-0"

### ALTERNATE BID 1

THIS ACTIVITY POOL AND ALL THE PIPING IS AN ALTERNATE BID ITEM

### POOL LAYOUT ON SITE:

DIMENSIONS SHOWN ARE FOR REFERENCE ONLY. POOL CONTRACTOR SHALL HAVE POOL LAYED OUT ON SITE BY A PROFESSIONAL SURVEYOR PRIOR TO EXCAVATION. POOL CONTRACTOR IS RESPONSIBLE FOR POOL SPECIFIC SURVEY WORK. AN ELECTRONIC FILE OF THE POOL BASE MAY BE PROVIDED TO THE CONTRACTOR FOR SURVEYOR'S USE. SEE CIVIL DRAWINGS FOR REFERENCE POINTS AND ADDITIONAL SITE INFORMATION.

The entire contents of the attached documents, including all sketches, plans, studies, drawings, schedules and specifications and all copyrights therein are, and shall remain the sole property of Water Design Incorporated. The documents and their contents may not be used, photocopied or reproduced digitally, electronically or in any other manner without the express prior written consent of Water Design Incorporated.

MHTN
ARCHITECTS
MHTN Architects, Inc.
420 East South Temple
Suite 100
Salt Lake City, Utah 84111
Telephone (801) 595-6700
Telefax (801) 595-6717
www.mhtn.com

Hastings+Chivetta
ARCHITECTURE • PLANNING • ENGINEERING
622 Emerson, Suite 200
St. Louis, MO 63141
Tel. 314.863.5717
Fax. 314.863.2823
www.hastingschivetta.com

Water Design Inc.
5047 S. Galleria Dr.
Murray, Utah 84123
Phone : (801) 261-4009
Fax : (801) 261-4069
www.waterdesigninc.com

BUILDING OFFICIAL STAMP

# UNIVERSITY OF UTAH
## STUDENT LIFE CENTER
1836 E. BALLIF ROAD
SALT LAKE CITY, UTAH 84112

SEAL

LICENSED PROFESSIONAL ENGINEER
CHARLES ROSS ANDERSON
145580-2202
5-15-13
STATE OF UTAH

MHTN PROJECT NO.

DRAWN BY: ACR CHECKED BY: BA

ISSUED:

| NO. | DATE | DESCRIPTION |
|---|---|---|

CONTRACTOR TO VERIFY DRAWINGS IN FIELD USE REFLECT LAST REVISION DATE.

| NO. | DATE | DESCRIPTION |
|---|---|---|

SHEET NAME

ACTIVITY POOL DIMENSION PLAN - ALT 1

BID DOCUMENTS
MAY 15, 2013

SHEET NUMBER

WF401.1

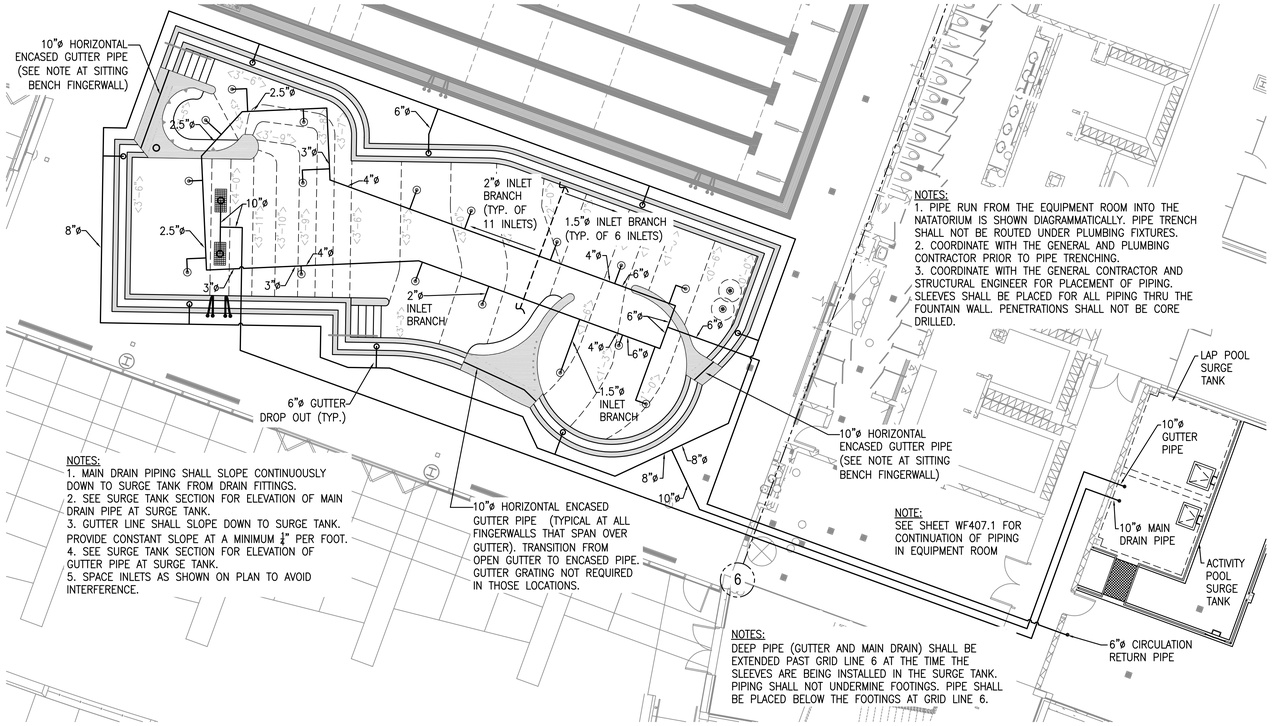


NOTES:
1. MAIN DRAIN PIPING SHALL SLOPE CONTINUOUSLY DOWN TO SURGE TANK FROM DRAIN FITTINGS.
2. SEE SURGE TANK SECTION FOR ELEVATION OF MAIN DRAIN PIPE AT SURGE TANK.
3. GUTTER LINE SHALL SLOPE DOWN TO SURGE TANK. PROVIDE CONSTANT SLOPE AT A MINIMUM ¼" PER FOOT.
4. SEE SURGE TANK SECTION FOR ELEVATION OF GUTTER PIPE AT SURGE TANK.
5. SPACE INLETS AS SHOWN ON PLAN TO AVOID INTERFERENCE.

NOTES:
1. PIPE RUN FROM THE EQUIPMENT ROOM INTO THE NATATORIUM IS SHOWN DIAGRAMMATICALLY. PIPE TRENCH SHALL NOT BE ROUTED UNDER PLUMBING FIXTURES.
2. COORDINATE WITH THE GENERAL AND PLUMBING CONTRACTOR PRIOR TO PIPE TRENCHING.
3. COORDINATE WITH THE GENERAL CONTRACTOR AND STRUCTURAL ENGINEER FOR PLACEMENT OF PIPING. SLEEVES SHALL BE PLACED FOR ALL PIPING THRU THE FOUNTAIN WALL. PENETRATIONS SHALL NOT BE CORE DRILLED.

NOTE:
SEE SHEET WF407.1 FOR CONTINUATION OF PIPING IN EQUIPMENT ROOM

NOTES:
DEEP PIPE (GUTTER AND MAIN DRAIN) SHALL BE EXTENDED PAST GRID LINE 6 AT THE TIME THE SLEEVES ARE BEING INSTALLED IN THE SURGE TANK. PIPING SHALL NOT UNDERMINE FOOTINGS. PIPE SHALL BE PLACED BELOW THE FOOTINGS AT GRID LINE 6.

## ACTIVITY POOL CIRCULATION PIPING PLAN

SCALE: 1/8" = 1'-0"

## ACTIVITY POOL CIRCULATION FITTING SCHEDULE

| MARK | DESCRIPTION | QUANTITY | DETAIL | REQUIREMENT |
|---|---|---|---|---|
| | CIRCULATION OUTLET FRAME AND GRATE WITH FIELD BUILT CONCRETE SUMP | 2 | 5 / WF504 | LAWSON AQUATIC COVER #MD-FG 1836 UNBLOCKABLE |
| REMARKS: PROVIDE SIZE OF PIPE CONNECTIONS TO SUMP OUTLETS AS SHOWN ON PLAN. TAMPER PROOF STAINLESS STEEL FASTENERS REQUIRED. FRAME AND GRATE SHALL BE LISTED ACCORDING TO THE CURRENT ASME/ANSI A-112.19.8 STANDARD. ALLOWABLE FLOW PER GRATE PER NSF CERTIFICATION EQUALS 1606 GPM. PROVIDE HYDROSTATIC RELIEF VALVE ASSEMBLY IN THE BOTTOM OF EACH SUMP. (TWO FEATURE PUMP SUCTION PIPES WILL ALSO DRAW FROM THESE SUMPS) | | | |
| ● | HYDROSTATIC RELIEF VALVE ASSEMBLY | 2 | 6 / WF504 | HAYWARD #SP1056 #SP1055 OR APPROVED EQUAL |
| REMARKS: PROVIDE ONE IN EACH MAIN DRAIN SUMP. | | | | |
| ◎ | FLOOR RETURN WATER INLET FITTING | 17 | 8 / WF504 | STA-RITE OR APPROVED EQUAL |
| REMARKS: SEE DETAIL FOR ADJUSTMENT AMOUNT. SPACE INLETS PER PLAN DIMENSIONS. | | | | |
| ○ | GUTTER DROP OUTS | 8 | 7 / WF504 | 6"ø PVC PIPE |

## ACTIVITY POOL FEATURE FITTING SCHEDULE

| MARK | DESCRIPTION | QUANTITY | DETAIL | REQUIREMENT |
|---|---|---|---|---|
| → | BUBBLE COUCH JET FITTING | 6 JETS | 12 / WF504 | HYDRO-AIR #10-4325 OR EQUAL |
| REMARKS: SHOTCRETE EXTENDED VENTURI TEE ASSEMBLY. ALSO PROVIDE THE OPTIONAL VENTURI TEE HEX REDUCER REDUCER TO PROVIDE 18 G.P.M./JET. | | | | |
| 1 | AIR LINE TO JETS | ONE AIR LINE FOR 8 JETS | N/A | SCH. 40 PVC PIPE FROM AIR INTAKE BOX |
| REMARKS: PROVIDE TWO SETS OF AIRLINES (ONE AIR LINE FOR 6 JETS. TOTAL 6 JETS. SEE PLAN.) SLOPE PIPE CONTINUOUSLY FROM AIR PORT TO JETS. NO LOW SPOTS. | | | | |
| 2 A | AIR INTAKE BOX (AIR PORT) | 1 | 5 / WF506 SIMILAR | PARAMOUNT AIRPORT 004-252-8192-OX |
| REMARKS: PROVIDE MUFFLER FITTING, AND USE BOTH BOTTOM PORTS FOR AIR LINE CONNECTIONS TO ACCOMMODATE SIX JETS. LOCATE IN THE COPING ON THE POOL SIDE OF THE GUTTER. PROVIDE POUR A LID FITTING WITH COPING MATERIAL INFILL. CUT PORT BODY AS NEEDED TO GET CORRECT HEIGHT OF PIPE PORT TO PREVENT WATER TRAPPING LOW SPOTS. | | | | |
| 2 B | POUR-A-LID | 1 | 5 / WF506 SIMILAR | POUR-A-LID |
| REMARKS: PROVIDE WITH FRAME COLOR TO MATCH COPING. PROVIDE COLOR SAMPLES TO ARCHITECT FOR SELECTION. POUR-A-LID SHALL RECEIVE COPING INFILL TO MATCH COPING. | | | | |

## GUTTER POOL PIPING NOTES:

1. ALL PIPING SHALL BE NSF APPROVED (ANSI/NSF 14), SCHEDULE 40 PVC (UNLESS OTHERWISE NOTED).
2. ALL PIPING SHALL BE IN ACCORDANCE WITH THE UTAH STATE PLUMBING CODE AND UTAH DEPARTMENT OF PUBLIC HEALTH CODE, THE A.S.T.M. DESIGNATION NUMBER D-1785, AND THE NSF SEAL FOR POTABLE WATER.
3. PVC PIPE INSTALLED SHALL CONFORM TO THE REQUIREMENT OF TECHNICAL REPORT PPI-TTR 13 (8/73). PLASTIC PIPE INSTITUTE.
4. POOL CONTRACTOR SHALL MAKE EVERY EFFORT TO CURTAIL THE USE OF FITTINGS TO REDUCE HEAD.
5. PIPING SHALL BE INSTALLED WITHOUT AIR ENTRAPPING HIGH POINTS OR REVERSE SLOPES, I.E. ON DISCHARGE LINES, NO DESCENDING RUNS BEYOND HORIZONTAL OR ASCENDING RUNS; ON SUCTION LINES, NO DESCENDING RUNS BEYOND ASCENDING RUNS.
6. ALL UNDERGROUND PRESSURE AND SUCTION PIPING SHALL SLOPE A MINIMUM OF 1%.
7. THE TEE FEEDING FROM THE COMMON LINE BETWEEN THE SUCTION OUTLETS, TO THE PUMP(S) SHALL BE LOCATED APPROXIMATELY MIDWAY BETWEEN THE OUTLETS (ANSI/APSP-7).
8. PIPING SHALL BE INSTALLED TO PREVENT FREEZING. WINTERIZE PIPING DURING WINTER MONTHS WHEN POOL IS NOT IN OPERATION.
9. ALL PIPING SHALL BE TESTED WITH AN INDUCED HYDRAULIC STATIC PRESSURE TEST AT MINIMUM 50 POUNDS PER SQUARE INCH (PSI) FOR 24 HOURS OR PER WRITTEN SPECIFICATIONS IF PROVIDED.
10. ALL DRAIN FITTINGS TO CARRY 100 % OF RECIRCULATION RATE AT A VELOCITY NOT TO EXCEED 1.5 FEET PER SECOND THROUGH THE CLEAR AREA OF THE GRATE WHEN ONE OUTLET FITTING IS COVERED.
11. MAIN DRAIN PIPING SHALL CARRY 100 % OF RECIRCULATION RATE AT A VELOCITY NOT TO EXCEED 6' PER SECOND.
12. ALL PIPING DESIGNED FOR 6' PER SECOND MAXIMUM SUCTION, 10' PER SECOND MAXIMUM PRESSURE, AND 3' PER SECOND MAXIMUM GRAVITY.
13. VERIFY PIPE SIZES WITH THE EQUIPMENT ROOM PLAN AND SCHEMATIC. IF THERE ARE ANY DISCREPANCIES, REPORT THEM TO THE ARCHITECT/ENGINEER IMMEDIATELY.
14. POOL CONTRACTOR SHALL COORDINATE ALL WORK WITH ARCHITECTURAL, MECHANICAL, ELECTRICAL AND STRUCTURAL DRAWINGS.
15. OVERALL PIPING IS SHOWN IN DIAGRAMMATIC FORM TO INDICATE WORK TO BE DONE RATHER THAN TO SHOW EXACT ROUTING & LOCATION. MAKE USE OF ALL DATA IN CONTRACT DOCUMENTS, VERIFY AGAINST DEVELOPED FIELD CONDITIONS, & INSTALL WORK IN AN ORDERLY ARRANGEMENT IN A MANNER TO OVERCOME STRUCTURAL, MECHANICAL & ELECTRICAL INTERFERENCE.
16. ALL GUTTER PIPING AND INLET RETURN PIPING MUST BE LAID SO IT WILL DRAIN TO THE SURGE TANK COMPLETELY BY GRAVITY.
17. MAIN DRAIN LINE PIPING MUST BE LAID SO THAT IF THE MAIN DRAIN FITTINGS ARE DEEPER THAN THE SURGE TANK, THEN THE MAIN DRAIN PIPING SHALL SLOPE TO CONTINUOUSLY PITCH TO DRAIN TO THE DRAIN FITTINGS. IF THE MAIN DRAIN FITTINGS ARE SHALLOWER THAN THE SURGE TANK, THEN THE MAIN DRAIN PIPING SHALL SLOPE TO CONTINUOUSLY PITCH TO DRAIN TO THE SURGE TANK.
18. IN ALL INSTANCES WHERE GRAVITY DRAINAGE IS NOT PROVIDED, THE POOL CONTRACTOR SHALL INSTALL DRAIN VALVES SO THAT ALL LINES CAN BE DRAINED COMPLETELY TO THE SURGE TANK OR ANOTHER APPROVED LOCATION.
19. DRAINAGE PLUGS SHALL BE PROVIDED IN THE PIPING SYSTEM TO ALLOW FOR DRAINING POOL PIPING.
20. POOL CONTRACTOR SHALL PROVIDE OPERATION AND DRAINING INSTRUCTION TO THE OWNER.
21. ALL ELEVATIONS TO BE FIELD VERIFIED TO ALLOW FOR PROPER PITCH AND DRAINAGE. PITCH APPROXIMATELY 1" IN 10'-0".

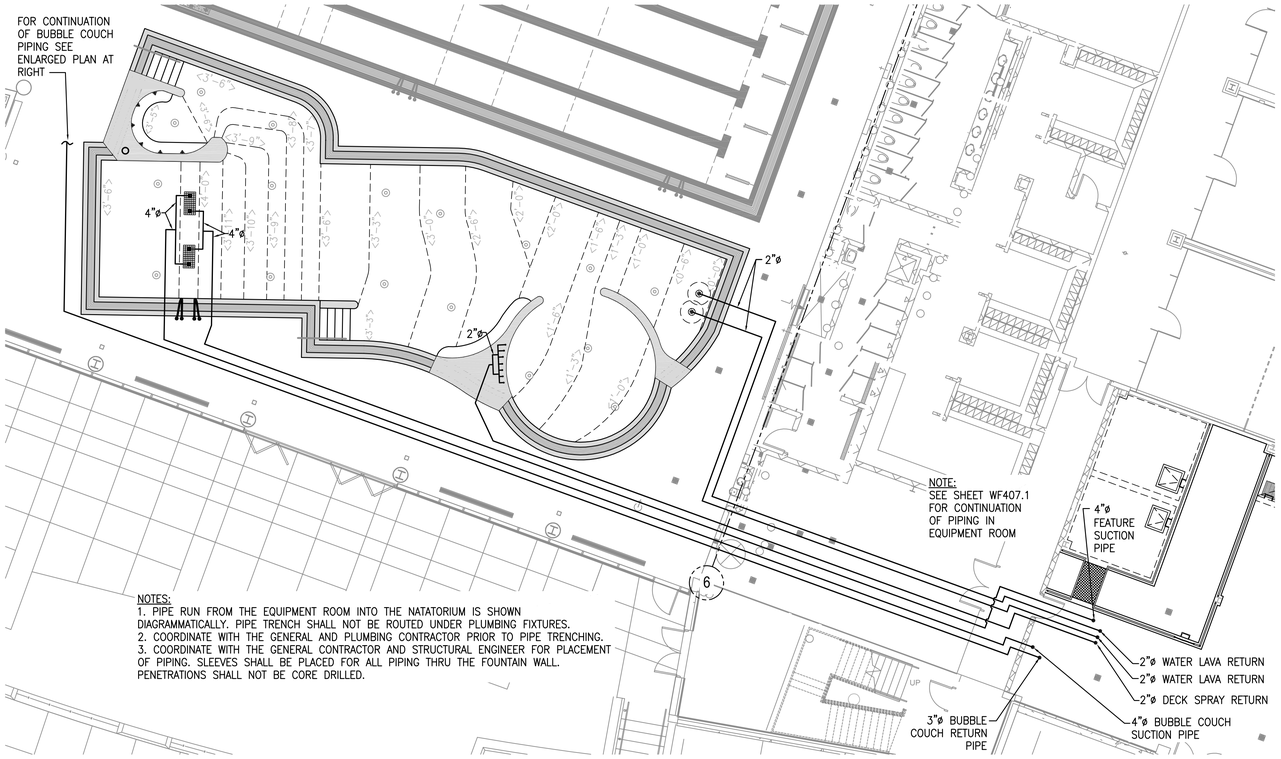


NOTES:
1. PIPE RUN FROM THE EQUIPMENT ROOM INTO THE NATATORIUM IS SHOWN DIAGRAMMATICALLY. PIPE TRENCH SHALL NOT BE ROUTED UNDER PLUMBING FIXTURES.
2. COORDINATE WITH THE GENERAL AND PLUMBING CONTRACTOR PRIOR TO PIPE TRENCHING.
3. COORDINATE WITH THE GENERAL CONTRACTOR AND STRUCTURAL ENGINEER FOR PLACEMENT OF PIPING. SLEEVES SHALL BE PLACED FOR ALL PIPING THRU THE FOUNTAIN WALL. PENETRATIONS SHALL NOT BE CORE DRILLED.

## ACTIVITY POOL FEATURE PIPING PLAN

SCALE: 1/8" = 1'-0"

NOTE:
FOR CONTINUATION OF BUBBLE COUCH PIPE SEE PLAN AT LEFT.

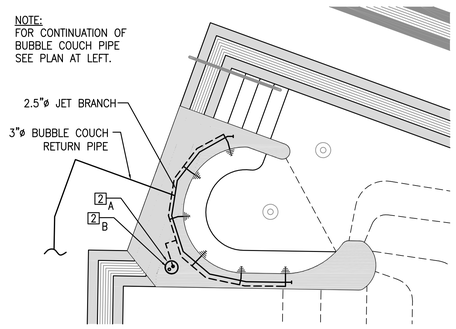


## BUBBLE COUCH ENLARGEDJET PIPING PLAN

SCALE: 1/4" = 1'-0"

## ALTERNATE BID 1

THIS ACTIVITY POOL AND ALL THE PIPING IS AN ALTERNATE BID ITEM

## POOL LAYOUT ON SITE:

DIMENSIONS SHOWN ARE FOR REFERENCE ONLY. POOL CONTRACTOR SHALL HAVE POOL LAYED OUT ON SITE BY A PROFESSIONAL SURVEYOR PRIOR TO EXCAVATION. POOL CONTRACTOR IS RESPONSIBLE FOR POOL SPECIFIC SURVEY WORK. AN ELECTRONIC FILE OF THE POOL BASE MAY BE PROVIDED TO THE CONTRACTOR FOR SURVEYOR'S USE. SEE CIVIL DRAWINGS FOR REFERENCE POINTS AND ADDITIONAL SITE INFORMATION.

The entire contents of the attached documents, including all sketches, plans, studies, drawings, schedules and specifications and all copyrights therein are, and shall remain the sole property of Water Design Incorporated. The documents and their contents may not be used, photocopied or reproduced digitally, electronically or in any other manner without the express prior written consent of Water Design Incorporated.

MHTN ARCHITECTS
MHTN Architects, Inc.
420 East South Temple
Suite 100
Salt Lake City, Utah 84111
Telephone (801) 595-6700
Telefax (801) 595-6717
www.mhtn.com

Hastings+Chivetta
ARCHITECTURE • PLANNING • ENGINEERING
622 Emerson, Suite 200
St. Louis, MO 63141
Tel. 314.863.5717
Fax. 314.863.2823
www.hastingschivetta.com

Water Design Inc.
5047 S. Galleria Dr.
Murray, Utah 84123
Phone : (801) 261-4009
Fax : (801) 261-4069
www.waterdesigninc.com

BUILDING OFFICIAL STAMP

# UNIVERSITY OF UTAH
# STUDENT LIFE CENTER
1836 E. BALLIF ROAD
SALT LAKE CITY, UTAH 84112

SEAL

MHTN PROJECT NO.

DRAWN BY: ACR CHECKED BY: BA

ISSUED:

| NO. | DATE | DESCRIPTION |
|---|---|---|
| | | |

CONTRACTOR TO VERIFY DRAWINGS IN FIELD USE REFLECT LAST REVISION DATE.

| NO. | DATE | DESCRIPTION |
|---|---|---|
| | | |

SHEET NAME
ACTIVITY POOL PIPING PLAN - ALTERNATE 1

BID DOCUMENTS
MAY 15, 2013

SHEET NUMBER
WF401.2

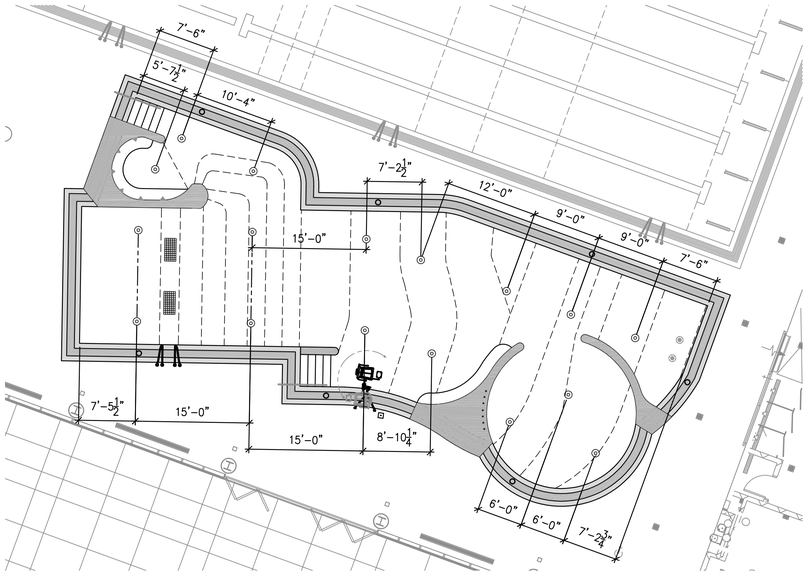


## ACTIVITY POOL INLET FITTING DIMENSION PLAN - 'A'

SCALE: 1/8" = 1'-0"

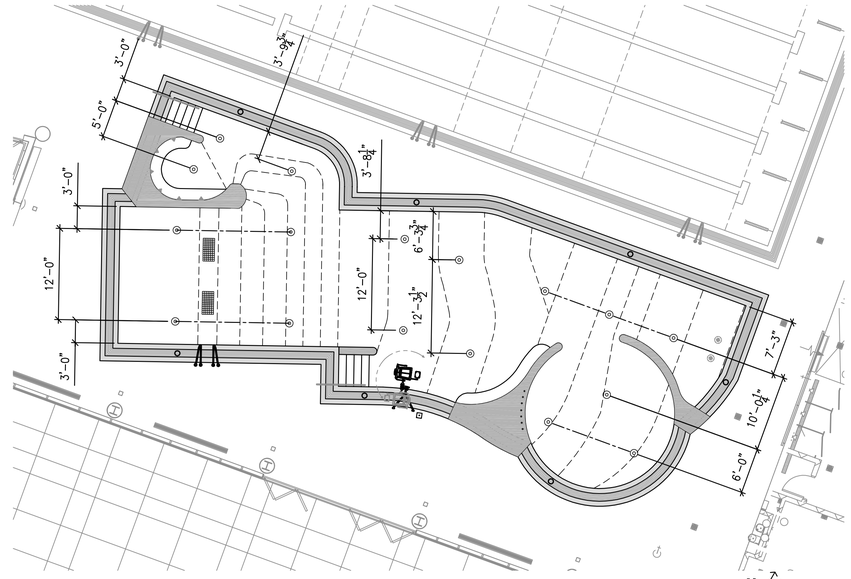


## ACTIVITY POOL INLET FITTING DIMENSION PLAN - 'B'

SCALE: 1/8" = 1'-0"

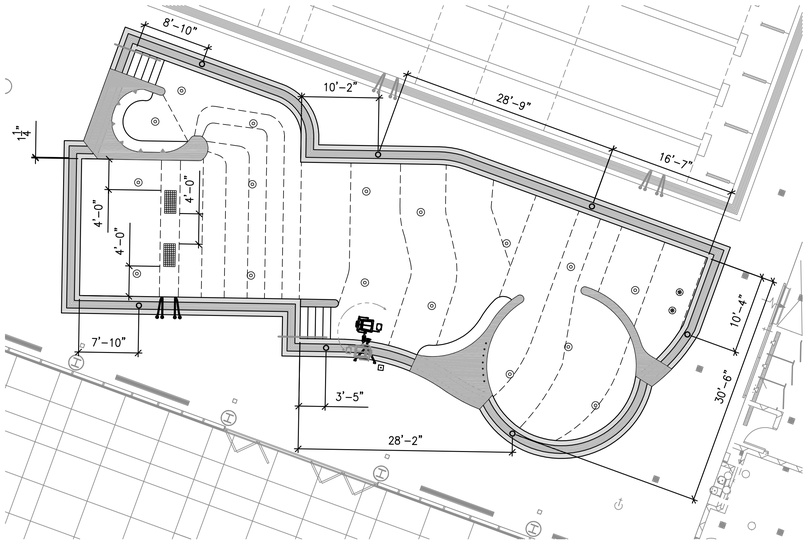


SCALE:

## ACTIVITY POOL GUTTER DROP-OUT AND MAIN DRAIN DIMENSION PLAN

1/8" = 1'-0"

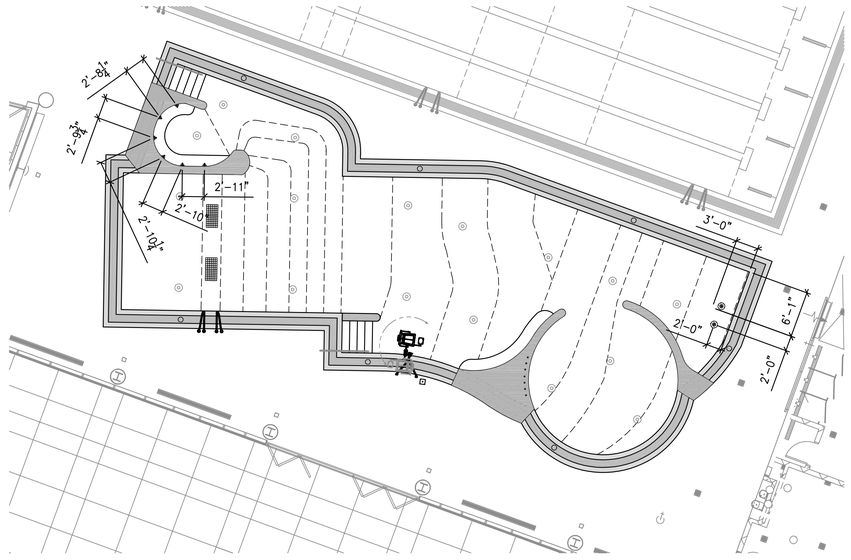


## ACTIVITY POOL FEATURE DIMENSION PLAN

SCALE: 1/8" = 1'-0"

### ALTERNATE BID 1

THIS ACTIVITY POOL AND ALL THE PIPING IS AN ALTERNATE BID ITEM

### POOL LAYOUT ON SITE:

DIMENSIONS SHOWN ARE FOR REFERENCE ONLY. POOL CONTRACTOR SHALL HAVE POOL LAYED OUT ON SITE BY A PROFESSIONAL SURVEYOR PRIOR TO EXCAVATION. POOL CONTRACTOR IS RESPONSIBLE FOR POOL SPECIFIC SURVEY WORK. AN ELECTRONIC FILE OF THE POOL BASE MAY BE PROVIDED TO THE CONTRACTOR FOR SURVEYOR'S USE. SEE CIVIL DRAWINGS FOR REFERENCE POINTS AND ADDITIONAL SITE INFORMATION.

The entire contents of the attached documents, including all sketches, plans, studies, drawings, schedules and specifications and all copyrights therein are, and shall remain the sole property of Water Design Incorporated. The documents and their contents may not be used, photocopied or reproduced digitally, electronically or in any other manner without the express prior written consent of Water Design Incorporated.

MHTN
ARCHITECTS
MHTN Architects, Inc.
420 East South Temple
Suite 100
Salt Lake City, Utah 84111
Telephone (801) 595-6700
Telefax (801) 595-6717
www.mhtn.com

Hastings+Chivetta
ARCHITECTURE • PLANNING • ENGINEERING
622 Emerson, Suite 200
St. Louis, MO 63141
Tel. 314.863.5717
Fax. 314.863.2823
www.hastingschivetta.com

Water Design Inc.
5047 S. Galleria Dr.
Murray, Utah 84123
Phone : (801) 261-4009
Fax : (801) 261-4069
www.waterdesigninc.com

BUILDING OFFICIAL STAMP

# UNIVERSITY OF UTAH
## STUDENT LIFE CENTER
1836 E. BALLIF ROAD
SALT LAKE CITY, UTAH 84112

SEAL

MHTN PROJECT NO.

DRAWN BY: ACR CHECKED BY: BA

ISSUED:

| NO. | DATE | DESCRIPTION |
|---|---|---|
| | | |

CONTRACTOR TO VERIFY DRAWINGS IN FIELD USE REFLECT LAST REVISION DATE.

| NO. | DATE | DESCRIPTION |
|---|---|---|
| | | |

SHEET NAME

ACTIVITY POOL FITTING DIM PLAN ALT 1

BID DOCUMENTS
MAY 15, 2013

SHEET NUMBER

WF401.3

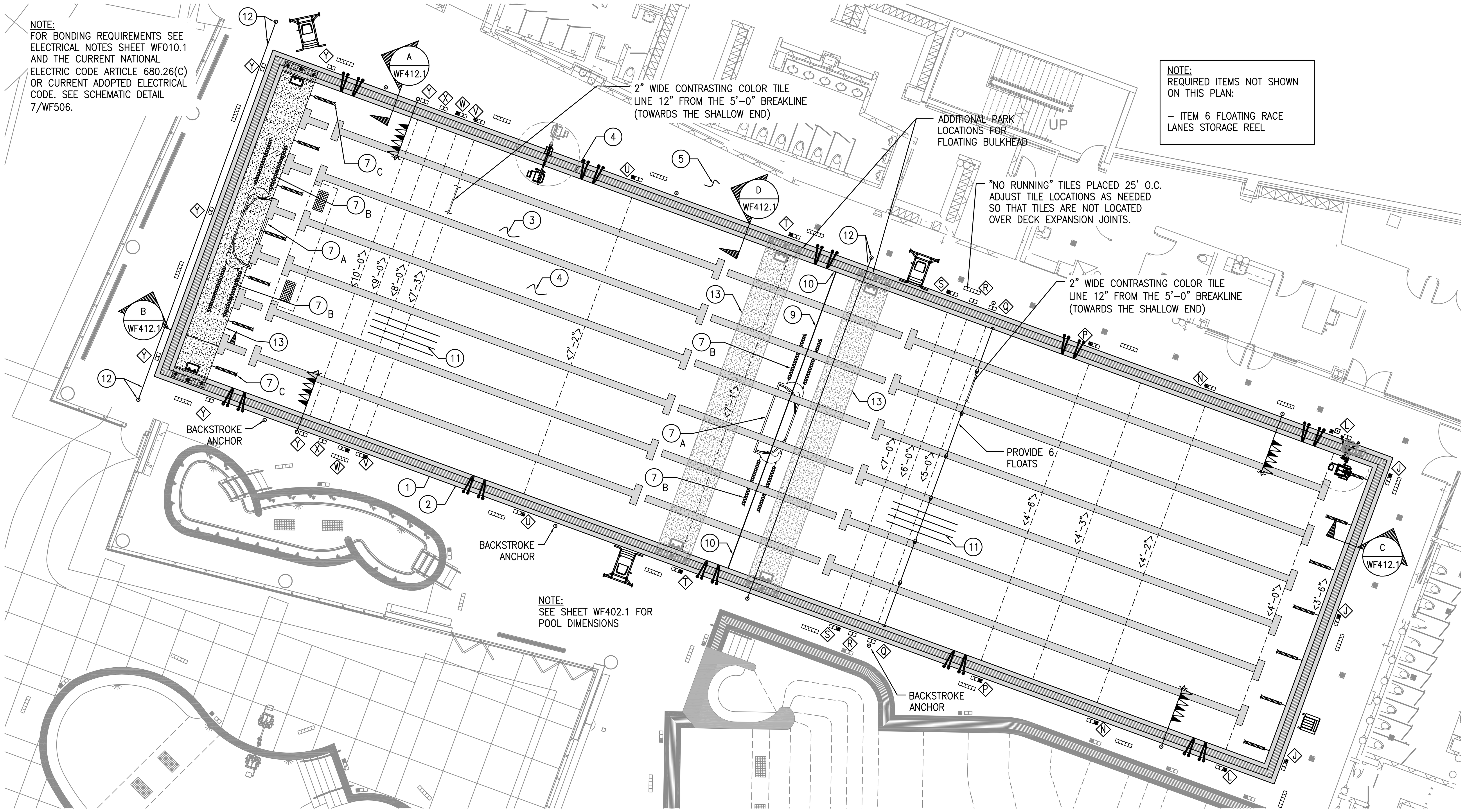


## ENLARGED 50 METER LAP POOL PLAN

SCALE: 1/8" = 1'-0"

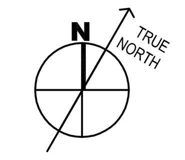


### 50 METER LAP POOL DATA

| | |
|---|---|
| SIZE: | 46'-0" x 169'-2 1/2" |
| WATER DEPTH: | 3'-6" TO 10'-3" |
| SHAPE: | RECTANGULAR |
| CONSTRUCTION TYPE: | SHOTCRETE |
| PERIMETER AREA: | 7,784 SQ.FT. |
| WATER AREA: (LESS SF AREA OF BULKHEAD) | 7,554 SQ.FT. |
| PERIMETER: | 430'-5" |
| VOLUME: | 352,601 GALLONS |
| MIN. FLOW: | 1,175 GPM |
| MAX. FLOW: | 1,300 GPM |
| TURNOVER AT MINIMUM FLOW: | 5 HOUR |

### ALTERNATE BID 1

THIS 50 METER LAP POOL AND ITS PIPING IS AN ALTERNATE BID ITEM

### 50 METER LAP POOL DECK EQUIPMENT SCHEDULE

| MARK | DESCRIPTION | QUANTITY | DETAIL | REQUIREMENT | REMARKS |
|---|---|---|---|---|---|
| F | DEPTH MARKER TILES | SEE PLAN | 1/WF503 | IN-LAYS, INC. OR EQUAL | FROST PROOF GLAZED TILE W/4" HIGH NUMBERS WITH CONTRASTING COLOR BACKGROUND ON VERTICAL WALL AT WATERLINE. PROVIDE 6" x 6" FROST PROOF NON-SKID TILE W/4" HIGH NUMBERS WITH CONTRASTING COLOR BACKGROUND ON POOL DECK. SEE DETAIL FOR DEPTH MARKER KEY. WATER DEPTH SHALL BE PLAINLY MARKED AT LOCATION OF MINIMUM AND MAXIMUM POOL WATER DEPTHS AND AT ONE FOOT INCREMENTS OF DEPTH. MARKERS SHALL BE SPACED AT MAX. 25'-0" C.C. TILES PROVIDED BY POOL CONTRACTOR AND INSTALLED BY DECK CONTRACTOR. |
| NO DIVING | "NO DIVING" ICON TILES | SEE PLAN | 1/WF503 | IN-LAYS, INC. OR EQUAL | 6" X 6" NON-SKID, FROSTPROOF, CERAMIC NO DIVING TILE WITH LETTERING AND ICON ON CONTRASTING COLOR BACKGROUND ON POOL DECK. AT 25'-0" C.C. MAXIMUM ADJACENT TO DEPTH MARKERS IN LOCATIONS AS SHOWN ON THE PLAN. TILES PROVIDED BY POOL CONTRACTOR AND INSTALLED BY DECK CONTRACTOR. |
| | "NO RUNNING" TILES | SEE PLAN | 3/WF503 | IN-LAYS, INC. OR EQUAL | 6" x 6" NON-SKID, FROSTPROOF, CERAMIC "NO RUNNING" TILES WITH 4" HIGH RED LETTERING ON CONTRASTING COLOR BACKGROUND. PLACE ON DECK AT 25'-0" C.C. MAXIMUM. "NO RUNNING" TILES PROVIDED BY POOL CONTRACTOR AND INSTALLED BY DECK CONTRACTOR |
| | HANDICAP LIFT AND ANCHOR | 1 | 5/WF503 | SPECTRUM PRODUCTS GALLATIN WP400 BASE STAND CUSTOM ANCHORAGE | WITH WIDE POOL BOND BEAM, PROVIDE THE LIFT WITH A CUSTOM BASE STAND, LEVELER FOOT AND A CUSTOM SEAT POLE. POOL CONTRACTOR SHALL PROVIDE THE LIFT COMPLETE WITH ANCHOR, FLEXIBLE HOSE, AND LIFT COVER. PROVIDE CONCRETE FOOTING SIZED PER MANUFACTURER'S RECOMMENDATIONS. POOL CONTRACTOR SHALL VERIFY THAT ALL ANCHORS ARE SET AT THE CORRECT ELEVATION JUST PRIOR TO THE DECK POUR. THE FLUSH MOUNTED WATER BOX SHALL BE MOUNTED IN THE DECK BY THE GENERAL CONTRACTOR AT THE LOCATION PER THE MANUFACTURER'S DETAIL. MECHANICAL CONTRACTOR SHALL PROVIDE THE FLUSH MOUNTED HOSE BIB BOX, SUPPLY LINE AND A HOSE SPIGOT WITH MINIMUM 55 PSI AND MAXIMUM 65 PSI FOR INSTALLATION INTO THE WATER BOX. HOSE BIB BOX SHALL HAVE DRAIN TO WASTE. |
| | ADA COMPLIANT LIFT AND ANCHOR | 1 | 6/SP600 | SPECTRUM PRODUCTS SWIM LIFT TRAVELER II XRC-500 | PROVIDE ELECTRICALLY (BATTERY) OPERATED LIFT COMPLETE WITH ANCHOR KIT (WITH KEY AND LID), STAINLESS STEEL TRANSPORT CART, BATTERY CHARGER, AN EXTRA BATTERY AND THE PROTECTIVE COVER. THE DECK CONTRACTOR SHALL INSTALL THE LIFT ANCHOR. POOL CONTRACTOR SHALL VERIFY THAT THE ANCHOR HAS BEEN INSTALLED AT THE CORRECT LOCATION/ ELEVATION PRIOR TO THE CONCRETE PLACEMENT.PROVIDE FOOTING PER MANUFACTURER'S RECOMMENDATIONS. |
| | LIFEGUARD CHAIR – MOVABLE – 6' HIGH CHAIR | 3 | 7/WF503 | SPECTRUM PRODUCTS DISCOVERY #20160 | PROVIDE LIFE GUARD CHAIRS COMPLETE WITH MOUNTED LIFE BUOY HOLDER AND RING GUIDE & SOCKET FOR SHEPHERD'S CROOK. LOCATE LIFE GUARD CHAIRS PER REQUIRED STATE AND LOCAL CODES, AND PER OWNER'S DIRECTIONS. |
| | LIFEGUARD CHAIR SEAT HEIGHT 30" | 1 | 8/WF503 | LINCOLN "CHAMPION" #38-057 OR APPROVED EQUAL | PROVIDE RECYCLED PLASTIC GUARD CHAIR WITH LIFETIME WARRANTY. PROVIDE COLOR CHOICES TO ARCHITECT FOR SELECTION. LOCATE LIFEGUARD CHAIRS PER REQUIRED STATE AND LOCAL CODES, AND PER OWNER'S DIRECTIONS. |
| | OUTLET FRAME AND GRATE | SEE LAP POOL PIPING PLAN AND FITTING SCHEDULE SHEET WF402.2 | | | |
| | "PRETZEL TYPE" GRABRAILS, ANCHORS AND RECESSED STEPS | 10 SETS | 6/WF503 | SPECTRUM 30" BURBOT .065" THICKNESS CUSTOM LENGTH | PROVIDE STAINLESS STEEL PRETZEL STYLE GRABRAILS PROVIDE CUSTOM LENGTH TO ACCOMMODATE INSTALLATION BEHIND THE WIDE POOL GUTTER WALL / BOND BEAM. PROVIDE STAINLESS STEEL GRABRAILS WITH 4" BRONZE INSTITUTIONAL ANCHOR ASSEMBLY AND STAINLESS STEEL ROUND ESCUTCHEON PLATE (SPECTRUM #24097). FOUR ANCHORS AND FOUR ESCUTCHEON PLATES REQUIRED FOR EACH GRABRAIL SET. POOL CONTRACTOR SHALL VERIFY THAT ALL ANCHORS ARE SET AT THE CORRECT ELEVATION JUST PRIOR TO THE DECK PLACEMENT. PROVIDE THREE WHITE RECESSED STEPS PER GRABRAIL LOCATION (S.R. SMITH #62-209-4001). |
| | SWIM LANE MARKERS AND WALL TARGET | SEE PLAN | 6/WF507 | WATERPROOF CERAMIC TILE | USE UNGLAZED CERAMIC TILE. PROVIDE CONTRASTING COLOR. SUBMIT COLOR AND TILE SIZE CHOICES TO ARCHITECT. |
| | FLOATING SWIM LANE LINES AND WALL ANCHORS | 14-25 YD LANES LINES 7-50M EXTENSIONS 14-WALL ANCHORS | N/A | COMPETITOR 4" DIAMETER DISKS | PROVIDE TWO SETS OF SEVEN 25 YD LANE LINES (TOTAL 14) WITH 7 CENTER CONNECTOR LANE LINES TO CREATE THE 50 METER LANE LINES. SUBMIT COLOR CHOICES OF LANE LINES TO ARCHITECT FOR SELECTION. THE LAST 15 FEET OF EACH LANE LINE SHALL BE A CONTRASTING COLOR. THE COLOR OF THE CENTER CONNECTING LANE LINES USED TO CREATE THE 50M LANES SHALL MATCH THE COLOR OF THE 25 YD LANES. POOL CONTRACTOR SHALL ALSO PROVIDE AND INSTALL ABS CUP ANCHORS WITH STAINLESS STEEL BAR. (STA-RITE OR APPROVED EQUAL. SEE DETAIL 10/SP503). |
| ◉ | BACKSTROKE STANCHION POST | 4 POSTS WITH 10 ANCHORS | 11/WF503 | PARAGON AQUATICS #38106 (8'-0") | STAINLESS STEEL POST 1.90" O.D.X 0.145" WALL. PROVIDE BRONZE SOCKETS WITH THREADED CAP (KDI PARAGON #38201TC). SEE PLAN FOR MULTIPLE ANCHOR LOCATIONS (FOR VARIOUS SWIM COURSES) POOL CONTRACTOR SHALL VERIFY THAT ALL ANCHORS ARE SET AT THE CORRECT ELEVATION JUST PRIOR TO THE DECK PLACEMENT. PROVIDE TWO SLIDING COLLARS WITH ONE EYEBOLT EACH COLLAR FOR EACH STANCHION POST. |
| | BACKSTROKE LINE W/PENNANTS | 2 LOCATIONS | N/A | LINCOLN AQUATICS "CHAMPION" PENNANTS #53-020 | PROVIDE MINIMUM 46 PENNANTS (VERIFY). PROVIDE PENNANTS COMPLETE WITH CABLE (#50-175) AND HARDWARE PACKAGE (#50-030). PROVIDE SUBMITTAL FOR ARCHITECTS SELECTION OF CUSTOM NUMBERING AND/ OR LETTERING TO PROVIDE ON THE PENNANTS. ARCHITECT TO SELECT COLORS. SUBMIT ALL COLORS INCLUDING PREMIUM FOR SELECTION. VERIFY LENGTH OF CABLE REQUIRED TO REACH STANCHION POSTS. |
| | SAFETY ROPE WITH FLOATS | 1 LOCATION | 9/WF503 | LINCOLN AQUATICS | SPACE FLOATS MAXIMUM 7'-0" C.C. PROVIDE 3/4"ø ROPE (VERIFY LENGTH REQUIRED). PROVIDE FLOATS, FLOAT COLLARS AND HOOKS. FASTEN FLOATS TO ROPE WITH FLOAT COLLARS SO THAT FLOATS CANNOT SLIDE ON ROPE. PROVIDE NUMBER OF FLOATS AS SHOWN ON PLAN. PROVIDE ABS CUP ANCHORS WITH STAINLESS STEEL BAR. (STA RITE OR APPROVED EQUAL. SEE DETAIL 10/WF503). |
| 1 | POOL STRUCTURE | AROUND POOL PERIMETER | A/WF412.0 | STEEL REINFORCED SHOTCRETE | REINFORCED SHOTCRETE GUTTER POOL STRUCTURE. POOL SHELL SHALL BE BONDED PER THE REQUIRMENTS OF THE NATIONAL ELECTRIC CODE ARTICLE 680. |
| 2 | POOL GUTTER | AROUND POOL PERIMETER | 1/WF412.0, 1/WF412.1 | PRECAST STONE GUTTER COPING W/LAWSON AQUATICS PARALLEL FLOW GRATING | PROVIDE PRECAST STONE GUTTER EDGE WITH HAND HOLD AROUND PERIMETER OF POOL. PROVIDE PARALLEL FLOW GRATING AROUND PERIMETER OF GUTTER. PROVIDE PRECAST COPING STONE BEHIND GRATING. SEAL INTERIOR OF GUTTER WITH AQUAFIN 2KM. |
| 3 | POOL WALL AND FLOOR INTERIOR FINISH | AS REQUIRED | 1/WF412.0 | 2" X 2" NON-SLIP CERAMIC TILE | FINISH SHALL BE WATERPROOF AND FREE FROM DEFECTS. PROVIDE TILE SAMPLES TO ARCHITECT FOR SELECTION. COLOR SELECTION BY ARCHITECT. |
| 4 | POOL SHELL WATERPROOFING | AS REQUIRED | N/A | AQUAFIN 2K/M OR EQUAL | PRIOR TO THE TILE FINISH INSTALLATION, WATERPROOF INTERIOR OF POOL. PREPARE SURFACE PER MANUFACTURER'S SPECIFICATIONS. SEE WATERPROOFING SPECIFICATIONS AND MANUFACTURER'S INSTALLATION INSTRUCTIONS FOR ADDITIONAL INFORMATION AND REQUIREMENTS. |
| 5 | POOL DECK | AS REQUIRED | CONTINUOUS AROUND POOL | NON-SLIP CONCRETE | MINIMUM 5' WIDE NON-SLIP CONCRETE DECK CONTINUOUS AROUND POOL PERIMETER. SLOPE DECK 1/4" PER FOOT AWAY FROM BACK OF GUTTER TO DECK DRAINS. DECK AND DECK DRAINS BY GENERAL CONTRACTOR. INDOOR DECK DRAINS SHALL DRAIN TO SANITARY SEWER. |
| 6 | FLOATING RACE LANE STORAGE REEL | 3 | N/A | PARAGON AQUATICS #75101-SS | EACH REEL PROVIDES 540' OF LANE CAPACITY WITH STAINLESS STEEL CASTERS. PROVIDE WITH STORAGE REEL COVERS. |
| 7A | WATER POLO FLOATING GOAL | 2 GOALS | N/A | LINCOLN AQUATICS ANTIWAVE SENIOR FLIP FLOAT | PROVIDE WATER POLO GOALS COMPLETE WITH NETS, POWDER COATED ALUMINUM FRAME WITH FIBERGLASS FLOATATION PANELS. |
| 7B | WATER POLO OUT-OF-BOUNDS DEMARCATION FLOATING LINES | 4 | N/A | LINCOLN AQUATICS COMPETITOR #50-045 4" DIAMTER DISCS | PROVIDE CUSTOM LENGTH LINES TO IDENTIFY WATER POLO OUT-OF-BOUNDS DEMARCATION. POOL CONTRACTOR SHALL PROVIDE FLOATING LINE DISTRIBUTOR WITH POOL DIMENSIONS / LAYOUT FOR COMPETITOR SWIM PRODUCTS TO DETERMINE THE REQUIRED LENGTH OF LINES TO BE ABLE TO SPAN BETWEEN AND CONNECT AT ONE END TO THE FLOATING GOALS AND THE OTHER END OF THE LINES SHALL ATTACH TO THE COURSE DEMARCATION FLOATING LANE LINE. PROVIDE COMPLETE WITH HARDWARE PACKAGE FOR EACH LANE AS REQUIRED. PROVIDE DISC COLOR CHOICES TO ARCHITECT FOR SELECTION. (NO ADDITIONAL WALL ANCHORS REQUIRED). |
| 7C | WATER POLO COURSE FLOATING LANE LINE & HARDWARE PACKAGE | 2 | N/A | LINCOLN AQUATICS COMPETITOR #50-045 4" DIAMETER DISCS | PROVIDE CUSTOM LENGTH LINES TO IDENTIFY WATER POLO COURSE. CONFIGURE THE LANES TO IDENTIFY COURSE ZONES. POOL CONTRACTOR SHALL PROVIDE LANE DISTRIBUTOR WITH POOL DIMENSIONS / LAYOUT FOR COMPETITOR SWIM PRODUCTS TO DETERMINE THE REQUIRED ZONE DEMARCATION. PROVIDE COMPLETE WITH HARDWARE PACKAGE FOR EACH LANE AS REQUIRED. ONE END OF THE COURSE DEMARCATION FLOATING LINES SHALL UTILIZE THE SAME WALL ANCHORS AS THE OUTSIDE SWIM LANE LINES UTILIZE. THE OTHER END OF THE COURSE DEMARCATION LINE WILL CONNECT TO THE ANCHOR LOCATED ON THE BULKHEAD. (NO ADDITIONAL WALL ANCHORS REQUIRED). PROVIDE COLORS AS DESIGNATED BY USA WATER POLO REGULATIONS. |
| 8 | TOE HOLD | DEEP END WALL | 6/WF506 | PER ANSI, STATE AND LOCAL CODE REQUIREMENTS | BOTTOM OF TOE HOLD SHALL SLOPE TOWARDS THE POOL TO ALLOW FOR COMPLETE DRAINAGE. NO PART OF THE TOE HOLD SHALL EXTEND PAST THE FACE OF THE WALL. BOTTOM OF TOE HOLD SHALL BE MIN. 3'-6" BELOW WATER LEVEL. POOL CONTRACTOR SHALL THICKEN THE POOL WALL BEHIND THE TOE HOLD. |
| 9 | FLOOR CONTROL JOINT | SEE PLAN | 2/WF413, 3/WF413 | SEE DETAIL | |
| 10 | WALL CONTROL JOINT | SEE PLAN | 5/WF413 | SEE DETAIL | |
| 11 | ADDITIONAL STEEL AT BREAKLINE | TWO LOCATIONS 12" O.C. | 4/WF413 | #4 REINFORCING BARS 10'-0" LONG EACH | |
| 12 | WATER POLO PROTECTIVE NETTING | TWO LOCATIONS EACH WITH TWO 10' HIGH POSTS AND ANCHORSWITH CUSTOM LENGTH NETS | N/A | LINCOLN AQUATICS CHAMPION SAFETY NETTING PACKAGE | PROTECTIVE NETTING SYSTEM SHALL BE COMPLETE WITH STAINLESS CARABINERS SPACED EVERY 2 FT OF NET, NETTING, BRONZE ANCHORS. POOL CONTRACTOR SHALL PROVIDE POST ANCHORS FOR INSTALLATION IN THE THICKENED DECK BY THE DECK CONTRACTOR. POOL CONTRACTOR SHALL CONFIRM THAT THE ANCHORS ARE IN THE CORRECT LOCATION PRIOR TO THE DECK POUR. ANCHORS SHALL HAVE THREADED CLOSURE PLATES FOR WHEN THE POSTS ARE NOT IN PLACE. |
| 13 | MOVABLE BULKHEAD | 1 | SEE DETAILS SHEET WF508 | STARK OR APPROVED EQUAL | 5' WIDE X 46' WATER SPAN X 5' DEEP. PROVIDE 3 DOCKING LOCATIONS ON POOL AS SHOWN ON PLAN. PROVIDE TARGETS AND LANE LINE ANCHORS ON BOTH SIDES OF BULKHEAD. PROVIDE WITH TOE HOLD ON BOTH SIDES OF BULKHEAD. PROVIDE COMPLETE WITH BLOWER TO INFLATE BELLOWS TO MOVE BULKHEAD. |

The entire contents of the attached documents, including all sketches, plans, studies, drawings, schedules and specifications and all copyrights therein are, and shall remain the sole property of Water Design Incorporated. The documents and their contents may not be used, photocopied or reproduced digitally, electronically or in any other manner without the express prior written consent of Water Design Incorporated.

MHTN ARCHITECTS
MHTN Architects, Inc.
420 East South Temple
Suite 100
Salt Lake City, Utah 84111
Telephone (801) 595-6700
Telefax (801) 595-6717
www.mhtn.com

Hastings+Chivetta
ARCHITECTURE • PLANNING • ENGINEERING
622 Emerson, Suite 200
St. Louis, MO 63141
Tel. 314.863.5717
Fax. 314.863.2823
www.hastingschivetta.com

Water Design Inc.
5047 S. Galleria Dr.
Murray, Utah 84123
Phone : (801) 261-4009
Fax : (801) 261-4069
www.waterdesigninc.com

BUILDING OFFICIAL STAMP

UNIVERSITY OF UTAH
STUDENT LIFE CENTER
1836 E. BALLIF ROAD
SALT LAKE CITY, UTAH 84112

SEAL

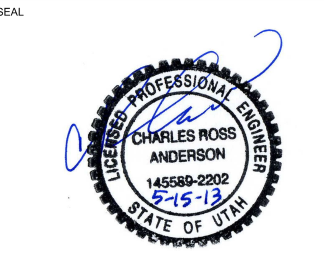


MHTN PROJECT NO.

DRAWN BY: ACR CHECKED BY: BA

ISSUED:

| NO. | DATE | DESCRIPTION |
|---|---|---|

CONTRACTOR TO VERIFY DRAWINGS IN FIELD USE REFLECT LAST REVISION DATE.

| NO. | DATE | DESCRIPTION |
|---|---|---|

SHEET NAME

LAP POOL PLAN - ALT 1

BID DOCUMENTS
MAY 15, 2013

SHEET NUMBER

WF402.0

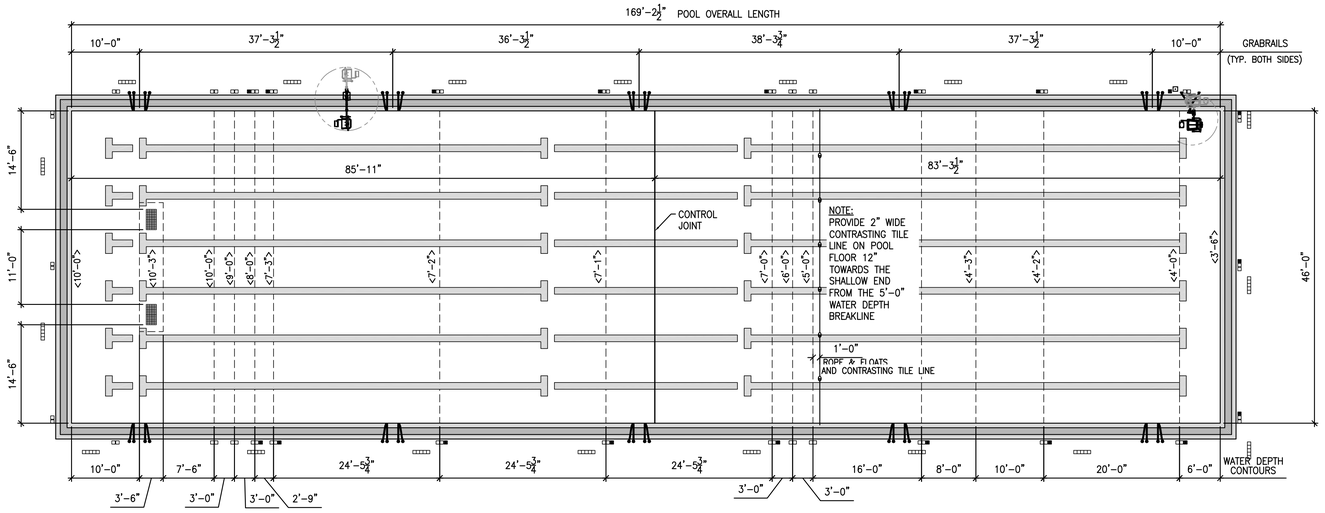


## 50 METER LAP POOL DIMENSION PLAN

SCALE: 1/8" = 1'-0"

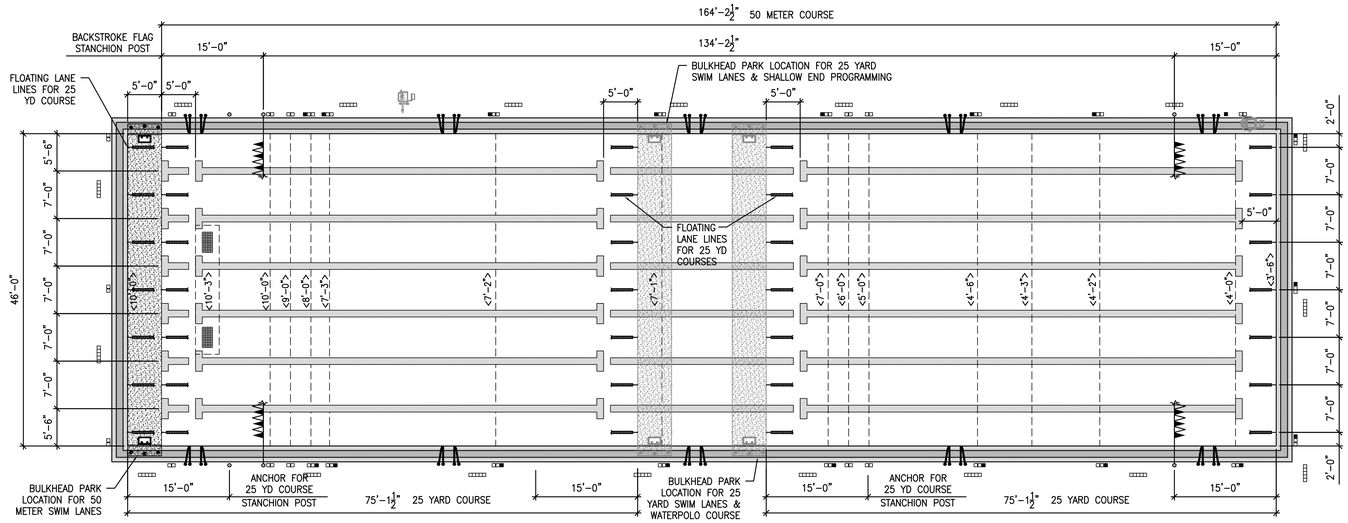


## 50 METER LAP POOL SWIM COURSE DIMENSION PLAN

SCALE: 1/8" = 1'-0"

WATER POLO FIELD OF PLAY:
WIDTH: 10 TO 20 METERS
LENGTH: 20 TO 30 METERS
DEPTH PREFERRED: 2 METERS (6'-7")

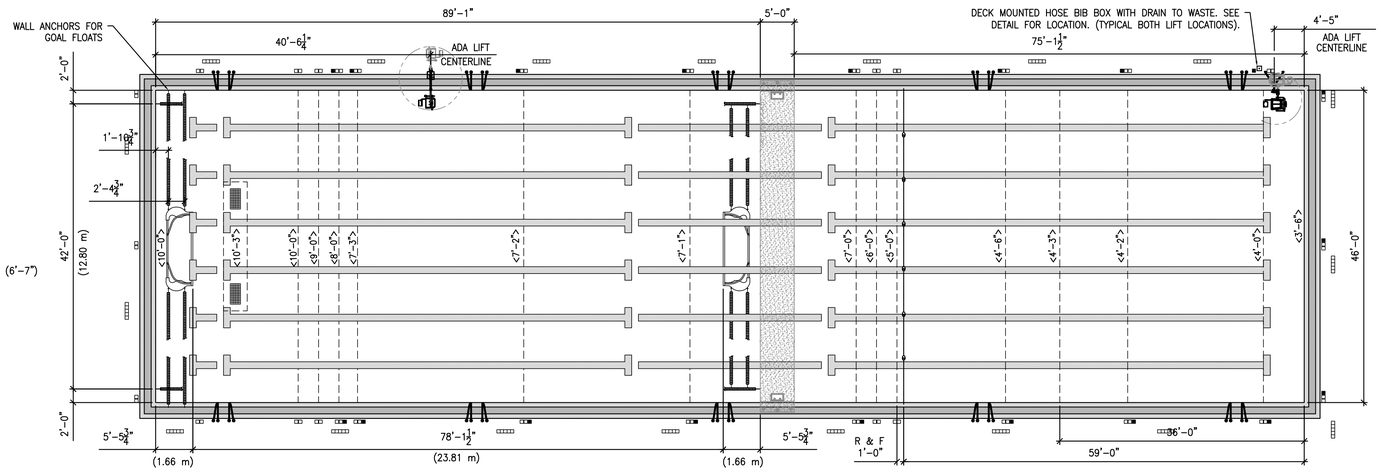


## 50 METER WATER POLO COURSE AND ADA LIFT DIMENSION PLAN

SCALE: 1/8" = 1'-0"

**ALTERNATE BID 1**

THIS 50 METER LAP POOL AND ITS PIPING IS AN ALTERNATE BID ITEM

The entire contents of the attached documents, including all sketches, plans, studies, drawings, schedules and specifications and all copyrights therein are, and shall remain the sole property of Water Design Incorporated. The documents and their contents may not be used, photocopied or reproduced digitally, electronically or in any other manner without the express prior written consent of Water Design Incorporated.

MHTN
ARCHITECTS
MHTN Architects, Inc.
420 East South Temple
Suite 100
Salt Lake City, Utah 84111
Telephone (801) 595-6700
Telefax (801) 595-6717
www.mhtn.com

Hastings+Chivetta
ARCHITECTURE • PLANNING • ENGINEERING
622 Emerson, Suite 200
St. Louis, MO 63141
Tel. 314.863.5717
Fax. 314.863.2823
www.hastingschivetta.com

Water Design Inc.
5047 S. Galleria Dr.
Murray, Utah 84123
Phone : (801) 261-4009
Fax : (801) 261-4069
www.waterdesigninc.com

BUILDING OFFICIAL STAMP

# UNIVERSITY OF UTAH
# STUDENT LIFE CENTER
1836 E. BALLIF ROAD
SALT LAKE CITY, UTAH 84112

SEAL

LICENSED PROFESSIONAL ENGINEER
CHARLES ROSS ANDERSON
145589-2202
5-15-13
STATE OF UTAH

MHTN PROJECT NO.

DRAWN BY: ACR CHECKED BY: BA

ISSUED:

| NO. | DATE | DESCRIPTION |
|---|---|---|
| | | |

CONTRACTOR TO VERIFY DRAWINGS IN FIELD USE REFLECT LAST REVISION DATE.

| NO. | DATE | DESCRIPTION |
|---|---|---|
| | | |

SHEET NAME

LAP POOL DIMENSION PLAN - ALTERNATE 1

BID DOCUMENTS
MAY 15, 2013

SHEET NUMBER

WF402.1

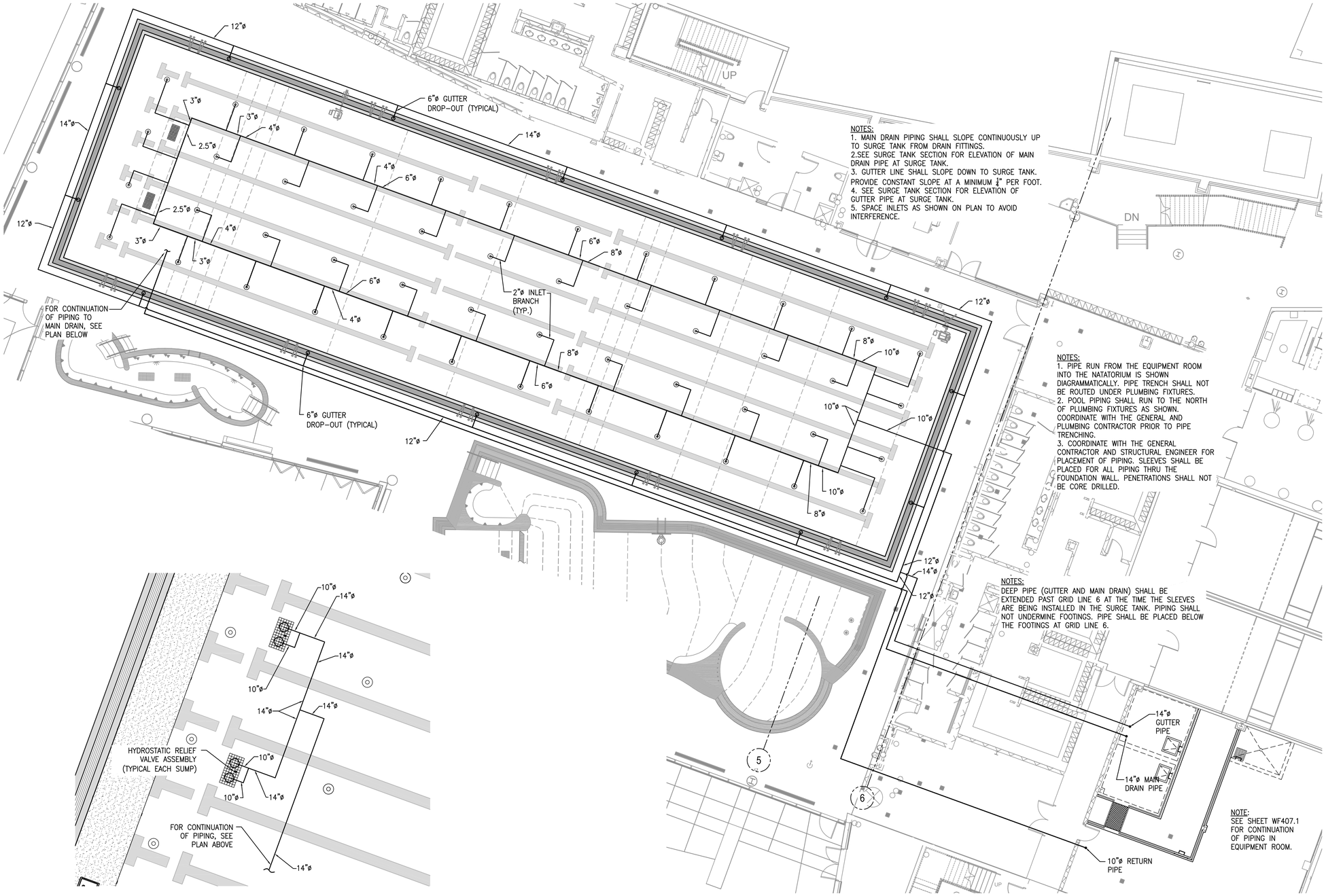





## MAIN DRAIN PIPING PLAN

SCALE: 1/4" = 1'-0"

## 50 METER LAP POOL PIPING PLAN

SCALE: 1/8" = 1'-0"

### 50 meter LAP POOL CIRCULATION FITTING SCHEDULE

| MARK | DESCRIPTION | QUANTITY | DETAIL | REQUIREMENT |
|---|---|---|---|---|
| ▦ | CIRCULATION OUTLET FRAME AND GRATE WITH FIELD BUILT CONCRETE SUMP | 2 | 5 / WF504 | LAWSON AQUATICS #MD-FG1836 UNBLOCKABLE WITH TWO 10"ø PIPE DROP-OUTS EACH SUMP |

REMARKS: PROVIDE SIZE OF PIPE CONNECTION TO SUMP OUTLETS AS SHOWN ON PLAN. TAMPER PROOF STAINLESS STEEL FASTENERS REQUIRED. FRAME AND GRATE SHALL BE LISTED ACCORDING TO THE CURRENT ASME\ANSI A-112.19.8 STANDARD. ALLOWABLE FLOW PER GRATE PER NSF CERTIFICATION EQUALS 1606 GPM. PROVIDE HYDROSTATIC RELIEF VALVE ASSEMBLY IN THE BOTTOM OF EACH SUMP.

| MARK | DESCRIPTION | QUANTITY | DETAIL | REQUIREMENT |
|---|---|---|---|---|
| ● | HYDROSTATIC RELIEF VALVE ASSEMBLY | 2 | 6 / WF504 | HAYWARD #SP1056 #SP1055 OR APPROVED EQUAL |
| REMARKS: PROVIDE ONE IN EACH MAIN DRAIN SUMP. | | | | |
| ◎ | FLOOR RETURN WATER INLET FITTING | 48 | 8 / WF504 | STA-RITE OR APPROVED EQUAL |
| REMARKS: SEE DETAIL FOR ADJUSTMENT AMOUNT. SPACE INLETS PER PLAN DIMENSIONS. | | | | |
| ○ | GUTTER DROP OUTS | 14 | 7 / WF504 | 6"ø PVC PIPE |

**ALTERNATE BID 1**

THIS 50 METER LAP POOL AND ITS PIPING IS AN ALTERNATE BID ITEM

**SEE GUTTER PIPING NOTES SHEET WF401.2**

The entire contents of the attached documents, including all sketches, plans, studies, drawings, schedules and specifications and all copyrights therein are, and shall remain the sole property of Water Design Incorporated. The documents and their contents may not be used, photocopied or reproduced digitally, electronically or in any other manner without the express prior written consent of Water Design Incorporated.

MHTN
ARCHITECTS
MHTN Architects, Inc.
420 East South Temple
Suite 100
Salt Lake City, Utah 84111
Telephone (801) 595-6700
Telefax (801) 595-6717
www.mhtn.com

Hastings+Chivetta
ARCHITECTURE • PLANNING • ENGINEERING
622 Emerson, Suite 200
St. Louis, MO 63141
Tel. 314.863.5717
Fax. 314.863.2823
www.hastingschivetta.com

Water Design Inc.
5047 S. Galleria Dr.
Murray, Utah 84123
Phone : (801) 261-4009
Fax : (801) 261-4069
www.waterdesigninc.com

BUILDING OFFICIAL STAMP

# UNIVERSITY OF UTAH
## STUDENT LIFE CENTER
1836 E. BALLIF ROAD
SALT LAKE CITY, UTAH 84112

SEAL

LICENSED PROFESSIONAL ENGINEER
CHARLES ROSS ANDERSON
145599-2202
5-15-13
STATE OF UTAH

MHTN PROJECT NO.

DRAWN BY: ACR CHECKED BY: BA

ISSUED:

| NO. | DATE | DESCRIPTION |
|---|---|---|
| | | |

CONTRACTOR TO VERIFY DRAWINGS IN FIELD USE REFLECT LAST REVISION DATE:

| NO. | DATE | DESCRIPTION |
|---|---|---|
| | | |

SHEET NAME

LAP POOL PIPING PLAN - ALT 1

BID DOCUMENTS
MAY 15, 2013

SHEET NUMBER

WF402.2

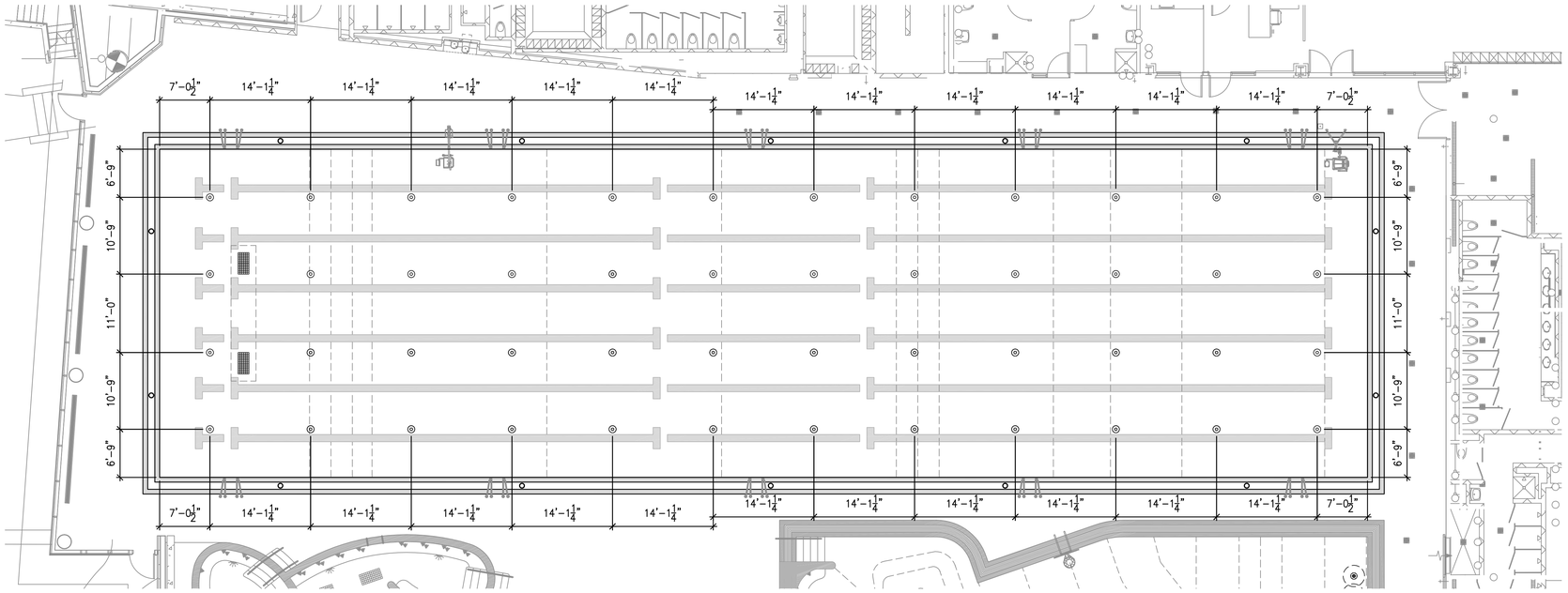


## 50 METER LAP POOL INLET FITTING DIMENSION PLAN

SCALE: 1/8" = 1'-0"

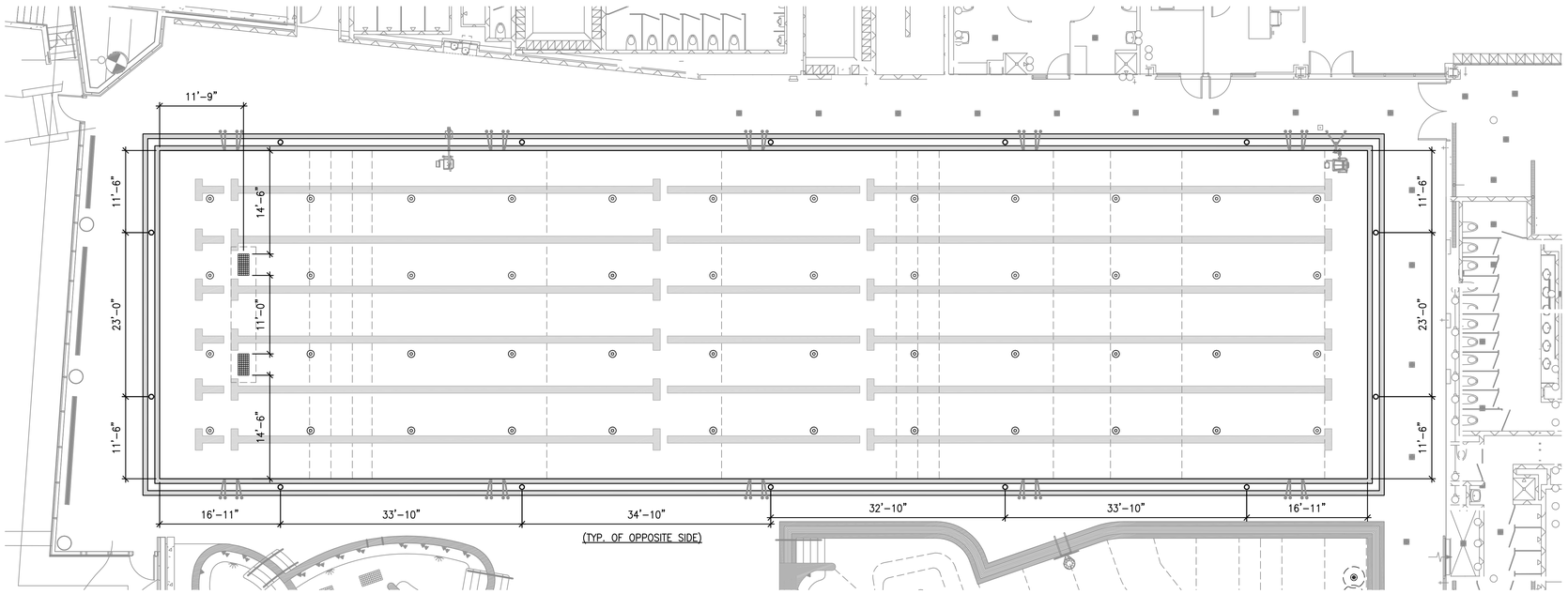


## 50 METER LAP POOL MAIN DRAIN AND GUTTER DROP-OUT DIMENSION PLAN

SCALE: 1/8" = 1'-0"

**ALTERNATE BID 1**

THIS 50 METER LAP POOL AND ITS PIPING IS AN ALTERNATE BID ITEM

The entire contents of the attached documents, including all sketches, plans, studies, drawings, schedules and specifications and all copyrights therein are, and shall remain the sole property of Water Design Incorporated. The documents and their contents may not be used, photocopied or reproduced digitally, electronically or in any other manner without the express prior written consent of Water Design Incorporated.

MHTN
ARCHITECTS
MHTN Architects, Inc.
420 East South Temple
Suite 100
Salt Lake City, Utah 84111
Telephone (801) 595-6700
Telefax (801) 595-6717
www.mhtn.com

Hastings+Chivetta
ARCHITECTURE • PLANNING • ENGINEERING
622 Emerson, Suite 200
St. Louis, MO 63141
Tel. 314.863.5717
Fax. 314.863.2823
www.hastingschivetta.com

Water Design Inc.
5047 S. Galleria Dr.
Murray, Utah 84123
Phone : (801) 261-4009
Fax : (801) 261-4069
www.waterdesigninc.com

BUILDING OFFICIAL STAMP

# UNIVERSITY OF UTAH
## STUDENT LIFE CENTER
1836 E. BALLIF ROAD
SALT LAKE CITY, UTAH 84112

SEAL

LICENSED PROFESSIONAL ENGINEER
CHARLES ROSS ANDERSON
145589-2202
5-15-13
STATE OF UTAH

MHTN PROJECT NO.

DRAWN BY: ACR CHECKED BY: BA

ISSUED:

| NO. | DATE | DESCRIPTION |
|---|---|---|
| | | |

CONTRACTOR TO VERIFY DRAWINGS IN FIELD USE REFLECT LAST REVISION DATE.

| NO. | DATE | DESCRIPTION |
|---|---|---|
| | | |

SHEET NAME

LAP POOL FITTING DIMENSION PLAN - ALTERNATE 1

BID DOCUMENTS
MAY 15, 2013

SHEET NUMBER

WF402.3

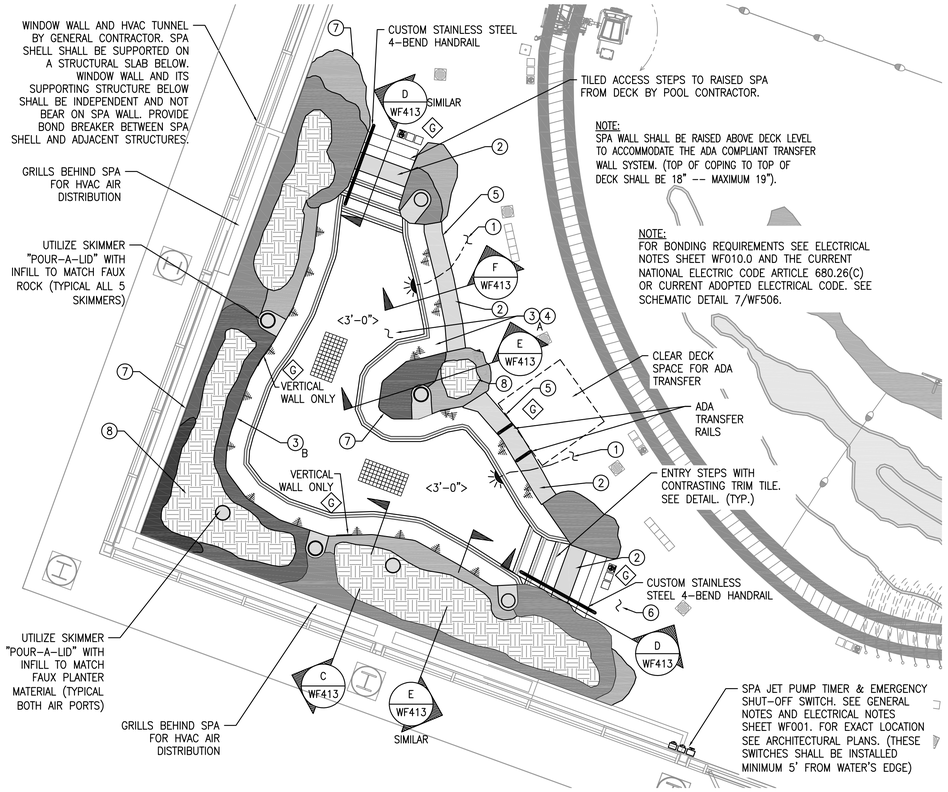


## ENLARGED LOWER LEVEL RAISED SPA PLAN

SCALE: 1/4" = 1'-0"

N TRUE NORTH

## RAISED SPA DATA

| | |
|---|---|
| SIZE: | 21'-8" x 23'-9" x 8' |
| WATER DEPTH: | 3'-0" |
| SHAPE: | MODIFIED "L" |
| CONSTRUCTION TYPE: | SHOTCRETE |
| AREA: | 303 SQ.FT. |
| PERIMETER: | 90'-4" |
| VOLUME: | 5,319 GALLONS |
| MIN. FLOW: | 315 GPM |
| MAX. FLOW: | 435 GPM |
| TURNOVER: | 17 MINUTE MINIMUM |

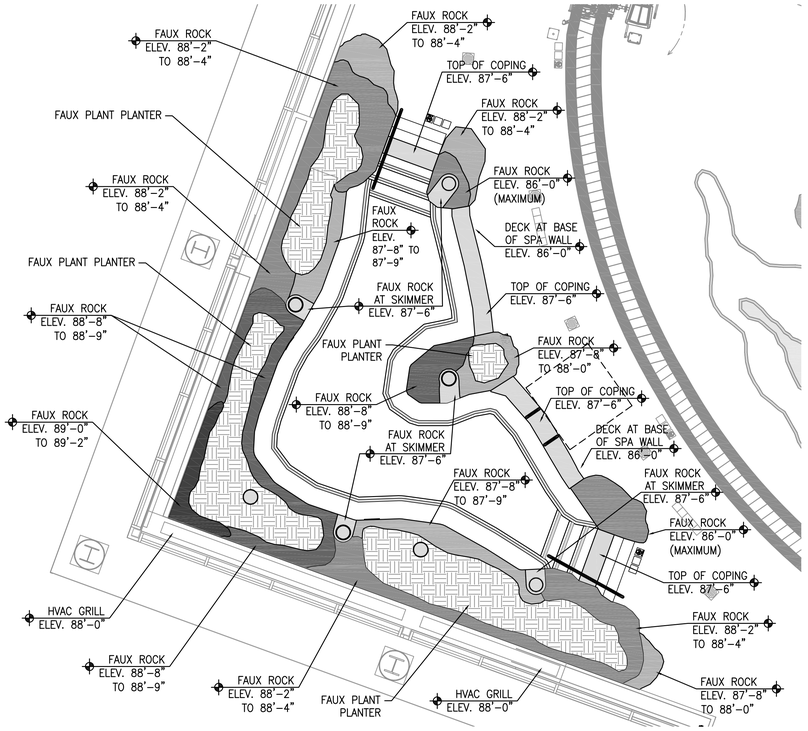


## FAUX ROCK ELEVATIONS AT SPA PLAN

SCALE: 1/4" = 1'-0"

## SPA LAYOUT ON SITE:

DIMENSIONS SHOWN ARE FOR REFERENCE ONLY. POOL CONTRACTOR SHALL HAVE SPA LAYED OUT ON SITE BY A PROFESSIONAL SURVEYOR PRIOR TO EXCAVATION. POOL CONTRACTOR IS RESPONSIBLE FOR POOL SPECIFIC SURVEY WORK. AN ELECTRONIC FILE OF THE SPA BASE MAY BE PROVIDED TO THE CONTRACTOR FOR SURVEYOR'S USE. SEE CIVIL AND ARCHITECTURAL DRAWINGS FOR REFERENCE POINTS AND ADDITIONAL SITE INFORMATION.

## RAISED SPA SCHEDULE

| MARK | DESCRIPTION | QUANTITY | DETAIL | REQUIREMENT |
|---|---|---|---|---|
| | UNDERWATER (U.W.) LIGHT | 2 | 1 WF506 | PENTAIR INTELLIBRITE WHITE LED #601 1** 120 VOLT U.L. LISTED |
| | REMARKS: EACH LIGHT IS APPROXIMATELY 45 WATT LED LIGHT (300 WATT EQUIVALENCY). **PROVIDE SUFFICIENT LENGTH OF CORD FOR RE-LAMPING ON DECK. **PROVIDE SUFFICIENT LENGTH OF CORD TO J-BOX. PROVIDE WITH STAINLESS STEEL RING AND STAINLESS STEEL NICHE. | | | |
| | ENTRY STEP HANDRAIL | ONE PER SET OF STEPS (TOTAL 2) | 9 WF411 | S.R. SMITH CUSTOM 4-BEND |
| | REMARKS: STAINLESS STEEL RAIL 1.90" O.D. X 0.065" THICK WALL. HANDRAIL SHALL EXTEND FROM DECK UP TO THE RAISED SPA COPING AND DOWN INTO THE SPA. PROVIDE HANDRAIL WITH WEDGE ANCHORS & S.S. ESCUTCHEON PLATES (SEE DETAIL 4/WF503). SEE PLAN FOR HANDRAIL LENGTH. CONSTRUCTION OF THE TILED ENTRY STEPS TO THE SPA FROM THE DECK BY THE POOL CONTRACTOR. | | | |
| | TRANSFER WALL RAIL | ONE SET OF TWO RAILS | 12 WF503 | S.R. SMITH CUSTOM RAIL ADA COMPLIANT |
| | REMARKS: STAINLESS STEEL RAIL 1.50" O.D. X 0.065" THICK WALL. TRANSFER RAIL SHALL BE MOUNTED IN THE TOP OF THE SPA WALL AT A LOCATION COMPLIANT WITH ADA GUIDELINES. POOL CONTRACTOR SHALL PROVIDE WITH S.S. DECK-MOUNTED ANCHOR FLANGE. SEE DETAIL FOR HANDRAIL LENGTH. | | | |
| G | DEPTH MARKER TILES | SEE PLAN | 3 WF506 | IN-LAYS, INC. OR EQUAL |
| | REMARKS: CUSTOM FROST PROOF GLAZED TILE W/4" HIGH NUMBERS WITH CONTRASTING COLOR BACKGROUND ON VERTICAL WALL AT WATERLINE. PROVIDE 6" x 6" FROST PROOF NON-SKID TILE W/4" HIGH NUMBERS WITH CONTRASTING COLOR BACKGROUND IN SPA DECK. SEE DETAIL FOR DEPTH MARKER KEY. WATER DEPTH SHALL BE PLAINLY MARKED AT MAX. 25'-0" CENTER TO CENTER. DECK DEPTH MARKERS SHALL BE PROVIDED BY THE POOL CONTRACTOR AND INSTALLED BY DECK CONTRACTOR. | | | |
| NO DIVING | "NO DIVING" ICON TILES | SEE PLAN | 3 WF506 | IN-LAYS, INC. OR EQUAL |
| | REMARKS: 6" X 6" NON-SKID, FROSTPROOF, CERAMIC NO DIVING TILE WITH LETTERING AND ICON ON CONTRASTING COLOR BACKGROUND. PLACE IN DECK AT 25'-0" C.C. MAXIMUM ADJACENT TO DEPTH MARKERS IN LOCATIONS AS SHOWN ON THE PLAN. NO DIVING TILES SHALL BE PROVIDED BY THE POOL CONTRACTOR AND INSTALLED BY DECK CONTRACTOR. | | | |
| | OUTLET FRAME AND GRATES | SEE PIPING PLAN AND FITTING SCHEDULE SHEET WF403.2 | | |
| | HYDRO THERAPY JET FITTING ASSEMBLY | 12 SINGLE BACK JETS | | SEE JET PIPING PLAN AND FITTING SCHEDULE SHEET WF403.3 |
| | HYDRO THERAPY JET FITTING ASSEMBLY | 12 STACKED JETS (TOTAL 24 JETS) | | SEE JET PIPING PLAN AND FITTING SCHEDULE SHEET WF403.3 |
| | JET PUMP TIMER | 2 | N/A | 15 MINUTE MAXIMUM |
| | REMARKS: INSTALL PER NEC ARTICLE 680. POOL CONTRACTOR TO PROVIDE TIMERS AND ELECTRICAL CONTRACTOR TO INSTALL. TIMERS SHALL BE MOUNTED IN A LOCATION WHICH REQUIRES THE BATHER TO EXIT THE SPA BEFORE THE TIMERS CAN BE RESET. | | | |
| | EMERGENCY SHUT OFF SWITCH | 1 | N/A | SHUT OFF SWITCH |
| | REMARKS: INSTALL PER NEC ARTICLE 680. POOL CONTRACTOR TO PROVIDE SHUT OFF SWITCH AND ELECTRICAL CONTRACTOR TO INSTALL (MINIMUM 5' FROM WATER'S EDGE). | | | |
| 1 | U.W. LIGHT JUNCTION BOX | AS REQ'D | 1 WF506 | PER N.E.C. ARTICLE 680 |
| | REMARKS: NOT SHOWN IN PLAN. INSTALLED PER THE 2008 NEC ARTICLE 680 OR CURRENT ADOPTED ELECTRICAL CODE. SEE ELECTRICAL ITEMS SHEET WF001. JUNCTION BOX(ES) PROVIDED AND INSTALLED BY ELECTRICAL CONTRACTOR. LOCATION OF J-BOXES AND LIGHT SWITCHES BY ELECTRICAL CONTRACTOR. | | | |
| 2 | SPA COPING | AROUND SPA PERIMETER | 1 WF411 | PRE-CAST COPING |
| | REMARKS: COPING SHALL PROVIDE HAND HOLD AROUND. PRE-CAST COPING SHALL BE LOCATED AT BOTH OF THE STEP ENTRIES AND AT THE DECK SIDE OF THE WALLS (SEE PLAN FOR LOCATIONS). | | | |
| 3 A | SPA INTERIOR FINISH | AS REQUIRED | 4 WF411 | UNGLAZED CERAMIC TILE |
| | REMARKS: FINISH SHALL BE WATERPROOF AND FREE FROM DEFECTS. PROVIDE TILE SAMPLES TO ARCHITECT FOR SELECTION. ARCHITECT SHALL SELECT COLOR. | | | |
| 3 B | SPA INTERIOR WATERLINE TILE | AS REQUIRED | 1 WF411 | STONE TILE |
| | REMARKS: APPLY WATERPROOF FINISH COMPATIBLE WITH CHEMICALLY TREATED WATER OVER THE STONE TILE. SEE ARCHITECTURAL SPECIFICATIONS FOR TILE SELECTION. PROVIDE SAMPLES FOR REVIEW. | | | |
| 3 C | SPA EXTERIOR STEP FINISH | AS REQUIRED | 4 WF411 | UNGLAZED CERAMIC TILE |
| | REMARKS: FINISH SHALL BE WATERPROOF AND FREE FROM DEFECTS. PROVIDE TILE SAMPLES TO ARCHITECT FOR SELECTION. ARCHITECT SHALL SELECT COLOR. | | | |
| 4 | SPA SHELL WATERPROOFING | AS REQUIRED | N/A | AQUAFIN 1K AND 2K/M OR EQUAL |
| | REMARKS: PRIOR TO THE TILE FINISH INSTALLATION, WATERPROOF INTERIOR OF SPA AND CONTINUE WATERPROOFING OVER BOND BEAM AND DOWN EXTERIOR FACE OF SPA TO BELOW BOTTOM OF FINISHED SPA DECK. EXTERIOR WALL TO BE WATERPROOFED WITH WATERPROOFING MATERIAL THAT RESISTS NEGATIVE HYDROSTATIC PRESSURE. POOL CONTRACTOR SHALL NOT USE FORM RELEASE ON FORMS. PREPARE SURFACE PER MANUFACTURER'S SPECIFICATIONS. SEE WATERPROOFING SPECIFICATIONS AND MANUFACTURER'S INSTALLATION INSTRUCTIONS FOR ADDITIONAL INFORMATION AND REQUREMENTS. | | | |
| 5 | SPA RAISED WALL EXTERIOR FINISH | AS REQUIRED | N/A | ROCA STONE TILE |
| | REMARKS: PROVIDE STONE TILE FINISH AT VERTICAL FACE OF RAISED SPA WALL. SEE ARCHITECTURAL SPECIFICATIONS. PROVIDE SAMPLES FOR SELECTION OF COLOR AND TILE. WATERPROOF SPA SHELL PRIOR TO TILE INSTALLATION. SEE WATERPROOFING REMARKS ABOVE. | | | |
| 6 | SPA DECK | CONTINUOUS AROUND SPA | N/A | NON-SLIP CONCRETE |
| | REMARKS: MINIMUM 3' WIDE NON-SLIP CONCRETE DECK CONTINUOUS AROUND MINIMUM 25% OR MORE OF SPA PERIMETER. SLOPE DECK MINIMUM 1/4" PER FOOT AND MAXIMUM 3/8" PER FOOR AWAY FROM SPA RAISED WALL TO DECK DRAINS WHICH DRAIN TO SANITARY SEWER. DECK AND DECK DRAINS ARE NOT IN SPA CONTRACT. | | | |
| 7 | FAUX ROCK | SEE PLAN | N/A | BY FAUX ROCK CONTRACTOR |
| | REMARKS: FAUX ROCK SHALL VARY IN HEIGHT. SEE ELEVATION PLAN. FAUX ROCK SHALL PROVIDE HANDHOLD AT SPA EDGE. PRIOR TO CONSTRUCTION PROVIDE SHOP DRAWING SUBMITTAL FOR REVIEW. SEE ARCHITECTURAL SPECIFICATIONS. ARCHITECT SHALL SELECT COLOR AND FINISH. THERE SHALL BE NO ROUGH EDGES. | | | |
| 8 | FAUX PLANT PLANTERS | SEE PLAN | N/A | BY FAUX PLANT CONTRACTOR |
| | REMARKS: CONTRACTOR SHALL COORDINATE WITH POOL CONTRACTOR TO PROVIDE DRAINAGE LINES IN THE PLANTER TO REMOVE ANY ANCILLARY WATER THAT WOULD OTHERWISE COLLECT IN THE PLANTERS. SEE ARCHITECTURAL SPECIFICATIONS. | | | |

The entire contents of the attached documents, including all sketches, plans, studies, drawings, schedules and specifications and all copyrights therein are, and shall remain the sole property of Water Design Incorporated. The documents and their contents may not be used, photocopied or reproduced digitally, electronically or in any other manner without the express prior written consent of Water Design Incorporated.

MHTN ARCHITECTS
MHTN Architects, Inc.
420 East South Temple
Suite 100
Salt Lake City, Utah 84111
Telephone (801) 595-6700
Telefax (801) 595-6717
www.mhtn.com

Hastings+Chivetta
ARCHITECTURE • PLANNING • ENGINEERING
622 Emerson, Suite 200
St. Louis, MO 63141
Tel. 314.863.5717
Fax. 314.863.2823
www.hastingschivetta.com

Water Design Inc.
5047 S. Galleria Dr.
Murray, Utah 84123
Phone : (801) 261-4009
Fax : (801) 261-4069
www.waterdesigninc.com

BUILDING OFFICIAL STAMP

# UNIVERSITY OF UTAH
## STUDENT LIFE CENTER
1836 E. BALLIF ROAD
SALT LAKE CITY, UTAH 84112

SEAL

MHTN PROJECT NO.

DRAWN BY: ACR CHECKED BY: BA

ISSUED:

| NO. | DATE | DESCRIPTION |
|---|---|---|
| | | |

CONTRACTOR TO VERIFY DRAWINGS IN FIELD USE REFLECT LAST REVISION DATE.

| NO. | DATE | DESCRIPTION |
|---|---|---|
| | | |

SHEET NAME

LOWER LEVEL RAISED SPA PLAN

BID DOCUMENTS
MAY 15, 2013

SHEET NUMBER

WF403.0

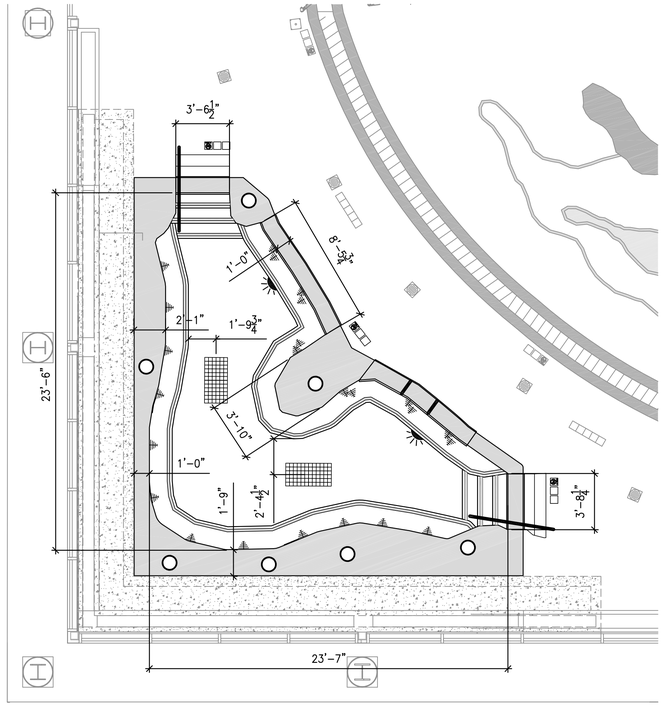


## SPA DIMENSION PLAN

SCALE: 1/4" = 1'-0"

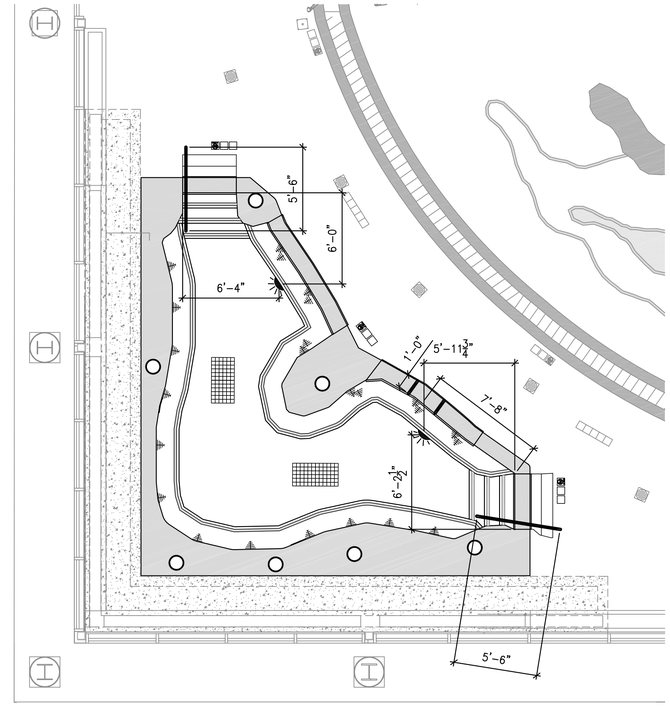


## DECK DIMENSION PLAN

SCALE: 1/4" = 1'-0"

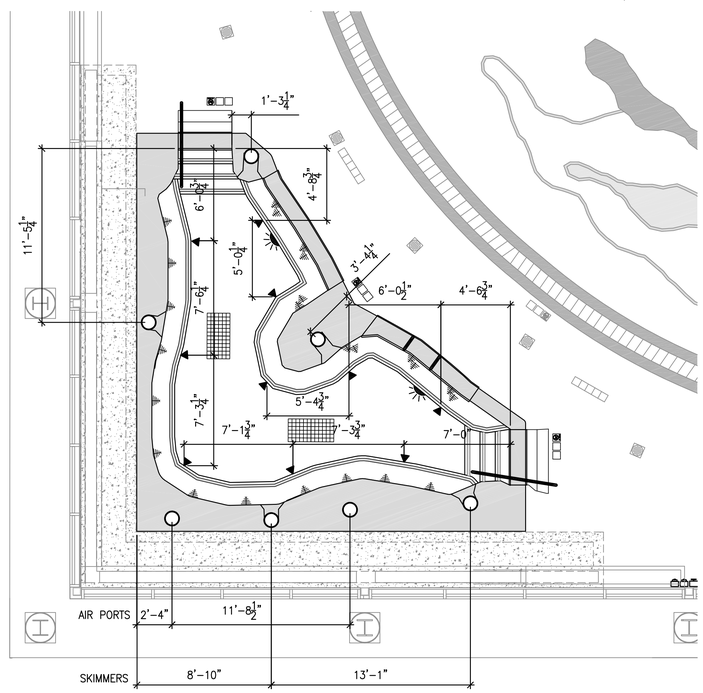


## CIRCULATION EQUIPMENT DIMENSION PLAN

SCALE: 1/4" = 1'-0"

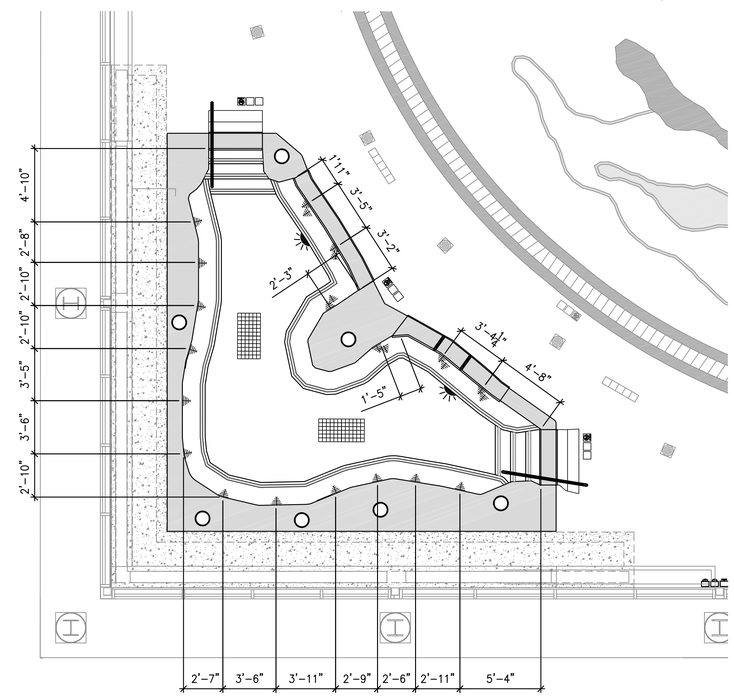


## JET FITTINGS DIMENSION PLAN

SCALE: 1/4" = 1'-0"

**SPA LAYOUT ON SITE:**

DIMENSIONS SHOWN ARE FOR REFERENCE ONLY. POOL CONTRACTOR SHALL HAVE SPA LAID OUT ON SITE BY A PROFESSIONAL SURVEYOR PRIOR TO EXCAVATION. POOL CONTRACTOR IS RESPONSIBLE FOR POOL SPECIFIC SURVEY WORK. AN ELECTRONIC FILE OF THE SPA BASE MAY BE PROVIDED TO THE CONTRACTOR FOR SURVEYOR'S USE. SEE CIVIL AND ARCHITECTURAL DRAWINGS FOR REFERENCE POINTS AND ADDITIONAL SITE INFORMATION.

The entire contents of the attached documents, including all sketches, plans, studies, drawings, schedules and specifications and all copyrights therein are, and shall remain the sole property of Water Design Incorporated. The documents and their contents may not be used, photocopied or reproduced digitally, electronically or in any other manner without the express prior written consent of Water Design Incorporated.

MHTN
ARCHITECTS
**MHTN Architects, Inc.**
420 East South Temple
Suite 100
Salt Lake City, Utah 84111
Telephone (801) 595-6700
Telefax (801) 595-6717
www.mhtn.com

**Hastings+Chivetta**
ARCHITECTURE • PLANNING • ENGINEERING
622 Emerson, Suite 200
St. Louis, MO 63141
Tel. 314.863.5717
Fax. 314.863.2823
www.hastingschivetta.com

Water Design Inc.
5047 S. Galleria Dr.
Murray, Utah 84123
Phone : (801) 261-4009
Fax : (801) 261-4069
www.waterdesigninc.com

BUILDING OFFICIAL STAMP

# UNIVERSITY OF UTAH
## STUDENT LIFE CENTER
1836 E. BALLIF ROAD
SALT LAKE CITY, UTAH 84112

SEAL

MHTN PROJECT NO.

DRAWN BY: ACR CHECKED BY: BA

ISSUED:

| NO. | DATE | DESCRIPTION |
|---|---|---|
| | | |

CONTRACTOR TO VERIFY DRAWINGS IN FIELD USE REFLECT LAST REVISION DATE.

| NO. | DATE | DESCRIPTION |
|---|---|---|
| | | |

SHEET NAME

SPA DIMENSION PLANS

BID DOCUMENTS
MAY 15, 2013

SHEET NUMBER

WF403.1

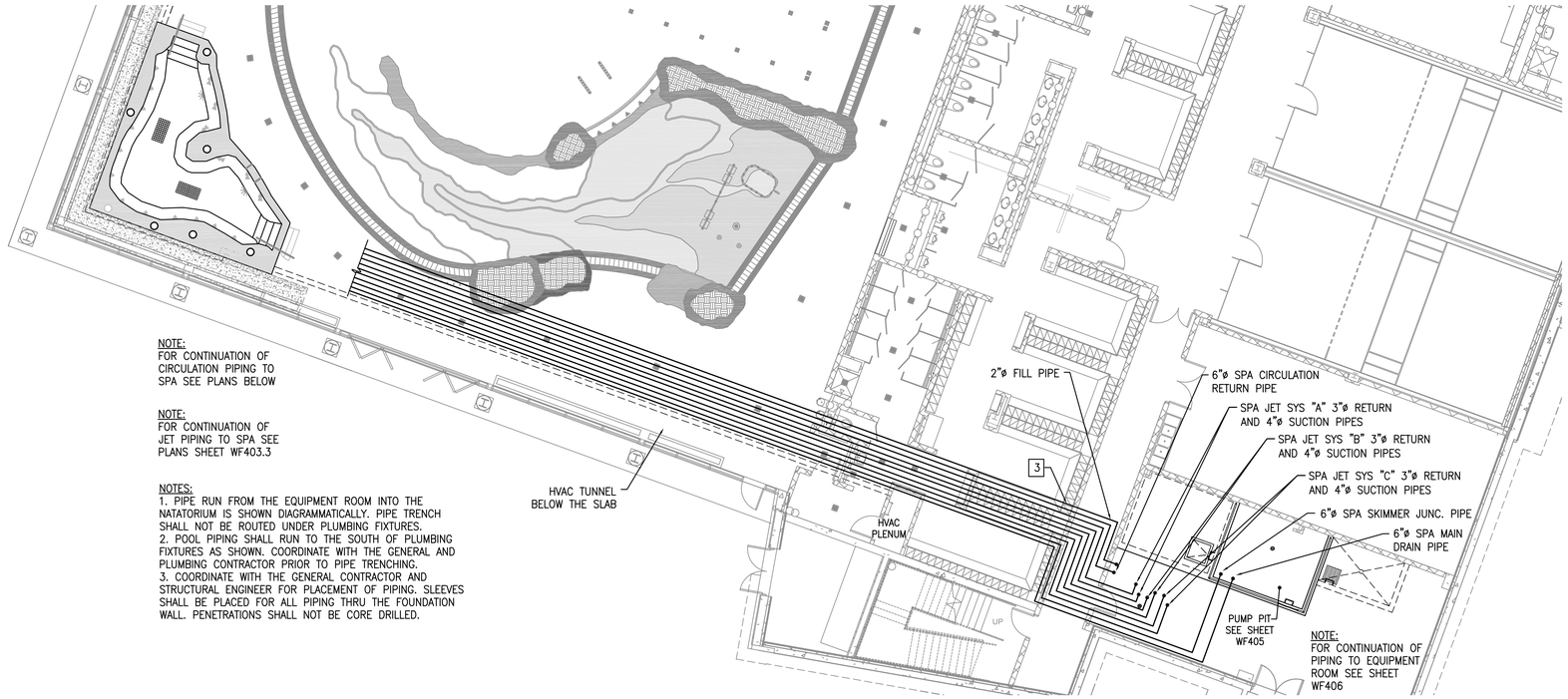


## OVERALL SPA CIRCULATION AND THERAPY JET PIPING PLAN TO EQUIPMENT ROOM

SCALE: 1/8" = 1'-0"

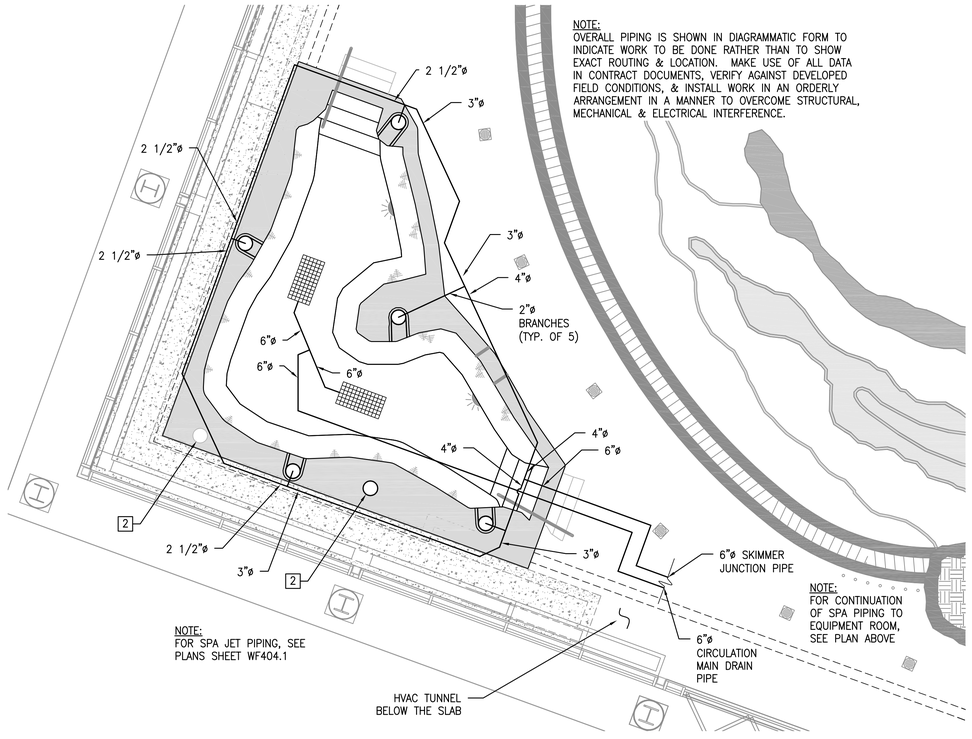


## ENLARGED SPA SUCTION PIPING PLAN

SCALE: 1/4" = 1'-0"

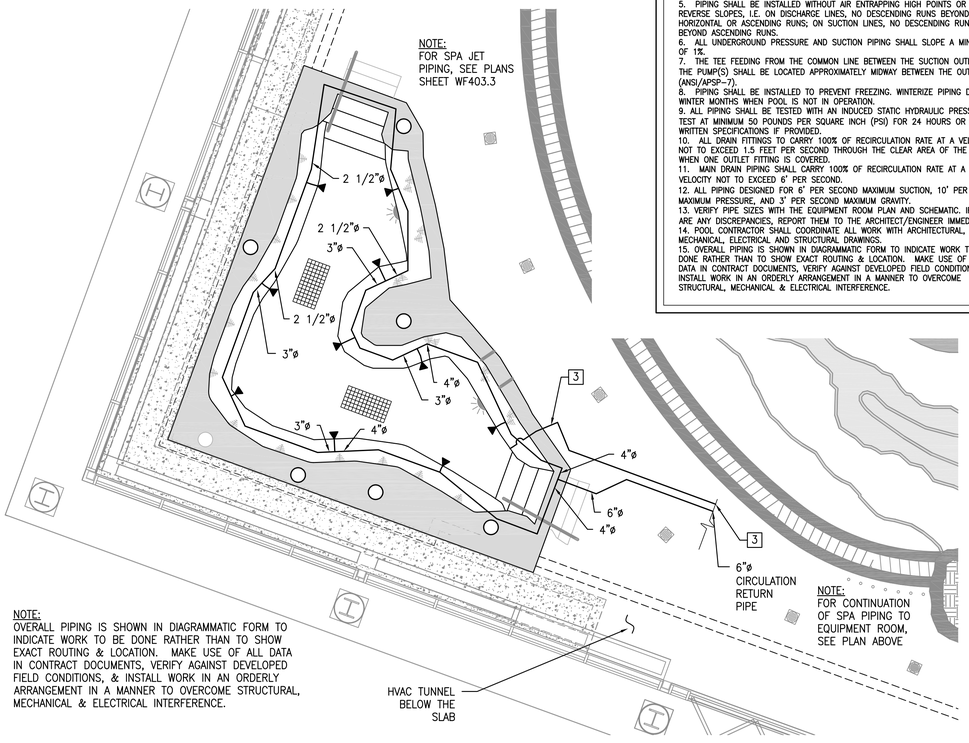


## ENLARGED SPA RETURN PIPING PLAN

SCALE: 1/4" = 1'-0"

## SPA CIRCULATION FITTING SCHEDULE

| MARK | DESCRIPTION | QUANTITY | DETAIL | REQUIREMENT |
|---|---|---|---|---|
| | CIRCULATION/JET OUTLET FRAME AND GRATE WITH FIELD-BUILT CONCRETE SUMP | 2 | 3 / WF306 | LAWSON AQUATIC COVER 18" x 36" #MD-FG-1836 UNBLOCKABLE |
| REMARKS: PROVIDE SIZE OF PIPE CONNECTION TO SUMP OUTLETS AS SHOWN ON PLANS. (CIRCULATION AND JET SYSTE). LOCATE ALL SUCTION PIPES ON SUMP WALLS. TAMPER PROOF STAINLESS STEEL FASTENERS REQUIRED. FRAME AND GRATE SHALL BE LISTED ACCORDING TO THE CURRENT ASME\ANSI A-112.19.8 STANDARD. ALLOWABLE FLOW PER GRATE PER NSF CERTIFICATION EQUALS 2080 GPM. (THREE JET PUMP SUCTION PIPES WILL ALSO DRAW FROM EACH SUMP) | | | | |
| | SURFACE SKIMMER | 5 | 10 / WF304 | WATERWAYS OR APPROVED EQUAL |
| REMARKS: NSF APPROVED. PROVIDE WITH FLOAT VALVE AND CHECK VALVE. PROVIDE EQUALIZER LINE WITH COVER COMPLIANT WITH VGBA REGULATIONS (SEE BELOW). PROVIDE ROUND FRAME WITH POUR-A-LID COVER. POUR-A-LID SHALL MATCH COPING AND/OR FAUX ROCK COLOR. SUBMIT LID COLOR CHOICES TO ARCHITECT. ARCHITECT SHALL SELECT COLOR. | | | | |
| | SURFACE SKIMMER EQUALIZER FITTING COVER | 5 | 10 / WF304 | AQUASTAR 6HP10" COVER WITH RND*** FITTING |
| REMARKS: PROVIDE CURRENT ADOPTED ASME/ANSI A112.19.8 STANDARD EQUALIZER COVER FITTING. SUBMIT COVER COLOR CHOICES TO ARCHITECT. ARCHITECT SHALL SELECT COLOR. | | | | |
| | WALL RETURN WATER INLET FITTING | 10 | 5 / WF304 | CUSTOM NON-ADJUSTABLE |
| REMARKS: SEE DETAIL FOR ORIFICE SIZE. SPACE INLETS PER PLAN LAYOUT/ DIMENSIONS. | | | | |
| | STACKED HYDRO THERAPY JET FITTINGS SEE SPA JET FITTING SCHEDULE SHEET WF403.3 | | | |
| | SINGLE HYDRO THERAPY JET FITTINGS SEE SPA JET FITTING SCHEDULE SHEET WF403.3 | | | |
| 1 | AIR LINE TO JETS | SEE FITTING SCHEDULE SHEET WF403.3 | | |
| 2 | AIR INTAKE BOX (AIR PORT) | SEE FITTING SCHEDULE SHEET WF403.3 | | |
| 3 | FILL LINE | ONE | N/A | 2"ø PIPE |
| REMARKS: TERMINATE FILL LINE AT EDGE OF SPA BENCH. LOCATE SENSOR IN SKIMMER BODY. WATER LEVEL CONTROLLER LOCATED IN EQUIPMENT ROOM. | | | | |

## SPA PIPING NOTES:

1. ALL PIPING SHALL BE NSF APPROVED (ANSI/NSF 14), SCHEDULE 40 PVC (UNLESS OTHERWISE NOTED)
2. ALL PIPING SHALL BE IN ACCORDANCE WITH THE UTAH STATE PLUMBING CODE AND UTAH DEPARTMENT OF PUBLIC HEALTH CODE, THE A.S.T.M. DESIGNATION NUMBER D-1785, AND THE NSF SEAL FOR POTABLE WATER.
3. PVC PIPE INSTALLED SHALL CONFORM TO THE REQUIREMENT OF TECHNICAL REPORT PPI-TTR 13 (8/73). PLASTIC PIPE INSTITUTE.
4. POOL CONTRACTOR SHALL MAKE EVERY EFFORT TO CURTAIL THE USE OF FITTINGS TO REDUCE HEAD.
5. PIPING SHALL BE INSTALLED WITHOUT AIR ENTRAPPING HIGH POINTS OR REVERSE SLOPES, I.E. ON DISCHARGE LINES, NO DESCENDING RUNS BEYOND HORIZONTAL OR ASCENDING RUNS; ON SUCTION LINES, NO DESCENDING RUNS BEYOND ASCENDING RUNS.
6. ALL UNDERGROUND PRESSURE AND SUCTION PIPING SHALL SLOPE A MINIMUM OF 1%.
7. THE TEE FEEDING FROM THE COMMON LINE BETWEEN THE SUCTION OUTLETS, TO THE PUMP(S) SHALL BE LOCATED APPROXIMATELY MIDWAY BETWEEN THE OUTLETS (ANSI/APSP-7).
8. PIPING SHALL BE INSTALLED TO PREVENT FREEZING. WINTERIZE PIPING DURING WINTER MONTHS WHEN POOL IS NOT IN OPERATION.
9. ALL PIPING SHALL BE TESTED WITH AN INDUCED STATIC HYDRAULIC PRESSURE TEST AT MINIMUM 50 POUNDS PER SQUARE INCH (PSI) FOR 24 HOURS OR PER WRITTEN SPECIFICATIONS IF PROVIDED.
10. ALL DRAIN FITTINGS TO CARRY 100% OF RECIRCULATION RATE AT A VELOCITY NOT TO EXCEED 1.5 FEET PER SECOND THROUGH THE CLEAR AREA OF THE GRATE WHEN ONE OUTLET FITTING IS COVERED.
11. MAIN DRAIN PIPING SHALL CARRY 100% OF RECIRCULATION RATE AT A VELOCITY NOT TO EXCEED 6' PER SECOND.
12. ALL PIPING DESIGNED FOR 6' PER SECOND MAXIMUM SUCTION, 10' PER SECOND MAXIMUM PRESSURE, AND 3' PER SECOND MAXIMUM GRAVITY.
13. VERIFY PIPE SIZES WITH THE EQUIPMENT ROOM PLAN AND SCHEMATIC. IF THERE ARE ANY DISCREPANCIES, REPORT THEM TO THE ARCHITECT/ENGINEER IMMEDIATELY.
14. POOL CONTRACTOR SHALL COORDINATE ALL WORK WITH ARCHITECTURAL, MECHANICAL, ELECTRICAL AND STRUCTURAL DRAWINGS.
15. OVERALL PIPING IS SHOWN IN DIAGRAMMATIC FORM TO INDICATE WORK TO BE DONE RATHER THAN TO SHOW EXACT ROUTING & LOCATION. MAKE USE OF ALL DATA IN CONTRACT DOCUMENTS, VERIFY AGAINST DEVELOPED FIELD CONDITIONS, & INSTALL WORK IN AN ORDERLY ARRANGEMENT IN A MANNER TO OVERCOME STRUCTURAL, MECHANICAL & ELECTRICAL INTERFERENCE.


MHTN ARCHITECTS
MHTN Architects, Inc.
420 East South Temple
Suite 100
Salt Lake City, Utah 84111
Telephone (801) 595-6700
Telefax (801) 595-6717
www.mhtn.com

Hastings+Chivetta
ARCHITECTURE • PLANNING • ENGINEERING
622 Emerson, Suite 200
St. Louis, MO 63141
Tel. 314.863.5717
Fax. 314.863.2823
www.hastingschivetta.com

Water Design Inc.
5047 S. Galleria Dr.
Murray, Utah 84123
Phone : (801) 261-4009
Fax : (801) 261-4069
www.waterdesigninc.com


BUILDING OFFICIAL STAMP

# UNIVERSITY OF UTAH
## STUDENT LIFE CENTER
1836 E. BALLIF ROAD
SALT LAKE CITY, UTAH 84112

SEAL

MHTN PROJECT NO.

DRAWN BY: ACR CHECKED BY: BA

ISSUED:

| NO. | DATE | DESCRIPTION |
|---|---|---|
| | | |

CONTRACTOR TO VERIFY DRAWINGS IN FIELD USE REFLECT LAST REVISION DATE.

| NO. | DATE | DESCRIPTION |
|---|---|---|
| | | |

SHEET NAME

SPA CIRCULATION PIPING PLAN

BID DOCUMENTS
MAY 15, 2013

SHEET NUMBER

WF403.2


The entire contents of the attached documents, including all sketches, plans, studies, drawings, schedules and specifications and all copyrights therein are, and shall remain the sole property of Water Design Incorporated. The documents and their contents may not be used, photocopied or reproduced digitally, electronically or in any other manner without the express prior written consent of Water Design Incorporated.

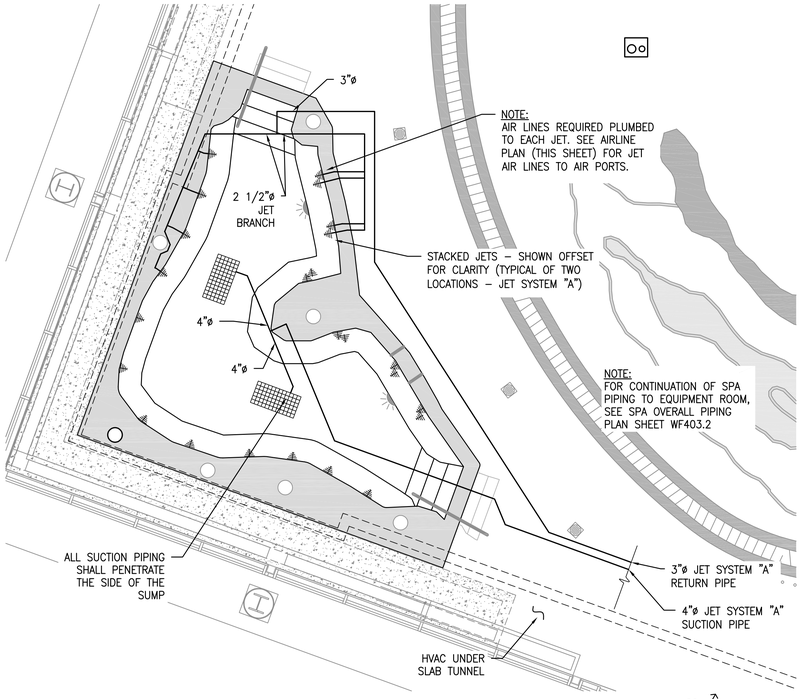


## ENLARGED SPA JET SYSTEM "A" PIPING PLAN

SCALE: 1/4" = 1'-0"

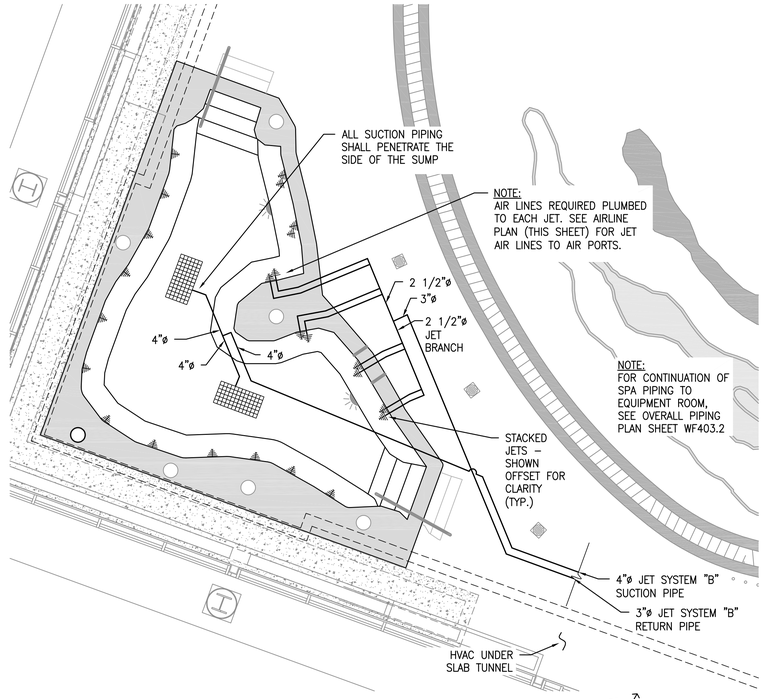


## ENLARGED SPA JET SYSTEM "B" PIPING PLAN

SCALE: 1/4" = 1'-0"

## SPA JET FITTING SCHEDULE

| MARK | DESCRIPTION | QUANTITY | DETAIL | REQUIREMENT |
|---|---|---|---|---|
| | CIRCULATION/JET OUTLET FRAME AND GRATE WITH SUMP | SEE CIRCULATION FITTING SCHEDULE WF403.2 | | |
| | SURFACE SKIMMER | SEE CIRCULATION FITTING SCHEDULE WF403.2 | | |
| | WALL RETURN WATER INLET FITTING | SEE CIRCULATION FITTING SCHEDULE WF403.2 | | |
| | STACKED HYDRO THERAPY JET FITTINGS | 6 LOCATIONS (12 JETS) | 11 WF506 | HYDRO-AIR #10-4325 OR EQUAL |
| | SINGLE HYDRO THERAPY JET FITTINGS | 12 LOCATIONS (12 JETS) | 11 WF506 | HYDRO-AIR #10-4325 OR EQUAL |
| REMARKS: SEE PLAN FOR LOCATIONS FOR STACKED AND STANDARD JET PLACEMENT. SHOTCRETE EXTENDED VENTURI TEE ASSEMBLY. ALSO PROVIDE THE OPTIONAL VENTURI TEE HEX REDUCER REDUCER TO PROVIDE 18 G.P.M./JET. | | | | |
| 1 | AIR LINE TO JETS | ONE AIR LINE FOR 6 JETS – 4 AIRLINES TOTAL | N/A | SCH. 40 PVC PIPE FROM AIR INTAKE BOX |
| REMARKS: PROVIDE ONE AIR LINE FOR EACH SET OF 6 JETS. PROVIDE FOUR AIR LINES TOTAL. SEE PLAN. SLOPE CONTINUOUSLY FROM PORT TO JETS. NO LOW SPOTS. CUT PORT BODY AS NEEDED TO GET CORRECT HEIGHT OF PIPE PORT TO PREVENT WATER-TRAPING LOW SPOTS. | | | | |
| 2 | AIR INTAKE BOX (AIR PORT) | 2 | 5 WF506 | PARAMOUNT AIRPORT 004-252-8192-OX |
| REMARKS: PROVIDE WITH TWO MUFFLER FITTINGS, AND USE BOTH BOTTOM PORTS FOR AIR LINE CONNECTIONS. SIX JETS SHALL BE THE MAXIMUM NUMBER OF JETS PER PORT. LOCATE IN FAUX PLANTER BED AND PROVIDE POUR A LID FITTING TO CAMOUFLAGE. CUT PORT BODY AS NEEDED TO GET CORRECT HEIGHT OF PIPE PORT TO PREVENT WATER-TRAPING LOW SPOTS. | | | | |

**NOTE:**

OVERALL PIPING IS SHOWN IN DIAGRAMMATIC FORM TO INDICATE WORK TO BE DONE RATHER THAN TO SHOW EXACT ROUTING & LOCATION. MAKE USE OF ALL DATA IN CONTRACT DOCUMENTS, VERIFY AGAINST DEVELOPED FIELD CONDITIONS, & INSTALL WORK IN AN ORDERLY ARRANGEMENT IN A MANNER TO OVERCOME STRUCTURAL, MECHANICAL & ELECTRICAL INTERFERENCE.

SEE PIPING NOTES SHEET WF403.2

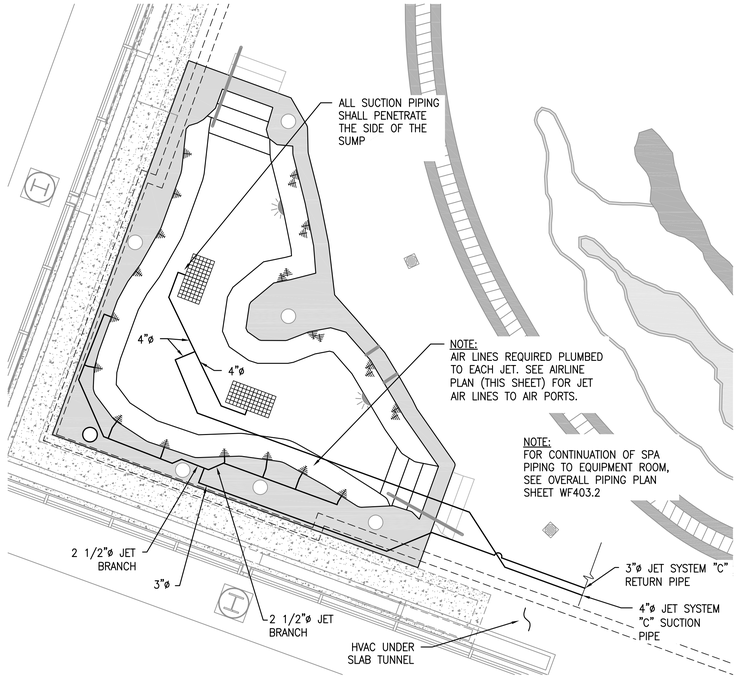


## ENLARGED SPA JET SYSTEM "C" PIPING PLAN

SCALE: 1/4" = 1'-0"

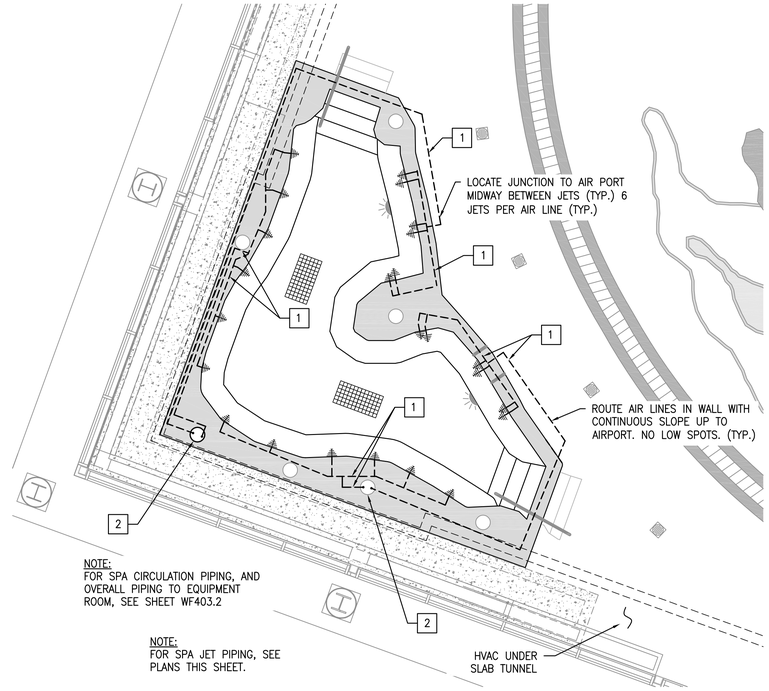


## ENLARGED SPA JET SYSTEM AIRLINE PIPING PLAN

SCALE: 1/4" = 1'-0"

The entire contents of the attached documents, including all sketches, plans, studies, drawings, schedules and specifications and all copyrights therein are, and shall remain the sole property of Water Design Incorporated. The documents and their contents may not be used, photocopied or reproduced digitally, electronically or in any other manner without the express prior written consent of Water Design Incorporated.

MHTN
ARCHITECTS
MHTN Architects, Inc.
420 East South Temple
Suite 100
Salt Lake City, Utah 84111
Telephone (801) 595-6700
Telefax (801) 595-6717
www.mhtn.com

Hastings+Chivetta
ARCHITECTURE • PLANNING • ENGINEERING
622 Emerson, Suite 200
St. Louis, MO 63141
Tel. 314.863.5717
Fax. 314.863.2823
www.hastingschivetta.com

Water Design Inc.
5047 S. Galleria Dr.
Murray, Utah 84123
Phone : (801) 261-4009
Fax : (801) 261-4069
www.waterdesigninc.com

BUILDING OFFICIAL STAMP

# UNIVERSITY OF UTAH
# STUDENT LIFE CENTER
1836 E. BALLIF ROAD
SALT LAKE CITY, UTAH 84112

SEAL

LICENSED PROFESSIONAL ENGINEER
CHARLES ROSS ANDERSON
145589-2202
5-15-13
STATE OF UTAH

MHTN PROJECT NO.

DRAWN BY: ACR CHECKED BY: BA

ISSUED:

| NO. | DATE | DESCRIPTION |
|---|---|---|
| | | |

CONTRACTOR TO VERIFY DRAWINGS IN FIELD USE REFLECT LAST REVISION DATE.

| NO. | DATE | DESCRIPTION |
|---|---|---|
| | | |

SHEET NAME

SPA JET
PIPING PLANS

BID DOCUMENTS
MAY 15, 2013

SHEET NUMBER

WF403.3

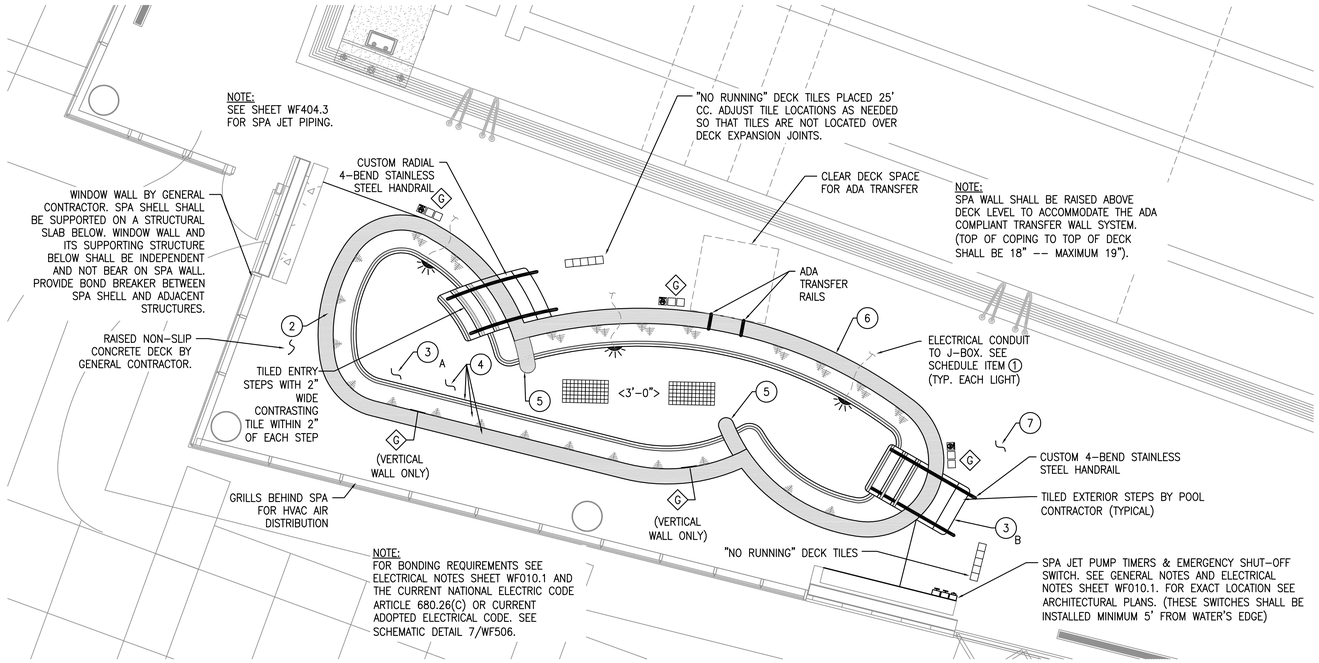


## ENLARGED LOWER LEVEL RAISED SPA PLAN

SCALE: 1/4" = 1'-0"

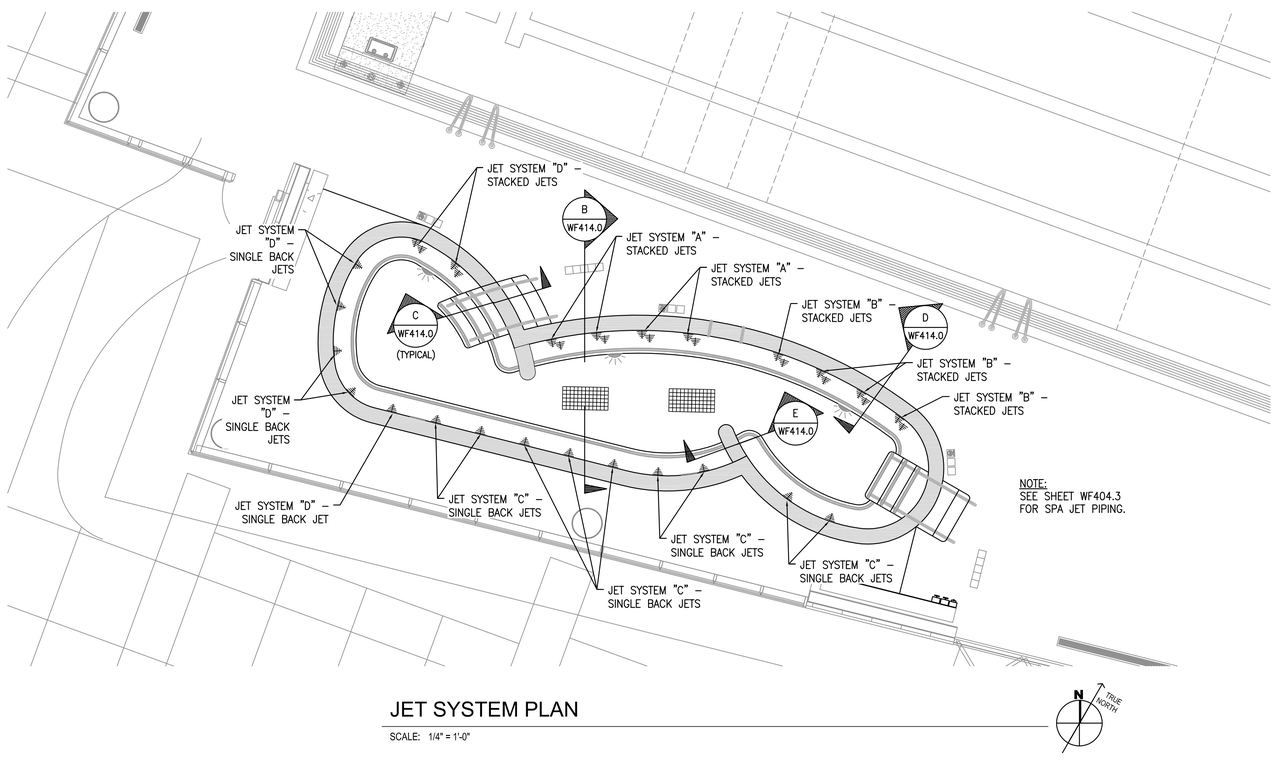


## JET SYSTEM PLAN

SCALE: 1/4" = 1'-0"

### RAISED SPA DATA

| | |
|---|---|
| SIZE: | 40'-5" x 8' |
| WATER DEPTH: | 3'-0" |
| SHAPE: | CUSTOM |
| CONSTRUCTION TYPE: | SHOTCRETE |
| AREA: | 342 SQ.FT. |
| PERIMETER: | 90'-4" |
| VOLUME: | 5,596 GALLONS |
| MIN. FLOW: | 315 GPM |
| MAX. FLOW: | 435 GPM |
| TURNOVER AT MINIMUM FLOW: | 18 MINUTE MINIMUM |

### SPA LAYOUT ON SITE:

DIMENSIONS SHOWN ARE FOR REFERENCE ONLY. POOL CONTRACTOR SHALL HAVE SPA LAYED OUT ON SITE BY A PROFESSIONAL SURVEYOR PRIOR TO EXCAVATION. POOL CONTRACTOR IS RESPONSIBLE FOR POOL SPECIFIC SURVEY WORK. AN ELECTRONIC FILE OF THE SPA BASE MAY BE PROVIDED TO THE CONTRACTOR FOR SURVEYOR'S USE. SEE CIVIL AND ARCHITECTURAL DRAWINGS FOR REFERENCE POINTS AND ADDITIONAL SITE INFORMATION.

### ALTERNATE BID 1

THIS RAISED SPA AND ALL ITS PIPING IS AN ALTERNATE BID ITEM

## RAISED SPA SCHEDULE

| MARK | DESCRIPTION | QUANTITY | DETAIL | REQUIREMENT |
|---|---|---|---|---|
| | UNDERWATER (U.W.) LIGHT | 3 | 3 / WF506 | PENTAIR INTELLIBRITE WHITE LED #601111* 120 VOLT U.L. LISTED |
| REMARKS: EACH LIGHT IS APPROXIMATELY 45 WATT LED LIGHT (300 WATT EQUIVALENCY). **PROVIDE SUFFICIENT LENGTH OF CORD FOR RE-LAMPING ON DECK. **PROVIDE SUFFICIENT LENGTH OF CORD TO J-BOX. PROVIDE WITH STAINLESS STEEL RING AND STAINLESS STEEL NICHE. | | | | |
| | ENTRY STEP HANDRAIL | TWO PER SET OF STEPS | C / WF414 | S.R. SMITH CUSTOM 4-BEND |
| REMARKS: STAINLESS STEEL RAIL 1.90" O.D. X 0.065" THICK WALL. HANDRAIL SHALL EXTEND FROM DECK UP TO THE RAISED SPA COPING AND DOWN INTO THE SPA. PROVIDE HANDRAIL WITH WEDGE ANCHORS & S.S. ESCUTCHEON PLATES (SEE DETAIL 4/WF503). SEE PLAN FOR HANDRAIL LENGTH. CONSTRUCTION OF THE TILED FINISH ENTRY STEPS TO THE SPA FROM THE DECK BY THE POOL CONTRACTOR. | | | | |
| | ENTRY STEP HANDRAIL | TWO PER SET OF STEPS | C / WF414 | S.R. SMITH CUSTOM CURVED 4-BEND |
| REMARKS: STAINLESS STEEL RAIL 1.90" O.D. X 0.065" THICK WALL. HANDRAIL SHALL EXTEND FROM DECK UP TO THE RAISED SPA COPING AND DOWN INTO THE SPA. PROVIDE HANDRAIL WITH WEDGE ANCHORS & S.S. ESCUTCHEON PLATES (SEE DETAIL 4/WF503). SEE PLAN FOR HANDRAIL LENGTH. CONSTRUCTION OF THE TILED FINISH ENTRY STEPS TO THE SPA FROM THE DECK BY THE POOL CONTRACTOR. | | | | |
| | TRANSFER WALL RAIL | ONE SET OF TWO RAILS | 12 / WF503 | S.R. SMITH CUSTOM RAIL ADA COMPLIANT |
| REMARKS: STAINLESS STEEL RAIL 1.50" O.D. X 0.065" THICK WALL. TRANSFER RAILS SHALL BE MOUNTED IN THE TOP OF THE SPA WALL AT A LOCATION COMPLIANT WITH ADA GUIDELINES. POOL CONTRACTOR SHALL PROVIDE WITH S.S. DECK-MOUNTED ANCHOR FLANGE. SEE DETAIL FOR HANDRAIL LENGTH. | | | | |
| G | DEPTH MARKER TILES | SEE PLAN | 3 / WF503 | IN-LAYS, INC. OR EQUAL |
| REMARKS: CUSTOM FROST PROOF GLAZED TILES W/4" HIGH NUMBERS WITH CONTRASTING COLOR BACKGROUND ON VERTICAL WALL AT WATERLINE AT MAX 25' C.C. PROVIDE 6" x 6" FROST PROOF NON-SKID TILES W/4" HIGH NUMBERS WITH CONTRASTING COLOR BACKGROUND IN SPA DECK. SEE DETAIL FOR DEPTH MARKER KEY. WATER DEPTH SHALL BE PLAINLY MARKED AT MAX. 25'-0" CENTER TO CENTER. TILES PROVIDED BY POOL CONTRACTOR AND INSTALLED BY DECK CONTRACTOR. | | | | |
| | "NO DIVING" ICON TILES | SEE PLAN | 2 / WF503 | IN-LAYS, INC. OR EQUAL |
| REMARKS: 6" X 6" NON-SKID, FROSTPROOF, CERAMIC NO DIVING TILE WITH LETTERING AND ICON ON CONTRASTING COLOR BACKGROUND. PLACE IN DECK AT 25'-0" C.C. MAXIMUM ADJACENT TO DEPTH MARKERS IN LOCATIONS AS SHOWN ON THE PLAN. TILES PROVIDED BY POOL CONTRACTOR AND INSTALLED BY DECK CONTRACTOR. | | | | |
| | "NO RUNNING" TILES | SEE PLAN | 3 / WF503 SMLR | IN-LAYS, INC. OR EQUAL |
| REMARKS: 6" x 6" NON-SKID, FROSTPROOF, CERAMIC "NO RUNNING" TILES WITH 4" HIGH RED LETTERING ON CONTRASTING COLOR BACKGROUND. PLACE ON DECK AT 25'-0" C.C. MAXIMUM. "NO RUNNING" TILES PROVIDED BY POOL CONTRACTOR AND INSTALLED BY DECK CONTRACTOR. | | | | |
| | OUTLET FRAME AND GRATES | SEE PIPING PLAN AND FITTING SCHEDULE SHEET WF404.2 | | |
| | HYDRO THERAPY JET FITTING ASSEMBLY | SINGLE 14 BACK JETS (TOTAL 34 JETS) | SEE PIPING PLAN AND FITTING SCHEDULE SHEET WF404.2 | |
| | HYDRO THERAPY JET FITTING ASSEMBLY | 20 STACKED JETS (TOTAL 34 JETS) | SEE PIPING PLAN AND FITTING SCHEDULE SHEET WF404.2 | |
| | JET PUMP TIMER | 2 | N/A | 15 MINUTE MAXIMUM |
| REMARKS: INSTALL PER NEC ARTICLE 680. POOL CONTRACTOR TO PROVIDE TIMERS AND ELECTRICAL CONTRACTOR TO INSTALL. TIMERS SHALL BE MOUNTED IN A LOCATION WHICH REQUIRES THE BATHER TO EXIT THE SPA BEFORE THE TIMERS CAN BE RESET. ONE TIMER SHALL ACTIVATE JET SYSTEMS A & B AND THE OTHER TIMER SHALL ACTIVATE JET SYSTEMS C & D. | | | | |
| | EMERGENCY SHUT OFF SWITCH | 1 | N/A | SHUT OFF SWITCH |
| REMARKS: INSTALL PER NEC ARTICLE 680. POOL CONTRACTOR TO PROVIDE SHUT OFF SWITCH AND ELECTRICAL CONTRACTOR TO INSTALL (MINIMUM 5' FROM WATER'S EDGE). EMERGENCY SHUT OFF SWITCH WHEN PUSHED SHALL SHUT OFF THE CIRCULATION PUMP AND ALL FOUR JET PUMPS. | | | | |
| 1 | U.W. LIGHT JUNCTION BOX | AS REQ'D | 4 / WF504 | PER N.E.C. ARTICLE 680 |
| REMARKS: NOT SHOWN IN PLAN. INSTALLED PER THE 2008 NEC ARTICLE 680 OR CURRENT ADOPTED ELECTRICAL CODE. SEE ELECTRICAL ITEMS SHEET WF010.1. JUNCTION BOX(ES) PROVIDED AND INSTALLED BY ELECTRICAL CONTRACTOR. LOCATION OF J-BOXES AND LIGHT SWITCHES BY ELECTRICAL CONTRACTOR. | | | | |
| 2 | SPA COPING | AROUND SPA PERIMETER | 1 / WF414 | PRE-CAST COPING |
| REMARKS: COPING SHALL PROVIDE HAND HOLD AROUND. PRE-CAST COPING SHALL MATCH COLOR AND THE FINISH OF THE POOL GUTTER COPING. | | | | |
| 3 A | SPA INTERIOR FINISH | AS REQUIRED | A / WF414 | 2" X 2" NON-SLIP CERAMIC TILE |
| REMARKS: FINISH SHALL BE WATERPROOF AND FREE FROM DEFECTS. PROVIDE TILE SAMPLES TO ARCHITECT FOR SELECTION. ARCHITECT SHALL SELECT COLOR. | | | | |
| 3 B | SPA EXTERIOR STEP FINISH | AS REQUIRED | A / WF414 | 2" X 2" NON-SLIP CERAMIC TILE |
| REMARKS: FINISH SHALL BE WATERPROOF AND FREE FROM DEFECTS. PROVIDE TILE SAMPLES TO ARCHITECT FOR SELECTION. ARCHITECT SHALL SELECT COLOR. | | | | |
| 4 | SPA SHELL WATERPROOFING | AS REQUIRED | N/A | AQUAFIN 1K AND 2K/M OR EQUAL |
| REMARKS: PRIOR TO THE TILE FINISH INSTALLATION, WATERPROOF INTERIOR OF SPA AND CONTINUE WATERPROOFING OVER BOND BEAM AND DOWN EXTERIOR FACE OF SPA TO BELOW BOTTOM OF FINISHED SPA DECK. EXTERIOR WALL TO BE WATERPROOFED WITH WATERPROOFING MATERIAL THAT RESISTS NEGATIVE HYDROSTATIC PRESSURE. POOL CONTRACTOR SHALL NOT USE FORM RELEASE ON FORMS. PREPARE SURFACE PER MANUFACTURER'S SPECIFICATIONS. SEE WATERPROOFING SPECIFICATIONS AND MANUFACTURER'S INSTALLATION INSTRUCTIONS FOR ADDITIONAL INFORMATION AND REQUIREMENTS. | | | | |
| 5 | SPA FINGER WALL | TWO LOCATIONS | E / WF414.0 | TILE FINISH WITH COPING |
| REMARKS: TOP OF FINGER WALL COPING SHALL BE FLUSH WITH PERIMETER COPING. TILE SHALL MATCH INTERIOR TILE FINISH. | | | | |
| 6 | SPA RAISED WALL EXTERIOR FINISH | AS REQUIRED | N/A | ROCA STONE TILE |
| REMARKS: PROVIDE STONE TILE FINISH AT VERTICAL FACE OF RAISED SPA WALL. SEE ARCHITECTURAL SPECIFICATIONS. PROVIDE SAMPLES FOR SELECTION OF COLOR AND TILE. WATERPROOF SPA SHELL PRIOR TO TILE INSTALLATION. SEE WATERPROOFING REMARKS ABOVE. | | | | |
| 7 | SPA DECK | CONTINUOUS AROUND SPA | N/A | NON-SLIP CONCRETE |
| REMARKS: MINIMUM 3' WIDE NON-SLIP CONCRETE DECK CONTINUOUS AROUND MINIMUM 25% OR MORE OF SPA PERIMETER. SLOPE DECK MINIMUM 1/4" PER FOOT AND MAXIMUM 3/8" PER FOOT AWAY FROM SPA RAISED WALL TO DECK DRAINS WHICH DRAIN TO SANITARY SEWER. DECK AND DECK DRAINS ARE NOT IN SPA CONTRACT. | | | | |


MHTN ARCHITECTS
MHTN Architects, Inc.
420 East South Temple
Suite 100
Salt Lake City, Utah 84111
Telephone (801) 595-6700
Telefax (801) 595-6717
www.mhtn.com

Hastings+Chivetta
ARCHITECTURE • PLANNING • ENGINEERING
622 Emerson, Suite 200
St. Louis, MO 63141
Tel. 314.863.5717
Fax. 314.863.2823
www.hastingschivetta.com

Water Design Inc.
5047 S. Galleria Dr.
Murray, Utah 84123
Phone : (801) 261-4009
Fax : (801) 261-4069
www.waterdesigninc.com


BUILDING OFFICIAL STAMP

# UNIVERSITY OF UTAH
## STUDENT LIFE CENTER
1836 E. BALLIF ROAD
SALT LAKE CITY, UTAH 84112

SEAL

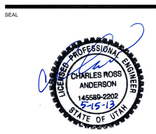


MHTN PROJECT NO.

DRAWN BY: ACR CHECKED BY: BA

ISSUED:

| NO. | DATE | DESCRIPTION |
|---|---|---|
| | | |

CONTRACTOR TO VERIFY DRAWINGS IN FIELD USE REFLECT LAST REVISION DATE.

| NO. | DATE | DESCRIPTION |
|---|---|---|
| | | |

SHEET NAME

RAISED SPA PLAN
ALT 1

BID DOCUMENTS
MAY 15, 2013

SHEET NUMBER

WF404.0


The entire contents of the attached documents, including all sketches, plans, studies, drawings, schedules and specifications and all copyrights therein are, and shall remain the sole property of Water Design Incorporated. The documents and their contents may not be used, photocopied or reproduced digitally, electronically or in any other manner without the express prior written consent of Water Design Incorporated.

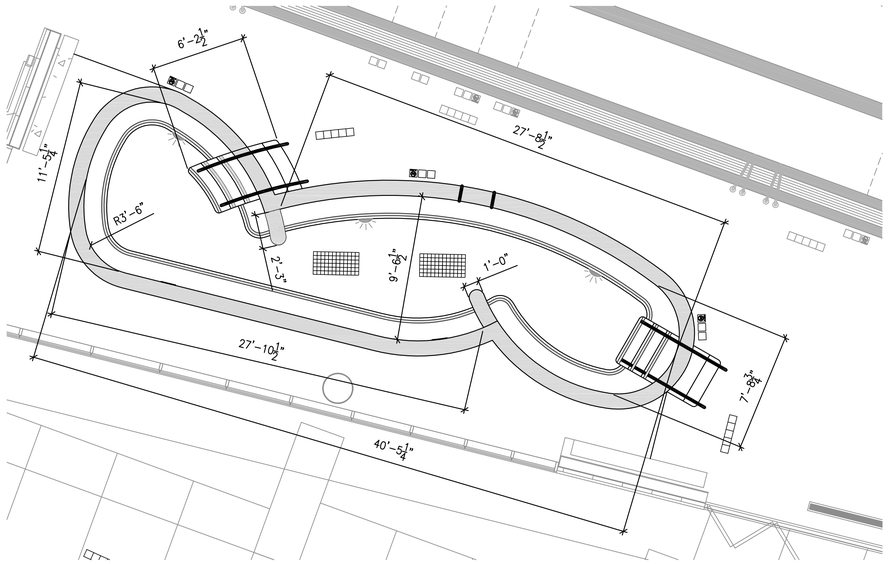


## RAISED SPA DIMENSION PLAN

SCALE: 1/4" = 1'-0"

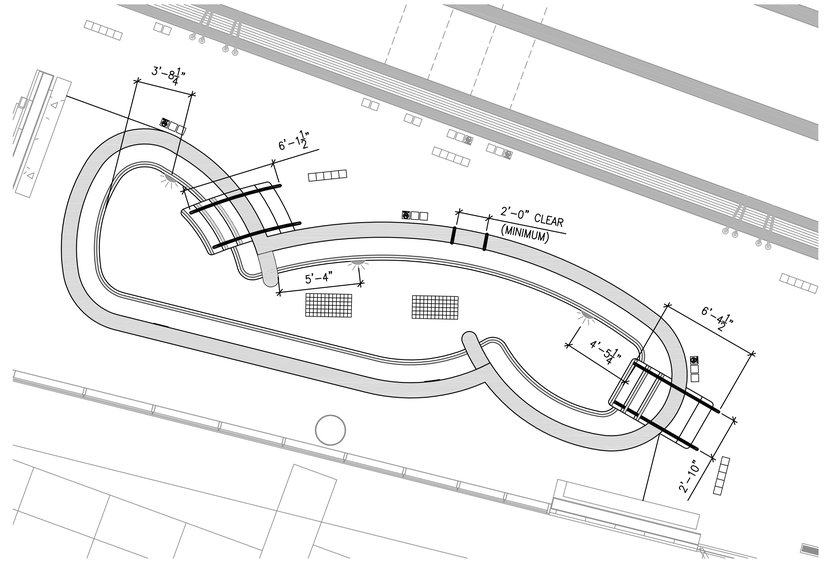


## RAIL & LIGHT DIMENSION PLAN

SCALE: 1/4" = 1'-0"

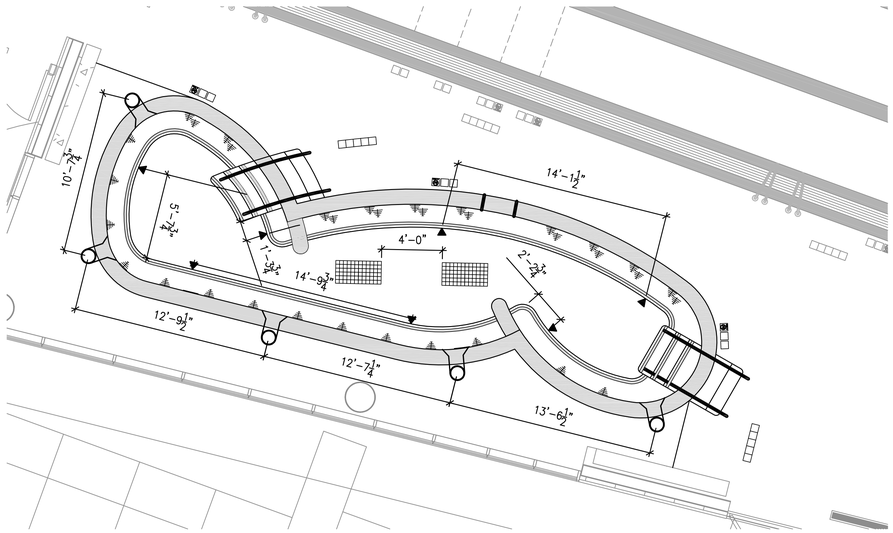


## CIRCULATION FITTING DIMENSION PLAN

SCALE: 1/4" = 1'-0"

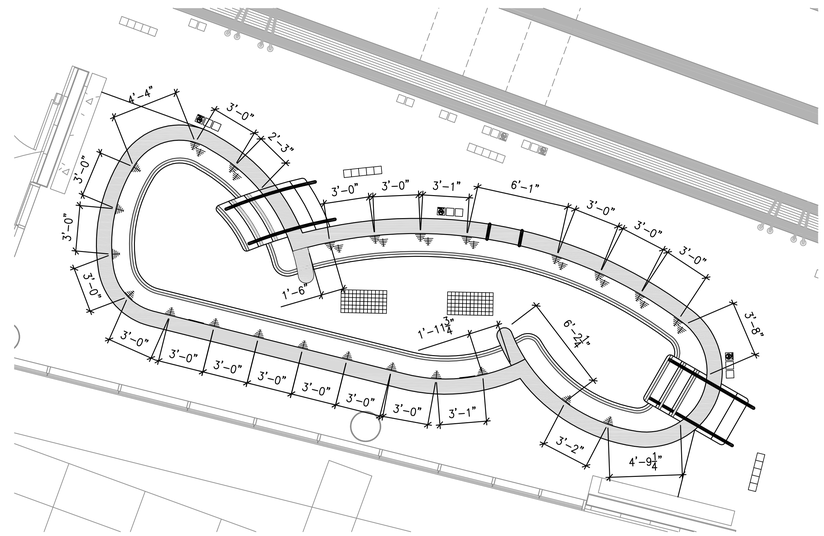


## JET FITTING DIMENSION PLAN

SCALE: 1/4" = 1'-0"

### SPA LAYOUT ON SITE:

DIMENSIONS SHOWN ARE FOR REFERENCE ONLY. POOL CONTRACTOR SHALL HAVE SPA LAYED OUT ON SITE BY A PROFESSIONAL SURVEYOR PRIOR TO EXCAVATION. POOL CONTRACTOR IS RESPONSIBLE FOR POOL SPECIFIC SURVEY WORK. AN ELECTRONIC FILE OF THE SPA BASE MAY BE PROVIDED TO THE CONTRACTOR FOR SURVEYOR'S USE. SEE CIVIL AND ARCHITECTURAL DRAWINGS FOR REFERENCE POINTS AND ADDITIONAL SITE INFORMATION.

The entire contents of the attached documents, including all sketches, plans, studies, drawings, schedules and specifications and all copyrights therein are, and shall remain the sole property of Water Design Incorporated. The documents and their contents may not be used, photocopied or reproduced digitally, electronically or in any other manner without the express prior written consent of Water Design Incorporated.

MHTN
ARCHITECTS
**MHTN Architects, Inc.**
420 East South Temple
Suite 100
Salt Lake City, Utah 84111
Telephone (801) 595-6700
Telefax (801) 595-6717
www.mhtn.com

**Hastings+Chivetta**
ARCHITECTURE • PLANNING • ENGINEERING
622 Emerson, Suite 200
St. Louis, MO 63141
Tel. 314.863.5717
Fax. 314.863.2823
www.hastingschivetta.com

Water Design Inc.
5047 S. Galleria Dr.
Murray, Utah 84123
Phone : (801) 261-4009
Fax : (801) 261-4069
www.waterdesigninc.com

BUILDING OFFICIAL STAMP

# UNIVERSITY OF UTAH
## STUDENT LIFE CENTER
1836 E. BALLIF ROAD
SALT LAKE CITY, UTAH 84112

SEAL

MHTN PROJECT NO.

DRAWN BY: ACR CHECKED BY: BA

ISSUED:

| NO. | DATE | DESCRIPTION |
|---|---|---|
| | | |

CONTRACTOR TO VERIFY DRAWINGS IN FIELD USE REFLECT LAST REVISION DATE.

| NO. | DATE | DESCRIPTION |
|---|---|---|
| | | |

SHEET NAME

SPA DIMENSION PLAN - ALT 1

BID DOCUMENTS
MAY 15, 2013

SHEET NUMBER

WF404.1

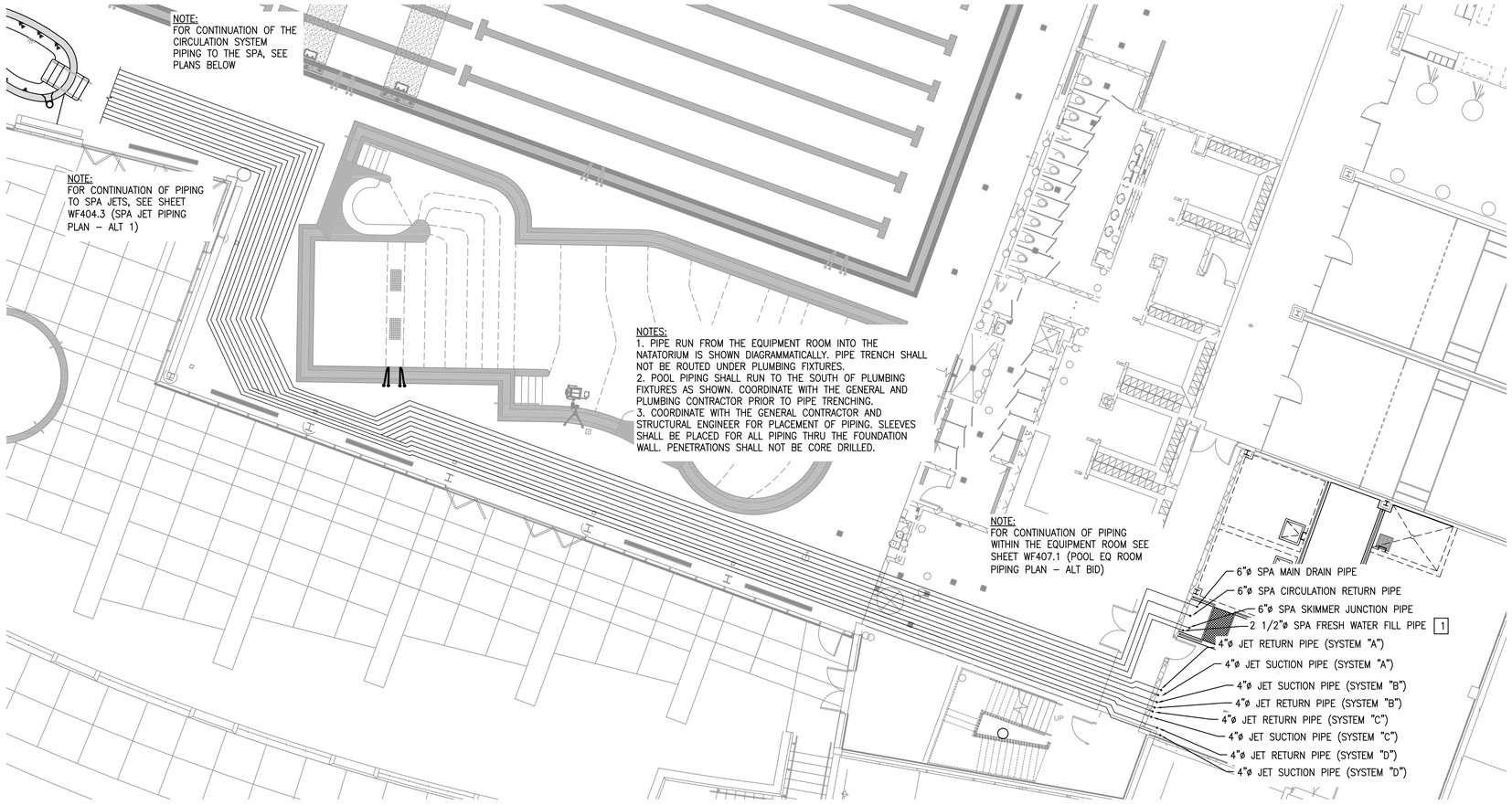


## OVERALL SPA CIRCULATION AND THERAPY JET PIPING PLAN TO EQUIPMENT ROOM

SCALE: 1/8" = 1'-0"

## SPA CIRCULATION FITTING SCHEDULE

| MARK | DESCRIPTION | QUANTITY | DETAIL | REQUIREMENT |
|---|---|---|---|---|
| | CIRCULATION/JET OUTLET FRAME AND GRATE WITH FIELD-BUILT CONCRETE SUMP | 2 | 3 / WF404 | LAWSON AQUATIC COVER 18" x 36" #MD-FC-1836 UNBLOCKABLE |
| REMARKS: PROVIDE SIZE OF PIPE CONNECTION TO SUMP OUTLETS AS SHOWN ON PLAN. LOCATE ALL SUCTION PIPES ON SUMP WALLS. TAMPER PROOF STAINLESS STEEL FASTENERS REQUIRED. FRAME AND GRATE SHALL BE LISTED ACCORDING TO THE CURRENT ASME\ANSI A-112.19.8 STANDARD. ALLOWABLE FLOW PER GRATE PER NSF CERTIFICATION EQUALS 2080 GPM. FOUR JET PUMP SUCTION PIPES WILL ALSO DRAW FROM EACH OF THESE SUMPS. | | | | |
| | SURFACE SKIMMER | 5 | 10 / WF404 | WATERWAYS OR APPROVED EQUAL |
| REMARKS: NSF APPROVED. PROVIDE WITH FLOAT VALVE AND CHECK VALVE. PROVIDE EQUALIZER LINE WITH COVER COMPLIANT WITH VGBA REGULATIONS (SEE BELOW). PROVIDE ROUND FRAME WITH POUR-A-LID COVER. POUR-A-LID SHALL MATCH COPING AND/OR FAUX ROCK COLOR. SUBMIT LID COLOR CHOICES TO ARCHITECT. ARCHITECT SHALL SELECT COLOR. | | | | |
| | SURFACE SKIMMER EQUALIZER FITTING COVER | 5 | 10 / WF404 | AQUASTAR 6HP10* COVER WITH RND*** FITTING |
| REMARKS: PROVIDE CURRENT ADOPTED ASME/ANSI A112.19.8 STANDARD EQUALIZER COVER FITTING. SUBMIT COVER COLOR CHOICES TO ARCHITECT. ARCHITECT SHALL SELECT COLOR. | | | | |
| | WALL RETURN WATER INLET FITTING | 7 | 9 / WF404 | CUSTOM NON-ADJUSTABLE |
| REMARKS: SEE DETAIL FOR ORIFICE SIZE. SPACE INLETS PER PLAN LAYOUT/ DIMENSIONS. | | | | |
| | STACKED HYDRO THERAPY JET FITTINGS<br>SEE SPA JET FITTING SCHEDULE SHEET WF404.3 | | | |
| | SINGLE HYDRO THERAPY JET FITTINGS<br>SEE SPA JET FITTING SCHEDULE SHEET WF404.3 | | | |
| 1 | FILL LINE | ONE | N/A | 2.5"ø PIPE |
| REMARKS: TERMINATE FILL LINE AT EDGE OF SPA BENCH. LOCATE SENSOR IN SKIMMER BODY. WATER LEVEL CONTROLLER LOCATED IN EQUIPMENT ROOM. | | | | |

## SPA PIPING NOTES:

1. ALL PIPING SHALL BE NSF APPROVED (ANSI/NSF 14), SCHEDULE 40 PVC (UNLESS OTHERWISE NOTED)
2. ALL PIPING SHALL BE IN ACCORDANCE WITH THE UTAH STATE PLUMBING CODE AND UTAH DEPARTMENT OF PUBLIC HEALTH CODE, THE A.S.T.M. DESIGNATION NUMBER D-1785, AND THE NSF SEAL FOR POTABLE WATER.
3. PVC PIPE INSTALLED SHALL CONFORM TO THE REQUIREMENT OF TECHNICAL REPORT PPI-TTR 13 (8/73). PLASTIC PIPE INSTITUTE.
4. POOL CONTRACTOR SHALL MAKE EVERY EFFORT TO CURTAIL THE USE OF FITTINGS TO REDUCE HEAD.
5. PIPING SHALL BE INSTALLED WITHOUT AIR ENTRAPPING HIGH POINTS OR REVERSE SLOPES, I.E. ON DISCHARGE LINES, NO DESCENDING RUNS BEYOND HORIZONTAL OR ASCENDING RUNS; ON SUCTION LINES, NO DESCENDING RUNS BEYOND ASCENDING RUNS.
6. ALL UNDERGROUND PRESSURE AND SUCTION PIPING SHALL SLOPE A MINIMUM OF 1%.
7. THE TEE FEEDING FROM THE COMMON LINE BETWEEN THE SUCTION OUTLETS, TO THE PUMP(S) SHALL BE LOCATED APPROXIMATELY MIDWAY BETWEEN THE OUTLETS (ANSI/APSP-7).
8. PIPING SHALL BE INSTALLED TO PREVENT FREEZING. WINTERIZE PIPING DURING WINTER MONTHS WHEN POOL IS NOT IN OPERATION.
9. ALL PIPING SHALL BE TESTED WITH AN INDUCED STATIC HYDRAULIC PRESSURE TEST AT MINIMUM 50 POUNDS PER SQUARE INCH (PSI) FOR 24 HOURS OR PER WRITTEN SPECIFICATIONS IF PROVIDED.
10. ALL DRAIN FITTINGS TO CARRY 100% OF RECIRCULATION RATE AT A VELOCITY NOT TO EXCEED 1.5 FEET PER SECOND THROUGH THE CLEAR AREA OF THE GRATE WHEN ONE OUTLET FITTING IS COVERED.
11. MAIN DRAIN PIPING SHALL CARRY 100% OF RECIRCULATION RATE AT A VELOCITY NOT TO EXCEED 6' PER SECOND.
12. ALL PIPING DESIGNED FOR 6' PER SECOND MAXIMUM SUCTION, 10' PER SECOND MAXIMUM PRESSURE, AND 3' PER SECOND MAXIMUM GRAVITY.
13. VERIFY PIPE SIZES WITH THE EQUIPMENT ROOM PLAN AND SCHEMATIC. IF THERE ARE ANY DISCREPANCIES, REPORT THEM TO THE ARCHITECT/ENGINEER IMMEDIATELY.
14. POOL CONTRACTOR SHALL COORDINATE ALL WORK WITH ARCHITECTURAL, MECHANICAL, ELECTRICAL AND STRUCTURAL DRAWINGS.
15. OVERALL PIPING IS SHOWN IN DIAGRAMMATIC FORM TO INDICATE WORK TO BE DONE RATHER THAN TO SHOW EXACT ROUTING & LOCATION. MAKE USE OF ALL DATA IN CONTRACT DOCUMENTS, VERIFY AGAINST DEVELOPED FIELD CONDITIONS, & INSTALL WORK IN AN ORDERLY ARRANGEMENT IN A MANNER TO OVERCOME STRUCTURAL, MECHANICAL & ELECTRICAL INTERFERENCE.

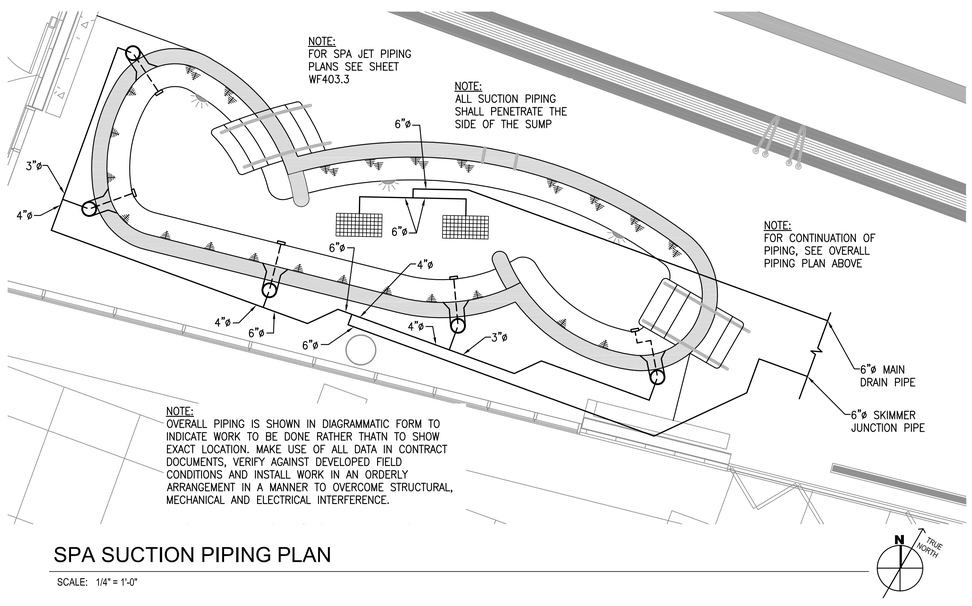


## SPA SUCTION PIPING PLAN

SCALE: 1/4" = 1'-0"

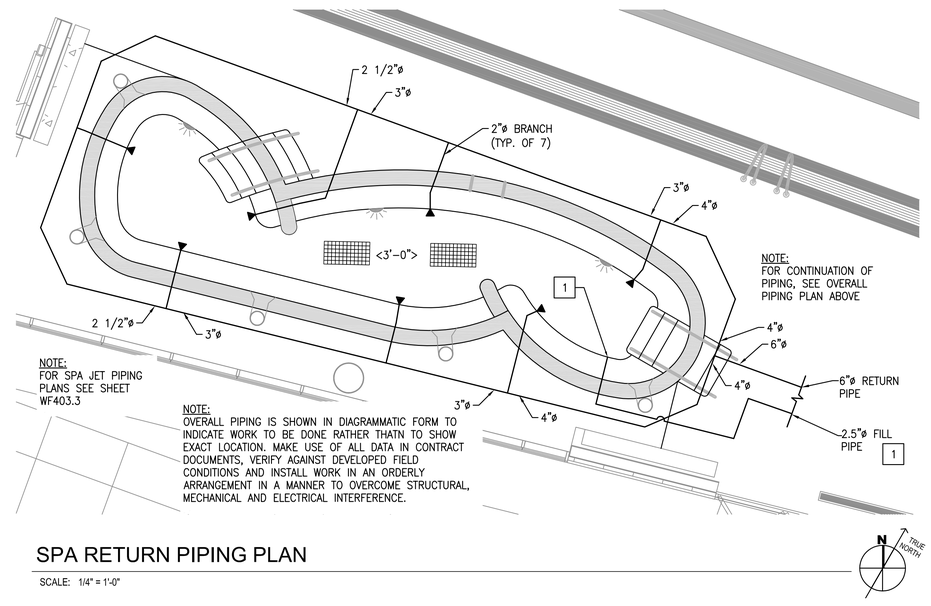


## SPA RETURN PIPING PLAN

SCALE: 1/4" = 1'-0"

The entire contents of the attached documents, including all sketches, plans, studies, drawings, schedules and specifications and all copyrights therein are, and shall remain the sole property of Water Design Incorporated. The documents and their contents may not be used, photocopied or reproduced digitally, electronically or in any other manner without the express prior written consent of Water Design Incorporated.

MHTN
ARCHITECTS
MHTN Architects, Inc.
420 East South Temple
Suite 100
Salt Lake City, Utah 84111
Telephone (801) 595-6700
Telefax (801) 595-6717
www.mhtn.com

Hastings+Chivetta
ARCHITECTURE • PLANNING • ENGINEERING
622 Emerson, Suite 200
St. Louis, MO 63141
Tel. 314.863.5717
Fax. 314.863.2823
www.hastingschivetta.com

Water Design Inc.
5047 S. Galleria Dr.
Murray, Utah 84123
Phone : (801) 261-4009
Fax : (801) 261-4069
www.waterdesigninc.com

BUILDING OFFICIAL STAMP

# UNIVERSITY OF UTAH
# STUDENT LIFE CENTER
1836 E. BALLIF ROAD
SALT LAKE CITY, UTAH 84112

SEAL

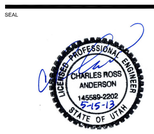


MHTN PROJECT NO.

DRAWN BY: ACR CHECKED BY: BA

ISSUED:

| NO. | DATE | DESCRIPTION |
|---|---|---|
| | | |

CONTRACTOR TO VERIFY DRAWINGS IN FIELD USE REFLECT LAST REVISION DATE.

| NO. | DATE | DESCRIPTION |
|---|---|---|
| | | |

SHEET NAME

SPA CIRC. PIPING PLAN - ALT 1

BID DOCUMENTS
MAY 15, 2013

SHEET NUMBER

WF404.2

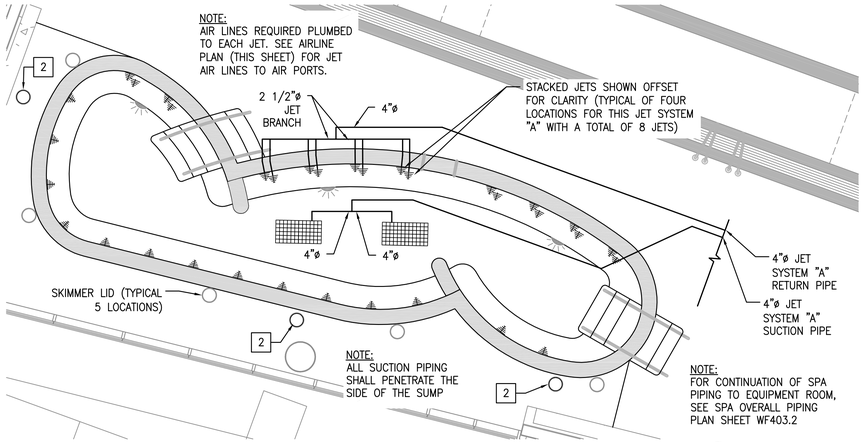


## ENLARGED SPA JET SYSTEM "A" PIPING PLAN

SCALE: 1/4" = 1'-0"

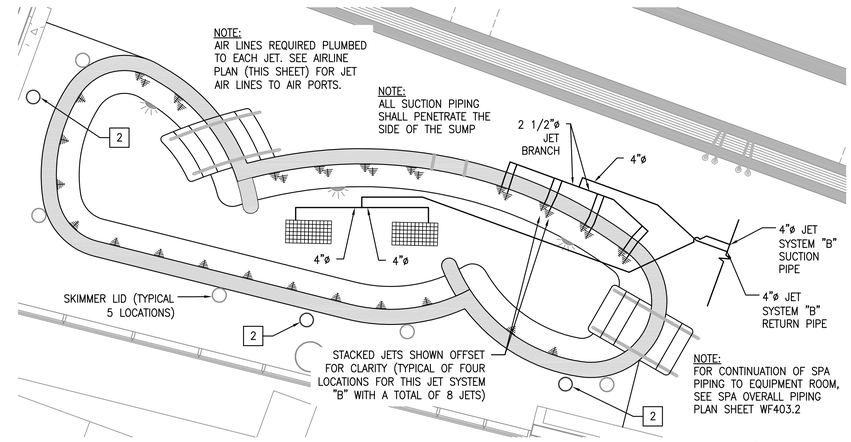


## ENLARGED SPA JET SYSTEM "B" PIPING PLAN

SCALE: 1/4" = 1'-0"

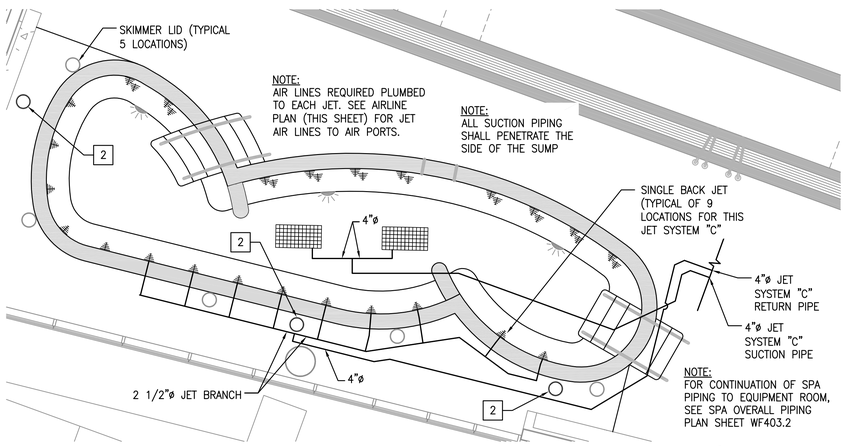


## ENLARGED SPA JET SYSTEM "C" PIPING PLAN

SCALE: 1/4" = 1'-0"

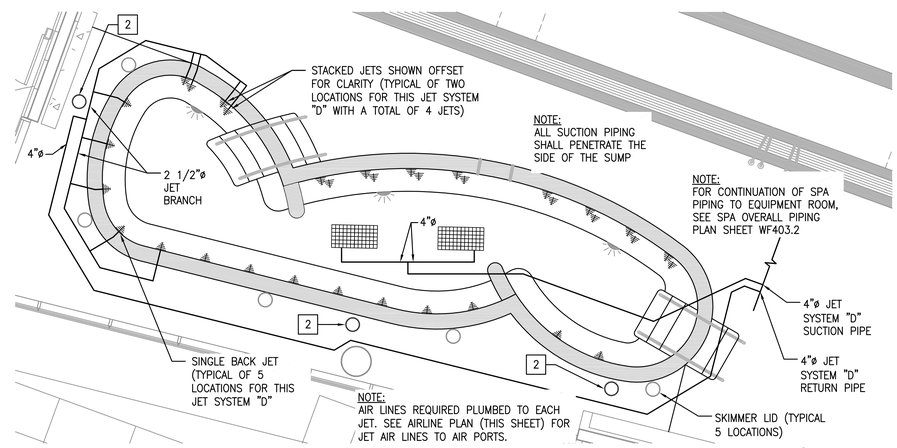


## ENLARGED SPA JET SYSTEM "D" PIPING PLAN

SCALE: 1/4" = 1'-0"

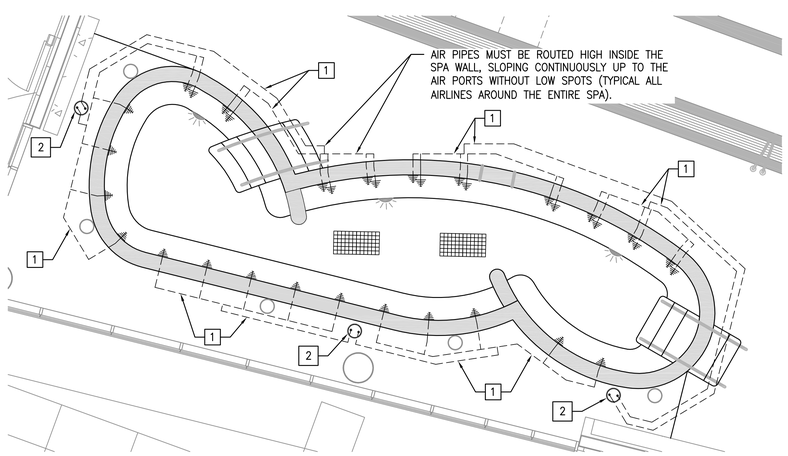


## ENLARGED SPA JET SYSTEM AIRLINE PIPING PLAN

SCALE: 1/4" = 1'-0"

**NOTE:**

OVERALL PIPING IS SHOWN IN DIAGRAMMATIC FORM TO INDICATE WORK TO BE DONE RATHER THAN TO SHOW EXACT ROUTING & LOCATION. MAKE USE OF ALL DATA IN CONTRACT DOCUMENTS, VERIFY AGAINST DEVELOPED FIELD CONDITIONS, & INSTALL WORK IN AN ORDERLY ARRANGEMENT IN A MANNER TO OVERCOME STRUCTURAL, MECHANICAL & ELECTRICAL INTERFERENCE.

SEE PIPING NOTES SHEET WF404.2

### SPA JET FITTING SCHEDULE

| MARK | DESCRIPTION | QUANTITY | DETAIL | REQUIREMENT |
|---|---|---|---|---|
| | CIRCULATION/JET OUTLET FRAME AND GRATE WITH SUMP | SEE CIRCULATION FITTING SCHEDULE WF404.2 | | |
| | SURFACE SKIMMER | SEE CIRCULATION FITTING SCHEDULE WF404.2 | | |
| | WALL RETURN WATER INLET FITTING | SEE CIRCULATION FITTING SCHEDULE WF404.2 | | |
| | STACKED HYDRO THERAPY JET FITTINGS | 10 LOCATIONS (20 JETS) | 11 WF504 | HYDRO-AIR #10-4325 OR EQUAL |
| | SINGLE HYDRO THERAPY JET FITTINGS | 14 LOCATIONS (14 JETS) | 11 WF504 | HYDRO-AIR #10-4325 OR EQUAL |
| REMARKS: SEE PLAN FOR LOCATIONS FOR STACKED AND STANDARD JET PLACEMENT. SHOTCRETE EXTENDED VENTURI TEE ASSEMBLY. ALSO PROVIDE THE OPTIONAL VENTURI TEE HEX REDUCER REDUCER TO PROVIDE 18 G.P.M./JET. | | | | |
| 1 | AIR LINE TO JETS | ONE AIR LINE PER JET 6 JETS | N/A | SCH. 40 PVC PIPE FROM AIR INTAKE BOX |
| REMARKS: PROVIDE ONE AIR LINE FOR EACH SET OF JETS. SIZE AIRLINE TO ACCOMMODATE NUMBER OF JETS. PROVIDE AIR LINES PER THE INSTALLATION REQUIREMENTS OF THE AIR PORT AIR INTAKE BOX. SLOPE PIPES CONTINUOUSLY FROM PORT TO JETS. NO LOW SPOTS. CUT PORT BODY AS NEEDED TO GET CORRECT HEIGHT OF PIPE PORT TO PREVENT WATER TRAPPING LOW SPOTS. | | | | |
| 2 | AIR INTAKE BOX (AIR PORT) | 3 | 5 WF506 3M14 | PARAMOUNT AIRPORT 004-252-8192-0X |
| REMARKS: PROVIDE EACH AIRPORT BODY WITH TWO MUFFLER FITTINGS. USE BOTH BOTTOM PORTS FOR AIR LINE CONNECTIONS. SIX JETS SHALL BE THE MAXIMUM NUMBER OF JETS PER PORT. CUT PORT BODY AS NEEDED TO GET CORRECT HEIGHT OF PIPE PORT TO PREVENT WATER TRAPPING LOW SPOTS. LOCATE IN COPING BEHIND SPA AND PROVIDE POUR A LID FITTING TO CAMOUFLAGE. | | | | |

The entire contents of the attached documents, including all sketches, plans, studies, drawings, schedules and specifications and all copyrights therein are, and shall remain the sole property of Water Design Incorporated. The documents and their contents may not be used, photocopied or reproduced digitally, electronically or in any other manner without the express prior written consent of Water Design Incorporated.

MHTN
ARCHITECTS
MHTN Architects, Inc.
420 East South Temple
Suite 100
Salt Lake City, Utah 84111
Telephone (801) 595-6700
Telefax (801) 595-6717
www.mhtn.com

Hastings+Chivetta
ARCHITECTURE • PLANNING • ENGINEERING
622 Emerson, Suite 200
St. Louis, MO 63141
Tel. 314.863.5717
Fax. 314.863.2823
www.hastingschivetta.com

Water Design Inc.
5047 S. Galleria Dr.
Murray, Utah 84123
Phone : (801) 261-4009
Fax : (801) 261-4069
www.waterdesigninc.com

BUILDING OFFICIAL STAMP

# UNIVERSITY OF UTAH
## STUDENT LIFE CENTER
1836 E. BALLIF ROAD
SALT LAKE CITY, UTAH 84112

SEAL

LICENSED PROFESSIONAL ENGINEER
CHARLES ROSS ANDERSON
145589-2202
5-15-13
STATE OF UTAH

MHTN PROJECT NO.

DRAWN BY: ACR CHECKED BY: BA

ISSUED:

| NO. | DATE | DESCRIPTION |
|---|---|---|

CONTRACTOR TO VERIFY DRAWINGS IN FIELD USE REFLECT LAST REVISION DATE.

| NO. | DATE | DESCRIPTION |
|---|---|---|

SHEET NAME

SPA
JET PIPING
PLAN - ALT 1

BID DOCUMENTS
MAY 15, 2013

SHEET NUMBER

WF404.3

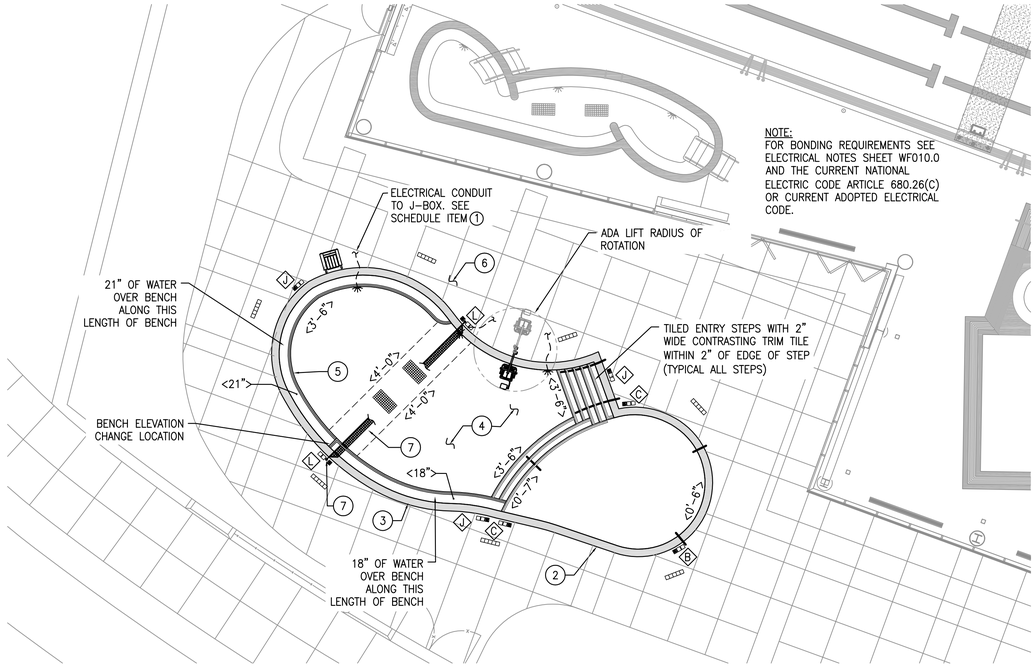


NOTE:
FOR BONDING REQUIREMENTS SEE ELECTRICAL NOTES SHEET WF010.0 AND THE CURRENT NATIONAL ELECTRIC CODE ARTICLE 680.26(C) OR CURRENT ADOPTED ELECTRICAL CODE.

## OUTDOOR LEISURE POOL PLAN

SCALE: 1/8" = 1'-0"

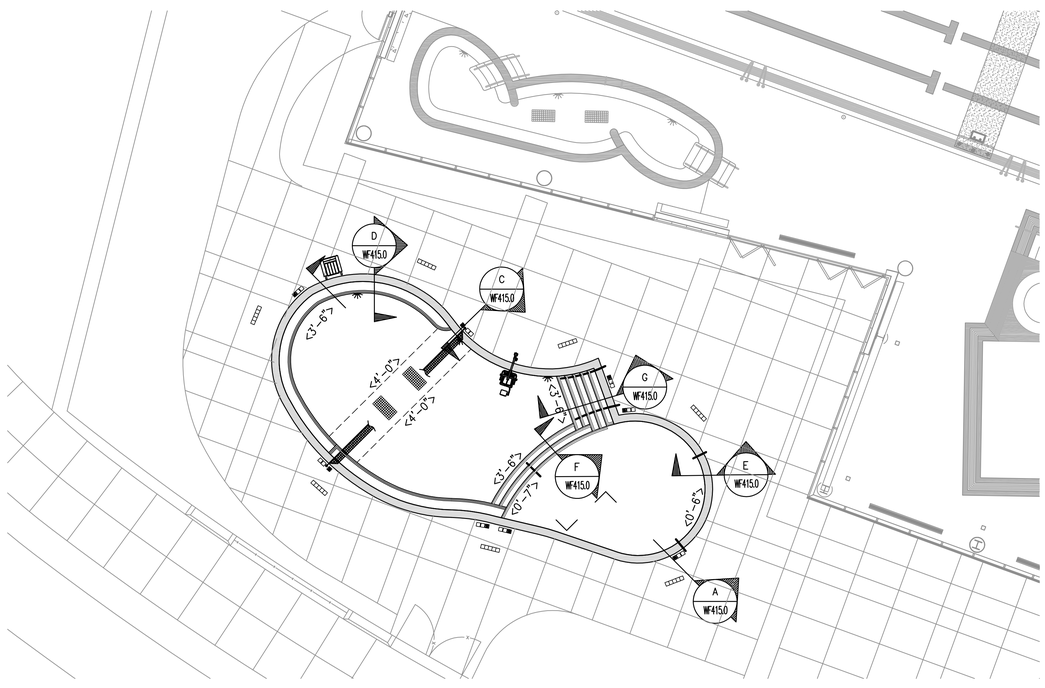


## OUTDOOR LEISURE SECTION PLAN

SCALE: 1/8" = 1'-0"

## OUTDOOR LEISURE POOL DECK EQUIPMENT SCHEDULE

| MARK | DESCRIPTION | QUANTITY | DETAIL | REQUIREMENT |
|---|---|---|---|---|
| | ENTRY STEP HANDRAIL | 2 | G WF415.0 / 5 WF415.0 | S.R. SMITH CUSTOM CURVED 3-BEND |
| REMARKS: RAIL LENGTH AND CURVES NOT THE SAME FOR BOTH RAILS. REQUEST PLAN FROM DESIGN ENGINEER FOR SUBMITTAL TO MANUFACTURER. STAINLESS STEEL RAIL 1.90" O.D. X 0.065" THICK WALL. PROVIDE WITH WEDGE ANCHORS & S.S. ESCUTCHEON PLATES (SEE DETAIL 4/WF503). DECK ANCHOR INSTALLED BY DECK CONTRACTOR. THICKEN DECK AS REQUIRED. SEE POOL PLAN FOR HANDRAIL LENGTH. FIELD VERIFY WITH SITE CONDITIONS THE REQUIRED HANDRAIL DIMENSIONS PRIOR TO ORDERING. | | | |
| | INTERMEDIATE STEPS HANDRAIL | 1 | F WF415.0 / 4 WF415.0 | S.R. SMITH CUSTOM 3-BEND |
| REMARKS: STAINLESS STEEL RAIL 1.90" O.D. X 0.065" THICK WALL. PROVIDE WITH WEDGE ANCHORS & S.S. ESCUTCHEON PLATES (SEE DETAIL 4/WF503 - SIMILAR). DECK ANCHOR INSTALLED BY DECK CONTRACTOR. THICKEN DECK AS REQUIRED. SEE POOL PLAN FOR HANDRAIL LENGTH. FIELD VERIFY WITH SITE CONDITIONS THE REQUIRED HANDRAIL DIMENSIONS PRIOR TO ORDERING. | | | |
| | SHALLOW ENTRY STEP HANDRAIL | 2 | E WF415.0 / 3 WF415.0 | S.R. SMITH CUSTOM 3-BEND |
| REMARKS: STAINLESS STEEL RAIL 1.90" O.D. X 0.065" THICK WALL. PROVIDE WITH WEDGE ANCHORS & S.S. ESCUTCHEON PLATES (SEE DETAIL 4/WF503 - SIMILAR). DECK ANCHOR INSTALLED BY DECK CONTRACTOR. THICKEN DECK AS REQUIRED. SEE POOL PLAN FOR HANDRAIL LENGTH. FIELD VERIFY WITH SITE CONDITIONS THE REQUIRED HANDRAIL DIMENSIONS PRIOR TO ORDERING. | | | |
| | UNDERWATER (U.W.) LIGHT | 3 | 3 WF507 | PENTAIR INTELLIBRITE WHITE LED #50134* 70 WATT U.L. LISTED |
| REMARKS: 120 VOLT 70 WATT WHITE LED UNDERWATER LIGHTS (500 WATT EQUIVALENCY). **PROVIDE SUFFICIENT LENGTH OF CORD FOR RE-LAMPING ON DECK. **PROVIDE SUFFICIENT LENGTH OF CORD TO J-BOX. PROVIDE WITH STAINLESS STEEL RING AND STAINLESS STEEL NICHE. | | | | |
| C | DEPTH MARKER TILES | SEE PLAN | 1 WF507 | ALSO SEE DEPTH MARKER KEY WF503 / IN-LAYS, INC. OR EQUAL |
| REMARKS: CUSTOM FROST PROOF GLAZED TILE W/4" HIGH NUMBERS WITH CONTRASTING COLOR BACKGROUND ON VERTICAL WALL AT WATERLINE. PROVIDE 6" x 6" FROST PROOF NON-SKID TILE W/4" HIGH NUMBERS WITH CONTRASTING COLOR BACKGROUND ON POOL DECK. SEE DETAIL FOR DEPTH MARKER KEY. WATER DEPTH SHALL BE PLAINLY MARKED AT LOCATION OF MINIMUM AND MAXIMUM POOL WATER DEPTHS AND AT ONE FOOT INCREMENTS OF DEPTH. MARKERS SHALL BE SPACED AT MAX. 25'-0" C.C. DECK DEPTH MARKER TILES SHALL BE PROVIDED BY POOL CONTRACTOR AND INSTALLED BY DECK CONTRACTOR. | | | | |
| | "NO DIVING" ICON TILES | SEE PLAN | 1 WF507 | IN-LAYS, INC. OR EQUAL |
| REMARKS: 6" X 6" NON-SKID, FROSTPROOF, CERAMIC NO DIVING TILE WITH LETTERING AND ICON ON CONTRASTING COLOR BACKGROUND. PLACE ON DECK AT 25'-0" C.C. MAXIMUM ADJACENT TO DEPTH MARKERS IN LOCATIONS AS SHOWN ON THE PLAN. TILES PROVIDED BY POOL CONTRACTOR AND INSTALLED BY DECK CONTRATOR | | | | |
| | "NO RUNNING" TILES | SEE PLAN | 2 WF507 | IN-LAYS, INC. OR EQUAL |
| REMARKS: 6" x 6" NON-SKID, FROSTPROOF, CERAMIC "NO RUNNING" TILES WITH 4" HIGH RED LETTERING ON CONTRASTING COLOR BACKGROUND. PLACE ON DECK AT 25'-0" C.C. MAXIMUM. "NO RUNNING" TILES PROVIDED BY POOL CONTRACTOR AND INSTALLED BY DECK CONTRACTOR | | | | |
| | HANDICAP LIFT AND ANCHOR | 1 | 8 WF507 | SPECTRUM PRODUCTS SWIM LIFT SERIES ASPEN #BP350 800-791-8056 OR EQUAL |
| REMARKS: PROVIDE BATTERY OPERATED LIFT COMPLETE WITH DECK ANCHOR KIT (WITH LID AND KEY), LIFT COVER, BATTERY CHARGER AND EXTRA 24 VOLT DC BATTERY. INSTALL PER MANUFACTURER'S RECOMMENDATIONS. ANCHOR SHALL BE BONDED PER THE REQUIREMENTS OF THE NEC ARTICLE 680. | | | | |

| MARK | DESCRIPTION | QUANTITY | DETAIL | REQUIREMENT |
|---|---|---|---|---|
| A | LIFEGUARD CHAIR SEAT HEIGHT 30" | 1 | 8 WF507 | LINCOLN "CHAMPION" #38-057 OR APPROVED EQUAL |
| REMARKS: PROVIDE RECYCLED PLASTIC GUARD CHAIR WITH LIFETIME WARRANTY. PROVIDE COLOR CHOICES TO ARCHITECT FOR SELECTION. LOCATE LIFEGUARD CHAIRS PER REQUIRED STATE AND LOCAL CODES, AND PER OWNER'S DIRECTIONS. | | | | |
| | OUTLET FRAME AND GRATE | SEE ACTIVITY POOL PIPING PLAN AND FITTING SCHEDULE SHEET WF405.2 | | |
| 1 | UNDERWATER LIGHT JUNCTION BOX | AS REQ'D | 4 WF504 | PER N.E.C. ARTICLE 680 |
| REMARKS: NOT SHOWN IN PLAN. INSTALLED PER THE 2008 NEC ARTICLE 680 OR CURRENT ADOPTED ELECTRICAL CODE. SEE ELECTRICAL ITEMS SHEET WF010.1. JUNCTION BOX(ES) AND SWITCHES PROVIDED AND INSTALLED BY ELECTRICAL CONTRACTOR. FOR LOCATION OF J-BOXES AND LIGHT SWITCHES SEE ELECTRICAL DRAWINGS. | | | | |
| 2 | POOL STRUCTURE | AROUND POOL PERIMETER | C WF415.0 / 1 WF415.0 | STEEL REINFORCED SHOTCRETE |
| REMARKS: REINFORCED SHOTCRETE SKIMMER POOL STRUCTURE. POOL SHELL SHALL BE BONDED PER THE REQUIRMENTS OF THE NATIONAL ELECTRIC CODE ARTICLE 680. | | | | |
| 3 | POOL COPING | AROUND POOL PERIMETER | 6 WF415.0 | PRE-CAST COPING |
| REMARKS: PROVIDE EDGE WITH HAND HOLD AROUND PERIMETER OF POOL. | | | | |
| 4 | POOL WALL AND FLOOR INTERIOR FINISH | AS REQUIRED | C WF415.0 | EXPOSED AGGREGATE PLASTER FINISH |
| REMARKS: FINISH SHALL BE WATERPROOF AND FREE FROM DEFECTS. PROVIDE FINISH SAMPLES TO ARCHITECT FOR SELECTION. COLOR SELECTION BY ARCHITECT. | | | | |
| 5 | SITTING BENCH | SEE PLAN | D WF415.0 / 2 WF415.0 | REINFORCED CONCRETE |
| REMARKS: PROVIDE TWO DEPTHS OF WATER OVER TOP OF BENCH. (18" WATER AND 21" WATER OVER TOP OF BENCH.) SEE PLAN FOR LOCATION OF ELEVATION CHANGE. PROVIDE WITH WATERPROOF TILE FINISH. PROVIDE 2" WIDE NON-SLIP, FROST PROOF CERAMIC TILE 2" WITHIN EDGE OF BENCH. TILE COLOR SHALL BE CONTRASTING FORM THE FINISH COLOR. PROVIDE SAMPLES TO ARCHITECT FOR SELECTION. | | | | |
| 6 | POOL DECK | AS REQUIRED | CONTINUOUS AROUND POOL | NON-SLIP CONCRETE |
| REMARKS: MINIMUM 5' WIDE NON-SLIP CONCRETE DECK CONTINUOUS AROUND POOL PERIMETER. SLOPE DECK 1/4" PER FOOT AWAY BACK OF COPING TO DECK DRAINS OR LANDSCAPING. DECK AND DECK DRAINS BY GENERAL CONTRACTOR. OUTDOOR DECK DRAINS SHALL DRAIN TO STORM SEWER. | | | | |
| 7 | VOLLEYBALL POSTS ANCHORS AND NET | 1 NET WITH WITH TWO POSTS | 2 WF505 / 3 WF505 SIMILAR | SR SMITH VOLLEYBALL GAME WITH CUSTOM LENGTH NET |
| REMARKS: PROVIDE WITH CUSTOM WIDTH NET. FIELD VERIFY FOR NET LENGTH AFTER ANCHORS ARE LOCATED. PROVIDE 1.9" O.D. x .065" WALL STAINLESS STEEL VOLLEYBALL NET SUPPORT POSTS, WITH REMOVABLE STAINLESS STEEL EYEBOLTS WHICH ANCHOR THE NET. PROVIDE BRONZE ANCHORS WITH THREADED CAPS FOR WHEN POSTS ARE NOT INSTALLED. ANCHOR SHALL BE INSTALLED TO PROVIDE FOR VERTICAL INSTALLATION OF POSTS. ANCHORS SHALL BE INSTALLED IN THE POOL DECK. | | | | |

## OUTDOOR LEISURE POOL DATA

| | |
|---|---|
| SIZE: | 22'-11E " x 59'-6" |
| WATER DEPTH: | 0'-6" TO 4'-0" |
| SHAPE: | CUSTOM |
| CONSTRUCTION TYPE: | SHOTCRETE |
| AREA: | 1,139 SQ.FT. |
| PERIMETER: | 148'-6" |
| VOLUME: | 21,727 GALLONS |
| MIN. FLOW: | 94 GPM |
| MAX. FLOW: | 127 GPM |
| TURNOVER AT MINIMUM FLOW RATE: | 3 HOUR 51 MINUTES |

## ALTERNATE BID 2

THIS OUTDOOR LEISURE POOL AND ALL ITS OUTDOOR PIPING IS AN ALTERNATE BID ITEM (ITEM 2)

THIS POOL'S PIPING FROM STUB OUTS IN THE EQUIPMENT ROOM AND STUBBED OUT 5 FEET PAST THE BUILDING FOUNDATION WALL IS PART OF ALTERNATE BID ITEM 1.

The entire contents of the attached documents, including all sketches, plans, studies, drawings, schedules and specifications and all copyrights therein are, and shall remain the sole property of Water Design Incorporated. The documents and their contents may not be used, photocopied or reproduced digitally, electronically or in any other manner without the express prior written consent of Water Design Incorporated.

MHTN
ARCHITECTS
MHTN Architects, Inc.
420 East South Temple
Suite 100
Salt Lake City, Utah 84111
Telephone (801) 595-6700
Telefax (801) 595-6717
www.mhtn.com

Hastings+Chivetta
ARCHITECTURE • PLANNING • ENGINEERING
622 Emerson, Suite 200
St. Louis, MO 63141
Tel. 314.863.5717
Fax. 314.863.2823
www.hastingschivetta.com

Water Design Inc.
5047 S. Galleria Dr.
Murray, Utah 84123
Phone : (801) 261-4009
Fax : (801) 261-4069
www.waterdesigninc.com

BUILDING OFFICIAL STAMP

# UNIVERSITY OF UTAH
# STUDENT LIFE CENTER
1836 E. BALLIF ROAD
SALT LAKE CITY, UTAH 84112

SEAL

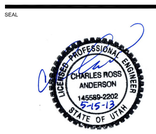


MHTN PROJECT NO.

DRAWN BY: ACR CHECKED BY: BA

ISSUED:

| NO. | DATE | DESCRIPTION |
|---|---|---|
| | | |

CONTRACTOR TO VERIFY DRAWINGS IN FIELD USE REFLECT LAST REVISION DATE.

| NO. | DATE | DESCRIPTION |
|---|---|---|
| | | |

SHEET NAME

OUTDOOR LEISURE POOL PLAN - ALT 2

BID DOCUMENTS
MAY 15, 2013

SHEET NUMBER

WF405.0

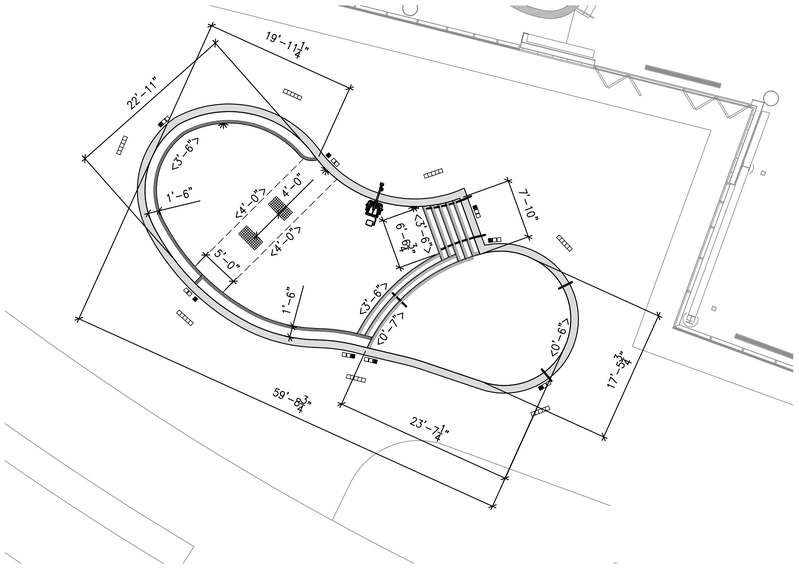


## OUTDOOR LEISURE POOL DIMENSION PLAN

SCALE: 1/8" = 1'-0"

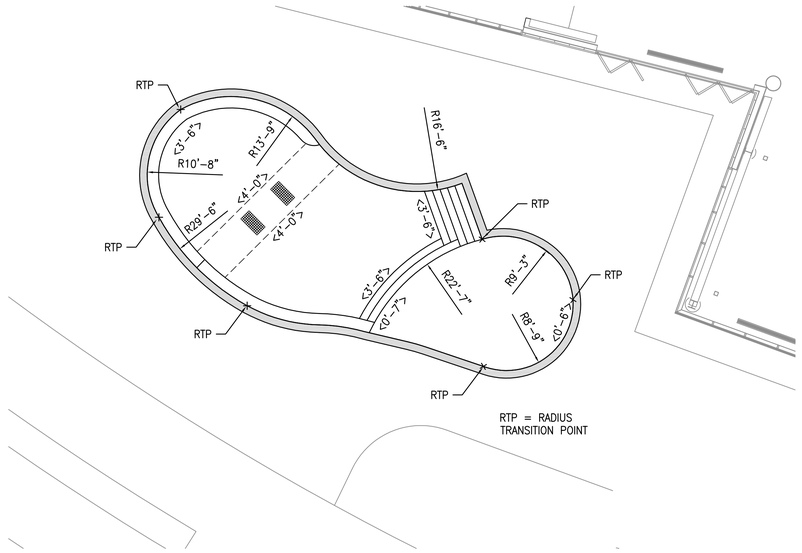


## OUTDOOR LEISURE POOL RADIAL DIMENSION PLAN

SCALE: 1/8" = 1'-0"

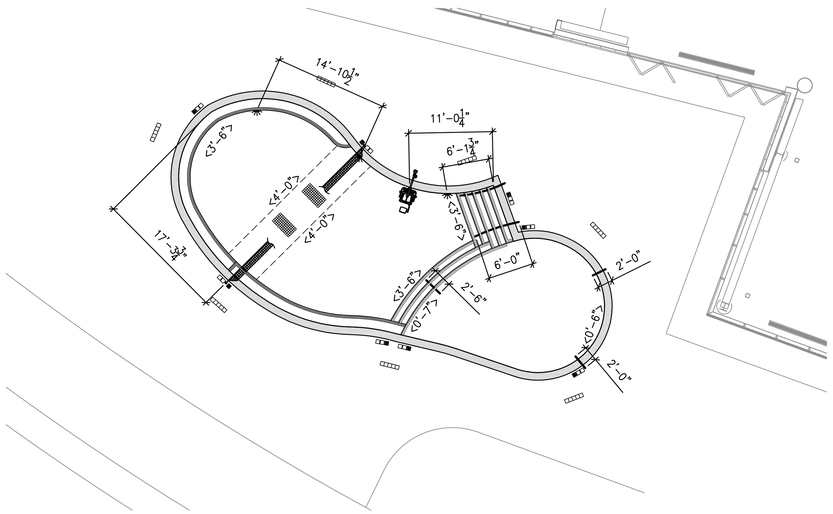


## OUTDOOR LEISURE POOL DECK EQUIPMENT DIMENSION PLAN

SCALE: 1/8" = 1'-0"

**POOL LAYOUT ON SITE:**

DIMENSIONS SHOWN ARE FOR REFERENCE ONLY. POOL CONTRACTOR SHALL HAVE POOL LAYED OUT ON SITE BY A PROFESSIONAL SURVEYOR PRIOR TO EXCAVATION. POOL CONTRACTOR IS RESPONSIBLE FOR POOL SPECIFIC SURVEY WORK. AN ELECTRONIC FILE OF THE POOL BASE MAY BE PROVIDED TO THE CONTRACTOR FOR SURVEYOR'S USE. SEE CIVIL DRAWINGS FOR REFERENCE POINTS AND ADDITIONAL SITE INFORMATION.

The entire contents of the attached documents, including all sketches, plans, studies, drawings, schedules and specifications and all copyrights therein are, and shall remain the sole property of Water Design Incorporated. The documents and their contents may not be used, photocopied or reproduced digitally, electronically or in any other manner without the express prior written consent of Water Design Incorporated.

MHTN
ARCHITECTS
**MHTN Architects, Inc.**
420 East South Temple
Suite 100
Salt Lake City, Utah 84111
Telephone (801) 595-6700
Telefax (801) 595-6717
www.mhtn.com

**Hastings+Chivetta**
ARCHITECTURE • PLANNING • ENGINEERING
622 Emerson, Suite 200
St. Louis, MO 63141
Tel. 314.863.5717
Fax. 314.863.2823
www.hastingschivetta.com

Water Design Inc.
5047 S. Galleria Dr.
Murray, Utah 84123
Phone : (801) 261-4009
Fax : (801) 261-4069
www.waterdesigninc.com

BUILDING OFFICIAL STAMP

# UNIVERSITY OF UTAH
# STUDENT LIFE CENTER
1836 E. BALLIF ROAD
SALT LAKE CITY, UTAH 84112

SEAL

MHTN PROJECT NO.

DRAWN BY: ACR CHECKED BY: BA

ISSUED:

| NO. | DATE | DESCRIPTION |
|---|---|---|
| | | |

CONTRACTOR TO VERIFY DRAWINGS IN FIELD USE REFLECT LAST REVISION DATE.

| NO. | DATE | DESCRIPTION |
|---|---|---|
| | | |

SHEET NAME

OUTDOOR LEISURE POOL DIMENSION PLAN - ALT 2

BID DOCUMENTS
MAY 15, 2013

SHEET NUMBER

WF405.1

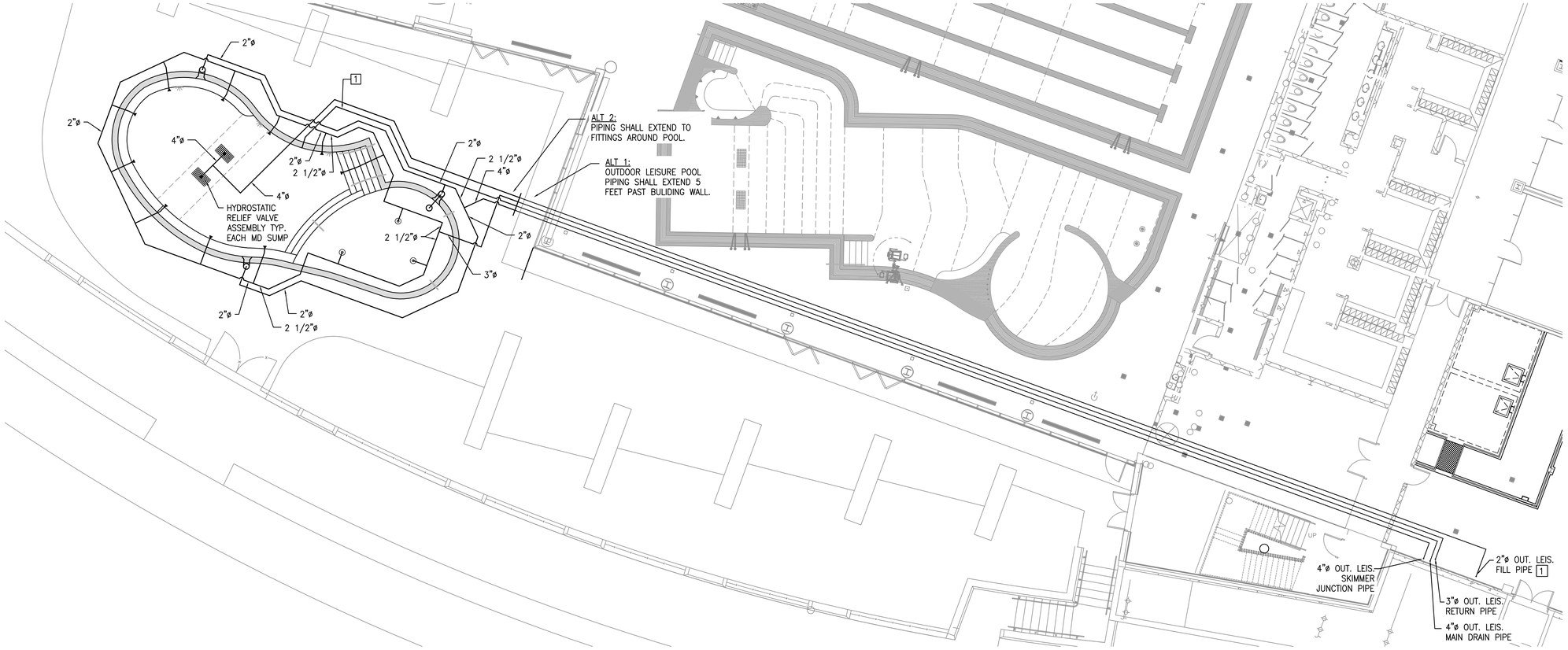


## OUTDOOR LEISURE POOL FITTING AND PIPING PLAN

SCALE: 1/8" = 1'-0"

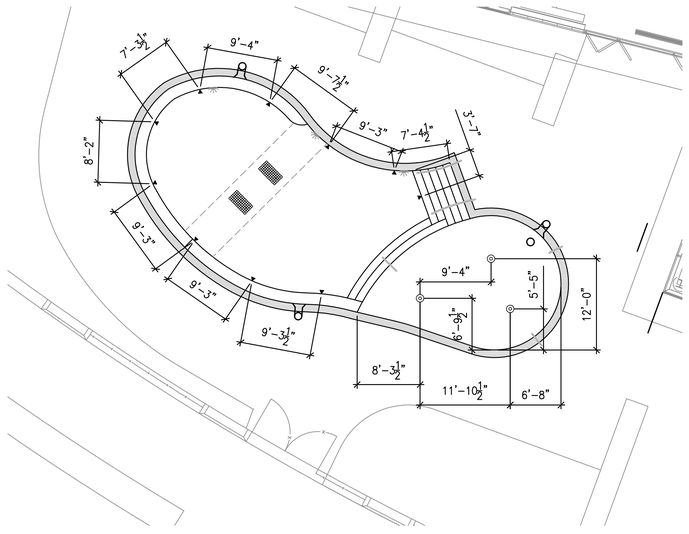


## OUTDOOR LEISURE POOL FITTING DIMENSION PLAN

SCALE: 1/8" = 1'-0"

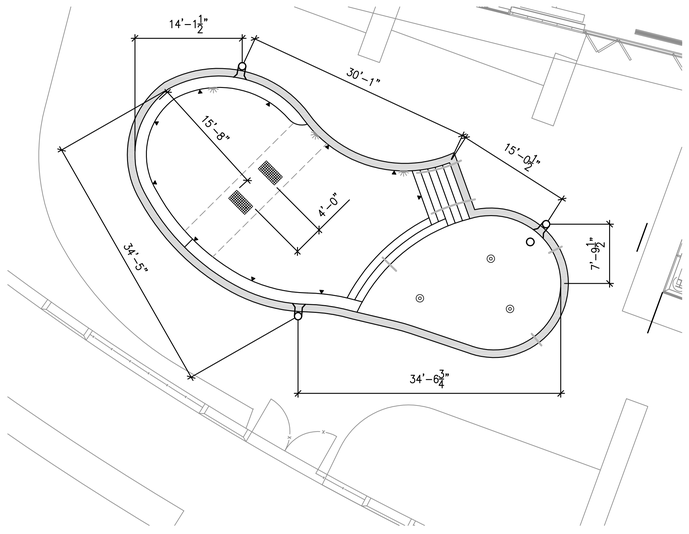


## OUTDOOR LEISURE POOL FITTING DIMENSION PLAN

SCALE: 1/8" = 1'-0"

**SEE PIPING NOTES - SHEET WF404.2**

## SPA CIRCULATION FITTING SCHEDULE

| MARK | DESCRIPTION | QUANTITY | DETAIL | REQUIREMENT |
|---|---|---|---|---|
| | CIRCULATION/JET OUTLET FRAME AND GRATE WITH FIELD BUILT CONCRETE SUMP | 2 | 5 / WF504 | LAWSON AQUATIC COVER 18" x 36" #MD-FG-1836 UNBLOCKABLE |
| REMARKS: PROVIDE SIZE OF PIPE CONNECTION TO SUMP OUTLETS AS SHOWN ON PLANS. LOCATE ALL SUCTION PIPES ON SUMP WALLS. TAMPER PROOF STAINLESS STEEL FASTENERS REQUIRED. FRAME AND GRATE SHALL BE LISTED ACCORDING TO THE CURRENT ASME\ANSI A-112.19.8 STANDARD. ALLOWABLE FLOW PER GRATE PER NSF CERTIFICATION EQUALS 2080 GPM. PROVIDE HYDROSTATIC RELIEF VALVE ASSEMBLY IN THE BOTTOM OF EACH SUMP. | | | | |
| ● | HYDROSTATIC RELIEF VALVE ASSEMBLY | 2 | 6 / WF504 | HAYWARD #SP1056 #SP1055 OR APPROVED EQUAL |
| REMARKS: PROVIDE ONE IN EACH MAIN DRAIN SUMP. | | | | |
| | SURFACE SKIMMER | 3 | 4 / WF507 | WATERWAYS OR APPROVED EQUAL |
| REMARKS: NSF APPROVED. PROVIDE WITH FLOAT VALVE AND CHECK VALVE. PROVIDE EQUALIZER LINE WITH COVER COMPLIANT WITH VGBA REGULATIONS (SEE BELOW). PROVIDE ROUND FRAME WITH POUR-A-LID COVER. POUR-A-LID SHALL MATCH COPING AND/OR FAUX ROCK COLOR. SUBMIT LID COLOR CHOICES TO ARCHITECT. ARCHITECT SHALL SELECT COLOR. | | | | |
| | SURFACE SKIMMER EQUALIZER FITTING COVER | 2 | 4 / WF507 | AQUASTAR 6HP10* COVER WITH RND** FITTING |
| REMARKS: PROVIDE CURRENT ADOPTED ASME/ANSI A112.19.8 STANDARD EQUALIZER COVER FITTING. SUBMIT COVER COLOR CHOICES TO ARCHITECT. ARCHITECT SHALL SELECT COLOR. | | | | |
| ○ | SURFACE SKIMMER EQUALIZER FITTING FLOOR COVER | 1 | 5 / WF507 | PARAMOUNT SDX 10" DIAMETER FRAME & GRATE |
| REMARKS: PROVIDE CURRENT ADOPTED ASME/ANSI A112.19.8 STANDARD EQUALIZER COVER FITTING FOR INSTALLATION IN THE POOL FLOOR. PROVIDE WITH TAMPER PROOF STAINLESS STEEL SCREWS. SUMP DEPTH SHALL BE SIZED TO ALLOW FOR 1.5 TIMES THE PIPE DIAMETER FROM TOP OF PIPE TO BOTTOM OF GRATE. SUBMIT COVER COLOR CHOICES TO ARCHITECT. ARCHITECT SHALL SELECT COLOR. | | | | |
| | WALL RETURN WATER INLET FITTING | 10 | 10 / WF504 | CUSTOM NON-ADJUSTABLE |
| REMARKS: SEE DETAIL FOR ORIFICE SIZE. SPACE INLETS PER PLAN LAYOUT/ DIMENSIONS. | | | | |
| ◎ | FLOOR RETURN WATER INLET FITTING | 3 | 8 / WF504 | STA-RITE OR APPROVED EQUAL |
| REMARKS: SEE DETAIL FOR ADJUSTMENT AMOUNT. SPACE INLETS PER PLAN DIMENSIONS. | | | | |
| 1 | FILL LINE | ONE | SEE POTABLE WATER SCHEMATIC SHEET WF500.1 | 2"ø PIPE |
| REMARKS: TERMINATE FILL LINE AT EDGE OF SPA BENCH. LOCATE SENSOR IN SKIMMER BODY. WATER LEVEL CONTROLLER LOCATED IN EQUIPMENT ROOM. | | | | |

The entire contents of the attached documents, including all sketches, plans, studies, drawings, schedules and specifications and all copyrights therein are, and shall remain the sole property of Water Design Incorporated. The documents and their contents may not be used, photocopied or reproduced digitally, electronically or in any other manner without the express prior written consent of Water Design Incorporated.

MHTN
ARCHITECTS
MHTN Architects, Inc.
420 East South Temple
Suite 100
Salt Lake City, Utah 84111
Telephone (801) 595-6700
Telefax (801) 595-6717
www.mhtn.com

Hastings+Chivetta
ARCHITECTURE • PLANNING • ENGINEERING
622 Emerson, Suite 200
St. Louis, MO 63141
Tel. 314.863.5717
Fax. 314.863.2823
www.hastingschivetta.com

Water Design Inc.
5047 S. Galleria Dr.
Murray, Utah 84123
Phone : (801) 261-4009
Fax : (801) 261-4069
www.waterdesigninc.com

BUILDING OFFICIAL STAMP

# UNIVERSITY OF UTAH
# STUDENT LIFE CENTER
1836 E. BALLIF ROAD
SALT LAKE CITY, UTAH 84112

SEAL

LICENSED PROFESSIONAL ENGINEER
CHARLES ROSS ANDERSON
145589-2202
5-15-13
STATE OF UTAH

MHTN PROJECT NO.

DRAWN BY: ACR CHECKED BY: BA

ISSUED:

| NO. | DATE | DESCRIPTION |
|---|---|---|

CONTRACTOR TO VERIFY DRAWINGS IN FIELD USE REFLECT LAST REVISION DATE.

| NO. | DATE | DESCRIPTION |
|---|---|---|

SHEET NAME

OUTDOOR LEISURE POOL PIPING PLAN ALT 1 and 2

BID DOCUMENTS
MAY 15, 2013

SHEET NUMBER

WF405.2

## PIPE VALVE NOTES:

1. ALL VALVES FOR PIPING 3" AND SMALLER SHALL BE PVC BALL VALVES, ASAHI/ AMERICAN OMNI OR EQUAL.
2. ALL VALVES 4" AND LARGER SHALL BE BUTTERFLY VALVES ASAHI/ AMERICAN FOUNTAIN COMPATIBLE VALVES ("POOL PRO" OR EQUAL). BUTTERFLY VALVES ARE TO BE MANUFACTURED OF PVC WITH REINFORCED DISKS BUBBLE-TITE WITH STAINLESS STEEL SHAFTS.
3. VALVES 4" AND 6" SHALL BE LEVER OPERATED. VALVES 8" AND ABOVE SHALL BE GEAR OPERATED.
4. ALL CHECK VALVES SHALL BE TECHNO-CHECK, SERIES 5001, PVC, FLANGED ENDS, WAFER TYPE CHECK VALVES, SIZE AS REQUIRED.

## PIPE HANGER NOTES:

THE PIPE HANGERS SHALL BE ADJUSTABLE B-LINE FIGURE B3105 STAINLESS STEEL OR EQUAL. PIPE SUPPORTS SHALL BE ADJUSTABLE B-LINE FIGURE B3092 STAINLESS STEEL SADDLE SUPPORT WITH FIGURE B3088T STAINLESS STEEL STAND OR APPROVED EQUAL. PIPE HANGERS AND SUPPORTS SHALL BE CONSTRUCTED OF STAINLESS STEEL AND SHALL BE LOCATED AS NEEDED TO ADEQUATELY SUPPORT ALL PIPING AND COMPONENTS. POOL CONTRACTOR MAY FABRICATE SPECIAL HANGERS OR SUPPORTS SUBJECT TO APPROVAL OF THE ARCHITECT. PVC PIPING SHALL NOT BE UNSUPPORTED FOR LENGTHS IN EXCESS OF SIX FEET. PROVIDE ADEQUATE SUPPORTS AND SPACING AS TO AVOID PIPE SAGGING BETWEEN SUPPORTS AND TO SUPPORT AGAINST THE EFFECTS OF WATER HAMMER. ALL POOL PIPING LARGER THAN 3" MUST BE SUPPORTED FOR SEISMIC LOADS IN ACCORDANCE WITH THE INTERNATIONAL BUILDING CODE. THE POOL CONTRACTOR IS RESPONSIBLE FOR THE DESIGN AND INSTALLATION OF ALL SEISMIC BRACING.

PROVIDE THE DETAILS AND ENGINEERING CALCULATIONS (WET STAMPED AND SIGNED) FOR ALL NON-STRUCTURAL COMPONENTS PERMANENTLY ATTACHED TO STRUCTURES AND THEIR SUPPORTS & ATTACHMENTS, DESIGNED T RESIST THE EFFECTS OF EARTHQUAKE MOTIONS IN ACCORDANCE WITH ASCE 7-05. SUBMIT TO THE BUILDING DEPARTMENT AS A DEFERRED SUBMITTAL (IF REQUIRED BY BUILDING INSPECTOR).

## PIPE CONNECTIONS NOTE:

1. ALL CONNECTIONS FOR PIPING 3"ø AND SMALLER SHALL BE UNIONS, AND FOR PIPING 4"ø AND LARGER FLANGES SHALL BE PROVIDED.

## FIRE PROTECTION NOTE:

PIPING LOCATED IN PLENUMS, FIRE RATED WALLS, OR OTHER AREAS RESTRICTED BY CODE SHALL BE OF THE MATERIAL TYPE REQUIRED OR SHALL BE PROTECTED PER CODE REQUIREMENTS. POOL CONTRACTOR TO COORDINATE WITH MECHANICAL AND GENERAL CONTRACTOR TO VERIFY REQUIREMENTS PRIOR TO INSTALLING PIPE. ALL PENETRATIONS THROUGH FIRE RATED WALLS AND FLOORS SHOULD BE SEALED PER THE REQUIREMENTS OF THE PROJECT SPECIFICATIONS.

## POOL PIPING NOTE:

ALL POOL AND SPA EQUIPMENT ROOM PIPING SHALL BE SCHEDULE 80 PVC, UNLESS OTHERWISE NOTED ON THIS DRAWINGS OR IN THE SPECIFICATIONS.
ALL BURIED POOL AND SPA PIPING SHALL BE SCHEDULE 40 PVC, UNLESS OTHERWISE NOTED ON THESE DRAWINGS OR IN THE SPECIFICATIONS.

## CHEMICAL STORAGE ROOM DOOR SIGN:

(PROVIDED BY POOL CONTRACTOR)

PROVIDE AN NFPA 704 MARKING SYSTEM IDENTIFICATION PLACARD ON THE ENTRY DOOR TO THE STORAGE AREA OF EACH CHEMICAL STORAGE ROOM AS REQUIRED BY THE NFPA 704.

## ACTIVITY POOL EQUIPMENT INTERLOCKING NOTES

ELECTRICAL INTERLOCKING BY ELECTRICAL CONTRACTOR.
COORDINATE WITH POOL CONTRACTOR.

PROVIDE INTERLOCKING OF CIRCULATION EQUIPMENT PER POOL DRAWINGS AND SPECIFICATIONS. PROVIDE RELAY AND CONTROL WIRING IN 3/4" CONDUIT AS REQUIRED.

1. INTERLOCK THE LAP POOL CIRCULATION PUMP (EQUIPMENT SCHEDULE ITEM # 3) WITH ITS HEAT EXCHANGER TEMPERATURE CONTROLS (HEAT EXCHANGER OUR SCHEDULE ITEM # 2).
(IF THE POOL CIRCULATION PUMP SHUTS OFF THE CALL FOR HEAT DEMAND SHOULD SHUT OFF ALSO.)
2. INTERLOCK THE CIRCULATION PUMP (ITEM # 3) WITH THE REGENERATIVE MEDIA FILTER'S AUTOMATIC CONTROLLER (INSTALLED ON ITEM # 1A) PER MANUFACTURER'S REQUIREMENTS.
3. INTERLOCK THE REGENERATIVE MEDIA FILTER AUTOMATIC CONTROLLER (ON ITEM # 1A) WITH ITS RESPECTIVE VACUUM TRANSFER SYSTEM (ITEM # 1B) PER MANUFACTURER'S REQUIREMENTS.
4. INTERLOCK THE CIRCULATION PUMP (ITEM # 3) WITH ITS CHLORINE FEED AND CO2 FEED RELAYS WITHIN THE CHEMICAL CONTROLLER (ITEM # 5).
(IF POOL CIRCULATION PUMP SHUTS OFF, THE POWER TO ALL CHLORINE AND CO2 FEEDERS SHALL SHUT OFF ALSO.)
5. INTERLOCK THE CIRCULATION PUMP (ITEM # 3) WITH ITS UV DISINFECTION SYSTEM CONTROL PANEL (ITEM # 11A).
(IF POOL CIRCULATION PUMP SHUTS OFF, THE POWER TO THE UV SYSTEM CONTROL PANEL SHALL SHUT OFF ALSO.)

## RAISED SPA EQUIPMENT INTERLOCKING NOTES

ELECTRICAL INTERLOCKING BY ELECTRICAL CONTRACTOR.
COORDINATE WITH POOL CONTRACTOR.

PROVIDE INTERLOCKING OF CIRCULATION EQUIPMENT PER POOL DRAWINGS AND SPECIFICATIONS. PROVIDE RELAY AND CONTROL WIRING IN 3/4" CONDUIT AS REQUIRED.

1. INTERLOCK THE RAISED SPA CIRCULATION PUMP (ITEM # 33) WITH THE RAISED SPA HEAT EXCHANGER TEMPERATURE CONTROLS (ITEM # 32). (IF THE SPA CIRCULATION PUMP SHUTS OFF THE CALL FOR HEAT DEMAND SHOULD SHUT OFF ALSO.)
2. INTERLOCK THE RAISED SPA CIRCULATION PUMP (ITEM # 33) WITH THE RAISED SPA REGENERATIVE MEDIA FILTER'S AUTOMATIC CONTROLLER (INSTALLED ON ITEM # 31A) PER MANUFACTURER'S REQUIREMENTS.
3. INTERLOCK THE RAISED SPA'S REGENERATIVE MEDIA FILTER AUTOMATIC CONTROLLER (INSTALLED ON ITEM # 31A) WITH ITS VACUUM TRANSFER SYSTEM (ITEM # 31B)
PER MANUFACTURER'S REQUIREMENTS.
4. INTERLOCK THE RAISED SPA CIRCULATION PUMP (ITEM # 33) WITH THE CHLORINE AND CO2 FEED RELAYS (SEE ITEM # 5).
(IF SPA CIRCULATION PUMP SHUTS OFF, THE POWER TO ALL CHLORINE AND ACID FEEDERS SHALL SHUT OFF ALSO.)
5. INTERLOCK THE RAISED SPA CIRCULATION PUMP (ITEM # 33) WITH THE UV DISINFECTION SYSTEM CONTROL PANEL (ITEM # 38B).
(IF SPA CIRCULATION PUMP SHUTS OFF, THE POWER TO THE UV SYSTEM CONTROL PANEL SHALL SHUT OFF ALSO.)
6. INTERLOCK RAISED SPA TIMER(S) AT SPA SIDE WITH THEIR RESPECTIVE THERAPY JET PUMPS (ITEM # 39).
7. INTERLOCK THE RAISED SPA EMERGENCY SHUT OFF SWITCH (LOCATED AT SPA SIDE) WITH THE RAISED SPA CIRCULATION PUMP (ITEM # 33) AND THE SPA JET PUMPS (ITEM # 39).

## EQUIPMENT ROOM NOTES:

1. FILTRATION AND CHEMICAL EQUIPMENT SHALL BE NATIONAL SANITATION FOUNDATION (NSF) APPROVED.
2. EQUIPMENT SHALL BE INSTALLED ON SLABS WITH MINIMUM 4" THICKNESS AND AS REQUIRED TO WITHSTAND THE LOADS ASSOCIATED WITH THE POOL EQUIPMENT AND PIPING.
3. COORDINATE WITH ALL OTHER TRADES & VERIFY EXACT LOCATION OF POOL EQUIPMENT.
4. SEE OVERALL PIPING PLAN TO VERIFY PIPE SIZES AND FOR CONTINUATION OF PIPING. IF THERE ARE ANY DISCREPANCIES, REPORT THEM IMMEDIATELY TO THE ARCHITECT/ENGINEER.
5. POOL CONTRACTOR SHALL IDENTIFY ALL PIPING AND VALVES BY COLOR CODING AND DIRECTION OF FLOW ARROWS IN ACCORDANCE WITH LOCAL HEALTH CODE.
6. REDUCER FITTINGS SHALL BE USED WHERE PIPE SIZES CHANGE.
7. NO COMMON PIPING OR FITTING ON THE SUCTION SIDE OF THE PUMP IS TO BE SMALLER THAN THE LARGEST SINGLE ELEMENT CONNECTED. DOWNSIZING AND UPSIZING IS TO BE DONE AT THE THROATS OF THE PUMP PORTS.
8. ALL VALVES SHALL HAVE A MINIMUM PRESSURE RATING OF 125 PSI.
9. ALL TRADES SHALL KEEP SPACE ABOVE THE FILTRATION AND CHEMICAL EQUIPMENT CLEAR FOR SERVICING. EACH OF THE FILTERS REQUIRE A 16" MINIMUM CLEARANCE ABOVE THE FILTER AS WELL AS AN ADJACENT CLEARANCE FOR THE TOP OF THE FILTER TO ROTATE 360 DEGREES UPON A DAVIT POINT FOR SERVICING OF THE INTERIOR FILTER ELEMENTS.
10. HAIR AND LINT STRAINER OPENINGS SHALL BE NO MORE THAN 1/8". THE HAIR AND LINT STRAINER MUST PROVIDE A FREE FLOW CAPACITY OF AT LEAST FOUR TIMES THE AREA OF THE PUMP SUCTION LINE.
11. FILTER SHALL BE PROVIDED WITH THE FOLLOWING APPROPRIATELY LOCATED ACCESSORIES: INFLUENT AND EFFLUENT PRESSURE GAUGES, BACKWASH SIGHT GLASS ON WASTE DISCHARGE LINE, AIR RELIEF VALVE AT THE HIGH POINT OF THE FILTER SYSTEM, AND A VALVED TANK DRAIN, WHICH WILL REQUIRE A GRAVITY FLOW TO THE SANITARY SEWER.
12. FLOWMETER SHALL BE PROVIDED IN THE INLET RETURN LINE AFTER FILTER AND BEFORE CHEMICAL INJECTION. INSTALL ON A STRAIGHT LENGTH OF PIPE AT A DISTANCE OF AT LEAST 10 PIPE DIAMETERS DOWNSTREAM AND 5 PIPE DIAMETERS UPSTREAM FROM ANY VALVE, ELBOW OR OTHER SOURCE OF TURBULENCE OR PER MANUFACTURER'S SPECIFICATIONS.
13. ALL POOL WATER EVACUATION SHALL BE TO AN APPROVED PLUMBING FIXTURE. ALL POOL WATER EVACUATION SHALL BE RECEIVED INTO THE SANITARY SEWER.
14. HEAT EXCHANGERS MUST MEET REQUIREMENTS FOR HEAT EXCHANGERS PER LOCAL AND STATE CODES.
15. PROVIDE AT LEAST THE MIN. REQUIRED SPACE AROUND THE HEAT EXCHANGER PER MFG. SPECS.
16. PROVIDE HEAT SINK OR CPVC PIPING IF RECOMMENDED BY HEAT EXCHANGER MANUFACTURER. INSTALL PER MANUFACTURER RECOMMENDATIONS.
17. PROVIDE A BY PASS VALVE AND PIPING AT HEAT EXCHANGER PER MANUFACTURERS RECOMMENDATIONS.
18. INSTALL A THERMOMETER ON HEAT EXCHANGER INFLUENT AND EFFLUENT PIPES AND IN THE POOL RETURN LINE A MINIMUM OF 5'-0" AFTER HEAT EXCHANGER BYPASS.
19. HEAT EXCHANGERS MUST MEET THE STATE & LOCAL CODES FOR HEAT EXCHANGER INSTALLATION.
20. ALL SELF PRIMING CIRCULATING PUMPS SHALL BE INSTALLED NO MORE THAN 2'-0" ABOVE THE OPERATING WATER LEVEL OF THE POOL BEING SERVED. ALL NON-SELF PRIMING PUMPS SHALL BE INSTALLED BELOW THE WATER LEVEL OF THE POOL.
21. PROVIDE A COMBINATION VACUUM/PRESSURE GAUGE ON THE SUCTION SIDE OF ALL PUMPS.
22. PROVIDE A PRESSURE GAUGE ON THE DISCHARGE SIDE OF ALL PUMPS.
23. FOR FEATURE PUMPS PROVIDE A COMBINATION VACUUM/PRESSURE GAUGE ON THE SUCTION SIDE OF THE PUMP AND A PRESSURE GAUGE ON THE DISCHARGE SIDE OF THE PUMP.
24. EYE WASH AND EMERGENCY SHOWER PROVIDED AND INSTALLED BY MECHANICAL. SEE "MECHANICAL AND PLUMBING ITEMS".

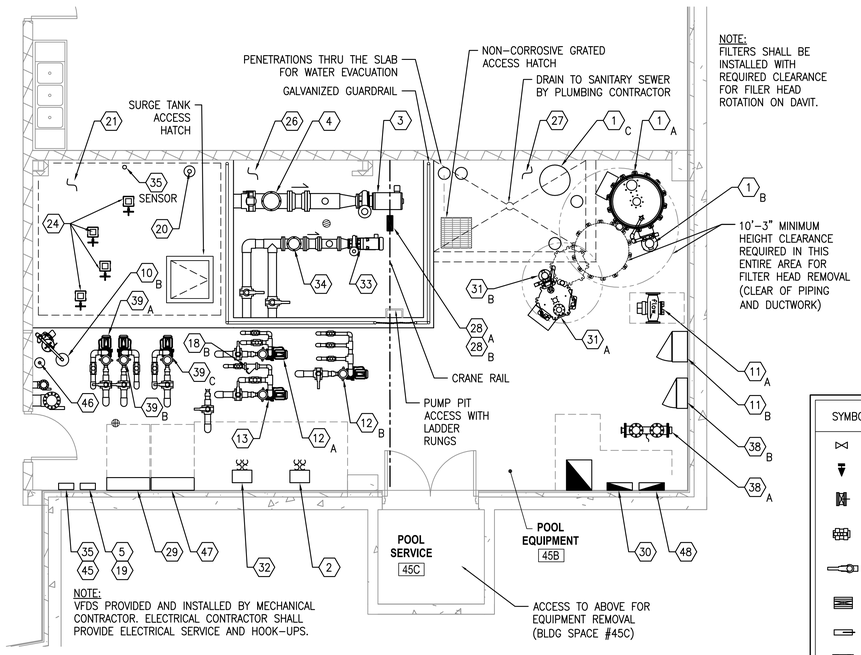


NOTE:
FILTERS SHALL BE INSTALLED WITH REQUIRED CLEARANCE FOR FILER HEAD ROTATION ON DAVIT.

NOTE:
VFDS PROVIDED AND INSTALLED BY MECHANICAL CONTRACTOR. ELECTRICAL CONTRACTOR SHALL PROVIDE ELECTRICAL SERVICE AND HOOK-UPS.

### LOWER LEVEL POOL EQUIPMENT ROOM PLAN

SCALE: 1/4" = 1'-0"

| SYMBOL | LEGEND |
|---|---|
| | VALVE |
| | VALVE |
| | VALVE |
| | VALVE |
| | VALVE |
| | VALVE |
| | VALVE |
| | VALVE |
| | CHECK VALVE |
| | CHECK VALVE |
| | VALVE |

## EQUIPMENT SCHEDULES:

FOR EQUIPMENT SCHEDULE HEXEGON REFERENCES, SEE SHEET WF601

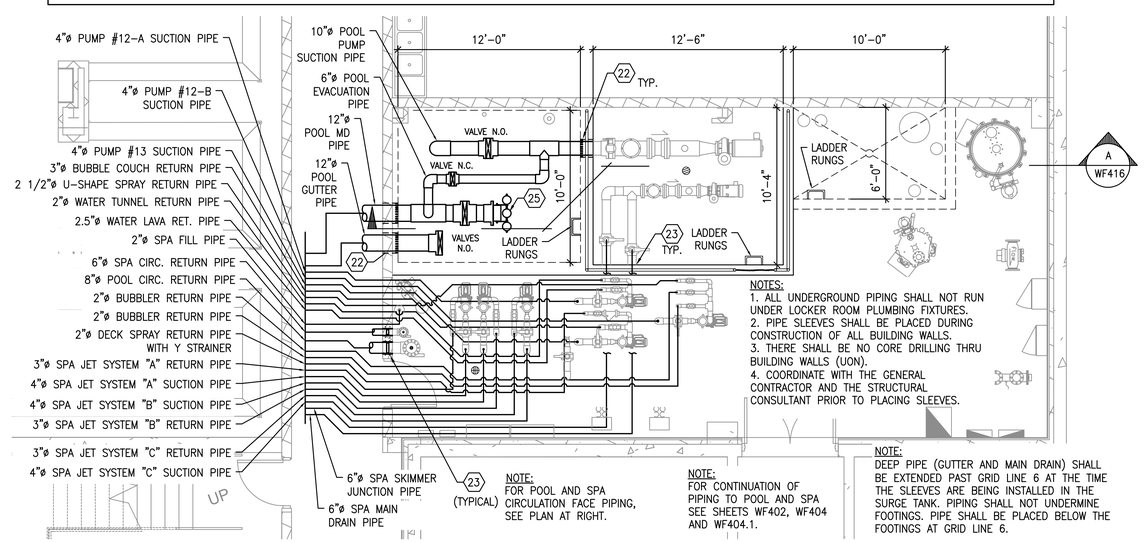


NOTES:
1. ALL UNDERGROUND PIPING SHALL NOT RUN UNDER LOCKER ROOM PLUMBING FIXTURES.
2. PIPE SLEEVES SHALL BE PLACED DURING CONSTRUCTION OF ALL BUILDING WALLS.
3. THERE SHALL BE NO CORE DRILLING THRU BUILDING WALLS (UON).
4. COORDINATE WITH THE GENERAL CONTRACTOR AND THE STRUCTURAL CONSULTANT PRIOR TO PLACING SLEEVES.

NOTE:
FOR POOL AND SPA CIRCULATION FACE PIPING, SEE PLAN AT RIGHT.

NOTE:
FOR CONTINUATION OF PIPING TO POOL AND SPA SEE SHEETS WF402, WF404 AND WF404.1.

NOTE:
DEEP PIPE (GUTTER AND MAIN DRAIN) SHALL BE EXTENDED PAST GRID LINE 6 AT THE TIME THE SLEEVES ARE BEING INSTALLED IN THE SURGE TANK. PIPING SHALL NOT UNDERMINE FOOTINGS. PIPE SHALL BE PLACED BELOW THE FOOTINGS AT GRID LINE 6.

### LOWER LEVEL POOL EQUIPMENT ROOM UNDERGROUND PIPING PLAN

SCALE: 1/4" = 1'-0"

NOTE:
FOR CONTINUATION OF PIPING TO POOL AND SPA SEE SHEETS WF402, WF404 AND WF404.1.

NOTE:
FOR FEATURE PIPING FOR POOL AND SPA SEE PLAN AT LEFT.

NOTE:
SEE SHEET WF500 FOR CIRCULATION EQUIPMENT SCHEMATICS.

NOTE:
FOR ADDITIONAL FILTER PIPING CONFIGURATION INFORMATION SEE FILTER SCHEMATIC SHEET WF500.0

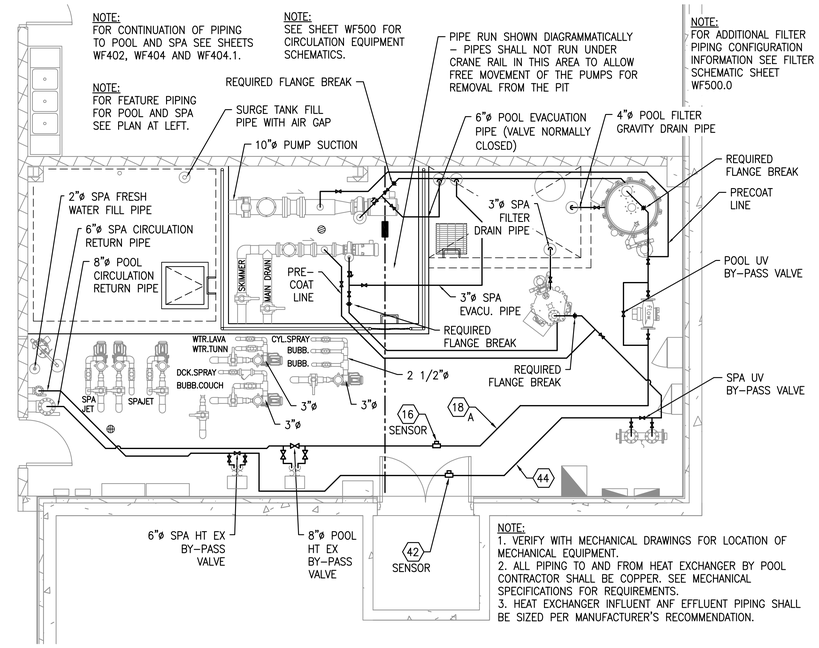


NOTE:
1. VERIFY WITH MECHANICAL DRAWINGS FOR LOCATION OF MECHANICAL EQUIPMENT.
2. ALL PIPING TO AND FROM HEAT EXCHANGER BY POOL CONTRACTOR SHALL BE COPPER. SEE MECHANICAL SPECIFICATIONS FOR REQUIREMENTS.
3. HEAT EXCHANGER INFLUENT ANF EFFLUENT PIPING SHALL BE SIZED PER MANUFACTURER'S RECOMMENDATION.

### LOWER LEVEL POOL/SPA EQUIPMENT ROOM CIRCULATION FACE PIPING PLAN

SCALE: 1/4" = 1'-0"

The entire contents of the attached documents, including all sketches, plans, studies, drawings, schedules and specifications and all copyrights therein are, and shall remain the sole property of Water Design Incorporated. The documents and their contents may not be used, photocopied or reproduced digitally, electronically or in any other manner without the express prior written consent of Water Design Incorporated.

MHTN
ARCHITECTS
MHTN Architects, Inc.
420 East South Temple
Suite 100
Salt Lake City, Utah 84111
Telephone (801) 595-6700
Telefax (801) 595-6717
www.mhtn.com

Hastings+Chivetta
ARCHITECTURE • PLANNING • ENGINEERING
622 Emerson, Suite 200
St. Louis, MO 63141
Tel. 314.863.5717
Fax. 314.863.2823
www.hastingschivetta.com

Water Design Inc.
5047 S. Galleria Dr.
Murray, Utah 84123
Phone : (801) 261-4009
Fax : (801) 261-4069
www.waterdesigninc.com

BUILDING OFFICIAL STAMP

# UNIVERSITY OF UTAH
# STUDENT LIFE CENTER
1836 E. BALLIF ROAD
SALT LAKE CITY, UTAH 84112

SEAL

MHTN PROJECT NO.

DRAWN BY: ACR CHECKED BY: BA

ISSUED:

| NO. | DATE | DESCRIPTION |
|---|---|---|
| | | |

CONTRACTOR TO VERIFY DRAWINGS IN FIELD USE REFLECT LAST REVISION DATE.

| NO. | DATE | DESCRIPTION |
|---|---|---|
| | | |

SHEET NAME
LOWER LEVEL POOL EQUIPMENT ROOM PLAN

BID DOCUMENTS
MAY 15, 2013

SHEET NUMBER
WF406.0

## PIPE VALVE NOTES:

1. ALL VALVES FOR PIPING 3" AND SMALLER SHALL BE PVC BALL VALVES, ASAHI/ AMERICAN OMNI OR EQUAL.
2. ALL VALVES 4" AND LARGER SHALL BE BUTTERFLY VALVES ASAHI/ AMERICAN FOUNTAIN COMPATIBLE VALVES ("POOL PRO" OR EQUAL). BUTTERFLY VALVES ARE TO BE MANUFACTURED OF PVC WITH REINFORCED DISKS BUBBLE-TITE WITH STAINLESS STEEL SHAFTS.
3. VALVES 4" AND 6" SHALL BE LEVER OPERATED. VALVES 8" AND ABOVE SHALL BE GEAR OPERATED.
4. ALL CHECK VALVES SHALL BE TECHNO-CHECK, SERIES 5001, PVC, FLANGED ENDS, WAFER TYPE CHECK VALVES, SIZE AS REQUIRED.

## PIPE HANGER NOTES:

THE PIPE HANGERS SHALL BE ADJUSTABLE B-LINE FIGURE B3105 STAINLESS STEEL OR EQUAL. PIPE SUPPORTS SHALL BE ADJUSTABLE B-LINE FIGURE B3092 STAINLESS STEEL SADDLE SUPPORT WITH FIGURE B3088T STAINLESS STEEL STAND OR APPROVED EQUAL. PIPE HANGERS AND SUPPORTS SHALL BE CONSTRUCTED OF STAINLESS STEEL AND SHALL BE LOCATED AS NEEDED TO ADEQUATELY SUPPORT ALL PIPING AND COMPONENTS. POOL CONTRACTOR MAY FABRICATE SPECIAL HANGERS OR SUPPORTS SUBJECT TO APPROVAL OF THE ARCHITECT. PVC PIPING SHALL NOT BE UNSUPPORTED FOR LENGTHS IN EXCESS OF SIX FEET. PROVIDE ADEQUATE SUPPORTS AND SPACING AS TO AVOID PIPE SAGGING BETWEEN SUPPORTS AND TO SUPPORT AGAINST THE EFFECTS OF WATER HAMMER. ALL POOL PIPING LARGER THAN 3" MUST BE SUPPORTED FOR SEISMIC LOADS IN ACCORDANCE WITH THE INTERNATIONAL BUILDING CODE. THE POOL CONTRACTOR IS RESPONSIBLE FOR THE DESIGN AND INSTALLATION OF ALL SEISMIC BRACING.

PROVIDE THE DETAILS AND ENGINEERING CALCULATIONS (WET STAMPED AND SIGNED) FOR ALL NON-STRUCTURAL COMPONENTS PERMANENTLY ATTACHED TO STRUCTURES AND THEIR SUPPORTS & ATTACHMENTS, DESIGNED T RESIST THE EFFECTS OF EARTHQUAKE MOTIONS IN ACCORDANCE WITH ASCE 7-05. SUBMIT TO THE BUILDING DEPARTMENT AS A DEFERRED SUBMITTAL (IF REQUIRED BY BUILDING INSPECTOR).

## PIPE CONNECTIONS NOTE:

1. ALL CONNECTIONS FOR PIPING 3"ø AND SMALLER SHALL BE UNIONS, AND FOR PIPING 4"ø AND LARGER FLANGES SHALL BE PROVIDED.

## FIRE PROTECTION NOTE:

PIPING LOCATED IN PLENUMS FIRE RATED WALLS, OR OTHER AREAS RESTRICTED BY CODE SHALL BE OF THE MATERIAL TYPE REQUIRED OR SHALL BE PROTECTED PER CODE REQUIREMENTS. POOL CONTRACTOR TO COORDINATE WITH MECHANICAL AND GENERAL CONTRACTOR TO VERIFY REQUIREMENTS PRIOR TO INSTALLING PIPE. ALL PENETRATIONS THROUGH FIRE RATED WALLS AND FLOORS SHOULD BE SEALED PER THE REQUIREMENTS OF THE PROJECT SPECIFICATIONS.

## POOL PIPING NOTE:

ALL POOL AND SPA EQUIPMENT ROOM PIPING SHALL BE SCHEDULE 80 PVC, UNLESS OTHERWISE NOTED ON THIS DRAWINGS OR IN THE SPECIFICATIONS.
ALL BURIED POOL AND SPA PIPING SHALL BE SCHEDULE 40 PVC, UNLESS OTHERWISE NOTED ON THESE DRAWINGS OR IN THE SPECIFICATIONS.

## CHEMICAL STORAGE ROOM DOOR SIGN:

(PROVIDED BY POOL CONTRACTOR)

PROVIDE AN NFPA 704 MARKING SYSTEM IDENTIFICATION PLACARD ON THE ENTRY DOOR TO THE STORAGE AREA OF EACH CHEMICAL STORAGE ROOM AS REQUIRED BY THE NFPA 704.

## EQUIPMENT ROOM NOTES:

1. FILTRATION AND CHEMICAL EQUIPMENT SHALL BE NATIONAL SANITATION FOUNDATION (NSF) APPROVED.
2. EQUIPMENT SHALL BE INSTALLED ON SLABS WITH MINIMUM 4" THICKNESS AND AS REQUIRED TO WITHSTAND THE LOADS ASSOCIATED WITH THE POOL EQUIPMENT AND PIPING.
3. COORDINATE WITH ALL OTHER TRADES & VERIFY EXACT LOCATION OF POOL EQUIPMENT.
4. SEE OVERALL PIPING PLAN TO VERIFY PIPE SIZES AND FOR CONTINUATION OF PIPING. IF THERE ARE ANY DISCREPANCIES, REPORT THEM IMMEDIATELY TO THE ARCHITECT/ENGINEER.
5. POOL CONTRACTOR SHALL IDENTIFY ALL PIPING AND VALVES BY COLOR CODING AND DIRECTION OF FLOW ARROWS IN ACCORDANCE WITH LOCAL HEALTH CODE.
6. REDUCER FITTINGS SHALL BE USED WHERE PIPE SIZES CHANGE.
7. NO COMMON PIPING OR FITTING ON THE SUCTION SIDE OF THE PUMP IS TO BE SMALLER THAN THE LARGEST SINGLE ELEMENT CONNECTED. DOWNSIZING AND UPSIZING IS TO BE DONE AT THE THROATS OF THE PUMP PORTS.
8. ALL VALVES SHALL HAVE A MINIMUM PRESSURE RATING OF 125 PSI.
9. ALL TRADES SHALL KEEP SPACE ABOVE THE FILTRATION AND CHEMICAL EQUIPMENT CLEAR FOR SERVICING. EACH OF THE FILTERS REQUIRE A 16" MINIMUM CLEARANCE ABOVE THE FILTER AS WELL AS AN ADJACENT CLEARANCE FOR THE TOP OF THE FILTER TO ROTATE 360 DEGREES UPON A DAVIT POINT FOR SERVICING OF THE INTERIOR FILTER ELEMENTS.
10. HAIR AND LINT STRAINER OPENINGS SHALL BE NO MORE THAN 1/8". THE HAIR AND LINT STRAINER MUST PROVIDE A FREE FLOW CAPACITY OF AT LEAST FOUR TIMES THE AREA OF THE PUMP SUCTION LINE.
11. FILTER SHALL BE PROVIDED WITH THE FOLLOWING APPROPRIATELY LOCATED ACCESSORIES: INFLUENT AND EFFLUENT PRESSURE GAUGES, BACKWASH SIGHT GLASS ON WASTE DISCHARGE LINE, AIR RELIEF VALVE AT THE HIGH POINT OF THE FILTER SYSTEM, AND A VALVED TANK DRAIN, WHICH WILL REQUIRE A GRAVITY FLOW TO THE SANITARY SEWER.
12. FLOWMETER SHALL BE PROVIDED IN THE INLET RETURN LINE AFTER FILTER AND BEFORE CHEMICAL INJECTION. INSTALL ON A STRAIGHT LENGTH OF PIPE AT A DISTANCE OF AT LEAST 10 PIPE DIAMETERS DOWNSTREAM AND 5 PIPE DIAMETERS UPSTREAM FROM ANY VALVE, ELBOW OR OTHER SOURCE OF TURBULENCE OR PER MANUFACTURER'S SPECIFICATIONS.
13. ALL POOL WATER EVACUATION SHALL BE TO AN APPROVED PLUMBING FIXTURE. ALL POOL WATER EVACUATION SHALL BE RECEIVED INTO THE SANITARY SEWER.
14. HEAT EXCHANGERS MUST MEET REQUIREMENTS FOR HEAT EXCHANGERS PER LOCAL AND STATE CODES.
15. PROVIDE AT LEAST THE MIN. REQUIRED SPACE AROUND THE HEAT EXCHANGER PER MFG. SPECS.
16. PROVIDE HEAT SINK OR CPVC PIPING IF RECOMMENDED BY HEAT EXCHANGER MANUFACTURER. INSTALL PER MANUFACTURER RECOMMENDATIONS.
17. PROVIDE A BY PASS VALVE AND PIPING AT HEAT EXCHANGER PER MANUFACTURERS RECOMMENDATIONS.
18. INSTALL A THERMOMETER ON HEAT EXCHANGER INFLUENT AND EFFLUENT PIPES AND IN THE POOL RETURN LINE A MINIMUM OF 5'-0" AFTER HEAT EXCHANGER BYPASS.
19. HEAT EXCHANGERS MUST MEET THE STATE & LOCAL CODES FOR HEAT EXCHANGER INSTALLATION.
20. ALL SELF PRIMING CIRCULATING PUMPS SHALL BE INSTALLED NO MORE THAN 2'-0" ABOVE THE OPERATING WATER LEVEL OF THE POOL BEING SERVED. ALL NON-SELF PRIMING PUMPS SHALL BE INSTALLED BELOW THE WATER LEVEL OF THE POOL.
21. PROVIDE A COMBINATION VACUUM/PRESSURE GAUGE ON THE SUCTION SIDE OF ALL PUMPS.
22. PROVIDE A PRESSURE GAUGE ON THE DISCHARGE SIDE OF ALL PUMPS.
23. FOR FEATURE PUMPS PROVIDE A COMBINATION VACUUM/PRESSURE GAUGE ON THE SUCTION SIDE OF THE PUMP AND A PRESSURE GAUGE ON THE DISCHARGE SIDE OF THE PUMP.
24. EYE WASH AND EMERGENCY SHOWER PROVIDED AND INSTALLED BY MECHANICAL. SEE "MECHANICAL AND PLUMBING ITEMS".

| SYMBOL | LEGEND |
|---|---|
| | VALVE |
| | VALVE |
| | VALVE |
| | VALVE |
| | VALVE |
| | VALVE |
| | VALVE |
| | VALVE |
| | VALVE |
| | CHECK VALVE |
| | CHECK VALVE |
| | VALVE |

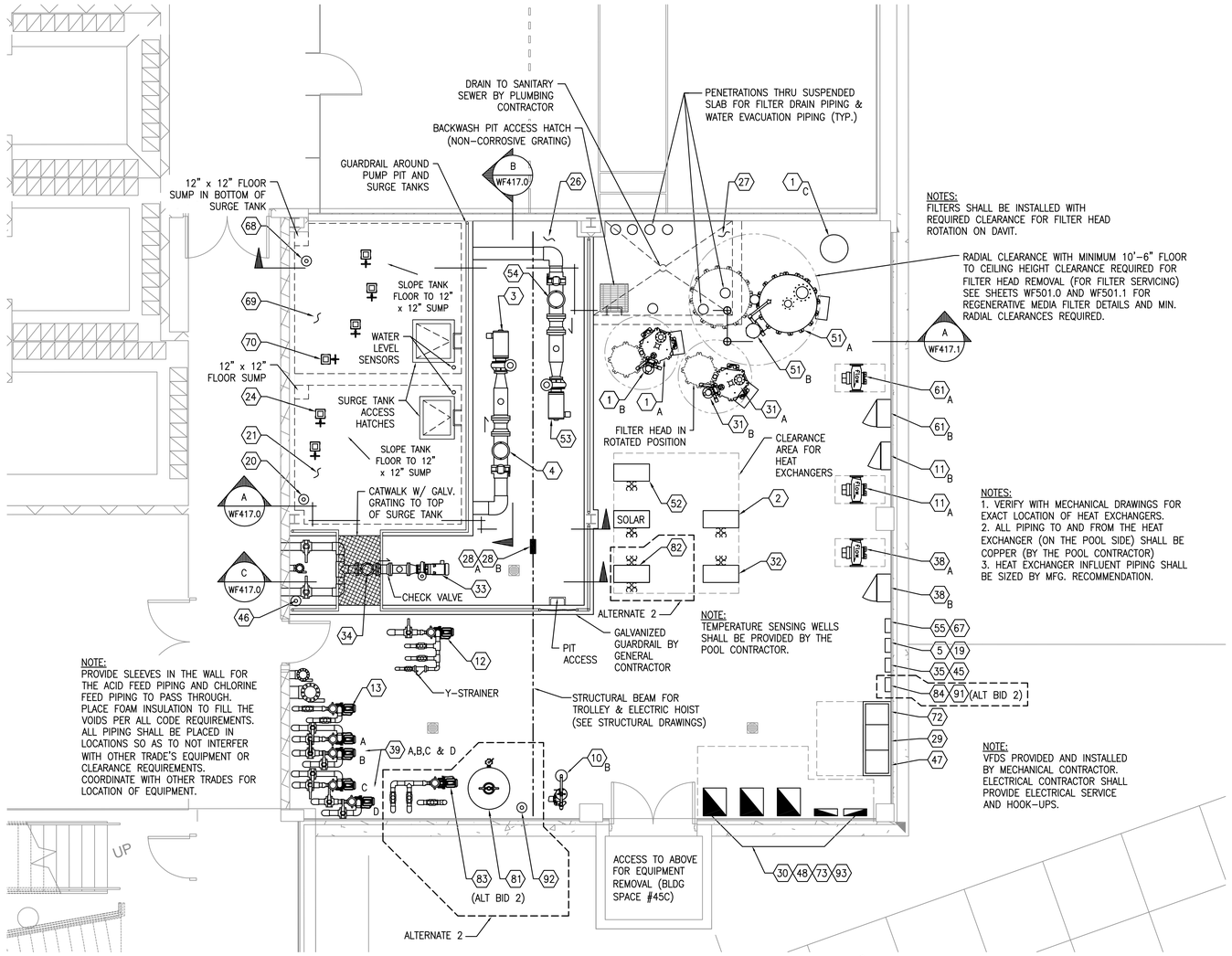


NOTES:
FILTERS SHALL BE INSTALLED WITH REQUIRED CLEARANCE FOR FILTER HEAD ROTATION ON DAVIT.

RADIAL CLEARANCE WITH MINIMUM 10'-6" FLOOR TO CEILING HEIGHT CLEARANCE REQUIRED FOR FILTER HEAD REMOVAL (FOR FILTER SERVICING) SEE SHEETS WF501.0 AND WF501.1 FOR REGENERATIVE MEDIA FILTER DETAILS AND MIN. RADIAL CLEARANCES REQUIRED.

NOTES:
1. VERIFY WITH MECHANICAL DRAWINGS FOR EXACT LOCATION OF HEAT EXCHANGERS.
2. ALL PIPING TO AND FROM THE HEAT EXCHANGER (ON THE POOL SIDE) SHALL BE COPPER (BY THE POOL CONTRACTOR)
3. HEAT EXCHANGER INFLUENT PIPING SHALL BE SIZED BY MFG. RECOMMENDATION.

NOTE:
TEMPERATURE SENSING WELLS SHALL BE PROVIDED BY THE POOL CONTRACTOR.

NOTE:
VFDS PROVIDED AND INSTALLED BY MECHANICAL CONTRACTOR. ELECTRICAL CONTRACTOR SHALL PROVIDE ELECTRICAL SERVICE AND HOOK-UPS.

NOTE:
PROVIDE SLEEVES IN THE WALL FOR THE ACID FEED PIPING AND CHLORINE FEED PIPING TO PASS THROUGH. PLACE FOAM INSULATION TO FILL THE VOIDS PER ALL CODE REQUIREMENTS. ALL PIPING SHALL BE PLACED IN LOCATIONS SO AS TO NOT INTERFER WITH OTHER TRADE'S EQUIPMENT OR CLEARANCE REQUIREMENTS. COORDINATE WITH OTHER TRADES FOR LOCATION OF EQUIPMENT.

## LOWER LEVEL POOL EQUIPMENT ROOM PLAN

SCALE: 1/8" = 1'-0"

## EQUIPMENT SCHEDULES:

FOR EQUIPMENT SCHEDULE HEXEGON REFERENCES, SEE SHEETS WF601.1 AND WF601.2

## NOTE:

ALL ITEMS SHOWN ON THIS SHEET ARE ALTERNATE BID ITEM 1 (UNLESS OTHERWISE NOTED AS BID ITEM 2)

The entire contents of the attached documents, including all sketches, plans, studies, drawings, schedules and specifications and all copyrights therein are, and shall remain the sole property of Water Design Incorporated. The documents and their contents may not be used, photocopied or reproduced digitally, electronically or in any other manner without the express prior written consent of Water Design Incorporated.

MHTN
ARCHITECTS
MHTN Architects, Inc.
420 East South Temple
Suite 100
Salt Lake City, Utah 84111
Telephone (801) 595-6700
Telefax (801) 595-6717
www.mhtn.com

Hastings+Chivetta
ARCHITECTURE • PLANNING • ENGINEERING
622 Emerson, Suite 200
St. Louis, MO 63141
Tel. 314.863.5717
Fax. 314.863.2823
www.hastingschivetta.com

Water Design Inc.
5047 S. Galleria Dr.
Murray, Utah 84123
Phone : (801) 261-4009
Fax : (801) 261-4069
www.waterdesigninc.com

BUILDING OFFICIAL STAMP

# UNIVERSITY OF UTAH
# STUDENT LIFE CENTER
1836 E. BALLIF ROAD
SALT LAKE CITY, UTAH 84112

SEAL

MHTN PROJECT NO.

DRAWN BY: ACR CHECKED BY: BA

ISSUED:

| NO. | DATE | DESCRIPTION |
|---|---|---|
| | | |

CONTRACTOR TO VERIFY DRAWINGS IN FIELD USE REFLECT LAST REVISION DATE.

| NO. | DATE | DESCRIPTION |
|---|---|---|
| | | |

SHEET NAME

POOL EQUIPMENT ROOM PLAN ALT BID 1

BID DOCUMENTS
MAY 15, 2013

SHEET NUMBER

WF407.0

NOTE:
1. ALL UNDERGROUND PIPING SHALL NOT RUN UNDER LOCKER ROOM PLUMBING FIXTURES.
2. PIPE SLEEVES SHALL BE PLACED DURING CONSTRUCTION OF ALL BUILDING WALL.
3. THERE SHALL BE NO CORE DRILLING THRU BUILDING WALL (UON).
4.COORDINATE WITH THE GENERAL CONTRACTOR AND THE STRUCTURAL CONSULTANT PRIOR TO PLACING SLEEVES.
5. DEEP PIPE (GUTTER AND MAIN DRAIN) SHALL BE EXTENDED PAST GRID LINE 6 AT THE TIME THE SLEEVES ARE BEING INSTALLED IN THE SURGE TANK. PIPING SHALL NOTUNDERMINE FOOTINGS. PIPE SHALL BE PLACED BELOW THE FOOTINGS AT GRID LINE 6.

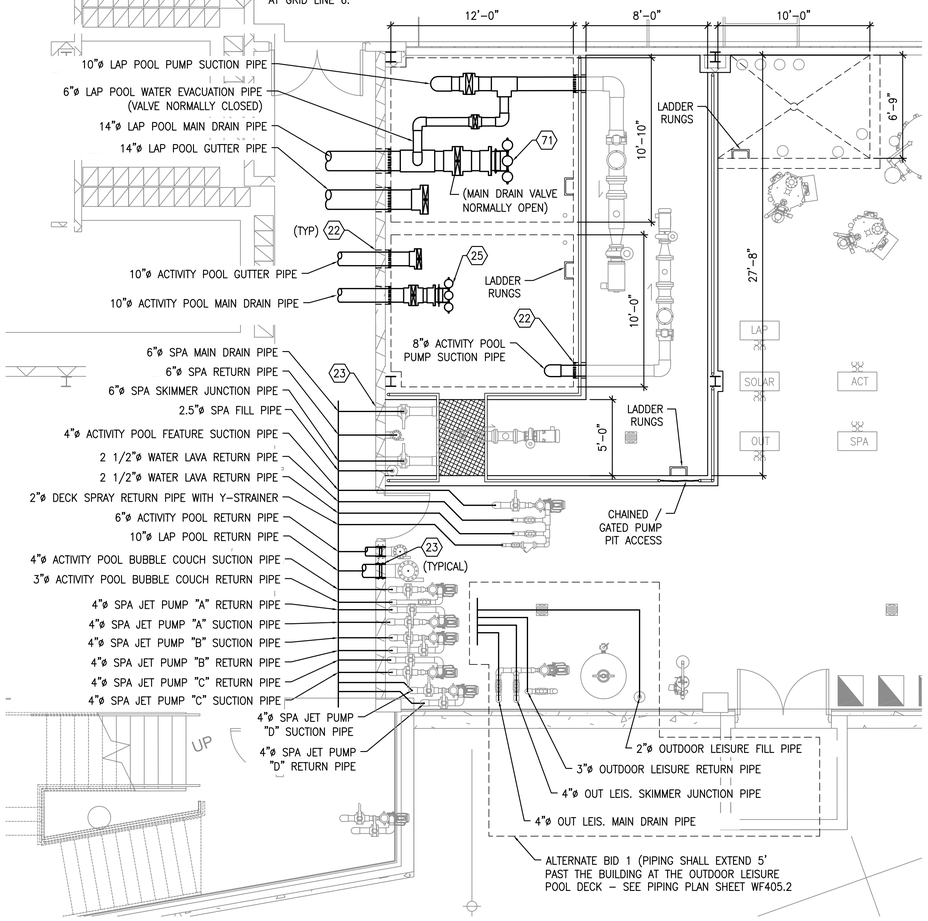


## POOL EQUIPMENT ROOM UNDERGROUND PIPING PLAN (ALTERNATE BID)

SCALE: 1/4" = 1'-0"

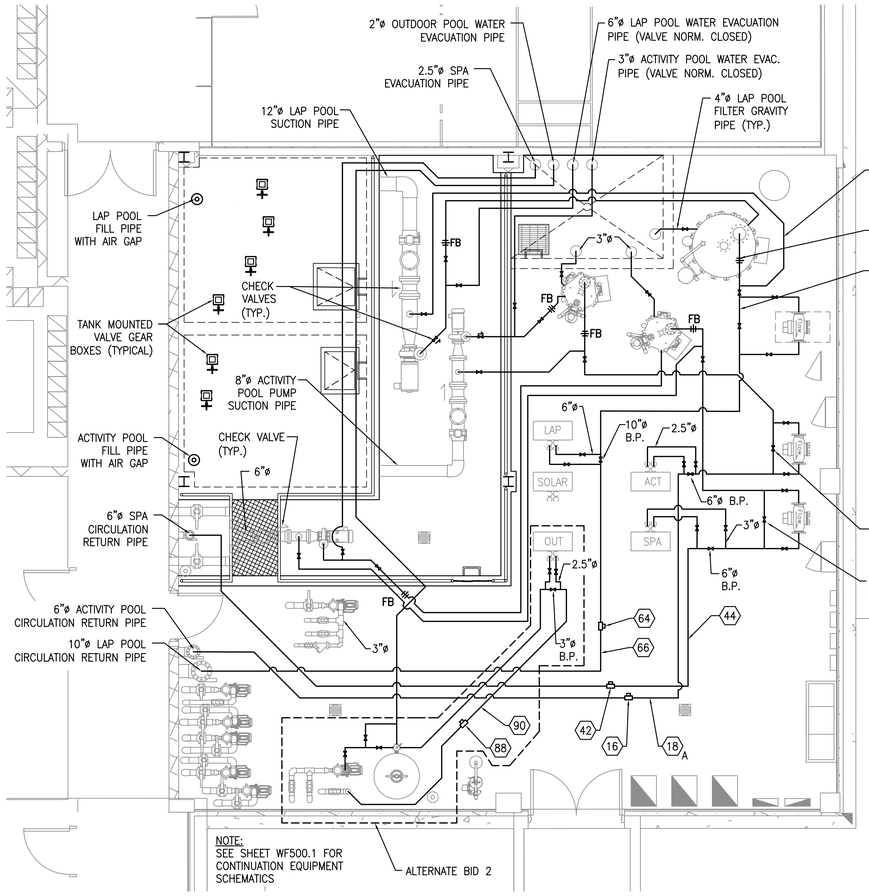


NOTE:
FOR ADDITIONAL FILTER PIPING CONFIGURATION INFORMATION, SEE FILTER SCHEMATIC SHEET WF500.0

NOTE:
1. VERIFY WITH MECHANICAL DRAWINGS FOR LOCATION OF MECHANICAL EQUIPMENT.
2. ALL PIPING TO AND FROM HEAT EXCHANGER BY POOL CONTRACTOR SHALL BE COPPER. SEE MECHANICAL SPECIFICATIONS FOR REQUIREMENTS.
3. HEAT EXCHANGER INFLUENT AND EFFLUENT PIPING SHALL BE SIZED PER MANUFACTURER'S RECOMMENDATION.

NOTE:
PIPES SHALL NOT RUN UNDER CRANE RAIL AREA FOR PUMP REMOVAL FROM THE PUMP PIT.

NOTE:
FOR CONTINUATION OF PIPING TO POOLS/SPA SEE SHEETS WF401.2, WF402.2, WF404.4, WF404.3, AND WF405.2

## POOL/SPA EQUIPMENT ROOM CIRCULATION FACE PIPING PLAN (ALTERNATE BID)

SCALE: 1/4" = 1'-0"

SYMBOL LEGEND

| | |
|---|---|
| VALVE | VALVE |
| VALVE | VALVE |
| VALVE | VALVE |
| VALVE | CHECK VALVE |
| VALVE | CHECK VALVE |
| VALVE | VALVE |
| FLANGE BREAK | |

**NOTE:**
ALL ITEMS ON THIS SHEET ARE ALTERNATE BID ITEM 1. (UNLESS OTHERWISE NOTED AS ALTERNATE BID ITEM 2.)

**EQUIPMENT SCHEDULES:**
FOR EQUIPMENT SCHEDULE HEXEGON REFERENCES, SEE SHEET WF601

The entire contents of the attached documents, including all sketches, plans, studies, drawings, schedules and specifications and all copyrights therein are, and shall remain the sole property of Water Design Incorporated. The documents and their contents may not be used, photocopied or reproduced digitally, electronically or in any other manner without the express prior written consent of Water Design Incorporated.

MHTN
ARCHITECTS
MHTN Architects, Inc.
420 East South Temple
Suite 100
Salt Lake City, Utah 84111
Telephone (801) 595-6700
Telefax (801) 595-6717
www.mhtn.com

Hastings+Chivetta
ARCHITECTURE • PLANNING • ENGINEERING
622 Emerson, Suite 200
St. Louis, MO 63141
Tel. 314.863.5717
Fax. 314.863.2823
www.hastingschivetta.com

Water Design Inc.
5047 S. Galleria Dr.
Murray, Utah 84123
Phone : (801) 261-4009
Fax : (801) 261-4069
www.waterdesigninc.com

BUILDING OFFICIAL STAMP

# UNIVERSITY OF UTAH
# STUDENT LIFE CENTER
1836 E. BALLIF ROAD
SALT LAKE CITY, UTAH 84112

SEAL

LICENSED PROFESSIONAL ENGINEER
CHARLES ROSS ANDERSON
14S0AB-2202
5-15-13
STATE OF UTAH

MHTN PROJECT NO.

DRAWN BY: ACR CHECKED BY: BA

ISSUED:

| NO. | DATE | DESCRIPTION |
|---|---|---|

CONTRACTOR TO VERIFY DRAWINGS IN FIELD USE REFLECT LAST REVISION DATE.

| NO. | DATE | DESCRIPTION |
|---|---|---|

SHEET NAME
POOL EQ ROOM PIPING PLAN ALT BID

BID DOCUMENTS
MAY 15, 2013

SHEET NUMBER
WF407.1

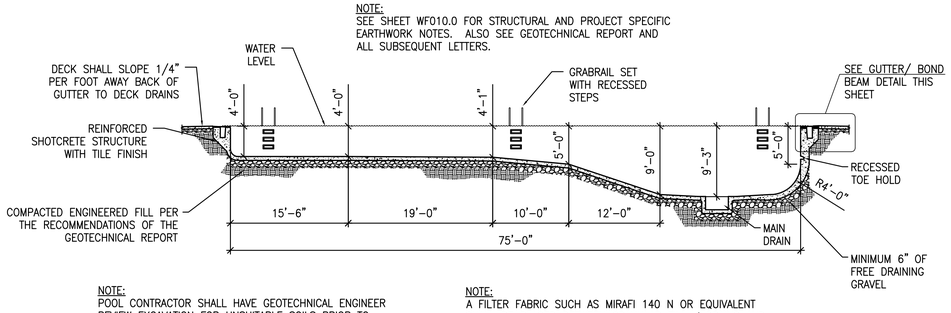


## ACTIVITY POOL LONGITUDINAL SECTION THRU DEEP END

SCALE: 1/8" = 1'-0"

A WF410

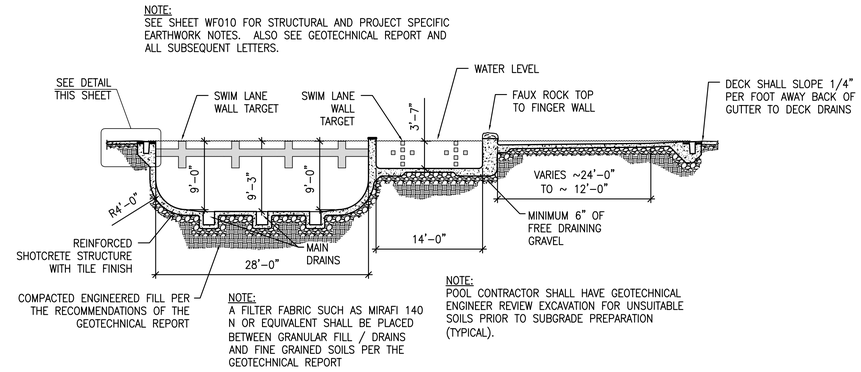


## ACTIVITY POOL CROSS SECTION THRU DEEP END AND SHALLOW ENTRY

SCALE: 1/8" = 1'-0"

B WF410

NOTE:
THE GUTTER POOL INTERIOR SHALL BE WATERPROOFED AND TILE FINISHED FOR PRE-LOADING OF WATER. THE ACTIVITY POOL SHALL BE PRE-LOADED WITH WATER TO NEAR FULL (TO WITHIN 2" OF TOP OF STRUCTURE AT GUTTER LIP) PRIOR TO PLACEMENT OF HORIZONTAL GUTTER LIP EDGE COPING STONE. THE POOL SHALL REMAIN FULL OF WATER FOR A DURATION OF TIME AS DETERMINED BY THE GEOTECHNICAL ENGINEER. POOL CONTRACTOR SHALL BE RESPONSIBLE FOR CIRCULATION, OPERATION, MAINTENANCE AND HAND SKIMMING OF POOL DURING THIS TIME. WATER LEVEL SHALL BE MAINTAINED ON VERTICAL EDGE TILE TO AVOID A SCUM LINE ON THE POOL FINISH. HORIZONTAL EDGE GUTTER STONE SHALL BE INSTALLED AFTER THE POOL HAS BEEN DETERMINED BY THE GEOTECHNICAL ENGINEER THAT THE PRE-LOADING TIME IS SUFFICIENT. THE COPING SHALL BE PLACED AND SHALL BE LEVEL TO A 1/16" TOLERANCE AROUND ENTIRE PERIMETER OF POOL TO ASSURE UNIFORM SKIMMING.

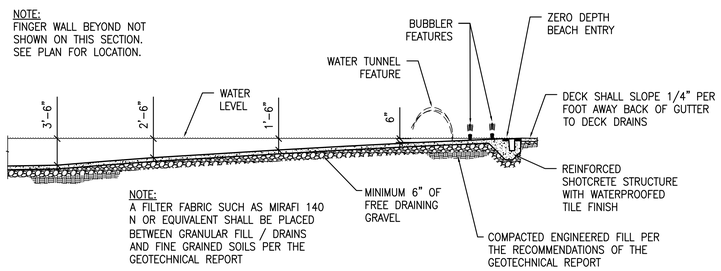


## ACTIVITY POOL LONGITUDINAL SECTION THRU ZERO ENTRY

SCALE: 1/8" = 1'-0"

C WF410

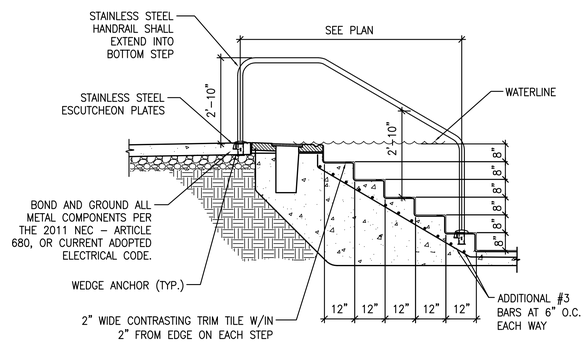


## ADA ENTRY STEP SECTION AT SWIM LANES

SCALE: 1/2" = 1'-0"

D WF410

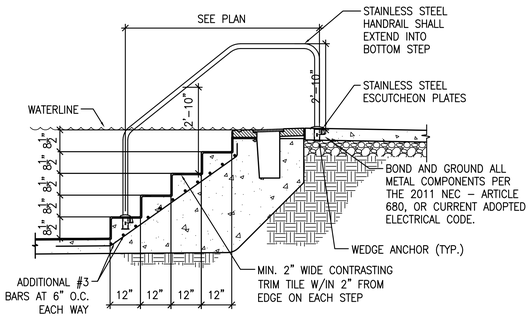


## ENTRY STEP SECTION AT ACTIVITY POOL

SCALE: 1/2" = 1'-0"

E WF410

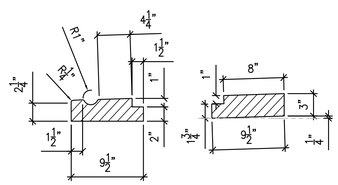


## TYPICAL COPING DIMENSION DETAIL

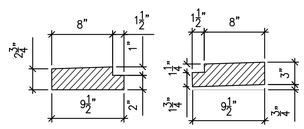


## ZERO ENTRY COPING DIMENSION DETAIL

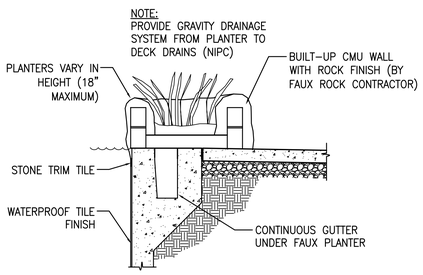


## FAUX ROCK / PLANTER SECTION

SCALE: 1/2" = 1'-0"

F WF410

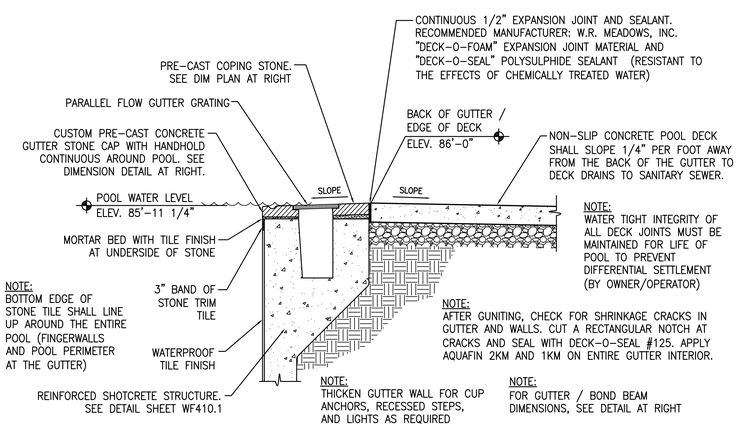


## POOL GUTTER/ BOND BEAM DETAIL

SCALE: 3/4" = 1'-0"

1 WF410

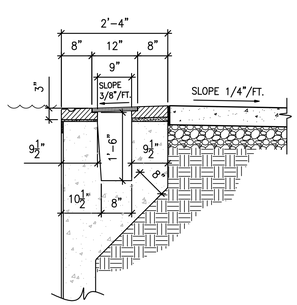


## POOL GUTTER DIMENSION DETAIL

SCALE: 3/4" = 1'-0"

2 WF410

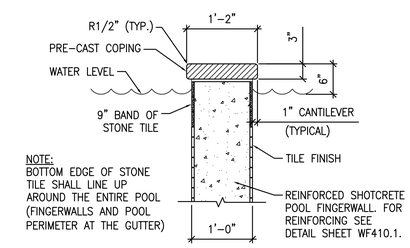


## FINGER WALL AT LAP LANES DETAIL

SCALE: 1" = 1'-0"

3 WF410

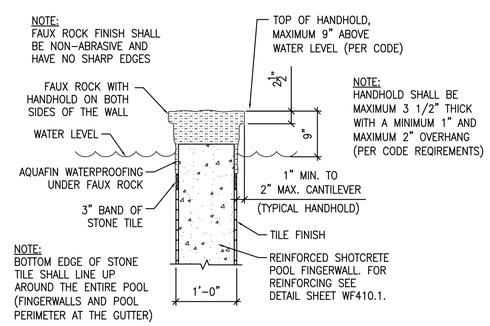


## FINGER WALL AT ACTIVITY AREA DETAIL

SCALE: 1" = 1'-0"

4 WF410

The entire contents of the attached documents, including all sketches, plans, studies, drawings, schedules and specifications and all copyrights therein are, and shall remain the sole property of Water Design Incorporated. The documents and their contents may not be used, photocopied or reproduced digitally, electronically or in any other manner without the express prior written consent of Water Design Incorporated.

MHTN
ARCHITECTS
MHTN Architects, Inc.
420 East South Temple
Suite 100
Salt Lake City, Utah 84111
Telephone (801) 595-6700
Telefax (801) 595-6717
www.mhtn.com

Hastings+Chivetta
ARCHITECTURE • PLANNING • ENGINEERING
622 Emerson, Suite 200
St. Louis, MO 63141
Tel. 314.863.5717
Fax. 314.863.2823
www.hastingschivetta.com

Water Design Inc.
5047 S. Galleria Dr.
Murray, Utah 84123
Phone : (801) 261-4009
Fax : (801) 261-4069
www.waterdesigninc.com

BUILDING OFFICIAL STAMP

# UNIVERSITY OF UTAH
# STUDENT LIFE CENTER
1836 E. BALLIF ROAD
SALT LAKE CITY, UTAH 84112

SEAL

LICENSED PROFESSIONAL ENGINEER
CHARLES ROSS ANDERSON
145580-2202
5-15-13
STATE OF UTAH

MHTN PROJECT NO.

DRAWN BY: ACR CHECKED BY: BA

ISSUED:

| NO. | DATE | DESCRIPTION |
|---|---|---|

CONTRACTOR TO VERIFY DRAWINGS IN FIELD USE REFLECT LAST REVISION DATE.

| NO. | DATE | DESCRIPTION |
|---|---|---|

SHEET NAME

ACTIVITY POOL SECTIONS

BID DOCUMENTS
MAY 15, 2013

SHEET NUMBER

WF410.0

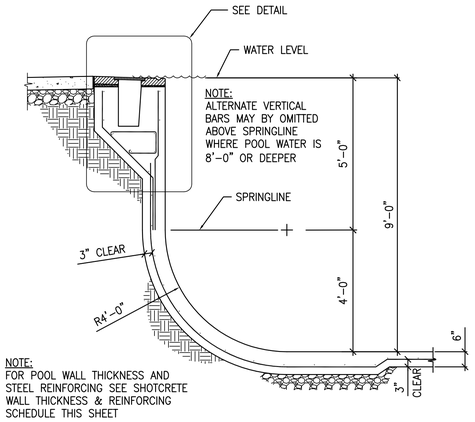


## POOL WALL STRUCTURAL SECTION AT 9' DEPTH

SCALE: 1/2" = 1'-0" — A / WF410.1

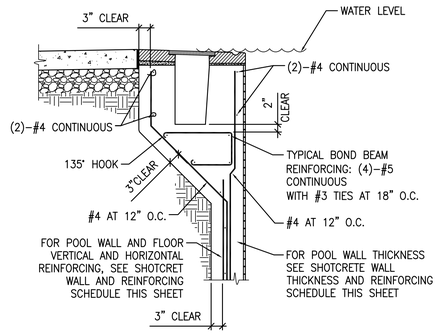


## GUTTER BOND BEAM STRUCTURAL DETAIL

SCALE: 3/4" = 1'-0" — 1 / WF410.1

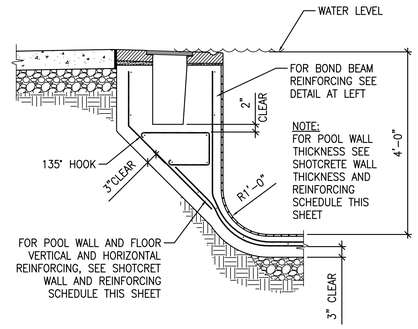


## POOL WALL STRUCTURAL SECTION AT 4'-0" DEPTH

SCALE: 3/4" = 1'-0" — B / WF410.1

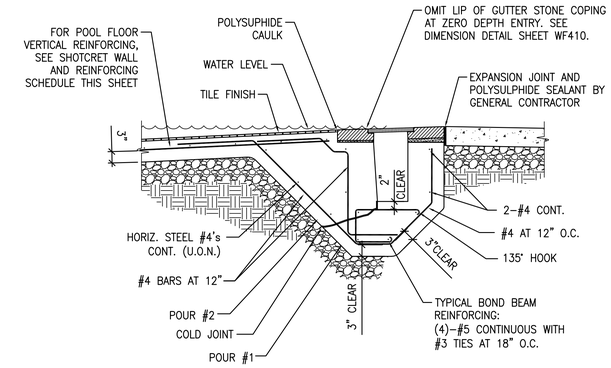


## POOL WALL STRUCTURAL SECTION AT ZERO DEPTH BEACH ENTRY

SCALE: 3/4" = 1'-0" — C / WF410.1

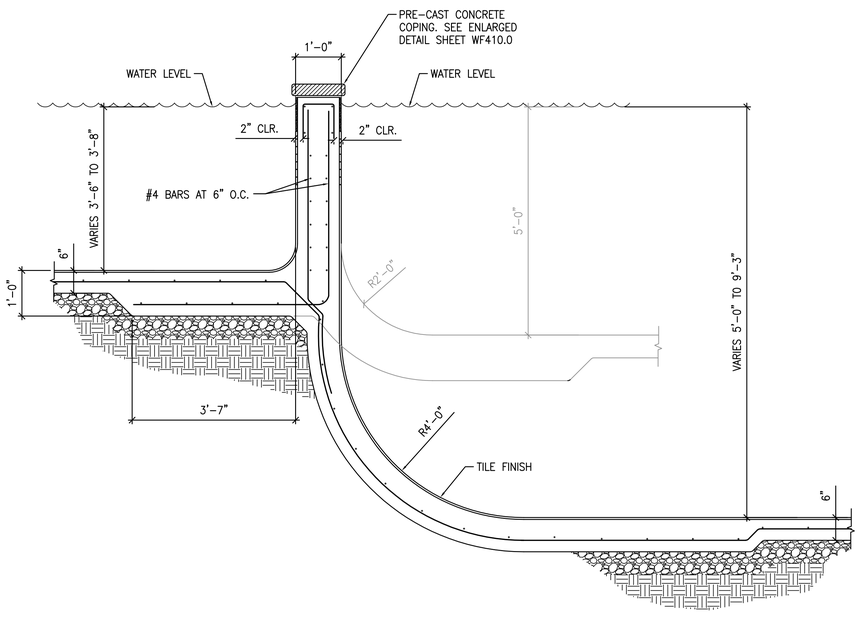


## POOL FINGERWALL STRUCTURAL SECTION AT DEEP END LANES

SCALE: 3/4" = 1'-0" — D / WF410.1

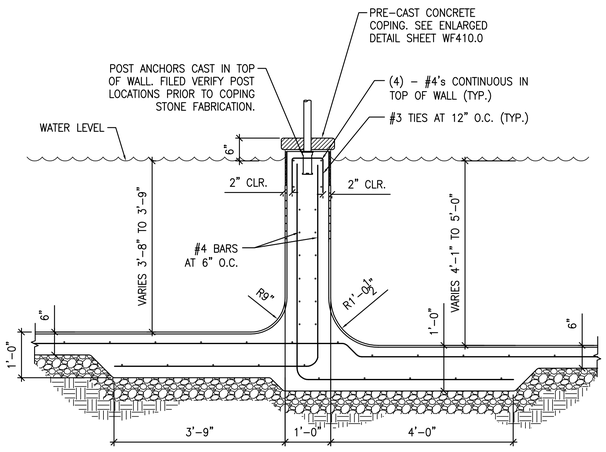


## POOL FINGERWALL STRUCTURAL SECTION AT SHALLOW END LANES

SCALE: 3/4" = 1'-0" — E / WF410.1

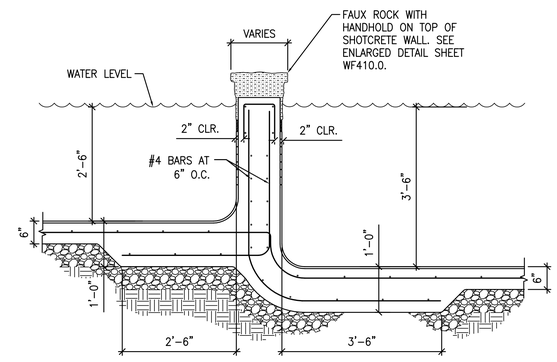


## POOL FINGERWALL STRUCTURAL SECTION AT ACTIVITY AREA

SCALE: 3/4" = 1'-0" — F / WF410.1

## POOL AND SPA SHOTCRETE WALL THICKNESS AND REINFORCING SCHEDULE

REINFORCING STEEL GRADE 60

| WATER DEPTH (UP TO) | SPRINGLINE | COVE RADIUS | WALL THICKNESS | VERTICAL REINFORCING SIZE | VERTICAL REINFORCING SPACING | HORIZONTAL REINFORCING SIZE | HORIZONTAL REINFORCING SPACING |
|---|---|---|---|---|---|---|---|
| 5'-0" | 3'-0" | UP TO 2'-0" | 6" | #4 | 12" | #4 | 12" |
| 6'-0" | 3'-6" | 2'-6" | 7 | #4 | 12" | #4 | 12" |
| 7'-0" | 4'-0" | 3'-0" | 7" | #4 | 6" | #4 | 12" |
| 8'-0" | 4'-6" | 3'-6" | 9" | #4 | 6" | #4 | 12" |
| 9'-0" | 5'-0" | 4'-0" | 9" | #4 | 4" | #4 | 12" |
| 10'-3" | 5'-0" | 5'-0" | 10" | #4 | 3" | #4 | 11" |

POOL FLOOR SHALL BE 6 INCHES THICK WITH #4 BARS AT 12" O.C. EACH WAY (UNLESS OTHERWISE NOTED IN SECTIONS – SPA FLOOR 21" THICK)

PROVIDE CORNER BARS WITH 18" LAP AT EACH HORIZONTAL BAR AT CORNERS

AT RE-ENTRANT CORNERS, PROVIDE ADDITIONAL #4 BARS AT 12" O.C. IN FLOOR. (6'-0" LONG EACH)

EQUIVALENT FLUID PRESSURE: = 50 LBS PER CUBIC FOOT.

ALL STEEL LAPS SHALL BE A MINIMUM 40 BAR DIAMETERS.

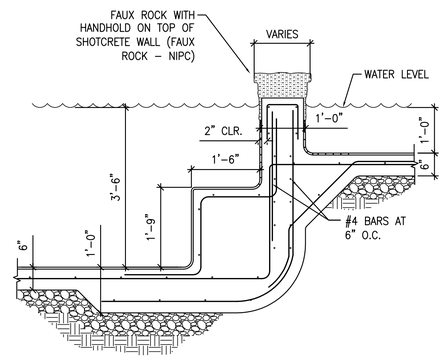


## POOL FINGERWALL STRUCTURAL SECTION AT ACTIVITY POOL BUBBLE COUCH

SCALE: 3/4" = 1'-0" — G / WF410.1

The entire contents of the attached documents, including all sketches, plans, studies, drawings, schedules and specifications and all copyrights therein are, and shall remain the sole property of Water Design Incorporated. The documents and their contents may not be used, photocopied or reproduced digitally, electronically or in any other manner without the express prior written consent of Water Design Incorporated.

MHTN ARCHITECTS
MHTN Architects, Inc.
420 East South Temple
Suite 100
Salt Lake City, Utah 84111
Telephone (801) 595-6700
Telefax (801) 595-6717
www.mhtn.com

Hastings+Chivetta
ARCHITECTURE • PLANNING • ENGINEERING
622 Emerson, Suite 200
St. Louis, MO 63141
Tel. 314.863.5717
Fax. 314.863.2823
www.hastingschivetta.com

Water Design Inc.
5047 S. Galleria Dr.
Murray, Utah 84123
Phone : (801) 261-4009
Fax : (801) 261-4069
www.waterdesigninc.com

BUILDING OFFICIAL STAMP

# UNIVERSITY OF UTAH
# STUDENT LIFE CENTER
1836 E. BALLIF ROAD
SALT LAKE CITY, UTAH 84112

SEAL

MHTN PROJECT NO.

DRAWN BY: ACR CHECKED BY: BA

ISSUED:

| NO. | DATE | DESCRIPTION |
|---|---|---|

CONTRACTOR TO VERIFY DRAWINGS IN FIELD USE REFLECT LAST REVISION DATE.

| NO. | DATE | DESCRIPTION |
|---|---|---|

SHEET NAME

ACTIVITY POOL SECTIONS

BID DOCUMENTS
MAY 15, 2013

SHEET NUMBER

WF410.1

NOTE:
SEE SHEET WF010.1 FOR STRUCTURAL AND PROJECT SPECIFIC EARTHWORK NOTES. ALSO SEE GEOTECHNICAL REPORT AND ALL SUBSEQUENT LETTERS.

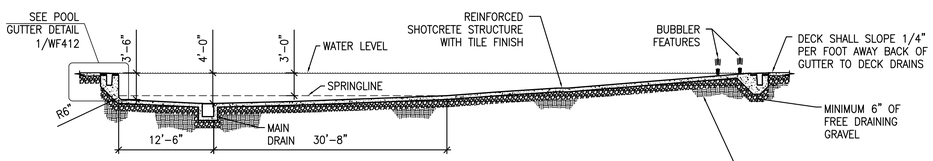


NOTE:
A FILTER FABRIC SUCH AS MIRAFI 140 N OR EQUIVALENT SHALL BE PLACED BETWEEN GRANULAR FILL / DRAINS AND FINE GRAINED SOILS PER THE GEOTECHNICAL REPORT

NOTE:
POOL CONTRACTOR SHALL HAVE GEOTECHNICAL ENGINEER REVIEW EXCAVATION FOR UNSUITABLE SOILS PRIOR TO SUBGRADE PREPARATION (TYPICAL).

## ACTIVITY POOL LONGITUDINAL SECTION

SCALE: 1/8" = 1'-0"

A WF411.0

NOTE:
THE GUTTER POOL INTERIOR SHALL BE WATERPROOFED AND TILE FINISHED FOR PRE-LOADING OF WATER. THE ACTIVITY POOL SHALL BE PRE-LOADED WITH WATER TO NEAR FULL (TO WITHIN 2" OF TOP OF STRUCTURE AT GUTTER LIP) PRIOR TO PLACEMENT OF HORIZONTAL GUTTER LIP EDGE COPING STONE. THE POOL SHALL REMAIN FULL OF WATER FOR A DURATION OF TIME AS DETERMINED BY THE GEOTECHNICAL ENGINEER. POOL CONTRACTOR SHALL BE RESPONSIBLE FOR CIRCULATION, OPERATION, MAINTENANCE AND HAND SKIMMING OF POOL DURING THIS TIME. WATER LEVEL SHALL BE MAINTAINED ON VERTICAL EDGE TILE TO AVOID A SCUM LINE ON THE POOL FINISH. HORIZONTAL EDGE GUTTER STONE SHALL BE INSTALLED AFTER THE POOL HAS BEEN DETERMINED BY THE GEOTECHNICAL ENGINEER THAT THE PRE-LOADING TIME IS SUFFICIENT. THE COPING SHALL BE PLACED AND SHALL BE LEVEL TO A 1/16" TOLERANCE AROUND ENTIRE PERIMETER OF POOL TO ASSURE UNIFORM SKIMMING.

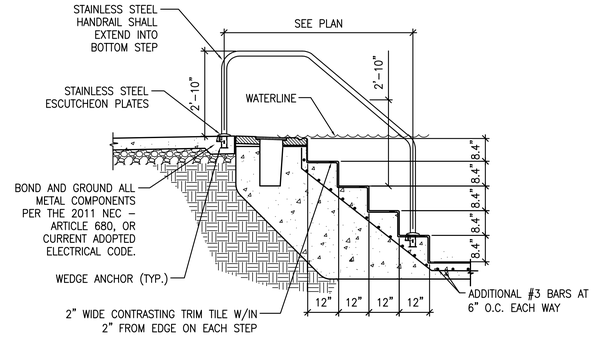


## ENTRY STEP SECTION AT BUBBLE COUCH

SCALE: 1/2" = 1'-0"

B WF411.0

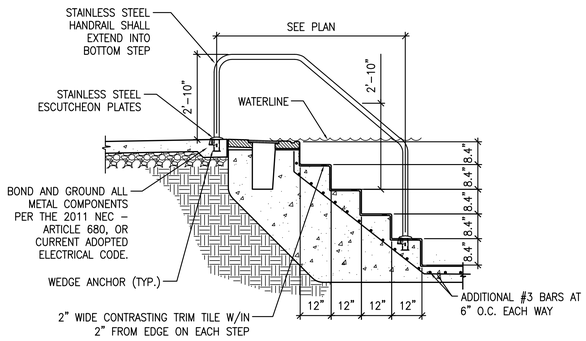


## ENTRY STEP SECTION NEAR SITTING BENCH

SCALE: 1/2" = 1'-0"

C WF411.0

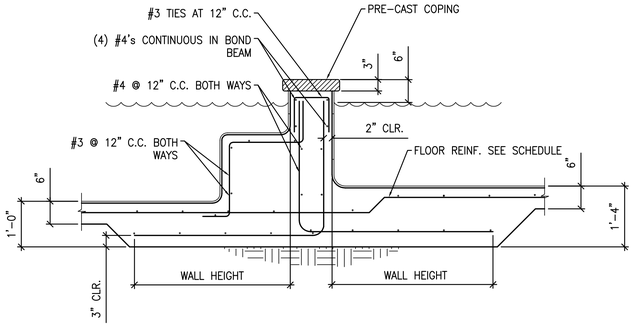


## SECTRION THRU FINGER WALL AT BENCH

SCALE: 3/4" = 1'-0"

D WF411.0

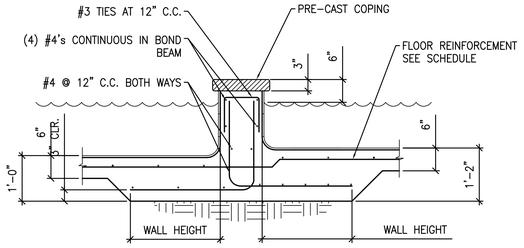


## FINGER WALL AT SHALLOW AREA

SCALE: 3/4" = 1'-0"

E WF411.0

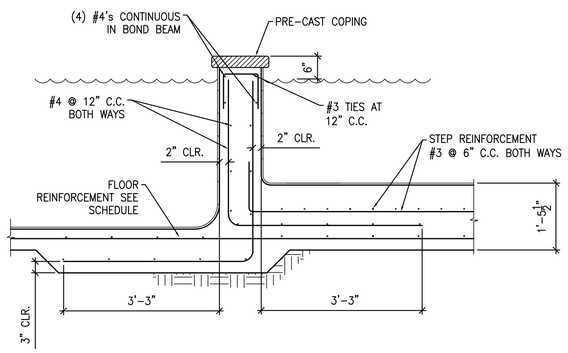


## SECTRION THRU FINGER WALL AT STAIRS

SCALE: 3/4" = 1'-0"

F WF411.0

SEE REINFORCING SCHEDULE
SHEET WF410.1

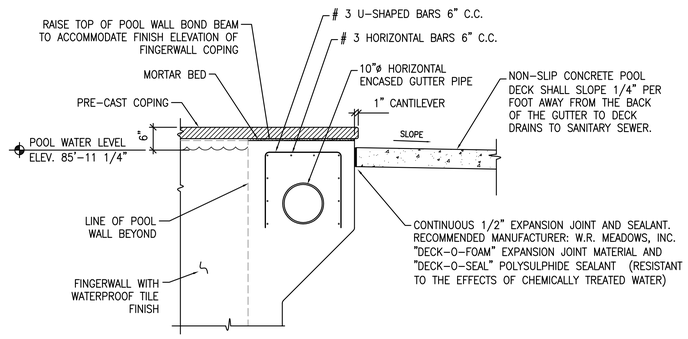


## FINGER WALL AT GUTTER DETAIL

SCALE: 3/4" = 1'-0"

G WF411.0

The entire contents of the attached documents, including all sketches, plans, studies, drawings, schedules and specifications and all copyrights therein are, and shall remain the sole property of Water Design Incorporated. The documents and their contents may not be used, photocopied or reproduced digitally, electronically or in any other manner without the express prior written consent of Water Design Incorporated.

MHTN
ARCHITECTS
MHTN Architects, Inc.
420 East South Temple
Suite 100
Salt Lake City, Utah 84111
Telephone (801) 595-6700
Telefax (801) 595-6717
www.mhtn.com

Hastings+Chivetta
ARCHITECTURE • PLANNING • ENGINEERING
622 Emerson, Suite 200
St. Louis, MO 63141
Tel. 314.863.5717
Fax. 314.863.2823
www.hastingschivetta.com

Water Design Inc.
5047 S. Galleria Dr.
Murray, Utah 84123
Phone : (801) 261-4009
Fax : (801) 261-4069
www.waterdesigninc.com

BUILDING OFFICIAL STAMP

# UNIVERSITY OF UTAH
# STUDENT LIFE CENTER
1836 E. BALLIF ROAD
SALT LAKE CITY, UTAH 84112

SEAL

LICENSED PROFESSIONAL ENGINEER
CHARLES ROSS ANDERSON
145589-2202
5-15-13
STATE OF UTAH

MHTN PROJECT NO.

DRAWN BY: ACR CHECKED BY: BA

ISSUED:

| NO. | DATE | DESCRIPTION |
|---|---|---|
| | | |

CONTRACTOR TO VERIFY DRAWINGS IN FIELD USE REFLECT LAST REVISION DATE.

| NO. | DATE | DESCRIPTION |
|---|---|---|
| | | |

SHEET NAME

ACTIVITY POOL SECTIONS - ALTERNATE BID 1

BID DOCUMENTS
MAY 15, 2013

SHEET NUMBER

WF411.0

NOTE:
SEE SHEET WF010.0 FOR STRUCTURAL AND PROJECT SPECIFIC EARTHWORK NOTES.
ALSO SEE GEOTECHNICAL REPORT AND ALL SUBSEQUENT LETTERS.

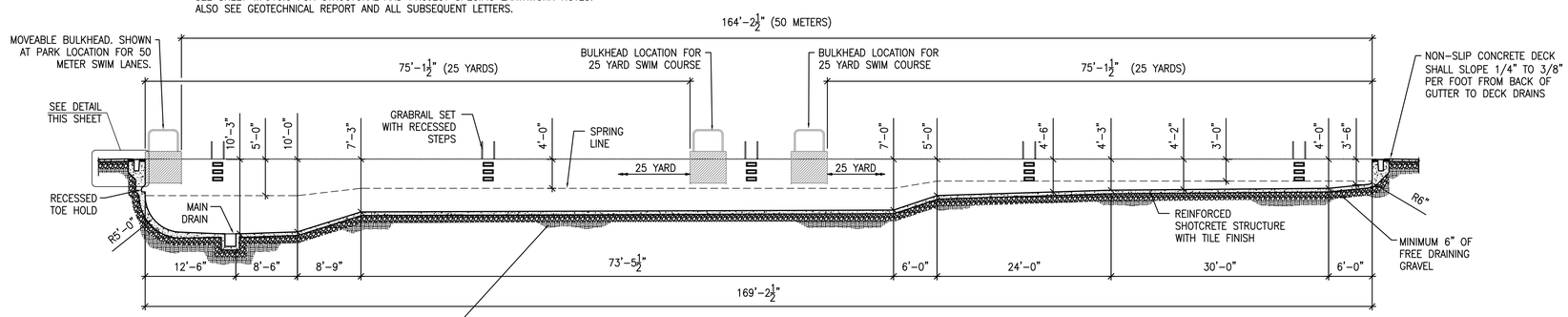


NOTE:
POOL CONTRACTOR SHALL HAVE GEOTECHNICAL ENGINEER REVIEW EXCAVATION FOR UNSUITABLE SOILS PRIOR TO SUBGRADE PREPARATION (TYPICAL).

NOTE:
A FILTER FABRIC SUCH AS MIRAFI 140 N OR EQUIVALENT SHALL BE PLACED BETWEEN GRANULAR FILL / DRAINS AND FINE GRAINED SOILS PER THE GEOTECHNICAL REPORT

## LAP POOL LONGITUDINAL SECTION

SCALE: 1/8" = 1'-0"

A / WF412.0

NOTE:
SEE SHEET WF010.0 FOR STRUCTURAL AND PROJECT SPECIFIC EARTHWORK NOTES. ALSO SEE GEOTECHNICAL REPORT AND ALL SUBSEQUENT LETTERS.

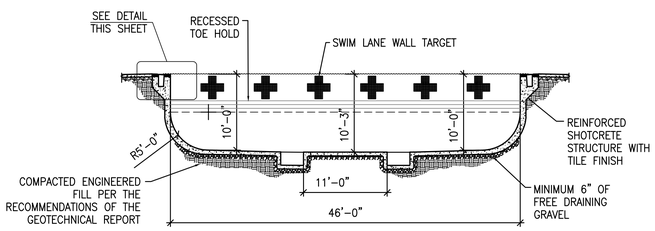


NOTE:
POOL CONTRACTOR SHALL HAVE GEOTECHNICAL ENGINEER REVIEW EXCAVATION FOR UNSUITABLE SOILS PRIOR TO SUBGRADE PREPARATION (TYPICAL).

NOTE:
A FILTER FABRIC SUCH AS MIRAFI 140 N OR EQUIVALENT SHALL BE PLACED BETWEEN GRANULAR FILL / DRAINS AND FINE GRAINED SOILS PER THE GEOTECHNICAL REPORT

## LAP POOL CROSS SECTION THRU DEEP END

SCALE: 1/8" = 1'-0"

B / WF412.0

NOTE:
SEE SHEET WF010.0 FOR STRUCTURAL AND PROJECT SPECIFIC EARTHWORK NOTES. ALSO SEE GEOTECHNICAL REPORT AND ALL SUBSEQUENT LETTERS.

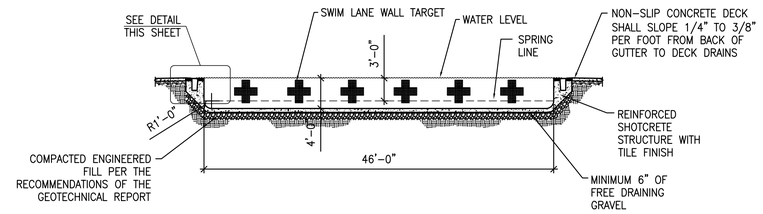


NOTE:
POOL CONTRACTOR SHALL HAVE GEOTECHNICAL ENGINEER REVIEW EXCAVATION FOR UNSUITABLE SOILS PRIOR TO SUBGRADE PREPARATION (TYPICAL).

NOTE:
A FILTER FABRIC SUCH AS MIRAFI 140 N OR EQUIVALENT SHALL BE PLACED BETWEEN GRANULAR FILL / DRAINS AND FINE GRAINED SOILS PER THE GEOTECHNICAL REPORT

## LAP POOL CROSS SECTION THRU SHALLOW END

SCALE: 1/8" = 1'-0"

C / WF412.0

NOTE:
THE GUTTER POOL INTERIOR SHALL BE WATERPROOFED AND TILE FINISHED FOR PRE-LOADING OF WATER. THE ACTIVITY POOL SHALL BE PRE-LOADED WITH WATER TO NEAR FULL (TO WITHIN 2" OF TOP OF STRUCTURE AT GUTTER LIP) PRIOR TO PLACEMENT OF HORIZONTAL GUTTER LIP EDGE COPING STONE. THE POOL SHALL REMAIN FULL OF WATER FOR A DURATION OF TIME AS DETERMINED BY THE GEOTECHNICAL ENGINEER. POOL CONTRACTOR SHALL BE RESPONSIBLE FOR CIRCULATION, OPERATION, MAINTENANCE AND HAND SKIMMING OF POOL DURING THIS TIME. WATER LEVEL SHALL BE MAINTAINED ON VERTICAL EDGE TILE TO AVOID A SCUM LINE ON THE POOL FINISH. HORIZONTAL EDGE GUTTER STONE SHALL BE INSTALLED AFTER THE POOL HAS BEEN DETERMINED BY THE GEOTECHNICAL ENGINEER THAT THE PRE-LOADING TIME IS SUFFICIENT. THE COPING SHALL BE PLACED AND SHALL BE LEVEL TO A 1/16" TOLERANCE AROUND ENTIRE PERIMETER OF POOL TO ASSURE UNIFORM SKIMMING.

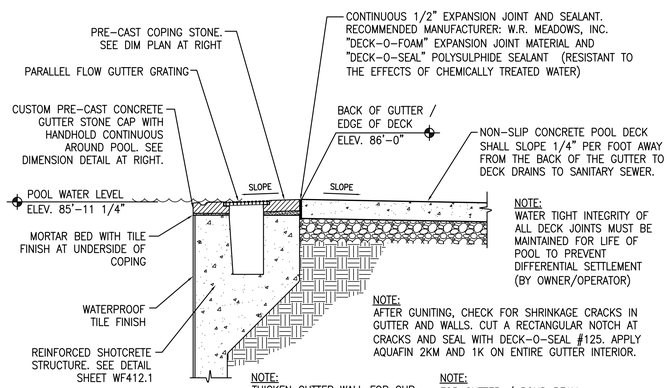


NOTE:
WATER TIGHT INTEGRITY OF ALL DECK JOINTS MUST BE MAINTAINED FOR LIFE OF POOL TO PREVENT DIFFERENTIAL SETTLEMENT (BY OWNER/OPERATOR)

NOTE:
AFTER GUNITING, CHECK FOR SHRINKAGE CRACKS IN GUTTER AND WALLS. CUT A RECTANGULAR NOTCH AT CRACKS AND SEAL WITH DECK-O-SEAL #125. APPLY AQUAFIN 2KM AND 1K ON ENTIRE GUTTER INTERIOR.

NOTE:
THICKEN GUTTER WALL FOR CUP ANCHORS, RECESSED STEPS, AND LIGHTS AS REQUIRED

NOTE:
FOR GUTTER / BOND BEAM DIMENSIONS, SEE DETAIL AT RIGHT

## POOL GUTTER DETAIL

SCALE: 3/4" = 1'-0"

1 / WF412.0

NOTE:
SEE DETAIL AT RIGHT FOR COPING DIMENSIONS

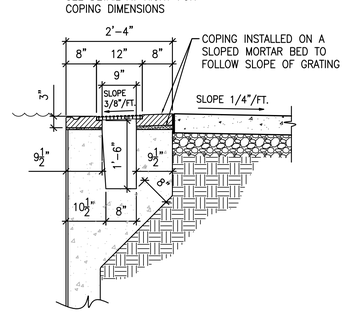


## POOL GUTTER DIMENSION DETAIL

SCALE: 3/4" = 1'-0"

3 / WF412.0

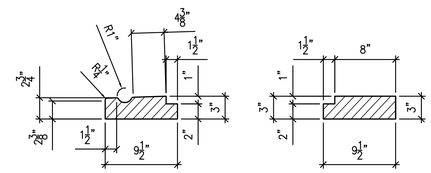


## GUTTER COPING ENLARGED DIMENSION DETAIL

SCALE: 1 1/2" = 1'-0"

The entire contents of the attached documents, including all sketches, plans, studies, drawings, schedules and specifications and all copyrights therein are, and shall remain the sole property of Water Design Incorporated. The documents and their contents may not be used, photocopied or reproduced digitally, electronically or in any other manner without the express prior written consent of Water Design Incorporated.

MHTN
ARCHITECTS
MHTN Architects, Inc.
420 East South Temple
Suite 100
Salt Lake City, Utah 84111
Telephone (801) 595-6700
Telefax (801) 595-6717
www.mhtn.com

Hastings+Chivetta
ARCHITECTURE • PLANNING • ENGINEERING
622 Emerson, Suite 200
St. Louis, MO 63141
Tel. 314.863.5717
Fax. 314.863.2823
www.hastingschivetta.com

Water Design Inc.
5047 S. Galleria Dr.
Murray, Utah 84123
Phone : (801) 261-4009
Fax : (801) 261-4069
www.waterdesigninc.com

BUILDING OFFICIAL STAMP

# UNIVERSITY OF UTAH
# STUDENT LIFE CENTER
1836 E. BALLIF ROAD
SALT LAKE CITY, UTAH 84112

SEAL

MHTN PROJECT NO.

DRAWN BY: ACR CHECKED BY: BA

ISSUED:

| NO. | DATE | DESCRIPTION |
|---|---|---|
| | | |

CONTRACTOR TO VERIFY DRAWINGS IN FIELD USE REFLECT LAST REVISION DATE.

| NO. | DATE | DESCRIPTION |
|---|---|---|
| | | |

SHEET NAME

LAP POOL SECTIONS ALTERNATE BID 1

BID DOCUMENTS
MAY 15, 2013

SHEET NUMBER

WF412.0

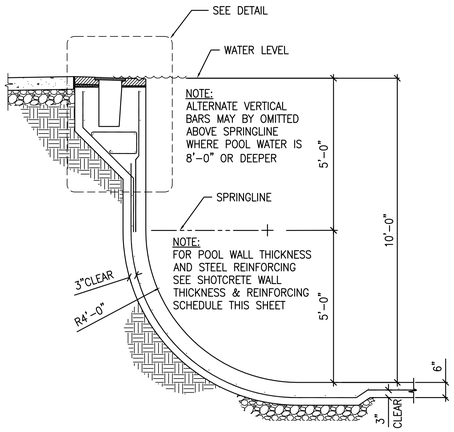


## POOL SIDE WALL STRUCTURAL SECTION AT 10' DEPTH

SCALE: 1/2" = 1'-0"

A / WF412.1

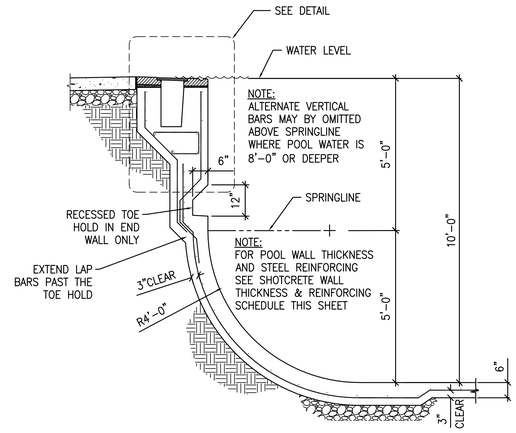


## POOL END WALL STRUCTURAL SECTION AT 10' DEPTH

SCALE: 1/2" = 1'-0"

B / WF412.1

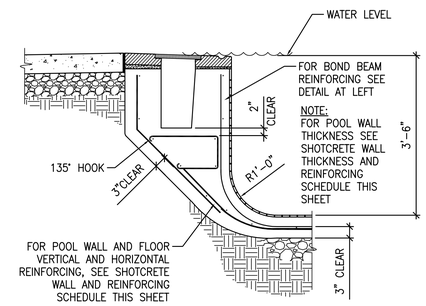


## POOL WALL STRUCTURAL SECTION AT 3'-6" DEPTH

SCALE: 3/4" = 1'-0"

C / WF412.1

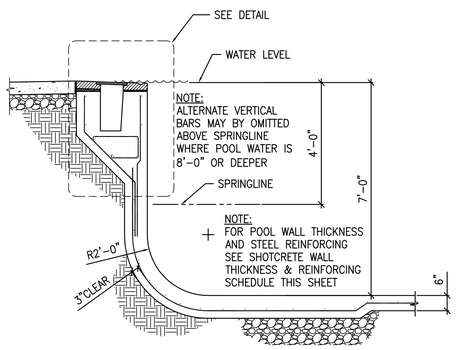


## POOL WALL STRUCTURAL SECTION AT 7' DEPTH

SCALE: 1/2" = 1'-0"

D / WF412.1

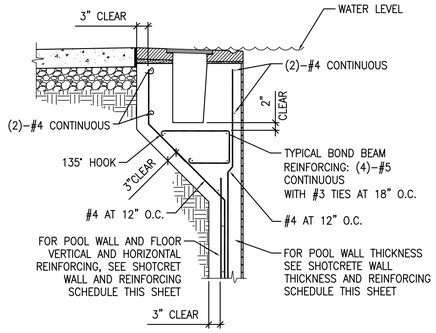


## GUTTER BOND BEAM STRUCTURAL DETAIL

SCALE: 3/4" = 1'-0"

1 / WF412.1

SEE REINFORCING SCHEDULE SHEET WF410.1

The entire contents of the attached documents, including all sketches, plans, studies, drawings, schedules and specifications and all copyrights therein are, and shall remain the sole property of Water Design Incorporated. The documents and their contents may not be used, photocopied or reproduced digitally, electronically or in any other manner without the express prior written consent of Water Design Incorporated.

MHTN
ARCHITECTS
MHTN Architects, Inc.
420 East South Temple
Suite 100
Salt Lake City, Utah 84111
Telephone (801) 595-6700
Telefax (801) 595-6717
www.mhtn.com

Hastings+Chivetta
ARCHITECTURE • PLANNING • ENGINEERING
622 Emerson, Suite 200
St. Louis, MO 63141
Tel. 314.863.5717
Fax. 314.863.2823
www.hastingschivetta.com

Water Design Inc.
5047 S. Galleria Dr.
Murray, Utah 84123
Phone : (801) 261-4009
Fax : (801) 261-4069
www.waterdesigninc.com

BUILDING OFFICIAL STAMP

# UNIVERSITY OF UTAH
# STUDENT LIFE CENTER
1836 E. BALLIF ROAD
SALT LAKE CITY, UTAH 84112

SEAL

LICENSED PROFESSIONAL ENGINEER
CHARLES ROSS ANDERSON
145589-2202
5-15-13
STATE OF UTAH

MHTN PROJECT NO.

DRAWN BY: ACR CHECKED BY: BA

ISSUED:

| NO. | DATE | DESCRIPTION |
|---|---|---|
| | | |

CONTRACTOR TO VERIFY DRAWINGS IN FIELD USE REFLECT LAST REVISION DATE.

| NO. | DATE | DESCRIPTION |
|---|---|---|
| | | |

SHEET NAME

LAP POOL SECTIONS ALTERNATE BID 1

BID DOCUMENTS
MAY 15, 2013

SHEET NUMBER

WF412.1

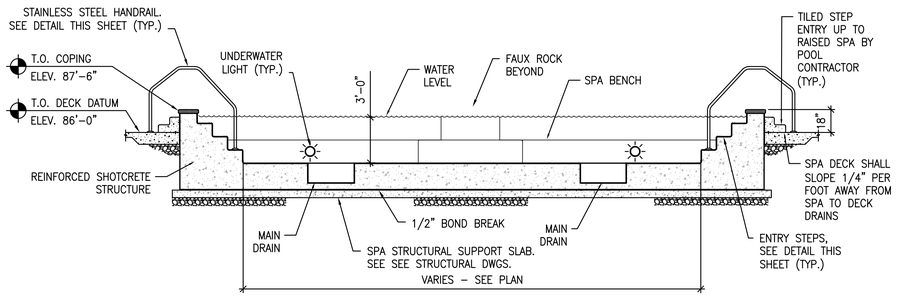


## SPA LONGIDUDINAL SECTION

SCALE: 1/4" = 1'-0"

A / WF413

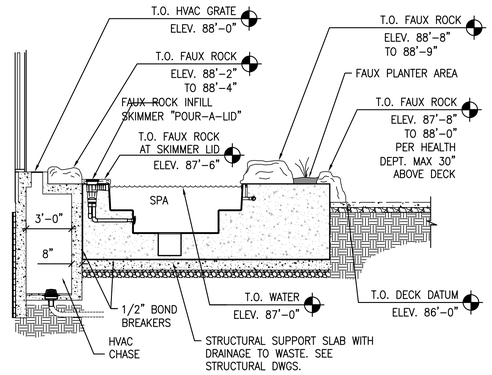


## SPA CROSS SECTION

SCALE: 1/4" = 1'-0"

B / WF413

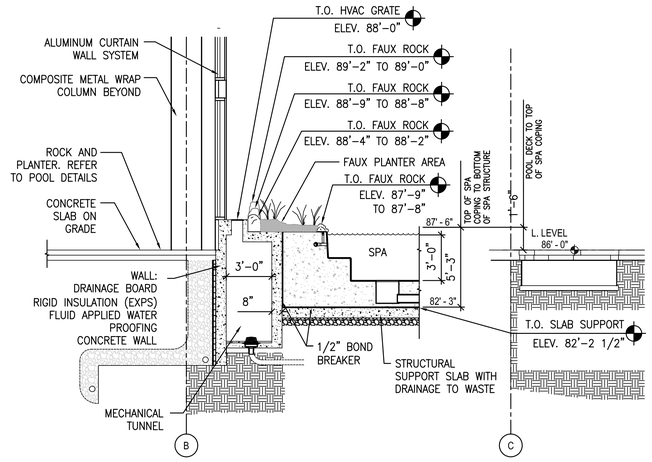


## SPA SECTION AT CURTAIN WALL

SCALE: 1/4" = 1'-0"

C / WF413

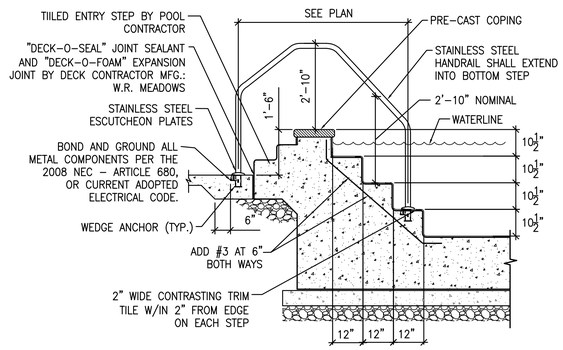


## SPA STEP AND HANDRAIL DETAIL

SCALE: 1/2" = 1'-0"

D / WF413

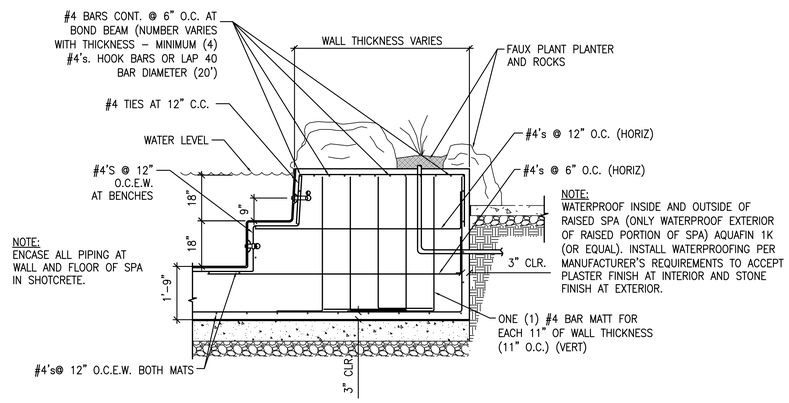


## SPA WALL STRUCTURAL DETAIL AT FAUX PLANTER

SCALE: 1/2" = 1'-0"

E / WF413

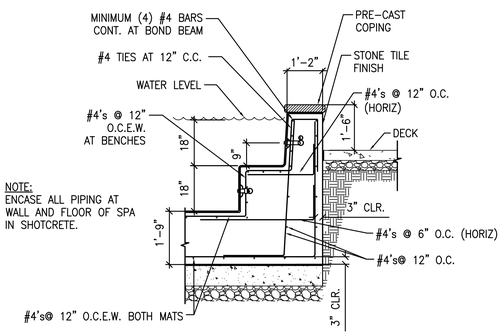


## SPA WALL STRUCTURAL DETAIL AT DECK

SCALE: 1/2" = 1'-0"

F / WF413

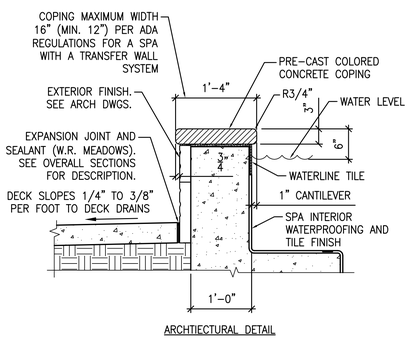


## SPA PRE-CAST COPING DETAIL

SCALE: 1" = 1'-0"

1 / WF413

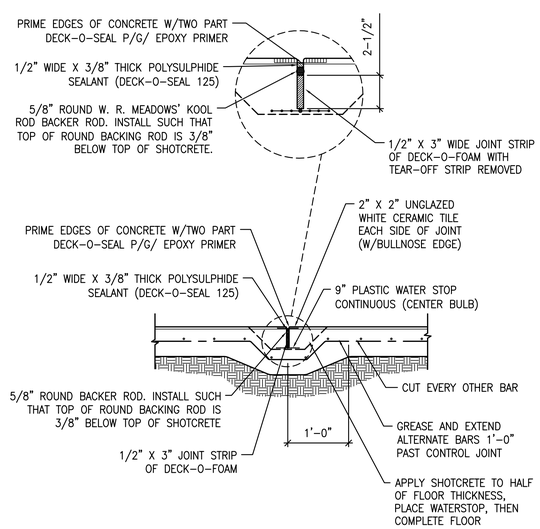


## POOL FLOOR CONTROL JOINT DETAIL

SCALE: 1" = 1'-0"

2 / WF413

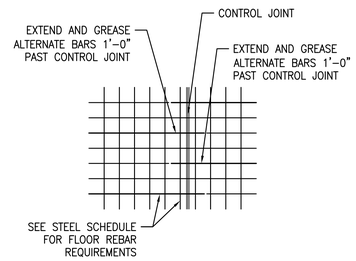


## POOL FLOOR CONTROL JOINT RE-INFORCING DETAIL

SCALE: 1/4" = 1'-0"

3 / WF411

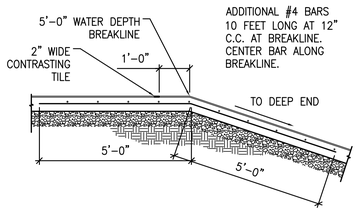


## ADDITIONAL STEEL BREAK LINE DETAIL

SCALE: 1/2" = 1'-0"

4 / WF413

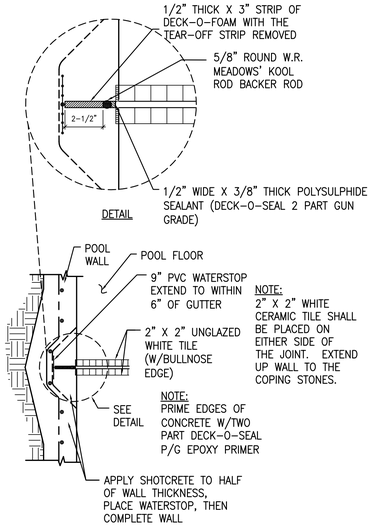


## POOL WALL CONTROL JOINT DETAIL

SCALE: 1" = 1'-0"

5 / WF413

The entire contents of the attached documents, including all sketches, plans, studies, drawings, schedules and specifications and all copyrights therein are, and shall remain the sole property of Water Design Incorporated. The documents and their contents may not be used, photocopied or reproduced digitally, electronically or in any other manner without the express prior written consent of Water Design Incorporated.

MHTN
ARCHITECTS
MHTN Architects, Inc.
420 East South Temple
Suite 100
Salt Lake City, Utah 84111
Telephone (801) 595-6700
Telefax (801) 595-6717
www.mhtn.com

Hastings+Chivetta
ARCHITECTURE • PLANNING • ENGINEERING
622 Emerson, Suite 200
St. Louis, MO 63141
Tel. 314.863.5717
Fax. 314.863.2823
www.hastingschivetta.com

Water Design Inc.
5047 S. Galleria Dr.
Murray, Utah 84123
Phone : (801) 261-4009
Fax : (801) 261-4069
www.waterdesigninc.com

BUILDING OFFICIAL STAMP

# UNIVERSITY OF UTAH
# STUDENT LIFE CENTER
1836 E. BALLIF ROAD
SALT LAKE CITY, UTAH 84112

SEAL

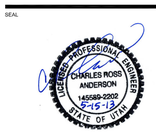


MHTN PROJECT NO.

DRAWN BY: ACR CHECKED BY: BA

ISSUED:

| NO. | DATE | DESCRIPTION |
|---|---|---|

CONTRACTOR TO VERIFY DRAWINGS IN FIELD USE REFLECT LAST REVISION DATE.

| NO. | DATE | DESCRIPTION |
|---|---|---|

SHEET NAME

SPA SECTIONS AND CONTROL JOINT DETAILS

BID DOCUMENTS
MAY 15, 2013

SHEET NUMBER

WF413.0

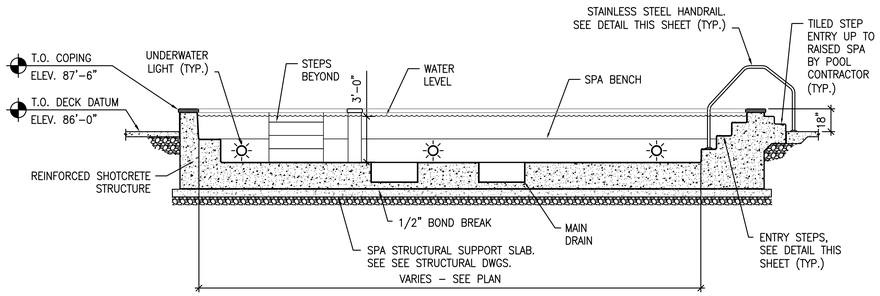


## RAISED SPA LONGIDUDINAL SECTION

SCALE: 1/4" = 1'-0"

A / WF414.0

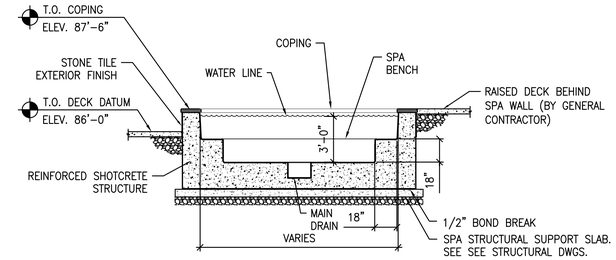


## SPA CROSS SECTION

SCALE: 1/4" = 1'-0"

B / WF414.0

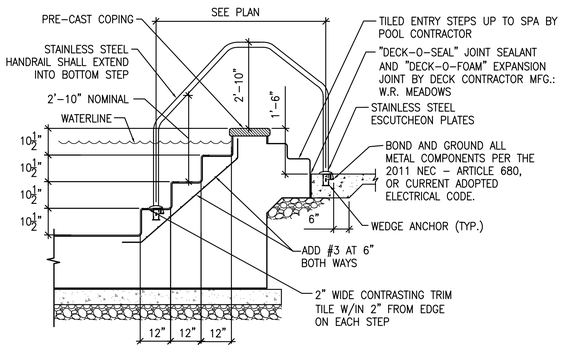


## SPA STEP AND HANDRAIL DETAIL

SCALE: 1/2" = 1'-0"

C / WF414.0

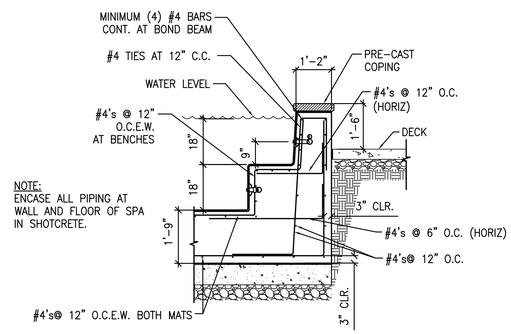


## STRUCTURAL SPA WALL DETAIL AT DECK

SCALE: 1/2" = 1'-0"

D / WF414.0

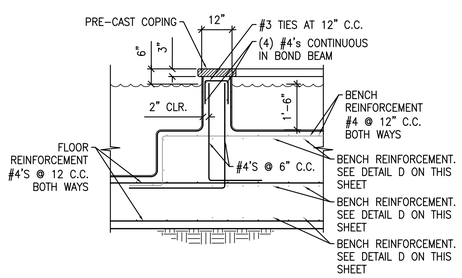


## FINGER WALL DETAIL

SCALE: 1/2" = 1'-0"

E / WF414.0

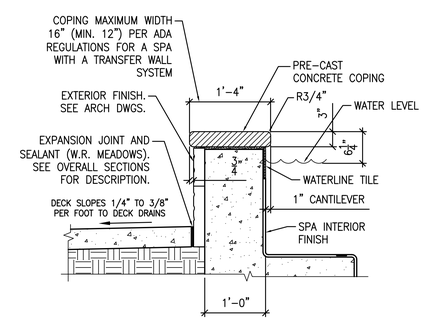


ARCHITECTURAL DETAIL

## SPA PRE-CAST COPING DETAIL

SCALE: 1" = 1'-0"

1 / WF414.0

The entire contents of the attached documents, including all sketches, plans, studies, drawings, schedules and specifications and all copyrights therein are, and shall remain the sole property of Water Design Incorporated. The documents and their contents may not be used, photocopied or reproduced digitally, electronically or in any other manner without the express prior written consent of Water Design Incorporated.

MHTN
ARCHITECTS
MHTN Architects, Inc.
420 East South Temple
Suite 100
Salt Lake City, Utah 84111
Telephone (801) 595-6700
Telefax (801) 595-6717
www.mhtn.com

Hastings+Chivetta
ARCHITECTURE • PLANNING • ENGINEERING
622 Emerson, Suite 200
St. Louis, MO 63141
Tel. 314.863.5717
Fax. 314.863.2823
www.hastingschivetta.com

Water Design Inc.
5047 S. Galleria Dr.
Murray, Utah 84123
Phone : (801) 261-4009
Fax : (801) 261-4069
www.waterdesigninc.com

BUILDING OFFICIAL STAMP

# UNIVERSITY OF UTAH
# STUDENT LIFE CENTER
1836 E. BALLIF ROAD
SALT LAKE CITY, UTAH 84112

SEAL

MHTN PROJECT NO.

DRAWN BY: ACR CHECKED BY: BA

ISSUED:

| NO. | DATE | DESCRIPTION |
|---|---|---|
| | | |

CONTRACTOR TO VERIFY DRAWINGS IN FIELD USE REFLECT LAST REVISION DATE.

| NO. | DATE | DESCRIPTION |
|---|---|---|
| | | |

SHEET NAME

SPA SECTIONS - ALT BID 1

BID DOCUMENTS
MAY 15, 2013

SHEET NUMBER

WF414.0

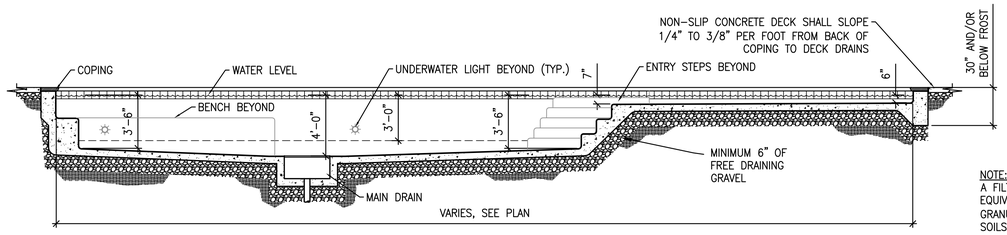


## OUTDOOR LEISURE POOL LOGITUDINAL SECTION (A / WF415.0)

SCALE: 1/4" = 1'-0"

NOTE:
SEE SHEET WF010.1 FOR STRUCTURAL AND PROJECT SPECIFIC EARTHWORK NOTES. ALSO SEE GEOTECHNICAL REPORT AND ALL SUBSEQUENT LETTERS.

NOTE:
POOL CONTRACTOR SHALL HAVE GEOTECHNICAL ENGINEER REVIEW EXCAVATION FOR UNSUITABLE SOILS PRIOR TO SUBGRADE PREPARATION (TYPICAL).

NOTE:
A FILTER FABRIC SUCH AS MIRAFI 140 N OR EQUIVALENT SHALL BE PLACED BETWEEN GRANULAR FILL / DRAINS AND FINE GRAINED SOILS PER THE GEOTECHNICAL REPORT

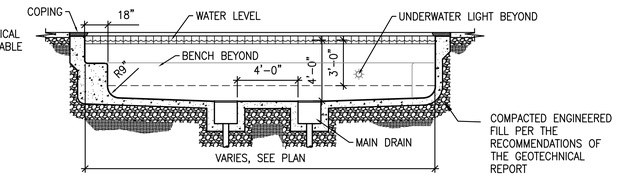


## OUTDOOR LEISURE POOL CROSS SECTION (B / WF415.0)

SCALE: 1/4" = 1'-0"

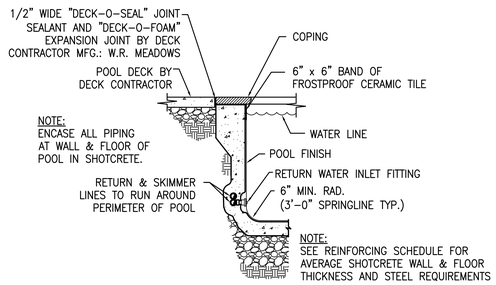


NOTE:
ENCASE ALL PIPING AT WALL & FLOOR OF POOL IN SHOTCRETE.

NOTE:
SEE REINFORCING SCHEDULE FOR AVERAGE SHOTCRETE WALL & FLOOR THICKNESS AND STEEL REQUIREMENTS

## OUTDOOR LEISURE POOL WALL SECTION (C / WF415.0)

SCALE: 1/2" = 1'-0"

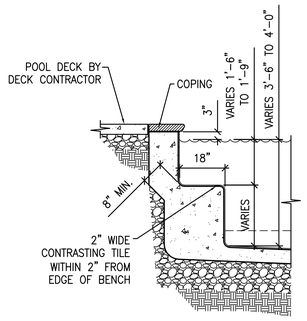


## OUTDOOR LEISURE POOL BENCH SECTION (D / WF415.0)

SCALE: 1/2" = 1'-0"

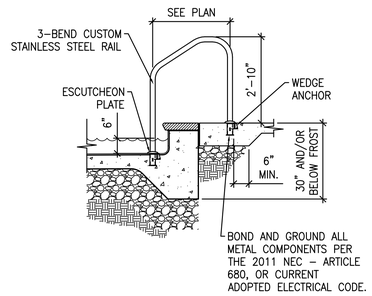


## OUTDOOR LEISURE POOL SHALLOW END ENTRY STEP SECTION (E / WF415.0)

SCALE: 1/2" = 1'-0"

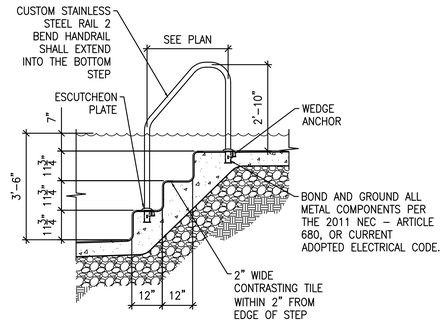


## OUTDOOR LEISURE MID POOL STEPS SECTION (F / WF415.0)

SCALE: 1/2" = 1'-0"

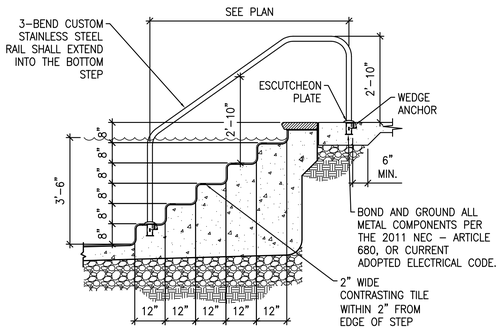


## OUTDOOR LEISURE POOL ENTRY STEPS SECTION (G / WF415.0)

SCALE: 1/2" = 1'-0"

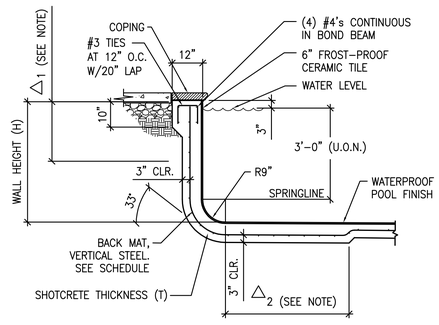


## OUTDOOR LEISURE POOL WALL STRUCTURAL DETAIL (1 / WF415.0)

SCALE: 1/2" = 1'-0"

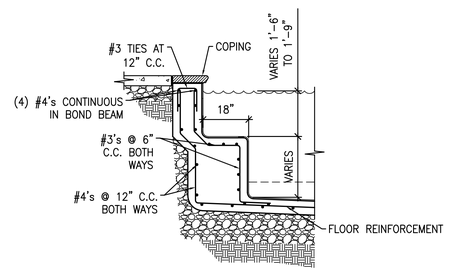


## OUTDOOR LEISURE POOL BENCH STRUCTURAL DETAIL (2 / WF415.0)

SCALE: 1/2" = 1'-0"

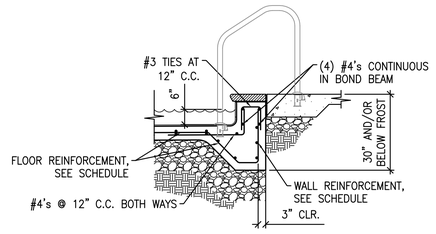


## OUTDOOR LEISURE POOL SHALLOW END ENTRY STEP STRUCTURAL DETAIL (3 / WF415.0)

SCALE: 1/2" = 1'-0"

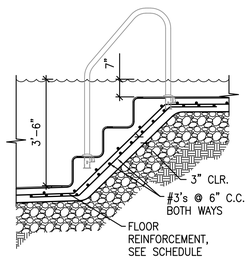


## OUTDOOR LEISURE MID POOL STEPS STRUCTURAL DETAIL (4 / WF415.0)

SCALE: 1/2" = 1'-0"

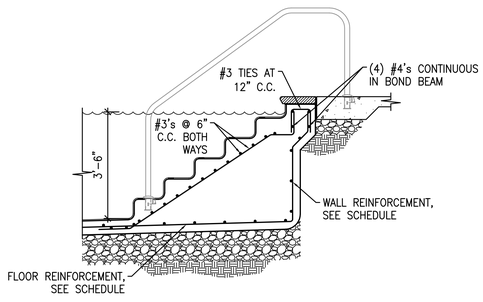


## OUTDOOR LEISURE POOL ENTRY STEPS STRUCTURAL DETAIL (5 / WF415.0)

SCALE: 1/2" = 1'-0"

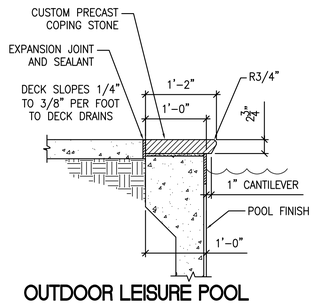


## OUTDOOR LEISURE POOL COPING DETAIL (6 / WF415.0)

SCALE: 1/2" = 1'-0"

The entire contents of the attached documents, including all sketches, plans, studies, drawings, schedules and specifications and all copyrights therein are, and shall remain the sole property of Water Design Incorporated. The documents and their contents may not be used, photocopied or reproduced digitally, electronically or in any other manner without the express prior written consent of Water Design Incorporated.

MHTN
ARCHITECTS
MHTN Architects, Inc.
420 East South Temple
Suite 100
Salt Lake City, Utah 84111
Telephone (801) 595-6700
Telefax (801) 595-6717
www.mhtn.com

Hastings+Chivetta
ARCHITECTURE • PLANNING • ENGINEERING
622 Emerson, Suite 200
St. Louis, MO 63141
Tel. 314.863.5717
Fax. 314.863.2823
www.hastingschivetta.com

Water Design Inc.
5047 S. Galleria Dr.
Murray, Utah 84123
Phone : (801) 261-4009
Fax : (801) 261-4069
www.waterdesigninc.com

BUILDING OFFICIAL STAMP

# UNIVERSITY OF UTAH
# STUDENT LIFE CENTER
1836 E. BALLIF ROAD
SALT LAKE CITY, UTAH 84112

SEAL

MHTN PROJECT NO.

DRAWN BY: ACR CHECKED BY: BA

ISSUED:

| NO. | DATE | DESCRIPTION |
|---|---|---|

CONTRACTOR TO VERIFY DRAWINGS IN FIELD USE REFLECT LAST REVISION DATE.

| NO. | DATE | DESCRIPTION |
|---|---|---|

SHEET NAME

OUTDOOR LEISURE POOL SECT. - ALT BID 2

BID DOCUMENTS
MAY 15, 2013

SHEET NUMBER

WF415.0

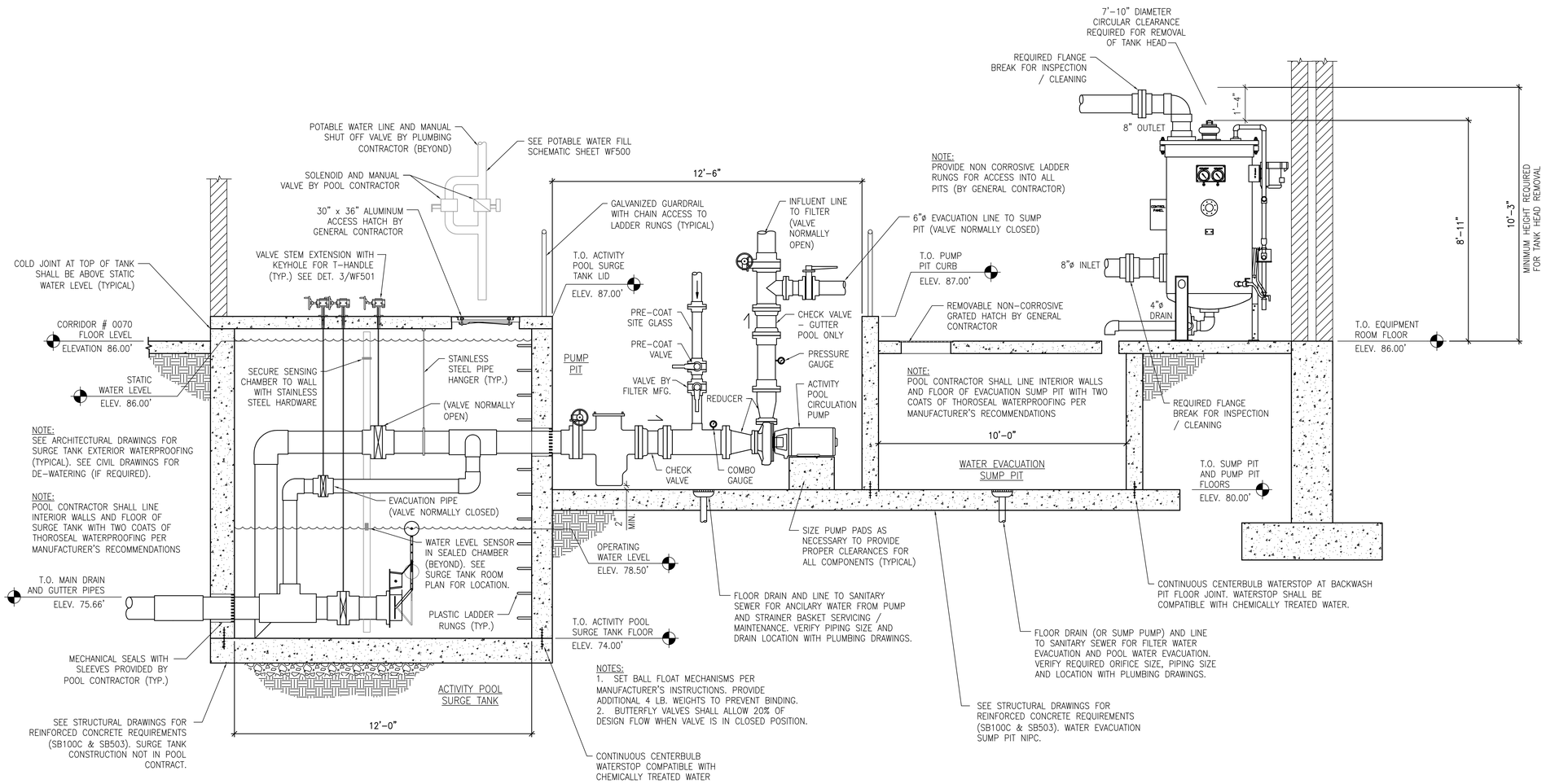


## ACTIVITY POOL SURGE TANK, PUMP PIT AND EVACUATION SUMP PIT SECTION

SCALE: 1/2" = 1'-0"

A
WF412

The entire contents of the attached documents, including all sketches, plans, studies, drawings, schedules and specifications and all copyrights therein are, and shall remain the sole property of Water Design Incorporated. The documents and their contents may not be used, photocopied or reproduced digitally, electronically or in any other manner without the express prior written consent of Water Design Incorporated.

MHTN
ARCHITECTS
MHTN Architects, Inc.
420 East South Temple
Suite 100
Salt Lake City, Utah 84111
Telephone (801) 595-6700
Telefax (801) 595-6717
www.mhtn.com

Hastings+Chivetta
ARCHITECTURE • PLANNING • ENGINEERING
622 Emerson, Suite 200
St. Louis, MO 63141
Tel. 314.863.5717
Fax. 314.863.2823
www.hastingschivetta.com

Water Design Inc.
5047 S. Galleria Dr.
Murray, Utah 84123
Phone : (801) 261-4009
Fax : (801) 261-4069
www.waterdesigninc.com

BUILDING OFFICIAL STAMP

# UNIVERSITY OF UTAH
# STUDENT LIFE CENTER
1836 E. BALLIF ROAD
SALT LAKE CITY, UTAH 84112

SEAL

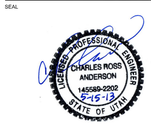


MHTN PROJECT NO.

DRAWN BY: ACR CHECKED BY: BA

ISSUED:

| NO. | DATE | DESCRIPTION |
|---|---|---|
| | | |

CONTRACTOR TO VERIFY DRAWINGS IN FIELD USE REFLECT LAST REVISION DATE.

| NO. | DATE | DESCRIPTION |
|---|---|---|
| | | |

SHEET NAME

LOWER LEVEL EQUIPMENT ROOM SECTIONS

BID DOCUMENTS
MAY 15, 2013

SHEET NUMBER

WF416.0

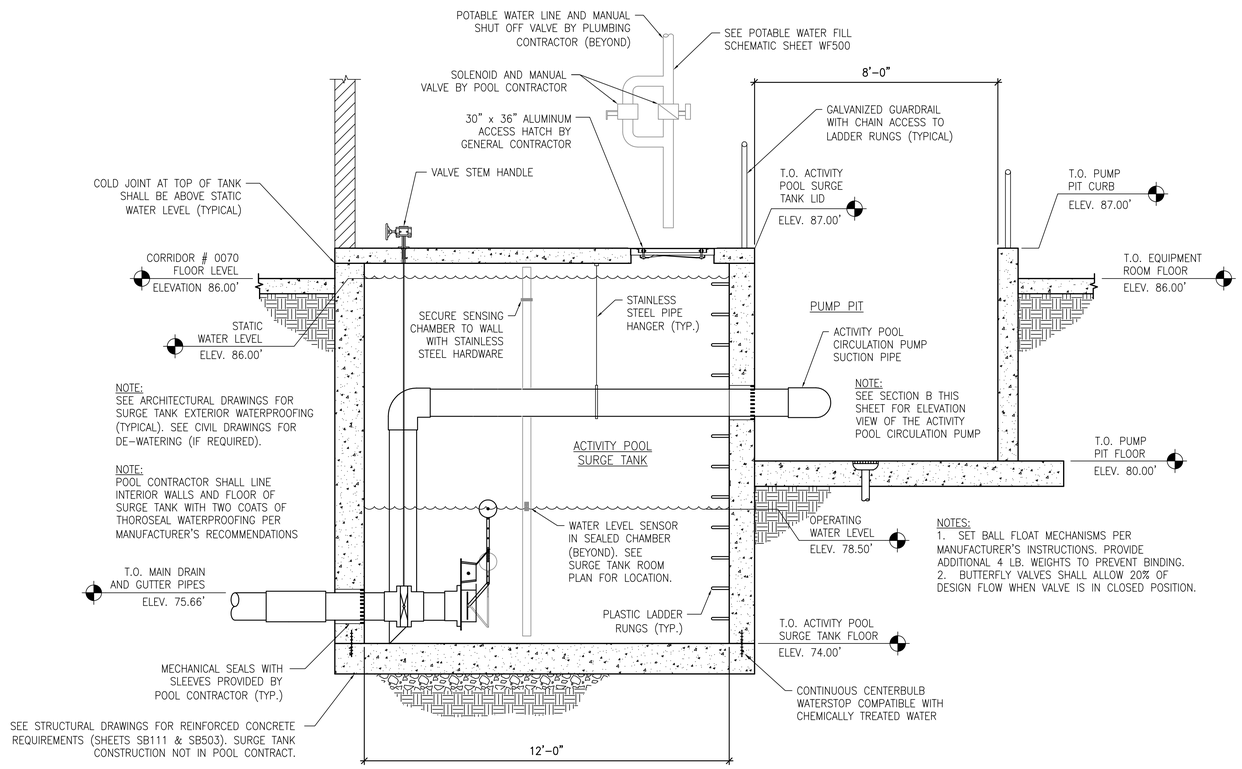


## ACTIVITY POOL SURGE TANK AND PUMP PIT SECTION

SCALE: 1/2" = 1'-0"

A WF417.0

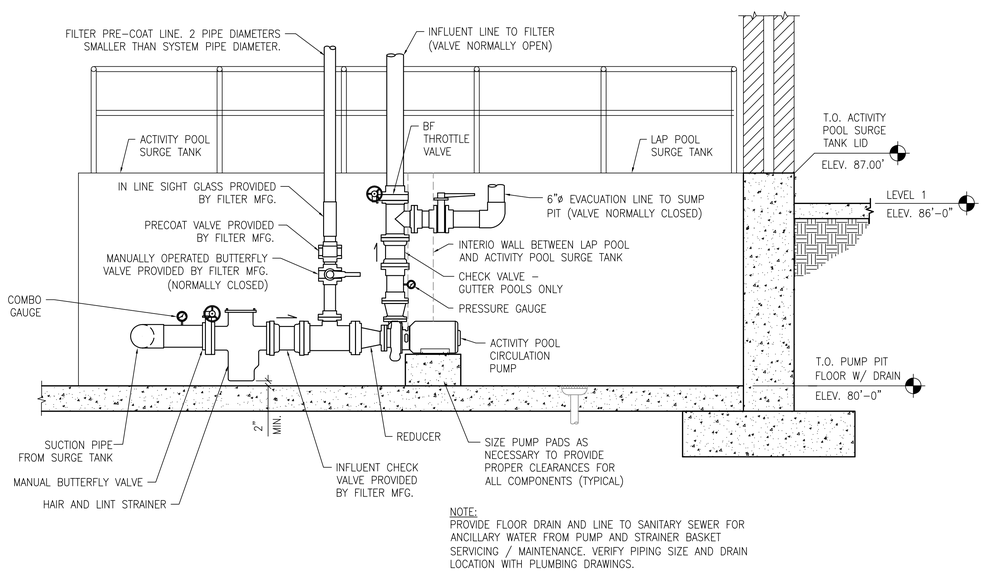


## PUMP PIT SECTION AT ACTIVITY POOL CIRCULATION PUMP

SCALE: 1/2" = 1'-0"

B WF417.0

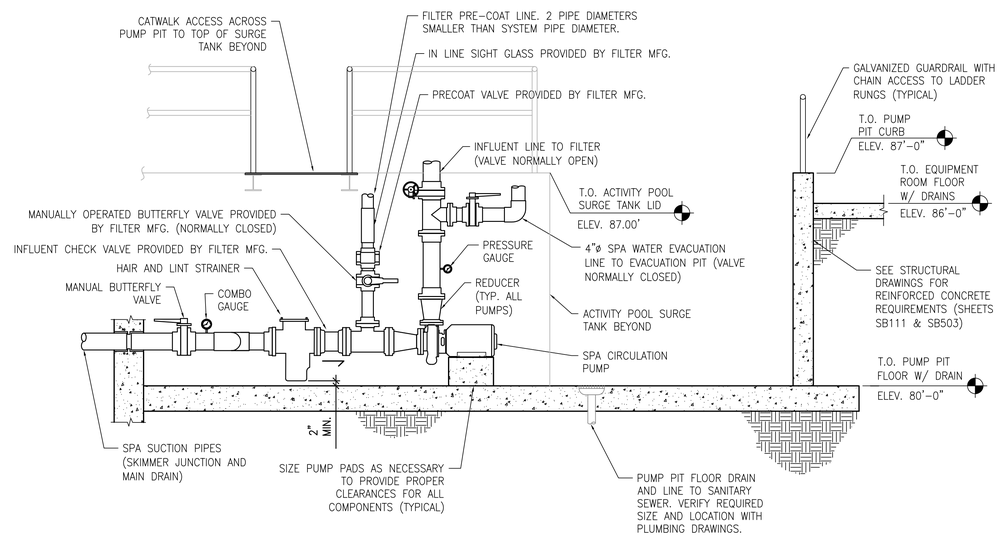


## PUMP PIT SECTION AT SPA CIRCULATION PUMP

SCALE: 1/2" = 1'-0"

C WF417.0

The entire contents of the attached documents, including all sketches, plans, studies, drawings, schedules and specifications and all copyrights therein are, and shall remain the sole property of Water Design Incorporated. The documents and their contents may not be used, photocopied or reproduced digitally, electronically or in any other manner without the express prior written consent of Water Design Incorporated.

MHTN
ARCHITECTS
MHTN Architects, Inc.
420 East South Temple
Suite 100
Salt Lake City, Utah 84111
Telephone (801) 595-6700
Telefax (801) 595-6717
www.mhtn.com

Hastings+Chivetta
ARCHITECTURE • PLANNING • ENGINEERING
622 Emerson, Suite 200
St. Louis, MO 63141
Tel. 314.863.5717
Fax. 314.863.2823
www.hastingschivetta.com

Water Design Inc.
5047 S. Galleria Dr.
Murray, Utah 84123
Phone : (801) 261-4009
Fax : (801) 261-4069
www.waterdesigninc.com

BUILDING OFFICIAL STAMP

# UNIVERSITY OF UTAH
# STUDENT LIFE CENTER
1836 E. BALLIF ROAD
SALT LAKE CITY, UTAH 84112

SEAL

LICENSED PROFESSIONAL ENGINEER
CHARLES ROSS ANDERSON
145599-2202
5-15-13
STATE OF UTAH

MHTN PROJECT NO.

DRAWN BY: ACR CHECKED BY: BA

ISSUED:

| NO. | DATE | DESCRIPTION |
|---|---|---|
| | | |

CONTRACTOR TO VERIFY DRAWINGS IN FIELD USE REFLECT LAST REVISION DATE.

| NO. | DATE | DESCRIPTION |
|---|---|---|
| | | |

SHEET NAME

LOWER LEVEL EQUIPMENT ROOM SECTIONS - ALT 1

BID DOCUMENTS
MAY 15, 2013

SHEET NUMBER

WF417.0

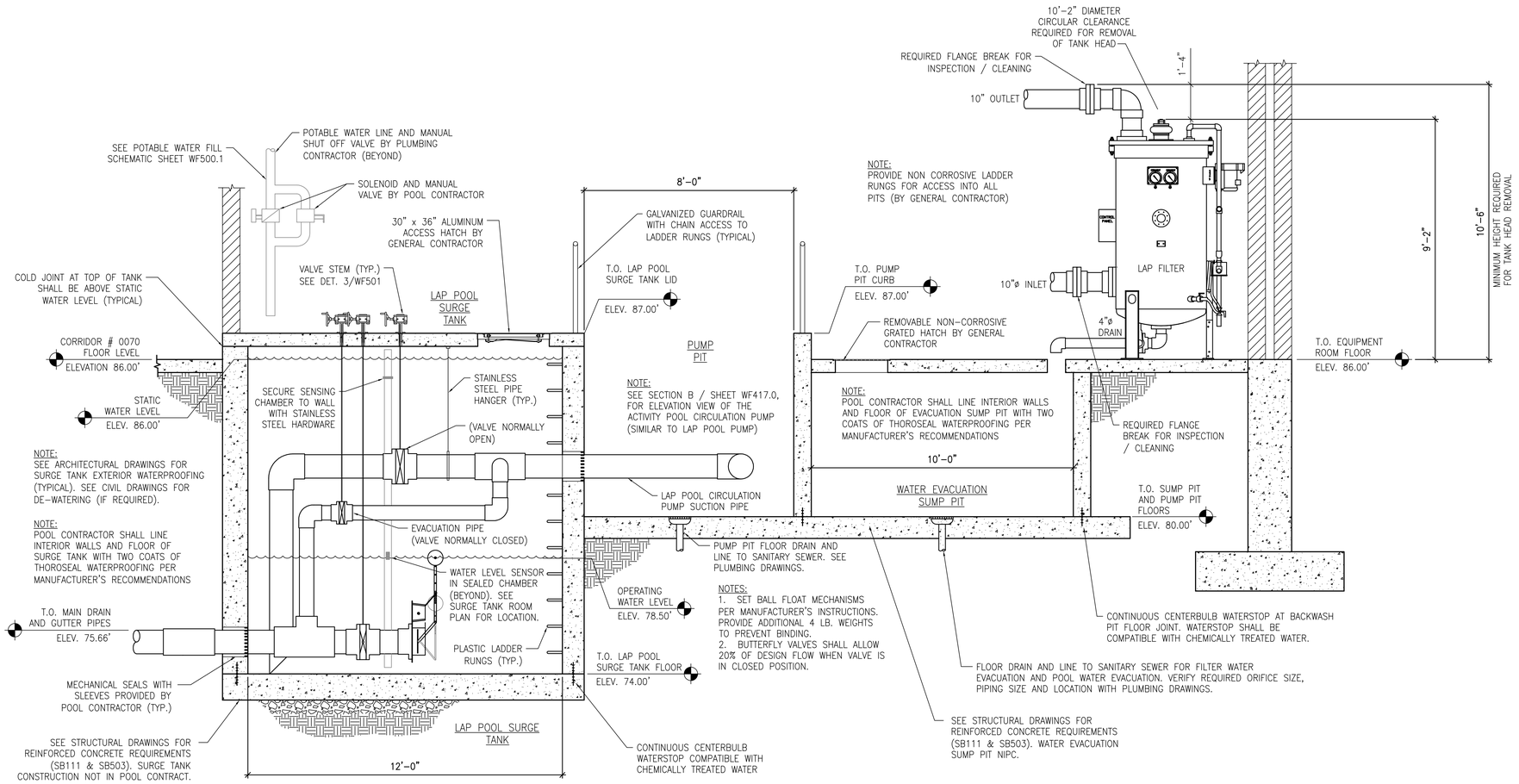


## LAP POOL SURGE TANK, PUMP PIT AND EVACUATION SUMP PIT SECTION

SCALE: 1/2" = 1'-0"

A
WF417.1

The entire contents of the attached documents, including all sketches, plans, studies, drawings, schedules and specifications and all copyrights therein are, and shall remain the sole property of Water Design Incorporated. The documents and their contents may not be used, photocopied or reproduced digitally, electronically or in any other manner without the express prior written consent of Water Design Incorporated.

MHTN
ARCHITECTS
MHTN Architects, Inc.
420 East South Temple
Suite 100
Salt Lake City, Utah 84111
Telephone (801) 595-6700
Telefax (801) 595-6717
www.mhtn.com

Hastings+Chivetta
ARCHITECTURE • PLANNING • ENGINEERING
622 Emerson, Suite 200
St. Louis, MO 63141
Tel. 314.863.5717
Fax. 314.863.2823
www.hastingschivetta.com

Water Design Inc.
5047 S. Galleria Dr.
Murray, Utah 84123
Phone : (801) 261-4009
Fax : (801) 261-4069
www.waterdesigninc.com

BUILDING OFFICIAL STAMP

# UNIVERSITY OF UTAH
## STUDENT LIFE CENTER
1836 E. BALLIF ROAD
SALT LAKE CITY, UTAH 84112

SEAL

MHTN PROJECT NO.

DRAWN BY: ACR CHECKED BY: BA

ISSUED:

| NO. | DATE | DESCRIPTION |
|---|---|---|
| | | |

CONTRACTOR TO VERIFY DRAWINGS IN FIELD USE REFLECT LAST REVISION DATE.

| NO. | DATE | DESCRIPTION |
|---|---|---|
| | | |

SHEET NAME

LOWER LEVEL EQUIPMENT ROOM SECTIONS - ALT 1

BID DOCUMENTS
MAY 15, 2013

SHEET NUMBER

WF417.1

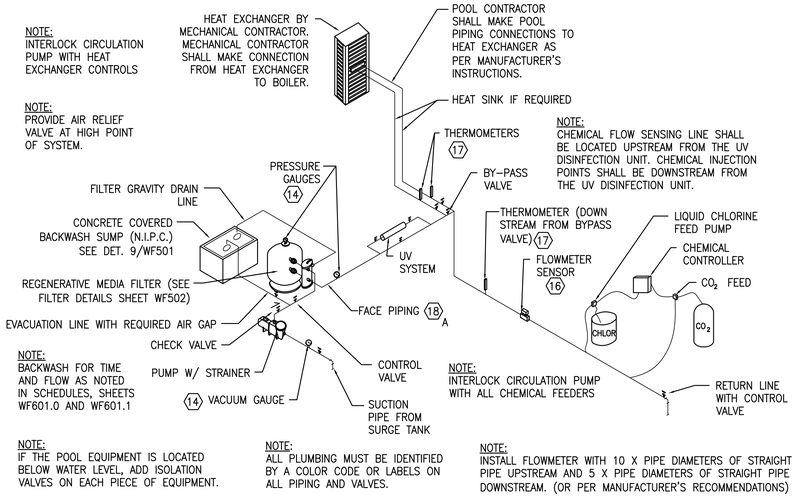


## ACTIVITY POOL CIRCULATION SCHEMATIC

SCALE: NONE

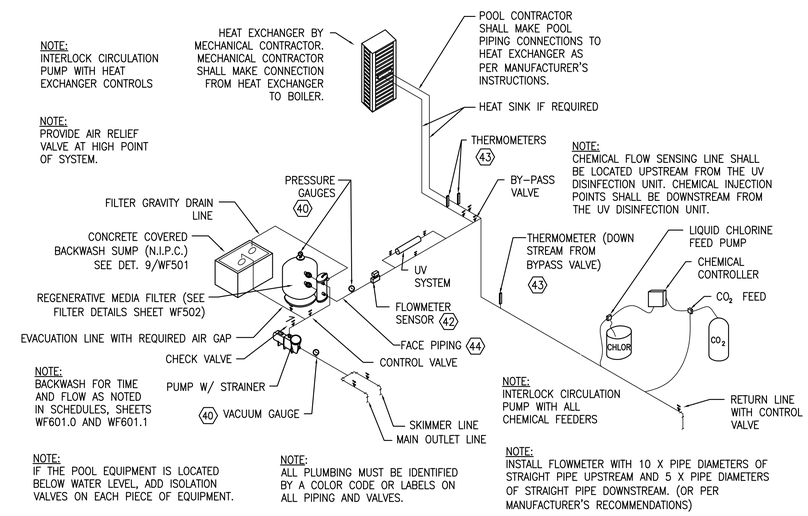


## RAISED SPA CIRCULATION SCHEMATIC

SCALE: NONE

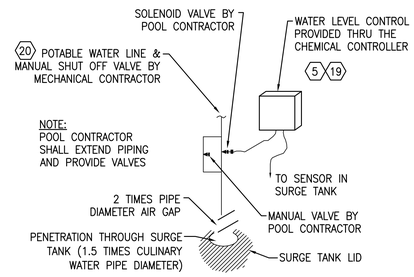


## ACTIVITY POOL POTABLE WATER FILL SCHEMATIC

SCALE: NONE

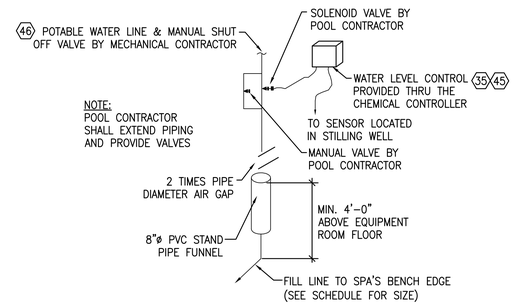


NOTE:
FOR HEXAGON REFERENCES SHOWN IN THESE SCHEMATICS, SEE SCHEDULES SHEETS WF601.0, WF601.1 AND WF601.2

## RAISED SPA POTABLE WATER FILL SCHEMATIC

SCALE: NONE

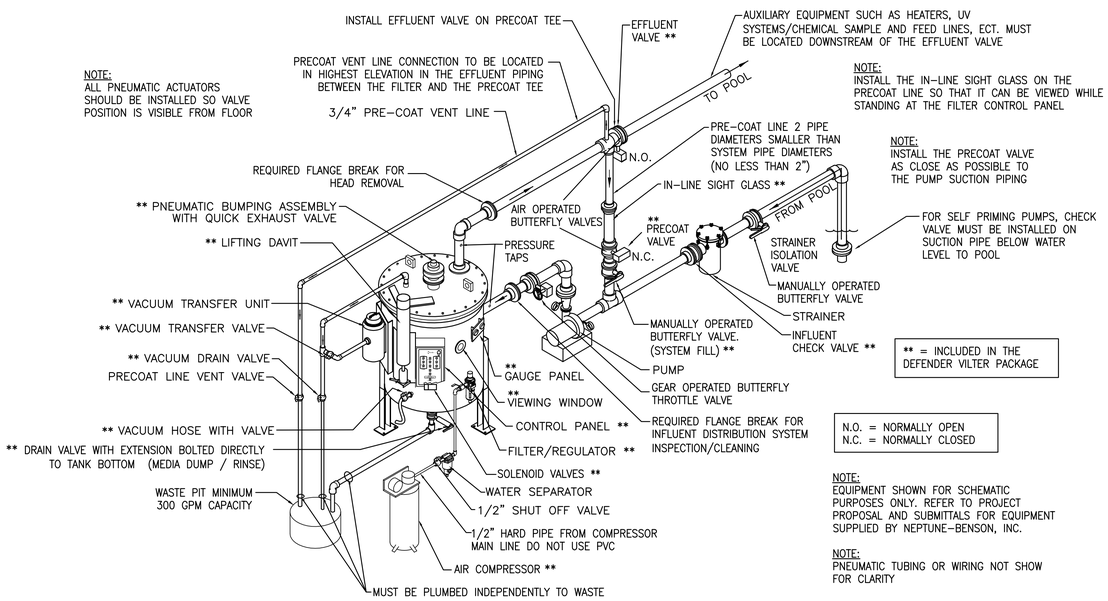


## REGENERATIVE MEDIA FILTER SCHEMATIC

NOT TO SCALE

NOTE:
MECHANICAL SCOPE FOR REFERENCE ONLY. THE FINAL DESIGN OF THE MECHANICAL SIDE OF THE HEAT EXCHANGER SHALL BE BY OTHERS . SHOWN FOR DESIGN COORDINATION PURPOSES ONLY – SEE MECHANICAL DRAWINGS. ACTUAL CONTRACTOR SCOPE MAY VARY – WORK AND MATERIALS TO BE PROVIDED PER PROJECT CONTRACT/SUB CONTRACT AGREEMENTS.

NOTES:
1. PROVIDE CONSTANT FLOW THROUGH COLD SIDE OF HEAT EXCHANGER
2. HEAT EXCHANGER SHALL BE COMPATIBLE WITH CORROSIVE WATER (CUPRO NICKEL)
3. SET POINT SHALL BE SEVERAL DEGREES COOLER THAN POOL BOILER SET POINT
4. SENSORS SHALL BE COMPATIBLE WITH CHLORINE AND ACID

NOTE:
POOL CONTRACTOR SHALL PROVIDE ADDITIONAL SENSING WELLS AND TEMPERATURE SENSORS AS REQUIRED TO MONITOR THE POOL WATER TEMPERATURE THROUGH THE CHEMICAL CONTROLLER

LEGEND

| | |
|---|---|
| UNION (POOL SIDE BY PC. BOILER SIDE BY MC.) | TS TEMP SENSOR (BY MECHANICAL) |
| THERMOMETER (POOL SIDE BY PC. BOILER SIDE BY MC.) | FS FLOW SENSOR (BY MECHANICAL) |

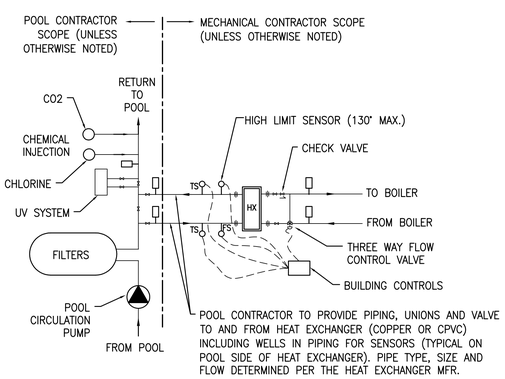


## POOL HEAT EXCHANGER SCHEMATIC

SCALE: NONE

The entire contents of the attached documents, including all sketches, plans, studies, drawings, schedules and specifications and all copyrights therein are, and shall remain the sole property of Water Design Incorporated. The documents and their contents may not be used, photocopied or reproduced digitally, electronically or in any other manner without the express prior written consent of Water Design Incorporated.

MHTN
ARCHITECTS
MHTN Architects, Inc.
420 East South Temple
Suite 100
Salt Lake City, Utah 84111
Telephone (801) 595-6700
Telefax (801) 595-6717
www.mhtn.com

Hastings+Chivetta
ARCHITECTURE • PLANNING • ENGINEERING
622 Emerson, Suite 200
St. Louis, MO 63141
Tel. 314.863.5717
Fax. 314.863.2823
www.hastingschivetta.com

Water Design Inc.
5047 S. Galleria Dr.
Murray, Utah 84123
Phone : (801) 261-4009
Fax : (801) 261-4069
www.waterdesigninc.com

BUILDING OFFICIAL STAMP

# UNIVERSITY OF UTAH
# STUDENT LIFE CENTER
1836 E. BALLIF ROAD
SALT LAKE CITY, UTAH 84112

SEAL

MHTN PROJECT NO.

DRAWN BY: ACR CHECKED BY: BA

ISSUED:

| NO. | DATE | DESCRIPTION |
|---|---|---|
| | | |

CONTRACTOR TO VERIFY DRAWINGS IN FIELD USE REFLECT LAST REVISION DATE.

| NO. | DATE | DESCRIPTION |
|---|---|---|
| | | |

SHEET NAME

EQUIPMENT SCHEMATICS

BID DOCUMENTS
MAY 15, 2013

SHEET NUMBER

WF500.0

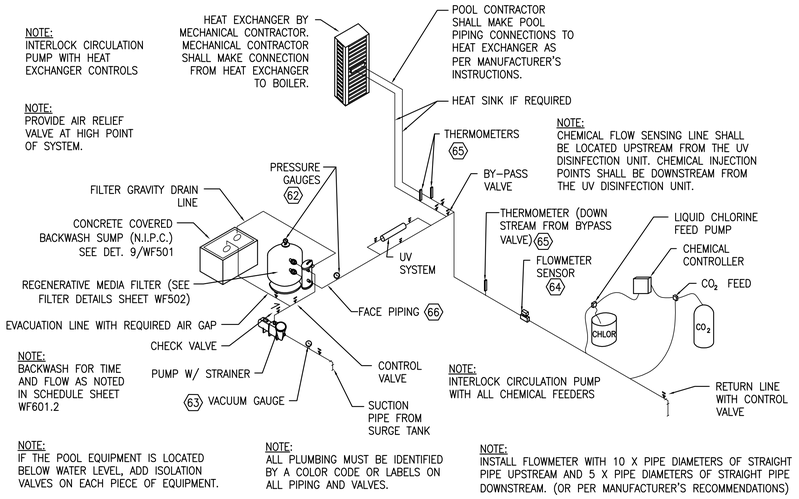


## 50 METER LAP POOL CIRCULATION SCHEMATIC (ALT 1)

SCALE: NONE

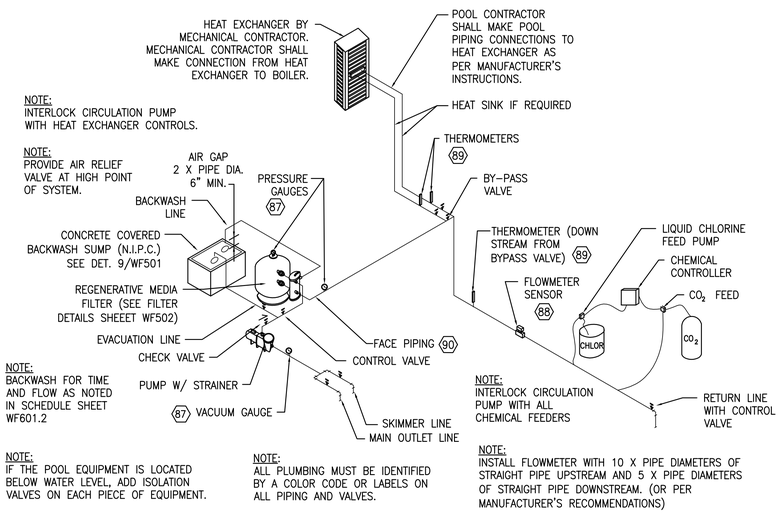


## OUTDOOR LEISURE POOL CIRCULATION SCHEMATIC (ALT 2)

SCALE: NONE

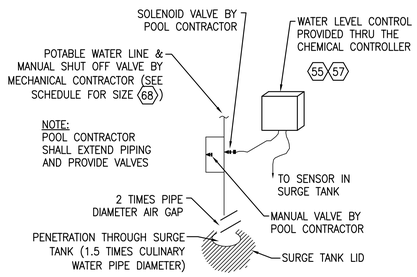


## 50 M LAP POOL POTABLE WATER FILL SCHEMATIC (ALT 1)

SCALE: NONE

NOTE:
FOR HEXAGON REFERENCES SHOWN IN THESE SCHEMATICS, SEE SCHEDULES SHEETS WF601.0, WF601.1 AND WF601.2

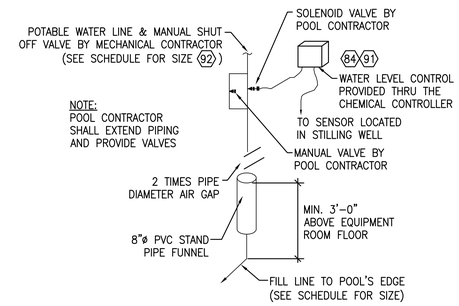


## OUTDOOR LEISURE POOL POTABLE WATER FILL SCHEMATIC (ALT 2)

SCALE: NONE

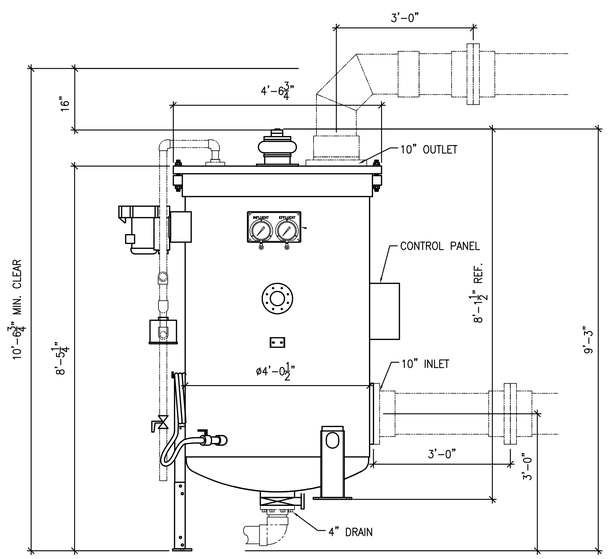


ELEVATION VIEW

## MODEL SP49 REGENERATIVE MEDIA FILTER DIMENSION DETAIL

NOT TO SCALE

1 / WF500.1

The entire contents of the attached documents, including all sketches, plans, studies, drawings, schedules and specifications and all copyrights therein are, and shall remain the sole property of Water Design Incorporated. The documents and their contents may not be used, photocopied or reproduced digitally, electronically or in any other manner without the express prior written consent of Water Design Incorporated.

MHTN
ARCHITECTS
MHTN Architects, Inc.
420 East South Temple
Suite 100
Salt Lake City, Utah 84111
Telephone (801) 595-6700
Telefax (801) 595-6717
www.mhtn.com

Hastings+Chivetta
ARCHITECTURE • PLANNING • ENGINEERING
622 Emerson, Suite 200
St. Louis, MO 63141
Tel. 314.863.5717
Fax. 314.863.2823
www.hastingschivetta.com

Water Design Inc.
5047 S. Galleria Dr.
Murray, Utah 84123
Phone : (801) 261-4009
Fax : (801) 261-4069
www.waterdesigninc.com

BUILDING OFFICIAL STAMP

# UNIVERSITY OF UTAH
# STUDENT LIFE CENTER
1836 E. BALLIF ROAD
SALT LAKE CITY, UTAH 84112

SEAL

MHTN PROJECT NO.

DRAWN BY: ACR CHECKED BY: BA

ISSUED:

| NO. | DATE | DESCRIPTION |
|---|---|---|
| | | |

CONTRACTOR TO VERIFY DRAWINGS IN FIELD USE REFLECT LAST REVISION DATE.

| NO. | DATE | DESCRIPTION |
|---|---|---|
| | | |

SHEET NAME

EQUIPMENT SCHEMATICS - ALT BID 1 and 2

BID DOCUMENTS
MAY 15, 2013

SHEET NUMBER

WF500.1

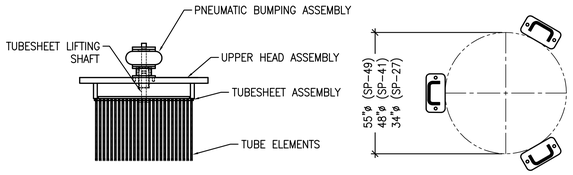


UPPER HEAD AND ELEMENT DETAIL

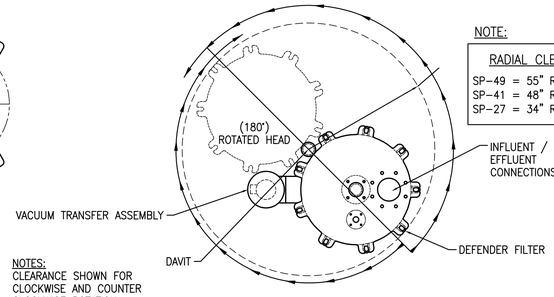


NOTES:
CLEARANCE SHOWN FOR CLOCKWISE AND COUNTER CLOCKWISE ROTATION

HEAD REMOVAL CLEARANCE REQUIREMENT

NOTE:

RADIAL CLEARANCE REQUIRED:

SP-49 = 55" RADIAL CLEARANCE REQUIRED
SP-41 = 48" RADIAL CLEARANCE REQUIRED
SP-27 = 34" RADIAL CLEARANCE REQUIRED

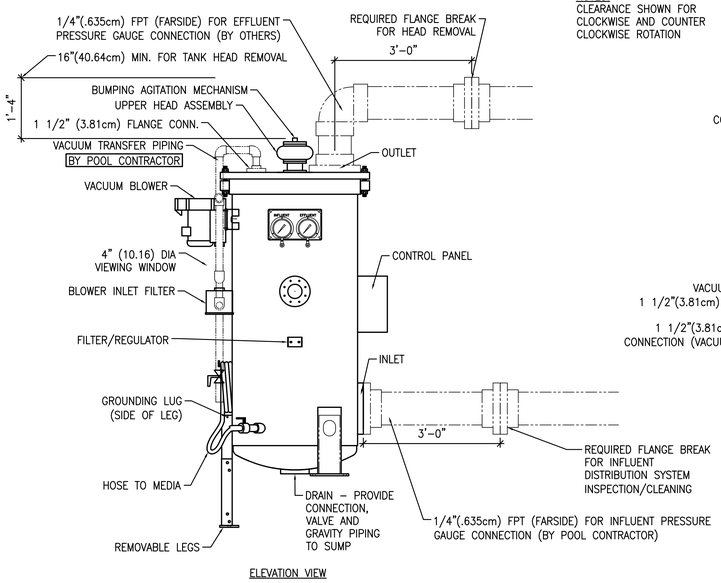


ELEVATION VIEW

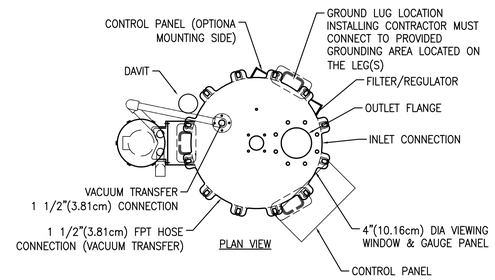


PLAN VIEW

NOTES:
1. FILTER TANK IS TO BE CONSTRUCTED OF HIGH QUALITY A36 CARBON STEEL. INTERIOR OF TANK IS LINED WITH 120 MILS THICK. FLEXSOL 3000. EXTERIOR IF COATED WITH 5–8 MILS OF HIGH PERFORMANCE ACRYLIC. NO WELDING OR EXTREME HEAT IS TO BE APPLIED TO TANK AFTER LINING OR COATING PROCESS IS DONE.
2. CONTROL PANEL POWER. VOLTAGE REQUIREMENTS 110/120 VAC. 50/60 HZ. 30 AMPS.
3. LOCATE ALL ELECTRICAL ITEMS IN A NON–HAZARDOUS LOCATION.
4. ELECTRICAL CONNECTIONS ARE THE RESPONSIBILITY OF THE ELECTRICAL CONTRACTOR.
5. MEDIA QUANTITIES ARE INDICATED FOR INFORMATIONAL PURPOSES ONLY.
6. ALL PNEUMATIC TUBING BY POOL CONTRACTOR.

## REGENERATIVE MEDIA FILTER DETAIL

NOT TO SCALE

1 / WF501

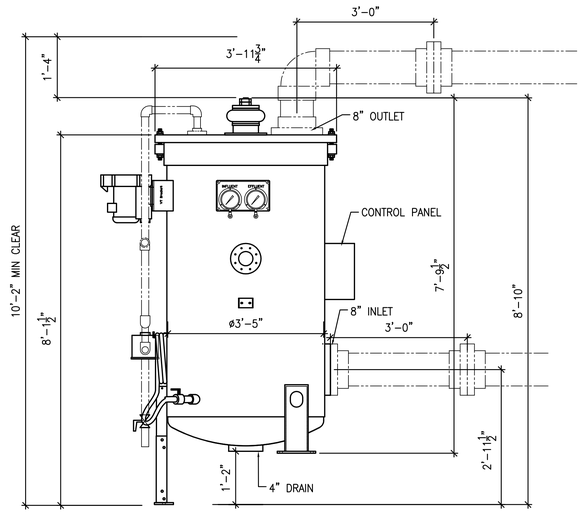


ELEVATION VIEW

## MODEL SP41 REGENERATIVE MEDIA FILTER DIMENSION DETAIL

NOT TO SCALE

2 / WF501

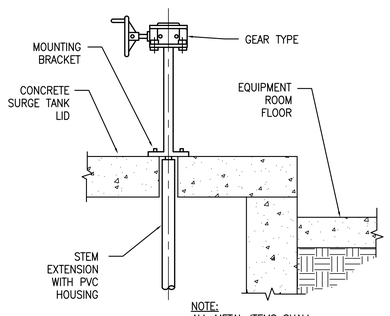


NOTE:
ALL METAL ITEMS SHALL BE STAINLESS STEEL.

## SURGE TANK VALVE HANDLE DETAIL

SCALE: 1" = 1'-0"

3 / WF501

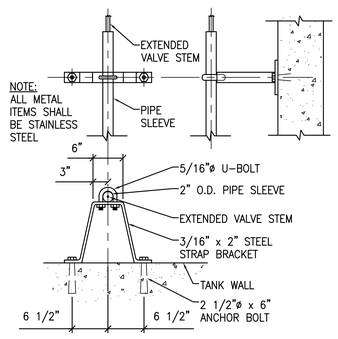


NOTE:
ALL METAL ITEMS SHALL BE STAINLESS STEEL

## VALVE STEM MOUNTING BRACKET DETAIL

SCALE: 1" = 1'-0"

4 / WF501

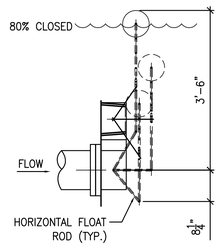


NOTE:
NUMBER OF FLOATS VARIES WITH SIZE OF VALVE.

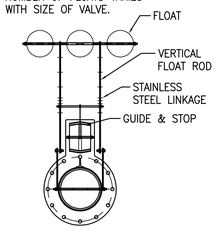


## GUTTER POOL MAIN DRAIN PIPE BALL AND FLOAT VALVE DETAIL

SCALE: 3/4" = 1'-0"

5 / WF501

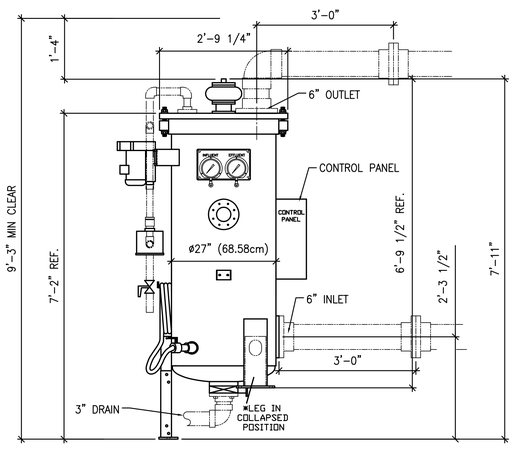


ELEVATION VIEW

## MODEL SP27 REGENERATIVE MEDIA FILTER DIMENSION DETAIL

NOT TO SCALE

6 / WF501

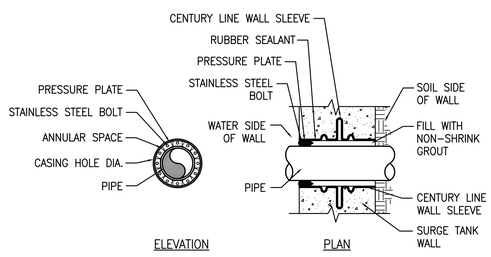


## PIPE MECHANICAL SEAL DETAIL

SCALE: 1 1/2" = 1'-0"

7 / WF501

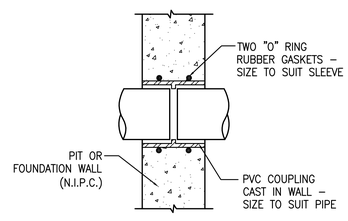


## "O" RING WALL SLEEVE DETAIL

SCALE: 1" = 1'-0"

8 / WF501

NOTE:
POOL CONTRACTOR TO PROVIDE FUNNEL AS REQUIRED TO ELIMINATE SPLASHING ON EQUIPMENT ROOM FLOOR.

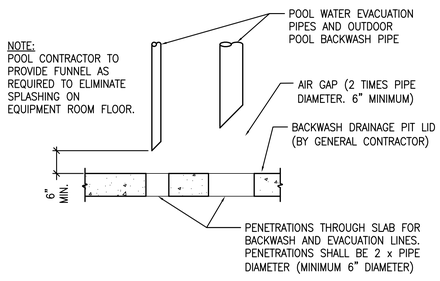


## PIPING OVER WATER EVACUTAION PIT DETAIL

SCALE: NONE

9 / WF501

The entire contents of the attached documents, including all sketches, plans, studies, drawings, schedules and specifications and all copyrights therein are, and shall remain the sole property of Water Design Incorporated. The documents and their contents may not be used, photocopied or reproduced digitally, electronically or in any other manner without the express prior written consent of Water Design Incorporated.

MHTN
ARCHITECTS
MHTN Architects, Inc.
420 East South Temple
Suite 100
Salt Lake City, Utah 84111
Telephone (801) 595-6700
Telefax (801) 595-6717
www.mhtn.com

Hastings+Chivetta
ARCHITECTURE • PLANNING • ENGINEERING
622 Emerson, Suite 200
St. Louis, MO 63141
Tel. 314.863.5717
Fax. 314.863.2823
www.hastingschivetta.com

Water Design Inc.
5047 S. Galleria Dr.
Murray, Utah 84123
Phone : (801) 261-4009
Fax : (801) 261-4069
www.waterdesigninc.com

BUILDING OFFICIAL STAMP

# UNIVERSITY OF UTAH
## STUDENT LIFE CENTER
1836 E. BALLIF ROAD
SALT LAKE CITY, UTAH 84112

SEAL

MHTN PROJECT NO.

DRAWN BY: ACR CHECKED BY: BA

ISSUED:

| NO. | DATE | DESCRIPTION |
|---|---|---|
| | | |

CONTRACTOR TO VERIFY DRAWINGS IN FIELD USE REFLECT LAST REVISION DATE.

| NO. | DATE | DESCRIPTION |
|---|---|---|
| | | |

SHEET NAME

EQUIPMENT DETAILS

BID DOCUMENTS
MAY 15, 2013

SHEET NUMBER

WF501

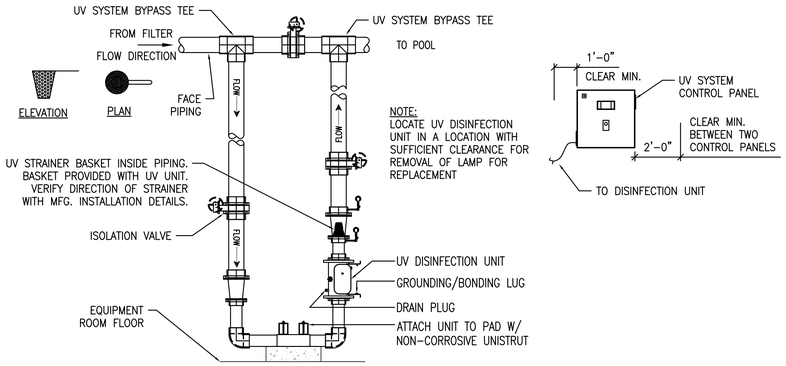


NOTES:
1. SEE EQUIPMENT SCHEDULE FOR UV UNIT FLANGE CONNECTION SIZE.
2. ALL PIPING AND FITTINGS TO AND FROM UV UNIT TO THE "UV BY-PASS TEES" SHALL BE SCHEDULE 80 PVC.
3. ALL PIPE REDUCTIONS, IF NECESSARY, SHALL BE WITH A CONCENTRIC REDUCER AS SHOWN. NO BUSHINGS ALLOWED.
4. DO NOT INSTALL VALVES DIRECTLY TO CHAMBER BODY.
5. CHEMICAL FLOW CELL SENSING LINE SHALL BE LOCATED UPSTREAM FROM THE UV UNIT. CHEMICAL INJECTION POINTS SHALL BE DOWNSTREAM FROM THE UV UNIT.
6. POOL CONTRACTOR SHALL PROVIDE AND INSTALL AN IN-LINE FLOW SWITCH THAT IS CONNECTED TO THE DRY CONTACT WITHIN THE UV CONTROL PANEL FOR INDICATION OF NO-FLOW CONDITION.
7. COORDINATE INSTALLATION WITH ELECTRICAL CONTRACTOR. CONTROL BOX SHALL BE INSTALLED WITHIN 10 FEET OF UNIT, WHENEVER POSSIBLE.
8. PROVIDE CLEARANCE AS REQUIRED ADJACENT TO UV UNIT FOR REMOVAL AND REPLACEMENT OF UV LAMPS. SEE CHARTS.
9 PROVIDE SUPPORTS / BRACING FOR PIPES AS REQUIRED.
10. WALL MOUNTING BRACKET AVAILABLE IF REQUIRED.

## UV DISINFECTION SYSTEM SCHEMATIC
NOT TO SCALE — 1 / WF502

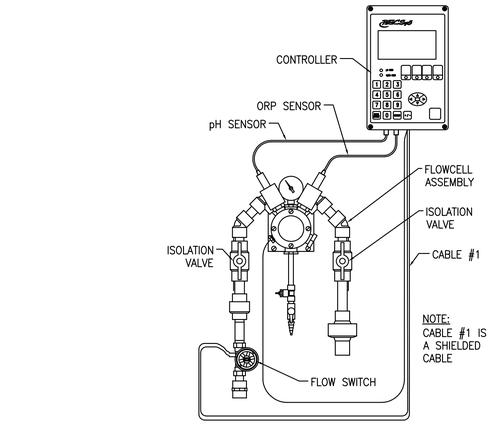


## CHEMICAL CONTROLLER GENERAL ARRANGEMENT
SCALE: NONE — 3 / WF502

## NOT USED
2 / WF502

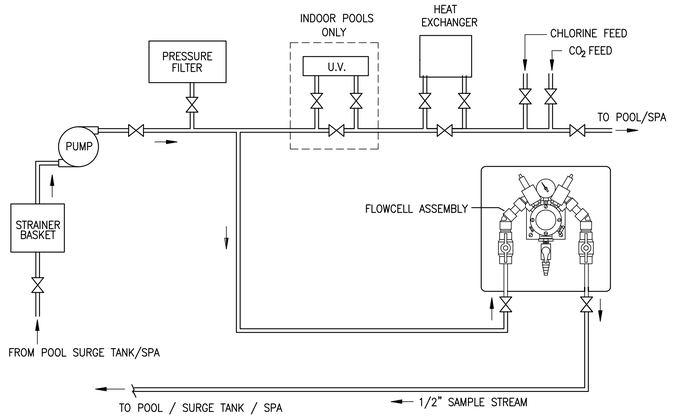


## CHEMICAL FEED SYSTEM SCHEMATIC
NOT TO SCALE — 4 / WF502

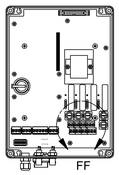


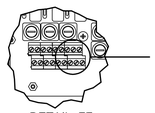


BECSYS5 CURRENT RATINGS
CONTROLLER: 0.25 AMPS
RELAY OUTPUTS: 12.0 AMPS

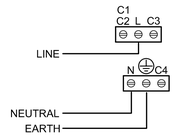


TERMINAL BLOCK WIRE SIZE
MINIMUM: 24 AWG
MAXIMUM: 12 AWG
RECOMMENDED: 16 AWG

NOTE:
ALWAYS SIZE WIRE GAUGE APPROPRIATELY FOR CURRENT DRAW AND TEMPERATURE RISE

NOTE:
ALL LINE VOLTAGE INTERLOCKING BY ELECTRICAL CONTRACTOR. LOW VOLTAGE INTERLOCKING BY THE POOL CONTRACTOR.

## CHEMICAL CONTROLLER - POWER WIRING DIAGRAM
NOT TO SCALE — 5 / WF502

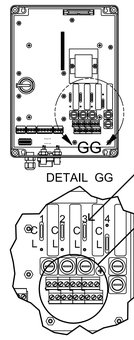


JUMPERS 1, 2, AND 3 MUST BE MOVED TO C POSITION

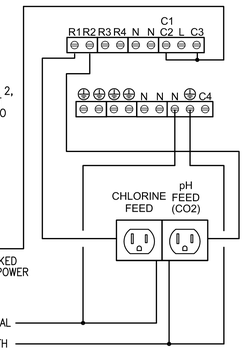


TERMINAL BLOCK WIRE SIZE
MINIMUM: 24 AWG
MAXIMUM: 12 AWG
RECOMMENDED: 16 AWG

NOTE:
ALWAYS SIZE WIRE GAUGE APPROPRIATELY FOR CURRENT DRAW AND TEMPERATURE RISE

NOTE:
DUPLEX RECEPTACLES WITH LINE POLES SPLIT. NEUTRALS AND EARTHS ARE COMMON.

NOTE:
ALL LINE VOLTAGE INTERLOCKING BY ELECTRICAL CONTRACTOR. LOW VOLTAGE INTERLOCKING BY THE POOL CONTRACTOR.

## CHEMICAL CONTROLLER - CHEMICAL FEED ELECTRICAL INTERLOCKING
NOT TO SCALE — 6 / WF502

NOTE:
PROVIDE CHEMICAL PIPING/TUBING CONTENT IDENTIFICATION AND FLOW DIRECTION MARKINGS.

NOTE:
ANCHOR CHLORINE AND $CO_2$ FEED LINES TO WALL AND/OR CEILING. PROVIDE ANCHORS AT 3'-0" C.C. MAX.

NOTE:
PROVIDE SLEEVES IN THE WALL FOR THE CHLORINE AND $CO_2$ LINES TO PASS THROUGH. FILL THE VOIDS WITH FOAM INSULATION OR OTHER MATERIALS TO COMPLY WITH ALL APPLICABLE FIRE CODES FOR PIPE PENETRATIONS.

NOTE:
READILY ACCESSIBLE MANUAL VALVES SHALL BE INSTALLED ON THE SUPPLY PIPING AND TUBING AT THE POINT OF USE AND AT THE TANK, CYLINDER OR BULK SOURCE. THE MANUAL EMERGENCY SHUTOFF VALVES SHALL BE IDENTIFIED AND THE LOCATION SHALL BE CLEARLY VISIBLE, ACCESSIBLE AND INDICATED BY MEANS OF A SIGN.

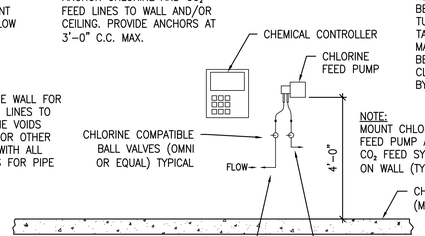


NOTE:
MOUNT CHLORINE FEED PUMP AND $CO_2$ FEED SYSTEM ON WALL (TYPICAL).

## CHLORINE FEED PUMP AND $CO_2$ FEED SYSTEM DETAIL
SCALE: NONE — 7 / WF502

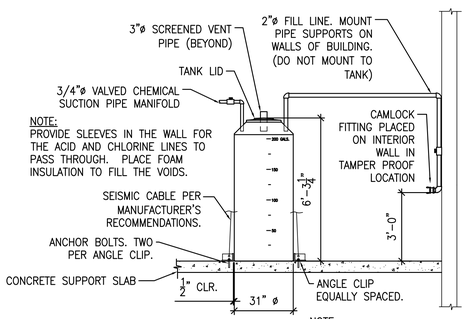


NOTE:
PROVIDE SLEEVES IN THE WALL FOR THE ACID AND CHLORINE LINES TO PASS THROUGH. PLACE FOAM INSULATION TO FILL THE VOIDS.

NOTE:
PROVIDE QUANTITY OF SEISMIC RESTRAINTS PER MANUFACTURER'S RECOMMENDATIONS

PIPING NOTES:
1. PROVIDE 3/4"ø CHEMICAL FEED PIPE MANIFOLD WITH MANUAL SHUTOFF VALVE AT EACH TANK (PROVIDE SIMILAR MANIFOLD AT ACID STORAGE TANKS).
2. 3/4"ø SCH 80 LINES TO EACH CHLORINE FEED PUMP WITH CHLORINE COMPATIBLE BALL VALVES (OMNI OR APPROVED EQUAL).
3. PROVIDE 3/4"ø SCH. 80 LINES FROM ACID STORAGE TANK MANIFOLD TO EACH ACID FEED PUMP.

IDENTIFICATION NOTES:
1. PROVIDE IDENTIFICATION PLACARDS ON THE ENTRY DOOR TO THE CHLORINE STORAGE AREA PER THE NFPA 704 REQUIREMENTS. (TYPICAL FOR THE ACID STORAGE AREA).
2. PROVIDE VISIBLE HAZARD IDENTIFICATION SIGNS ON THE CHLORINE STORAGE CONTAINER PER THE NFPA 704 REQUIREMENTS. (TYPICAL FOR THE ACID CONTAINERS).
3. PROVIDE CHEMICAL PIPING/TUBING CONTENT IDENTIFICATION AND FLOW DIRECTION MARKINGS.
4. READILY ACCESSIBLE MANUAL VALVES SHALL BE INSTALLED ON THE SUPPLY PIPING AND TUBING AT THE POINT OF USE AND AT THE TANK, CYLINDER OR BULK SOURCE. THE MANUAL EMERGENCY SHUTOFF VALVES SHALL BE IDENTIFIED AND THE LOCATION SHALL BE CLEARLY VISIBLE, AND ACCESSIBLE.

## CHEMICAL STORAGE AND PIPING DETAIL
SCALE: 3/8" = 1'-0" — 8 / WF502

The entire contents of the attached documents, including all sketches, plans, studies, drawings, schedules and specifications and all copyrights therein are, and shall remain the sole property of Water Design Incorporated. The documents and their contents may not be used, photocopied or reproduced digitally, electronically or in any other manner without the express prior written consent of Water Design Incorporated.

MHTN
ARCHITECTS
MHTN Architects, Inc.
420 East South Temple
Suite 100
Salt Lake City, Utah 84111
Telephone (801) 595-6700
Telefax (801) 595-6717
www.mhtn.com

Hastings+Chivetta
ARCHITECTURE • PLANNING • ENGINEERING
622 Emerson, Suite 200
St. Louis, MO 63141
Tel. 314.863.5717
Fax. 314.863.2823
www.hastingschivetta.com

Water Design Inc.
5047 S. Galleria Dr.
Murray, Utah 84123
Phone : (801) 261-4009
Fax : (801) 261-4069
www.waterdesigninc.com

BUILDING OFFICIAL STAMP

# UNIVERSITY OF UTAH
# STUDENT LIFE CENTER
1836 E. BALLIF ROAD
SALT LAKE CITY, UTAH 84112

SEAL

MHTN PROJECT NO.

DRAWN BY: ACR CHECKED BY: BA

ISSUED:

| NO. | DATE | DESCRIPTION |
|---|---|---|
| | | |

CONTRACTOR TO VERIFY DRAWINGS IN FIELD USE REFLECT LAST REVISION DATE.

| NO. | DATE | DESCRIPTION |
|---|---|---|
| | | |

SHEET NAME
EQUIPMENT DETAILS

BID DOCUMENTS
MAY 15, 2013

SHEET NUMBER
WF502

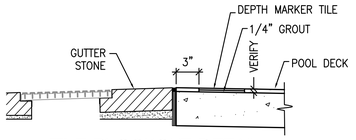


## TILE BLOCKOUT DETAIL

NOTE:
DEPTH MARKER AND NO DIVING ICON TILES SHALL BE PROVIDED BY POOL CONTRACTOR. TILES TO BE EMBEDDED IN CONCRETE DECK BY DECK CONTRACTOR. POOL CONTRACTOR SHALL COORDINATE RECESSES IN DECK WITH DECK CONTRACTOR.

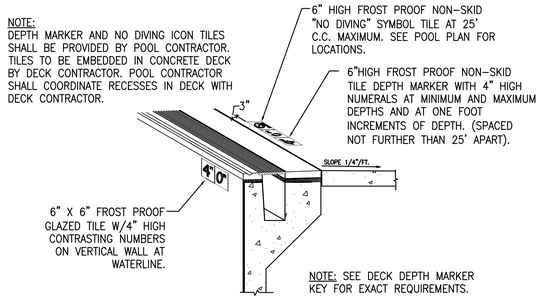


NOTE: SEE DECK DEPTH MARKER KEY FOR EXACT REQUIREMENTS.

## GUTTER POOL DEPTH MARKER AND NO DIVING ICON DETAIL

SCALE: 1/2" = 1'-0" — 1 / WF503

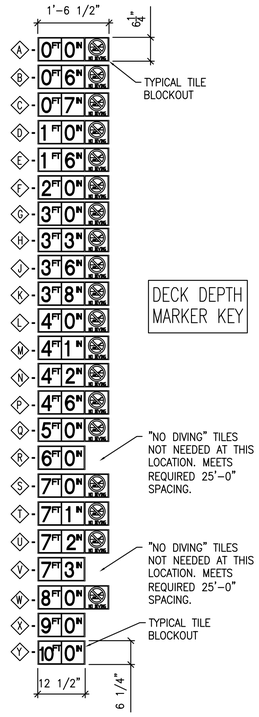


DECK DEPTH MARKER KEY

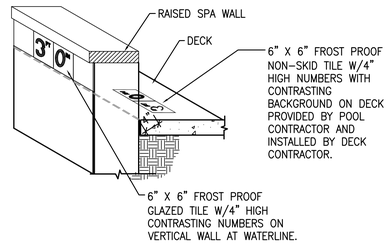


NOTE: SEE DECK DEPTH MARKER KEY FOR EXACT REQUIREMENTS.

## SPA DEPTH MARKER AND NO DIVING ICON DETAIL

SCALE: 3/4" = 1'-0" — 2 / WF503

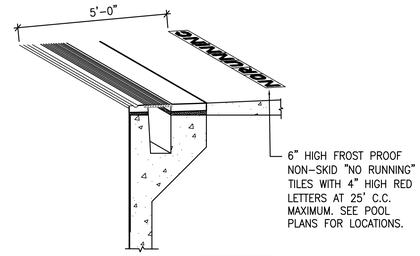


NO RUNNING

"NO RUNNING" TILES PROVIDED BY POOL CONTRACTOR. "NO RUNNING" NON-SKID TILES SHALL BE EMBEDDED IN CONCRETE DECK BY DECK CONTRACTOR. POOL CONTRACTOR SHALL COORDINATE BLOCKOUTS IN DECK WITH DECK CONTRACTOR. "NO RUNNING" TILES INSTALLED 4'-0" FROM WATER'S EDGE. SEE POOL PLANS FOR LOCATIONS.

## "NO RUNNING" DETAIL

SCALE: 1/2" = 1'-0" — 3 / WF503

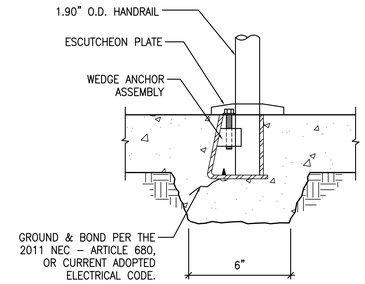


## HANDRAIL WEDGE ANCHOR DETAIL

SCALE: 3" = 1'-0" — 4 / WF503

NOTE:
COORDINATE WITH MANUFACTURER WITH CUSTOM GUTTER WIDTH ANCHOR REQUIREMENT AS REQUIRED. PROVIDE CUSTOM BASE STAND, CUSTOM LEVELER FOOT AND CUSTOM SEAT POLE.

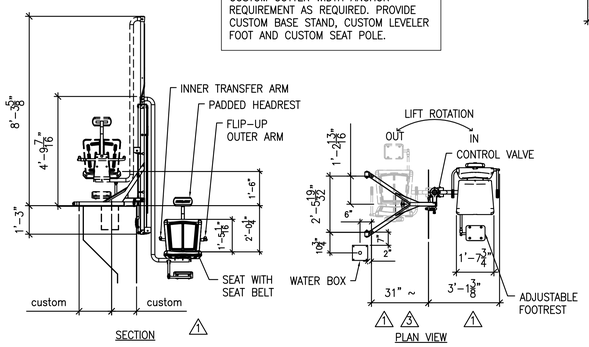


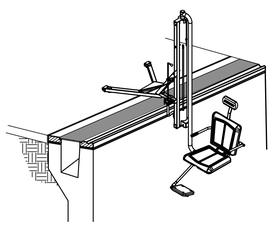

ISOMETRIC VIEW

1 DIMENSIONS VARY WITH SPECIFIC APPLICATIONS. *NOTE: SPECIFICATIONS ARE NORMAL AND ARE SUBJECT TO CHANGE. PLEASE CONTACT SPECTRUM PRODUCTS FOR CUSTOM APPLICATIONS.

2 *NOTE: CLEAR DECK SPACE SHALL BE PROVIDED PARALLEL TO THE WATER 36" WIDE x 48" MINIMUM FROM A LINE LOCATED 12" BEHIND THE REAR EDGE OF THE SEAT. (15.8.5.3 ADA GUIDELINES)

3 *NOTE: PREFERRED SETBACK OF 28" FROM THE EDGE OF THE POOL WALL TO THE ANCHOR LOCATIONS

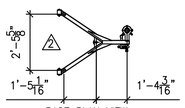


BASE PLAN VIEW

## ADA LIFT DETAIL - Hydraulic

SCALE: 3/8" = 1'-0" — 5 / WF503

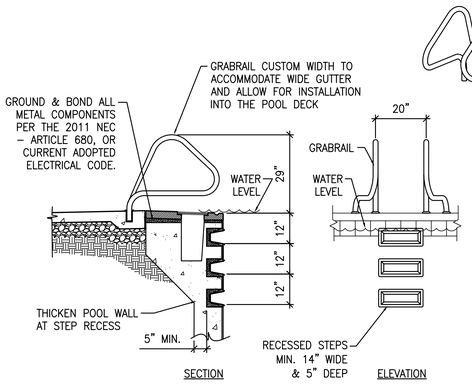


## GRABRAIL AND RECESSED STEP DETAIL

SCALE: 1/2" = 1'-0" — 6 / WF503

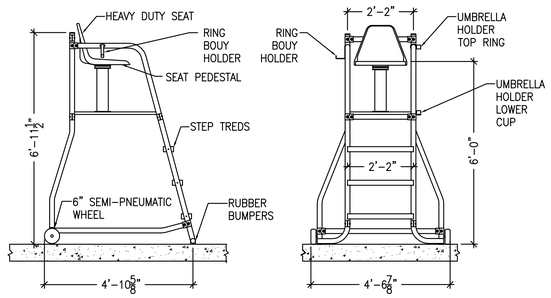


NOTE:
POOL CONTRACTOR SHALL PROVIDE AND INSTALL LIFE RING HOLDER (HOOK) AND RING GUIDE AND SOCKET FOR SHEPHERD'S CROOK ON EACH MOVABLE CHAIR (TYPICAL).

## 6 FT. MOVABLE LIFEGUARD CHAIR DETAIL

SCALE: 1/2" = 1'-0" — 7 / WF503

INCLUDES:
CUP HOLDER, AND UMBRELLA HOLDER. NON-SLIP SURFACE PLATFORM

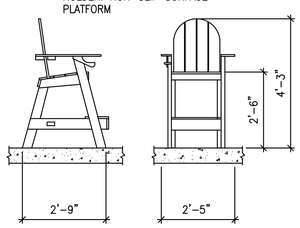


## 3' FT LIFEGUARD CHAIR DETAIL

SCALE: 1/2" = 1'-0" — 8 / WF503

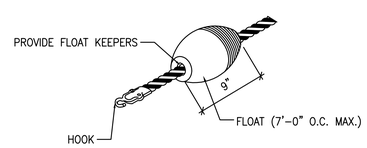


## SAFETY ROPE WITH FLOATS DETAIL

SCALE: 1 1/2" = 1'-0" — 9 / WF503

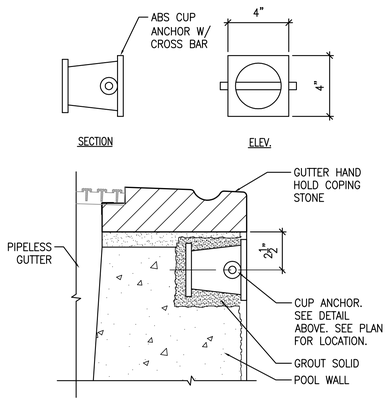


## CUP ANCHOR DETAIL

SCALE: 1 1/2" = 1'-0" — 10 / WF503

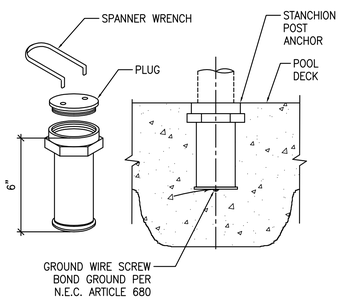


## STANCHION POST ANCHOR DETAIL

SCALE: 3" = 1'-0" — 11 / WF503

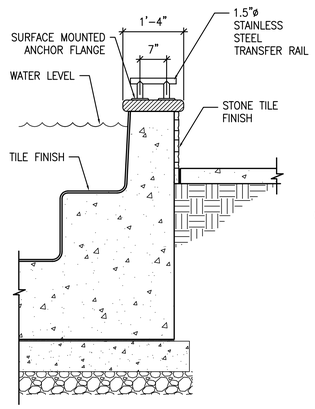


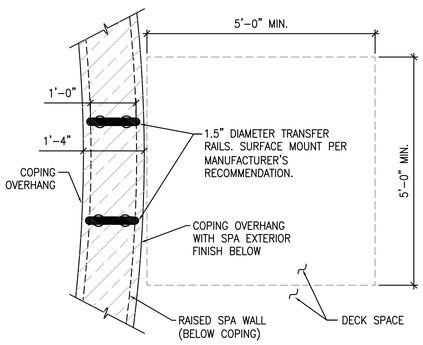


## RAISED SPA ADA TRANSFER WALL RAIL DETAIL

SCALE: 3/4" = 1'-0" — 12 / WF503

The entire contents of the attached documents, including all sketches, plans, studies, drawings, schedules and specifications and all copyrights therein are, and shall remain the sole property of Water Design Incorporated. The documents and their contents may not be used, photocopied or reproduced digitally, electronically or in any other manner without the express prior written consent of Water Design Incorporated.

MHTN
ARCHITECTS
MHTN Architects, Inc.
420 East South Temple
Suite 100
Salt Lake City, Utah 84111
Telephone (801) 595-6700
Telefax (801) 595-6717
www.mhtn.com

Hastings+Chivetta
ARCHITECTURE • PLANNING • ENGINEERING
622 Emerson, Suite 200
St. Louis, MO 63141
Tel. 314.863.5717
Fax. 314.863.2823
www.hastingschivetta.com

Water Design Inc.
5047 S. Galleria Dr.
Murray, Utah 84123
Phone : (801) 261-4009
Fax : (801) 261-4069
www.waterdesigninc.com

BUILDING OFFICIAL STAMP

# UNIVERSITY OF UTAH
# STUDENT LIFE CENTER
1836 E. BALLIF ROAD
SALT LAKE CITY, UTAH 84112

SEAL

MHTN PROJECT NO.

DRAWN BY: ACR CHECKED BY: BA

ISSUED:

| NO. | DATE | DESCRIPTION |
|---|---|---|

CONTRACTOR TO VERIFY DRAWINGS IN FIELD USE REFLECT LAST REVISION DATE.

| NO. | DATE | DESCRIPTION |
|---|---|---|

SHEET NAME
DETAILS

BID DOCUMENTS
MAY 15, 2013

SHEET NUMBER
WF503

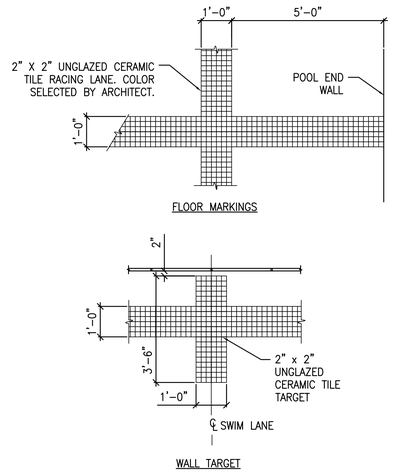


## LAP AREA LANE MARKER DETAIL

SCALE: 1/2" = 1'-0"

1 / WF504

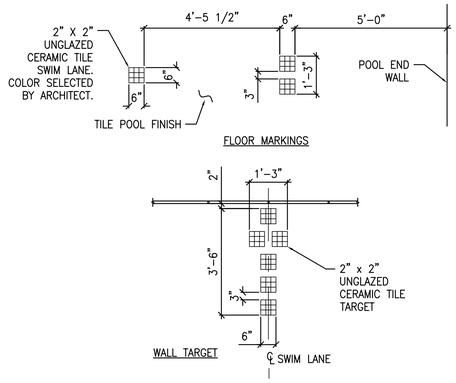


## ACTIVITY AREA LANE MARKER DETAIL

SCALE: 1/2" = 1'-0"

2 / WF504

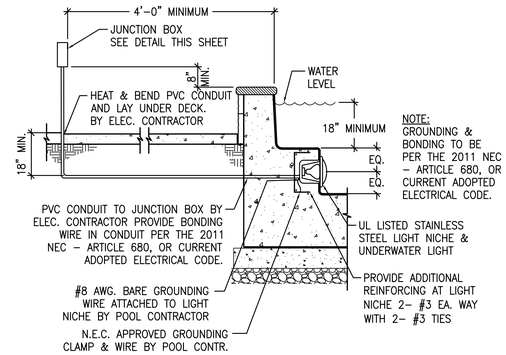


## SPA UNDERWATER LIGHT DETAIL

SCALE: 1/2" = 1'-0"

3 / WF504

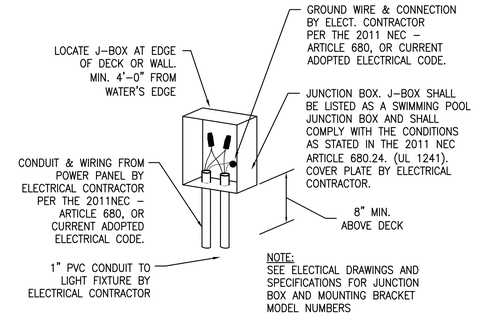


## U.W. LIGHT JUNCTION BOX DETAIL

SCALE: NONE

4 / WF504

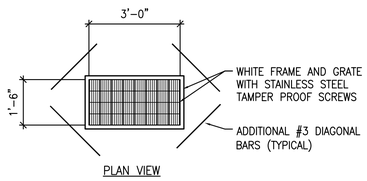


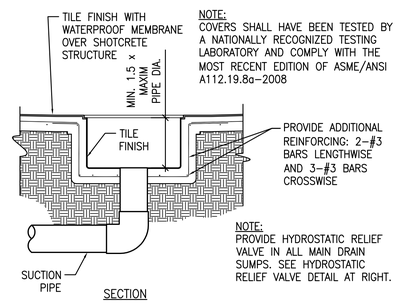


NOTE:
COVERS SHALL HAVE BEEN TESTED BY A NATIONALLY RECOGNIZED TESTING LABORATORY AND COMPLY WITH THE MOST RECENT EDITION OF ASME/ANSI A112.19.8a–2008

NOTE:
PROVIDE HYDROSTATIC RELIEF VALVE IN ALL MAIN DRAIN SUMPS. SEE HYDROSTATIC RELIEF VALVE DETAIL AT RIGHT.

## MAIN DRAIN SUMP AND COVER DETAIL

SCALE: 1" = 1'-0"

5 / WF504

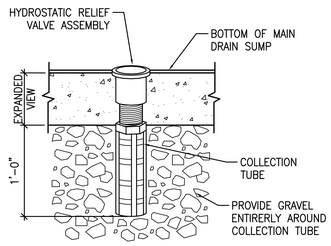


## HYDROSTATIC RELIEF VALVE ASSEMBLY DETAIL

SCALE: 11/2" = 1'-0"

6 / WF504

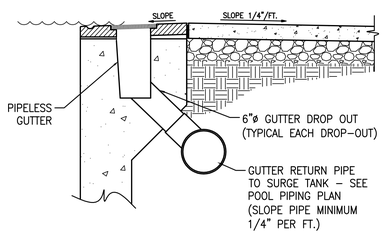


## GUTTER DROP OUT DETAIL

SCALE: 3/4" = 1'-0"

7 / WF504

INLET FLOW REQUIREMENTS:

BASE BID ACTIVITY POOL INLETS:
SHALLOW AREA <2' DEEP
SET FLOW AT 10.5 GPM WITH 5.25 PSI = 1/8 TURN OPEN
ACTIVITY AREA 2' TO 4' DEEP
SET FLOW AT 32.6 GPM WITH 5.25 PSI = 3/8 TURN OPEN
LAP AREA 4' TO 9' DEEP
SET FLOW AT 31 GPM WITH 5.25 PSI = ~3/8 TURN OPEN

ALT BID ACTIVITY POOL INLETS:
SHALLOW AREA <2' DEEP
SET FLOW AT 15.5 GPM WITH 5.0 PSI = 3/16 TURN OPEN
ACTIVITY AREA >2' DEEP
SET FLOW AT 25 GPM WITH 5.0 PSI = 5/16 TURN OPEN

ALT BID 50 M LAP POOL INLETS:
SET FLOW AT 24.5 GPM WITH 6.25 PSI = 1/4 TURN OPEN

ALT BID OUTDOOR POOL INLETS:
SHALLOW AREA <2' DEEP
SET FLOW AT 8 GPM WITH 4.5 PSI = 1/8 TURN OPEN

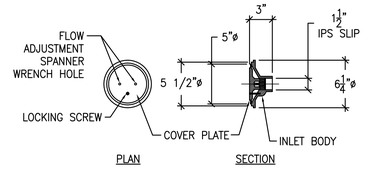


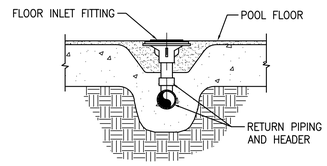


## POOL FLOOR INLET DETAIL

SCALE: 1/2" = 1'-0"

8 / WF504

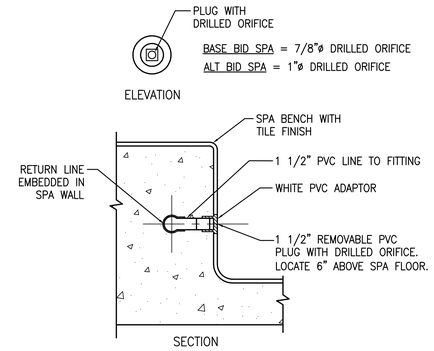


## SPA WALL INLET DETAIL

SCALE: 1/2" = 1'-0"

9 / WF504

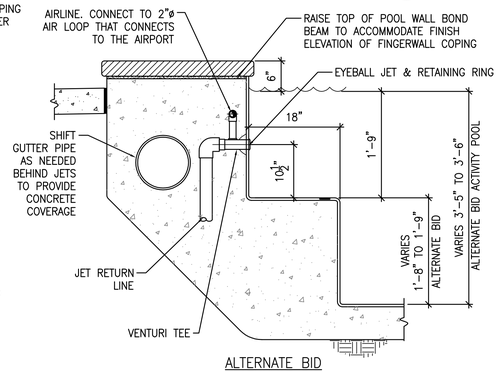


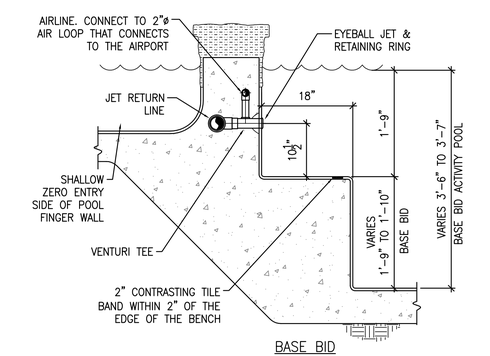


## ACTIVITY POOL BUBBLE COUCH DETAIL

SCALE: 1" = 1'-0"

12 / WF504

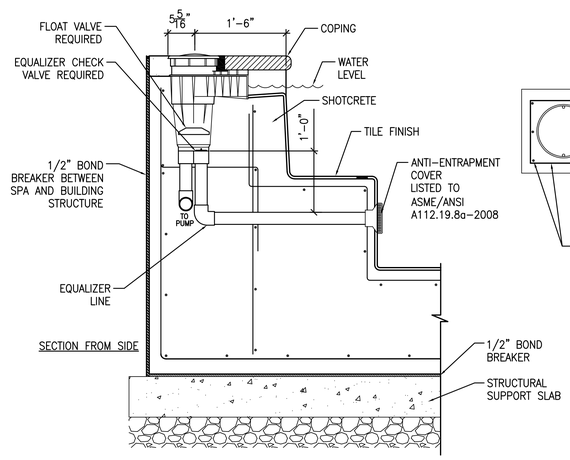


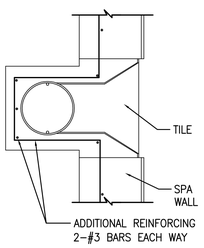


## SPA SURFACE SKIMMER DETAIL

SCALE: 1" = 1'-0"

10 / WF504

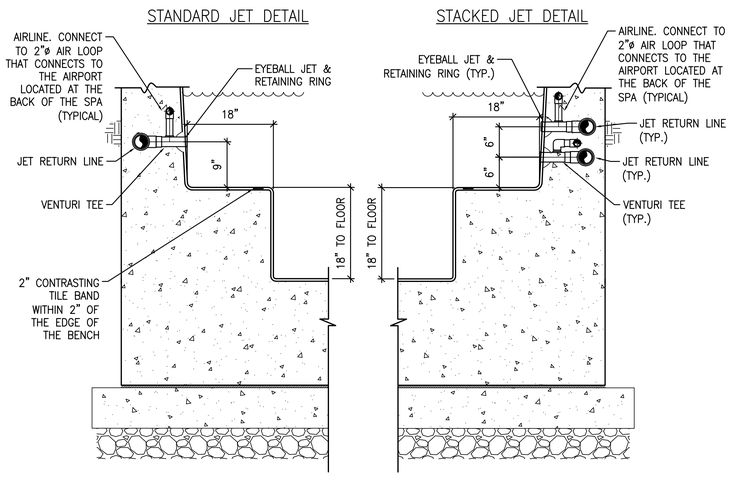


## SPA JET DETAIL

SCALE: 1" = 1'-0"

11 / WF504

The entire contents of the attached documents, including all sketches, plans, studies, drawings, schedules and specifications and all copyrights therein are, and shall remain the sole property of Water Design Incorporated. The documents and their contents may not be used, photocopied or reproduced digitally, electronically or in any other manner without the express prior written consent of Water Design Incorporated.

MHTN
ARCHITECTS
MHTN Architects, Inc.
420 East South Temple
Suite 100
Salt Lake City, Utah 84111
Telephone (801) 595-6700
Telefax (801) 595-6717
www.mhtn.com

Hastings+Chivetta
ARCHITECTURE • PLANNING • ENGINEERING
622 Emerson, Suite 200
St. Louis, MO 63141
Tel. 314.863.5717
Fax. 314.863.2823
www.hastingschivetta.com

Water Design Inc.
5047 S. Galleria Dr.
Murray, Utah 84123
Phone : (801) 261-4009
Fax : (801) 261-4069
www.waterdesigninc.com

BUILDING OFFICIAL STAMP

# UNIVERSITY OF UTAH
# STUDENT LIFE CENTER
1836 E. BALLIF ROAD
SALT LAKE CITY, UTAH 84112

SEAL

LICENSED PROFESSIONAL ENGINEER
CHARLES ROSS ANDERSON
145349-2202
5-15-13
STATE OF UTAH

MHTN PROJECT NO.

DRAWN BY: ACR CHECKED BY: BA

ISSUED:

| NO. | DATE | DESCRIPTION |
|---|---|---|
| | | |

CONTRACTOR TO VERIFY DRAWINGS IN FIELD USE REFLECT LAST REVISION DATE.

| NO. | DATE | DESCRIPTION |
|---|---|---|
| | | |

SHEET NAME

DETAILS

BID DOCUMENTS
MAY 15, 2013

SHEET NUMBER

WF504

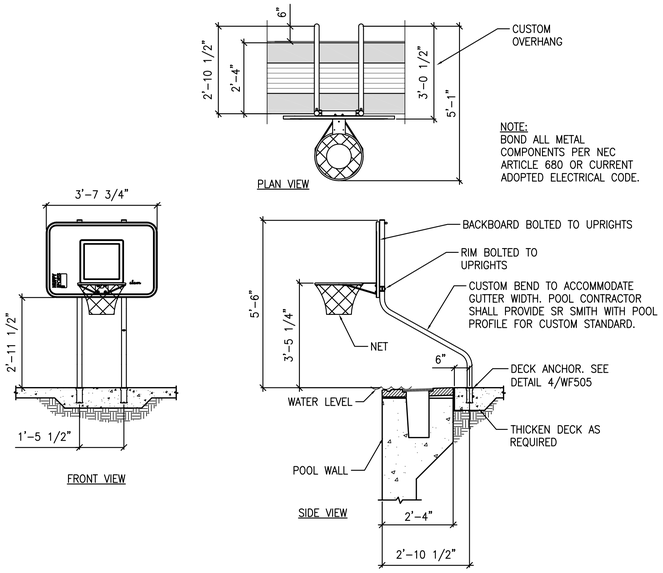


NOTE:
BOND ALL METAL COMPONENTS PER NEC ARTICLE 680 OR CURRENT ADOPTED ELECTRICAL CODE.

## CUSTOM WATER BASKETBALL STANDARD DETAIL (1 / WF505)

SCALE: 1/2" = 1'-0"

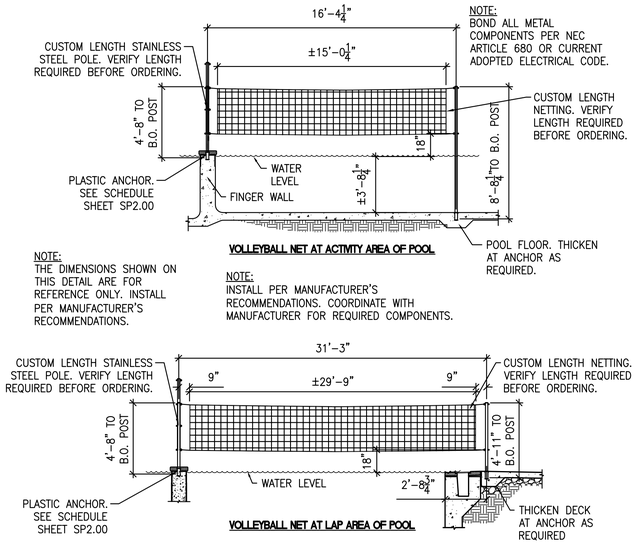


NOTE:
THE DIMENSIONS SHOWN ON THIS DETAIL ARE FOR REFERENCE ONLY. INSTALL PER MANUFACTURER'S RECOMMENDATIONS.

NOTE:
BOND ALL METAL COMPONENTS PER NEC ARTICLE 680 OR CURRENT ADOPTED ELECTRICAL CODE.

NOTE:
INSTALL PER MANUFACTURER'S RECOMMENDATIONS. COORDINATE WITH MANUFACTURER FOR REQUIRED COMPONENTS.

## WATER VOLLEYBALL SYSTEM DETAIL (2 / WF505)

SCALE: NONE

NOTE:
BOND ALL METAL COMPONENTS PER NEC ARTICLE 680 OR CURRENT ADOPTED ELECTRICAL CODE.

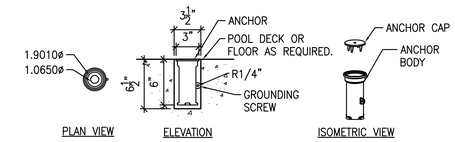


## WATER VOLLEYBALL/BASKETBALL POST ANCHOR DETAIL (3 / WF505)

SCALE: NONE

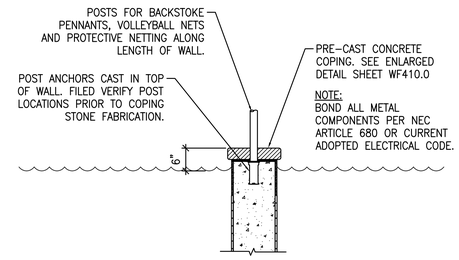


NOTE:
BOND ALL METAL COMPONENTS PER NEC ARTICLE 680 OR CURRENT ADOPTED ELECTRICAL CODE.

## FINGERWALL POST ANCHORS (4 / WF505)

SCALE: 3/4" = 1'-0"

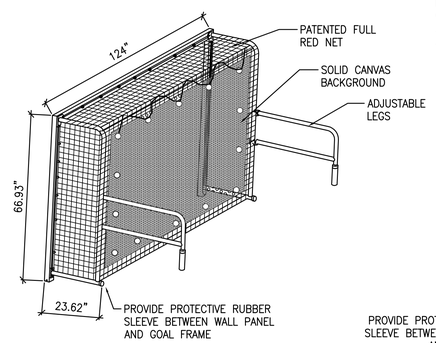


NOTE:
BOND ALL METAL COMPONENTS PER NEC ARTICLE 680 OR CURRENT ADOPTED ELECTRICAL CODE.

NOTE:
THE DIMENSIONS SHOWN ON THIS DETAIL ARE FOR REFERENCE ONLY. INSTALL PER MANUFACTURER'S RECOMMENDATIONS.

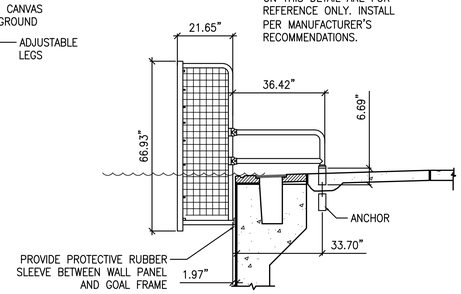


## WATER POLO GOAL DETAIL (5 / WF505)

SCALE: 1/2" = 1'-0"

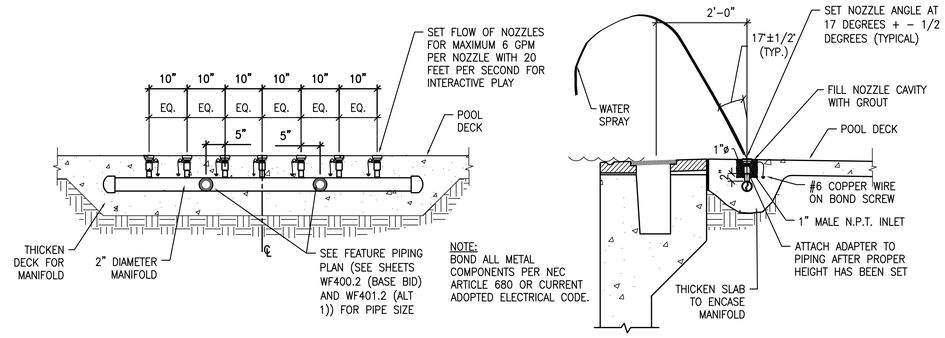


NOTE:
BOND ALL METAL COMPONENTS PER NEC ARTICLE 680 OR CURRENT ADOPTED ELECTRICAL CODE.

## ANGLED DECK SPRAY DETAIL (6 / WF505)

SCALE: 3/4" = 1'-0"

NOTE:
FEATURE IS INSTALLED ON A SLOPED FLOOR. CONTRACTOR SHALL INSTALL NICHE IN SUCH A WAY THAT THE SPRAYS SHALL BE VERTICAL. ADJUST FLOOR AT NOZZLE NICHE AS REQUIRED.

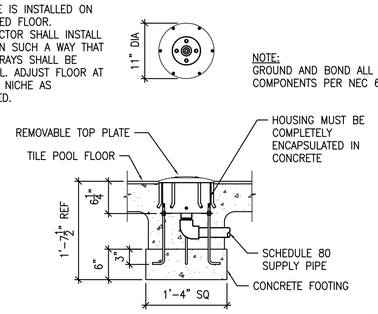


NOTE:
GROUND AND BOND ALL METAL COMPONENTS PER NEC 680.

NOTES:
HOUSING: 20 GAUGE DEEP-DRAWN TYPE 304 STAINLESS STEEL WITH GROUNDING CONNECTION AND 1½" FPT INLET. SUPPLIED WITH 4, 3/8" X 12" X 2" 18/8 STAINLESS STEEL ANCHOR BOLTS WITH TWO LEVELING NUTS AND WASHERS PER BOLT AND WOOD POUR TEMPLATE.
GASKETS: 70 DUROMETER EPDM O-RING.
CONSTRUCTION COVER: REUSABLE 11" DIAMETER HDPE (HIGH DENSITY POLYETHYLENE).
TOP PLATE: 11" DIAMETER SLIGHTLY DOMED CAST BRONZE WITH INTERCHANGEABLE NOZZLE ASSEMBLY AND UV STABILIZED, TEXTURED ELASTOMERIC URETHANE COATING.
TOP PLATE ANCHORS: SIX ½" X 5" MACHINED BRASS WITH 30° HOOK BEND.
COLOR: SPECIFY RED, DARK BLUE, LIGHT BLUE, YELLOW, GREEN, ORANGE, PURPLE, OR CUSTOM PAINT.
FASTENERS: TAMPER-RESISTANT 18/8 STAINLESS STEEL.
NOZZLE: PRECISION MACHINED BRASS AND COPPER.

## WATER LAVA DETAIL (7 / WF505)

SCALE: 1" = 1'-0"

NOTE:
FEATURE IS INSTALLED ON A SLOPED FLOOR. CONTRACTOR SHALL INSTALL NICHE IN SUCH A WAY THAT THE SPRAYS SHALL BE VERTICAL. ADJUST FLOOR AT NOZZLE NICHE AS REQUIRED.

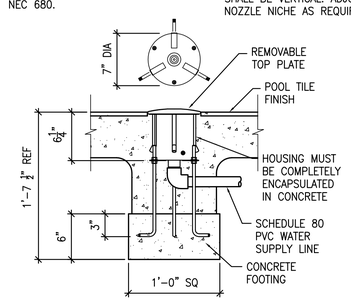


NOTES:
MODEL NUMBER: W091
INTERACTIVE WATER EFFECT: SHALL BE A VERTICAL AERATED MOUND OF WATER.
HOUSING: 20 GAUGE DEEP-DRAWN TYPE 304 STAINLESS STEEL WITH GROUNDING CONNECTION AND 1" FPT INLET. SUPPLIED WITH 4, 3/8" X 12" X 2" 18/8 STAINLESS STEEL ANCHOR BOLTS WITH TWO LEVELING NUTS AND WASHERS PER BOLT AND WOOD POUR TEMPLATE.
GASKETS: 70 DUROMETER EPDM O-RING.
CONSTRUCTION COVER: REUSABLE 7" DIAMETER HDPE (HIGH DENSITY POLYETHYLENE).
TOP PLATE: 7" DIAMETER SLIGHTLY DOMED CAST BRONZE WITH INTERCHANGEABLE NOZZLE ASSEMBLY AND UV STABILIZED, TEXTURED ELASTOMERIC URETHANE COATING WITH A UV AND CHLORINE RESISTANT SEALER COAT.
TOP PLATE ANCHORS: THREE ½" X 5" MACHINED BRASS WITH 30° HOOK BEND.
COLOR: (SPECIFY RED, DARK BLUE, LIGHT BLUE, YELLOW, GREEN, ORANGE, OR PURPLE.)
FASTENERS: TAMPER-RESISTANT 18/8 STAINLESS STEEL.
NOZZLE: PRECISION MACHINED BRASS.

## BUBBLER DETAIL (8 / WF505)

SCALE: 1 1/2" = 1'-0"

The entire contents of the attached documents, including all sketches, plans, studies, drawings, schedules and specifications and all copyrights therein are, and shall remain the sole property of Water Design Incorporated. The documents and their contents may not be used, photocopied or reproduced digitally, electronically or in any other manner without the express prior written consent of Water Design Incorporated.

MHTN
ARCHITECTS
MHTN Architects, Inc.
420 East South Temple
Suite 100
Salt Lake City, Utah 84111
Telephone (801) 595-6700
Telefax (801) 595-6717
www.mhtn.com

Hastings+Chivetta
ARCHITECTURE • PLANNING • ENGINEERING
622 Emerson, Suite 200
St. Louis, MO 63141
Tel. 314.863.5717
Fax. 314.863.2823
www.hastingschivetta.com

Water Design Inc.
5047 S. Galleria Dr.
Murray, Utah 84123
Phone : (801) 261-4009
Fax : (801) 261-4069
www.waterdesigninc.com

BUILDING OFFICIAL STAMP

# UNIVERSITY OF UTAH
# STUDENT LIFE CENTER
1836 E. BALLIF ROAD
SALT LAKE CITY, UTAH 84112

SEAL

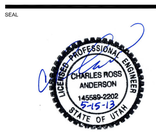


MHTN PROJECT NO.

DRAWN BY: ACR CHECKED BY: BA

ISSUED:

| NO. | DATE | DESCRIPTION |
|---|---|---|

CONTRACTOR TO VERIFY DRAWINGS IN FIELD USE REFLECT LAST REVISION DATE.

| NO. | DATE | DESCRIPTION |
|---|---|---|

SHEET NAME

DETAILS

BID DOCUMENTS
MAY 15, 2013

SHEET NUMBER

WF505

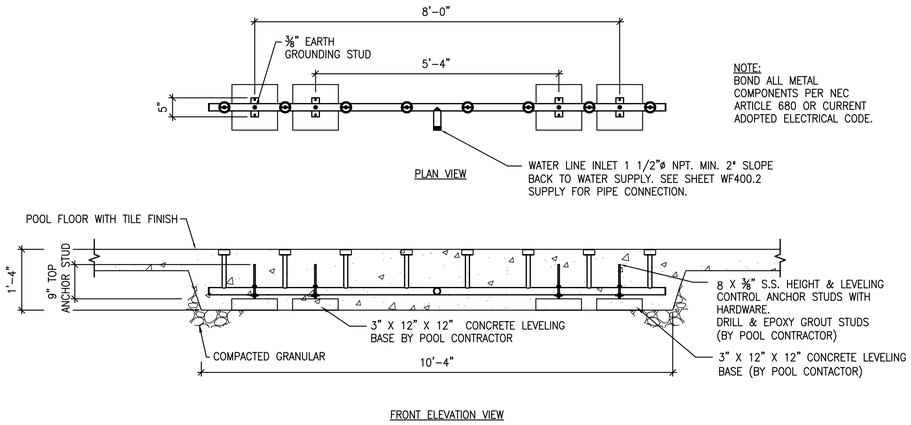


## "WATERWALL" FEATURE DETAIL

SCALE: 3/4" = 1'-0"

1 / WF506

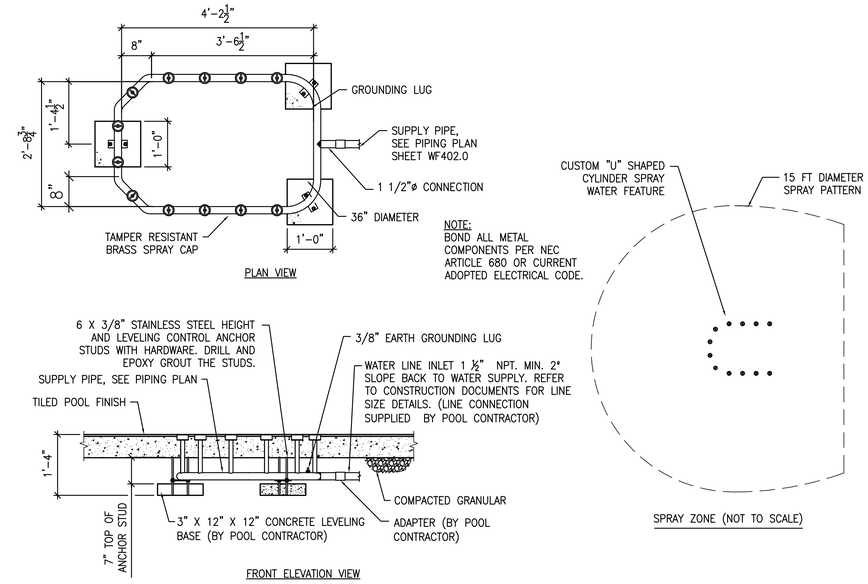


## "U" SPRAY DETAIL

SCALE: 3/4" = 1'-0"

2 / WF506

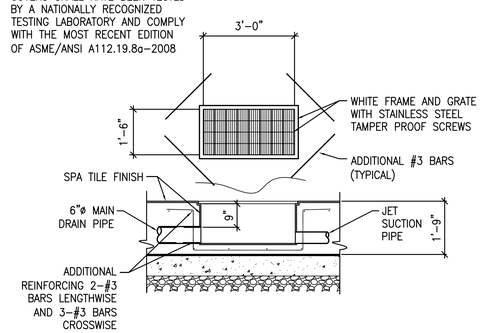


## SPA MAIN DRAIN AND SUMP DETAIL

SCALE: 1/2" = 1'-0"

3 / WF506

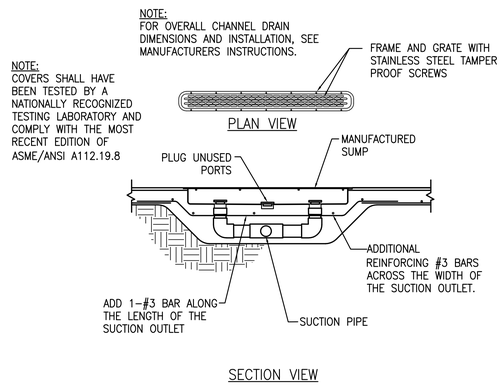


## POOL BUBBLE COUCH FRAME, GRATE AND SUMP DETAIL

SCALE: 1" = 1'-0"

4 / WF506

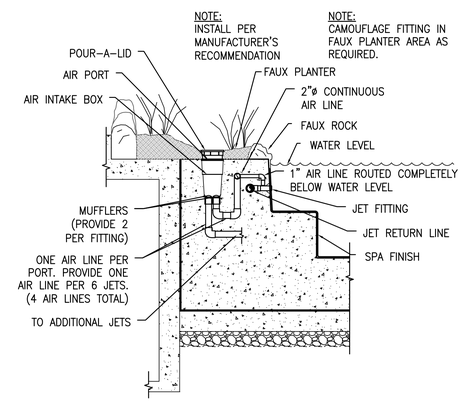


## AIR PORT DETAIL

SCALE: 1/2" = 1'-0"

5 / WF506

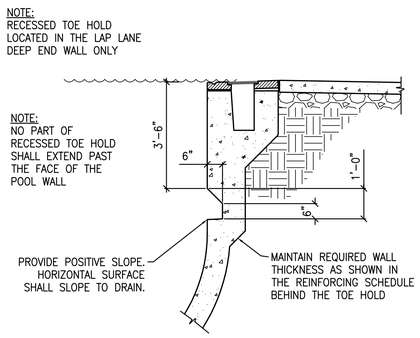


## POOL TOE HOLD DETAIL

SCALE: 1/2" = 1'-0"

6 / WF506

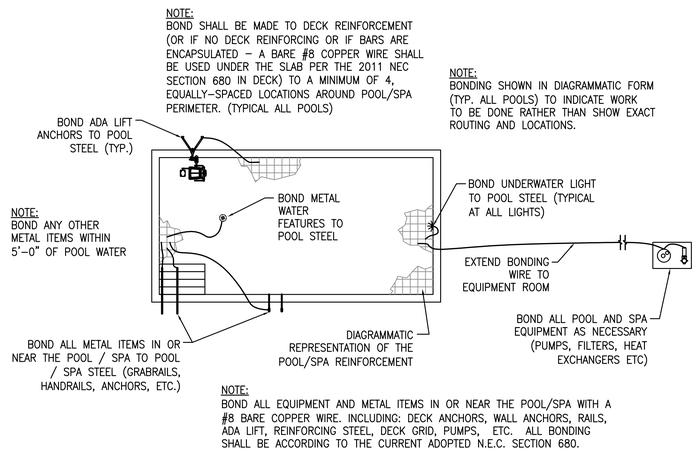


## EQUIPOTENTIAL BONDING SCHEMATIC

NO SCALE

7 / WF506

The entire contents of the attached documents, including all sketches, plans, studies, drawings, schedules and specifications and all copyrights therein are, and shall remain the sole property of Water Design Incorporated. The documents and their contents may not be used, photocopied or reproduced digitally, electronically or in any other manner without the express prior written consent of Water Design Incorporated.

MHTN
ARCHITECTS
MHTN Architects, Inc.
420 East South Temple
Suite 100
Salt Lake City, Utah 84111
Telephone (801) 595-6700
Telefax (801) 595-6717
www.mhtn.com

Hastings+Chivetta
ARCHITECTURE • PLANNING • ENGINEERING
622 Emerson, Suite 200
St. Louis, MO 63141
Tel. 314.863.5717
Fax. 314.863.2823
www.hastingschivetta.com

Water Design Inc.
5047 S. Galleria Dr.
Murray, Utah 84123
Phone : (801) 261-4009
Fax : (801) 261-4069
www.waterdesigninc.com

BUILDING OFFICIAL STAMP

# UNIVERSITY OF UTAH
# STUDENT LIFE CENTER
1836 E. BALLIF ROAD
SALT LAKE CITY, UTAH 84112

SEAL

LICENSED PROFESSIONAL ENGINEER
CHARLES ROSS ANDERSON
145589-2202
5-15-13
STATE OF UTAH

MHTN PROJECT NO.

DRAWN BY: ACR CHECKED BY: BA

ISSUED:

| NO. | DATE | DESCRIPTION |
|---|---|---|
| | | |

CONTRACTOR TO VERIFY DRAWINGS IN FIELD USE REFLECT LAST REVISION DATE.

| NO. | DATE | DESCRIPTION |
|---|---|---|
| | | |

SHEET NAME

DETAILS

BID DOCUMENTS
MAY 15, 2013

SHEET NUMBER

WF506

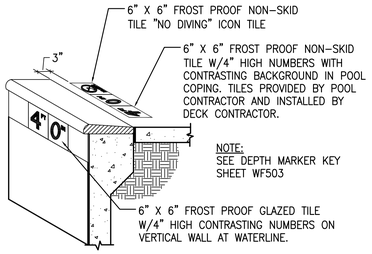


## DEPTH MARKER DETAIL (ALT BID 2)

SCALE: 3/4" = 1'-0"

1 / WF507

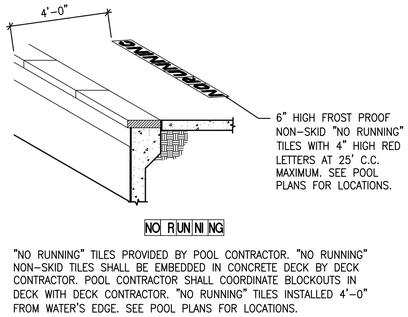


## NO RUNNNG TILE DETAIL (ALT BID 2)

SCALE: 1/2" = 1'-0"

2 / WF507

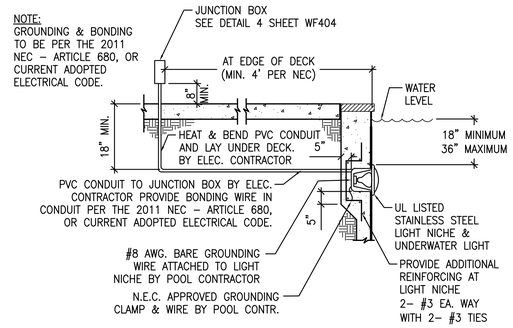


## OUTDOOR POOL UNDERWATER LIGHT DETAIL (ALT BID 2)

SCALE: 1/2" = 1'-0"

3 / WF507

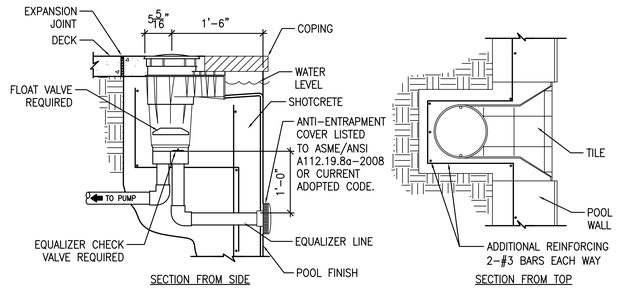


## OUTDOOR POOL SKIMMER DETAIL (ALT BID 2)

SCALE: 1" = 1'-0"

4 / WF507

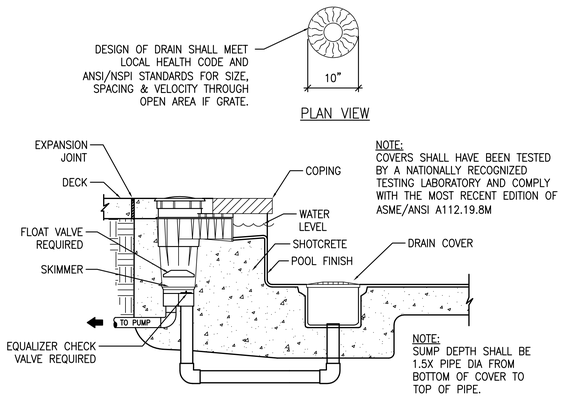


## SKIMMER AT SHALLOW DEPTH DETAIL (ALT BID 2)

SCALE: 1" = 1'-0"

5 / WF507

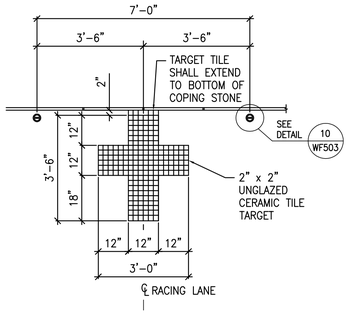


WALL TARGET

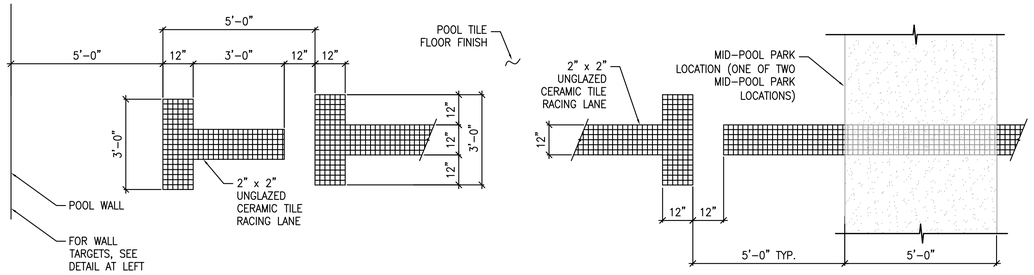


FLOOR MARKINGS

## FLOOR SWIM LANE, FLOOR AND WALL TURNING TEE MARKINGS DETAIL

SCALE: 1/2" = 1'-0"

6 / WF507

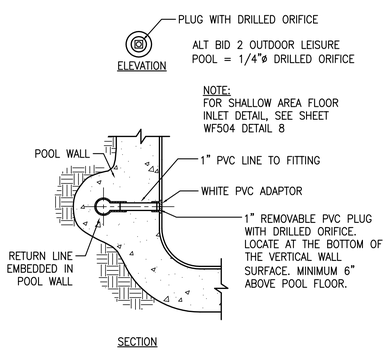


## OUTDOOR POOL WALL INLET DETAIL (ALT BID 2)

SCALE: 1 1/2" = 1'-0"

7 / WF507

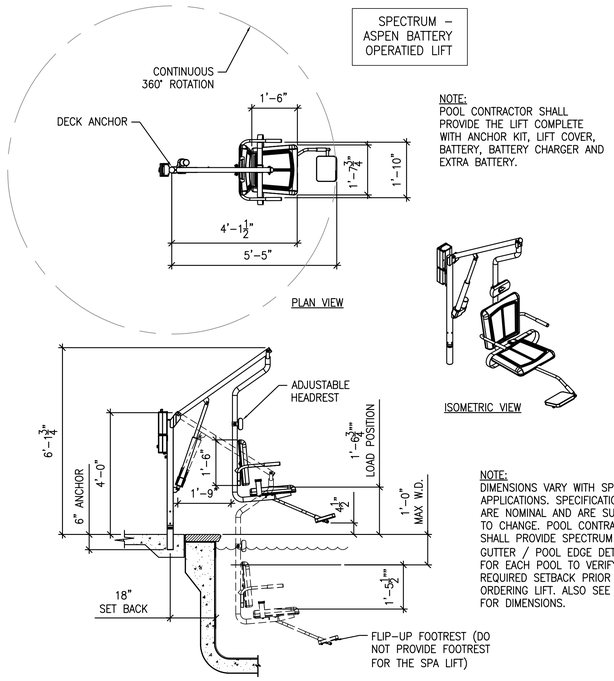


## OUTDOOR LEISURE POOL ADA LIFT DETAIL (ALT BID 2)

NO SCALE

8 / WF507

NOTES:

- PRIOR TO ORDERING HANDICAP LIFT, CONFIRM WITH MANUFACTURER THE ANCHOR SETBACK REQUIRED FOR POOL WALL WIDTH.
- DIMENSIONS VARY WITH SPECIFIC APPLICATIONS.
- SPECIFICATIONS ARE NOMINAL AND ARE SUBJECT TO CHANGE. PLEASE CONTACT SPECTRUM PRODUCTS FOR CUSTOM APPLICATIONS.
- MAXIMUM DEPTH ACHIEVED WHEN TRAVELER IS SET BACK TO A MAXIMUM OF 27".
- LIFT WILL LOWER TO 18" BELOW POOL DECK AT A MAXIMUM OF 33" SETBACK.

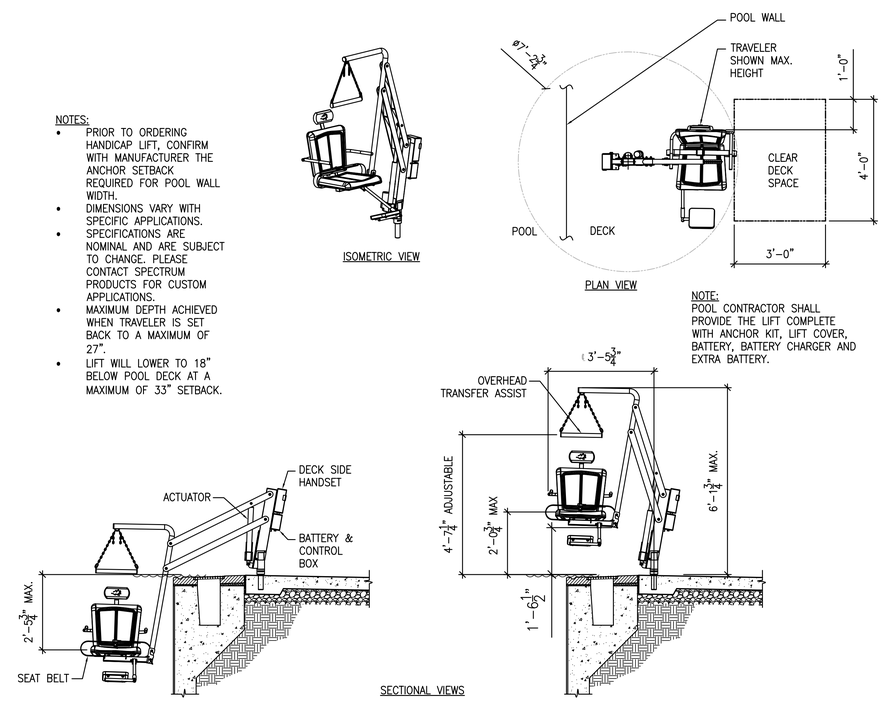


## INDOOR LAP POOL ADA LIFT DETAIL (ALT BID 1)

NO SCALE

9 / WF507

The entire contents of the attached documents, including all sketches, plans, studies, drawings, schedules and specifications and all copyrights therein are, and shall remain the sole property of Water Design Incorporated. The documents and their contents may not be used, photocopied or reproduced digitally, electronically or in any other manner without the express prior written consent of Water Design Incorporated.

MHTN ARCHITECTS
MHTN Architects, Inc.
420 East South Temple
Suite 100
Salt Lake City, Utah 84111
Telephone (801) 595-6700
Telefax (801) 595-6717
www.mhtn.com

Hastings+Chivetta
ARCHITECTURE • PLANNING • ENGINEERING
622 Emerson, Suite 200
St. Louis, MO 63141
Tel. 314.863.5717
Fax. 314.863.2823
www.hastingschivetta.com

Water Design Inc.
5047 S. Galleria Dr.
Murray, Utah 84123
Phone : (801) 261-4009
Fax : (801) 261-4069
www.waterdesigninc.com

BUILDING OFFICIAL STAMP

# UNIVERSITY OF UTAH
# STUDENT LIFE CENTER
1836 E. BALLIF ROAD
SALT LAKE CITY, UTAH 84112

SEAL

LICENSED PROFESSIONAL ENGINEER CHARLES ROSS ANDERSON 145589-2202 5-15-13 STATE OF UTAH

MHTN PROJECT NO.

DRAWN BY: ACR CHECKED BY: BA

ISSUED:

| NO. | DATE | DESCRIPTION |
|---|---|---|

CONTRACTOR TO VERIFY DRAWINGS IN FIELD USE REFLECT LAST REVISION DATE.

| NO. | DATE | DESCRIPTION |
|---|---|---|

SHEET NAME

DETAILS - ALTERNATE BID

BID DOCUMENTS
MAY 15, 2013

SHEET NUMBER

WF507

POOL BULKHEAD NOTES:

1. ONE MOVEABLE SWIMMING POOL BULKHEAD AS DESCRIBED HEREIN, AND AS REQUIRED FOR A COMPLETED AND OPERABLE BULKHEAD SYSTEM.
2. BULKHEAD SHALL BE 5' WIDE, 48'–11" LONG, 5' HIGH, AND SHALL SATISFY THE REQUIREMENTS OF THE FINA, U.S. SWIMMING, AND NCAA RULES BOTH IN TERMS OF DIMENSIONS AND MARKINGS (BLACK WALL TARGETS).
3. MOVING THE BULKHEAD SHALL BE ACCOMPLISHED BY ONE PERSON AT EACH END OF THE BULKHEAD. BUOYANCY CHAMBERS SHALL BE PROVIDED AS MEANS OF REDUCING THE STATIC WEIGHT AND INERTIAL RESISTANCE TO MOVEMENT. UNITS SHALL GLIDE FREELY ON CORROSION PROOF UHMWP (ULTRA HIGH MOLECULAR WEIGHT POLYETHYLENE) GUIDES, AND UHMWP SKID PLATES INSTALLED BOTH AT THE GUTTER LIPS AND SIDE WALLS.
4. SUITABLE MEANS OF ANCHORING THE BULKHEAD SHALL BE PROVIDED TO RESIST ALL DEAD AND LIVE LOAD COMPONENTS, ANCHORAGE POINTS ON THE GUTTER TO BE SUPPLIED BY STARK (6 TOTAL) AND INSTALLED BY THE CONTRACTOR, WHICH SHALL POSITION THE BULKHEAD IN THE REQUIRED COURSE DIMENSION'S FOR MULTIPLE LOCATIONS.
5. ACCESS HATCHES SHALL BE INCLUDED AT BOTH ENDS OF THE BULKHEAD TO FACILITATE INSPECTION OF THE INTERIOR OF THE BULKHEAD, ANCHOR MECHANISMS, AND TO ALLOW FOR INSTALLATION OF ELECTRONIC TIMING CABLES AND CONDUCTORS INTO TIMING GUTTER.
6. THE MANUFACTURER SHALL GUARANTEE THE COMPLETE BULKHEAD TO BE FREE OF MATERIAL DEFECTS, AND WARRANTY THE VARIOUS INDIVIDUAL COMPOSITE MATERIALS FOR A PERIOD OF THREE (3) YEARS WITH A TWENTY FIVE (25) YEAR STRUCTURAL WARRANTY.

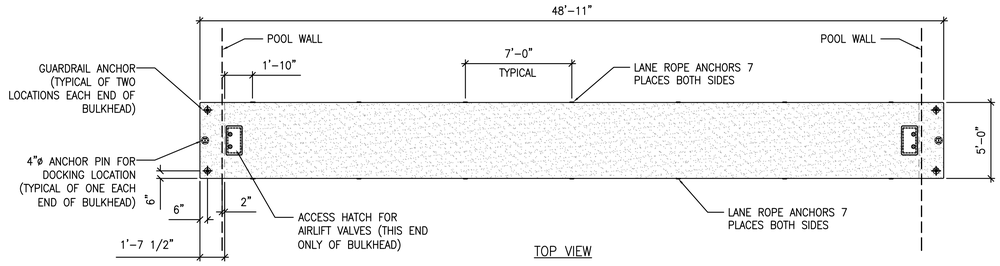


TOP VIEW

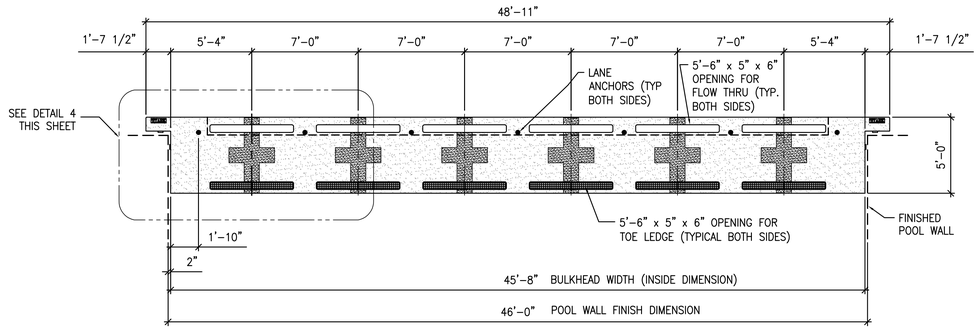


FRONT ELEVATION
(OPPOSITE SIDE SIMILAR)

## BULKHEAD FRONT ELEVATION AND TOP VIEW DETAIL

SCALE: 1/4" = 1'-0"

1 / WF508

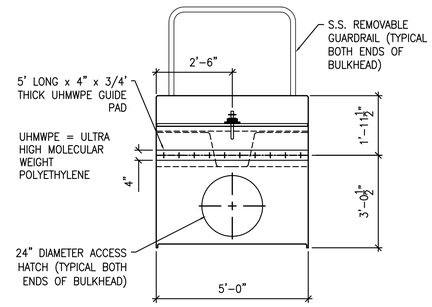


## BULKHEAD END VIEW ELEVATION DETAIL

SCALE: 1/2" = 1'-0"

2 / WF508

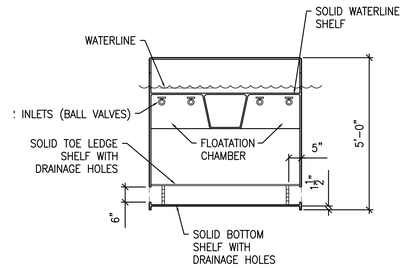


## BULKHEAD CROSS SECTION DETAIL

SCALE: 1/2" = 1'-0"

3 / WF508

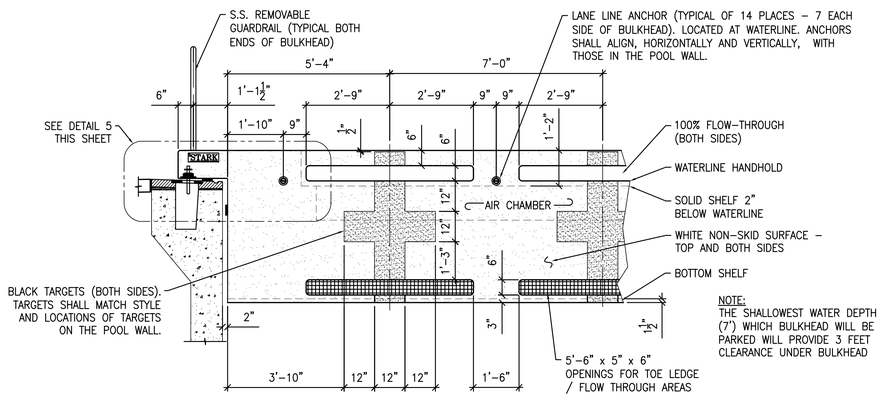


NOTE:
THE SHALLOWEST WATER DEPTH (7') WHICH BULKHEAD WILL BE PARKED WILL PROVIDE 3 FEET CLEARANCE UNDER BULKHEAD

## BULKHEAD AT POOL WALL DETAIL

SCALE: 1/2" = 1'-0"

4 / WF508

NOTE:
UHMWPE = ULTRA HIGH MOLECULAR WEIGHT POLYETHYLENE

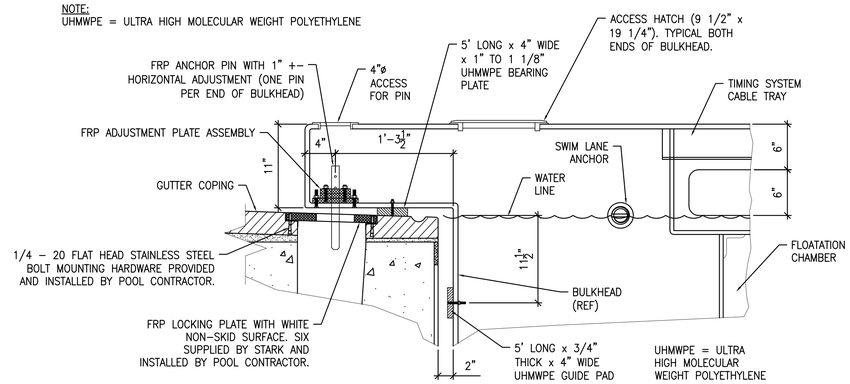


## ENLARGED BULKHEAD PARK ANCHORAGE DETAIL

SCALE: 1 1/2" = 1'-0"

5 / WF508

The entire contents of the attached documents, including all sketches, plans, studies, drawings, schedules and specifications and all copyrights therein are, and shall remain the sole property of Water Design Incorporated. The documents and their contents may not be used, photocopied or reproduced digitally, electronically or in any other manner without the express prior written consent of Water Design Incorporated.

MHTN
ARCHITECTS
MHTN Architects, Inc.
420 East South Temple
Suite 100
Salt Lake City, Utah 84111
Telephone (801) 595-6700
Telefax (801) 595-6717
www.mhtn.com

Hastings+Chivetta
ARCHITECTURE • PLANNING • ENGINEERING
622 Emerson, Suite 200
St. Louis, MO 63141
Tel. 314.863.5717
Fax. 314.863.2823
www.hastingschivetta.com

Water Design Inc.
5047 S. Galleria Dr.
Murray, Utah 84123
Phone : (801) 261-4009
Fax : (801) 261-4069
www.waterdesigninc.com

BUILDING OFFICIAL STAMP

# UNIVERSITY OF UTAH
# STUDENT LIFE CENTER
1836 E. BALLIF ROAD
SALT LAKE CITY, UTAH 84112

SEAL

LICENSED PROFESSIONAL ENGINEER
CHARLES ROSS ANDERSON
145589-2202
5-15-13
STATE OF UTAH

MHTN PROJECT NO.

DRAWN BY: ACR CHECKED BY: BA

ISSUED:

| NO. | DATE | DESCRIPTION |
|---|---|---|
| | | |

CONTRACTOR TO VERIFY DRAWINGS IN FIELD USE REFLECT LAST REVISION DATE.

| NO. | DATE | DESCRIPTION |
|---|---|---|
| | | |

SHEET NAME

BULKHEAD DETAILS ALT 1

BID DOCUMENTS
MAY 15, 2013

SHEET NUMBER

WF508

# ACTIVITY POOL
# CIRCULATION EQUIPMENT SCHEDULE

(VERIFY ALL ELECTRICAL REQUIREMENTS WITH ELECTRICAL CONSULTANT/CONTRACTOR)

| MARK | DESCRIPTION | QUANTITY | DETAIL | REQUIREMENT | REMARKS |
|---|---|---|---|---|---|
| 1A | REGENERATIVE MEDIA FILTER | ONE | SEE FILTER SCHEMATIC (WF500.0) AND DETAILS 1/WF501 & 2/WF501 | NEPTUNE BENSON DEFENDER #SP-41-48-1038 | FILTER AREA SHALL EQUAL 812 SF. PROVIDE WITH 8"ø FACE PIPING. PROVIDE FILTER WITH AN AUTOMATIC CONTROLLER TO ACTIVATE THE BUMP CYCLE, PRE-COATING, STOPPING & STARTING OF THE MAIN CIRCULATION PUMP, PNEUMATIC VALVE, VACUUM TRANSFER SYSTEM, AUXILIARY CONTACTS TO INTERLOCK CHEMICAL CONTROL, KEY SWITCH FOR BUMP CYCLE FLEX TUBE CLEANING. ELECTRICAL SHALL PROVIDE A 120 VOLT, SINGLE PHASE 20 AMP, GFIC, DEDICATED CIRCUIT FOR THE AUTOMATIC CONTROLLER. THE CONTROLLER WILL PROVIDE SIGNAL POWER TO THE CIRCULATION PUMP MOTOR. THE CIRCULATION PUMP SHALL BE OPERATED WITH A VFD WITH FOR A SOFT START PER THE RECOMMENDATIONS OF THE FILTER MANUFACTURER. CONTROL WIRING BY THE ELECTRICAL CONTRACTOR. |
| 1B | FILTER - VACUUM TRANSFER SYSTEM | ONE | SEE FILTER SCHEMATIC (WF500.0) AND DETAIL 1/WF501 | NEPTUNE BENSON DEFENDER | PROVIDE THE SYSTEM COMPLETE WITH A VACUUM BLOWER, 1 1/2 HP, TEFC 120 VAC, SINGLE PHASE MOTOR, 60 HZ. SYSTEM SHALL ALSO BE PROVIDED COMPLETE WITH THE REQUIRED IN-LINE FILTER, BALL VALVES, AND VACUUM HOSE (VENT LINES AND BALL VALVES BY THE POOL CONTRACTOR). |
| 1C | FILTER - AIR COMPRESSOR SYSTEM | ONE | SEE FILTER SCHEMATIC (WF500.0) | NEPTUNE BENSON DEFENDER | PROVIDE THE SYSTEM COMPLETE WITH A 2HP COMPRESSOR MOTOR, 120 VAC, SINGLE PHASE, 15 AMP, OIL FREE PUMP. ELECTICAL CONTRACTOR SHALL PROVIDE A DEDICATED CIRCUIT OUTLET FOR THE AIR COMPRESSOR. POOL CONTRACTOR SHALL PROVIDE COMPLETE WITH A SIX GALLON TANK AND WATER SEPARATOR WITH AUTOMATIC DRAIN. |
| 2 | HEAT EXCHANGER | 1 | SEE CIRC EQUIP & HEAT EXCHANGER SCHEMATICS SHEET WF500.0 | 1,600,000 BTU OUTPUT REQUIRED | HEAT EXCHANGER DESIGN AND SPECIFICATION BY OTHERS. SEE MECHANICAL DRAWINGS (BY OTHERS). MECHANICAL CONTRACTOR SHALL PROVIDE AND INSTALL HEAT EXCHANGER, BOILER WATER CONNECTIONS, TEMPERATURE CONTROLS, CONTROL VALVE AND HIGH LIMIT SHUT OFF SWITCH. LIMIT SWITCH SHALL BE SET AT MAXIMUM 130 DEGREES F. TEMPERATURE SHALL BE MONITORED (NOT CONTROLLED) THROUGH THE CHEMICAL CONTROLLER. POOL CONTRACTOR SHALL PROVIDE TWO (2) TEMPERATURE SENSOR WELLS ON POOL INFLUENT AND EFFLUENT PIPING TO & FROM HEAT EXCHANGER. POOL CONTRACTOR SHALL MAKE POOL PIPING CONNECTIONS. |
| 3 | CIRCULATION PUMP | 1 | SEE CIRC. EQUIP. SCHEMATIC (WF500.0) | PACO #5095-7 25 HP | PREMIUM EFFICIENCY MOTOR, INVERTER RATED MOTOR FOR VARIABLE FREQUENCY DRIVE, END SUCTION, CLOSED-COUPLED, TYPE LC PUMP, EPOXY COATED, TEFC. 903 GPM AT 74' TDH. IMPELLER SIZE = 9.18 INCH. IMPELLER SHALL BE H316 STAINLESS STEEL. 460 V, 60 Hz, THREE PHASE, 1750 RPM, 79.9% EFFICIENT. PROVIDE WITH 3 AUXILIARY CONTACTS. MECHANICAL CONTRACTOR SHALL PROVIDE AND INSTALL VFD. ELECTRICAL CONTRACTOR SHALL PROVIDE HOOK-UPS. SEE MECHANICAL AND ELECTRICAL DRAWINGS. POOL CONTRACTOR SHALL COORDINATE WITH THE MECHANICAL AND ELECTRICAL CONTRACTORS. SPEED OF PUMP TO BE CONTROLLED BY THE VFD. SEE ELECTRICAL INTERLOCK NOTES (BY ELECTRICAL CONTRACTOR). VERIFY WITH ELECTRICAL CONTRACTOR/ENGINEER FOR EXACT ELECTRICAL REQUIREMENTS. |
| 4 | HAIR AND LINT STRAINER | 1 | SEE CIRC. EQUIP. SCHEMATIC (WF500.0) | MERMADE FO SERIES STRAINER (10"x 10") | FIBERGLASS REINFORCED PLASTIC WITH TRANSPARENT LID AND STAINLESS STEEL BASKET. VERIFY SIZE WITH PIPE SUCTION SIZE AND PUMP INLET SIZE. |
| 5 | CHEMICAL CONTROLLER | 1 | 3/WF502, 4/WF502, 5/WF502, 6/WF502, 7/WF502 | BECS TECHNOLOGY BECSys 5 OR EQUAL | 120 VAC, <1 AMP. CONTROLLER COMES STANDARD WITH TEMPERATURE MONITORING CAPABILITIES, FLOW MONITORING, WATER LEVEL CONTROL AND AN ETHERNET CONNECTION. THE ELECTRICAL CONTRACTOR SHALL PROVIDE AN ETHERNET CONNECTION WITHIN 5 FEET OF THE CONTROLLER. ELECTRICAL INTERLOCKING BY ELECTRICAL CONTRACTOR. SEE ELECTRICAL INTERLOCK NOTES. COORDINATE WITH THE POOL CONTRACTOR. THE POOL CONTRACTOR SHALL PROVIDE A CLS CALIBRATED LIQUID LEVEL SENSOR FOR MONITORING OF THE SURGE TANK WATER LEVELS. POOL CONTRACTOR SHALL UTILIZE THE SIGNET FLOW METER SENSOR FOR MONITORING OF THE POOL WATER FLOW RATE. |
| 6 | LIQUID CHLORINE FEED PUMP | LOCATED IN CHEMICAL ROOM ON LEVEL 1 SEE SHEET WF101.0 | | | |
| 7 | LIQUID CHLORINE STORAGE CONTAINERS | LOCATED IN CHEMICAL ROOM ON LEVEL 1 SEE SHEET WF101.0 | | | |
| 8 | CHLORINE STORAGE ROOM | LOCATED ON LEVEL 1 SEE SHEET WF101.0 | | | |
| 9 A THRU C | CO2 FEED SYSTEM AND CANNISTERS | LOCATED IN CHEMICAL ROOM ON LEVEL 1 SEE SHEET WF101.0 | | | |
| 10A | EMERGENCY EYEWASH SINK | LOCATED IN CHEMICAL ROOM ON LEVEL 1 SEE SHEET WF101.0 | | | |
| 10B | EMERGENCY SHOWER AND EYE WASH SINK | 1 | N/A | SEE MECHANICAL / PLUMBING DRAWINGS | TEPID POTABLE WATER AND WASTE LINES REQUIRED. PLUMBING CONTRACTOR SHALL INSTALL ONE EYEWASH SINK. SEE POOL EQUIPMENT ROOM DRAWING FOR LOCATION. |
| 11A | UV DISINFECTION SYSTEM | 1 | 1/WF502 ALSO SEE CIRC. EQ. SCHEMATIC SHEET WF500.0 | ENGINEERED TREATMENT SYSTEMS (ETS) ECF-225-10V | PROVIDE FOR INSTALLATION WITH TRANSITION FROM 8"ø PIPING. TO 10"ø PIPING ON UV UNIT. PROVIDE UV SYSTEM EQUIPPED WITH MEDIUM PRESSURE UV LAMPS AND AUTOMATIC MECHANICAL CLEANING SYSTEM. FOR CONTROL PANEL REMARKS, SEE BELOW. PROVIDE SYSTEM TO ACCOMMODATE INSTALLATION BEFORE THE HEAT EXCHANGER. INSTALLATION SHALL BE PER THE REQUIRMENTS OF THE UV SYSTEM MANUFACTURER WITH ALL REQUIRED COMPONENTS PROVIDED (I.E. BY-PASS LINE, ISOLATION VALVES, FLANGED CONNECTIONS, UV STRAINER BASKET, AND PROPER LENGTHS OF PIPING). POOL CONTRACTOR SHALL PROVIDE AND INSTALL AN IN-LINE FLOW SWITCH AND MAKE CONNECTIONS AS REQUIRED TO THE CONTROL PANEL. USE SCHEDULE 80 PVC PIPING PER THE REQUIREMENTS OF THE MANUFACTURER. |
| 11B | UV SYSTEM CONTROL PANEL | 1 | 1/WF502 | ENGINEERED TREATMENT SYSTEMS (ETS) ECF-A-480 | ELECTRICAL CONTRACTOR SHALL COORDINATE WITH POOL CONTRACTOR FOR POWER REQUIREMENTS FOR MANUFACTURER OF UV SYSTEM PROVIDED. PROVIDE WITH INTERMEDIATE JUNCTION BOX AND OPTIONAL LENGTHS OF CABLES AS REQUIRED. ELECTRICAL CONTRACTOR SHALL INTERLOCK THE CONTROL PANEL WITH THE CIRCULATION PUMP, SUCH THAT WHEN THE CIRCULATION PUMP STOPS THE POWER TO THE UV CONTROL PANEL WILL SHUT OFF. CONTROL PANEL ELECTRICAL REQUIREMENTS: ETS: 480 VOLT, THREE PHASE, 60 HZ, 40 AMP BREAKER. |
| 12A | WATER TUNNEL AND WATER LAVA FEATURES PUMP WITH HAIR AND LINT STRAINER | 1 | N/A | PENTAIR INTELLIFLO #VS 3 HP | WITH 98 GPM 79 FT THD AVAILABLE. PUMP COMES WITH INTEGRAL PROGRAMMABLE VARIABLE FREQUENCY DRIVE. 230 VOLT, 60 Hz, SINGLE PHASE WITH 3 AUXILIARY CONTACTS. VERIFY WITH ELECTRICAL CONTRACTOR/ ENGINEER FOR EXACT ELECTRICAL REQUIREMENTS. ELECTRICAL CONTRACTOR SHALL PROVIDE A DISCONNECT NEAR THE PUMP. ELECTRICAL CONTRACTOR SHALL PROVIDE A BUCK-BOOST TRANSFORMER AND PROVIDE ALL CONNECTIONS / HOOK-UPS. |
| 12B | CYLINDER SPRAY AND BUBBLERS FEATURES PUMP WITH HAIR AND LINT STRAINER | 1 | N/A | PENTAIR INTELLIFLO XF 3 HP | WITH 130 GPM 73' HEAD AVAILABLE. PUMP COMES WITH INTEGRAL PROGRAMMABLE VARIABLE FREQUENCY DRIVE. 230 VOLT, 60 Hz, SINGLE PHASE WITH 3 AUXILIARY CONTACTS. VERIFY WITH ELECTRICAL CONTRACTOR/ ENGINEER FOR EXACT ELECTRICAL REQUIREMENTS. ELECTRICAL CONTRACTOR SHALL PROVIDE A DISCONNECT NEAR THE PUMP. ELECTRICAL CONTRACTOR SHALL PROVIDE A BUCK-BOOST TRANSFORMER AND PROVIDE ALL CONNECTIONS / HOOK-UPS. |
| 13 | BUBBLE COUCH AND DECK JETS FEATURE PUMP WITH HAIR AND LINT STRAINER | 1 | N/A | PENTAIR INTELLIFLO XF 3 HP | WITH 132 GPM 72' HEAD AVAILABLE. PUMP COMES WITH INTEGRAL PROGRAMMABLE VARIABLE FREQUENCY DRIVE. 230 VOLT, 60 Hz, SINGLE PHASE WITH 3 AUXILIARY CONTACTS. VERIFY WITH ELECTRICAL CONTRACTOR/ ENGINEER FOR EXACT ELECTRICAL REQUIREMENTS. ELECTRICAL CONTRACTOR SHALL PROVIDE A DISCONNECT NEAR THE PUMP. ELECTRICAL CONTRACTOR SHALL PROVIDE A BUCK-BOOST TRANSFORMER AND PROVIDE ALL CONNECTIONS / HOOK-UPS. |
| 14 | CIRCULATION SYSTEM PRESSURE GAUGES AND VACUUM GAUGE | 2 1 | SEE CIRC. EQUIP. SCHEMATIC (WF500.0) | 0-60 PSI | NOT SHOWN ON PLAN. SEE CIRCULATION EQUIPMENT SCHEMATIC. INTEGRATE TO SHOW FILTER INFLUENT AND EFFLUENT PRESSURES. PROVIDE VACUUM GAUGE (OR COMBINATION VACUUM/ PRESSURE GAUGE IF NEC.) ON SUCTION SIDE AND PRESSURE GAUGE ON DISCHARGE SIDE OF PUMP. |
| 15 | FEATURE PUMP PRESSURE AND VACUUM GAUGES | AS REQUIRED | SEE EQUIPMENT ROOM NOTES | 0-60 PSI | NOT SHOWN ON PLAN. FOR FEATURE PUMPS PROVIDE A COMBINATION VACUUM /PRESSURE GAUGE ON THE SUCTION SIDE OF EACH PUMP AND A PRESURE GAUGE ON THE DISCHARGE SIDE OF EACH PUMP. |
| 16 | FLOWMETER | 1 SENSOR 1 METER | SEE CIRC. EQUIP. SCHEMATIC (WF500.0) | SIGNET #MK515 SENSOR #MK5090 METER | SENSOR: (ONE IN RETURN LINE) METER: (WALL MOUNT IN EASILY READABLE LOCATION). DIAL FACE RANGE: 0 TO 4, x 1000 = GPM. |
| 17 | THERMOMETER | 3 | SEE CIRC. EQUIP. SCHEMATIC (WF500.0) | LETRO | 30° TO 130°. NOT SHOWN ON PLANS. SEE EQUIPMENT SCHEMATIC. INSTALL ONE THERMOMETER IN AN EASILY READABLE LOCATION MIN 10 PIPE DIAMETERS DOWN STREAM FROM BYPASS VALVE, AND PROVIDE THERMOMETERS ON INFLUENT AND EFFLUENT LINES OF HEAT EXCHANGER. |
| 18A | CIRC. EQUIP. FACE PIPING | AS REQUIRED | SEE CIRC. EQUIP. SCHEMATIC (WF500.0) | PVC SCHEDULE 80 | 8"ø PVC PIPE. UTILIZE SCHEDULE 80 PVC PIPE, UNLESS OTHERWISE SPECIFIED. |
| 18B | DECK SPRAY FEATURES "Y" STRAINERS | 2 | SEE EQUIPMENT ROOM NOTES | HAYWARD PVC Y-STRAINER | PROVIDE PVC Y-STRAINER ON RETURN PIPE OF EACH DECK SPRAY. PROVIDE COMPLETE WITH STANDARD 1/32" PERFORATED PLASTIC SCREEN. |
| 19 | WATER LEVEL CONTROL PROVIDED THROUGH CHEMICAL CONTROLLER | | SEE POTABLE WATER FILL SCHEMATIC SHEET WF500.0 | SEE ITEM 5 THIS SCHEDULE | WATER LEVEL SHALL BE MONITORED AND CONTROLLED THRU THE CHEMICAL CONTROLLER (SEE ITEM #5). MAKE CONNECTION TO POTABLE WATER SUPPLY AND PROVIDE MANUAL AND SOLENOID VALVE ON FILL LINE TO SURGE TANK. SENSOR UNIT LOCATED IN THE SURGE TANK. PROTECT SENSOR CABLE IN WATERTIGHT CHAMBER. SEE POTABLE WATER LINE REMARKS BELOW. |
| 20 | POTABLE WATER PIPING AND VALVES TO EQUIPMENT ROOM | AS REQUIRED | SEE POTABLE WATER FILL SCHEMATIC SHEET WF500.0 | POTABLE WATER SUPPLY LINE PROVIDING 110 GPM | POTABLE WATER SUPPLY AND SHUT OFF VALVE BY MECHANICAL CONTRACTOR. MECHANICAL CONTRACTOR TO PROVIDE STUB-IN TO POOL EQUIPMENT ROOM. POOL CONTRACTOR TO EXTEND PIPING TO SURGE TANK WITH REQUIRED AIR GAP. PROVIDE SOLENOID VALVE, MANUAL FILL VALVE, AND PROVIDE CONNECTION. SEE WATER LEVEL CONTROL SYSTEM REMARKS ABOVE. |
| 21 | SURGE TANK | 1 | A/WF412 | REINFORCED CONCRETE (BY GENERAL CONTRACTOR) | SEE EQUIPMENT ROOM PLAN AND SECTIONS FOR SURGE TANK SIZE. SURGE TANK BY GENERAL CONTRACTOR. ALSO SEE ARCHITECTURAL AND STRUCTURAL DRAWINGS. GENERAL CONTRACTOR SHALL PROVIDE A 30"ø x 36" ALUMINUM ACCESS HATCH WITH STAINLESS STEEL HARDWARE. PROVIDE PLASTIC LADDER RUNGS FOR ACCESS. PROVIDE WATERSTOP AT ALL CORNERS AND JOINTS. GENERAL CONTRACTOR SHALL REFER TO ARCHITECTURAL DRAWINGS FOR EXTERIOR WATERPROOFING OF SURGE TANK. POOL CONTRACTOR SHALL PROVIDE TWO COATS OF THOROSEAL WATERPROOFING ON THE INTERIOR SURFACES OF THE SURGE TANK. APPLY COATING PER THE MANUFACTURER'S RECOMMENDATIONS FOR THIS APPLICATION. GENERAL CONTRACTOR SHALL FINISH THE INTERIOR OF THE BACKWASH SUMP PIT PER THE RECOMMENDATIONS OF THE WATERPROOFING MATERIAL. COORDINATION BETWEEN TRADES SHALL BE MADE PRIOR TO CONSTRUCTION OF THE TANK. |
| 22 | PIPE WALL SLEEVE WITH MECHANICAL SEAL | AS REQUIRED | 7/WF501 | THUNDERSEAL "LINK-SEAL" | PROVIDE MANUFACTURER'S SLEEVE AT ALL SURGE TANK PENETRATIONS. POOL CONTRACTOR SHALL PROVIDE SLEEVES. GENERAL CONTRACTOR SHALL COORDINATE LOCATION OF SLEEVES WITH POOL CONTRACTOR AND SHALL INSTALL. |
| 23 | PIPE WALL SLEEVE | AS REQUIRED | 8/WF501 | WITH "O" RINGS | PROVIDE MANUFACTURER'S SLEEVE AT ALL PENETRATIONS (EXCEPT THROUGH SURGE TANK). POOL CONTRACTOR SHALL PROVIDE SLEEVES. GENERAL CONTRACTOR SHALL COORDINATE LOCATION OF SLEEVES WITH POOL CONTRACTOR AND SHALL INSTALL. |
| 24 | VALVE STEM EXTENSION AND MOUNTING BRACKET | AS REQUIRED | 3/WF501, 4/WF501 | STAINLESS STEEL CONSTUCTION | PROVIDE PENETRATIONS THROUGH THE TOP OF THE SURGE TANK LID FOR THE VALVE STEM AND SHUT OFF HANDLE. |
| 25 | MODULATING FLOAT VALVE WITH VERTICAL FLOATS | 1 | 5/WF501 | NEMATO INC. #NFV-12V (FOR 12"ø PIPE) | FOR HORIZONTAL INSTALLATION. SET DISK FOR 20% FLOW WHEN THE VALVE IS CLOSED. SET DISK FOR 100% FLOW WHEN THE VALVE IS OPEN. PROVIDE 4# WEIGHT TO PREVENT BINDING. |
| 26 | PUMP PIT | 1 | A/WF412 | OPEN PIT W/DRAIN TO SANITARY SEWER (BY GENERAL CONTRACTOR) | CONCRETE REINFORCED PUMP PIT BY THE GENERAL CONTRACTOR. GENERAL CONTRACTOR SHALL PROVIDE GALVANIZED GUARDRAILS WITH CHAIN ACCESS AND PLASTIC LADDER RUNG ACCESS AS SHOWN ON PLANS. DRAIN LINE TO SANITARY SEWER BY PLUMBING CONTRACTOR. SEE EQUIPMENT ROOM PLAN AND SECTIONS FOR DIMENSIONS. |
| 27 | WATER EVACUATION SUMP PIT | 1 | A/WF412, 9/WF501 | CONCRETE COVERED WITH DRAIN TO SANITARY SEWER (NIPC) | WATER CAPACITY OF EVACUATION SUMP PIT IS APPROXIMATELY 2400 GALLONS. STAGGER FILTER WATER EVACUATION CYCLES TO ALLOW SEWER TO FULLY DRAIN PRIOR TO WATER EVACUATION FROM ANOTHER FILTER. CONCRETE BACKWASH SUMP BY GENERAL CONTRACTOR. SEE EQUIPMENT ROOM PLAN AND SECTIONS FOR DIMENSIONS. GENERAL CONTRACTOR TO PROVIDE A NON-CORROSIVE REMOVABLE ACCESS HATCH SO WATER LEVEL IN THE TANK IS VISIBLE. PROVIDE PLASTIC ACCESS LADDER RUNGS. COORDINATE WITH POOL CONTRACTOR FOR LOCATION OF PIPE SLEEVE PENETRATIONS FOR BACKWASH THROUGH LID OF SUMP. DRAIN LINE TO SANITARY SEWER BY PLUMBING CONTRACTOR. POOL CONTRACTOR SHALL PROVIDE TWO COATS OF THOROSEAL WATERPROOFING ON THE INTERIOR SURFACES OF SUMP PIT. APPLY COATING PER THE MANUFACTURER'S RECOMMENDATIONS FOR THIS APPLICATION. GENERAL CONTRACTOR SHALL FINISH THE INTERIOR OF THE SUMP PIT PER THE RECOMMENDATIONS OF THE WATERPROOFING MATERIAL. COORDINATION BETWEEN TRADES SHALL BE MADE PRIOR TO CONSTRUCTION OF THE PIT. POOL CONTRACTOR SHALL PROVIDE GRAVITY DRAIN LINES FROM EACH FILTER TO THE EVACUATION SUMP PIT. SIZE DRAIN LINES AND VALVES PER THE MANUFACTURER'S RECOMMENDATIONS. |
| 28A | TROLLEY FOR HOIST | 1 | N/A | CM HOIST PRODUCTS SERIES 633 #3304 | RATED CAPACITY: 1 TON. STRUCTURAL CONSULTANT SHALL DESIGN REQUIRED BEAM OVER THE PUMP PIT. |
| 28B | ELECTRIC CHAIN HOIST | 1 | N/A | CM HOIST PRODUCTS LODESTAR SINGLE SPEED # 4224 MODEL L 1 TON CAPACITY | RATED CAPACITY = 1 TON. STANDARD LIFT = 15 FEET. LIFT SPEED = 16 FT/MIN. VERIFY LENGTH OF CHAIN REQUIRED BEFORE ORDERING. VERIFY LENGTH OF CONTROLLER CABLE REQUIRED BEFORE ORDERING. ELECTRICAL CONTRACTOR SHALL PROVIDE ALL REQUIRED ELECTRICAL FOR CONNECTION OF HOIST. 1 HP, 460 VOLT, THREE PHASE, 60 Hz. |
| 29 | VFD FOR CIRCULATION PUMP (ITEM 3) | 1 | N/A | ALSO SEE MECHANICAL DRAWINGS | MECHANICAL CONTRACTOR SHALL PROVIDE VFD, ELECTRICAL CONTRACTOR SHALL INSTALL AND ALSO PROVIDE STARTER, CONTACTORS AND RELAYS. THIS SHALL INCLUDE ALL WIRING AND CONDUIT. ELECTRICAL CONTRACTOR SHALL MAKE ALL CONNECTIONS TO EQUIPMENT. PROVIDE CONTROL WIRING AS DIRECTED BY POOL CONTRACTOR. SEE ELECTRICAL INTERLOCK NOTES FOR REQUIRED INTERLOCKING OF POOL EQUIPMENT. |
| 30 | POWER PANEL | AS REQUIRED | N/A | ALSO SEE ELECTRICAL PROJECT DRAWINGS | ELECTRICAL CONTRACTOR SHALL PROVIDE POWER PANEL AS REQUIRED. THIS SHALL INCLUDE ALL WIRING AND CONDUIT. ELECTRICAL CONTRACTOR SHALL MAKE ALL CONNECTIONS TO EQUIPMENT. PROVIDE CONTROL WIRING AS DIRECTED BY POOL CONTRACTOR. SEE ELECTRICAL INTERLOCK NOTES FOR REQUIRED INTERLOCKING OF POOL EQUIPMENT. |

# RAISED SPA
# CIRCULATION EQUIPMENT SCHEDULE

(VERIFY ALL ELECTRICAL REQUIREMENTS WITH ELECTRICAL CONSULTANT/CONTRACTOR)

| MARK | DESCRIPTION | QUANTITY | DETAIL | REQUIREMENT | REMARKS |
|---|---|---|---|---|---|
| 31A | REGENERATIVE MEDIA FILTER | ONE | SEE FILTER SCHEMATIC (WF500.0) AND DETAILS 1/WF501 & 6/WF501 | NEPTUNE BENSON DEFENDER #SP-27-48-487 | FILTER AREA SHALL EQUAL 381 SF. PROVIDE WITH 6"ø FACE PIPING. PROVIDE FILTER WITH AN AUTOMATIC CONTROLLER TO ACTIVATE THE BUMP CYCLE, PRE-COATING, STOPPING & STARTING OF THE MAIN CIRCULATION PUMP, PNEUMATIC VALVE, VACUUM TRANSFER SYSTEM, AUXILIARY CONTACTS TO INTERLOCK CHEMICAL CONTROL, KEY SWITCH FOR BUMP CYCLE FLEX TUBE CLEANING. ELECTRICAL SHALL PROVIDE A 120 VOLT, SINGLE PHASE 20 AMP, GFIC, DEDICATED CIRCUIT FOR THE AUTOMATIC CONTROLLER. THE CONTROLLER WILL PROVIDE SIGNAL POWER TO THE CIRCULATION PUMP MOTOR. THE CIRCULATION PUMP SHALL BE OPERATED BY A VFD WITH A SOFT START DEVICE PER THE RECOMMENDATIONS OF THE FILTER MANUFACTURER. CONTROL WIRING BY THE ELECTRICAL CONTRACTOR. |
| 31B | FILTER - VACUUM TRANSFER SYSTEM | ONE | SEE FILTER SCHEMATIC (WF500.0) AND DETAIL 1/WF501 | NEPTUNE BENSON DEFENDER | PROVIDE THE SYSTEM COMPLETE WITH A VACUUM BLOWER, 1 1/2 HP, TEFC 120 VAC, SINGLE PHASE MOTOR, 60 HZ. SYSTEM SHALL ALSO BE PROVIDED COMPLETE WITH THE REQUIRED IN-LINE FILTER, BALL VALVES, AND VACUUM HOSE (VENT LINES AND BALL VALVES BY THE POOL CONTRACTOR). |
| 32 | HEAT EXCHANGER | 1 | SEE CIRC EQUIP & HEAT EXCHANGER SCHEMATICS SHEET WF500.0 | 600,000 BTU OUTPUT REQUIRED | HEAT EXCHANGER DESIGN AND SPECIFICATION BY OTHERS. SEE MECHANICAL DRAWINGS (BY OTHERS). MECHANICAL CONTRACTOR SHALL PROVIDE AND INSTALL HEAT EXCHANGER, BOILER WATER CONNECTIONS, TEMPERATURE CONTROLS, CONTROL VALVE AND HIGH LIMIT SHUT OFF SWITCH. LIMIT SWITCH SHALL BE SET AT MAXIMUM 130 DEGREES F. TEMPERATURE SHALL BE MONITORED (NOT CONTROLLED) THROUGH THE CHEMICAL CONTROLLER. POOL CONTRACTOR SHALL PROVIDE TWO (2) TEMPERATURE SENSOR WELLS ON POOL INFLUENT AND EFFLUENT PIPING TO & FROM HEAT EXCHANGER. POOL CONTRACTOR SHALL MAKE POOL PIPING CONNECTIONS. |
| 33 | CIRCULATION PUMP | 1 | SEE CIRC. EQUIP. SCHEMATIC (WF500.0) | PACO #3095-7 7.5 HP | PREMIUM EFFICIENCY MOTOR, INVERTER RATED MOTOR FOR VARIABLE FREQUENCY DRIVE, END SUCTION, CLOSED-COUPLED, TYPE LC PUMP, EPOXY COATED, TEFC. 315 GPM AT 66.7' TDH. IMPELLER SIZE = INCH. IMPELLER SHALL BE H-316 STAINLESS STEEL. 460 V, 60 Hz, THREE PHASE, 1750 RPM, 74.5% EFFICIENT. PROVIDE WITH 3 AUXILIARY CONTACTS. MECHANICAL CONTRACTOR SHALL PROVIDE AND INSTALL VFD. ELECTRICAL CONTRACTOR SHALL PROVIDE HOOK-UPS. SEE MECHANICAL AND ELECTRICAL DRAWINGS. POOL CONTRACTOR SHALL COORDINATE WITH THE MECHANICAL AND ELECTRICAL CONTRACTORS. SPEED OF PUMP TO BE CONTROLLED BY THE VFD. SEE ELECTRICAL INTERLOCK NOTES (BY ELECTRICAL CONTRACTOR). VERIFY WITH ELECTRICAL CONTRACTOR/ENGINEER FOR EXACT ELECTRICAL REQUIREMENTS. |
| 34 | HAIR AND LINT STRAINER | 1 | SEE CIRC. EQUIP. SCHEMATIC (WF500.0) | MERMADE FO SERIES STRAINER (6"x 6") | FIBERGLASS REINFORCED PLASTIC WITH TRANSPARENT LID AND STAINLESS STEEL BASKET. VERIFY SIZE WITH PIPE SUCTION SIZE AND PUMP INLET SIZE. |
| 35 | CHEMICAL CONTROLLER | 1 | 3/WF502, 4/WF502, 5/WF502, 6/WF502, 7/WF502 | BECS TECHNOLOGY BECSys 5 OR EQUAL | 120 VAC, <1 AMP. CONTROLLER COMES STANDARD WITH TEMPERATURE MONITORING CAPABILITIES, FLOW MONITORING, WATER LEVEL CONTROL AND AN ETHERNET CONNECTION. THE ELECTRICAL CONTRACTOR SHALL PROVIDE AN ETHERNET CONNECTION WITHIN 5 FEET OF THE CONTROLLER. ELECTRICAL INTERLOCKING BY ELECTRICAL CONTRACTOR. SEE ELECTRICAL INTERLOCK NOTES. COORDINATE WITH THE POOL CONTRACTOR. THE POOL CONTRACTOR SHALL PROVIDE A CLS CALIBRATED LIQUID LEVEL SENSOR FOR MONITORING OF THE SPA WATER LEVELS. POOL CONTRACTOR SHALL UTILIZE THE SIGNET FLOW METER SENSOR FOR MONITORING OF THE SPA WATER FLOW RATE. |
| 36 | LIQUID CHLORINE FEED PUMP | LOCATED IN CHEMICAL ROOM ON LEVEL 1 SEE SHEET WF101.0 | | | |
| 37 | CO2 FEED SYSTEM | LOCATED IN CHEMICAL ROOM ON LEVEL 1 SEE SHEET WF101.0 | | | |
| 38A | UV DISINFECTION SYSTEM | 1 | 1/WF502 ALSO SEE CIRC. EQ. SCHEMATIC SHEET WF500.0 | ENGINEERED TREATMENT SYSTEMS (ETS) ECF-215-6V | PROVIDE FOR INSTALLATION ON 6"ø PIPING. PROVIDE UV SYSTEM EQUIPPED WITH MEDIUM PRESSURE UV LAMPS AND AUTOMATIC MECHANICAL CLEANING SYSTEM. FOR CONTROL PANEL REMARKS, SEE BELOW. PROVIDE SYSTEM TO ACCOMMODATE INSTALLATION BEFORE THE HEAT EXCHANGER. INSTALLATION SHALL BE PER THE REQUIRMENTS OF THE UV SYSTEM MANUFACTURER WITH ALL REQUIRED COMPONENTS PROVIDED (I.E. BY-PASS LINE, ISOLATION VALVES, FLANGED CONNECTIONS, UV STRAINER BASKET, AND PROPER LENGTHS OF PIPING). POOL CONTRACTOR SHALL PROVIDE AND INSTALL AN IN-LINE FLOW SWITCH AND MAKE CONNECTIONS AS REQUIRED TO THE CONTROL PANEL. USE SCHEDULE 80 PVC PIPING PER THE REQUIREMENTS OF THE MANUFACTURER. |
| 38B | UV SYSTEM CONTROL PANEL | 1 | 1/WF502 | ENGINEERED TREATMENT SYSTEMS (ETS) ECF-A-480 | ELECTRICAL CONTRACTOR SHALL COORDINATE WITH POOL CONTRACTOR FOR POWER REQUIREMENTS FOR MANUFACTURER OF UV SYSTEM PROVIDED. PROVIDE WITH INTERMEDIATE JUNCTION BOX AND OPTIONAL LENGTHS OF CABLES AS REQUIRED. ELECTRICAL CONTRACTOR SHALL INTERLOCK THE CONTROL PANEL WITH THE CIRCULATION PUMP, SUCH THAT WHEN THE CIRCULATION PUMP STOPS THE POWER TO THE UV CONTROL PANEL WILL SHUT OFF. CONTROL PANEL ELECTRICAL REQUIREMENTS: 480 VOLT, THREE PHASE, 60 HZ, 40 AMP EXTERNAL BREAKER, 32 AMP INTERNAL BREAKER, FAST ACTING. |
| 39 A, B, & C | HYDRO-THERAPY JET PUMP WITH HAIR AND LINT STRAINER | 3 | N/A | PENTAIR INTELLIFLO XF #022005 3 HP | 8 JETS PER PUMP AT 144 GPM WITH 64 FT TDH AVAILABLE. EACH PUMP COMES WITH INTEGRAL PROGRAMMABLE VARIABLE FREQUENCY DRIVE. 230 VOLT, 60 Hz, SINGLE PHASE WITH 3 AUXILIARY CONTACTS. VERIFY WITH ELECTRICAL CONTRACTOR/ ENGINEER FOR EXACT ELECTRICAL REQUIREMENTS. ELECTRICAL CONTRACTOR SHALL PROVIDE A DISCONNECT NEAR THE PUMP. ELECTRICAL CONTRACTOR SHALL PROVIDE A BUCK-BOOST TRANSFORMER AND PROVIDE ALL CONNECTIONS / HOOK-UPS. |
| 40 | CIRCULATION SYSTEM PRESSURE GAUGES AND VACUUM GAUGE | 2 1 | SEE CIRC. EQUIP. SCHEMATIC (WF500.0) | 0-60 PSI | NOT SHOWN ON PLAN. SEE CIRCULATION EQUIPMENT SCHEMATIC. INTEGRATE TO SHOW FILTER INFLUENT AND EFFLUENT PRESSURES. PROVIDE VACUUM GAUGE (OR COMBINATION VACUUM/ PRESSURE GAUGE IF NEC.) ON SUCTION SIDE AND PRESSURE GAUGE ON DISCHARGE SIDE OF PUMP. |
| 41 | JET PUMP PRESSURE AND VACUUM GAUGES | AS REQUIRED | SEE EQUIPMENT ROOM NOTES | 0-60 PSI | NOT SHOWN ON PLAN. FOR FEATURE PUMPS PROVIDE A COMBINATION VACUUM /PRESSURE GAUGE ON THE SUCTION SIDE OF EACH PUMP AND A PRESURE GAUGE ON THE DISCHARGE SIDE OF EACH PUMP. |
| 42 | FLOWMETER | 1 SENSOR 1 METER | SEE CIRC. EQUIP. SCHEMATIC (WF500.0) | SIGNET #MK515 SENSOR #MK5090 METER | SENSOR: (ONE IN RETURN LINE) METER: (WALL MOUNT IN EASILY READABLE LOCATION). DIAL FACE RANGE: 0 TO 4, x 1000 = GPM. |
| 43 | THERMOMETER | 3 | SEE CIRC. EQUIP. SCHEMATIC (WF500.0) | LETRO | 30° TO 130°. NOT SHOWN ON PLANS. SEE EQUIPMENT SCHEMATIC. INSTALL ONE THERMOMETER IN AN EASILY READABLE LOCATION MIN 10 PIPE DIAMETERS DOWN STREAM FROM BYPASS VALVE, AND PROVIDE THERMOMETERS ON INFLUENT AND EFFLUENT LINES OF HEAT EXCHANGER. |
| 44 | CIRC. EQUIP. FACE PIPING | AS REQUIRED | SEE CIRC. EQUIP. SCHEMATIC (WF500.0) | PVC SCHEDULE 80 | 6"ø PVC PIPE. UTILIZE SCHEDULE 80 PVC PIPE, UNLESS OTHERWISE SPECIFIED. |
| 45 | WATER LEVEL CONTROL PROVIDED THROUGH CHEMICAL CONTROLLER | | SEE POTABLE WATER FILL SCHEMATIC SHEET WF500.0 | SEE ITEM 35 THIS SCHEDULE | WATER LEVEL SHALL BE MONITORED AND CONTROLLED THRU THE CHEMICAL CONTROLLER (SEE ITEM #5). MAKE CONNECTION TO POTABLE WATER SUPPLY AND PROVIDE MANUAL AND SOLENOID VALVE ON FILL LINE TO SPA. SENSOR UNIT LOCATED IN DECK WELL AT SPA SIDE. PROTECT SENSOR CABLE IN WATERTIGHT CHAMBER. SEE POTABLE WATER LINE REMARKS BELOW. |
| 46 | POTABLE WATER PIPING AND VALVES TO EQUIPMENT ROOM | AS REQUIRED | SEE POTABLE WATER FILL SCHEMATIC SHEET WF500.0 | POTABLE WATER SUPPLY LINE PROVIDING 20 GPM | POTABLE WATER SUPPLY AND SHUT OFF VALVE BY MECHANICAL CONTRACTOR. MECHANICAL CONTRACTOR TO PROVIDE STUB-IN TO POOL EQUIPMENT ROOM. POOL CONTRACTOR TO EXTEND PIPING TO FILL PIPE. PROVIDE SOLENOID VALVE, MANUAL FILL VALVE, AND PROVIDE CONNECTION. SEE WATER LEVEL CONTROL SYSTEM REMARKS ABOVE. |
| 47 | VFD FOR CIRCULATION PUMP (ITEM 33) | 1 | N/A | ALSO SEE MECHANICAL DRAWINGS | MECHANICAL CONTRACTOR SHALL PROVIDE VFD, ELECTRICAL CONTRACTOR SHALL INSTALL AND ALSO PROVIDE STARTER, CONTACTORS AND RELAYS. THIS SHALL INCLUDE ALL WIRING AND CONDUIT. ELECTRICAL CONTRACTOR SHALL MAKE ALL CONNECTIONS TO EQUIPMENT. PROVIDE CONTROL WIRING AS DIRECTED BY POOL CONTRACTOR. SEE ELECTRICAL INTERLOCK NOTES FOR REQUIRED INTERLOCKING OF POOL EQUIPMENT. |
| 48 | POWER PANEL | AS REQUIRED | N/A | ALSO SEE ELECTRICAL PROJECT DRAWINGS | ELECTRICAL CONTRACTOR SHALL PROVIDE POWER PANEL AS REQUIRED. THIS SHALL INCLUDE ALL WIRING AND CONDUIT. ELECTRICAL CONTRACTOR SHALL MAKE ALL CONNECTIONS TO EQUIPMENT. PROVIDE CONTROL WIRING AS DIRECTED BY POOL CONTRACTOR. SEE ELECTRICAL INTERLOCK NOTES FOR REQUIRED INTERLOCKING OF POOL EQUIPMENT. |

The entire contents of the attached documents, including all sketches, plans, studies, drawings, schedules and specifications and all copyrights therein are, and shall remain the sole property of Water Design Incorporated. The documents and their contents may not be used, photocopied or reproduced digitally, electronically or in any other manner without the express prior written consent of Water Design Incorporated.

MHTN ARCHITECTS
MHTN Architects, Inc.
420 East South Temple
Suite 100
Salt Lake City, Utah 84111
Telephone (801) 595-6700
Telefax (801) 595-6717
www.mhtn.com

Hastings+Chivetta
ARCHITECTURE • PLANNING • ENGINEERING
622 Emerson, Suite 200
St. Louis, MO 63141
Tel. 314.863.5717
Fax. 314.863.2823
www.hastingschivetta.com

Water Design Inc.
5047 S. Galleria Dr.
Murray, Utah 84123
Phone : (801) 261-4009
Fax : (801) 261-4069
www.waterdesigninc.com

BUILDING OFFICIAL STAMP

UNIVERSITY OF UTAH

STUDENT LIFE CENTER

1836 E. BALLIF ROAD
SALT LAKE CITY, UTAH 84112

SEAL

LICENSED PROFESSIONAL ENGINEER
CHARLES ROSS ANDERSON
145589-2202
5-15-13
STATE OF UTAH

MHTN PROJECT NO.

DRAWN BY: ACR    CHECKED BY: BA

ISSUED:

| NO. | DATE | DESCRIPTION |
|---|---|---|

CONTRACTOR TO VERIFY DRAWINGS IN FIELD USE REFLECT LAST REVISION DATE.

| NO. | DATE | DESCRIPTION |
|---|---|---|

SHEET NAME
POOL EQUIPMENT SCHEDULES

BID DOCUMENTS
MAY 15, 2013

SHEET NUMBER
WF601.0

# ACTIVITY POOL
# CIRCULATION EQUIPMENT SCHEDULE

## ALTERNATE BID 1

(VERIFY ALL ELECTRICAL REQUIREMENTS WITH ELECTRICAL CONSULTANT/CONTRACTOR)

| MARK | DESCRIPTION | QUANTITY | DETAIL | REQUIREMENT | REMARKS |
|---|---|---|---|---|---|
| 1A | REGENERATIVE MEDIA FILTER | ONE | SEE FILTER SCHEMATIC (WF500.0) AND DETAILS 1/WF501 & 6/WF501 | NEPTUNE BENSON DEFENDER #SP-27-48-487 | FILTER AREA SHALL EQUAL 381 SF. PROVIDE WITH 6"ø FACE PIPING. PROVIDE FILTER WITH AN AUTOMATIC CONTROLLER TO ACTIVATE THE BUMP CYCLE, PRE-COATING, STOPPING & STARTING OF THE MAIN CIRCULATION PUMP, PNEUMATIC VALVE, VACUUM TRANSFER SYSTEM, AUXILIARY CONTACTS TO INTERLOCK CHEMICAL CONTROL, KEY SWITCH FOR BUMP CYCLE FLEX TUBE CLEANING. ELECTRICAL SHALL PROVIDE A 120 VOLT, SINGLE PHASE 20 AMP, GFIC, DEDICATED CIRCUIT FOR THE AUTOMATIC CONTROLLER. THE CONTROLLER WILL PROVIDE SIGNAL POWER TO THE CIRCULATION PUMP MOTOR. THE CIRCULATION PUMP SHALL BE OPERATED WITH A VFD WITH FOR A SOFT START PER THE RECOMMENDATIONS OF THE FILTER MANUFACTURER. CONTROL WIRING BY THE ELECTRICAL CONTRACTOR. |
| 1B | FILTER – VACUUM TRANSFER SYSTEM | ONE | SEE FILTER SCHEMATIC (WF500.0) AND DETAIL 1/WF501 | NEPTUNE BENSON DEFENDER | PROVIDE THE SYSTEM COMPLETE WITH A VACUUM BLOWER, 1 1/2 HP, TEFC 120 VAC, SINGLE PHASE MOTOR, 60 HZ. SYSTEM SHALL ALSO BE PROVIDED COMPLETE WITH THE REQUIRED IN-LINE FILTER, BALL VALVES, AND VACUUM HOSE (VENT LINES AND BALL VALVES BY THE POOL CONTRACTOR). |
| 1C | FILTER – AIR COMPRESSOR SYSTEM | ONE | SEE FILTER SCHEMATIC (WF500.0) | NEPTUNE BENSON DEFENDER | PROVIDE THE SYSTEM COMPLETE WITH A 2HP COMPRESSOR MOTOR, 120 VAC, SINGLE PHASE, 15 AMP, OIL FREE PUMP. ELECTICAL CONTRACTOR SHALL PROVIDE A DEDICATED CIRCUIT OUTLET FOR THE AIR COMPRESSOR. POOL CONTRACTOR SHALL PROVIDE COMPLETE WITH A SIX GALLON TANK AND WATER SEPARATOR WITH AUTOMATIC DRAIN. |
| 2 | HEAT EXCHANGER | 1 | SEE CIRC EQUIP & HEAT EXCHANGER SCHEMATICS SHEET WF500.0 | 500,000 BTU OUTPUT REQUIRED | HEAT EXCHANGER DESIGN AND SPECIFICATION BY OTHERS. SEE MECHANICAL DRAWINGS (BY OTHERS). MECHANICAL CONTRACTOR SHALL PROVIDE AND INSTALL HEAT EXCHANGER, BOILER WATER CONNECTIONS, TEMPERATURE CONTROLS, CONTROL VALVE AND HIGH LIMIT SHUT OFF SWITCH. LIMIT SWITCH SHALL BE SET AT MAXIMUM 130 DEGREES F. TEMPERATURE SHALL BE MONITORED (NOT CONTROLLED) THROUGH THE CHEMICAL CONTROLLER. POOL CONTRACTOR SHALL PROVIDE TWO (2) TEMPERATURE SENSOR WELLS ON POOL INFLUENT AND EFFLUENT PIPING TO & FROM HEAT EXCHANGER. POOL CONTRACTOR SHALL MAKE POOL PIPING CONNECTIONS. |
| 3 | CIRCULATION PUMP | 1 | SEE CIRC. EQUIP. SCHEMATIC (WF500.0) | PACO #3095-7 10 HP | PREMIUM EFFICIENCY MOTOR, INVERTER RATED FOR VARIABLE FREQUENCY DRIVE, END SUCTION, CLOSED-COUPLED, TYPE LC PUMP, EPOXY COATED, TEFC. 367 GPM AT 73.2' TDH. IMPELLER SIZE = 9.07 INCH. IMPELLER SHALL BE H-316 STAINLESS STEEL. 460 V, 60 Hz, THREE PHASE, 1750 RPM, 77.7% EFFICIENT. PROVIDE WITH 3 AUXILIARY CONTACTS. MECHANICAL CONTRACTOR SHALL PROVIDE AND INSTALL VFD. ELECTRICAL CONTRACTOR SHALL PROVIDE HOOK-UPS. SEE MECHANICAL AND ELECTRICAL DRAWINGS. POOL CONTRACTOR SHALL COORDINATE WITH THE MECHANICAL AND ELECTRICAL CONTRACTORS. SPEED OF PUMP TO BE CONTROLLED BY THE VFD. SEE ELECTRICAL INTERLOCK NOTES (BY ELECTRICAL CONTRACTOR). VERIFY WITH ELECTRICAL CONTRACTOR/ENGINEER FOR EXACT ELECTRICAL REQUIREMENTS. |
| 4 | HAIR AND LINT STRAINER | 1 | SEE CIRC. EQUIP. SCHEMATIC (WF500.0) | MERMADE FO SERIES STRAINER (6"x 6") | FIBERGLASS REINFORCED PLASTIC WITH TRANSPARENT LID AND STAINLESS STEEL BASKET. VERIFY SIZE WITH PIPE SUCTION SIZE AND PUMP INLET SIZE. |
| 5 | CHEMICAL CONTROLLER | 1 | 3/WF502, 4/WF502, 5/WF502, 6/WF502, 7/WF502 | BECS TECHNOLOGY BECSys 5 OR EQUAL | 120 VAC, <1 AMP. CONTROLLER COMES STANDARD WITH TEMPERATURE MONITORING CAPABILITIES, FLOW MONITORING, WATER LEVEL CONTROL AND AN ETHERNET CONNECTION. THE ELECTRICAL CONTRACTOR SHALL PROVIDE AN ETHERNET CONNECTION WITHIN 5 FEET OF THE CONTROLLER. ELECTRICAL INTERLOCKING BY ELECTRICAL CONTRACTOR. SEE ELECTRICAL INTERLOCK NOTES. COORDINATE WITH THE POOL CONTRACTOR. THE POOL CONTRACTOR SHALL PROVIDE A CLS CALIBRATED LIQUID LEVEL SENSOR FOR MONITORING OF THE SURGE TANK WATER LEVELS. POOL CONTRACTOR SHALL UTILIZE THE SIGNET FLOW METER SENSOR FOR MONITORING OF THE POOL WATER FLOW RATE. |
| 6 | LIQUID CHLORINE FEED PUMP | LOCATED IN CHEMICAL ROOM ON LEVEL 1 SEE SHEET WF101.1 | | | |
| 7 | LIQUID CHLORINE STORAGE CONTAINERS | LOCATED IN CHEMICAL ROOM ON LEVEL 1 SEE SHEET WF101.1 | | | |
| 8A | CHLORINE STORAGE ROOM | LOCATED ON LEVEL 1 SEE SHEET WF101.1 | | | |
| 8B | CO2 STORAGE AREA | LOCATED ON LEVEL 1 SEE SHEET WF101.1 | | | |
| 9 A THRU C | CO2 FEED SYSTEM AND CANNISTERS | LOCATED IN CHEMICAL ROOM ON LEVEL 1 SEE SHEET WF101.1 | | | |
| 10A | EMERGENCY SHOWER AND EYEWASH SINK | LOCATED IN CHEMICAL ROOM ON LEVEL 1 SEE SHEET WF101.1 | | | |

| MARK | DESCRIPTION | QUANTITY | DETAIL | REQUIREMENT | REMARKS |
|---|---|---|---|---|---|
| 10B | EMERGENCY SHOWER AND EYE WASH SINK | 1 | SEE MECHANICAL / PLUMBING DRAWINGS | | TEPID POTABLE WATER AND WASTE LINES REQUIRED. PLUMBING CONTRACTOR SHALL INSTALL ONE EYEWASH SINK. SEE POOL EQUIPMENT ROOM DRAWING FOR LOCATION. |
| 11A | UV DISINFECTION SYSTEM | 1 | 1/WF502 ALSO SEE CIRC. EQ. SCHEMATIC SHEET WF500.0 | ENGINEERED TREATMENT SYSTEMS (ETS) ECF-215-6V | PROVIDE FOR INSTALLATION ON 6"ø PIPING. PROVIDE UV SYSTEM EQUIPPED WITH MEDIUM PRESSURE UV LAMPS AND AUTOMATIC MECHANICAL CLEANING SYSTEM. FOR CONTROL PANEL REMARKS, SEE BELOW. PROVIDE SYSTEM TO ACCOMMODATE INSTALLATION BEFORE THE HEAT EXCHANGER. INSTALLATION SHALL BE PER THE REQUIREMENTS OF THE UV SYSTEM MANUFACTURER WITH ALL REQUIRED COMPONENTS PROVIDED (I.E. BY-PASS LINE, ISOLATION VALVES, FLANGED CONNECTIONS, UV STRAINER BASKET, AND PROPER LENGTHS OF PIPING). POOL CONTRACTOR SHALL PROVIDE AND INSTALL AN IN-LINE FLOW SWITCH AND MAKE CONNECTIONS AS REQUIRED TO THE CONTROL PANEL. USE SCHEDULE 80 PVC PIPING PER THE REQUIREMENTS OF THE MANUFACTURER. |
| 11B | UV SYSTEM CONTROL PANEL | 1 | 1/WF502 | ENGINEERED TREATMENT SYSTEMS (ETS) ECF-A-480 | ELECTRICAL CONTRACTOR SHALL COORDINATE WITH POOL CONTRACTOR FOR POWER REQUIREMENTS FOR MANUFACTURER OF UV SYSTEM PROVIDED. PROVIDE WITH INTERMEDIATE JUNCTION BOX AND OPTIONAL LENGTHS OF CABLES AS REQUIRED. ELECTRICAL CONTRACTOR SHALL INTERLOCK THE CONTROL PANEL WITH THE CIRCULATION PUMP, SUCH THAT WHEN THE CIRCULATION PUMP STOPS THE POWER TO THE UV CONTROL PANEL WILL SHUT OFF. CONTROL PANEL ELECTRICAL REQUIREMENTS: 480 VOLT, THREE PHASE, 60 HZ, 40 AMP EXTERNAL BREAKER, 32 AMP INTERNAL BREAKER, FAST ACTING. |
| 12 | WATER LAVA AND DECK JETS FEATURE PUMP WITH HAIR AND LINT STRAINER | 1 | N/A | PENTAIR INTELLIFLO XF 3 HP | WITH 146 GPM 70' TDH IS AVAILABLE. PUMP COMES WITH INTEGRAL PROGRAMABLE VARIABLE FREQUENCY DRIVE. 230 VOLT, 60 Hz, SINGLE PHASE WITH 3 AUXILIARY CONTACTS. VERIFY WITH ELECTRICAL CONTRACTOR/ ENGINEER FOR EXACT ELECTRICAL REQUIREMENTS. ELECTRICAL CONTRACTOR SHALL PROVIDE A DISCONNECT NEAR THE PUMP. ELECTRICAL CONTRACTOR SHALL PROVIDE A BUCK-BOOST TRANSFORMER AND PROVIDE ALL CONNECTIONS / HOOK-UPS. |
| 13 | BUBBLE COUCH PUMP WITH HAIR AND LINT STRAINER | 1 | N/A | PENTAIR INTELLIFLO XF 3 HP | WITH 144 GPM 71' TDH IS AVAILABLE. PUMP COMES WITH INTEGRAL PROGRAMABLE VARIABLE FREQUENCY DRIVE. 230 VOLT, 60 Hz, SINGLE PHASE WITH 3 AUXILIARY CONTACTS. VERIFY WITH ELECTRICAL CONTRACTOR/ ENGINEER FOR EXACT ELECTRICAL REQUIREMENTS. ELECTRICAL CONTRACTOR SHALL PROVIDE A DISCONNECT NEAR THE PUMP. ELECTRICAL CONTRACTOR SHALL PROVIDE A BUCK-BOOST TRANSFORMER AND PROVIDE ALL CONNECTIONS / HOOK-UPS. |
| 14 | CIRCULATION SYSTEM PRESSURE GAUGES AND VACUUM GAUGE | 2 1 | SEE CIRC. EQUIP. SCHEMATIC (WF500.0) | 0-60 PSI | NOT SHOWN ON PLAN. SEE CIRCULATION EQUIPMENT SCHEMATIC. INTEGRATE TO SHOW FILTER INFLUENT AND EFFLUENT PRESSURES. PROVIDE VACUUM GAUGE (OR COMBINATION VACUUM/ PRESSURE GAUGE IF NEC.) ON SUCTION SIDE AND PRESSURE GAUGE ON DISCHARGE SIDE OF PUMP. |
| 15 | FEATURE PUMP PRESSURE AND VACUUM GAUGES | AS REQUIRED | SEE EQUIPMENT ROOM NOTES | 0-60 PSI | NOT SHOWN ON PLAN. FOR FEATURE PUMPS PROVIDE A COMBINATION VACUUM /PRESSURE GAUGE ON THE SUCTION SIDE OF EACH PUMP AND A PRESURE GAUGE ON THE DISCHARGE SIDE OF EACH PUMP. |
| 16 | FLOWMETER | 1 SENSOR ONLY | SEE CIRC. EQUIP. SCHEMATIC (WF500.0) | SIGNET #MK515 SENSOR | SENSOR: (ONE IN RETURN LINE). FLOW READINGS THROUGH CHEMICAL CONTROLLER. |
| 17 | THERMOMETER | 3 | SEE CIRC. EQUIP. SCHEMATIC (WF500.0) | LETRO | 30˚ TO 130˚. NOT SHOWN ON PLANS. SEE EQUIPMENT SCHEMATIC. INSTALL ONE THERMOMETER IN AN EASILY READABLE LOCATION MIN 10 PIPE DIAMETERS DOWN STREAM FROM BYPASS VALVE, AND PROVIDE THERMOMETERS ON INFLUENT AND EFFLUENT LINES OF HEAT EXCHANGER. |
| 18A | CIRC. EQUIP. FACE PIPING | AS REQUIRED | SEE CIRC. EQUIP. SCHEMATIC (WF500.0) | PVC SCHEDULE 80 | 6"ø PVC PIPE. UTILIZE SCHEDULE 80 PVC PIPE, UNLESS OTHERWISE SPECIFIED. |
| 18B | FEATURE "Y" STRAINER | 3 | SEE EQUIPMENT ROOM NOTES | HAYWARD PVC Y-STRAINER | PROVIDE PVC Y-STRAINER ON RETURN PIPE OF EACH FEATURE. PROVIDE COMPLETE WITH STANDARD 1/32" PERFORATED PLASTIC SCREEN. |
| 19 | WATER LEVEL CONTROL PROVIDED THROUGH CHEMICAL CONTROLLER | | SEE POTABLE WATER FILL SCHEMATIC SHEET WF500.0 | SEE ITEM 5 THIS SCHEDULE | WATER LEVEL SHALL BE MONITORED AND CONTROLLED THRU THE CHEMICAL CONTROLLER (SEE ITEM #5). MAKE CONNECTION TO POTABLE WATER SUPPLY AND PROVIDE MANUAL AND SOLENOID VALVE ON FILL LINE TO SURGE TANK. SENSOR UNIT LOCATED IN THE SURGE TANK. PROTECT SENSOR CABLE IN WATERTIGHT CHAMBER. SEE POTABLE WATER LINE REMARKS BELOW. |

| MARK | DESCRIPTION | QUANTITY | DETAIL | REQUIREMENT | REMARKS |
|---|---|---|---|---|---|
| 20 | POTABLE WATER PIPING AND VALVES TO EQUIPMENT ROOM | AS REQUIRED | SEE POTABLE WATER FILL SCHEMATIC SHEET WF500.0 | POTABLE WATER SUPPLY LINE PROVIDING 30 GPM | POTABLE WATER SUPPLY AND SHUT OFF VALVE BY MECHANICAL CONTRACTOR. MECHANICAL CONTRACTOR TO PROVIDE STUB-IN TO POOL EQUIPMENT ROOM. POOL CONTRACTOR TO EXTEND PIPING TO SURGE TANK WITH REQUIRED AIR GAP. PROVIDE SOLENOID VALVE, MANUAL FILL VALVE, AND PROVIDE CONNECTION. SEE WATER LEVEL CONTROL SYSTEM REMARKS ABOVE. |
| 21 | SURGE TANK | 1 | A/WF412 | REINFORCED CONCRETE (BY GENERAL CONTRACTOR) | SEE EQUIPMENT ROOM PLAN AND SECTIONS FOR SURGE TANK SIZE. SURGE TANK BY GENERAL CONTRACTOR. ALSO SEE ARCHITECTURAL AND STRUCTURAL DRAWINGS. GENERAL CONTRACTOR SHALL PROVIDE A 30"ø x 30" ALUMINUM ACCESS HATCH WITH STAINLESS STEEL HARDWARE. PROVIDE PLASTIC LADDER RUNGS FOR ACCESS. PROVIDE WATERSTOP AT ALL CORNERS AND JOINTS. GENERAL CONTRACTOR SHALL REFER TO ARCHITECTURAL DRAWINGS FOR EXTERIOR WATERPROOFING OF SURGE TANK. POOL CONTRACTOR SHALL PROVIDE TWO COATS OF THOROSEAL WATERPROOFING ON THE INTERIOR SURFACES OF THE SURGE TANK. APPLY COATING PER THE MANUFACTURER'S RECOMMENDATIONS FOR THIS APPLICATION. GENERAL CONTRACTOR SHALL FINISH THE INTERIOR OF THE BACKWASH SUMP PIT PER THE RECOMMENDATIONS OF THE WATERPROOFING MATERIAL. COORDINATION BETWEEN TRADES SHALL BE MADE PRIOR TO CONSTRUCTION OF THE TANK. |
| 22 | PIPE WALL SLEEVE WITH MECHANICAL SEAL | AS REQUIRED | 7/WF501 | THUNDERSEAL "LINK-SEAL" | PROVIDE MANUFACTURER'S SLEEVE AT ALL SURGE TANK PENETRATIONS. POOL CONTRACTOR SHALL PROVIDE SLEEVES. GENERAL CONTRACTOR SHALL COORDINATE LOCATION OF SLEEVES WITH POOL CONTRACTOR AND SHALL INSTALL. |
| 23 | PIPE WALL SLEEVE | AS REQUIRED | 8/WF501 | WITH "O" RINGS | PROVIDE MANUFACTURER'S SLEEVE AT ALL PENETRATIONS (EXCEPT THROUGH SURGE TANK). POOL CONTRACTOR SHALL PROVIDE SLEEVES. GENERAL CONTRACTOR SHALL COORDINATE LOCATION OF SLEEVES WITH POOL CONTRACTOR AND SHALL INSTALL. |
| 24 | VALVE STEM EXTENSION AND MOUNTING BRACKET | AS REQUIRED | 3/WF501, 4/WF501 | STAINLESS STEEL CONSTUCTION | PROVIDE PENETRATIONS THROUGH THE TOP OF THE SURGE TANK LID FOR THE VALVE STEM AND SHUT OFF HANDLE. |
| 25 | MODULATING FLOAT VALVE WITH VERTICAL FLOATS | 1 | 5/WF501 | NEMATO INC. #NFV-8V (FOR 8"ø PIPE) | FOR HORIZONTAL INSTALLATION. SET DISK FOR 20% FLOW WHEN THE VALVE IS CLOSED. SET DISK FOR 100% FLOW WHEN THE VALVE IS OPEN. PROVIDE 4# WEIGHT TO PREVENT BINDING. |
| 26 | PUMP PIT | 1 | A/WF412 | OPEN PIT W/DRAIN TO SANITARY SEWER (BY GENERAL CONTRACTOR) | CONCRETE REINFORCED PUMP PIT BY THE GENERAL CONTRACTOR. GENERAL CONTRACTOR SHALL PROVIDE GALVANIZED GUARDRAILS WITH CHAIN ACCESS AND PLASTIC LADDER RUNG ACCESS AS SHOWN ON PLANS. DRAIN LINE TO SANITARY SEWER BY PLUMBING CONTRACTOR. SEE EQUIPMENT ROOM PLAN AND SECTIONS FOR DIMENSIONS. |
| 27 | WATER EVACUATION SUMP PIT | 1 | A/WF412, 9/WF501 | CONCRETE COVERED WITH DRAIN TO SANITARY SEWER (NIPC) | WATER CAPACITY OF EVACUATION SUMP PIT IS APPROXIMATELY 2400 GALLONS. STAGGER FILTER WATER EVACUATION CYCLES TO ALLOW SEWER TO FULLY DRAIN PRIOR TO WATER EVACUATION FROM ANOTHER FILTER. CONCRETE BACKWASH SUMP BY GENERAL CONTRACTOR. SEE EQUIPMENT ROOM PLAN AND SECTIONS FOR DIMENSIONS. GENERAL CONTRACTOR TO PROVIDE A NON-CORROSIVE REMOVABLE ACCESS HATCH SO WATER LEVEL IN THE TANK IS VISIBLE. PROVIDE PLASTIC ACCESS LADDER RUNGS. COORDINATE WITH POOL CONTRACTOR FOR LOCATION OF PIPE SLEEVE PENETRATIONS FOR BACKWASH THROUGH LID OF SUMP. DRAIN LINE TO SANITARY SEWER BY PLUMBING CONTRACTOR. POOL CONTRACTOR SHALL PROVIDE TWO COATS OF THOROSEAL WATERPROOFING ON THE INTERIOR SURFACES OF SUMP PIT. APPLY COATING PER THE MANUFACTURER'S RECOMMENDATIONS FOR THIS APPLICATION. GENERAL CONTRACTOR SHALL FINISH THE INTERIOR OF THE SUMP PIT PER THE RECOMMENDATIONS OF THE WATERPROOFING MATERIAL. COORDINATION BETWEEN TRADES SHALL BE MADE PRIOR TO CONSTRUCTION OF THE PIT. POOL CONTRACTOR SHALL PROVIDE GRAVITY DRAIN LINES FROM EACH FILTER TO THE EVACUATION SUMP PIT. SIZE DRAIN LINES AND VALVES PER THE MANUFACTURER'S RECOMMENDATIONS. |
| 28A | TROLLEY FOR HOIST | 1 | N/A | CM HOIST PRODUCTS SERIES 633 #3304 | RATED CAPACITY: 1 TON. STRUCTURAL CONSULTANT SHALL DESIGN REQUIRED BEAM OVER THE PUMP PIT. |
| 28B | ELECTRIC CHAIN HOIST | 1 | N/A | CM HOIST PRODUCTS LODESTAR SINGLE SPEED # 4224 MODEL L 1 TON CAPACITY | RATED CAPACITY = 1 TON. STANDARD LIFT = 15 FEET. LIFT SPEED = 16 FT/MIN. VERIFY LENGTH OF CHAIN REQUIRED BEFORE ORDERING. VERIFY LENGTH OF CONTROLLER CABLE REQUIRED BEFORE ORDERING. ELECTRICAL CONTRACTOR SHALL PROVIDE ALL REQUIRED ELECTRICAL FOR CONNECTION OF HOIST. 1 HP, 460 VOLT, THREE PHASE, 60 Hz. |
| 29 | VFD FOR CIRCULATION PUMP (ITEM 3) | 1 | N/A | ALSO SEE MECHANICAL DRAWINGS | MECHANICAL CONTRACTOR SHALL PROVIDE VFD, ELECTRICAL CONTRACTOR SHALL INSTALL AND ALSO PROVIDE STARTER, CONTACTORS AND RELAYS. THIS SHALL INCLUDE ALL WIRING AND CONDUIT. ELECTRICAL CONTRACTOR SHALL MAKE ALL CONNECTIONS TO EQUIPMENT. PROVIDE CONTROL WIRING AS DIRECTED BY POOL CONTRACTOR. SEE ELECTRICAL INTERLOCK NOTES FOR REQUIRED INTERLOCKING OF POOL EQUIPMENT. |
| 30 | POWER PANEL | AS REQUIRED | N/A | ALSO SEE ELECTRICAL PROJECT DRAWINGS | ELECTRICAL CONTRACTOR SHALL PROVIDE POWER PANEL AS REQUIRED. THIS SHALL INCLUDE ALL WIRING AND CONDUIT. ELECTRICAL CONTRACTOR SHALL MAKE ALL CONNECTIONS TO EQUIPMENT. PROVIDE CONTROL WIRING AS DIRECTED BY POOL CONTRACTOR. SEE ELECTRICAL INTERLOCK NOTES FOR REQUIRED INTERLOCKING OF POOL EQUIPMENT. |

# RAISED SPA
# CIRCULATION EQUIPMENT SCHEDULE

## ALTERNATE BID 1

(VERIFY ALL ELECTRICAL REQUIREMENTS WITH ELECTRICAL CONSULTANT/CONTRACTOR)

| MARK | DESCRIPTION | QUANTITY | DETAIL | REQUIREMENT | REMARKS |
|---|---|---|---|---|---|
| 31A | REGENERATIVE MEDIA FILTER | ONE | SEE FILTER SCHEMATIC (WF500.0) AND DETAILS 1/WF501 & 6/WF501 | NEPTUNE BENSON DEFENDER #SP-27-48-487 | FILTER AREA SHALL EQUAL 381 SF. PROVIDE WITH 6"ø FACE PIPING. PROVIDE FILTER WITH AN AUTOMATIC CONTROLLER TO ACTIVATE THE BUMP CYCLE, PRE-COATING, STOPPING & STARTING OF THE MAIN CIRCULATION PUMP, PNEUMATIC VALVE, VACUUM TRANSFER SYSTEM, AUXILIARY CONTACTS TO INTERLOCK CHEMICAL CONTROL, KEY SWITCH FOR BUMP CYCLE FLEX TUBE CLEANING. ELECTRICAL SHALL PROVIDE A 120 VOLT, SINGLE PHASE 20 AMP, GFIC, DEDICATED CIRCUIT FOR THE AUTOMATIC CONTROLLER. THE CONTROLLER WILL PROVIDE SIGNAL POWER TO THE CIRCULATION PUMP MOTOR. THE CIRCULATION PUMP SHALL BE OPERATED BY A VFD WITH A SOFT START DEVICE PER THE RECOMMENDATIONS OF THE FILTER MANUFACTURER. CONTROL WIRING BY THE ELECTRICAL CONTRACTOR. |
| 31B | FILTER – VACUUM TRANSFER SYSTEM | ONE | SEE FILTER SCHEMATIC (WF500.0) AND DETAIL 1/WF501 | NEPTUNE BENSON DEFENDER | PROVIDE THE SYSTEM COMPLETE WITH A VACUUM BLOWER, 1 1/2 HP, TEFC 120 VAC, SINGLE PHASE MOTOR, 60 HZ. SYSTEM SHALL ALSO BE PROVIDED COMPLETE WITH THE REQUIRED IN-LINE FILTER, BALL VALVES, AND VACUUM HOSE (VENT LINES AND BALL VALVES BY THE POOL CONTRACTOR). |
| 32 | HEAT EXCHANGER | 1 | SEE CIRC EQUIP & HEAT EXCHANGER SCHEMATICS SHEET WF500.0 | 600,000 BTU OUTPUT REQUIRED | HEAT EXCHANGER DESIGN AND SPECIFICATION BY OTHERS. SEE MECHANICAL DRAWINGS (BY OTHERS). MECHANICAL CONTRACTOR SHALL PROVIDE AND INSTALL HEAT EXCHANGER, BOILER WATER CONNECTIONS, TEMPERATURE CONTROLS, CONTROL VALVE AND HIGH LIMIT SHUT OFF SWITCH. LIMIT SWITCH SHALL BE SET AT MAXIMUM 130 DEGREES F. TEMPERATURE SHALL BE MONITORED (NOT CONTROLLED) THROUGH THE CHEMICAL CONTROLLER. POOL CONTRACTOR SHALL PROVIDE TWO (2) TEMPERATURE SENSOR WELLS ON POOL INFLUENT AND EFFLUENT PIPING TO & FROM HEAT EXCHANGER. POOL CONTRACTOR SHALL MAKE POOL PIPING CONNECTIONS. |
| 33 | CIRCULATION PUMP | 1 | SEE CIRC. EQUIP. SCHEMATIC (WF500.0) | PACO #3095-7 7.5 HP | PREMIUM EFFICIENCY MOTOR, INVERTER RATED MOTOR FOR VARIABLE FREQUENCY DRIVE, END SUCTION, CLOSED-COUPLED, TYPE LC PUMP, EPOXY COATED, TEFC. 315 GPM AT 69.7' TDH. IMPELLER SIZE = 8.75 INCH. IMPELLER SHALL BE H-316 STAINLESS STEEL. 460 V, 60 Hz, THREE PHASE, 1750 RPM, 74.3% EFFICIENT. PROVIDE WITH 3 AUXILIARY CONTACTS. MECHANICAL CONTRACTOR SHALL PROVIDE AND INSTALL VFD. ELECTRICAL CONTRACTOR SHALL PROVIDE HOOK-UPS. SEE MECHANICAL AND ELECTRICAL DRAWINGS. POOL CONTRACTOR SHALL COORDINATE WITH THE MECHANICAL AND ELECTRICAL CONTRACTORS. SPEED OF PUMP TO BE CONTROLLED BY THE VFD. SEE ELECTRICAL INTERLOCK NOTES (BY ELECTRICAL CONTRACTOR). VERIFY WITH ELECTRICAL CONTRACTOR/ENGINEER FOR EXACT ELECTRICAL REQUIREMENTS. |
| 34 | HAIR AND LINT STRAINER | 1 | SEE CIRC. EQUIP. SCHEMATIC (WF500.0) | MERMADE FO SERIES STRAINER (6"x 6") | FIBERGLASS REINFORCED PLASTIC WITH TRANSPARENT LID AND STAINLESS STEEL BASKET. VERIFY SIZE WITH PIPE SUCTION SIZE AND PUMP INLET SIZE. |
| 35 | CHEMICAL CONTROLLER | 1 | 3/WF502, 4/WF502, 5/WF502, 6/WF502, 7/WF502 | BECS TECHNOLOGY BECSys 5 OR EQUAL | 120 VAC, <1 AMP. CONTROLLER COMES STANDARD WITH TEMPERATURE MONITORING CAPABILITIES, FLOW MONITORING, WATER LEVEL CONTROL AND AN ETHERNET CONNECTION. THE ELECTRICAL CONTRACTOR SHALL PROVIDE AN ETHERNET CONNECTION WITHIN 5 FEET OF THE CONTROLLER. ELECTRICAL INTERLOCKING BY ELECTRICAL CONTRACTOR. SEE ELECTRICAL INTERLOCK NOTES. COORDINATE WITH THE POOL CONTRACTOR. THE POOL CONTRACTOR SHALL PROVIDE A CLS CALIBRATED LIQUID LEVEL SENSOR FOR MONITORING OF THE SPA WATER LEVELS. POOL CONTRACTOR SHALL UTILIZE THE SIGNET FLOW METER SENSOR FOR MONITORING OF THE SPA WATER FLOW RATE. |
| 36 | LIQUID CHLORINE FEED PUMP | LOCATED IN CHEMICAL ROOM ON LEVEL 1 SEE SHEET WF101.1 | | | |
| 37 | CO2 FEED SYSTEM | LOCATED IN CHEMICAL ROOM ON LEVEL 1 SEE SHEET WF101.1 | | | |
| 38A | UV DISINFECTION SYSTEM | 1 | 1/WF502 ALSO SEE CIRC. EQ. SCHEMATIC SHEET WF500.0 | ENGINEERED TREATMENT SYSTEMS (ETS) ECF-215-6V | PROVIDE FOR INSTALLATION ON 6"ø PIPING. PROVIDE UV SYSTEM EQUIPPED WITH MEDIUM PRESSURE UV LAMPS AND AUTOMATIC MECHANICAL CLEANING SYSTEM. FOR CONTROL PANEL REMARKS, SEE BELOW. PROVIDE SYSTEM TO ACCOMMODATE INSTALLATION BEFORE THE HEAT EXCHANGER. INSTALLATION SHALL BE PER THE REQUIRMENTS OF THE UV SYSTEM MANUFACTURER WITH ALL REQUIRED COMPONENTS PROVIDED (I.E. BY-PASS LINE, ISOLATION VALVES, FLANGED CONNECTIONS, UV STRAINER BASKET, AND PROPER LENGTHS OF PIPING). POOL CONTRACTOR SHALL PROVIDE AND INSTALL AN IN-LINE FLOW SWITCH AND MAKE CONNECTIONS AS REQUIRED TO THE CONTROL PANEL. USE SCHEDULE 80 PVC PIPING PER THE REQUIREMENTS OF THE MANUFACTURER. |
| 38B | UV SYSTEM CONTROL PANEL | 1 | 1/WF502 | ENGINEERED TREATMENT SYSTEMS (ETS) ECF-A-480 | ELECTRICAL CONTRACTOR SHALL COORDINATE WITH POOL CONTRACTOR FOR POWER REQUIREMENTS FOR MANUFACTURER OF UV SYSTEM PROVIDED. PROVIDE WITH INTERMEDIATE JUNCTION BOX AND OPTIONAL LENGTHS OF CABLES AS REQUIRED. ELECTRICAL CONTRACTOR SHALL INTERLOCK THE CONTROL PANEL WITH THE CIRCULATION PUMP, SUCH THAT WHEN THE CIRCULATION PUMP STOPS THE POWER TO THE UV CONTROL PANEL WILL SHUT OFF. CONTROL PANEL ELECTRICAL REQUIREMENTS: 480 VOLT, THREE PHASE, 60 HZ, 40 AMP EXTERNAL BREAKER, 32 AMP INTERNAL BREAKER, FAST ACTING. |

| MARK | DESCRIPTION | QUANTITY | DETAIL | REQUIREMENT | REMARKS |
|---|---|---|---|---|---|
| 39 A & B | HYDRO-THERAPY JET PUMP WITH HAIR AND LINT STRAINER | 2 | N/A | PENTAIR INTELLIFLO XF #022005 3 HP | 8 JETS PER PUMP AT 144 GPM WITH 64 FT TDH AVAILABLE. EACH PUMP COMES WITH INTEGRAL PROGRAMMABLE VARIABLE FREQUENCY DRIVE. 230 VOLT, 60 Hz, SINGLE PHASE WITH 3 AUXILIARY CONTACTS. VERIFY WITH ELECTRICAL CONTRACTOR/ ENGINEER FOR EXACT ELECTRICAL REQUIREMENTS. ELECTRICAL CONTRACTOR SHALL PROVIDE A DISCONNECT NEAR THE PUMP. ELECTRICAL CONTRACTOR SHALL PROVIDE A BUCK-BOOST TRANSFORMER AND PROVIDE ALL CONNECTIONS / HOOK-UPS. |
| 39 C & D | HYDRO-THERAPY JET PUMP WITH HAIR AND LINT STRAINER | 2 | N/A | PENTAIR INTELLIFLO XF #022005 3 HP | 9 JETS PER PUMP AT 162 GPM WITH 64 FT TDH AVAILABLE. EACH PUMP COMES WITH INTEGRAL PROGRAMMABLE VARIABLE FREQUENCY DRIVE. 230 VOLT, 60 Hz, SINGLE PHASE WITH 3 AUXILIARY CONTACTS. VERIFY WITH ELECTRICAL CONTRACTOR/ ENGINEER FOR EXACT ELECTRICAL REQUIREMENTS. ELECTRICAL CONTRACTOR SHALL PROVIDE A DISCONNECT NEAR THE PUMP. ELECTRICAL CONTRACTOR SHALL PROVIDE A BUCK-BOOST TRANSFORMER AND PROVIDE ALL CONNECTIONS / HOOK-UPS. |
| 40 | CIRCULATION SYSTEM PRESSURE GAUGES AND VACUUM GAUGE | 2 1 | SEE CIRC. EQUIP. SCHEMATIC (WF500.0) | 0-60 PSI | NOT SHOWN ON PLAN. SEE CIRCULATION EQUIPMENT SCHEMATIC. INTEGRATE TO SHOW FILTER INFLUENT AND EFFLUENT PRESSURES. PROVIDE VACUUM GAUGE (OR COMBINATION VACUUM/ PRESSURE GAUGE IF NEC.) ON SUCTION SIDE AND PRESSURE GAUGE ON DISCHARGE SIDE OF PUMP. |
| 41 | JET PUMP PRESSURE AND VACUUM GAUGES | AS REQUIRED | SEE EQUIPMENT ROOM NOTES | 0-60 PSI | NOT SHOWN ON PLAN. FOR FEATURE PUMPS PROVIDE A COMBINATION VACUUM /PRESSURE GAUGE ON THE SUCTION SIDE OF EACH PUMP AND A PRESURE GAUGE ON THE DISCHARGE SIDE OF EACH PUMP. |
| 42 | FLOWMETER | 1 SENSOR ONLY | SEE CIRC. EQUIP. SCHEMATIC (WF500.0) | SIGNET #MK515 SENSOR | SENSOR: (ONE IN RETURN LINE). FLOW READINGS THROUGH CHEMICAL CONTROLLER. |
| 43 | THERMOMETER | 3 | SEE CIRC. EQUIP. SCHEMATIC (WF500.0) | LETRO | 30˚ TO 130˚. NOT SHOWN ON PLANS. SEE EQUIPMENT SCHEMATIC. INSTALL ONE THERMOMETER IN AN EASILY READABLE LOCATION MIN 10 PIPE DIAMETERS DOWN STREAM FROM BYPASS VALVE, AND PROVIDE THERMOMETERS ON INFLUENT AND EFFLUENT LINES OF HEAT EXCHANGER. |
| 44 | CIRC. EQUIP. FACE PIPING | AS REQUIRED | SEE CIRC. EQUIP. SCHEMATIC (WF500.0) | PVC SCHEDULE 80 | 6"ø PVC PIPE. UTILIZE SCHEDULE 80 PVC PIPE, UNLESS OTHERWISE SPECIFIED. |
| 45 | WATER LEVEL CONTROL PROVIDED THROUGH CHEMICAL CONTROLLER | | SEE POTABLE WATER FILL SCHEMATIC SHEET WF500.0 | SEE ITEM 35 THIS SCHEDULE | WATER LEVEL SHALL BE MONITORED AND CONTROLLED THRU THE CHEMICAL CONTROLLER (SEE ITEM #35). MAKE CONNECTION TO POTABLE WATER SUPPLY AND PROVIDE MANUAL AND SOLENOID VALVE ON FILL LINE TO SPA. SENSOR UNIT LOCATED IN DECK WELL AT SPA SIDE. PROTECT SENSOR CABLE IN WATERTIGHT CHAMBER. SEE POTABLE WATER LINE REMARKS BELOW. |
| 46 | POTABLE WATER PIPING AND VALVES TO EQUIPMENT ROOM | AS REQUIRED | SEE POTABLE WATER FILL SCHEMATIC SHEET WF500.0 | POTABLE WATER SUPPLY LINE PROVIDING 20 GPM | POTABLE WATER SUPPLY AND SHUT OFF VALVE BY MECHANICAL CONTRACTOR. MECHANICAL CONTRACTOR TO PROVIDE STUB-IN TO POOL EQUIPMENT ROOM. POOL CONTRACTOR TO EXTEND PIPING TO FILL PIPE. PROVIDE SOLENOID VALVE, MANUAL FILL VALVE, AND PROVIDE CONNECTION. SEE WATER LEVEL CONTROL SYSTEM REMARKS ABOVE. |
| 47 | VFD FOR CIRCULATION PUMP (ITEM 33) | 1 | N/A | ALSO SEE MECHANICAL DRAWINGS | MECHANICAL CONTRACTOR SHALL PROVIDE VFD, ELECTRICAL CONTRACTOR SHALL INSTALL AND ALSO PROVIDE STARTER, CONTACTORS AND RELAYS. THIS SHALL INCLUDE ALL WIRING AND CONDUIT. ELECTRICAL CONTRACTOR SHALL MAKE ALL CONNECTIONS TO EQUIPMENT. PROVIDE CONTROL WIRING AS DIRECTED BY POOL CONTRACTOR. SEE ELECTRICAL INTERLOCK NOTES FOR REQUIRED INTERLOCKING OF POOL EQUIPMENT. |
| 48 | POWER PANEL | AS REQUIRED | N/A | ALSO SEE ELECTRICAL PROJECT DRAWINGS | ELECTRICAL CONTRACTOR SHALL PROVIDE POWER PANEL AS REQUIRED. THIS SHALL INCLUDE ALL WIRING AND CONDUIT. ELECTRICAL CONTRACTOR SHALL MAKE ALL CONNECTIONS TO EQUIPMENT. PROVIDE CONTROL WIRING AS DIRECTED BY POOL CONTRACTOR. SEE ELECTRICAL INTERLOCK NOTES FOR REQUIRED INTERLOCKING OF POOL EQUIPMENT. |

# ACTIVITY POOL EQUIPMENT INTERLOCKING NOTES

ELECTRICAL INTERLOCKING BY ELECTRICAL CONTRACTOR.
COORDINATE WITH POOL CONTRACTOR.

PROVIDE INTERLOCKING OF CIRCULATION EQUIPMENT PER POOL DRAWINGS AND SPECIFICATIONS. PROVIDE RELAY AND CONTROL WIRING IN 3/4" CONDUIT AS REQUIRED.

1. INTERLOCK THE ACTIVITY POOL CIRCULATION PUMP (EQUIPMENT SCHEDULE ITEM # 3) WITH ITS HEAT EXCHANGER TEMPERATURE CONTROLS (HEAT EXCHANGER OUR SCHEDULE ITEM # 2).
(IF THE POOL CIRCULATION PUMP SHUTS OFF THE CALL FOR HEAT DEMAND SHOULD SHUT OFF ALSO.)
2. INTERLOCK THE CIRCULATION PUMP (ITEM # 3) WITH THE REGENERATIVE MEDIA FILTER'S AUTOMATIC CONTROLLER (INSTALLED ON ITEM # 1A) PER MANUFACTURER'S REQUIREMENTS.
3. INTERLOCK THE REGENERATIVE MEDIA FILTER AUTOMATIC CONTROLLER (ON ITEM # 1A) WITH ITS RESPECTIVE VACUUM TRANSFER SYSTEM (ITEM # 1B) PER MANUFACTURER'S REQUIREMENTS.
4. INTERLOCK THE CIRCULATION PUMP (ITEM # 3) WITH ITS CHLORINE FEED AND CO2 FEED RELAYS WITHIN THE CHEMICAL CONTROLLER (ITEM # 5).
(IF POOL CIRCULATION PUMP SHUTS OFF, THE POWER TO ALL CHLORINE AND CO2 FEEDERS SHALL SHUT OFF ALSO.)
5. INTERLOCK THE CIRCULATION PUMP (ITEM # 3) WITH ITS UV DISINFECTION SYSTEM CONTROL PANEL (ITEM # 11B).
(IF POOL CIRCULATION PUMP SHUTS OFF, THE POWER TO THE UV SYSTEM CONTROL PANEL SHALL SHUT OFF ALSO.)

# RAISED SPA EQUIPMENT INTERLOCKING NOTES

ELECTRICAL INTERLOCKING BY ELECTRICAL CONTRACTOR.
COORDINATE WITH POOL CONTRACTOR.

PROVIDE INTERLOCKING OF CIRCULATION EQUIPMENT PER POOL DRAWINGS AND SPECIFICATIONS. PROVIDE RELAY AND CONTROL WIRING IN 3/4" CONDUIT AS REQUIRED.

1. INTERLOCK THE RAISED SPA CIRCULATION PUMP (ITEM # 33) WITH THE RAISED SPA HEAT EXCHANGER TEMPERATURE CONTROLS (ITEM # 32). (IF THE SPA CIRCULATION PUMP SHUTS OFF THE CALL FOR HEAT DEMAND SHOULD SHUT OFF ALSO.)
2. INTERLOCK THE RAISED SPA CIRCULATION PUMP (ITEM # 33) WITH THE RAISED SPA REGENERATIVE MEDIA FILTER'S AUTOMATIC CONTROLLER (INSTALLED ON ITEM # 31A) PER MANUFACTURER'S REQUIREMENTS.
3. INTERLOCK THE RAISED SPA'S REGENERATIVE MEDIA FILTER AUTOMATIC CONTROLLER (INSTALLED ON ITEM # 31A) WITH ITS VACUUM TRANSFER SYSTEM (ITEM # 31B)
PER MANUFACTURER'S REQUIREMENTS.
4. INTERLOCK THE RAISED SPA CIRCULATION PUMP (ITEM # 33) WITH THE CHLORINE AND CO2 FEED RELAYS (SEE ITEM # 5).
(IF SPA CIRCULATION PUMP SHUTS OFF, THE POWER TO ALL CHLORINE AND ACID FEEDERS SHALL SHUT OFF ALSO.)
5. INTERLOCK THE RAISED SPA CIRCULATION PUMP (ITEM # 33) WITH THE UV DISINFECTION SYSTEM CONTROL PANEL (ITEM # 38B).
(IF SPA CIRCULATION PUMP SHUTS OFF, THE POWER TO THE UV SYSTEM CONTROL PANEL SHALL SHUT OFF ALSO.)
6. INTERLOCK RAISED SPA TIMER(S) AT SPA SIDE WITH THEIR RESPECTIVE THERAPY JET PUMPS (TIMER 1 WITH PUMPS 39A & B. TIMER 2 WITH PUMPS 39C & D).
7. INTERLOCK THE RAISED SPA EMERGENCY SHUT OFF SWITCH (LOCATED AT SPA SIDE) WITH THE RAISED SPA CIRCULATION PUMP (ITEM # 33) AND THE FOUR SPA JET PUMPS (ITEM # 39 A, B, C & D).

The entire contents of the attached documents, including all sketches, plans, studies, drawings, schedules and specifications and all copyrights therein are, and shall remain the sole property of Water Design Incorporated. The documents and their contents may not be used, photocopied or reproduced digitally, electronically or in any other manner without the express prior written consent of Water Design Incorporated.

MHTN ARCHITECTS
MHTN Architects, Inc.
420 East South Temple
Suite 100
Salt Lake City, Utah 84111
Telephone (801) 595-6700
Telefax (801) 595-6717
www.mhtn.com

Hastings+Chivetta
ARCHITECTURE • PLANNING • ENGINEERING
622 Emerson, Suite 200
St. Louis, MO 63141
Tel. 314.863.5717
Fax. 314.863.2823
www.hastingschivetta.com

Water Design Inc.
5047 S. Galleria Dr.
Murray, Utah 84123
Phone : (801) 261-4009
Fax : (801) 261-4069
www.waterdesigninc.com

BUILDING OFFICIAL STAMP

UNIVERSITY OF UTAH
STUDENT LIFE CENTER
1836 E. BALLIF ROAD
SALT LAKE CITY, UTAH 84112

SEAL

LICENSED PROFESSIONAL ENGINEER
CHARLES ROSS ANDERSON
145589-2202
5-15-13
STATE OF UTAH

MHTN PROJECT NO.
DRAWN BY: ACR CHECKED BY: BA

ISSUED:

| NO. | DATE | DESCRIPTION |
|---|---|---|

CONTRACTOR TO VERIFY DRAWINGS IN FIELD USE REFLECT LAST REVISION DATE.

| NO. | DATE | DESCRIPTION |
|---|---|---|

SHEET NAME
POOL EQUIPMENT SCHEDULES - ALT BID 1

BID DOCUMENTS
MAY 15, 2013

SHEET NUMBER
WF601.1

# 50 METER LAP POOL CIRCULATION EQUIPMENT SCHEDULE

## ALTERNATE BID 1

(VERIFY ALL ELECTRICAL REQUIREMENTS WITH ELECTRICAL CONSULTANT/CONTRACTOR)

| MARK | DESCRIPTION | QUANTITY | DETAIL | REQUIREMENT |
|---|---|---|---|---|
| 51 A | REGENERATIVE MEDIA FILTER | ONE | SEE FILTER SCHEMATIC (WF500.0) AND DETAIL 1/WF500.1 & 1/WF501 | NEPTUNE BENSON DEFENDER #SP-49-48-1548 |
| 51 B | FILTER – VACUUM TRANSFER SYSTEM | ONE | SEE FILTER SCHEMATIC (WF500.0) AND DETAIL 1/WF501 | NEPTUNE BENSON DEFENDER |
| 52 | HEAT EXCHANGER | 1 | SEE CIRC EQUIP & HEAT EXCHANGER SCHEMATICS SHEET WF500.0 & WF500.1 | 2,300,000 BTU OUTPUT REQUIRED |
| 53 | CIRCULATION PUMP | 1 | SEE CIRC. EQUIP. SCHEMATIC (WF500.1) | PACO #6095-7 30 HP |
| 54 | HAIR AND LINT STRAINER | 1 | SEE CIRC. EQUIP. SCHEMATIC (WF500.1) | MERMADE FO SERIES STRAINER (10"x 10") |
| 55 | CHEMICAL CONTROLLER | 1 | 3 4 5 6 7 WF502 | BECS TECHNOLOGY BECSys 5 OR EQUAL |

REMARKS: FIBERGLASS REINFORCED PLASTIC WITH TRANSPARENT LID AND STAINLESS STEEL BASKET. VERIFY SIZE WITH PIPE SUCTION SIZE AND PUMP INLET SIZE.

REMARKS: 120 VAC, <1 AMP. CONTROLLER COMES STANDARD WITH TEMPERATURE MONITORING CAPABILITIES, FLOW MONITORING, WATER LEVEL CONTROL AND AN ETHERNET CONNECTION. THE ELECTRICAL CONTRACTOR SHALL PROVIDE AN ETHERNET CONNECTION WITHIN 5 FEET OF THE CONTROLLER. ELECTRICAL INTERLOCKING BY ELECTRICAL CONTRACTOR. SEE ELECTRICAL INTERLOCK NOTES. COORDINATE WITH THE POOL CONTRACTOR. THE POOL CONTRACTOR SHALL PROVIDE A CLS CALIBRATED LIQUID LEVEL SENSOR FOR MONITORING OF THE SURGE TANK WATER LEVELS. POOL CONTRACTOR SHALL UTILIZE THE SIGNET FLOW METER SENSOR FOR MONITORING OF THE POOL WATER FLOW RATE.

REMARKS: HEAT EXCHANGER DESIGN AND SPECIFICATION BY OTHERS. SEE MECHANICAL DRAWINGS (BY OTHERS). MECHANICAL CONTRACTOR SHALL PROVIDE AND INSTALL HEAT EXCHANGER, BOILER WATER CONNECTIONS, TEMPERATURE CONTROLS, CONTROL VALVE AND HIGH LIMIT SHUT OFF SWITCH. LIMIT SWITCH SHALL BE SET AT MAXIMUM 130 DEGREES F. TEMPERATURE SHALL BE MONITORED (NOT CONTROLLED) THROUGH THE CHEMICAL CONTROLLER. POOL CONTRACTOR SHALL PROVIDE TWO (2) TEMPERATURE SENSOR WELLS ON POOL INFLUENT AND EFFLUENT PIPING TO & FROM HEAT EXCHANGER. POOL CONTRACTOR SHALL MAKE POOL PIPING CONNECTIONS.

REMARKS: PREMIUM EFFICIENCY MOTOR, INVERTER RATED MOTOR FOR VARIABLE FREQUENCY DRIVE, END SUCTION, CLOSED-COUPLED, TYPE LC PUMP, EPOXY COATED, TEFC. 1,175 GPM AT 73.3' TDH. IMPELLER SIZE = 9.35 INCH. IMPELLER SHALL BE H-316 STAINLESS STEEL. 460 V, 60 Hz, THREE PHASE, 1750 RPM, 80.1% EFFICIENT. PROVIDE WITH 3 AUXILIARY CONTACTS. MECHANICAL CONTRACTOR SHALL PROVIDE AND INSTALL VFD. ELECTRICAL CONTRACTOR SHALL PROVIDE HOOK-UPS. SEE MECHANICAL AND ELECTRICAL DRAWINGS. POOL CONTRACTOR SHALL COORDINATE WITH THE MECHANICAL AND ELECTRICAL CONTRACTORS. SPEED OF PUMP TO BE CONTROLLED BY THE VFD. SEE ELECTRICAL INTERLOCK NOTES (BY ELECTRICAL CONTRACTOR). VERIFY WITH ELECTRICAL CONTRACTOR/ENGINEER FOR EXACT ELECTRICAL REQUIREMENTS.

| MARK | DESCRIPTION | QUANTITY | DETAIL | REQUIREMENT |
|---|---|---|---|---|
| 56 | LIQUID CHLORINE FEED PUMP | | LOCATED IN CHEMICAL ROOM ON LEVEL 1 SEE SHEET WF101.1 | |
| 57 | LIQUID CHLORINE STORAGE CONTAINERS | | LOCATED IN CHEMICAL ROOM ON LEVEL 1 SEE SHEET WF101.1 | |
| 58 | CHLORINE STORAGE ROOM | | LOCATED ON LEVEL 1 SEE SHEET WF101.1 | |
| 59 A THRU C | CO2 FEED SYSTEM AND CANNISTERS | | LOCATED IN CHEMICAL ROOM ON LEVEL 1 SEE SHEET WF101.1 | |
| 60 A | EMERGENCY EYEWASH SINK | | LOCATED IN CHEMICAL ROOM ON LEVEL 1 SEE SHEET WF101.1 | |
| 61 A | UV DISINFECTION SYSTEM | 1 | 1 WF502 ALSO SEE CIRC. EQ. SCHEMATIC SHEET WF500.1 | ENGINEERED TREATMENT SYSTEMS (ETS) ECF-225-12V |
| 61 B | UV SYSTEM CONTROL PANEL | 1 | 1 WF502 | ENGINEERED TREATMENT SYSTEMS (ETS) ECF-A-480 |
| 62 | CIRCULATION SYSTEM PRESSURE GAUGES AND VACUUM GAUGE | 2 1 | SEE CIRC. EQUIP. SCHEMATIC (WF500.1) | 0-60 PSI |
| 63 | FEATURE PUMP PRESSURE AND VACUUM GAUGES | AS REQUIRED | SEE EQUIPMENT ROOM NOTES | 0-60 PSI |
| 64 | FLOWMETER | 1 SENSOR ONLY | SEE CIRC. EQUIP. SCHEMATIC (WF500.1) | SIGNET #MK515 SENSOR |

REMARKS: PROVIDE FOR INSTALLATION WITH TRANSITION FROM 10"ø TO 12"ø PIPING ON UV UNIT. PROVIDE UV SYSTEM EQUIPPED WITH MEDIUM PRESSURE UV LAMPS AND AUTOMATIC MECHANICAL CLEANING SYSTEM. FOR CONTROL PANEL REMARKS, SEE BELOW. PROVIDE SYSTEM TO ACCOMMODATE INSTALLATION BEFORE THE HEAT EXCHANGER. INSTALLATION SHALL BE PER THE REQUIREMENTS OF THE UV SYSTEM MANUFACTURER WITH ALL REQUIRED COMPONENTS PROVIDED (I.E. BY-PASS LINE, ISOLATION VALVES, FLANGED CONNECTIONS, UV STRAINER BASKET, AND PROPER LENGTHS OF PIPING). POOL CONTRACTOR SHALL PROVIDE AND INSTALL AN IN-LINE FLOW SWITCH AND MAKE CONNECTIONS AS REQUIRED TO THE CONTROL PANEL. USE SCHEDULE 80 PVC PIPING PER THE REQUIREMENTS OF THE MANUFACTURER.

REMARKS: ELECTRICAL CONTRACTOR SHALL COORDINATE WITH POOL CONTRACTOR FOR POWER REQUIREMENTS FOR MANUFACTURER OF UV SYSTEM PROVIDED. PROVIDE WITH INTERMEDIATE JUNCTION BOX AND OPTIONAL LENGTHS OF CABLES AS REQUIRED. ELECTRICAL CONTRACTOR SHALL INTERLOCK THE CONTROL PANEL WITH THE CIRCULATION PUMP, SUCH THAT WHEN THE CIRCULATION PUMP STOPS THE POWER TO THE UV CONTROL PANEL WILL SHUT OFF.

CONTROL PANEL ELECTRICAL REQUIREMENTS:
ETS: 480 VOLT, THREE PHASE, 60 HZ, 40 AMP BREAKER.

REMARKS: NOT SHOWN ON PLAN. SEE CIRCULATION EQUIPMENT SCHEMATIC. INTEGRATE TO SHOW FILTER INFLUENT AND EFFLUENT PRESSURES. PROVIDE VACUUM GAUGE (OR COMBINATION VACUUM/ PRESSURE GAUGE IF NEC.) ON SUCTION SIDE AND PRESSURE GAUGE ON DISCHARGE SIDE OF PUMP.

REMARKS: NOT SHOWN ON PLAN. FOR FEATURE PUMPS PROVIDE A COMBINATION VACUUM /PRESSURE GAUGE ON THE SUCTION SIDE OF EACH PUMP AND A PRESURE GAUGE ON THE DISCHARGE SIDE OF EACH PUMP.

REMARKS: SENSOR: (ONE IN RETURN LINE). FLOW READINGS THROUGH CHEMICAL CONTROLLER.

| MARK | DESCRIPTION | QUANTITY | DETAIL | REQUIREMENT |
|---|---|---|---|---|
| 65 | THERMOMETER | 3 | SEE CIRC. EQUIP. SCHEMATIC (WF500.1) | LETRO |
| 66 | CIRC. EQUIP. FACE PIPING | AS REQUIRED | SEE CIRC. EQUIP. SCHEMATIC (WF500.1) | PVC SCHEDULE 80 |
| 67 | WATER LEVEL CONTROL PROVIDED THROUGH CHEMICAL CONTROLLER | | SEE POTABLE WATER FILL SCHEMATIC SHEET WF500.1 | SEE ITEM 55 THIS SCHEDULE |
| 68 | POTABLE WATER PIPING AND VALVES TO EQUIPMENT ROOM | AS REQUIRED | SEE POTABLE WATER FILL SCHEMATIC SHEET WF500.1 | POTABLE WATER SUPPLY LINE PROVIDING 260 GPM |
| 69 | SURGE TANK | 1 | A WF412 | REINFORCED CONCRETE (BY GENERAL CONTRACTOR) |
| 70 | VALVE STEM EXTENSION AND MOUNTING BRACKET | AS REQUIRED | 3 4 WF501 WF501 | STAINLESS STEEL CONSTUCTION |
| 71 | MODULATING FLOAT VALVE WITH VERTICAL FLOATS | 1 | 5 WF501 | NEMATO INC. #NFV-14V (FOR 14"ø PIPE) |
| 72 | VFD FOR CIRCULATION PUMP (ITEM 53) | 1 | N/A | ALSO SEE MECHANICAL DRAWINGS |
| 73 | POWER PANEL | AS REQUIRED | N/A | ALSO SEE ELECTRICAL PROJECT DRAWINGS |

REMARKS: 30' TO 130'. NOT SHOWN ON PLANS. SEE EQUIPMENT SCHEMATIC. INSTALL ONE THERMOMETER IN AN EASILY READABLE LOCATION MIN 10 PIPE DIAMETERS DOWN STREAM FROM BYPASS VALVE, AND PROVIDE THERMOMETERS ON INFLUENT AND EFFLUENT LINES OF HEAT EXCHANGER.

REMARKS: WATER LEVEL SHALL BE MONITORED AND CONTROLLED THRU THE CHEMICAL CONTROLLER (SEE ITEM #5). MAKE CONNECTION TO POTABLE WATER SUPPLY AND PROVIDE MANUAL AND SOLENOID VALVE ON FILL LINE TO SURGE TANK. SENSOR UNIT LOCATED IN THE SURGE TANK. PROTECT SENSOR CABLE IN WATERTIGHT CHAMBER. SEE POTABLE WATER LINE REMARKS BELOW.

REMARKS: POTABLE WATER SUPPLY AND SHUT OFF VALVE BY MECHANICAL CONTRACTOR. MECHANICAL CONTRACTOR TO PROVIDE STUB-IN TO POOL EQUIPMENT ROOM. POOL CONTRACTOR TO EXTEND PIPING TO SURGE TANK WITH REQUIRED AIR GAP. PROVIDE SOLENOID VALVE, MANUAL FILL VALVE, AND PROVIDE CONNECITON. SEE WATER LEVEL CONTROL SYSTEM REMARKS ABOVE.

REMARKS: SEE EQUIPMENT ROOM PLAN AND SECTIONS FOR SURGE TANK SIZE. SURGE TANK BY GENERAL CONTRACTOR. ALSO SEE ARCHITECTURAL AND STRUCTURAL DRAWINGS. GENERAL CONTRACTOR SHALL PROVIDE A 30"ø x 36" ALUMINUM ACCESS HATCH WITH STAINLESS STEEL HARDWARE. PROVIDE PLASTIC LADDER RUNGS FOR ACCESS. PROVIDE WATERSTOP AT ALL CORNERS AND JOINTS. GENERAL CONTRACTOR SHALL REFER TO ARCHITECTURAL DRAWINGS FOR EXTERIOR WATERPROOFING OF SURGE TANK. POOL CONTRACTOR SHALL PROVIDE TWO COATS OF THOROSEAL WATERPROOFING ON THE INTERIOR SURFACES OF THE SURGE TANK. APPLY COATING PER THE MANUFACTURER'S RECOMMENDATIONS FOR THIS APPLICATION. GENERAL CONTRACTOR SHALL FINISH THE INTERIOR OF THE BACKWASH SUMP PIT PER THE RECOMMENDATIONS OF THE WATERPROOFING MATERIAL. COORDINATION BETWEEN TRADES SHALL BE MADE PRIOR TO CONSTRUCTION OF THE TANK.

REMARKS: PROVIDE PENETRATIONS THROUGH THE TOP OF THE SURGE TANK LID FOR THE VALVE STEM AND SHUT OFF HANDLE.

REMARKS: FOR HORIZONTAL INSTALLATION. SET DISK FOR 20% FLOW WHEN THE VALVE IS CLOSED. SET DISK FOR 100% FLOW WHEN THE VALVE IS OPEN. PROVIDE 4# WEIGHT TO PREVENT BINDING.

REMARKS: MECHANICAL CONTRACTOR SHALL PROVIDE VFD, ELECTRICAL CONTRACTOR SHALL INSTALL AND ALSO PROVIDE STARTER, CONTACTORS AND RELAYS. THIS SHALL INCLUDE ALL WIRING AND CONDUIT. ELECTRICAL CONTRACTOR SHALL MAKE ALL CONNECTIONS TO EQUIPMENT. PROVIDE CONTROL WIRING AS DIRECTED BY POOL CONTRACTOR. SEE ELECTRICAL INTERLOCK NOTES FOR REQUIRED INTERLOCKING OF POOL EQUIPMENT.

REMARKS: ELECTRICAL CONTRACTOR SHALL PROVIDE POWER PANEL AS REQUIRED. THIS SHALL INCLUDE ALL WIRING AND CONDUIT. ELECTRICAL CONTRACTOR SHALL MAKE ALL CONNECTIONS TO EQUIPMENT. PROVIDE CONTROL WIRING AS DIRECTED BY POOL CONTRACTOR. SEE ELECTRICAL INTERLOCK NOTES FOR REQUIRED INTERLOCKING OF POOL EQUIPMENT.

# 50 METER LAP POOL EQUIPMENT INTERLOCKING NOTES

ELECTRICAL INTERLOCKING BY ELECTRICAL CONTRACTOR.
COORDINATE WITH POOL CONTRACTOR.

PROVIDE INTERLOCKING OF CIRCULATION EQUIPMENT PER POOL DRAWINGS AND SPECIFICATIONS. PROVIDE RELAY AND CONTROL WIRING IN 3/4" CONDUIT AS REQUIRED.

1. INTERLOCK THE LAP POOL CIRCULATION PUMP (EQUIPMENT SCHEDULE ITEM # 53) WITH ITS HEAT EXCHANGER TEMPERATURE CONTROLS (HEAT EXCHANGER OUR SCHEDULE ITEM # 52).
(IF THE POOL CIRCULATION PUMP SHUTS OFF THE CALL FOR HEAT DEMAND SHOULD SHUT OFF ALSO.)
2. INTERLOCK THE CIRCULATION PUMP (ITEM # 53) WITH THE REGENERATIVE MEDIA FILTER'S AUTOMATIC CONTROLLER (INSTALLED ON ITEM # 51A) PER MANUFACTURER'S REQUIREMENTS.
3. INTERLOCK THE REGENERATIVE MEDIA FILTER AUTOMATIC CONTROLLER (ON ITEM # 51A) WITH ITS RESPECTIVE VACUUM TRANSFER SYSTEM (ITEM # 51B) PER MANUFACTURER'S REQUIREMENTS.
4. INTERLOCK THE CIRCULATION PUMP (ITEM # 53) WITH ITS CHLORINE FEED AND CO2 FEED RELAYS WITHIN THE CHEMICAL CONTROLLER (ITEM # 55).
(IF POOL CIRCULATION PUMP SHUTS OFF, THE POWER TO ALL CHLORINE AND CO2 FEEDERS SHALL SHUT OFF ALSO.)
5. INTERLOCK THE CIRCULATION PUMP (ITEM # 53) WITH ITS UV DISINFECTION SYSTEM CONTROL PANEL (ITEM # 61B).
(IF POOL CIRCULATION PUMP SHUTS OFF, THE POWER TO THE UV SYSTEM CONTROL PANEL SHALL SHUT OFF ALSO.)

# OUTDOOR LEISURE POOL CIRCULATION EQUIPMENT SCHEDULE

## ALTERNATE BID 2

(VERIFY ALL ELECTRICAL REQUIREMENTS WITH ELECTRICAL CONSULTANT/CONTRACTOR)

| MARK | DESCRIPTION | QUANTITY | DETAIL | REQUIREMENT |
|---|---|---|---|---|
| 81 | HIGH RATE SAND FILTER | 1 | SEE CIRC. EQUIP. SCHEMATIC (WF500.1) | PENTAIR TRITON TR-140C |
| 82 | HEAT EXCHANGER | 1 | SEE CIRC EQUIP & HEAT EXCHANGER SCHEMATICS SHEETS WF500.0 & WF500.1 | 500,000 BTU OUTPUT REQUIRED |
| 83 | CIRCULATION PUMP WITH HAIR AND LINT STRAINER | 1 | SEE CIRC. EQUIP. SCHEMATIC (WF500.1) | PENTAIR INTELLIFLO #VF 3 HP |
| 84 | CHEMICAL CONTROLLER | 1 | 3 4 5 6 7 WF502 | BECS TECHNOLOGY BECSys 5 OR EQUAL |
| 85 | LIQUID CHLORINE FEED PUMP | | LOCATED IN CHEMICAL ROOM ON LEVEL 1 SEE SHEET WF101.1 | |
| 86 | CO2 FEED SYSTEM | | LOCATED IN CHEMICAL ROOM ON LEVEL 1 SEE SHEET WF101.1 | |
| 87 | CIRCULATION SYSTEM PRESSURE GAUGES AND VACUUM GAUGE | 2 1 | SEE CIRC. EQUIP. SCHEMATIC (WF500.1) | 0-60 PSI |
| 88 | FLOWMETER | 1 SENSOR ONLY | SEE CIRC. EQUIP. SCHEMATIC (WF500.1) | SIGNET #MK515 SENSOR |
| 89 | THERMOMETER | 3 | SEE CIRC. EQUIP. SCHEMATIC (WF500.1) | LETRO |
| 90 | CIRC. EQUIP. FACE PIPING | AS REQUIRED | SEE CIRC. EQUIP. SCHEMATIC (WF500.1) | PVC SCHEDULE 80 |
| 91 | WATER LEVEL CONTROL PROVIDED THROUGH CHEMICAL CONTROLLER | | SEE POTABLE WATER FILL SCHEMATIC SHEET WF500.1 | SEE ITEM 84 THIS SCHEDULE |
| 92 | POTABLE WATER PIPING AND VALVES TO EQUIPMENT ROOM | AS REQUIRED | SEE POTABLE WATER FILL SCHEMATIC SHEET WF500.1 | POTABLE WATER SUPPLY LINE PROVIDING 20 GPM |
| 93 | POWER PANEL | AS REQUIRED | N/A | ALSO SEE ELECTRICAL PROJECT DRAWINGS |

REMARKS: 36"ø FILTER. 7.06 SF FILTER AREA. PROVIDE A HIGH FLOW MULTI-PORT VALVE FOR MANUAL BACKWASH. BACKWASH FILTER AT 106 GPM FOR A FIVE MINUTE DURATION.

REMARKS: 36"ø FILTER. 7.06 SF FILTER AREA. PROVIDE A HIGH FLOW MULTI-PORT VALVE FOR MANUAL BACKWASH. BACKWASH FILTER AT 106 GPM FOR A FIVE MINUTE DURATION.

REMARKS: HEAT EXCHANGER DESIGN AND SPECIFICATION BY OTHERS. SEE MECHANICAL DRAWINGS (BY OTHERS). MECHANICAL CONTRACTOR SHALL PROVIDE AND INSTALL HEAT EXCHANGER, BOILER WATER CONNECTIONS, TEMPERATURE CONTROLS, CONTROL VALVE AND HIGH LIMIT SHUT OFF SWITCH. LIMIT SWITCH SHALL BE SET AT MAXIMUM 130 DEGREES F. TEMPERATURE SHALL BE MONITORED (NOT CONTROLLED) THROUGH THE CHEMICAL CONTROLLER. POOL CONTRACTOR SHALL PROVIDE TWO (2) TEMPERATURE SENSOR WELLS ON POOL INFLUENT AND EFFLUENT PIPING TO & FROM HEAT EXCHANGER. POOL CONTRACTOR SHALL MAKE POOL PIPING CONNECTIONS.

REMARKS: PUMP COMES WITH INTEGRAL PROGRAMMABLE VARIABLE FREQUENCY DRIVE. 230 VOLT, 60 Hz, SINGLE PHASE WITH 3 AUXILIARY CONTACTS. VERIFY WITH ELECTRICAL CONTRACTOR/ ENGINEER FOR EXACT ELECTRICAL REQUIREMENTS. ELECTRICAL CONTRACTOR SHALL PROVIDE A DISCONNECT NEAR THE PUMP. ELECTRICAL CONTRACTOR SHALL PROVIDE A BUCK-BOOST TRANSFORMER AND PROVIDE ALL CONNECTIONS / HOOK-UPS.

REMARKS: 120 VAC, <1 AMP. CONTROLLER COMES STANDARD WITH TEMPERATURE MONITORING CAPABILITIES, FLOW MONITORING, WATER LEVEL CONTROL AND AN ETHERNET CONNECTION. THE ELECTRICAL CONTRACTOR SHALL PROVIDE AN ETHERNET CONNECTION WITHIN 5 FEET OF THE CONTROLLER. ELECTRICAL INTERLOCKING BY ELECTRICAL CONTRACTOR. SEE ELECTRICAL INTERLOCK NOTES. COORDINATE WITH THE POOL CONTRACTOR. THE POOL CONTRACTOR SHALL PROVIDE A CLS CALIBRATED LIQUID LEVEL SENSOR FOR MONITORING OF THE SPA WATER LEVELS. POOL CONTRACTOR SHALL UTILIZE THE SIGNET FLOW METER SENSOR FOR MONITORING OF THE SPA WATER FLOW RATE.

REMARKS: NOT SHOWN ON PLAN. SEE CIRCULATION EQUIPMENT SCHEMATIC. INTEGRATE TO SHOW FILTER INFLUENT AND EFFLUENT PRESSURES. PROVIDE VACUUM GAUGE (OR COMBINATION VACUUM/ PRESSURE GAUGE IF NEC.) ON SUCTION SIDE AND PRESSURE GAUGE ON DISCHARGE SIDE OF PUMP.

REMARKS: SENSOR: (ONE IN RETURN LINE). FLOW READINGS THROUGH CHEMICAL CONTROLLER.

REMARKS: 30' TO 130'. NOT SHOWN ON PLANS. SEE EQUIPMENT SCHEMATIC. INSTALL ONE THERMOMETER IN AN EASILY READABLE LOCATION MIN 10 PIPE DIAMETERS DOWN STREAM FROM BYPASS VALVE, AND PROVIDE THERMOMETERS ON INFLUENT AND EFFLUENT LINES OF HEAT EXCHANGER.

REMARKS: SEE POTABLE WATER FILL SCHEMATIC SHEET WF500.1 AND PROVIDE MANUAL AND SOLENOID VALVE ON FILL LINE TO POOL. SENSOR UNIT LOCATED IN DECK WELL AT POOL SIDE. PROTECT SENSOR CABLE IN WATERTIGHT CHAMBER. SEE POTABLE WATER LINE REMARKS BELOW.

REMARKS: POTABLE WATER SUPPLY AND SHUT OFF VALVE BY MECHANICAL CONTRACTOR. MECHANICAL CONTRACTOR TO PROVIDE STUB-IN TO POOL EQUIPMENT ROOM. POOL CONTRACTOR TO EXTEND PIPING TO FILL PIPE. PROVIDE SOLENOID VALVE, MANUAL FILL VALVE, AND PROVIDE CONNECTION. SEE WATER LEVEL CONTROL SYSTEM REMARKS ABOVE.

REMARKS: ELECTRICAL CONTRACTOR SHALL PROVIDE POWER PANEL AS REQUIRED. THIS SHALL INCLUDE ALL WIRING AND CONDUIT. ELECTRICAL CONTRACTOR SHALL MAKE ALL CONNECTIONS TO EQUIPMENT. PROVIDE CONTROL WIRING AS DIRECTED BY POOL CONTRACTOR. SEE ELECTRICAL INTERLOCK NOTES FOR REQUIRED INTERLOCKING OF POOL EQUIPMENT.

# OUTDOOR LEISURE POOL EQUIPMENT INTERLOCKING NOTES

ELECTRICAL INTERLOCKING BY ELECTRICAL CONTRACTOR.
COORDINATE WITH POOL CONTRACTOR.

PROVIDE INTERLOCKING OF CIRCULATION EQUIPMENT PER POOL DRAWINGS AND SPECIFICATIONS. PROVIDE RELAY AND CONTROL WIRING IN 3/4" CONDUIT AS REQUIRED.

1. INTERLOCK THE OUTDOOR LEISURE CIRCULATION PUMP (EQUIPMENT SCHEDULE ITEM # 83) WITH ITS HEAT EXCHANGER TEMPERATURE CONTROLS (HEAT EXCHANGER OUR SCHEDULE ITEM # 82).
(IF THE POOL CIRCULATION PUMP SHUTS OFF THE CALL FOR HEAT DEMAND SHOULD SHUT OFF ALSO.)
2. INTERLOCK THE CIRCULATION PUMP (ITEM # 83) WITH ITS CHLORINE FEED AND CO2 FEED RELAYS WITHIN THE CHEMICAL CONTROLLER (ITEM # 84). (IF POOL CIRCULATION PUMP SHUTS OFF, THE POWER TO ALL CHLORINE AND CO2 FEEDERS SHALL SHUT OFF ALSO.)

ALTERNATE BID ITEM 2

The entire contents of the attached documents, including all sketches, plans, studies, drawings, schedules and specifications and all copyrights therein are, and shall remain the sole property of Water Design Incorporated. The documents and their contents may not be used, photocopied or reproduced digitally, electronically or in any other manner without the express prior written consent of Water Design Incorporated.

MHTN ARCHITECTS
MHTN Architects, Inc.
420 East South Temple
Suite 100
Salt Lake City, Utah 84111
Telephone (801) 595-6700
Telefax (801) 595-6717
www.mhtn.com

Hastings+Chivetta
ARCHITECTURE • PLANNING • ENGINEERING
622 Emerson, Suite 200
St. Louis, MO 63141
Tel. 314.863.5717
Fax. 314.863.2823
www.hastingschivetta.com

Water Design Inc.
5047 S. Galleria Dr.
Murray, Utah 84123
Phone : (801) 261-4009
Fax : (801) 261-4069
www.waterdesigninc.com

BUILDING OFFICIAL STAMP

UNIVERSITY OF UTAH
STUDENT LIFE CENTER
1836 E. BALLIF ROAD
SALT LAKE CITY, UTAH 84112

SEAL

MHTN PROJECT NO.

DRAWN BY: ACR CHECKED BY: BA

ISSUED:

| NO. | DATE | DESCRIPTION |
|---|---|---|

CONTRACTOR TO VERIFY DRAWINGS IN FIELD USE REFLECT LAST REVISION DATE.

| NO. | DATE | DESCRIPTION |
|---|---|---|

SHEET NAME
POOL EQUIPMENT SCHEDULES ALT BIDS

BID DOCUMENTS
MAY 15, 2013

SHEET NUMBER
WF601.2