UTAH NATIONAL GUARD

ORGANIZATIONAL MAINTENANCE SHOP ADDITION
WEST JORDAN UTAH

DFCM PROJECT NO. 08031480

CRSA PROJECT NUMBER: B08-024

ARCHITECT

COOPER ROBERTS SIMONSEN
ARCHITECTS
700 NORTH 200 WEST
SALT LAKE CITY, UT 84103
(801) 355-5915
FAX (801) 355-9885
WWW.CRARCHITECTS.COM

STRUCTURAL ENGINEER

CALDER RICHARDS ENGINEERS
2015 S 1100 EAST
SALT LAKE CITY, UT 84111
(801) 466-1699
FAX (801) 467-2495

stephen@crceng.com

ELECTRICAL ENGINEER

SPECTRUM
175 S. MAIN STREET STE. 300
SALT LAKE CITY, UTAH 84111
(801) 328-5151 (801) 401-9471

MECHANICAL ENDINEER

SMD
986 WEST ATHERTON DRIVE STE. 200
TAYLORSVILLE, UTAH 84123
(801) 268- 3828
FAX (801) 268-3297

SHEET INDEX

GENERAL

G1001	COVER SHEET & SHEET INDEX

ARCHITECTURAL

A5101	OVERALL SITE PLAN
A5102	ENLARGED SITE PLAN W/ DEMO
A5103	ENLARGED SITE PLAN
AE101	MAIN LEVEL FLOOR PLAN
AE102	ROOF PLAN
AE201	EXTERIOR ELEVATIONS
AE301	BUILDING SECTIONS
AE302	WALL SECTIONS
AE501	DETAILS

STRUCTURAL

S001	STRUCTURAL DETAILS
S101	FOOTING & FOUNDATION PLAN

MECHANICAL

MH001	MECHANICAL LEGEND AND NOTES
MH101	MECHANICAL MAIN LEVEL FLOOR PLAN
MH501	MECHANICAL DETAILS AND SCHEDULES
MH601	MECHANICAL SCHEDULES
PP101	PLUMBING MAIN LEVEL FLOOR PLAN

ELECTRICAL

EE001	SYMBOL LEGEND & INDEX
EE501	TYPICAL MOUNTING HEIGHT DETAILS
EE502	DETAILS
EE503	DETAILS
ED101	ELECTRICAL DEMOLITION PLAN
EP101	MAIN LEVEL POWER PLAN
EP601	EXISTING ONE-LINE DIAGRAM
EP602	POWER SCHEDULES
EL101	MAIN LEVEL LIGHTING PLAN
EL201	LIGHTING ELEVATIONS
EL601	LIGHTING FIXTURE SCHEDULE
FA101	MAIN LEVEL FIRE ALARM PLAN

VICINITY MAP

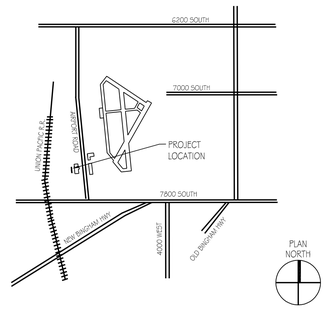

COOPER
ROBERTS
SIMONSEN
ASSOCIATES

crsa

700 NORTH 200 WEST
SALT LAKE CITY,UTAH 84103
(801) 355-5915
(801) 355-9885 FAX
WWW.CRSA-US.COM

STRUCTURAL ENGINEER
CALDER RICHARDS CONSULTING ENGINEERS
634 South 400 West Suite 100
SALT LAKE CITY, UT 84101
(801) 466-1699 (801) 467-2495 FAX
stephen@crceng.com

MECHANICAL ENGINEER
SMD
986 WEST ATHERTON DRIVE STE. 200
TAYLORSVILLE, UTAH 84123
(801)268-3828 FAX (801)268-3297
# #

ELECTRICAL ENGINEER
SPECTRUM
175 S MAIN STREET STE. 300
SALT LAKE CITY, UTAH 84111
(801)328-5151 (801)401-9471
# #

UTNG WJRC
OMS SHOP ADDN.
DFCM NO. 08031480
7602 SOUTH AIRPORT ROAD
WEST JORDAN, UTAH

UTAH NATIONAL GUARD
12953 SOUTH
MINUTEMAN DRIVE.
DRAPER UTAH 84020-1776

SYMBOLS LEGEND

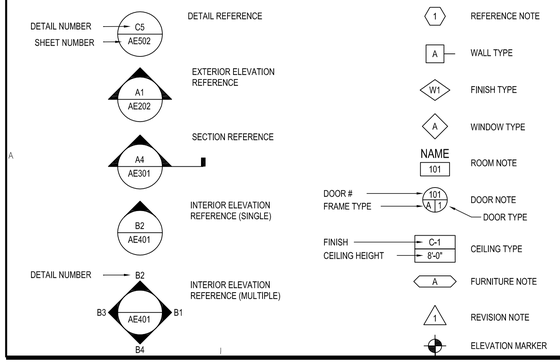

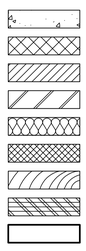

NOTE: ALL MATERIALS REFERENCED ARE NEW UNLESS NOTED OTHERWISE

CODE ANALYSIS

APPLICABLE CODES

	Year		Year
International Building Code	2006	National Electrical Code	2005
International Mechanical Code	2006	Uniform Code for Building Conservation	N/A
International Plumbing Code	2006	ADA Accessibility Guildelines	2006
International Fire Code	2006		
International Energy Conservation Code	2006		

A. Occupancy Group: S-1 (MOTOR VEHICLE REPAIR), B (ACCESSORY TO S-1)
Change in Use: Yes _____ No X Mixed Occupancy: Yes X No _____
Special Use and Occupancy (e.g. High Rise, Covered Mall): N/A

B. Seismic Design Category: D Design Wind Speed: 90 mph

C. Type of Construction (circle one):
I/A I/B II/A (II/B) III/A III/B IV/HT V/A V/B

D. Fire Resistance Rating Requirements for the Exterior Walls based on the fire separation distance (in hours):
North: 0 South: 0 East: 0 West: 0

E. Mixed Occupancies: X Nonseparated Uses: X

F: Sprinklers: (Vehicle maintenance shop less than 12,000 SF)
Required: NO Provided: N/A Type of Sprinkler System: N/A

G: Number of Stories: 1 Building Height: 25' (APPROX.)

H: Actual Area per Floor (square feet): 12,988 SF (W/ PROPOSED ADDITION)

I: Tabular Area: 17,500 SF

J: Area Modifications:

a) $A_a = A_t + \left[\frac{A_t\, I_f}{100}\right] + \left[A_t\, I_s\right]$ $\quad I_f = 100\left[\frac{F}{P} - 0.25\right]\frac{W}{30}$

b) Sum of the Ratio Calculations for Mixed Occupancies:
$\frac{\text{Actual Area}}{\text{Allowable Area}} \leq 1$

c) Total Allowable Area for:
1) One Story: 17,500 SF W/ OUT MODIFIACATIONS
2) Two Story: A_a(2) N/A
3) Three Story: A_a(3) N/A

d) Unlimited Area Building: Yes _____ No X Code Section: N/A

K. Fire Resistance Rating Requirements for Building Elements (hours).

Element	Hours	Assembly Listing	Element	Hours	Assembly Listing
Exterior Bearing Walls	0		Floors - Ceiling Floors	N/A	
Interior Bearing Walls	0		Roofs - Ceiling Roofs	0	
Exterior Non-Bearing Walls	0		Exterior Doors and Windows	0	
Structural Frame	0		Shaft Enclosures	N/A	
Partitions - Permanent	0		Fire Walls	N/A	
Fire Barriers	N/A		Fire Partitions	N/A	
			Smoke Partitions	N/A	

L. Design Occupant Load: 26 (@ 500 SF PER OCC.)
Exit Width Required: 32" Exit Width Provided: 108"

M. Minimum Number of Required Plumbing Facilities: (EXISTING TO REMAIN)
EXISTING FACILITIES ON-SITE, INCLUDING PRIMARY BUILDING, EXCEED REQ'S.

a) Water Closets - Required (m) 1 (f) 1 Provided (m) 1+ (f) 1+
b) Lavatories - Required (m) 1 (f) 1 Provided (m) 1+ (f) 1+
c) Bath Tubs or Showers: N/A
d) Drinking Fountains: 1+ Service Sinks: 1+

FOOTNOTES:

1) In case of conflict with the U.S. Department of Justice Federal Registers Parts I through V - ADA Guidelines and specific reference to the International Building Code Accessibility Chapters, the more restrictive requirement shall govern.

2) Additional Code Information shall be provided at the discretion of the Building Official for Complex Buildings. Including, but not limited to:
a) High Rise Requirements.
b) Atriums.
c) Performance Based Criteria.
d) Means or Egress Analysis.
e) Fire Assembly Locator Sheet.
f) Exterior and Interior Accessibility Route.
g) Fire Stopping, Including Tested Design Number.

-	-	-
-	-	-
-	-	-
BID	8/15/08	BID DOCUMENTS

PROJECT NO: B08-024
CAD DWG FILE:
DRAWN BY: A.G.B.
CHECKED BY: D.T.

COVER SHEET

G1001
SHEET OF

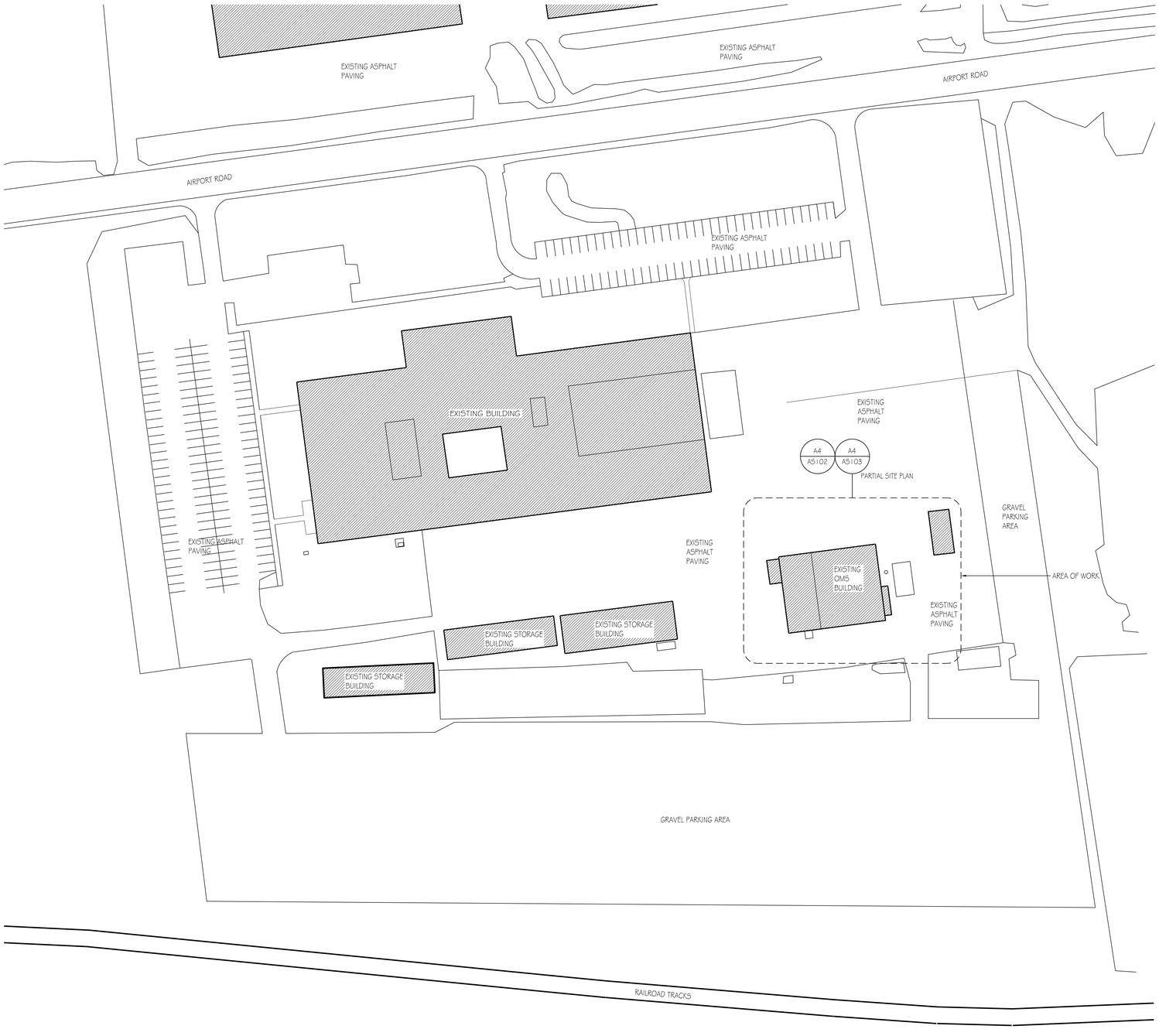

PLAN NORTH

A4 OVERALL SITE PLAN

SCALE: 1"=60'-0"

COOPER ROBERTS SIMONSEN ASSOCIATES

crsa

700 NORTH 200 WEST
SALT LAKE CITY,UTAH 84103
(801) 355-5915
(801) 355-9885 FAX
WWW.CRSA-US.COM

STRUCTURAL ENGINEER
CALDER RICHARDS CONSULTING ENGINEERS
634 South 400 West Suite 100
SALT LAKE CITY, UT 84101
(801) 466-1699 (801) 467-2495 FAX
stephen@crceng.com

MECHANICAL ENGINEER
SMD
986 WEST ATHERTON DRIVE STE. 200
TAYLORSVILLE, UTAH 84123
(801)268-3828 FAX (801)268-3297
# #

ELECTRICAL ENGINEER
SPECTRUM
175 S MAIN STREET STE. 300
SALT LAKE CITY, UTAH 84111
(801)328-5151 (801)401-9471
# #

UTNG WJRC
OMS SHOP ADDN.
DFCM NO. 08031480
7602 SOUTH AIRPORT ROAD
WEST JORDAN, UTAH

UTAH NATIONAL GUARD
12953 SOUTH
MINUTEMAN DRIVE.
DRAPER UTAH 84020-1776

2		
1		
-	-	-
-	-	-
-	-	-
BID	8/15/08	BID DOCUMENTS

PROJECT NO:	B08-024
CAD DWG FILE:	
DRAWN BY:	A.G.B.
CHECKED BY:	D.T.

OVERALL SITE PLAN

AS101

SHEET OF

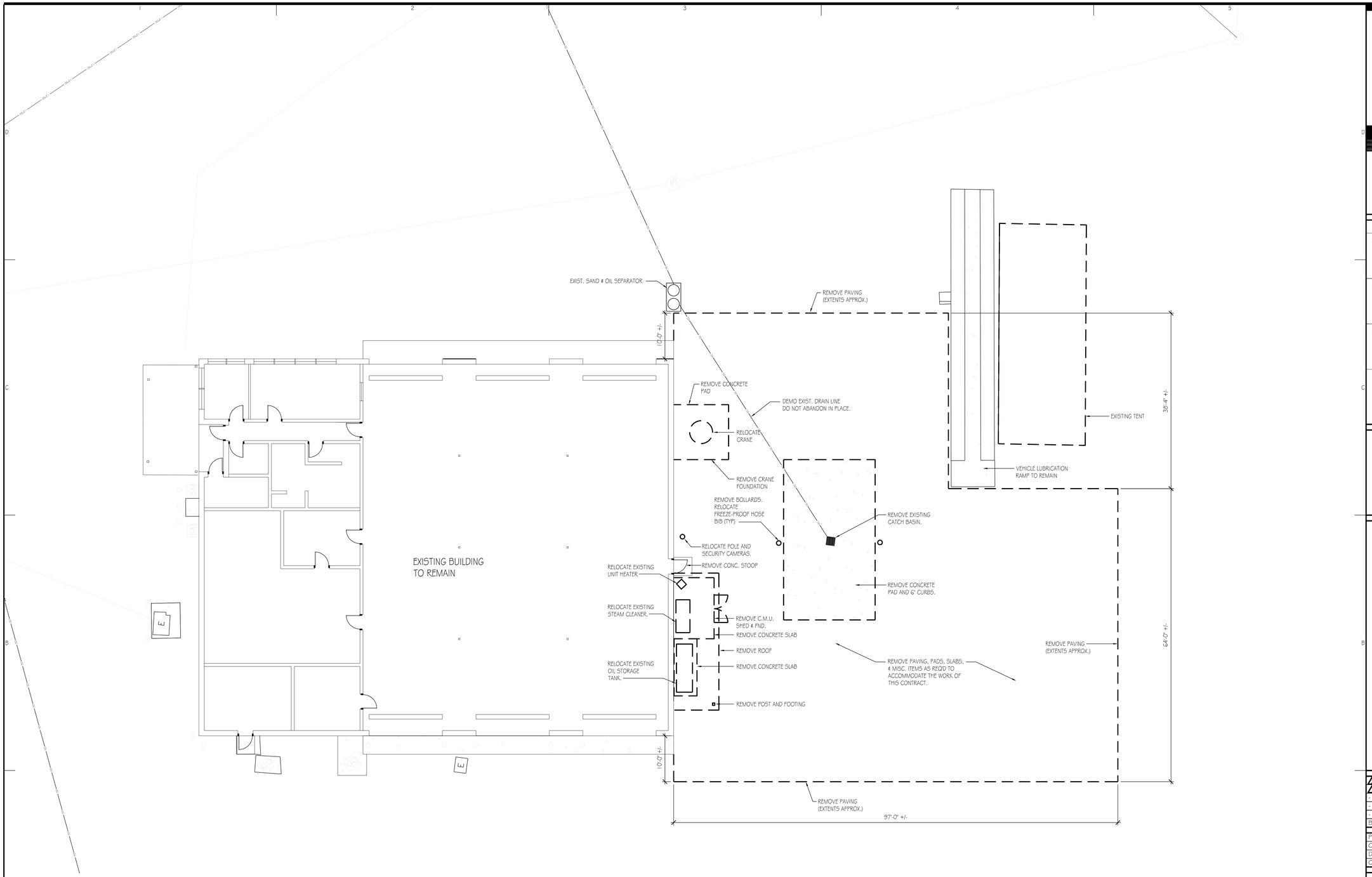

PLAN NORTH

A4 SITE PLAN - DEMOLITIOM

SCALE: 1"=10'-0"

COOPER ROBERTS SIMONSEN ASSOCIATES

crsa

700 NORTH 200 WEST
SALT LAKE CITY,UTAH 84103
(801) 355-5915
(801) 355-9885 FAX
WWW.CRSA-US.COM

STRUCTURAL ENGINEER
CALDER RICHARDS CONSULTING ENGINEERS
634 South 400 West Suite 100
SALT LAKE CITY, UT 84101
(801) 466-1699 (801) 467-2495 FAX
stephen@crceng.com

MECHANICAL ENGINEER
SMD
986 WEST ATHERTON DRIVE STE. 200
TAYLORSVILLE, UTAH 84123
(801)268-3828 FAX (801)268-3297
# #

ELECTRICAL ENGINEER
SPECTRUM
175 S MAIN STREET STE. 300
SALT LAKE CITY, UTAH 84111
(801)328-5151 (801)401-9471
# #

UTNG WJRC
OMS SHOP ADDN.
DFCM NO. 08031480
7602 SOUTH AIRPORT ROAD
WEST JORDAN, UTAH

UTAH NATIONAL GUARD
12953 SOUTH
MINUTEMAN DRIVE.
DRAPER UTAH 84020-1776

3		
2		
1		
-	-	-
-	-	-
-	-	-
BID	8/15/08	BID DOCUMENTS

PROJECT NO:	B08-024
CAD DWG FILE:	
DRAWN BY:	A.G.B.
CHECKED BY:	D.T.

ENLARGED SITE PLAN W/ DEMO

AS102

SHEET OF

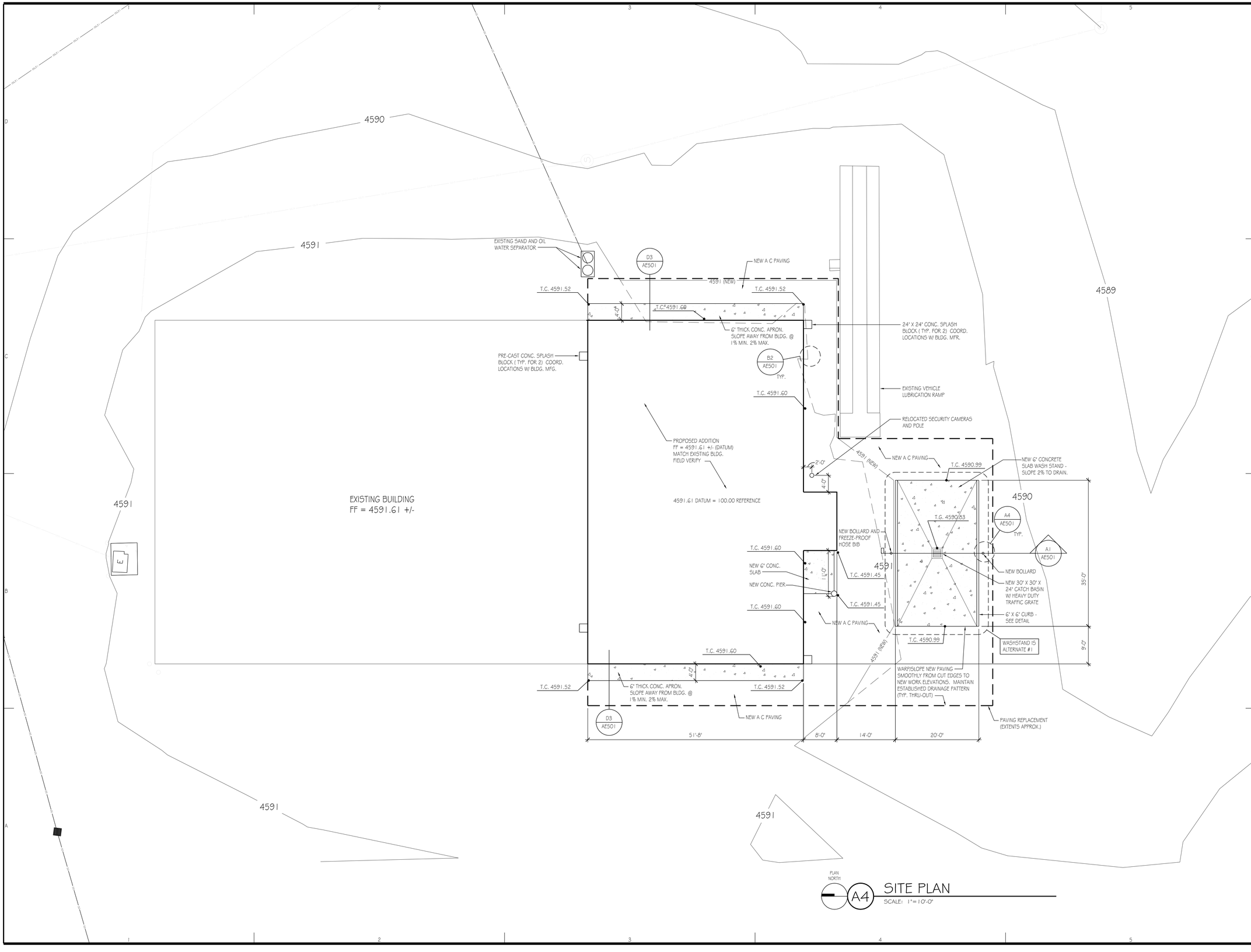

COOPER
ROBERTS
SIMONSEN
ASSOCIATES

crsa

700 NORTH 200 WEST
SALT LAKE CITY,UTAH 84103
(801) 355-5915
(801) 355-9885 FAX
WWW.CRSA-US.COM

STRUCTURAL ENGINEER
CALDER RICHARDS CONSULTING ENGINEERS
634 South 400 West Suite 100
SALT LAKE CITY, UT 84101
(801) 466-1699 (801) 467-2495 FAX
stephen@crceng.com

MECHANICAL ENGINEER
SMD
986 WEST ATHERTON DRIVE STE. 200
TAYLORSVILLE, UTAH 84123
(801)268-3828 FAX (801)268-3297
# #

ELECTRICAL ENGINEER
SPECTRUM
175 S MAIN STREET STE. 300
SALT LAKE CITY, UTAH 84111
(801)328-5151 (801)401-9471
# #

UTNG WJRC
OMS SHOP ADDN.
DFCM NO. 08031480
7602 SOUTH AIRPORT ROAD
WEST JORDAN, UTAH

UTAH NATIONAL GUARD
12953 SOUTH
MINUTEMAN DRIVE.
DRAPER UTAH 84020-1776

2		
1		
-	-	-
-	-	-
-	-	-
BID	8/15/08	BID DOCUMENTS

PROJECT NO:	B08-024
CAD DWG FILE:	
DRAWN BY:	A.G.B.
CHECKED BY:	D.T.

ENLARGED SITE PLAN

AS103

SHEET OF

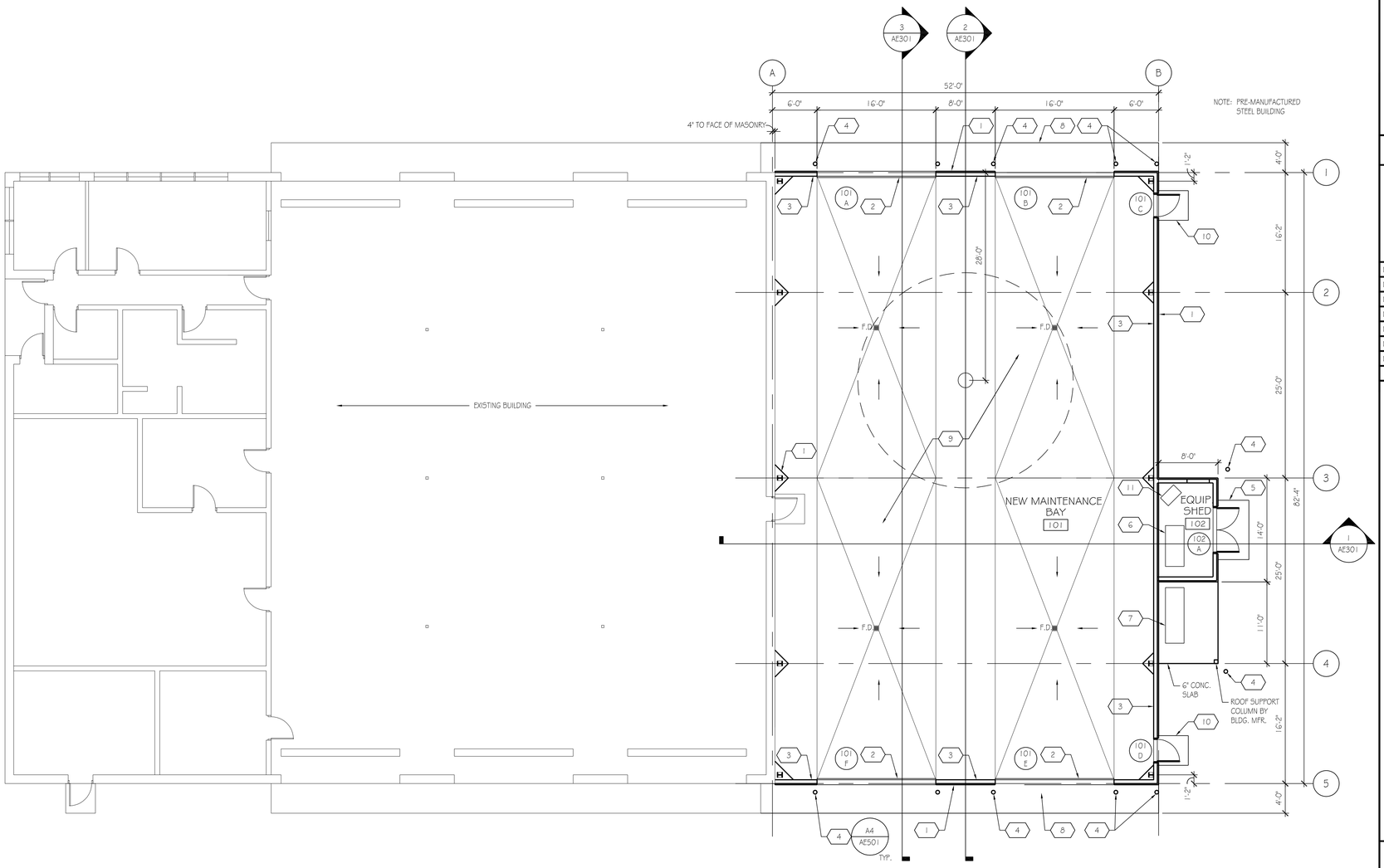

PLAN NORTH

1 FLOOR PLAN

SCALE: 1/8" = 1'-0"

KEY NOTES

1. PRE-ENGINEERED BLDG. FRAME & ENCLOSURE (TYP.).
2. OVERHEAD COILED DOOR.
3. 8' HIGH X 3/4" CDX PLYWD. WALL LINER, @ INTERIOR OF NEW METAL BUILDING EXTERIOR WALLS - PAINTED.
4. BOLLARD
5. 4'-0" X 8'-0" X 4" THICK CONCRETE STOOP.
6. RELOCATED STEAM CLEANER.
7. RELOCATED OIL STORAGE TANK.
8. CONC. APRON. SLOPE AWAY FROM BLDG.
9. WATER BASED EPOXY FLOOR FINISH. (ALT #2)
10. 4'-0" X 4'-0" X 4" CONCRETE STOOP
11. RELOCATED UNIT HEATER

DOOR SCHEDULE

DOOR NUMBER	SINGLE	DOUBLE	DOOR TYPE	DOOR SIZE	HARDWARE GROUP	FRAME TYPE	COMMENTS
101A	●		T-3	S-2	H-3	F-2	
101B	●		T-3	S-2	H-3	F-2	
101C	●		T-1	S-1	H-1	F-1	
101D	●		T-1	S-1	H-1	F-1	
101E	●		T-3	S-2	H-3	F-2	
101F	●		T-3	S-2	H-3	F-2	
102A		●	T-1	S-3	H-2	F-1	

DOOR TYPES

T-1 = HOLLOW METAL INSULATED FLUSH
T-2 = HOLLOW METAL NON-INSULATED FLUSH
T-3 = INSULATED OVERHEAD ROLL-UP

DOOR SIZES

S-1 = 3'-0" X 7'-0" X 1-3/4"
S-2 = 16'-0" X 14'-0"
S-3 = 6'-0" X 7'-0" X 1-3/4"

HARDWARE GROUPS

H-1 ENTRY DOOR - SEE SPECIFICATIONS
H-2 STORAGE & UTILITY - SEE SPECIFICATIONS
H-3 OVERHEAD ROLL-UP DOOR - SEE SPECIFICATIONS

FRAME TYPES

F-1 = HOLLOW METAL
F-2 = PER OVERHEAD DOOR MFR.

COMMENTS

GENERAL NOTES

A. REPAIR DAMAGE TO EXISTING ELEMENTS TO REMAIN RESULTING FROM DEMOLITION. PROVIDE SEAMLESS TRANSITIONS BETWEEN NEW WORK AND EXISTING TO REMAIN. THE INTENT IS THAT PORTIONS OF THE BUILDING SHOWN TO REMAIN THAT ARE ADJACENT TO DEMOLITION ARE TO BE REPAIRED SO THAT TRANSITIONS ARE NOT DETECTABLE.

COOPER ROBERTS SIMONSEN ASSOCIATES

crsa

700 NORTH 200 WEST
SALT LAKE CITY,UTAH 84103
(801) 355-5915
(801) 355-9885 FAX
WWW.CRSA-US.COM

STRUCTURAL ENGINEER
CALDER RICHARDS CONSULTING ENGINEERS
634 South 400 West Suite 100
SALT LAKE CITY, UT 84101
(801) 466-1699 (801) 467-2495 FAX
stephen@crceng.com

MECHANICAL ENGINEER
SMD
986 WEST ATHERTON DRIVE STE. 200
TAYLORSVILLE, UTAH 84123
(801)268-3828 FAX (801)268-3297
# #

ELECTRICAL ENGINEER
SPECTRUM
175 S MAIN STREET STE. 300
SALT LAKE CITY, UTAH 84111
(801)328-5151 (801)401-9471
# #

UTNG WJRC
OMS SHOP ADDN.
DFCM NO. 08031480
7602 SOUTH AIRPORT ROAD
WEST JORDAN, UTAH

UTAH NATIONAL GUARD
12953 SOUTH
MINUTEMAN DRIVE.
DRAPER UTAH 84020-1776

1		
2		
-	-	-
-	-	-
-	-	-
BID	8/15/08	BID DOCUMENTS

PROJECT NO: B08-024
CAD DWG FILE:
DRAWN BY: A.G.B.
CHECKED BY: D.T.

FLOOR PLAN

AE101

SHEET OF

KEY NOTES

1. SNOW GUARDS.
2. METAL ROOF BY BUILDING MFR.
3. GUTTER AND DOWN SPOUTS (BY BLDG. MFR)
4. UNIT HEATER FLUE PENETRATION - LOCATE DOWNSLOPE FROM SNOW GUARDS WHERE OCCURS
5. STEAM CLEANER FLUE PENETRATION

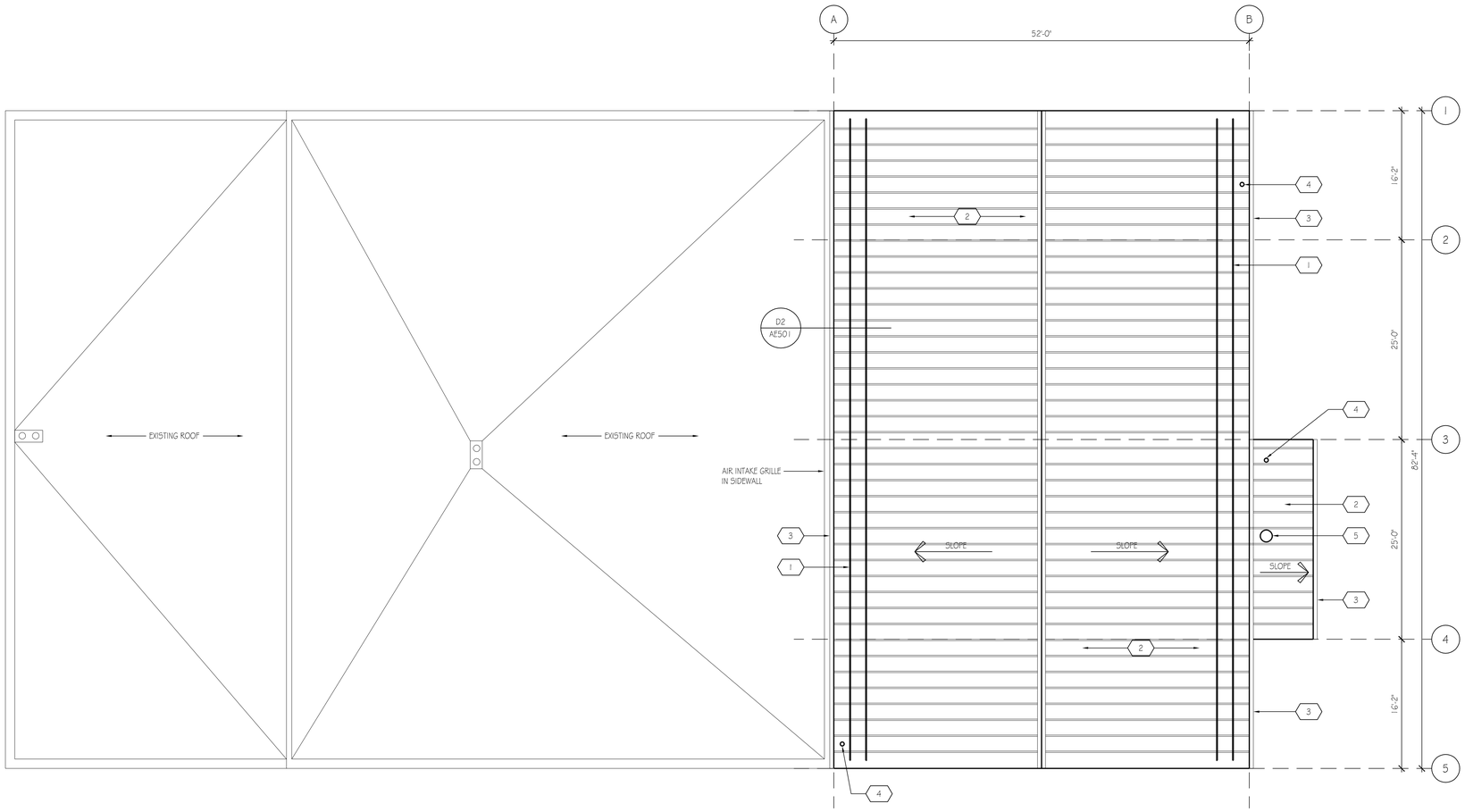

PLAN NORTH

1 ROOF PLAN

SCALE: 1" = 1'-0"

COOPER
ROBERTS
SIMONSEN
ASSOCIATES

crsa

700 NORTH 200 WEST
SALT LAKE CITY,UTAH 84103
(801) 355-5915
(801) 355-9885 FAX
WWW.CRSA-US.COM

STRUCTURAL ENGINEER
CALDER RICHARDS CONSULTING ENGINEERS
634 South 400 West Suite 100
SALT LAKE CITY, UT 84101
(801) 466-1699 (801) 467-2495 FAX
stephen@crceng.com

MECHANICAL ENGINEER
SMD
986 WEST ATHERTON DRIVE STE. 200
TAYLORSVILLE, UTAH 84123
(801)268-3828 FAX (801)268-3297
# #

ELECTRICAL ENGINEER
SPECTRUM
175 S MAIN STREET STE. 300
SALT LAKE CITY, UTAH 84111
(801)328-5151 (801)401-9471
# #

UTNG WJRC
OMS SHOP ADDN.
DFCM NO. 08031480
7602 SOUTH AIRPORT ROAD
WEST JORDAN, UTAH

UTAH NATIONAL GUARD
12953 SOUTH
MINUTEMAN DRIVE.
DRAPER UTAH 84020-1776

3		
2		
1	-	-
-	-	-
-	-	-
-	-	-
BID	8/15/08	BID DOCUMENTS

PROJECT NO:	B08-024
CAD DWG FILE:	
DRAWN BY:	A.G.B.
CHECKED BY:	D.T.

ROOF PLAN

AE102

SHEET OF

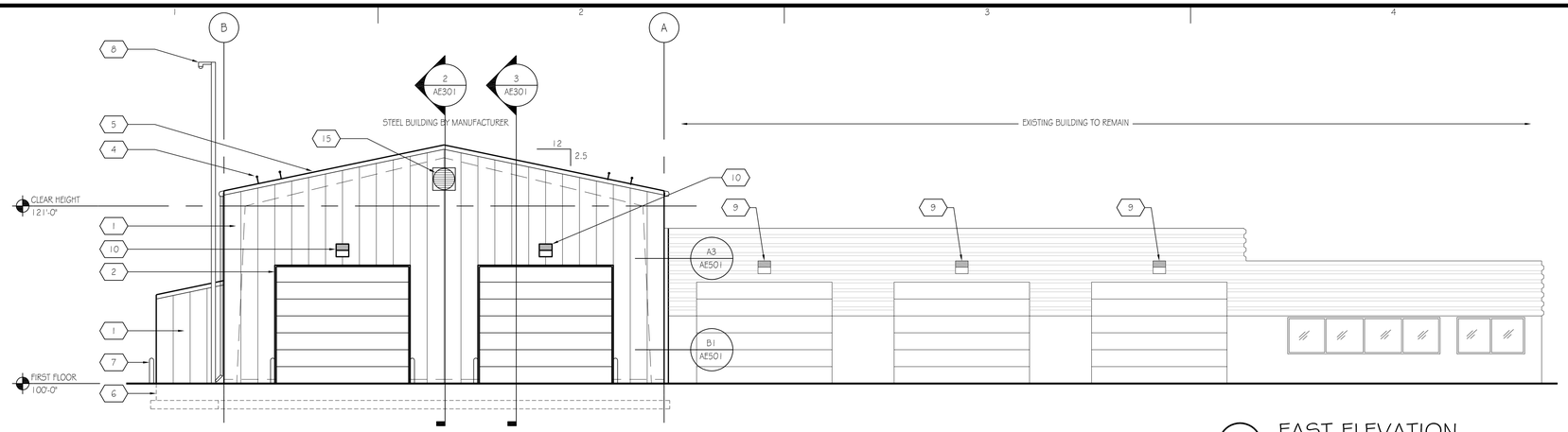

1 EAST ELEVATION

SCALE: 1/8" = 1'-0"

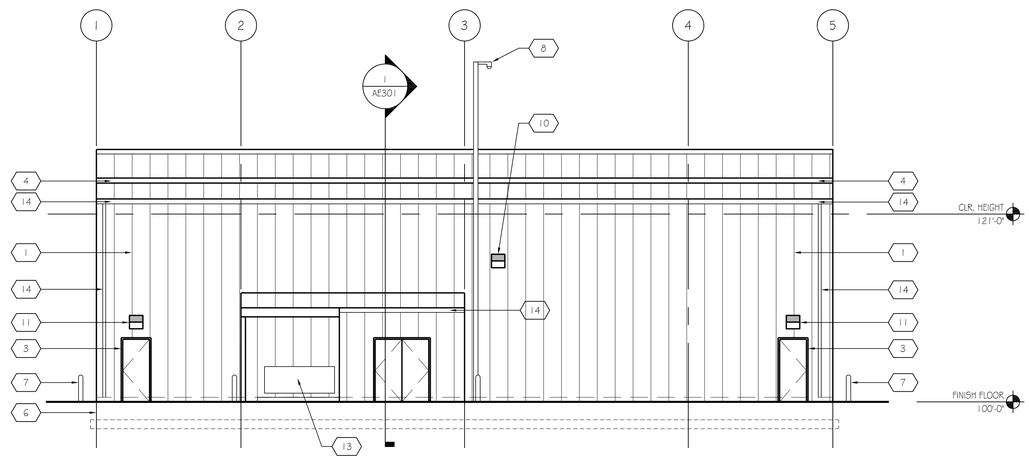

2 SOUTH ELEVATION

SCALE: 1/8" = 1'-0"

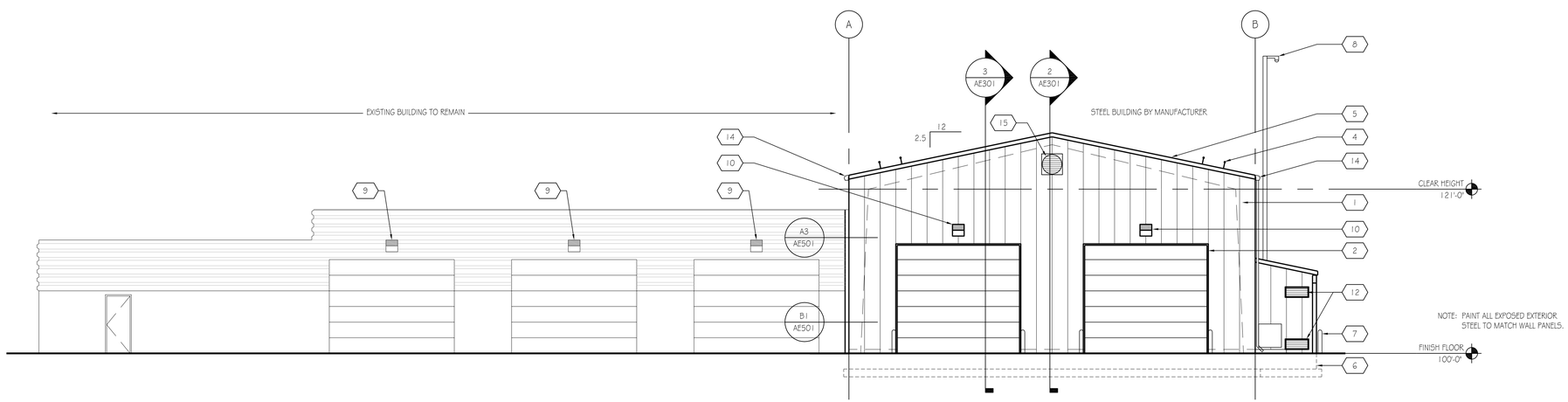

3 WEST ELEVATION

SCALE: 1/8" = 1'-0"

KEY NOTES

1. SIDING - BY BUILDING MANUFACTURER.
2. OVERHEAD DOOR.
3. PERSONNEL DOOR.
4. SNOW GUARDS
5. ROOFING - BY BUILDING MANFUFACTURER.
6. CONCRETE FOUNDATION WALL.
7. BOLLARD
8. RELOCATED CAMERA POLE
9. EXISTING WALL PACK TO REMAIN
10. NEW PACK OQ-99
11. NEW EMERGENCY WALL PACK EOA-2
12. COMBUSTION AIR INTAKE LOUVERS
13. RELOCATED OIL STORAGE TANK
14. GUTTER AND DOWNSPOUTS BY BUILDING MFR.
15. EXHAUST FAN

COOPER ROBERTS SIMONSEN ASSOCIATES

crsa

700 NORTH 200 WEST
SALT LAKE CITY,UTAH 84103
(801) 355-5915
(801) 355-9885 FAX
WWW.CRSA-US.COM

STRUCTURAL ENGINEER
CALDER RICHARDS CONSULTING ENGINEERS
634 South 400 West Suite 100
SALT LAKE CITY, UT 84101
(801) 466-1699 (801) 467-2495 FAX
stephen@crceng.com

MECHANICAL ENGINEER
SMD
986 WEST ATHERTON DRIVE STE. 200
TAYLORSVILLE, UTAH 84123
(801)268-3828 FAX (801)268-3297
# #

ELECTRICAL ENGINEER
SPECTRUM
175 S MAIN STREET STE. 300
SALT LAKE CITY, UTAH 84111
(801)328-5151 (801)401-9471
# #

UTNG WJRC
OMS SHOP ADDN.
DFCM NO. 08031480
7602 SOUTH AIRPORT ROAD
WEST JORDAN, UTAH

UTAH NATIONAL GUARD
12953 SOUTH
MINUTEMAN DRIVE.
DRAPER UTAH 84020-1776

1	-	-
2	-	-
-	-	-
BID	8/15/08	BID DOCUMENTS

PROJECT NO:	B08-024
CAD DWG FILE:	
DRAWN BY:	A.G.B.
CHECKED BY:	D.T.

EXTERIOR ELEVATION

AE201

SHEET OF

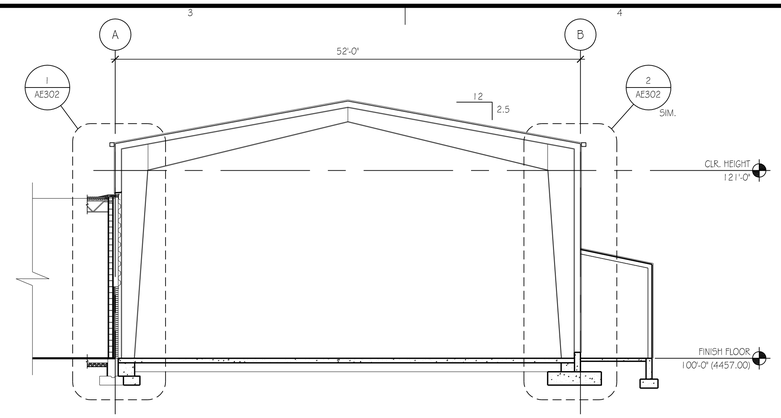

1 BUIDLING SECTION
SCALE: 1/8" = 1'-0"

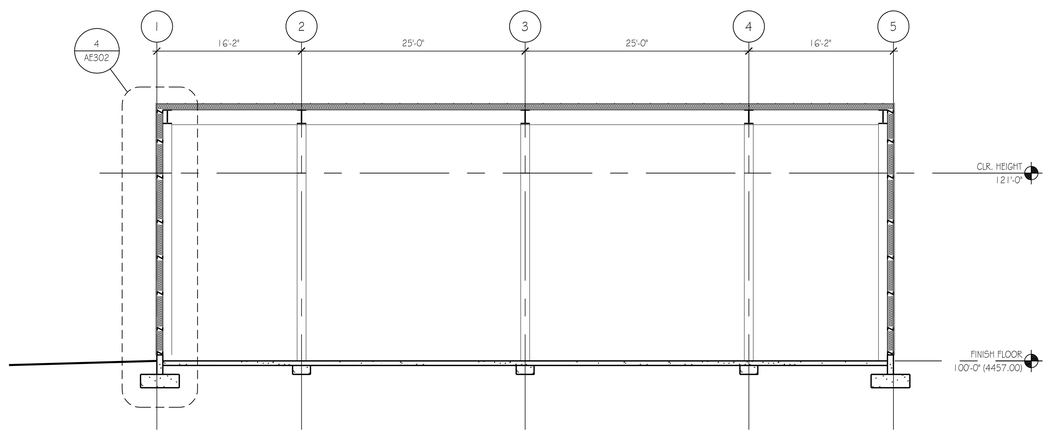

2 BUIDLING SECTION
SCALE: 1/8" = 1'-0"

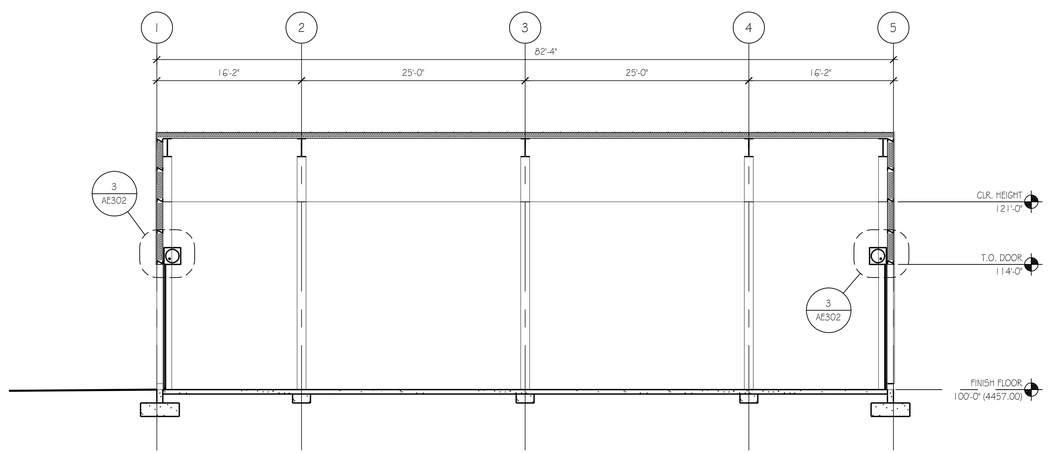

3 BUIDLING SECTION
SCALE: 1/8" = 1'-0"

COOPER
ROBERTS
SIMONSEN
ASSOCIATES

crsa

700 NORTH 200 WEST
SALT LAKE CITY,UTAH 84103
(801) 355-5915
(801) 355-9885 FAX
WWW.CRSA-US.COM

STRUCTURAL ENGINEER
CALDER RICHARDS CONSULTING ENGINEERS
634 South 400 West Suite 100
SALT LAKE CITY, UT 84101
(801) 466-1699 (801) 467-2495 FAX
stephen@crceng.com

MECHANICAL ENGINEER
SMD
986 WEST ATHERTON DRIVE STE. 200
TAYLORSVILLE, UTAH 84123
(801)268-3828 FAX (801)268-3297
# #

ELECTRICAL ENGINEER
SPECTRUM
175 S MAIN STREET STE. 300
SALT LAKE CITY, UTAH 84111
(801)328-5151 (801)401-9471
# #

UTNG WJRC
OMS SHOP ADDN.
DFCM NO. 08031480
7602 SOUTH AIRPORT ROAD
WEST JORDAN, UTAH

UTAH NATIONAL GUARD
12953 SOUTH
MINUTEMAN DRIVE.
DRAPER UTAH 84020-1776

3		
2		
1	-	-
-	-	-
-	-	-
BID	8/15/08	BID DOCUMENTS

PROJECT NO:	B08-024
CAD DWG FILE:	
DRAWN BY:	A.G.B.
CHECKED BY:	D.T.

BUILDING
SECTIONS

AE301

SHEET OF

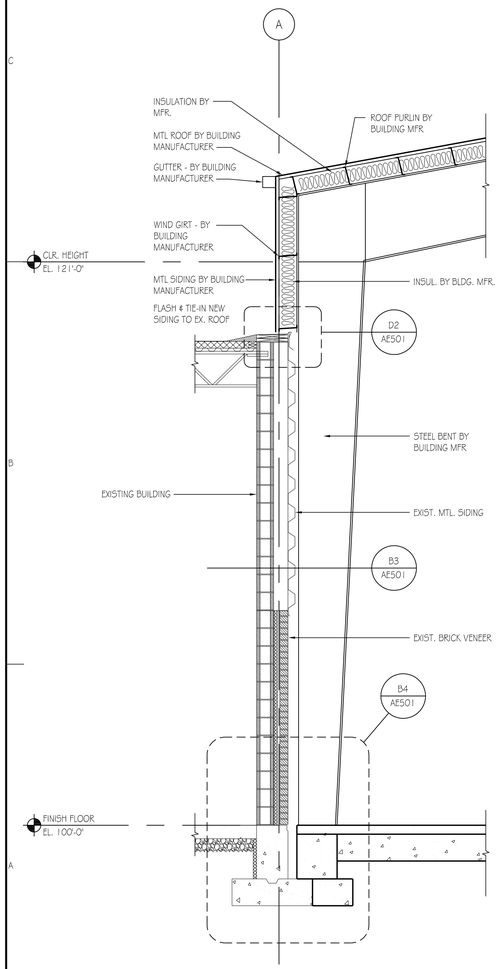

1 WALL SECTION
SCALE: 3/8" = 1'-0"

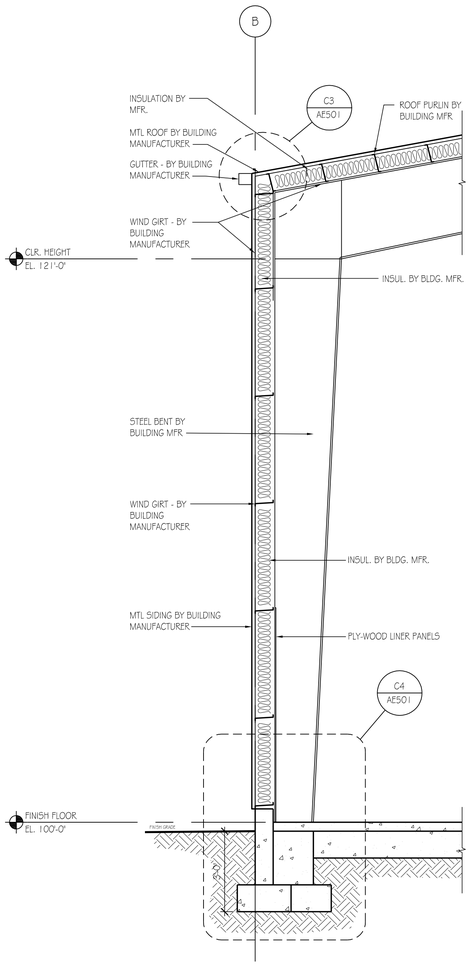

2 WALL SECTION
SCALE: 3/8" = 1'-0"

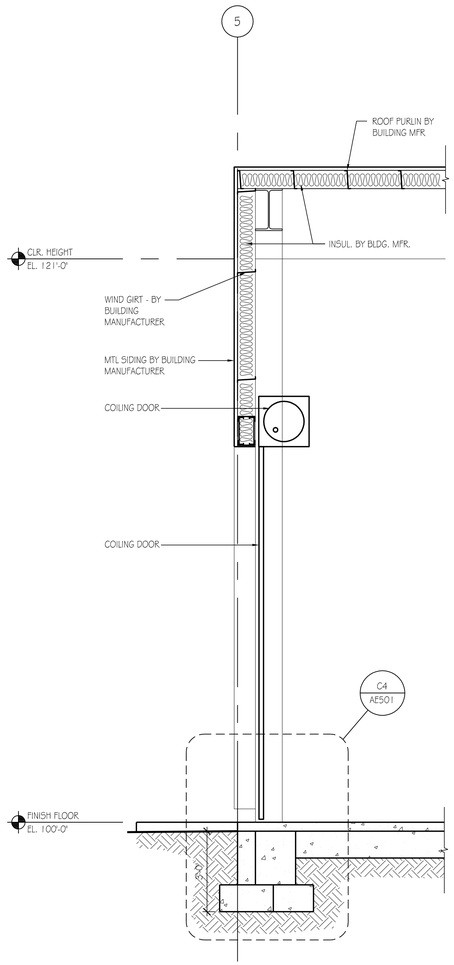

3 WALL SECTION
SCALE: 3/8" = 1'-0"

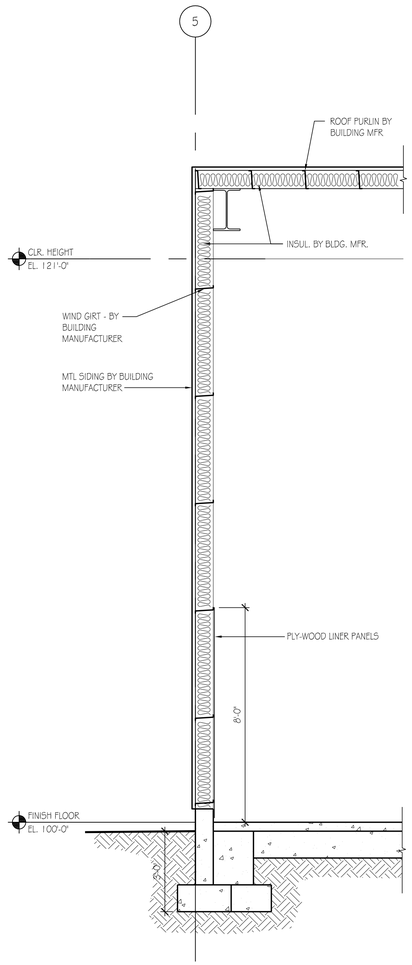

4 WALL SECTION
SCALE: 3/8" = 1'-0"

COOPER
ROBERTS
SIMONSEN
ASSOCIATES

crsa

700 NORTH 200 WEST
SALT LAKE CITY,UTAH 84103
(801) 355-5915
(801) 355-9885 FAX
WWW.CRSA-US.COM

STRUCTURAL ENGINEER
CALDER RICHARDS CONSULTING ENGINEERS
634 South 400 West Suite 100
SALT LAKE CITY, UT 84101
(801) 466-1699 (801) 467-2495 FAX
stephen@crceng.com

MECHANICAL ENGINEER
SMD
986 WEST ATHERTON DRIVE STE. 200
TAYLORSVILLE, UTAH 84123
(801)268-3828 FAX (801)268-3297
# #

ELECTRICAL ENGINEER
SPECTRUM
175 S MAIN STREET STE. 300
SALT LAKE CITY, UTAH 84111
(801)328-5151 (801)401-9471
# #

UTNG WJRC
OMS SHOP ADDN.
DFCM NO. 08031480
7602 SOUTH AIRPORT ROAD
WEST JORDAN, UTAH

UTAH NATIONAL GUARD
12953 SOUTH
MINUTEMAN DRIVE.
DRAPER UTAH 84020-1776

2	####	####
1	####	####
####	####	####
####	####	####
####	####	####
###	###	### DOCUMENTS

PROJECT NO: ---808-024
CAD DWG FILE: ae302.dwg
DRAWN BY: # A.G.B.
CHECKED BY: ### T.

WALL SECTIONS

AE302
SHEET OF

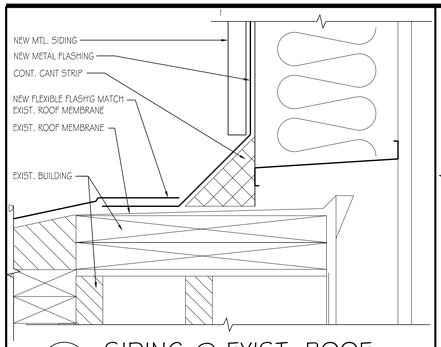

D1 SIDING @ EXIST. ROOF
SCALE: 3" = 1'-0"

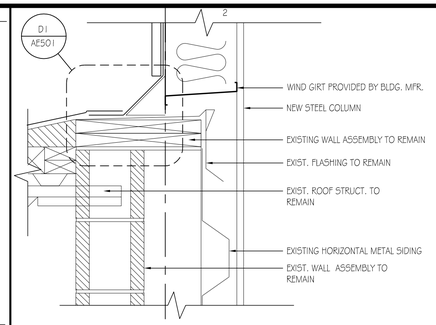

D2 WALL @ EXIST. ROOF
SCALE: 1 1/2" = 1'-0"

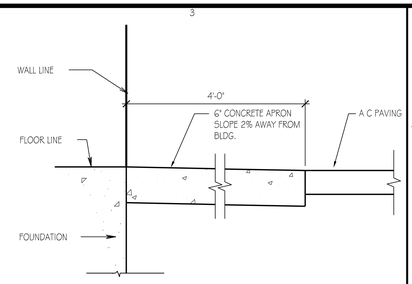

D3 CONCRETE APRON DETAIL
SCALE: 1"= 1'-0"

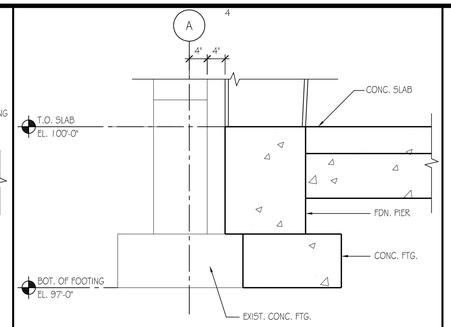

D4 FDN. @ EXIST. BLDG.
SCALE: 3/4" = 1'-0"

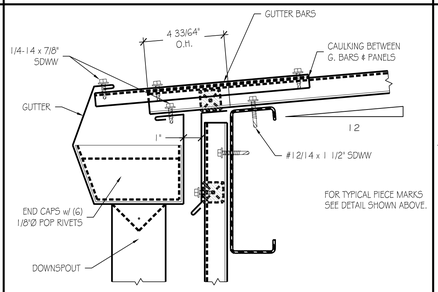

C3 GUTTER DETAIL
SCALE: 3" = 1'-0"

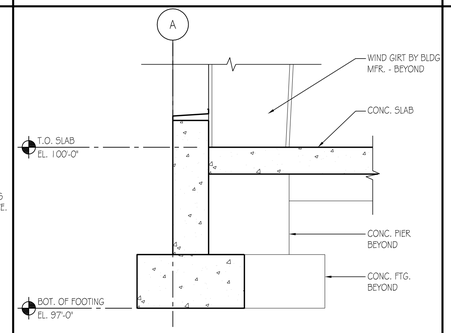

C4 TYPICAL FOUNDATION
SCALE: 3/4" = 1'-0"

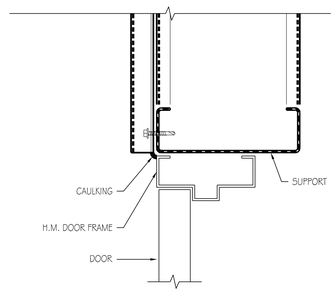

C5 H.M. DOOR HEAD
SCALE: 3" = 1'-0"

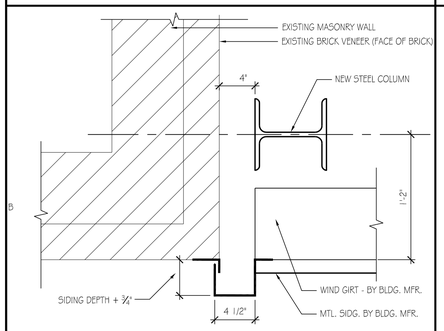

B1 SIDING TRANSITION DETAIL
SCALE: 1 1/2" = 1'-0"

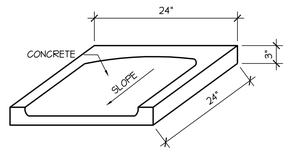

B2 SPLASH BLOCK DETAIL
SCALE: 1"= 1'-0"

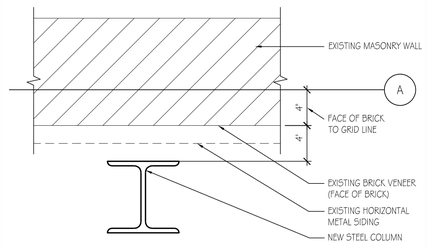

B3 STEEL COLUMN @ SIDING
SCALE: 1 1/2" = 1'-0"

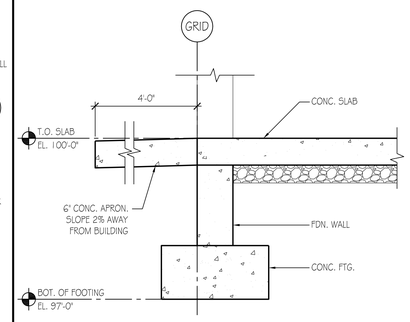

B4 FOUNDATION @ DOOR
SCALE: 3/4" = 1'-0"

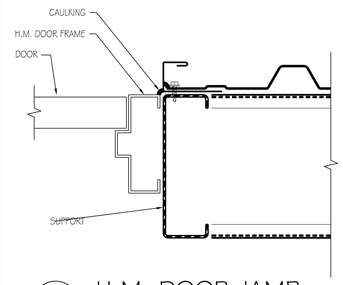

B5 H.M. DOOR JAMB
SCALE: 3" = 1'-0"

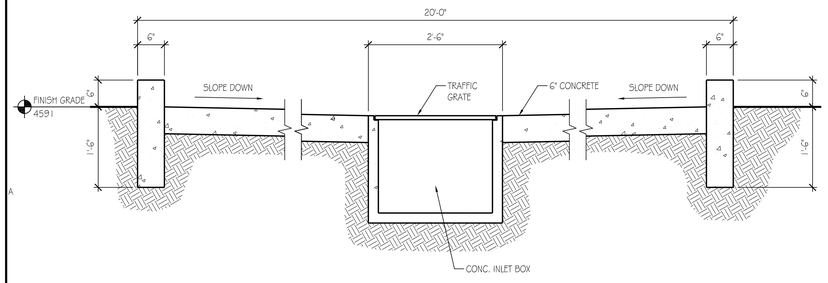

A1 SECTION @ WASH STAND
SCALE: 3/4" = 1'-0"

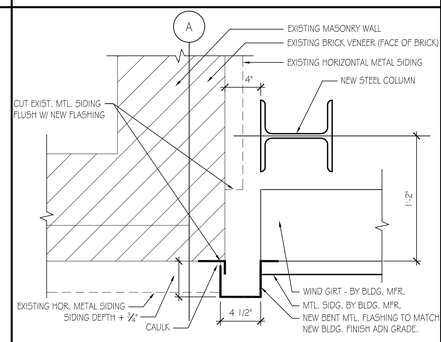

A3 SIDING TRANSITION DETAIL
SCALE: 1 1/2" = 1'-0"

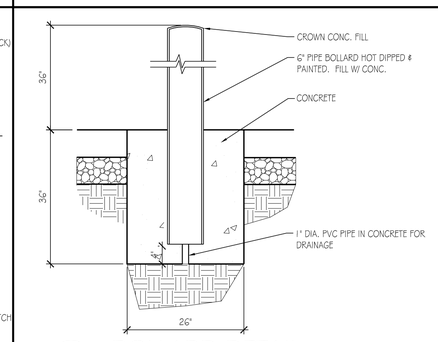

A4 BOLLARD DETAIL
SCALE: 3/4" = 1'-0"

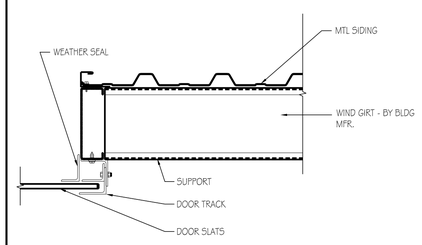

A5 OVERHEAD DOOR JAMB
SCALE: 1 1/2" = 1'-0"

COOPER
ROBERTS
SIMONSEN
ASSOCIATES

crsa

700 NORTH 200 WEST
SALT LAKE CITY,UTAH 84103
(801) 355-5915
(801) 355-9885 FAX
WWW.CRSA-US.COM

STRUCTURAL ENGINEER
CALDER RICHARDS CONSULTING ENGINEERS
634 South 400 West Suite 100
SALT LAKE CITY, UT 84101
(801) 466-1699 (801) 467-2495 FAX
stephen@crceng.com

MECHANICAL ENGINEER
SMD
986 WEST ATHERTON DRIVE STE. 200
TAYLORSVILLE, UTAH 84123
(801)268-3828 FAX (801)268-3297
# #

ELECTRICAL ENGINEER
SPECTRUM
175 S MAIN STREET STE. 300
SALT LAKE CITY, UTAH 84111
(801)328-5151 (801)401-9471
# #

UTNG WJRC
OMS SHOP ADDN.
DFCM NO. 08031480
7602 SOUTH AIRPORT ROAD
WEST JORDAN, UTAH

UTAH NATIONAL GUARD
12953 SOUTH
MINUTEMAN DRIVE.
DRAPER UTAH 84020-1776

3	####	####
2	####	####
####	####	####
####	####	####
####	####	####
###	###	###

PROJECT NO: ---808-024
CAD DWG FILE: ae501.dwg
DRAWN BY: # A.G.B.
CHECKED BY: ### T.

DETAILS

AE501
SHEET OF

STRUCTURAL NOTES

STRUCTURAL DESIGN LOADS

ROOF:
DEAD LOAD: TO BE DETERMINED BY METAL BLDG MFR + 10 PSF
SNOW: I = 1.0

WIND LOAD:
BASIC WIND SPEED: V = 90 MPH (3 SEC GUST)
IMPORTANCE FACTOR: I = 1.0
WIND EXPOSURE: "C"

SEISMIC:
OCCUPANCY CATEGORY: II
SITE CLASS: D
SEISMIC DESIGN CATEGORY: D
SPECTRAL RESPONSE COEF: SDS = 0.79
SD1 = 0.45
BASIC SEISMIC-FORCE-RESISTING SYSTEM:
ORDINARY STEEL MOMENT FRAME
R=3.5, OMEGA=3.5, Cd=3

SOILS:
NET ALLOWABLE SOIL PRESSURE = 2000 PSF, PER REPORT BY PSI DATED JUNE 18, 2004, PROJECT NUMBER 710-45054.

GENERAL

1. ALL DESIGN, CONSTRUCTION, AND INSPECTION SHALL BE IN CONFORMANCE WITH THE 2006 INTERNATIONAL BUILDING CODE.
2. THE CONTRACTOR SHALL VERIFY ALL DIMENSIONS AND CONDITIONS AT THE SITE.
3. ALL OMISSIONS OR CONFLICTS BETWEEN THE VARIOUS ELEMENTS OF THE WORKING DRAWINGS AND/OR SPECIFICATIONS SHALL BE BROUGHT TO THE ATTENTION OF THE ARCHITECT AND/OR STRUCTURAL ENGINEER BEFORE PROCEEDING WITH ANY WORK INVOLVED.
4. DRAWINGS INDICATE THE FINISHED PRODUCT. THEY DO NOT INDICATE A METHOD OF CONSTRUCTION. CONTRACTOR SHALL TAKE ALL PRECAUTIONS NECESSARY TO PROTECT THE STRUCTURE DURING CONSTRUCTION. SUCH PRECAUTIONS SHALL INCLUDE, BUT NOT BE LIMITED TO, BRACING, SHORING FOR CONSTRUCTION EQUIPMENT, ETC.
5. THE CONTRACTOR SHALL BE RESPONSIBLE FOR COMPENSATING THE OWNER FOR ANY CHANGES MADE AS A RESULT OF A DEVIATION FROM THE CONTRACT DOCUMENTS, DEVIATION FROM THE SPECIFICATIONS, FAULTY MATERIALS, OR FAULTY WORKMANSHIP.
6. CONTRACTOR SHALL BE RESPONSIBLE FOR SAFETY AND PROTECTION WITHIN AND ADJACENT TO THE JOB SITE.
7. TEMPORARY SHORING AND BRACING SHALL BE PROVIDED WHEREVER NECESSARY TO TAKE CARE OF ALL LOADS TO WHICH THE STRUCTURE MAY BE SUBJECTED INCLUDING WIND, AND SOIL LOADS. SUCH BRACING SHALL BE LEFT IN PLACE AS LONG AS MAY BE REQUIRED FOR SAFETY OR UNTIL ALL THE STRUCTURAL ELEMENTS ARE COMPLETE.
8. DURING AND AFTER CONSTRUCTION THE CONTRACTOR AND/OR OWNER SHALL KEEP LOADS ON THE STRUCTURE WITHIN THE LIMITS OF THE DESIGN LOADS.
9. THE GENERAL CONTRACTOR SHALL HAVE SHOP DRAWINGS REVIEWED BY THE ARCHITECT PRIOR TO THE FABRICATION OR ERECTION FOR THE FOLLOWING ITEMS: REINFORCING STEEL, TILT PANELS/REINFORCING, STRUCTURAL STEEL, AND PREFABRICATED STEEL JOISTS.
10. ALL DETAILS, SECTIONS, AND NOTES ARE INTENDED TO BE TYPICAL AND SHALL APPLY TO SIMILAR SITUATIONS UNLESS NOTED OR SHOWN OTHERWISE.
11. REFER TO THE SPECIFICATIONS FOR ADDITIONAL INFORMATION NOT COVERED ON THE DRAWINGS.
12. OBSERVATION VISITS TO THE JOB SITE BY FIELD REPRESENTATIVES OF CALDER RICHARDS CONSULTING ENGINEERS SHALL NEITHER BE CONSTRUED AS INSPECTION NOR APPROVAL OF CONSTRUCTION.
13. SIZES, LOCATIONS, AND ANCHORAGES OF EQUIPMENT SHALL BE VERIFIED IN THE FIELD WITH EQUIPMENT MANUFACTURERS (SUPPLIERS) PRIOR TO PLACING CONCRETE OR FABRICATING STEEL.

QUALITY ASSURANCE PLAN

1. SPECIAL INSPECTION SHALL BE PROVIDED BY THE OWNER ACCORDING TO IBC CHAPTER 17 FOR THE ITEMS IDENTIFIED IN THIS SECTION AND ON THE CONTRACT DOCUMENTS.
2. THE NAMES AND CREDENTIALS OF SPECIAL INSPECTORS TO BE USED SHALL BE SUBMITTED TO THE BUILDING DEPARTMENT WHEN APPLYING FOR A BUILDING PERMIT.
3. SPECIAL INSPECTION REPORTS SHALL BE DELIVERED TO THE ENGINEER OF RECORD, ARCHITECT, AND OWNER (AS REQUESTED) BI-WEEKLY OR MORE FREQUENTLY AS REQUIRED BY THE INSPECTOR OR BUILDING OFFICIAL.
4. OFF-SITE FABRICATION: WHERE FABRICATION OF STRUCTURAL LOAD-BEARING MEMBERS AND ASSEMBLIES IS BEING PERFORMED ON THE PREMISES OF A FABRICATORS SHOP, SPECIAL INSPECTION OF THE FABRICATED ITEMS SHALL BE IN ACCORDANCE WITH IBC SECTION 1704.2 UNLESS THE FABRICATOR IS APPROVED ACCORDING TO IBC SECTION 1704.2.2.
5. STEEL CONSTRUCTION: SPECIAL INSPECTIONS FOR STEEL ELEMENTS SHALL BE PROVIDED IN ACCORDANCE WITH SECTIONS 1704.3 AND TABLE 1704.3.
6. WELDING: WELDING INSPECTION SHALL BE PROVIDED IN ACCORDANCE WITH TABLE 1704.3. ELEMENTS THAT ARE PART OF THE SEISMIC-FORCE-RESISTING SYSTEM SHALL ALSO BE INSPECTED ACCORDING TO SECTION 1707.2 AND 1708.4.
7. SOILS: SPECIAL INSPECTION SHALL BE PROVIDED FOR PLACEMENT OF FILL 12 INCHES OR MORE DEEP IN ACCORDANCE WITH SECTION 1704.7.
8. NO SPECIAL INSPECTION OF CONCRETE FOOTINGS AND FOUNDATION IS REQUIRED SINCE THE DESIGN STRENGTH f'c IS EQUAL TO 2500 PSI. SEE IBC SECTION 1704.4 execption 2.2.
9. NO SPECIAL INSPECTION OF CONCRETE REINFORCING STEEL IS REQUIRED SINCE THE CONCRETE ITSELF REQUIRES NO SPECIAL INSPECTION. SEE IBC SECTION 1704.4 execption 2.2.
10. NO INSPECTION OF BOLTS INSTALLED IN CONCRETE IS REQUIRED SINCE THE STRESS INCREASES PERMITTED BY SECTION 1912.5 ARE NOT UTILIZED.

REINFORCING STEEL

1. ALL REINFORCEMENT SHALL BE DETAILED AND PLACED IN ACCORDANCE WITH ACI DETAILING MANUAL 315-92 AND ACI STANDARD 318-05.
2. REINFORCING STEEL SHALL BE ASTM A615 GRADE 60.
3. ALL REINFORCEMENT SHALL BE SECURELY TIED AND HELD IN PLACE.
4. ALL CONTINUOUS REINFORCEMENT SHALL TERMINATE WITH A 90 DEGREE TURN OR A SEPARATE CORNER BAR. ALL SPLICE SHALL HAVE A MINIMUM LAP OR EMBEDMENT PER REINFORCING SCHEDULE.
5. COVER TO MAIN REINFORCEMENT FROM ADJACENT SURFACES SHALL BE AS FOLLOWS UNLESS SHOWN OTHERWISE:
   A. UNFORMED SURFACES IN CONTACT WITH GROUND OR EXPOSED TO THE WEATHER (BOTTOM OF FOOTINGS). 3"
   B. SLABS ON GRADE..... 2"
   C. FORMED SURFACES IN CONTACT WITH THE GROUND OR EXPOSED TO THE WEATHER (GRADE BMS, WALLS, ETC). BEAMS AND COLUMNS..... 2"
   D. STRUCTURAL SLABS AND JOISTS NOT EXPOSED TO WEATHER OR EARTH..... 1"
   E. INTERIOR WALL SURFACES..... 1"
   F. INTERIOR BEAMS AND COLUMNS..... 1-1/2"
   G. IN ALL CASES MINIMUM COVER SHALL NOT BE LESS THAN THE DIAMETER OF ADJACENT BARS.
6. PRIOR TO FABRICATION AND PLACEMENT, SHOP DRAWINGS FOR ALL REINFORCING STEEL SHALL BE REVIEWED BY THE STRUCTURAL ENGINEER.

CONCRETE

1. CONCRETE SHALL ATTAIN THE FOLLOWING MINIMUM COMPRESSIVE STRENGTHS AT 28 DAYS:
   FOOTINGS ..... 3000 PSI
   INTERIOR SLABS ON GRADE & SUSPENDED SLABS. 4000 PSI
   TILT WALLS..... 4000 PSI
   EXTERIOR FLAT WORK..... 4000 PSI
2. A STATEMENT OF MIX DESIGN FOR ALL CONCRETE SHALL BE SUBMITTED TO AND REVIEWED BY THE STRUCTURAL ENGINEER PRIOR TO COMMENCING WORK.
3. ALL CONCRETE WORK SHALL BE PLACED, CURED, STRIPPED, AND PROTECTED AS DIRECTED BY THE SPECIFICATIONS AND ACI STANDARDS AND PRACTICES.
4. UNLESS NOTED OTHERWISE ON THE DRAWINGS, REINFORCE CONCRETE WALLS AS FOLLOWS:

WIDTH	HORIZ REINF EACH FACE	VERT REINF EACH FACE
6" WALL	#4 @ 15"	#4 @ 18" CENTER OF WALL
8" WALL	#5 @ 18"	#4 @ 18" CENTER OF WALL
10" WALL	#5 @ 15"	#4 @ 14" CENTER OF WALL
12" WALL	#4 @ 12"	#4 @ 12"

5. DOWEL VERTICAL BARS PER SCHEDULE INTO STRUCTURE ABOVE AND FOOTINGS BELOW. PROVIDE 90 DEGREE HOOK WHERE 36 DIAMETER IS NOT POSSIBLE. IN ADDITION, PROVIDE (2) #5 CONTINUOUS BARS TOP AND BOTTOM OF 6" AND 8" WALLS AND (2) #6 BARS TOP AND BOTTOM OF WALLS 10" OR THICKER.
6. BEFORE CONCRETE IS POURED CHECK WITH ALL TRADES TO ENSURE PROPER PLACEMENT OF ALL OPENINGS, SLEEVES, CURBS, CONDUITS, BOLTS, INSERTS, ETC. RELATIVE TO WORK.
7. ADD (2) #5 BARS MINIMUM AROUND ALL OPENINGS (UNLESS OTHERWISE NOTED) AND EXTEND 24" BEYOND CORNER OF OPENING.
8. PROVIDE A #3 NOSING BAR IN ALL STAIR TREADS.
9. REFER TO DRAWINGS FOR TYPICAL CONSTRUCTION JOINT DETAILS. UNLESS NOTED IN DRAWINGS, ALL REINFORCEMENT SHALL BE CONTINUOUS THRU JOINTS AND EACH CONSTRUCTION JOINT SHALL BE KEYED.
10. WHERE EXTERIOR SLABS ON GRADE ABUT WALLS OR COLUMNS PROVIDE 3/8" PREFORMED EXPANSION JOINT WITH SEALANT.

STRUCTURAL STEEL

1. ALL STRUCTURAL STEEL AND STRUCTURAL STEEL WORK SHALL COMPLY WITH BOTH THE AISC "MANUAL OF STEEL CONSTRUCTION" CONTAINING THE SPECIFICATIONS FOR THE DESIGN, FABRICATION AND ERECTION OF STRUCTURAL STEEL BUILDINGS, INCLUDING THE "CODE OF STANDARD PRACTICES" (LATEST EDITION), AND WITH THE IBC 2006 EDITION.
2. ALL WIDE FLANGE STRUCTURAL STEEL SHALL BE ASTM A992 AND ALL MISCELLANEOUS SHAPES SHALL BE ASTM A36, UNO.
3. STRUCTURAL STEEL TUBING SHALL CONFORM TO ASTM A500 GRADE B; YIELD STRESS = 46 KSI.
4. USE A325 BOLTS FOR STEEL TO STEEL CONNECTIONS AND A307 BOLTS FOR ALL OTHER CONNECTIONS. USE 3/4" DIAMETER MINIMUM.
5. PRIOR TO FABRICATION AND ERECTION, SHOP DRAWINGS FOR ALL STEEL ITEMS SHALL BE REVIEWED BY THE STRUCTURAL ENGINEER. THE CONTRACTOR SHALL VERIFY ALL SHOP DRAWING DIMENSIONS WITH STRUCTURAL AND ARCHITECTURAL PLANS AND DETAILS.
6. ALL WELDS SHALL BE MADE WITH E70XX ELECTRODES AND BY WELDERS CERTIFIED BY AWS STANDARDS WITHIN THE PAST 12 MONTHS; PROVIDE WRITTEN CERTIFICATION IF REQUESTED.
7. UNLESS SHOWN OTHERWISE. BEAMS SUPPORTING FLOOR SYSTEMS SHALL BE CAMBERED ¼ INCH PER 10 FEET OF SPAN.

PRE-ENGINEERED METAL BUILDING FRAME

1. THE COMPLETE DESIGN OF METAL BUILDING INCLUDING ALL COMPONETS SHOWN OR NOT SHOWN ON THE DRAWINGS SHALL BE ACCOMPLISHED BY THE BUILDING MANUFACTURER.
2. THE DESIGN SHALL BE MADE BY A PROFESSIONAL ENGINEER REGISTERED IN THE STATE WHERE PROJECT IS CONSTRUCTED AND HE SHALL AFFIX HIS REQISTRATION NUMBER AND SEAL TO ALL SHOP DRAWINGS AND CALCULATIONS. HE SHALL SUBMIT SHOP DRAWINGS AMD CALCULATIONS TO ARCHITECT/ENGINEER FOR REVIEW BEFORE FABRICATION. CALCULATIONS SHALL INCLUDE ALL BUILDING REACTIONS ON THE FOUNDATIONS. THESE REACTIONS SHALL BE REVIEWED FOR COMPLIANCE WITH THE FOUNDATION DESIGN.
3. THE BUILDING AND ALL OF ITS COMPONENTS SHALL BE DESIGNED FOR THE FOLLOWING DEAD AND LIVE LOADS;
   A. ACTUAL WEIGTH OF STEEL STRUCTURE.
   B. 10 PSF DEAD LOAD IN ADDITION TO ACTUAL WEIGTH.
   C. 30 PSF ROOF SNOW LOAD, + DRIFT ON THE LOW ROOF AND OTHER APPLICABLE AREAS. AS PER IBC 2003.
   D. ANY ADDITIONAL LOADS AND REACTIONS THAT ARE SHOWN OR NOTED ON THE DRAWINGS, SEE PLAN NOTES.
   E. WIND LOAD AS REQUIRED BY THE IBC **2006**. (SEE STRUCTURAL DESIGN LOADS)
   F. SEISMIC LOADS AS REQUIRED BY THE IBC **2006**. (SEE STRUCTURAL DESIGN LOADS)
   G. THRU-WALL FAN- 350#, SEE MECHANICAL DRAWINGS & DETAILS.
   H. SUSPENED UNIT HEATERS= 300#, SEE DRAWINGS AND DETAILS.
4. SEE PLAN FOR ADDTIONAL DESIGN NOTES (i.e. FUTURE EXPANSION LOADS, SUSPENDED LOADS, ETC.).
5. PROVIDE BRACED BAYS ONLY WHERE INDICATED. SUBMIT PROPOSED LOCATIONS TO ARCHITECT FOR APPORVAL BEFORE FABRICATIONS. RIGID FRAME COLUMN BASES SHALL BE DESIGNED FOR A PINNED CONDITION. NO DIAGONAL BRACING SHALL BE USED AT ENDWALLS UNLESS INDICATED. PROVIDE PORTAL FRAMES, AS REQUIRED. PROVIDE TURNBACKS ON ALL ROD "X" BRACING.
6. WHERE RIGID FRAMES ARE INDICATED AT ENDWALLS DESIGN FRAMES FOR CLEAR SPAN CONDITION WITH NO INTERMEDIATE SUPPORTS. INTERIOR ENDWALL COLUMNS SHALL BE FOR LATER LOAD ONLY.
7. NO LIVE LOAD REDUCTION SHALL BE TAKEN FOR THE DESIGN OF THE RIGID LOAD FRAMES.
8. WHERE MEMBER SIZES AND GAGES ARE SHOWN THEY SHALL BE CONSIDERED A MINIMUM SIZE. THE MANUFACTURE SHALL NOT USE SMALLER OT LIGHTER GAGES, OR OMIT FRAMING WHERE INDICATED. HE SHALL USE ONLY LARGER SIZE AND HEAVIER GAGES IF HIS DESIGN INDICATES THESE ARE REQUIRED TO MEET THE LOADING CRITERIA.
9. THE DEFLECTION OF GIRTS AND PURLINS SHALL BE LIMTED TO 1/240 OF THE SPAN. DEFLECTION OF RIGID FRAMES SHALL BE BASED ON TOTAL LOAD. (DEAD LOAD PLUS LIVE LOAD).
10. SEE THE SPECIFICATIONS FOR ADDITIONAL DESIGN AND FABRICATION CRITERIA.
11. THE PREFABRICATION METAL BUILDING SHALL BE DESIGNED, FABRICATED AND ERECTED IN ACCORDANCE WITH THE ABOVE NOTES, THE PLANS AND DETAILS, THE SPECIFICATIONS AND IN ACCORDANCE WITH RECOMMENDED DESIGN PRACTICES MANUAL OF THE METAL BUILDING MANUFACTURERS ASSOCIATION (MBMA) AND IN ACCORDANCE WITH MBMA SPECIFICATIONS.

SITE PREPARATION NOTES

1. SITE PREPARATION NOTES FOR THIS PROJECT ARE BASED ON RECOMMENDATIONS CONTAINED IN A SOILS REPORT BY GORDON SPILKER HUBER GEOTECHNICAL COUNSULTANTS, INC, DATED MAY 6, 2008, ALONG WITH ANY ADDENDA THERETO, WHICH HAS BEEN PREPARED FOR THIS PROJECT. A REFERENCE COPY IS AVAILABLE UPON REQUEST FROM THE ARCHITECT. FOOTINGS AND FOUNDATIONS AS SHOWN ON DRAWINGS MAY VARY IF THE SUBSURFACE SOIL CONDITIONS VARY FROM THOSE FOUND IN THE SOILS REPORT.
2. ALL CONCRETE SLABS AND ASPHALT PAVING AND, ANY OTHER DELETERIOUS MATERIALS, SHALL BE REMOVED FROM WITHIN AN AREA EXTENDING TWO FEET BEYOND THE BUILDING PAD AREA. THE STRIPPED SOILS ARE UNSUITABLE AS COMPACTED STRUCTURAL FILL.
3. THE SUBGRADE SHALL BE PROOF ROLLED. ALL SOFT SPOTS SHALL BE REMOVED AND REPLACED WITH COMPACTED STRUCTURAL FILL.
4. FOOTINGS SHALL BEAR UPON FIRM UNDISTURBED NATURAL SOILS AND/OR UPON STRUCTURAL FILL EXTENDING TO FIRM UNDISTURBED NATURAL SOILS.
5. WHERE REQUIRED, THE WIDTH OF STRUCTURAL FILL BELOW FOOTINGS SHALL BE EQUAL TO THE WIDTH OF THE FOOTINGS PLUS ONE FOOT FOR EACH FOOT OF FILL THICKNESS
6. STRUCTURAL FILL SHALL CONSIST OF WELL GRADED, GRANULAR SOILS WITH A MAXIMUM PARTICLE SIZE OF 4 INCHES, LESS 35% PASSING THE NO. 200 SIEVE. STRUCTURAL FILL SOILS SHALL BE NON-EXPANSIVE AND HAVE A LIQUID LIMIT LESS THAN 35 AND A PLASICITY INDEX BELOW 15.
7. ALL STRUCTURAL FILL, WHERE REQUIRED, SHALL EXTEND TO SUITABLE NATURAL SOILS. STRUCTURAL FILL SHALL BE PLACED IN MAXIMUM 8 INCH LOOSE LIFTS AND COMPACTED TO AT LEAST 95% OF MAXIMUM DENSITY AS DETERMINED BY ASTM D-1557 AND SHALL BE COMPACTED AT A MOISTURE CONTENT WITHIN 2% OF THE OPTIMUM MOISTURE CONTENT.
8. SLABS ON GRADE SHALL BE UNDERLAIN BY A MINIMUM OF 4Φ OF FREE-DRAINING GRANULAR MATERIAL. GRANULAR MATERIAL SHALL BE PLACED UPON PROPERLY PREPARED SUBGRADE AS DESCRIBED ABOVE.
9. SITE PREPARATION, PLACEMENT AND COMPACTION OF STRUCTURAL FILL SHALL BE OBSERVED AND TESTED BY OWNER'S TESTING LABORATORY TO INSURE THAT THE ABOVE REQUIREMENTS ARE ACHIEVED.

A1 STRUCTURAL NOTES
SCALE: 3/4" = 1'-0"

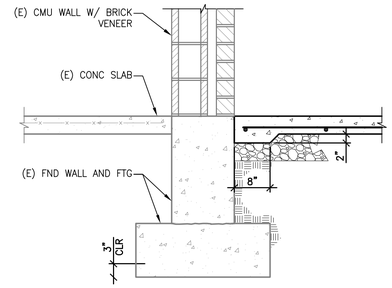

D4 SCALE: 3/4" = 1'-0"

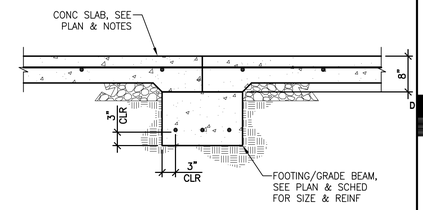

D5 SCALE: 3/4" = 1'-0"

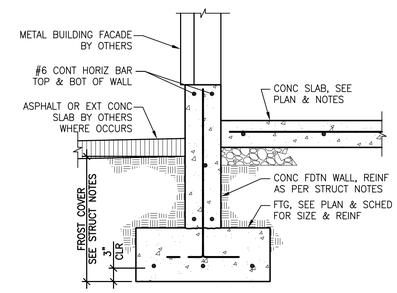

C4 SCALE: 3/4" = 1'-0"

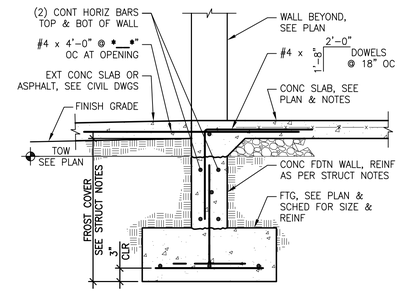

C5 EXT DOOR OPENING DETAIL
3136_03 SCALE: 3/4" = 1'-0"

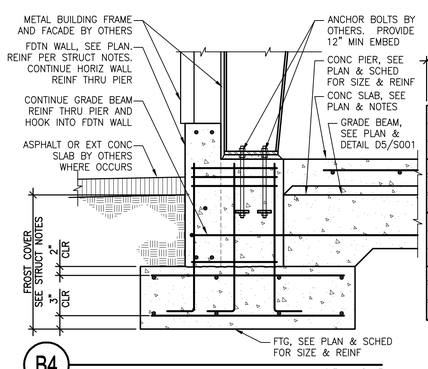

B4 SCALE: 3/4" = 1'-0"

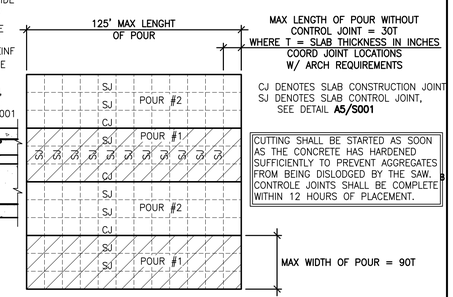

B5 SLAB CONTROL JOINT CRITERIA
3677_01 SCALE: NONE

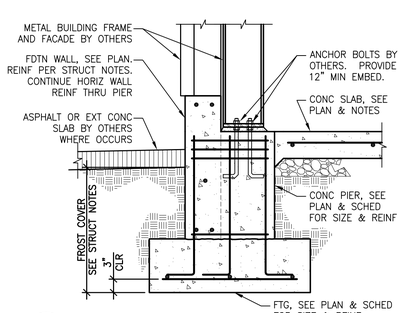

A4 SCALE: 3/4" = 1'-0"

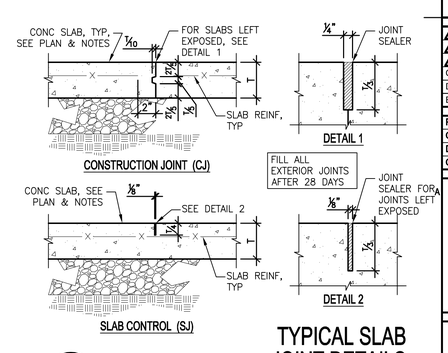

A5 TYPICAL SLAB JOINT DETAILS
3677_03 SCALE: NONE

COOPER ROBERTS SIMONSEN ARCHITECTURE
crsa
700 NORTH 200 WEST
SALT LAKE CITY,UTAH 84103
(801) 355-5915
(801) 355-9885 FAX
WWW.CRSARCHITECTS.COM

CALDER RICHARDS CONSULTING ENGINEERS
634 SOUTH 400 WEST, SUITE 100, SALT LAKE CITY, UT 84101
T: 801.466.1899 F: 801.467.2495

UTNG WJRC
OMS SHOP ADDN.
DFCM NO. 8031480
7602 SOUTH AIRPORT ROAD
WEST JORDAN, UTAH

UTAH NATIONAL GUARD
12953 SOUTH
MINUTEMAN DRIVE
DRAPER, UTAH 84020-1776

△	__/__/__	-
△		
△		
CD		-
DD		
BID	8/19/08	BID DOCUMENTS

PROJECT NO: B08-024
CAD DWG FILE: s001.dwg
DRAWN BY: JRS
CHECKED BY: SC

STRUCTURAL DETAILS

S001

#

X:\Project Files\2008\08031.05 UTNG WJ OMS Addition\Drawings\S001.dwg, S001, 8/25/2008 5:34:14 PM

FOOTING SCHEDULE

MARK	WIDTH	LENGTH	THICK	CROSSWISE REINF				LENGTHWISE REINF				NOTES
				NO	SIZE	LENGTH	SPACING	NO	SIZE	LENGTH	SPACING	
FC2.0	2'–0"	CONT	12"	–	–	–	–	2	#5	CONT	18"	
GB1	1'–0"	CONT	12"	–	–	–	–	3	#5	CONT	6"	CENTERED
FS3.0	3'–0"	3'–0"	12"	3	#4	2'–6"	15"	3	#4	2'–6"	15"	
FS4.0	4'–0"	4'–0"	12"	4	#5	3'–6"	14"	4	#5	3'–6"	14"	
FS5.0	5'–0"	5'–0"	12"	5	#5	4'–6"	13.5"	5	#5	4'–6"	13.5"	
FR4.0/3.0	3'–0"	4'–0"	12"	4	#5	3'–2"	14"	3	#5	3'–6"	15"	
FR5.0/3.25	3'–3"	5'–0"	12"	5	#5	3'–5"	13.5"	3	#5	4'–6"	16.5"	
FS12.0	12'–0"	12'–0"	30"	10	#8	11'–6"	15.3"	10	#8	11'–6"	15.3"	

NOTES

1. PLACE CROSSWISE REINFORCING 3" CLEAR FROM GRADE AND LENGTHWISE REINFORCING ON TOP OF CROSSWISE.
2. WHERE TOP REINFORCING IS INDICATED, PLACE TOP CROSSWISE REINFORCING 2" CLEAR FROM TOP OF FOOTING AND LENGTHWISE REINFORCING UNDER CROSSWISE REINFORCING.
3. ALL CONTINUOUS FOOTINGS SHALL BE FC2.0 AND SQUARE FOOTINGS SHALL BE FS3.0, MINIMUM, UNO ON PLANS.

D1 — FOOTING SCHEDULE
3110.00 SCALE: NONE

CONCRETE PIER SCHEDULE

MARK	CONCRETE PIER SIZE A	CONCRETE PIER SIZE B	REINFORCING VERTICAL	REINFORCING TIES	CONFIGURATION
CP–1	1'–8"	1'–8"	(8) #5	#3 @ 6" OC	TYPE A
CP–2	2'–2"	1'–8"	(8) #5	#3 @ 6" OC	TYPE A
CP–3	1'–9"	1'–8"	(8) #5	#3 @ 6" OC	TYPE B

NOTES

1. PROVIDE (3) SETS OF TIES IN TOP 5" OF PIER IN ADDITION TO TIE SPACING SHOWN.
2. EMBED COLUMN ANCHOR BOLTS PER DETAILS.
3. NOT ALL BAR CONFIGURATIONS ARE SHOWN. PROVIDE CROSS TIES WHERE VERT REINF IS SPACED MORE THAN 6" APART OR AT EVERY OTHER VERT BAR.
4. CROSS TIES SHALL HAVE ONE END WITH A 90° HOOK AND ONE END WITH A 135° HOOK. ALTERNATE ENDS OF HOOKS ALONG VERT BARS.
5. TOP OF PIER AND TOP OF WALL MAY BE AT DIFFERENT ELEVATIONS. COORDINATE ELEVATIONS WITH PLANS AND DETAILS.

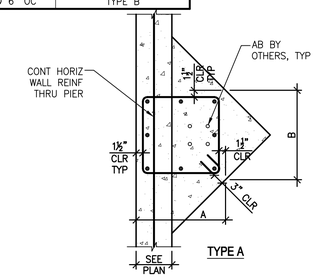

D3 — CONCRETE PIER SCHEDULE
3310.01 SCALE: NONE

NOTE:
FOR THE BASE BID PROVIDE THE CONCRETE PIER AS SHOWN. FOR ALTERNATE NO. 1 DELETE THE CONCRETE PIER, CHANGE THE TOP OF FOOTING TO BE AT FINISH FLOOR ELEVATION AND EXTEND THE CRANE MAST PER THE MANUFACTURER'S REQUIREMENTS.

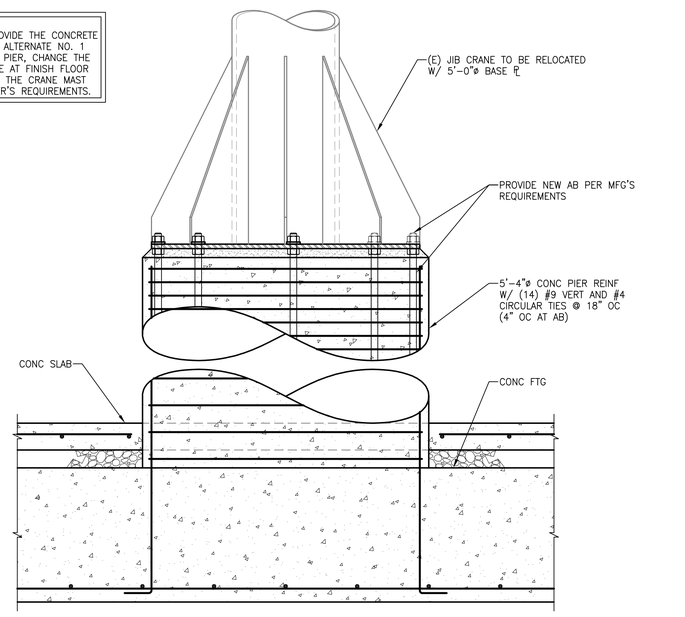

B1 — SCALE: 3/4" = 1'–0"

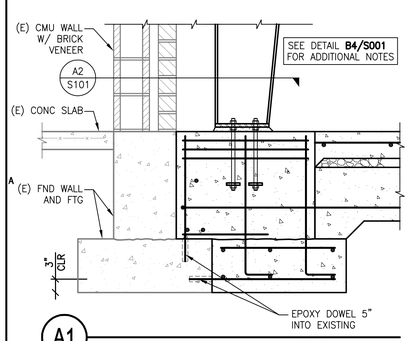

A1 — SCALE: 3/4" = 1'–0"

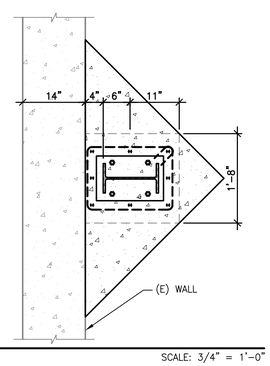

A2 — SCALE: 3/4" = 1'–0"

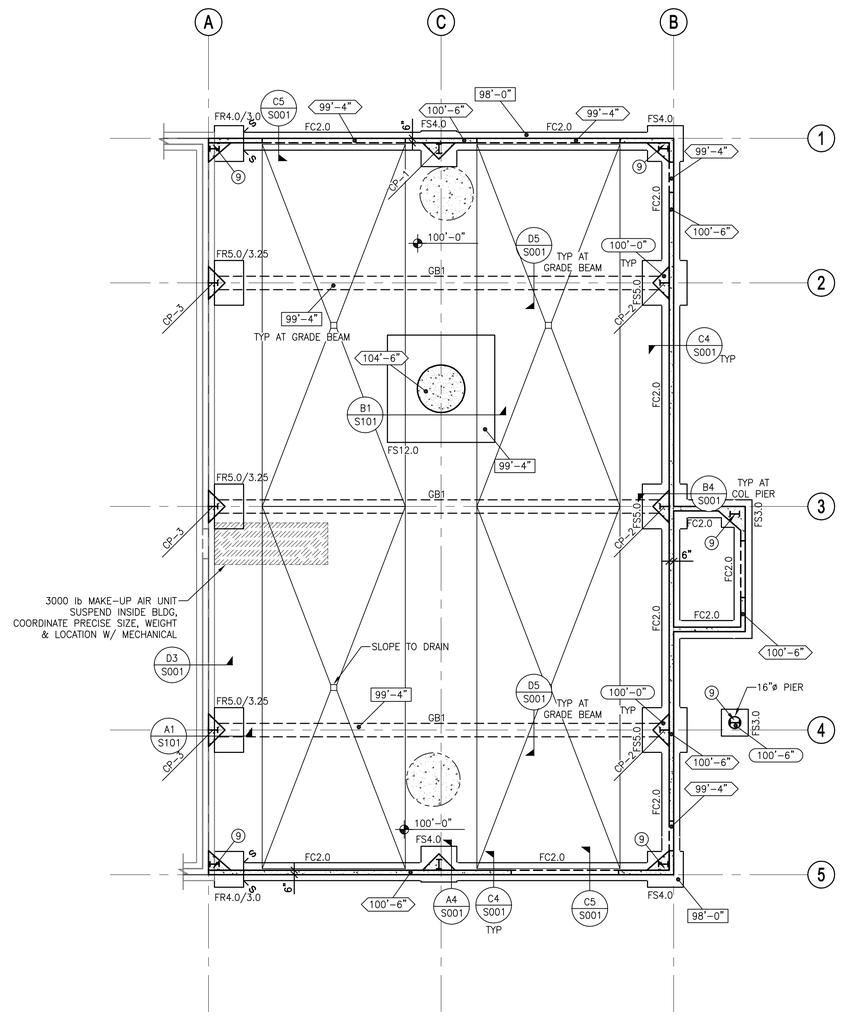

FOOTING & FOUNDATION PLAN
SCALE: 1/8" = 1'–0"

PLAN NOTES (FTG & FDTN):

CIRCLED NOTES ARE KEYED ON PLAN.

SEE ARCHITECTURAL DRAWINGS FOR ALL DIMENSIONS, TYPICAL.

NOT ALL NOTES MAY APPLY TO AREA SHOWN ON SHEET.

1. SLAB ON GRADE SHALL BE 6" CONCRETE OVER 4" FREE–DRAINING GRAVEL. REINFORCE SLAB WITH #4 @ 18" OC EA WAY.
2. PLACE CONTROL JOINTS AND CONSTRUCTION JOINTS IN SLAB PER GENERAL NOTES. SEE DETAIL **A5/S001**. COORDINATE W/ ARCH REQUIREMENTS.
3. CENTER FOOTINGS ON WALLS AND COLUMNS UNLESS DIMENSIONED OTHERWISE ON PLANS.
4. SEE PLAN AND SECTIONS FOR TOP OF FOUNDATION WALL ELEVATIONS.
5. COORDINATE METAL BUILDING FRAME COLUMN LOCATIONS, BASE PLATE SIZES, AND ANCHOR BOLT CONFIGURATIONS W/ METAL BUILDING MANUFACTURER'S PLANS. CONTRACTOR SHALL NOTIFY ENGINEER REGARDING ANY DISCREPANCIES.
6. ALL SITE PREPARATION, EXCAVATION, FILL, COMPACTION, AND PLACEMENT WORK PERFORMED SHALL COMPLY WITH RECOMMENDATIONS OUTLINED IN THE SITE PREPARATION NOTES ON **S001**.
7. SEE ARCHITECTURAL/SITE DRAWINGS FOR INFORMATION AND LOCATION OF SITE WALLS, STEPS, PLANTERS, RAMPS, ETC.
8. SEE GENERAL NOTES ON SHEET **S001** FOR ADDITIONAL INFORMATION.
9. AT ALL PIERS OTHER THAN CP–1 PROVIDE PIERS WITH DIM REQD. TO SUPPORT METAL BUILDING COLUMNS ABOVE. REINF PIERS W/ (4) #5 BARS VERTICAL & #3 TIES @ 6" OC W/ (3) #3 TIES @ 2'–0" OC @ TOP.

LEGEND:

FCx.0, FSx.0	CONTINUOUS FOOTING, SPOT FOOTING TYPES RESPECTIVELY, SEE SCHEDULE **THIS SHEET**
	SLAB BLOCK–OUT AT COLUMN
xx'–xx"	TOP OF FTG ELEVATION
xxx'–xx"	TOP OF WALL ELEVATION
xx'–xx"	TOP OF PIER ELEVATION
xxx'–xx"	TOP OF SLAB ELEVATION
	CONC SLAB ON GRADE
FCx.x	CONCRETE FOOTING & FDTN WALL
	CONCRETE FOOTING & FDTN WALL
	RECESS IN CONC FDTN WALL
CP–#	CONCRETE PIER, SEE SCHEDULE **THIS SHEET**
I	STEEL COLS – WIDE FLANGE

COOPER ROBERTS SIMONSEN ARCHITECTURE
crsa
700 NORTH 200 WEST
SALT LAKE CITY,UTAH 84103
(801) 355-5915
(801) 355-9885 FAX
WWW.CRSARCHITECTS.COM

CALDER RICHARDS CONSULTING ENGINEERS
634 SOUTH 400 WEST, SUITE 100, SALT LAKE CITY, UT 84101
T: 801.466.1899 F: 801.467.2495

UTNG WJRC
OMS SHOP ADDN.
DFCM NO. 8031480
7602 SOUTH AIRPORT ROAD
WEST JORDAN, UTAH

UTAH NATIONAL GUARD
12953 SOUTH
MINUTEMAN DRIVE
DRAPER, UTAH 84020-1776

1	__/__/__	-
2		
3		
CD		-
DD		
BID	8/19/08	BID DOCUMENTS

PROJECT NO: B08-024
CAD DWG FILE: s101.dwg
DRAWN BY: JRS
CHECKED BY: SC

FOOTING & FOUNDATION PLAN

S101
#

X:\Project Files\2008\08031.05 UTNG WJ OMS Addition\Drawings\S101.dwg, S101, 8/25/2008 5:34:35 PM

THIS DRAWING, AS AN INSTRUMENT OF SERVICE, IS AND SHALL REMAIN THE PROPERTY OF SMD ENGINEERING, PLLC AND SHALL NOT BE REPRODUCED, PUBLISHED, OR USED IN ANY WAY WITHOUT THE PERMISSION OF SMD ENGINEERING, PLLC. THE INFORMATION, DESIGN, OR CONCEPTS REPRESENTED ON THIS DRAWING ARE CONFIDENTIAL AND ARE NOT FOR GENERAL DISTRIBUTION. © SMD ENGINEERING, PLLC 2008

ABBREVIATIONS

ø	ROUND, DIAMETER, PHASE	EWT	ENTERING WATER TEMPERATURE	OZ	OUNCE
ABS	ACRYLONITRILE–BUTADIENE–STYRENE, ABSOLUTE	EXH	EXHAUST	P	PUMP
ACCU	AIR COOLED CONDENSING UNIT	EXP	EXPANSION	PD	PRESSURE DROP/DIFFERENCE
A/C	AIR CONDITIONING	EXT	EXTERIOR	PE	POLYETHYLENE
AD	ACCESS DOOR, AREA DRAIN	F	FAHRENHEIT	PEX	CROSS–LINKED POLYETHYLENE
ADA	AMERICAN DISABILITIES ACT	FC	FLEXIBLE CONNECTION, FORWARD CURVED	PF	PRE–FILTER
AF	AIR FOIL, AIR FILTER	FCO	FLOOR CLEAN OUT	PH	PHASE
AFF	ABOVE FINISH FLOOR	FCU	FAN COIL UNIT	PIV	POST INDICATOR VALVE
AHU	AIR HANDLING UNIT	FD	FLOOR DRAIN, FIRE DAMPER	PLMB	PLUMBING
ALT	ALTITUDE, ALTERNATE	FDC	FIRE DEPARTMENT CONNECTION	POC	POINT OF CONNECTION
AMB	AMBIENT	FF	FINISH FLOOR, FINAL FILTER	PPM	PARTS PER MILLION
AMP	AMPERE (AMP, AMPS)	FL	FLOW LINE	PRS	PRESSURE REDUCING STATION
AP	ACCESS PANEL	FLEX	FLEXIBLE	PRV	PRESSURE REDUCING VALVE
APD	AIR PRESSURE DROP	FO	FLAT OVAL	PSF	POUNDS PER SQUARE FOOT
ARCH	ARCHITECT	FP	FIRE PROTECTION	PSI	POUNDS PER SQUARE INCH
AS	AIR SEPARATOR	FPM	FEET PER MINUTE	PTAC	PACKAGED TERMINAL AIR CONDITIONER
AV	ACID VENT, AIR VENT	FS	FLOOR SINK	PVC	POLYVINYL CHLORIDE
B	BOILER	FSD	FIRE SMOKE DAMPER	R	THERMAL RESISTANCE, RANKINE, RETURN
BAL	BALANCE	FSTAT	FREEZESTAT	RA	RETURN AIR
BAS	BUILDING AUTOMATION SYSTEM	FT	FEET	RAD	RADIUS
BBR	BASEBOARD RADIATOR	FTR	FIN TUBE RADIATION	RCP	RADIANT CEILING PANEL
BDD	BACKDRAFT DAMPER	FURN	FURNACE, FURNISH, FURNITURE	RD	ROOF DRAIN
BFP	BACKFLOW PREVENTER	FV	FACE VELOCITY	RECIRC	RECIRCULAT(E),(OR),(ING)
BFV	BUTTERFLY VALVE	G	GAUGE, NATURAL GAS	REF	REFRIGERAT(OR),(ION)
BHP	BRAKE HORSEPOWER	GA	GAGE	REQ'D	REQUIRED
BI	BACKWARD INCLINED	GAL	GALLON	RF	RETURN FAN
BOD	BOTTOM OF DUCT	GALV	GALVANIZED	RH	RELATIVE HUMIDITY
BOP	BOTTOM OF PIPE	GC	GENERAL CONTRACTOR	RM	ROOM
BT	BATH TUB	GD	GARAGE DRAIN	RPBP	REDUCED PRESS. BACKFLOW PREVENTER
BTU	BRITISH THERMAL UNIT	GH	GRAVITY HOOD	RPM	REVOLUTIONS PER MINUTE
BTUH	BRITISH THERMAL UNITS/HR	GPM	GALLONS PER MINUTE	RTU	ROOF TOP UNIT
BV	BALL VALVE	GT	GREASE TRAP	REV	REVOLUTION, REVISION, REVERSE
C	CHILLER	HB	HOSE BIBB	S	SECONDS, SUPPLY, SINK
CA	COMPRESSED AIR, COMBUSTION AIR	H/C, HC	HEATING COIL	SA	SUPPLY AIR, SOUND ATTENUATOR
CAP	CAPACITY	HEPA	HIGH EFFICIENCY PARTICULATE AIR	SAN	SANITARY
CAV	CONSTANT AIR VOLUME	HOA	HAND, OFF, AUTO	SAT	SATURATED
C/C, CC	COOLING COIL	HP	HORSEPOWER, HEAT PUMP	SCFM	STANDARD CUBIC FEET PER MINUTE
CD	CONDENSATE DRAIN, CEILING DIFFUSER	HR	HOUR	SD	STORM DRAIN, SMOKE DAMPER
CFM	CUBIC FEET PER MINUTE	HSTAT	HUMIDISTAT	SECT	SECTION
CFOI	CONTRACTOR FURN., OWNER INSTALLED	HT	HEIGHT	SEN	SENSIBLE
CHW	CHILLER WATER	HVAC	HEATING, VENTILATING, AIR–CONDITIONING	SHT	SHEET
CO	CLEAN OUT, CARBON MONOXIDE	HX	HEAT EXCHANGER	SIM	SIMILAR
CO2	CARBON DIOXIDE	HZ	FREQUENCY	SL	SEA LEVEL
CONC	CONCRETE	IAQ	INDOOR AIR QUALITY	SP	STATIC PRESSURE
COND	CONDENS(ER),(ING),(ATE),(ATION)	ID	INSIDE DIAMETER	SPEC	SPECIFICATION
CONT	CONTINUOUS	IE	INVERT ELEVATION	SQ	SQUARE
COP	COEFFICIENT OF PERFORMANCE, COPPER	IN	INCH	SS	SERVICE SINK, STAINLESS STEEL
COTG	CLEANOUT TO GRADE	IN WC	INCHES, WATER COLUMN	STC	SOUND TRANSMISSION CLASS
CPVC	CHLORINATED POLY VINYL CHLORIDE	INV	INVERT	STD	STANDARD
CT	COOLING TOWER	I/O	INPUT/OUTPUT	STRUCT	STRUCTUR(E),(AL)
CU	CONDENSING UNIT, CUBIC	JS	JANITORS SINK	SUCT	SUCTION
CV	CONTROL VALVE, CONSTANT VOLUME	KEC	KITCHEN EQUIPMENT CONTRACTOR	T	TEMPERATURE, TIME
CUH	CABINET UNIT HEATER	KW	KILOWATT	T&P	TEMPERATURE AND PRESSURE
CW	CONDENSER WATER, CLOCKWISE	KWH	KILOWATT HOUR	TAB	TEST, ADJUST AND BALANCE
DA	DISCHARGE AIR	LAT	LEAVING AIR TEMPERATURE	TDH	TOTAL DYNAMIC HEAD
dB	DECIBELS	LAV	LAVATORY	TEMP	TEMPERATURE, TEMPORARY
DB	DRY BULB TEMPERATURE	LBS	POUNDS	TONS	TONS OF REFRIGERATION
DDC	DIRECT DIGITAL CONTROL	LF	LINEAR FEET	TOD	TOP OF DUCT
DF	DRINKING FOUNTAIN	LVR	LOUVER	TOP	TOP OF PIPE
DIA	DIAMETER	LWT	LEAVING WATER TEMPERATURE	TSP	TOTAL STATIC PRESSURE
DMPR	DAMPER	MA	MEDICAL AIR, MIXED AIR	TSTAT	THERMOSTAT
DP	DEWPOINT, DIFFERENTIAL PRESSURE	MAT	MATERIAL, MIXED AIR TEMPERATURE	TYP	TYPICAL
DR	DRAIN	MAU	MAKE UP AIR HANDLING UNIT	U	URINAL
DSN	DOWNSPOUT NOZZLE	MAV	MANUAL AIR VENT	UH	UNIT HEATER
DW	DISHWASHER	MAX	MAXIMUM	UNO	UNLESS NOTED OTHERWISE
DWG	DRAWING	MBH	BTU/HR X 1,000	V	VENT, VALVE
DWV	DRAIN, WASTE, VENT	MC	MECHANICAL CONTRACTOR	VA	VOLT AMPERE
DX	DIRECT EXPANSION	MCC	MOTOR CONTROL CENTER	VAC	VACUUM
(E) EXIST	EXISTING	MECH	MECHANICAL	VAV	VARIABLE AIR VOLUME
EAT	ENTERING AIR TEMPERATURE	MH	MAN HOLE	VD	VOLUME DAMPER
EC	ELECTRICAL CONTRACTOR	MIN	MINIMUM, MINUTE	VFD	VARIABLE FREQUENCY DRIVE
ECON	ECONOMIZER	MVD	MANUAL VOLUME DAMPER	VI	VIBRATION ISOLATOR
EDH	ELECTRIC DUCT HEATER	NA	NOT APPLICABLE	VOL	VOLUME
EER	ENERGY EFFICIENCY RATIO	NC	NOISE CRITERIA, NORMALLY CLOSED	VP	VELOCITY PRESSURE
EF	EXHAUST FAN	NIC	NOT IN CONTRACT	VSC	VARIABLE SPEED CONTROLLER
EFF	EFFICIENCY	NO	NORMALLY OPEN, NITROUS OXIDE	VTR	VENT THROUGH ROOF
EL, ELEV	ELEVATION	NO.	NUMBER	W	WASTE
EMER	EMERGENCY	NOM	NOMINAL	W/	WITH
ENCL	ENCLOSURE	NR	NOISE REDUCTION	W/O	WITHOUT
ESP	EXTERNAL STATIC PRESSURE	NRC	NOISE REDUCTION COEFFICIENT	WB	WET BULB
ET	EXPANSION TANK	NTS	NOT TO SCALE	WC	WATER CLOSET
EUH	ELECTRIC UNIT HEATER	OA	OUTSIDE AIR	WCO	WALL CLEAN OUT
EVAP	EVAPORAT(E),(ING),(ED),(OR)	OBD	OPPOSED BLADE DAMPER	WHA	WATER HAMMER ARRESTOR
EWB	ENTERING WET BULB	OD	OVERFLOW DRAIN, OUTSIDE DIAMETER	WT	WEIGHT
EWC	ELECTRIC WATER COOLER	OF/CI	OWNER FURN./CONTRACTOR INSTALLED	YCO	YARD CLEANOUT
EWH	ELECTRIC WATER HEATER	OF/OI	OWNER FURNISHED/OWNER INSTALLED		
EWS	EYE WASH STATION	OS&Y	OPEN SCREW & YOLK		

MECHANICAL LEGEND

BALL VALVE
BUTTERFLY VALVE
GATE VALVE
ANGLE GATE VALVE, PLAN VIEW
GLOBE VALVE
PLUG VALVE
3–WAY VALVE
NON–RISING STEM/OS&Y VALVE ACTUATOR
LEVER VALVE ACTUATOR
ELECTRONIC/PNEUMATIC VALVE ACTUATOR
SOLENOID/DIAPHRAGM VALVE ACTUATOR
CHECK VALVE
SPRING CHECK VALVE
BALL VALVE W/HOSE END & CAP
NEEDLE VALVE
PRESSURE REDUCING VALVE
REDUCED PRESSURE BACKFLOW PREVENTER — RPBP
INLINE PUMP
PRESSURE & TEMPERATURE RELIEF VALVE
SQUARE HEAD COCK
STRAINER, W/BV HOSE END & CAP
TEMPERATURE & PRESSURE PLUG
CIRCUIT SETTER
AUTOMATIC FLOW CONTROL VALVE
AUTOMATIC/MANUAL AIR VENT — AV, MAV
VENTURI FLOW MEASURING DEVICE
THERMOMETER/PRESSURE GAGE W/COCK
TEMPERATURE SENSOR
CONCENTRIC/ECCENTRIC REDUCER
UNION
BUSHING/CAP
ELBOW UP/DOWN
TOP/BOTTOM CONNECTION, 45° OR 90°
TEE UP/SIDE/DOWN
FLOW/PITCH DOWN DIRECTION — 2%
ANCHOR/GUIDE
EXPANSION JOINT/FLEX CONNECTOR
FLOOR OR GRADE CLEANOUT, W/CONC PAD
WALL CLEANOUT, HOSE BIBB OR WALL HYDRANT — HB, WH
FLOOR DRAIN/FLOOR SINK
VENT
COLD WATER
HOT WATER
HOT WATER RETURN
COMPRESSED AIR — A
CONDENSATE DRAIN — D
SANITARY SEWER
SANITARY SEWER BELOW GRADE
ROOF DRAIN — RD
OVERFLOW ROOF DRAIN — OD
NATURAL GAS — G

DUCT SIZE, (1ST FIGURE, SIDE SHOWN; 2ND FIGURE, OTHER SIDE) — 24/12
DIRECTION OF FLOW
LINED DUCT — 24/12
HIDDEN DUCT — (24/12)
WYE W/45° ENTRY
TEE W/45° ENTRY
ELBOW W/TURNING VANES
HELICAL FLEX DUCT
SUPPLY DUCT SECTION UP/DOWN — 24/12
RETURN DUCT SECTION UP/DOWN — 24/12
EXHAUST DUCT SECTION UP/DOWN — 24/12
SUPPLY DUCT SECTION UP/DOWN — 18ø
ROUND BRANCH — 12ø, 18ø
DUCT TRANSITION — 24/12, 18/12
SPIN–IN W/VOLUME DAMPER — 24/12
FIRE SMOKE DAMPER — S
FIRE DAMPER
SMOKE DAMPER — S
MOTORIZED DAMPER — M
GRAVITY BACKDRAFT DAMPER — G
MANUAL VOLUME DAMPER — VD
SIDE/PLAN ACCESS DOOR
SUPPLY AIR DEVICE
RETURN AIR DEVICE
EXHAUST AIR DEVICE
DUCT PRESSURE CLASS/CHANGE — 2", 2", 1"
THERMOSTAT/HUMIDISTAT — T, H
POINT OF CONNECTION/REMOVAL
KEYED NOTE/REVISION — 1, 1
WALL SWITCH — $
EQUIPMENT CALLOUT — DESIGNATOR, CHARACTERISTIC
PLUMBING FIXTURE CALLOUT — FIXTURE
DETAIL TAG — DETAIL NO. 1, SHEET NO. M601

PROJECT NOTES

1. ALL WORK SHALL BE PERFORMED IN ACCORDANCE WITH, 2006 INTERNATIONAL BUILDING CODE, 2006 INTERNATIONAL MECHANICAL CODE, 2006 INTERNATIONAL PLUMBING CODE, 2006 INTERNATIONAL FUEL GAS CODE, AND 2006 INTERNATIONAL ENERGY CODE, INCLUDING STATE AND LOCAL AMENDMENTS, SUBJECT TO AUTHORITY HAVING JURISDICTION INTERPRETATION.
2. CLOSELY COORDINATE NEW MECHANICAL AND PLUMBING CONSTRUCTION WITH ALL MECHANICAL, ELECTRICAL, ARCHITECTURAL AND STRUCTURAL MEMBERS. DUCTWORK AND PIPE ROUTING IS APPROXIMATE, DIAGRAMMATIC AND IS NOT TO BE SCALED. PROVIDE ALTERNATE ROUTING, OFFSETS AND TRANSITIONS AS REQUIRED FOR COORDINATION OF ALL WORK WITHOUT ADDITIONAL COST.
3. DO NOT SHUT–OFF/PUT OUT SERVICE ANY SYSTEMS/SERVICES WITHOUT FIRST COORDINATING ALL DOWNTIME WITH THE OWNER'S PERSONNEL.
4. PROVIDE SEISMIC RESTRAINT FOR ALL MECHANICAL AND PLUMBING EQUIPMENT AND PIPING IN ACCORDANCE WITH 2006 IBC, IMC, AND IPC. SEISMIC DESIGN CATEGORY "D", SITE CLASS "D", SD1=0.45, SDS=0.79, AND SEISMIC OCCUPANCY CATEGORY II.
5. CONTRACTOR SHALL PROVIDE 1 YEAR STANDARD WARRANTY.
6. SUBMIT ALL VALVES, FITTINGS, PIPE MATERIALS, INSULATION, AND ACCESSORIES TO BE USED IN PROJECT. SUBMIT ALL EQUIPMENT AND ACCESSORIES LISTED ON MECHANICAL SCHEDULE SHEET. SUBMIT SEVEN COPIES IN 3 RING BINDER TO ARCHITECT FOR REVIEW AND APPROVAL BY ENGINEER. DO NOT PLACE ORDER UNTIL ENGINEER HAS REVIEWED AND APPROVED SUBMITTAL.
7. RECORD ALL FIELD CHANGES ON RECORD DRAWINGS AND SUBMIT TO ENGINEER DURING PROJECT CLOSE OUT.
8. INSTALL ALL EQUIPMENT IN ACCORDANCE WITH MANUFACTURERS INSTALLATION INSTRUCTIONS.
9. PROJECT ELEVATION IS 5000 FT FOR EQUIPMENT SELECTION.
10. PROVIDE ALL DUCT IN ACCORDANCE WITH SMACNA STANDARDS FOR 2" WC PRESSURE CLASS. SEAL ALL TRANSVERSE AND LONGITUDINAL SEAMS AND JOINTS EXCEPT FOR WELDED OR LOCKING–TYPE LONGITUDINAL JOINTS.
11. PROVIDE 1–1/2" THICK INSULATED FLEXIBLE DUCT AS INDICATED ON DRAWINGS CONFORMING TO NFPA 90A, UL 181–CLASS 0 OR 1 STANDARDS. INSTALL FLEXIBLE DUCT AS SHORT AS POSSIBLE WITHOUT KINKS.
12. DUCT DIMENSIONS SHOWN ARE INSIDE FLOW DIMENSIONS.
13. PROVIDE TEST AND BALANCE REPORT TO ENGINEER FOR REVIEW AND APPROVAL.
14. PROVIDE ISOLATION VALVES SERVING EACH PIECE OF EQUIPMENT.
15. DISINFECT NEW DOMESTIC WATER PIPING. SUBMIT DISINFECTION REPORT TO ENGINEER FOR REVIEW.
16. ALL WASTE AND VENT IS 2" UNLESS OTHERWISE NOTED.
17. ALL OVERFLOW ROOF DRAIN, ROOF DRAIN, WASTE AND VENT PIPE SHALL BE SERVICE WEIGHT CAST IRON.
18. PROVIDE TRAP PRIMERS AND CONNECT TO ALL FLOOR DRAINS, ALL FLOOR SINKS, AND ALL STANDPIPES THAT DO NOT HAVE A RELIABLE SOURCE TO MAINTAIN TRAP SEAL.
19. ALL WATER PIPE SHALL BE TYPE "L" COPPER.
20. T–DRILL FITTINGS SHALL NOT BE USED IN THIS PROJECT.
21. INSULATE ALL HOT WATER AND RETURN PIPE WITH 1" INSULATION WITH ASJ. INSULATE ALL COLD WATER PIPE WITH 1/2" INSULATION WITH ASJ.
22. ALL "BRANCH" HOT AND COLD WATER LINES FEEDING ONE OR TWO SINKS OR LAV'S ARE 1/2". DROP IN WALL AND DISTRIBUTE TO SINKS OR LAV'S AS REQ'D. PROVIDE INDIVIDUAL STOPS FOR EACH SINK OR LAV.
23. ALL COMPRESSED AIR PIPING SHALL BE TYPE "L" COPPER OR SCHEDULE 40 STEEL PIPE WITH SCREWED FITTINGS.
24. ALL NATURAL GAS PIPE SHALL BE SCHEDULE 40 STEEL PIPE WITH SCREWED FITTINGS FOR 2 LB SERVICE. CONTRACTOR MAY USE CSST DOWNSTREAM OF REGULATORS FOR FINAL EQUIPMENT CONNECTION.
25. PROVIDE "DIRT LEG" AHEAD OF EACH PIECE OF FUEL FIRED EQUIPMENT.

SHEET LIST

MH001 – MECHANICAL LEGENDS AND NOTES
MH101 – MECHANICAL MAIN LEVEL FLOOR PLAN
MH501 – MECHANICAL DETAILS
MH601 – MECHANICAL SECHEDULES
PP101 – PLUMBING MAIN LEVEL FLOOR PLAN

COOPER ROBERTS SIMONSEN ASSOCIATES
crsa
700 NORTH 200 WEST
SALT LAKE CITY,UTAH 84103
(801) 355-5915
(801) 355-9885 FAX
WWW.CRSA-US.COM

STRUCTURAL ENGINEER
CALDER RICHARDS CONSULTING ENGINEERS
2015 S 1100 EAST
SALT LAKE CITY, UT 84106
(801) 466-1699 (801) 467-2495 FAX
stephen@crceng.com

MECHANICAL ENGINEER
SMD
986 WEST ATHERTON DRIVE STE. 200
TAYLORSVILLE, UTAH 84123
(801)268-3828 FAX (801)268-3297
# #

ELECTRICAL ENGINEER
SPECTRUM
175 S MAIN STREET STE. 300
SALT LAKE CITY, UTAH 84111
(801)328-5151 (801)401-9471
# #

SMD ENGINEERING, PLLC
"Engineered Mechanical Solutions"
986 WEST ATHERTON DRIVE
TAYLORSVILLE, UT 84123
(801) 268-3828, FAX (801) 268-3297

UTNG WJRC
OMS SHOP ADDN.
DFCM NO. 8031480
7602 SOUTH AIRPORT ROAD
WEST JORDAN, UTAH

UTAH NATIONAL GUARD

12953 SOUTH MINUTEMAN DRIVE.
DRAPER, UTAH 84020-1776

3		
2		
1		
-	-	-
-	-	-
-	-	-
BID	6/15/08	BID DOCUMENTS

PROJECT NO:	20080703
CAD DWG FILE:	
DRAWN BY:	B.L.K.
CHECKED BY:	S.M.D.

MECHANICAL LEGENDS AND NOTES

MH001

SHEET OF

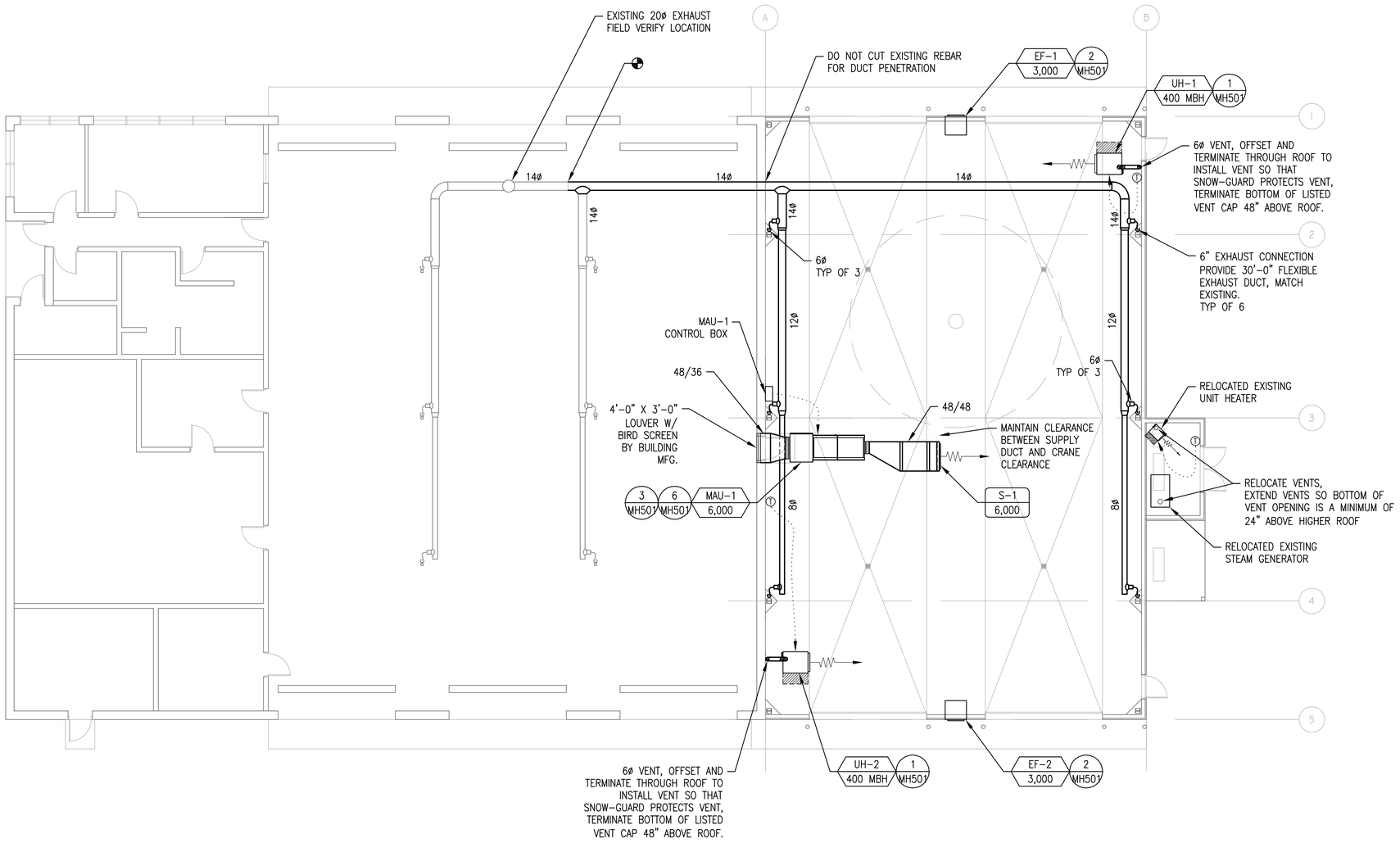

1 MH101 MECHANICAL MAIN LEVEL FLOOR PLAN

NORTH

8' 4' 2' 0 8' 16'

SCALE: 1/8" = 1'-0"

COOPER ROBERTS SIMONSEN ASSOCIATES

crsa

700 NORTH 200 WEST
SALT LAKE CITY,UTAH 84103
(801) 355-5915
(801) 355-9885 FAX
WWW.CRSA-US.COM

STRUCTURAL ENGINEER
CALDER RICHARDS CONSULTING ENGINEERS
2015 S 1100 EAST
SALT LAKE CITY, UT 84106
(801) 466-1699 (801) 467-2495 FAX
stephen@crceng.com

MECHANICAL ENGINEER
SMD
986 WEST ATHERTON DRIVE STE. 200
TAYLORSVILLE, UTAH 84123
(801)268-3828 FAX (801)268-3297
# #

ELECTRICAL ENGINEER
SPECTRUM
175 S MAIN STREET STE. 300
SALT LAKE CITY, UTAH 84111
(801)328-5151 (801)401-9471
# #

SMD ENGINEERING, PLLC
"Engineered Mechanical Solutions"
986 WEST ATHERTON DRIVE
TAYLORSVILLE, UT 84123
(801) 268-3828, FAX (801) 268-3297

UTNG WJRC
OMS SHOP ADDN.
DFCM NO. 8031480
7602 SOUTH AIRPORT ROAD
WEST JORDAN, UTAH

UTAH NATIONAL GUARD

12953 SOUTH MINUTEMAN DRIVE.
DRAPER UTAH 84020-1776

3		
2		
1		
-	-	-
-	-	-
-	-	-
BID	8/15/08	BID DOCUMENTS

PROJECT NO: 20080703
CAD DWG FILE:
DRAWN BY: B.L.K.
CHECKED BY: S.M.D.

MECHANICAL MAIN LEVEL FLOOR PLAN

MH101

SHEET OF

THIS DRAWING, AS AN INSTRUMENT OF SERVICE, IS AND SHALL REMAIN THE PROPERTY OF SMD ENGINEERING, PLLC AND SHALL NOT BE REPRODUCED, PUBLISHED, OR USED IN ANY WAY WITHOUT THE PERMISSION OF SMD ENGINEERING, PLLC. THE INFORMATION, DESIGN, OR CONCEPTS REPRESENTED ON THIS DRAWING ARE CONFIDENTIAL AND ARE NOT FOR GENERAL DISTRIBUTION. © SMD ENGINEERING, PLLC 2008

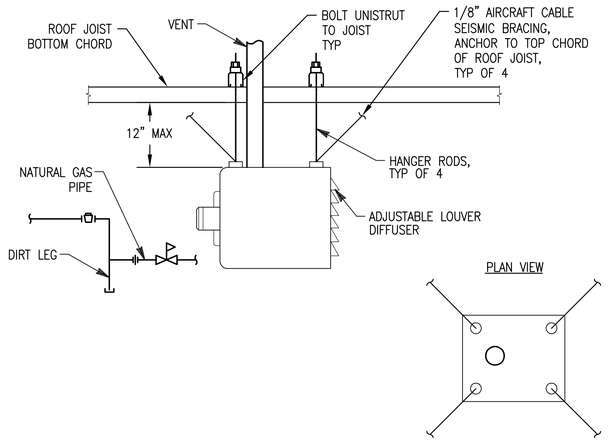

1 MH501 UNIT HEATER MOUNTING DETAIL

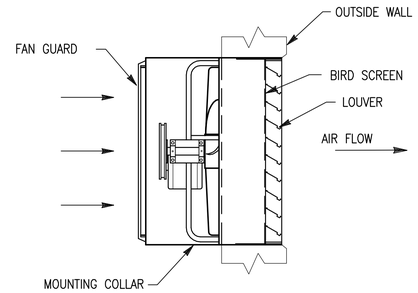

2 MH501 PROPELLER WALL EXHAUST FAN

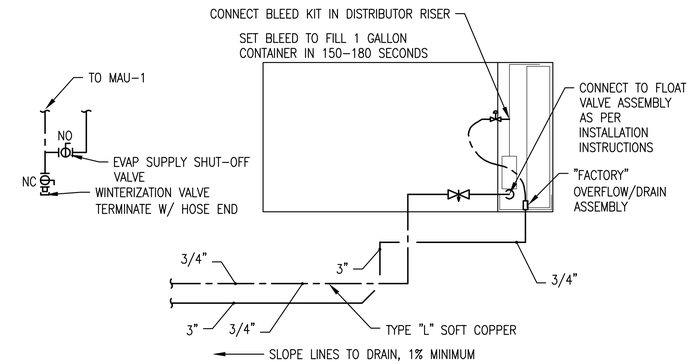

3 MH501 EVAP. COOLER PLUMBING CONNECTIONS

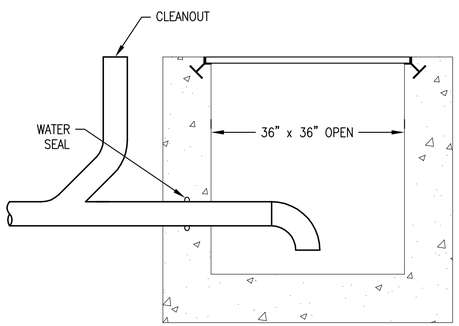

4 MH501 CATCH BASIN PLUMBING DETAIL

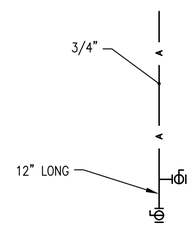

5 MH501 COMPRESSED AIR DROP

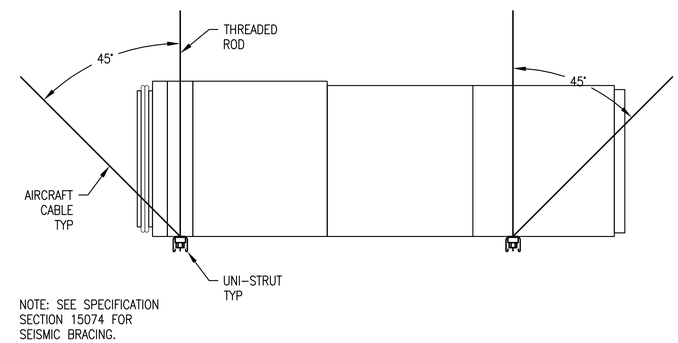

6 MH501 MAU MOUNTING

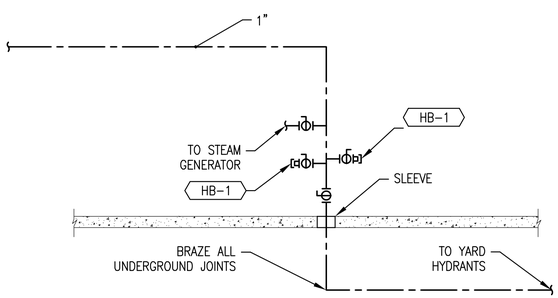

7 MH501 YARD HYDRANT CONNCTION

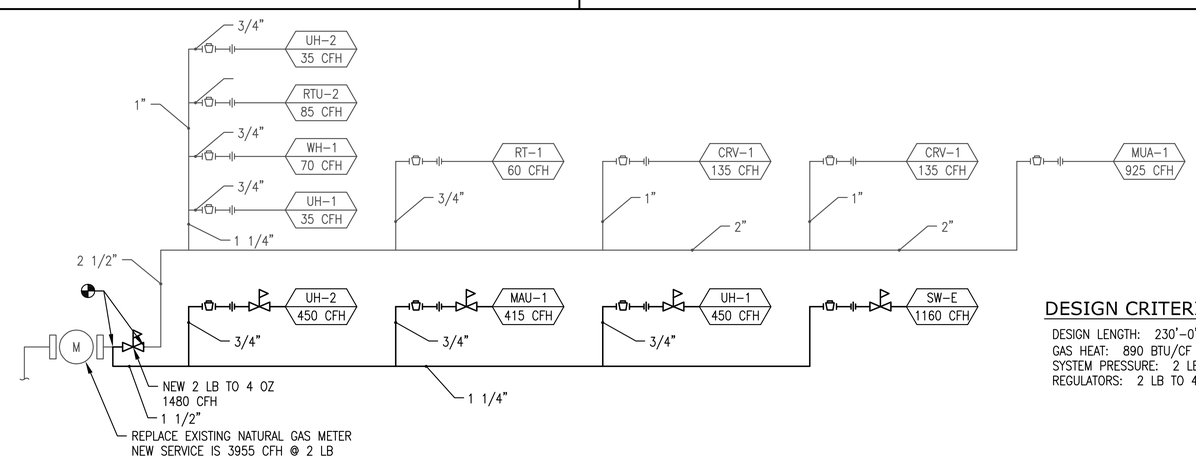

8 MH501 NATURAL GAS PIPING DIAGRAM

DESIGN CRITERIA

DESIGN LENGTH: 230'-0"
GAS HEAT: 890 BTU/CF
SYSTEM PRESSURE: 2 LB
REGULATORS: 2 LB TO 4 OZ

COOPER ROBERTS SIMONSEN ASSOCIATES
crsa
700 NORTH 200 WEST
SALT LAKE CITY,UTAH 84103
(801) 355-5915
(801) 355-9885 FAX
WWW.CRSA-US.COM

STRUCTURAL ENGINEER
CALDER RICHARDS CONSULTING ENGINEERS
2015 S 1100 EAST
SALT LAKE CITY, UT 84106
(801) 466-1699 (801) 467-2495 FAX
stephen@crceng.com

MECHANICAL ENGINEER
SMD
986 WEST ATHERTON DRIVE STE. 200
TAYLORSVILLE, UTAH 84123
(801)268-3828 FAX (801)268-3297
# #

ELECTRICAL ENGINEER
SPECTRUM
175 S MAIN STREET STE. 300
SALT LAKE CITY, UTAH 84111
(801)328-5151 (801)401-9471
# #

SMD ENGINEERING, PLLC
"Engineered Mechanical Solutions"
986 WEST ATHERTON DRIVE
TAYLORSVILLE, UT 84123
(801) 268-3828, FAX (801) 268-3297

UTNG WJRC
OMS SHOP ADDN.
DFCM NO. 8031480
7602 SOUTH AIRPORT ROAD
WEST JORDAN, UTAH

UTAH NATIONAL GUARD

12953 SOUTH MINUTEMAN DRIVE.
DRAPER, UTAH 84020-1776

1	-	-
2	-	-
3	-	-
BID	6/15/08	BID DOCUMENTS

PROJECT NO:	20080703
CAD DWG FILE:	
DRAWN BY:	B.L.K.
CHECKED BY:	S.M.D.

MECHANICAL DETAILS

MH501

SHEET OF

THIS DRAWING, AS AN INSTRUMENT OF SERVICE, IS AND SHALL REMAIN THE PROPERTY OF SMD ENGINEERING, PLLC AND SHALL NOT BE REPRODUCED, PUBLISHED, OR USED IN ANY WAY WITHOUT THE PERMISSION OF SMD ENGINEERING, PLLC. THE INFORMATION, DESIGN, OR CONCEPTS REPRESENTED ON THIS DRAWING ARE CONFIDENTIAL AND ARE NOT FOR GENERAL DISTRIBUTION. © SMD ENGINEERING, PLLC 2008

THIS DRAWING, AS AN INSTRUMENT OF SERVICE, IS AND SHALL REMAIN THE PROPERTY OF SMD ENGINEERING, PLLC AND SHALL NOT BE REPRODUCED, PUBLISHED, OR USED IN ANY WAY WITHOUT THE PERMISSION OF SMD ENGINEERING, PLLC. THE INFORMATION, DESIGN, OR CONCEPTS REPRESENTED ON THIS DRAWING ARE CONFIDENTIAL AND ARE NOT FOR GENERAL DISTRIBUTION. © SMD ENGINEERING, PLLC 2008

UNIT HEATER SCHEDULE

UH / MBH

MARK	AREA SERVED	HEATING CAPACITY (PROJECT)						CFM	THROW FT	MOUNTING	FAN MOTOR				DIMENSIONS				MANUFACTURER MODEL	REMARKS
		IN MBH	OUT MBH	CONNECT IN	MIN AFUE	FLUE	FUEL				NO.	HP	VOLT/ PHASE	FLA UNIT	W (IN)	D (IN)	H (IN)	WT (LBS)		
UH-1	MAINTENANCE	400	332	3/4	83	6"	NAT GAS	5120	N/A	CEILING	1	1/2	120/ 1ø	11.0	41	42	34	139	REZNOR MODEL UDAS	
UH-2	MAINTENANCE	400	332	3/4	83	6"	NAT GAS	5120	N/A	CEILING	1	1/2	120/ 1ø	11.0	41	42	34	139	REZNOR MODEL UDAS	

NOTE: SINGLE STAGE, HOT SURFACE IGNITION, 100% SHUT-OFF, MULTIPLE RETRY W/ AUTO RESET FROM LOCKOUT. VENT IS SLOPED DOWNWARD 1/4" PER FOOT TOWARDS TERMINATION W/ A LISTED THIMBLE IN WALL PENETRATION, AND LISTED VENT CAP.

EXHAUST FAN SCHEDULE (EF)

EF / CFM

MARK	AREA SERVED	TYPE	CFM	ESP IN WC	FAN RPM	MOTOR			SONES	DAMPER	CONTROL	OPENING SIZE IN	MANUFACTURER MODEL	REMARKS
						BHP	HP	VOLT/ PHASE						
EF-1	SERVICE BAY	WALL PROP. FAN	3000	.150	826	.19	1/4	120/ 1ø	14.5	MOTORIZED	INTERLOCK W/ MAU-1	32/32	COOK XMP 24XMP	
EF-2	SERVICE BAY	WALL PROP. FAN	3000	.150	826	.19	1/4	120/ 1ø	14.5	MOTORIZED	INTERLOCK W/ MAU-1	32/32	COOK XMP 24XMP	

MAKE UP AIR UNIT SCHEDULE (MAU)

MAU / CFM

MARK	CFM	ESP IN WC	FAN		BURNER					CELDEK EVAPORATIVE MEDIA						DIMENSIONS				MANUFACTURER MODEL	REMARKS
			HP	VOLT/ PHASE	TYPE	INPUT MBH	OUT. MBH	TEMP RISE °F	EFF. %	FACE VEL. FPM	PD IN WC	MEDIA DEPTH IN	EFF. %	PUMP HP	PUMP VOLT/ PHASE	L IN	H IN	W IN	WT LBS		
MAU-1	6,000	0.5	5.0	208/ 3ø	DIRECT	370	370	65	100	500 MAX.	0.60	12	92	1/4	120/ 1ø	123	51	48	3000	CAPTIVE-AIRE A3-D.750-G18	NOTE 1, END DISCHARGE

NOTE 1: DIRECT FIRED, 100% OUTSIDE AIR, W/ 2" 30% PLEATED FILTERS, 115 VOLT CONVENIENCE OUTLET, DISCONNECT SWITCH, FIRESTAT, CONTROL RELAY, AND "FACTORY" DISCHARGE AIR TEMPERATURE CONTROL W/ SPACE OVERRIDE AND REMOTE CONTROL CONSOLE, INTERLOCK W/ EF-1 AND EF-2.

AIR DEVICE SCHEDULE

DEVICE / CFM/NCK

MARK	TYPE & DUTY	FACE SIZE H X W	NECK SIZE H X W	CEILING TYPE	MAX. CFM	MAX. T.P. (IN WC)	MAX. NC LEVEL	MIN T50 THROW (FT)	PATTERN	MANUFACTURER MODEL	REMARKS
S-1	DOUBLE DEFLECTION SUPPLY GRILLE	42/42	40/40	WALL	6,000	0.07	30	110	ADJ.	KREUGER 880	W/ SURFACE MOUNT FRAME

PLUMBING FIXTURE SCHEDULE

FIXTURE

MARK	FIXTURE	ROUGH IN SIZE					MANUFACTURER MODEL	REMARKS
		WASTE IN	TRAP IN	VENT IN	HW IN	CW IN		
HB-1	HOSE BIBB	N/A	N/A	N/A	N/A	3/4	ZURN Q1343	ROUGH BRONZE LAWN FAUCET.
YH-1	YARD HYDRANT	N/A	N/A	N/A	N/A	1	WOODFORD IOWA Y34	3' BURY DEPTH, FREEZELESS YARD HYDRANT, 1" FEMALE NPT INLET, 1 1/4" CASING, 3/8" GALVANIZED OPERATING ROD, 3/4" BRASS HOSE NOZZLE
TP-1	TRAP PRIMER	N/A	N/A	N/A	N/A	1/2	PPP 500	TRAP PRIMER.
DSN	DOWNSPOUT NOZZLE	X	N/A	N/A	N/A	N/A	ZURN ZARB-199 "X" INDICATED ON DRAWINGS	DOWNSPOUT NOZZLE, ROUGH BRONZE BODY, THREADED INLET, DECORATIVE FACE, AND BIRDSCREEN.
FD-1	HEAVY DUTY FLOOR DRAIN	X	X	X/2 2" MIN	N/A	N/A	ZURN FD-2310-NH"X"-P-Y-C "X" INDICATED ON DRAWINGS	CAST IRON BODY, HEAVY DUTY ADJUSTABLE NICKEL BRONZE STRAINER ASSEMBLY, MEMBRANE CLAMP, SEDIMENT BUCKET, AND TRAP PRIMER CONNECTION.

COOPER ROBERTS SIMONSEN ASSOCIATES
crsa
700 NORTH 200 WEST
SALT LAKE CITY,UTAH 84103
(801) 355-5915
(801)355-9885 FAX
WWW.CRSA-US.COM

STRUCTURAL ENGINEER
CALDER RICHARDS CONSULTING ENGINEERS
2015 S 1100 EAST
SALT LAKE CITY, UT 84106
(801) 466-1699 (801) 467-2495 FAX
stephen@crceng.com

MECHANICAL ENGINEER
SMD
986 WEST ATHERTON DRIVE STE. 200
TAYLORSVILLE, UTAH 84123
(801)268-3828 FAX (801)268-3297
# #

ELECTRICAL ENGINEER
SPECTRUM
175 S MAIN STREET STE. 300
SALT LAKE CITY, UTAH 84111
(801)328-5151 (801)401-9471
# #

SMD ENGINEERING, PLLC
"Engineered Mechanical Solutions"
986 WEST ATHERTON DRIVE
TAYLORSVILLE, UT 84123
(801) 268-3828, FAX (801) 268-3297

UTNG WJRC
OMS SHOP ADDN.
DFCM NO. 8031480
7602 SOUTH AIRPORT ROAD
WEST JORDAN, UTAH

UTAH NATIONAL GUARD

12953 SOUTH MINUTEMAN DRIVE.
DRAPER UTAH 84020-1776

2		
1		
-	-	-
-	-	-
-	-	-
BID	8/15/08	BID DOCUMENTS

PROJECT NO: 20080703
CAD DWG FILE:
DRAWN BY: B.L.K.
CHECKED BY: S.M.D.

MECHANICAL SCHEDULES

MH601

SHEET OF

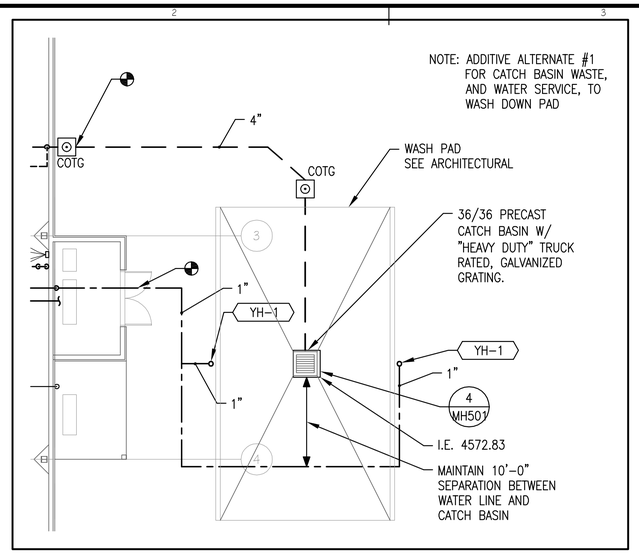

2 PP101 ADDITIVE ALETERNATE #1

NORTH

8' 4' 2' 0 8' 16'

SCALE: 1/8" = 1'-0"

KEYED NOTES

1. NEW 3/4" SCHEDULE 40 STEEL OIL PIPE. CONNECT TO PUMP OUTLET AND OIL TANK.
2. RUN PIPE "TIGHT" TO ROOF JOISTS.

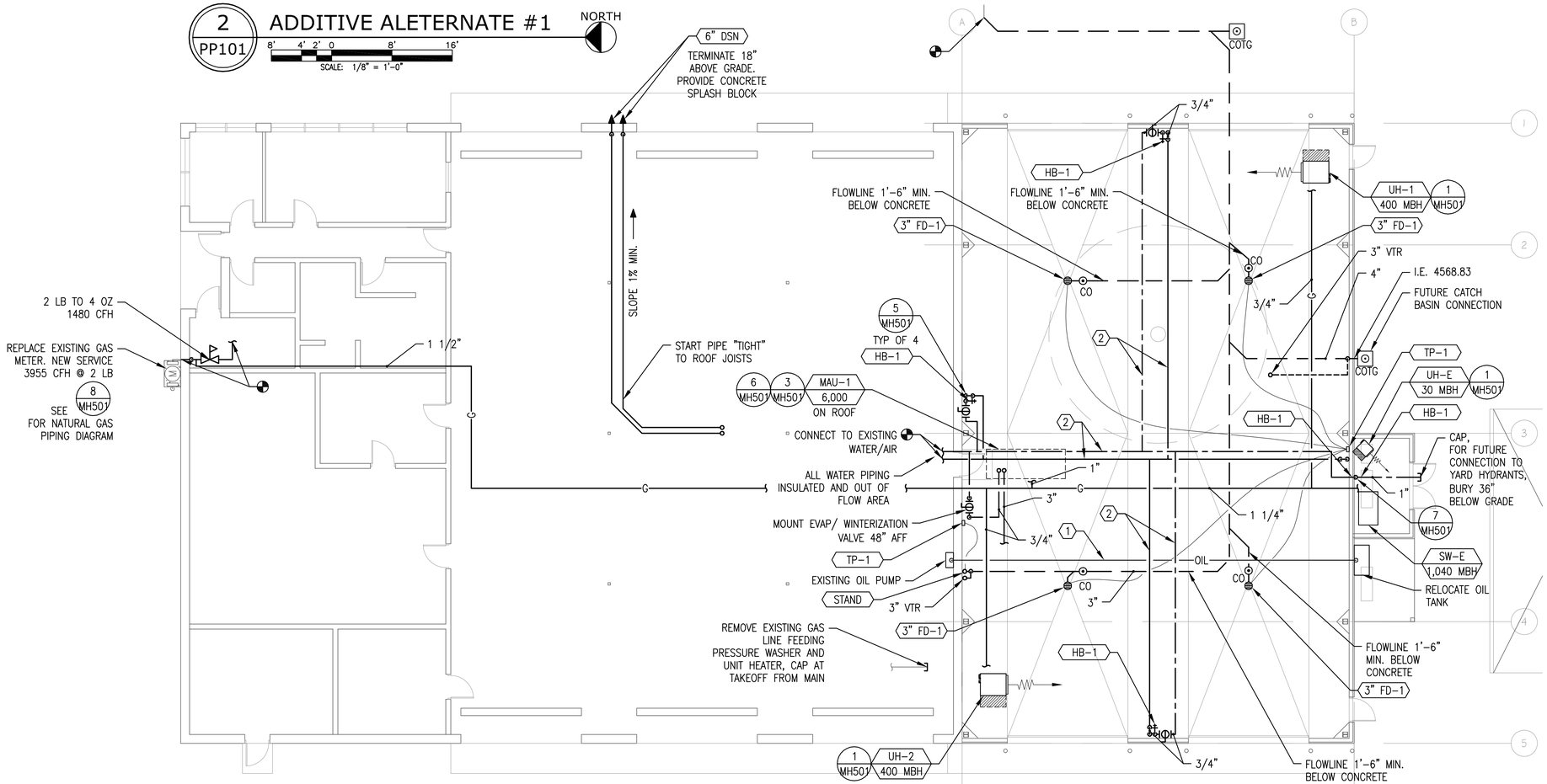

1 PP101 PLUMBING MAIN LEVEL FLOOR PLAN

NORTH

8' 4' 2' 0 8' 16'

SCALE: 1/8" = 1'-0"

COOPER ROBERTS SIMONSEN ASSOCIATES

crsa

700 NORTH 200 WEST
SALT LAKE CITY,UTAH 84103
(801) 355-5915
(801)355-9885 FAX
WWW.CRSA-US.COM

STRUCTURAL ENGINEER
CALDER RICHARDS CONSULTING ENGINEERS
2015 S 1100 EAST
SALT LAKE CITY, UT 84106
(801) 466-1699 (801) 467-2495 FAX
stephen@crceng.com

MECHANICAL ENGINEER
SMD
986 WEST ATHERTON DRIVE STE. 200
TAYLORSVILLE, UTAH 84123
(801)268-3828 FAX (801)268-3297
# #

ELECTRICAL ENGINEER
SPECTRUM
175 S MAIN STREET STE. 300
SALT LAKE CITY, UTAH 84111
(801)328-5151 (801)401-9471
# #

SMD ENGINEERING, PLLC
"Engineered Mechanical Solutions"
986 WEST ATHERTON DRIVE
TAYLORSVILLE, UT 84123
(801) 268-3828, FAX (801) 268-3297

UTNG WJRC
OMS SHOP ADDN.
DFCM NO. 8031480
7602 SOUTH AIRPORT ROAD
WEST JORDAN, UTAH

UTAH NATIONAL GUARD

12953 SOUTH MINUTEMAN DRIVE.
DRAPER UTAH 84020-1776

2		
1		
-	-	-
-	-	-
-	-	-
BID	8/15/08	BID DOCUMENTS

PROJECT NO:	20080703
CAD DWG FILE:	
DRAWN BY:	B.L.K.
CHECKED BY:	S.M.D.

PLUMBING MAIN LEVEL FLOOR PLAN

PP101

SHEET OF

THIS DRAWING, AS AN INSTRUMENT OF SERVICE, IS AND SHALL REMAIN THE PROPERTY OF SMD ENGINEERING, PLLC AND SHALL NOT BE REPRODUCED, PUBLISHED, OR USED IN ANY WAY WITHOUT THE PERMISSION OF SMD ENGINEERING, PLLC. THE INFORMATION, DESIGN, OR CONCEPTS REPRESENTED ON THIS DRAWING ARE CONFIDENTIAL AND ARE NOT FOR GENERAL DISTRIBUTION. © SMD ENGINEERING, PLLC 2008

SYMBOL LEGEND

SYMBOL	DESCRIPTION
REFERENCE AND LINE SYMBOLS	
A5 / E-501	DETAIL INDICATOR: A5 INDICATES DETAIL NUMBER, E-501 INDICATES DRAWING SHEET WHERE DETAIL IS SHOWN.
A5 / E-201	ELEVATION OR SECTION INDICATOR, EXTERIOR: A5 INDICATES ELEVATION OR SECTION NUMBER, E-201 INDICATES DRAWING SHEET WHERE ELEVATION OR SECTION IS SHOWN.
A5 / E-201	ELEVATION OR SECTION INDICATOR, INTERIOR: A5 INDICATES ELEVATION OR SECTION NUMBER, E-201 INDICATES DRAWING SHEET WHERE ELEVATION OR SECTION IS SHOWN.
100	ROOM OR SPACE NUMBER.
1	KEYNOTE INDICATOR.
1	REVISION INDICATOR.
CU-1	EQUIPMENT INDICATOR.
	BREAK, STRAIGHT: TO BREAK PARTS OF DRAWING.
	BREAK, ROUND.
	NEW LINE: MEDIUM LINE.
	HIDDEN FEATURES LINE: HIDDEN, THIN LINE.
	EXISTING TO REMAIN LINE: THIN LINE.
	DEMOLITION LINE: DASHED, MEDIUM LINE.
WIRING METHODS	
	WIRING.
A-1,3,5	BRANCH CIRCUIT HOME RUN TO PANELBOARD: NUMBER OF ARROWS INDICATES NUMBER OF CIRCUITS. LETTER AND NUMBER NOTATIONS IDENTIFY PANEL AND CIRCUIT NUMBERS. USE #12 CONDUCTORS, EXCEPT #10 CONDUCTORS SHALL BE INSTALLED IF DISTANCES EXCEED THOSE SPECIFIED IN SECTION 16120.
1 A-1,3,5	BRANCH CIRCUIT HOME RUN TO PANELBOARD: NUMBER OF ARROWS INDICATES NUMBER OF CIRCUITS. LETTER AND NUMBER NOTATIONS IDENTIFY PANEL AND CIRCUIT NUMBERS. NUMBER IN BOX REFERS TO THE CONDUCTOR AND CONDUIT SCHEDULE. FOR BRANCH WIRING USE #12 CONDUCTORS, EXCEPT #10 CONDUCTORS SHALL BE INSTALLED IF DISTANCES EXCEED THOSE SPECIFIED IN SECTION 16120.
	FLEXIBLE WIRING.
	LOW VOLTAGE WIRING: DIVIDE, MEDIUM LINE.
	CONDUIT STUB. DIMENSION RECORD DRAWINGS AND MARK.
1	CONDUCTOR & CONDUIT ("CC") SCHEDULE INDICATOR. REFER TO ONE-LINE DIAGRAM.
	EARTH GROUND (ONE-LINE DIAGRAM).
C	JUNCTION BOX, CEILING.
	JUNCTION BOX.
LIGHTING (REFER TO FIXTURE SCHEDULE FOR SYMBOLS)	
(W-3)	FIXTURE IDENTIFICATION: (W-3) INDICATES FIXTURE TYPE AS SCHEDULED.
(W-3)	FIXTURE IDENTIFICATION, EMERGENCY WITH BATTERY PACK, CONNECTED TO GENERATOR AS INDICATED: (W-3) INDICATES FIXTURE TYPE AS SCHEDULED.
LIGHTING CONTROL	
	OCCUPANCY SENSOR, DUAL TECHNOLOGY, OMNI-DIRECTIONAL, CEILING.
P	PHOTOCELL.
TC	TIME CLOCK.
WIRING DEVICES	
	RECEPTACLE, DUPLEX WITH GROUND FAULT CIRCUIT INTERRUPTER: NEMA 5-20R.
WP	RECEPTACLE, DUPLEX WITH GROUND FAULT CIRCUIT INTERRUPTER, WEATHERPROOF: NEMA 5-20R.
CR	CORD REEL. SEE DETAIL.
X $	SWITCH, SINGLE POLE ("x" INDICATES FIXTURES CONTROLLED).
X $3	SWITCH, THREE-WAY ("x" INDICATES FIXTURES CONTROLLED).
X $4	SWITCH, FOUR-WAY ("x" INDICATES FIXTURES CONTROLLED).
CCTV	
	CCTV CAMERA/ENCLOSURE WITH LENS, TYPICAL. SEE SCHEDULE.

SYMBOL LEGEND

SYMBOL	DESCRIPTION
ELECTRICAL POWER AND DISTRIBUTION	
	DISCONNECT, FUSED (ONE-LINE DIAGRAM).
	DISCONNECT, NONFUSED (ONE-LINE DIAGRAM).
	CIRCUIT BREAKER, MOLDED CASE (ONE-LINE DIAGRAM).
	CIRCUIT BREAKER, SOLID STATE (ONE-LINE DIAGRAM).
	MOTOR.
	TRANSFORMER (ONE-LINE DIAGRAM).
225/3 "1H"	PANELBOARD WITH MAIN LUGS ONLY. BUS SIZE AND PHASE AS SHOWN (ONE-LINE DIAGRAM).
225/3 "1H" 60/3	PANELBOARD WITH MAIN AND SUB FEED CIRCUIT BREAKER (ONE-LINE DIAGRAM).
DMM	DIGITAL MULTIMETER (ONE-LINE DIAGRAM).
	SERVICE ENTRANCE SURGE PROTECTION (ONE-LINE DIAGRAM).
	DISCONNECT SWITCH, FUSED.
	DISCONNECT SWITCH, UNFUSED.
	STARTER, COMBINATION WITH DISCONNECT SWITCH.
	STARTER OR MOTOR CONTROLLER.
	PUSHBUTTON.
	PUSHBUTTONS, MOTOR CONTROL.
	PANELBOARD CABINET, SURFACE MOUNTED, 1 SECTION.
DP#__	DISTRIBUTION PANEL OR SWITCHBOARD.
LP	LIGHTING RELAY, CONTACTOR PANEL, OR DIMMING ENCLOSURE.
$ST	SWITCH, TOGGLE MOTOR STARTER WITH OVERLOAD PROTECTION.
75	TRANSFORMER: NUMBER INDICATES kVA.
FIRE ALARM	
	DETECTOR, HEAT.
75	ALARM, HORN/STROBE, ONE ASSEMBLY. SUBSCRIPT INDICATES CANDELA RATING.

ELECTRICAL SHEET INDEX

SHEET NO	SHEET TITLE
EE001	SYMBOL LEGEND & SHEET INDEX
EE501	TYPICAL MOUNTING HEIGHT DETAILS
EE502	DETAILS
EE503	DETAILS
ED101	ELECTRICAL DEMOLITION PLAN
EP101	MAIN LEVEL POWER PLAN
EP601	EXISTING ONE-LINE DIAGRAM
EP602	POWER SCHEDULES
EL101	MAIN LEVEL LIGHTING PLAN
EL201	LIGHTING ELEVATIONS
EL601	LIGHTING FIXTURE SCHEDULE
FA101	MAIN LEVEL FIRE ALARM PLAN

ABBREVIATIONS

NOTE: ALL ABBREVIATIONS MAY NOT BE USED.

1P	SINGLE POLE	KV	KILOVOLT
1PH	SINGLE-PHASE	KVA	KILOVOLT AMPERE
1WAY	ONE-WAY	kVAR	KILOVOLT AMPERE REACTIVE
2/C	TWO-CONDUCTOR	kW	KILOWATT
2WAY	TWO-WAY	kWh	KILOWATT HOUR
3/C	THREE-CONDUCTOR	LED	LIGHT EMITTING DIODE
3PH	THREE-PHASE	LFMC	LIQUID TIGHT FLEXIBLE METAL CONDUIT
3WAY	THREE-WAY	LFNC	LIQUID TIGHT FLEXIBLE NONMETALLIC CONDUIT
4OUT	QUADRUPLE RECEPTACLE OUTLET	LPS	LOW PRESSURE SODIUM
4PDT	FOUR-POLE DOUBLE THROW	LRA	LOCKED ROTOR AMPS
4PST	FOUR-POLE SINGLE THROW	LTG	LIGHTING
4W	FOUR-WIRE	LV	LOW VOLTAGE
4WAY	FOUR-WAY	MATV	MASTER ANTENNA TELEVISION SYSTEM
A	ABOVE COUNTER	MAX	MAXIMUM
AC	ARMORED CABLE	MC	METAL CLAD
ADA	AMERICANS WITH DISABILITIES ACT	MCA	MINIMUM CIRCUIT AMPS
ADJ	ADJACENT	MCB	MAIN CIRCUIT BREAKER
AFF	ABOVE FINISHED FLOOR	MCC	MOTOR CONTROL CENTER
AFG	ABOVE FINISHED GRADE	MCP	MOTOR CIRCUIT PROTECTION
AIC	AMPERE INTERRUPTING CAPACITY	MDP	MAIN DISTRIBUTION PANEL
ALUM	ALUMINUM	MG	MOTOR GENERATOR
AMP	AMPERE	MH	MANHOLE
ANN	ANNUNCIATOR	MIN	MINIMUM
AP	ACCESS POINT (WIRELESS DATA)	MLO	MAIN LUGS ONLY
AR	AS REQUIRED	MOCP	MAXIMUM OVERCURRENT PROTECTION
ASC	AMPS SHORT CIRCUIT	NA	NOT APPLICABLE
ATS	AUTOMATIC TRANSFER SWITCH	NC	NORMALLY CLOSED
AV	AUDIO VISUAL	NEC	NATIONAL ELECTRICAL CODE
AWG	AMERICAN WIRE GAGE	NEMA	NATIONAL ELECTRICAL MANUFACTURERS ASSOCIATION
BB XFMR	BUCK-BOOST TRANSFORMER	NFC	NATIONAL FIRE CODE
C	CEILING MOUNTED	NFPA	NATIONAL FIRE PROTECTION ASSOCIATION
CATV	COMMUNITY ANTENNA TELEVISION	NIC	NOT IN CONTRACT
CB	CIRCUIT BREAKER	NL	NIGHT LIGHT
CCBA	CUSTOM COLOR AS SELECTED BY ARCHITECT	NO	NORMALLY OPEN
CCTV	CLOSED CIRCUIT TELEVISION	NTS	NOT TO SCALE
CFBA	CUSTOM FINISH AS SELECTED BY ARCHITECT	OC	ON CENTER
CF/CI	CONTRACTOR FURNISHED/ CONTRACTOR INSTALLED	OCP	OVER CURRENT PROTECTION
CF/OI	CONTRACTOR FURNISHED/ OWNER INSTALLED	OF/CI	OWNER FURNISHED/ CONTRACTOR INSTALLED
CKT	CIRCUIT	OF/OI	OWNER FURNISHED/ OWNER INSTALLED
CM	CONSTRUCTION MANAGER	OFP	OBTAIN FROM PLANS
CND	CONDUIT	OH DR	OVERHEAD (COILING) DOOR
CO	CONVENIENCE OUTLET	OL	OVERLOAD
COR	CONTRACTING OFFICER'S REPRESENTATIVE	PB	PUSHBUTTON
CP	CONTROL PANEL	PF	POWER FACTOR
CT	CURRENT TRANSFORMER	PH	PHASE
CTV	CABLE TELEVISION	PNL	PANEL
CU	COPPER	PT	POTENTIAL TRANSFORMER
dBA	UNIT OF SOUND LEVEL	PTZ	PAN/TILT/ZOOM
DPDT	DOUBLE POLE DOUBLE THROW	QTY	QUANTITY
DS	DISCONNECT SWITCH	R	REMOVE
EA	EACH	RCP	REFLECTED CEILING PLAN
EM	EMERGENCY	RMC	RIGID METAL CONDUIT
EMT	ELECTRICAL METALLIC TUBING	RNC	RIGID NONMETALLIC CONDUIT
ENT	ELECTRICAL NONMETALLIC TUBING	RPM	REVOLUTIONS PER MINUTE
EPO	EMERGENCY POWER OFF	RR	REMOVE AND RELOCATE
EQUIP	EQUIPMENT	SCA	SHORT CIRCUIT AMPS
EX	EXISTING	SCBA	STANDARD COLOR AS SELECTED BY ARCHITECT
F	FURNITURE MOUNTED	SF	SQUARE FOOT (FEET)
FA	FIRE ALARM	SFBA	STANDARD FINISH AS SELECTED BY ARCHITECT
FCP	FIRE ALARM CONTROL PANEL	SPDT	SINGLE POLE, DOUBLE THROW
FLA	FULL LOAD AMPS	SPEC	SPECIFICATION
FMC	FLEXIBLE METALCONDUIT	SPST	SINGLE POLE, SINGLE THROW
FOB	FREIGHT ON BOARD	S/S	START/STOP
FVNR	FULL VOLTAGE NON-REVERSING	ST	SINGLE THROW
FVR	FULL VOLTAGE REVERSING	SWBD	SWITCHBOARD
G	GROUND	SWGR	SWITCHGEAR
GEN	GENERATOR	TL	TWIST LOCK
GFCI	GROUND FAULT CIRCUIT INTERRUPTER	TP	TELEPHONE POLE
GFP	GROUND FAULT PROTECTION	TP	TWISTED PAIR
HD	HEAVY DUTY	TTB	TELEPHONE TERMINAL BOARD
HID	HIGH INTENSITY DISCHARGE	TV	TELEVISION
HOA	HAND-OFF-AUTOMATIC	TVSS	TRANSIENT VOLTAGE SURGE SUPPRESSER
HP	HORSE POWER	TYP	TYPICAL
HPF	HIGH POWER FACTOR	UF	UNDERFLOOR
HPS	HIGH PRESSURE SODIUM	UGND	UNDERGROUND
HV	HIGH VOLTAGE	UPS	UNINTERRUPTIBLE POWER SUPPLY
HZ	HERTZ	V	VOLTS
IG	ISOLATED GROUND	VA	VOLT AMPERE
IMC	INTERMEDIATE METAL CONDUIT	VFC/VFD	VARIABLE FREQUENCY MOTOR CONTROLLER
IN/IS	INSULATED/ISOLATED	W/	WITH
I/O	INPUT/OUTPUT	W/O	WITHOUT
IR	INFRARED	WP	WEATHERPROOF
J-BOX	JUNCTION BOX	XFMR	TRANSFORMER

GENERAL ELECTRICAL NOTES

1. CLARIFICATION METHODS: AT THE TIME OF BIDDING, BIDDERS SHALL FAMILIARIZE THEMSELVES WITH THE DRAWINGS AND SPECIFICATIONS. ANY QUESTIONS, MISUNDERSTANDINGS, CONFLICTS, DELETIONS, DISCONTINUED PRODUCTS, CATALOG NUMBER DISCREPANCIES, DISCREPANCIES BETWEEN THE EQUIPMENT SUPPLIED AND THE INTENT OR FUNCTION OF THE EQUIPMENT, ETC, SHALL BE SUBMITTED TO THE ARCHITECT/ENGINEER IN WRITING FOR CLARIFICATION PRIOR TO ISSUANCE OF THE FINAL ADDENDUM AND BIDDING OF THE PROJECT. WHERE DISCREPANCIES OR MULTIPLE INTERPRETATIONS OCCUR, THE MOST STRINGENT (WHICH IS GENERALLY RECOGNIZED AS THE MOST COSTLY) THAT MEETS THE INTENT OF THE DOCUMENTS SHALL BE ENFORCED.

2. OWNER FURNISHED ITEMS: THE OWNER WILL FURNISH MATERIAL AND EQUIPMENT AS INDICATED IN THE CONTRACT DOCUMENTS TO BE INCORPORATED INTO THE WORK. THESE ITEMS ARE ASSIGNED TO THE INSTALLER AND COSTS FOR RECEIVING, HANDLING, STORAGE, IF REQUIRED, AND INSTALLATION ARE INCLUDED IN THE CONTRACT SUM.

   A. THE INSTALLER'S RESPONSIBILITIES ARE THE SAME AS IF THE INSTALLER FURNISHED THE MATERIALS OR EQUIPMENT.

   B. THE OWNER WILL ARRANGE AND PAY FOR DELIVERY OF OWNER FURNISHED ITEMS FREIGHT ON BOARD JOB SITE AND THE INSTALLER WILL INSPECT DELIVERIES FOR DAMAGE. IF OWNER FURNISHED ITEMS ARE DAMAGED, DEFECTIVE OR MISSING, DOCUMENT DAMAGED ITEMS WITH THE TRANSPORT COMPANY AND THE OWNER WILL ARRANGE FOR REPLACEMENT. THE OWNER WILL ALSO ARRANGE FOR MANUFACTURER'S FIELD SERVICES, AND THE DELIVERY OF MANUFACTURER'S WARRANTIES AND BONDS TO THE INSTALLER.

   C. THE INSTALLER IS RESPONSIBLE FOR DESIGNATING THE DELIVERY DATES OF OWNER FURNISHED ITEMS AND FOR RECEIVING, UNLOADING AND HANDLING OWNER FURNISHED ITEMS AT THE SITE. THE INSTALLER IS RESPONSIBLE FOR PROTECTING OWNER FURNISHED ITEMS FROM DAMAGE, INCLUDING DAMAGE FROM EXPOSURE TO THE ELEMENTS, AND TO REPAIR OR REPLACE ITEMS DAMAGED AS A RESULT OF HIS OPERATIONS.

3. EXPOSED STRUCTURE AREAS (EXCLUDING MECHANICAL, ELECTRICAL, AND COMMUNICATION SPACES): INSTALL RACEWAYS BETWEEN DECK AND STRUCTURE WHEREVER POSSIBLE IN EXPOSED STRUCTURE CEILING AREAS. ROUTE RACEWAYS IN CONCEALED AREAS WHEREVER POSSIBLE. REFER ALL CONDITIONS WHERE RACEWAYS MUST BE INSTALLED WHICH CANNOT COMPLY WITH THESE REQUIREMENTS TO THE ARCHITECT.

4. SUBMITTALS: PROVIDE SUBMITTALS IN THREE RING BINDERS WITH JOB NAME, SUBCONTRACTOR, AND VOLUME ON THE BINDING. PREPARE TABS FOR EACH SPECIFICATION SECTION REQUIRING SUBMITTALS. PREPARE INDEX OF EQUIPMENT SUBMITTED IN EACH TAB.

5. REFLECTED CEILING PLANS: COORDINATE THE LOCATION OF LIGHT FIXTURES WITH THE ARCHITECTURAL REFLECTED CEILING PLANS. REFER ALL DISCREPANCIES TO THE ARCHITECT AND ENGINEER.

DEFINITIONS

NOTE: ALL DEFINITIONS MAY NOT BE USED.

INDICATED: THE TERM "INDICATED" REFERS TO GRAPHIC REPRESENTATIONS, NOTES, OR SCHEDULES ON THE DRAWINGS, OTHER PARAGRAPHS OR SCHEDULES IN THE SPECIFICATIONS, AND SIMILAR REQUIREMENTS IN THE CONTRACT DOCUMENTS. WHERE TERMS SUCH AS "SHOWN", "NOTED", "SCHEDULED", AND "SPECIFIED" ARE USED, IT IS TO HELP THE READER LOCATE THE REFERENCE, NO LIMITATION ON LOCATION IS INTENDED.

DIRECTED: TERMS SUCH AS "DIRECTED", "REQUESTED", AUTHORIZED", "SELECTED", "APPROVED", "REQUIRED", AND "PERMITTED" MEAN "DIRECTED BY THE ENGINEER", "REQUESTED BY THE ENGINEER", AND SIMILAR PHRASES.

APPROVED: THE TERM "APPROVED", WHERE USED IN CONJUNCTION WITH THE ENGINEER'S ACTION ON THE CONTRACTOR'S SUBMITTALS, APPLICATIONS, AND REQUESTS, IS LIMITED TO THE ENGINEER'S DUTIES AND RESPONSIBILITIES AS STATED IN GENERAL AND SUPPLEMENTARY CONDITIONS.

FURNISH: THE TERM "FURNISH" IS USED TO MEAN "SUPPLY AND DELIVER TO THE PROJECT SITE, READY FOR UNLOADING, UNPACKING, ASSEMBLY, INSTALLATION, AND SIMILAR OPERATIONS."

INSTALL: THE TERM "INSTALL" IS USED TO DESCRIBE OPERATIONS AT PROJECT SITE INCLUDING THE ACTUAL "UNLOADING, UNPACKING, ASSEMBLY, ERECTION, PLACING, ANCHORING, APPLYING, WORKING TO DIMENSION, FINISHING, CURING, PROTECTING, CLEANING, AND SIMILAR OPERATIONS."

PROVIDE: THE TERM "PROVIDE" MEANS "TO FURNISH AND INSTALL, COMPLETE AND READY FOR THE INTENDED USE."

INSTALLER: AN "INSTALLER" IS THE CONTRACTOR OR AN ENTITY ENGAGED BY THE CONTRACTOR, EITHER AS AN EMPLOYEE, SUBCONTRACTOR, OR SUB-SUBCONTRACTOR, FOR PERFORMANCE OF A PARTICULAR CONSTRUCTION ACTIVITY, INCLUDING INSTALLATION, ERECTION, APPLICATION, AND SIMILAR OPERATIONS. INSTALLERS ARE REQUIRED TO BE EXPERIENCED IN THE OPERATIONS THEY ARE ENGAGED TO PERFORM.

TECHNOLOGY SYSTEMS: THE TERM "TECHNOLOGY SYSTEMS" IS USED TO DESCRIBE ALL LOW VOLTAGE SYSTEMS GENERALLY REFERRED TO AS "SPECIAL SYSTEMS". THESE SYSTEMS INCLUDE BUT ARE NOT NECESSARILY LIMITED TO ALL SYSTEMS WHICH UTILIZE VOLTAGES OF LESS THAN 71 VOLTS SUCH AS SOUND SYSTEMS, VIDEO SYSTEMS, TV SYSTEMS, SECURITY SYSTEMS, VOICE AND DATA CABLING SYSTEMS, ETC...

COOPER ROBERTS SIMONSEN ASSOCIATES

crsa

700 NORTH 200 WEST
SALT LAKE CITY,UTAH 84103
(801) 355-5915
(801) 355-9885 FAX
WWW.CRSA-US.COM

STRUCTURAL ENGINEER
CALDER RICHARDS CONSULTING ENGINEERS
634 South 400 West Suite 100
SALT LAKE CITY, UT 84101
(801) 466-1699 (801) 467-2495 FAX
stephen@crceng.com

MECHANICAL ENGINEER
SMD
986 WEST ATHERTON DRIVE STE. 200
TAYLORSVILLE, UTAH 84123
(801)268-3828 FAX (801)268-3297

ELECTRICAL ENGINEER
SPECTRUM
175 S MAIN STREET STE. 300
SALT LAKE CITY, UTAH 84111
(801)328-5151 (801)401-9471

UTNG WJRC
OMS SHOP ADDN.
DFCM NO. 8031480
7602 SOUTH AIRPORT ROAD
WEST JORDAN, UTAH

UTAH NATIONAL GUARD
12953 SOUTH
MINUTEMAN DRIVE.
DRAPER UTAH 84020-1776

2		
1		
-	-	-
-	-	-
-	-	-
BID	8/15/08	BID DOCUMENTS

PROJECT NO:	B08-024
CAD DWG FILE:	21EE-001.dwg
DRAWN BY:	PSS
CHECKED BY:	DLA

SYMBOL LEGEND & SHEET INDEX

EE001

SHEET OF

File Name: P:\2008\20080321\1Drawings\Sheet\21EE-001.dwg Last Plotted: 2008/08/29 @ 6:05 PM By: pss

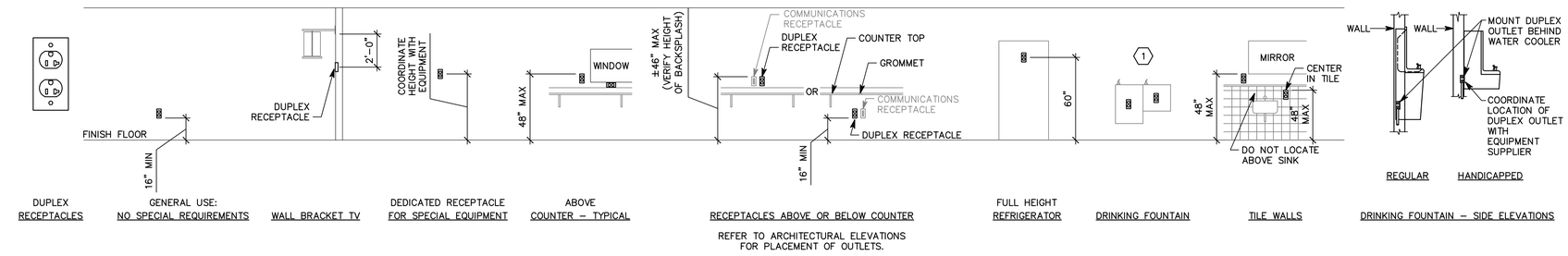

REFER TO ARCHITECTURAL ELEVATIONS FOR PLACEMENT OF OUTLETS.

D1 RECEPTACLE MOUNTING DETAILS

NTS

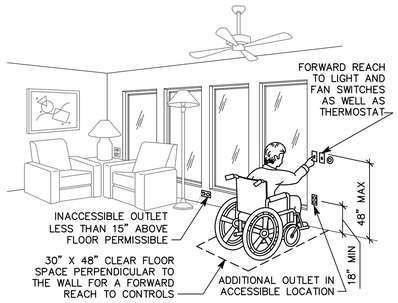

C1 ADA DETAIL

NTS

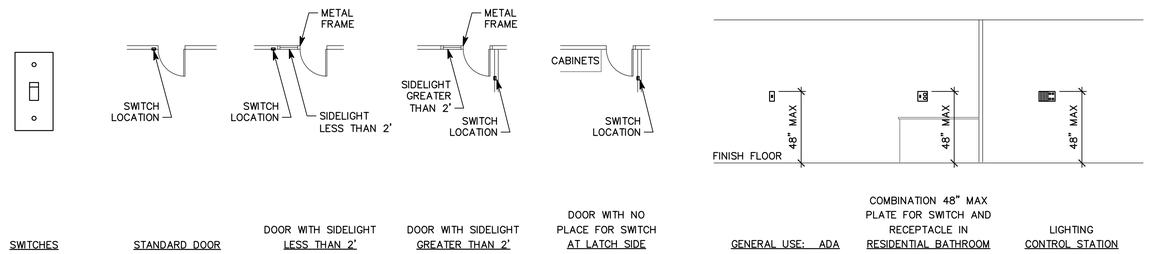

C2 SWITCH MOUNTING DETAILS

NTS

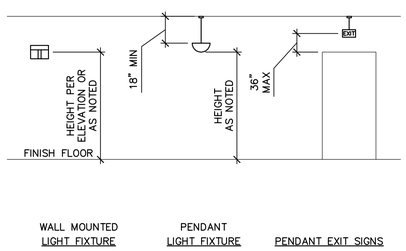

B1 LIGHTING MOUNTING DETAILS

NTS

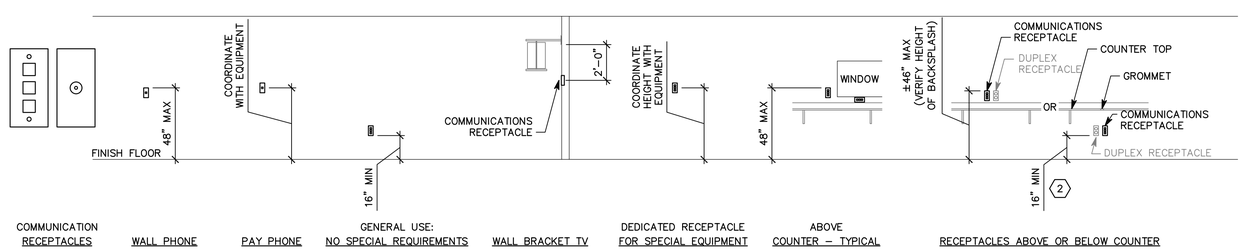

B2 COMMUNICATION MOUNTING DETAILS

NTS

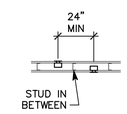

B5 BOX MOUNTING DETAILS

NTS

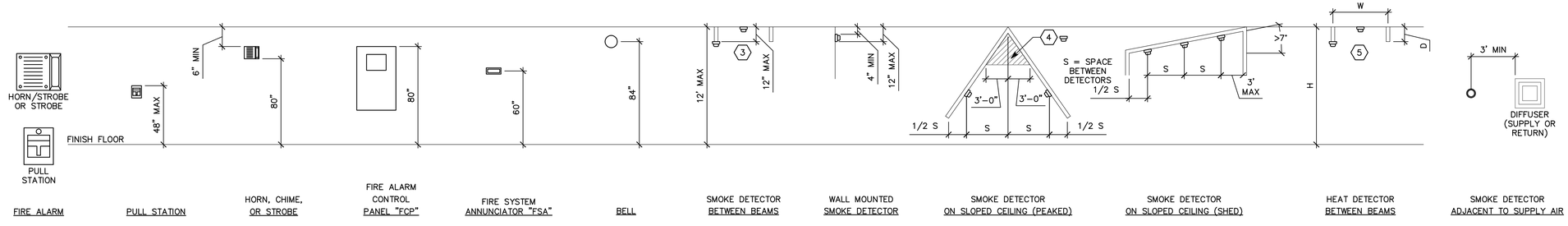

A1 FIRE ALARM MOUNTING DETAILS

NTS

GENERAL SHEET NOTES

1. DETERMINE MOUNTING HEIGHTS OF ELECTRICAL AND ELECTRONIC EQUIPMENT IN THE FOLLOWING ORDER OF PRIORITY:

   1 – ELEVATIONS (ARCHITECTURAL, ELECTRICAL, MECHANICAL, ETC).
   2 – EQUIPMENT SHOP DRAWINGS.
   3 – FIELD INSTRUCTIONS.

2. LOCATE RECEPTACLES SERVING THE SAME TYPE OF USE AT A UNIFORM HEIGHT UNLESS DIRECTED OTHERWISE.
3. MECHANICAL, ELECTRICAL, AND COMMUNICATION ROOMS: COORDINATE LOCATION OF LIGHTING AND POWER RECEPTACLES WITH EQUIPMENT, PIPING, AND DUCTWORK. DO NOT INSTALL RECEPTACLES BEHIND EQUIPMENT OR WHERE OTHERWISE INACCESSIBLE. POSITION LIGHTING REGARDLESS OF WHERE SHOWN ON DRAWING TO PROVIDE PROPER ILLUMINATION.
4. MOUNT RECEPTACLE BOXES FOR SWITCHES AND RECEPTACLES WITH LONG AXIS OF THE DEVICE VERTICAL UNLESS OTHERWISE INDICATED.
5. SET BOXES WITH PLASTER RINGS FLUSH WITH FINISHED SURFACE.
6. LOCATE BOX COVERS OR DEVICE PLATES SO THEY WILL NOT SPAN DIFFERENT TYPES OF BUILDING FINISHES EITHER VERTICALLY OR HORIZONTALLY.
7. VERIFY ALL DOOR CONDITIONS ON ARCHITECTURAL DRAWINGS PRIOR TO INSTALLING SWITCHES.
8. LOCATE WIRING DEVICES WHICH ARE ADJACENT AND ARE COMPATIBLE VOLTAGES IN ONE PLATE.

⬡ SHEET KEYNOTES

1. LOCATE RECEPTACLES BEHIND DRINKING FOUNTAINS.
2. REFER TO ARCHITECTURAL ELEVATIONS FOR PLACEMENT OF OUTLETS.
3. LOCATE AT BOTTOM OF BEAMS (OR JOISTS) OR AT CEILING. (REDUCE SPACING BY .5 PERPENDICULAR TO BEAM OR JOIST DIRECTION.) FOR OTHER CONDITIONS, REFER TO NFPA 72.
4. LOCATE SMOKE DETECTOR ANYWHERE IN SHADED AREA.
5. LOCATE AT BOTTOM OF BEAMS IF EITHER D/H < .1 OR W/H < .4; OTHERWISE, LOCATE IN BEAM POCKET.

COOPER ROBERTS SIMONSEN ASSOCIATES

crsa

700 NORTH 200 WEST
SALT LAKE CITY,UTAH 84103
(801) 355-5915
(801) 355-9885 FAX
WWW.CRSA-US.COM

STRUCTURAL ENGINEER
CALDER RICHARDS CONSULTING ENGINEERS
634 South 400 West Suite 100
SALT LAKE CITY, UT 84101
(801) 466-1699 (801) 467-2495 FAX
stephen@crceng.com

MECHANICAL ENGINEER
SMD
986 WEST ATHERTON DRIVE STE. 200
TAYLORSVILLE, UTAH 84123
(801)268-3828 FAX (801)268-3297

ELECTRICAL ENGINEER
SPECTRUM
175 S MAIN STREET STE. 300
SALT LAKE CITY, UTAH 84111
(801)328-5151 (801)401-9471

UTNG WJRC
OMS SHOP ADDN.
DFCM NO. 8031480
7602 SOUTH AIRPORT ROAD
WEST JORDAN, UTAH

UTAH NATIONAL GUARD
12953 SOUTH
MINUTEMAN DRIVE.
DRAPER UTAH 84020-1776

2		
1		
-	-	-
-	-	-
-	-	-
BID	8/15/08	BID DOCUMENTS

PROJECT NO: B08-024
CAD DWG FILE: 21EE-501.dwg
DRAWN BY: PSS
CHECKED BY: DLA

TYPICAL MOUNTING HEIGHT DETAILS

EE501

SHEET OF

File Name: P:\2008\20080321\1Drawings\Sheet\21EE-501.dwg Last Plotted: 2008/08/29 @ 6:05 PM By: pss

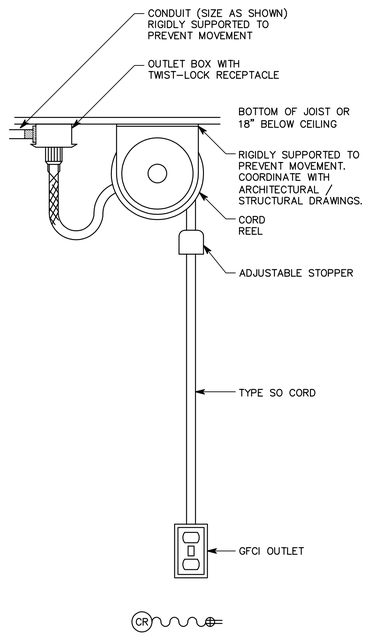

C3 CORD REEL DETAIL
NTS

NOTE:
TIE WIRE SHALL NOT BE USED AS A COMPONENT OF ANY RACEWAY HANGER SYSTEM.

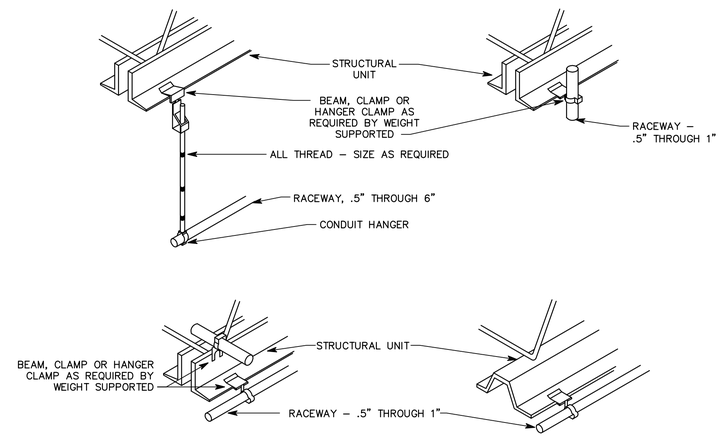

C4 TYPICAL RACEWAY SUPPORT METHODS DETAIL
NTS

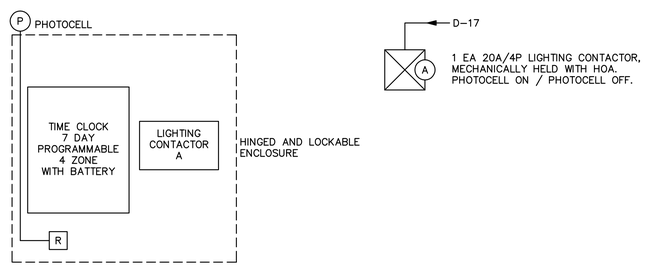

B2 LIGHTING CONTROL DIAGRAM
NO SCALE

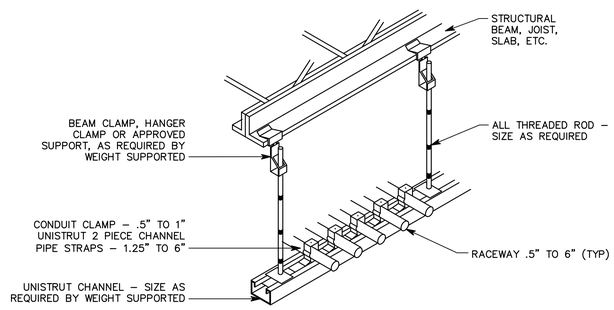

A2 TYPICAL CONDUIT RACK DETAIL
NTS

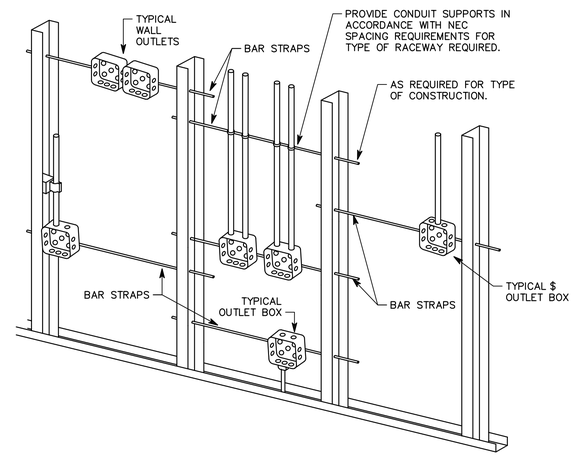

NOTES:

1. TYPICAL FOR WOOD AND METAL STUD ROUGH–IN.
2. PLASTER RINGS NOT SHOWN.
3. LOCATE ALL OUTLET BOXES IN ACCORDANCE WITH ARCHITECTURAL AND MECHANICAL DRAWINGS AND WITH ALL APPLICABLE SHOP DRAWINGS.
4. IN ACCORDANCE WITH IBC 711.3.2 EXCEPTION 1, OUTLETS ON OPPOSITE SIDES OF WALLS OR PARTITIONS IN THE SAME STUD SPACE IN A RATED FIRE SEPARATION WALL MUST BE SEPARATED BY A MINIMUM OF 24" HORIZONTAL DISTANCE.
5. IN NON–RATED WALLS, OUTLETS ON OPPOSITE SIDES OF WALLS OR PARTITIONS MUST BE SEPARATED BY 16" FOR SOUND ATTENUATION.

A4 TYPICAL ROUGH–IN REQUIREMENTS DETAIL
NTS

COOPER ROBERTS SIMONSEN ASSOCIATES
crsa
700 NORTH 200 WEST
SALT LAKE CITY,UTAH 84103
(801) 355-5915
(801) 355-9885 FAX
WWW.CRSA-US.COM

STRUCTURAL ENGINEER
CALDER RICHARDS CONSULTING ENGINEERS
634 South 400 West Suite 100
SALT LAKE CITY, UT 84101
(801) 466-1699 (801) 467-2495 FAX
stephen@crceng.com

MECHANICAL ENGINEER
SMD
986 WEST ATHERTON DRIVE STE. 200
TAYLORSVILLE, UTAH 84123
(801)268-3828 FAX (801)268-3297

ELECTRICAL ENGINEER
SPECTRUM
175 S MAIN STREET STE. 300
SALT LAKE CITY, UTAH 84111
(801)328-5151 (801)401-9471

UTNG WJRC
OMS SHOP ADDN.
DFCM NO. 8031480
7602 SOUTH AIRPORT ROAD
WEST JORDAN, UTAH

UTAH NATIONAL GUARD
12953 SOUTH
MINUTEMAN DRIVE.
DRAPER UTAH 84020-1776

2		
1		
-	-	-
-	-	-
-	-	-
BID	8/15/08	BID DOCUMENTS

PROJECT NO:	B08-024
CAD DWG FILE:	21EE-502.dwg
DRAWN BY:	PSS
CHECKED BY:	DLA

DETAILS

EE502

SHEET OF

File Name: P:\2008\20080321\1Drawings\Sheet\21EE-502.dwg Last Plotted: 2008/08/29 @ 6:04 PM By: pss

12.5 KV EQUIPMENT LIST

EQUIP NO	QTY.	DESCRIPTION	MANUFACTURER	CATALOG NO.
105	3	15 KV SHIELDED POWER CABLE TERMINATION DEAD BREAK KIT WITH INTEGRAL MOV ARRESTORS	TBD	TBD

NOTES:
TBD = TO BE DETERMINED BY CONTRACTOR BASED ON EQUIPMENT REQUIREMENTS AND AS PER THE SPECIFICATIONS.

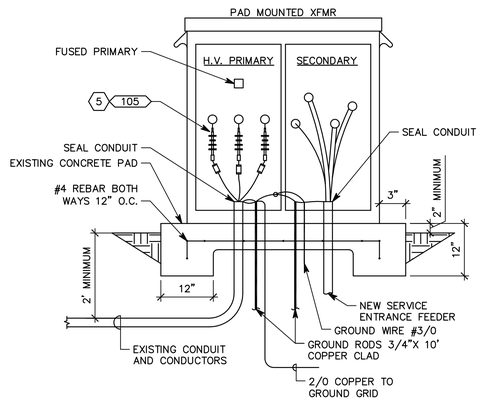

C4 TRANSFORMER DETAIL

NTS

SHEET KEYNOTES

1. PROVIDE NEW LOAD BREAK ELBOWS WITH INTEGRAL MOV ARRESTORS. CONNECT TO EXISTING PRIMARY CONDUCTORS. VERIFY REQUIREMENTS.

COOPER ROBERTS SIMONSEN ASSOCIATES

crsa

700 NORTH 200 WEST
SALT LAKE CITY,UTAH 84103
(801) 355-5915
(801) 355-9885 FAX
WWW.CRSA-US.COM

STRUCTURAL ENGINEER
CALDER RICHARDS CONSULTING ENGINEERS
634 South 400 West Suite 100
SALT LAKE CITY, UT 84101
(801) 466-1699 (801) 467-2495 FAX
stephen@crceng.com

MECHANICAL ENGINEER
SMD
986 WEST ATHERTON DRIVE STE. 200
TAYLORSVILLE, UTAH 84123
(801)268-3828 FAX (801)268-3297

ELECTRICAL ENGINEER
SPECTRUM
175 S MAIN STREET STE. 300
SALT LAKE CITY, UTAH 84111
(801)328-5151 (801)401-9471

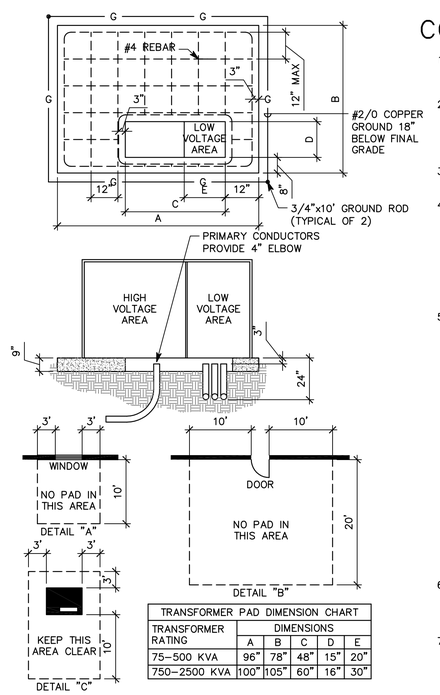

TRANSFORMER PAD DIMENSION CHART					
TRANSFORMER RATING	DIMENSIONS				
	A	B	C	D	E
75–500 KVA	96"	78"	48"	15"	20"
750–2500 KVA	100"	105"	60"	16"	30"

A4 TRANSFORMER PAD DETAIL

NTS

CONTRACTOR GENERAL NOTES

1. SITE PREPARATION. ALL SOIL BENEATH THE PAD SITE MUST BE COMPACTED AND LEVEL PRIOR TO SETTING OR POURING THE PAD TO PREVENT SETTLING.
2. CONCRETE. STEEL REINFORCEMENT SHALL BE #4 BARS, PLACED ACCORDING TO THE DRAWING. THE PAD MUST BE POURED AT LEAST SEVEN FULL DAYS PRIOR TO SETTING THE TRANSFORMER. THE FINISHED SURFACE MUST BE COMPLETELY FLAT AND LEVEL. SEE STANDARD 73 036 FOR CONCRETE SPECIFICATIONS.
3. PREFABRICATION. THE PAD MAY EITHER BE CONSTRUCTED ON THE SITE OR PREFABRICATED ACCORDING TO SPECIFICATIONS.
4. CONDUIT WINDOW LAYOUT. LOW VOLTAGE CONDUITS SHALL BE FORMED AS TIGHTLY AS POSSIBLE AGAINST THE RIGHT SIDE OF THE OPENING AND SHALL IN NO CASE EXTEND FURTHER THAN 20" FROM THE RIGHT SIDE OF THE CONDUIT WINDOW ON THE SMALL PAD OR 30" ON THE LARGE PAD. NO MORE THAN 8 CONDUITS WILL BE USED ON THE LOW VOLTAGE SIDE (NOT INCLUDING THE METERING CONDUIT). DO NOT PUT ANY CONCRETE IN OR UNDER THE CONDUIT WINDOW. USE SOIL TO SEPARATE CONDUITS. BELL ENDS ARE REQUIRED FOR ALL METAL CONDUIT, BUT NOT FOR PLASTIC CONDUIT.
5. CLEARANCES. THE FRONT OF THE PAD SHOULD ALWAYS FACE AWAY FROM ADJACENT STRUCTURES AND BE FREE OF OBSTRUCTIONS. AT LEAST 3 FEET MUST SEPARATE THE EDGES OF THE PAD FROM ANY ADJACENT STRUCTURE. THE EDGES OF THE PAD MUST BE AT LEAST 10 FEET FROM ANY COMBUSTIBLE STRUCTURE. IF AN ADJACENT STRUCTURE HAS ANY OVERHANG OR EAVE WITHIN 27 VERTICAL FEET OF THE TOP OF THE PAD, CLEARANCES MUST BE MEASURED FROM THE OUTSIDE OF THE OVERHANG. THE PAD MUST NOT BE PLACED IN AN AREA 10 FEET IN LINE WITH OR 3 FEET TO EITHER SIDE OF ANY WINDOW IN AN ADJACENT STRUCTURE (SEE DETAIL "A"). CLEARANCE FOR A DOOR MUST BE 20 FEET IN LINE WITH IT AND 10 FEET ON THE SIDES (SEE DETAIL "B"). PADS MUST NOT BE PLACED WITHIN 15 FEET OF ANY VALVE OR WITHIN 20 FEET OF ANY PLUMBING OR STORAGE FACILITY CONTAINING FLAMMABLE MATERIAL. NO WALLS, FENCES, OR ANY OTHER OBSTRUCTIONS WILL BE PLACED WITHIN 3 FEET OF THE SIDES OR BACK OF THE PAD, OR WITHIN 10 FEET OF THE FRONT OF THE PAD (SEE DETAIL "C"). THE AREA IN FRONT OF THE PAD MUST HAVE 10 FEET OF CLEAR, LEVEL WORKING AREA FOR MAINTENANCE OF THE TRANSFORMER. THE PAD MAY NOT BE PLACED IN LINE WITH AN AIR INTAKE WITHIN 32 VERTICAL FEET OF THE SURFACE PAD. ALSO VERTICALLY, IT MUST NOT BE PLACED WITHIN 12 FEET OF A DOOR OR WINDOW.
6. BARRIERS. IF THE TRANSFORMER PAD IS TO BE LOCATED IN AREAS SUBJECT TO VEHICULAR TRAFFIC, (PARKING LOTS, DRIVEWAYS, ETC) CONTACT CAMP WILLIAMS FOR PROTECTIVE BARRIER REQUIREMENTS.
7. IF THE TRANSFORMER WILL NOT COVER THE CABLE OPENINGS ON THESE STANDARD PADS, SEAL THE SIDES OF THE CABLE OPENING TO FIT THE TRANSFORMER USING SAKRETE OR COMPARABLE.

UTNG WJRC
OMS SHOP ADDN.
DFCM NO. 8031480
7602 SOUTH AIRPORT ROAD
WEST JORDAN, UTAH

UTAH NATIONAL GUARD
12953 SOUTH
MINUTEMAN DRIVE.
DRAPER UTAH 84020-1776

2		
1		
-	-	-
-	-	-
-	-	-
BID	8/15/08	BID DOCUMENTS

PROJECT NO:	B08-024
CAD DWG FILE:	21EE-503.dwg
DRAWN BY:	PSS
CHECKED BY:	DLA

DETAILS

EE503

SHEET OF

File Name: P:\2008\20080321\1Drawings\Sheet\21EE-503.dwg Last Plotted: 2008/08/29 @ 6:04 PM By: pss

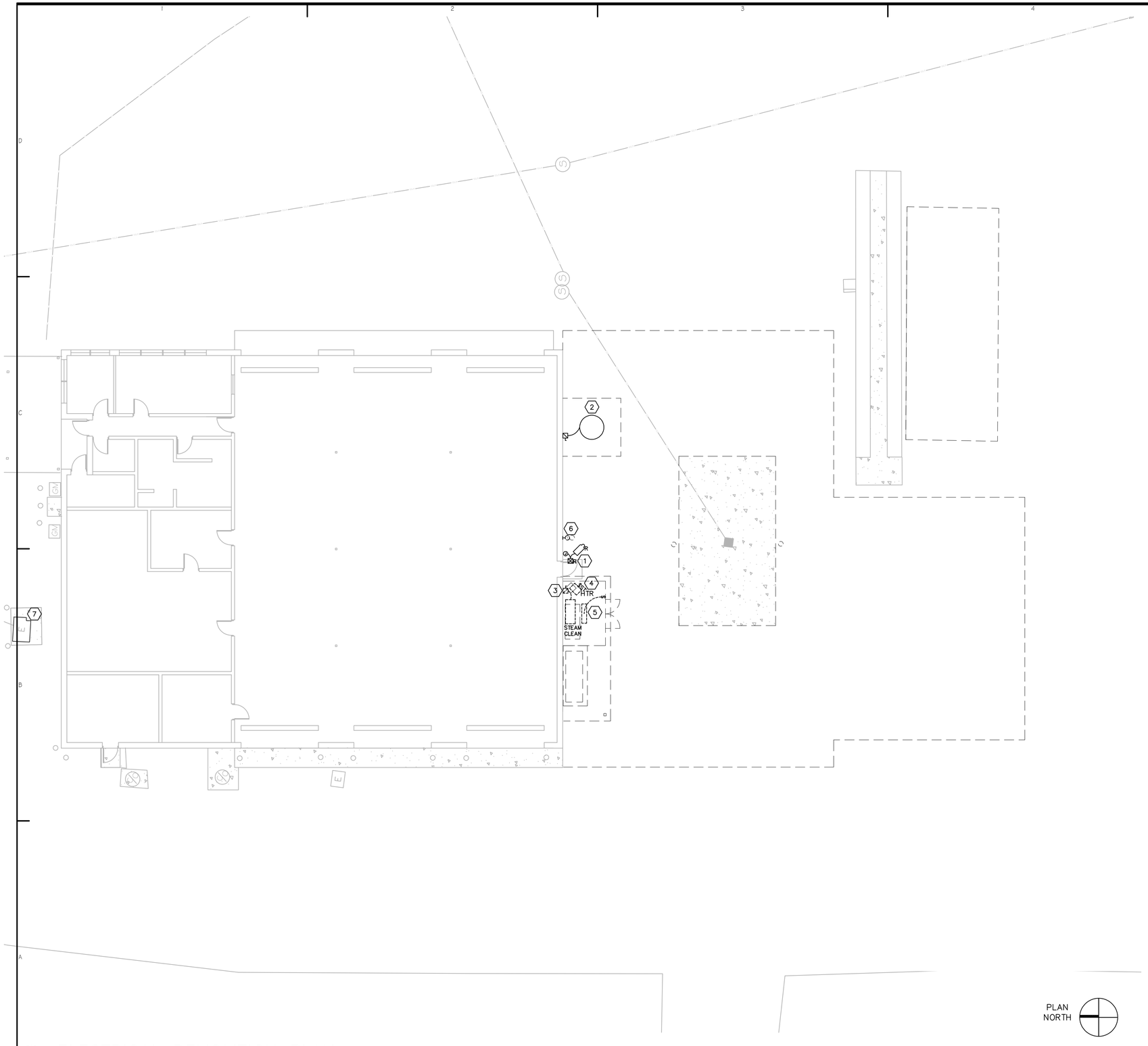

A1 ELECTRICAL DEMOLITION PLAN
1" = 10'-0"

GENERAL SHEET NOTES

1. PROVIDE GROUNDING CONDUCTORS PER NEC FOR CIRCUITS AFFECTED BY THIS WORK.
2. RELOCATE AND/OR REROUTE EXISTING CONDUIT, WIRING OR OTHER EQUIPMENT THAT CONFLICTS WITH DEMOLITION OR NEW CONSTRUCTION.
3. REMOVE ALL CONDUIT, WIRING AND CABLING THAT IS ABANDONED OR WILL BECOME ABANDONED AS A RESULT OF THIS PROJECT.
4. WHERE DEVICES, LIGHT FIXTURES OR OTHER EQUIPMENT ARE BEING REMOVED, REMOVE ASSOCIATED CONDUIT AND WIRING TO PANEL BOARD OR FIRST ACTIVE JUNCTION BOX.

SHEET KEYNOTES

1. RELOCATE EXISTING CAMERA AND POLE TO OUTSIDE THE SOUTH SIDE OF THE NEW ADDITION. PROVIDE NEW POLE BASE TO MATCH POLE.
2. EXISTING JIB CRANE TO BE RELOCATED. EXISTING DISCONNECT ON THE WALL TO REMAIN.
3. REMOVE AND RELOCATE STEAM CLEAN DISCONNECT. PROVIDE JUNCTION BOX IN EXISTING LOCATION AND EXTEND CONDUIT AND WIRING TO NEW LOCATION.
4. REMOVE AND RELOCATE WALL HEATER. EXTEND CONDUIT AND CONDUCTORS TO NEW LOCATION IN NEW STEAM CLEAN ROOM.
5. DEMO EXISTING LIGHT SWITCH AND LIGHT FIXTURE.
6. DEMO EXISTING WALL PACK.
7. EXISTING 75 KVA PAD MOUNTED TRANSFORMER TO BE REMOVED AND REPLACED WITH NEW PAD MOUNTED 150 KVA TRANSFORMER. MODIFY TRANSFORMER PAD AS REQUIRED TO ACCOMMODATE NEW TRANSFORMER. PROVIDE ADDITIONAL GROUNDING AS REQUIRED. SEE DETAIL.

COOPER ROBERTS SIMONSEN ASSOCIATES
crsa
700 NORTH 200 WEST
SALT LAKE CITY,UTAH 84103
(801) 355-5915
(801) 355-9885 FAX
WWW.CRSA-US.COM

STRUCTURAL ENGINEER
CALDER RICHARDS CONSULTING ENGINEERS
634 South 400 West Suite 100
SALT LAKE CITY, UT 84101
(801) 466-1699 (801) 467-2495 FAX
stephen@crceng.com

MECHANICAL ENGINEER
SMD
986 WEST ATHERTON DRIVE STE. 200
TAYLORSVILLE, UTAH 84123
(801)268-3828 FAX (801)268-3297

ELECTRICAL ENGINEER
SPECTRUM
175 S MAIN STREET STE. 300
SALT LAKE CITY, UTAH 84111
(801)328-5151 (801)401-9471

UTNG WJRC
OMS SHOP ADDN.
DFCM NO. 8031480
7602 SOUTH AIRPORT ROAD
WEST JORDAN, UTAH

UTAH NATIONAL GUARD
12953 SOUTH
MINUTEMAN DRIVE.
DRAPER UTAH 84020-1776

2		
1		
-	-	-
-	-	-
-	-	-
BID	8/15/08	BID DOCUMENTS

PROJECT NO:	B08-024
CAD DWG FILE:	21ED-101.dwg
DRAWN BY:	PSS
CHECKED BY:	DLA

ELECTRICAL DEMOLITION PLAN

ED101

SHEET OF

File Name: P:\2008\20080321\1Drawings\Sheet\21ED-101.dwg Last Plotted: 2008/08/29 @ 6:04 PM By: pss

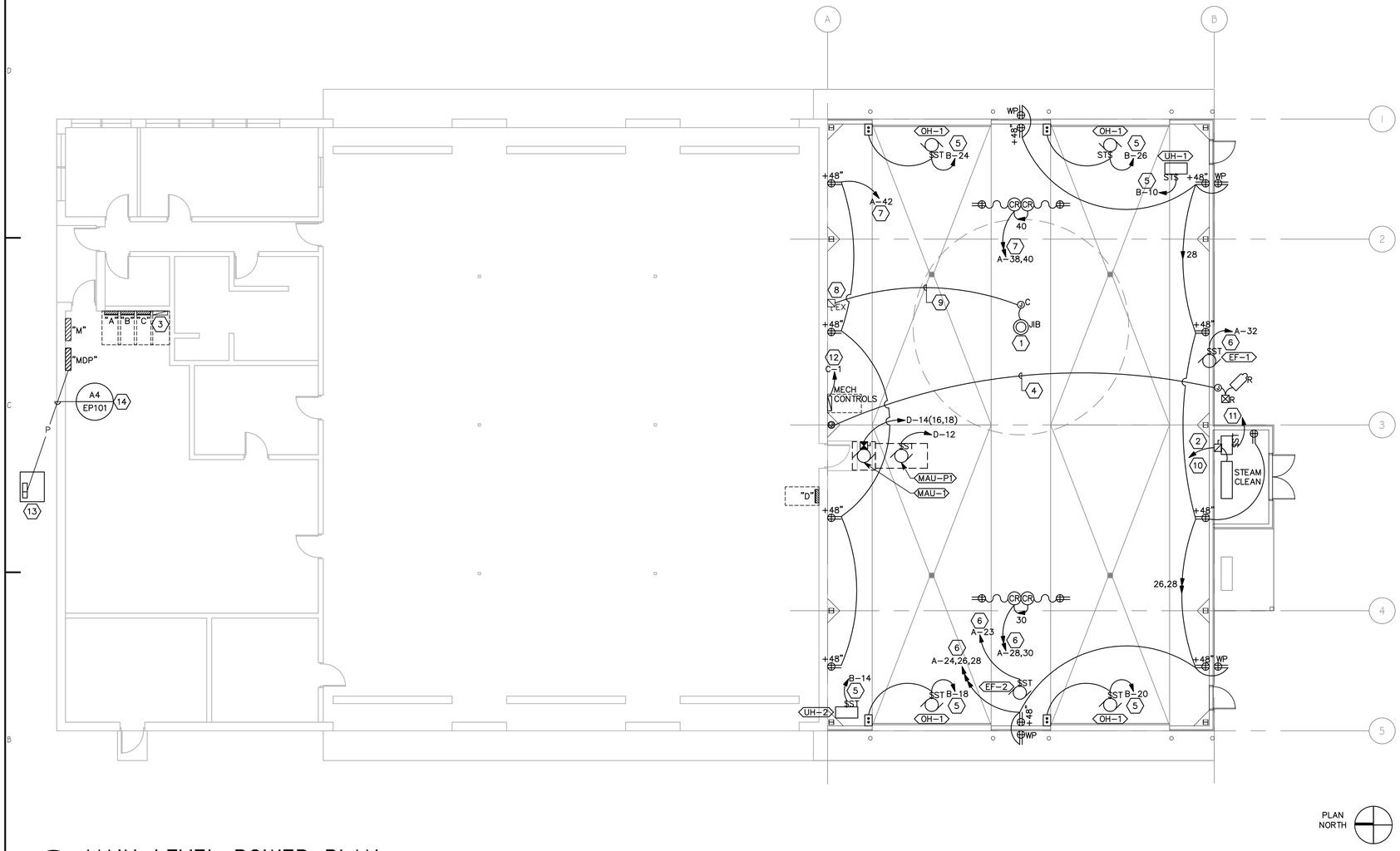

B1 MAIN LEVEL POWER PLAN

1/8" = 1'-0"

SHEET KEYNOTES

1. PROVIDE NEW ROTATING POWER CONNECTION TO TOP OF JIB CRANE. COORDINATE REQUIREMENTS WITH CRANE MANUFACTURER.
2. RELOCATED STEAM CLEAN EQUIPMENT. VERIFY REQUIREMENTS.
3. EXISTING MAIN FIRE ALARM PANEL. SILENT KNIGHT IFP-50.
4. EXTEND CONDUIT AND CONDUCTORS TO NEW WIRELESS CAMERA LOCATION. FIELD VERIFY REQUIREMENTS.
5. CONNECT TO SPARE 20/1 BREAKER IN PANEL "B". FIELD VERIFY AVAILABLE SPARE BREAKERS.
6. CONNECT TO SPARE 20/1 BREAKER IN PANEL "A". FIELD VERIFY AVAILABLE SPARE BREAKERS.
7. CONNECT TO NEW 20/1 BREAKER IN PANEL "A". PROVIDE NEW 20/1 BREAKER IN PANEL "A" TO MATCH PANELBOARD TYPE.
8. RECONNECT POWER FOR JIB CRANE TO EXISTING JIB CRANE DISCONNECT.
9. EXTEND EXISTING CONDUCTORS AND CONDUIT FROM THE EXISTING JIB CRANE DISCONNECT UP TO CEILING TO FEED THE JIB CRANE FROM ABOVE. FIELD VERIFY REQUIRED CONDUIT AND CONDUCTOR SIZE REQUIRED.
10. EXTEND EXISTING CONDUIT AND CONDUCTORS TO NEW STEAM CLEAN EQUIPMENT LOCATION. FIELD VERIFY REQUIREMENTS.
11. EXTEND EXISTING CONDUIT AND CONDUCTORS TO NEW UNIT HEATER LOCATION. FIELD VERIFY REQUIREMENTS.
12. CONNECT TO NEW 20/1 BREAKER IN PANEL "C". FIELD VERIFY AVAILABLE SPARE BREAKERS.
13. NEW 150 KVA PAD MOUNTED TRANSFORMER. SEE ONE-LINE DIAGRAM.
14. NEW UNDERGROUND SECONDARY FEEDER.

COOPER ROBERTS SIMONSEN ASSOCIATES

crsa

700 NORTH 200 WEST
SALT LAKE CITY,UTAH 84103
(801) 355-5915
(801) 355-9885 FAX
WWW.CRSA-US.COM

STRUCTURAL ENGINEER
CALDER RICHARDS CONSULTING ENGINEERS
634 South 400 West Suite 100
SALT LAKE CITY, UT 84101
(801) 466-1699 (801) 467-2495 FAX
stephen@crceng.com

MECHANICAL ENGINEER
SMD
986 WEST ATHERTON DRIVE STE. 200
TAYLORSVILLE, UTAH 84123
(801)268-3828 FAX (801)268-3297

ELECTRICAL ENGINEER
SPECTRUM
175 S MAIN STREET STE. 300
SALT LAKE CITY, UTAH 84111
(801)328-5151 (801)401-9471

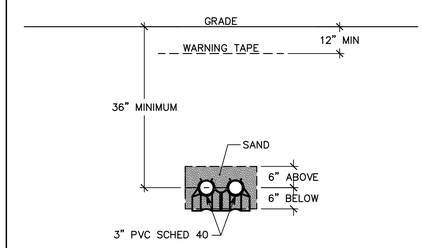

A4 UNDERGROUND SECONDARY FEEDER

NTS

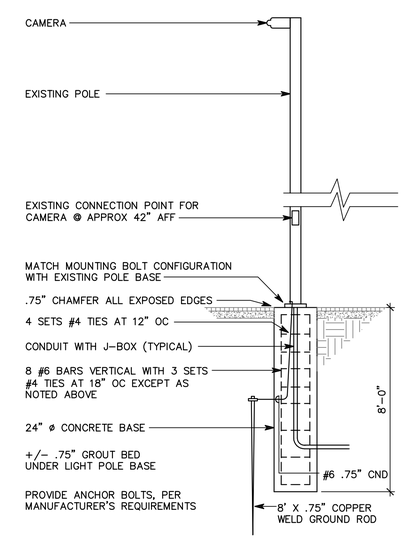

A5 CAMERA MOUNTING POLE BASE DETAIL

NTS

UTNG WJRC
OMS SHOP ADDN.
DFCM NO. 8031480
7602 SOUTH AIRPORT ROAD
WEST JORDAN, UTAH

UTAH NATIONAL GUARD
12953 SOUTH
MINUTEMAN DRIVE.
DRAPER UTAH 84020-1776

2		
1		
-	-	-
-	-	-
-	-	-
BID	8/15/08	BID DOCUMENTS

PROJECT NO:	B08-024
CAD DWG FILE:	21EP-101.dwg
DRAWN BY:	PSS
CHECKED BY:	DLA

MAIN LEVEL POWER PLAN

EP101

SHEET OF

File Name: P:\2008\20080321\1Drawings\Sheet\21EP-101.dwg Last Plotted: 2008/08/29 @ 6:04 PM By: pss

MAIN DISTRIBUTION PANEL "MDP"

VOLTS/PHASE/WIRE:	MAIN SIZE & TYPE:	LOCATION:	NOTES:
120/208 V, 3 PH 4 WIRE	600 AMPERE MAIN BKR		

ACCESSORIES: IDENTIFICATION, GROUNDING BAR, INSULATED GROUND BAR, SERVICE RATED

CKT	OCP		LOAD (kVA)			PANEL / EQUIPMENT	LCL	PHASE LOAD			LCL	PANEL / EQUIPMENT	LOAD (kVA)			OCP		CKT
NO	AMP	POLE	LTG	CO	PWR		kVA	A	B	C	kVA		LTG	CO	PWR	AMP	POLE	NO
1	350	3	4.8	5.2	20.3	PANEL M	31.5	43.3			13.0	PANEL C	0.0	1.0	12.0	200	3	2
–	–	–	4.3	5.8	19.1	–	30.3		44.7		15.5	–	0.0	1.0	14.5	–	–	–
–	–	–	3.9	5.2	14.1	–	24.2			36.2	13.0	–	0.0	0.0	13.0	–	–	–
3	200	3	0.0	0.0	17.4	PANEL B	17.4	17.4			0.0	SPARE				100	3	4
–	–	–	0.0	0.0	17.3	–	17.3		17.3		0.0	–				–	–	–
–	–	–	0.0	0.0	17.7	–	17.7			17.7	0.0	–				–	–	–
5	200	3				BLANK	0.0	0.0			0.0	BLANK				200	3	6
–	–	–				----	0.0		0.0		0.0	----				–	–	–
–	–	–				----	0.0			0.0	0.0	----				–	–	–

TOTALS: CONNECTED kVA PER PHASE **61 62 54** CONNECTED TOTAL kVA **177**
CONNECTED AMPS PHASE **506 517 450** CONNECTED AVERAGE AMPS PER PHASE **491**

NEC DIVERSIFIED LOAD CALCULATIONS

LIGHTING 13kVA @125% =	16 kVA	ALL OTHER LOADS @100% =	145 kVA	DIVERSIFIED TOTAL kVA =	176
RECEPTACLES 10kVA @100% =	10 kVA	25% OF LARGEST MOTOR =	0 kVA	AVERAGE AMPS PER PHASE =	488
REMAINDER 8kVA @ 50% =	4 kVA				

SHEET KEYNOTES

1. REMOVE EXISTING FEEDERS TO PANEL "B" AND "C".
2. PROVIDE NEW FEEDERS TO PANELS "B" AND "C" AS INDICATED.
3. RECONNECT EXISTING #2 COPPER MEDIUM VOLTAGE FEEDER CONDUCTORS TO NEW TRANSFORMER. PROVIDE NEW LOAD BREAK ELBOWS.
4. PROVIDE 2–EACH 3–INCH CONDUITS EACH WITH 4–300 KCMIL CU AND 1–#3/0 CU GROUND.
5. REMOVE EXISTING BOND BETWEEN GROUND BUS AND NEUTRAL BUS IN EXISTING PANEL "M".

GENERAL SHEET NOTES

1. PROVIDE NEMA 3R ENCLOSURES FOR EQUIPMENT LOCATED OUTDOORS. REFER TO PLANS FOR EQUIPMENT LOCATIONS.
2. REFER TO PLANS FOR CONSTRAINTS ON PHYSICAL DIMENSIONS AND CLEARANCE REQUIREMENTS OF EQUIPMENT. PROVIDE EQUIPMENT DIMENSIONS THAT FALL WITHIN THE CONSTRAINTS OF EACH SPECIFIC LOCATION.
3. ALL EQUIPMENT SHALL BE CONSTRUCTED AND BRACED FOR THE SEISMIC CONDITIONS OF THE PROJECT. REFER TO SPECIFICATIONS SECTION 16071 FOR REQUIREMENTS.

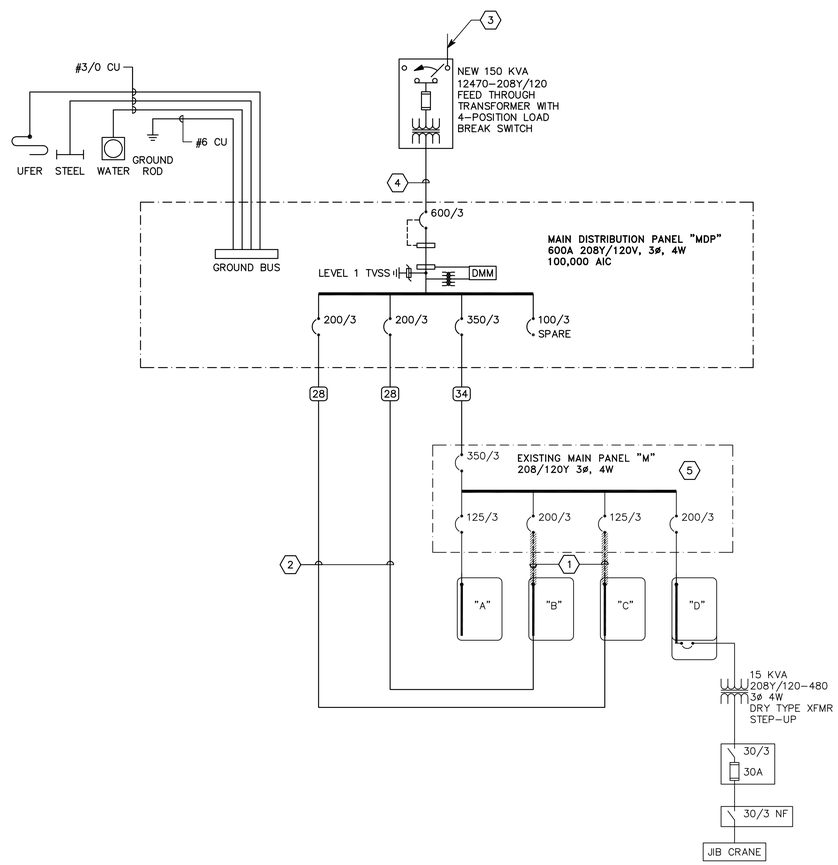

A3 ONE–LINE DIAGRAM
NO SCALE

CONDUCTOR AND CONDUIT SCHEDULE

SCHEDULE NUMBER
SUBSCRIPT (NOTE 5)
(E.G.) 5 IG

SYM	AMP	CONDUIT SIZE	CONDUCTOR(NOTE 1)			IG	SE	NOTES
			QTY	SIZE	G			
1	20	.75	2	12	12	12	8	2
2	20	.75	3	12	12	12	8	2,3
3	20	.75	4	12	12	12	8	2,3
4	30	.75	2	10	10	10	8	2
5	30	.75	3	10	10	10	8	2
6	30	.75	4	10	10	10	8	2
7	40	1	2	8	10	8	6	2
8	40	1	3	8	10	8	6	2
9	40	1	4	8	10	8	6	2
10	55	1	2	6	10	8	4	2
11	55	1	3	6	10	8	4	2
12	55	1.25	4	6	10	8	4	2
13	70	1	2	4	8	4	2	2
14	70	1.25	3	4	8	4	2	2
15	70	1.25	4	4	8	4	2	2
16	85	1.25	2	3	8	3	2	2
17	85	1.25	3	3	8	3	2	2
18	85	1.25	4	3	8	3	2	2
19	95	1.25	3	2	8	2	2	2
20	95	1.50	4	2	8	2	2	2
21	130	1.50	3	1	6	2	2	2
22	130	1.50	4	1	6	2	2	2
23	150	2	3	1/0	6	2	1/0	2
24	150	2	4	1/0	6	2	1/0	2
25	175	2	3	2/0	6	2	2/0	2
26	175	2	4	2/0	6	2	2/0	2
27	200	2	3	3/0	6	2	2/0	2
28	200	2.50	4	3/0	6	2	2/0	2
29	230	2.50	3	4/0	4	2	2/0	2
30	230	2.50	4	4/0	4	2	2/0	2
31	255	2.50	3	250	4	1	2/0	2
32	255	2.50	4	250	4	1	2/0	2
33	310	3	3	350	3	1/0	3/0	2
34	310	3	4	350	3	1/0	3/0	2
35	380	3.50	3	500	3	3/0	3/0	2
36	380	4	4	500	3	3/0	3/0	2
37	400	2 EA 2	3	3/0	3	3/0	3/0	2
38	400	2 EA 2.50	4	3/0	3	3/0	3/0	2
39	510	2 EA 2.50	3	250	1	4/0	3/0	2
40	510	2 EA 3	4	250	1	4/0	3/0	2
41	620	2 EA 3	3	350	1/0	4/0	3/0	2,4
42	620	2 EA 3	4	350	1/0	4/0	3/0	2,4
43	760	2 EA 3.50	3	500	1/0	4/0	3/0	2,4
44	760	2 EA 4	4	500	1/0	4/0	3/0	2,4
45	855	3 EA 3	3	300	2/0	4/0	3/0	2,4
46	855	3 EA 3	4	300	2/0	4/0	3/0	2,4
47	1000	3 EA 3.50	3	400	2/0	4/0	3/0	4
48	1000	3 EA 3.50	4	400	2/0	4/0	3/0	4
49	1140	3 EA 4	3	500	3/0	4/0	3/0	4
50	1140	3 EA 4	4	500	3/0	4/0	3/0	4
51	1240	4 EA 3	3	350	3/0	4/0	3/0	4
52	1240	4 EA 3	4	350	3/0	4/0	3/0	4
53	1675	5 EA 3.50	4	400	4/0	4/0	4/0	4
54	2010	6 EA 3.50	4	400	250	250	250	4
55	2660	7 EA 4	4	500	350	350	350	4
56	3040	8 EA 4	4	500	500	500	500	4
57	4180	11 EA 4	4	500	500	500	500	4
58		5 EA 4						6
59		5						6
60		10 EA 4						6

CONDUCTOR AND CONDUIT SCHEDULE NOTES

1. CONDUCTORS SHOWN ARE SHOWN FOR EACH CONDUIT WITH MODIFICATIONS AS NOTED IN NOTE 5. ALL CONDUCTORS SHOWN ARE THWN UNLESS OTHERWISE NOTED.
2. PROVIDE EQUIPMENT GROUND CONDUCTORS PER TABLE 250–122 WHEN CIRCUIT BREAKERS ARE SIZED GREATER THAN AMPERE RATING SHOWN IN TABLE.
3. PROVIDE #10 NEUTRALS FOR MULTIWIRE BRANCH CIRCUITS SERVING COMPUTERS.
4. GROUND (G) CONDUCTOR MAY BE DELETED ON SERVICE ENTRANCE CONDUCTORS.
5. WHEN SYMBOL SUBSCRIPT INDICATES "IG", INCLUDE "IG" OR INSULATED GROUND CONDUCTOR SCHEDULED ALONG WITH GROUND OR EQUIPMENT GROUND CONDUCTOR. WHEN SYMBOL SUBSCRIPT INDICATES "SE", SUBSTITUTE "SE" CONDUCTOR FOR "G" CONDUCTOR SHOWN WHICH IS SIZED FOR THE GROUNDING OF THE SECONDARY OF THE SEPARATELY DERIVED SYSTEMS.
6. RACEWAY ONLY. CONDUCTORS PROVIDED BY UTILITY.

COOPER ROBERTS SIMONSEN ASSOCIATES
crsa
700 NORTH 200 WEST
SALT LAKE CITY,UTAH 84103
(801) 355-5915
(801) 355-9885 FAX
WWW.CRSA-US.COM

STRUCTURAL ENGINEER
CALDER RICHARDS CONSULTING ENGINEERS
634 South 400 West Suite 100
SALT LAKE CITY, UT 84101
(801) 466-1699 (801) 467-2495 FAX
stephen@crceng.com

MECHANICAL ENGINEER
SMD
986 WEST ATHERTON DRIVE STE. 200
TAYLORSVILLE, UTAH 84123
(801)268-3828 FAX (801)268-3297

ELECTRICAL ENGINEER
SPECTRUM
175 S MAIN STREET STE. 300
SALT LAKE CITY, UTAH 84111
(801)328-5151 (801)401-9471

UTNG WJRC
OMS SHOP ADDN.
DFCM NO. 8031480
7602 SOUTH AIRPORT ROAD
WEST JORDAN, UTAH

UTAH NATIONAL GUARD
12953 SOUTH
MINUTEMAN DRIVE.
DRAPER UTAH 84020-1776

2		
1	-	-
-	-	-
-	-	-
BID	8/15/08	BID DOCUMENTS

PROJECT NO: B08-024
CAD DWG FILE: 21EP-601.dwg
DRAWN BY: PSS
CHECKED BY: DLA

EXISTING ONE-LINE DIAGRAM

EP601
SHEET OF

File Name: P:\2008\20080321\1Drawings\Sheet\21EP-601.dwg Last Plotted: 2008/08/29 @ 6:04 PM By: pss

PANEL "C" (EXISTING)

VOLTS/PHASE/WIRE:	PANEL SIZE & TYPE:	MAIN SIZE & TYPE:	LOCATION:	CABINET:	NOTES:
120/208 V, 3 PH 4 WIRE	22" W x 6" D, BOLT-ON	225 AMPERE MAIN LUG		SURFACE	125A PROT

ACCESSORIES: PANEL DIRECTORY, IDENTIFICATION, GROUNDING BAR, SUBFEED LUGS, HINGED COVER

CKT NO	OCP AMP	OCP POLE	LOAD (kVA) LTG	LOAD (kVA) CO	LOAD (kVA) PWR	DESCRIPTION	LCL kVA	PHASE LOAD A	PHASE LOAD B	PHASE LOAD C	LCL kVA	DESCRIPTION	LOAD (kVA) LTG	LOAD (kVA) CO	LOAD (kVA) PWR	OCP AMP	OCP POLE	CKT NO
1	20	1		1.0		OUTLETS IN FORMANS OFF	1.0	1.5			0.5	**MECH CONTROL PNL**			**0.5**	20	1	2
3	20	1		1.0		RCA'S DEDICATED OUTLET	1.0		1.0		0.0	SPARE				20	1	4
5	20	1				SPARE	0.0			0.0	0.0	SPARE				20	1	6
7	20	1				SPARE	0.0	1.5			1.5	UNMARKED			1.5	30	2	8
9	20	1				BLANK	0.0		1.5		1.5	----			1.5	–	–	10
11	20	1				BLANK	0.0			0.0	0.0	BLANK				20	1	12
13	20	1				BLANK	0.0	0.0			0.0	BLANK				20	1	14
15	20	1				BLANK	0.0		0.0		0.0	BLANK				20	1	16
17	20	1				BLANK	0.0			0.0	0.0	BLANK				20	1	18
19	20	1				BLANK	0.0	0.0			0.0	BLANK				20	1	20
21	50	3			4.0	TIRE MACHINE	4.0		4.0		0.0	BLANK				20	1	22
23	–	–			4.0	----	4.0			4.0	0.0	BLANK				20	1	24
25	–	–			4.0	----	4.0	4.0			0.0	BLANK				20	1	26
27	30	2			1.5	SPECIAL OUTLET	1.5		3.0		1.5	SPECIAL OUTLET			1.5	30	2	28
29	–	–			1.5	----	1.5			3.0	1.5	----			1.5	–	–	30
31	30	2			1.5	SPECIAL OUTLET	1.5	3.0			1.5	SPECIAL OUTLET			1.5	30	2	32
33	–	–			1.5	----	1.5		3.0		1.5	----			1.5	–	–	34
35	30	2			1.5	SPECIAL OUTLET	1.5			3.0	1.5	SPECIAL OUTLET			1.5	30	1	36
37	–	–			1.5	----	1.5	3.0			1.5	SPECIAL OUTLET			1.5	30	1	38
39	30	2			1.5	SPECIAL OUTLET	1.5		3.0		1.5	SPECIAL OUTLET			1.5	30	2	40
41	–	–			1.5	----	1.5			3.0	1.5	----			1.5	–	–	42

TOTALS: CONNECTED kVA PER PHASE **13 16 13** CONNECTED TOTAL kVA **42**
CONNECTED AMPS PER PHASE **108 129 108** CONNECTED AVERAGE AMPS PER PHASE **115**

NEC DIVERSIFIED LOAD CALCULATIONS
LIGHTING 0kVA @125% = **0** kVA ALL OTHER LOADS @100% = **40** kVA DIVERSIFIED TOTAL kVA = **42**
RECEPTACLES 2kVA @100% = **2** kVA 25% OF LARGEST MOTOR = **0** kVA AVERAGE AMPS PER PHASE = **115**
REMAINDER 0kVA @ 50% = **0** kVA

PANEL "D" (EXISTING)

VOLTS/PHASE/WIRE:	PANEL SIZE & TYPE:	MAIN SIZE & TYPE:	LOCATION:	CABINET:	NOTES:
120/208 V, 3 PH 4 WIRE	22" W x 6" D, BOLT-ON	225 AMPERE MAIN LUG		SURFACE	200A PROT

ACCESSORIES: PANEL DIRECTORY, IDENTIFICATION, GROUNDING BAR, SUBFEED LUGS, HINGED COVER

CKT NO	OCP AMP	OCP POLE	LOAD (kVA) LTG	LOAD (kVA) CO	LOAD (kVA) PWR	DESCRIPTION	LCL kVA	PHASE LOAD A	PHASE LOAD B	PHASE LOAD C	LCL kVA	DESCRIPTION	LOAD (kVA) LTG	LOAD (kVA) CO	LOAD (kVA) PWR	OCP AMP	OCP POLE	CKT NO
1	50	3			5.5	WASHER	5.5	12.4			6.9	WELDER			6.9	125	2	2
3	–	–			5.5	----	5.5		12.4		6.9	----			6.9	–	–	4
5	–	–			5.5	----	5.5			5.5	0.0	SPARE				70	3	6
7	60	3			2.3	JIB CRANE (15 KVA XFMR)	2.3	2.3			0.0	----				–	–	8
9	–	–			2.3	----	2.3		2.3		0.0	----				–	–	10
11	–	–			2.3	----	2.3			3.0	0.7	**MAU-1P**			**0.7**	***20**	**1**	12
13	***20**	**1**	**1.2**			**NEW BAY LIGHTS**	1.5	3.2			2.0	**MAU-1**			**2.0**	****30**	**3**	14
15	***20**	**1**	**0.9**			**NEW BAY LIGHTS**	1.1		2.9		2.0	**----**			**2.0**	–	–	16
17	***20**	**1**	**0.6**			**BUILDING LIGHTS**	0.8			2.6	2.0	**----**			**2.0**	–	–	18

TOTALS: CONNECTED kVA PER PHASE **18 18 11** CONNECTED TOTAL kVA **47**
CONNECTED AMPS PER PHASE **149 147 93** CONNECTED AVERAGE AMPS PER PHASE **130**

NEC DIVERSIFIED LOAD CALCULATIONS
LIGHTING 3kVA @125% = **3** kVA ALL OTHER LOADS @100% = **44** kVA DIVERSIFIED TOTAL kVA = **47**
RECEPTACLES 0kVA @100% = **0** kVA 25% OF LARGEST MOTOR = **0** kVA AVERAGE AMPS PER PHASE = **131**
REMAINDER 0kVA @ 50% = **0** kVA

*–PROVIDE NEW 20/1 BREAKER TO MATCH PANEL TYPE. FIELD VERIFY.
**–PROVIDE NEW 30/3 BREAKER TO MATCH PANEL TYPE. FIELD VERIFY.

STANDARD WIRING DEVICE SCHEDULE

NOTE TO BIDDERS: COMPLY WITH SECTION 262726 OF THE SPECIFICATIONS. THE CATALOG NUMBERS LISTED BELOW HAVE BEEN CAREFULLY PREPARED WITH THE ASSISTANCE OF THE MANUFACTURER?S REPRESENTATIVES WITH THE OBJECTIVE OF ASSISTING THE BIDDERS IN DETERMINING THE QUALITY AND RATINGS OF THE WIRING DEVICE SPECIFIED; HOWEVER, THE CATALOG NUMBERS MAY NOT BE COMPLETE OR ACCURATE. IN ADDITION, THE COLOR OF THE WIRING DEVICE IS NOT INTENDED TO BE DETERMINED BY THE CATALOG NUMBERS LISTED BELOW, BUT SHALL BE SELECTED BY THE ARCHITECT AS INDICATED IN THE SPECIFICATION. EACH MANUFACTURER PRIOR TO BIDDING SHALL COMPARE CATALOG NUMBERS SHOWN WITH THE DESCRIPTION AND SHALL NOTIFY THE ARCHITECT/ENGINEER OF ANY DISCREPANCIES.

NEMA	DESCRIPTION	CATALOG NUMBERS
NEMA 5–20R	20A, 125V 2 POLE 3 WIRE DUPLEX GROUNDING RECEPTACLES. NYLON OR LEXAN FACES. BACK AND SIDE WIRED. COMPLY WITH FS W–C–596 AND UL 498.	BRYANT 5352 HUBBELL CR5352 LEVITON 5352 P&S 5352
NEMA 5–20R GFCI	20A, 125V 2 POLE 3 WIRE DUPLEX FEED THRU GFCI RECEPTACLES WITH INDICATOR LIGHT. NYLON OR LEXAN DECORATOR FACES. BACK AND SIDE WIRED. INTERNAL COMPONENTS SHALL COMPLY WITH FS W–C–596 WHERE APPLICABLE. COMPLY WITH UL 498 AND UL 493.	BRYANT GFR53FT HUBBELL GF5352 LEVITON 6898 P&S 2091 S
NEMA 5–20R WATERPROOF (WEATHERPROOF IN USE)	20A, 125V 2 POLE 3 WIRE DUPLEX GROUNDING RECEPTACLES. NYLON OR LEXAN FACES. BACK AND SIDE WIRED. COMPLY WITH FS W–C–596 AND UL 498. FULLY GASKETED WEATHERPROOF WHILE IN USE ENCLOSURE.	HUBBELL CR5352/5051–0
NEMA 5–20R WATERPROOF	20A, 125V 2 POLE 3 WIRE DUPLEX GROUNDING RECEPTACLES. NYLON OR LEXAN FACES. BACK AND SIDE WIRED. COMPLY WITH FS W–C–596 AND UL 498. CAST ALUMINUM AND UL LISTED FOR WET LOCATIONS.	HUBBELL HBL5206WO
20A DROP CORD REEL RETRACTABLE OUTLET/PLUG	20A, 125V 3–WIRE #10 CU SOW CABLE WITH ADJUSTABLE CABLE BUMPER, MATCH REQUIRED RECEPTACLE/PLUG WITH EQUIPMENT UL LISTED FOR WET LOCATIONS. PROVIDE WITH 40–FOOT MINIMUM PULL LENGTH.	HUBBELL REELCRAFT UNITED EQUIPMENT
20A SINGLE POLE	20A SINGLE POLE 125V–277V STANDARD TOGGLE SWITCH LABELED AS COMPLYING UL STANDARD 20 AND WITH FEDERAL SPECIFICATION W–S–896. PROVIDE NYLON OR LEXAN FACE, BACK AND SIDE WIRED. RATED 1 HP 120V.	HUBBELL CS1221 LEVITON 1221 P&S 521 BRYANT 4903
20A THREE–WAY	20A SINGLE POLE 125V–277V STANDARD TOGGLE SWITCH LABELED AS COMPLYING UL STANDARD 20 AND WITH FEDERAL SPECIFICATION W–S–896. PROVIDE NYLON OR LEXAN FACE, BACK AND SIDE WIRED. RATED 1 HP 120V.	HUBBELL CS1223 LEVITON 1223 P&S 523 BRYANT 4903
20A FOUR–WAY	20A SINGLE POLE 125V–277V STANDARD TOGGLE SWITCH LABELED AS COMPLYING UL STANDARD 20 AND WITH FEDERAL SPECIFICATION W–S–896. PROVIDE NYLON OR LEXAN FACE, BACK AND SIDE WIRED. RATED 1 HP 120V.	HUBBELL CS1224 LEVITON 1224 P&S 524 BRYANT 4904

EQUIPMENT SCHEDULE KEY

E	DIVISION 16
Q	FURNISHED WITH THE EQUIPMENT
*	COORDINATE WITH THE DIVISION 15 TEMPERATURE CONTROL INSTALLER
**	AUTOMATIC CONTROL WIRING BY DIVISION 15

MAIN PANEL "M" (EXISTING)

VOLTS/PHASE/WIRE:	MAIN SIZE & TYPE:	LOCATION:	NOTES:
120/208 V, 3 PH 4 WIRE	350 AMPERE MAIN BKR		

ACCESSORIES: IDENTIFICATION, GROUNDING BAR, INSULATED GROUND BAR

CKT NO	OCP AMP	OCP POLE	LOAD (kVA) LTG	LOAD (kVA) CO	LOAD (kVA) PWR	PANEL / EQUIPMENT	LCL kVA	PHASE LOAD A	PHASE LOAD B	PHASE LOAD C	LCL kVA	PANEL / EQUIPMENT	LOAD (kVA) LTG	LOAD (kVA) CO	LOAD (kVA) PWR	OCP AMP	OCP POLE	CKT NO
1	125	3	3.6	5.2	3.6	PANEL A	13.3	12.4			0.0	SPARE				125	3	2
–	–	–	3.4	5.8	2.4	–	12.4		11.6		0.0	–				–	–	–
–	–	–	3.3	5.2	3.6	–	13.0			12.1	0.0	–				–	–	–
3	200	3				SPARE	0.0	17.9			18.2	PANEL D	1.2	0.0	16.7	200	3	4
–	–	–				–	0.0		17.6		17.8	–	0.9	0.0	16.7	–	–	–
–	–	–				–	0.0			11.1	11.3	–	0.6	0.0	10.5	–	–	–

TOTALS: CONNECTED kVA PER PHASE **30 29 23** CONNECTED TOTAL kVA **83**
CONNECTED AMPS PER PHASE **253 243 194** CONNECTED AVERAGE AMPS PER PHASE **230**

NEC DIVERSIFIED LOAD CALCULATIONS
LIGHTING 13kVA @125% = **16** kVA ALL OTHER LOADS @100% = **54** kVA DIVERSIFIED TOTAL kVA = **83**
RECEPTACLES 10kVA @100% = **10** kVA 25% OF LARGEST MOTOR = **0** kVA AVERAGE AMPS PER PHASE = **230**
REMAINDER 6kVA @ 50% = **3** kVA

PANEL "A" (EXISTING)

VOLTS/PHASE/WIRE:	PANEL SIZE & TYPE:	MAIN SIZE & TYPE:	LOCATION:	CABINET:	NOTES:
120/208 V, 3 PH 4 WIRE	22" W x 6" D, BOLT-ON	225 AMPERE MAIN LUG		SURFACE	125A PROT

ACCESSORIES: PANEL DIRECTORY, IDENTIFICATION, GROUNDING BAR, SUBFEED LUGS, HINGED COVER

CKT NO	OCP AMP	OCP POLE	LOAD (kVA) LTG	LOAD (kVA) CO	LOAD (kVA) PWR	DESCRIPTION	LCL kVA	PHASE LOAD A	PHASE LOAD B	PHASE LOAD C	LCL kVA	DESCRIPTION	LOAD (kVA) LTG	LOAD (kVA) CO	LOAD (kVA) PWR	OCP AMP	OCP POLE	CKT NO
1	20	1	1.2			LIGHTS WORK BAY	1.5	2.0			1.0	OUTSIDE LIGHTS	0.8			20	1	2
3	20	1	1.2			LIGHTS WORK BAY	1.5		2.2		1.2	LIGHTS–MECH,HALL,BREAK	1.0			20	1	4
5	20	1	1.2			LIGHTS WORK BAY	1.5			2.1	1.2	LIGHTS–TOOL BAY STORAGE	0.9			20	1	6
7	20	1	1.2			LIGHTS WORK BAY	1.5	2.4			1.2	GFI–WORK BAY		1.2		20	1	8
9	20	1	1.2			LIGHTS WORK BAY	1.5		2.4		1.2	GFI–WORK BAY		1.2		20	1	10
11	20	1	1.2			LIGHTS WORK BAY	1.5			2.4	1.2	GFI–WORK BAY		1.2		20	1	12
13	20	1		1.2		GFI WORK BAY	1.2	2.4			1.2	GFI–WORK BAY		1.2		20	1	14
15	20	1		1.2		GFI WORK BAY	1.2		2.4		1.2	GFI–WORK BAY		1.2		20	1	16
17	20	1		1.2		GFI WORK BAY	1.2			2.4	1.2	GFI–WORK BAY		1.2		20	1	18
19	20	1		0.6		C.O.	0.6	1.0			0.5	GFI BATTERY PACK	0.4			20	1	20
21	20	1		1.0		C.O.	1.0		1.8		0.8	**NEW SHOP**		**0.8**		20	1	22
23	20	1			**1.2**	**EF–2**	1.2			1.8	0.6	**NEW SHOP**		**0.6**		20	1	24
25	20	1			1.2	DOOR MOTOR	1.2	2.0			0.8	**NEW SHOP**		**0.8**		20	1	26
27	20	1			1.2	DOOR MOTOR	1.2		1.4		0.2	**NEW SHOP CORD REEL**		**0.2**		20	1	28
29	20	1			1.2	DOOR MOTOR	1.2			1.4	0.2	**NEW SHOP CORD REEL**		**0.2**		20	1	30
31	20	1			1.2	DOOR MOTOR	1.2	2.4			1.2	**EF–1**			**1.2**	20	1	32
33	20	1			1.2	DOOR MOTOR	1.2		1.2		0.0	SPARE				20	2	34
35	20	1			1.2	DOOR MOTOR	1.2			1.2	0.0	----				–	–	36
37	20	3				SURGE SUPPRESSOR	0.0	0.2			0.2	**NEW SHOP CORD REEL**		**0.2**		***20**	**1**	38
39	–	–				----	0.0		0.2		0.2	**NEW SHOP CORD REEL**		**0.2**		***20**	**1**	40
41	–	–				----	0.0			0.8	0.8	**NEW SHOP**		**0.8**		***20**	**1**	42

TOTALS: CONNECTED kVA PER PHASE **12 12 12** CONNECTED TOTAL kVA **36**
CONNECTED AMPS PER PHASE **103 97 101** CONNECTED AVERAGE AMPS PER PHASE **100**

NEC DIVERSIFIED LOAD CALCULATIONS
LIGHTING 10kVA @125% = **13** kVA ALL OTHER LOADS @100% = **10** kVA DIVERSIFIED TOTAL kVA = **36**
RECEPTACLES 10kVA @100% = **10** kVA 25% OF LARGEST MOTOR = **0** kVA AVERAGE AMPS PER PHASE = **99**
REMAINDER 6kVA @ 50% = **3** kVA

*–PROVIDE NEW 20/1 BREAKER TO MATCH PANEL TYPE. FIELD VERIFY.

PANEL "B" (EXISTING)

VOLTS/PHASE/WIRE:	PANEL SIZE & TYPE:	MAIN SIZE & TYPE:	LOCATION:	CABINET:	NOTES:
120/208 V, 3 PH 4 WIRE	22" W x 6" D, BOLT-ON	225 AMPERE MAIN LUG		SURFACE	200A PROT

ACCESSORIES: PANEL DIRECTORY, IDENTIFICATION, GROUNDING BAR, SUBFEED LUGS, HINGED COVER

CKT NO	OCP AMP	OCP POLE	LOAD (kVA) LTG	LOAD (kVA) CO	LOAD (kVA) PWR	DESCRIPTION	LCL kVA	PHASE LOAD A	PHASE LOAD B	PHASE LOAD C	LCL kVA	DESCRIPTION	LOAD (kVA) LTG	LOAD (kVA) CO	LOAD (kVA) PWR	OCP AMP	OCP POLE	CKT NO
1	20	1				SPARE	0.0	0.1			0.1	EF–1			0.1	20	1	2
3	20	1			0.8	CRV–1 EAST	0.8		1.3		0.5	EF–2			0.5	20	1	4
5	20	1			1.1	EXHAUST FAN S.E.	1.1			2.0	0.8	EF–3			0.8	20	1	6
7	20	1			1.1	EXHAUST FAN N.E.	1.1	2.0			0.8	EF–4			0.8	20	1	8
9	20	1			1.1	SPARE	1.1		2.3		1.2	**UH–1**			**1.2**	20	1	10
11	20	1			0.02	UH–1	0.0			1.1	1.1	EXHAUST FAN N.W.			1.1	20	1	12
13	20	1			0.02	UH–1	0.0	1.2			1.2	**UH–2**			**1.2**	20	1	14
15	20	1			0.02	UH–1	0.0		1.1		1.1	CRV–2 WEST			1.1	20	1	16
17	20	1			0.5	T.T.B.	0.5			2.2	1.7	**OH–1**			**1.7**	20	1	18
19	20	3				RTU–2	0.0	1.7			1.7	**OH–1**			**1.7**	20	1	20
21	–	–				----	0.0		0.0		0.0	EXPLOSION PROOF ROOM				20	1	22
23	–	–				----	0.0			1.7	1.7	**OH–1**			**1.7**	20	1	24
25	20	3				EF–6	0.0	1.7			1.7	**OH–1**			**1.7**	20	1	26
27	–	–				----	0.0		0.0		0.0	SPARE				20	1	28
29	–	–				----	0.0			2.0	2.0	RTU–1			2.0	30	2	30
31	50	2			3.8	ELEC. WALL HTR S.	3.8	5.8			2.0	----			2.0	–	–	32
33	–	–			3.8	----	3.8		7.6		3.8	ELECTRIC WALL HTR N.			3.8	50	2	34
35	20	1				SPARE	0.0			3.8	3.8	----			3.8	–	–	36
37	50	3			2.9	MUA–1	2.9	4.9			2.0	COMPRESSOR			2.0	40	3	38
39	–	–			2.9	----	2.9		4.9		2.0	----			2.0	–	–	40
41	–	–			2.9	----	2.9			4.9	2.0	----			2.0	–	–	42

TOTALS: CONNECTED kVA PER PHASE **17 17 18** CONNECTED TOTAL kVA **52**
CONNECTED AMPS PER PHASE **145 145 148** CONNECTED AVERAGE AMPS PER PHASE **146**

NEC DIVERSIFIED LOAD CALCULATIONS
LIGHTING 0kVA @125% = **0** kVA ALL OTHER LOADS @100% = **52** kVA DIVERSIFIED TOTAL kVA = **52**
RECEPTACLES 0kVA @100% = **0** kVA 25% OF LARGEST MOTOR = **0** kVA AVERAGE AMPS PER PHASE = **146**
REMAINDER 0kVA @ 50% = **0** kVA

EQUIPMENT SCHEDULE

MARK	ITEM DESCRIPTION	LOAD DATA HP	kW	MCA	FLA	VOLT	PH	Hz	WIRE AND CONDUIT SIZE (CC–INDICATES CONDUCTOR AND CONDUIT SCHEDULE)	OVERCURRENT PROTECTION: DISCONNECT SWITCH FURN BY	SWITCH TYPE	NEMA RATING	FUSED SWITCH	FUSE RATING	FUSE CLASS	CIRCUIT BREAKER CB	PANEL	RATING	NOTES	MARK
EF–1	EXHAUST FAN	1/2			9.8	120	1	60	CC#4	E	THERMAL SWITCH					20/1		HACR	1	EF–1
EF–2	EXHAUST FAN	1/2			9.8	120	1	60	CC#4	E	THERMAL SWITCH					20/1		HACR	1	EF–2
MAU–1	MAKE–UP AIR UNIT	5			16.7	208	3	60	CC#5	E	30/3	3R	YES	25A	RK5	30/3		HACR	1,2	MAU–1
MAU–P1	MAU–1 PUMP	1/4			5.8	120	1	60	CC#4	E	THERMAL SWITCH					20/1		HACR	1,3	MAU–P1
OH–1	OVERHEAD DOOR	3/4			13.8	120	1	60	CC#4	E	THERMAL SWITCH					20/1		HACR	1	OH–1
UH–1	GAS UNIT HEATER	1/2			9.8	120	1	60	CC#4	E	THERMAL SWITCH					20/1		HACR	1	UH–1
UH–2	GAS UNIT HEATER	1/2			9.8	120	1	60	CC#4	E	THERMAL SWITCH					20/1		HACR	1	UH–2

NOTES:
1. LOCATE DISCONNECT ADJACENT TO UNIT.
2. PROVIDE WITH SIZE 1, FVNR STARTER WITH HOA SWITCH, RED AND GREEN PILOT LIGHTS, 2 NORMALLY OPEN CONTACTS AND 2 NORMALLY CLOSED CONTACTS
3. PROVIDE WITH STARTER RATED THERMAL OVERLOAD SWITCH.

COOPER ROBERTS SIMONSEN ASSOCIATES
crsa
700 NORTH 200 WEST
SALT LAKE CITY,UTAH 84103
(801) 355-5915
(801) 355-9885 FAX
WWW.CRSA-US.COM

STRUCTURAL ENGINEER
CALDER RICHARDS CONSULTING ENGINEERS
634 South 400 West Suite 100
SALT LAKE CITY, UT 84101
(801) 466-1699 (801) 467-2495 FAX
stephen@crceng.com

MECHANICAL ENGINEER
SMD
986 WEST ATHERTON DRIVE STE. 200
TAYLORSVILLE, UTAH 84123
(801)268-3828 FAX (801)268-3297

ELECTRICAL ENGINEER
SPECTRUM
175 S MAIN STREET STE. 300
SALT LAKE CITY, UTAH 84111
(801)328-5151 (801)401-9471

UTNG WJRC
OMS SHOP ADDN.
DFCM NO. 8031480
7602 SOUTH AIRPORT ROAD
WEST JORDAN, UTAH

UTAH NATIONAL GUARD
12953 SOUTH
MINUTEMAN DRIVE.
DRAPER UTAH 84020-1776

2	
1	
-	-
-	-
-	-
BID	8/15/08 BID DOCUMENTS

PROJECT NO:	B08-024
CAD DWG FILE:	21EP-602.dwg
DRAWN BY:	PSS
CHECKED BY:	DLA

POWER SCHEDULES

EP602
SHEET OF

File Name: P:\2008\20080321\1Drawings\Sheet\21EP-602.dwg Last Plotted: 2008/08/29 @ 6:04 PM By: pss

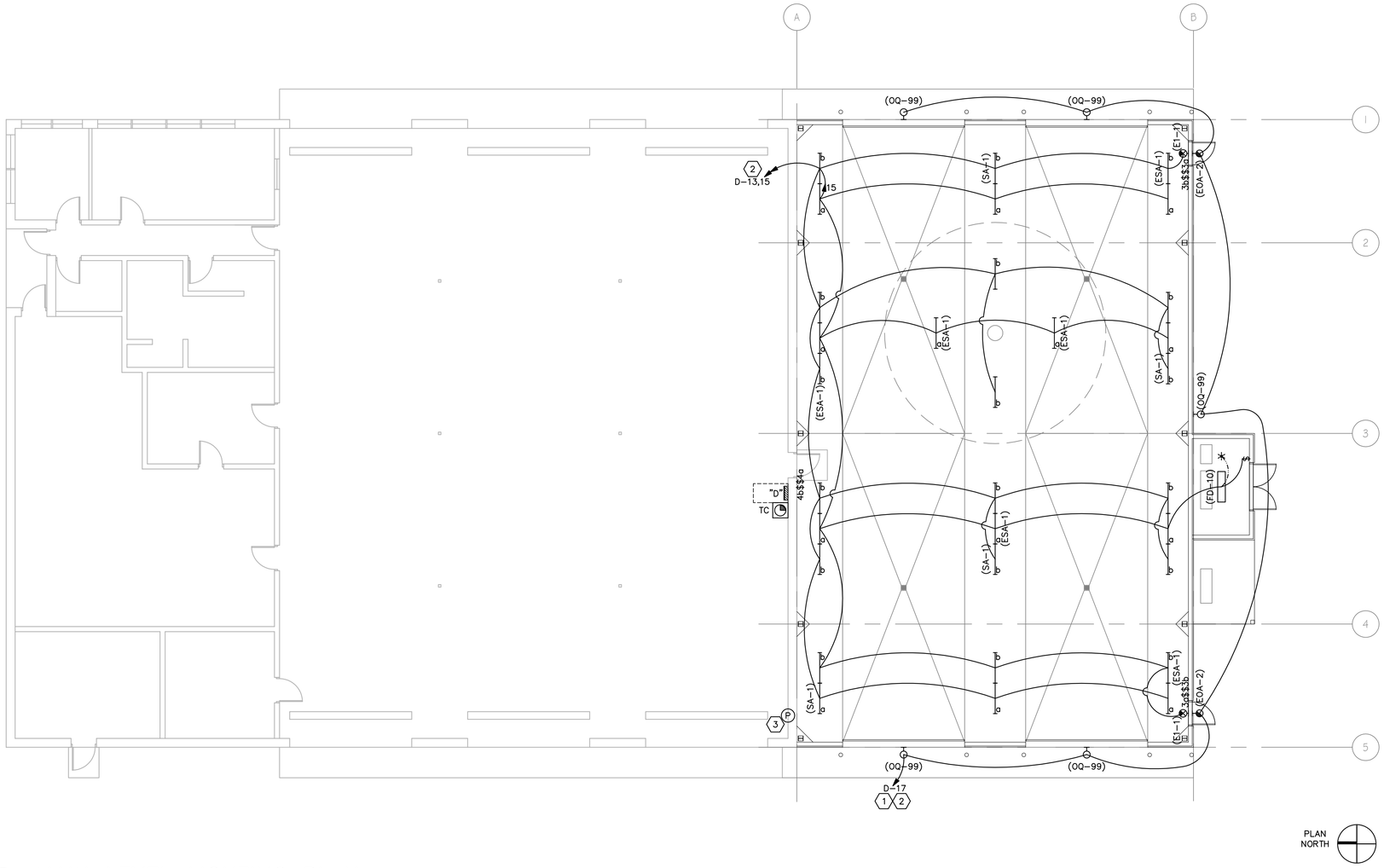

B1 MAIN LEVEL LIGHTING PLAN
1/8" = 1'-0"

GENERAL SHEET NOTES

1. CONNECT ALL EMERGENCY BATTERY PACKS AND EXIT SIGNS TO UNSWITCHED LEG OF CIRCUIT.

SHEET KEYNOTES

1. CONNECT LIGHTS THROUGH TIMECLOCK AND PHOTOCELL. PHOTOCELL ENABLE, TIMECLOCK OFF. SEE LIGHTING CONTROL DETAIL B2, SHEET EE502.
2. CONNECT TO NEW 20/1 BREAKER(S) IN PANEL "D". PROVIDE NEW 20/1 BREAKER IN PANEL "D" TO MATCH EXISTING PANEL TYPE.
3. NEW PHOTOCELL ON ROOF. FACE NORTH.

COOPER ROBERTS SIMONSEN ASSOCIATES
crsa
700 NORTH 200 WEST
SALT LAKE CITY,UTAH 84103
(801) 355-5915
(801) 355-9885 FAX
WWW.CRSA-US.COM

STRUCTURAL ENGINEER
CALDER RICHARDS CONSULTING ENGINEERS
634 South 400 West Suite 100
SALT LAKE CITY, UT 84101
(801) 466-1699 (801) 467-2495 FAX
stephen@crceng.com

MECHANICAL ENGINEER
SMD
986 WEST ATHERTON DRIVE STE. 200
TAYLORSVILLE, UTAH 84123
(801)268-3828 FAX (801)268-3297

ELECTRICAL ENGINEER
SPECTRUM
175 S MAIN STREET STE. 300
SALT LAKE CITY, UTAH 84111
(801)328-5151 (801)401-9471

UTNG WJRC
OMS SHOP ADDN.
DFCM NO. 8031480
7602 SOUTH AIRPORT ROAD
WEST JORDAN, UTAH

UTAH NATIONAL GUARD
12953 SOUTH
MINUTEMAN DRIVE.
DRAPER, UTAH 84020-1776

2		
1		
-	-	-
-	-	-
-	-	-
BID	8/15/08	BID DOCUMENTS

PROJECT NO:	B08-024
CAD DWG FILE:	21EL-101.dwg
DRAWN BY:	PSS
CHECKED BY:	DLA

MAIN LEVEL
LIGHTING PLAN

EL101
SHEET OF

File Name: P:\2008\20080321\1Drawings\Sheet\21EL-101.dwg Last Plotted: 2008/08/29 @ 6:04 PM By: pss

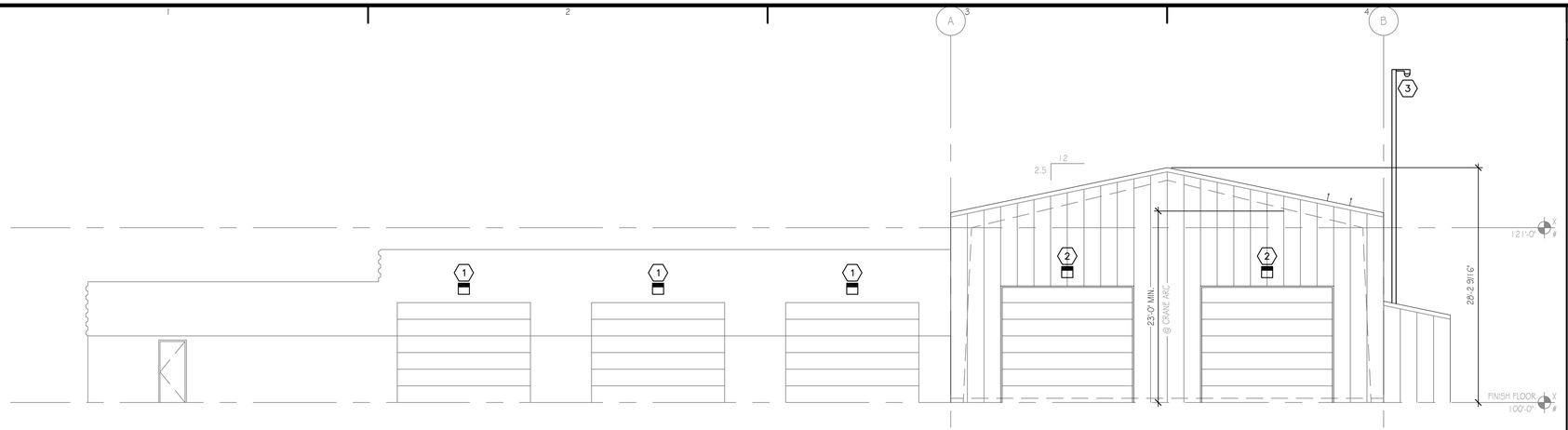

C1 WEST ELEVATION
1/8" = 1'-0"

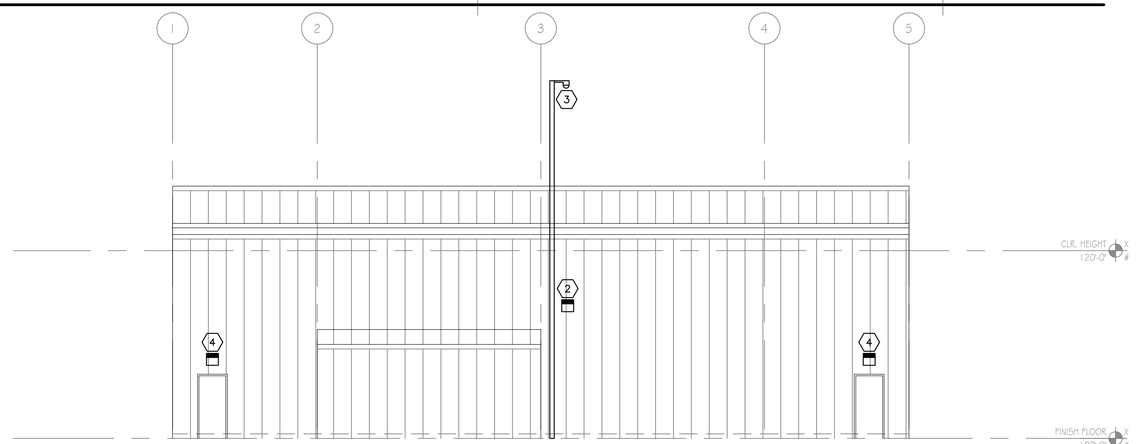

B3 SOUTH ELEVATION
1/8" = 1'-0"

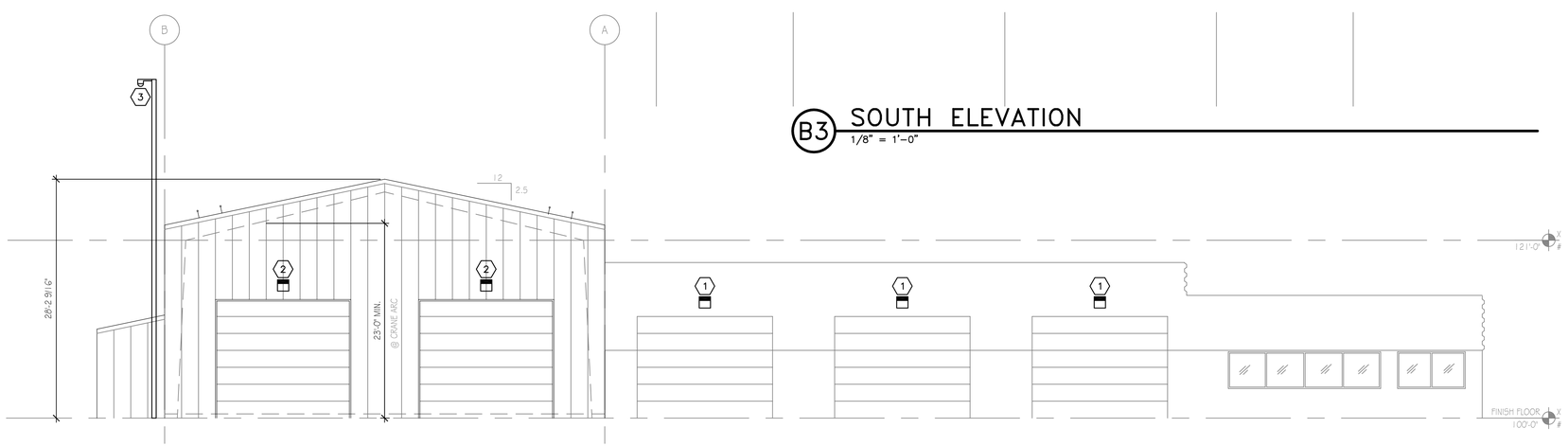

A1 EAST ELEVATION
1/8" = 1'-0"

SHEET KEYNOTES

1. EXISTING WALL PACK TO REMAIN.
2. NEW WALL PACK OQ-99.
3. RELOCATED CAMERA POLE AND CAMERA.
4. NEW EMERGENCY WALL PACK EOA-2.

COOPER
ROBERTS
SIMONSEN
ASSOCIATES

crsa

700 NORTH 200 WEST
SALT LAKE CITY,UTAH 84103
(801) 355-5915
(801) 355-9885 FAX
WWW.CRSA-US.COM

STRUCTURAL ENGINEER
CALDER RICHARDS CONSULTING ENGINEERS
634 South 400 West Suite 100
SALT LAKE CITY, UT 84101
(801) 466-1699 (801) 467-2495 FAX
stephen@crceng.com

MECHANICAL ENGINEER
SMD
986 WEST ATHERTON DRIVE STE. 200
TAYLORSVILLE, UTAH 84123
(801)268-3828 FAX (801)268-3297

ELECTRICAL ENGINEER
SPECTRUM
175 S MAIN STREET STE. 300
SALT LAKE CITY, UTAH 84111
(801)328-5151 (801)401-9471

UTNG WJRC
OMS SHOP ADDN.
DFCM NO. 8031480
7602 SOUTH AIRPORT ROAD
WEST JORDAN, UTAH

UTAH NATIONAL GUARD
12953 SOUTH
MINUTEMAN DRIVE.
DRAPER UTAH 84020-1776

2			
1			
-	-	-	
-	-	-	
-	-	-	
BID	8/15/08	BID DOCUMENTS	

PROJECT NO:	B08-024
CAD DWG FILE:	21EL-201.dwg
DRAWN BY:	PSS
CHECKED BY:	DLA

LIGHTING
ELEVATIONS

EL201

SHEET OF

File Name: P:\2008\20080321\1Drawings\Sheet\21EL-201.dwg Last Plotted: 2008/08/29 @ 6:04 PM By: pss

LIGHTING FIXTURE SCHEDULE

NOTE TO BIDDERS: COMPLY WITH SECTIONS 16511, 16521, AND 16570 OF THE SPECIFICATIONS.
REFER TO SPECIFICATIONS FOR IMPORTANT TECHNICAL REQUIREMENTS FOR LIGHTING FIXTURES, BALLASTS, AND LAMPS. THE CATALOG NUMBERS LISTED BELOW HAVE BEEN CAREFULLY PREPARED TO ASSIST BIDDERS IN SELECTING PRODUCTS TO ACHIEVE THE DESIGN CONCEPT, HOWEVER, PRIOR TO BIDDING, EACH MANUFACTURER SHALL COMPARE THE CATALOG NUMBERS SHOWN WITH THE DESCRIPTION AND REQUIREMENTS ON THE DRAWINGS, AND SHALL NOTIFY THE ARCHITECT/ENGINEER OF ANY DISCREPANCIES. SPECIFICALLY INCLUDED IN THIS EVALUATION SHALL BE THE VERIFYING OF PROPER MOUNTING KITS OR ACCESSORIES TO FACILITATE INSTALLATION AS SHOWN AT EACH LOCATION ON THE DRAWINGS. NO ALLOWANCE OR REDRESS WILL BE ALLOWED FOR DISCREPANCIES THAT WERE NOT REPORTED TO THE ARCHITECT/ENGINEER IN TIME FOR CORRECTION OR CLARIFICATION BEFORE THE BID. THE REPORTING OF ANY AMBIGUITY IS THE RESPONSIBILITY OF THE BIDDER. PROVIDE UNIT PRICES AND FIXTURE BRAND SELECTED FOR ADD/DELETE CHANGES FOR EACH FIXTURE TYPES SHOWN WITHIN 48 BUSINESS HOURS OF THE BID DATE. FAILURE TO COMPLY WITH THIS REQUIREMENT MAY DISQUALIFY THE PRODUCTS AND EMPOWER THE ENGINEER TO DETERMINE FAIR VALUE FOR FIXTURE AND INSTALLATION CHANGES, WITHOUT FURTHER INPUT FROM THE CONTRACTOR OR INSTALLER. SUBMITTAL PACKAGE SHALL INCLUDE LAMP MANUFACTURER AND CATALOG NUMBER ON EACH FIXTURE SHEET. ON ALL PENDANT MOUNTED FIXTURES, PROVIDE A SECOND SET OF PENDANTS, OF A DIFFERENT LENGTH, AS DIRECTED BY THE ARCHITECT/ENGINEER, PROVIDED AND INSTALLED AT NO ADDITIONAL CHARGE. ALL FIXTURES SHALL BE APPROVED BY UL OR ANOTHER ACCEPTABLE TESTING LAB FOR THE PURPOSE INTENDED AND WITH THE LAMP AND BALLAST PROPOSED. CONTRACTOR ALLOWANCE PRICES ARE ACCURATE WHEN THIS JOB WAS SPECIFIED, CONTRACTOR AND ELECTRICAL DISTRIBUTOR SHALL VERIFY THIS ALLOWANCE AND REPORT ANY PROBLEMS TO THE ENGINEER BEFORE THE BID. ALLOWANCE PRICE MAY OR MAY NOT INCLUDE LAMP(S) OR FREIGHT AS NOTED, AND DO NOT INCLUDE ANY TAXES. UNIVERSAL VOLTAGE (120/277) BALLASTS REQUIRED UNLESS NOTED OTHERWISE. DIMENSION SEQUENCE = (LENGTH X WIDTH X DEPTH) IN INCHES.

SYMBOL	MARK	FIXTURE CHARACTERISTICS BODY / AIR / MOUNTING / DOOR LENS/LOUVER/REFLECTOR/OTHER	LAMP	WATTS	VOLTS	MANUFACTURER	CATALOG NUMBER	NOTES
	E	E PREFIX INDICATES THAT FIXTURE IS PROVIDED WITH AN EMERGENCY BATTERY PACK TO PROVIDE POWER TO ANY 2, 3, 4 OR 8 FOOT FLOURESCENT LAMP COMPATIBLE WITH ALL STANDARD AND ELECTRONIC BALLASTS; COMPLETELY SELF-CONTAINED TO PROVIDE 90 MINUTES OF EMERGENCY POWER TO FIXTURE BALLAST; MINIMUM LIGHT OUTPUT FOR TYPICAL 4' LAMP SHALL BE 1100 LUMENS OR HIGHER;UNIVERSAL TRANSFORMER FOR 120 OR 277 VOLTS; LOW VOLTAGE PROTECTION, COMBINATION TEST SWITCH AND AC "ON" INDICATOR; 10 YEAR PRO-RATA WARRANTY; INSTALL TEST SWITCH IN A MANNER THAT REQUIRES NO DISASSEMBLY FOR TESTING.						
	E	EMERGENCY BATTERY PACK.		120/277V	3W	IOTA	I-80	
						BODINE	B50	
						LITHONIA	PS-1400	
						PRESCOLITE	EFPS-5	
						EELP	EB1400 (CONTRACTOR INSTALLED)	
						CHLORIDE	CFP841	
						LIGHTOLIER	FBP50	
						SIDELITE	S60F	
	E1	EXIT SIGN: THERMOPLASTIC HOUSING; UNIVERSAL MOUNTING; UNIVERSAL ARROWS PER PLANS; EMERGENCY BATTERY PACK WITH 10 YEAR PRO-RATA WARRANTY; LED, DIFFUSE LENS PANEL; GREEN LETTERS ON WHITE BACKGROUND. MUST MEET NFPA ILLUMINATION STANDARDS.						
	E1-1	SINGLE FACE:	LED	1W	120/277V	MCPHILBEN	CXXL-1-GW	
						DUAL-LITE	LXSGWE	
						EELP	XE 1 GW EM	
						LITHONIA	LQM S W 1 G 120/277 ELN	
						SURE-LITES	LPX70DGW	
						DAY-BRITE	CXL-1-GW-EM	
						CHLORIDE	SLN1GW	
						LIGHTOLIER	LTN1GW	
	FD	WET LOCATION FLUORESCENT; PLASTIC HOUSING; IMPACT RESISTANT ACRYLIC LENS.						
	FD-10	4' 2 T8 FLUORESCENT LAMPS; INSTANT START BALLASTS; 0 DEGREE STARTING TEMPERATURE.	2-F32T8 RE835	70W	277/120V	LITHONIA	DMW 232T8 AR 120/277 PROGRAM START	
						METALUX	VT2-232T8/DR-PROG-WL	
						HUBBELL	EWL042-SPDR-U	
						COLUMBIA	LUN4-232T8-EB120/277 PROG	
						DAYBRITE	V2WAB232T8-1/2EB-LT	
						LIGHTOLIER	STW-232-U-SO	
	OA	SMALL RECTANGULAR WALL PACK: POLYCARBONATE HOUSING WITH POLYCARBONATE PRISMATIC DIFFUSER, RECESSED BOX MOUNTING; BRONZE.						
	EOA-2	RECTANGULAR WALL PACK: APPROX 6" X 6" X 12"; WALL MOUNTED SEE ELEVATION.	1-42PLT RE741	50W	120V	HUBBELL	NRG-304 (277 AVAILABLE)-EM	
						TERON	CA42TBXE-EM	
						LITHONIA	TWL-42TRT-120-EM	
						LUMARK	N/A	
						LUMINAIRE	DWL512-1PLT42-EM	
						DESIGN PLAN	207-8-H5-1-XX-0-9-P-0-EM	
	OQ	WALL PACK: NON-CUTOFF; FULL PERIMETER GASKETING; WET LOCATION; STAINLESS STEEL HINGES AND LATCHES; HPF BALLAST; SEE ELEVATION FOR MOUNTING HEIGHT.						
	OQ-99	70HPS, DARK BRONZE; RECESSED J BOX.	70HPS	100W	277/120V	LITHONIA	TWP 70S TB	
						HUBBELL	PVL-70S-128	
						EXCELINE	33370LXL-8	
						LUMARK	HPWL-70-XXX	
						DATBRITE	WLI70S-DT	
						SPAULDING	WGRI-S70P-MT-DBZ	
						HOLOPHANE	WL2K7AHPMTBZ	
	SA	GENERAL PURPOSE INDUSTRIAL: WHITE ENAMEL, APERTURED REFLECTOR; PROGRAM START ELECTRONIC BALLASTS; T8 LAMPS; ONE BALLAST PER FIXTURE WHERE POSSIBLE; UNLESS TWO LEVEL SWITCHING IS SHOWN ON THE PLANS; STEM MOUNTED WITH TONG HANGERS.						
	SA-1	4', 2-LAMP.	2-F32T8 RE835	65W	277/120V	LITHONIA	EJA232-MVOLT-TUBRHP-THUN	
						LIGHTOLIER	KWA232-U-SOP	
						METALUX	IA-232-UNV-PROGRAM START	
						HUBBELL	IG142R-PP10-UPS	
						COLUMBIA	CSR4-232U-EB8120/277 PROG-CSTH	
						DAYBRITE	IA232-UNV-1/2-EB-SPEC	

COOPER ROBERTS SIMONSEN ASSOCIATES

crsa

700 NORTH 200 WEST
SALT LAKE CITY,UTAH 84103
(801) 355-5915
(801) 355-9885 FAX
WWW.CRSA-US.COM

STRUCTURAL ENGINEER
CALDER RICHARDS CONSULTING ENGINEERS
634 South 400 West Suite 100
SALT LAKE CITY, UT 84101
(801) 466-1699 (801) 467-2495 FAX
stephen@crceng.com

MECHANICAL ENGINEER
SMD
986 WEST ATHERTON DRIVE STE. 200
TAYLORSVILLE, UTAH 84123
(801)268-3828 FAX (801)268-3297

ELECTRICAL ENGINEER
SPECTRUM
175 S MAIN STREET STE. 300
SALT LAKE CITY, UTAH 84111
(801)328-5151 (801)401-9471

UTNG WJRC
OMS SHOP ADDN.
DFCM NO. 8031480
7602 SOUTH AIRPORT ROAD
WEST JORDAN, UTAH

UTAH NATIONAL GUARD
12953 SOUTH
MINUTEMAN DRIVE.
DRAPER UTAH 84020-1776

2		
1		
-	-	-
-	-	-
-	-	-
BID	8/15/08	BID DOCUMENTS

PROJECT NO:	B08-024
CAD DWG FILE:	21EL-601.dwg
DRAWN BY:	PSS
CHECKED BY:	DLA

LIGHTING FIXTURE SCHEDULE

EL601

SHEET OF

File Name: P:\2008\20080321\1Drawings\Sheet\21EL-601.dwg Last Plotted: 2008/08/29 @ 6:04 PM By: pss

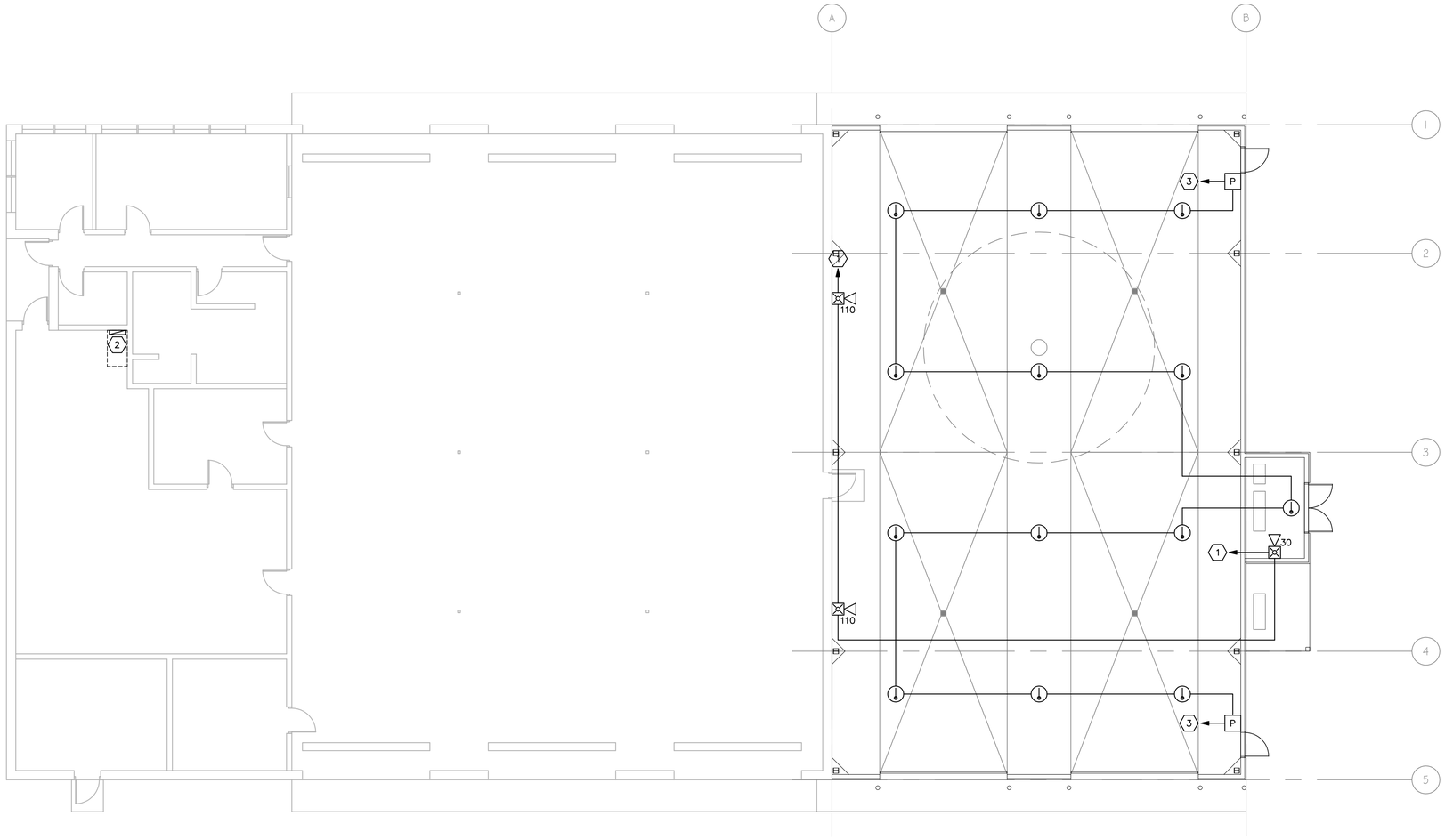

B1 MAIN LEVEL FIRE ALARM PLAN

1/8" = 1'-0"

SHEET KEYNOTES

1. CONNECT TO EXISTING FIRE ALARM PANEL INDICATING LOOP. FIELD VERIFY REQUIREMENTS.
2. EXISTING FIRE ALARM PANEL. SILENT KNIGHT MODEL IFP-50. PROVIDE REPROGRAMMING OF FIRE ALARM PANEL AND NAC EXTENDER PANELS AS REQUIRED FOR SUPPORT OF NEW DEVICES. FIELD VERIFY REQUIREMENTS.
3. CONNECT TO EXISTING FIRE ALARM PANEL INITIATING LOOP. FIELD VERIFY REQUIREMENTS.

COOPER ROBERTS SIMONSEN ASSOCIATES

crsa

700 NORTH 200 WEST
SALT LAKE CITY,UTAH 84103
(801) 355-5915
(801) 355-9885 FAX
WWW.CRSA-US.COM

STRUCTURAL ENGINEER
CALDER RICHARDS CONSULTING ENGINEERS
634 South 400 West Suite 100
SALT LAKE CITY, UT 84101
(801) 466-1699 (801) 467-2495 FAX
stephen@crceng.com

MECHANICAL ENGINEER
SMD
986 WEST ATHERTON DRIVE STE. 200
TAYLORSVILLE, UTAH 84123
(801)268-3828 FAX (801)268-3297

ELECTRICAL ENGINEER
SPECTRUM
175 S MAIN STREET STE. 300
SALT LAKE CITY, UTAH 84111
(801)328-5151 (801)401-9471

UTNG WJRC
OMS SHOP ADDN.
DFCM NO. 8031480
7602 SOUTH AIRPORT ROAD
WEST JORDAN, UTAH

UTAH NATIONAL GUARD
12953 SOUTH
MINUTEMAN DRIVE.
DRAPER UTAH 84020-1776

2		
1		
-	-	-
-	-	-
-	-	-
BID	8/15/08	BID DOCUMENTS

PROJECT NO:	808-024
CAD DWG FILE:	21FA-101.dwg
DRAWN BY:	PSS
CHECKED BY:	DLA

MAIN LEVEL
FIRE ALARM PLAN

FA101

SHEET OF

File Name: P:\2008\20080321\1Drawings\Sheet\21FA-101.dwg Last Plotted: 2008/08/29 @ 6:04 PM By: pss