CODE ANALYSIS

APPLICABLE CODES	Year		Year
International Building Code	2006	National Electrical Code	2005
International Mechanical Code	2006	Uniform Code for Building Conservation	1997
International Fuel Gas Code	2006	ADA Accessibility Guildelines	1994
International Plumbing Code	2006		
International Fire Code	2006		
International Energy Conservation Code	2006		

A. Occupancy and Group: A-3 B S-1

Change in Use: Yes ____ No X Mixed Occupancy: Yes X No ____

Special Use and Occupancy (e.g. High Rise, Covered Mall): NO

B. Seismic Design Category: D Design Wind Speed: 100 mph

C. Type of Construction (circle one):

I A | I B | II A | (II B) | III A | III B | IV HT | V A | V B

D. Fire Resistance Rating Requirements for the Exterior Walls based on the fire separation distance (in hours):

North: 0 South: 0 East: 0 West: 0

E. Mixed Occupancies: ____ Nonseparated Uses: X

F: Sprinklers:

Required: NO Provided: NO

Type of Sprinkler System (IBC 903.3.1) N/A

G: Number of Stories: 2 Building Height: 24

H: Actual Area per Floor (square feet): L1 = 24,873 (EXIST)
L2 = 7266 (EXIST + NEW)

I: Tabular Area: (table 503): 9,500 A-3 MOST RESTRICTIVE

J: Area Modifications:

a) $A_a = \left\{ A_t + \left[A_t \times I_f \right] + \left[A_t \times I_s \right] \right\}$ $I_f = \left[F/P - 0.25 \right] W / 30$

9,500 + 7125 = 16,625 666/666 - 0.25 X 1 = 0.75

b) Sum of the Ratio Calculations for Mixed Occupancies:

$\frac{\text{Actual Area}}{\text{Allowable Area}} \leq 1$ NA (NON-SEPERATED OCCUPANCIES

c) Total Allowable Area for:

1) One Story: 16,625
2) Two Story: A_a(2) 33,250
3) Three Story: A_a(3) N/A

d) Unlimited Area Building: Yes ____ No X Code Section: ____

K. Fire Resistance Rating Requirements for Building Elements (hours).

Element	Hours	Assembly Listing	Element	Hours	Assembly Listing
Exterior Bearing Walls	0	N/A	Floors - Ceiling Floors	0	N/A
Interior Bearing Walls	0	N/A	Roofs - Ceiling Roofs	0	N/A
Exterior Non-Bearing Walls	0	N/A	Exterior Doors and Windows	0	N/A
Structural Frame	0	N/A	Shaft Enclosures	0	N/A
Partitions - Permanent	0	N/A	Fire Walls	0	N/A
Fire Barriers	0	N/A	Fire Barriers	1	GA WP1072
			Smoke Partitions	0	N/A

L. Design Occupant Load: 5 (NEW)

Exit Width Required: 1" Exit Width Provided: 66"

M. Minimum Number of Required Plumbing Facilities:

a) Water Closets - Required (m) EX (f) EX Provided (m) 7(E) 1(N) (f) 2(E)
b) Urinals - Required (m) EX (f) N/A Provided (m) 6(E) 1(N) (f) N/A
c) Lavatories - Required (m) EX (f) EX Provided (m) 6(E) (f) 2(E)
d) Bath Tubs or Showers: 5MEN (4E, 1N) 1 WOMEN (E)
e) Drinking Fountains: 1(E) Service Sinks: 1(E)

(E) = EXISTING
(N) = NEW

FOOTNOTES:

1) In case of conflict with the U.S. Department of Justice Federal Registers Parts I through V - ADA Guidelines and specific reference to the International Building Code Accessibility Chapters, the more restrictive requirement shall govern.

2) Additional Code Information shall be provided at the discretion of the Building Official for Complex Buildings. Including, but not limited to:
   a) High Rise Requirements.
   b) Atriums.
   c) Performance Based Criteria.
   d) Means or Egress Analysis.
   e) Fire Assembly Locator Sheet.
   f) Exterior and Interior Accessibility Route.
   g) Fire Stopping, Including Tested Design Number.

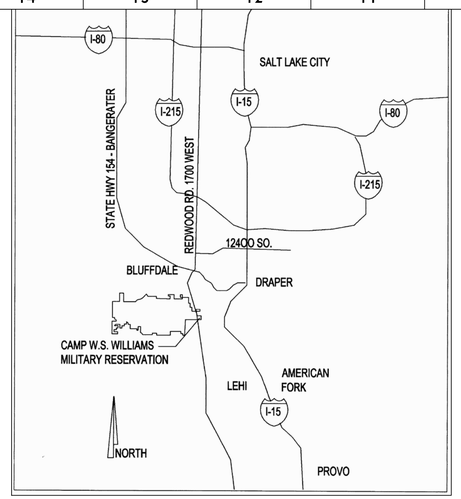

VICINITY MAP

SUPPLEMENTAL CODE DATA

Project

Utah National Guard Readiness Center Renovation
Building 5170 Camp Williams, Utah

Occupancy

Occupancy Classification (Existing):			A-3, B, S-1
Occupancy Classification (New Addition):			S-1
Most Restrictive Recuirements*	A-3√	B	S-1
Allowable Area	16625√	46240	30625
Allowable Height	2√	4	3

*Allowable area and height for existing buildings in accordance with IBC 3403.1
√ = Most restrictive requirements

Area

		Width
Public Way/Open Space		
North (assumed property line)		30
East (centerline of street)		44
South (assumed property line)		30
West (assumed property line)		30
Qualifying Building Frontage (F):		666
Building Perimeter (P):		666
F/P:		1.00
W/30: W=30		1.00
Frontage Increase (If):		75.00

Allowable Area	Multipliers	A-3√	B	S-1
Tabular Area (At)		6500	23000	17500
Frontage Increase (If)	75.00	7125	17250	13125
Allowable Area (Aa) - Per Floor		16625	46250	30625
Allowable Area - Building Total	2	33250	80500	61250

√Most restrictive

Actual Area	Existing	New	Total
Actual Area - Level 2	5066	2200	7266
Actual Area - Building Total	26939	2200	32139

Actual area of Level 2 and Building Total (with new Level 2 addition) does not exceed most restrictive allowable areas (A-3) - OK

Height and Number of Stories

	A-3√	B	S-1
Allowable Height	55	55	55
Actual Height	24	24	24
Allowable No. of Stories	2	4	3
Actual No. of Stories	2	2	2

√Most Restrictive

Actual height and number of stories does not exceed allowable height and number of stories for most restrictive occupancy (A-3) - OK

Type of Construction

Type of Construction-Existing (Assumed):	IIB
Type of Construction-New Addition:	IIB

Fire Protection Systems

Automatic Sprinkler System Required:	No

Reason: The State Building Official has determined that the Level 2 floor addition will not trigger a requirement for installing a new automatic sprinkler system throughout the existing building. Although the Level 1 floor area and fire areas in the e

Standpipe System Required:	No
Fire Alarm System: New area connected to existing system.	Yes

Means of Egress

Occupant Load	
Occupant Load - New addition: 2200/500=4.4	5

Means of Egress	Requirement	Provided
Exit Access Doors (New Addition)	1	1
Egress Width (inches): 5 x 0.20 = 1	1	66
Maximum Common Path of Travel (ft.)	75	70
Maximum Travel Distance (ft.)	200	182

Accessibility

Restroom/Shower Room upgrades on Level 1 and 2 satisfy accessible route upgrade (20% requirement) to new Level 2 addition (primary function) in accordance with IBC 3409.5 and 3409.7

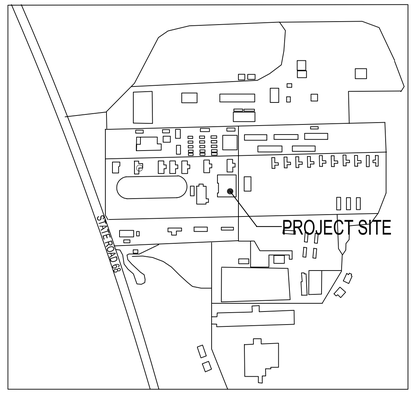

LOCATION MAP

APPROVALS:

Prime Agency ____ Date ____

DFCM ____ Date ____

UTAH NATIONAL GUARD

RENOVATION OF READINESS CENTER

CAMP W.G. WILLIAMS - BUILDING 5170, UTAH

PROJECT No. 08032470 CW

DATE: DECEMBER 15, 2008

STATE OF UTAH - DEPARTMENT OF ADMINISTRATIVE SERVICES

DIVISION OF FACILITIES & CONSTRUCTION AND MANAGEMENT
4110 STATE OFFICE BUILDING
SALT LAKE CITY, UTAH 84111
801.538.3018

INDEX OF DRAWINGS

GENERAL
GI 001 COVER SHEET
GI 002 OCCUPANCY SHEET

ARCHITECTURAL
AS101 SITE PLAN
AD101 1ST FLOOR DEMOLITION PLAN
AD102 2ND FLOOR DEMOLITION PLAN
AE101 1ST FLOOR PLAN
AE102 2ND FLOOR PLAN
AE 201 EXTERIOR ELEVATIONS
AE 202 INTERIOR ELEVATIONS
AE 203 INTERIOR ELEVATIONS
AE301 1ST FLOOR CEILING PLAN
AE302 2ND FLOOR CEILING PLAN
AE 401 SECTIONS
AE 501 SCHEDULES

STRUCTURAL
SE001 GENERAL STRUCTURAL NOTES
SE002 GENERAL STRUCTURAL NOTES
SE003 GENERAL STRUCTURAL NOTES
SB101 FTG & FDTN PLAN
SB501 FTG & FDTN DETAILS
SB601 SCHEDULES
SF101 MEZZANINE PLAN
SF201 BRACED FRAME ELEVS
SF202 BRACED FRAME DTLS
SF501 FRAMING DETAILS
SF502 FRAMING DETAILS
SF503 FRAMING DETAILS
SF601 SCHEDULES

MECHANICAL
M000 MECHANICAL LEGEND
M101 1st FLOOR MECHANICAL DEMOLITION PLAN
M102 2nd FLOOR MECHANICAL DEMOLITION PLAN
M201 1ST FLOOR MECHANICAL PLAN
M202 2ND FLOOR MECHANICAL PLAN
M501 MECHANICAL DETAILS
M502 SEISMIC DETAILS
M601 MECHANICAL SCHEDULES

PLUMBING
P101 1ST FLOOR PLUMBING DEMO PLN
P102 2ND FLOOR PLUMBING DEMO PLN
P201 1ST FLOOR PLUMBING PLAN
P202 2ND FLOOR PLUMBING PLAN
P401 ENLARGED PLUMBING PLAN
P501 PLUMBING DETAILS
P601 PLUMBING SCHEDULE

ELECTRICAL
EE001 SYMBOL LEGEND / SHEET INDEX
EE501 DETAILS
EE502 DETAILS
ES101 ELECTRICAL SITE PLAN
ED101 1st FLOOR DEMOLITION PLAN
ED102 2nd FLOOR DEMOLITION PLAN
EP101 1st FLOOR POWER PLAN
EP102 2nd FLOOR POWER PLAN
EP501 COMMUNICATIONS DETAILS
EP502 SECURITY DETAILS
EP601 ONE-LINE DIAGRAM
EP602 SCHEDULES
EL101 1st FLOOR LIGHTING PLAN
EL102 2nd FLOOR LIGHTING PLAN
EL601 LIGHT FIXTURE SCHEDULE
FA101 1st FLOOR FIRE ALARM PLAN
FA102 2nd FLOOR FIRE ALARM PLAN
FA601 FIRE ALARM RISER

ARCHITECT:
HARRIS & ASSOCIATES
265 EAST 100 SOUTH, SUITE 350
SALT LAKE CITY , UTAH 84111
PH: 801.521.8564
FAX: 801.355.2938
www.3di.com

STRUCTURAL ENGINEER:
REAVELEY ENGINEERING
575 EAST 500 SOUTH
SALT LAKE CITY , UTAH 84102
PH: 801.486.3883

MECHANICAL ENGINEER:
VAN BOERUM & FRANK
330 SOUTH 300 EAST
SALT LAKE CITY , UTAH 84111
PH: 801.530.3148
FAX: 801.530.3150
www.vbfa.com

ELECTRICAL ENGINEER:
SPECTRUM ENGINEERS
175 SOUTH MAIN STREET, SUITE 300
SALT LAKE CITY , UTAH 84111
PH: 801.328.5151
FAX: 801.328.5155
www.spectrum-engineers.com

Harris & Associates
265 East 100 South Suite 350
Salt Lake City, Utah 84111-1604
Ph (801) 521-8564 Fax (801) 355-2938

CONSULTANT INFORMATION

KEYED NOTES

Utah National Guard
RENOVATION OF READINESS CENTER
BUILDING 5170
CAMP W.G. WILLIAMS, UTAH

SHEET TITLE
COVER SHEET

REVISIONS	DATE	BY	DESCRIPTION
△			
△			
△			
△			

DRAWN BY JRA CHECKED BY ERT

PROJECT NO. 08032470

DATE DEC. 15, 2007

DRAWING NO. GL001

Utah National Guard - Camp Williams Bldg. 5170

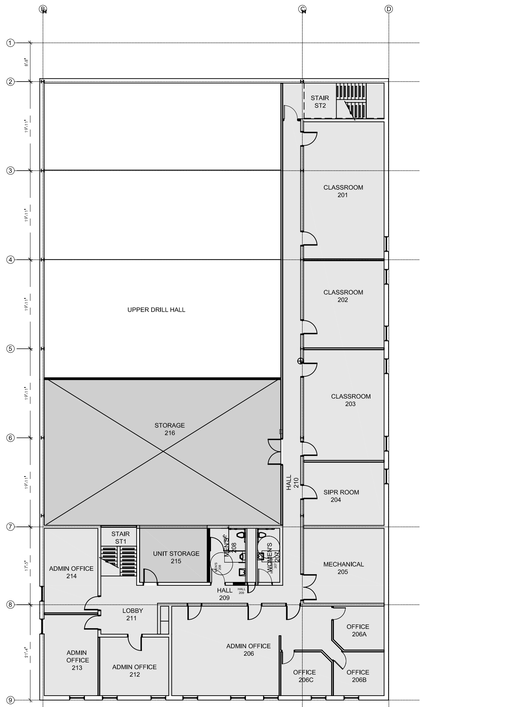

2ND FLOOR PLAN
SCALE: 1/16" = 1'-0"

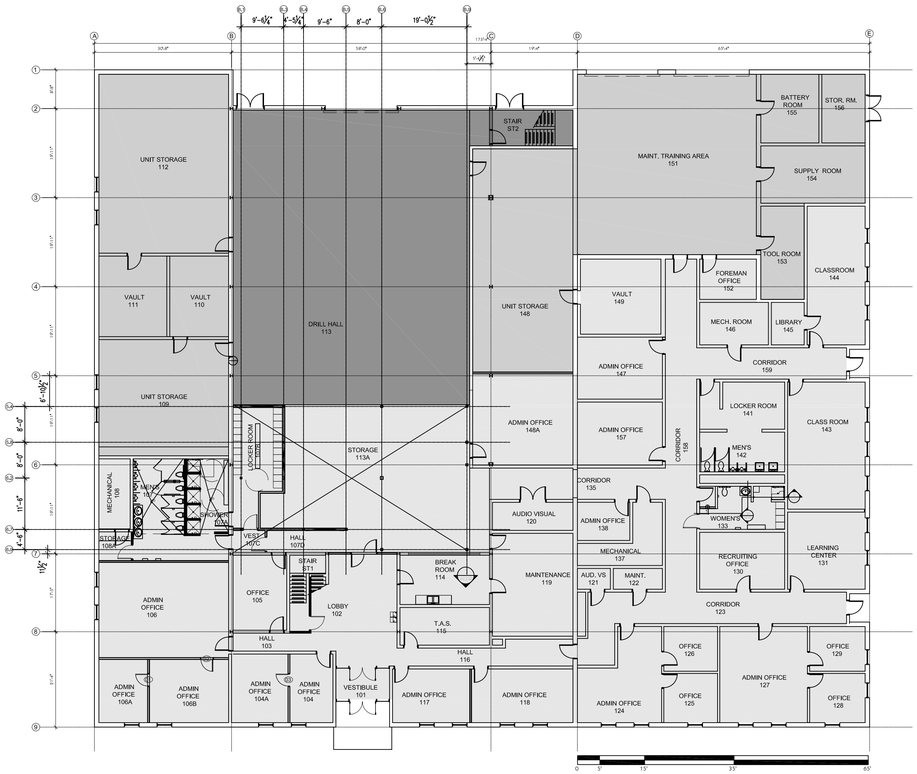

1ST FLOOR PLAN
SCALE: 1/16" = 1'-0"

DEFERRED SUBMITTALS:	ESTIMATED DATE SUBMITTED
FIRE ALARM	APRIL 2009
MECHANICAL & ELECTRICAL SEISMIC BRACING	APRIL 2009
DEFERRED SUBMITTAL ITEMS SHALL NOT BE INSTALLED UNTIL THE DESIGN AND SUBMITTAL DOCUMENTS HAVE BEEN APPROVED BY THE BUILDING OFFICIAL	

LEGEND

B S1 A3

SEISMIC DESIGN REQUIREMENTS FOR NONSTRUCTURAL COMPONENTS

Design and installation of seismic restraints systems for nonstructural components (e.g. architectural, mechanical, and electrical) is to comply with the 2006 International Building Code (IBC), ASCE 7-05 as referenced in the IBC, seismic control specifications, details on the drawings, and seismic design requirements indicated on the structural drawings. Calculations are to be prepared by a professional engineer licensed in State of Utah.

Harris & Associates Inc
265 East 100 South Suite 350
Salt Lake City, Utah 84111-1604
Ph (801) 521-8564 Fax (801) 355-2938

CONSULTANT INFORMATION

KEYED NOTES

STATE OF UTAH
ERIC R. THOLEN
129665
LICENSED ARCHITECT
12-14-07

Utah National Guard
RENOVATION OF READINESS CENTER
BUILDING 5170
CAMP W.G. WILLIAMS, UTAH

SHEET TITLE
OCCUPANCY SHEET

REVISIONS	DATE	BY	DESCRIPTION
1			
2			
3			
4			

DRAWN BY: JRA
CHECKED BY: ERT
PROJECT NO.: 08032470
DATE: DEC. 15, 2007
DRAWING NO.: GL002

Utah National Guard - Camp Williams Bldg. 5170

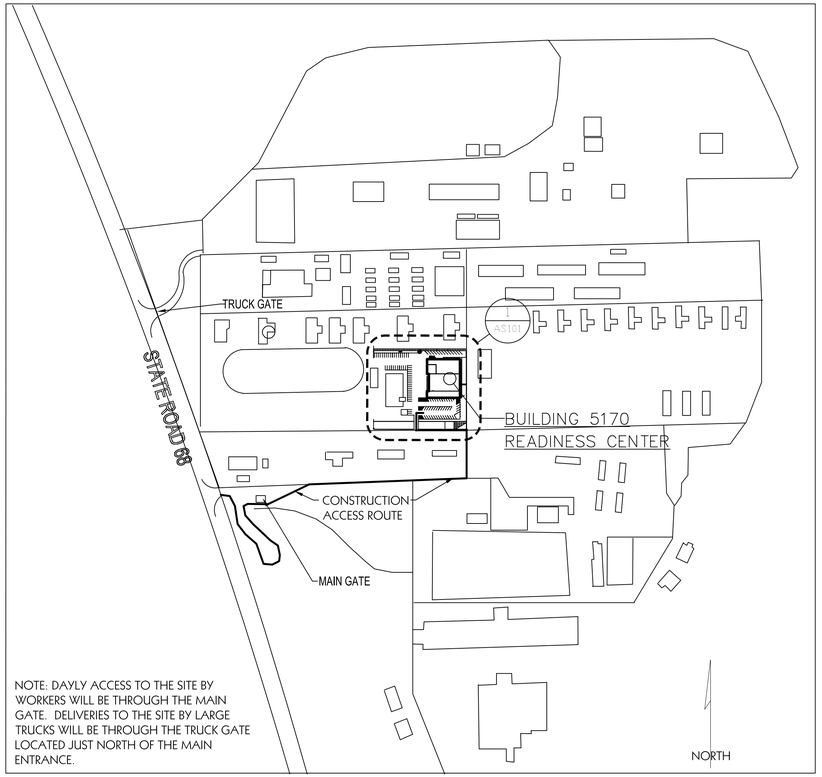

2 AS101 CONSTRUCTION ACCESS ROUTE
SCALE: N.T.S.

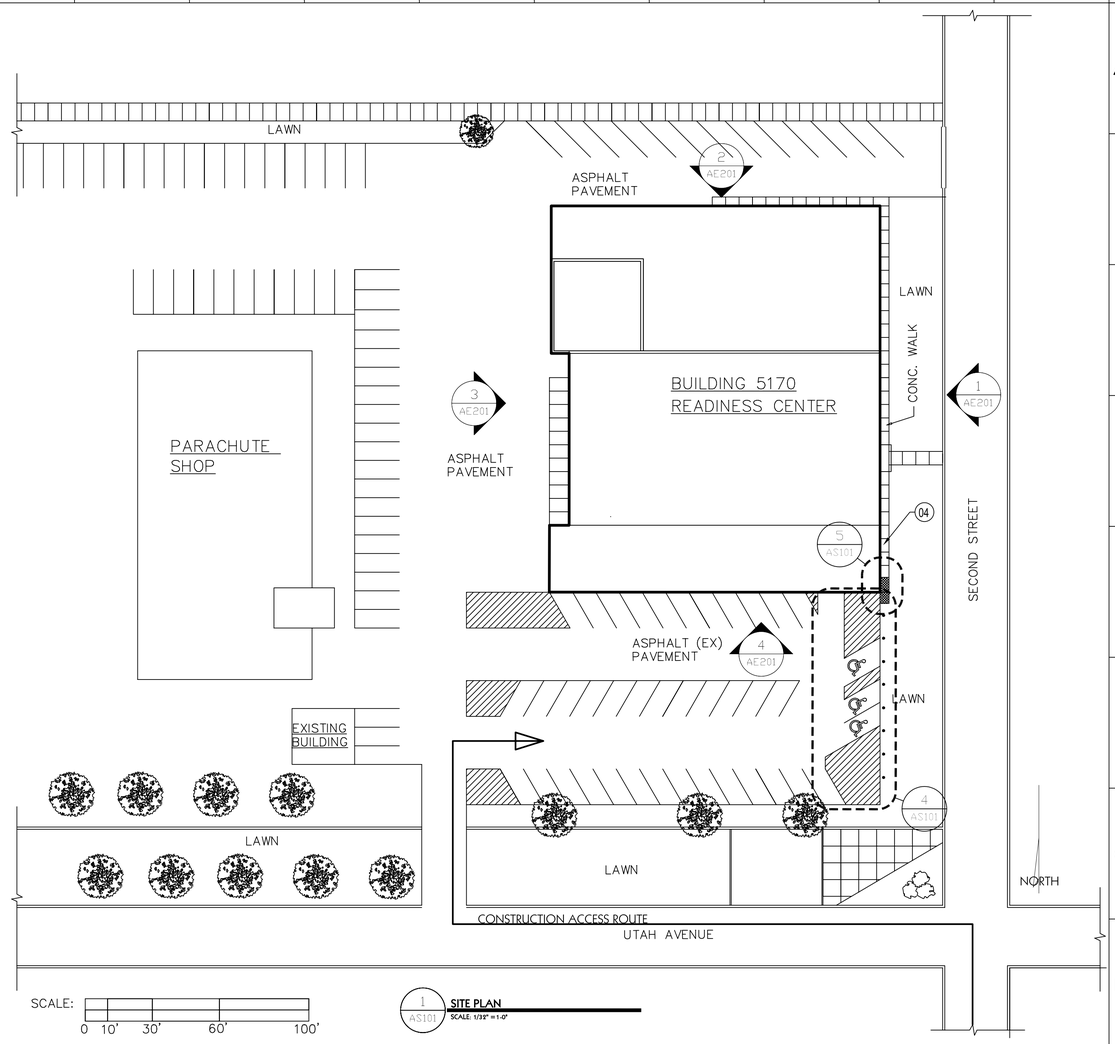

SCALE: 0 10' 30' 60' 100'

1 AS101 SITE PLAN
SCALE: 1/32" = 1'-0"

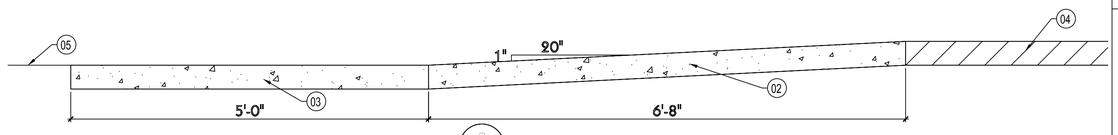

3 AS101 SIDEWALK SECTION
SCALE: 1" = 1'-0"

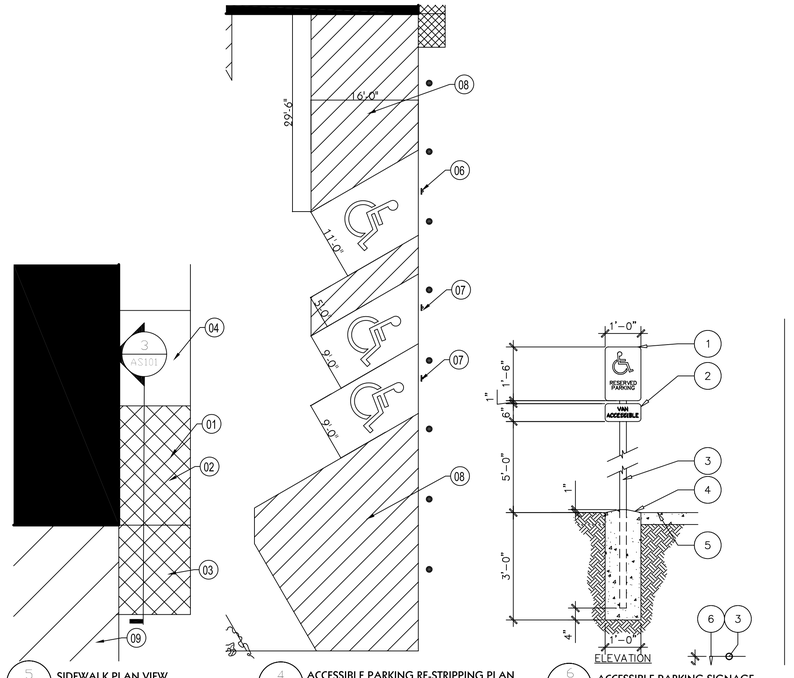

5 AS101 SIDEWALK PLAN VIEW
SCALE: 1/4" = 1'-0"

4 AS101 ACCESSIBLE PARKING RE-STRIPPING PLAN
SCALE: 3/32" = 1'-0"

6 AS101 ACCESSIBLE PARKING SIGNAGE
SCALE: N.T.S.

1 .080 ALUMINUM PLAQUE W/ RADIUSED CORNERS; STANDARD BLUE REFLECTIVE BACKROUND. WHITE REFLECTIVE SYMBOL.

2 .080 ALUMINUM PLAUQE W/ RADIUSED CORNERS; STANDARD BLUE REFLECTIVE BACKROUND, WHITE REFLECTIVE TEXT: "VAN ACCESIBLE"

3 2" sq. ALUMINUM POST; PREFINISHED

4 STEEL TROWEL FINISH

5 TOP OF WALK (OR A/C OR GRADE WHERE OCCURS).

6 BACK OF CURB/ SIDEWALK

Harris & Associates Inc.
265 East 100 South Suite 350
Salt Lake City, Utah 84111-1604
Ph (801) 521-8564 Fax (801) 355-2938

CONSULTANT INFORMATION

KEYED NOTES

01 REMOVE EXISTING SIDEWALK SHOWN CROSS-HATCHED

02 SLOPE THIS SECTION OF SIDEWALK AT 1:20 MAX - FIELD VERIFY LENGTH OF SLOPED AREA

03 PROVIDE 5'-0" X 4'-0" LANDING LEVEL WITH EXISTING PARKING LOT PAVEMENT

04 EXISTING SIDEWALK TO REMAIN

05 TOP OF EXISTING PAVING BEYOND

06 VAN ACCESSIBLE PARKING SIGN - SEE 6/AS101

07 ACCESSIBLE PARKING SIGN - 6/AS101 SIMILAR WITHOUT VAN ACCESSIBLE SIGN

08 RESTRIPE EAST END OF PARKING TO FORM NEW ACCESSIBLE PARKING STALLS AS SHOWN

09 EXISTING PAVING

10 SOUTH EAST CORNER OF EXISTING BUILDING

GENERAL NOTES

1. SEE ELECTRICAL AND MECHANICAL DRAWINGS FOR SITE UTILITY WORK.
2. STAGING AREA FOR THIS PROJECT WILL BE AS DETERMINED BY THE UTAH NATIONAL GUARG AT THE TIME OF CONSTRUCTION.

Utah National Guard
RENOVATION OF READINESS CENTER
BUILDING 5170
CAMP W.G. WILLIAMS, UTAH

SHEET TITLE
SITE PLAN

REVISIONS	DATE	BY	DESCRIPTION
1			
2			
3			
4			

DRAWN BY: JRA
CHECKED BY: ERT
PROJECT NO.: 08032470 CW
DATE: DEC. 15, 2008
DRAWING NO.: AS101

STATE OF UTAH ERIC R. THOLEN 129665 LICENSED ARCHITECT

Utah National Guard - Camp Williams Bldg. 5170

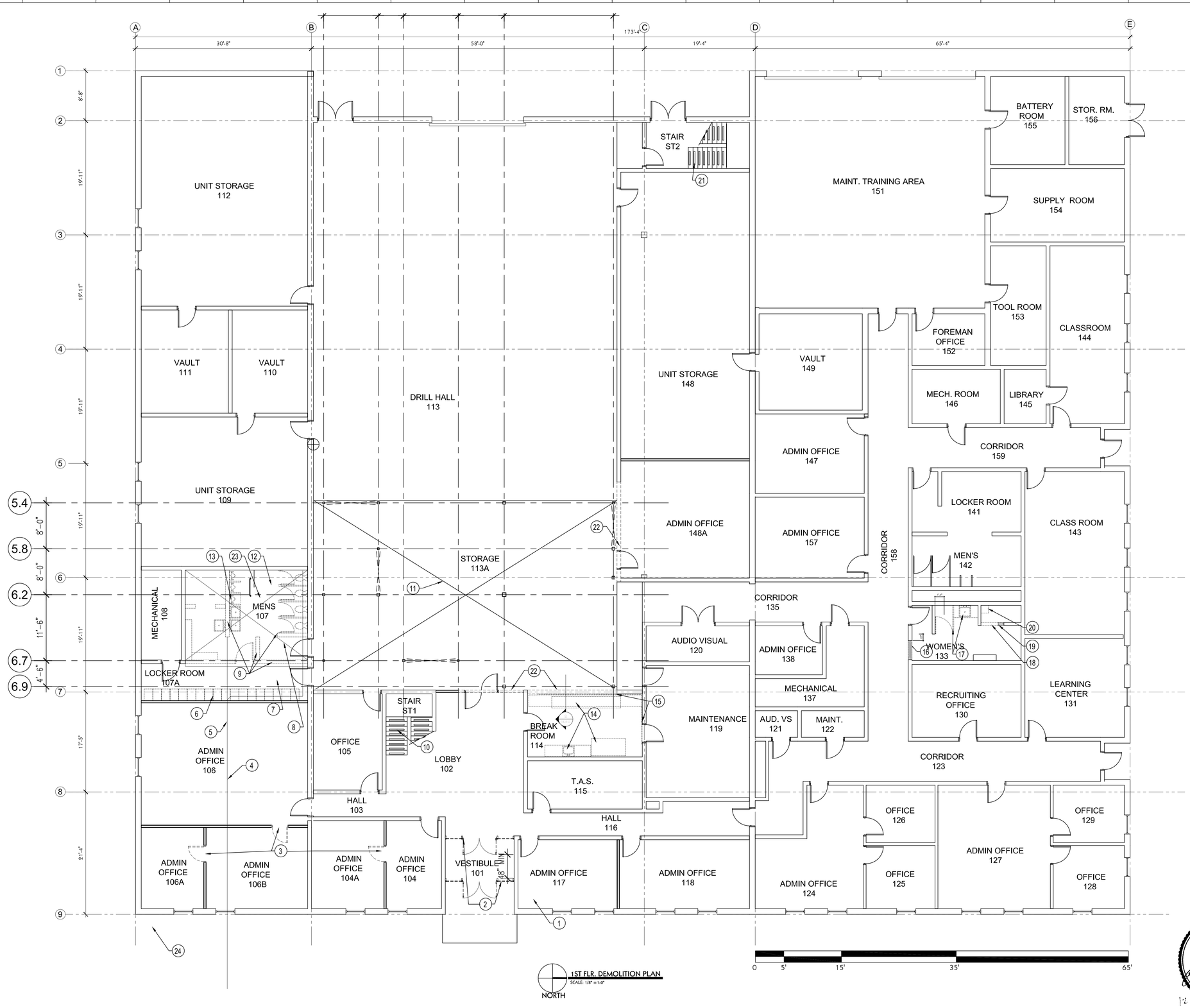

1ST FLR. DEMOLITION PLAN
SCALE: 1/8" = 1'-0"

Harris & Associates
265 East 100 South Suite 350
Salt Lake City, Utah 84111-1604
Ph (801) 521-8564 Fax (801) 355-2938

CONSULTANT INFORMATION

KEYED NOTES

1. SEE CEILING PLANS FOR ROOMS WHERE THE EXISTING CEILING TILE IS TO BE REMOVED. EXISTING CEILING GRID TO REMAIN AND TILE TO BE REPLACED WITH NEW TYPICAL.
2. REMOVE EXISTING ENTRY DOORS, FRAMES, & SIDELIGHTS
3. REMOVE EXISTING DOORS AND PREP OPENING FOR 3' X 7' METAL FRAME
4. SAW CUT & DEMOLISH FLOOR AS REQUIRED FOR REPLACEMENT OF UNDERGROUND SEWER LINE
5. REPLACE EXISTING SEWER LINE - SEE MECHANICAL
6. RELOCATE EXISTING LOCKERS - COORDINATE LOCATION W/ NATIONAL GUARD. REINSTALL IN NEW LOCKER ROOM.
7. REMOVE EXISTING SUSPENDED CEILING TILE IN EXISTING LOCKER ROOM AREA ONLY
8. REMOVE RESTROOM FLOOR WHERE SHOWN FOR REPLACEMENT OF UNDERGROUND SEWER LINES AND INSTALLATION OF NEW RESTROOM SHOWERS, FIXTURES & FLOOR DRAINS - SLOPE NEW FLOORS TO DRAINS AT 1/8" PER FOOT - SEE MECHANICAL
9. DEMOLISH EXISTING WALLS SHOWN DASHED
10. REMOVE EXISTING SLIP RESISTANT MATERIAL FROM EXISTING TREADS.
11. AREA OF NEW MEZZANINE SEE STRUCTURAL FOR DEMOLITION REQUIRED FOR INSTALLATION OF FOOTINGS AND COLUMNS AND DESIGN OF MEZZANINE
12. REMOVE ALL EXISTING WALL & FLOOR TILE
13. REMOVE EXISTING SINKS, TOILETS, TOILET PARTITIONS, AND ASSOCIATED MISC. HARDWARE. PRIOR TO DISPOSAL VERIFY W/ GUARD IF ANY FIXTURES ARE TO BE SALVAGED TO THE GUARD
14. REMOVE EXISTING SINK & SINK CABINET, SS COUNTER, SS HOODS & ASSOCIATED DUCT THROUGH ROOF AND CAP ROOF PENETRATIONS. INFILL CEILING WHERE HOODS ARE REMOVED.
15. REMOVE EXISTING PLYWOOD OVER ROLL UP WINDOW AND DOOR - REPAIR DAMAGED SURFACES TO MATCH ADJACENT.
16. CUT OPENING FOR NEW DOOR
17. REMOVE EXISTING TOILET PARTITIONS, SINK AND COUNTER
18. REMOVE EXISTING TILE CURB
19. CUT END OF WALL BACK TO FORM 3'-0" DEEP ACCESSIBLE SHOWER
20. REMOVE EXISTING TILE COVERED SEAT AND PATCH FLOOR W/ MATCHING TILE
21. REMOVE EXISTING SLIP RESISTANT MATERIAL FROM EXISTING TREADS
22. REMOVE EXISTING WALL AS REQUIRED FOR INSTALLATION OF NEW FOOTINGS. SALVAGE EXISTING DOORS FOR REUSE.
23. REMOVE EXISTING GYP. BOARD CEILING AT MEN'S RESTROOM.
24. SEE SITE PLAN FOR OUTSIDE SIDWALK DEMILITION

GENERAL NOTES

1. REMOVE EXISTING CEILING TILE IN THE FOLLOWING 1ST FLOOR ROOMS; LOCKER ROOM 107A, ADMIN OFFICE 106, 106A, 106B, 104, 104A, 117, 118, 148A, AND CLASSROOM 105.
2. REMOVE CARPET IN THE FOLLOWING 1ST FLOOR ROOMS; ADMIN OFFICE 106, 106A, 106B, 104, 104A, 117, 118, 148A, AND CLASSROOM 105. NOTE: ABATEMENT OF VAT WILL BE COMPLETED PRIOR TO THIS CONTRACT. CARPET WILL BE REMOVED IN THOSE AREAS WHERE VAT EXISTS.
3. MAKE EVERY EFFORT POSSIBLE TO SALVAGE ENOUGH CERAMIC TILE FROM THE DEMOLITION OF THE FIRST AND SECOND FLOOR MEN's ROOMS TO REPAIR THE TILE IN THE 2ND FLOOR WOMEN's ROOM WHERE FIXTURES ARE BEING RELOCATED AND WHERE THE DUCT CHASE IS BEING DEMOLISHED IN THE NORTHEAST CORNER OF THE 2ND FLOOR WOMEN'S ROOM.

Utah National Guard
RENOVATION OF READINESS CENTER
BUILDING 5170
CAMP W.G. WILLIAMS, UTAH

SHEET TITLE
1ST FLOOR DEMO PLN

REVISIONS	DATE	BY	DESCRIPTION
△			
△			
△			
△			

DRAWN BY	CHECKED BY
JRA	ERT

PROJECT NO.	DRAWING NO.
08032470 CW	AD101

DATE
DEC. 15, 2008

STATE OF UTAH
ERIC R. THOLEN
129665
LICENSED ARCHITECT

Utah National Guard - Camp Williams Bldg. 5170

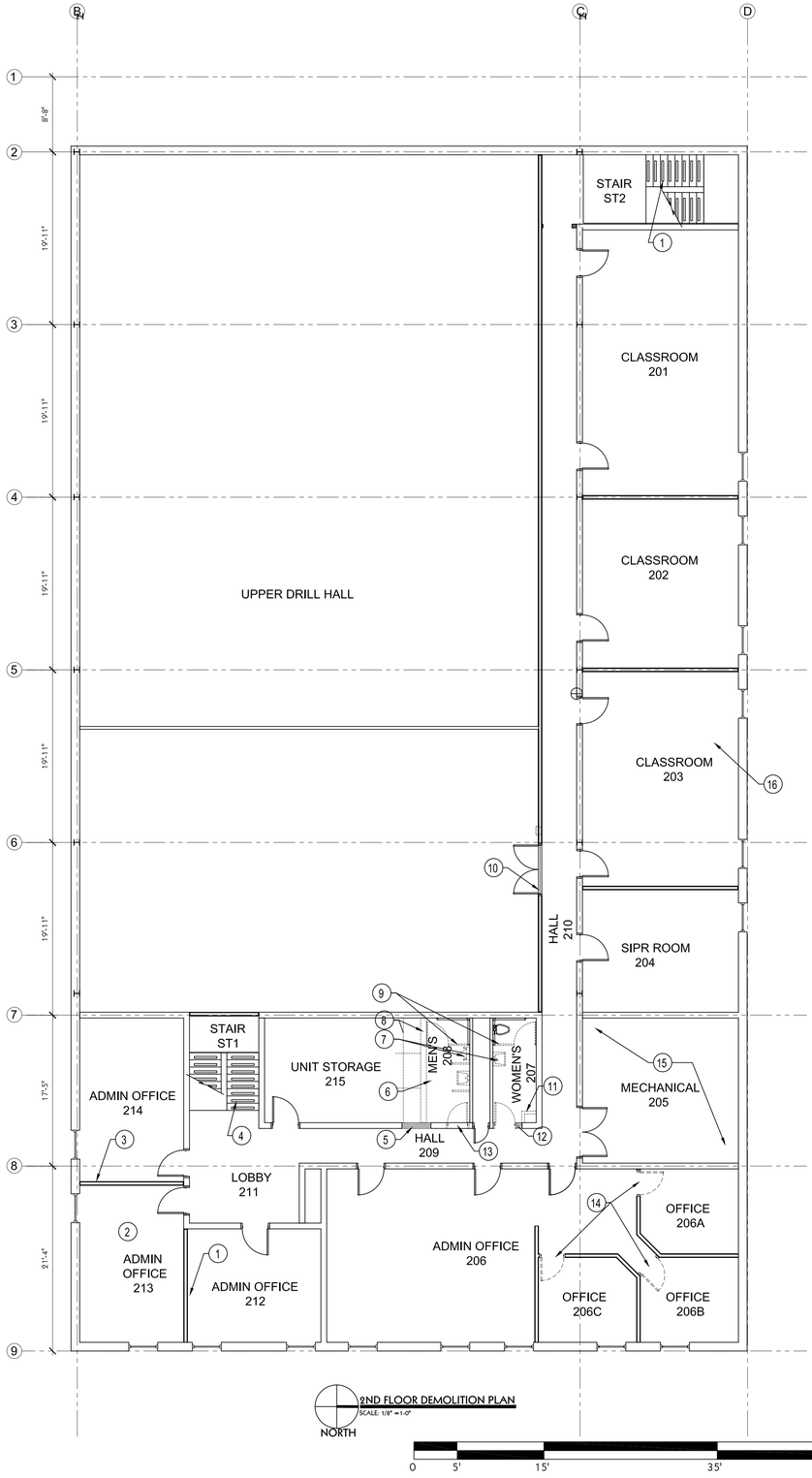

2ND FLOOR DEMOLITION PLAN
SCALE: 1/8" = 1'-0"

NORTH

Harris & Associates
265 East 100 South Suite 350
Salt Lake City, Utah 84111-1604
Ph (801) 521-8564 Fax (801) 355-2938

CONSULTANT INFORMATION

KEYED NOTES

1. REMOVE EXISTING PANELING & FIBER BOARD ON THIS WALL - REPLACE WITH NEW 5/8" TYPE X GYPSUM BOARD AND PREP WALL FOR REPAINTING
2. REMOVE EXISTING PANELING AND WOOD FURRING ON ALL 4 WALLS IN THIS ROOM. REPLACE WITH NEW 5/8" TYPE X GYPSUM BOARD AND PREP FOR PAINTING.
3. REMOVE EXISTING PANELING ON THIS WALL - REPAIR AND PREP WALL FOR REPAINTING
4. REMOVE EXISTING SLIP RESISTANT MATERIAL FROM EXISTING TREADS
5. CUT OPENING FOR NEW DOOR
6. REMOVE EXISTING CERAMIC TILE ON WALLS AND FLOOR IN THIS RESTROOM - SALVAGE ENOUGH WALL TILE FOR REPAIRS IN ADJACENT WOMENS RESTROOMS.
7. REMOVE EXISTING SINKS, URINAL, TIOLET SHOWN DASHED & ACCESSORIES IN BOTH RESTROOMS - SALVAGE FOR RELOCATION
8. DEMOLISH THIS WALL AND REMOVE CEILING BACK TO NEW WALL LINE
9. REMOVE EXISTING TOILET PARTITIONS & MIRRORS IN BOTH RESTROOMS
10. CUT OPENING FOR NEW DOOR TO NEW STORAGE ROOM.
11. DEMOLISH EXISTING SHAFT & ASSOCIATED DUCT - CAP DUCT ABOVE CEILING
12. REMOVE EXISTING DOOR AND ENLARGE OPENING FOR NEW DOOR
13. REMOVE EXISTING DOOR AND INFILL OPENING WITH CMU TO MATCH ADJACENT.
14. REMOVE EXISTING DOORS AND PREP OPENING FOR 3' X 7' METAL FRAME
15. REMOVE REMAINING CEILING GRID COMPONENTS FROM THIS ROOM
16. SEE CEILING PLANS FOR ROOMS WHERE THE EXISTING CEILING TILE IS TO BE REMOVED. EXISTING CEILING GRID TO REMIAN AND TILE TO BE REPLACED WITH NEW - TYPICAL. SALVAGE EXISTING TILE FOR REPLACING DAMAGED TILES IN ROOM NOT GETTING NEW TILE.

GENERAL NOTES

1. REMOVE EXISTING CEILING TILE IN ALL 2ND FLOOR ROOMS, HALLS, AND LOBBY.
2. REMOVE CARPET IN ALL 2ND FLOOR ROOMS, HALLS, & LOBBY WITH EXISTING CARPET.
3. MAKE EVERY EFFORT POSSIBLE TO SALVAGE ENOUGH TILE FROM THE DEMOLITION OF THE FIRST AND SECOND FLOOR MEN'S ROOMS TO REPAIR THE TILE IN THE 2ND FLOOR WOMEN'S ROOM WHERE FIXTURES ARE BEING RELOCATED AND WHERE THE DUCT CHASE IS BEING DEMOLISHED IN THE NORTHEAST CORNER OF THE 2ND FLOOR WOMEN'S ROOM.

Utah National Guard
RENOVATION OF READINESS CENTER
BUILDING 5170
CAMP W.G. WILLIAMS, UTAH

SHEET TITLE
2ND FLR. DEMO. PLN.

REVISIONS	DATE	BY	DESCRIPTION
△			
△			
△			
△			

DRAWN BY	CHECKED BY
JRA	ERT

PROJECT NO. 08032470 CW
DATE DEC. 15, 2008
DRAWING NO. AD102

STATE OF UTAH · ERIC R. THOLEN · 129665 · LICENSED ARCHITECT

Utah National Guard - Camp Williams Bldg. 5170

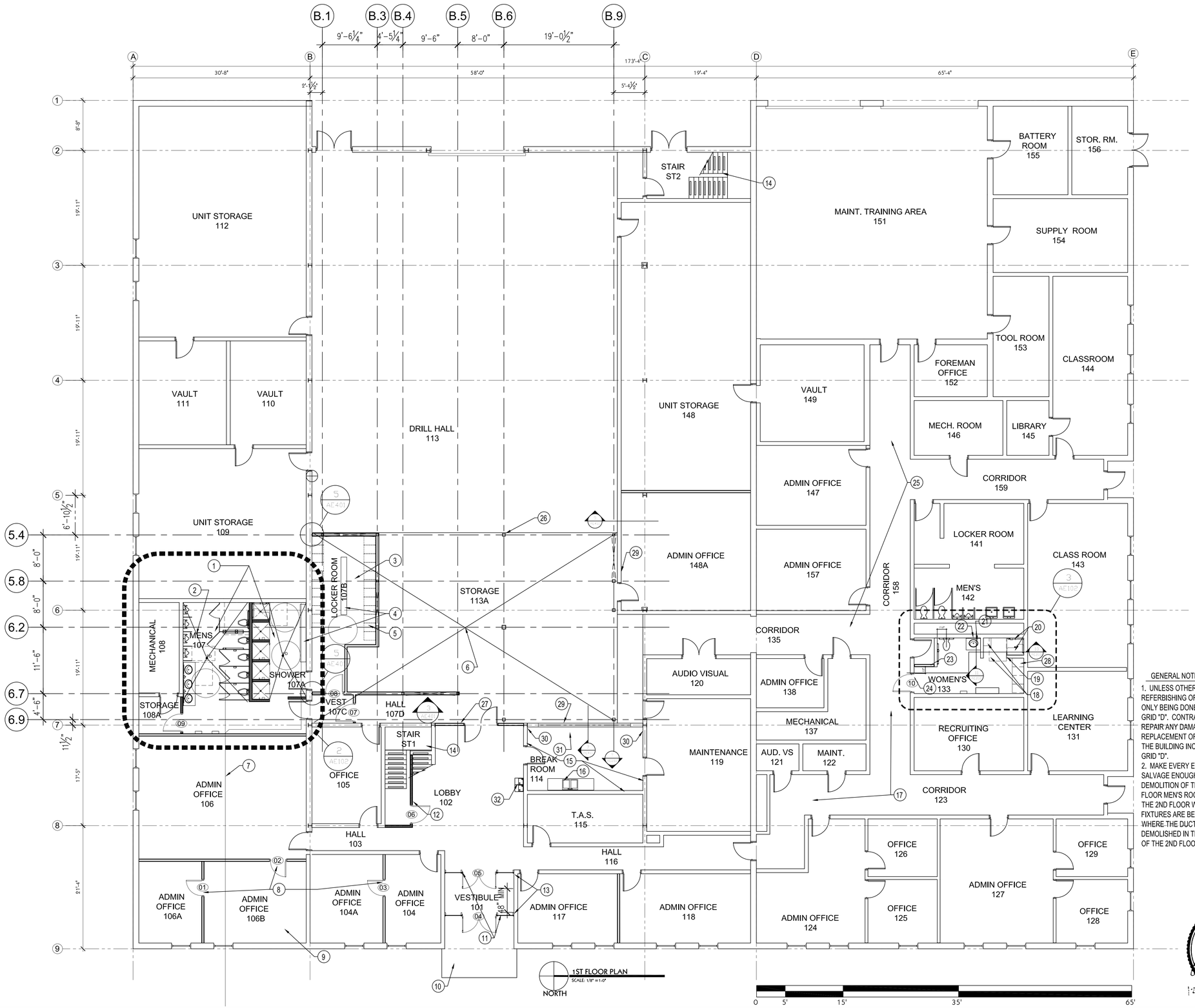

GENERAL NOTES

1. UNLESS OTHERWISE NOTED REFERBISHING OF ROOM FINISHES ARE ONLY BEING DONE IN THE SPACES SOUTH OF GRID "D". CONTRACTOR IS REQUIRED TO REPAIR ANY DAMAGE CAUSED BY THE REPLACEMENT OF WINDOWS THROUGHOUT THE BUILDING INCLUDING THOSE NORTH OF GRID "D".
2. MAKE EVERY EFFORT POSSIBLE TO SALVAGE ENOUGH TILE FROM THE DEMOLITION OF THE FIRST AND SECOND FLOOR MEN'S ROOMS TO REPAIR THE TILE IN THE 2ND FLOOR WOMEN'S ROOM WHERE FIXTURES ARE BEING RELOCATED AND WHERE THE DUCT CHASE IS BEING DEMOLISHED IN THE NORTHEAST CORNER OF THE 2ND FLOOR WOMEN'S ROOM.

KEYED NOTES

1. NEW CERAMIC TILE FLOOR THROUGHOUT ENTIRE RESTROOM /SHOWER AREA
2. SLOPE NEW FLOOR TO FLOOR DRAINS AT 1/8" PER FOOT.
3. NEW CERAMIC TILE FLOOR & BASE IN LOCKER ROOM TO MATCH RESTROOM FLOOR
4. NEW 12" X 10'-0" BENCH
5. REINSTALL LOCKERS REMOVED FROM OLD LOCKER ROOM - 5% OF OWNER FURNISHED LOCKER TO BE ACCESSIBLE
6. AREA OF NEW MEZZANINE SEE STRUCTURAL FOR DEMOLITION REQUIRED FOR INSTALLATION OF FOOTINGS & COLUMNS AND DESIGN OF MEZZANINE
7. REPLACE EXISTING SEWER LINE - SEE MECHANICAL - REPAIR FLOOR WHERE DAMAGED OR SAW CUT
8. NEW METAL DOORS AND FRAMES AND HARDWARE - PAINTED
9. SEE CEILING PLANS FOR ROOMS WHERE THE EXISTING CEILING TILE IS TO BE REMOVED. - EXISTING CEILING GRID TO REMIAN AND TILE TO BE REPLACE WITH NEW. TYPICAL
10. REPAIR & REPAINT SOFFIT
11. NEW STOREFRONT ENTRY DOORS, FRAMES, & SIDELIGHTS
12. NEW STAIRWAY SECURITY ENCLOSURE W/ NEW METAL DOOR , FRAME & SECURITY HARWARE
13. PATCH AND REPAIR EXISTING SURFACE TO MATCH ADJACENT AT NEW STOREFRONT.
14. REPAINT W/ EPOXY PAINT, EXISTING STAIR, LANDING, RAILINGS ETC THAT ARE CURRENTLY PAINTED GREEN - COLOR AS SELCTED BY GUARD
15. REPAIR CEILING & WALLS WHERE HOODS, PLYWOOD, SINKS ETC. WERE REMOVED AND REPAINT WALLS AND CEILING ABOVE TILE LINE TO MATCH ADJACENT.
16. NEW SINK & SINK CABINET
17. REPLACE ALL MISSING OR DAMAGED CEILING TILE IN CORRIDOR 123, 135, 158, & 159 WITH NEW MATCHING CEILING TILE
18. PATCH TILE WHERE SEAT, CURB, AND WALL WERE REMOVED W/ MATCHING TILE OR AS SELECTED BY THE ARCHITECT
19. RECAP END OF WALL WITH MATCHING TILE IF AVAILABLE OR AS SELECTED BY THE ARCHITECT
20.. NEW ACCESSIBLE SHOWER FIXTURES AND SEAT.
21. NEW SINK & 30" PLASTIC LAMINATE COUNTER TOP SEE 11/AE202
22. CENTER MIRROR ON NEW SINK AND RELOCATE SOAP DISPENSER ON OPPOSITE SIDE
23. NEW GYP BD WALL - PAINTED
24. NEW DOOR
25. REPLACE MISSING OR DAMAGED CEILING TILE IN CORRIDOR 123, 135, 158, & 159 WITH NEW MATCHING CEILING TILE
26. REPAINT EXISTING EXPOSED STRUCTURE.
27. NEW GYP. BOARD WALL. PAINT TO MATCH ADJACENT. REUSE EXISTING DOORS AND HARDWARE. RELOCATE EXISTING CONDUIT INTO NEW WALL.
28. WOMENS LOCKERS - O.F.O.I. - (N.I.C.) 5% OF OWNER FURNISHED LOCKER TO BE ACCESSIBLE
29. NEW MASONRY WALL - SEE STRUCTURAL FOR ATTACHMENT TO STRUCTURE.
30. DO NOT DAMAGE TILE ON EXISTING WALLS TO REMAIN
31. REPLACE FLOOR TILE REMOVED FOR ISTALLATION OF FOOTINGS WITH NEW TO MATCH EXISTING.
32. NEW DUEL LEVEL DRINKING FOUNTAIN - SEE 12/AE203 & MECHANICAL

STATE OF UTAH
ERIC R. THOLEN
129665
LICENSED ARCHITECT

Harris & Associates Inc.
265 East 100 South Suite 350
Salt Lake City, Utah 84111-1604
Ph (801) 521-8564 Fax (801) 355-2938

CONSULTANT INFORMATION

Utah National Guard
RENOVATION OF READINESS CENTER
BUILDING 5170
CAMP W.G. WILLIAMS, UTAH

SHEET TITLE
1ST FLOOR PLAN.

REVISIONS	DATE	BY	DESCRIPTION
△			
△			
△			
△			

DRAWN BY: JRA
CHECKED BY: ERT
PROJECT NO.: 08032470 CW
DRAWING NO.: AE101
DATE: DEC. 15, 2008

Utah National Guard - Camp Williams Bldg. 5170

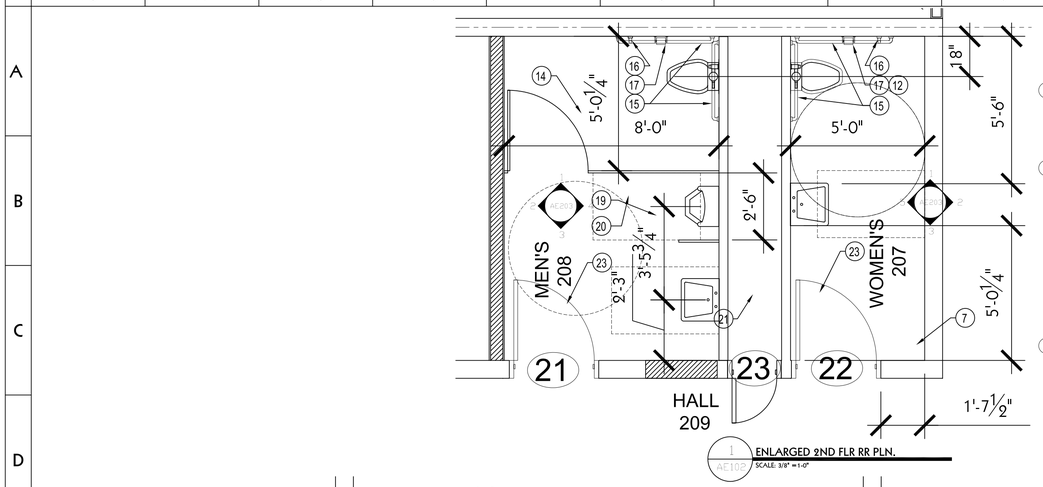

1 AE102 ENLARGED 2ND FLR RR PLN.
SCALE: 3/8" = 1'-0"

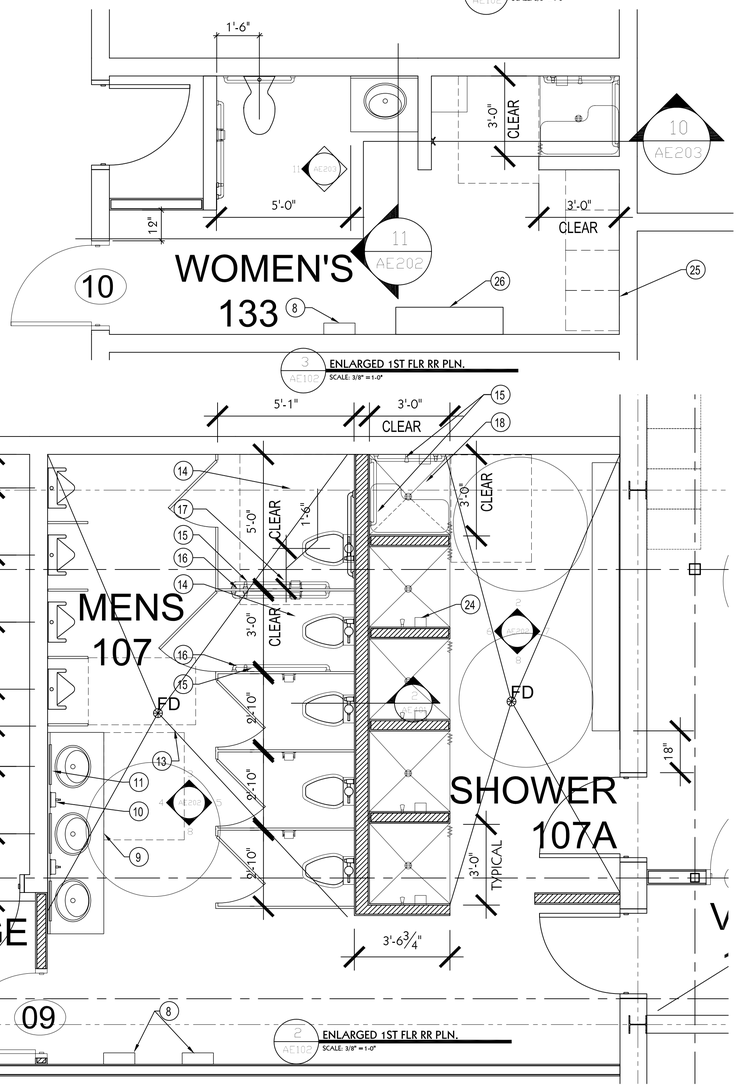

3 AE102 ENLARGED 1ST FLR RR PLN.
SCALE: 3/8" = 1'-0"

2 AE102 ENLARGED 1ST FLR RR PLN.
SCALE: 3/8" = 1'-0"

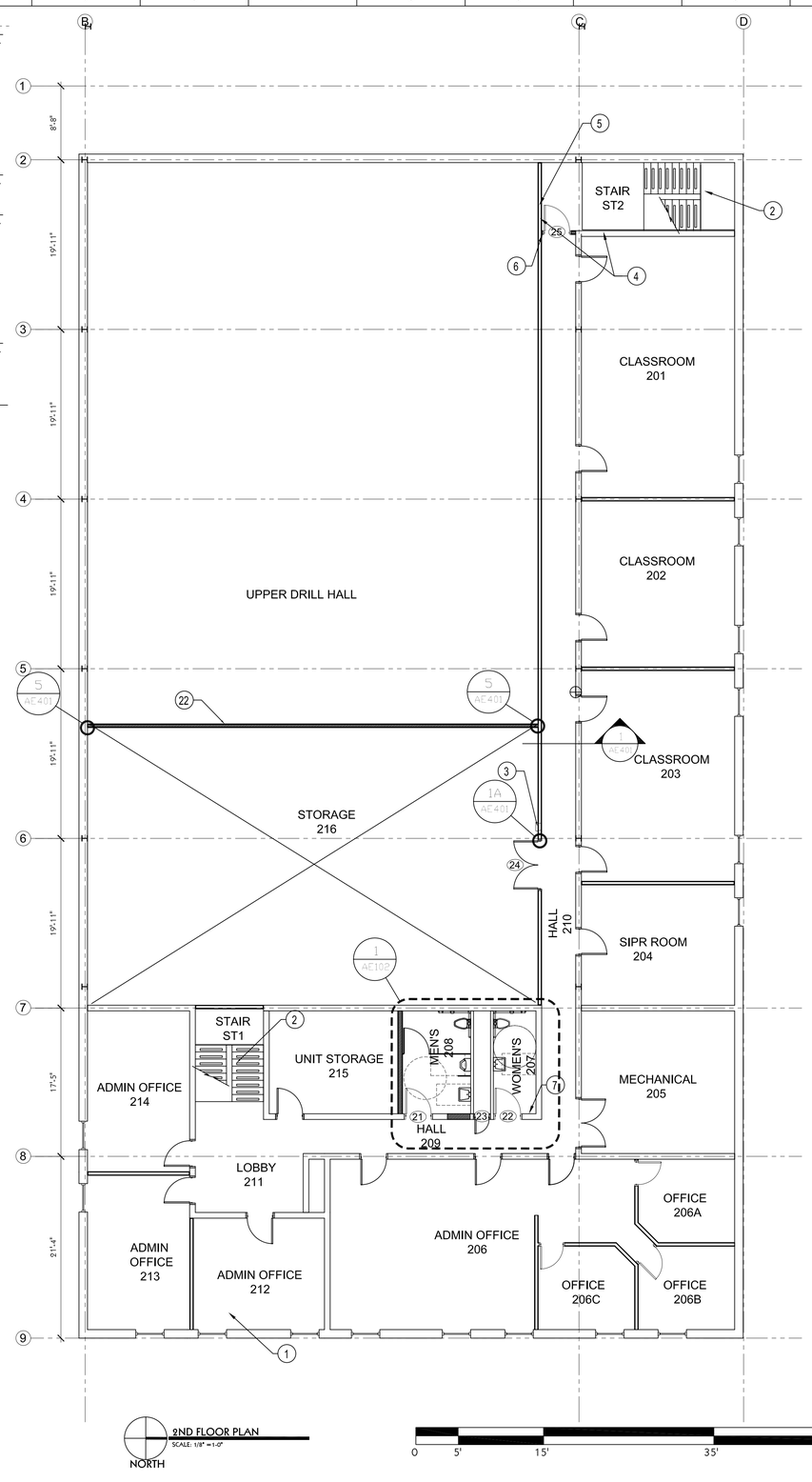

2ND FLOOR PLAN
SCALE: 1/8" = 1'-0"

NORTH

0 5' 15' 35' 65'

STATE OF UTAH
ERIC R. THOLEN
129665
LICENSED ARCHITECT

Harris & Associates Inc.
265 East 100 South Suite 350
Salt Lake City, Utah 84111-1604
Ph (801) 521-8564 Fax (801) 355-2938

CONSULTANT INFORMATION

KEYED NOTES

1. SEE CEILING PLANS FOR ROOMS WHERE THE EXISTING CEILING TILE IS TO BE REMOVED. - EXISTING CEILING GRID TO REMIAN AND TILE TO BE REPLACE WITH NEW. TYPICAL
2. REPAINT W/ SLIP RESISTANT EPOXY PAINT, EXISTING STAIR, LANDING, RAILINGS ETC THAT ARE CURRENTLY PAINTED GREEN - COLOR AS SELCTED BY GUARD
3. 1 HR FIRE RATED SEMI RECESSED FIRE EXTINGUSHER CABINET - MOUNTED AT 4'-0" TO TOP OF CABINET ABOVE FINISH FLOOR
4. EXTEND EXISTING WALLS TO ROOF STRUCTURE WITH 1 HOUR FIRE RATED GYP. BOARD/ METAL STUD WALL. FIRESTOP ALL PENETRATIONS. PROVIDE 1 HOUR FIRE RATED JOINT AT TOP OF WALL.
5. REPAIR WALL WHERE OPENING WAS CUT. REPAINT BOTHE SIDES TO MATCH ADJACENT SURFACE.
6. NEW 1 HOUR FIRE RATED GYP. BOARD/METAL STUD WALL TO ROOF STRUCTURE. FIRESTOP ALL PENETRATIONS. PROVIDE 1 HOUR FIRE RATED JOINT AT TOP OF WALL.
7. PATCH AND REPAIR AREA WHERE EXISTING SHAFT WAS DEMOLISHED TO MATCH ADJACENT.
8. TOWEL DISPENSER TBA#2 - TYP.
9. NEW ACCESSIBLE SINK
10. SOAP DISPENSER TBA#3 - TYP.
11. MIRROR @ EA SINK TBA#6 - TYP.
12. SANITARY NAPKIN DISPOSAL UNIT TBA#5 - TYP.
13. SLOPE FLOORS TO DRAINS @ 1/8" PER FOOT
14. NEW ACCESSIBLE TOILET STALL
15. GRAB BARS TBA#4 - TYP.
16. VERTICAL GRAB BAR TBA#4 - TYP.
17. TOILET PAPER DISPENSER TBA#1 - TYP.
18. NEW ACCESSIBLE SHOWER STALL
19. ROBE HOOK FOR EACH SHOWER TBA#10 - TYPICAL
20. REPAIR CEILING W/ NEW GYP BD CEILING IN AREA BETWEEN OLD WALL AND NEW WALL LOCATION
21. NEW INSULATED METAL STUD WALL W/ 5/8" GYP BD EACH SIDE
22. FILL IN OLD DOOR OPENING WITH NEW MASONRY TO MATCH EXISTING.
23. RELOCATE EXISTING TOWEL DISPENSER, MIRROR, AND SOAP DISPENSER.
24. NEW SOAP DISH INSTALLED AT SHOWERS TYP.
25. OWNER FURNISHED CONTRACTOR INSTALLED LOCKERS.
26. BENCH.

GENERAL NOTES

1. MAKE EVERY EFFORT POSSIBLE TO SALVAGE ENOUGH TILE FROM THE DEMOLITION OF THE FIRST AND SECOND FLOOR MEN'S ROOMS TO REPAIR THE TILE IN THE 2ND FLOOR WOMEN'S ROOM WHERE FIXTURES ARE BEING RELOCATED AND WHERE THE DUCT CHASE IS BEING DEMOLISHED IN THE NORTHEAST CORNER OF THE 2ND FLOOR WOMEN'S ROOM.

Utah National Guard
RENOVATION OF READINESS CENTER
BUILDING 5170
CAMP W.G. WILLIAMS, UTAH

SHEET TITLE
2ND FLOOR PLAN

REVISIONS	DATE	BY	DESCRIPTION
△			
△			
△			
△			

DRAWN BY JRA
CHECKED BY ERT
PROJECT NO. 08032470 CW
DATE DEC. 15, 2008
DRAWING NO. AE102

Utah National Guard - Camp Williams Bldg. 5170

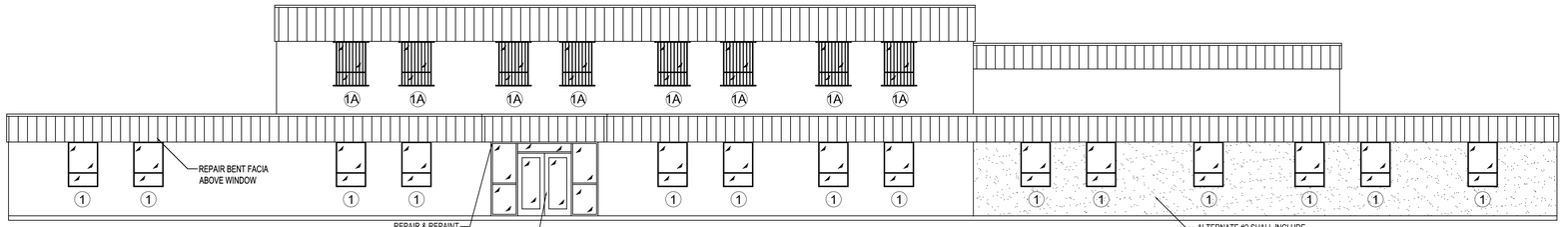

1 AE201 EAST ELEVATION
SCALE: 1/8" = 1-0"

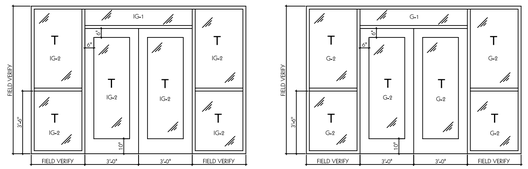

1A AE201 EXTERIOR STORE FRONT (DR # 4)
SCALE: 1/8" = 1-0"

T = TEMPERED
G-# = GLASS TYPE

1B AE201 INTERIOR STOREFRONT (DR #5)
SCALE: 1/8" = 1-0"

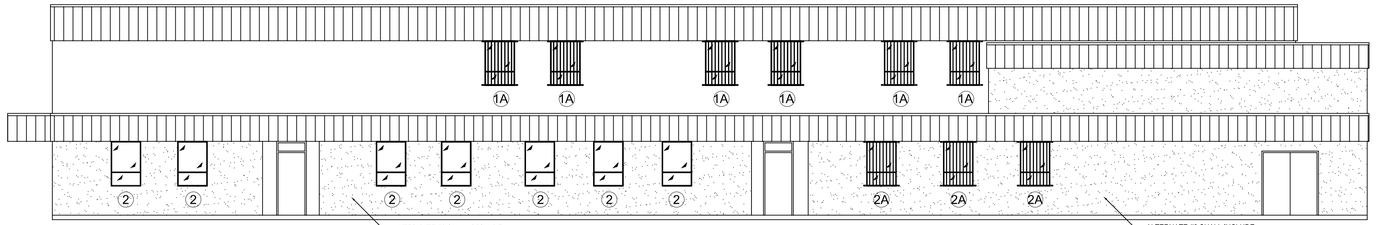

2 AE201 NORTH ELEVATION
SCALE: 1/8" = 1-0"

WINDOW REPLACEMENT INSTRUCTIONS

1. ALL TYPE 1 WINDOWS SHALL BE REMOVED & REPLACED W/ NEW ALUMINUM WINDOWS.
2. TYPE 1A WINDOWS SHALL BE REMOVED & REPLACED WITH NEW ALUMINUM WINDOWS AND SECURITY BARS AS DETAILED IN 4/AE201

ADD ALTERNATE #1

3. TYPE 2 WINDOWS SHALL BE REMOVED & REPLACED WITH NEW ALUMINUM WINDOWS IF ADD ALTERNATE #1 IS ACCEPTED
4. TYPE 2A WINDOWS SHALL BE REMOVED & REPLACED WITH NEW ALUMINUM WINDOWS IFADD ALTERNATE #1 IS ACCEPTED, EXCEPT THE EXISTING SECURITY BARS ARE TO BE SALVAGED AND REINSTALLED.

5. REPAIR ANY DAMAGE TO EXISTING CONSTRUCTION CAUSED BY WINDOW REMOVAL AND REPLACEMENT

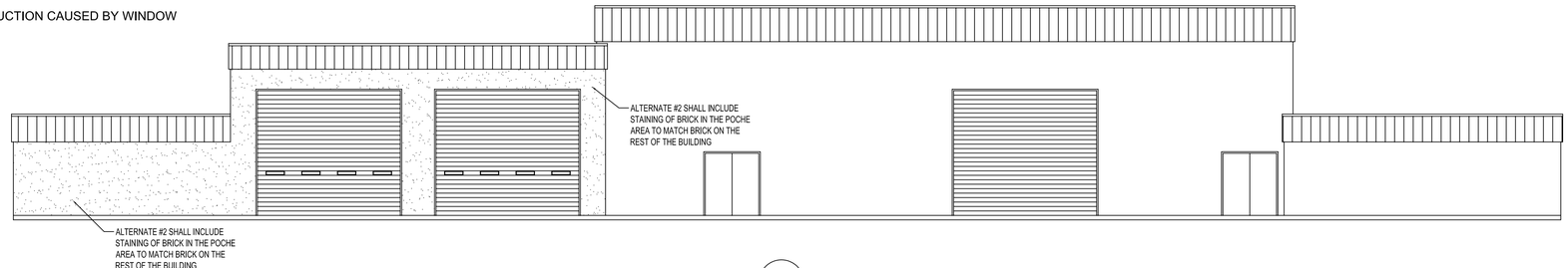

3 AE201 WEST ELEVATION
SCALE: 1/8" = 1-0"

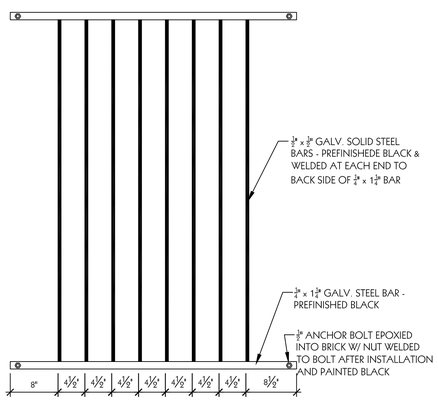

4 AE201 SECURITY BAR DETAIL
SCALE: 1" = 1-0"

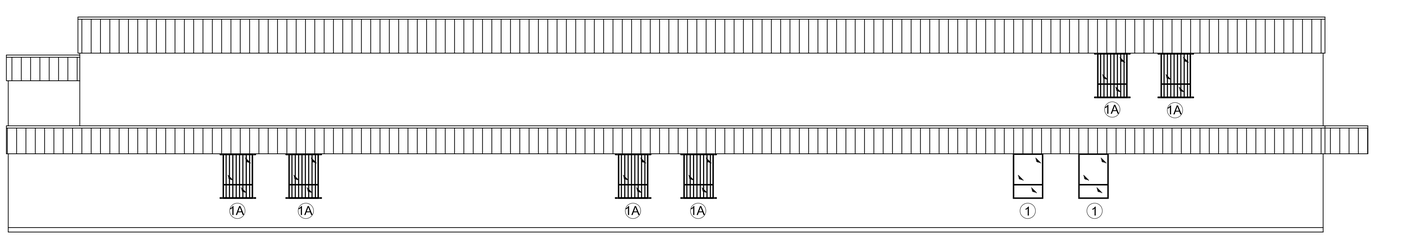

4 AE201 SOUTH ELEVATION
SCALE: 1/8" = 1-0"

0 5' 15' 35' 65'

Harris & Associates
265 East 100 South Suite 350
Salt Lake City, Utah 84111-1604
Ph (801) 521-8564 Fax (801) 355-2938

CONSULTANT INFORMATION

KEYED NOTES

STATE OF UTAH
ERIC R. THOLEN
129665
LICENSED ARCHITECT

GENERAL NOTES

1. CLEAN ENTIRE EXTERIOR BRICK FINISHES TO REMOVE ALL STAINS, DIRT, EFFERVESCENCE, ETC. - IF ALTERNATE #2 IS ACCEPTED CLEANING SHOULD BE COMPLETED PRIOR TO STAINING

Utah National Guard
RENOVATION OF READINESS CENTER
BUILDING 5170
CAMP W.G. WILLIAMS, UTAH

SHEET TITLE
EXTERIOR ELEVATIONS

REVISIONS	DATE	BY	DESCRIPTION
△			
△			
△			
△			

DRAWN BY: JRA
CHECKED BY: ERT
PROJECT NO.: 08032470 CW
DRAWING NO.: AE201
DATE: DEC. 15, 2008

Utah National Guard - Camp Williams Bldg. 5170

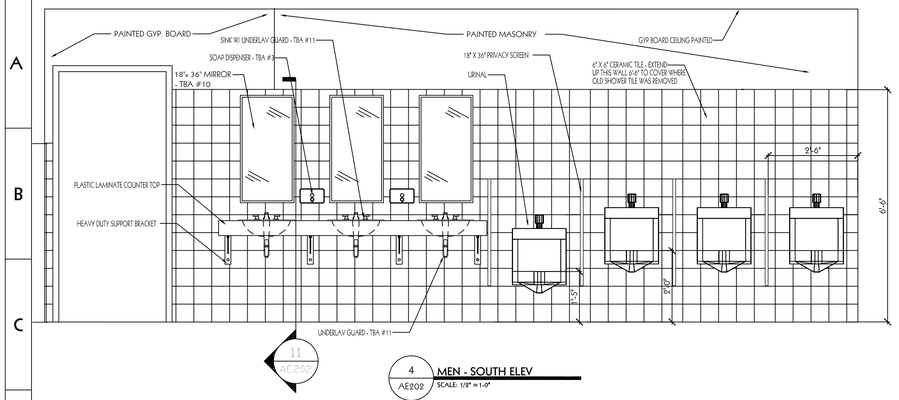

11 AE202

4 AE202 **MEN - SOUTH ELEV**
SCALE: 1/2" = 1'-0"

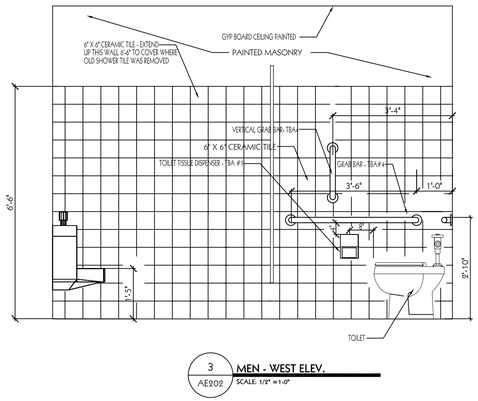

3 AE202 **MEN - WEST ELEV.**
SCALE: 1/2" = 1'-0"

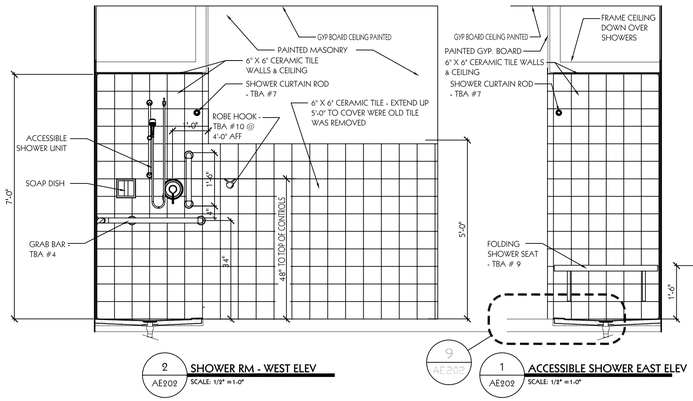

2 AE202 **SHOWER RM - WEST ELEV**
SCALE: 1/2" = 1'-0"

9 AE202

1 AE202 **ACCESSIBLE SHOWER EAST ELEV**
SCALE: 1/2" = 1'-0"

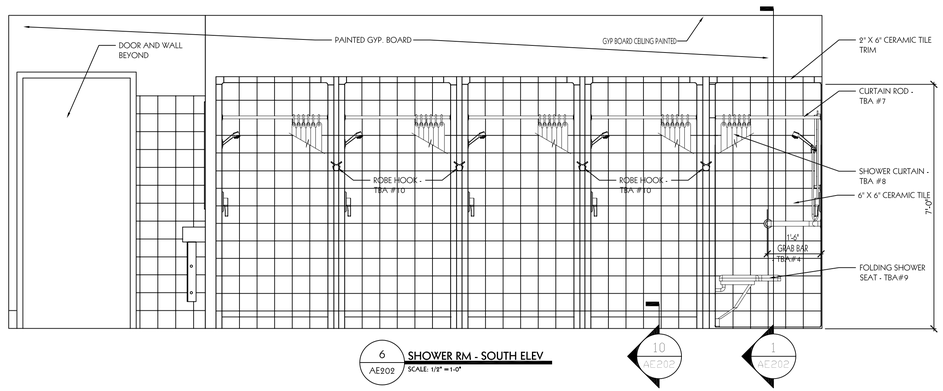

6 AE202 **SHOWER RM - SOUTH ELEV**
SCALE: 1/2" = 1'-0"

10 AE202

1 AE202

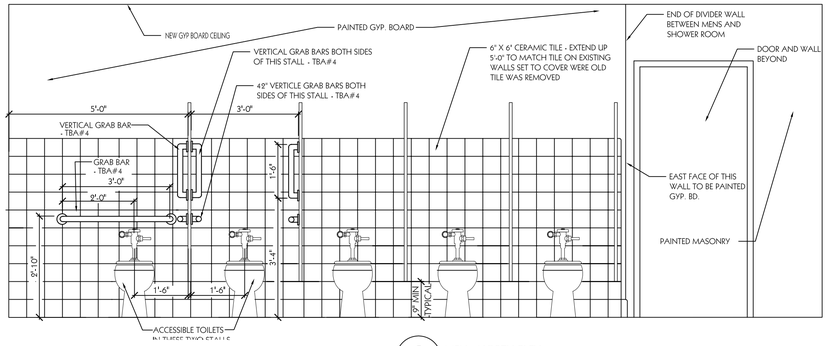

5 AE202 **MEN - NORTH ELEV**
SCALE: 1/2" = 1'-0"

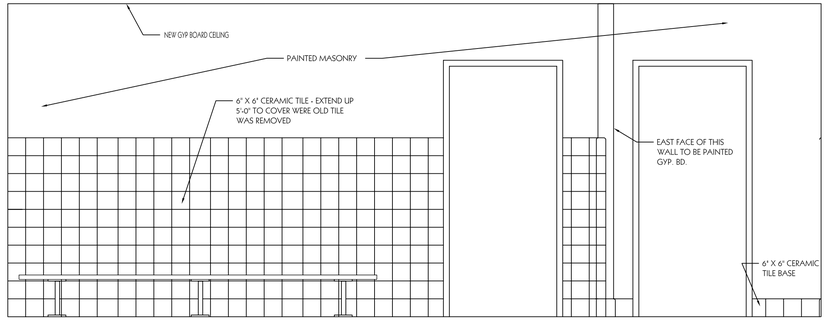

7 AE202 **SHOWER RM - NORTH ELEV**
SCALE: 1/2" = 1'-0"

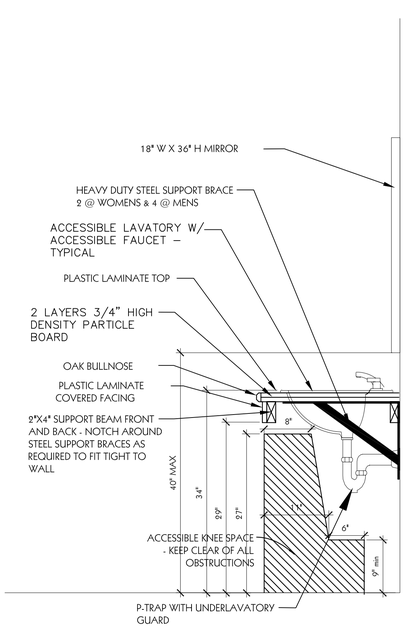

11 AE202 **VANITY SECT.**
SCALE: 1" = 1'-0"

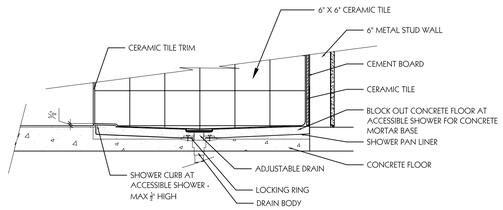

9 AE202 **ACCESSIBLE SHOWER CURB SECT.**
SCALE: 1" = 1'-0"

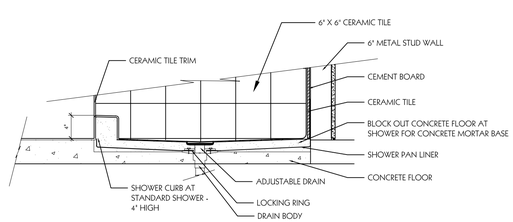

10 AE202 **STANDARD SHOWER CURB SECT.**
SCALE: 1" = 1'-0"

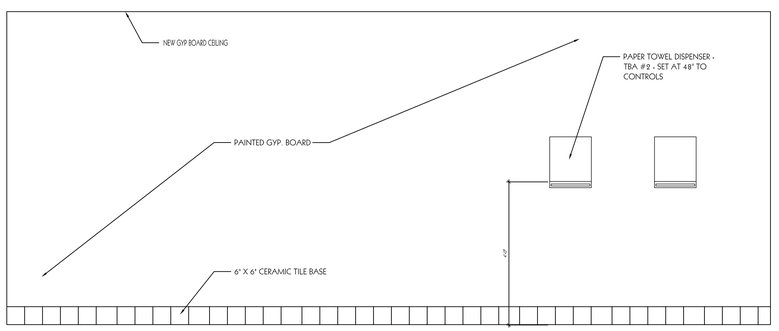

8 AE202 **MEN - EAST WALL**
SCALE: 1/2" = 1'-0"

Harris & Associates
265 East 100 South Suite 350
Salt Lake City, Utah 84111-1604
Ph (801) 521-8564 Fax (801) 355-2938

CONSULTANT INFORMATION

KEYED NOTES

STATE OF UTAH
ERIC R. THOLEN
129665
LICENSED ARCHITECT

Utah National Guard
RENOVATION OF READINESS CENTER
BUILDING 5170
CAMP W.G. WILLIAMS, UTAH

SHEET TITLE
INTERIOR ELEVATIONS

REVISIONS	DATE	BY	DESCRIPTION
1			
2			
3			
4			

DRAWN BY: JRA
CHECKED BY: ERT
PROJECT NO.: 08032470 CW
DRAWING NO.: AE202
DATE: DEC. 15, 2008

Utah National Guard - Camp Williams Bldg. 5170

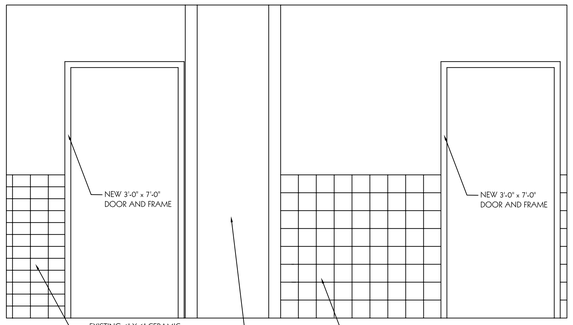

3 AE203 **2ND FLR. RR ELEVATION**
SCALE: 1/2" = 1-0"

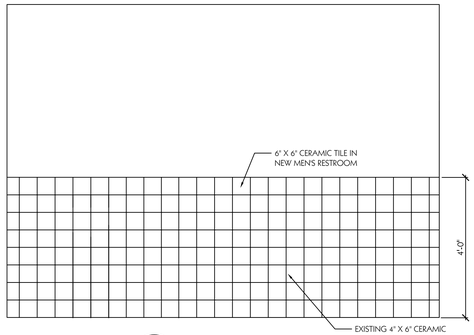

2 AE203 **2ND FLR. RR ELEVATION**
SCALE: 1/2" = 1-0"

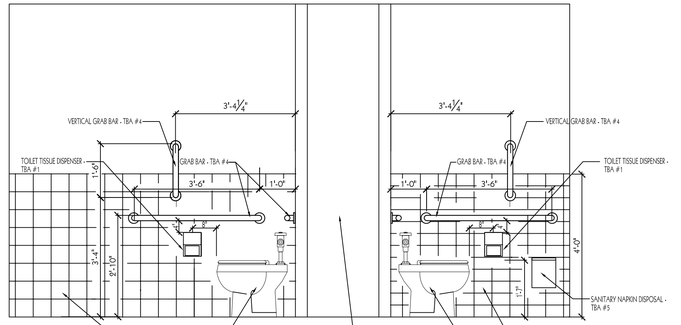

1 AE203 **2ND FLR. RR ELEVATION**
SCALE: 1/2" = 1-0"

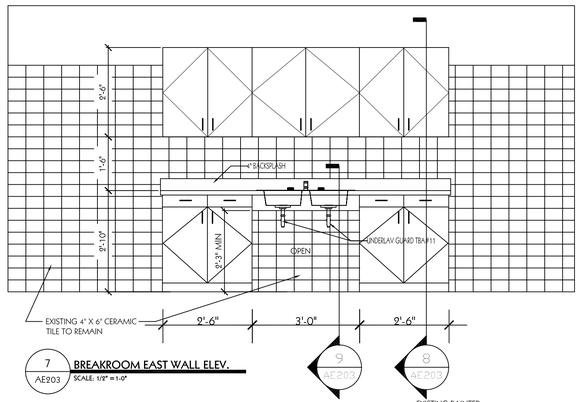

7 AE203 **BREAKROOM EAST WALL ELEV.**
SCALE: 1/2" = 1-0"

9 AE203

8 AE203

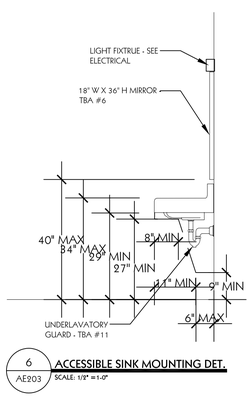

6 AE203 **ACCESSIBLE SINK MOUNTING DET.**
SCALE: 1/2" = 1-0"

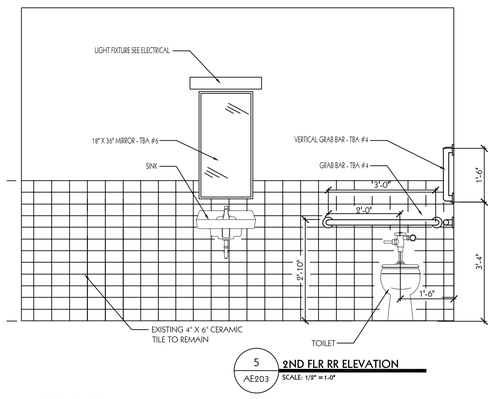

5 AE203 **2ND FLR RR ELEVATION**
SCALE: 1/2" = 1-0"

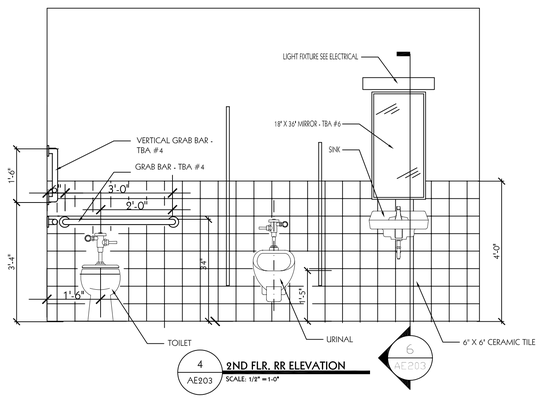

4 AE203 **2ND FLR. RR ELEVATION**
SCALE: 1/2" = 1-0"

6 AE203

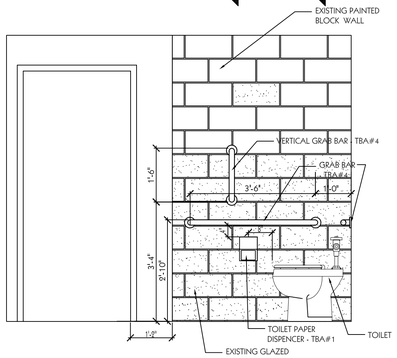

11 AE203 **WOMENS RR. ELEV.**
SCALE: 1/2" = 1-0"

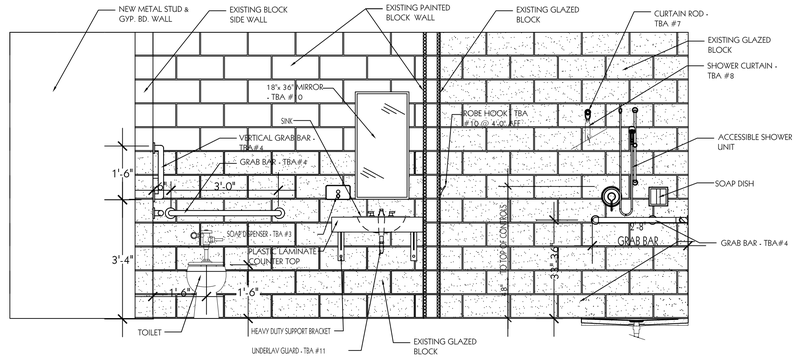

10 AE203 **WOMENS RR. ELEV.**
SCALE: 1/2" = 1-0"

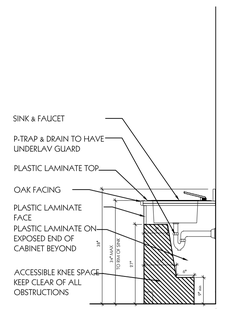

9 AE203 **CABINET SECTION**
SCALE: 1/2" = 1-0"

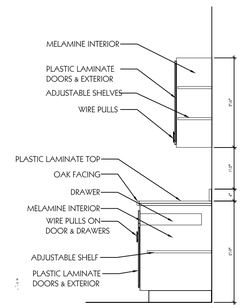

8 AE203 **CABINET SECTION**
SCALE: 1/2" = 1-0"

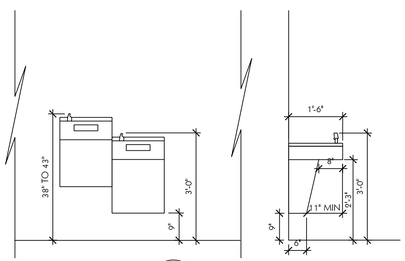

12 AE203 **ACCESSIBLE DRINKING FOUNTAIN DET.**
SCALE: 1/2" = 1-0"

Harris & Associates

265 East 100 South Suite 350
Salt Lake City, Utah 84111-1604
Ph (801) 521-8564 Fax (801) 355-2938

CONSULTANT INFORMATION

KEYED NOTES

STATE OF UTAH
ERIC R. THOLEN
129665
REGISTERED ARCHITECT
12-15-08

Utah National Guard
RENOVATION OF READINESS CENTER
BUILDING 5170
CAMP W.G. WILLIAMS, UTAH

SHEET TITLE
INTERIOR ELEVATIONS

REVISIONS	DATE	BY	DESCRIPTION
△			
△			
△			
△			

DRAWN BY: JRA
CHECKED BY: ERT
PROJECT NO.: 08032470 CW
DRAWING NO.: AE203
DATE: DEC. 15, 2008

Utah National Guard - Camp Williams Bldg. 5170

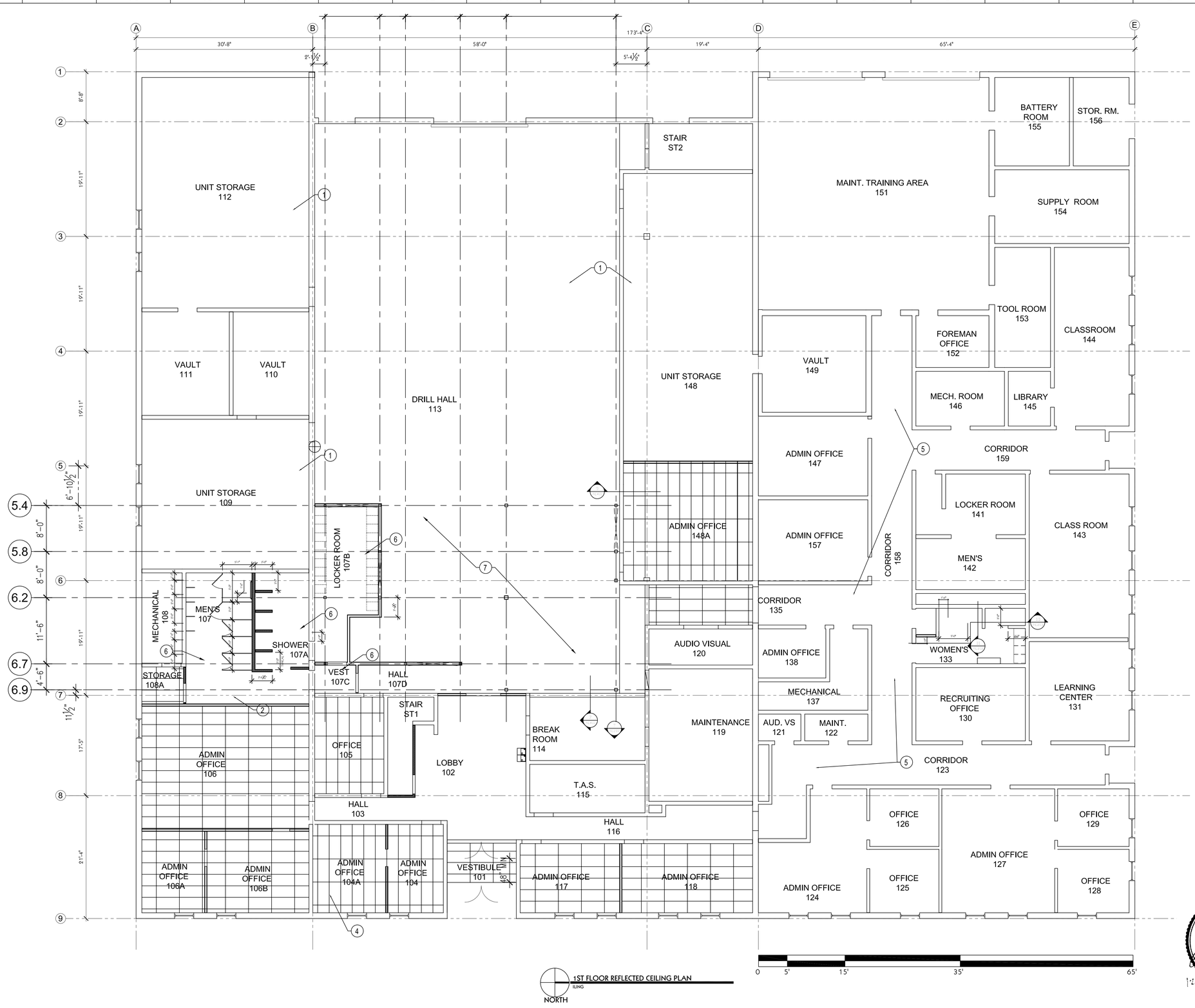

1ST FLOOR REFLECTED CEILING PLAN

NORTH

Harris & Associates

265 East 100 South Suite 350
Salt Lake City, Utah 84111-1604
Ph (801) 521-8564 Fax (801) 355-2938

CONSULTANT INFORMATION

KEYED NOTES

1. REPLACE ANY DAMAGED OR STAINED EXISTING TILE IN ROOMS NOT RECIEVEING NEW TILE WITH EXISTING TILE IN GOOD CONDITION SALVAGED FROM ROOMS RECEIVING NEW TILE.
2. REMOVE AND REPLACE EXISTING CEILING GRID & TILE IN OLD LOCKER ROOM AND REPLACE WITH NEW GYPSUM BOARD CEILING.
3. REMOVE REMAINING CEILING TILE AND GRID FROM MECHANICAL ROOM - LEAVE CEILING EXPOSED TO STRUCTURE ABOVE
4. REMOVE AND REPLACE EXISTING CEILING TILE WITH NEW IN ROOMS WHERE THE CEILING GRID IS SHOWN. EXISTING GRID AND SUSPENSION SYSTEM TO REMAIN. REPAIR ANY DAMAGE TO EXISTING GRID - TYPICAL
5. REPLACE ALL MISSING, DAMAGED OR STAINED CEILING TILE IN CORRIDOR 123, 135, 158, 159 WITH NEW MATCHING CEILING TILE
6. NEW SUSPENDED GYPSUM BOARD CEILING.
7. PAINT EXPOSED STRUCTURE.

GENERAL NOTES

1. UNLESS OTHERWISE NOTED REFERBISHING OF ROOM FINISHES ARE ONLY BEING DONE IN THE SPACES SOUTH OF GRID "D". THE CONTRACTOR WILL BE REQUIRED TO REPAIR ANY DAMAGE CAUSED BY THE REPLACEMENT OF WINDOWS THROUGHOUT THE BUILDING INCLUDING THOSE NORTH OF GRID "D".

STATE OF UTAH
ERIC R. THOLEN
129665
LICENSED ARCHITECT

Utah National Guard
RENOVATION OF READINESS CENTER
BUILDING 5170
CAMP W.G. WILLIAMS, UTAH

SHEET TITLE
1ST FLR CEILING PLN.

REVISIONS	DATE	BY	DESCRIPTION
△			
△			
△			
△			

DRAWN BY: JRA
CHECKED BY: ERT
PROJECT NO.: 08032470 CW
DRAWING NO.: AE301
DATE: DEC. 15, 2008

Utah National Guard - Camp Williams Bldg. 5170

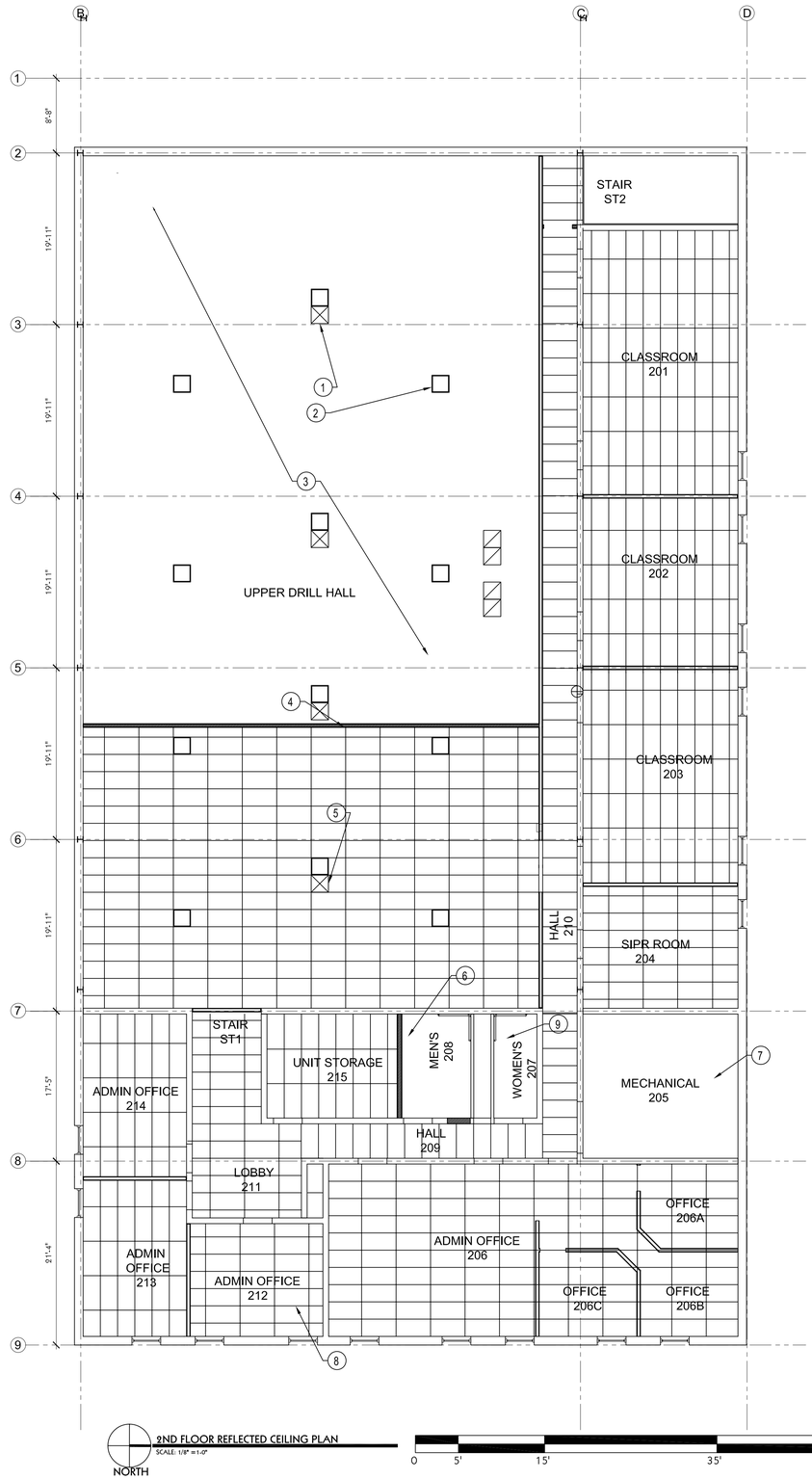

2ND FLOOR REFLECTED CEILING PLAN
SCALE: 1/8" = 1'-0"

NORTH

0 5' 15' 35' 65'

Harris & Associates
265 East 100 South Suite 350
Salt Lake City, Utah 84111-1604
Ph (801) 521-8564 Fax (801) 355-2938

CONSULTANT INFORMATION

KEYED NOTES

1. EXISTING DIFFUSERS TYP.
2. EXISTING LIGHTS TYP.
3. REPLACE ANY DAMAGED OR STAINED EXISTING TILE IN ROOMS NOT RECIEVEING NEW TILE WITH EXISTING TILE IN GOOD CONDITION SALVAGED FROM ROOMS RECEIVING NEW TILE.
4. EXISTING CEILING TILES - CUT AND REPAIR GRID AS REQUIRED FOR INSTALLATION OF NEW WALL STRUCTURE SEE 6/AE401
5. EXISTING DIFFUSERS - SEE MECHANICAL FOR PLACEMENT
6. REMOVE AND REPLACE EXISTING CEILING GRID & TILE WITH NEW GYPSUM BOARD CEILING - TIE INTO OLD MENS EXISTING CEILING IN OLD MENS ROOM
7. REMOVE REMAINING CEILING TILE AND GRID FROM MECHANICAL ROOM - LEAVE CEILING EXPOSED TO STRUCTURE ABOVE
8. REMOVE AND REPLACE EXISTING CEILING TILE WITH NEW IN ROOMS WHERE THE CEILING GRID IS SHOWN. EXISTING GRID AND SUSPENSION SYSTEM TO REMAIN. REPAIR ANY DAMAGE TO EXISTING GRID - TYPICAL
9. EXISTING CEILING TO REMAIN - REPAINT

GENERAL NOTES

1. SEE ELECTRICAL AND MECHANICAL FOR ANY REQUIRED CHANGES TO THE EXISTING DIFFUSERS AND LIGHTS

STATE OF UTAH
ERIC R. THOLEN
129665
LICENSED ARCHITECT
12-15-08

Utah National Guard
RENOVATION OF READINESS CENTER
BUILDING 5170
CAMP W.G. WILLIAMS, UTAH

SHEET TITLE
2ND FLR CEILING PLN

REVISIONS	DATE	BY	DESCRIPTION
1			
2			
3			
4			

DRAWN BY: JRA
CHECKED BY: ERT
PROJECT NO.: 08032470 CW
DRAWING NO.: AE302
DATE: DEC. 15, 2008

Utah National Guard - Camp Williams Bldg. 5170

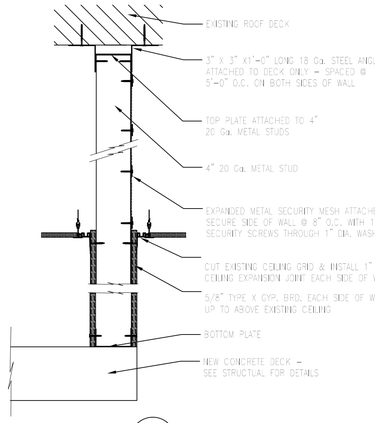

6 AE401 **WALL DETAIL**
SCALE: 1 1/2" = 1'-0"

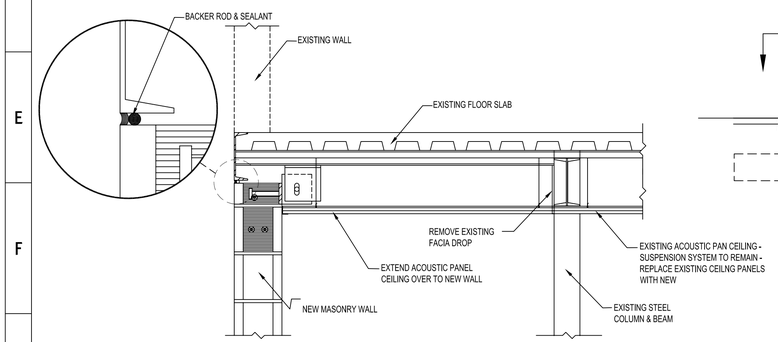

9 AE401 **MASONRY WALL @ ADMIN OFFICE 148A**
SCALE: 1" = 1'-0"

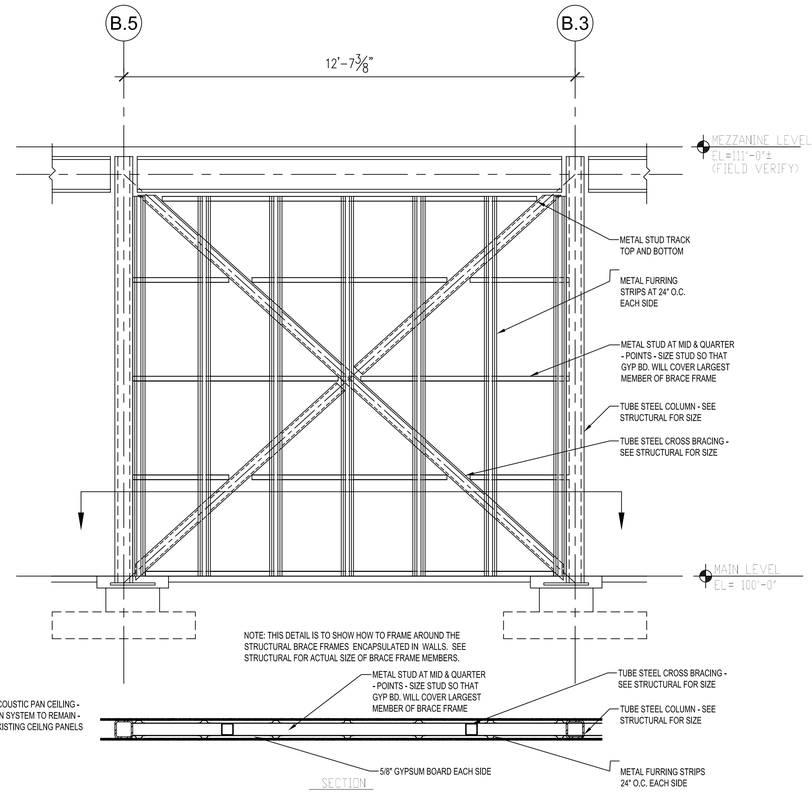

3 AE401 **GYP BD WALL FRAMING @ BRACE FRAMES ON GRIDS 6.7 & B3**
SCALE: 1/2" = 1'-0"

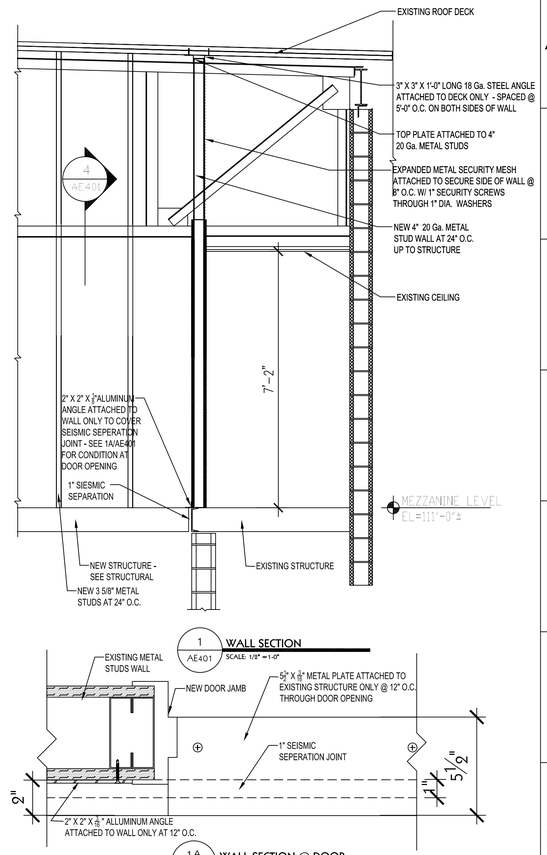

1 AE401 **WALL SECTION**
SCALE: 1/2" = 1'-0"

1A AE401 **WALL SECTION @ DOOR**
SCALE: 3" = 1'-0"

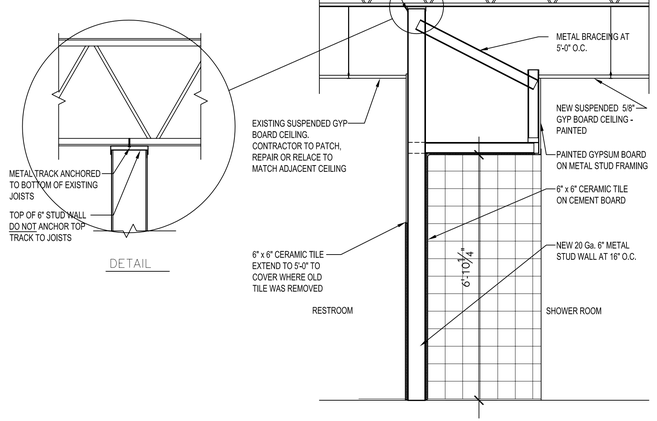

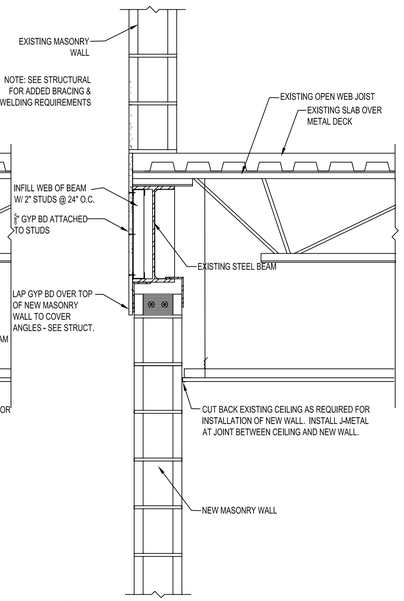

8 AE401 **DEMOLITION @ BREAKROOM WALL**
SCALE: 1" = 1'-0"

7 AE401 **MASONRY WALL @ BREAKROOM**
SCALE: 1" = 1'-0"

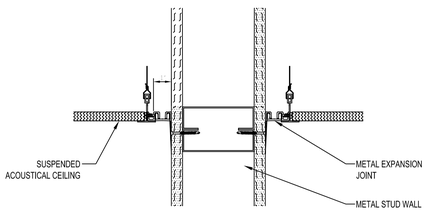

4 AE401 **EXPANSION JOINT DETAIL**
SCALE: 3" = 1'-0"

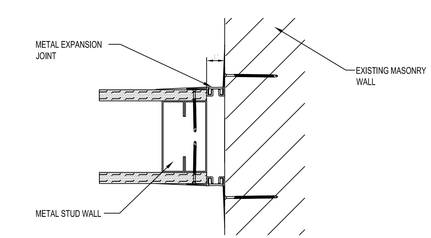

5 AE401 **EXPANSION JOINT DETAIL**
SCALE: 3" = 1'-0"

2 AE401 **WALL SECTION**
SCALE: 1" = 1'-0"

STATE OF UTAH
ERIC R. THOLEN
129665
LICENSED ARCHITECT

Harris & Associates
265 East 100 South Suite 350
Salt Lake City, Utah 84111-1604
Ph (801) 521-8564 Fax (801) 355-2938

CONSULTANT INFORMATION

KEYED NOTES

GENERAL NOTES

Utah National Guard
RENOVATION OF READINESS CENTER
BUILDING 5170
CAMP W.G. WILLIAMS, UTAH

SHEET TITLE
SECTIONS

REVISIONS	DATE	BY	DESCRIPTION
△			
△			
△			
△			

DRAWN BY JRA | CHECKED BY ERT
PROJECT NO. 08032470 CW | DRAWING NO. AE401
DATE DEC. 15. 2008

Utah National Guard - Camp Williams Bldg. 5170

FINISH SCHEDULE

ROOM NO.	ROOM NAME	BASE	FLR.	WALLS NORTH MATERIAL & FINISH	WALLS EAST MATERIAL & FINISH	WALLS SOUTH MATERIAL & FINISH	WALLS WEST MATERIAL & FINISH	CEILING TYPE	CEILING HEIGHT	MISC. NOTES
101	VESTIBULE	EX	EX	PM	SF	PM	SF	AC	EX	1
102	LOBBY	EX	EX	PM	PM/SF	PM	P	P	EX	
103	HALL	RB	CT	-	PM	PM	PM	P	EX	
104	ADMIN OFFICE	RB	CT	PM	PM	P	PM	AC	EX	1
104A	ADMIN OFFICE	RB	CT	P	PM	PM	PM	AC	EX	1
105	OFFICE	RB	CT	PM	PM	PM	PM	AC	EX	1
106	ADMIN OFFICE	RB	CT	PM	P	PM	P	AC	EX	1
106A	ADMIN OFFICE	RB	CT	P	PM	PM	PM	AC	EX	1
106B	ADMIN OFFICE	RB	CT	EP	EP	EP	EP	AC	EX	1
107	MEN'S	T	T	T/P	T/P	T/PM	T/PM	P	EX	3
107A	LOCKER RM.	T	T	P	P	PM	P	GB	9'-0"	
107B	SHOWER RM.	T	T	T/PM	T/P	T/P	T/PM	P	EX	3
107C	VEST	T	T	P	P	PM	P	GB	9'-0"	
107D	HALL	RB	EX		PM	P	P	P	9'-0"	3
108	MECHANICAL	EX	EX	EX	EX	EX	EX	EX	EX	6
108A	STORAGE	EX/RB	EX	P	P	P	P	AC	EX	1
109	UNIT STORAGE	EX	EX	EX	EX	EX	EX	EX	EX	5
110	VAULT	EX	EX	EX	EX	EX	EX	EX	EX	
111	VAULT	EX	EX	EX	EX	EX	EX	EX	EX	
112	UNIT STORAGE	EX	EX	EX	EX	EX	EX	EX	EX	5
113	ASSEMBLY HALL	EX	EX	PM	PM	PM	P	EX	EX	1 5 7
113A	STORAGE	EX	EX	PM	PM	PM	-	ES	ES	
114	BREAK ROOM	EX	EX	EX/P	EX/P	EX/P	EX/P	P	EX	
115	T.A.S.	EX	CT	P	P	P	P	AC	EX	1
116	HALL	EX	CT	P	P	P	P	P	MEX	1
117	ADMIN OFFICE	RB	CT	P	P	P	P	AC	EX	1
118	ADMIN OFFICE	RB	CT	P	P	P	P	AC	EX	1
119	MAINTENANCE	EX	EX	EX	EX	EX	EX	EX	EX	5
120	AUDIO VISUAL	EX	EX	EX	EX	EX	EX	EX	EX	
148A	ADMIN OFFICE	RB	CT	P	P	P	P	AC	EX	1
148	UNIT STORAGE	EX	EX	EX	EX	EX	EX	EX	EX	5
		BASE	FLR.	NORTH	EAST	SOUTH	WEST	TYPE	HEIGHT	
201	CLASS ROOM	RB	CT	PM	PM	PM	PM	AC	EX	1
202	CLASS ROOM	RB	CT	PM	PM	PM	PM	AC	EX	1
203	CLASS ROOM	RB	CT	PM	PM	PM	PM	AC	EX	1
204	SIFR ROOM	RB	CT	PM	PM	PM	PM	AC	EX	1
205	MECHANICAL	EX	EX	EX	EX	EX	EX	EX	EX	6
206	ADMIN OFFICE	RB	CT	P	PM	PM	PM	AC	EX	1
206A	ADMIN OFFICE	RB	CT	PM	P	P	PM	AC	EX	1
206B	ADMIN OFFICE	RB	CT	PM	PM	P	P	AC	EX	1
206C	ADMIN OFFICE	RB	CT	P	PM	P	P	AC	EX	1
207	WOMEN'S	ET	ET	ET/P	ET/P	ET/P	ET/P	P	EX	2
208	MEN'S	T	T	T/P	T/P	T/P	T/P	P	EX	
209	HALL	RB	CT	-	PM	-	PM	AC	EX	1
210	HALL	RB	CT	PM	-	P	PM	AC	EX	1
211	LOBBY	RB	CT	PM	PM	PM	-	AC	EX	1
212	ADMIN OFFICE	RB	CT	PM	PM	P	PM	AC	EX	1
213	ADMIN OFFICE	RB	CT	P	P	P	P	AC	EX	1
214	ADMIN OFFICE	RB	CT	PM	P	PM	PM	AC	EX	1
215	UNIT STORAGE	RB	CT	PM	PM	PM	PM	AC	EX	1
216	STORAGE	SC	PM	P/PM	PM	PM	P	AC	EX	4
ST1	STAIR	RB	EP	PM	-	PM	P	AC	EX	
ST2	STAIR	RB	EP	PM	PM	-	PM	AC	EX	4

WALLS
P = PAINTED GYP.BD.
PM = PAINTED MASONRY
T = CERAMIC TILE - CT2
EX = EXISTING TO REMAIN
SF = STORE FRONT

FLOOR
T = CERAMIC TILE - CT1
ET = EXISTING CERAMIC TILE
CT = CARPET TILE
EX = EXISTING TO REMAIN
EP = EPOXY PAINT
SC = SEALED CONCRETE

BASE
RB = RESILIENT BASE
T = CERAMIC TILE - CT2
EX = EXISTING TO REMAIN

CEILING
P = PAINTED GYP.BD.
EX = EXISTING TO REMAIN
AC = ACOUSTIC TILE - SEE NOTE 1
GB = NEW SUSPENDED GYP. BD.-PAINTED
ES = EXPOSED TO STRUCTURE

MISC. NOTES

1. EXISTING CEILING SUSPENSION SYSTEM TO REMAIN - REPLACE EXISTING CEILING TILE W/ NEW . REPAIR ANY DAMAGE TO EXISTING GRID
2. REPAIR ANY DAMAGED WALL TILE W/SALVAGED TILE & REPAINT WALL ABOVE TILE
3. REPAIR EXISTING CEILING AND ADD MATCHING CEILING IN AREA WHERE ACOUSTIC TILE CEILING WAS REMOVED.
4. EXISTING STAIR TREADS, RISERS, LANDINGS, RAILING & STRINGERS TO BE EPOXY PAINTED
5. IN ROOMS WHERE EXISTING CEILING TILE IS TO REMAIN REPAIR ANY DAMAGE TO GRID AND REPLACE DAMAGED TILES WITH TILES IN GOOD CONDITON SALVAGED FROM ROOMS RECEIVING NEW CEILING TILE
6. IN MECHANICAL ROOMS WHERE CEILING HAS BEEN PARTIALLY REMOVE, REMOVE REMAINING CEILING TILES & GRID
7. PAINT LOWER PORTION OF WALL IN ASSEMBLY HALL UP TO EXISTING LINE WHERE COLOR CHANGES. MATCH EXISTING WALL COLOR OF LOWER HALF OF WALL

DOOR SCHEDULE

DOOR #	ROOM NAME	DOOR TYPE	DOOR SIZE	DOOR GLASS	FRAME PROFILE	FRAME FRAME TYPE	FRAME DETAILS HEAD	FRAME DETAILS JAMB	THRESHOLD	HARDWARE GROUP	FIRE RATING	REMARKS
MAIN FLOOR												
01	ADMIN OFFICE 106A	M	S1		A	1	STEEL FRAME	STEEL FRAME		HW-1		
02	ADMIN OFFICE 106B	M	S1		A	1	STEEL FRAME	STEEL FRAME		HW-1		
03	ADMIN OFFICE 104A	M	S1		A	1	STEEL FRAME	STEEL FRAME		HW-1		
04	VESTIBULE TO EXTERIOR	SF	S2	G	B	2	STORE FRONT	STORE FRONT	T1	HW-2		
05	VESTIBULE TO LOBBY	SF	S2	G	B	2	STORE FRONT	STORE FRONT		HW-3		
06	LOBBY TO STAIR ST1	M	S1		A	1	STEEL FRAME	STEEL FRAME		HW-4		
07	VESTIBULE 107C	M	S1		A	1	STEEL FRAME	STEEL FRAME		HW-5		
08	LOCKER ROOM 107B	M	S1		A	1	STEEL FRAME	STEEL FRAME		HW-5		
09	STORAGE 108A	M	S1		A	1	STEEL FRAME	STEEL FRAME		HW-6		
10	WOMEN'S	M	S1		A	1	STEEL FRAME	STEEL FRAME		HW-7	20 MIN.	
21	MEN'S	M	S1		A	1	STEEL FRAME	STEEL FRAME		HW-7	20 MIN.	
22	WOMEN'S	M	S1		A	1	STEEL FRAME	STEEL FRAME		HW-7	20 MIN.	
23	PIPE CHASE	EX	EX		EX	EX	EXISTING	EXISTING		HW-8		
24	STORAGE 216	M	S1		A	3	STEEL FRAME	STEEL FRAME		HW-9	20 MIN.	
25	HALL 210 (WEST END)	M	S2		A	1	STEEL FRAME	STEEL FRAME		HW-4	1 HR. 450°	

S SIZE
S1 = 3'-0" x 7'-0" x 1 3/4"
S2 = DOUBLE 3'-0" x 7'-0" x 1 3/4"
EX = EXISTING DOOR & FRAME - NEW HARDWARE

G GLASS
G = SEE 1A & 1B/AE201 FOR GLASS TYPE

T THRESHOLD
T1 = METAL THRESHOLD

NOTE: EXISTING DOORS AND HARDWARE TO REMAIN ON EXISTING UN-NUMBERED DOOR OPENINGS - REPAINT DOORS AND FRAMES OF ALL DOORS SOUTH OF GRID "D" PAINT ALL NEW DOORS AND FRAMES

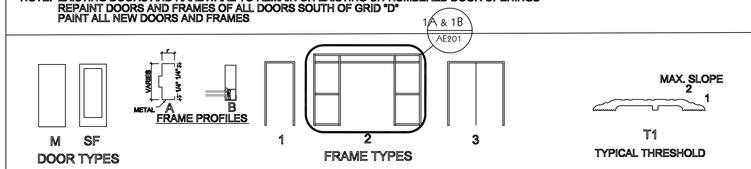

GENERAL NOTES:

1. DOORS TO BE SET TO CLEAR FINISHED FLOOR SURFACE BY 1/2"
2. PAINT ALL DOORS & JAMBS INCLUDING EXISTING COLOR AS SELECTED BY ARCHITECT.

STATE OF UTAH · ERIC R. THOLEN · 129665 · LICENSED ARCHITECT

Harris & Associates
265 East 100 South Suite 350
Salt Lake City, Utah 84111-1604
Ph (801) 521-8564 Fax (801) 355-2938

CONSULTANT INFORMATION

KEYED NOTES

GENERAL NOTES

Utah National Guard
RENOVATION OF READINESS CENTER
BUILDING 5170
CAMP W.G. WILLIAMS, UTAH

SHEET TITLE
SCHEDULES

REVISIONS	DATE	BY	DESCRIPTION
1			
2			
3			
4			

DRAWN BY: JRA
CHECKED BY: ERT
PROJECT NO.: 08032470 CW
DRAWING NO.: AE501
DATE: DEC. 15. 2008

Utah National Guard - Camp Williams Bldg. 5170

GENERAL STRUCTURAL NOTES

I. Design Criteria

A. Governing Building Code: 2006 International Building Code (IBC)

B. Mezzanine Live Loading:
1. Heavy Storage: ..... 250 psf Live Load

C. Earthquake:
1. Occupancy Category: I
2. Seismic Design Category ..... D
3. Spectral Response Accelerations:
   S_s = 1.125 g S_{DS} = 0.788 g
   S_1 = 0.459g S_{D1} = 0.472 g
4. Soil Site Class: ..... D
   F_a = 1.05 F_v = 1.54
5. Basic Seismic-Force-Resisting System: ..... Special Concentric Braced Frame
   R = 6 C_d = 5 Ω_o = 2
6. Importance Factor, I_E: 1.5
7. Design Base Shear: ..... 49 kips
8. Design Story Drift, Δ: ..... 0.5 in
9. Analysis Procedure: ..... Equivalent Lateral Force (Static)

D. Foundation:
1. Subsurface Conditions:
   Soils report and log of borings was obtained by the Owner for a previous project, and is not a part of the Contract Documents. The Owner has directed the Engineer to refer to this report for design values. This report and log of borings is available for the Contractor's information, but is not a warranty of the subsurface conditions. The Contractor may use the report at his own risk.
2. Soils Report by AMEC Earth & Environmental, dated November 3, 2004.
3. Soil Bearing Pressure: ..... 2500 psf, on Compacted Fill,
4. Lateral Soil Pressure Fluid Equivalent Density.
   a. Passive: ..... 300 pcf
5. Coefficient of Friction: 0.45

E. Classification for Fire Rated Construction:
1. For the purpose of determining fire-resistive assemblies, open-web steel framing members shall be considered unrestrained. All other steel floor and roof framing members shall be considered restrained.
2. Diagonal members in vertical braced frames shall be considered as secondary members for fire proofing protection

II. Earthwork

A. Proof rolling: The natural undisturbed soil below all footings shall be proof rolled prior to placing concrete. Remove all soft spots and replace with compacted structural fill.

B. Compacted structural fill: All fill material shall be a well-graded granular material with a maximum size less than 4 inches and with not more than 10 percent passing a No. 200 sieve. It shall be compacted to 95 percent of the maximum laboratory density as determined by ASTM D1557. All fill shall be tested (see Specifications and the Quality Assurance section of the GSN.)

C. New concrete footings may be placed on suitable native soils per the project geotechnical report. Unsuitable native soils shall be removed and replaced with structural fill. The width of fill under new footings shall be based on the depth of fill required to bear on suitable native soils (see foundation details.)

III. Concrete

A. Materials shall comply with the Standards specified in American Concrete Institute (ACI) 318-05, "Building Code Requirements for Structural Concrete."
1. Compressive strengths of concrete at 28 days shall be as follows:
   a. Footings: ..... 3000 psi
   b. Slabs on Grade: ..... 3000 psi
   c. Normal weight concrete over Steel Deck: ..... 3000 psi
2. Concrete Density (Maximum Air Dry Weight):
   a. Normal weight concrete shall be approximately 145 to 155 pounds per cubic foot.
3. Reinforcement steel:
   a. ASTM A615 Grade 60, fy = 60,000 psi min. unless noted otherwise.
4. Admixtures:
   a. Air-entraining admixtures, comply with ASTM C 260 (when used).
      (1) When air content of a trowel finished floor slab exceeds 3%, there is an increased risk for delaminations and blistering to occur. When this situation is present, the contractor shall pay special attention to the finishing procedures to help minimize such risks. Refer to ACI 302.1R-96 "Guide for Concrete Floor and Slab Construction" for proper finishing guidelines.
   b. Calcium chloride shall not be added to the concrete mix.
5. Only one grade or type of concrete shall be poured on the site at any given time.
6. Plastic coated tie wires and chairs shall be used to support reinforcing bars.

B. Formwork shall comply with ACI Standards Publication 347 and the project specifications. The contractor shall be responsible for the design, detailing, care, placement and removal of the formwork and shores.

C. Concrete cover requirements for deformed bar reinforcing steel shall comply with ACI 318, "Building Code Requirements for Structural Concrete".

1. Cast-in-place Concrete:	Clear Cover
a. Cast against and permanently exposed to earth:	3"
b. Formed concrete exposed to earth or weather:	
#6 thru #18 bars	2"
#5 and smaller bars	1.1/2"

D. Control Joints:
1. Control joints shall be installed in slabs on grade so the length to width ratio of the slab is no more than 1.25:1. Control joints shall be completed within 12 hours of concrete placement. Control joints may be installed by:
   a. Saw cut a depth of 1/4 the thickness of the slab
   b. Tooled joints a depth of 1/4 the thickness of the slab
2. Control joints in visually exposed walls, unless noted otherwise: (Joints shall line up with masonry and architectural joints, see drawings.)
   a. Vertical control joints at 10'-0" on center.
   b. Reinforcing shall be continuous through control and construction joints, unless noted otherwise.
   c. Control joints in concrete foundation walls shall line up with masonry control joints.
3. Control joints shall be installed in suspended slabs over steel decking by sawcutting along all interior grid lines. Joints centered above the purlins and girders shall be ¾" deep.

E. Detailing: All reinforcing, including WWF, shall be detailed, bolstered & supported to comply with ACI 315, "Details and Detailing of Concrete Reinforcement" and the Concrete Reinforcing Steel Institute (CRSI) recommendations. Reinforcing bars shall not be welded unless specifically shown on drawings.
1. Lap splice lengths shall be detailed to comply with the "Reinforcing Bar Lap Splice Schedule" contained within the contract drawings. Splices may be made with mechanical splices capable of 125% tension capacity of the bar being spliced. Mechanical splices shall be the positive connecting type coupler. They shall be covered by a current ICC Code Evaluation Report. Use "Cadweld" splice sleeves with ferrous filler, "Lenton" taper threaded rebar splices, "Bar-Lock" lockshear bolt coupling sleeves, or approved equivalent. If mechanical splices are used, splices or couplers on adjacent bars shall be staggered a minimum of 24" apart along the longitudinal axis of the reinforcing bars.
2. All embedments and dowels shall be securely tied to formwork or to adjacent reinforcing prior to the placement of concrete.
3. Use chairs or other support devices recommended by the CRSI to support reinforcement bars prior to placing concrete.
4. Contractor shall coordinate placement of all openings, curbs, dowels, sleeves, conduits, bolts, inserts and other embedded items prior to concrete placement.
5. All reinforcement shall be bent cold, and shall be bent only once at the same location. All reinforcement shall be shop bent, unless otherwise permitted by the engineer.

F. No aluminum conduit or product containing aluminum or any other material injurious to concrete shall be embedded in concrete.

G. Unless otherwise noted, all slabs on grade shall be 4" thick.

IV. Masonry

A. Materials, unless noted otherwise:
1. Concrete Masonry Units: ASTM C 90, Lightweight, minimum unit strength of 1900 psi average or better. (f'm = 1500 psi)
2. Mortar: Use Type "S" according to IBC Section 2103.8, and tested according to ASTM C270. Admixtures shall not be added to the mortar mix. (1800 psi minimum compressive strength).
3. Grout: Conform to IBC Table 2103.12 or ASTM C476. Proportioned according to IBC Section 2103.12 and tested according to ASTM C1019. Grout shall attain a minimum compressive strength equal to or greater than f'm but shall not be less than 2000 psi at 28 days.
4. Reinforcing: Grade 60 reinforcing steel shall comply with ASTM A615. Wire joint reinforcing shall comply with ASTM A951.
5. Headed Stud Anchors (HSA): Manufacture all HSAs in conformance with ASTM A108 with dimensions complying with AISC specifications.

B. Construction Requirements:
1. Mortar Joints: Joints shall be "concave", "V-joint" or "weathered raked" for structural members unless noted otherwise on architectural drawings.
2. Masonry walls, beams and columns shall be constructed with running bond, unless noted otherwise.
3. Grouting Requirements: Comply with IBC Section 2104 and ACI 530.1/ASCE 6/TMS 602. Grout shall be mechanically consolidated and mechanically reconsolidated according to ACI 530.1/ASCE 6/TMS 602 Section 3.5 E.
4. Reinforcing Bars shall not be welded unless specifically shown on drawings. In such cases, use only AWS standards. Do not substitute reinforcing bars for DBAs or HSAs.
5. Control Joints: Spacing shall not exceed 40'-0". See architectural drawings for locations.
6. Grout all beam and joist pockets solid after installation of beams and joists.

C. Detailing Requirements:
1. Standards: Reinforcing detailing shall comply with American Concrete Institute (ACI) Standard 315, "Details and Detailing of Concrete Reinforcement."
2. Reinforcement Protection (cover):
   a. Joint reinforcement shall have not less than 5/8" mortar coverage from the exposed face.
   b. Other reinforcement shall have a minimum coverage of one bar diameter over all the bars, but not less than 3/4". When masonry is exposed to soil, minimum coverage shall be 1.5".
3. Vertical steel reinforcement shall be placed and secured against displacement prior to grouting by wire positioners or other suitable devices: at intervals not exceeding 112 bar diameters, at the grout lift heights, or at bar splice locations, whichever is less. Vertical reinforcing shall be located at the center of the wall, unless noted otherwise.
4. Lap Splice Lengths: Lap all masonry reinforcing bars per the "Masonry Reinforcing Bar Lap Splice Schedule." Joint reinforcement shall lap a minimum of 6".
5. Corner Bars: Horizontal reinforcement shall be continuous at all corners and at intersecting walls. Provide corner bars with the required lap splice length.
6. Dowels: All vertical reinforcing shall be doweled to the foundation wall, footing (structure below) and to the structure above with the same size dowel, spacing (and in the same core) as the vertical wall reinforcing unless noted otherwise.
7. Wall Openings 24" wide and wider: Provide reinforced masonry lintels per Masonry Lintel Schedule over the top of, and 2 - #5 bars, in grouted spaces, on all sides and adjacent to every unscheduled opening, unless noted otherwise. Bars for all openings shall extend a minimum of 48 bar diameters beyond the corners of the opening. Vertical bars shall extend from floor level below to the floor , or roof, level above. Where a 48 bar diameter extension is not possible, extend bars as far beyond the opening as possible and terminate them with a 90 degree standard ACI hook.
8. Horizontal wall reinforcing shall be continuous through joining concrete walls, masonry walls, columns, and pilasters. Provide a key between the wall and the column or pilaster. Horizontal wall reinforcing shall be placed inside the column vertical reinforcing.
9. Anchor bolts and headed stud anchors shall be set in a grouted cell. Anchor bolts and headed stud anchors shall have 1" grout surrounding the shank at its penetration. Grout shall be flush with the face or top of the masonry.
10. The exposed face of all embed plates shall be set flush with the face of masonry wall or column.

D. Minimum Reinforcing:
1. All masonry walls shall be reinforced as follows, unless shown otherwise on the drawings. Reinforcing shall be placed in grouted cells.

Wall Thickness	Horizontal Reinf.	Vertical Reinf.
8"	#5 @ 48" o.c.	#5 @ 32" o.c.

E. Modifications to Existing Masonry Partition Walls
1. Infill walls.
   a. Infill walls shall contain minimum reinforcing per the general structural notes.
   b. All cells containing reinforcing shall be solid grouted.
   c. New reinforcing bars shall be lapped with existing reinforcing bars using 12-inch-long epoxy dowels. Epoxy shall be Hilti HIT HY-150 or engineer approved equal.
2. New openings in existing walls.
   a. All new openings shall be core-drilled at the corners before saw-cutting. Openings shall not be overcut.
   b. Openings smaller than 1'-0" wide need not be reinforced.
   c. Openings larger than 1'-0" shall be reinforced per the typical details.
   d. Contractor shall be responsible for shoring walls before wall reinforcement is installed.

ABBREVIATIONS

AB	ANCHOR BOLT (S)	F.D	FLOOR DRAIN	NIC	NOT IN CONTRACT
ABV	ABOVE	FDTN	FOUNDATION	NTS	NOT TO SCALE
@	AT	F.F.	FINISH FLOOR		
ALT	ALTERNATE	FIN	FINISH	OPNG	OPENING
APPROX	APPROXIMATE	FL	FLOOR	OPP	OPPOSITE
ARCH	ARCHITECT(URAL)	FT	FOOT	O.C.	ON CENTER
		FTG	FOOTING	O.F.	OUTSIDE FACE
BM	BEAM	FV	FIELD VERIFY	OWSJ	OPEN WEB STEEL JOIST
BLW	BELOW				
		GA	GAUGE	PCF	POUNDS/CUBIC FOOT
BRG	BEARING	GALV	GALVANIZED	PL	PLATE
BTWN	BETWEEN	GLB	GLU-LAMINATED BEAM	PLF	POUNDS/LINEAL FOOT
BLDG	BUILDING	GR	GRADE	PNL	PANEL
BOT	BOTTOM	GSN	GENERAL STRUCTURAL NOTES	PSF	POUNDS/SQ FOOT
				PSI	POUNDS/SQ INCH
C.J.	CONSTRUCTION JOINT OR CONTROL JOINT	HB	HORIZONTAL BRIDGING	PT	POINT
CJP	COMPLETE JOINT PENETRATION	HT	HEIGHT	REINF	REINFORCING
		HORIZ	HORIZONTAL	R.D.	ROOF DRAIN
CMU	CONC MASONRY UNIT	HSA	HEADED STUD ANCHORS	REQ'D	REQUIRED
COL	COLUMN				
CONC	CONCRETE	IBC	INTERNATIONAL BUILDING CODE	SHT	SHEET
CONST	CONSTRUCTION			SI	SPECIAL INSPECTION
CONT	CONTINUOUS	ICBO	INTERNATIONAL CONFERENCE OF BUILDING OFFICIALS	SOG	SLAB ON GRADE
CONTR	CONTRACTOR			STD	STANDARD
CTR	CENTER	ICC	INTERNATIONAL CODE COUNCIL	STIFF	STIFFENER
				STL	STEEL
DB	DECK BEARING	IN.	INCH	SQ	SQUARE
DBA	DEFORMED BAR ANCHORS	INSUL	INSULATION	SIM	SIMILAR
		INT	INTERIOR	STR	STRUCTURAL
DBL	DOUBLE	I.F.	INSIDE FACE	STAG	STAGGERED
DET	DETAIL				
DIA	DIAMETER	JT	JOINT	T&B	TOP AND BOTTOM
DIM	DIMENSION	JST	JOIST	TEMP	TEMPERATURE
DN	DOWN	KLF	KIPS PER LINEAL FOOT	THDS	THREADS
DWG	DRAWING	KSF	KIPS PER SQUARE FOOT	T.O.	TOP OF
DWL	DOWEL	KSI	KIPS PER SQUARE INCH	TOC	TOP OF CONCRETE
		K	KIPS – 1,000 POUNDS	TOF	TOP OF FOOTING
EA	EACH			TOS	TOP OF SLAB
E.J.	EXPANSION JOINT (SEISMIC SEPARATION JOINT)	LF	LINEAL FOOT	TOW	TOP OF WALL
		LBS	POUNDS	TYP	TYPICAL
ELEV	ELEVATION	LLH	LONG LEG HORIZONTAL		
ELEC	ELECTRICAL	LLV	LONG LEG VERTICAL	UNO	UNLESS NOTED OTHERWISE
EQUIP	EQUIPMENT				
EQ	EQUAL	MAS	MASONRY	VERT	VERTICAL
EXIST	EXISTING	MAX	MAXIMUM	W/	WITH
EXP	EXPANSION / EXPOSED	MCJ	MASONRY C.J.	WWF	WELDED WIRE FABRIC
EXT	EXTERIOR	MECH	MECHANICAL		
E.F.	EACH FACE	MFR	MANUFACTURER		
E.W.	EACH WAY	MIN	MINIMUM		
		MISC	MISCELLANEOUS		

STRUCTURAL DRAWING INDEX

Sheet No.	Sheet Title
SE001	GENERAL STRUCTURAL NOTES
SE002	GENERAL STRUCTURAL NOTES
SE003	GENERAL STRUCTURAL NOTES
SB101	FOOTING & FOUNDATION PLAN
SB501	TYPICAL FOOTING & FOUNDATION DETAILS
SB601	STRUCTURAL SCHEDULES
SF102	MEZZANINE FRAMING PLAN
SF201	BRACED FRAME ELEVATIONS
SF202	TYPICAL BRACED FRAME DETAILS
SF501	TYPICAL FLOOR FRAMING DETAILS
SF502	TYPICAL FLOOR FRAMING DETAILS
SF503	TYPICAL FLOOR FRAMING DETAILS
SF601	STRUCTURAL SCHEDULES

Harris & Associates SM
265 East 100 South Suite 350
Salt Lake City, Utah 84111-1604
Ph (801) 521-8564 Fax (801) 355-2938

CONSULTANT INFORMATION
REAVELEY
ENGINEERS + ASSOCIATES
Consulting Structural Engineers
675 E. 500 S. Suite 400
Salt Lake City, UT 84102
P:801.486.3883
F:801.485.0911
www.reaveley.com

KEYED NOTES

LICENSED CERTIFIED STRUCTURAL ENGINEER
NO. 154201
ARTHUR PARRY BROWN
UTAH
1/30/09

Utah National Guard
RENOVATION OF READINESS CENTER
BUILDING 5170
CAMP W.G. WILLIAMS, UTAH

SHEET TITLE
GEN STRUCT NOTES

REVISIONS	DATE	BY	DESCRIPTION
△			
△			
△			
△			

DRAWN BY: CAT/REA
CHECKED BY:
PROJECT NO.: 08032470 CW
DRAWING NO.: SE001
DATE: JAN. 30, 2009

Utah National Guard - Camp Williams Bldg. 5170

GENERAL STRUCTURAL NOTES

V. Structural Steel

A. Material:
1. W-Shapes: ASTM A992, (F_y = 50 ksi), except as noted otherwise.
2. All Other Shapes and Plates: ASTM A36 (Fy = 36 ksi), except as noted otherwise.
3. Square Hollow Structural Sections (HSS): ASTM A500, Grade B (Fy = 46 ksi).
4. Deformed Bar Anchors (DBA): ASTM A496.
5. Headed Stud Anchors (HSA): ASTM A108, with dimensions complying with AISC specifications.
6. Anchor Rods: ASTM F1554, Grade 36 (headed) and Grade 105 (unheaded) with ASTM A563 heavy hex nuts and ASTM F436 hardened washers, unless noted otherwise.
7. All steel shapes and plates which are a part of the seismic force resisting system shall have Charpy V-Notch absorbed energy of 20 ft-lbs. or greater at 70 degrees Fahrenheit, as indicated below:
   a. Shapes: Group 3 (with flanges 1.1/2" or thicker), Groups 4 and 5.
   b. Plates: 2" and thicker.
   c. Test Frequency: Each heat.

B. Fabrication and construction shall comply with the following Codes and Standards:
1. American Institute of Steel Construction (AISC) 360-05, "Specification for Structural Steel Buildings," dated March 9, 2005.
2. AISC 341-05, "Seismic Provisions for Structural Steel Buildings" dated March 9, 2005, including Supplement No. 1, dated November 16, 2005.
3. AISC 303-05, "Code of Standard Practice for Steel Buildings and Bridges" excluding the following: Section 3.3 (last sentence of first paragraph), Section 4.4, Section 4.4.1, Section 4.4.2, Section 4.5, and Section 7.13.3.
   a. The architectural drawings are the prime contract drawings. Consultants' drawings by other disciplines are supplementary to the architectural drawings. The structural drawings shall be used in conjunction with the architectural drawings. Detailing and shop drawing production for structural elements will require information (including dimensions) contained in architectural, structural, and/or other consultants' drawings. Refer to VII. Special Instructions, notes VII.B and VII.C on this sheet.
4. AISC/RCSC 2004, "Specification for Structural Joints Using ASTM A325 or A490 Bolts"
5. American Welding Society (AWS) D1.1-04, "Structural Welding Code – Steel" (specific items do not apply when they conflict with the AISC requirements).
6. American Iron and Steel Institute (AISI) 2001, "North American Specification for the Design of Cold-Formed Steel Structural Members."

C. Structural shapes and plates shall be fabricated from newly rolled (milled) one-piece sections without splices, unless specifically noted otherwise on the structural drawings. Connections for structural steel shall comply with the structural drawings, unless written approval is given by the structural engineer.

D. Welding:
1. Certification of Welders: All shop and field welding shall be executed by AWS certified welders who have been specifically certified for the type of work to be performed. Certification shall be considered current if dated within the past 12 months. Welders will be considered certified if they have been certified under AWS and their work records are current within every six-month period thereafter as required by AWS. Certification and records must comply with AWS Standards. Certification and appropriate records must be provided to the architect prior to beginning work.
2. Electrodes: E-70 XX or as noted otherwise. E60 XX may be used for welding steel floor and roof decks.
3. Minimum Welds: All intersecting steel shapes that are not bolted shall be connected by a fillet weld all around, unless noted otherwise. Fillet weld sizes that are not shown shall be 1/16" less than the thinnest of the connected parts for thicknesses 1/4" and larger. Fillet welds on plates less than 1/4" shall be of the same size as the thinnest of the connected parts.
4. Reinforcing Bars: Do not weld rebar except as specifically detailed in the drawings. In such cases, use only AWS standards. Do not substitute reinforcing bars for deformed bar anchors (DBAs), machine bolts, or headed stud anchors (HSAs).
5. Bolts: Do not apply any welds, including "tack" welds to bolts, including anchor bolts, except as specifically detailed in the drawings.
6. It is recommended the steel erection contractor and steel fabricator contact the Quality Assurance Agency prior to beginning any of the above welds. A program of joint preparation and welding procedures should be worked out between the two parties before the welding is started so that correct welds will be made from the beginning.
7. Headed Stud Anchor (HSA) welding and Deformed Bar Anchor (DBA) welding shall conform to the manufacturer's specifications. Welding shall comply with AWS D1.1 Section 7.6 through 7.8 and Annex IX.
8. Braced Frame welding: lengths shown for fillet welds for brace-to-gusset, gusset-to-baseplate, and column-to-gusset connections are minimums, intended for establishing gusset plate dimensions. Weld entire contact length at these joints, typical.

E. Bolted Connections:
1. Use ASTM A325N bolts for steel to steel connections, as noted herein or as noted on the drawings. A325N bolts shall be used in connections for simple span framing and beam (or girder) to bearing plate connections. Tighten bolts to a snug tight condition. A snug tight condition is usually attained by a few impacts of an impact wrench or the full effort of a man using an ordinary spud wrench. Bolts shall be tightened until all plies of the joint are in firm contact.
2. Provide hardened washers beneath the turned element of all bolts or nuts. Provide hardened beveled washers, to compensate for the lack of parallelism, where the outer face of the bolted parts has a slope greater than one in twenty with respect to the plane normal to the bolt axis. Hardened washers or plates installed over oversized holes or slotted holes shall be at least 5/16" thick and shall conform to ASTM F436. Plates or bars installed at slotted holes shall have a size sufficient to completely cover the slot after installation.
3. Where a steel to steel beam connection is not detailed in the drawings, provide a standard AISC framed connection with the capacity to support one half of the total uniform load capacity of the given shape for the span and for the steel specified.
4. Bolts, nuts and washers shall not be reused.

F. Beam Web Stiffener Plates:
Provide full-height web stiffener plates to each side of all beams above all bearing points. Stiffener plates shall be the thickness noted below unless noted otherwise and shall be welded on both sides of the stiffener plate with fillet welds (noted below) all around.

Beam Web stiffener thickness	For beams with flange widths between	Weld Size
1/4 inch thick	Greater than 0" and less than 8 1/4"	3/16"
3/8 inch thick	Greater than 8 1/4" and less than 12 1/4"	1/4"
1/2 inch thick	Greater than 12 1/4" and less than 16 1/2"	5/16"
5/8 inch thick	Greater than 16 1/2" and less than 20 3/4"	3/8"

G. Composite Beams
1. Composite beams are indicated on the framing plans with the suffix ( ). The number inside the brackets indicates number of studs for this beam. Beams shall have the studs spaced uniformly over the entire beam length.
2. Beams which have more than one number inside the symbol (, ,), such as (W, X, Y, Z), shall have "W" number of studs spaced evenly over the first "section of beam", "X" number of studs spaced evenly over the second "section of beam", "Y" number of studs spaced evenly over the third "section of beam", and "Z" number of studs spaced evenly over the fourth "section of beam".
   A "section of beam" is defined as that portion of beam located between the column and the nearest intersecting framing member or that portion of beam located between two adjacent intersecting framing members.
3. All headed stud type shear connectors shall be in conformance with ASTM A108. Dimensions shall comply with AWS. Use 3/4" diameter studs. Headed studs shall extend 2" minimum above the top of the steel deck after welding. Headed studs shall be applied through the metal deck to the top flange of the steel section, or welded directly to the steel section.
4. The minimum center-to-center spacing of stud connectors shall be six (6) diameters along the longitudinal axis of the supporting composite beam and four (4) diameters transverse to the longitudinal axis of the supporting composite beam. The maximum center to center spacing shall not exceed 32".
5. C= 0.00" on the plans denotes precamber dimension (upward) in inches.

H. Steel Floor Deck:
1. Steel floor deck shall comply with the latest requirements of the Steel Deck Institute (SDI). Submit ICC Code Evaluation Report with load and lateral shear capacities with shop drawings.
2. Steel floor deck shall be 2" deep X 18 gauge minimum phosphatized/painted composite (deck shall be galvanized (G60) when used above or below mechanical equipment rooms), type "W" deck with interlocking side seams with the following properties:

	18 Gauge
Minimum S (in^3/ft) =	0.510
Minimum I (in^4/ft) =	0.555

   Painted deck shall be coated with special paint to receive sprayed-on fire proofing, where required.
3. A 6" thick (8" overall) normal weight concrete (f'c = 3,000 psi @ 28 days unless noted otherwise) slab shall be poured over the steel deck.
4. Steel deck with 6" thick (8" overall) normal weight concrete slab shall have a minimum diaphragm shear capacity of 2150 lbs/ft. for a 8'-0" deck span.
5. Weld deck to supporting framing members with 3/4" diameter puddle welds at the following spacing (Closer spacings may be used to develop minimum shear requirements.):
   a. 12" o.c. to supports perpendicular to deck corrugations (4 welds per 36" wide sheet).
   b. 12" o.c. to all supports parallel to deck corrugations.
   c. Stud welds may take the place of puddle welds where studs are welded through the deck to the top flange of beams.
   d. All welded surfaces shall be dry before welding deck or studs to supports.
6. Attach interlocking seams with 3/16" button punch at 18" o.c. or 1 1/2" top seam weld at 36" o.c. between adjacent pieces of deck. Crimp seams before button punching or welding interlocking seams. Closer spacings may be used to develop minimum shear requirements.
7. All deck shall be 3-span continuous minimum where possible. In areas where 3-span conditions are not possible, the deck shall meet the above loading criteria for the span condition. The contractor shall provide heavier gauge deck or provide shoring as required for one or two span conditions to meet the equivalent loading of the above deck under a three span condition.
8. Deck shall have a minimum bearing length of 2".

VI. Special Instructions

A. The project specifications are not superseded by the General Structural Notes but are intended to be complementary to them. Consult the specifications for additional requirements in each section. Notes and specific details on the drawings shall take precedence over General Structural Notes and typical details.

B. The architectural drawings are the prime contract drawings. Consultant drawings by other disciplines are supplementary to the architectural drawings. All omissions or conflicts, including dimensions, between the various elements of the consultants' drawings and/or specifications shall be brought to the attention of the Architect before proceeding with any work involved. In case of conflict, follow the most stringent requirement as directed by the Architect without additional cost to the owner. Any work done by the contractor after discovery of such discrepancy shall be done at the contractor's risk.

C. The structural drawings shall be used in conjunction with the architectural drawings. Primary structural elements and overall structural layout are indicated within the structural plans and details. Some secondary elements, architectural layouts, alcoves, elevations, slopes, depressions, curbs, mechanical equipment and electrical equipment, are not indicated within the structural drawings. Detailing and shop drawing production for structural elements will require information (including dimensions) contained in the architectural, structural and/or other consultants' drawings.

D. Shoring and Bracing Requirements:
1. Floor and Roof Structures -- The General Contractor is responsible for the method and sequence of all structural erection. He shall provide temporary shoring and bracing as his method of erection requires to provide adequate vertical and lateral support. Shoring and bracing shall remain in place as the chosen method requires until all permanent members are in place and all final connections are completed, including all roof and floor attachments. The building shall not be considered stable until all connections are complete.

E. All expansion joints (E.J.) shown in the structural drawings shall be considered seismic separation joints, unless noted otherwise.

F. Submittals: A copy of all shop drawings that have been submitted for review must be kept at the construction site for reference. These drawings must bear the appropriate review stamps. The shop drawing review shall not relieve the contractor of the responsibility of completing the project according to the contract documents. The general contractor shall review and mark all shop drawings prior to submitting them to the Architect for his review. Shop Drawings made from reproductions of (these) contract drawings will be rejected.

G. Project Coordination: It shall be the responsibility of the general contractor to coordinate with all trades any and all items that are to be integrated into the structural system. Openings or penetrations through, or attachments to the structural system that are not indicated on these drawings shall be the responsibility of the general contractor and shall be coordinated with the Architect/Engineers. The order of construction is the responsibility of the general contractor. It is the contractor's obligation to provide all items necessary for his chosen procedure.

H. Contractor shall field verify all dimensions, and conditions. If the contract drawings do not represent actual conditions, contractor shall notify architect/engineer prior to fabrication or construction within that area.

I. Notice of Copyright: The structural drawings, plans, schedules, notes and details are hereby copyrighted by Reaveley Engineers and Associates, Inc., All Rights reserved. Submission or distribution of documents to meet official regulatory requirements or for similar purposes in connection with the project is not to be construed as publication in derogation of Reaveley Engineers & Associates, Inc.'s reserved rights. The documents defining the structure are instruments of service prepared by Reaveley Engineers and Associates, Inc. for one use only. Furthermore, these documents shall not be reproduced, or copied, in whole or in part by the contractor or his subcontractors for preparation of shop drawings or other submittals.

VII. Quality Assurance

A. Quality Assurance Agency Requirements:
1. The owner shall engage a qualified Quality Assurance Agency (QAA) to provide all special inspection and quality assurance testing for the project. All quality assurance personnel assigned to the project shall demonstrate competence, to the satisfaction of the building official, for inspection of the particular type of construction or operation requiring special inspection.
2. Prior to construction, the QAA shall submit the following information to the Architect and Engineer of Record for approval:
   a. A copy of the appropriate certification and training records for each individual performing inspections or testing.
   b. A list of the testing equipment designated for the project and recent calibration records for the equipment.
   c. Sample inspection and testing reports and the distribution list for the reports.
3. The special inspector shall inspect the work per Chapter 17 of the IBC for conformance with the contract documents. The special inspector shall send reports to the owner, building official, architect, engineer, and contractor. All discrepancies shall be brought to the immediate attention of the contractor for correction. The QAA shall submit a final signed report stating that the special inspection work was, to the best of their knowledge, in conformance with the plans, specifications and applicable workmanship provisions of the IBC.

B. Seismic Force Resisting Systems
1. Elements that are a part of the Main Seismic Force Resisting System for the structure may require increased quality assurance inspection and testing. The Main Seismic Force Resisting system for the structure includes the following elements:
   a. Steel braces, columns and beams that are part of a steel braced frame.
   b. Footings and foundation systems that directly support columns and braces referenced above.
   c. Floor decking and/or slab systems.
   d. All elements labeled as "drag struts" or "chords."
   e. Connections between the elements referenced above.

C. Special Inspection: Special Inspection shall be provided for the following elements per IBC sections 1704 and 1707:
1. Concrete and elements embedded in concrete shall be special inspected prior to and during placement of concrete. Special inspection of concrete shall include the following:
   a. Reinforcing steel size and placement.
   b. Surface preparation at cold joints including placement of keyways.
   c. Bolt and embed size, configuration and placement.
   d. Concrete shall receive continuous special inspection during placement, and periodic inspection after placement to ensure proper curing and weather protection procedures.
2. Structural steel fabrication and erection shall be special inspected, including the following:
   a. High strength bolts per IBC 1704.3.3 and IBC section 2209.
   b. Fillet welds smaller than 5/16" per AWS D1.1.
   c. Fillet welds larger than 5/16", multiple pass welds, and all groove welds shall receive continuous special inspection during weld placement per AWS D1.1.
   d. Welding of reinforcing steel shall receive continuous special inspection during weld placement per AWS D1.1.
   e. Welding of Headed Stud Anchors (HSA) and Deformed Bar Anchors (DBA) shall be inspected to comply with AWS D1.1 Section 7.6 through 7.8 and Annex IX.
   f. Welding or fastening of floor or roof deck per AWS D1.3. or per the code evaluation report for the fastening method.
3. Post-installed anchors, including but not limited to expansion anchors, adhesive anchors and rebar dowels, and low velocity fasteners, shall receive special inspection per the code evaluation reports for the anchors.
   a. Continuous special inspection is required during the installation of all adhesive anchors and rebar dowels. Special inspector shall verify the following:
      (1) Anchor size and steel grade.
      (2) Hole diameter, location, and type of drill bit.
      (3) Cleanliness of hole and anchor.
      (4) Adhesive application.
      (5) Anchor embedment.

D. Structural Testing: The following materials shall be tested per IBC sections 1704 and 1708. The owner reserves the right to test any and all materials using any appropriate non-destructive procedure. Any items found to be deficient shall be corrected and retested at no additional cost to the owner.
1. Earthwork: All compacted structural fill shall be tested to verify soil gradation, lift thickness, and compaction requirements. See the specifications and earthwork section of the GSN for testing frequency and acceptability criteria.
2. Concrete Strength Verification and Testing. All concrete shall be tested to verify strength, slump, unit weight, air content, and temperature. See the specifications for testing criteria, testing frequency and acceptability criteria.
3. Welded connections shall be tested for compliance according to IBC Table 1704.3, AWS D1.1 and the contract specifications and plans. As a minimum, the testing shall include the following:
   a. All complete penetration groove welds shall be tested 100 percent either by ultrasonic testing or by radiography.
   b. Partial penetration groove welds shall be tested either by ultrasonic testing or radiography. A minimum of 50% of these welds shall be tested.
   c. Base metal thicker than 1 1/2", when subjected to through thickness weld shrinkage strains, shall be ultrasonically inspected for discontinuities directly behind such welds and three inches above and below the weld after joint assembly completion.
   d. Any material discontinuities shall be accepted or rejected on the basis of the defect rating in accordance with the testing in AWS D1.1 Chapter 6, excluding Sections 6.1 through and including 6.6. All deficient welds shall be corrected and retested at no additional cost to the owner.
4. Post-installed anchors, including but not limited to expansion anchors, adhesive anchors, and low velocity fasteners, shall be tested per the code evaluation reports for the anchors.

E. Structural Observations by the Engineer of Record.
1. The Engineer of Record may perform structural observations at critical phases of the project. Copies of the engineer's report will be distributed to the architect, contractor, owner, and QAA.
2. Observation visits to the site by the Engineer's field representatives shall not be construed as inspection or approval of construction.
3. Notification of Engineer: The contractor shall notify the engineer twenty-four hours prior to:
   a. Placing concrete in any footing.
   b. Placing concrete in any suspended slab.
   c. Completing the welding of major sections of steel decking.

F. Contractor Responsibility: The contractor shall prepare and submit a written statement of responsibility to the building official and the owner prior to commencement of work on the project. As a minimum the statement shall contain the following information:
1. Acknowledgement of the quality assurance requirements for the structure.
2. Acknowledgement that control will be exercised to obtain conformance to the Contract Documents.
3. Quality control procedures within the contractors organization, methods and frequency of reporting, and distribution of the reports.
4. Identification and qualifications of the person(s) responsible for quality control and their position(s) in the organization.

Harris & Associates SM
265 East 100 South Suite 350
Salt Lake City, Utah 84111-1604
Ph (801) 521-8564 Fax (801) 355-2938

CONSULTANT INFORMATION
REAVELEY
ENGINEERS + ASSOCIATES
Consulting Structural Engineers
675 E. 500 S. Suite 400
Salt Lake City, UT 84102
P:801.486.3883
F:801.485.0911
www.reaveley.com

KEYED NOTES

LICENSED STATE OF UTAH CERTIFIED STRUCTURAL ENGINEER NO. 154201 ARTHUR PARRY BROWN
1/30/09

Utah National Guard
RENOVATION OF READINESS CENTER
BUILDING 5170
CAMP W.G. WILLIAMS, UTAH

SHEET TITLE
GEN STRUCT NOTES

REVISIONS	DATE	BY	DESCRIPTION
△			
△			
△			
△			

DRAWN BY CAT/REA
CHECKED BY
PROJECT NO. 08032470 CW
DRAWING NO. SE002
DATE JAN. 30, 2009

Utah National Guard - Camp Williams Bldg. 5170

SPECIAL INSPECTION AND TESTING (IBC 1704)

Indicate required Special inspections for project by checking the appropriate boxes:

FABRICATORS (IBC1704.2)

■ Approved Fabricator	Fabricators Name: Fabricators must be on the DFCM approved fabricators list
□ Unapproved Fabricator	Fabricators Name:

In-plant inspections (For Non-AISC-Certified Fabricators only)
■ Steel Construction ■ Welding ■ Details

STEEL (IBC1704.3)

Item			Reference/Comments
High Strength Bolting(1704.3.3)	□ Continuous	■ Periodic	
WELDING (1704.3.1)			
Details (1704.3.2)			
Complete & partial penetration groove welds	■ Continuous	□ Periodic	
Multipass fillet welds	■ Continuous	□ Periodic	
Single-pass fillet welds > 5/16"	■ Continuous	□ Periodic	
Single-pass fillet welds ≤ 5/16"	□ Continuous	■ Periodic	
Floor & roof deck welds	□ Continuous	■ Periodic	
REINFORCEMENT STEEL	□ Continuous		N/A
Verification of weldability	□ Continuous	□ Periodic	N/A
Shear wall and shear reinforcement	□ Continuous	□ Periodic	N/A
Other reinforcement	□ Continuous	■ Periodic	
Steel frame joint details	□ Continuous	■ Periodic	

CONCRETE CONSTRUCTION (IBC1704.4)

Item			Reference/Comments
Materials (1704.4.1)	□ Continuous	□ Periodic	Obtain mix design histories per ACI 318 Sec. 5.3.1
Steel placement	□ Continuous	■ Periodic	
Steel welding	□ Continuous	□ Periodic	N/A
Bolts prior & during placement	■ Continuous	□ Periodic	
Use of required design mix	□ Continuous	■ Periodic	
Concrete sampling for strength test, slump, air content, and temperature of concrete	■ Continuous	□ Periodic	
Concrete & shotcrete placement	■ Continuous	□ Periodic	
Curing temperature and techniques	□ Continuous	■ Periodic	
Pre-stressed concrete	□ Continuous	□ Periodic	N/A
Pre-cast concrete	□ Continuous	□ Periodic	N/A
Posttentsioned concrete	□ Continuous	□ Periodic	N/A
Form work	□ Continuous	■ Periodic	

MASONRY CONSTRUCTION (IBC1704.5)

Item	Reference/Comments
As masonry construction begins:	

Site prepared mortar	□ Continuous	■ Periodic	
Construction of mortar joints	□ Continuous	■ Periodic	
Location of reinforcement, connectors, pre-stressing tendons and anchorages	□ Continuous	■ Periodic	
Pre-stressing technique	□ Continuous	□ Periodic	N/A
Grade and size of pre-stressing tendons and anchorages	□ Continuous	□ Periodic	N/A
Inspection program verify:			
Size and location of structural elements	□ Continuous	■ Periodic	
Type, size and location of anchors	□ Continuous	■ Periodic	
Size, grade and type of reinforcement	□ Continuous	■ Periodic	
Welding of reinforcement	□ Continuous	□ Periodic	N/A
Cold and hot weather protection	□ Continuous	■ Periodic	
Application and measurement of pre-stressing force	□ Continuous	□ Periodic	N/A
Prior to grouting verify			
Clean grout space	□ Continuous	■ Periodic	
Placement of reinforcement	□ Continuous	■ Periodic	
Grout mix	□ Continuous	■ Periodic	
Mortar joints	□ Continuous	■ Periodic	
Grout placement	■ Continuous	□ Periodic	
Grout and mortar specimens and prisms	■ Continuous	□ Periodic	
Construction and submittal compliance verification	□ Continuous	■ Periodic	
Empirical masonry – Cat. I-III (1708.1.1)	□ Continuous	□ Periodic	N/A
Empirical masonry – Cat. IV (1708.1.1)	□ Continuous	□ Periodic	N/A
Engineered masonry – Cat. I-III 1708.1.1	□ Continuous	□ Periodic	N/A
Engineered masonry – Cat. IV (1708.1.1)	□ Continuous	□ Periodic	Provide Level 2 Quality Assurance per IBC 2006 Table 1708.1.4
Engineering & pre-stressing steel (1708.3)	□ Continuous	□ Periodic	N/A
Structural steel (1708.4)	□ Continuous	□ Periodic	Provide testing per AISC 341 & AWS D1.1
Qualification of mechanical & electrical equipment (1708.5)	□ Continuous	□ Periodic	N/A
Seismically isolated structures (1708.6)	□ Continuous	□ Periodic	N/A
Testing for seismic resistance is	□ Continuous	□ Periodic	Provide testing per AISC 341 & AWS D1.1

WOOD CONSTRUCTION (IBC1704.6)

Item			Reference/Comments
Prefabricated elements & assembly	□ Continuous	□ Periodic	N/A

SOILS CONSTRUCTION (IBC1704.7)

Item			Reference/Comments
Site preparation	□ Continuous	■ Periodic	

Structural fill material	■ Continuous	□ Periodic	
Structural fill lift thickness	■ Continuous	□ Periodic	
Structural fill soil densities	■ Continuous	□ Periodic	
Backfill soils materials	■ Continuous	□ Periodic	
Backfill soil densities	■ Continuous	□ Periodic	
Fill material under side walks and parking	■ Continuous	□ Periodic	
Fill soil densities under side walks and parking	■ Continuous	□ Periodic	

PILE FOUNDATIONS (IBC1704.8)

Item			Reference/Comments
Observe driving operation and reporting	□ Continuous	□ Periodic	N/A
Verify placement & installation data	□ Continuous	□ Periodic	N/A

PIER FOUNDATIONS (IBC1704.9)

Item			Reference/Comments
Observe drilling operation and reporting	□ Continuous	□ Periodic	N/A
Verify placement & installation data	□ Continuous	□ Periodic	N/A

SPRAYED FIRE-RESISTANT MATERIALS (IBC1704.10)

Item			Reference/Comments
Structural member surface conditions	□ Continuous	□ Periodic	N/A
Material application	□ Continuous	□ Periodic	N/A
Material thickness	□ Continuous	□ Periodic	N/A
Material density	□ Continuous	□ Periodic	N/A
Bonding strength	□ Continuous	□ Periodic	N/A

MASTIC AND INTUMESCENT FIRE-RESISTANT COATINGS (IBC1704.11)

Item			Reference/Comments
Material and instillation	□ Continuous	□ Periodic	N/A

EXTERIOR INSTULATION AND FINISH SYSTEMS (EIFS) (IBC1704.12)

Item			Reference/Comments
Material and instillation	□ Continuous	□ Periodic	N/A

ALTERNITIVE CONSTRUCTION METHODS OR MATERIALS (IBC1704.13)

Item			Reference/Comments
Material and instillation	□ Continuous	□ Periodic	N/A

EPOXY (IBC1704.13)

Item			Reference/Comments
Material and instillation	■ Continuous	□ Periodic	Applicable for all epoxy anchors

SMOKE CONTROL (IBC1704.14)

Item			Reference/Comments
Material	□ Continuous	□ Periodic	N/A

Instillation	□ Continuous	□ Periodic	N/A

Special inspection for seismic resistance (IBC1707)

Item			Reference/Comments
Structural Steel (1707.2)	■ Continuous	□ Periodic	
Structural Wood (1707.3)	□ Continuous	□ Periodic	N/A
Cold–formed steel framing (1707.4)	□ Continuous	□ Periodic	N/A
Pier foundations (1707.5)	□ Continuous	□ Periodic	N/A
Storage racks & access floors (1707.6)	□ Continuous	□ Periodic	N/A
Architectural components (1707.7)	□ Continuous	□ Periodic	Special Inspection not required per IBC Section 1707.7 Exception #1
Mechanical & electrical items (1707.8)	□ Continuous	□ Periodic	N/A As per the State Building Official
Designated systems verification (1707.9)	□ Continuous	□ Periodic	N/A
Seismic isolation systems (1707.10)	□ Continuous	□ Periodic	N/A

Inspection of seismic resistance are not required per IBC 1705.3 □

OTHER

Item			Reference/Comments
	□ Continuous	□ Periodic	N/A
	□ Continuous	□ Periodic	N/A

Special Inspectors Shall:

- Be approved by the Building Official prior to performing any duties;
- Provide proof of licensure as a special inspector by the State of Utah for each type of inspection;
- Inspection reports are to meet the requirements of IBC 1704.1.2 and DFCM standards;
- Inspection reports are to be submitted to the code consultant, architect, DFCM project manager, and the State of Utah Building Official within 48 hrs. of inspections;
- A final inspection report shall be submitted following completion of the project documenting the types of special inspections performed and a statement indicating that the structure is in compliance with the drawings, specifications and applicable codes. IBC 1704.1.2

Harris & Associates
265 East 100 South Suite 350
Salt Lake City, Utah 84111-1604
Ph (801) 521-8564 Fax (801) 355-2938

CONSULTANT INFORMATION
REAVELEY
ENGINEERS + ASSOCIATES
Consulting Structural Engineers
675 E. 500 S. Suite 400
Salt Lake City, UT 84102
P:801.486.3883
F:801.485.0911
www.reaveley.com

KEYED NOTES

LICENSED REGISTERED STRUCTURAL ENGINEER
NO. 154201
ARTHUR PARRY BROWN
UTAH
1/30/09

Utah National Guard
RENOVATION OF READINESS CENTER
BUILDING 5170
CAMP W.G. WILLIAMS, UTAH

SHEET TITLE
GEN STRUCT NOTES

REVISIONS	DATE	BY	DESCRIPTION
△			
△			
△			
△			

DRAWN BY CAT/REA
CHECKED BY
PROJECT NO. 08032470 CW
DRAWING NO. SE003
DATE JAN. 30, 2009

Utah National Guard - Camp Williams Bldg. 5170

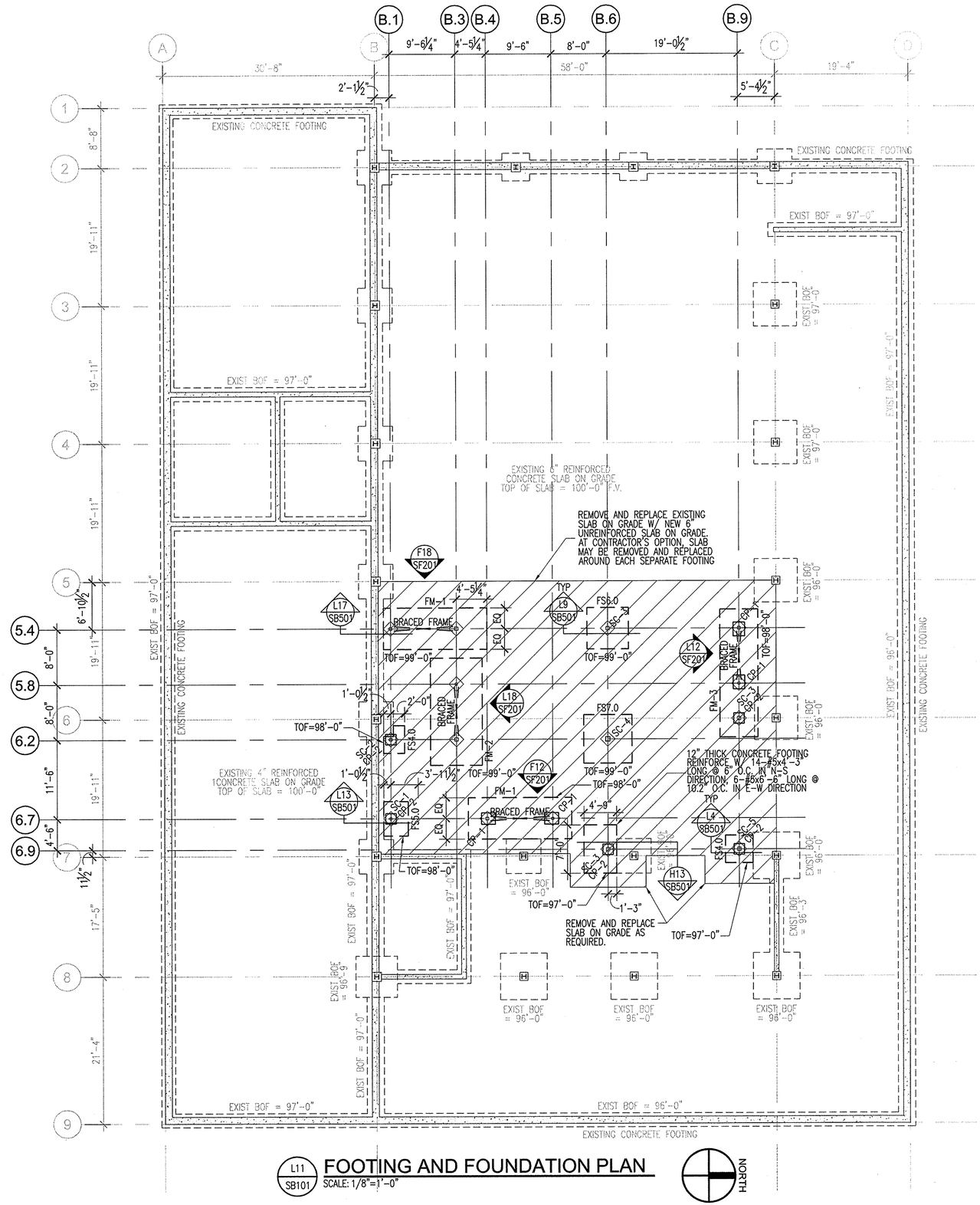

L11 / SB101 FOOTING AND FOUNDATION PLAN

SCALE: 1/8"=1'-0"

NORTH

EXISTING ITEMS PLAN LEGEND

LEG-EXIST

- EXISTING FOOTING – CONTINUOUS
- EXISTING FOOTING – SQUARE, RECTANGULAR, OR MAT
- EXISTING CONCRETE SHEAR WALL, FOUNDATION WALL OR RETAINING WALL
- EXISTING CONCRETE PIER IN CONCRETE WALL. PIER RECESSED 8" BELOW SLAB. TYP U.N.O.
- EXISTING CONCRETE COLUMN
- EXISTING STEEL COLUMN – TUBE
- EXISTING STEEL COLUMN – WIDE FLANGE

FOOTING & FOUNDATION PLAN LEGEND

LEG-FOOTING

- FOOTING – SQUARE FOOTING – RECTANGULAR FOOTING – MAT FOOTING
- STEEL COLUMN – TUBE
- CONCRETE PIER
- STEEL BRACED FRAME – ABOVE
- SLAB BLOCK-OUT AT COLUMN
- SPECIAL SLAB AREA

FOOTING & FOUNDATION PLAN NOTES

NOTE-FOOTING

1. SEE ARCHITECTURAL DRAWINGS AND FINISH SCHEDULE FOR SLAB AREAS TO RECEIVE FLOOR TILE.
2. SEE ARCHITECTURAL DRAWINGS FOR SLAB DEPRESSIONS AND SLOPES TO DRAINS, ETC.
3. SEE D4/SB501 FOR TYPICAL DETAIL AT SLAB JOINTS IN CONCRETE SLABS ON GRADE.
4. SEE H9/SB501 FOR REINFORCEMENT AT DISCONTINUOUS CONSTRUCTION / CONTROL JOINTS IN CONCRETE SLAB ON GRADE.
5. REFER TO GENERAL STRUCTURAL NOTES AND SEE H4/SB501 FOR COMPACTED STRUCTURAL FILL REQUIREMENTS BELOW FOOTINGS.
6. TOP OF CONCRETE PIERS SHALL BE 99'-0" UNO.

NOTE TO CONTRACTOR

NOTE-FOOTING

1. CONTRACTOR SHALL FIELD VERIFY ALL EXISTING CONDITIONS PRIOR TO DEMOLITION, FABRICATION, INSTALLATION. ALL DISCREPANCIES SHALL BE REPORTED TO A/E TEAM PRIOR TO COMMENCING CONSTRUCTION.

Harris & Associates

265 East 100 South Suite 350
Salt Lake City, Utah 84111-1604
Ph (801) 521-8564 Fax (801) 355-2938

CONSULTANT INFORMATION

REAVELEY
ENGINEERS + ASSOCIATES
Consulting Structural Engineers

675 E. 500 S. Suite 400
Salt Lake City, UT 84102
P:801.486.3883
F:801.485.0911
www.reaveley.com

KEYED NOTES

LICENSED CERTIFIED STRUCTURAL ENGINEER
NO. 154201
ARTHUR PARRY BROWN
UTAH
1/30/09

Utah National Guard
RENOVATION OF READINESS CENTER
BUILDING 5170
CAMP W.G. WILLIAMS, UTAH

SHEET TITLE
FTG & FDTN PLAN

REVISIONS	DATE	BY	DESCRIPTION
△			
△			
△			
△			

DRAWN BY: CAT/REA
CHECKED BY:
PROJECT NO.: 08032470 CW
DRAWING NO.: SB101
DATE: JAN. 30, 2009

Utah National Guard - Camp Williams Bldg. 5170

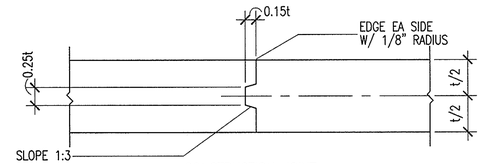

CONSTRUCTION JOINT

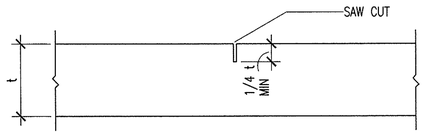

CONTROL JOINT

D4 / SB501 — TYPICAL SLAB JOINTS
NO SCALE
CF-TYP03

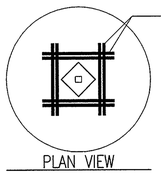

PLAN VIEW

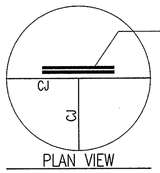

PLAN VIEW

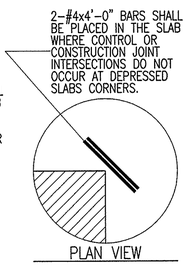

PLAN VIEW

H9 / SB501 — TYPICAL SLAB REINFORCING AT DISCONTINUOUS SLAB JOINTS
NO SCALE
CF-TYP10

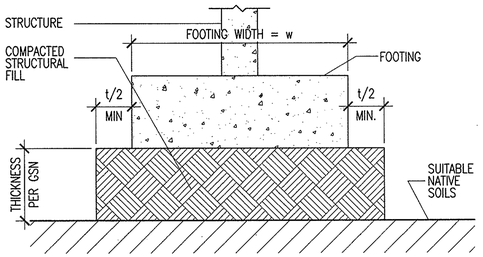

COMPACTED STRUCTURAL FILL:
REFER TO GENERAL STRUCTURAL NOTES FOR COMPOSITION OF STRUCTURAL FILL.

H4 / SB501 — TYP COMPACTED STRUCTURAL FILL DETAIL
NO SCALE
CF-TYP09

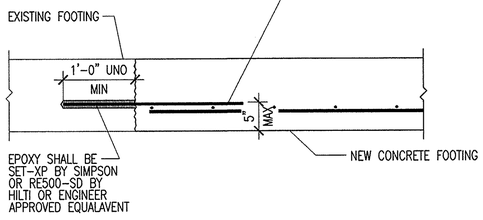

H13 / SB501 — CONCRETE FOOTING TO EXIST FOOTING
NO SCALE
2008-208-SB501/H13

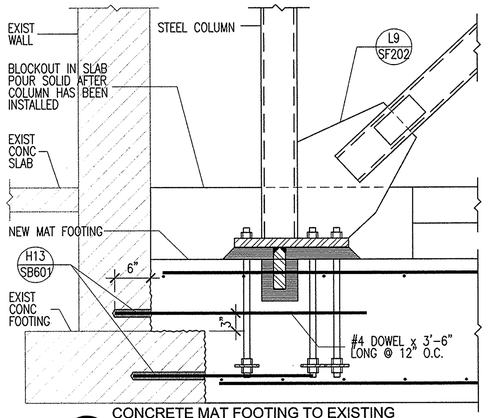

L17 / SB501 — CONCRETE MAT FOOTING TO EXISTING CONCRETE FOOTING
NO SCALE
2008-208-SB501/L17

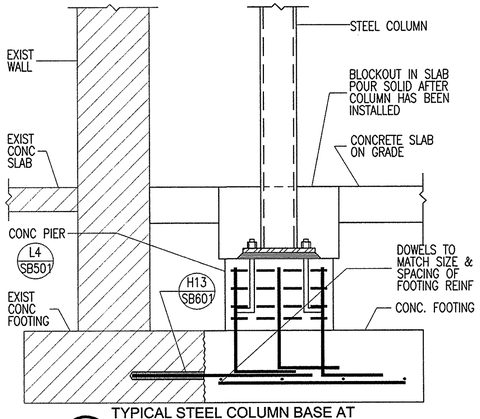

L13 / SB501 — TYPICAL STEEL COLUMN BASE AT CONCRETE PIER
NO SCALE
2008-208-SB501/L13

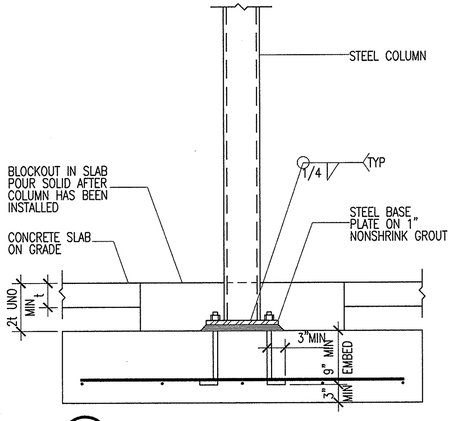

L9 / SB501 — TYPICAL STEEL COLUMN BASE
NO SCALE
SC1-CF-01

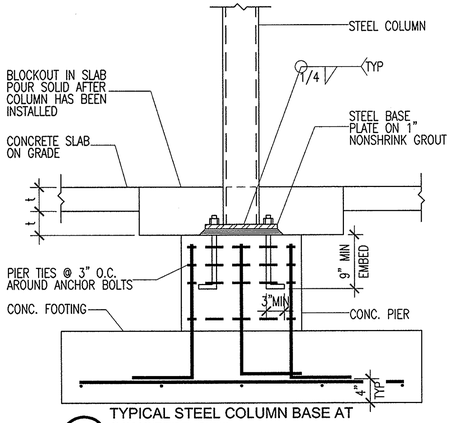

L4 / SB501 — TYPICAL STEEL COLUMN BASE AT CONCRETE PIER
NO SCALE
2008-208-SB501/L4

Harris & Associates SM
265 East 100 South Suite 350
Salt Lake City, Utah 84111-1604
Ph (801) 521-8564 Fax (801) 355-2938

CONSULTANT INFORMATION
REAVELEY
ENGINEERS + ASSOCIATES
Consulting Structural Engineers
675 E. 500 S. Suite 400
Salt Lake City, UT 84102
P:801.486.3883
F:801.485.0911
www.reaveley.com

KEYED NOTES

LICENSED CERTIFIED STRUCTURAL ENGINEER
NO. 154201
ARTHUR PARRY BROWN
UTAH
1/30/09

Utah National Guard
RENOVATION OF READINESS CENTER
BUILDING 5170
CAMP W.G. WILLIAMS, UTAH

SHEET TITLE
FTG & FDTN DETAILS

REVISIONS	DATE	BY	DESCRIPTION
△			
△			
△			
△			

DRAWN BY: CAT/REA
CHECKED BY:
PROJECT NO.: 08032470 CW
DRAWING NO.: SB501
DATE: JAN. 30, 2009

Utah National Guard - Camp Williams Bldg. 5170

MASONRY LINTEL SCHEDULE

ML-1

MARK	LINTEL DEPTH	LINTEL WIDTH	MASONRY TYPE	LINTEL HORIZONTAL	LINTEL STIRRUPS	MAXIMUM SPAN	REMARKS
ML-1	8"	6",8",10" OR 12"	BRICK OR CMU	1- #7 CONT.	-----	3'-4"	
ML-2	16"	6",8",10" OR 12"	BRICK OR CMU	1- #7 CONT. TOP & BOT.	#3 @ 8" O.C.	6'-0"	

NOTES:

1. MASONRY LINTELS ML-1 THROUGH ML-2 SHALL BE USED OVER OPENINGS IN MASONRY WALLS WHEN A SPECIFIC MASONRY LINTEL IS NOT OTHERWISE SPECIFIED. THE MASONRY LINTEL TO BE USED SHALL BE DETERMINED BY THE MAXIMUM SPAN AS SPECIFIED IN THIS SCHEDULE.
2. EXTEND ALL HORIZONTAL REINFORCING 48 BAR DIAMETERS BEYOND THE EDGE OF THE OPENING. IF HORIZONTAL REINFORCING CANNOT BE EXTENDED 48 BAR DIAMETERS BEYOND THE EDGE OF THE OPENING, PROVIDE 90 DEGREE STANDARD HOOK.
3. GROUT MASONRY LINTELS MONOLITHICALLY WITH THE SUPPORT WALL OR COLUMN AT EACH END.
4. SPLICE TOP BARS AT MIDSPAN OF LINTEL ONLY.
5. SPLICE BOTTOM BARS OVER SUPPORTS ONLY.
6. FOR WALL ABOVE LINTEL, DOWEL VERTICAL REINFORCING INTO FULL DEPTH OF THE LINTEL OR 48 BAR DIAMETERS, WHICHEVER IS LESS.
7. HORIZONTAL WALL REINFORCING SHALL CONTINUE THROUGH MASONRY LINTELS. WHERE BOTH HORIZONTAL WALL REINFORCING AND LINTEL REINFORCING WOULD OCCUR IN THE SAME COURSE, THE LARGER BARS ARE TO REPLACE THE SMALLER BARS.

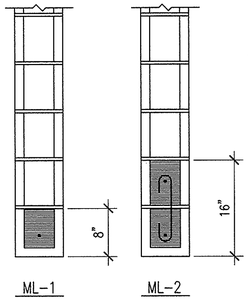

H17 / SB601 TYPICAL MASONRY LINTEL DETAILS
NO SCALE

MASONRY REINFORCING BAR LAP SPLICE SCHEDULE

MRBLS-1500

BAR SIZE	f'm = 1500 psi							f'm = 2500 psi		
	6" CMU	8" CMU		10" CMU		12" CMU		6" ATLAS	8" ATLAS	
	CLASS	CLASS		CLASS		CLASS		CLASS	CLASS	
	A	A	B	A	B	A	B	A	A	B
#3	19"	19"	19"	19"	19"	19"	19"	15"	15"	15"
#4	25"	25"	30"	25"	28"	25"	28"	20"	20"	24"
#5	39"	31"	49"	31"	45"	31"	45"	31"	24"	40"
#6	81"	57"	**	53"	92"	53"	92"	64"	45"	87"
#7	-	79"	**	61"	**	61"	**	-	63"	**
#8	-	**	**	87"	**	75"	**	-	89"	**
#9	-	-	-	**	**	90"	**	-	-	-

NOTES:

1. CLASS A SPLICES MAY BE USED WHEN ONLY ONE BAR IS CONTINUOUS IN THE MASONRY CELL OR COURSE.
2. CLASS B SPLICES SHALL BE USED WHEN TWO BARS ARE CONTINUOUS IN THE MASONRY CELL OR COURSE.
3. ** INDICATES THAT A LAP SPLICE IS NOT ALLOWED AND MECHANICAL BAR COUPLERS ARE REQUIRED FOR THE BAR SPLICES.
4. WHERE VERTICAL BARS HAVE A REQUIRED LAP SPLICE GREATER THAN THE HEIGHT OF THE GROUT POUR, THE BAR SPLICE SHALL BE MADE WITH A MECHANICAL BAR COUPLER. WHERE THE HEIGHT OF THE GROUT POUR EXCEEDS 60 INCHES, HIGH LIFT GROUTING PROCEDURES SHALL BE FOLLOWED.
5. WHERE MECHANICAL BAR COUPLERS ARE USED, THE CONNECTOR SHALL DEVELOP 125% OF THE SPECIFIED YIELD STRENGTH OF THE BAR IN TENSION AND COMPRESSION.

CONCRETE PIER SCHEDULE

CP-1

MARK	SIZE	REINFORCING VERTICAL	REINFORCING TIES	REMARKS
CP-1	24"x20"	12-#6	#4 @ 3" O.C.	SEE NOTES
CP-2	18"x18"	8-#6	#4 @ 12" O.C. UNO	SEE NOTES

NOTES:

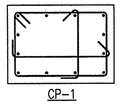
CP-1

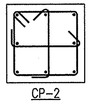
CP-2

CONCRETE MAT FOOTING SCHEDULE

CMF-1

MARK	WIDTH	LENGTH	THICK	CROSSWISE REINFORCING NO.	CROSSWISE REINFORCING SIZE	CROSSWISE REINFORCING LENGTH	CROSSWISE REINFORCING SPACE	LENGTHWISE REINFORCING NO.	LENGTHWISE REINFORCING SIZE	LENGTHWISE REINFORCING LENGTH	LENGTHWISE REINFORCING SPACE	REMARKS
FM-1	6'-0"	15'-0"	24"	16	#5	5'-6"	10.9" O.C.	6	#5	14'-6"	11" O.C.	
				16	#5	5'-6"	10.9" O.C.	6	#5	14'-6"	11" O.C.	
FM-2	7'-6"	15'-6"	30"	19	#5	7'-0"	10" O.C.	8	#5	15'-0"	12" O.C.	
				19	#5	7'-0"	10" O.C.	8	#5	15'-0"	12" O.C.	
FM-3	5'-6"	18'-6"	24"	19	#5	5'-0"	12" O.C.	6	#5	18'-0"	12" O.C.	
				19	#5	5'-0"	12" O.C.	6	#5	18'-0"	12" O.C.	

NOTES:

1. PLACE ALL FOOTING REINFORCING IN BOTTOM OF FOOTING WITH 3" CLEAR CONCRETE COVER UNLESS NOTED OTHERWISE.
2. TOP REINFORCING, WHERE SPECIFIED, SHALL BE PLACED IN THE TOP OF THE FOOTING WITH 2" CLEAR CONCRETE COVER.
3. MAT FOOTINGS SHALL BE CENTERED UNDER COLUMNS, UNLESS NOTED OTHERWISE.
4. ALL FOOTINGS SHALL BE FORMED. FOOTINGS SHALL NOT BE EARTH FORMED OR OVERSIZED WITHOUT WRITTEN PERMISSION FROM THE STRUCTURAL ENGINEER.

CONCRETE FOOTING SCHEDULE

CF-2500

MARK	WIDTH	LENGTH	THICK	CROSSWISE REINFORCING NO.	CROSSWISE REINFORCING SIZE	CROSSWISE REINFORCING LENGTH	CROSSWISE REINFORCING SPACE	LENGTHWISE REINFORCING NO.	LENGTHWISE REINFORCING SIZE	LENGTHWISE REINFORCING LENGTH	LENGTHWISE REINFORCING SPACE	REMARKS
FS4.0	4'-0"	4'-0"	12"	6	#4	3'-6"	8.4"	6	#4	3'-6"	8.4"	
FS5.0	5'-0"	5'-0"	12"	7	#4	4'-6"	9"	7	#4	4'-6"	9"	
FS6.0	6'-0"	6'-0"	14"	7	#5	5'-6"	11"	7	#5	5'-6"	11"	
FS7.0	7'-0"	7'-0"	16"	7	#6	6'-6"	13"	7	#6	6'-6"	13"	

NOTES:

1. PLACE ALL FOOTING REINFORCING IN BOTTOM OF FOOTING WITH 3" CLEAR CONCRETE COVER UNLESS NOTED OTHERWISE.
2. TOP REINFORCING, WHERE SPECIFIED, SHALL BE PLACED IN THE TOP OF THE FOOTING WITH 2" CLEAR CONCRETE COVER.
3. SPOT FOOTINGS SHALL BE CENTERED UNDER COLUMNS AND CONTINUOUS FOOTINGS SHALL BE CENTERED UNDER WALLS, UNLESS NOTED OTHERWISE.
4. ALL FOOTINGS SHALL BE FORMED. FOOTINGS SHALL NOT BE EARTH FORMED OR OVERSIZED WITHOUT WRITTEN PERMISSION FROM THE STRUCTURAL ENGINEER.

CONCRETE REINFORCING BAR LAP SPLICE SCHEDULE

RBLS-1

BAR SIZE Fy = 60 KSI	TENSION BARS f'c = 3000 PSI REGULAR CLASS A	REGULAR CLASS B	TOP CLASS A	TOP CLASS B	f'c = 4000 PSI REGULAR CLASS A	REGULAR CLASS B	TOP CLASS A	TOP CLASS B	f'c = 5000 PSI REGULAR CLASS A	REGULAR CLASS B	TOP CLASS A	TOP CLASS B	f'c = 6000 PSI REGULAR CLASS A	REGULAR CLASS B	TOP CLASS A	TOP CLASS B	COMP. BARS f'c = ALL
#3	17"	22"	22"	28"	15"	19"	19"	25"	13"	17"	17"	22"	12"	16"	16"	20"	12"
#4	22"	29"	29"	38"	19"	25"	25"	33"	17"	23"	23"	29"	16"	21"	21"	27"	15"
#5	28"	36"	36"	47"	24"	31"	31"	41"	22"	28"	28"	36"	20"	26"	26"	33"	19"
#6	33"	43"	43"	56"	29"	37"	37"	49"	26"	34"	34"	44"	24"	31"	31"	40"	23"
#7	48"	63"	63"	81"	42"	54"	54"	71"	38"	49"	49"	63"	34"	45"	45"	58"	27"
#8	55"	72"	72"	93"	48"	62"	62"	81"	43"	56"	56"	72"	39"	51"	51"	66"	30"
#9	62"	81"	81"	105"	54"	70"	70"	91"	48"	63"	63"	81"	44"	57"	57"	74"	34"
#10	70"	91"	91"	118"	61"	79"	79"	102"	54"	71"	71"	92"	50"	64"	64"	84"	39"
#11	78"	101"	101"	131"	67"	87"	87"	114"	60"	78"	78"	102"	55"	71"	71"	93"	43"

NOTES: THESE NOTES SHALL BE USED FOR ALL SPLICES, UNLESS NOTED OTHERWISE ON DRAWINGS.

1. TOP BARS ARE HORIZONTAL BARS, SPLICED SO THAT 12" OR MORE OF FRESH CONCRETE IS CAST IN THE MEMBER BELOW THE REINFORCING BAR.
2. CLASS A SPLICES MAY BE USED ONLY WHEN 50% OR LESS OF THE BARS ARE SPLICED WITHIN THE LAP SPLICE LENGTH.
3. CLASS B SPLICES SHALL BE USED FOR ALL SPLICES IN SLABS, BEAMS, JOISTS, WALLS, MOMENT RESISTING COLUMNS, AND JAMB COLUMNS, UNLESS THEY MEET THE REQUIREMENTS OF NOTE #2 ABOVE.
4. TIES AND STIRRUPS SHALL NOT BE SPLICED.
5. A. FOR BUNDLED BARS OF THREE OR LESS, LAP SPLICE LENGTHS SHALL BE MULTIPLIED BY 1.2.
   B. FOR BUNDLED BARS OF FOUR OR MORE, LAP LENGTHS SHALL BE MULTIPLIED BY 1.33.
   C. INDIVIDUAL BAR SPLICES WITHIN A BUNDLE SHALL NOT OVERLAP. ENTIRE BUNDLES SHALL NOT BE LAP SPLICED.
6. FOR ALL LIGHTWEIGHT CONCRETE, LAP LENGTHS SHALL BE MULTIPLIED BY 1.3.
7. FOR ALL EPOXY COATED BARS WITH COVER LESS THAN 3 BAR DIAMETERS OF CLEAR SPACING LESS THAN 6 BAR DIAMETERS THE LAP SPLICE LENGTHS SHALL BE MULTIPLIED BY 1.5. FOR ALL OTHER EPOXY BARS THE SPLICE LENGTHS SHALL BE MULTIPLIED BY 1.2
8. THE BAR LAP SPLICE LENGTHS SHALL BE MULTIPLIED BY 1.5 WHEN EITHER OF THE FOLLOWING IS TRUE:
   A. CLEAR SPACING OF BARS BEING DEVELOPED IS LESS THAN ONE BAR DIAMETER, CLEAR COVER IS LESS THAN ONE BAR DIAMETER AND STIRRUPS OR TIES ALONG THE LENGTH OF THE SPLICE ARE LESS THAN THE CODE MINIMUM.
   B. CLEAR SPACING OF BARS BEING DEVELOPED IS LESS THAN 2 BAR DIAMETERS AND CLEAR COVER IS LESS THAN ONE BAR DIAMETER.

AS PER ACI 318-05

Harris & Associates
265 East 100 South Suite 350
Salt Lake City, Utah 84111-1604
Ph (801) 521-8564 Fax (801) 355-2938

CONSULTANT INFORMATION
REAVELEY
ENGINEERS + ASSOCIATES
Consulting Structural Engineers
675 E. 500 S. Suite 400
Salt Lake City, UT 84102
P:801.486.3883
F:801.485.0911
www.reaveley.com

KEYED NOTES

LICENSED CERTIFIED STRUCTURAL ENGINEER
NO. 154201
ARTHUR PARRY BROWN
UTAH
1/30/09

Utah National Guard
RENOVATION OF READINESS CENTER
BUILDING 5170
CAMP W.G. WILLIAMS, UTAH

SHEET TITLE
SCHEDULES

REVISIONS	DATE	BY	DESCRIPTION
△			
△			
△			
△			

DRAWN BY CAT/REA
CHECKED BY
PROJECT NO. 08032470 CW
DRAWING NO. SB601
DATE JAN. 30, 2009

Utah National Guard - Camp Williams Bldg. 5170

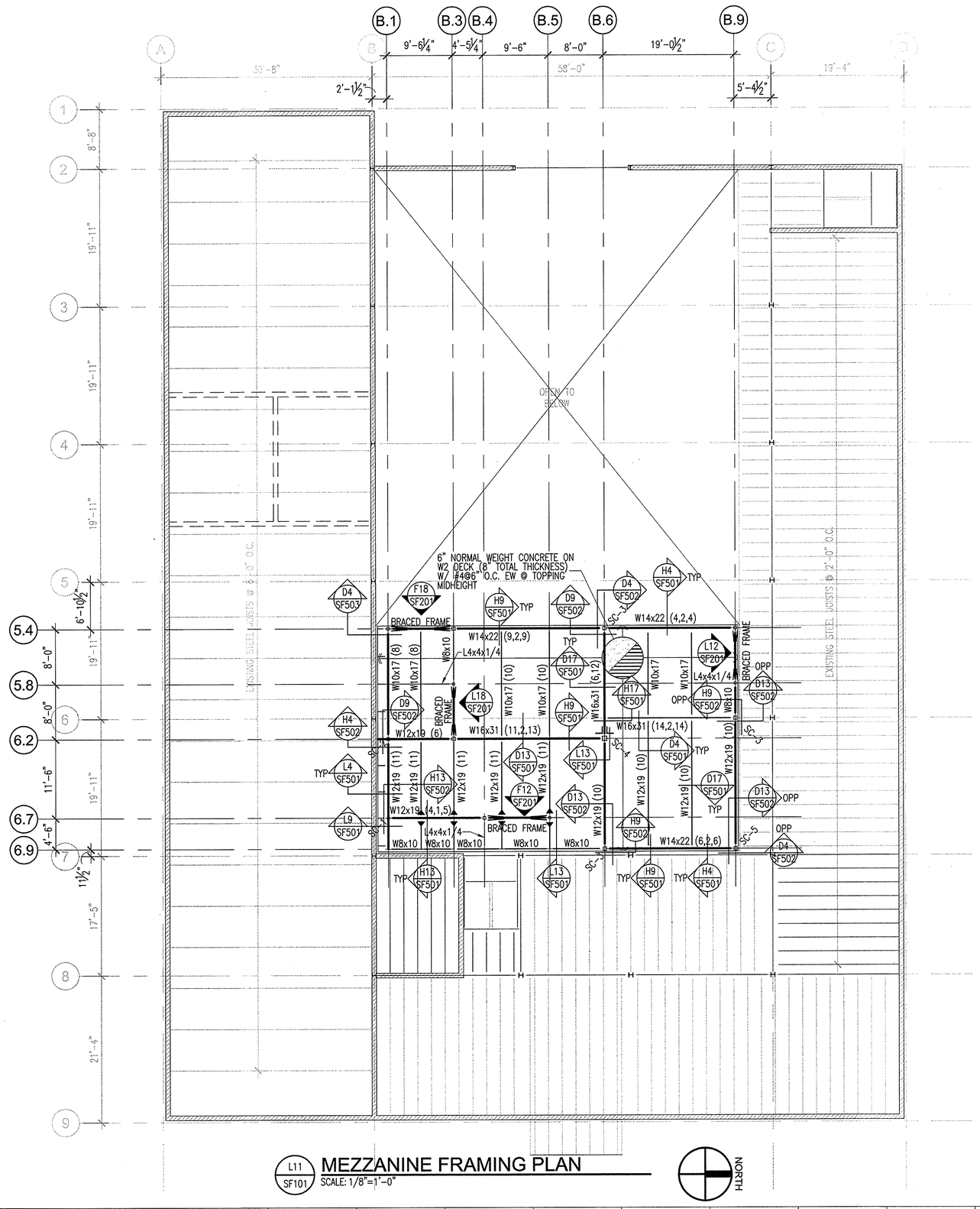

L11 / SF101 **MEZZANINE FRAMING PLAN**
SCALE: 1/8"=1'-0"

NORTH

EXISTING ITEMS PLAN LEGEND
LEG-EXIST

- EXISTING MASONRY WALL
- EXISTING OPENING THROUGH MASONRY WALL
- EXISTING STEEL COLUMN – TUBE
- EXISTING STEEL COLUMN – WIDE FLANGE
- EXISTING STEEL BEAM OR GIRDER
- EXISTING STEEL JOIST OR PURLIN
- EXISTING CROSS BRIDGING
- EXISTING HORIZONTAL BRIDGING
- EXISTING TO BE REMOVED
- EXISTING OPENING

FLOOR FRAMING PLAN LEGEND
LEG-FLOOR

- STEEL COLUMN – TUBE
- STEEL BRACED FRAME
- MOMENT CONNECTION
- DOUBLE SHEAR CONNECTION SEE H17/SF601
- STEEL BEAM OR GIRDER
- STEEL JOIST OR PURLIN
- CROSS BRIDGING
- HORIZONTAL BRIDGING
- CONCRETE ON METAL DECK
- SPECIAL DECK AREA
- RECESSED/DEPRESSED SLAB ON METAL DECK
- OPENING

FLOOR FRAMING PLAN NOTES
NOTE-FLOOR

1. SEE DETAILS L11 & L17/SF502 FOR MISCELLANEOUS FLOOR OPENINGS.
2. SEE GENERAL STRUCTURAL NOTE (V.J.7) FOR STEEL DECK REQUIREMENTS WHERE 3-SPAN CONDITIONS ARE NOT POSSIBLE.
3. PROVIDE 4.1/2" LONG HEADED STUD ANCHORS ON COMPOSITE BEAMS IN THE AREAS OF 1" SLAB RECESSES.
4. PROVIDE A MINIMUM 1" SEISMIC SEPERATION BETWEEN THE MEZZANINE AND ADJACENT EXISTING STRUCTURE.

NOTE TO CONTRACTOR
NOTE-FOOTING

1. CONTRACTOR SHALL FIELD VERIFY ALL EXISTING CONDITIONS PRIOR TO DEMOLITION, FABRICATION, INSTALLATION. ALL DISCREPANCIES SHALL BE REPORTED TO A/E TEAM PRIOR TO COMMENCING CONSTRUCTION.

Harris & Associates
265 East 100 South Suite 350
Salt Lake City, Utah 84111-1604
Ph (801) 521-8564 Fax (801) 355-2938

CONSULTANT INFORMATION
REAVELEY
ENGINEERS + ASSOCIATES
Consulting Structural Engineers
675 E. 500 S. Suite 400
Salt Lake City, UT 84102
P:801.486.3883
F:801.485.0911
www.reaveley.com

KEYED NOTES

LICENSED ARTHUR PARRY BROWN NO. 154201 REGISTERED STRUCTURAL ENGINEER UTAH
1/30/09

Utah National Guard
RENOVATION OF READINESS CENTER
BUILDING 5170
CAMP W.G. WILLIAMS, UTAH

SHEET TITLE
MEZZANINE PLAN

REVISIONS	DATE	BY	DESCRIPTION
△			
△			
△			
△			

DRAWN BY	CHECKED BY
CAT/REA	
PROJECT NO. 08032470 CW	DRAWING NO. SF101
DATE JAN. 30, 2009	

Utah National Guard - Camp Williams Bldg. 5170

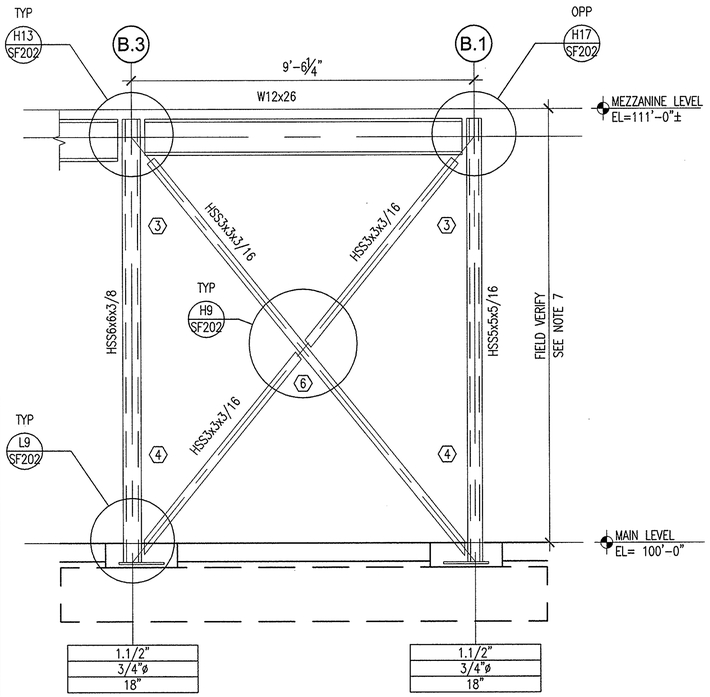

F18 SF201 **BRACE FRAME ELEVATION AT GRID 5.4**
SCALE: 1/2"=1'-0"

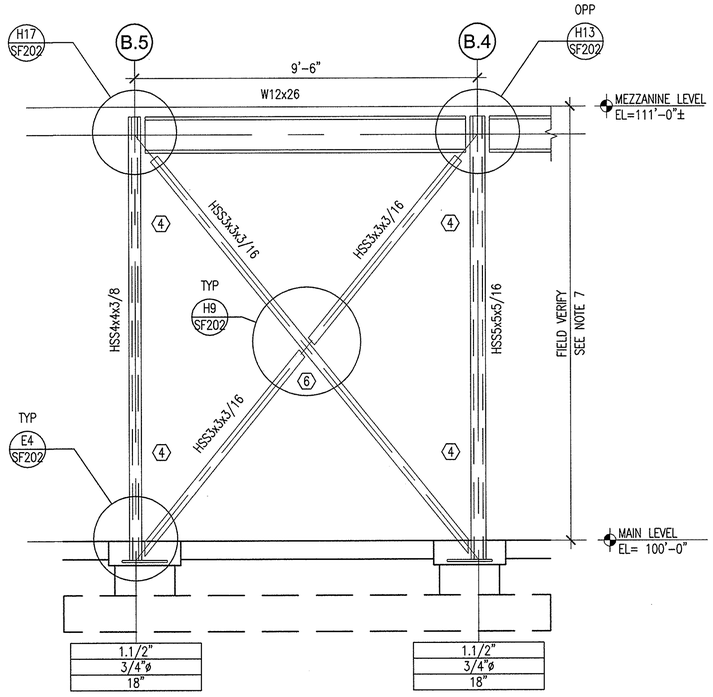

F12 SF201 **BRACE FRAME ELEVATION AT GRID 6.7**
SCALE: 1/2"=1'-0"

BRACED FRAME ELEVATION NOTES AND LEGEND

NOTE-BRACE

1. ALL W-SHAPED BRACED FRAME MEMBERS SHALL BE ASTM A992 (Fy = 50KSI) STEEL, U.N.O.
2. ALL HSS-SHAPED BRACED FRAME MEMBERS SHALL BE ASTM A500 GRADE B (Fy = 46KSI) STEEL, U.N.O.
3. ADD 3/4" ø x 6" LONG HEADED STUD ANCHOR AT 24" O.C. TO ALL BRACED FRAME HORIZONTAL FRAMING MEMBERS (BEAMS) EXCEPT ROOF BEAMS.
4. (?) INDICATES BRACED FRAME CONNECTION MARK. SEE D17/SF202 FOR BRACED FRAME CONNECTION SCHEDULE.
5.

BP
AR
EB

BP = BASE PLATE SIZE. (ASTM A572 GRADE 50)
AR = ANCHOR RODS. (ASTM F1554 GRADE 105)
EB = ANCHOR ROD EMBEDMENT LENGTH

6. VERIFY ALL DATUM ELEVATIONS W/ ARCHITECTURAL DRAWINGS.
7. CONTRACTOR SHALL MATCH NEW MEZZANINE ELEVATION W/ EXIST SECOND FLOOR ELEVATION. CONTRACTOR SHALL COORDINATE ALL ELEVATION W/ ARCHITECT AND STEEL FABRICATOR.

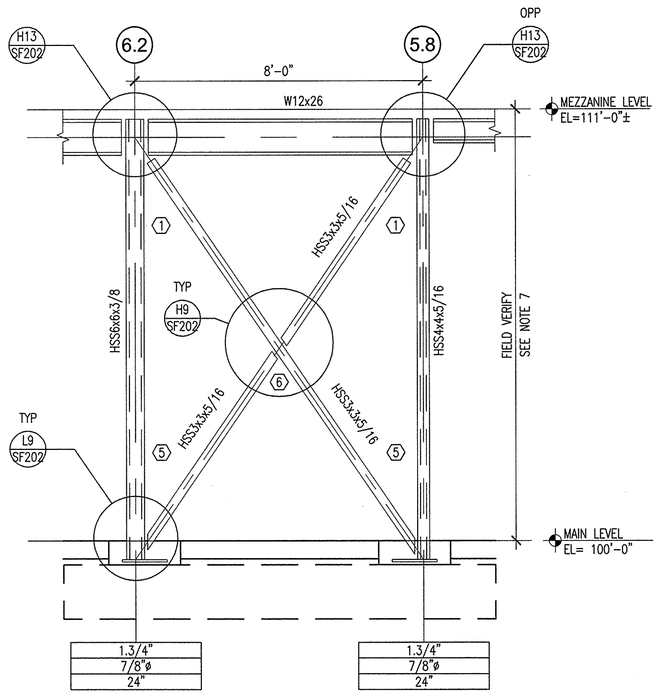

L18 SF201 **BRACE FRAME ELEVATION AT GRID B.3**
SCALE: 1/2"=1'-0"

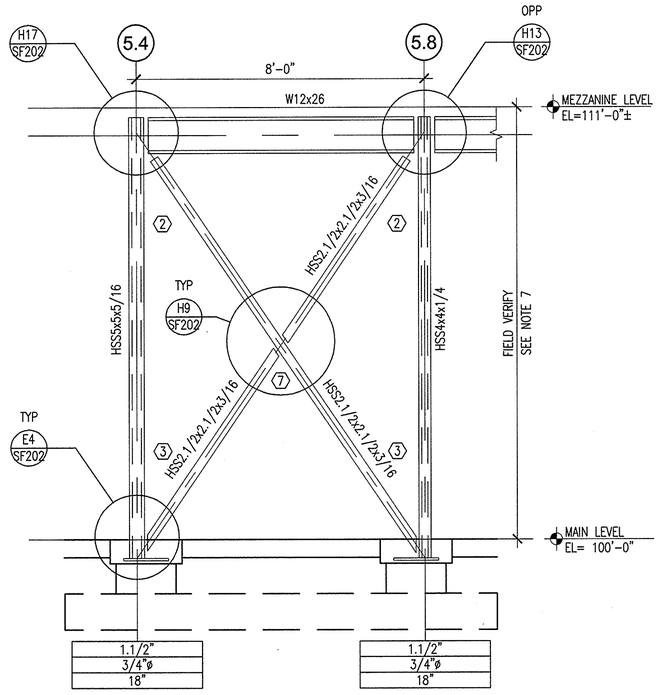

L12 SF201 **BRACE FRAME ELEVATION AT GRID B.9**
SCALE: 1/2"=1'-0"

NOTES

1. DO NOT WELD OR USE ERECTION AIDS. THERMAL CUTTING AND AIR ARC GOUGING SHALL BE AVOIDED OR BE REPAIRED AS PER THE STRUCTURAL ENGINEERS APPROVED METHOD.
2. DO NOT WELD HSA'S IN PROTECTED ZONES.
3. WELDED, SCREWED, SHOT-IN FASTENERS AND BOLTED ATTACHMENTS SHALL NOT, UNDER ANY CIRCUMSTANCES BE PLACED WITHIN THE PROTECTED ZONES.

PROTECTED ZONES

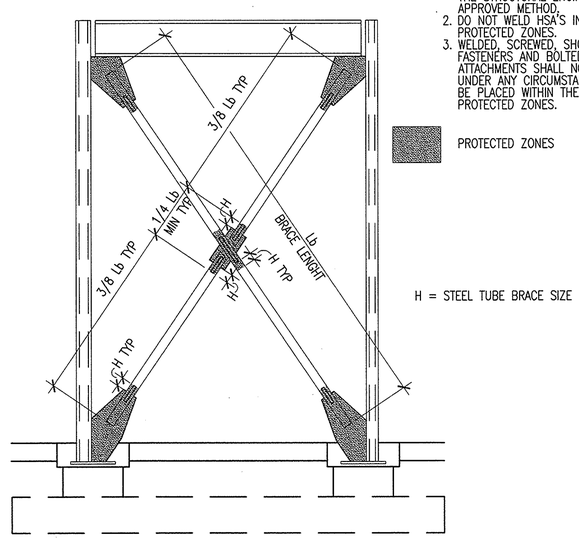

H = STEEL TUBE BRACE SIZE

L6 SF201 **TYPICAL PROTECTED ZONES OF STEEL BRACED FRAMES**
SCALE: 1/2"=1'-0"

Harris & Associates SM
265 East 100 South Suite 350
Salt Lake City, Utah 84111-1604
Ph (801) 521-8564 Fax (801) 355-2938

CONSULTANT INFORMATION
REAVELEY
ENGINEERS + ASSOCIATES
Consulting Structural Engineers
675 E. 500 S. Suite 400
Salt Lake City, UT 84102
P:801.486.3883
F:801.485.0911
www.reaveley.com

KEYED NOTES

LICENSED VERIFIED STRUCTURAL ENGINEER
NO. 154201
ARTHUR PARRY BROWN
UTAH
1/30/09

Utah National Guard
RENOVATION OF READINESS CENTER
BUILDING 5170
CAMP W.G. WILLIAMS, UTAH

SHEET TITLE
BRACED FRAME ELEVS

REVISIONS	DATE	BY	DESCRIPTION
△			
△			
△			
△			

DRAWN BY: CAT/REA
CHECKED BY:
PROJECT NO.: 08032470 CW
DRAWING NO.: SF201
DATE: JAN. 30, 2009

Utah National Guard - Camp Williams Bldg. 5170

SPECIAL CONCENTRICALLY BRACED FRAME CONNECTION SCHEDULE - TUBE BRACES

MARK	WELDING CRITERIA					GUSSET PLATE		COVER PLATE			NOTES
	T1 WELD THICKNESS	T2 WELD THICKNESS	T3 WELD THICKNESS	T4 WELD THICKNESS	L1 WELD LENGTH	GUSSET PLATE THICKNESS (tg)	GUSSET PLATE WIDTH	COVER PLATE SIZE	T5 WELD THICKNESS	L5 WELD LENGTH	
1	3/8"	3/8"	5/16"	--	6"	3/4"	12"	1.1/2x5/8	9/16"	2"	
2	3/16"	1/4"	3/16"	--	6"	3/4"	9"	1.1/2x3/8	5/16"	2"	
3	1/4"	1/4"	3/16"	--	7"	3/4"	10"	2x3/8	5/16"	2.1/2"	
4	1/4"	1/4"	1/4"	--	7"	3/4"	11"	2x3/8	5/16"	2.1/2"	
5	3/8"	1/4"	1/4"	--	6"	3/4"	13"	1.1/2x5/8	9/16"	2"	
6	3/8"	--	--	--	6"	3/4"	8"	1.1/2x5/8	9/16"	2"	
7	1/4"	--	--	--	7"	3/4"	5.1/2"	2x3/8	5/16"	2.1/2"	

NOTES:
1. ALL GUSSET PLATES SHALL BE GRADE A36 STEEL.
2. ALL COVER PLATES SHALL BE A572 GRADE 50 STEEL, SEE L4/SF202 FOR DETAIL.

D17 / SF202 SPECIAL CONCENTRICALLY BRACED FRAME CONNECTION SCHEDULE - TUBE BRACES
NO SCALE
SP-CON-HSS-01

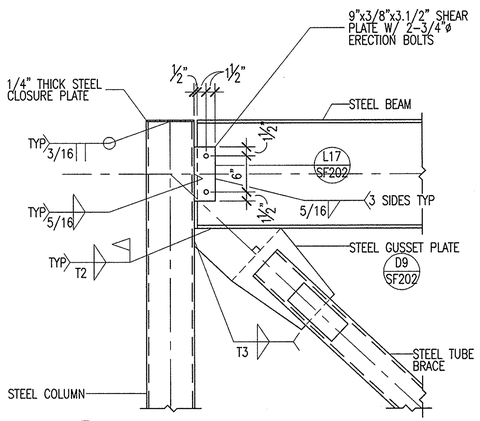

H17 / SF202 TYPICAL BRACED FRAME DETAIL
NO SCALE
2008-208-SF202/H17

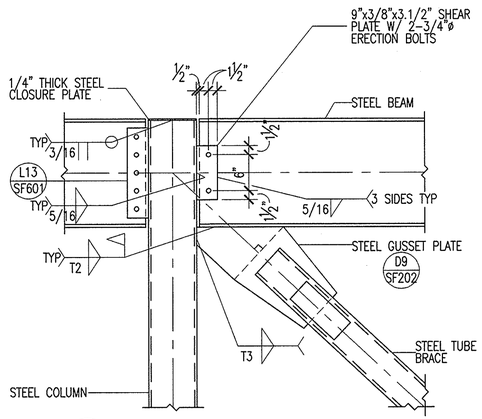

H13 / SF202 TYPICAL BRACED FRAME DETAIL
NO SCALE
2008-208-SF202/H13

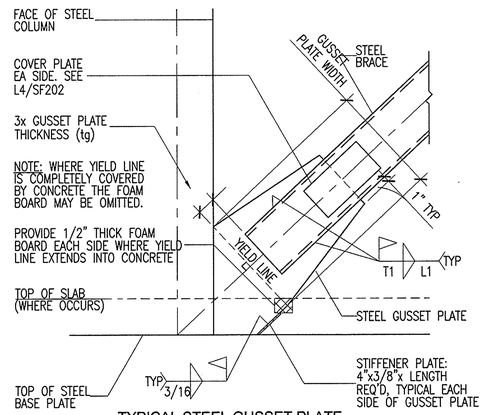

TYPICAL STEEL GUSSET PLATE CONNECTION AT STEEL BASE PLATE
D9 / SF202 NO SCALE
SP-CON-HSS-04

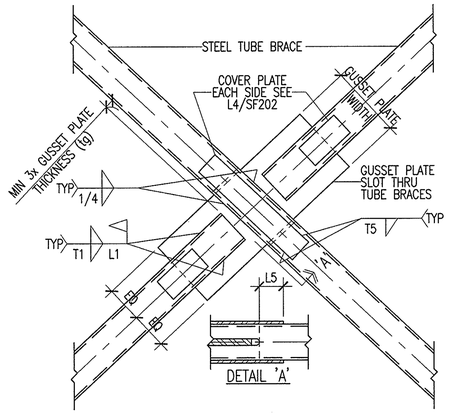

H9 / SF202 TYPICAL BRACED FRAME DETAIL
NO SCALE
SP-CON-HSS-08

L9 / SF202 TYPICAL BRACED FRAME COLUMN BASE AT CONCRETE FOOTING
NO SCALE
SP-CON-HSS-101

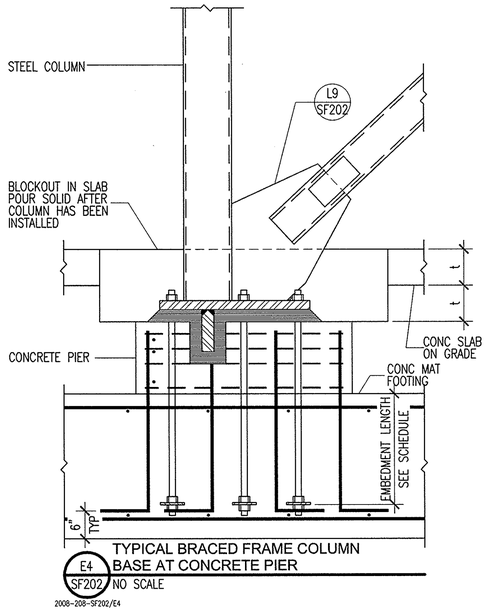

E4 / SF202 TYPICAL BRACED FRAME COLUMN BASE AT CONCRETE PIER
NO SCALE
2008-208-SF202/E4

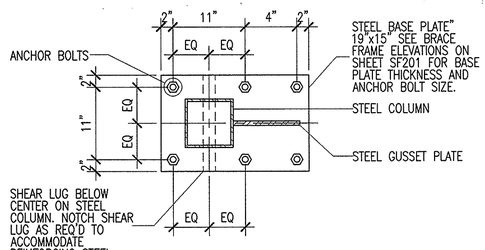

H4 / SF202 TYPICAL BRACED FRAME COLUMN BASE PLATE (PLAN VIEW)
NO SCALE
2008-208-SF202/H4

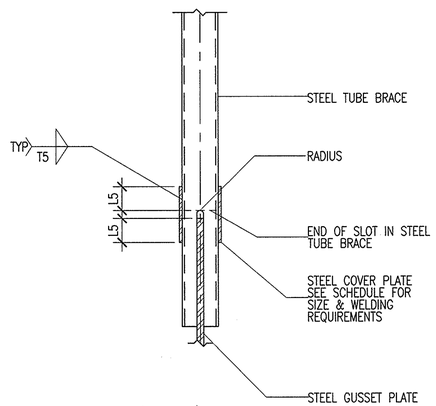

L4 / SF202 TYPICAL STEEL TUBE BRACE COVER PLATE
NO SCALE
SP-CON-HSS-09

Harris & Associates
265 East 100 South Suite 350
Salt Lake City, Utah 84111-1604
Ph (801) 521-8564 Fax (801) 355-2938

CONSULTANT INFORMATION
REAVELEY
ENGINEERS + ASSOCIATES
Consulting Structural Engineers
675 E. 500 S. Suite 400
Salt Lake City, UT 84102
P:801.486.3883
F:801.485.0911
www.reaveley.com

KEYED NOTES

LICENSED CERTIFIED STRUCTURAL ENGINEER NO. 154201 ARTHUR PARRY BROWN UTAH
1/30/09

Utah National Guard
RENOVATION OF READINESS CENTER
BUILDING 5170
CAMP W.G. WILLIAMS, UTAH

SHEET TITLE
BRACED FRAME DTLS

REVISIONS	DATE	BY	DESCRIPTION
1			
2			
3			
4			

DRAWN BY: CAT/REA
CHECKED BY:
PROJECT NO.: 08032470 CW
DRAWING NO.: SF202
DATE: JAN. 30, 2009

Utah National Guard - Camp Williams Bldg. 5170

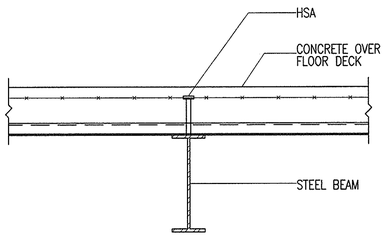

D17 TYPICAL COMPOSITE STEEL BEAM
SF501 NO SCALE
SB1FLR01

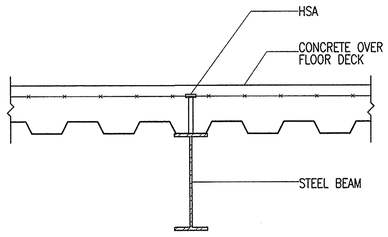

D13 TYPICAL COMPOSITE STEEL BEAM
SF501 NO SCALE
SB1FLR02

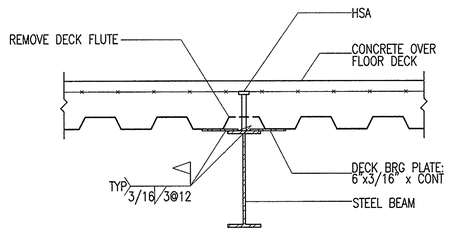

NOTE: THIS DETAIL SHALL APPLY WHEREVER THE DECK FLUTE INTERFERES WITH THE PROPER INSTALLATION OF THE HEADED STUD ANCHOR.

D9 TYPICAL ALTERNATE DECK BEARING AT COMPOSITE STEEL BEAM
SF501 NO SCALE
SB1FLR03

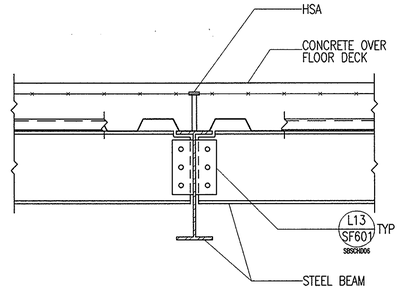

D4 TYPICAL COMPOSITE STEEL BEAM W/ STEEL BEAM TWO SIDES
SF501 NO SCALE
SB1FLR04

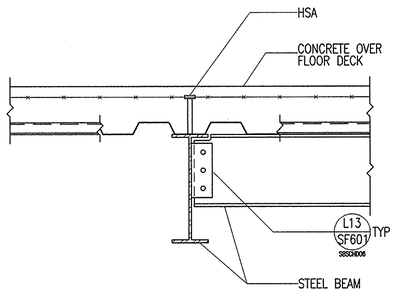

H17 TYPICAL COMPOSITE STEEL BEAM W/ STEEL BEAM ONE SIDE
SF501 NO SCALE
SB1FLR05

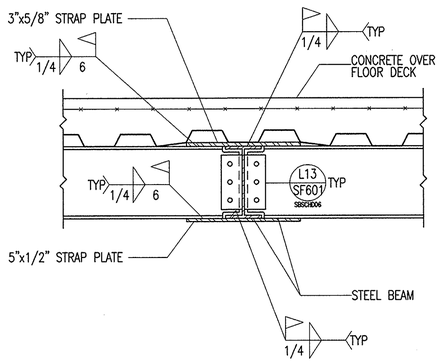

H13 STRAP PLATE MOMENT CONNECTION AT STEEL BEAM
SF501 NO SCALE
2008-208-SF501/H13

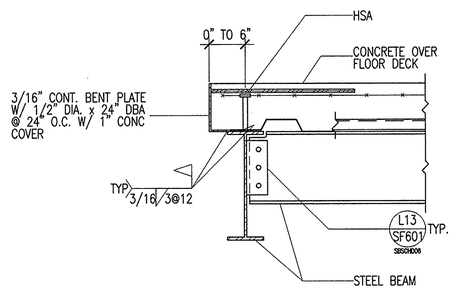

H9 TYPICAL COMPOSITE STEEL BEAM AT SLAB EDGE DETAIL FOR 0" UP TO 6"
SF501 NO SCALE
SB1FLR07

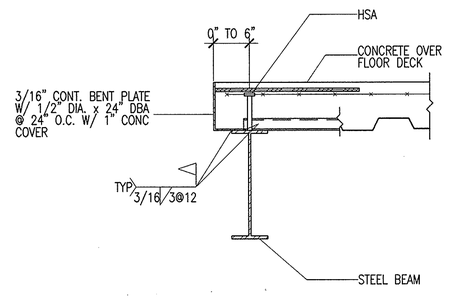

H4 TYPICAL COMPOSITE STEEL BEAM AT SLAB EDGE DETAIL FOR 0" UP TO 6"
SF501 NO SCALE
SB1FLR08

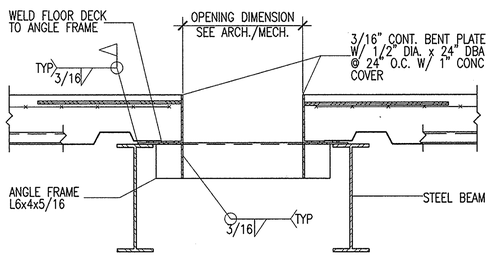

L17 TYPICAL FLOOR OPENING W/ ANGLE FRAME
SF501 NO SCALE
SB1FLR09

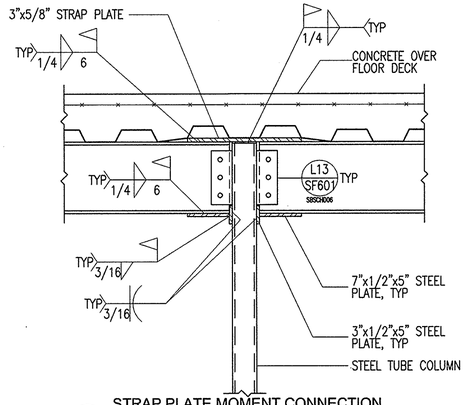

L13 STRAP PLATE MOMENT CONNECTION AT STEEL COLUMN
SF501 NO SCALE
2008-208-SF501/L13

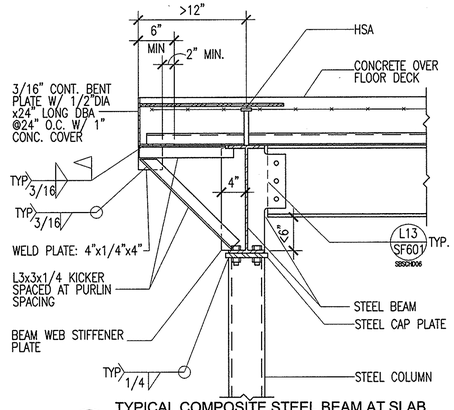

L9 TYPICAL COMPOSITE STEEL BEAM AT SLAB EDGE DETAIL FOR >12" DIMENSION
SF501 NO SCALE
2008-208-SF501/L9

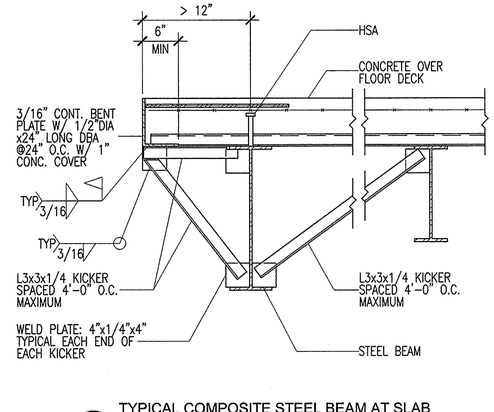

L4 TYPICAL COMPOSITE STEEL BEAM AT SLAB EDGE DETAIL FOR >12" DIMENSION
SF501 NO SCALE
SB1FLR15

Harris & Associates SM
265 East 100 South Suite 350
Salt Lake City, Utah 84111-1604
Ph (801) 521-8564 Fax (801) 355-2938

CONSULTANT INFORMATION
REAVELEY ENGINEERS + ASSOCIATES
Consulting Structural Engineers
675 E. 500 S. Suite 400
Salt Lake City, UT 84102
P:801.486.3883
F:801.485.0911
www.reaveley.com

KEYED NOTES

LICENSED CERTIFIED STRUCTURAL ENGINEER NO. 154201 ARTHUR PARRY BROWN UTAH
1/30/09

Utah National Guard
RENOVATION OF READINESS CENTER
BUILDING 5170
CAMP W.G. WILLIAMS, UTAH

SHEET TITLE
FRAMING DETAILS

REVISIONS	DATE	BY	DESCRIPTION
△			
△			
△			
△			

DRAWN BY CAT/REA
CHECKED BY
PROJECT NO. 08032470 CW
DRAWING NO. SF501
DATE JAN. 30, 2009

Utah National Guard - Camp Williams Bldg. 5170

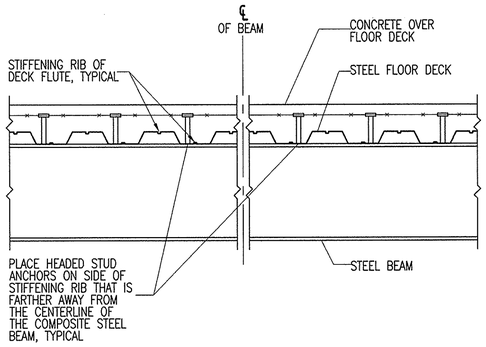

D17 / SF502 — TYPICAL HEADED STUD ANCHOR PLACEMENT PATTERN FOR COMPOSITE STEEL BEAMS
NO SCALE
SB1FLR24

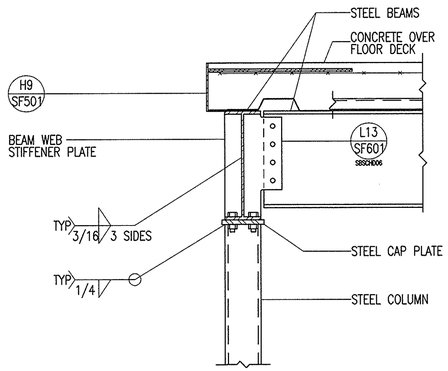

D13 / SF502 — TYPICAL STEEL BEAM TO STEEL COLUMN
NO SCALE
SB2FLR01

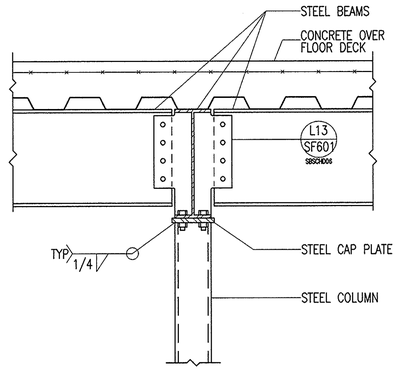

D9 / SF502 — TYPICAL STEEL BEAM TO STEEL COLUMN
NO SCALE
SB2FLR02

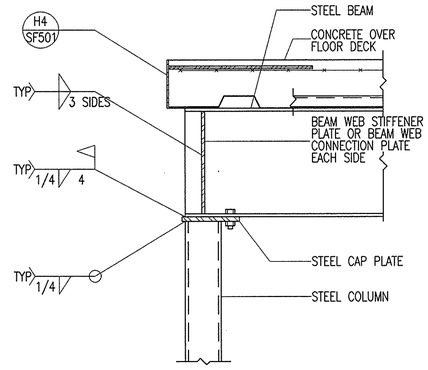

D4 / SF502 — TYPICAL STEEL BEAM TO STEEL COLUMN
NO SCALE
SB2FLR03

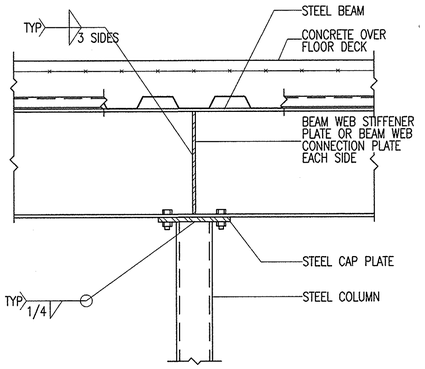

H13 / SF502 — TYPICAL STEEL BEAM TO STEEL COLUMN
NO SCALE
SB2FLR05

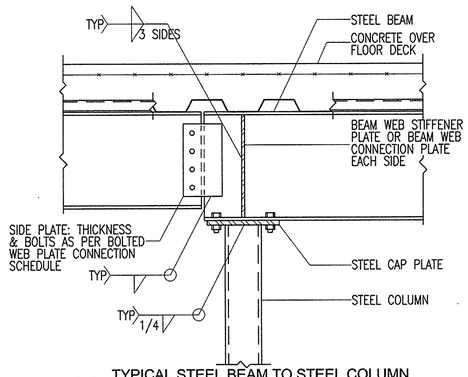

H9 / SF502 — TYPICAL STEEL BEAM TO STEEL COLUMN AT DROP-IN BEAM
NO SCALE
SB2FLR06

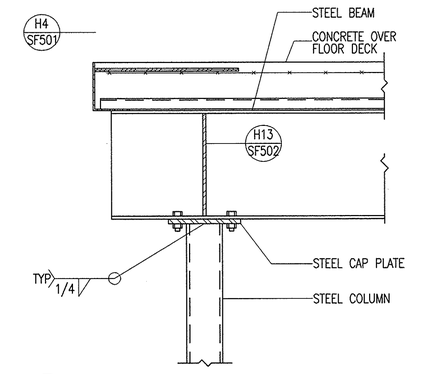

H4 / SF502 — STEEL BEAM TO STEEL COLUMN
NO SCALE
2008-208-SF502/H4

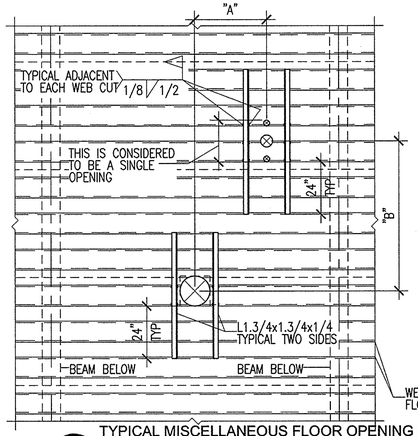

USE THIS DETAIL FOR HOLES LARGER THAN 6" CUTTING 1 TO 2 ADJACENT WEBS. HOLES 6" IN DIAMETER OR LESS NEED NO REINFORCING.

NOTES:

1. PRIOR TO CONCRETE POUR, OPENINGS SHOULD BE BLOCKED OUT AND LEFT INTACT. AFTER THE CONCRETE HAS CURED, THE BLOCKOUT CAN BE REMOVED AND THE FLOOR DECK IN THE AREA OF THE HOLE REMOVED.
2. IF DIMENSIONS "A" AND "B" ARE LESS THAN 32" THE OPENING GROUP MUST BE CONSIDERED AS A SINGLE HOLE, AND REINFORCED AS REQUIRED FOR THE LARGER OPENING. SEE DETAIL ___/S___

L17 / SF502 — TYPICAL MISCELLANEOUS FLOOR OPENING REINFORCING DETAIL FOR TYPE 'W' DECK
NO SCALE
FLROPNG-W1

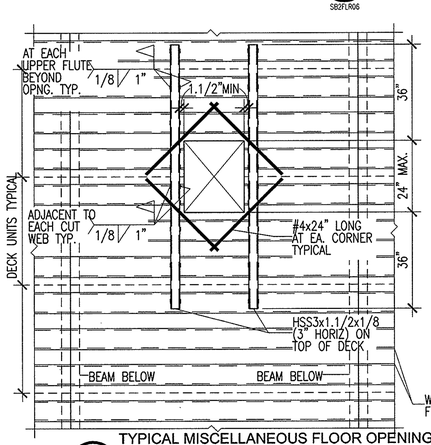

USE THIS DETAIL FOR LARGER HOLES CUTTING 3 OR 4 ADJACENT WEBS.

NOTES:

1. IF THE OPENING OR GROUP OF OPENINGS OCCURS IN ONE DECK UNIT THE OPENING OR OPENING GROUP MAY BE CUT PRIOR TO POURING CONCRETE.
2. IF, AS SHOWN, THE OPENING OR OPENING GROUP CUTS THROUGH TWO DECK UNITS, THE DECKING SHALL NOT BE CUT UNTIL CONCRETE HAS BEEN PLACED AND CURED.
3. WHEN THE MAXIMUM DIMENSION OF AN OPENING OR OPENING GROUP EXCEEDS 24", PROVIDE W8X10 HEADER BEAMS BELOW THE DECK AT ALL SIDES.

L11 / SF502 — TYPICAL MISCELLANEOUS FLOOR OPENING REINFORCING DETAIL FOR TYPE 'W' DECK
NO SCALE
FLROPNG-W2

Harris & Associates
265 East 100 South Suite 350
Salt Lake City, Utah 84111-1604
Ph (801) 521-8564 Fax (801) 355-2938

CONSULTANT INFORMATION
REAVELEY
ENGINEERS + ASSOCIATES
Consulting Structural Engineers
675 E. 500 S. Suite 400
Salt Lake City, UT 84102
P:801.486.3883
F:801.485.0911
www.reaveley.com

KEYED NOTES

LICENSED CERTIFIED STRUCTURAL ENGINEER NO. 154201 ARTHUR PARRY BROWN UTAH
1/30/09

Utah National Guard
RENOVATION OF READINESS CENTER
BUILDING 5170
CAMP W.G. WILLIAMS, UTAH

SHEET TITLE
FRAMING DETAILS

REVISIONS	DATE	BY	DESCRIPTION
△			
△			
△			
△			

DRAWN BY: CAT/REA
CHECKED BY:
PROJECT NO.: 08032470 CW
DRAWING NO.: SF502
DATE: DEC. 15. 2008

Utah National Guard - Camp Williams Bldg. 5170

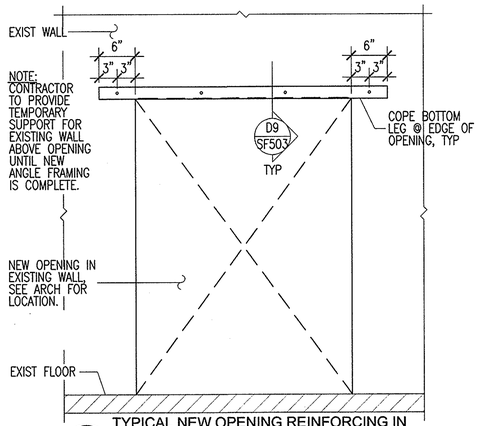

D13 SF503 TYPICAL NEW OPENING REINFORCING IN EXISTING WALL USING STEEL ANGLES
NO SCALE

NWOPNG11

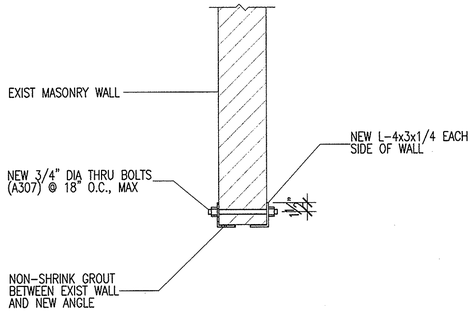

D9 SF503 TYPICAL SECTION AT HEAD & JAMB
NO SCALE

NWOPNG12

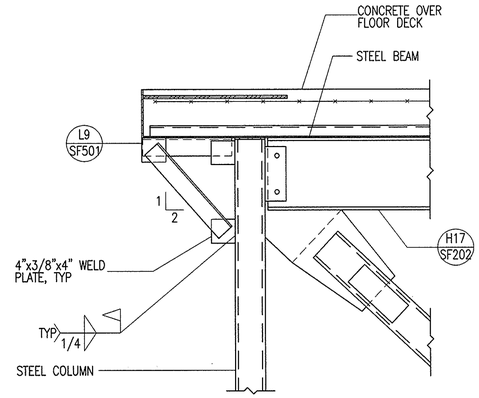

D4 SF503 DECK SUPPORT @ BRACED FRAME COLUMN
NO SCALE

2008-208-SF503/D4

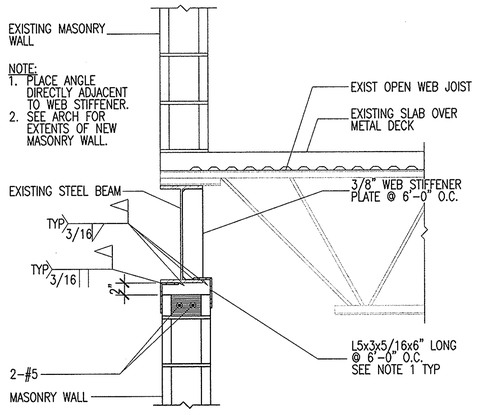

H9 SF503 NEW MASONRY WALL @ GRID 6.9
NO SCALE

2008-208-SF503/H9

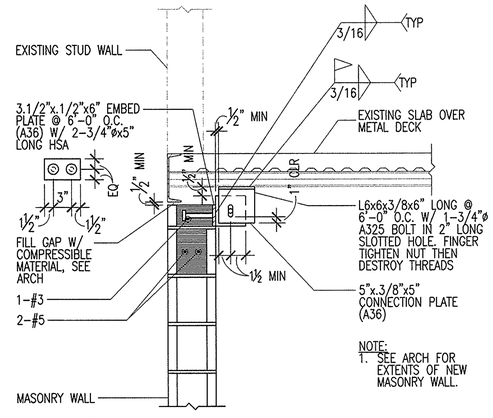

H4 SF503 NEW MASONRY WALL @ GRID B.9
NO SCALE

2008-208-SF503/H4

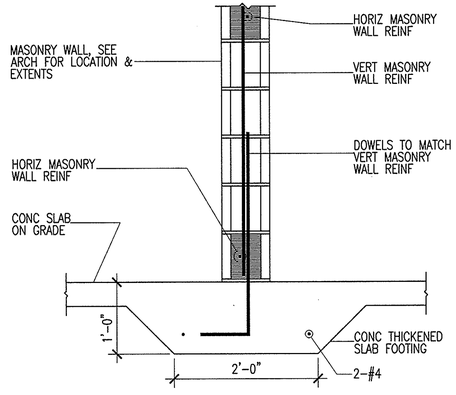

L9 SF503 TYPICAL INTERIOR MASONRY WALL AT THICKENED SLAB
NO SCALE

2008-208-SF503/L9

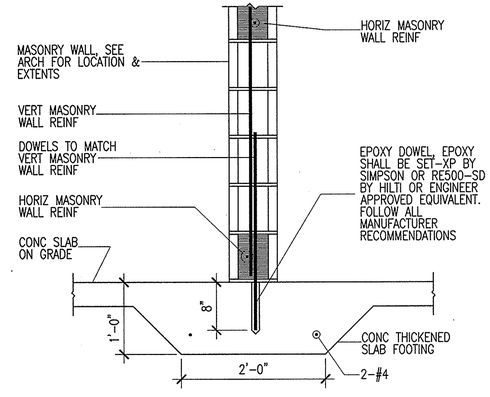

L4 SF503 TYPICAL INTERIOR MASONRY WALL AT THICKENED SLAB (ALTERNATE)
NO SCALE

2008-208-SF503/L4

Harris & Associates
265 East 100 South Suite 350
Salt Lake City, Utah 84111-1604
Ph (801) 521-8564 Fax (801) 355-2938

CONSULTANT INFORMATION
REAVELEY
ENGINEERS + ASSOCIATES
Consulting Structural Engineers
675 E. 500 S. Suite 400
Salt Lake City, UT 84102
P:801.486.3883
F:801.485.0911
www.reaveley.com

KEYED NOTES

LICENSED CERTIFIED STRUCTURAL ENGINEER
NO. 154201
ARTHUR PARRY BROWN
UTAH
1/30/09

Utah National Guard
RENOVATION OF READINESS CENTER
BUILDING 5170
CAMP W.G. WILLIAMS, UTAH

SHEET TITLE
FRAMING DETAILS

REVISIONS	DATE	BY	DESCRIPTION
△			
△			
△			
△			

DRAWN BY: CAT/REA
CHECKED BY:
PROJECT NO.: 08032470 CW
DRAWING NO.: SF503
DATE: JAN. 30, 2009

Utah National Guard - Camp Williams Bldg. 5170

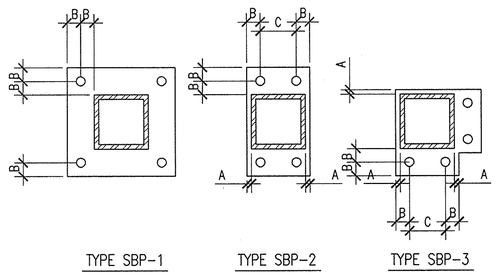

TYPE SBP-1 TYPE SBP-2 TYPE SBP-3

A = 1/2" MIN.
B = 1 1/2" (PER TABLE J3.5 OF THE MANUAL OF STEEL CONSTRUCTION FOR BOLTS LARGER THAN 7/8" DIAMETER)
C = 3" MIN.

C18 / SF601 TYPICAL STEEL BASE PLATES - PLAN VIEW
NO SCALE
SBP-1

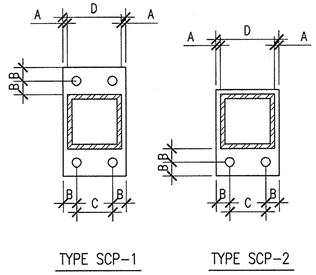

TYPE SCP-1 TYPE SCP-2

A = 1/2" MIN.
B = 1 1/2" MIN.
C = GAGE OF CONNECTED MEMBER
D = COLUMN WIDTH + 1", BEAM OR GIRDER WIDTH + 1", OR BOLT GAGE + 3", WHICHEVER IS GREATER.

C12 / SF601 TYPICAL STEEL CAP PLATES - REFLECTED PLAN VIEW
NO SCALE
SCP-1

STEEL COLUMN SCHEDULE

SC-1

MARK	SIZE	STEEL BASE PLATE	STEEL CAP PLATE	REMARKS
SC-1	HSS4x4x1/4	3/4" SBP-1	3/4" SCP-1	
SC-2	HSS5x5x5/16	3/4" SBP-1	3/4" SCP-1	
SC-3	HSS6x6x3/8	3/4" SBP-1	3/4" SCP-1	
SC-4	HSS8x8x1/2	3/4" SBP-1	3/4" SCP-2	
SC-5	HSS6x6x3/8	3/4" SBP-1	3/4" SCP-2	

NOTES:
1. UNLESS NOTED OTHERWISE, ALL COLUMNS SHALL BE INSTALLED W/4-3/4" DIAMETER A.B. W/ 3" (MIN) HOOKS. PROJECT ANCHOR BOLTS 3" (MIN) ABOVE THE TOP OF THE BASE PLATE. EMBEDMENT SHALL BE 9" (MIN). ALL BOLTS SHALL BE INSTALLED W/ HARDENED WASHERS BENEATH THE NUT. ANY BOLT HOLES LARGER THAN THE BOLT DIAMETER PLUS 5/16" SHALL HAVE 5/16" PLATE WASHERS INSTALLED BENEATH THE HARDENED WASHERS.
2. ALL BOLTS IN CAP PLATES SHALL BE 3/4" DIA, A325N BOLTS TYPICAL U.N.O.
3. COLUMN SPLICES SHALL BE LOCATED PER SPLICE DETAILS, TYPICAL, U.N.O.
4. WELDS SHALL NOT BE MADE TO ANCHOR BOLTS.

A325 BOLT SCHEDULE

MAXIMUM BEAM SIZE IN EACH BEAM DEPTH GROUP	A325N BOLTS NO. PER LEG	A325N BOLTS SIZE
W16	4	3/4"ø

NOTES:
① CLIP ANGLES: 2-L4x3.1/2. THICKNESS SHALL BE EQUAL TO ONE HALF THE BEAM WEB THICKNESS PLUS 1/16" (1/4" MIN.). FOR TWO ROWS OF BOLTS OR SKEWED CONNECTIONS, USE BENT PLATES.
② FILLET WELDS SHALL BE ANGLE THICKNESS MINUS 1/16" (1/4" MIN.)
③ CONTRACTOR HAS OPTION TO BOLT CLIP ANGLES AT EITHER BEAM WEB IN BEAM TO BEAM CONNECTIONS.
④ BOLT EDGE DISTANCE SHALL BE 1.1/2" MIN. AT ALL BEAM AND CLIP ANGLE EDGES. BOLT SPACING SHALL BE 3" O.C. MIN.

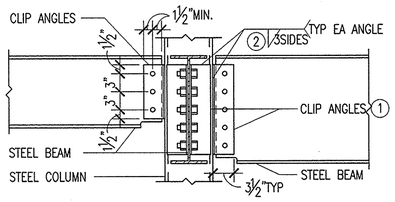

BEAM TO COLUMN CLIP ANGLE CONNECTION

H17 / SF601 TYPICAL BOLTED CLIP ANGLE CONNECTIONS W/ BOLT SCHEDULE (DOUBLE SHEAR)
NO SCALE
2008-208-SF601/H17

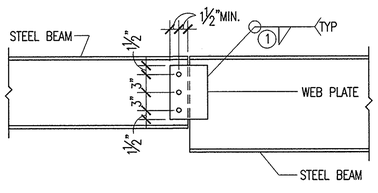

BEAM TO BEAM WEB PLATE CONNECTION

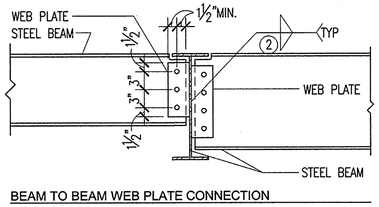

BEAM TO BEAM WEB PLATE CONNECTION

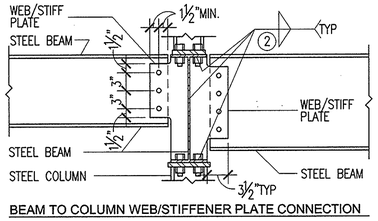

BEAM TO COLUMN WEB/STIFFENER PLATE CONNECTION

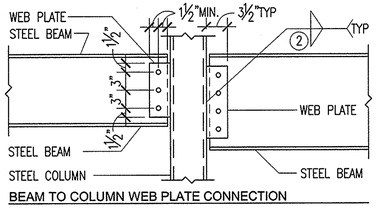

BEAM TO COLUMN WEB PLATE CONNECTION

L13 / SF601 TYPICAL BOLTED WEB PLATE CONNECTIONS W/ BOLT SCHEDULE (SINGLE SHEAR)
NO SCALE

A325 BOLT SCHEDULE

MAXIMUM BEAM SIZE IN EACH BEAM DEPTH GROUP	WEB PLATE THICKNESS	A325N BOLTS NUMBER	A325N BOLTS SIZE
W8	5/16"	2	3/4"ø
W10	5/16"	2	3/4"ø
W12	5/16"	3	3/4"ø
W14	5/16"	3	3/4"ø
W16	3/8"	4	3/4"ø

NOTES:
① FILLET WELDS ONE SIDE SHALL EQUAL THE PLATE THICKNESS MINUS 1/16" (1/4" MIN.)
② FILLET WELDS TWO SIDES SHALL BE 3/4 THE PLATE THICKNESS (1/4" MIN.) EACH SIDE
③ BOLT EDGE DISTANCE SHALL BE 1.1/2" MIN. AT ALL EDGES. BOLT SPACING SHALL BE 3" MIN.
④ THICKNESS EQUALS BEAM FLANGE THICKNESS OF BEAM FRAMING INTO COLUMN WEB. (3/8" MIN.)

Harris & Associates SM
265 East 100 South Suite 350
Salt Lake City, Utah 84111-1604
Ph (801) 521-8564 Fax (801) 355-2938

CONSULTANT INFORMATION
REAVELEY
ENGINEERS + ASSOCIATES
Consulting Structural Engineers
675 E. 500 S. Suite 400
Salt Lake City, UT 84102
P:801.486.3883
F:801.485.0911
www.reaveley.com

KEYED NOTES

LICENSED REGISTERED STRUCTURAL ENGINEER
NO. 154201
ARTHUR PARRY BROWN
UTAH
1/30/09

Utah National Guard
RENOVATION OF READINESS CENTER
BUILDING 5170
CAMP W.G. WILLIAMS, UTAH

SHEET TITLE
SCHEDULES

REVISIONS	DATE	BY	DESCRIPTION
1			
2			
3			
4			

DRAWN BY CAT/REA
CHECKED BY
PROJECT NO. 08032470 CW
DRAWING NO. SF601
DATE JAN. 30, 2009

Utah National Guard - Camp Williams Bldg. 5170

LEGEND OF MECHANICAL SYMBOLS AND ABBREVIATIONS

MECHANICAL

- POSITIVE PRESSURE DUCT - RISE
- POSITIVE PRESSURE DUCT - DROP
- NEGATIVE PRESSURE DUCT - RISE
- NEGATIVE PRESSURE DUCT - DROP
- ROUND DUCT - RISE
- ROUND DUCT - DROP
- TURNING VANES
- FRESH AIR LOUVER
- RELIEF AIR OR EXHAUST AIR LOUVER
- 12X12 200 — CEILING SUPPLY DIFFUSER
- 22X22 200 — CEILING RETURN REGISTER
- 12X12 200 — CEILING EXHAUST REGISTER, (BALANCE TO MATCH SUPPLY IF RETURN CFM IS NOT SHOWN)
- 24X10 200 — SIDEWALL SUPPLY REGISTER
- 24X10 200 — SIDEWALL EXHAUST OR RETURN REGISTER
- 12X12 200 — CEILING SUPPLY DIFFUSER WITH FLEXIBLE DUCT
- 12X12 200 — CEILING AIR GRILLE WITH FLEXIBLE DUCT
- CEILING RETURN AIR GRILE W/ SOUND BOOT

TOP FIGURES INDICATE NECK SIZE. BOTTOM FIGURE INDICATES CFM.

- 3-1" SLOTS @ 48" 400 — LINEAR DIFFUSER WITH PLENUM AND FLEXIBLE DUCT CONNECTION. NO. OF SLOTS & SIZE OF SLOT ON TOP, ACTIVE LENGTH AND CFM ON BOTTOM
- FLEXIBLE DUCT CONNECTION
- FLEXIBLE DUCT
- FAN
- 12/8 — RECTANGULAR DUCT WITH NET INSIDE DIMENSIONS SHOWN IN INCHES.
- 12ø — ROUND DUCT WITH NET INSIDE DIMENSIONS SHOWN IN INCHES.
- UP — INCLINED RISE
- DN — INCLINED DROP

WITH RESPECT TO AIR FLOW 15° NOMINAL INCLINE WITH RADIUS TURNS=DEPTH OF DUCT.

- W R — R/W=1. ROUND DUCT SIMILAR TO RECTANGULAR
- 12/12 8/8 — RECTANGULAR TO RECTANGULAR OR ROUND TO ROUND DUCT TRANSFORMATION MAXIMUM 15° INCLUDED ANGLE EXCEPT WHERE SHOWN OTHERWISE.
- 12/12 12ø — RECTANGULAR TO ROUND DUCT TRANSFORMATION
- R — BRANCH DUCT SPLIT WITH 6' WIDTH AND MIN. R=WIDTH OF BRANCH DUCT DOWNSTREAM.
- ELBOW TURNING VANE OPTIONAL. TAP ENTRY AREA EQUALS 150% OF BRANCH AREA
- 12ø 12/12 — HIGH EFFICIENCY FITTING
- MANUAL VOLUME DAMPER
- FD — FIRE DAMPER IN DUCT, W/ ACCESS PANEL REQD.
- FSD — COMBINATION FIRE/SMOKE DAMPER W/ ACCESS PANEL
- SD — SMOKE DAMPER W/ ACCESS PANEL
- BDD — BACK DRAFT DAMPER
- ATC DR — ATC DAMPER
- AD — ACCESS PANEL IN DUCT OR PLENUM
- HEATING OR COOLING COIL IN DUCT
- SINGLE DUCT AIR TERMINAL BOX VARIABLE OR CONSTANT VOLUME. MIN. 1-1/2 TERMINAL INLET SIZE STRAIGHT DUCT AT TERMINAL INLET.
- 4-WAY BLOW PATTERN
- 3-WAY BLOW PATTERN
- 2-WAY BLOW PATTERN
- 2-WAY BLOW PATTERN
- 1-WAY BLOW PATTERN
- SD — DUCT SMOKE DETECTOR
- UNIT HEATER

PLUMBING

- FLOOR SINK
- FLOOR DRAIN
- FCO / CDTG — FLOOR CLEAN-OUT OR CLEAN-OUT TO GRADE
- ROOF DRAIN
- DOWNSPOUT NOZZLE
- ARROW INDICATES DIRECTION OF FLOW IN PIPE
- CHECK VALVE
- PRESSURE REDUCING, EXTERNAL PRESSURE VALVE
- PRESSURE REDUCING, SELF CONTAINED VALVE
- ATC VALVE - 2 WAY
- ATC VALVE - 3 WAY
- SOLENOID VALVE
- GATE VALVE
- MANUAL BALL VALVE
- GLOBE VALVE
- TEMPERATURE AND PRESSURE TEST PORT
- PRESSURE SWITCH
- LUBRICATED PLUG VALVE
- CBV — CALIBRATED BALANCING VALVE WITH GPM INDICATED
- 0.0 GPM — FLOW CONTROL VALVE
- BRANCH - BOTTOM CONNECTION
- BRANCH - TOP CONNECTION
- BRANCH - SIDE CONNECTION
- RISE OR DROP
- RISER - DOWN (ELBOW)
- RISER - DOWN (ELBOW)
- OVTR — VENT THRU ROOF
- WATER HAMMER ARRESTOR
- INLINE PUMP
- INLINE PUMP
- CLEAN-OUT
- RELIEF VALVE
- ANGLE VALVE
- FLOW METER
- UNION
- GAS COCK
- SHUT-OFF COCK FOR USE WITH PRESSURE GAUGE
- FLEXIBLE EXPANSION JOINT
- THERMOMETER - TEMP RANGE AS INDICATED
- PRESSURE GAUGE WITH SHUT-OFF COCK
- PRESSURE GAUGE WITH PIGTAIL
- LATERAL STRAINER WITH BLOW-OFF VALVE, PROVIDE HOSE END WITH CAP WHERE DISCHARGE IS NOT PIPED TO DRAIN
- BFV — BALL VALVE (PIPE SIZES 2" AND SMALLER) BUTTERFLY VALVE (PIPE SIZES 2-1/2" AND LARGER)
- MOTOR OPERATED BUTTERFLY VALVE
- VALVE IN RISE
- AIR VENT-MANUAL
- AIR VENT-AUTO
- FLOW SWITCH
- REDUCER
- CONCENTRIC REDUCER
- ECCENTRIC REDUCER

PLUMBING CONT.

- HOSE BIBB
- PIPE CAP
- S — SWITCH
- S — SENSOR
- T — THERMOSTAT
- TN — NIGHT THERMOSTAT
- FILL PORT
- DRAIN PAN AND P-TRAP
- (NAME) — FIXTURE FROM LEVEL ABOVE
- GPM LB/HR — FLOW METER ORIFICE
- FLANGE
- 90° ELBOW
- 45° ELBOW
- DN — LEADER INDICATES DOWNWARD SLOPE

LINETYPES

- CF — CHEMICAL FEED
- DOMESTIC COLD WATER (DCW)
- DOMESTIC HOT WATER (DHW)
- DOMESTIC HOT WATER RETURN (DHWR)
- GS — GEOTHERMAL SUPPLY
- GR — GEOTHERMAL RETURN
- G — NATURAL GAS
- HWR — HEATING HOT WATER RETURN
- HWS — HEATING HOT WATER SUPPLY
- RD — ROOF DRAIN
- RDO — ROOF DRAIN OVERFLOW
- SEWER (BELOW GRADE)
- SEWER (ABOVE GRADE)
- VENT (SEWER)

SYMBOLS

- P-1 — PLUMBING FIXTURES
- POINT OF CONNECTION
- A / M-101 — SECTION TAG - TOP FIGURE IS SECTION NO. BOTTOM FIGURE IS SHEET NO.
- A / M101 — DETAIL TAG - TOP FIGURE IS DETAIL NO. BOTTOM FIGURE IS SHEET NO.
- EF 1 — EQUIPMENT IDENTIFICATION
- 1 — KEYED NOTE IDENTIFICATION
- 1 — KITCHEN EQUIPMENT IDENTIFICATION

FIRE

- HOSE VALVE
- NRS GATE VALVE WITH SUPERVISION
- FLOW SWITCH
- FIRE RISER
- SPRINKLER HEAD
- F — FIRE SPRINKLER WATER

Harris & Associates
265 East 100 South Suite 350
Salt Lake City, Utah 84111-1604
Ph (801) 521-8564 Fax (801) 355-2938

VAN BOERUM & FRANK ASSOCIATES INC.
WWW.VBFA.COM CONSULTING ENGINEERS
Salt Lake City · Logan · St. George · Tempe · Pocatello
330 South 300 East 801.530.3148 T
Salt Lake City, UT 84111 801.530.3150 F
VBFA Project Number:8269_

KEYED NOTES

1. ---

Do not remove this notice. PROPERTY OF THE UNITED STATES GOVERNMENT END USER/MILITARY ONLY Properly destroy documents when no longer needed.

Utah National Guard
RENOVATION OF READINESS CENTER
BUILDING 5170
CAMP W.G. WILLIAMS, UTAH

SHEET TITLE
MECHANICAL LEGEND

REVISIONS	DATE	BY	DESCRIPTION
1	.	.	.
2			
3			
4			

DRAWN BY TJ | CHECKED BY CDH
PROJECT NO. 08032470 CW
DRAWING NO. M000
DATE DEC. 15, 2008

Utah National Guard - Camp Williams Bldg. 5170

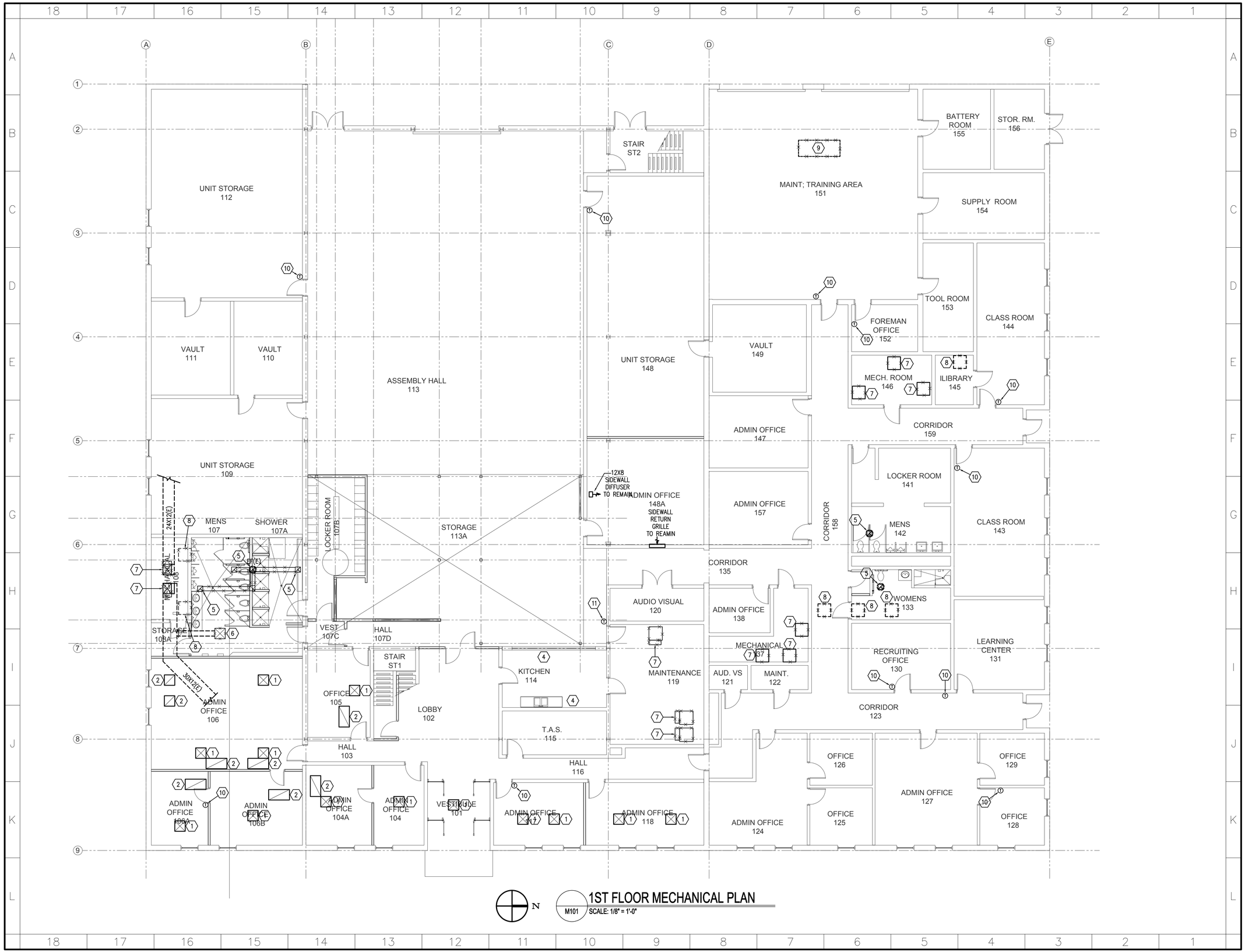

M101 1ST FLOOR MECHANICAL PLAN
SCALE: 1/8" = 1'-0"

Harris & Associates
265 East 100 South Suite 350
Salt Lake City, Utah 84111-1604
Ph (801) 521-8564 Fax (801) 355-2938

VAN BOERUM & FRANK ASSOCIATES INC.
CONSULTING ENGINEERS
WWW.VBFA.COM
Salt Lake City - Logan - St. George - Tempe - Pocatello
330 South 300 East 801.530.3148 T
Salt Lake City, UT 84111 801.530.3150 F
VBFA Project Number:8269_

KEYED NOTES

1. DIFFUSERS TO BE REMOVED AND REINSTALLED IN NEW CEILING GRID.
2. REMOVE EXISTING RETURN GRILLE AND DISCARD. REPLACE WITH NEW.
3. EXISTING FURNACE AND ASSOCIATED DUCT WORK TO REMAIN.
4. REMOVE EXISTING COOKING HOOD IN IT'S ENTIRETY. REMOVE EXHAUST DUCT UP THRU ROOF.
5. REMOVE EXISTING EXHAUST FAN, AND DUCTING & PREPARE FOR INSTALLATION OF NEW FAN AND DUCTING.
6. REMOVE EXISTING SUPPLY AIR DIFFUSER & DISCARD.
7. REMOVE EXISTING GAS FURNACE AND COOLING COIL IN IT'S ENTIRETY. PREPARE FOR INSTALLATION OF NEW FURNACE AND COOLING COIL IN SAME LOCATION. CONFIRM EXACT LOCATION.
8. REMOVE EXISTING ROOF MOUNTED A/C CONDENSING UNIT IN IT'S ENTIRETY. PREPARE FOR INSTALLATION OF NEW UNIT IN SAME LOCATION. CONFIRM EXACT LOCATION.
9. REMOVE EXISTING ROOF TOP UNIT IN IT'S ENTIRETY. PREPARE FOR INSTALLATION OF NEW ROOF TOP UNIT IN SAME LOCATION.
10. REMOVE EXISTING THERMOSTAT AND REPLACE WITH NEW. CONFIRM EXACT LOCATION.
11. REMOVE EXISTING THERMOSTAT IN IT'S ENTIRETY. PATCH AND REPAIR WALL TO MATCH SURROUNDINGS. RELOCATE AS INDICATED ON MECHANICAL PLANS. CONFIRM EXACT LOCATION.

Utah National Guard
RENOVATION OF READINESS CENTER
BUILDING 5170
CAMP W.G. WILLIAMS, UTAH

SHEET TITLE
1ST FLOOR MECHANICAL DEMOLITION PLAN

REVISIONS	DATE	BY	DESCRIPTION
△	.	.	.
△			
△			
△			

DRAWN BY TJ	CHECKED BY CDH
PROJECT NO. 08032470 CW	DRAWING NO. M101
DATE DEC. 15, 2008	

Utah National Guard - Camp Williams Bldg. 5170
Do not remove this notice.
PROPERTY OF THE UNITED STATES GOVERNMENT FOR OFFICIAL USE ONLY
Properly destroy documents when no longer needed.

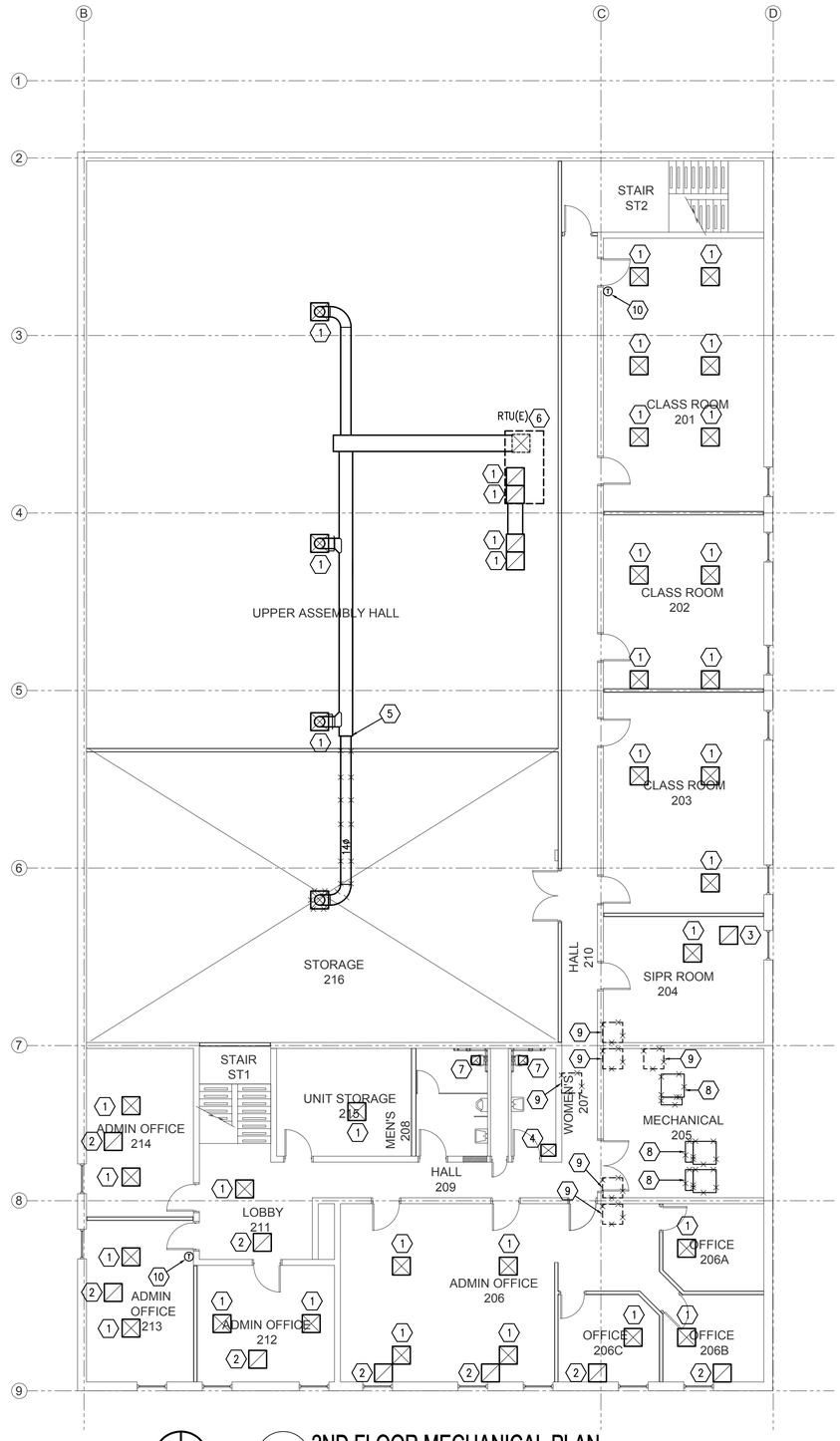

2ND FLOOR MECHANICAL PLAN

M102 SCALE: 1/8" = 1'-0"

Harris & Associates
265 East 100 South Suite 350
Salt Lake City, Utah 84111-1604
Ph (801) 521-8564 Fax (801) 355-2938

VAN BOERUM & FRANK ASSOCIATES INC.
CONSULTING ENGINEERS
WWW.VBFA.COM
Salt Lake City - Logan - St. George - Tempe - Pocatello
330 South 300 East 801.530.3148 T
Salt Lake City, UT 84111 801.530.3150 F
VBFA Project Number:8269_

KEYED NOTES

1. DIFFUSERS TO BE REMOVED AND REINSTALLED IN NEW CEILING GRID.
2. REMOVE EXISTING CEILING RETURN GRILLE AND DISCARD. REPLACE WITH NEW PER SCHEDULE.
3. REMOVE EXISTING CEILING RETURN GRILLE AND DISCARD.
4. REMOVE EXISTING EXHAUST DUCT IN ITS ENTIRETY FROM LOWER FLOOR TO ROOF. PATCH AND REPAIR WALL AND FLOOR AS REQUIRED. REMOVE ANY EXISTING ROOF MOUNTED EXHAUST FAN. PATCH AND REPAIR ROOF AS REQUIRED.
5. CAP EXISTING DUCT IN THIS AREA TO MAKE WAY FOR NEW SECOND FLOOR ADDITION. REMOVE EXISTING DUCT AND DIFFUSER DOWN STREAM.
6. REMOVE EXISTING ROOF TOP UNIT IN IT'S ENTIRETY. PREPARE FOR INSTALLATION OF NEW UNIT IN SAME LOCATION. CONFIRM EXACT LOCATION.
7. REMOVE EXISTING EXHAUST FAN IN IT'S ENTIRETY. TO BE REPLACED WITH NEW FAN IN SAME LOCATION. CONFIRM EXACT LOCATION.
8. REMOVE EXISTING GAS FURNACE AND COOLING COIL IN THEIR ENTIRETY. PREPARE FOR INSTALLATION OF NEW FURNACE AND COOLING COIL IN SAME LOCATION. CONFIRM EXACT LOCATION.
9. REMOVE EXISTING ROOF MOUNTED A/C CONDENSING UNIT IN ITS ENTIRETY. PREPARE FOR INSTALLATION OF NEW UNIT IN SAME LOCATION. CONFIRM EXACT LOCATION.
10. REMOVE EXISTING THERMOSTAT AND REPLACE WITH NEW IN SAME LOCATION. CONFIRM EXACT LOCATION.

Utah National Guard
RENOVATION OF READINESS CENTER
BUILDING 5170
CAMP W.G. WILLIAMS, UTAH

SHEET TITLE
2ND FLOOR MECHANICAL DEMOLITION PLAN

REVISIONS	DATE	BY	DESCRIPTION
△	.	.	.
△			
△			
△			

DRAWN BY TJ	CHECKED BY CDH
PROJECT NO. 08032470 CW	DRAWING NO. M102
DATE DEC. 15, 2008	

Utah National Guard - Camp Williams Bldg. 5170
Do not remove this notice. PROPERTY OF THE UNITED STATES GOVERNMENT FOR OFFICIAL USE ONLY Properly destroy documents when no longer needed.

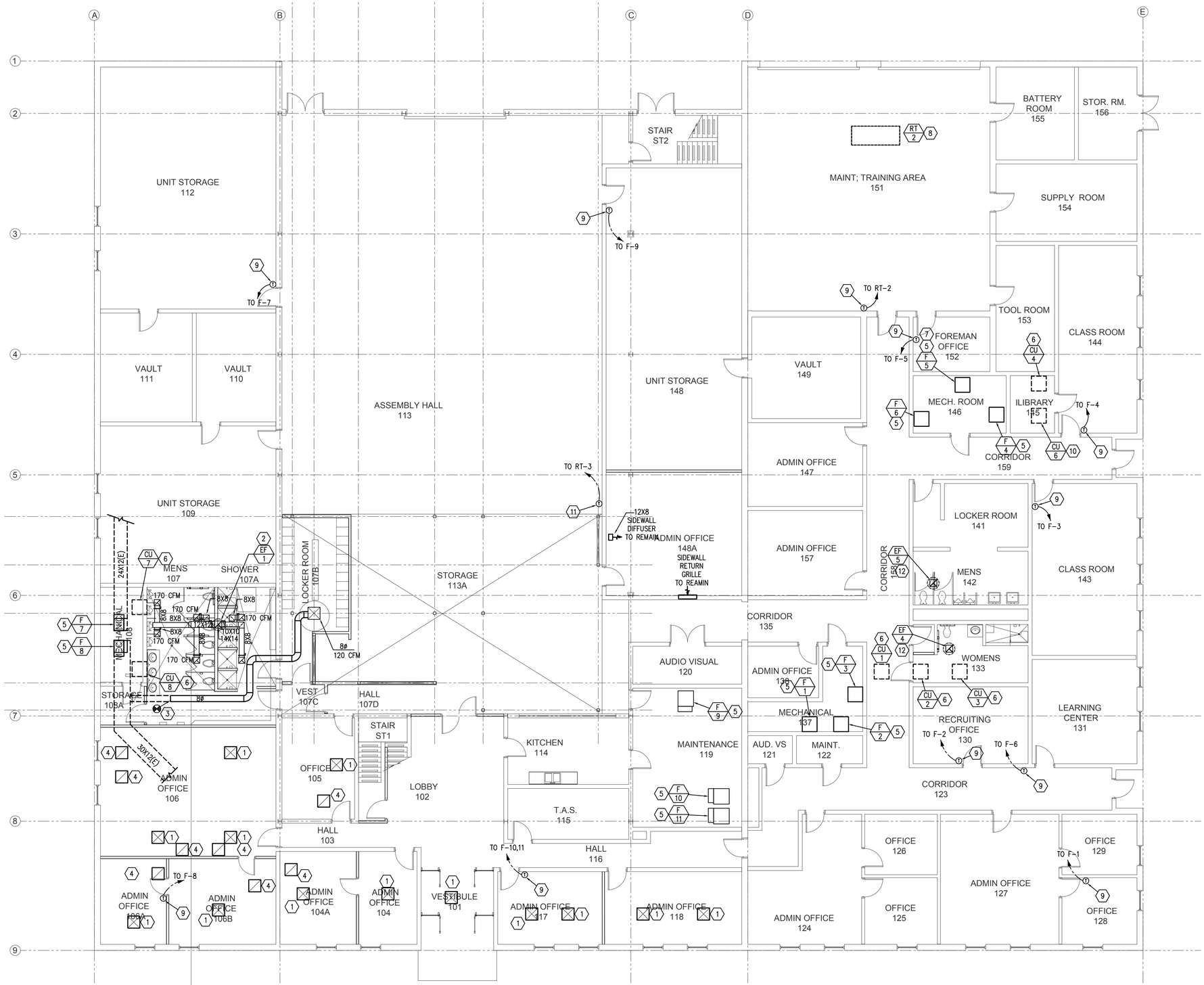

N

1ST FLOOR MECHANICAL PLAN

M201 SCALE: 1/8" = 1'-0"

Harris & Associates
265 East 100 South Suite 350
Salt Lake City, Utah 84111-1604
Ph (801) 521-8564 Fax (801) 355-2938

VAN BOERUM & FRANK ASSOCIATES INC. CONSULTING ENGINEERS
WWW.VBFA.COM
Salt Lake City · Logan · St. George · Tempe · Pocatello
330 South 300 East 801.530.3148 T
Salt Lake City, UT 84111 801.530.3150 F
VBFA Project Number:8269_

KEYED NOTES

1. INSTALL EXISTING DIFFUSERS IN NEW CEILING GRID. EXTEND AND OR MODIFY EXISTING DUCT AS REQUIRED.
2. INSTALL NEW EXHAUST FAN IN SAME LOCATION AS EXISTING EXHAUST FAN.
3. MAKE CONNECTION TO EXISTING SUPPLY AIR DUCT IN THIS AREA. CONFIRM EXACT LOCATION. EXTEND NEW DUCT TO NEW DIFFUSER IN NEW LOCATION.
4. PROVIDE AND INSTALL NEW RETURN GRILLE PER SCHEDULE.
5. INSTALL NEW FURNACE AND COOLING COIL IN SAME LOCATION AS OLD FURNACE AND COOLING COIL. PROVIDE NEW REFRIGERANT LINE CONNECTIONS AS REQUIRED. MAKE DUCT ALTERATIONS AS REQUIRED TO MAKE THE NEW FURNACE FIT INTO THE EXISTING DUCT CONFIGURATIONS. MAKE GAS PIPING CONNECTIONS TO NEW FURNACE. MAKE CONDENSATE DRAIN CONNECTIONS TO NEW FURNACE AND COOLING COIL AND ROUTE TO NEAREST DRAIN. MAKE THERMOSTAT CONNECTIONS TO NEW FURNACE CONTROLS AS REQUIRED.
6. INSTALL NEW AIR CONDITIONING CONDENSING UNIT ON ROOF IN SAME LOCATION AS OLD UNIT. MAKE ELECTRICAL AND REFRIGERANT LINE CONNECTIONS AS REQUIRED.
7. THIS FURNACE DOES NOT RECEIVE AN AIR CONDITIONING COIL.
8. INSTALL NEW ROOF TOP UNIT IN SAME LOCATION AS EXISTING UNIT. CONFIRM EXACT LOCATION. MAKE CONNECTIONS TO ELECTRICAL AND GAS PIPING AS REQUIRED. PROVIDE NEW CURB TO FIT NEW UNIT. MAKE CONNECTION TO EXISTING DUCT WORK. MAKE TRANSITIONS AS REQUIRED BY EXISTING CONDITIONS.
9. INSTALL NEW THERMOSTAT IN SAME LOCATION AS EXISTING. CONFIRM EXACT LOCATION.
10. INSTALL NEW AIR CONDITIONING UNIT ON ROOF IN NEW LOCATION. PROVIDE NEW ROOF CURB AND PLATFORM TO ACCOMMODATE NEW UNIT.
11. INSTALL NEW THERMOSTAT IN NEW LOCATION.
12. INSTALL NEW EXHAUST FAN IN SAME LOCATION AS EXISTING FAN. CONFIRM EXACT LOCATION.

Utah National Guard
RENOVATION OF READINESS CENTER
BUILDING 5170
CAMP W.G. WILLIAMS, UTAH

SHEET TITLE
1ST FLOOR MECHANICAL PLAN

REVISIONS	DATE	BY	DESCRIPTION
1	.	.	.
2			
3			
4			

DRAWN BY TJ
CHECKED BY CDH
PROJECT NO. 08032470 CW
DRAWING NO. M201
DATE DEC. 15, 2008

DRAWINGS AND SPECIFICATIONS AS INSTRUMENTS OF SERVICE ARE AND SHALL REMAIN THE PROPERTY OF VAN BOERUM & FRANK ASSOCIATES INC. CONSULTING ENGINEERS. THESE DRAWINGS AND SPECIFICATIONS ARE NOT TO BE USED IN WHOLE OR IN PART FOR ANY OTHER PROJECT WITHOUT THE WRITTEN AGREEMENT OF VAN BOERUM & FRANK ASSOCIATES INC. CONSULTING ENGINEERS. ALL RIGHTS RESERVED UNDER THE UNITED STATES COPYRIGHT LAWS.
Properly destroy documents when no longer needed.
Do not remove this notice.

Utah National Guard - Camp Williams Bldg. 5170

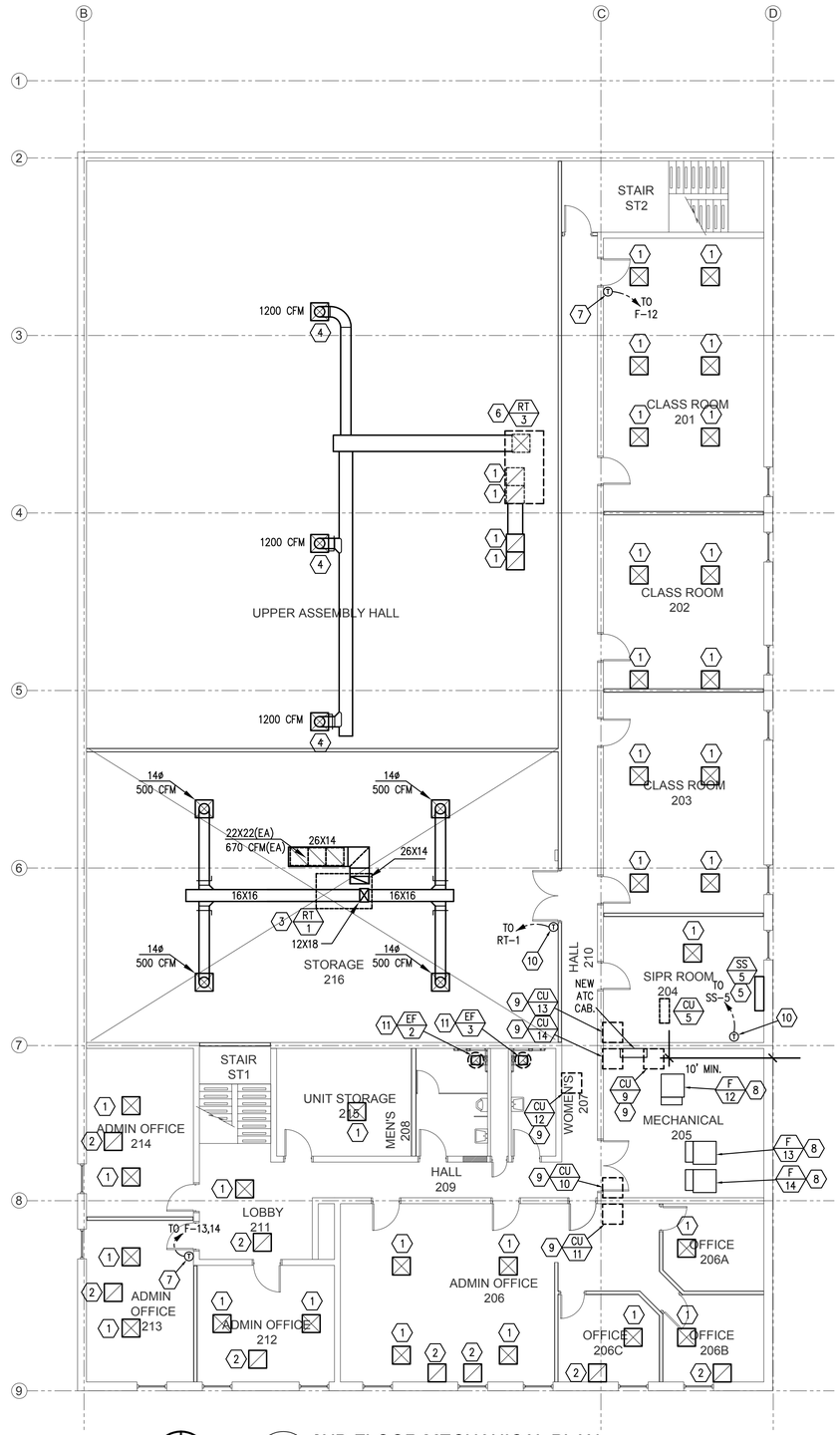

N

2ND FLOOR MECHANICAL PLAN

M202 SCALE: 1/8" = 1'-0"

Harris & Associates
265 East 100 South Suite 350
Salt Lake City, Utah 84111-1604
Ph (801) 521-8564 Fax (801) 355-2938

VAN BOERUM & FRANK ASSOCIATES INC.
WWW.VBFA.COM CONSULTING ENGINEERS
Salt Lake City - Logan - St. George - Tempe - Pocatello
330 South 300 East 801.530.3148 T
Salt Lake City, UT 84111 801.530.3150 F
VBFA Project Number:8269_

KEYED NOTES

1. INSTALL EXISTING DIFFUSER IN NEW CEILING GRID. EXTEND AND/OR MODIFY DUCT TO FIT NEW GRID.
2. PROVIDE AND INSTALL NEW CEILING RETURN GRILLE PER SCHEDULE.
3. PROVIDE AND INSTALL NEW ROOF TOP UNIT AND CURB IN NEW LOCATION.
4. RE-BALANCE EXISTING ROOF TOP UNIT SYSTEM TO PROVIDE AIR FLOWS LISTED.
5. MOUNT INDOOR COOLING UNIT AS HIGH AS POSSIBLE ON WALL.
6. INSTALL NEW ROOFTOP UNIT IN SAME LOCATION AS EXISTING UNIT. CONFIRM EXACT LOCATION.
7. INSTALL NEW THERMOSTAT IN SAME LOCATION AS EXISTING. CONFIRM EXACT LOCATION.
8. INSTALL NEW FURNACE AND COOLING COIL IN SAME LOCATION AS OLD FURNACE AND COOLING COIL. PROVIDE NEW REFRIGERANT LINE CONNECTIONS AS REQUIRED. MAKE DUCT ALTERATIONS AS REQUIRED TO MAKE THE NEW FURNACE FIT INTO THE EXISTING DUCT CONFIGURATIONS. MAKE GAS PIPING CONNECTIONS TO NEW FURNACE. MAKE CONDENSATE DRAIN CONNECTIONS TO NEW FURNACE AND COOLING COIL AND ROUTE TO NEAREST DRAIN. MAKE THERMOSTAT CONNECTIONS TO NEW FURNACE CONTROLS AS REQUIRED.
9. INSTALL NEW AIR CONDITIONING CONDENSING UNIT ON ROOF IN SAME LOCATION AS OLD UNIT. MAKE ELECTRICAL AND REFRIGERANT LINE CONNECTIONS AS REQUIRED.
10. INSTALL NEW THERMOSTAT IN NEW LOCATION.
11. INSTALL NEW EXHAUST FAN IN SAME LOCATION AS EXISTING. CONFIRM EXACT LOCATION.

Utah National Guard
RENOVATION OF READINESS CENTER
BUILDING 5170
CAMP W.G. WILLIAMS, UTAH

SHEET TITLE
2ND FLOOR MECHANICAL PLAN

REVISIONS	DATE	BY	DESCRIPTION
△	.	.	.
△			
△			
△			

DRAWN BY TJ	CHECKED BY CDH
PROJECT NO. 08032470 CW	DRAWING NO. M202
DATE DEC. 15, 2008	

Utah National Guard - Camp Williams Bldg. 5170
Do not remove this notice. PROPERTY OF THE UNITED STATES GOVERNMENT FOR OFFICIAL USE ONLY Properly destroy documents when no longer needed.

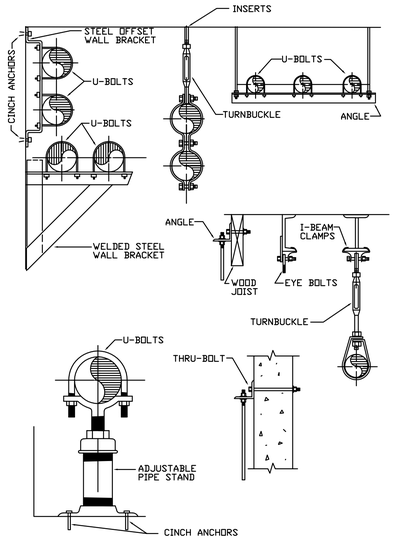

11 M501 **TYPICAL PIPE SUPPORT DETAIL**
NO SCALE

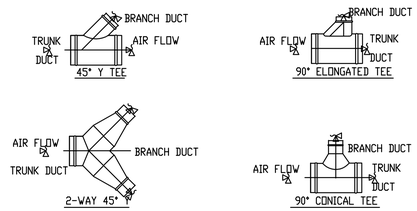

6 M501 **ROUND DUCT BRANCH TAKE-OFF DETAILS**
NO SCALE

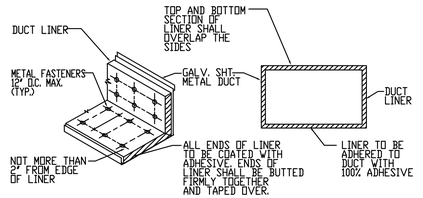

1 M501 **DUCT LINER DETAIL**
NO SCALE

NOTE: ANCHOR ROOFTOP UNIT TO PREFAB ROOF CURB PER SEISMIC RESTRAINT REQUIREMENTS.

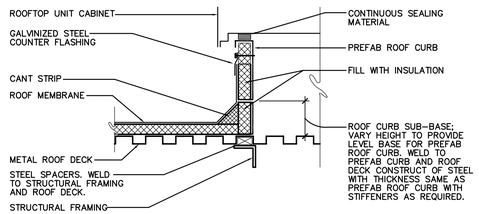

7 M501 **ROOFTOP UNIT CURB DETAIL**
NO SCALE

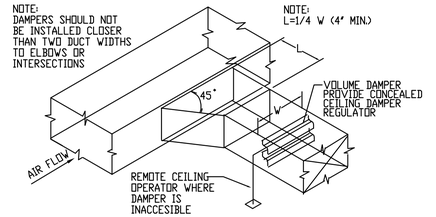

2 M501 **BRANCH DUCT TAKE-OFF & DAMPER DETAIL**
NO SCALE

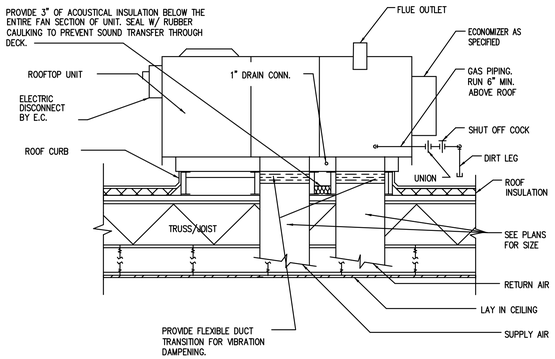

13 M501 **ROOFTOP UNIT WITH GAS FIRED HEATING**
NO SCALE

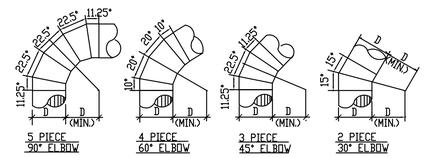

8 M501 **ROUND DUCT ELBOW DETAILS**
NO SCALE

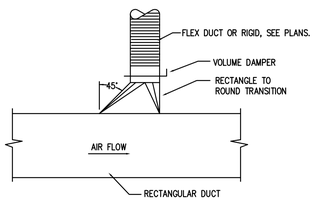

9 M501 **HIGH EFFICIENCY TAKE-OFF DETAIL**
NO SCALE

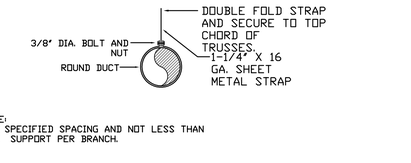

NOTE:
USE SPECIFIED SPACING AND NOT LESS THAN ONE SUPPORT PER BRANCH.

3 M501 **ROUND DUCT SUPPORT DETAIL**
NO SCALE

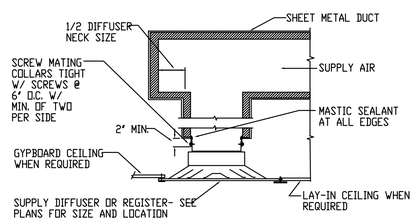

4 M501 **TYPICAL CEILING DIFFUSER DETAIL**
NO SCALE

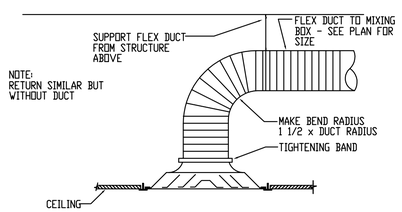

10 M501 **DIFFUSER CONNECTION DETAIL-A**
NO SCALE

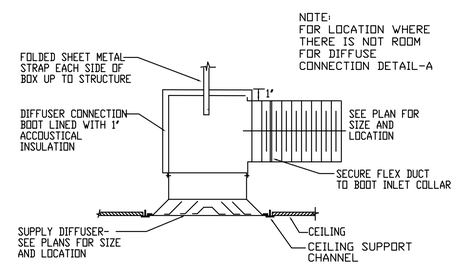

5 M501 **SUPPLY DIFFUSER W/ FLEX DUCT DETAIL-B**
NO SCALE

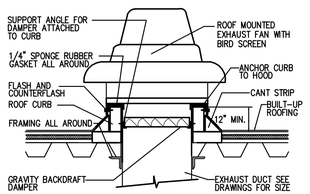

14 M501 **ROOF MOUNTED EXHAUST FAN**
NO SCALE

Harris & Associates
265 East 100 South Suite 350
Salt Lake City, Utah 84111-1604
Ph (801) 521-8564 Fax (801) 355-2938

VAN BOERUM & FRANK ASSOCIATES INC.
WWW.VBFA.COM CONSULTING ENGINEERS
Salt Lake City · Logan · St. George · Tempe · Pocatello
330 South 300 East 801.530.3148 T
Salt Lake City, UT 84111 801.530.3150 F
VBFA Project Number:8269_

KEYED NOTES

1. ---

Do not remove this notice. PROPERTY OF THE UNITED STATES GOVERNMENT - END USER MUST DESTROY ALL COPIES WHEN NO LONGER NEEDED

Utah National Guard
RENOVATION OF READINESS CENTER
BUILDING 5170
CAMP W.G. WILLIAMS, UTAH

SHEET TITLE
MECHANICAL DETAILS

REVISIONS	DATE	BY	DESCRIPTION
1	.	.	.
2			
3			
4			

DRAWN BY TJ
CHECKED BY CDH
PROJECT NO. 08032470 CW
DATE DEC. 15, 2008
DRAWING NO. M501

Utah National Guard - Camp Williams Bldg. 5170

SCHEDULE FOR TYPICAL CONNECTIONS TO STRUCTURAL SUPPORTING MEMBERS

TYPE	MAX. LOAD CAPACITY POUNDS	PHILLIP'S REDHEAD ANCHORS TO CONC. LT. WT.	PHILLIP'S REDHEAD ANCHORS TO CONC. HARD ROCK	CONC. CAST-IN PLACE INSERT	BOLT OF STL.BM. CLAMP
I II	500 1000	3/8" 3/8"	3/8" 3/8"	3/8" 1/2"	3/8" 3/8"
III IV	1500 2000	3/8" 1/2"	3/8" 1/2"	1/2" 5/8"	3/8" 1/2"
V VI	3000 4000	2-1/2" 2-5/8"	2-1/2" 2-5/8"	2-1/2" 2-5/8"	5/8" 5/8"

TYPE	SPREADER SIZE	BOLT THRU WOOD	SPAN-CRETE ROD	ANGLE TO SUPPORTING STRUCTURAL MEMBER	ROD SIZE FOR PIPES
I II	C4X5.4 C5X6.7	1/2" 3/4"	3/8" 3/8"	3X2X1/4"X0'-3" LLH 3-1/2X2-1/2X5/16X0'-3" LLH	1/2" 1/2"
III IV	C6X8.5 C8X11.5	*** ***	1/2" 1/2"	3-1/2X2-1/2X7/16X0'-4" LLH 5X3X1/2X0'-4" LLH	5/8" 3/4"
V VI	C9X13.4 C10X15.3	***		2-3-1/2X2-1/2X7/16X0'-4" 2-5X3X1/2X0'-4"	7/8" * 7/8" **

NOTES:

1 FOR SLABS LESS THAN 5" THICK ONLY, THIN SLAB INSERTS MAY BE USED.

*2 FOR USE W/CONC. CAST-IN PLACE INSERTS OR PHILLIPS REDHEAD IN HARD ROCK ONLY.

**3 FOR USE WITH CONC. CAST-IN PLACE INSERTS ONLY.

***4 WHERE TYPE III CONNECTIONS ARE REQUIRED FOR WOOD SYSTEMS, TYPE II CONNECTIONS SHALL BE USED WITH REDUCED RESTRAINT SPACING TO 20 FT. O.C. WHERE TYPE IV CONNECTIONS ARE REQUIRED FOR WOOD SYSTEMS, TYPE II CONNECTIONS SHALL BE USED WITH REDUCED RESTRAINT SPACING TO 15 FT. O.C. WHERE TYPE V CONNECTIONS ARE REQUIRED FOR WOOD SYSTEMS, TYPE II CONNECTIONS SHALL BE USED WITH REDUCED RESTRAINT SPACING TO 10 FT. O.C.

5 THE MECHANICAL CONTRACTOR SHALL SUBMIT SHOP DRAWINGS TO THE STRUCTURAL ENGINEER AND THEN TO THE MECHANICAL ENGINEER, SHOWING CONNECTION TYPE AND LOCATION OF ALL RESTRAINT CONNECTIONS TO THE STRUCTURE.

6 FOR ESSENTIAL FACILITIES WHERE CONCRETE ANCHOR BOLTS OF THE "REDHEAD" EXPANSION TYPE ARE LOADED IN PULL OUT, 50 PERCENT OF THE BOLTS (ALTERNATE BOLTS IN ANY GROUP ARRANGEMENT) SHALL BE PROOF TESTED TO TWICE THE ALLOWABLE LOAD. IF THERE ARE FAILURES, THE IMMEDIATELY ADJACENT BOLTS MUST THEN ALSO BE TESTED.

& "HILTI" AND "RAMSET" ANCHORS ARE EQUAL SUBSTITUTES FOR "REDHEAD".

PIPE SEISMIC BRACING SCHEDULE

PIPE SIZE	HANGER ROD SIZE	MAX. ROD LENGTH	HANGER TYPE	BOLTS TO ANGLE	ANGLE CLIP	ANGLE BRACE	ANCHOR CONN. TYPE	ANCHOR BOLT OR INSERT
1-1/2"	1/2"	25"	CLEVIS	3/8"	3x3x1/4	2x2x16GA	I	3/8"
2"	1/2"	25"	CLEVIS	3/8"	3x3x1/4	2x2x16GA	I	3/8"
2-1/2"	5/8"	31"	CLEVIS	3/8"	3x3x1/4	2x2x16GA	I	3/8"
3"	5/8"	31"	CLEVIS	3/8"	3x3x1/4	2-1/2x2-1/2x 16 GA	II	1/2"
3-1/2"	5/8"	31"	CLEVIS	3/8"	3x3x1/4	2-1/2x2-1/2x 16 GA	II	1/2"
4"	3/4"	37"	CLEVIS	3/8"	3x3x1/4	2-1/2x2-1/2x 16 GA	II	1/2"
5"	3/4"	37"	CLEVIS	1/2"	5x3x1/2	2-1/2x2-1/2x 16 GA	III	3/4"
6"	3/4"	37"	CLEVIS	5/8"	5x3x1/2	2-1/2x2-1/2x 16 GA	IV	3/4"
8"	7/8"	43"	CLEVIS	5/8"	2-5x3x1/2	3x3x12 GA	V	2-5/8"
10"	7/8"	43"	CLEVIS	3/4"	2-5x3x1/2	3x3x12 GA	VI	2-5/8"

FOR ANCHOR CONNECTIONS SEE LIST.

SEE PIPE BRACING DETAIL

*1-5/8"x1-5/8"x12 GA CHANNEL MAY BE USED

DUCT BRACING GENERAL NOTES

1 DETAILS SHOWN PROVIDE GENERAL GUIDELINES FOR A LATERAL BRACING SYSTEM. A TYPICAL VERTICAL SUPPORT SYSTEM MUST ALSO BE USED.

2 BRACE ALL RECTANGULAR DUCTS OF AREA 6 SQ. FT. AND LARGER. BRACE ALL ROUND DUCTS 28" IN DIAMETER AND LARGER.

3 CABLE RESTRAINTS AND BRACING NOT TO EXCEED 30'-0" CENTERS AND SHALL BE PROVIDED AT EACH TURN, AT THE END OF EACH DUCT RUN, AND ON EACH SIDE OF FLEXIBLE CONNECTIONS. BRACE POINTS SHALL NOT EXCEED 15'-0" FROM FLEXIBLE CONNECTION.

4 WHEN COMBINING DUCT GROUPS ON COMMON BRACING SYSTEMS, USE WEIGHTS AND DIMENSIONS FROM BRACING LIST.

5 ALL HOLES IN ANGLES ARE TO BE 1/16 INCH OVERSIZED. PLACE STANDARD CUT WASHERS BETWEEN SHEET METAL ANGLES AND NUT.

6 DUCTS NOT BRACED SHALL BE INSTALLED WITH A 6" MIN. CLEARANCE TO VERTICAL CEILING HANGER WIRES.

7 REHEAT BOXES AND OTHER ITEMS WHICH ATTACH TO THE DUCT SYSTEM SHALL BE BRACED INDEPENDENTLY OF THE DUCTS.

8 ALL SHEET METAL FOR BRACING TO BE FY = 33 KSI MINIMUM. GAUGE FOR SHEET METAL BRACING SHALL BE AS FOLLOWS:

16 GA = (0.0598 INCH)
14 GA = (0.0747 INCH)
12 GA = (0.1046 INCH)

9 MINIMUM DISTANCE FROM EDGE OF ANGLE TO BOLTS SHALL BE AS FOLLOWS:

BOLT DIAMETER	DISTANCE FROM EDGE
1/4" TO 1/2"	1"
5/8"	1 1/8"
3/4"	1 1/4"
7/8"	1 1/2"

10 DO NOT FASTEN RESTRAINT SYSTEM TO TWO DISSIMILAR PARTS OF A BUILDING THAT MAY RESPOND IN A DIFFERENT MODE DURING AN EARTHQUAKE. FOR EXAMPLE, A WALL AND A ROOF.

11 ALTERNATE EVERY OTHER CABLE RESTRAINT IN OPPOSITE DIRECTION (SHOWN DOTTED).

PIPE BRACING GENERAL NOTES

1 DETAILS SHOWN PROVIDE GENERAL GUIDELINES FOR A LATERAL BRACING SYSTEM. A TYPICAL VERTICAL SUPPORT SYSTEM MUST ALSO BE USED.

2 BRACE ALL PIPES 1-1/2" I.D. AND LARGER.

3 CABLE RESTRAINTS AND BRACING NOT TO EXCEED 30'-0" CENTERS AND SHALL BE PROVIDED AT ALL CHANGES IN DIRECTION OF PIPE. ALL DROPS TO EQUIPMENT, AND ON EACH SIDE OF FLEXIBLE CONNECTIONS. BRACE POINTS SHALL NOT EXCEED 15'-0" FROM FLEXIBLE CONNECTION.

4 ALL HOLES IN ANGLES ARE TO BE 1/16 INCH OVERSIZED. PLACE STANDARD CUT WASHERS BETWEEN SHEET METAL ANGLES AND NUT.

5 EQUIPMENT WHICH ATTACHES TO THE PIPING SYSTEM SHALL BE BRACED INDEPENDENTLY OF THE PIPES.

6 ALL SHEET METAL FOR BRACING TO BE FY=33 KSI MINIMUM. GAUGE FOR SHEET METAL BRACING SHALL BE AS FOLLOWS:

16 GA = (0.0598 INCH)
14 GA = (0.0747 INCH)
12 GA = (0.1046 INCH)

7 MINIMUM DISTANCE FROM EDGE OF ANGLE TO BOLTS SHALL BE AS FOLLOWS:

BOLT DIAMETER	DISTANCE FROM EDGE
1/4" TO 1/2"	1"
5/8"	1 1/8"
3/4"	1 1/4"
7/8"	1 1/2"

8 DO NOT FASTEN RESTRAINT SYSTEM TO TWO DISSIMILAR PARTS OF A BUILDING THAT MAY RESPOND IN A DIFFERENT MODE DURING AN EARTHQUAKE. FOR EXAMPLE, A WALL AND A ROOF.

9 PROVIDE LARGE ENOUGH PIPE SLEEVES THROUGH WALLS OR FLOORS TO ALLOW FOR ANTICIPATED DIFFERENTIAL MOVEMENTS.

10 DO NOT FASTEN ONE RIGID PIPING SYSTEM TO TWO DISSIMILAR PARTS OF A BUILDING THAT MAY RESPOND IN A DIFFERENT MODE DURING AN EARTHQUAKE. FOR EXAMPLE, A WALL AND A ROOF.

11 BRACING DETAILS, SCHEDULE AND NOTES ARE TO BE USED WITH THE FOLLOWING TYPES OF PIPE: STEEL PIPE SCHEDULE 40 AND 80, COPPER PIPE TYPE K,L,M (ONLY SILVER SOLDERED BRAZED JOINTS TO BE USED WITH COPPER PIPE).

12 FOR GAS PIPING, THE BRACING DETAILS, SCHEDULES AND NOTES MAY BE USED EXCEPT THAT RESTRAINTS SHALL BE INSTALLED AT EVERY 20'-0" O.C. ALSO ALL PIPE 1 INCH AND LARGER SHALL BE BRACED.

13 WASTE, VENT AND ROOF DRAINAGE PIPING SYSTEMS ARE EXCLUDED FROM THE RESTRAINT GUIDELINES.

14 ALTERNATE EVERY OTHER CABLE RESTRAINT IN OPPOSITE DIRECTION (SHOWN DOTTED).

DOMESTIC STORAGE TANK ANCHORAGE (2 / ME303)
NO SCALE

NOTES:

1. CABLES, THIMBLES, CLIPS, GROMMETS & FLAT WASHERS ARE TO BE FURNISHED BY RESTRAINT MANUFACTURER. ALL OTHER HARDWARE TO BE PROVIDED BY CONTRACTOR.

2. ENTIRE SYSTEM TO BE EQUAL TO AMBER BOOTH.

3. CABLE CLIPS MUST BE ORIENTED AS SHOWN WITH SHORT END OF CABLE ON THE CURVED PART OF THE CLIP.

CABLE SCHEDULE

CABLE DIA.	CABLE DESIGN	A	B	C	BOLT SIZE	ALLOWABLE LOAD (lbf)	BREAKING STRENGTH (lbf)
1/8"	7X19 GALV.	5-1/4"	1-5/8"	5/8"	3/8"	660	2000
3/16"	7X19 GALV.	5-3/4"	1-7/8"	5/8"	3/8"	1400	4200
1/4"	7X19 GALV.	6-3/4"	2-3/8"	11/16"	3/8"	2330	7000
5/16"	7X19 GALV.	7-3/8"	2-5/8"	13/16"	5/8"	3260	9800
3/8"	7X19 GALV.	8-7/8"	3-1/4"	1"	5/8"	4800	14400
7/16"	6X19 IWRC	17"	3-5/8"	1"	5/8"	5920	17800
1/2"	6X19 IWRC	18"	3-7/8"	1-1/8"	3/4"	7660	23000

CABLE RESTRAINT DETAIL (3 / ME303)
NO SCALE

EQUIPMENT ANCHORAGE TO CONCRETE FLOOR LIST

EQUIPMENT WEIGHT PER ANCHOR BOLT	MINIMUM ANCHOR DIAMETER (INCHES)	MINIMUM DEPTH OF EMBEDMENT (INCHES)	ICBO ALLOWABLE SHEAR PER BOLT (LBF)	ICBO ALLOWABLE TENSION PER BOLT (LBF)
UP TO 150#	1/4"	1-1/2"	380	215
300#	3/8"	2-1/2"	860	355
600#	1/2"	3"	1710	665
900#	5/8"	4-1/2"	2500	855
1300#	3/4"	6"	3050	1585
2000#	1"	6"	6280	2020

1 THE SIZES AND EMBEDMENT ARE FOR ANCHORS INSTALLED IN STONE AGGREGATE CONCRETE HAVING A FC = 2000 PSI ULTIMATE COMPRESSIVE STRENGTH AT THE TIME OF INSTALLATION. ALL BOLTS ARE TO BE INSTALLED PER MANUFACTURER INSTRUCTIONS AND TO BE INSTALLED NO CLOSER THAN 12 DIAMETERS ON CENTER AND WITH A MINIMUM EDGE DISTANCE OF 6 DIAMETERS.
2 EACH EQUIPMENT SUPPORT LEG WILL BE ANCHORED AND ALL EQUIPMENT WILL BE ANCHORED AT ALL CORNERS. A MINIMUM OF TWO ANCHORS WILL BE REQUIRED FOR ALL EQUIPMENT.
3 EQUIPMENT WEIGHT PER ANCHOR IS THE TOTAL OPERATING OF EQUIPMENT PLUS BASES AND SUPPORTS DIVIDED BY THE NUMBER OF ANCHORS.
4 ANCHORAGE IS TO PREVENT HORIZONTAL MOVEMENT, IF EQUIPMENT GEOMETRY IS SUCH THAT THE VERTICAL DISTANCE FROM SUPPORT LEG TO CENTER OF GRAVITY IS GREATER THAN FOUR TIMES THE SHORTEST DISTANCE FROM A SUPPORT LEG TO THE CENTER OF GRAVITY, ADDITIONAL ANCHORAGE AND RESTRAINTS WILL BE REQUIRED TO PREVENT OVERTURNING.

PIPING RESTRAINT DETAIL (1 / ME303)
NO SCALE

Harris & Associates
265 East 100 South Suite 350
Salt Lake City, Utah 84111-1604
Ph (801) 521-8564 Fax (801) 355-2938

VAN BOERUM & FRANK ASSOCIATES INC. CONSULTING ENGINEERS
WWW.VBFA.COM
Salt Lake City · Logan · St. George · Tempe · Pocatello
330 South 300 East 801.530.3148 T
Salt Lake City, UT 84111 801.530.3150 F
VBFA Project Number:8269_

KEYED NOTES

1. ---

Utah National Guard
RENOVATION OF READINESS CENTER
BUILDING 5170
CAMP W.G. WILLIAMS, UTAH

SHEET TITLE: MECHANICAL DETAILS

REVISIONS	DATE	BY	DESCRIPTION
△	.	.	.
△			
△			
△			

DRAWN BY: TJ
CHECKED BY: CDH
PROJECT NO.: 08032470 CW
DATE: DEC. 15, 2008
DRAWING NO.: M502

Properly destroy documents when no longer needed.
PROPERTY OF THE UNITED STATES GOVERNMENT - FOR OFFICIAL USE ONLY
Do not remove this notice.
Utah National Guard - Camp Williams Bldg. 5170

PACKAGED ROOFTOP UNIT SCHEDULE

ID	MANUFACTURER AND MODEL NUMBER	SUPPLY FAN AIRFLOW RATE (CFM)	SUPPLY FAN EXTERNAL STATIC PRESSURE (IN. WATER)	HEATING SECTION HEATING LOAD (BTU/H)	HEATING SECTION AFUE	HEATING SECTION FUEL	COOLING SECTION COOLING LOAD (BTU/H)	COOLING SECTION COOLING LOAD (TONS)	COOLING SECTION EER	COOLING SECTION SEER	ELECTRICAL TOTAL MCA	ELECTRICAL TOTAL MOCP	ELECTRICAL SINGLE POINT VOLT/PH/HZ	MINIMUM OUTSIDE AIR (CFM)	NOTES
RTU-1	CARRIER 48TCE	1600	0.5	115,000	81%	NAT. GAS	59,000	5	11	13	30.7	45	208/230/3/60	240	1,2,3,4,5,6,8
RTU-2	TRANE GRCA30GDKF0	3,000	0.75	300,000	80%	NAT. GAS	N/A	N/A	N/A	N/A	6	11	208/230/3/60	3,000	1,3,6,7
RTU-3	TRANE GRCA30GDKF0	3,000	0.75	300,000	80%	NAT. GAS	N/A	N/A	N/A	N/A	6	11	208/230/3/60	3,000	1,3,6,7

1. SELECTION BASED ON 4200 FT.
2. PROVIDE WITH THRU-THE-BASE CONNECTIONS
3. PROVIDE WITH POWERED CONVENIENCE OUTLET AND NON-FUSED DISCONNECT.
4. PROVIDE WITH ENTHALPY CONTROLLED ECONOMIZER.
5. PROVIDE WITH WINTER START KIT AND LOW AMBIENT OPERATION.

EXHAUST FAN SCHEDULE

ID	MANUFACTURER AND MODEL NUMBER	LOCATION	TYPE	AIR TYPE	AIR MAXIMUM AIRFLOW RATE (CFM)	AIR STATIC PRESSURE (IN. WATER)	FAN SPEED (RPM)	ELECTRICAL MOTOR SIZE (HP)	ELECTRICAL MOTOR BHP (HP)	ELECTRICAL VOLT/PH/HZ	PHYSICAL LENGTH/ WIDTH/ HEIGHT/WT (IN, LBS)	NOTES
EF-1	COOK #120C2B	RESTROOM	ROOF	EXHAUST	1053	0.25	1151	1/6	0.11	120/1	29/229/28/55	1, 2, 3
EF-2	COOK #70C15DL	RESTROOM	ROOF	EXHAUST	100	0.25	1700	1/20	86W	120/1	14/14/14/20	1, 2, 3
EF-3	COOK #70C15DL	RESTROOM	ROOF	EXHAUST	100	0.25	1700	1/20	86W	120/1	14/14/14/20	1, 2, 3
EF-4	COOK #70C15DL	RESTROOM	ROOF	EXHAUST	100	0.25	1700	1/20	86W	120/1	14/14/14/20	1, 2, 3
EF-5	COOK #90C10DM	RESTROOM	ROOF	EXHAUST	200	0.25	1100	1/25	88W	120/1	19/19/17/28	1, 2, 3

1. SPUN ALUMINUM, ROOF MOUNTED, BELT DRIVEN, DOWNBLAST CENTRIFUGAL
2. PROVIDE WITH DISCONNECT, ROOF CURB (AS REQUIRED) AND GRAVITY BACKDRAFT DAMPER.

AIR COOLED CONDENSING UNIT SCHEDULE

ID	MANUFACTURER AND MODEL NUMBER	REFRIGERANT	TOTAL CAPACITY (BTUH)	COMPRESSOR RATED LOAD AMPS (RLA)	CONDENSER FAN FULL LOAD AMPS (FLA)	MINIMUM CIRCUIT AMPACITY (MCA)	MOCP	EER	VOLT / PH	HEIGHT / WIDTH / DEPTH (IN)	WEIGHT (LBS)	NOTES
CU-1	CARRIER 24ACB360	R410A	60,000	17.7	1.2	23.3	40	14	208/230/3	35/39	261	2, 3
CU-2	CARRIER 24ACB342	R410A	42,000	13.5	1.2	18.1	30	14	208/230/3	32/33	210	2, 3
CU-3	CARRIER 24ACB342	R410A	42,000	13.5	1.2	18.1	30	14	208/230/3	32/33	210	2, 3
CU-4	CARRIER 24ACB330	R410A	30,000	10.1	0.75	13.4	20	14	208/230/3	26/29	149	2, 3
CU-5	MITSUBISHI MUY-D30NA	R410A	30,700	16	0.93	21	25	16	208/230/1	34/13/34	126	1, 2
CU-6	CARRIER 24ACB330	R410A	30,000	10.1	0.75	13.4	20	14	208/230/3	26/29	149	2, 3
CU-7	CARRIER 24ACB360	R410A	60,000	17.7	1.2	23.3	40	14	208/230/3	35/39	261	2, 3
CU-8	CARRIER 24ACB360	R410A	60,000	17.7	1.2	23.3	40	14	208/230/3	35/39	261	2, 3
CU-9	CARRIER 24ACB324	R410A	24,000	13.5	0.75	17.6	25	14	208/230/1	26/25	171	2, 3
CU-10	CARRIER 24ACB342	R410A	42,000	13.5	1.2	18.1	30	14	208/230/3	32/33	210	2, 3
CU-11	CARRIER 24ACB342	R410A	42,000	13.5	1.2	18.1	30	14	208/230/3	32/33	210	2, 3
CU-12	CARRIER 24ACB360	R410A	60,000	17.7	1.2	23.3	40	14	208/230/3	35/39	261	2, 3
CU-13	CARRIER 24ACB342	R410A	42,000	13.5	1.2	18.1	30	14	208/230/3	32/33	210	2, 3
CU-14	CARRIER 24ACB342	R410A	42,000	13.5	1.2	18.1	30	14	208/230/3	32/33	210	2, 3

1. PROVIDE MANUFACTURER'S UNIT ROOF MOUNTING PAD. COORDINATE WITH ROOFING SUBCONTRACTOR TO COMPLY WITH ROOF WARRANTY.
2. PROVIDE WITH LOW AMBIENT CONTROLS FOR OPERATION DOWN TO 0 DEGREES F.

COMPUTER SERVER ROOM UNIT SCHEDULE

ID	MANUFACTURER AND MODEL NUMBER	SUPPLY FAN AIR FLOW RATE (CFM)	COOLING SENSIBLE MINIMUM COOLING LOAD (BTUH)	COOLING SEER	COOLING SENSIBLE HEAT FACTOR	ELECTRICAL SUPPLY FAN FLA	ELECTRICAL SUPPLY FAN MOTOR MCA (AMP)	ELECTRICAL V/PH	NOTES
SS-5	MITSUBISHI MSY-D30NA	763	30,700	16	0.64	0.76	1	208/230/1	1,2,3,4,5,6

1. SELECTION BASED ON 4200 FT
2. PROVIDE WITH VIBRATION ISOLATORS AND MOUNTING BRACKET.
3. PIPE CONDENSATE TO ROOF BELOW.
4. SEE SPECIFICATIONS FOR REQUIRED COMPONENTS.
5. WALL MOUNTED
6. PROVIDE WITH WIRELESS REMOTECONTROLLER AND THERMOSTAT.

GAS FIRED FURNACE SCHEDULE

ID	MANUFACTURER AND MODEL NUMBER	ASSOCIATED CONDENSING UNIT	INPUT LOAD MAX. (BTU)	OUTPUT LOAD MAX. (BTU)	NOMINAL AIRFLOW RATE (CFM)	EXTERNAL STATIC PRESSURE DROP (IN H20)	AFUE (%)	FLUE/ COMB.AIR SIZE (IN)	GAS CONNECTION (NPT)	ELECTRICAL MAX UNIT AMPS	ELECTRICAL MOCP	ELECTRICAL VOLT/PH	PHYSICAL WIDTH/ DEPTH/ HEIGHT (IN)	NOTES
F-1	CARRIER 58MXB100	CU-1	100,000	94,000	1930	0.5	93	3	1/2	14.8	20	115/1	20/27/40	1,2,3,4
F-2	CARRIER 58MXB100	CU-2	100,000	94,000	1930	0.5	93	3	1/2	14.8	20	115/1	20/27/40	1,2,3,4
F-3	CARRIER 58MXB100	CU-3	100,000	94,000	1930	0.5	93	3	1/2	14.8	20	115/1	20/27/40	1,2,3,4
F-4	CARRIER 58MXB80	CU-4	80,000	75,000	1525	0.5	93	2 1/2	1/2	10.0	15	115/1	20/27/40	1,2,3,4
F-5	CARRIER 58MXB80	N/A	80,000	75,000	1525	0.5	93	2 1/2	1/2	10.0	15	115/1	20/27/40	1,2,3
F-6	CARRIER 58MXB80	CU-6	80,000	75,000	1525	0.5	93	2 1/2	1/2	10.0	15	115/1	20/27/40	1,2,3
F-7	CARRIER 58MXB140	CU-7	140,000	129,000	1990	0.5	92.6	3	1/2	14.3	20	115/1	20/27/40	1,2,3,4
F-8	CARRIER 58MXB140	CU-8	140,000	129,000	1990	0.5	92.6	3	1/2	14.3	20	115/1	20/27/40	1,2,3,4
F-9	CARRIER 58MXB80	CU-9	80,000	75,000	1525	0.5	93	2 1/2	1/2	10.0	15	115/1	20/27/40	1,2,3,4
F-10	CARRIER 58MXB80	CU-10	100,000	94,000	1600	0.5	93	3	1/2	10.2	15	115/1	20/27/40	1,2,3,4
F-11	CARRIER 58MXB80	CU-11	100,000	94,000	1600	0.5	93	3	1/2	10.2	15	115/1	20/27/40	1,2,3,4
F-12	CARRIER 58MXB140	CU-12	140,000	129,000	1990	0.5	92.6	3	1/2	14.3	20	115/1	20/27/40	1,2,3,4
F-13	CARRIER 58MXB140	CU-13	140,000	129,000	1990	0.5	92.6	3	1/2	14.3	20	115/1	20/27/40	1,2,3,4
F-14	CARRIER 58MXB140	CU-14	140,000	129,000	1990	0.5	92.6	3	1/2	14.3	20	115/1	20/27/40	1,2,3,4

1. FURNACE INPUT AND OUTPUT LISTING ARE AT SEA LEVEL. FOR ELEVATIONS ABOVE 2000 FEET, REDUCE RATINGS 2% FOR EACH 1000 FEET ABOVE SEA LEVEL.
2. COORDINATE ACTUAL CFM AND JUMPER SETTINGS WITH ASSOCIATED CONDENSING UNIT.
3. PROVIDE WITH BOTTOM RETURN FILTER.
4. PROVIDE WITH AIR CONDITIONING COIL TO MATCH CONDENSING UNIT CAPACITY AND UNIT AIRFLOW.

GRILLES, REGISTERS AND DIFFUSERS

ID	MANUFACTURER	MODEL	MAX NC	DESCRIPTION
CEILING	EH PRICE	SCDA	30	LOUVER FACE (4-CONE) CEILING DIFFUSERS. ADJUSTABLE AIR PATTERN, C.W./O.B.D. FRAME SHALL BE FOR SURFACE OR LAY-IN MOUNTING AS REQUIRED BY CEILING TYPE. LAY-IN FRAMES SHALL BE 24" x 24", 24" x 12" OR 12" x 12" AS REQUIRED TO FIT CEILING TILE SPACE AVAILABLE. PROVIDE ROUND NECK ADAPTER.
RETURN/ EXHAUST	EH PRICE	PDR	30	PERFORATED FACE RETURN AIR UNIT EXTRUDED ALUMINUM, REMOVABLE FACE & CORE. FRAME SHALL BE FOR SURFACE OR LAY-IN MOUNTING AS REQUIRED BY CEILING TYPE. LAY-IN FRAMES SHALL BE 24" x 24", 24" x 12" OR 12" x 12" AS REQUIRED TO FIT CEILING TILE SPACE AVAILABLE. AIR QUANTITY SHALL MATCH ROOM SUPPLY OR EXHAUST AIR QUANTITY.

Harris & Associates
265 East 100 South Suite 350
Salt Lake City, Utah 84111-1604
Ph (801) 521-8564 Fax (801) 355-2938

VAN BOERUM & FRANK ASSOCIATES INC. CONSULTING ENGINEERS
WWW.VBFA.COM
Salt Lake City · Logan · St. George · Tempe · Pocatello
330 South 300 East 801.530.3148 T
Salt Lake City, UT 84111 801.530.3150 F
VBFA Project Number:8269_

KEYED NOTES

1. ---

DOCUMENTS THE UNITED STATES GOVERNMENT - END USER MAY Properly destroy documents when no longer needed.
Do not remove this notice.

Utah National Guard
RENOVATION OF READINESS CENTER
BUILDING 5170
CAMP W.G. WILLIAMS, UTAH

SHEET TITLE
MECHANICAL SCHEDULES

REVISIONS	DATE	BY	DESCRIPTION
1	.	.	.
2			
3			
4			

DRAWN BY TJ
CHECKED BY CDH
PROJECT NO. 08032470 CW
DRAWING NO. M601
DATE DEC. 15, 2008

Utah National Guard - Camp Williams Bldg. 5170

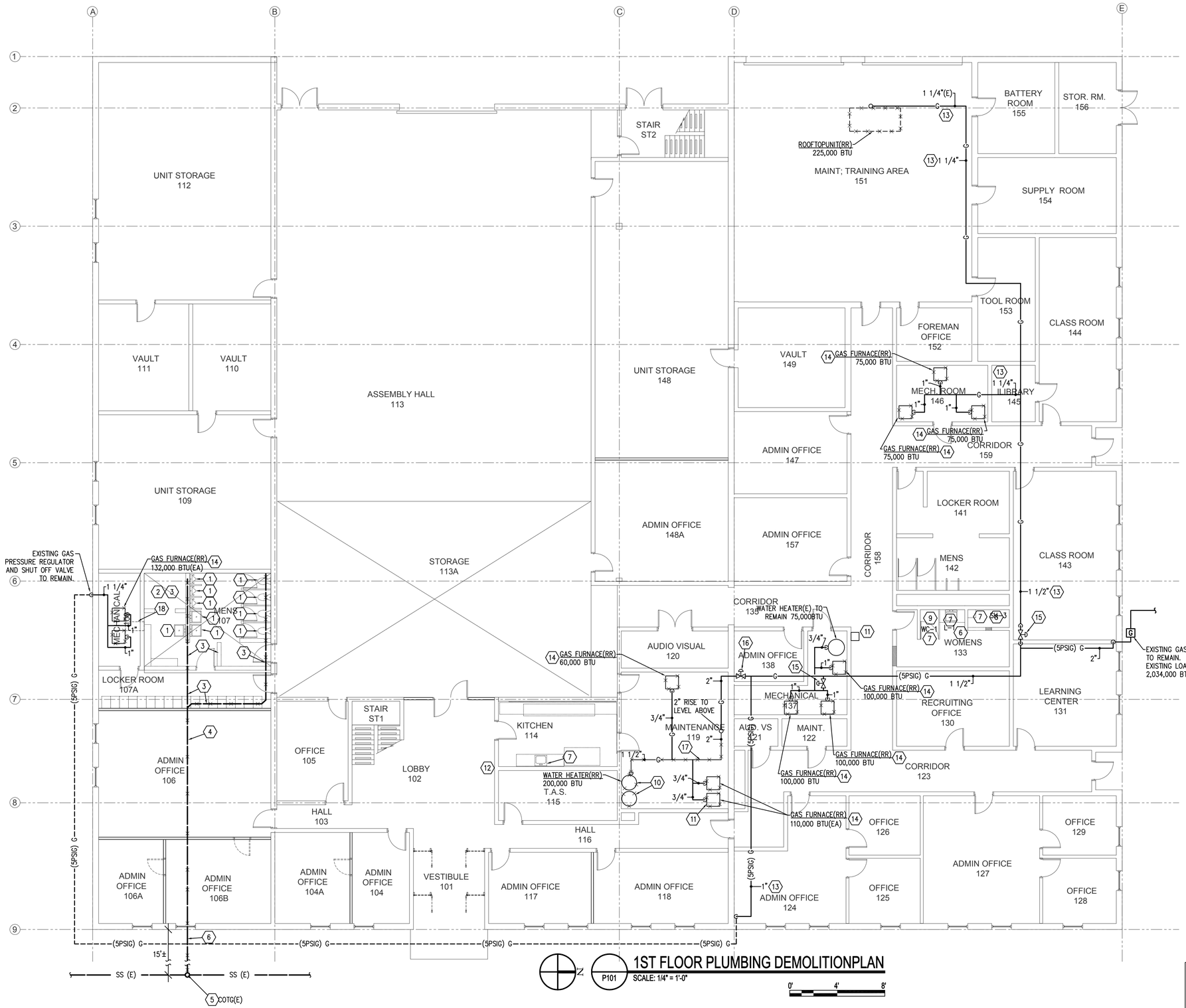

NOTE:
PIPING SIZES AND ROUTING SHOWN ARE BASED ON THE BEST AVAILABLE INFORMATION AND SITE OBSERVATIONS. CONTRACTOR SHALL FIELD VERIFY ALL DIMENSIONS, SIZES, LOCATIONS AND CONDITIONS PRIOR TO SUBMITTING BID.

Harris & Associates
265 East 100 South Suite 350
Salt Lake City, Utah 84111-1604
Ph (801) 521-8564 Fax (801) 355-2938

VAN BOERUM & FRANK ASSOCIATES INC.
WWW.VBFA.COM CONSULTING ENGINEERS
Salt Lake City · Logan · St. George · Tempe · Pocatello
330 South 300 East 801.530.3148 T
Salt Lake City, UT 84111 801.530.3150 F
VBFA Project Number:8269

KEYED NOTES

1. REMOVE EXISTING PLUMBING FIXTURE IN IT'S ENTIRETY. VERIFY WITH OWNER THE EXACT DISPOSITION OF FIXTURE. CAP WATER LINES ABOVE CEILING FOR CONNECTION AND EXTENSION TO NEW, RELOCATED FIXTURES. REMOVE VENT PIPING TO ABOVE CEILING. CAP PIPING FOR FUTURE CONNECTION AND EXTENSION TO NEW, RELOCATED FIXTURES. REMOVE WASTE PIPING TO BELOW FLOOR.
2. REMOVE EXISTING SHOWER HEADS AND VALVES TO ABOVE CEILING. CAP WATER PIPING FOR FUTURE CONNECTION AND EXTENSION TO NEW, RELOCATED FIXTURES.
3. REMOVE EXISTING UNDER FLOOR WASTE PIPING COMPLETELY. COORDINATE WITH GENERAL CONTRACTOR THE REMOVAL OF THE FLOOR IN THIS AREA.
4. SAW CUT EXISTING FLOOR AS REQUIRED. REMOVE EXISTING SANITARY WASTE PIPING FROM EXISTING TOILET ROOM TO EXISTING SANITARY SEWER MAIN IN STREET. CONFIRM EXACT LOCATION OF EXISTING SANITARY SEWER LINE.
5. CONFIRM EXACT LOCATION AND ELEVATION OF SANITARY SEWER LINE IN STREET.
6. SAWCUT EXISTING SIDEWALK AS REQUIRED FOR REMOVAL OF EXISTING SANITARY SEWER LINE.
7. REMOVE EXISTING PLUMBING FIXTURE IN IT'S ENTIRETY. VERIFY WITH OWNER THE EXACT DISPOSITION OF EXISTING FIXTURE. CAP PIPING IN WALL IN PREPARATION FOR CONNECTION AND EXTENSION TO NEW FIXTURE IN NEW LOCATION.
8. REMOVE EXISTING SHOWER VALVE AND HEAD. CAP PIPING IN WALL IN PREPARATION FOR INSTALLATION OF NEW VALVE AND HEAD IN SAME LOCATION.
9. REMOVE EXISTING WATER CLOSET IN IT'S ENTIRETY. VERIFY WITH OWNER THE EXACT DISPOSITION OF EXISTING FIXTURE. PREPARE FOR INSTALLATION OF NEW FIXTURE IN SAME LOCATION.
10. REMOVE EXISTING WATER HEATER, HOT WATER STORAGE TANK, CIRCULATION PUMP & HOT WATER SYSTEM CIRCULATING PUMP IN THEIR ENTIRETY. CONFIRM EXACT LOCATION. REMOVE GAS VENT THRU ROOF. PATCH AND REPAIR ROOF AS REQUIRED TO MAINTAIN WARRANTY.
11. REMOVE EXISTING PLUMBING FIXTURE IN IT'S ENTIRETY. VERIFY WITH OWNER THE EXACT DISPOSITION OF EXISTING FIXTURE. TEMPORARILY CAP PIPING IN PREPARATION FOR INSTALLATION OF NEW FIXTURE IN SAME LOCATION. CONFIRM EXACT LOCATION.
12. EXISTING WASTE PIPING AND WATER LINE FOR WATER COOLER IN THIS AREA TO REMAIN AND BE USED FOR NEW WATER COOLER IN THIS AREA. CONFIRM EXACT LOCATION.
13. EXISTING GAS PIPING TO REMAIN.
14. EXISTING FURNACE TO BE REMOVED AND REPLACE.
15. EXISTING GAS PRESSURE REGULATOR TO REMAIN.
16. REMOVE EXISTING GAS PRESSURE REGULATOR TO ALLOW 5PSI GAS DOWNSTREAM.
17. REMOVE EXISTING GAS PIPING AND REPLACE WITH NEW.
18. SAW CUT EXISTING FLOOR TO RECEIVE NEW FLOOR DRAIN AND ASSOCIATED PIPING.

Utah National Guard
RENOVATION OF READINESS CENTER
BUILDING 5170
CAMP W.G. WILLIAMS, UTAH

SHEET TITLE
1ST FLOOR PLUMBING DEMOLITION PLAN

REVISIONS	DATE	BY	DESCRIPTION
△	.	.	.
△			
△			
△			

DRAWN BY TJ
CHECKED BY CDH
PROJECT NO. 08032470 CW
DRAWING NO. P101
DATE DEC. 15, 2008

DOCUMENTS ARE THE PROPERTY OF THE UNITED STATES GOVERNMENT AND MAY NOT BE REPRODUCED OR DISTRIBUTED IN ANY MANNER WITHOUT THE EXPRESS WRITTEN PERMISSION OF THE ARCHITECT. Properly destroy documents when no longer needed.
Do not remove this notice.
Utah National Guard - Camp Williams Bldg. 5170

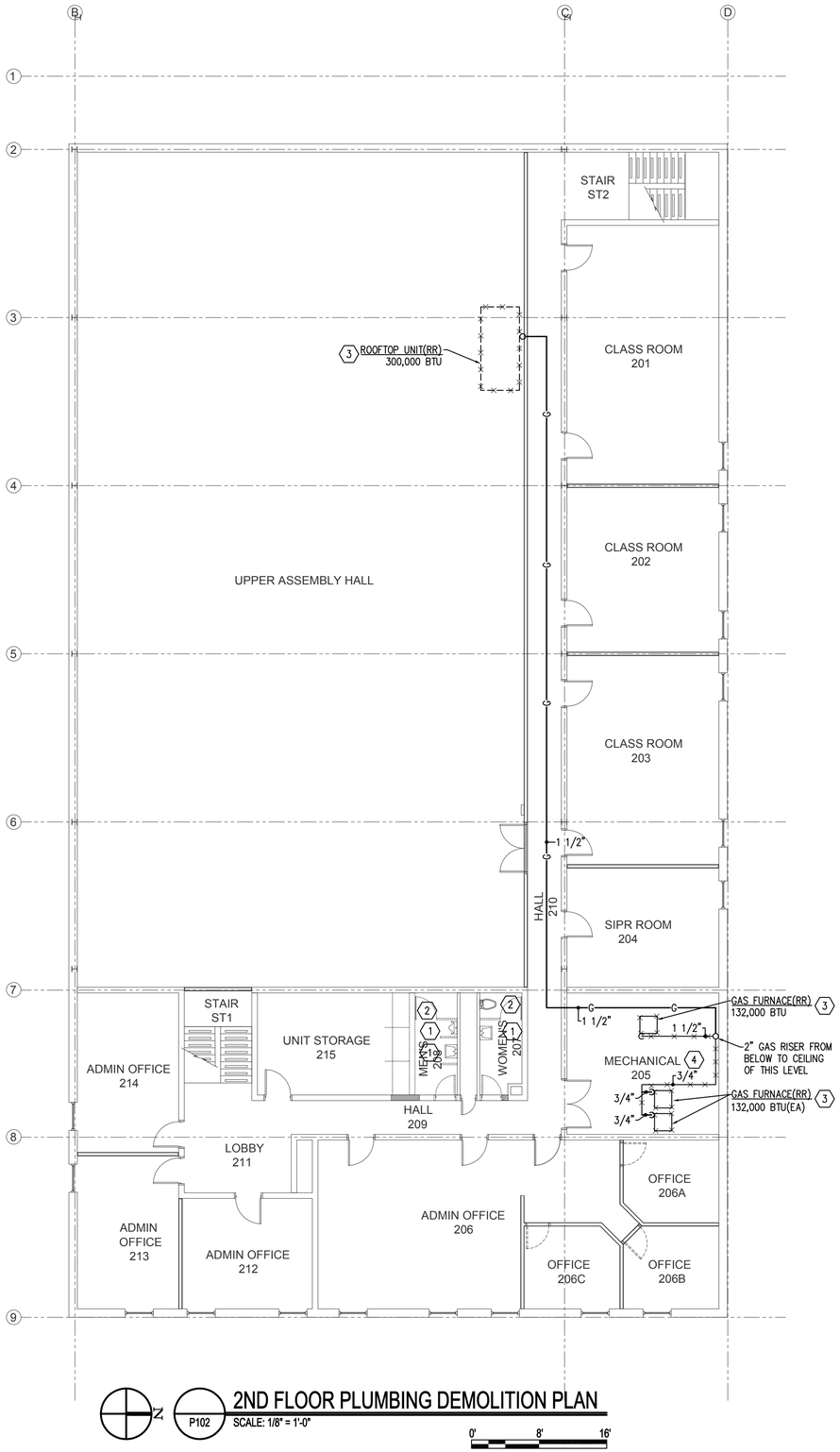

N

P102

2ND FLOOR PLUMBING DEMOLITION PLAN

SCALE: 1/8" = 1'-0"

0' 8' 16'

Harris & Associates
265 East 100 South Suite 350
Salt Lake City, Utah 84111-1604
Ph (801) 521-8564 Fax (801) 355-2938

VAN BOERUM & FRANK ASSOCIATES INC.
WWW.VBFA.COM CONSULTING ENGINEERS
Salt Lake City · Logan · St. George · Tempe · Pocatello
330 South 300 East 801.530.3148 T
Salt Lake City, UT 84111 801.530.3150 F
VBFA Project Number:8269_

KEYED NOTES

1. REMOVE EXISTING PLUMBING FIXTURE IN IT'S ENTIRETY. VERIFY WITH OWNER THE EXACT DISPOSITION OF FIXTURE. TEMPORARILY CAP WATER, WASTE AND VENT LINES IN CHASE OR AT FLOOR FOR FUTURE CONNECTION AND EXTENSION TO NEW, RELOCATED FIXTURES. CONFIRM EXACT LOCATIONS.
2. REMOVE EXISTING FIXTURE AND REPLACE WITH NEW IN SAME LOCATION AFTER ARCHITECTURAL FINISHES ARE COMPLETED.
3. EXISTING FURNACE TO BE REMOVED AND REPLACED. DISCONNECT AND TEMPORARILY CAP GAS PIPING.
4. REMOVE EXISTING GAS PIPING AND REPLACE WITH NEW.

DOCUMENTS ARE THE LIMITED STATES COPYRIGHT LAW. END USER MAY
Properly destroy documents when no longer needed.
Do not remove this notice.

Utah National Guard
RENOVATION OF READINESS CENTER
BUILDING 5170
CAMP W.G. WILLIAMS, UTAH

SHEET TITLE
2ND FLOOR PLUMBING DEMOLITION PLAN

REVISIONS	DATE	BY	DESCRIPTION
△	.	.	.
△			
△			
△			

DRAWN BY: TJ	CHECKED BY: CDH
PROJECT NO.: 08032470 CW	DRAWING NO.: P102
DATE: DEC. 15, 2008	

Utah National Guard - Camp Williams Bldg. 5170

Harris & Associates
265 East 100 South Suite 350
Salt Lake City, Utah 84111-1604
Ph (801) 521-8564 Fax (801) 355-2938

VAN BOERUM & FRANK ASSOCIATES INC.
WWW.VBFA.COM CONSULTING ENGINEERS
Salt Lake City · Logan · St. George · Tempe · Pocatello
330 South 300 East 801.530.3148 T
Salt Lake City, UT 84111 801.530.3150 F
VBFA Project Number:8269_

KEYED NOTES

1. MAKE CONNECTION TO EXISTING SANITARY SEWER MAIN IN THE STREET IN THIS AREA. CONFIRM EXACT LOCATION AND ELEVATION.
2. INSTALL NEW SANITARY SEWER LINE IN TRENCH AS REQUIRED. PATCH AND REPAIR STREET ASPHALT TO MATCH EXISTING.
3. PATCH AND REPAIR EXISTING CONCRETE SIDEWALK TO MATCH EXISTING.
4. INSTALL NEW CLEAN OUT TO GRADE. SEE DETAIL.
5. CONTINUED LARGE SCALE 1ST FLOOR RESTROOM PLAN.
6. INSTALL NEW FIXTURE IN NEW LOCATION. EXTEND PIPING AS REQUIRED TO PROVIDE HOT AND COLD WATER AND WASTE AND VENT PIPING TO FIXTURE.
7. INSTALL NEW FIXTURE IN SAME LOCATION AS OLD FIXTURE. CONFIRM EXACT LOCATION.
8. INSTALL NEW GAS WATER HEATER IN THIS AREA. MAKE CONNECTION TO EXISTING DOMESTIC COLD WATER, DOMESTIC HOT WATER, HOT WATER RE-CIRCULATING AND GAS LINES. CONFIRM EXACT LOCATIONS. EXTEND NEW VENT AND COMBUSTION AIR PIPING THROUGH THE ROOF TO ATMOSPHERE.
9. ADJUST GAS PRESSURE REGULATOR TO INCREASE GAS PRESSURE AT OUTLET TO 2PSI. CONFIRM EXACT LOCATION.
10. PROVIDE NEW GAS PRESSURE REGULATOR TO REGULATE GAS PRESSURE FROM 2PSI TO 1/2PSI. VENT REGULATOR TO ATMOSPHERE AS REQUIRED.
11. MAKE GAS CONNECTION TO NEW GAS APPLIANCE THROUGH SHUT-OFF VALVE, UNION AND FLEXIBLE CONNECTER.
12. MAKE CONNECTION TO EXISTING GAS PIPING IN THIS AREA WITH NEW GAS PIPING. RUN NEW GAS PIPING DOWN STREAM. ALL GAS PIPING SHALL BE WELDED.
13. EXISTING GAS PIPING TO REMAIN. CONFIRM EXACT LOCATION & ROUTING.
14. EXISTING GAS METER TO REMAIN AND BE RE-USED. CONFIRM WITH GAS COMPANY IF EXISTING METER HAS SUFFICIENT CAPACITY TO HANDLE NEW INCREASED LOAD.
15. PROVIDE NEW GAS PRESSURE REGULATOR TO REGULATE GAS PRESSURE FROM 5PSI TO 1/2PSI. VENT REGULATOR TO ATMOSPHERE AS REQUIRED.
16. EXISTING GAS PIPING RISE TO LEVEL ABOVE.

Utah National Guard
RENOVATION OF READINESS CENTER
BUILDING 5170
CAMP W.G. WILLIAMS, UTAH

SHEET TITLE
1ST FLOOR PLUMBING PLAN

REVISIONS	DATE	BY	DESCRIPTION
△	.	.	.
△			
△			
△			

DRAWN BY TJ | CHECKED BY CDH
PROJECT NO. 08032470 CW | DRAWING NO. P201
DATE DEC. 15, 2008

Utah National Guard - Camp Williams Bldg. 5170
Do not remove this notice. Properly destroy documents when no longer needed.
DISTRIBUTION STATEMENT A: APPROVED FOR PUBLIC RELEASE; DISTRIBUTION IS UNLIMITED. OTHER REQUESTS SHALL BE REFERRED TO THE PROGRAM EXECUTIVE OFFICER FOR SOLDIER. END OF DOCUMENT

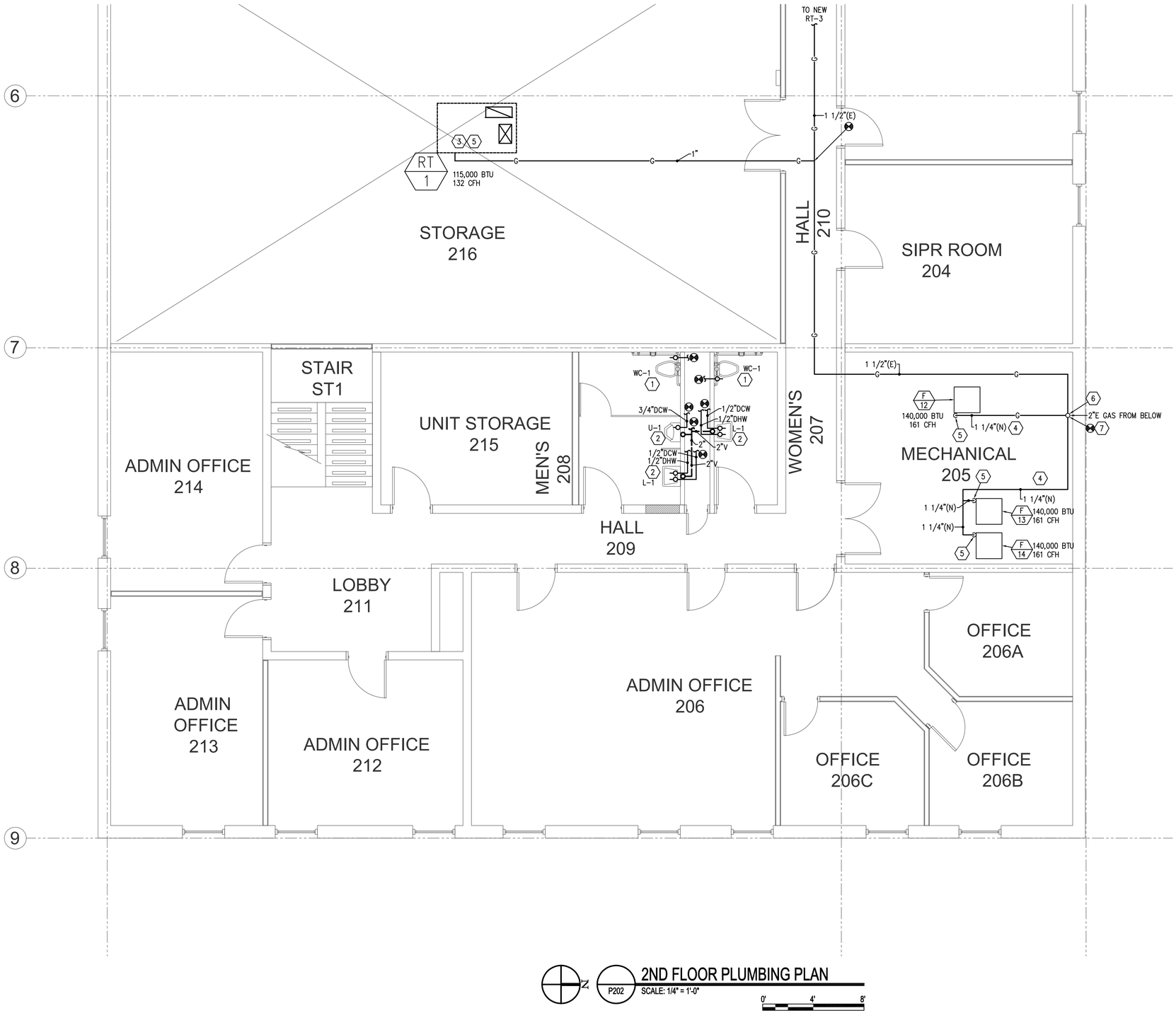

N

2ND FLOOR PLUMBING PLAN

P202

SCALE: 1/4" = 1'-0"

0' 4' 8'

Harris & Associates
265 East 100 South Suite 350
Salt Lake City, Utah 84111-1604
Ph (801) 521-8564 Fax (801) 355-2938

VAN BOERUM & FRANK ASSOCIATES INC.
WWW.VBFA.COM CONSULTING ENGINEERS
Salt Lake City · Logan · St. George · Tempe · Pocatello
330 South 300 East 801.530.3148 T
Salt Lake City, UT 84111 801.530.3150 F
VBFA Project Number:8269_

KEYED NOTES

1. INSTALL NEW FIXTURE IN SAME LOCATION AS OLD FIXTURE. CONFIRM EXACT LOCATION.
2. INSTALL NEW FIXTURE IN NEW LOCATION. EXTEND NEW HOT, COLD, WASTE AND VENT LINES TO MAKE CONNECTION TO EXISTING LINES IN THIS AREA. CONFIRM EXACT LOCATIONS.
3. MAKE GAS CONNECTION TO NEW ROOF TOP UNIT IN THIS AREA. CONFIRM EXACT LOCATION. MAKE CONNECTION PER DETAIL AND SPECIFICATIONS.
4. RUN PIPING HIGH IN CEILING SPACE AND DROP TO FIXTURES INDICATED.
5. MAKE GAS CONNECTION TO GAS APPLIANCE THRU SHUT-OFF VALVE, UNIM AND FLEXIBLE CONNECTOR. SE DETAIL.
6. PROVIDE NEW GAS PRESSURE REGULATOR IN EXISTING GAS PIPING TO REGULATE GAS PRESSURE FROM 5PSI TO 1/2PSI. VENT REGULATOR TO ATMOSPHERE AS REQUIRED.
7. MAKE NEW GAS PIPING CONNECTION TO EXISTING PIPING IN THIS AREA, DOWNSTREAM OF NEW PRESSURE REGULATOR. CONFIRM EXACT LOCATION.

Utah National Guard
RENOVATION OF READINESS CENTER
BUILDING 5170
CAMP W.G. WILLIAMS, UTAH

SHEET TITLE
2ND FLOOR PLUMBING PLAN

REVISIONS	DATE	BY	DESCRIPTION
1	.	.	.
2			
3			
4			

DRAWN BY TJ | CHECKED BY CDH
PROJECT NO. 08032470 CW
DRAWING NO. P202
DATE DEC. 15, 2008

DO NOT DESTROY THE TIMELY SUBMITTAL OF THIS DOCUMENT - END OF CONSTRUCTION
Do not remove this notice.
Utah National Guard - Camp Williams Bldg. 5170

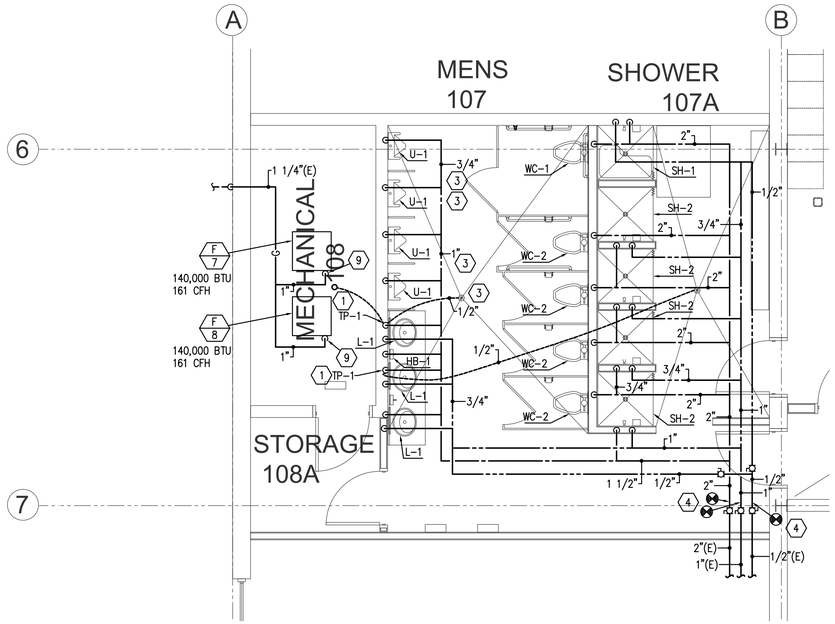

1 P401 1ST FLOOR ENLARGED WATER PLAN
SCALE: 1/4" = 1'-0"

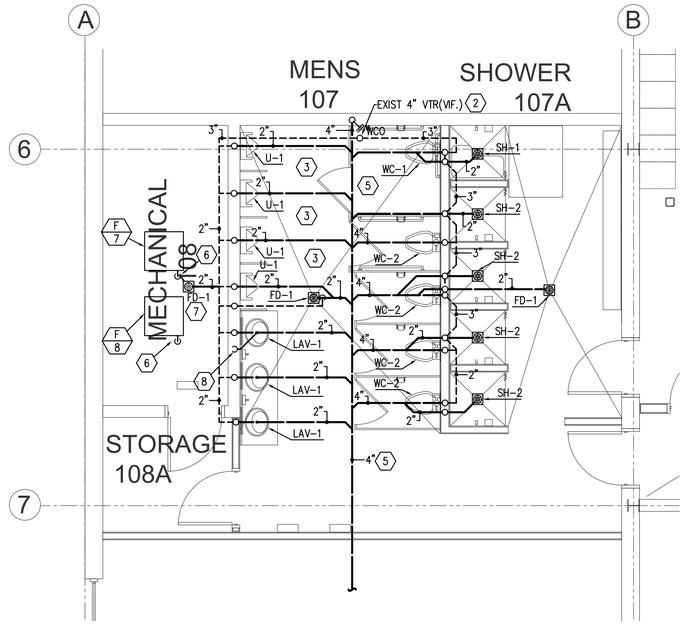

2 P401 1ST FLOOR ENLARGED PLUMBING PLAN
SCALE: 1/4" = 1'-0"

Harris & Associates
265 East 100 South Suite 350
Salt Lake City, Utah 84111-1604
Ph (801) 521-8564 Fax (801) 355-2938

VAN BOERUM & FRANK ASSOCIATES INC.
CONSULTING ENGINEERS
WWW.VBFA.COM
Salt Lake City - Logan - St. George - Tempe - Pocatello
330 South 300 East 801.530.3148 T
Salt Lake City, UT 84111 801.530.3150 F
VBFA Project Number:8269_

KEYED NOTES

1. DROP BELOW FLOOR WITH TRAP PRIMER LINE AND RUN TO MAKE CONNECTION TO FLOOR DRAIN TRAP PRIMER FITTING. NO JOINTS ALLOWED UNDER FLOOR. TRAP PRIMER SHALL BE MOUNTED IN ACCESSIBLE LOCATION BELOW COUNTER TOP.
2. MAKE CONNECTION TO EXISTING SANITARY VENT THROUGH THE ROOF IN THIS AREA. CONFIRM EXACT LOCATION.
3. MOUNT URINALS AT HEIGHTS INDICATED ON ARCHITECTURAL DRAWINGS TO MEET ADA REQUIREMENTS.
4. MAKE CONNECTION TO EXISTING DOMESTIC WATER PIPING IN THIS AREA. CONFIRM EXACT LOCATION
5. INSTALL NEW SANITARY SEWER PIPING UNDER NEW FLOOR. EXTEND TO MAKE CONNECTION TO MAIN IN THE STREET.
6. MAKE CONDENSATE DRAIN CONNECTION TO FURNACE AND A/C COIL. RUN TO DRAIN INDIRECTLY INTO NEW FLOOR DRAIN.
7. INSTALL NEW FLOOR DRAIN IN EXISTING FURNACE ROOM. PATCH AND REPAIR FLOOR TO MATCH SURROUNDINGS.
8. DROP IN WALL WITH CONDENSATE DRAIN PIPING TO MAKE CONNECTION TO LAVATORY DRAIN TAILPIECE.
9. MAKE GAS CONNECTION TO NEW GAS FURNACE THROUGH SHUT-OFF VALVE, UNION AND FLEXIBLE CONNECTOR. CONFIRM EXACT LOCATION. USE EXISTING PIPE WHERE POSSIBLE.

Utah National Guard
RENOVATION OF READINESS CENTER
BUILDING 5170
CAMP W.G. WILLIAMS, UTAH

SHEET TITLE
ENLARGED PLUMBING PLAN

REVISIONS	DATE	BY	DESCRIPTION
△	.	.	.
△			
△			
△			

DRAWN BY TJ	CHECKED BY CDH
PROJECT NO. 08032470 CW	DRAWING NO. P401
DATE DEC. 15, 2008	

Utah National Guard - Camp Williams Bldg. 5170
Do not remove this notice.
PROPERTY OF THE UNITED STATES GOVERNMENT FOR REGION 1 USE ONLY
Properly destroy documents when no longer needed.

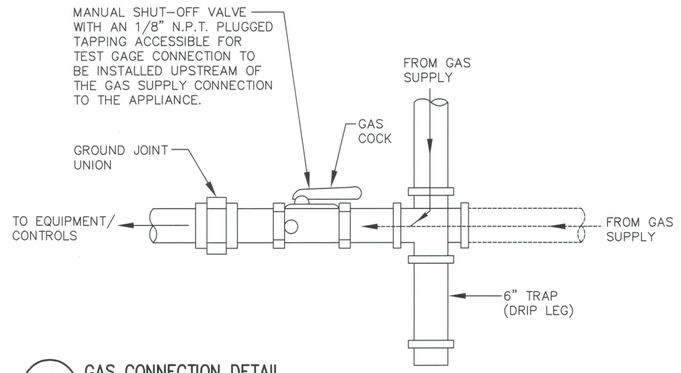

4 / P501 **GAS CONNECTION DETAIL**
NO SCALE

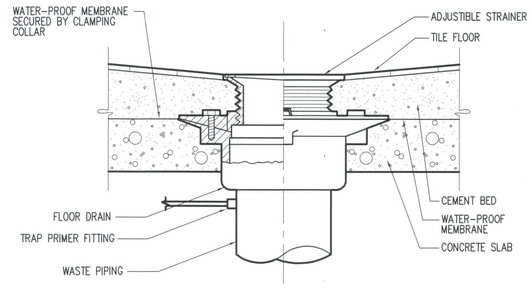

1 / P501 **FLOOR / SHOWER DRAIN DETAIL**
NOT TO SCALE

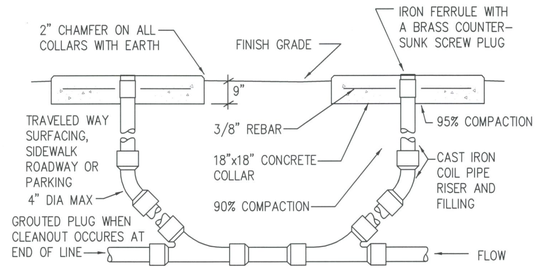

5 / P501 **CLEANOUT TO GRADE DETAIL (COTG)**
NO SCALE

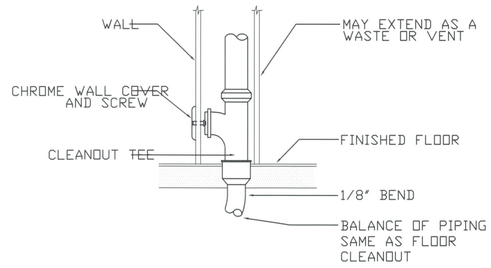

2 / P501 **WALL CLEANOUT DETAIL**
NO SCALE

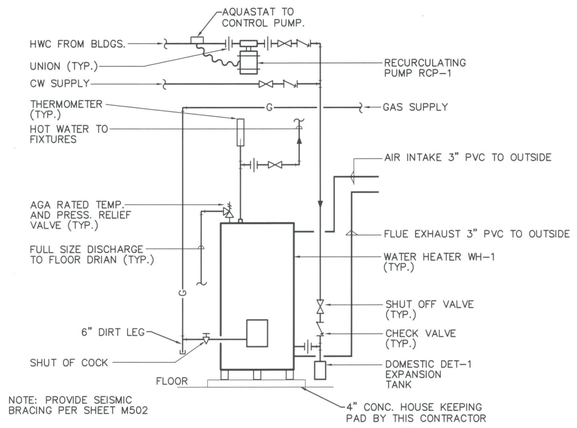

6 / P501 **GAS WATER HEATER DETAIL**
NO SCALE

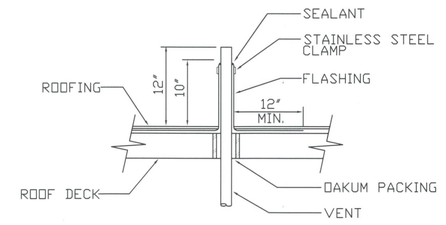

3 / P501 **VENT THRU ROOF FLASHING & SLEEVING DETAIL**
NO SCALE

Harris & Associates
265 East 100 South Suite 350
Salt Lake City, Utah 84111-1604
Ph (801) 521-8564 Fax (801) 355-2938

VAN BOERUM & FRANK ASSOCIATES INC.
WWW.VBFA.COM CONSULTING ENGINEERS
Salt Lake City - Logan - St. George - Tempe - Pocatello
330 South 300 East 801.530.3148 T
Salt Lake City, UT 84111 801.530.3150 F
VBFA Project Number:8269

KEYED NOTES

CLIFFORD DEE HOLMES 2-18-09 NUMBER 303570 STATE OF UTAH

Utah National Guard
RENOVATION OF READINESS CENTER
BUILDING 5170
CAMP W.G. WILLIAMS, UTAH

SHEET TITLE
PLUMBING DETAILS

REVISIONS	DATE	BY	DESCRIPTION
1	.	.	.
2			
3			
4			

DRAWN BY	CHECKED BY
TJ	CDH

PROJECT NO.	DRAWING NO.
08032470 CW	P501
DATE: DEC. 15, 2008	

PROPERTY OF THE UNITED STATES GOVERNMENT. FOR OFFICIAL USE ONLY. Properly destroy documents when no longer needed.
Do not remove this notice.
Utah National Guard - Camp Williams Bldg. 5170

PLUMBING FIXTURE SCHEDULE

ID	FIXTURE	CW (IN)	HW (IN)	W (IN)	V (IN)	NOTES	SPECIFICATIONS
FD-1	FLOOR DRAIN	-.-	-.-	2	2	RESTROOM	FLOOR DRAIN: SMITH FIGURE 2010-BP CAST IRON BODY AND FLASHING COLLAR WITH SQUARE NICKEL BRONZE ADJUSTABLE STRAINER HEAD WITH SECURED SQUARE HOLE GRATE AND TRAP PRIMER CONNECTION.
SS-1	SINK	1/2	1/2	2	1 1/2	COUNTER MOUNTED, DOUBLE COMPARTMENT	SINK: JUST DL-1933-A-GR TWO 14" X 14" X 7-1/2" DEEP BOWLS, 18-GAUGE, TYPE 304 STAINLESS STEEL, COUNTER MOUNTED SINK WITH 8" CENTERS DRILLING; CHICAGO 786-GN2FC FAUCET, NO. 317 4" WRIST BLADES, GN2 RIGID/SWING CONVERTIBLE GOOSE NECK WITH 1.6 GPM FC LAMINAR FLOW CONTROL AND PLAIN END SPOUT RING; FLEXIBLE STAINLESS STEEL SUPPLIES WITH LOOSE KEY ANGLE STOPS; JUST J-35 STAINLESS STEEL CUP STRAINER AND CAST BRASS P-TRAP WITH CLEAN-OUT PLUG.
EWC-1	ELECTRIC WATER COOLER	1/2	1/2	1 1/2	1 1/2	ADA, DUAL STATION	ELECTRIC WATER COOLER: ELKAY EZTLR8C DUAL STATION, WALL MOUNTED, BARRIER FREE, ADA ELECTRIC WATER COOLER WITH FLEXIBLE BUBBLER GUARD AND STAINLESS STEEL BOWLS. COMPRESSOR TO BE 115V, 60 HZ WITH CAPACITY TO DELIVER AT LEAST 8.0 GPH OF 50°F WATER. 1-½" CAST BRASS CHROME-PLATED P-TRAPS.
HB-1	HOSE BIB	3/4	-.-	-.-	-.-	TOILET ROOM	HOSE BIBB: ACORN 8126 HOSE VALVE WITH VACUUM BREAKER, ¾" MALE HOSE THREAD AND LOOSE KEY HANDLE.
L-1	LAVATORY	1/2	1/2	1 1/2	1 1/2	COUNTER MOUNTED	LAVATORY (COUNTER MOUNTED): KOHLER K-2196 PENNINGTON TECHNICAL CONCEPTS 500484 MILANO BATTERY POWERED 0.5 GPM LOW FLOW SENSOR FAUCET. FAUCET TO BE PROVIDED WITH FACTORY MIXING VALVE WITH 3/8" COMPRESSION CONNECTIONS, THERMOSTATIC MIXING VALVE AND IN-LINE CHECKS. PROVIDE WATTS NO. 7 DUAL CHECKS IN HOT AND COLD SUPPLIES. PROVIDE VANDAL RESISTANT AERATOR. PROVIDE LOOSE KEY ANGLE STOPS AND CHROME PLATED COPPER SUPPLIES AND 17 GA. CAST BRASS, CHROME PLATED "P" TRAP.
SH-1	SHOWER	1/2	1/2	2	2	ADA	SHOWER: SYMMONS BP-500-B30-V TEMPTROL II SHOWER SYSTEM WITH PRESSURE BALANCING MIXING VALVE WITH LEVER HANDLE, ADJUSTABLE STOP SCREW, INTEGRAL SERVICE STOPS, LEVER DIVERTER VALVE, WALL/HAND SHOWER WITH FLEXIBLE METAL HOSE, IN-LINE VACUUM BREAKER, WALL CONNECTION AND FLANGE, 30" SLIDE BAR FOR HAND SHOWER AND OXYGENICS MODEL 630 1.5 GPM SHOWER HEAD; SMITH 2005Y-A-NB ROUND TOP DRAIN WITH 6" NICKEL BRONZE STRAINER, CAST-IRON BODY, 2" OUTLET AND NO-HUB CONNECTION.
SH-2	SHOWER	1/2	1/2	2	2	–	SHOWER: SYMMONS BP-56-1 TEMPTROL II SHOWER SYSTEM WITH PRESSURE BALANCING MIXING VALVE WITH LEVER HANDLE, ADJUSTABLE STOP SCREW, INTEGRAL SERVICE STOPS AND OXYGENICS MODEL 630 1.5 GPM SHOWER HEAD; SMITH 2005Y-A-NB ROUND TOP DRAIN WITH 6" NICKEL BRONZE STRAINER, CAST-IRON BODY, 2" OUTLET AND NO-HUB CONNECTION.
SH-3	SHOWER	1/2	1/2	2	2	ADA	BRADLEY No. HN-200/EF/SF/ INDIVIDUAL FLUSH MOUNTED WALL SHOWER, STAINLESS STEEL PANEL, PRESSURE BALANCED VALVE WITH LEVER HANDLE, DELUXE SHOWER HEAD WITH BALL JOINT, RECESSED SOAP DISH, HOSE DIVERTER VALVE, 60" STAINLESS STEEL HOSE WITH HAND HELD SHOWER SPRAY, HOSE WALL BRACKET..
TP-1	TRAP PRIMER	1/2	-.-	-.-	-.-	PRESSURE TYPE	PRECISION PLUMBING PRODUCTS, INC. (PPP) PR-500 SERIES; ½" DIAMETER COPPER TUBE CONNECTION TO P-TRAP, INSTALL PER MANUFACTURER'S INSTRUCTIONS.
U-1	URINAL	3/4	-.-	2	2	WALL HUNG	KOHLER K-4960-ET BARDON; 0.5 GPF COMPLETE WITH SLOAN No. 8186 SENSOR OPERATED, BATTERY POWERED FLUSH VALVE. 3/4" TOP SPUD, 2" OUTLET.SMITH No. 0637 URINAL SUPPORT. SEE ARCHITECTURAL DRAWINGS FOR MOUNTING HEIGHTS.
WC-1	WATER CLOSET	1	-.-	4	2	FLOOR MOUNTED, FLUSH VALVE (ADA)	WATER CLOSET: KOHLER K-4368 HIGHCLIFF (17-1/2") VITREOUS CHINA, FLOOR MOUNTED, ELONGATED BOWL WITH K-4670-C LUSTRA OPEN FRONT SEAT; SLOAN No. 8111 LOW CONSUMPTION 1.6 G.P.F., EXPOSED, BATTERY POWERED, SENSOR OPERATED, FLUSH VALVE.
WC-2	WATER CLOSET	2	-.-	4	2	FLOOR MOUNTED, FLUSH VALVE	WATER CLOSET: KOHLER K-4349 WELLCOMME VITREOUS CHINA, FLOOR MOUNTED, ELONGATED BOWL WITH K-4670-C LUSTRA OPEN FRONT SEAT; SLOAN No. 8111 LOW CONSUMPTION 1.6 G.P.F. EXPOSED, BATTERY POWERED, SENSOR OPERATED, FLUSH VALVE.

1. ALL UNDER GROUND WASTE AND VENT SHALL BE 2" OR GREATER PER DRAWINGS.

GAS FIRED WATER HEATER SCHEDULE

ID	MANUFACTURER AND MODEL NUMBER	LOCATION	SERVICE	EFFICIENCY (%)	TYPE	GAS RATING (BTU)	RECOVERY RATE @ 100 F DELTA T	TANK SIZE (GAL)	FLUE/ CA INTAKE SIZE (IN)	LENGTH/ WIDTH/ HEIGHT (IN)	ELECTRICAL (AMP)	ELECTRICAL V/PH	NOTES
WH-1	AO SMITH BTH-400	MECH. ROOM	DOMESTIC HOT WATER	90%	GAS FIRED	399,900	465	130	4/4.	34/76	10	120/1	1

1. PROVIDE VERTICAL CONCENTRIC VENT KIT.

DOMESTIC EXPANSION TANK SCHEDULE

ID	MANUFACTURER AND MODEL NUMBER	LOCATION	SYSTEM SERVED	TYPE	WORKING FLUID	TANK SIZE (GAL)	RELIEF VALVE (PSIG)	DIA./ HEIGHT (IN)	NPT FITTING (IN)	NOTES
DET-1	AMTROL ST-25V	MECHANICAL ROOM	DOMESTIC	BLADDER	WATER	10.3	125	16/20	1	1

1. TANK LINER SUITABLE FOR POTABLE WATER
2. ADJUST PRE-CHARGE TO EQUAL STATIC SUPPLY PRESSURE.

DOMESTIC PUMP SCHEDULE

ID	MANUFACTURER AND MODEL NUMBER	LOCATION	TYPE	FLUID FLOW RATE (GPM)	FLUID WORKING FLUID	FLUID HEAD LOSS (FT)	ELECTRICAL MOTOR SIZE (FLA)	ELECTRICAL MOTOR SIZE (HP)	ELECTRICAL MOTOR SPEED (RPM)	ELECTRICAL VOLT/PH/HZ	NOTES
RCP-1	B&G Series 100 BFN1	MECHANICAL ROOM	RECIRCULATION	5.0	DOMESTIC WATER	8.0	1.75	1/12	1725	120/1/60	1

1. PROVIDE WITH AQUASTAT, TIMER AND SWITCH FOR CONTROL.

Harris & Associates
265 East 100 South Suite 350
Salt Lake City, Utah 84111-1604
Ph (801) 521-8564 Fax (801) 355-2938

VAN BOERUM & FRANK ASSOCIATES INC.
WWW.VBFA.COM CONSULTING ENGINEERS
Salt Lake City · Logan · St. George · Tempe · Pocatello
330 South 300 East 801.530.3148 T
Salt Lake City, UT 84111 801.530.3150 F
VBFA Project Number:8269_

KEYED NOTES

1. ---

DOCUMENTS ARE THE LIMITED STATES COPYRIGHT LAW © END USER MAY NOT REPRODUCE OR ALTER THESE DOCUMENT Properly destroy documents when no longer needed.
Do not remove this notice.

Utah National Guard
RENOVATION OF READINESS CENTER
BUILDING 5170
CAMP W.G. WILLIAMS, UTAH

SHEET TITLE
PLUMBING SCHEDULES

REVISIONS	DATE	BY	DESCRIPTION
△	.	.	.
△			
△			
△			

DRAWN BY TJ
CHECKED BY CDH
PROJECT NO. 08032470 CW
DRAWING NO. P601
DATE DEC. 15, 2008

Utah National Guard - Camp Williams Bldg. 5170

SYMBOL LEGEND

SYMBOL	DESCRIPTION
REFERENCE AND LINE SYMBOLS	
A5 / E-501	DETAIL INDICATOR: A5 INDICATES DETAIL NUMBER, E-501 INDICATES DRAWING SHEET WHERE DETAIL IS SHOWN.
A5 / E-201	ELEVATION OR SECTION INDICATOR, EXTERIOR: A5 INDICATES ELEVATION OR SECTION NUMBER, E-201 INDICATES DRAWING SHEET WHERE ELEVATION OR SECTION IS SHOWN.
A5 / E-201	ELEVATION OR SECTION INDICATOR, INTERIOR: A5 INDICATES ELEVATION OR SECTION NUMBER, E-201 INDICATES DRAWING SHEET WHERE ELEVATION OR SECTION IS SHOWN.
100	ROOM OR SPACE NUMBER.
1	KEYNOTE INDICATOR.
1	REVISION INDICATOR.
CU-1	EQUIPMENT INDICATOR.
	BREAK, STRAIGHT: TO BREAK PARTS OF DRAWING.
	BREAK, ROUND.
	NEW LINE: MEDIUM LINE.
	HIDDEN FEATURES LINE: HIDDEN, THIN LINE.
	EXISTING TO REMAIN LINE: THIN LINE.
	DEMOLITION LINE: DASHED, MEDIUM LINE.
WIRING METHODS	
	WIRING.
A-1,3,5	BRANCH CIRCUIT HOME RUN TO PANELBOARD: NUMBER OF ARROWS INDICATES NUMBER OF CIRCUITS. LETTER AND NUMBER NOTATIONS IDENTIFY PANEL AND CIRCUIT NUMBERS. USE #12 CONDUCTORS, EXCEPT #10 CONDUCTORS SHALL BE INSTALLED IF DISTANCES EXCEED THOSE SPECIFIED IN THE ELECTRICAL SPECIFICATIONS.
1 A-1,3,5	BRANCH CIRCUIT HOME RUN TO PANELBOARD: NUMBER OF ARROWS INDICATES NUMBER OF CIRCUITS. LETTER AND NUMBER NOTATIONS IDENTIFY PANEL AND CIRCUIT NUMBERS. NUMBER IN BOX REFERS TO THE CONDUCTOR AND CONDUIT SCHEDULE. FOR BRANCH WIRING USE #12 CONDUCTORS, EXCEPT #10 CONDUCTORS SHALL BE INSTALLED IF DISTANCES EXCEED THOSE SPECIFIED IN THE ELECTRICAL SPECIFICATIONS.
— X —	WIRING AND/OR RACEWAY: THIN LINE. WHERE "X" = : CATV = CABLE TELEVISION; CCTV = CLOSED CIRCUIT TELEVISION; FA = FIRE ALARM; FO = FIBER OPTICS; I = INTERCOM; NC = NURSE CALL; P = POWER; RC = RIGID CONDUIT; S = SOUND; T = TELEPHONE; TV = TELEVISION OTHERS AS NOTED IN OTHER SCHEDULES. RACEWAYS AND WIRING SHALL BE SIZED AS SHOWN AND/OR SPECIFIED.
	LOW VOLTAGE WIRING: DIVIDE, MEDIUM LINE.
	CONDUIT STUB. DIMENSION RECORD DRAWINGS AND MARK.
1	CONDUCTOR & CONDUIT ("CC") SCHEDULE INDICATOR. REFER TO ONE-LINE DIAGRAM.
	JUNCTION BOX.
C C	CABLE TRAY ABOVE ACCESSIBLE CEILING.
	EARTH GROUND (ONE-LINE DIAGRAM).
LIGHTING (REFER TO FIXTURE SCHEDULE FOR SYMBOLS)	
(W-3)	FIXTURE IDENTIFICATION: (W-3) INDICATES FIXTURE TYPE AS SCHEDULED.
(W-3)	FIXTURE IDENTIFICATION, EMERGENCY WITH BATTERY PACK, CONNECTED TO GENERATOR AS INDICATED: (W-3) INDICATES FIXTURE TYPE AS SCHEDULED.
LIGHTING CONTROL	
*	OCCUPANCY SENSOR, DUAL TECHNOLOGY, OMNI-DIRECTIONAL, CEILING.
FIRE ALARM	
FCP	FIRE ALARM CONTROL PANEL, SEMI-RECESSED.
	DETECTOR, SMOKE.
75	STROBE. SUBSCRIPT INDICATES CANDELA RATING.
	ALARM, HORN/STROBE, ONE ASSEMBLY, CEILING MOUNTED.

SYMBOL LEGEND

SYMBOL	DESCRIPTION
WIRING DEVICES	
	RECEPTACLE, DUPLEX: NEMA 5-20R.
A	RECEPTACLE, DUPLEX, ABOVE COUNTER: NEMA 5-20R.
C	RECEPTACLE, DUPLEX, CEILING: NEMA 5-20R.
D	RECEPTACLE, DUPLEX, DEDICATED CIRCUIT: NEMA 5-20R.
	RECEPTACLE, DUPLEX WITH GROUND FAULT CIRCUIT INTERRUPTER: NEMA 5-20R.
WP	RECEPTACLE, DUPLEX WITH GROUND FAULT CIRCUIT INTERRUPTER, WEATHERPROOF: NEMA 5-20R.
	RECEPTACLE, QUADRAPLEX: NEMA 5-20R.
	RECEPTACLE, SPECIAL PURPOSE. PROVIDE RECEPTACLE TO MATCH EQUIPMENT PLUG.
X $	SWITCH, SINGLE POLE ("x" INDICATES FIXTURES CONTROLLED).
X $3	SWITCH, THREE-WAY ("x" INDICATES FIXTURES CONTROLLED).
ELECTRICAL POWER AND DISTRIBUTION	
	DISCONNECT, FUSED (ONE-LINE DIAGRAM).
	DISCONNECT, NONFUSED (ONE-LINE DIAGRAM).
	CIRCUIT BREAKER, MOLDED CASE (ONE-LINE DIAGRAM).
	CIRCUIT BREAKER, SOLID STATE (ONE-LINE DIAGRAM).
	MOTOR.
	TRANSFORMER (ONE-LINE DIAGRAM).
225/3 "1H"	PANELBOARD WITH MAIN LUGS ONLY. BUS SIZE AND PHASE AS SHOWN (ONE-LINE DIAGRAM).
225/3 "1H"	PANELBOARD WITH MAIN CIRCUIT BREAKER. SIZE AND PHASE AS SHOWN (ONE-LINE DIAGRAM).
225/3 "1H" 60/3	PANELBOARD WITH MAIN AND SUB FEED CIRCUIT BREAKER (ONE-LINE DIAGRAM).
	CT CABINET PER UTILITY'S REQUIREMENTS (ONE-LINE DIAGRAM).
	SERVICE ENTRANCE SURGE PROTECTION (ONE-LINE DIAGRAM).
M	METER.
	DISCONNECT SWITCH, FUSED.
	DISCONNECT SWITCH, UNFUSED.
	STARTER, COMBINATION WITH DISCONNECT SWITCH.
	STARTER OR MOTOR CONTROLLER.
	PANELBOARD CABINET, FLUSH MOUNTED.
	PANELBOARD CABINET, SURFACE MOUNTED, 1 SECTION.
	PANELBOARD CABINET, SURFACE MOUNTED, 2 SECTION.
DP#__	DISTRIBUTION PANEL OR SWITCHBOARD.
LP	LIGHTING RELAY, CONTACTOR PANEL, OR DIMMING ENCLOSURE.
$ST	SWITCH, TOGGLE MOTOR STARTER WITH OVERLOAD PROTECTION.
75	TRANSFORMER: NUMBER INDICATES kVA.

ABBREVIATIONS

NOTE: ALL ABBREVIATIONS MAY NOT BE USED.

1P	SINGLE POLE	KV	KILOVOLT
1PH	SINGLE-PHASE	KVA	KILOVOLT AMPERE
1WAY	ONE-WAY	KVAR	KILOVOLT AMPERE REACTIVE
2/C	TWO-CONDUCTOR		
2WAY	TWO-WAY	kW	KILOWATT
3/C	THREE-CONDUCTOR	kWh	KILOWATT HOUR
3PH	THREE-PHASE	LED	LIGHT EMITTING DIODE
3WAY	THREE-WAY	LFMC	LIQUID TIGHT FLEXIBLE METAL CONDUIT
4OUT	QUADRUPLE RECEPTACLE OUTLET	LFNC	LIQUID TIGHT FLEXIBLE NONMETALLIC CONDUIT
4PDT	FOUR-POLE DOUBLE THROW	LPS	LOW PRESSURE SODIUM
4PST	FOUR-POLE SINGLE THROW	LRA	LOCKED ROTOR AMPS
		LTG	LIGHTING
4W	FOUR-WIRE	LV	LOW VOLTAGE
4WAY	FOUR-WAY	MATV	MASTER ANTENNA TELEVISION SYSTEM
A	ABOVE COUNTER		
AC	ARMORED CABLE	MAX	MAXIMUM
ADA	AMERICANS WITH DISABILITIES ACT	MC	METAL CLAD
		MCA	MINIMUM CIRCUIT AMPS
ADJ	ADJACENT	MCB	MAIN CIRCUIT BREAKER
AFF	ABOVE FINISHED FLOOR	MCC	MOTOR CONTROL CENTER
AFG	ABOVE FINISHED GRADE	MCP	MOTOR CIRCUIT PROTECTION
AIC	AMPERE INTERRUPTING CAPACITY	MDP	MAIN DISTRIBUTION PANEL
ALUM	ALUMINUM		
AMP	AMPERE	MG	MOTOR GENERATOR
ANN	ANNUNCIATOR	MH	MANHOLE
AP	ACCESS POINT (WIRELESS DATA)	MIN	MINIMUM
		MLO	MAIN LUGS ONLY
AR	AS REQUIRED	MOCP	MAXIMUM OVERCURRENT PROTECTION
ASC	AMPS SHORT CIRCUIT		
ATS	AUTOMATIC TRANSFER SWITCH	NA	NOT APPLICABLE
		NC	NORMALLY CLOSED
AV	AUDIO VISUAL	NEC	NATIONAL ELECTRICAL CODE
AWG	AMERICAN WIRE GAGE		
BB XFMR	BUCK-BOOST TRANSFORMER	NEMA	NATIONAL ELECTRICAL MANUFACTURERS ASSOCIATION
C	CEILING MOUNTED		
CATV	COMMUNITY ANTENNA TELEVISION	NFC	NATIONAL FIRE CODE
		NFPA	NATIONAL FIRE PROTECTION ASSOCIATION
CB	CIRCUIT BREAKER		
CCBA	CUSTOM COLOR AS SELECTED BY ARCHITECT	NIC	NOT IN CONTRACT
		NL	NIGHT LIGHT
CCTV	CLOSED CIRCUIT TELEVISION	NO	NORMALLY OPEN
		NTS	NOT TO SCALE
CFBA	CUSTOM FINISH AS SELECTED BY ARCHITECT	OC	ON CENTER
		OCP	OVER CURRENT PROTECTION
CF/CI	CONTRACTOR FURNISHED/ CONTRACTOR INSTALLED	OF/CI	OWNER FURNISHED/ CONTRACTOR INSTALLED
CF/OI	CONTRACTOR FURNISHED/ OWNER INSTALLED	OF/OI	OWNER FURNISHED/ OWNER INSTALLED
CKT	CIRCUIT	OFP	OBTAIN FROM PLANS
CM	CONSTRUCTION MANAGER	OH DR	OVERHEAD (COILING) DOOR
CND	CONDUIT		
CO	CONVENIENCE OUTLET	OL	OVERLOAD
COR	CONTRACTING OFFICER'S REPRESENTATIVE	PB	PUSHBUTTON
		PF	POWER FACTOR
CP	CONTROL PANEL	PH	PHASE
CT	CURRENT TRANSFORMER	PNL	PANEL
CTV	CABLE TELEVISION	PT	POTENTIAL TRANSFORMER
CU	COPPER	PTZ	PAN/TILT/ZOOM
dBA	UNIT OF SOUND LEVEL	QTY	QUANTITY
DPDT	DOUBLE POLE DOUBLE THROW	R	REMOVE
		RCP	REFLECTED CEILING PLAN
DS	DISCONNECT SWITCH	RMC	RIGID METAL CONDUIT
EA	EACH	RNC	RIGID NONMETALLIC CONDUIT
EM	EMERGENCY		
EMT	ELECTRICAL METALLIC TUBING	RPM	REVOLUTIONS PER MINUTE
		RR	REMOVE AND RELOCATE
ENT	ELECTRICAL NONMETALLIC TUBING	SCA	SHORT CIRCUIT AMPS
		SCBA	STANDARD COLOR AS SELECTED BY ARCHITECT
EPO	EMERGENCY POWER OFF		
EQUIP	EQUIPMENT	SF	SQUARE FOOT (FEET)
EX	EXISTING	SFBA	STANDARD FINISH AS SELECTED BY ARCHITECT
F	FURNITURE MOUNTED		
FA	FIRE ALARM	SPDT	SINGLE POLE, DOUBLE THROW
FCP	FIRE ALARM CONTROL PANEL		
		SPEC	SPECIFICATION
FLA	FULL LOAD AMPS	SPST	SINGLE POLE, SINGLE THROW
FMC	FLEXIBLE METALCONDUIT		
FOB	FREIGHT ON BOARD	S/S	START/STOP
FVNR	FULL VOLTAGE NON-REVERSING	ST	SINGLE THROW
		SWBD	SWITCHBOARD
FVR	FULL VOLTAGE REVERSING	SWGR	SWITCHGEAR
G	GROUND	TL	TWIST LOCK
GEN	GENERATOR	TP	TELEPHONE POLE
GFCI	GROUND FAULT CIRCUIT INTERRUPTER	TP	TWISTED PAIR
		TTB	TELEPHONE TERMINAL BOARD
GFP	GROUND FAULT PROTECTION		
HD	HEAVY DUTY	TV	TELEVISION
HID	HIGH INTENSITY DISCHARGE	TVSS	TRANSIENT VOLTAGE SURGE SUPPRESSER
HOA	HAND-OFF-AUTOMATIC	TYP	TYPICAL
HP	HORSE POWER	UF	UNDERFLOOR
HPF	HIGH POWER FACTOR	UGND	UNDERGROUND
HPS	HIGH PRESSURE SODIUM	UPS	UNINTERRUPTIBLE POWER SUPPLY
HV	HIGH VOLTAGE		
HZ	HERTZ	V	VOLTS
IG	ISOLATED GROUND	VA	VOLT AMPERE
IMC	INTERMEDIATE METAL CONDUIT	VFC/VFD	VARIABLE FREQUENCY MOTOR CONTROLLER
IN/IS	INSULATED/ISOLATED	W/	WITH
I/O	INPUT/OUTPUT	W/O	WITHOUT
IR	INFRARED	WP	WEATHERPROOF
J-BOX	JUNCTION BOX	XFMR	TRANSFORMER

DEFINITIONS

NOTE: ALL DEFINITIONS MAY NOT BE USED.

INDICATED: THE TERM "INDICATED" REFERS TO GRAPHIC REPRESENTATIONS, NOTES, OR SCHEDULES ON THE DRAWINGS, OTHER PARAGRAPHS OR SCHEDULES IN THE SPECIFICATIONS, AND SIMILAR REQUIREMENTS IN THE CONTRACT DOCUMENTS. WHERE TERMS SUCH AS "SHOWN", "NOTED", "SCHEDULED", AND "SPECIFIED" ARE USED, IT IS TO HELP THE READER LOCATE THE REFERENCE, NO LIMITATION ON LOCATION IS INTENDED.

DIRECTED: TERMS SUCH AS "DIRECTED", "REQUESTED", AUTHORIZED", "SELECTED", "APPROVED", "REQUIRED", AND "PERMITTED" MEAN "DIRECTED BY THE ENGINEER", "REQUESTED BY THE ENGINEER", AND SIMILAR PHRASES.

APPROVED: THE TERM "APPROVED", WHERE USED IN CONJUNCTION WITH THE ENGINEER'S ACTION ON THE CONTRACTOR'S SUBMITTALS, APPLICATIONS, AND REQUESTS, IS LIMITED TO THE ENGINEER'S DUTIES AND RESPONSIBILITIES AS STATED IN GENERAL AND SUPPLEMENTARY CONDITIONS.

FURNISH: THE TERM "FURNISH" IS USED TO MEAN "SUPPLY AND DELIVER TO THE PROJECT SITE, READY FOR UNLOADING, UNPACKING, ASSEMBLY, INSTALLATION, AND SIMILAR OPERATIONS."

INSTALL: THE TERM "INSTALL" IS USED TO DESCRIBE OPERATIONS AT PROJECT SITE INCLUDING THE ACTUAL "UNLOADING, UNPACKING, ASSEMBLY, ERECTION, PLACING, ANCHORING, APPLYING, WORKING TO DIMENSION, FINISHING, CURING, PROTECTING, CLEANING, AND SIMILAR OPERATIONS."

PROVIDE: THE TERM "PROVIDE" MEANS "TO FURNISH AND INSTALL, COMPLETE AND READY FOR THE INTENDED USE."

INSTALLER: AN "INSTALLER" IS THE CONTRACTOR OR AN ENTITY ENGAGED BY THE CONTRACTOR, EITHER AS AN EMPLOYEE, SUBCONTRACTOR, OR SUB-SUBCONTRACTOR, FOR PERFORMANCE OF A PARTICULAR CONSTRUCTION ACTIVITY, INCLUDING INSTALLATION, ERECTION, APPLICATION, AND SIMILAR OPERATIONS. INSTALLERS ARE REQUIRED TO BE EXPERIENCED IN THE OPERATIONS THEY ARE ENGAGED TO PERFORM.

TECHNOLOGY SYSTEMS: THE TERM "TECHNOLOGY SYSTEMS" IS USED TO DESCRIBE ALL LOW VOLTAGE SYSTEMS GENERALLY REFERRED TO AS "SPECIAL SYSTEMS". THESE SYSTEMS INCLUDE BUT ARE NOT NECESSARILY LIMITED TO ALL SYSTEMS WHICH UTILIZE VOLTAGES OF LESS THAN 71 VOLTS SUCH AS SOUND SYSTEMS, VIDEO SYSTEMS, TV SYSTEMS, SECURITY SYSTEMS, VOICE AND DATA CABLING SYSTEMS, ETC...

ELECTRICAL SHEET INDEX

SHEET NO	SHEET TITLE
EE001	SYMBOL LEGEND/SHEET INDEX
EE501	DETAILS
EE502	DETAILS
ES101	ELECTRICAL SITE PLAN
ED101	1ST FLOOR DEMOLITION PLAN
ED102	2ND FLOOR DEMOLITION PLAN
EP101	1ST FLOOR POWER PLAN
EP102	2ND FLOOR POWER PLAN
EP501	COMMUNICATIONS DETAILS
EP502	SECURITY DETAILS
EP601	ONE-LINE DIAGRAM
EP602	SCHEDULES
EL101	1ST FLOOR LIGHTING PLAN
EL102	2ND FLOOR LIGHTING PLAN
EL601	LIGHTING FIXTURE SCHEDULE
FA101	1ST FLOOR FIRE ALARM PLAN
FA102	2ND FLOOR FIRE ALARM PLAN
FA601	FIRE ALARM RISER

GENERAL ELECTRICAL NOTES

1. CLARIFICATION METHODS: AT THE TIME OF BIDDING, BIDDERS SHALL FAMILIARIZE THEMSELVES WITH THE DRAWINGS AND SPECIFICATIONS. ANY QUESTIONS, MISUNDERSTANDINGS, CONFLICTS, DELETIONS, DISCONTINUED PRODUCTS, CATALOG NUMBER DISCREPANCIES, DISCREPANCIES BETWEEN THE EQUIPMENT SUPPLIED AND THE INTENT OR FUNCTION OF THE EQUIPMENT, ETC, SHALL BE SUBMITTED TO THE ARCHITECT/ENGINEER IN WRITING FOR CLARIFICATION PRIOR TO ISSUANCE OF THE FINAL ADDENDUM AND BIDDING OF THE PROJECT. WHERE DISCREPANCIES OR MULTIPLE INTERPRETATIONS OCCUR, THE MOST STRINGENT (WHICH IS GENERALLY RECOGNIZED AS THE MOST COSTLY) THAT MEETS THE INTENT OF THE DOCUMENTS SHALL BE ENFORCED.
2. OWNER FURNISHED ITEMS: THE OWNER WILL FURNISH MATERIAL AND EQUIPMENT AS INDICATED IN THE CONTRACT DOCUMENTS TO BE INCORPORATED INTO THE WORK. THESE ITEMS ARE ASSIGNED TO THE INSTALLER AND COSTS FOR RECEIVING, HANDLING, STORAGE, IF REQUIRED, AND INSTALLATION ARE INCLUDED IN THE CONTRACT SUM.
   A. THE INSTALLER'S RESPONSIBILITIES ARE THE SAME AS IF THE INSTALLER FURNISHED THE MATERIALS OR EQUIPMENT.
   B. THE OWNER WILL ARRANGE AND PAY FOR DELIVERY OF OWNER FURNISHED ITEMS FREIGHT ON BOARD JOB SITE AND THE INSTALLER WILL INSPECT DELIVERIES FOR DAMAGE. IF OWNER FURNISHED ITEMS ARE DAMAGED, DEFECTIVE OR MISSING, DOCUMENT DAMAGED ITEMS WITH THE TRANSPORT COMPANY AND THE OWNER WILL ARRANGE FOR REPLACEMENT. THE OWNER WILL ALSO ARRANGE FOR MANUFACTURER'S FIELD SERVICES, AND THE DELIVERY OF MANUFACTURER'S WARRANTIES AND BONDS TO THE INSTALLER.
   C. THE INSTALLER IS RESPONSIBLE FOR DESIGNATING THE DELIVERY DATES OF OWNER FURNISHED ITEMS AND FOR RECEIVING, UNLOADING AND HANDLING OWNER FURNISHED ITEMS AT THE SITE. THE INSTALLER IS RESPONSIBLE FOR PROTECTING OWNER FURNISHED ITEMS FROM DAMAGE, INCLUDING DAMAGE FROM EXPOSURE TO THE ELEMENTS, AND TO REPAIR OR REPLACE ITEMS DAMAGED AS A RESULT OF HIS OPERATIONS.
3. EXPOSED STRUCTURE AREAS (EXCLUDING MECHANICAL, ELECTRICAL, AND COMMUNICATION SPACES): INSTALL RACEWAYS BETWEEN DECK AND STRUCTURE WHEREVER POSSIBLE IN EXPOSED STRUCTURE CEILING AREAS. ROUTE RACEWAYS IN CONCEALED AREAS WHEREVER POSSIBLE. REFER ALL CONDITIONS WHERE RACEWAYS MUST BE INSTALLED WHICH CANNOT COMPLY WITH THESE REQUIREMENTS TO THE ARCHITECT.
4. SUBMITTALS: PROVIDE SUBMITTALS IN THREE RING BINDERS WITH JOB NAME, SUBCONTRACTOR, AND VOLUME ON THE BINDING. PREPARE TABS FOR EACH SPECIFICATION SECTION REQUIRING SUBMITTALS. PREPARE INDEX OF EQUIPMENT SUBMITTED IN EACH TAB.
5. REFLECTED CEILING PLANS: COORDINATE THE LOCATION OF LIGHT FIXTURES WITH THE ARCHITECTURAL REFLECTED CEILING PLANS. REFER ALL DISCREPANCIES TO THE ARCHITECT AND ENGINEER.

Harris & Associates Sm
265 East 100 South Suite 350
Salt Lake City, Utah 84111-1604
Ph (801) 521-8564 Fax (801) 355-2938

CONSULTANT INFORMATION
SPECTRUM ENGINEERS
175 South Main Street, Suite 300
Salt Lake City, Utah 84111
801-328-5151
800-678-7077
FAX 801-328-5155
www.spectrum-engineers.com

REGISTERED PROFESSIONAL ENGINEER No. 7083854 DAVID L. AFFLECK STATE OF UTAH
2009-02-09

Utah National Guard
RENOVATION OF READINESS CENTER
BUILDING 5170
CAMP W.G. WILLIAMS, UTAH

SHEET TITLE
Symbol Legend/Sheet Index

REVISIONS	DATE	BY	DESCRIPTION
1			
2			
3			
4			

DRAWN BY: PSS
CHECKED BY: DLA
PROJECT NO.: 08032470 CW
DRAWING NO.: EE001
DATE: FEB 9, 2009

Utah National Guard - Camp Williams Bldg. 5170

File Name: P:\2008\20080419\1Drawings\Sheet\19EE001.dwg Last Plotted: 2009/02/13 @ 5:14 PM By: pss

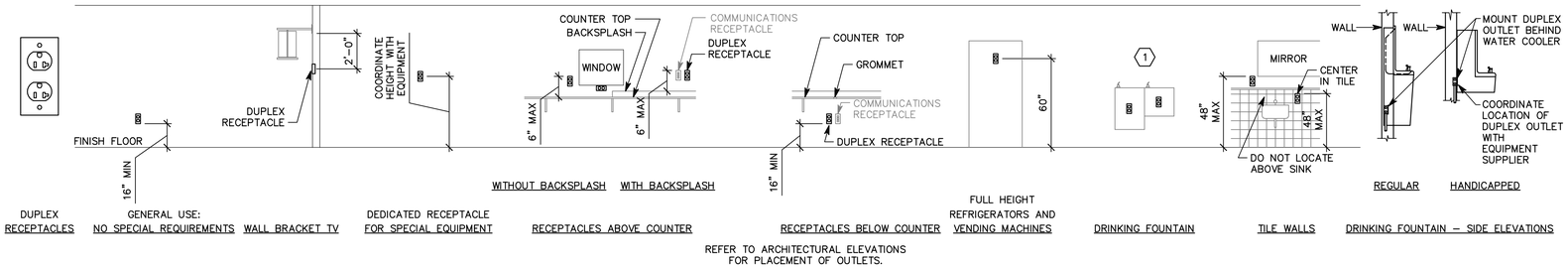

DUPLEX RECEPTACLES | GENERAL USE: NO SPECIAL REQUIREMENTS | WALL BRACKET TV | DEDICATED RECEPTACLE FOR SPECIAL EQUIPMENT | RECEPTACLES ABOVE COUNTER: WITHOUT BACKSPLASH, WITH BACKSPLASH | RECEPTACLES BELOW COUNTER | FULL HEIGHT REFRIGERATORS AND VENDING MACHINES | DRINKING FOUNTAIN | TILE WALLS | DRINKING FOUNTAIN – SIDE ELEVATIONS

REFER TO ARCHITECTURAL ELEVATIONS FOR PLACEMENT OF OUTLETS.

C18 RECEPTACLE MOUNTING DETAILS
NTS

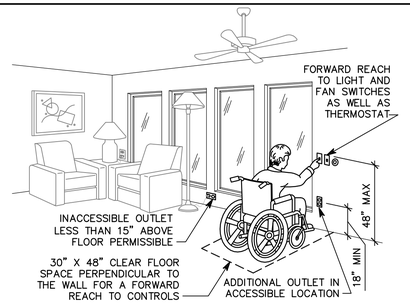

F18 ADA DETAIL
NTS

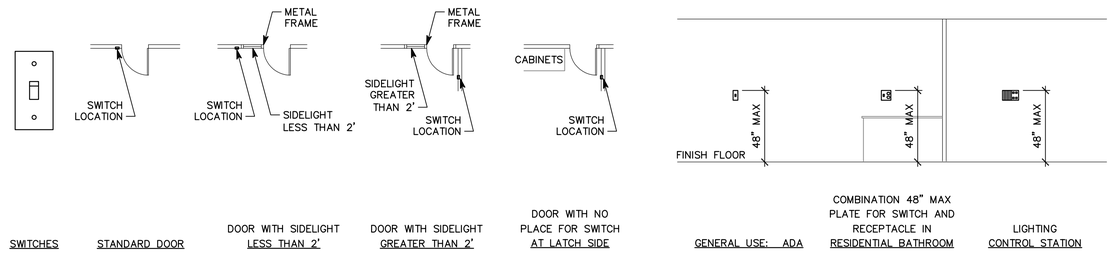

SWITCHES | STANDARD DOOR | DOOR WITH SIDELIGHT LESS THAN 2' | DOOR WITH SIDELIGHT GREATER THAN 2' | DOOR WITH NO PLACE FOR SWITCH AT LATCH SIDE | GENERAL USE: ADA | COMBINATION 48" MAX PLATE FOR SWITCH AND RECEPTACLE IN RESIDENTIAL BATHROOM | LIGHTING CONTROL STATION

F14 SWITCH MOUNTING DETAILS
NTS

GENERAL SHEET NOTES

1. DETERMINE MOUNTING HEIGHTS OF ELECTRICAL AND ELECTRONIC EQUIPMENT IN THE FOLLOWING ORDER OF PRIORITY:
   1 – ELEVATIONS (ARCHITECTURAL, ELECTRICAL, MECHANICAL, ETC).
   2 – EQUIPMENT SHOP DRAWINGS.
   3 – FIELD INSTRUCTIONS.
2. LOCATE RECEPTACLES SERVING THE SAME TYPE OF USE AT A UNIFORM HEIGHT UNLESS DIRECTED OTHERWISE.
3. MECHANICAL, ELECTRICAL, AND COMMUNICATION ROOMS: COORDINATE LOCATION OF LIGHTING AND POWER RECEPTACLES WITH EQUIPMENT, PIPING, AND DUCTWORK. DO NOT INSTALL RECEPTACLES BEHIND EQUIPMENT OR WHERE OTHERWISE INACCESSIBLE. POSITION LIGHTING REGARDLESS OF WHERE SHOWN ON DRAWING TO PROVIDE PROPER ILLUMINATION.
4. MOUNT RECEPTACLE BOXES FOR SWITCHES AND RECEPTACLES WITH LONG AXIS OF THE DEVICE VERTICAL UNLESS OTHERWISE INDICATED.
5. SET BOXES WITH PLASTER RINGS FLUSH WITH FINISHED SURFACE.
6. LOCATE BOX COVERS OR DEVICE PLATES SO THEY WILL NOT SPAN DIFFERENT TYPES OF BUILDING FINISHES EITHER VERTICALLY OR HORIZONTALLY.
7. VERIFY ALL DOOR CONDITIONS ON ARCHITECTURAL DRAWINGS PRIOR TO INSTALLING SWITCHES.
8. LOCATE WIRING DEVICES WHICH ARE ADJACENT AND ARE COMPATIBLE VOLTAGES IN ONE PLATE.

⬡SHEET KEYNOTES

1. LOCATE RECEPTACLES BEHIND DRINKING FOUNTAINS.
2. REFER TO ARCHITECTURAL ELEVATIONS FOR PLACEMENT OF OUTLETS.
3. LOCATE AT BOTTOM OF BEAMS (OR JOISTS) OR AT CEILING. (REDUCE SPACING BY .5 PERPENDICULAR TO BEAM OR JOIST DIRECTION.) FOR OTHER CONDITIONS, REFER TO NFPA 72.
4. LOCATE SMOKE DETECTOR ANYWHERE IN SHADED AREA.
5. LOCATE AT BOTTOM OF BEAMS IF EITHER D/H < .1 OR W/H < .4; OTHERWISE, LOCATE IN BEAM POCKET.

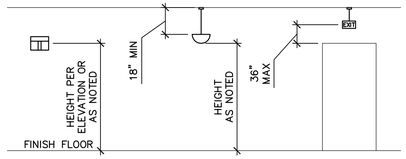

WALL MOUNTED LIGHT FIXTURE | PENDANT LIGHT FIXTURE | PENDANT EXIT SIGNS

I18 LIGHTING MOUNTING DETAILS
NTS

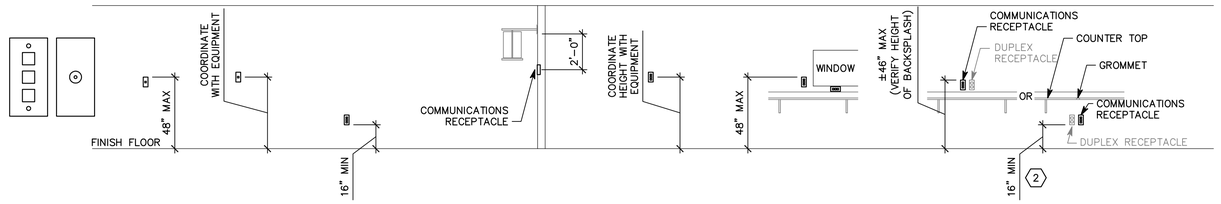

COMMUNICATION RECEPTACLES | WALL PHONE | PAY PHONE | GENERAL USE: NO SPECIAL REQUIREMENTS | WALL BRACKET TV | DEDICATED RECEPTACLE FOR SPECIAL EQUIPMENT | ABOVE COUNTER – TYPICAL | RECEPTACLES ABOVE OR BELOW COUNTER

I14 COMMUNICATION MOUNTING DETAILS
NTS

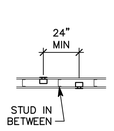

BOXES ON OPPOSITE SIDES OF WALL

I13 BOX MOUNTING DETAILS
NTS

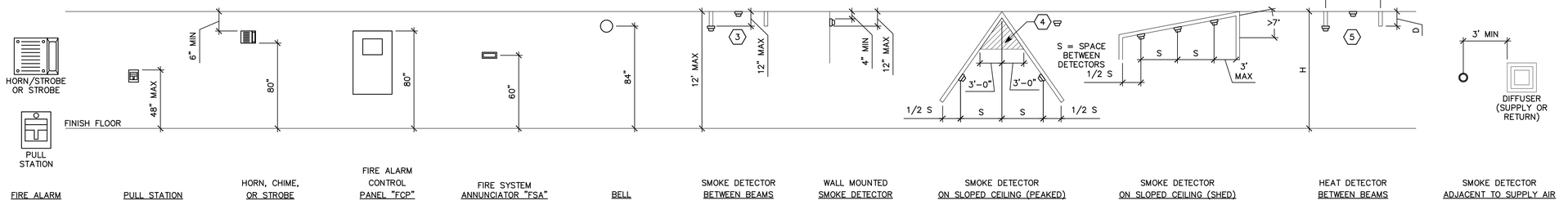

FIRE ALARM | PULL STATION | HORN, CHIME, OR STROBE | FIRE ALARM CONTROL PANEL "FCP" | FIRE SYSTEM ANNUNCIATOR "FSA" | BELL | SMOKE DETECTOR BETWEEN BEAMS | WALL MOUNTED SMOKE DETECTOR | SMOKE DETECTOR ON SLOPED CEILING (PEAKED) | SMOKE DETECTOR ON SLOPED CEILING (SHED) | HEAT DETECTOR BETWEEN BEAMS | SMOKE DETECTOR ADJACENT TO SUPPLY AIR

I18 FIRE ALARM MOUNTING DETAILS
NTS

Harris & Associates Inc
265 East 100 South Suite 350
Salt Lake City, Utah 84111-1604
Ph (801) 521-8564 Fax (801) 355-2938

CONSULTANT INFORMATION
SPECTRUM ENGINEERS
175 South Main Street, Suite 300
Salt Lake City, Utah 84111
801-328-5151
800-678-7077
FAX 801-328-5155
www.spectrum-engineers.com

REGISTERED PROFESSIONAL ENGINEER
No. 7083854
DAVID L. AFFLECK
STATE OF UTAH
2009-02-09

Utah National Guard
RENOVATION OF READINESS CENTER
BUILDING 5170
CAMP W.G. WILLIAMS, UTAH

SHEET TITLE
Details

REVISIONS	DATE	BY	DESCRIPTION
△			
△			
△			
△			

DRAWN BY: PSS | CHECKED BY: DLA
PROJECT NO.: 08032470 CW
DATE: FEB 9, 2009
DRAWING NO.: **EE501**

File Name: P:\2008\20080419\Drawings\Sheet\19EE501.dwg Last Plotted: 2009/02/13 @ 5:13 PM By: pss

Utah National Guard - Camp Williams Bldg. 5170

NOTE:
TIE WIRE SHALL NOT BE USED AS A COMPONENT OF ANY RACEWAY HANGER SYSTEM.

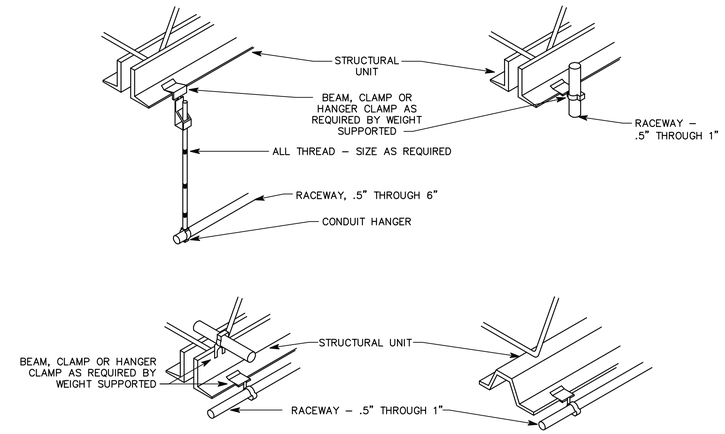

F7 TYPICAL RACEWAY SUPPORT METHODS DETAIL
NTS

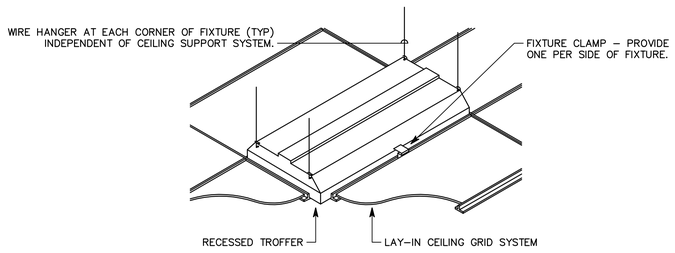

I14 RECESSED FIXTURE MOUNTING DETAIL
NTS

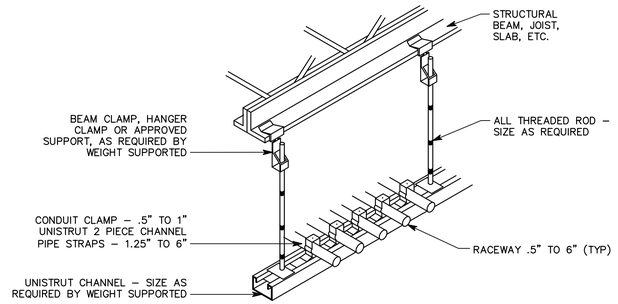

-14 TYPICAL CONDUIT RACK DETAIL
NTS

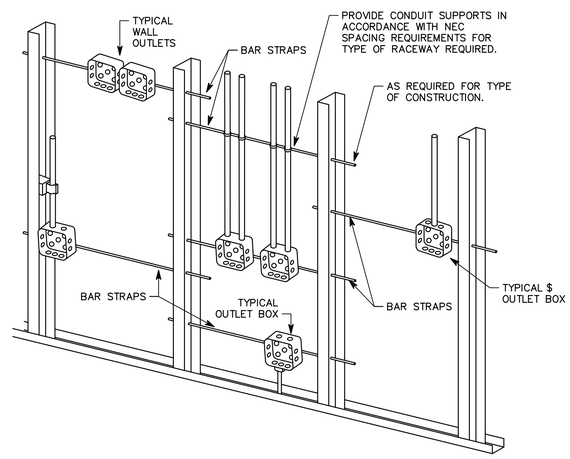

NOTES:

1. TYPICAL FOR WOOD AND METAL STUD ROUGH–IN.
2. PLASTER RINGS NOT SHOWN.
3. LOCATE ALL OUTLET BOXES IN ACCORDANCE WITH ARCHITECTURAL AND MECHANICAL DRAWINGS AND WITH ALL APPLICABLE SHOP DRAWINGS.
4. IN ACCORDANCE WITH IBC 711.3.2 EXCEPTION 1, OUTLETS ON OPPOSITE SIDES OF WALLS OR PARTITIONS IN THE SAME STUD SPACE IN A RATED FIRE SEPARATION WALL MUST BE SEPARATED BY A MINIMUM OF 24" HORIZONTAL DISTANCE.
5. IN NON–RATED WALLS, OUTLETS ON OPPOSITE SIDES OF WALLS OR PARTITIONS MUST BE SEPARATED BY 16" FOR SOUND ATTENUATION.

L7 TYPICAL ROUGH–IN REQUIREMENTS DETAIL
NTS

Harris & Associates Inc
265 East 100 South Suite 350
Salt Lake City, Utah 84111-1604
Ph (801) 521-8564 Fax (801) 355-2938

CONSULTANT INFORMATION
SPECTRUM ENGINEERS
175 South Main Street, Suite 300
Salt Lake City, Utah 84111
801-328-5151
800-678-7077
FAX 801-328-5155
www.spectrum-engineers.com

REGISTERED PROFESSIONAL ENGINEER
No. 7083854
DAVID L. AFFLECK
STATE OF UTAH
2009-02-09

Utah National Guard
RENOVATION OF READINESS CENTER
BUILDING 5170
CAMP W.G. WILLIAMS, UTAH

SHEET TITLE
Details

REVISIONS	DATE	BY	DESCRIPTION
△			
△			
△			
△			

DRAWN BY: PSS
CHECKED BY: DLA
PROJECT NO.: 08032470 CW
DRAWING NO.: EE502
DATE: FEB 9, 2009

Utah National Guard - Camp Williams Bldg. 5170

File Name: P:\2008\20080419\Drawings\Sheet\19EE502.dwg Last Plotted: 2009/02/13 @ 5:13 PM By: pss

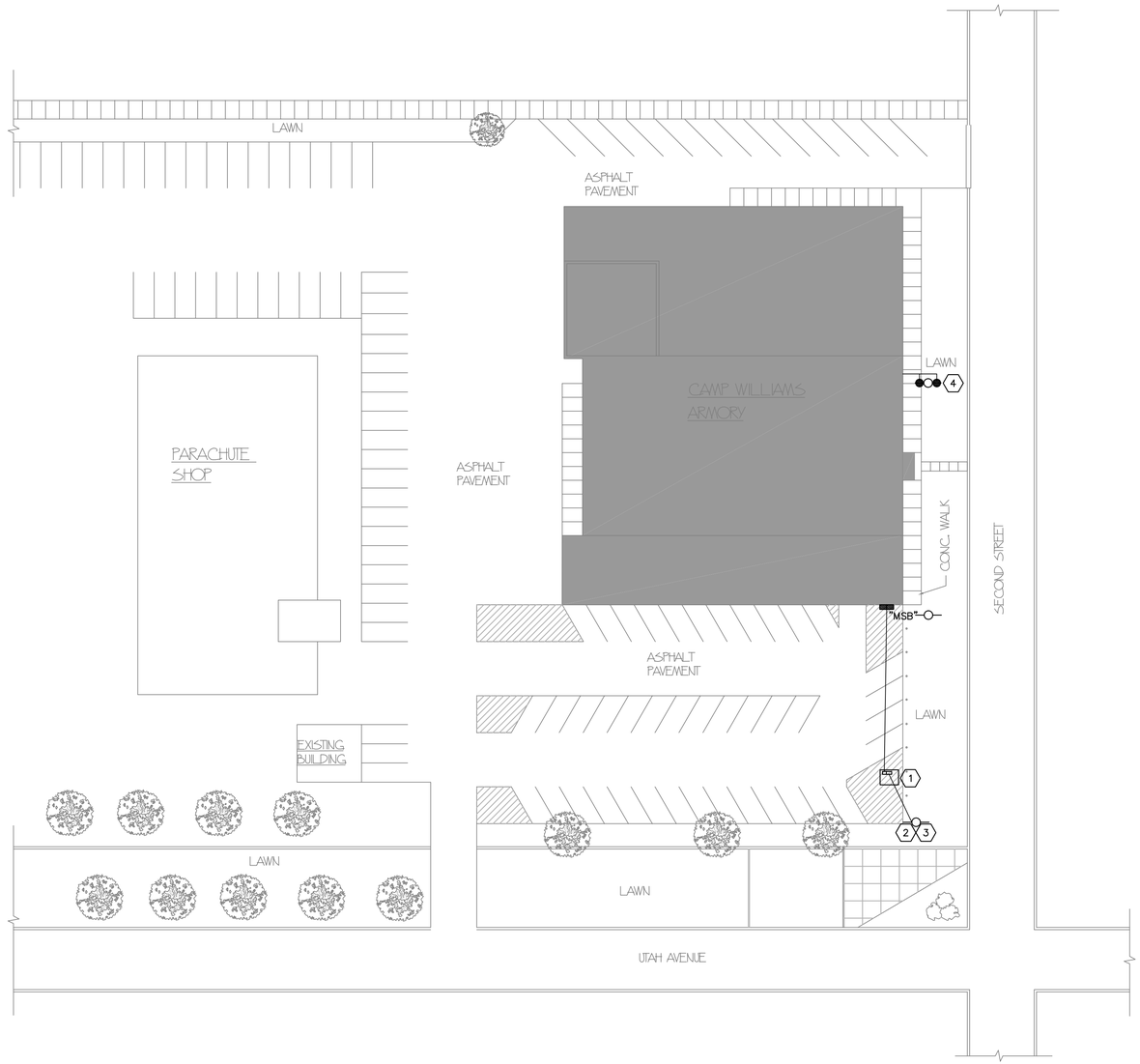

NORTH

18 ELECTRICAL SITE PLAN
1" = 30'-0"

0 4' 8' 16'

Harris & Associates Sm
265 East 100 South Suite 350
Salt Lake City, Utah 84111-1604
Ph (801) 521-8564 Fax (801) 355-2938

CONSULTANT INFORMATION
SPECTRUM ENGINEERS
175 South Main Street, Suite 300
Salt Lake City, Utah 84111
801-328-5151
800-678-7077
FAX 801-328-5155
www.spectrum-engineers.com

SHEET KEYNOTES

1. NEW PAD MOUNTED TRANSFORMER.
2. TO EXISTING OVERHEAD POLE.
3. NOT USED.
4. POLE MOUNTED TRANSFORMER. CURRENT FEEDERS INTO BUILDINGS. REMOVE EXISTING SECONDARY. SALVAGE POLE MOUNTED TRANSFORMER TO UTNG. COORDINATE WITH UTILITY COMPANY.

REGISTERED PROFESSIONAL ENGINEER
No. 708354
DAVID L. AFFLECK
STATE OF UTAH
2009-02-09

Utah National Guard
RENOVATION OF READINESS CENTER
BUILDING 5170
CAMP W.G. WILLIAMS, UTAH

SHEET TITLE
Electrical Site Plan

REVISIONS	DATE	BY	DESCRIPTION
1			
2			
3			
4			

DRAWN BY: PSS	CHECKED BY: DLA
PROJECT NO.: 08032470 CW	DRAWING NO.: ES101
DATE: FEB 9, 2009	

Utah National Guard - Camp Williams Bldg. 5170

File Name: P:\2008\20080419\Drawings\Sheet\19ES101.dwg Last Plotted: 2009/02/13 @ 5:13 PM By: pss

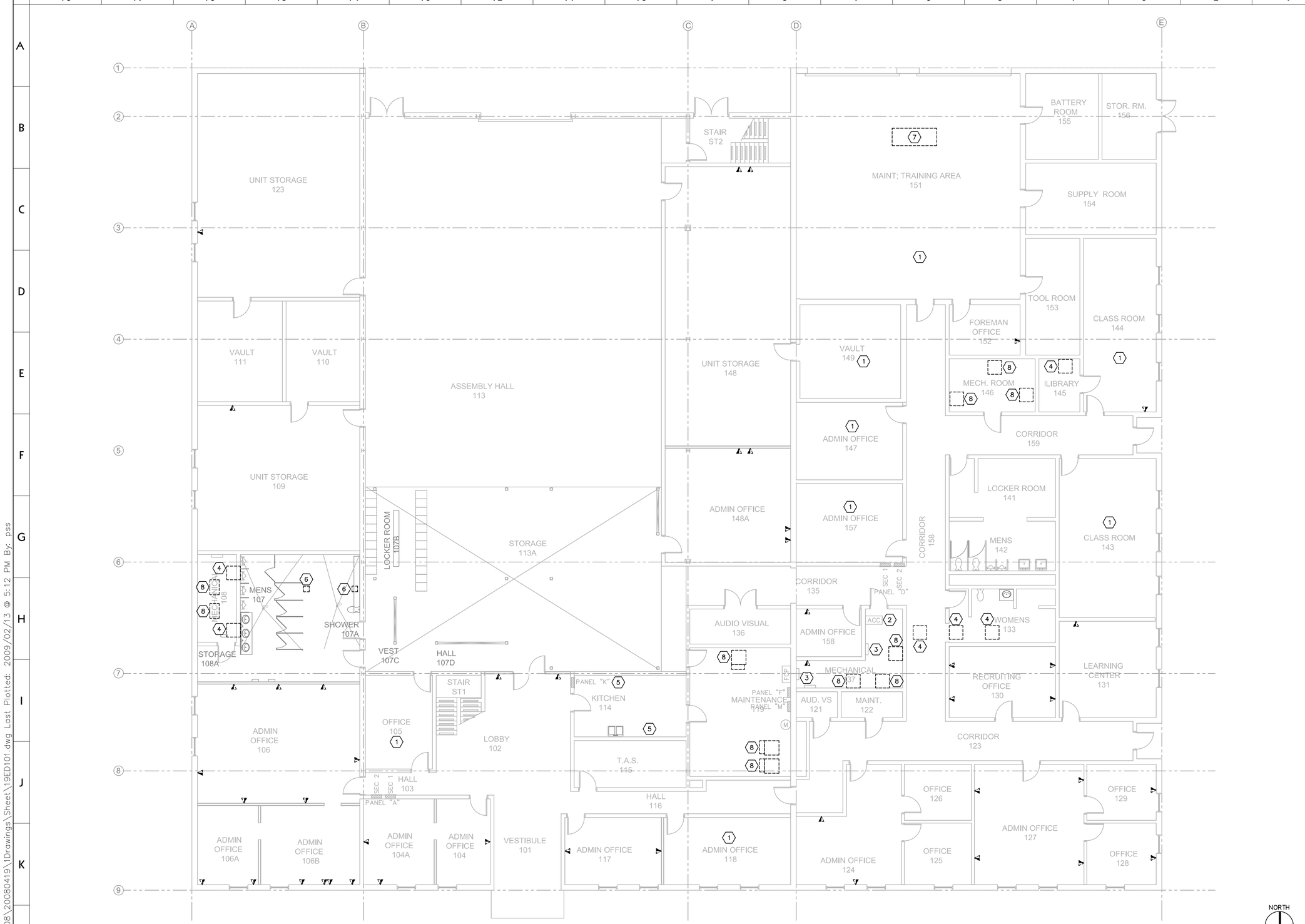

1/18 1ST FLOOR DEMOLITION PLAN

1/8" = 1'-0"

Harris & Associates Sm
265 East 100 South Suite 350
Salt Lake City, Utah 84111-1604
Ph (801) 521-8564 Fax (801) 355-2938

CONSULTANT INFORMATION
SPECTRUM ENGINEERS
175 South Main Street, Suite 300
Salt Lake City, Utah 84111
801-328-5151
800-678-7077
FAX 801-328-5155
www.spectrum-engineers.com

GENERAL SHEET NOTES

1. REMOVE AND REPLACE ALL VOICE/DATA TO NEW STANDARD. SHOULD COMPLY WITH NEW G6 NATIONAL GUARD STANDARD.

SHEET KEYNOTES

1. FIELD VERIFY ALL COMMUNICATIONS. REMOVE AND REPLACE.
2. EXISTING ACCESS CONTROL PANEL TO REMAIN.
3. EXISTING COMMUNICATIONS EQUIPMENT TO REMAIN.
4. REMOVE EXISTING ELECTRICAL FOR ROOF TOP MOUNTED A/C CONDENSING UNIT. PREPARE FOR INSTALLATION OF NEW UNIT IN SAME LOCATION. CONFIRM EXACT LOCATION.
5. REMOVE ELECTRICAL TO EXISTING KITCHEN HOOD.
6. REMOVE EXISTING ELECTRICAL TO EXHAUST FAN. PREPARE FOR NEW INSTALLATION OF NEW FAN.
7. REMOVE EXISTING ELECTRICAL TO ROOF TOP UNIT. PREPARE FOR INSTALLATION OF NEW UNIT. CONFIRM EXACT LOCATION.
8. REMOVE EXISTING ELECTRICAL TO EXISTING FURNACE. PREPARE FOR INSTALLATION OF NEW UNIT.

LICENSED PROFESSIONAL ENGINEER No. 7083854 DAVID L. AFFLECK STATE OF UTAH 2009-02-09

Utah National Guard
RENOVATION OF READINESS CENTER
BUILDING 5170
CAMP W.G. WILLIAMS, UTAH

SHEET TITLE
1st Floor Demolition Plan

REVISIONS	DATE	BY	DESCRIPTION
△			
△			
△			
△			

DRAWN BY: PSS
CHECKED BY: DLA
PROJECT NO.: 08032470 CW
DRAWING NO.: ED101
DATE: FEB 9, 2009

Utah National Guard - Camp Williams Bldg. 5170

File Name: P:\2008\20080419\1Drawings\Sheet\19ED101.dwg Last Plotted: 2009/02/13 @ 5:12 PM By: pss

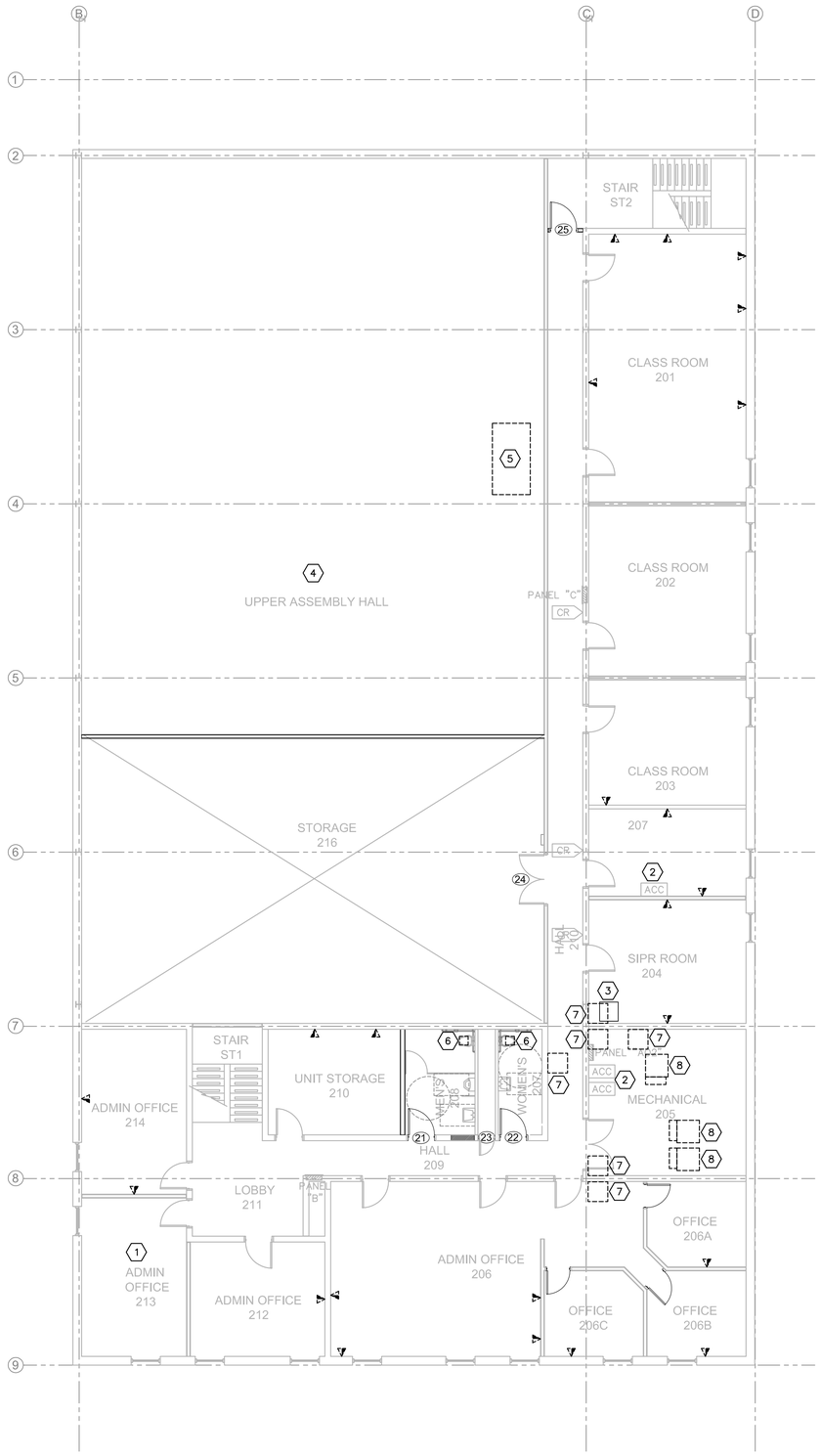

NORTH

0 4' 8' 16'

18 2ND FLOOR DEMOLITION PLAN

1/8" = 1'-0"

Harris & Associates Sm
265 East 100 South Suite 350
Salt Lake City, Utah 84111-1604
Ph (801) 521-8564 Fax (801) 355-2938

CONSULTANT INFORMATION
SPECTRUM ENGINEERS
175 South Main Street, Suite 300
Salt Lake City, Utah 84111
801-328-5151
800-678-7077
FAX 801-328-5155
www.spectrum-engineers.com

GENERAL SHEET NOTES

1. REMOVE AND REPLACE ALL VOICE/DATA TO NEW STANDARD.

⬡SHEET KEYNOTES

1. FIELD VERIFY ALL COMMUNICATIONS REMOVE AND REPLACE.
2. EXISTING ACCESS CONTROL CABINETS TO REMAIN.
3. EXISTING COMMUNICATIONS EQUIPMENT TO REMAIN.
4. REMOVE EXISTING HIGH BAY FIXTURES ABOVE THE CEILING AND REPLACE WITH NEW FIXTURES AS INDICATED. EL101.
5. REMOVE ELECTRICAL FROM EXISTING ROOFTOP UNIT. PREPARE FOR INSTALLATION OF NEW UNIT. CONFIRM EXACT LOCATION.
6. REMOVE ELECTRICAL FROM EXISTING EXHAUST FAN. TO BE REPLACED WITH NEW FAN IN SAME LOCATION. CONFIRM EXACT LOCATIONS.
7. REMOVE ELECTRICAL FROM EXISTING ROOF MOUNTED A/C CONDENSING UNIT. PREPARE FOR INSTALLATION OF NEW UNIT. CONFIRM EXACT LOCATION.
8. REMOVE EXISTING ELECTRICAL TO EXISTING FURNACE. PREPARE FOR INSTALLATION OF NEW UNIT.

REGISTERED PROFESSIONAL ENGINEER
No. 7083854
DAVID L. AFFLECK
STATE OF UTAH
2009-02-09

Utah National Guard
RENOVATION OF READINESS CENTER
BUILDING 5170
CAMP W.G. WILLIAMS, UTAH

SHEET TITLE
2nd Floor Demolition Plan

REVISIONS	DATE	BY	DESCRIPTION
1			
2			
3			
4			

DRAWN BY: PSS
CHECKED BY: DLA
PROJECT NO.: 08032470 CW
DRAWING NO.: ED102
DATE: FEB 9, 2009

Utah National Guard - Camp Williams Bldg. 5170

File Name: P:\2008\20080419\Drawings\Sheet\19ED102.dwg Last Plotted: 2009/02/13 @ 5:12 PM By: pss

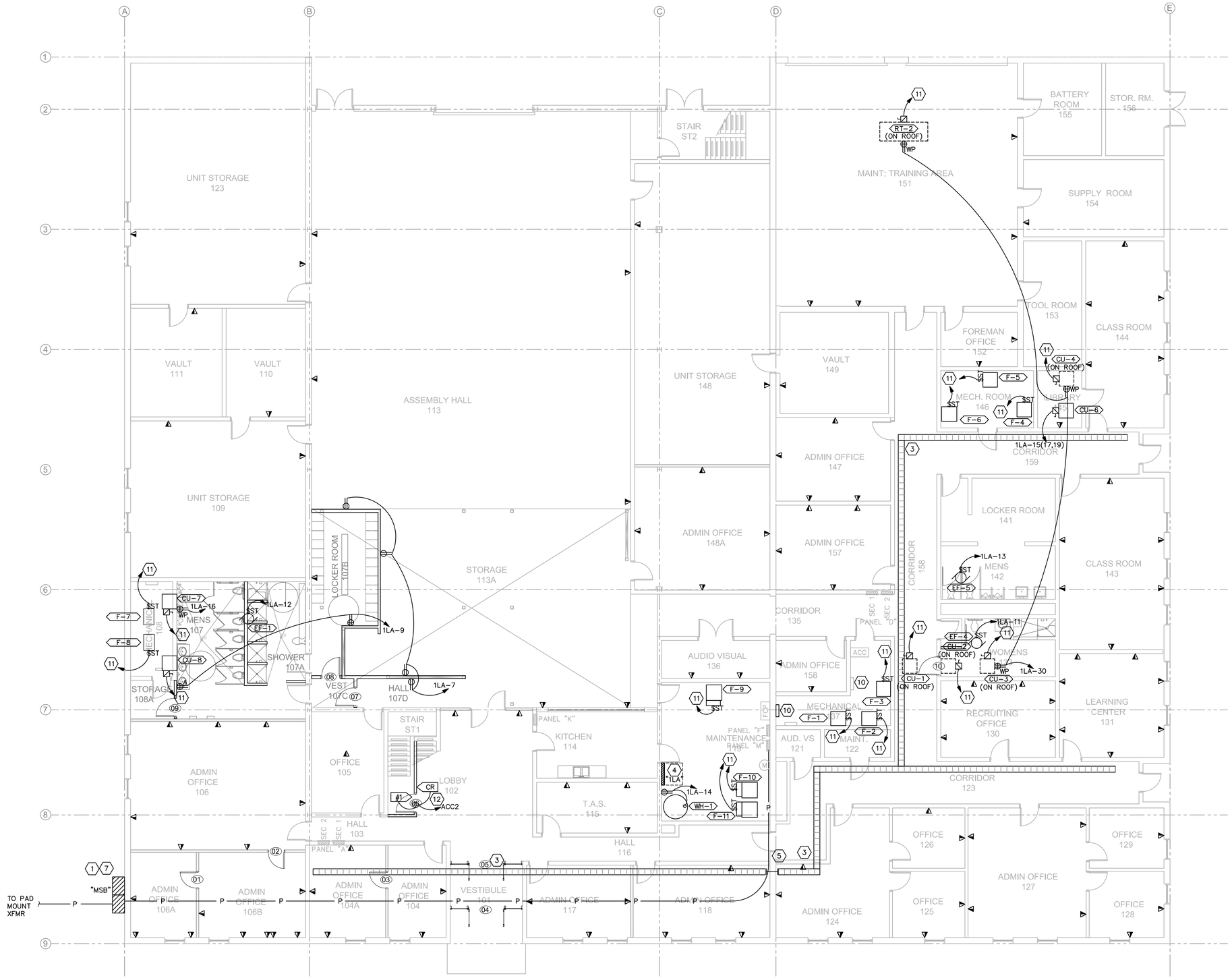

18 1ST FLOOR POWER PLAN

1/8" = 1'-0"

File Name: P:\2008\20080419\Drawings\Sheet\19EP101.dwg Last Plotted: 2009/02/13 @ 5:13 PM By: pss

Harris & Associates Sm

265 East 100 South Suite 350
Salt Lake City, Utah 84111-1604
Ph (801) 521-8564 Fax (801) 355-2938

CONSULTANT INFORMATION
SPECTRUM ENGINEERS
175 South Main Street, Suite 300
Salt Lake City, Utah 84111
801-328-5151
800-678-7077
FAX 801-328-5155
www.spectrum-engineers.com

GENERAL SHEET NOTES

1. OUTLET, BUILDING STANDARD COMBINATION TELEPHONE/DATA COMMUNICATION. SHOWING EXISTING DROPS THAT ARE BEING UPGRADED TO NEW G6 NATIONAL GUARD STANDARD AND NEW DROPS TO BE ADDED.

SHEET KEYNOTES

1. NEW MAIN SWITCHBOARD "MSB".
2. NOT USED.
3. PROVIDE NEW BASKET TRAY ABOVE THE EXISTING CEILING FOR NEW COMMUNICATIONS WIRING IN THE BUILDING.
4. NEW PANEL "1LA".
5. PROVIDE 2-EACH 4-INCH CONDUIT SLEEVES THROUGH THE MASONRY WALL. CORE DRILL AS REQUIRED.
6. NOT USED.
7. MOUNT "MSB" IN LINE W/CONDUIT RUNS WHERE THERE IS SUFFICIENT SPACE IN CEILING TO RUN ALL OF THIS FEEDER CONDUITS INTO MECHANICAL/ELECTRICAL ROOM.
8. NOT USED.
9. NOT USED.
10. PROVIDE NEW PATCH PANELS TO THE NEW G6 STANDARD TO ACCOMODATE ALL NEW OR REPLACED VOICE/DATA OUTLETS THROUGHOUT THE BUILDING. COORDINATE WITH UTAH NATIONAL GUARD. FIELD VERIFY CURRENT CONDITION AND CAPACITY.
11. CONNECT TO EXISTING PANEL SERVING THE EXISTING EQUIPMENT TO SERVE NEW EQUIPMENT. PROVIDE NEW FEEDER AND NEW CIRCUIT BREAKER IN EXISTING PANEL TO SERVE NEW EQUIPMENT. PROVIDE BREAKER TO MATCH EXISTING PANEL. FIELD VERIFY.
12. PROVIDE NEW CARD READER TO MATCH EXISTING SYSTEM.

LICENSED PROFESSIONAL ENGINEER
No. 708354
DAVID L. AFFLECK
STATE OF UTAH
2009-02-09

Utah National Guard
RENOVATION OF READINESS CENTER
BUILDING 5170
CAMP W.G. WILLIAMS, UTAH

SHEET TITLE
1st Floor Power Plan

REVISIONS	DATE	BY	DESCRIPTION
△			
△			
△			
△			

DRAWN BY: PSS
CHECKED BY: DLA
PROJECT NO.: 08032470 CW
DRAWING NO.: EP101
DATE: FEB 9, 2009

Utah National Guard - Camp Williams Bldg. 5170

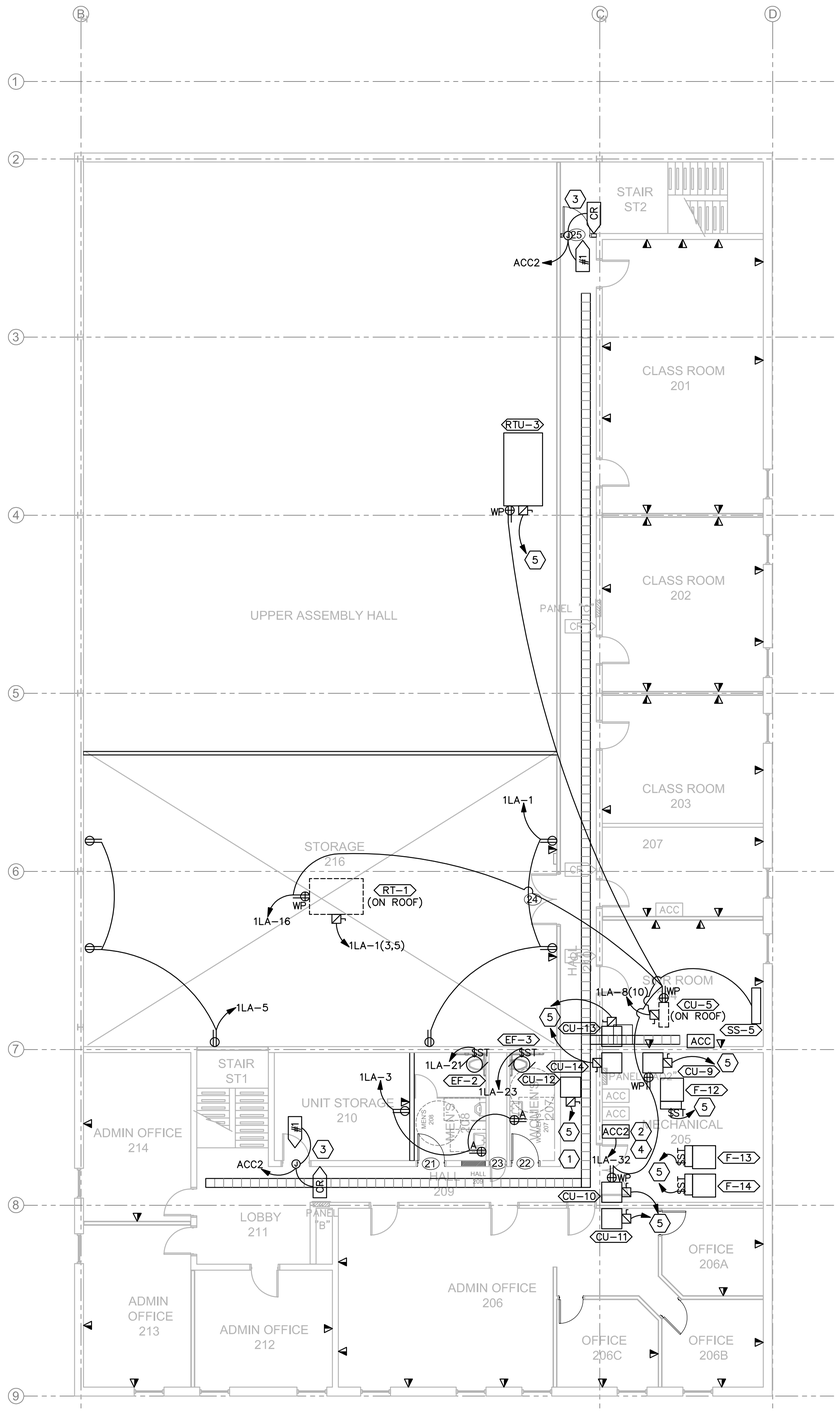

L18 2ND FLOOR POWER PLAN
1/8" = 1'-0"

Harris & Associates Sm
265 East 100 South Suite 350
Salt Lake City, Utah 84111-1604
Ph (801) 521-8564 Fax (801) 355-2938

CONSULTANT INFORMATION
SPECTRUM ENGINEERS
175 South Main Street, Suite 300
Salt Lake City, Utah 84111
801-328-5151
800-678-7077
FAX 801-328-5155
www.spectrum-engineers.com

GENERAL SHEET NOTES

1. OUTLET, BUILDING STANDARD COMBINATION TELEPHONE/DATA COMMUNICATION. SHOWING EXISTING DROPS THAT ARE BEING UPGRADED TO NEW G6 NATIONAL GUARD STANDARD AND NEW DROPS TO BE ADDED.

⬡SHEET KEYNOTES

1. NEW CABLE TRAY.
2. PROVIDE NEW CARD READER AND CONTROL CABINET FOR EACH NEW CARD READER. MAY INCLUDE MULTIPLE CONTROLLERS PER CABINET. MUST CONFORM TO EXISTING ACCESS CONTROL EQUIPMENT.
3. PROVIDE NEW CARD READER TO MATCH EXISTING SYSTEM.
4. PROVIDE POWER REQUIRED FOR NEW IDS EQUIPMENT INSTALLED. INSTALLATION OF NEW CONDUIT, CONDUCTORS, AND CIRCUIT BREAKER MAY BE REQUIRED.
5. CONNECT TO EXISTING PANEL SERVING THE EXISTING EQUIPMENT TO SERVE NEW EQUIPMENT. PROVIDE NEW FEEDER AND NEW CIRCUIT BREAKER IN EXISTING PANEL TO SERVE NEW EQUIPMENT. PROVIDE BREAKER TO MATCH EXISTING PANEL.

LICENSED PROFESSIONAL ENGINEER No. 7083854 DAVID L. AFFLECK STATE OF UTAH
2009-02-09

Utah National Guard
RENOVATION OF READINESS CENTER
BUILDING 5170
CAMP W.G. WILLIAMS, UTAH

SHEET TITLE
2nd Floor Power Plan

REVISIONS	DATE	BY	DESCRIPTION
1			
2			
3			
4			

DRAWN BY: PSS
CHECKED BY: DLA
PROJECT NO: 08032470 CW
DRAWING NO: EP102
DATE: FEB 9, 2009

File Name: P:\2008\20080419\1Drawings\Sheet\19EP102.dwg Last Plotted: 2009/02/13 @ 5:13 PM By: pss

Utah National Guard - Camp Williams Bldg. 5170

VOICE/DATA EQUIPMENT/CABLE LIST

SYMBOL	ITEM DESCRIPTION	MANUFACTURERS
X C6 VOICE	VOICE CABLING, CATEGORY 6	SEE SPECIFICATIONS (CAT6 YELLOW PLENUM RATED) ('X' INDICATES QUANTITY)
X C6 DATA	DATA CABLING, CATEGORY 6	SEE SPECIFICATIONS (CAT6 BLUE PLENUM RATED) ('X' INDICATES QUANTITY)
PPL	PATCH PANEL	SEE SPECIFICATIONS
V	BLUE METAL BACKBOARD (VOICE)	M183–B1 (VAR)
D	YELLOW METAL BACKBOARD (DATA)	M183–B5 (VAR)
SB	FULL SPOOL BOARDS	M187–B1 (VAR)
	WORK STATION OUTLET (1–LAN, 1–VOICE)	SEE SPECIFICATIONS
	BUS BAR, 10", 20", W/ LUGS & MOUNTING ACCESSORIES	CHATSWORTH 10622–010/020
	CABLE RUNWAY–12", BLACK	CHATSWORTH 10250–712
	CABLE RUNWAY–18", BLACK	CHATSWORTH 10250–718
	CABLE RUNWAY RADIUS DROP, BLACK	CHATSWORTH 12100–712
	BUTT SPLICE KIT, BLACK	CHATSWORTH 11301–001
	JUNCTION SPLICE KIT, BLACK	CHATSWORTH 11302–001
	ADJ. JUNCTION SPLICE KIT, BLACK	CHATSWORTH 10616–001
	FOOT KIT, BLACK	CHATSWORTH 11309–701
	3" CHANNEL RACK TO RUNWAY, BLACK	CHATSWORTH 10595–712
	TRIANGLE BRACKETS 12", BLACK	CHATSWORTH
	EQUIPMENT RACK, OPEN FRAME 19", BLACK	CHATSWORTH 55053–703
	EQUIPMENT RACK, 4 POST, 19" BLACK	CHATSWORTH 15053–703
PS	EQUIPMENT RACK POWER STRIP, 20A	LEVITON 5500–192
VWM	VERTICAL WIRE MANAGERS, BLACK, SIDE & CENTER	SEE SPECIFICATIONS
HWM	HORIZONTAL WIRE MANAGERS, BLACK, 2 RU	SEE SPECIFICATIONS
	COPPER CATEGORY 6 PATCH CABLES	SEE SPECIFICATIONS
	CAT 6 J–HOOKS	CADDY CAT32Z34
	CABLE TRAY	SEE SPECIFICATIONS

NOTE: ALL RACKS, LADDER, PATCH PANELS, AND ACCESSORIES SHALL BE BLACK IN COLOR.

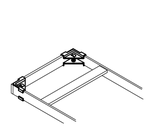

C6 CABLE RUNWAY END CLOSING DETAIL
NTS

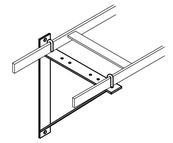

C3 TRIANGLE BRACKET DETAIL
NTS

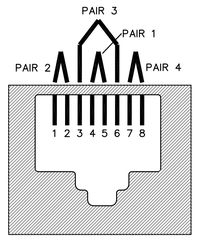

T568B

PAIR ID	PIN #
T1	5
R1	4
T2	1
R2	2
T3	3
R3	6
T4	7
R4	8

COLOR SCHEME
PAIR 1 – BLUE
PAIR 2 – ORANGE
PAIR 3 – GREEN
PAIR 4 – BROWN

F9 RJ45 WIRING DETAIL
NTS

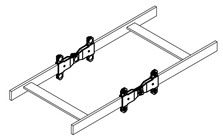

F6 SWIVEL SPLICE KIT FOR ELEVATION TRANSITION
NTS

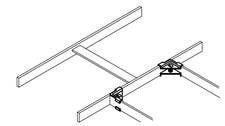

F3 CABLE RUNWAY SPLICE DETAIL
NTS

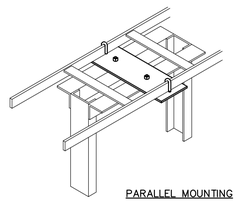

PARALLEL MOUNTING

I9 3" CHANNEL RACK–TO–RUNWAY MOUNT
NTS

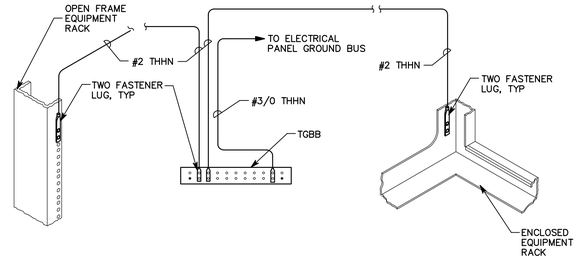

I6 TYPICAL RACK GROUNDING DETAIL
NTS

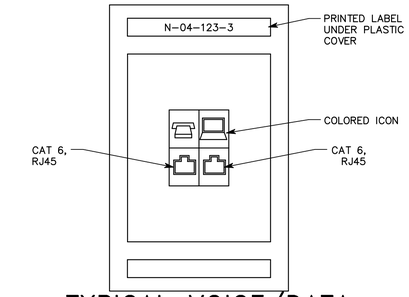

L13 TYPICAL VOICE/DATA PLATE DETAIL
NTS

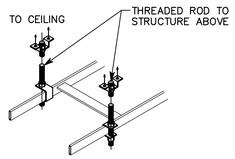

L9 OVERHEAD SUPPORT DETAIL
NTS

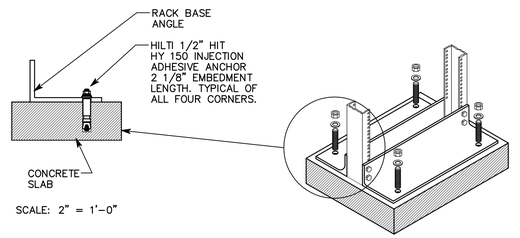

L6 EQUIPMENT RACK ANCHORAGE DETAIL
NTS

Harris & Associates Sm
265 East 100 South Suite 350
Salt Lake City, Utah 84111-1604
Ph (801) 521-8564 Fax (801) 355-2938

CONSULTANT INFORMATION
SPECTRUM ENGINEERS
175 South Main Street, Suite 300
Salt Lake City, Utah 84111
801-328-5151
800-678-7077
FAX 801-328-5155
www.spectrum-engineers.com

GENERAL VOICE/DATA NOTES

1. PROVIDE PLENUM RATED CABLE IN ALL AIR PLENUMS. IF A PLENUM RATED CABLE IS NOT SPECIFIED, PROVIDE THE PLENUM RATED EQUIVALENT TO THE SPECIFIED CABLE.
2. ALL CABLE, REGARDLESS OF LENGTH, INSTALLED UNDER THIS CONTRACT ARE TO BE LABELED.
3. THE EQUIPMENT LABELING IDENTIFIED ON DETAILS IN THESE DRAWINGS ARE EXAMPLES ONLY OF THE ACTUAL LABELING WHICH IS REQUIRED AS PART OF THIS CONTRACT. PRIOR TO FABRICATION, SUBMIT THE NOMENCLATURE FOR ALL LABELS TO THE OWNER FOR REVIEW. THIS REQUIREMENT INCLUDES BUT IS NOT LIMITED TO ALL CABLE LABELING, AND ALL EQUIPMENT LABELING.
4. FOR EVERY CABLE PULL SPECIFIED, COIL 10' OF EXCESS CABLE AT THE AT THE CLOSET END, NEATLY COIL, AND LABEL.
5. GROUND ALL EQUIPMENT RACKS AS DETAILED.
6. ALL CABLE, FIBER, AND UTP TO TERMINATE ON BOTH ENDS.
7. COORDINATE RACK LAYOUTS WITH OWNER PRIOR TO INSTALLATION.
8. WELL IN ADVANCE OF INSTALLATION, COORDINATE WORK WITH ALL OTHER TRADES SO THAT ELECTRICAL EQUIPMENT, OR ITS INTENDED USE, IS NOT OBSTRUCTED BY EQUIPMENT BEING PROVIDED BY OTHER DIVISIONS.
9. INSTALL ALL ELECTRONIC SYSTEMS EQUIPMENT IN COMPLIANCE WITH THE MANUFACTURER'S WRITTEN INSTRUCTIONS, SEISMIC CODES, AND INDUSTRY WIDE ACCEPTED PRACTICES. SUPPORT EQUIPMENT WEIGHT FROM BUILDING STRUCTURE. DURING THE SUBMITTAL PROCESS, PROVIDE SHOP DRAWINGS WHICH DETAIL PROPOSED MOUNTING FOR ALL SUCH EQUIPMENT.
10. 'A' INDICATES MOUNTING ABOVE COUNTER. VERIFY HEIGHT OF POWER OUTLET AND MOUNT DATA OUTLET NEXT TO POWER OUTLET.
11. ALL WORK SHALL BE IN COMPLIANCE WITH UTNG STANDARD UT–G6–C.
12. ALL WORK SHALL BE COORDINATED WITH UTAH NATIONAL GUARD.
13. ALL CONDUIT FOR VOICE/DATA CABLE SHALL BE INSTALLED IN ACCORDANCE WITH ANSI/TIA/EIA569–A.

REGISTERED PROFESSIONAL ENGINEER
No. 7083854
DAVID L. AFFLECK
STATE OF UTAH
2009–02–09

Utah National Guard
RENOVATION OF READINESS CENTER
BUILDING 5170
CAMP W.G. WILLIAMS, UTAH

SHEET TITLE
Communications Details

REVISIONS	DATE	BY	DESCRIPTION
1			
2			
3			
4			

DRAWN BY: PSS
CHECKED BY: DLA
PROJECT NO.: 08032470 CW
DRAWING NO.: EP501
DATE: FEB 9, 2009

File Name: P:\2008\20080419\1Drawings\Sheet\19EP501.dwg Last Plotted: 2009/02/13 @ 5:13 PM By: pss

Utah National Guard - Camp Williams Bldg. 5170

CARD ACCESS DOOR TYPE SCHEDULE

DOOR TYPE #	SYMBOL	DESCRIPTION	PROTECTED SIDE ELEVATION	UNPROTECTED SIDE ELEVATION	LOCK TYPE(S)	INCLUDES:
TYPE 1:	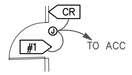	SINGLE DOOR, 1 CARD READER	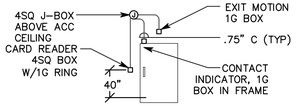 (NOTE: THIS IS A SEPARATE CONTACT INDICATOR FROM THE SECURITY CONTRACT INDICATORS SHOWN ON THE DRAWINGS)	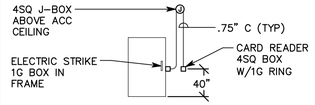	ELECTRIC STRIKE	* CARD READER * CONTACT INDICATOR * LOCK PWR (LOCK BY DOOR HDWR) * FREE EGRESS * EXIT REQUEST MOTION SENSOR

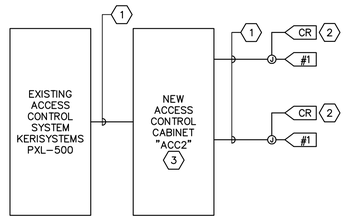

NOTES:

1. ACCESS CONTROL SYSTEM BASED UPON TWO CARD READERS PER ACCESS CONTROLLER/PROCESSOR. ALTERNATE CONFIGURATIONS ACCEPTABLE PROVIDED CONTRACTOR ALLOWS FOR ANY INCREASED WIRING OR EQUIPMENT AND PROVIDES SUBMITTAL DRAWINGS SHOWING NEW CONFIGURATION.
2. ACCESS CONTROLLER "ACC" INDICATED SHALL INCLUDE ANY ISOLATION MODULES, BUFFER MODULES, EXTERNAL POWER SUPPLIES, INPUT/OUTPUT MODULES, OR FORMAT CONVERTER MODULES (NOT SHOWN) REQUIRED TO SUPPORT CARD READER OR KEYPAD TYPES INDICATED, FOR COMPLETE AND FUNCTIONING CARD READER AND DOOR CONTROL.
3. PROVIDE SEPARATE WIRE PAIRS FOR DOOR CONTACT INDICATOR, FROM ACCESS DOOR TO ACCESS CONTROLLER "ACC" PANEL. SINGLE PAIR, FROM ACCESS DOOR TO CONTROLLER PANEL AND DOOR CONTACT INDICATOR, NOT ACCEPTABLE.
4. DOOR CONTACT INDICATOR CIRCUITS SHALL BE SUPERVISED FOR OPEN CIRCUIT OR SHORT CIRCUIT FAULTS BETWEEN THE DEVICE CONTACTS AND ACCESS CONTROLLER.

12 ACCESS CONTROL RISER DIAGRAM

NTS

Harris & Associates Sm
265 East 100 South Suite 350
Salt Lake City, Utah 84111-1604
Ph (801) 521-8564 Fax (801) 355-2938

CONSULTANT INFORMATION
SPECTRUM ENGINEERS
175 South Main Street, Suite 300
Salt Lake City, Utah 84111
801-328-5151
800-678-7077
FAX 801-328-5155
www.spectrum-engineers.com

SHEET KEYNOTES

1. CONDUIT AND WIRING PER MANUFACTURER'S INSTRUCTIONS.
2. CARD READER SHALL MATCH EXISTING CARD READER TYPE.
3. PROVIDE NEW CABINET WITH 2-EACH KERISYSTEMS SB-593 EXPANSION BOARDS. VERRIFY COMPATIBILITY OF EQUIPMENT WITH THE MANUFACTURER,

Utah National Guard
RENOVATION OF READINESS CENTER
BUILDING 5170
CAMP W.G. WILLIAMS, UTAH

SHEET TITLE
Security Details

REVISIONS	DATE	BY	DESCRIPTION
1			
2			
3			
4			

DRAWN BY: PSS
CHECKED BY: DLA
PROJECT NO: 08032470 CW
DRAWING NO: EP502
DATE: FEB 9, 2009

Utah National Guard - Camp Williams Bldg. 5170

File Name: P:\2008\20080419\1Drawings\Sheet\19EP502.dwg Last Plotted: 2009/02/13 @ 5:13 PM By: pss

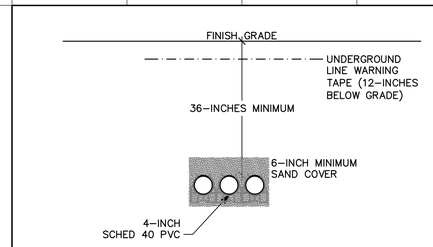

C12 UNDERGROUND SECONDARY DETAIL
NTS

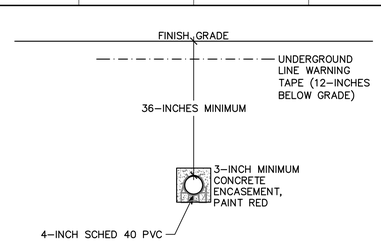

C8 UNDERGROUND PRIMARY DETAIL
NTS

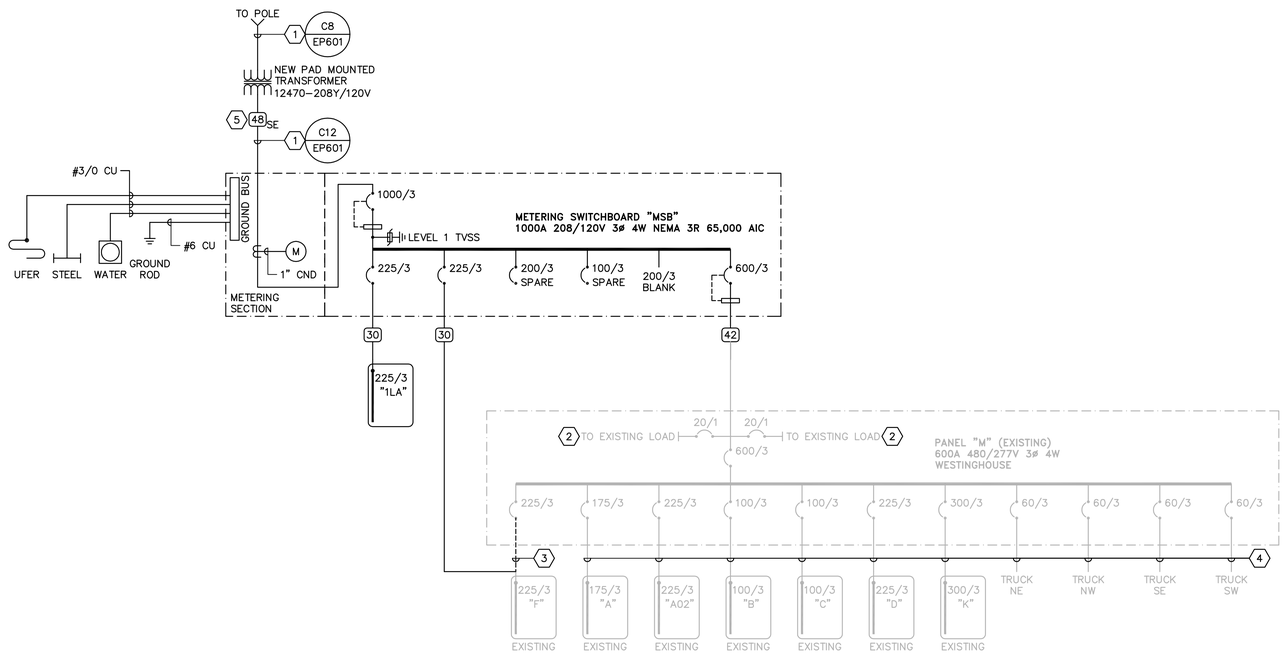

L18 ONE–LINE DIAGRAM
NO SCALE

CONDUCTOR AND CONDUIT SCHEDULE

SCHEDULE NUMBER
SUBSCRIPT (NOTE 5)
(E.G.) 5 IG

SYM	AMP	CONDUIT SIZE	CONDUCTOR(NOTE 1) QTY	SIZE	G	IG	SE	NOTES
1	20	.75	2	12	12	12	8	2
2	20	.75	3	12	12	12	8	2,3
3	20	.75	4	12	12	12	8	2,3
4	30	.75	2	10	10	10	8	2
5	30	.75	3	10	10	10	8	2
6	30	.75	4	10	10	10	8	2
7	40	1	2	8	10	8	6	2
8	40	1	3	8	10	8	6	2
9	40	1	4	8	10	8	6	2
10	55	1	2	6	10	8	4	2
11	55	1	3	6	10	8	4	2
12	55	1.25	4	6	10	8	4	2
13	70	1	2	4	8	4	2	2
14	70	1.25	3	4	8	4	2	2
15	70	1.25	4	4	8	4	2	2
16	85	1.25	2	3	8	3	2	2
17	85	1.25	3	3	8	3	2	2
18	85	1.25	4	3	8	3	2	2
19	95	1.25	3	2	8	2	2	2
20	95	1.50	4	2	8	2	2	2
21	130	1.50	3	1	6	2	2	2
22	130	1.50	4	1	6	2	2	2
23	150	2	3	1/0	6	2	1/0	2
24	150	2	4	1/0	6	2	1/0	2
25	175	2	3	2/0	6	2	2/0	2
26	175	2	4	2/0	6	2	2/0	2
27	200	2	3	3/0	6	2	2/0	2
28	200	2.50	4	3/0	6	2	2/0	2
29	230	2.50	3	4/0	4	2	2/0	2
30	230	2.50	4	4/0	4	2	2/0	2
31	255	2.50	3	250	4	1	2/0	2
32	255	2.50	4	250	4	1	2/0	2
33	310	3	3	350	3	1/0	3/0	2
34	310	3	4	350	3	1/0	3/0	2
35	380	3.50	3	500	3	3/0	3/0	2
36	380	4	4	500	3	3/0	3/0	2
37	400	2 EA 2	3	3/0	3	3/0	3/0	2
38	400	2 EA 2.50	4	3/0	3	3/0	3/0	2
39	510	2 EA 2.50	3	250	1	4/0	3/0	2
40	510	2 EA 3	4	250	1	4/0	3/0	2
41	620	2 EA 3	3	350	1/0	4/0	3/0	2,4
42	620	2 EA 3	4	350	1/0	4/0	3/0	2,4
43	760	2 EA 3.50	3	500	1/0	4/0	3/0	2,4
44	760	2 EA 4	4	500	1/0	4/0	3/0	2,4
45	855	3 EA 3	3	300	2/0	4/0	3/0	2,4
46	855	3 EA 3	4	300	2/0	4/0	3/0	2,4
47	1000	3 EA 3.50	3	400	2/0	4/0	3/0	4
48	1000	3 EA 3.50	4	400	2/0	4/0	3/0	4
49	1140	3 EA 4	3	500	3/0	4/0	3/0	4
50	1140	3 EA 4	4	500	3/0	4/0	3/0	4
51	1240	4 EA 3	3	350	3/0	4/0	3/0	4
52	1240	4 EA 3	4	350	3/0	4/0	3/0	4
53	1675	5 EA 3.50	4	400	4/0	4/0	4/0	4
54	2010	6 EA 3.50	4	400	250	250	250	4
55	2660	7 EA 4	4	500	350	350	350	4
56	3040	8 EA 4	4	500	500	500	500	4
57	4180	11 EA 4	4	500	500	500	500	4
58		5 EA 4						6
59		5						6
60		10 EA 4						6

CONDUCTOR AND CONDUIT SCHEDULE NOTES

1. CONDUCTORS SHOWN ARE SHOWN FOR EACH CONDUIT WITH MODIFICATIONS AS NOTED IN NOTE 5. ALL CONDUCTORS SHOWN ARE THWN UNLESS OTHERWISE NOTED.
2. PROVIDE EQUIPMENT GROUND CONDUCTORS PER TABLE 250–122 WHEN CIRCUIT BREAKERS ARE SIZED GREATER THAN AMPERE RATING SHOWN IN TABLE.
3. PROVIDE #10 NEUTRALS FOR MULTIWIRE BRANCH CIRCUITS SERVING COMPUTERS.
4. GROUND (G) CONDUCTOR MAY BE DELETED ON SERVICE ENTRANCE CONDUCTORS.
5. WHEN SYMBOL SUBSCRIPT INDICATES "IG", INCLUDE "IG" OR INSULATED GROUND CONDUCTOR SCHEDULED ALONG WITH GROUND OR EQUIPMENT GROUND CONDUCTOR. WHEN SYMBOL SUBSCRIPT INDICATES "SE", SUBSTITUTE "SE" CONDUCTOR FOR "G" CONDUCTOR SHOWN WHICH IS SIZED FOR THE GROUNDING OF THE SECONDARY OF THE SEPARATELY DERIVED SYSTEMS.
6. RACEWAY ONLY. CONDUCTORS PROVIDED BY UTILITY.

Harris & Associates Inc
265 East 100 South Suite 350
Salt Lake City, Utah 84111-1604
Ph (801) 521-8564 Fax (801) 355-2938

CONSULTANT INFORMATION
SPECTRUM ENGINEERS
175 South Main Street, Suite 300
Salt Lake City, Utah 84111
801-328-5151
800-678-7077
FAX 801-328-5155
www.spectrum-engineers.com

GENERAL SHEET NOTES

1. PROVIDE NEMA 3R ENCLOSURES FOR EQUIPMENT LOCATED OUTDOORS. REFER TO PLANS FOR EQUIPMENT LOCATIONS.
2. REFER TO PLANS FOR CONSTRAINTS ON PHYSICAL DIMENSIONS AND CLEARANCE REQUIREMENTS OF EQUIPMENT. PROVIDE EQUIPMENT DIMENSIONS THAT FALL WITHIN THE CONSTRAINTS OF EACH SPECIFIC LOCATION.
3. ALL EQUIPMENT SHALL BE CONSTRUCTED AND BRACED FOR THE SEISMIC CONDITIONS OF THE PROJECT. REFER TO SPECIFICATIONS SECTION 16071 FOR REQUIREMENTS.

SHEET KEYNOTES

1. PROVIDE 3–EACH #2 CU, 15KV TYPE MV–105 CONDUCTORS WITH 133% INSULATION AND 1/3 CONCENTRIC NEUTRAL IN 4–INCH CONDUIT. PROVIDE 3–INCH MINIMUM CONCRETE ENCASEMENT, PAINT RED.
2. RELOCATE TO LOAD SIDE OF MAIN CIRCUIT BREAKER OF EXISTING PANEL "M".
3. REMOVE CONDUIT AND CONDUCTORS FROM PANEL "M". REFEED TO NEW METERING SWITCH BOARD "MSB".
4. EXISTING CONDUIT AND CONDUCTORS TO REMAIN.
5. PROVIDE AS NOTED BUT WITH 4–INCH CONDUITS.

LICENSED PROFESSIONAL ENGINEER
No. 7083854
DAVID L. AFFLECK
STATE OF UTAH
2009–02–09

Utah National Guard
RENOVATION OF READINESS CENTER
BUILDING 5170
CAMP W.G. WILLIAMS, UTAH

SHEET TITLE
One-Line Diagram

REVISIONS	DATE	BY	DESCRIPTION
1			
2			
3			
4			

DRAWN BY: PSS
CHECKED BY: DLA
PROJECT NO: 08032470 CW
DRAWING NO: EP601
DATE: FEB 9, 2009

File Name: P:\2008\20080419\1Drawings\Sheet\19EP601.dwg Last Plotted: 2009/02/13 @ 5:13 PM By: pss
Utah National Guard - Camp Williams Bldg. 5170

EQUIPMENT SCHEDULE KEY

E	DIVISION 16
Q	FURNISHED WITH THE EQUIPMENT
*	COORDINATE WITH THE DIVISION 15 TEMPERATURE CONTROL INSTALLER
**	AUTOMATIC CONTROL WIRING BY DIVISION 15

EQUIPMENT SCHEDULE

MARK	ITEM DESCRIPTION	LOAD DATA							WIRE AND CONDUIT SIZE (CC=INDICATES CONDUCTOR AND CONDUIT SCHEDULE)	OVERCURRENT PROTECTION								NOTES	MARK
											DISCONNECT SWITCH					CIRCUIT BREAKER				
		HP	kW	MCA	FLA	VOLT	PH	Hz		FURN BY	SWITCH TYPE	NEMA RATING	FUSED SWITCH	FUSE RATING	FUSE CLASS	CB	PANEL	RATING		
CU-1	CONDENSING UNIT CU-1			23.3	1.2	208	3	60	CC#6	E	30/3	3R	YES	30A	RK5	30/3		HACR	1	CU-1
CU-2	CONDENSING UNIT CU-2			18.1	1.2	208	3	60	CC#6	E	30/3	3R	YES	25A	RK5	30/3		HACR	1	CU-2
CU-3	CONDENSING UNIT CU-3			18.1	1.2	208	3	60	CC#6	E	30/3	3R	YES	30A	RK5	30/3		HACR	1	CU-3
CU-4	CONDENSING UNIT CU-4			13.4	.75	208	3	60	CC#3	E	30/3	3R	YES	15A	RK5	20/3		HACR	1	CU-4
CU-5	CONDENSING UNIT CU-5			21	.93	208	1	60	CC#6	E	30/2	3R	YES	25A	RK5	30/2		HACR	1	CU-5
CU-6	CONDENSING UNIT CU-6			13.4	.75	208	3	60	CC#3	E	30/3	3R	YES	15A	RK5	30/3		HACR	1	CU-6
CU-7	CONDENSING UNIT CU-7			23.3	1.2	208	3	60	CC#6	E	30/3	3R	YES	30A	RK5	30/3		HACR	1	CU-7
CU-8	CONDENSING UNIT CU-8			23.3	1.2	208	3	60	CC#6	E	30/3	3R	YES	30A	RK5	30/3		HACR	1	CU-8
CU-9	CONDENSING UNIT CU-9			17.6	.75	208	1	60	CC#3	E	30/2	3R	YES	25A	RK5	30/2		HACR	1	CU-9
CU-10	CONDENSING UNIT CU-10			18.1	1.2	208	3	60	CC#6	E	30/3	3R	YES	25A	RK5	30/3		HACR	1	CU-10
CU-11	CONDENSING UNIT CU-11			18.1	1.2	208	3	60	CC#6	E	30/3	3R	YES	25A	RK5	30/3		HACR	1	CU-11
CU-12	CONDENSING UNIT CU-12			23.3	1.2	208	3	60	CC#6	E	30/3	3R	YES	30A	RK5	30/3		HACR	1	CU-12
CU-13	CONDENSING UNIT CU-13			18.1	1.2	208	3	60	CC#6	E	30/3	3R	YES	25A	RK5	30/3		HACR	1	CU-13
CU-14	CONDENSING UNIT CU-14			18.1	1.2	208	3	60	CC#6	E	30/3	3R	YES	25A	RK5	30/3		HACR	1	CU-14
EF-1	EXHAUST FAN EF-1	1/6				120	1	60	CC#1	E	THERMAL SWITCH					20/1		HACR	1	EF-1
EF-2	EXHAUST FAN EF-2	1/20				120	1	60	CC#1	E	THERMAL SWITCH					20/1		HACR	1	EF-2
EF-3	EXHAUST FAN EF-3	1/20				120	1	60	CC#1	E	THERMAL SWITCH					20/1		HACR	1	EF-3
EF-4	EXHAUST FAN EF-4	1/20				120	1	60	CC#1	E	THERMAL SWITCH					20/1		HACR	1	EF-4
EF-5	EXHAUST FAN EF-5	1/25				120	1	60	CC#1	E	THERMAL SWITCH					20/1		HACR	1	EF-5
F-1	GAS FURNACE F-1			14.8		120	1	60	CC#1	E	THERMAL SWITCH					20/1		HACR	1	F-1
F-2	GAS FURNACE F-2			14.8		120	1	60	CC#1	E	THERMAL SWITCH					20/1		HACR	1	F-2
F-3	GAS FURNACE F-3			14.8		120	1	60	CC#1	E	THERMAL SWITCH					20/1		HACR	1	F-3
F-4	GAS FURNACE F-4			10		120	1	60	CC#1	E	THERMAL SWITCH					20/1		HACR	1	F-4
F-5	GAS FURNACE F-5			10		120	1	60	CC#1	E	THERMAL SWITCH					20/1		HACR	1	F-5
F-6	GAS FURNACE F-6			10		120	1	60	CC#1	E	THERMAL SWITCH					20/1		HACR	1	F-6
F-7	GAS FURNACE F-7			14.3		120	1	60	CC#1	E	THERMAL SWITCH					20/1		HACR	1	F-7
F-8	GAS FURNACE F-8			14.3		120	1	60	CC#1	E	THERMAL SWITCH					20/1		HACR	1	F-8
F-9	GAS FURNACE F-9			10		120	1	60	CC#1	E	THERMAL SWITCH					20/1		HACR	1	F-9
F-10	GAS FURNACE F-10			10.2		120	1	60	CC#1	E	THERMAL SWITCH					20/1		HACR	1	F-10
F-11	GAS FURNACE F-11			10.2		120	1	60	CC#1	E	THERMAL SWITCH					20/1		HACR	1	F-11
F-12	GAS FURNACE F-12			14.3		120	1	60	CC#1	E	THERMAL SWITCH					20/1		HACR	1	F-12
F-13	GAS FURNACE F-13			14.3		120	1	60	CC#1	E	THERMAL SWITCH					20/1		HACR	1	F-13
F-14	GAS FURNACE F-14			14.3		120	1	60	CC#1	E	THERMAL SWITCH					20/1		HACR	1	F-14
RT-1	ROOF TOP UNIT RT-1			30.7		208	3	60	CC#11	E	60/3	3R	YES	45A	RK5	50/3		HACR	1	RT-1
RT-2	ROOF TOP UNIT RT-2			6		208	3	60	CC#3	E	30/3	3R	YES	15A	RK5	20/3		HACR	1	RT-2
RT-3	ROOF TOP UNIT RT-3			6		208	3	60	CC#3	E	30/3	3R	YES	15A	RK5	20/3		HACR	1	RT-3
SS-5	SPLIT SYSTEM COOLING			1	0.76	208	1	60	CC#8	E	30/3	3R	YES	3A	RK5	40/3		HACR	1,2	SS-5

NOTES:
1. LOCATE DISCONNECT ADJACENT TO UNIT.
2. INDOOR UNIT POWERED FROM OUTDOOR UNIT.

PANEL "MSB"

VOLTS/PHASE/WIRE:	PANEL SIZE & TYPE:	MAIN SIZE & TYPE:	LOCATION:	CABINET:	NOTES:
120/208 V, 3 PH 4 WIRE	SWITCHBOARD	1000 AMPERE MAIN BKR	OUTSIDE S.E. CORNER		

ACCESSORIES: PANEL DIRECTORY, IDENTIFICATION, GROUNDING BAR, INSULATED GROUND BAR, SUBFEED LUGS

CKT	OCP		LOAD (kVA)			DESCRIPTION	LCL	PHASE LOAD			LCL	DESCRIPTION	LOAD (kVA)			OCP		CKT
NO	AMP	POLE	LTG	CO	PWR		kVA	A	B	C	kVA		LTG	CO	PWR	AMP	POLE	NO
1	225	3	2.2	2.6	7.2	PANEL "1LA"	12.6	12.0			0.0	PANEL "M" (EXISTING)				600	3	2
–	–	–	2.2	1.8	6.1	–	10.7		10.1		0.0	–				–	–	–
–	–	–	2.8	1.2	5.7	–	10.4			9.7	0.0	–				–	–	–
3	225	3				PANEL "F" (EXISTING)	0.0	0.0			0.0	SPARE				100	3	4
–	–	–				–	0.0		0.0		0.0	–				–	–	–
–	–	–				–	0.0			0.0	0.0	–				–	–	–
5	0	3				BLANK	0.0	0.0			0.0	BLANK				200	3	6
–	–	–				–	0.0		0.0		0.0	–				–	–	–
–	–	–				–	0.0			0.0	0.0	–				–	–	–
19	20	1					0.0	0.0			0.0					20	1	20
21	20	1					0.0		0.0		0.0					20	1	22
23	20	1					0.0			0.0	0.0					20	1	24
TOTALS:						CONNECTED kVA PER PHASE	12	10	10							CONNECTED TOTAL kVA	32	
						CONNECTED AMPS PER PHASE	100	84	81			CONNECTED AVERAGE AMPS PER PHASE	89					

NEC DIVERSIFIED LOAD CALCULATIONS

LIGHTING 7kVA @125% =	9 kVA	ALL OTHER LOADS @100% =	19 kVA	DIVERSIFIED TOTAL kVA =	34
RECEPTACLES 6kVA @100% =	6 kVA	25% OF LARGEST MOTOR =	0 kVA	AVERAGE AMPS PER PHASE =	93
REMAINDER 0kVA @ 50% =	0 kVA				

PANEL "1LA"

VOLTS/PHASE/WIRE:	PANEL SIZE & TYPE:	MAIN SIZE & TYPE:	LOCATION:	CABINET:	NOTES:
120/208 V, 3 PH 4 WIRE	22" W x 6" D, BOLT-ON	225 AMPERE MAIN BKR		SURFACE	

ACCESSORIES: PANEL DIRECTORY, IDENTIFICATION, GROUNDING BAR, SUBFEED LUGS

CKT	OCP		LOAD (kVA)			DESCRIPTION	LCL	PHASE LOAD			LCL	DESCRIPTION	LOAD (kVA)			OCP		CKT
NO	AMP	POLE	LTG	CO	PWR		kVA	A	B	C	kVA		LTG	CO	PWR	AMP	POLE	NO
1	20	1			0.6	MEZZANINE OUTLETS	0.6	4.3			3.7	RTU-1			3.7	50	3	2
3	20	1			0.6	MEZZANINE OUTLETS	0.6		4.3		3.7	----			3.7	–	–	4
5	20	1			0.6	BATHROOMS 208, 207	0.6			4.3	3.7	----			3.7	–	–	6
7	20	1			0.8	1ST FLOOR RESTROOMS	0.8	3.0			2.2	CU-5 (SS-5)			2.2	30	2	8
9	20	1			0.2	1ST FLOOR RESTROOMS	0.2		2.4		2.2	----			2.2	–	–	10
11	20	1				EXHAUST FAN EF-4	0.2			0.8	0.6	EF-1			0.6	20	1	12
13	20	1			0.2	EXHAUST FAN EF-5	0.2	1.4			1.2	WATER HEATER OUTLET		1.2		20	1	14
15	30	3			0.1	CONDENSING UNIT CU-6	0.1		1.1		1.0	ROOFTOP OUTLETS		1.0		20	1	16
17	–	–			0.1	---	0.1			1.7	2.0	STORAGE 113A	1.6			20	1	18
19	–	–			0.1	---	0.1	1.1			1.3	LOCKERS/RESTROOMS	1.0			20	1	20
21	20	1			0.1	EXHAUST FAN EF-2	0.1		1.1		1.3	STORAGE 216	1.0			20	1	22
23	20	1			0.1	EXHAUST FAN EF-3	0.1			1.3	1.5	ASSEMBLY HALL	1.2			20	1	24
25	20	1				SPARE	0.0	1.2			1.5	ASSEMBLY HALL	1.2			20	1	26
27	20	1				SPARE	0.0		1.2		1.5	ASSEMBLY HALL	1.2			20	1	28
29	20	1				SPARE	0.0			0.6	0.6	ROOFTOP OUTLETS		0.6		20	1	30
31	20	1				SPARE	0.0	1.0			1.0	ACCESS CONTROL PANEL			1.0	20	1	32
33	20	1				SPARE	0.0		0.0		0.0	SPARE				20	1	34
35	20	1				SPARE	0.0			0.0	0.0	SPARE				20	1	36
37	20	1				SPARE	0.0	0.0			0.0	SPARE				20	1	38
39	20	1				SPARE	0.0		0.0		0.0	SPARE				20	1	40
41	20	1			1.0	FIRE PANEL	1.0			1.0	0.0	SPARE				20	1	42
TOTALS:						CONNECTED kVA PER PHASE	12	10	10							CONNECTED TOTAL kVA	32	
						CONNECTED AMPS PER PHASE	100	84	81			CONNECTED AVERAGE AMPS PER PHASE	89					

NEC DIVERSIFIED LOAD CALCULATIONS

LIGHTING 7kVA @125% =	9 kVA	ALL OTHER LOADS @100% =	19 kVA	DIVERSIFIED TOTAL kVA =	34
RECEPTACLES 6kVA @100% =	6 kVA	25% OF LARGEST MOTOR =	0 kVA	AVERAGE AMPS PER PHASE =	93
REMAINDER 0kVA @ 50% =	0 kVA				

*-PROVIDE 30mA GFI CIRCUIT BREAKER FOR HEAT TRACE.

Harris & Associates Inc
265 East 100 South Suite 350
Salt Lake City, Utah 84111-1604
Ph (801) 521-8564 Fax (801) 355-2938

CONSULTANT INFORMATION
SPECTRUM ENGINEERS
175 South Main Street, Suite 300
Salt Lake City, Utah 84111
801-328-5151
800-678-7077
FAX 801-328-5155
www.spectrum-engineers.com

LICENSED PROFESSIONAL ENGINEER
No. 7083854
DAVID L. AFFLECK
STATE OF UTAH
2009-02-09

Utah National Guard
RENOVATION OF READINESS CENTER
BUILDING 5170
CAMP W.G. WILLIAMS, UTAH

SHEET TITLE
Schedules

REVISIONS	DATE	BY	DESCRIPTION
1			
2			
3			
4			

DRAWN BY: PSS
CHECKED BY: DLA
PROJECT NO.: 08032470 CW
DRAWING NO.: EP602
DATE: FEB 9, 2009

Utah National Guard - Camp Williams Bldg. 5170

File Name: P:\2008\20080419\Drawings\Sheet\19EP602.dwg Last Plotted: 2009/02/13 @ 5:13 PM By: pss

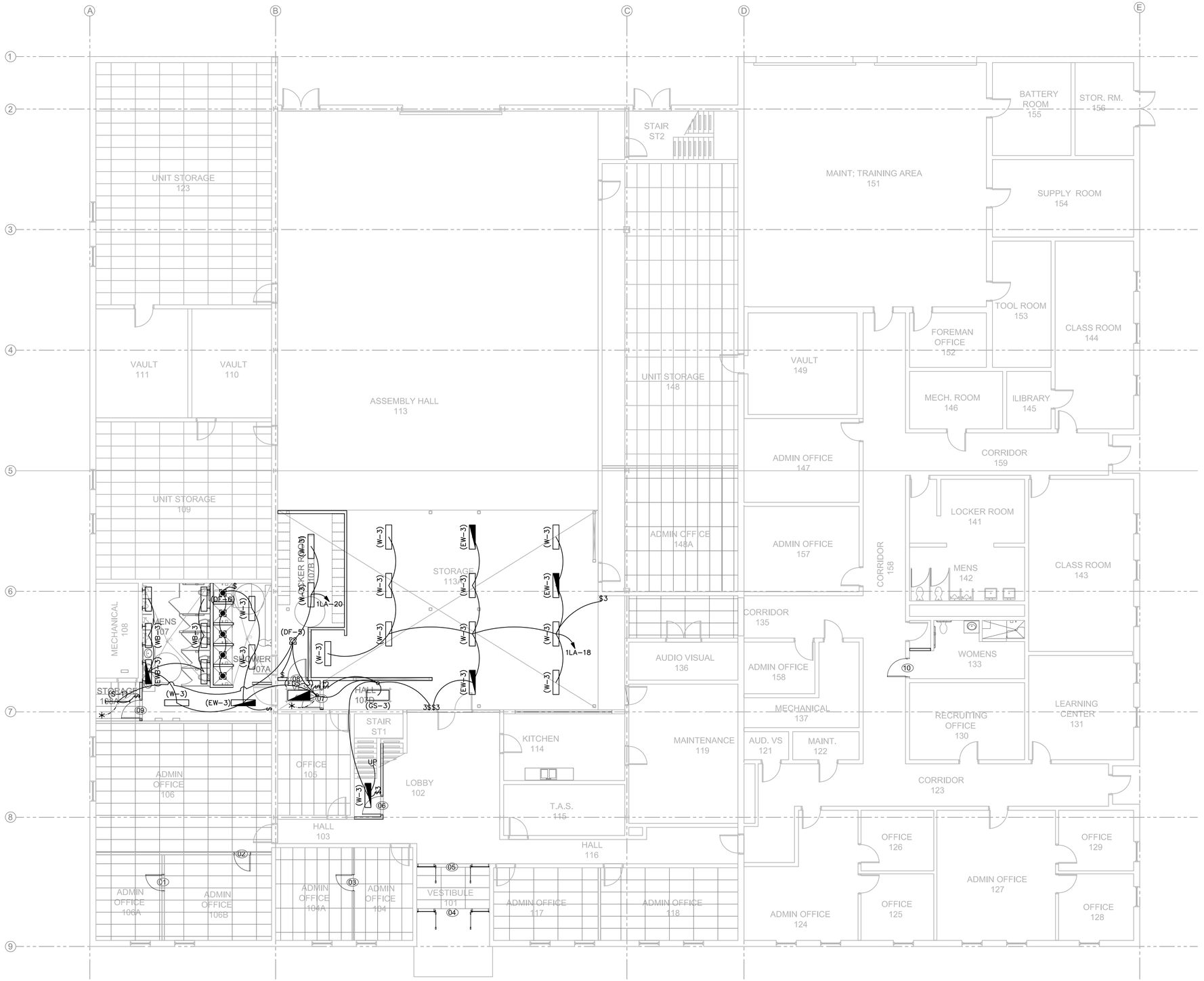

1 1ST FLOOR LIGHTING PLAN

1/8" = 1'-0"

0 4' 8' 16'

Harris & Associates Sm
265 East 100 South Suite 350
Salt Lake City, Utah 84111-1604
Ph (801) 521-8564 Fax (801) 355-2938

CONSULTANT INFORMATION
SPECTRUM ENGINEERS
175 South Main Street, Suite 300
Salt Lake City, Utah 84111
801-328-5151
800-678-7077
FAX 801-328-5155
www.spectrum-engineers.com

SHEET KEYNOTES

1. PROVIDE NEW LIGHT FIXTURES. TO REPLACE THE EXISTING LIGHTS IN AREAS SHOWN. FIELD VERIFY.
2. EXISTING LIGHTS SHALL REMAIN IN REMODELED AREA.

REGISTERED PROFESSIONAL ENGINEER
No. 7083854
DAVID L. AFFLECK
STATE OF UTAH
2009-02-09

Utah National Guard
RENOVATION OF READINESS CENTER
BUILDING 5170
CAMP W.G. WILLIAMS, UTAH

SHEET TITLE
1st Floor Lighting Plan

REVISIONS	DATE	BY	DESCRIPTION
△			
△			
△			
△			

DRAWN BY: PSS
CHECKED BY: DLA
PROJECT NO.: 08032470 CW
DRAWING NO.: EL101
DATE: FEB 9, 2009

Utah National Guard - Camp Williams Bldg. 5170

File Name: P:\2008\20080419\1Drawings\Sheet\19EL101.dwg Last Plotted: 2009/02/13 @ 5:13 PM By: pss

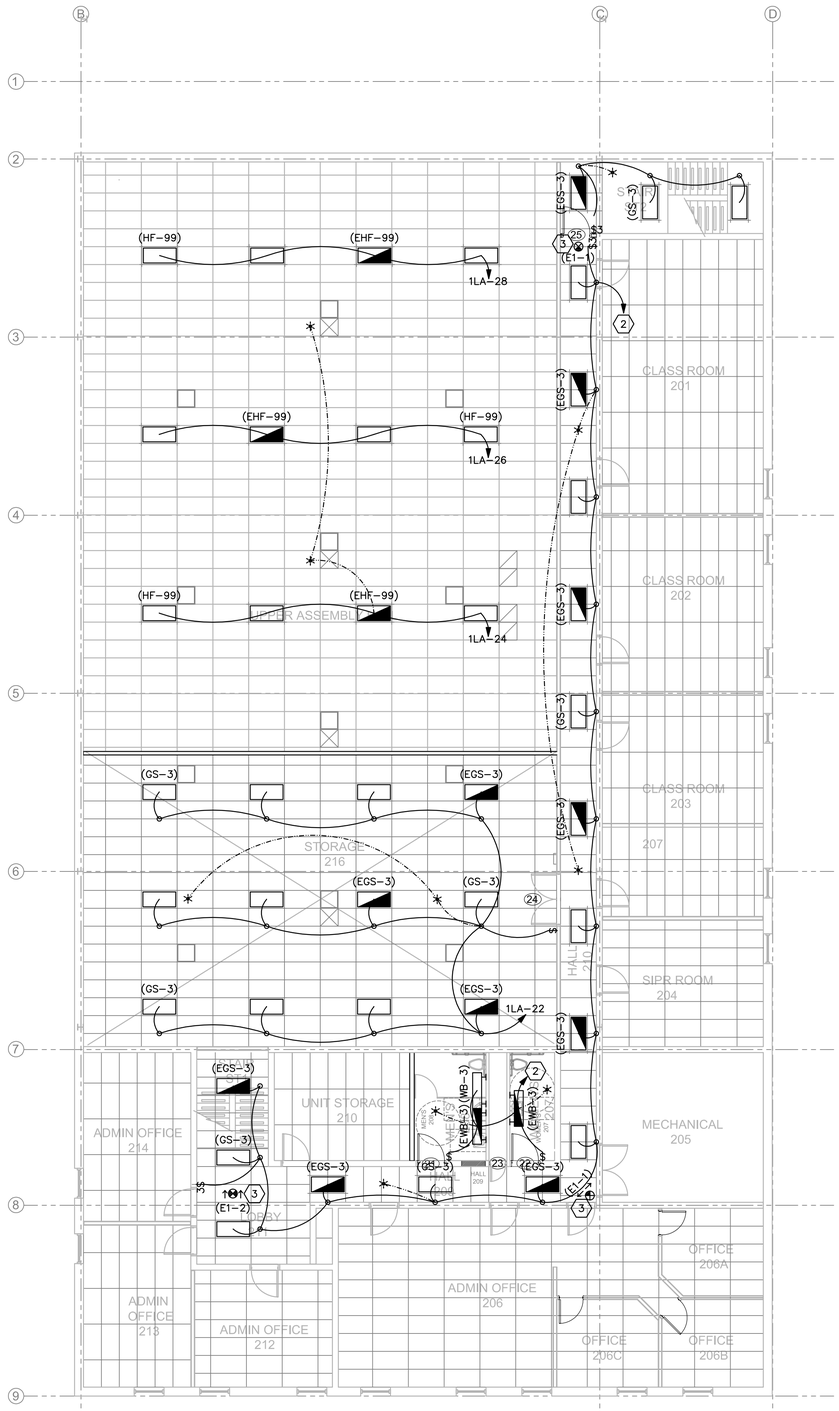

2ND FLOOR LIGHTING PLAN

1/8" = 1'-0"

NORTH

0 4' 8' 16'

Harris & Associates Sm
265 East 100 South Suite 350
Salt Lake City, Utah 84111-1604
Ph (801) 521-8564 Fax (801) 355-2938

CONSULTANT INFORMATION
SPECTRUM ENGINEERS
175 South Main Street, Suite 300
Salt Lake City, Utah 84111
801-328-5151
800-678-7077
FAX 801-328-5155
www.spectrum-engineers.com

SHEET KEYNOTES

1. PROVIDE NEW LIGHT FIXTURES. TO REPLACE THE EXISTING LIGHTS IN AREAS SHOWN. FIELD VERIFY.
2. CONNECT TO EXISTING CIRCUIT SERVING LIGHTS IN THIS ROOM.
3. CONNECT EXIT SIGN TO UNSWITCHED LEG OF CIRCUIT.

REGISTERED PROFESSIONAL ENGINEER
No. 7083854
DAVID L. AFFLECK
STATE OF UTAH
2009-02-09

Utah National Guard
RENOVATION OF READINESS CENTER
BUILDING 5170
CAMP W.G. WILLIAMS, UTAH

SHEET TITLE
2nd Floor Lighting Plan

REVISIONS	DATE	BY	DESCRIPTION
1			
2			
3			
4			

DRAWN BY: PSS
CHECKED BY: DLA
PROJECT NO.: 08032470 CW
DRAWING NO.: EL102
DATE: FEB 9, 2009

Utah National Guard - Camp Williams Bldg. 5170

File Name: P:\2008\20080419\1Drawings\Sheet\19EL102.dwg Last Plotted: 2009/02/13 @ 5:13 PM By: pss

LIGHTING FIXTURE SCHEDULE

NOTE TO BIDDERS: COMPLY WITH SECTIONS 16511, 16521, AND 16570 OF THE SPECIFICATIONS.
REFER TO SPECIFICATIONS FOR IMPORTANT TECHNICAL REQUIREMENTS FOR LIGHTING FIXTURES, BALLASTS, AND LAMPS. THE CATALOG NUMBERS LISTED BELOW HAVE BEEN CAREFULLY PREPARED TO ASSIST BIDDERS IN SELECTING PRODUCTS TO ACHIEVE THE DESIGN CONCEPT, HOWEVER, PRIOR TO BIDDING, EACH MANUFACTURER SHALL COMPARE THE CATALOG NUMBERS SHOWN WITH THE DESCRIPTION AND REQUIREMENTS ON THE DRAWINGS, AND SHALL NOTIFY THE ARCHITECT/ENGINEER OF ANY DISCREPANCIES. SPECIFICALLY INCLUDED IN THIS EVALUATION SHALL BE THE VERIFYING OF PROPER MOUNTING KITS OR ACCESSORIES TO FACILITATE INSTALLATION AS SHOWN AT EACH LOCATION ON THE DRAWINGS. NO ALLOWANCE OR REDRESS WILL BE ALLOWED FOR DISCREPANCIES THAT WERE NOT REPORTED TO THE ARCHITECT/ENGINEER IN TIME FOR CORRECTION OR CLARIFICATION BEFORE THE BID. THE REPORTING OF ANY AMBIGUITY IS THE RESPONSIBILITY OF THE BIDDER. PROVIDE UNIT PRICES AND FIXTURE BRAND SELECTED FOR ADD/DELETE CHANGES FOR EACH FIXTURE TYPES SHOWN WITHIN 48 BUSINESS HOURS OF THE BID DATE. FAILURE TO COMPLY WITH THIS REQUIREMENT MAY DISQUALIFY THE PRODUCTS AND EMPOWER THE ENGINEER TO DETERMINE FAIR VALUE FOR FIXTURE AND INSTALLATION CHANGES, WITHOUT FURTHER INPUT FROM THE CONTRACTOR OR INSTALLER. SUBMITTAL PACKAGE SHALL INCLUDE LAMP MANUFACTURER AND CATALOG NUMBER ON EACH FIXTURE SHEET. ON ALL PENDANT MOUNTED FIXTURES, PROVIDE A SECOND SET OF PENDANTS, OF A DIFFERENT LENGTH, AS DIRECTED BY THE ARCHITECT/ENGINEER, PROVIDED AND INSTALLED AT NO ADDITIONAL CHARGE. ALL FIXTURES SHALL BE APPROVED BY UL OR ANOTHER ACCEPTABLE TESTING LAB FOR THE PURPOSE INTENDED AND WITH THE LAMP AND BALLAST PROPOSED. CONTRACTOR ALLOWANCE PRICES ARE ACCURATE WHEN THIS JOB WAS SPECIFIED, CONTRACTOR AND ELECTRICAL DISTRIBUTOR SHALL VERIFY THIS ALLOWANCE AND REPORT ANY PROBLEMS TO THE ENGINEER BEFORE THE BID. ALLOWANCE PRICE MAY OR MAY NOT INCLUDE LAMP(S) OR FREIGHT AS NOTED, AND DO NOT INCLUDE ANY TAXES. UNIVERSAL VOLTAGE (120/277) BALLASTS REQUIRED UNLESS NOTED OTHERWISE. DIMENSION SEQUENCE = (LENGTH X WIDTH X DEPTH) IN INCHES.

SYMBOL	MARK	FIXTURE CHARACTERISTICS BODY / AIR / MOUNTING / DOOR LENS/LOUVER/REFLECTOR/OTHER	LAMP	WATTS	VOLTS	MANUFACTURER	CATALOG NUMBER	NOTES
	HF	SPECIAL FIXTURES AS INDICATED. MEET ALL REQUIREMENTS OF SPECIFICATIONS AND FIXTURE SCHEDULE. VISUAL AND FINISH APPROVAL REQUIRED.						
	HF-99	HIGH BAY FLUORESCENT	6-F54T5 RE841	350w	277/120V	MANUF	CATALOG NUMBER	
						DAYBRITE	FBF-6-54HO-UNV-1/42EB-U-WG-FBF6	
						LA LIGHTING	EBY400-6-4M-SR-WG11-2EH5-MVOLT	
						LITHONIA	FSB-654L-KD-MVOLT-2/3-WGI	
						HE WILLIAMS	GL-4-654T5H-WG11-UP5-WD	
						METALUX	2HB-6-54T5-WG-UNV-LAMPS-EBT2	
	S	FLUORESCENT STRIP LIGHT: STEEL CONSTRUCTION; WHITE PAINTED FINISH; SUITABLE FOR MOUNTING ON LOW DENSITY CEILINGS; PROGRAM START ELECTRONIC BALLASTS; T8 LAMPS; ONE BALLAST PER FIXTURE WHERE POSSIBLE, UNLESS TWO LEVEL SWITCHING IS SHOWN ON THE PLANS.						
	S-1	4', 1-LAMP.	1-F32T8 RE835	40W	277/120V	LITHONIA	C132-MVOLT-TUBRHP	
						LIGHTOLIER	SW132-U-SOP	
						METALUX	SS-132-UNV-PROGRAM START	
						DAYBRITE	T132-UNV-EB-SPEC	
						HUBBELL	S132UPS	
						COLUMBIA	CS4-132-EB8120/277 PROG	
	W	LOW PROFILE WRAPAROUND: SURFACE MOUNTED SUITABLE FOR MOUNTING ON LOW DENSITY CEILINGS WRAPAROUND ACRYLIC PRISMATIC DIFFUSER; WHITE ENAMEL ENDPLATES; MINIMUM CU OF 70 @ 80/50/20 AND RCR=1; PROGRAM START ELECTRONIC BALLASTS; T8 LAMPS; ONE BALLAST PER FIXTURE WHERE POSSIBLE, UNLESS TWO LEVEL SWITCHING IS SHOWN ON THE PLANS.						
	W-3	NARROW BODY WRAPAROUND; 2-LAMP, APPROX; 3" X 10" X 48".	2-F32T8 RE835	65W	277/120V	LITHONIA	LB232-MVOLT-TUBPHP	
						DAYBRITE	CAN232-UNV-1/2-EB-SPEC	
						METALUX	WS-232A-UNV-PROGRAM START	
						LIGHTOLIER	WA232-U-SOP	
						LSI	PR 232 SSO10PRS UE	
						COLUMBIA	WC4-232-EBPS120/277	
	WB	WALL MOUNTED FLUORESCENT LOCATED ABOVE WALL ELEMENT (MIRROR/WHITEBOARD, ETC.): AS INDICATED ON DRAWINGS; WITH ACRYLIC INJECTION MOLDED; PROGRAM START ELECTRONIC BALLASTS; T8 LAMPS; ONE BALLAST PER FIXTURE WHERE POSSIBLE, UNLESS TWO LEVEL SWITCHING IS SHOWN ON THE PLANS.						
	WB-3	2-LAMP, WALL MOUNT 48", STEEL ENCLOSURE, DOWNLIGHT ONLY; ACRYLIC INJECTION MOLDED PRISMATIC DIFFUSER.	2-F32T8 RE835	65W	277/120V	DAYBRITE	CD232W-UNV-1/2-EB-SPEC	
						LIGHTOLIER	CWB232-WB-U-SOP	
						METALUX	BI-232-UNV-PROGRAM START	
						L.A.L.	BSQ100-2-4R-INJ-WHT-T8EB-120/277-UPS	
						COLUMBIA	WAL4-232-EBPS120/277	
						LITHONIA	WP 232 DO MVOLT-TUBPHP	
						LSI	WB 232 SSO10PRS UE	

LIGHTING FIXTURE SCHEDULE

NOTE TO BIDDERS: COMPLY WITH SECTIONS 16511, 16521, AND 16570 OF THE SPECIFICATIONS.
REFER TO SPECIFICATIONS FOR IMPORTANT TECHNICAL REQUIREMENTS FOR LIGHTING FIXTURES, BALLASTS, AND LAMPS. THE CATALOG NUMBERS LISTED BELOW HAVE BEEN CAREFULLY PREPARED TO ASSIST BIDDERS IN SELECTING PRODUCTS TO ACHIEVE THE DESIGN CONCEPT, HOWEVER, PRIOR TO BIDDING, EACH MANUFACTURER SHALL COMPARE THE CATALOG NUMBERS SHOWN WITH THE DESCRIPTION AND REQUIREMENTS ON THE DRAWINGS, AND SHALL NOTIFY THE ARCHITECT/ENGINEER OF ANY DISCREPANCIES. SPECIFICALLY INCLUDED IN THIS EVALUATION SHALL BE THE VERIFYING OF PROPER MOUNTING KITS OR ACCESSORIES TO FACILITATE INSTALLATION AS SHOWN AT EACH LOCATION ON THE DRAWINGS. NO ALLOWANCE OR REDRESS WILL BE ALLOWED FOR DISCREPANCIES THAT WERE NOT REPORTED TO THE ARCHITECT/ENGINEER IN TIME FOR CORRECTION OR CLARIFICATION BEFORE THE BID. THE REPORTING OF ANY AMBIGUITY IS THE RESPONSIBILITY OF THE BIDDER. PROVIDE UNIT PRICES AND FIXTURE BRAND SELECTED FOR ADD/DELETE CHANGES FOR EACH FIXTURE TYPES SHOWN WITHIN 48 BUSINESS HOURS OF THE BID DATE. FAILURE TO COMPLY WITH THIS REQUIREMENT MAY DISQUALIFY THE PRODUCTS AND EMPOWER THE ENGINEER TO DETERMINE FAIR VALUE FOR FIXTURE AND INSTALLATION CHANGES, WITHOUT FURTHER INPUT FROM THE CONTRACTOR OR INSTALLER. SUBMITTAL PACKAGE SHALL INCLUDE LAMP MANUFACTURER AND CATALOG NUMBER ON EACH FIXTURE SHEET. ON ALL PENDANT MOUNTED FIXTURES, PROVIDE A SECOND SET OF PENDANTS, OF A DIFFERENT LENGTH, AS DIRECTED BY THE ARCHITECT/ENGINEER, PROVIDED AND INSTALLED AT NO ADDITIONAL CHARGE. ALL FIXTURES SHALL BE APPROVED BY UL OR ANOTHER ACCEPTABLE TESTING LAB FOR THE PURPOSE INTENDED AND WITH THE LAMP AND BALLAST PROPOSED. CONTRACTOR ALLOWANCE PRICES ARE ACCURATE WHEN THIS JOB WAS SPECIFIED, CONTRACTOR AND ELECTRICAL DISTRIBUTOR SHALL VERIFY THIS ALLOWANCE AND REPORT ANY PROBLEMS TO THE ENGINEER BEFORE THE BID. ALLOWANCE PRICE MAY OR MAY NOT INCLUDE LAMP(S) OR FREIGHT AS NOTED, AND DO NOT INCLUDE ANY TAXES. UNIVERSAL VOLTAGE (120/277) BALLASTS REQUIRED UNLESS NOTED OTHERWISE. DIMENSION SEQUENCE = (LENGTH X WIDTH X DEPTH) IN INCHES.

SYMBOL	MARK	FIXTURE CHARACTERISTICS BODY / AIR / MOUNTING / DOOR LENS/LOUVER/REFLECTOR/OTHER	LAMP	WATTS	VOLTS	MANUFACTURER	CATALOG NUMBER	NOTES
	DF	FLUORESCENT DOWNLIGHT; THERMALLY PROTECTED HOUSING: TO ACCOMMODATE MULTIPLE TRIMS AND REFLECTOR ASSEMBLIES FOR LAMPS AS LISTED BELOW; ELECTRONIC BALLASTS; LOW IRIDESCENT REFLECTOR FINISH (EVEN IF NOT SHOWN IN CATALOG #); SELF FLANGING TRIM UNLESS NOTED.						
	DF-5	RECESSED SHOWER LIGHT; WHITE TRIM, DROP OPAL LEXAN LENS, QUAD LAMP, 6-9" APERTURE.	1-Q13 RE835	25W	277/120V	INFINITY	PVSL68 113Q-EB (G24Q-1) 277 BH (16-1/4 X 12 X 7-7/8)	
						HALO	H274-71PS (15 X 6-3/4 X 7)	
						PRESCOLITE	CBX-TL30-120V-HPF (13 X 7-1/2 X 7-1/2)	
						LITHONIA	LP6F 13DTT MVOLT GEB10 6LD1PF (13-1/2 X 12-1/4 X 7-3/8)	
						LIGHTOLIER	1102FHX/1178SH (12-3/4 X 6-13/16 X 7-1/2)	
						CAPRI	PL07/U-PSH17P	
	DF-6	RECESSED SHOWER LIGHT; WHITE TRIM, DROP OPAL LENS, SQUARE, QUAD LAMP, 6-9" APERTURE.	2-Q13 RE835	40W	277/120V	PRESCOLITE	CF10SQ2EB-1015S3-TLG-TRG WET (17-1/4 X 10-1/16 X 4-1/8)	
						LITHONIA	LAF213DTT-11RW-DOL-MVOLT HPF (24 X 13-1/4 X 6)	
						LIGHTOLIER	1102DHX-1178SH (12-3/4 X 6-13/16 X 7-1/2)	
						CAPRI	CF102H13Q-U-S56	
						HALO	H242-11G (12 X 8-1/4 X 3-1/2)	
						INFINITY	PHSQ80 213Q-EB (G24Q-1) DO 277 BH (23 X 17 X 7)	
	DF-17	RECESSED DOWNLIGHT; VERTICAL, 6" APERTURE, 32W CF-AMALGAM LAMP, CLEAR.	1-CF-A32 RE835	50W	277/120V	LIGHTOLIER	8021CCLW/6132BU (12-3/4 X 10 X 9-3/8)	
						LITHONIA	AFV 32TRT 6AR MVOLT (15-13/16 X 12-15/16 X 10-7/8)	
						OMEGA	S632PLT-U-T6-CS (11-11/16 X 11-7/16 X 11-3/8)	
						PRESCOLITE	CFT632EB-STF602 (16-1/4 X 14-7/16 X 10-9/16)	
						PORTFOLIO	C6032E-6051LI (12 X 11-1/2 X 9-1/2)	
						INFINITY	PV60 132T-EB (GX24Q-3) 277 BH (16-1/4 X 12 X 9-5/8)	
	E	E PREFIX INDICATES THAT FIXTURE IS PROVIDED WITH AN EMERGENCY BATTERY PACK TO PROVIDE POWER TO ANY 2, 3, 4 OR 8 FOOT FLOURESCENT LAMP COMPATIBLE WITH ALL STANDARD AND ELECTRONIC BALLASTS; COMPLETELY SELF-CONTAINED TO PROVIDE 90 MINUTES OF EMERGENCY POWER TO FIXTURE BALLAST; MINIMUM LIGHT OUTPUT FOR TYPICAL 4' LAMP SHALL BE 1100 LUMENS OR HIGHER;UNIVERSAL TRANSFORMER FOR 120 OR 277 VOLTS; LOW VOLTAGE PROTECTION, COMBINATION TEST SWITCH AND AC "ON" INDICATOR; 10 YEAR PRO-RATA WARRANTY; INSTALL TEST SWITCH IN A MANNER THAT REQUIRES NO DISASSEMBLY FOR TESTING.						
	E	EMERGENCY BATTERY PACK.			120/277V3W	IOTA	I-80	
						BODINE	B50	
						LITHONIA	PS-1400	
						PRESCOLITE	EFPS-5	
						EELP	EB1400 (CONTRACTOR INSTALLED)	
						CHLORIDE	CFP841	
						LIGHTOLIER	FBP50	
						SIDELITE	S60F	
	E1	EXIT SIGN: THERMOPLASTIC HOUSING; UNIVERSAL MOUNTING; UNIVERSAL ARROWS PER PLANS; EMERGENCY BATTERY PACK WITH 10 YEAR PRO-RATA WARRANTY; LED, DIFFUSE LENS PANEL; GREEN LETTERS ON WHITE BACKGROUND. MUST MEET NFPA ILLUMINATION STANDARDS.						
	E1-1	SINGLE FACE:	LED	1W	120/277V	MCPHILBEN	CXXL-1-GW	
						DUAL-LITE	LXSGWE	
						EELP	XE 1 GW EM	
						LITHONIA	LQM S W 1 G 120/277 ELN	
						SURE-LITES	LPX70DGW	
						DAY-BRITE	CXL-1-GW-EM	
						CHLORIDE	SLN1GW	
						LIGHTOLIER	LTN1GW	
	E1-2	DUAL FACE:	LED	2W	120/277V	DUAL-LITE	LXUGWE	
						EELP	XE 2 GW EM	
						LITHONIA	LQM S W 3 G 120/277 ELN	
						SURE-LITES	LPX70DGW	
						DAY-BRITE	CXL-3-GW-EM	
						CHLORIDE	SLN2GW	
						LIGHTOLIER	LTN2GW	
						MCPHILBEN	CXXL-3-GW	
	GS	TROFFERS: RECESSED FOR LAY-IN GRID; STATIC; HINGED AND LATCHED STEEL DOOR; .125 ACRYLIC PRISMATIC LENS, MINIMUN 1/8"; EARTHQUAKE CLIPS; MAX 5" DEEP; SPECIFICATION GRADE; PROGRAM START ELECTRONIC BALLASTS, T8 LAMPS; ONE BALLAST PER FIXTURE WHERE POSSIBLE, UNLESS TWO LEVEL SWITCHING IS SHOWN ON THE PLANS.						
	GS-3	2X4, 2 LAMP.	2-F32T8 RE835	65W	277/120V	LITHONIA	2 SP8G 232 A12125 MVOLT TUBRHP (4-1/2" DEPTH)	
						METALUX	2GP-232A125-UNV-EB81-PROGRAM START (3-3/4" DEPTH)	
						DAYBRITE	2DPG232-FS21-UNV-1/2EB-SPEC (4-3/8" DEPTH)	
						LSI	LA125 232 SD SSO10PS UE (4" DEPTH)	
						LIGHTOLIER	XT2GVI232-UNV-SOP (3-5/8" DEPTH)	
						COLUMBIA	ST824-232G-FSA12.125-EB8LHPRUNV (3-3/4" DEPTH)	
	GS-4	2X4, 3 LAMP.	3-F32T8 RE835	95W	277/120V	LITHONIA	2 SP8G 332 A12125 1/3 MVOLT TUBRHP (4-1/2" DEPTH)	
						METALUX	2GP-332A125-UNV-EB81-PROGRAM START (3-3/4" DEPTH)	
						DAYBRITE	2DPG332-FS21-UNV-1/3EB-SPEC (4-3/8" DEPTH)	
						COLUMBIA	ST824-332G-FSA12.125-3EB8LHPRUNV (3-3/4" DEPTH)	
						LIGHTOLIER	XT2GVI332-UNV-03P (3-5/8" DEPTH)	
						LSI	LA125 332 SD SSO10PS UE (4" DEPTH)	

Harris & Associates Inc
265 East 100 South Suite 350
Salt Lake City, Utah 84111-1604
Ph (801) 521-8564 Fax (801) 355-2938

CONSULTANT INFORMATION
SPECTRUM ENGINEERS
175 South Main Street, Suite 300
Salt Lake City, Utah 84111
801-328-5151
800-678-7077
FAX 801-328-5155
www.spectrum-engineers.com

LICENSED PROFESSIONAL ENGINEER
No. 7083854
DAVID L. AFFLECK
STATE OF UTAH
2009-02-09

Utah National Guard
RENOVATION OF READINESS CENTER
BUILDING 5170
CAMP W.G. WILLIAMS, UTAH

SHEET TITLE
Lighting Fixture Schedule

REVISIONS	DATE	BY	DESCRIPTION
1			
2			
3			
4			

DRAWN BY: PSS
CHECKED BY: DLA
PROJECT NO.: 08032470 CW
DRAWING NO.: EL601
DATE: FEB 9, 2009

File Name: P:\2008\20080419\1Drawings\Sheet\19EL601.dwg Last Plotted: 2009/02/13 @ 5:13 PM By: pss

Utah National Guard - Camp Williams Bldg. 5170

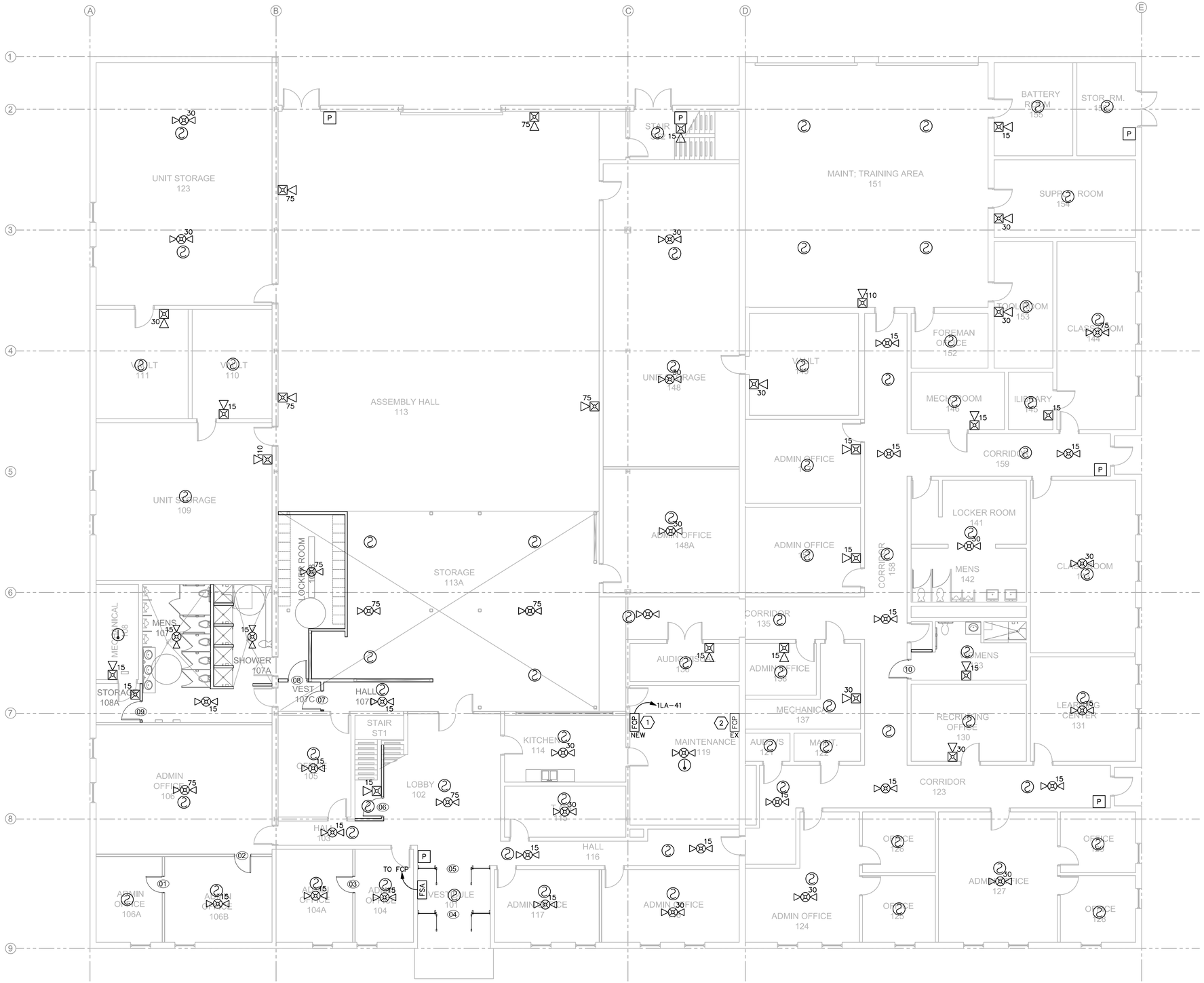

1 1ST FLOOR FIRE ALARM PLAN

1/8" = 1'-0"

Harris & Associates Inc.
265 East 100 South Suite 350
Salt Lake City, Utah 84111-1604
Ph (801) 521-8564 Fax (801) 355-2938

CONSULTANT INFORMATION
SPECTRUM ENGINEERS
175 South Main Street, Suite 300
Salt Lake City, Utah 84111
801-328-5151
800-678-7077
FAX 801-328-5155
www.spectrum-engineers.com

SHEET KEYNOTES

1. PROVIDE NEW FIRE ALARM PANEL TO REPLACE THE EXISTING FIRE ALARM PANEL. COORDINATE LOCATION OF NEW FIRE ALARM PANEL WITH UTAH NATIONAL GUARD PRIOR TO ROUGH-IN.
2. EXISTING FIRE ALARM PANEL TO BE REMOVED ONCE THE NEW FIRE ALARM SYSTEM IS OPERATIONAL AND APPROVED BY THE FIRE MARSHALL.

REGISTERED PROFESSIONAL ENGINEER No. 7083854 DAVID L. AFFLECK STATE OF UTAH
2009-02-09

Utah National Guard
RENOVATION OF READINESS CENTER
BUILDING 5170
CAMP W.G. WILLIAMS, UTAH

SHEET TITLE
1st Floor Fire Alarm Plan

REVISIONS	DATE	BY	DESCRIPTION
△			
△			
△			
△			

DRAWN BY: PSS
CHECKED BY: DLA
PROJECT NO.: 08032470 CW
DRAWING NO.: FA101
DATE: FEB 9, 2009

Utah National Guard - Camp Williams Bldg. 5170

File Name: P:\2008\20080419\1Drawings\Sheet\19FA101.dwg Last Plotted: 2009/02/13 @ 5:12 PM By: pss

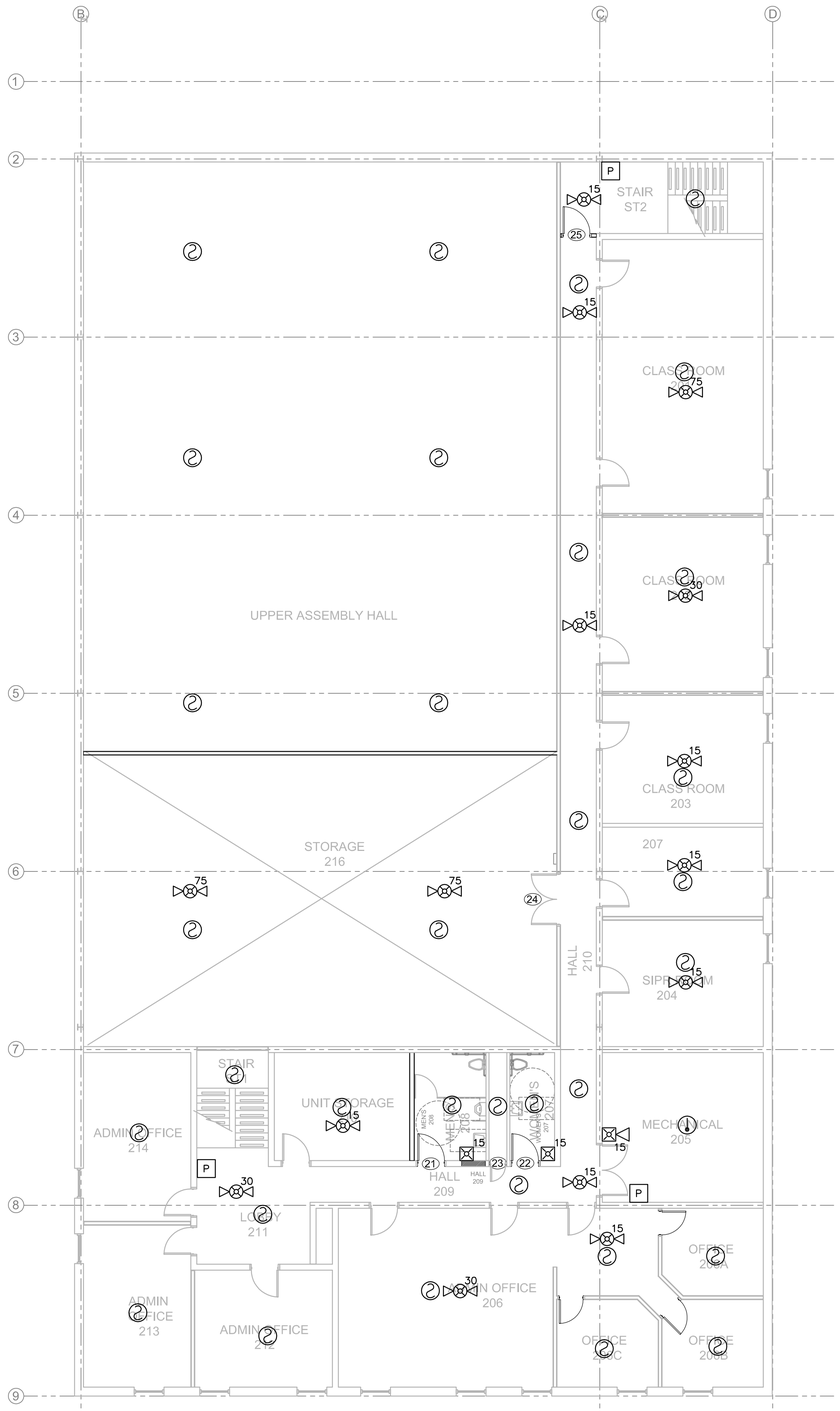

2ND FLOOR FIRE ALARM PLAN

1/8" = 1'-0"

0 4' 8' 16'

Harris & Associates Sm
265 East 100 South Suite 350
Salt Lake City, Utah 84111-1604
Ph (801) 521-8564 Fax (801) 355-2938

CONSULTANT INFORMATION
SPECTRUM ENGINEERS
175 South Main Street, Suite 300
Salt Lake City, Utah 84111
801-328-5151
800-678-7077
FAX 801-328-5155
www.spectrum-engineers.com

REGISTERED PROFESSIONAL ENGINEER
No. 7083854
DAVID L. AFFLECK
STATE OF UTAH
2009-02-09

Utah National Guard
RENOVATION OF READINESS CENTER
BUILDING 5170
CAMP W.G. WILLIAMS, UTAH

SHEET TITLE
2nd Floor Fire Alarm Plan

REVISIONS	DATE	BY	DESCRIPTION
1			
2			
3			
4			

DRAWN BY: PSS
CHECKED BY: DLA
PROJECT NO.: 08032470 CW
DRAWING NO.: FA102
DATE: FEB 9, 2009

Utah National Guard - Camp Williams Bldg. 5170

File Name: P:\2008\20080419\Drawings\Sheet\19FA102.dwg Last Plotted: 2009/02/13 @ 5:12 PM By: pss

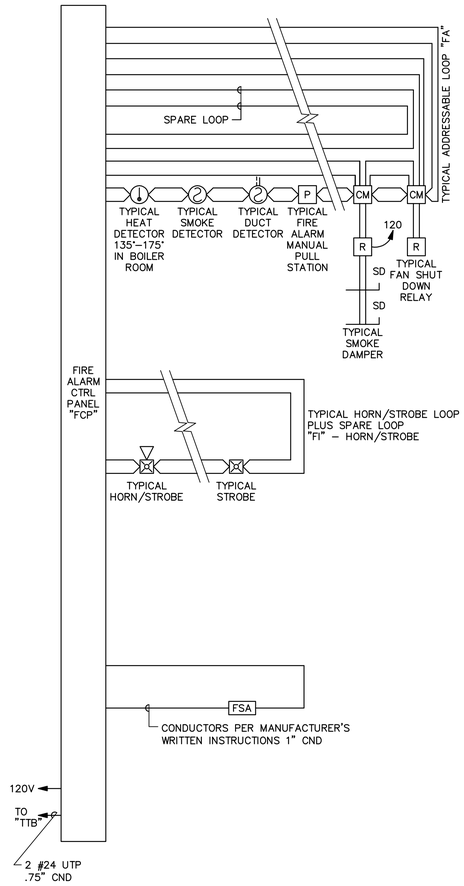

12 ADDRESSABLE FIRE ALARM RISER
NO SCALE

GENERAL SHEET NOTES

1. PLANS ARE BASED UPON 99 MONITOR AND CONTROL DEVICES PER ADDRESSABLE LOOP. OTHER CONFIGURATIONS ARE ACCEPTABLE SUBJECT TO CONTRACTOR ALLOWING FOR INCREASED WIRING REQUIREMENTS AND SUBMITTAL DRAWINGS SHOWING NEW WIRING CONFIGURATION. MAXIMUM INITIAL DEVICES PER LOOP SHALL NOT EXCEED 75% MAXIMUM ALLOWABLE.
2. PLANS ARE BASED UPON THE WIRING SCHEDULE SHOWN. WHERE MANUFACTURER'S REQUIREMENTS EXCEED REQUIREMENTS SHOWN, INCLUDE ADDITIONAL ASSOCIATED COSTS AND SUBMITTAL DRAWINGS INDICATING NEW WIRING CONFIGURATION.
3. PLANS ARE BASED UPON 2 AMPS AT 24 VDC, NOT TO EXCEED 75% (1.50 AMPS AVAILABLE), POWER SUPPLY CAPACITY PER NOTIFICATION CIRCUIT. NOTIFICATION DEVICE LOADS ARE BASED UPON NOTIFICATION DEVICE SCHEDULE SHOWN. INCLUDE ADDITIONAL ASSOCIATED COSTS FOR INCREASED WIRING AND POWER SUPPLY CAPACITY IF LOADS OF ACTUAL DEVICES PROVIDED EXCEED CIRCUIT CAPACITY, OR IF LOAD OUTPUT OF ACTUAL POWER SUPPLIES PROVIDED IS SIZED DIFFERENTLY. PROVIDE SUBMITTAL DRAWINGS SHOWING NEW WIRING CONFIGURATION.
4. FLOW AND TAMPER CONFIGURATION BASED UPON FIRE SPRINKLER DESIGN CONCEPT. FIELD VERIFY ACTUAL REQUIREMENTS. INCLUDE ANY ADDITIONAL MONITOR MODULES REQUIRED BY ACTUAL DESIGN REQUIREMENTS.
5. HEAT DETECTORS WHEN INSTALLED IN ELEVATOR SHAFTS OR MECHANICAL ROOMS FOR ELEVATOR SHUT DOWN SHALL HAVE HEAT DETECTOR WITH LOWER RESPONSE TIME INDEX THAN SPRINKLER HEAD.
6. PROVIDE POWER SUPPLY CAPACITY AS REQUIRED FOR DOOR HOLD OPENS SHOWN.
7. BATTERY CAPACITY TO BE ADEQUATE TO OPERATE 5 MINUTES AFTER 24 HOURS PLUS 25% SPARE CAPACITY.
8. VFD REQUIRES TWO RELAYS, ONE FOR SMOKE CONTROL, ONE SPARE.
9. RUN SPARE LOOPS IN SAME CONDUIT. DO NOT EXCEED 40% AREA FILL OF CONDUITS.
10. PROVIDE DUCT DETECTORS FOR SUPPLY AND RETURN AIR SYSTEMS OVER 2000 CFM. INSTALL DUCT DETECTORS PER NFPA 72 REQUIREMENTS AND PROVIDE ADDITIONAL DUCT DETECTORS DEPENDING UPON FINAL DUCT ARRANGEMENT.
11. PROVIDE DUCT DETECTOR AT EACH FLOOR, PRIOR TO CONNECTION TO A COMMON RETURN AND PRIOR TO RECIRCULATING OR FRESH AIR INLET IN AIR RETURN SYSTEMS OVER 15,000 CFM CAPACITY AND SERVING MORE THAN ONE STORY.
12. PROVIDE MANUAL PULL STATIONS IN BOILER ROOMS AND KITCHENS.
13. PROVIDE ONE YEAR OFF SITE MONITORING INCLUDING ALL INTERFACE DEVICES AND MONITORING CHARGES. COORDINATE WITH BUILDING OWNER'S OFF SITE MONITORING COMPANY.
14. LOCATE SMOKE DETECTORS MINIMUM 3' FROM AIR SUPPLY AND RETURN LOUVERS.
15. PROVIDE SYNCHRONIZED STROBES THROUGHOUT FACILITY. PROVIDE SYNCHRONIZATION MODULES PER MANUFACTURER'S REQUIREMENTS. INCLUDE ADDITIONAL WIRING, IF REQUIRED.
16. INITIATING AND INDICATING LOOPS SHALL NOT SERVE AN AREA OF GREATER THAN 22,500 SQUARE FEET. PROVIDE ADDITIONAL LOOPS FOR AREAS LARGER THAN THIS.
17. ALL OUTPUT DEVICES ARE DESIGNED ON SYSTEMS WITH 2 AMP POWER SUPPLY.
18. HORN/STROBE BASED ON 120 MILLIAMPS, DOOR HOLDERS BASED ON 70 MILLIAMPS.
19. INSTALL DUCT DETECTORS PER NFPA 72 REQUIREMENTS AND PROVIDE ADDITIONAL DUCT DETECTORS DEPENDING UPON FINAL DUCT ARRANGEMENT.

WIRING SCHEDULE

FUNCTION	< 500'	< 1000'	1000'-3000'	> 3000'
ADDRESSABLE LOOP	#18 TSP	#18 TSP	#16 TSP	#14 TSP
POWER LOOP	#14 THWN	#14 THWN	#12 THWN	#10 THWN
SPARE LOOP	#14 THWN	#14 THWN	#12 THWN	#10 THWN
STROBE HORNS	#14 THWN	#14 THWN	#12 THWN	#10 THWN
MAGNETIC DOOR HOLDER	#12 THWN	#10 THWN		
SPEAKERS	#16 TSP	#16 TSP	#14 TSP	#14 TSP

NOTIFICATION SCHEDULE

SYMBOL	STROBE SIZE	COVERAGE	AVERAGE CURRENT	MAXIMUM PER CIRCUIT ALONE
15	15 CD	20'x20'	.085A	17
30	30 CD	30'x30'	.135A	11
75	75 CD	40'x40'	.200A	7
110	110 CD	50'x50'	.225A	6

Harris & Associates Sm
265 East 100 South Suite 350
Salt Lake City, Utah 84111-1604
Ph (801) 521-8564 Fax (801) 355-2938

CONSULTANT INFORMATION
SPECTRUM ENGINEERS
175 South Main Street, Suite 300
Salt Lake City, Utah 84111
801-328-5151
800-678-7077
FAX 801-328-5155
www.spectrum-engineers.com

LICENSED PROFESSIONAL ENGINEER
No. 708384
DANIEL L. AFFLECK
STATE OF UTAH
2009-02-09

Utah National Guard
RENOVATION OF READINESS CENTER
BUILDING 5170
CAMP W.G. WILLIAMS, UTAH

SHEET TITLE
Fire Alarm Riser

REVISIONS	DATE	BY	DESCRIPTION
1			
2			
3			
4			

DRAWN BY: PSS
CHECKED BY: DLA
PROJECT NO.: 08032470 CW
DRAWING NO.: FA601
DATE: FEB 9, 2009

Utah National Guard - Camp Williams Bldg. 5170

File Name: P:\2008\20080419\Drawings\Sheet\19FA601.dwg Last Plotted: 2009/02/13 @ 5:12 PM By: pss