State of Utah

JON M. HUNTSMAN, JR.
Governor

GARY R. HERBERT
Lieutenant Governor

Department of Administrative Services
KIMBERLY K. HOOD
Executive Director

Division of Facilities Construction and Management
DAVID G. BUXTON
Director

ADDENDUM #1

Date: June 26, 2008

To: Contractors

From: Vic Middleton, Project Manager, DFCM

Reference: Administration/Culinary Remodel
UBATC Roosevelt Campus – Roosevelt, Utah
DFCM Project No. 08046250

Subject: **Addendum No. 1**

Pages	Addendum	1	pages
	Revised Bid Form	2	pages
	Architects Addendum	24	pages
	Total	27	pages

Note: This Addendum shall be included as part of the Contract Documents. Items in this Addendum apply to all drawings and specification sections whether referenced or not involving the portion of the work added, deleted, modified, or otherwise addressed in the Addendum. Acknowledge receipt of this Addendum in the space provided on the Bid Form. Failure to do so may subject the Bidder to Disqualification.

While we contend that SB220 should only be potentially applicable to a contract issued after the effective date of said bill, this is to clarify that for purposes of this contract, regardless of the execution or effective dates of this contract, the status of Utah Law and remedies available to the State of Utah and DFCM, as it relates to any matter referred to or affected by said SB220, shall be the Utah law in effect at the time of the issuance of this Addendum.

1.1 **SCHEDULE CHANGES – There are no changes to the project schedule.**

1.2 **GENERAL ITEMS** – Revised bid form adding alternate no.1 – HVAC additional improvements according to drawing.

1.3 Specifications and drawings from P+A Architects.

STATE OF UTAH - DEPARTMENT OF ADMINISTRATIVE SERVICES

Division of Facilities Construction and Management

DFCM

REVISED BID FORM
AS PER ADDENDUM NO. 1 DATED June 26, 2008

NAME OF BIDDER _____ DATE _____

To the Division of Facilities Construction and Management
4110 State Office Building
Salt Lake City, Utah 84114

The undersigned, responsive to the "Notice to Contractors" and in accordance with the "Instructions to Bidders", in compliance with your invitation for bids for the **ADMINISTRATIVE/CULINARY REMODEL - UBATC ROOSEVELT CAMPUS – ROOSEVELT, UTAH - DFCM PROJECT NO. 08046250**, and having examined the Contract Documents and the site of the proposed Work and being familiar with all of the conditions surrounding the construction of the proposed Project, including the availability of labor, hereby proposes to furnish all labor, materials and supplies as required for the Work in accordance with the Contract Documents as specified and within the time set forth and at the price stated below. This price is to cover all expenses incurred in performing the Work required under the Contract Documents of which this bid is a part:

I/We acknowledge receipt of the following Addenda: _____

For all work shown on the Drawings and described in the Specifications and Contract Documents, I/we agree to perform for the sum of:
BASE BID:

_____ DOLLARS ($_____)
(In case of discrepancy, written amount shall govern)

ADD ALTERNATE #1: **HVAC additional improvements according to drawings:**

_____ DOLLARS ($_____)
(In case of discrepancy, written amount shall govern)

I/We guarantee that the Work will be Substantially Complete by November 16, 2008, should I/we be the successful bidder, and agree to pay liquidated damages in the amount of **$300.00** per day for each day after expiration of the Contract Time as stated in Article 3 of the Contractor's Agreement.

This bid shall be good for 45 days after bid opening.

Enclosed is a 5% bid bond, as required, in the sum of _____

The undersigned Contractor's License Number for Utah is _____.

Upon receipt of notice of award of this bid, the undersigned agrees to execute the contract within ten (10) days, unless a shorter time is specified in the Contract Documents, and deliver acceptable Performance and Payment bonds in the prescribed form in the amount of 100% of the Contract Sum for faithful performance of the contract.

The Bid Bond attached, in the amount not less than five percent (5%) of the above bid sum, shall become the property of the Division of Facilities Construction and Management as liquidated damages for delay and additional expense caused thereby in the event that the contract is not executed and/or acceptable l00% Performance and Payment bonds are not delivered within the time set forth.

Type of Organization:

_____
(Corporation, Partnership, Individual, etc.)

Any request and information related to Utah Preference Laws:

_____

Respectfully submitted,

_____
Name of Bidder

Address:

_____

_____

_____
Authorized Signature

ADDENDUM NO. 1
Date: June 25th, 2008

PROJECT:

Utah College of Applied Technology
Culinary Arts Classroom and Office Remodel
Roosevelt, Utah
DFCM Project No. 08046250

ARCHITECT:

P+A ARCHITECTS
821 EAST KENSINGTON AVENUE
SALT LAKE CITY, UT 84105

The original Contract Documents issued for the above noted project are amended as noted in this Addendum. It shall be the sole responsibility of the bidder to appropriately disseminate this information to all concerned prior to the assigned bid time and date, and to coordinate the Addendum with the Contract Documents.

This Addendum consists of a total of Twenty Four (24) 8 ½"x11" documents, including this document.

If there are still unresolved questions after examining this addendum, please submit those questions via telephone or facsimile as soon as possible so that an addendum can be issued to clarify those issues in a timely manner.

Architectural:

1. See attached drawing 01. General contractor shall remove additional masonry wall as shown on demo plan 02/AD01 drawing 01. General contractor shall provide new wall type AD01 at locations as shown on drawing 01/AD01 drawing 01.

2. See attached drawing 02. General contractor shall provide wall type 10 as per architectural documents at bubbled exterior wall locations as shown on attached drawing 02.

3. See attached drawing 03. General contractor shall provide wall type AD02 at locations as show on drawing 01/AD03 drawing 03.

4. See attached drawing 04. General contractor shall saw cut and remove existing concrete floor slab and buried electrical raceway as shown on attached drawing 04. General contractor shall provide new concrete flooring in areas where existing floor was removed.

5. See architectural drawing A-CP102. All ceiling heights as noted to be set at 8'-11" shall be set at 8'-6".

6. See attached drawing 05. General contractor shall remove all existing walls around File Server Vault Room 120 and provide new walls as shown on drawing 05.

7. General contractor shall note that the existing concrete floor slab will need to be prepped prior to new carpet installation. The existing concrete flooring has carpet glue and some residual carpet padding that will need to be removed.

8. The general contractor shall remove and refill 18 existing electrical outlets that have been cast in the existing concrete floor slab. Electrical outlet boxes shall be saw cut and removed. General contractor shall fill cut voids with B.A.S.F. "Master Builder" 10-60 fast setting mortar or equal.

9. The general contractor shall include in bid pricing for 100'-0" of large concrete floor slab cracks to be repaired. The general contractor shall be required to remove all loose debris with high-pressure air and clean joint prior to crack filler application. Identified cracks will need to be ground to a minimum width of ¼" prior to crack filling material installation. General contractor shall provide "Sonneborn" Polyurea TF-100 or equal to large crack locations and shall shave top of material smooth after application. Crack filling material to be applied as per manufacturers recommendations.

10. See attached drawing 06. General contractor shall provide floor tile in Waiting 115 as noted on attached drawing 06.

Architectural Specifications:

1. See Specification Section 10801 Toilet and Bath Accessories, Toilet and Bath Accessory Schedules. General contractor shall only be required to provide item #5, grab bars for Women's 105 and Men's 106. Utility Shelf, Item #6 will be required in Storage Room 131. All other toilet and bath accessories will be provided by the college.

Structural:

1. See attached drawing from Vector Engineering. General contractor shall provide steel angles and anchor bolts as shown on drawing in existing masonry wall opening above door 130A.

Mechanical:

1. See attached Mechanical addenda items.

Electrical:

1. See attached Electrical addenda items.

End of Addendum 1

REFERENCE NOTES

1. REMOVE ADDITIONAL 9'-0" HIGH MASONRY WALL IN BUBBLED AREA
2. PROVIDE WALL TYPE AD01 AT THESE LOCATIONS AS SHOWN ON THIS DRAWING IN PLACE OF WALL TYPES AS SHOWN ON DRAWING A-FP100 AT THESE LOCATIONS.

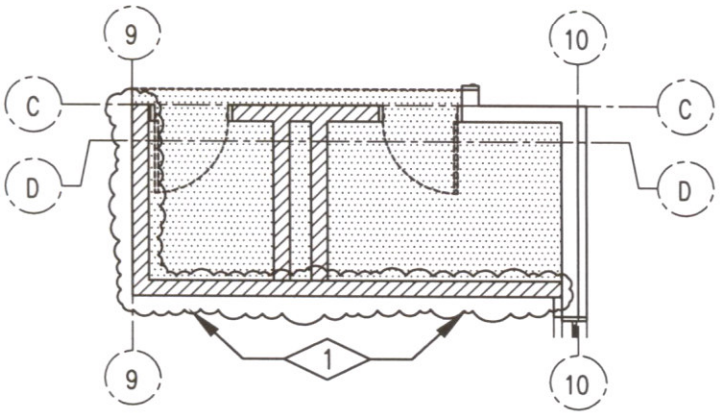

DEMO PLAN

02 / AD01 SCALE 1/8" = 1'-0"

PLAN NORTH

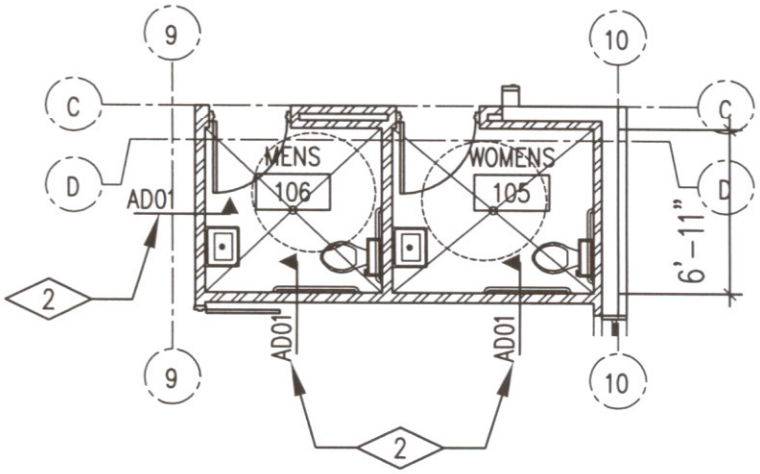

NEW PLAN

01 / AD01 SCALE 1/8" = 1'-0"

PLAN NORTH

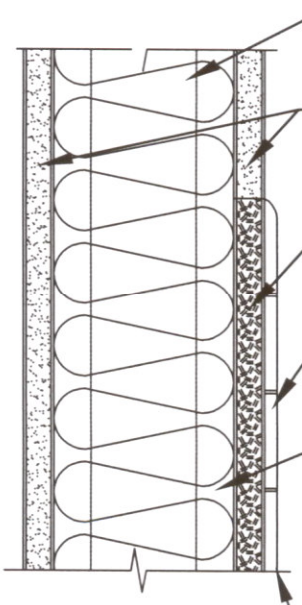

- 3⅝" METAL STUDS @ 16" O.C.. EXTEND METAL STUDS TO DECK ABOVE
- ⅝" TYPE "X" GYPSUM BOARD PRIMED & PAINTED. EXTEND GYP.BD TO DECK ABOVE.
- ⅝" CEMENTIOUS TILE BACKER BOARD FROM FLOOR TO TOP OF TILE WAINSCOT
- TILE WAINSCOT TO 5'-0" A.F.F., OR AS HIGH AS SHOWN ON INTERIOR ELEVATIONS SEE SPEC.
- SOUND BATT INSULATION FROM FLOOR TO TOP OF METAL STUDS
- BASE AS SCHEDULED

AD01

CREATED BY: P+A architects	PROJECT TITLE:	DRAWING TITLE:
P+A architects 821 East Kensington Ave. Salt Lake City, Utah 84105 P: 801.484.1161 F: 801.485.4640 e-mail parchitects@comcast.net	UTAH COLLEGE OF APPLIED TECHNOLOGY CULINARY ARTS CLASSROOM AND ADMINISTRATION OFFICE REMODLE	ADDENDA 01 DRAWING 01

REFERENCE NOTES

1 IN BUBBLED AREAS AS SHOWN, GENERAL CONTRACTOR SHALL PROVIDE WALL TYPE 10 AS PER ARCHITECTURAL DRAWINGS

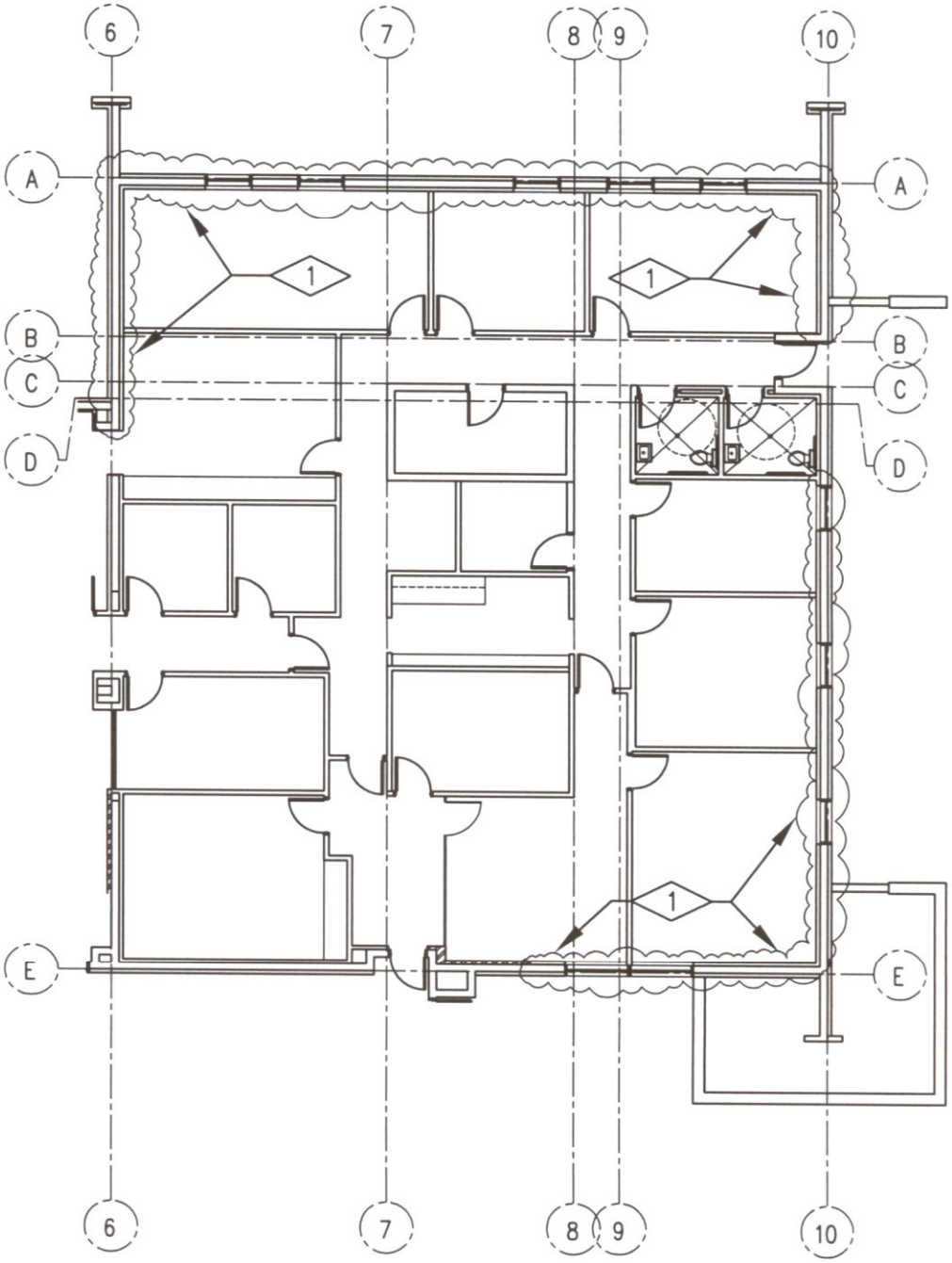

PLAN NORTH

01
AD02

PLAN VIEW

SCALE 1/16" = 1'-0"

CREATED BY: P+A architects

P+A architects
821 East Kensington Ave.
Salt Lake City, Utah 84105
P: 801.484.1161
F: 801.485.4640
e-mail parchitects@comcast.net

PROJECT TITLE:

UTAH COLLEGE OF APPLIED TECHNOLOGY
CULINARY ARTS CLASSROOM AND ADMINISTRATION OFFICE REMODLE

DRAWING TITLE:

ADDENDA 01

DRAWING 02

REFERENCE NOTES

1 PROVIDE WALL TYPE AD02 AS SHOWN ON THIS DRAWING AT LOCATION AS SHOWN ON PLAN VIEW THIS DRAWING.

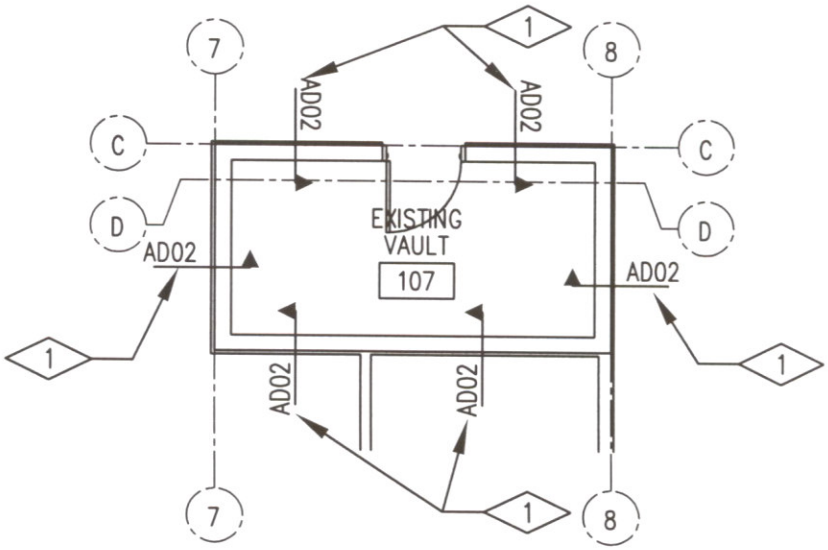

N
PLAN NORTH

01
AD03

PLAN VIEW

SCALE 1/18" = 1'-0"

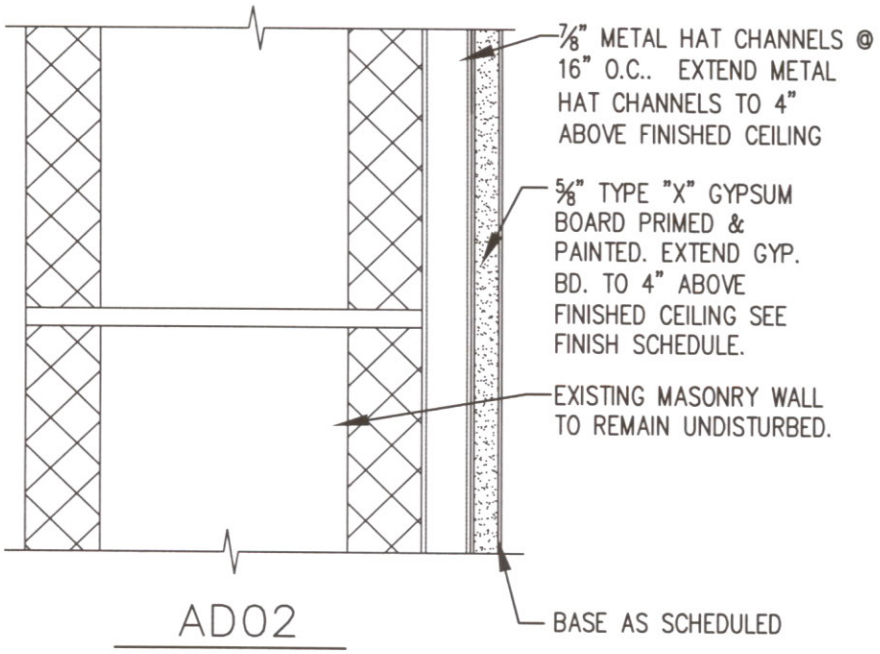

AD02

CREATED BY: P+A architects	PROJECT TITLE:	DRAWING TITLE:
P+A architects 821 East Kensington Ave. Salt Lake City, Utah 84105 P: 801.484.1161 F: 801.485.4640 e-mail parchitects@comcast.net	UTAH COLLEGE OF APPLIED TECHNOLOGY CULINARY ARTS CLASSROOM AND ADMINISTRATION OFFICE REMODLE	ADDENDA 01 DRAWING 03

REFERENCE NOTES

1 IN BUBBLED AREAS AS SHOWN, GENERAL CONTRACTOR SHALL SAW CUT EXISTING CONCRETE FLOOR SLAB AND REMOVE EXISTING CONCRETE FLOORING AND BURIED ELECTRICAL RACEWAY. GENERAL CONTRACTOR SHALL PROVIDE NEW CONCRETE FLOOR SLAB AT REMOVED FLOOR SLAB LOCATIONS.

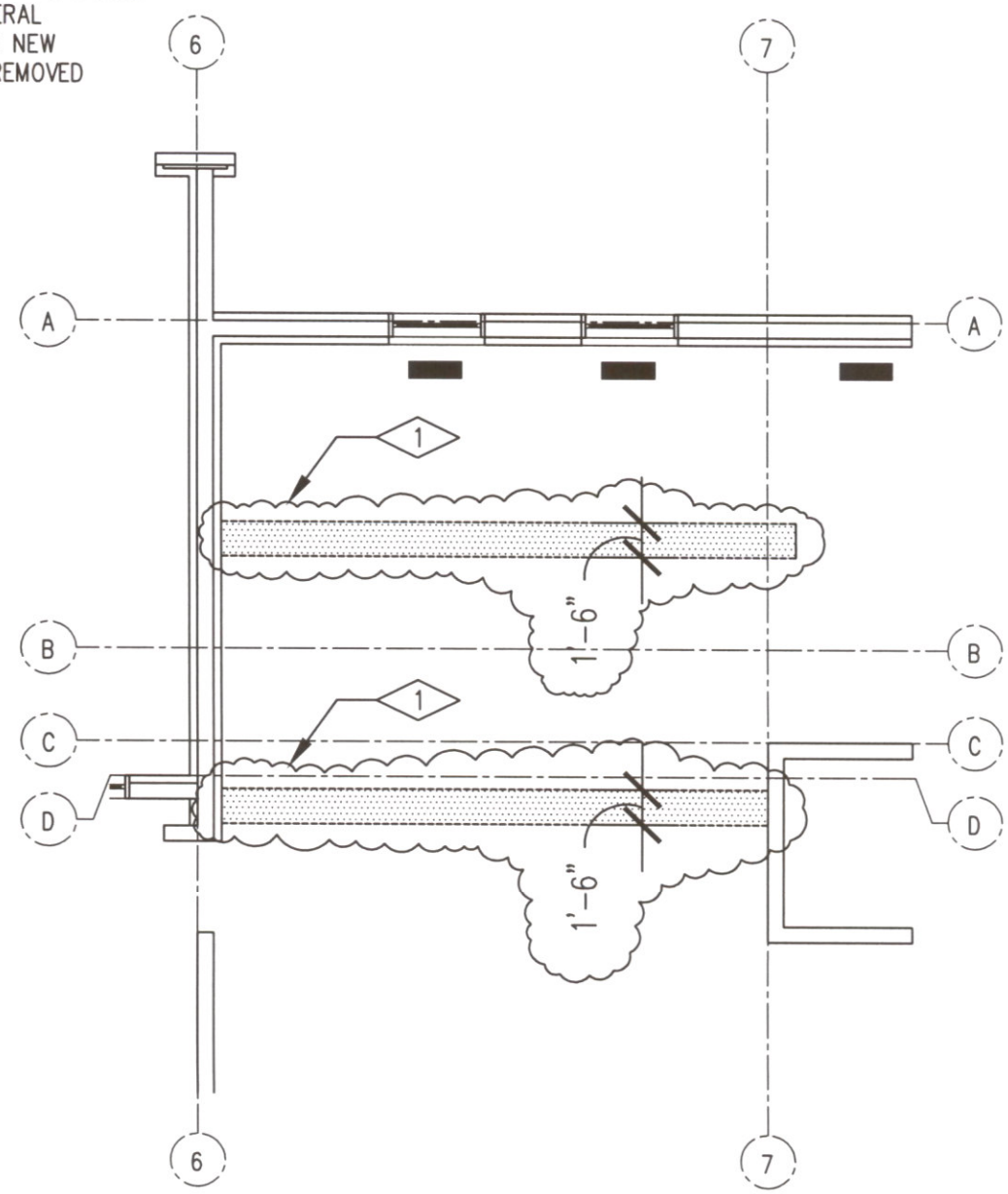

PLAN NORTH

01
AD04

DEMO PLAN VIEW

SCALE 1/8" = 1'-0"

CREATED BY: P+A architects	PROJECT TITLE:	DRAWING TITLE:
P+A architects 821 East Kensington Ave. Salt Lake City, Utah 84105 P: 801.484.1161 F: 801.485.4640 e-mail parchitects@comcast.net	UTAH COLLEGE OF APPLIED TECHNOLOGY CULINARY ARTS CLASSROOM AND ADMINISTRATION OFFICE REMODLE	ADDENDA 01 DRAWING 04

REFERENCE NOTES

1 PORTAFAB MODULAR WALL SYSTEMS OR EQUAL, "PORTAMAX S-SERIES 458 S, VINYL HARDBOARD WITH POLYSTYRENE CORE WALL SYSTEM WITH ALL REQUIRED TOP, BOTTOM AND VERTICAL FRAMING. PORTAFAB WALL TO EXTEND FROM FLOOR TO 18'-0" ABOVE FINISHED FLOOR. PROVIDE REQUIRED TOP OF WALL SUPPORTS FOR LATERAL WALL SUPPORT. SEE WALL TYPES THIS DRAWING FOR ADDITIONAL WALL CONSTRUCTION MATERIALS AND INFORMATION.

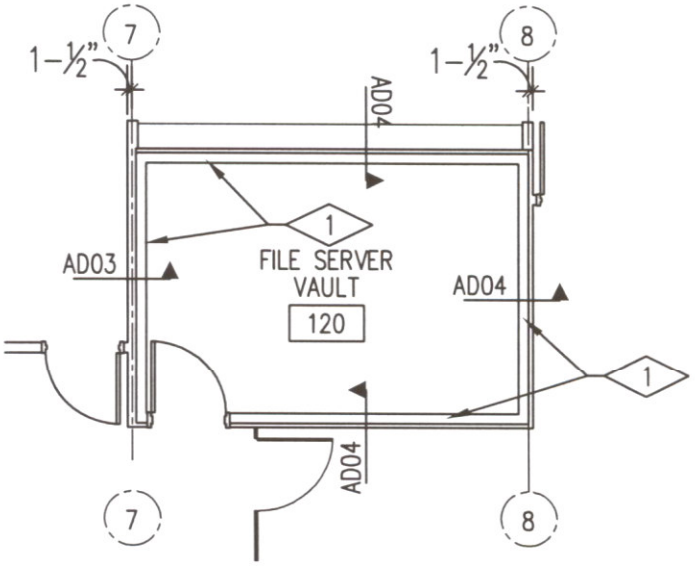

N
PLAN NORTH

01
AD05

PLAN VIEW

SCALE 1/8" = 1'-0"

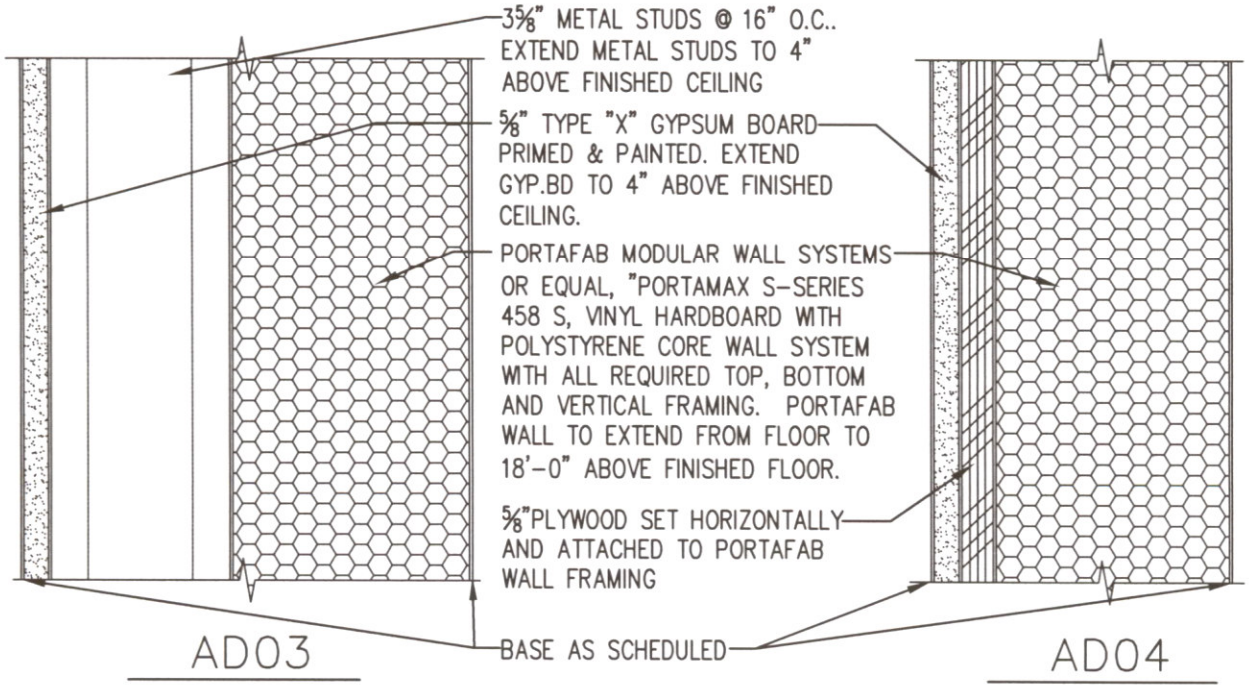

CREATED BY: P+A architects

P+A architects
821 East Kensington Ave.
Salt Lake City, Utah 84105
P: 801.484.1161
F: 801.485.4640
e-mail parchitects@comcast.net

PROJECT TITLE:
UTAH COLLEGE OF APPLIED TECHNOLOGY
CULINARY ARTS CLASSROOM AND ADMINISTRATION OFFICE REMODLE

DRAWING TITLE:
ADDENDA 01
DRAWING 05

REFERENCE NOTES

1. PROVIDE CERAMIC TILE IN WAITING 115 AS PER SPECIFICATION 09310 SECTION 3.10. CARPET NOT TO BE PROVIDED. PROVIDE TRANSITION STRIPS AT FLOORING TRANSITIONS AS PER ARCHITECTURAL DETAIL 03/ADT501.

2. TRANSITION STRIP LOCATIONS AS PER ARCHITECTURAL DETAIL 03/ADT501.

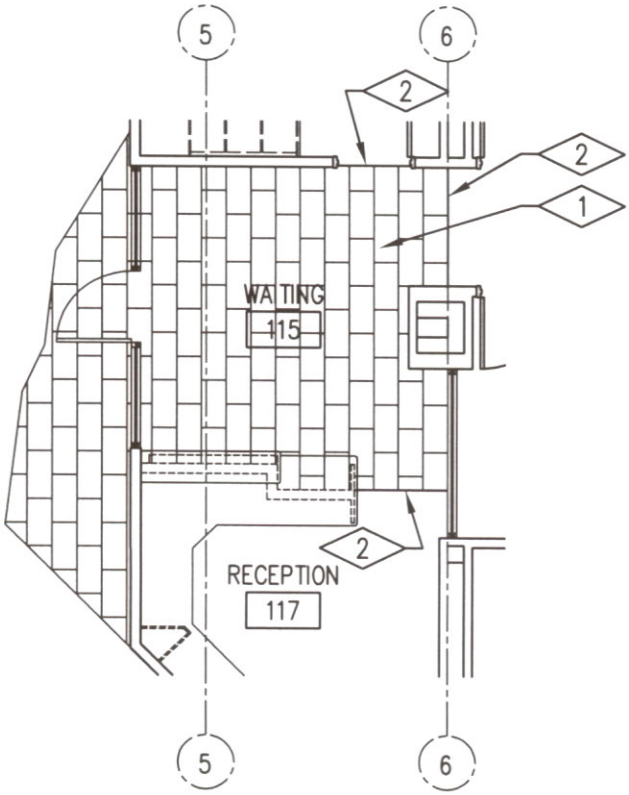

PLAN NORTH

01
AD06

PLAN VIEW

SCALE 1/8" = 1'-0"

CREATED BY: P+A architects	PROJECT TITLE:	DRAWING TITLE:
P+A architects 821 East Kensington Ave. Salt Lake City, Utah 84105 P: 801.484.1161 F: 801.485.4640 e-mail parchitects@comcast.net	UTAH COLLEGE OF APPLIED TECHNOLOGY CULINARY ARTS CLASSROOM AND ADMINISTRATION OFFICE REMODLE	ADDENDA 01 DRAWING 06

VECTOR ENGINEERS

JOB NO. U1044-003-081

DATE 6-25-08

PROJECT CULINARY ARTS REMODEL SHEET ____ OF ____

SUBJECT SK-1 DESIGNED JSP CHECKED RTA

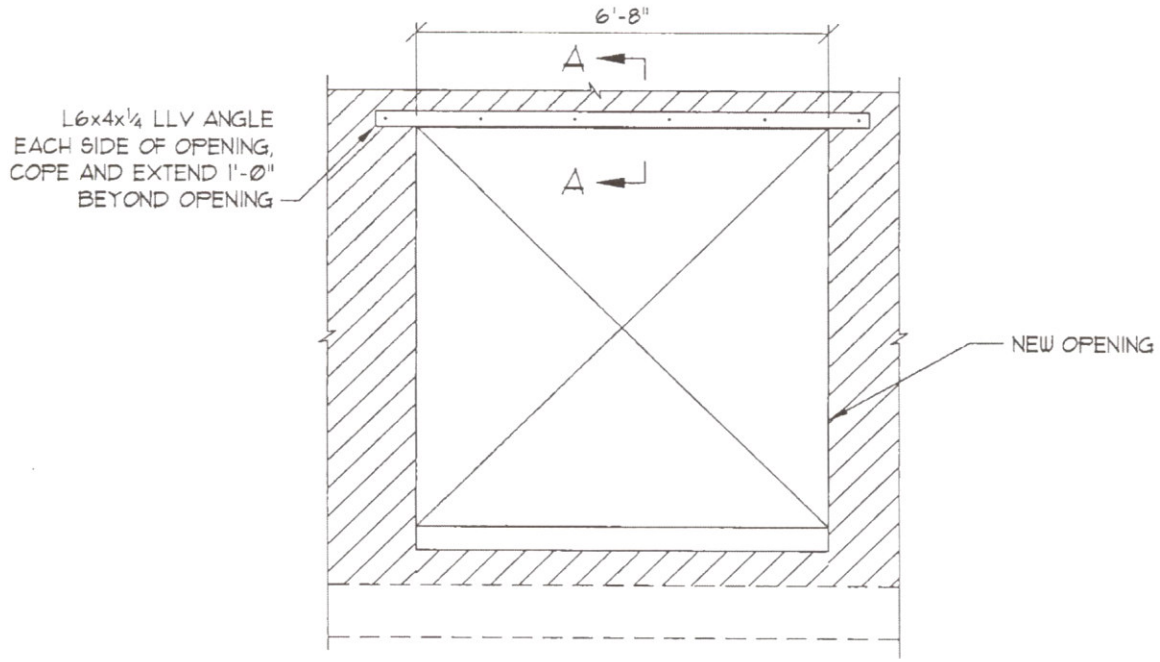

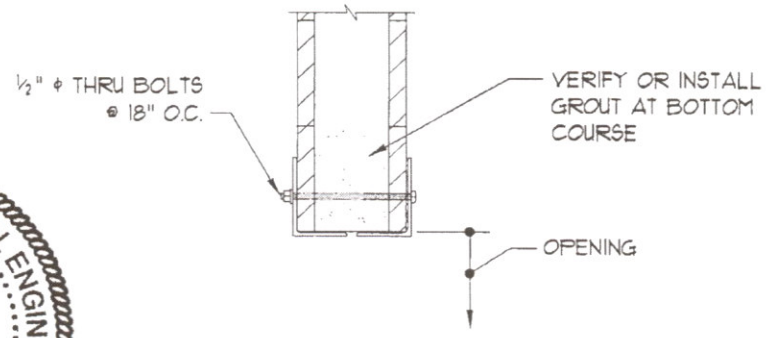

SECTION AA

PROFESSIONAL STRUCTURAL ENGINEER
No. 176983-2203
ROGER T ALWORTH
STATE OF UTAH
JUN 25 2008

9138 S. STATE STREET #101
SANDY, UTAH 84070
(801) 990-1775
(801) 990-1776 FAX

MECHANICAL ADDENDUM

DATE: June 25, 2008

PROJECT NO: 06326

PROJECT: UBATC Culinary Arts Classroom and Administration Office Remodel

DIVISION - 15

DRAWINGS

SHEET - MD-101

1. Extend a return air duct from existing MAU to return air plenum above entrance. Added keyed note 7 shall apply. See attached supplemental drawings SD-01 and SD-02.
2. Remove abandoned heat pump branch piping in administration area. Extend and connect heat pump supply to heat pump return mains to complete the loop. Added keyed note 8 shall apply. See attached supplemental drawings SD-01 and SD-02.

SHEET - M-101

1. Provide and install a new rooftop unit, RTU-5, and associated ductwork, controls, diffusers and return air grilles, etc. Detail A4/M-501 shall apply. See attached supplemental drawing, SD-03.
2. Revise keyed note 1 – "Remove existing split system including indoor and outdoor unit and return to owner."

SHEET - M-601

1. Regarding Rooftop Unit Schedule: Add rooftop unit RTU-5.
   - A. RTU-5 shall be a Carrier model 48HJD-005, 1600 cfm @ 0.8" ext sp, 100 cfm OA, 72.0 MBH heating input (sea level), natural gas heating, 43.36 MBtuh Total Cooling, 32.68 MBtuh Sensible Cooling, 78/62 EAT, 55.2/51.8 DAT, 95 Amb Temp, R-22, 22.5 MCA, 208/3 ph. Schedule notes 1, 2, 3 and 4 (this addendum) apply.
   - B. Add note 4 – "Provide unit mounted disconnect switch." Note 4 applies to all rooftop units.

SHEET - P-101

1. Extend and connect ¾" gas line from existing main gas to new rooftop unit, RTU-5. Keyed note 5 applies. See supplement drawing from M-101 (this addendum) for location of rooftop unit.

PRIOR APPROVALS

The following manufacturers, trade names and products are allowed to bid on a name brand only basis with the provision that they completely satisfy all and every requirement of the drawings, specifications and all addenda shall conform to the design, quality and standards specified, established and required for the complete and satisfactory installation and performance of the building and all its respective parts.

Item	Manufacturer	Comments
Water Closet, WC-1	Crane	Approved
Water Closet Seat, WC-1	Bemis	Approved
Lavatory, L-1	Crane	Approved
Exhaust Fans	Penn Barry	Approved
Exhaust Fans	Twin City	Approved
Ceiling Exhaust Fans	Broan – Nutone	Approved
Registers, Grilles, Diffusers	Carnes	Approved

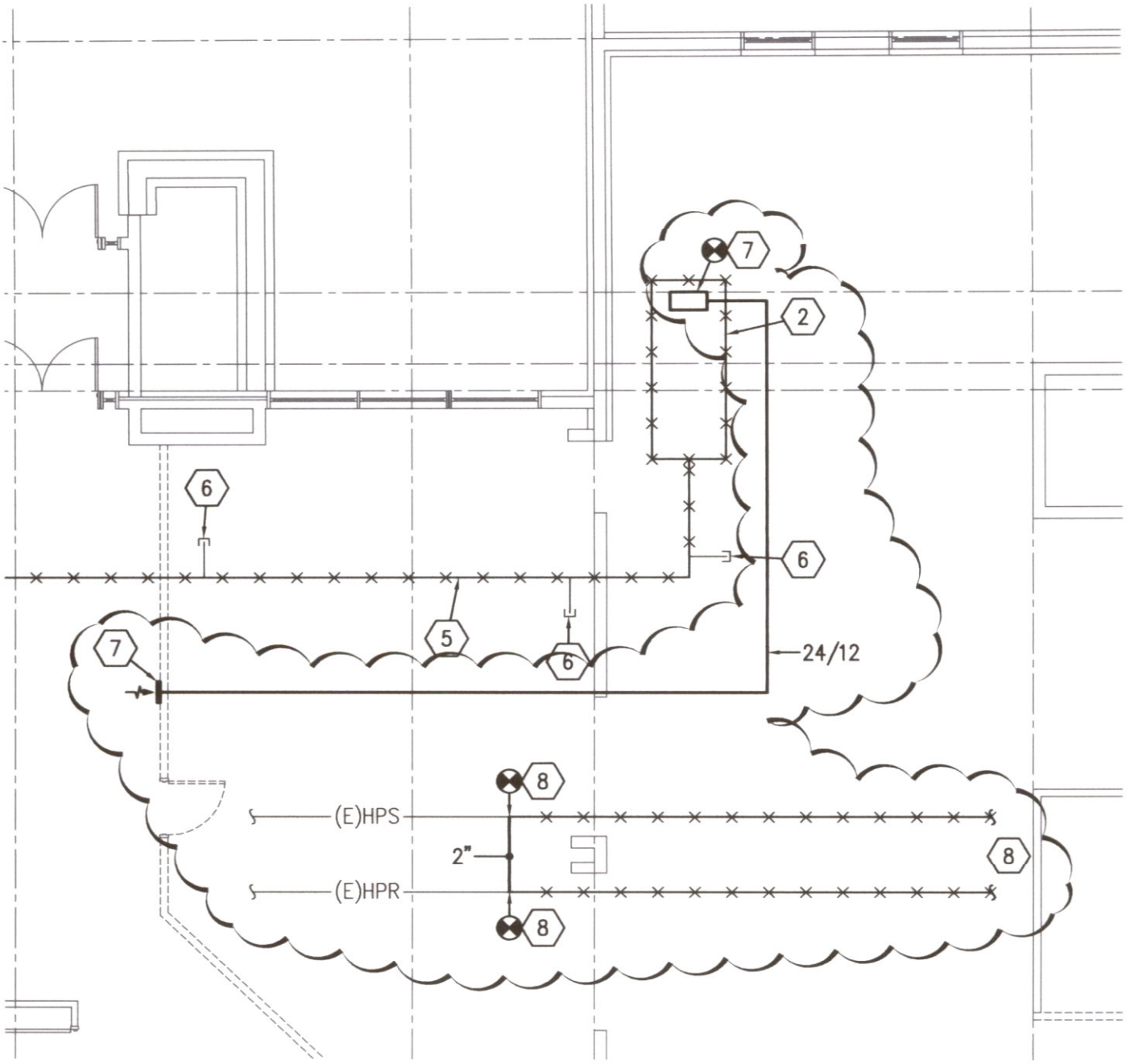

0 4' 8' 16'

MECHANICALDEMOLITION FLOOR PLAN

SCALE 1/8" = 1'-0"

PLAN NORTH

VAN BOERUM & FRANK ASSOCIATES INC.
WWW.VBFA.COM CONSULTING ENGINEERS
Salt Lake City · Logan · St. George · Tempe · Pocatello
330 South 300 East 801.530.3148 T
Salt Lake City, UT 84111 801.530.3150 F

UTAH COLLEGE OF APPLIED TECHNOLOGY
CULINARY ARTS CLASSROOM
& ADMINISTRATION OFFICE REMODEL

VBFA PROJECT #:	0632
CHECKED BY:	Sshepherd
DRAWN BY:	Equiroz
CURRENT/BID DATE:	06/25/08

SHEET CONTENTS

SHEET DESCRIPTION
MECHANICAL
FLOOR PLAN

SD-01
MD-101

⟨#⟩ KEYED NOTES

1. REMOVE EXISTING HEAT PUMP AND ASSOCIATED PIPING AND DUCTWORK. CAP PIPING BACK TO ACTIVE MAIN.
2. REMOVE EXISTING ROOFTOP MAKE-UP AIR UNIT AND ASSOCIATED DUCTWORK, GRILLES, ETC. AS PART OF ALTERNATE NO. 1.
3. EXISTING INDOOR AIR-CONDITIONER AND OUTDOOR CONDENSING UNIT AND ASSOCIATED REFRIGERANT PIPING TO REMAIN. CONTRACTOR TO REMOVE AND INSTALL IN THE SAME LOCATION TO ACCOMMODATE THE NEW WALL.
4. THERMOSTAT TO BE REMOVED AND SAVED FOR REINSTALLATION.
5. EXISTING DUCTWORK TO BE REMOVED AS PART OF ALTERNATE NO. 1.
6. CAP AND SEAL AT MAIN DUCT (BASE BID).
7. EXTEND AND CONNECT NEW DUCT FROM ROOFTOP UNIT RETURN AIR CONNECTION TO OPEN PLENUM SPACE ABOVE ENTRANCE (BASE BID). DO NOT DO WORK AS PART OF ALTERNATE.
8. REMOVE ALL ABANDONED HEAT PUMP LOOP PIPING IN ADMINISTRATION AREA. EXTEND AND CONNECT SUPPLY MAIN TO RETURN MAIN TO COMPLETE PIPING LOOP.

VAN BOERUM & FRANK ASSOCIATES INC.
WWW.VBFA.COM CONSULTING ENGINEERS
Salt Lake City · Logan · St. George · Tempe · Pocatello
330 South 300 East 801.530.3148 T
Salt Lake City, UT 84111 801.530.3150 F

UTAH COLLEGE OF APPLIED TECHNOLOGY
CULINARY ARTS CLASSROOM
& ADMINISTRATION OFFICE REMODEL

VBFA PROJECT #:	06326
CHECKED BY:	Sahagchard
DRAWN BY:	Ejalmaz
CURRENT/BID DATE:	06/25/08

SHEET CONTENTS

SHEET DESCRIPTION
MECHANICAL
KEYED NOTES

SD-02
MD-101

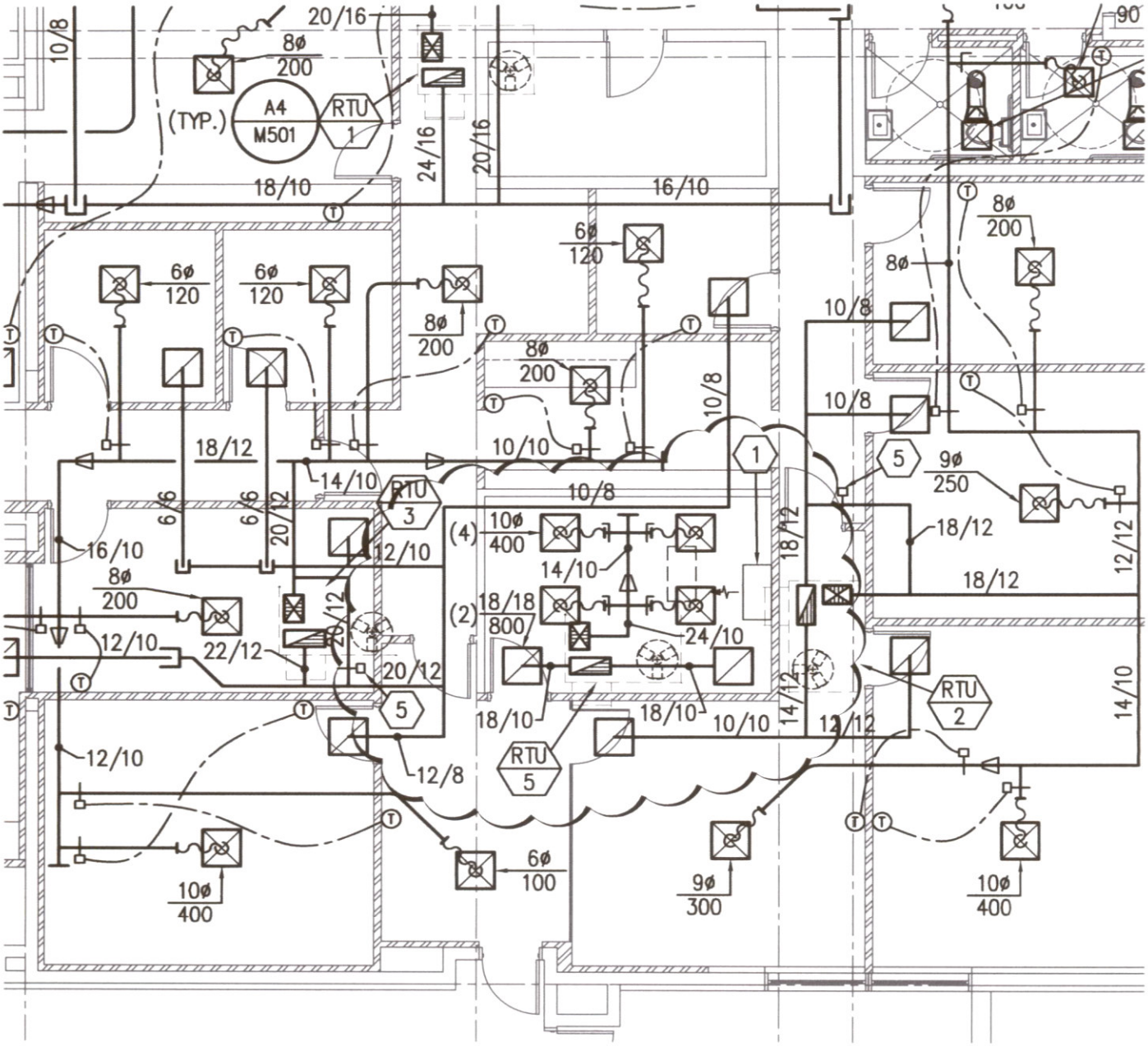

MECHANICAL FLOOR PLAN

SCALE 1/8" = 1'-0"

PLAN NORTH

VAN BOERUM & FRANK ASSOCIATES INC.
WWW.VBFA.COM CONSULTING ENGINEERS
Salt Lake City · Logan · St. George · Tempe · Pocatello
330 South 300 East 801.530.3148 T
Salt Lake City, UT 84111 801.530.3150 F

UTAH COLLEGE OF APPLIED TECHNOLOGY
CULINARY ARTS CLASSROOM
& ADMINISTRATION OFFICE REMODEL

VBFA PROJECT #: 06326
CHECKED BY: Sahechord
DRAWN BY: Ejalanz
CURRENT BID DATE: 09/25/08
SHEET CONTENTS

SHEET DESCRIPTION
MECHANICAL
FLOOR PLAN

SD-03
M-101

MECHANICAL ADDENDUM

DATE: June 26, 2008

PROJECT NO: 06326

PROJECT: UBATC Culinary Arts Classroom and Administration Office Remodel

DIVISION - 15

DRAWINGS

SHEET - M-601

1. Regarding Fan Schedule: Add notes 1, 2 and A. All notes apply to all fans.
   - A. Note 1 – "ALL CAPACITIES AT 5100 FT. ELEVATION."
   - B. Note 2 – "CEILING MOUNTED INLINE EXHAUST FAN PROVIDE GRAVITY BACKDRAFT DAMPER, INTERGRAL THERMAL OVERLOAD PROTECTION AND DISCONNECT"
   - C. Note A – "CONTROL: ON-OFF WALL SWITCH BY DIV. 16"

SPECIFICATIONS

SECTION - 15975 CONTROL SYSTEMS EQUIPMENT

1. Add the following paragraphs – Sequence of Operation
   - A. Rooftop Units, RTU-1, 2, 3.
     1) Rooftop VVT fan systems consists of a supply fan, gas fired heating, DX cooling, a bypass damper, filters & outdoor air return air, and relief air dampers.
     2) The supply fan shall be started from a local DDC controller. Fan operation shall be sensed by the DDC system.
     3) Fan system operation shall be subject to freezestat, building fire alarm, supply duct high static pressure, building optimal start-stop programs, and other conditions or logic pre-programmed into the DDC controllers.
     4) OCCUPIED mode: When the VVT terminals served by the air handler are in heating mode, the air handler shall switch to heating mode and shall stage the gas heat to maintain the lowest VVT terminal setpoint. When the VVT terminals served by the air handler are in cooling mode, the air handler shall switch to cooling mode and shall modulate the outside air and return air dampers and stage the DX units as required to maintain the highest VVT terminal setpoint.
     5) A duct static pressure sensor shall be provided and connected to the DDC system. The DDC controller shall modulate the air handler bypass damper via a PID control loop to maintain the air handler duct static setpoint.
     6) A supply air temperature sensor and an outdoor air temperature sensor shall be provided and connected to the DDC controller.
     7) UNOCCUPIED mode: The lowest space temperature sensor served by the air handler, acting through a DDC controller, shall cycle the supply fan to maintain desired minimum space temperature. The outdoor air dampers shall remain closed and the air handler shall operate under the warm-up mode sequence.
   - B. Rooftop Units, RTU-4, 5.
     1) Rooftop fan systems consists of a supply fan, gas fired heating, DX cooling, filters & outdoor air return air, and relief air dampers.
     2) The supply fan shall be started from a local DDC controller. Fan operation shall be sensed by the DDC system.

3) Fan system operation shall be subject to freezestat, building fire alarm, supply duct high static pressure, building optimal start-stop programs, and other conditions or logic pre-programmed into the DDC controllers.
4) OCCUPIED mode: Fan shall run continuously, stage heating and cooling as required.
5) A supply air temperature sensor and an outdoor air temperature sensor shall be provided and connected to the DDC controller.
6) UNOCCUPIED mode: Cycle fan to maintain unoccupied temperatures.
7) RTU-4 only: Provide (3) thermostats consisting of a master and two auxillary sensors. All sensors shall have a 3-hour override and capability to control rooftop unit heating and cooling.

ENVISION
ENGINEERING
Direction. Then Velocity.

ADDENDUM

Addendum

To:	Scott Prior, AIA	From:	Ryan Van Voast
Company:	Prior and Associates Architects	Date:	June 25, 2008
Phone:	800.484.1161	Address:	
Project:	**Uinta Basin ATC Admin area remodel**		Roosevelt, Utah

Envision Engineering, PC, is transmitting the following for your use and review:

Copies/Sets	Addendum Number & Description
1	Electrical addendum 1

Please issue these electrical Items. Should you have questions, please feel free to contact our office directly at the number below.

Thank you.

The following is a description of Electrical Addendum changes to the electrical construction documents for the Uinta Basin ATC administration area remodel:

PRIOR APPROVALS

The following items, trade names, products, and manufactures are approved for bidding. Approval does not relieve the bidder from satisfying the intent of the requirements of the drawings, specifications and addenda in every respect. Failure to conform to the design quality and standards specified, established and required may result in later disapproval. If equipment must be disapproved after bidding, Contractor shall supply specified equipment at no extra cost to the owner.

Items are listed generally and specific model number, etc., shall be as submitted. Items submitted but not approved either did not satisfy the requirements, showed insufficient data or arrived after the deadline established for submittals.

TYPE	MANUFACTURER	SERIES
DF	GOTHAM	AFV
	OMEGA	S632PLT
		SPEX
	PRESCOLITE	CFT6
	PORTFOLIO	C6042E
DF1	PRESCOLITE	D4
	ATLANTIC	AT45132E1
DF2	GOTHAM	AFV
	HE WILLIAMS	PV60
	PRESCOLITE	CFT6
	PORTFOLIO	C6042E
DFD	GOTHAM	AFV
	HE WILLIAMS	PV60
	PRESCOLITE	CFT6 WW
	PORTFOLIO	C60421D32
GA3	COLUMBIA	4PS
	METALUX	2GC8
GP2	LITHONIA	2PM3
	HE WILLIAMS	U3G
	COLUMBIA	P4D22
	METALUX	2EP3GX

GP2E	LITHONIA HE WILLIAMS COLUMBIA METALUX	2PM3 U3G P4D22 2EP3GX
GP3	LITHONIA METALUX COLUMBIA LIGHTOLIER HEWILLIAMS	2PM3 2EP3GX P4D24 DPS2G18 HE3G D24
GP3E	LITHONIA METALUX COLUMBIA LIGHTOLIER HE WILLIAMS	2PM3 2EP3GX P42D4 DPS2G18 HE3G D24
PF4	LEDALITE CORELITE	950-CENTRIS AB-WB-2T8
PF4E	LEDALITE CORELITE	950-CENTRIS AB-WB-2T8
PF8	LEDALITE CORELITE	950-CENTRIS AB-WB-2T8
TH	TECH LIGHTING WAK TECH LIGHTING WAC	700 OMT4 JTK-HID303 TT JT
WB4	METALUX COLUMBIA	BIU WAL4
X1	LITHONIA SURELITE DUAL LITE LIGHTOLIER EXITRONIX	LQM LPX CV3 LLNUGW GVEX

Notes:

1. Decorative trim for fixture type DF2 shall be selected by architect.

ELECTRICAL DRAWINGS

ESD-01

1. This Electrical supplemental drawing has callouts shown for the track elevation mounting details.

ESD-02

1. This Electrical supplemental drawing shows the new location of the RTU-5 with the associated circuiting.

ESD-03

1. This Electrical supplemental drawing shows a new keyed note 3 for clarification.

ESD-04

1. This Electrical supplemental drawing shows the equipment call out for the new RTU-5

ESD-05

1. This Electrical supplemental drawing shows the circuiting information for the RTU-5.

End of Addendum

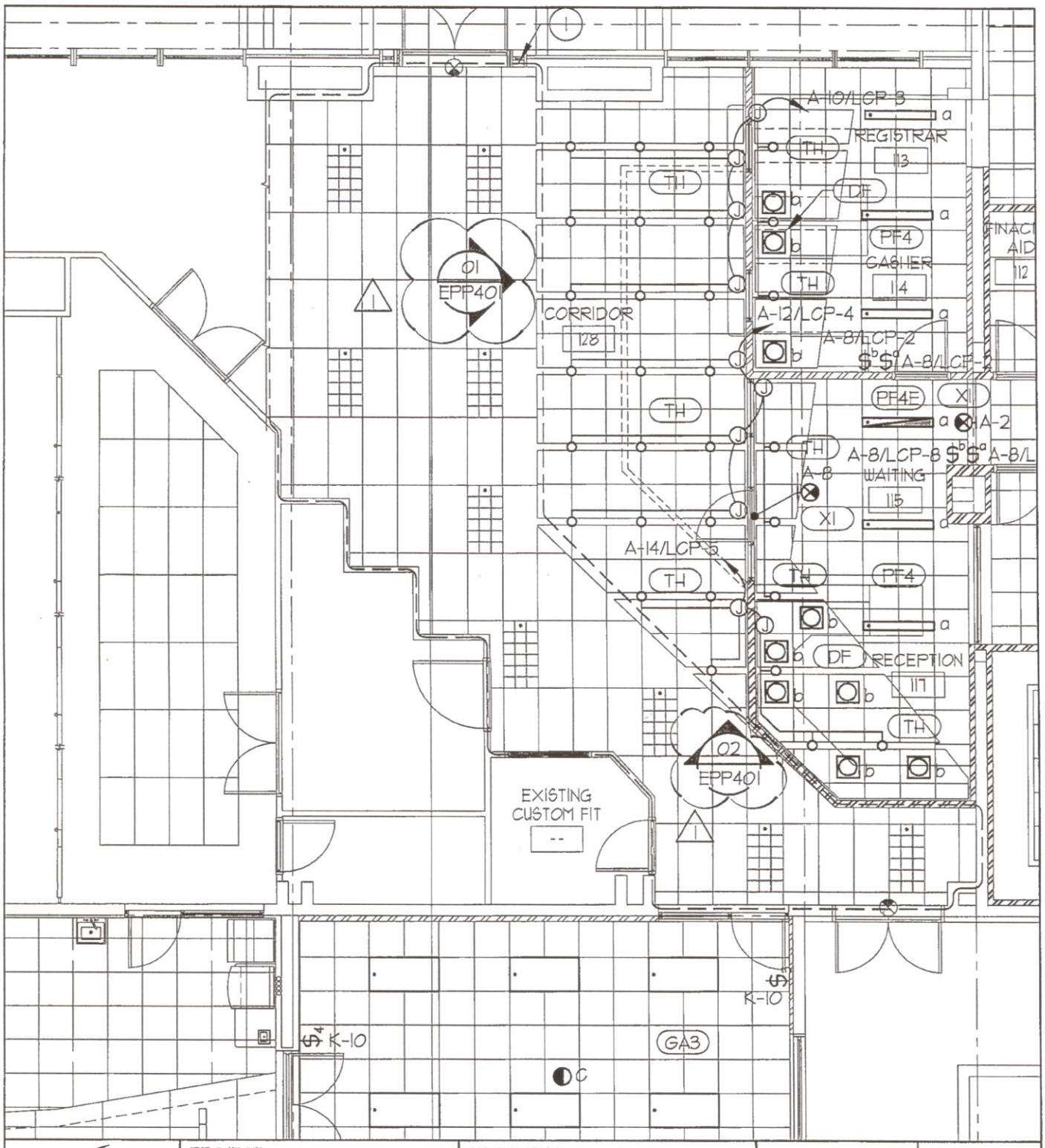

ENVISION ENGINEERING Direction. Then Velocity. 244 West 300 North, Suite 100 Salt Lake City, Utah 84103 801.534.1130 ph 801.534.1080 fax	PROJECT: UTAH COLLEGE OF APPLIED TECHNOLOGY	SHEET TITLE: LIGHTING PLAN	DATE: 06/25/08	ADDENDUM 1
			BY: BRT	
	ORIGINAL SHEET NO: E-LP101		SCALE: 1/8"=1'-0"	SHEET:
			JOB NO: 08-054	ESD-01

.2008-054.00 - Uinta Basin ATC Admin Offices Remodel Roosevelt, UT\Elec\E-LP101 6-25-08 ADD 1.dwg, 6/25/2008 3:00:17 PM,
odson, Envision Engineering, P.C.

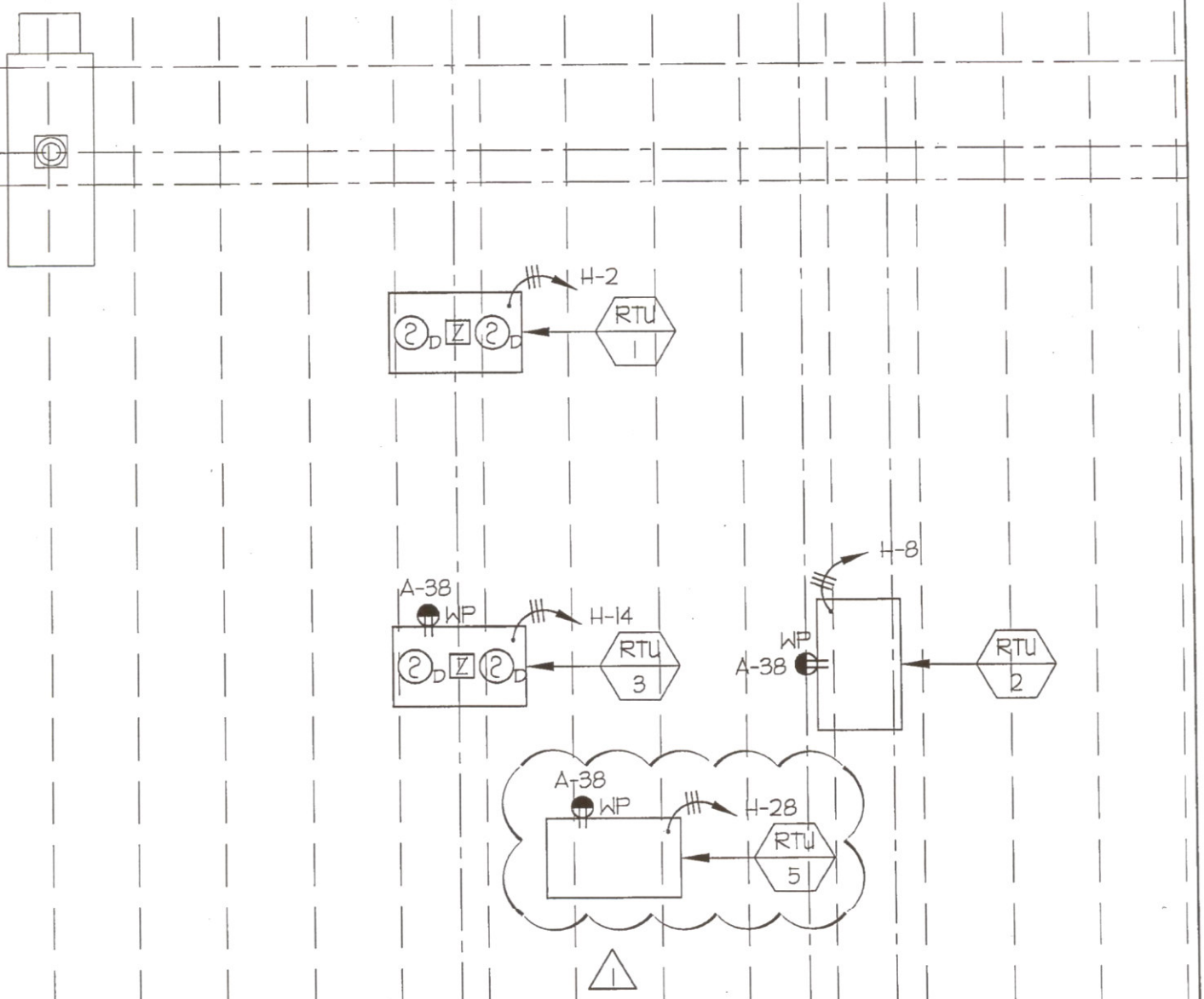

ENVISION
ENGINEERING
Direction. Then Velocity.
244 West 300 North, Suite 100
Salt Lake City, Utah 84103
801.534.1130 ph 801.534.1060 fax

PROJECT:
UTAH COLLEGE OF APPLIED TECHNOLOGY

ORIGINAL SHEET NO:
E-PP102

SHEET TITLE:
ROOF POWER PLAN

DATE: 06/25/08
BY: BRT
SCALE: 1/8"=1'-0"
JOB NO: 08-054

ADDENDUM 1

SHEET:
ESD-02

KEYED NOTES:

1. SECURE UNISTRUT AND TRACK TO WALL IN THIS LOCATION.
2. TRACK HEAD IS TO BE MOUNTED SUCH THAT THE BOTTOM OF THE FIXTURE IS FLUSH WITH THE BOTTOM OF THE PANEL.
3. THE TRACK IS TO BE MOUNTED SUCH THAT IT IS NOT VISIBLE FROM BELOW IN ALL LOCATIONS.

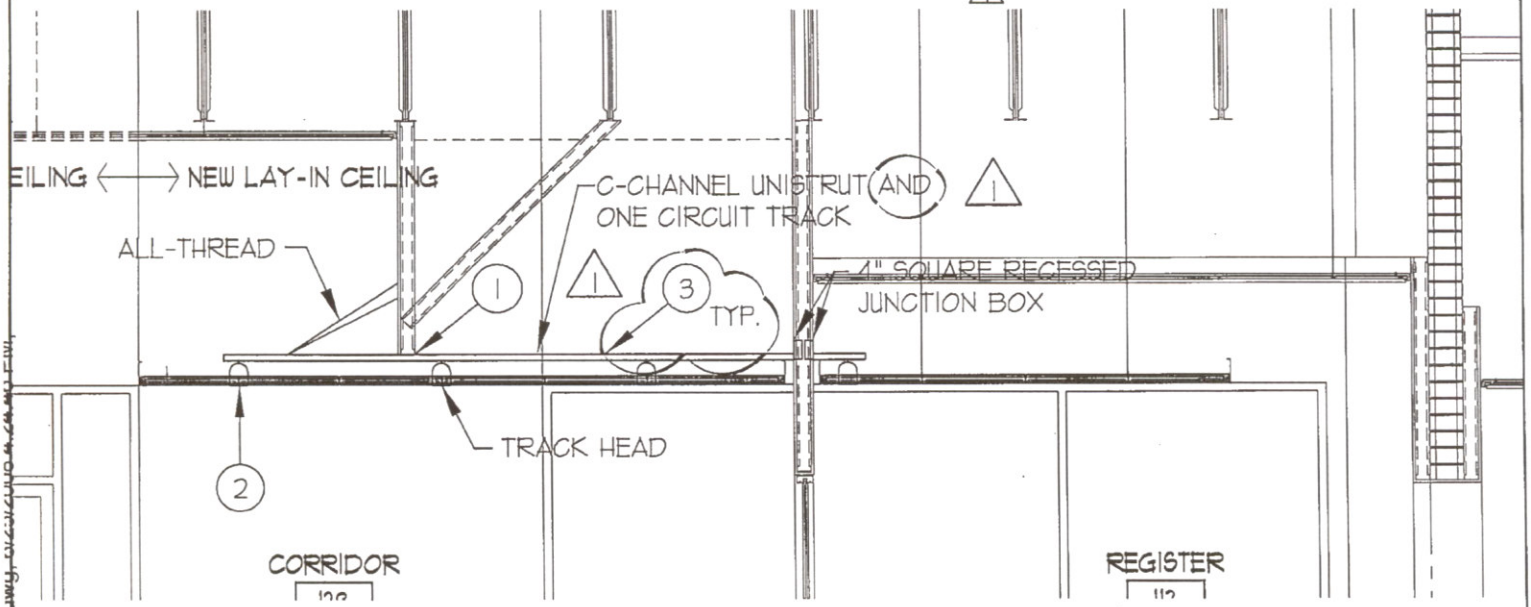

ELECTRICAL SECTION

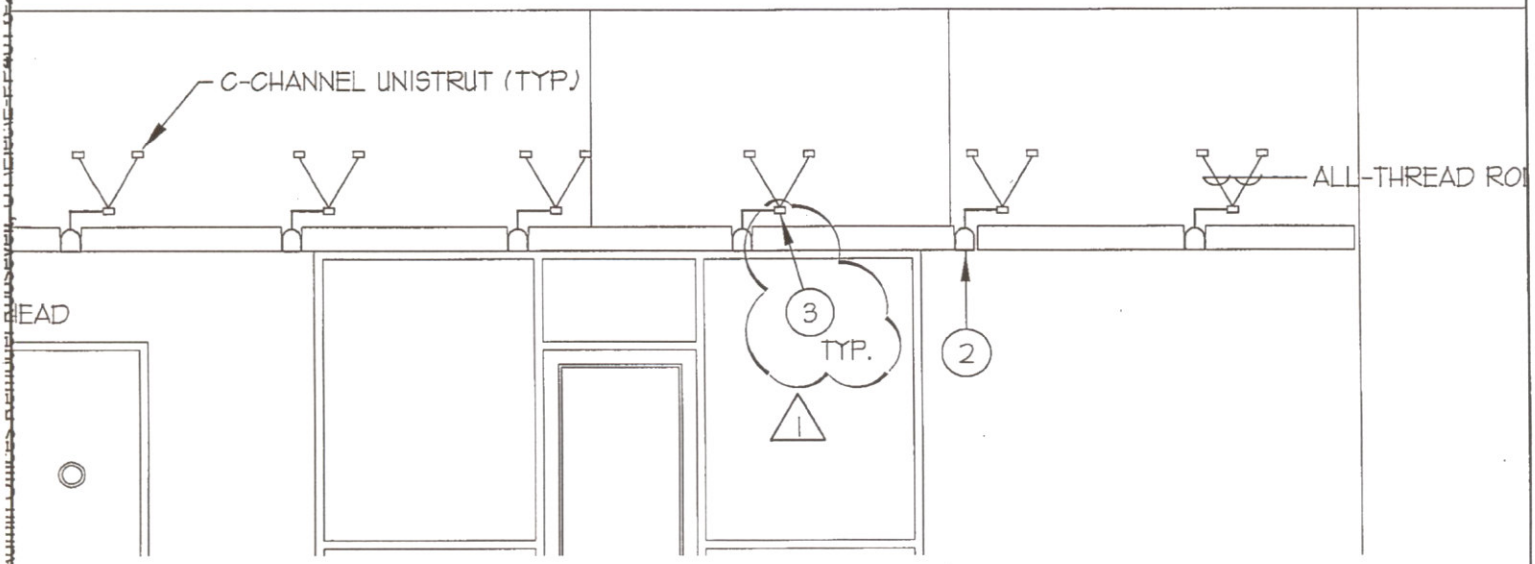

ELEVATION CORRIDOR 128

ENVISION ENGINEERING
Direction. Then Velocity.
244 West 300 North, Suite 100
Salt Lake City, Utah 84103
801.534.1130 ph 801.534.1080 fax

PROJECT: UTAH COLLEGE OF APPLIED TECHNOLOGY	SHEET TITLE: ELECTRICAL SECTION & ELEVATION CORRIDOR	DATE: 06/25/08	ADDENDUM 1
		BY: BRT	
ORIGINAL SHEET NO: E-PP401		SCALE: 1/8"=1'-0"	SHEET: ESD-03
		JOB NO: 08-054	

MECHANICAL EQUIPMENT SCHEDULE

UNIT NAME	DESCRIPTION	LOAD	TYPE	VOLTAGE	PHASE	AMPERAGE	CONDUIT SIZE	WIRES		STARTER / DISCONNECT/ CONNECTION AT UNIT					
												MCP /FUSE		DISCONNECT	
								NO.	SIZE	NOTE	STARTER SIZE	SIZE	POLES	SIZE	POLES
EF-1	EXHAUST FAN	1/8	HP	120	1	4	3/4"	2	12	1A	-	-	-	1 HP	1
EF-2	EXHAUST FAN	1/8	HP	120	1	4	3/4"	2	12	1A	-	-	-	1 HP	1
RTU-1	ROOF TOP UNIT	29	MCA	208	3	29	3/4"	3	8	4B & 10B	-	-	-	-	-
RTU-2	ROOF TOP UNIT	18.5	MCA	208	3	18.5	3/4"	3	12	4B & 10B	-	-	-	-	-
RTU-3	ROOF TOP UNIT	29	MCA	208	3	28.9	3/4"	3	8	4B & 10B	-	-	-	-	-
RTU-4	ROOF TOP UNIT	38.2	MCA	208	3	38.2	3/4"	3	8	4B & 10B	-	-	-	-	-
RTU-5	ROOF TOP UNIT	22.5	MCA	208	3	22.5	3/4"	3	10	4B & 10B	-	-	-	-	-
WH-1	WATER HEATER	9.5	KW	208	1	14.6	3/4"	2	12	14A	-	-	-	-	-
WH-2	WATER HEATER	9.5	KW	208	1	14.6	3/4"	2	12	14A	-	-	-	-	-

SIZE ALL FUSES IN ACCORDANCE WITH MANUFACTURER'S RECOMMENDATIONS.

STARTER / DISCONNECT NOTES:

1. MANUAL STARTER WITH THERMAL OVERLOAD
2. MANUAL STARTER WITH THERMAL OVERLOAD PROTECTION & LOW VOLTAGE RELAY / CONTACTOR FOR ATC CONTROL
3. COMBINATION MAGNETIC STARTER / FUSED DISCONNECT
4. COMBINATION MAGNETIC STARTER / MOTOR CIRCUIT PROTECTOR (MCP)
5. COMBINATION VARIABLE FREQUENCY DRIVE / MOTOR CIRCUIT PROTECTOR (MCP)
6. REDUCED VOLTAGE STARTER
7. COMBINATION TWO-SPEED STARTER / FUSED DISCONNECT
8. COMBINATION TWO-SPEED STARTER / MOTOR CIRCUIT PROTECTOR (MCP)
9. NON-FUSED DISCONNECT SWITCH
10. FUSED DISCONNECT SWITCH
11. BREAKER AND ENCLOSURE
12. DIRECT CONNECTION
13. DUPLEX RECEPTACLE OUTLET
14. SPECIAL PURPOSE OUTLET
15. SHUNT-TRIP BREAKER AND ENCLOSURE
16. TOGGLE SWITCH
17. FUSED DISCONNECT SWITCH WITH LATE MAKE/EARLY BREAK CONTACT

INSTALLATION NOTES:

A. FURNISHED, INSTALLED, & CONNECTED UNDE
B. FURNISHED & INSTALLED UNDER ANOTHER D REQUIRING CONNECTIONS UNDER DIVISION
C. FURNISHED UNDER ANOTHER DIVISION BUT AND CONNECTED UNDER DIVISION 16.
D. FURNISHED, INSTALLED, & CONNECTED UNDE
E. FURNISHED BY OWNER, INSTALLED & CONNE

ENVISION ENGINEERING
Direction. Then Velocity.
244 West 300 North, Suite 100
Salt Lake City, Utah 84103
801.534.1130 ph 801.534.1080 fax

PROJECT: UTAH COLLEGE OF APPLIED TECHNOLOGY

ORIGINAL SHEET NO: E-PP601

SHEET TITLE: EQUIPMENT SCHEDULE

DATE: 06/25/08 — ADDENDUM 1

BY: BRT

SCALE: 1/8"=1'-0"

JOB NO: 08-054

SHEET: ESD-04

LIGHTING AND APPLIANCE PANELBOARD SCHEDULE

PANEL NAME: H TYPE: (EXISTING) NQOD CIRCUIT BREAKERS: [X] BOLT ON [ ] PLUG ON 120 / 208 VOLTAGE 3 PH 4 W

[X] ENGRAVED NAME TAGS BUS MATERIAL: [ ] ALUM BUS [ ] CU BUS GROUND: [ ] GROUND BUS [ ] ISOL GND BUS NEUTRAL: [ ] 100% [ ] 200% LUGS: [ ] MAIN [ ] SUB-FEED [ ] FEED-THROUGH MAIN BREAKER: [ ] AMPS ____ BUS AMPS: ____

BRANCH BREAKERS

NOTES	ITEM	AMP	POLE	WIRE SIZE	CIR. NO.	LEFT PHASE LOAD A	LEFT PHASE LOAD B	LEFT PHASE LOAD C	RIGHT PHASE LOAD A	RIGHT PHASE LOAD B	RIGHT PHASE LOAD C	CIR. NO.	AMP	POLE	WIRE SIZE	ITEM	NOTES
9	BASE BOARD HEATER A-6				1				3480			2	50	3	8	RTU-1	8
9	BASE BOARD HEATER A-6				3					3480		4	-	-	-	-	-
					5						3480	6	-	-	-	-	-
9	HEAT PUMP				7				2220			8	25	3	12	RTU-2	8
					9					2220		10	-	-	-	-	-
9	SPARE				11						2220	12	-	-	-	-	-
9	PLUGS HALL				13				3480			14	50	3	8	RTU-3	8
9	LIGHT A-2				15					3480		16	-	-	-	-	-
9	PLUG HOLD A-2				17						3480	18	-	-	-	-	-
					19				1150			20	25	2	12	WH-1	8
					21					1150		22	-	-	-	-	-
					23						1150	24	25	2	12	WH-2	8
9	HEAT PUMP ( )				25				1150			26	-	-	-	-	-
9	HEAT PUMP (BOARD RM)				27					2700		28				RTU-5	8
9	HEAT PUMP ( )				29						2700	30	90	3	10	-	-
8	SPARE				31				2700			32	-	-	-	-	-
8	SPARE				33							34	-	-	-	-	-
8	SPARE				35							36				SPARE	8
8	SPARE				37							38				SPARE	8
8	SPARE				39							40				SPARE	8
8	SPARE				41							42				SPARE	8
						0	0	0	15380	13630	13630						
						128	114	114	TOTAL AMPS / PHASE								

FRONT: [X] STANDARD [ ] HINGED [ ] DOOR-IN-DOOR

MOUNTING: [ ] FLUSH [ ] SURFACE [ ] SURFACE W/ SKIRT ABOVE [ ] SURFACE W/ SKIRT BELOW

TVSS: [X] NONE [ ] CATEGORY "C" [ ] CATEGORY "B" [ ] CATEGORY "A"

NEMA RATING: [X] NEMA 1 [ ] NEMA 3R [ ] NEMA 4X [ ] NEMA 12 [ ] STAINLESS STEEL

TOTAL CONNECTED LOAD: 42,640

SHORT CIRCUIT RATING: [ ] SERIES - RATED [ ] FULLY - RATED

____ AMPS RMS SYM

REFER TO ONE-LINE DIAGRAM FOR FEEDER, CONDUIT AND CONDUCTOR SIZES

ng, P.C.

ENVISION ENGINEERING
Direction. Then Velocity.
244 West 300 North, Suite 100
Salt Lake City, Utah 84103
801.534.1130 ph 801.534.1080 fax

PROJECT: UTAH COLLEGE OF APPLIED TECHNOLOGY

ORIGINAL SHEET NO: E-PP801

SHEET TITLE: PANEL BOARD SCHEDULES

DATE: 06/25/08 | ADDENDUM 1

BY: BRT

SCALE: 1/8"=1'-0"

JOB NO: 08-054

SHEET: ESD-05