State of Utah

JON M. HUNTSMAN, JR.
Governor

GARY R. HERBERT
Lieutenant Governor

Department of Administrative Services
KIMBERLY K. HOOD
Executive Director

Division of Facilities Construction and Management
DAVID G. BUXTON
Director

ADDENDUM #1

Date:	July 16, 2008
To:	Contractors
From:	Tim Parkinson, Project Manager, DFCM
Reference:	Chiller Replacement Ogden Weber ATC – Metals Bldg. – Ogden, Utah DFCM Project No. 08049240
Subject:	**Addendum No. 1**

Pages	Addendum	1	page
	Engineers Addendum	6	pages
	Total	7	pages

Note: This Addendum shall be included as part of the Contract Documents. Items in this Addendum apply to all drawings and specification sections whether referenced or not involving the portion of the work added, deleted, modified, or otherwise addressed in the Addendum. Acknowledge receipt of this Addendum in the space provided on the Bid Form. Failure to do so may subject the Bidder to Disqualification.

While we contend that SB220 should only be potentially applicable to a contract issued after the effective date of said bill, this is to clarify that for purposes of this contract, regardless of the execution or effective dates of this contract, the status of Utah Law and remedies available to the State of Utah and DFCM, as it relates to any matter referred to or affected by said SB220, shall be the Utah law in effect at the time of the issuance of this Addendum.

1.1 **SCHEDULE CHANGES – There are no changes to the project schedule.**

1.2 **GENERAL ITEMS** – ICP Consulting Engineers – Please review attached addendum.

Utah!
Where ideas connect

Intermountain Consumer Professional Engineers, Inc.

Consulting Engineers
1145 East South Union Avenue
Midvale, Utah 84047
Office: (801) 255-1111 · Fax: (801) 566-0088 · E-mail: icpe@icpeinc.com

ADDENDUM #1

July 16, 2008

RE: DFCM Project # 08049240
Ogden Weber Applied Technology College Chiller Replacement

ITEM #1 – Drawing sheet M-1, Air Cooled Water Chiller Schedule, note #2 – change note to read – "Based on 35% propylene glycol solution at 4500 ft ASL jobsite elevation" all glycol to be PROPYLENE glycol.

ITEM # 2 – New chilled water piping size to be 4 inch. Existing chilled water piping size is 4 inch.

ITEM #3 – New chiller information is attached showing footprint and specified information. SEE ATTACHMENT.

End of addendum

Information only – During the week of August 4th through August 8th there will be no classes on campus and should be minimal students.

YORK®
A JOHNSON CONTROLS COMPANY

Air Cooled Scroll Chiller Performance Specification

Unit Tag	Qty	Model No.	Capacity (Tons)	Volts/Ph/Hz	Refrigerant
080506 CH1 STD	1	YLAA0120ZE46	111.8	460/3/60	R410A

Pin No: YLAA0120ZE46XBASXTXATXBLXCXX44SX1XXXHXXXSAXXXXXXXXXXXXSBXXXXX

Evaporator Data		Condenser Data		Performance Data	
EWT (°F)	54.0	Ambient Temp. (°F)	95.0	EER / COP	9.1 / 2.7
LWT (°F)	44.0	Altitude (ft.)	4500	EER NPLV/COP NPLV	13.8 / 4.0
Design Flow Rate (gpm)	283.7			**Physical Data**	
Pressure Drop (ft.)	15.5			Rigging Wt. (lbs.)	6449.0
Fluid	P.G. 30.0%			Operating Wt. (lbs.)	7001.0
Fouling Factor	0.00010				
Water Volume. (gal)	66.0				

Electrical Data				
Circuit	1	2	3	4
Compressor RLA	54.5/54.5	54.5/54.5		
Compressor Start Current (LRA)	310.0/310.0	310.0/310.0		
Fan QTY/FLA (each)	3/4.0	3/4.0		

Single Point				
Min. Circuit Ampacity	255.2			
Min. Non-Fused Disconnect (Amps)	400			
Min. Dual Element Fuse Size (Amps)	300			
Max. Dual Element Fuse Size (Amps)	300			
Min. Circuit Breaker (Amps)	300			
Max. Circuit Breaker (Amps)	300			
Wire Lugs Per Phase*	2			
Wire Range (Lug Size)				

Total Amps	242.0	Inrush (PW) Amps	310.0	Starter Type	Across the Line
Compressor kW	137.9	Total Fan kW	10.1	Total kW	148.0

Notes: RATINGS OUTSIDE THE SCOPE OF ARI STANDARD 550/590.
* Use Copper Conductors only

Part Load Rating Data				
Load %	Ambient (°F)	Capacity (Tons)	Compressor kW	Unit Efficiency
100.0	95.0	111.8	137.9	9.1 / 2.7
75.0	84.5	92.2	87.6	11.3 / 3.3
50.0	72.3	69.5	46.6	14.7 / 4.3
25.0	55.0	32.4	24.0	15.1 / 4.4

Project Name: 080428 STATE OF UTAH AC 120	Sold To:	
Location:	Customer Purchase Order No.:	
Engineer:	York Contract No.:	
Contractor:	Date:	Revision Date:

YORK®
A JOHNSON CONTROLS COMPANY

AIR COOLED SCROLL CHILLER PRICING FORM

Project Name: 080428 State of Utah AC 120	York Contract Number:	
Location:	Date:	Rev Date:

Unit Tag	Capacity(Tons)	EER / COP	EER NPLV/COP NPLV	Refrigerant	Total Unit Price
080506 CH1 STD	**111.8**	**9.1 / 2.7**	**13.8 / 4.0**	**R410A**	**54868**

Line #	Equipment Details	Qty.	
01	**Base Unit/Access. - YLAA0120ZE46XBA**		
	Standard Efficiency	1	
	Copper tube / Aluminum fin condenser coils	1	
	Voltage Code - (460/3/60)	1	
	Across-the-Line Start	1	
	SP Supply TB	1	
	Control Transformer (fac)	1	
	Both Low & High Ambient Kits (2 Circuits)	1	
	Discharge Pressure Readout Kit	1	
	BAS/EMS Temperature Reset / Offset	1	
	Suction Pressure Readout Kit	1	
	N American Safety Code (cETL)	1	
	Motor Current Module	1	
	Service Isolation Valves	1	
	Hot Gas Bypass (1 circuit)	1	
	Compressor Crankcase Heater	1	
	1 Flow Switch per Chiller (150 psig Cooler)	1	
	ASME Pressure Vessel & Associated Codes	1	
	Vibration Isolators - Seismic	1	
02	**Warranty - 18 Months Parts & Labor (1 year) (entire unit)**		
	18 Months Parts & Labor (1 year) (entire unit)	1	

Line #	Equipment Details	Qty.	
03	**Start up/TCA - Region: West in 2008**		
	Startup [1 day(s)] to occur during 2008 in Region: West		

NOTES:

1. PLACEMENT ON A LEVEL SURFACE FREE OF OBSTRUCTIONS (INCLUDING SNOW, FOR WINTER OPERATION) OR AIR RECIRCULATION ENSURES RATED PERFORMANCE, RELIABLE OPERATION AND EASE OF MAINTENANCE. SITE RESTRICTIONS MAY COMPROMISE MINIMUM CLEARANCES INDICATED BELOW, RESULTING IN UNPREDICATBLE AIR FLOW PATTERNS AND POSSIBLE DIMINISHED PERFORMANCE. JCI'S UNNIT CONTROL WILL OPTIMIZE OPERATION WITHOUT NUISANCE HIGH PRESSURE SAFETY CUTOUT; HOWEVER, THE SYSTEM DESIGNER MUST CONSIDER POTENTIAL PERFORMANCE DEGRADATION. ACCESS TO THE CONTROL CENTER ASSUMED THE UNIT IS NO HIGHER THAN ON SPREING ISOLATORS.

2. RECOMMENDED MINIMUM CLEARANCES:
   SIDE TO WALL: 72" (1828 MM)
   REAR TO WALL; 72" (1828 MM)
   CONTROL PANEL TO END OF WALL; 48" (1219 MM)
   TOP – NO OBSTRUCTIONS ALLOWED; DISTANCE BETWEEN ADJACENT UNITS; 120" (3048 MM)
   NO MORE THAN ONE ADJACENT WALL MAY BE HIGHER THAN THE UNIT

3. R-410A EQUIPMENT

PRELIMINARY
NOT FOR FABRICATION

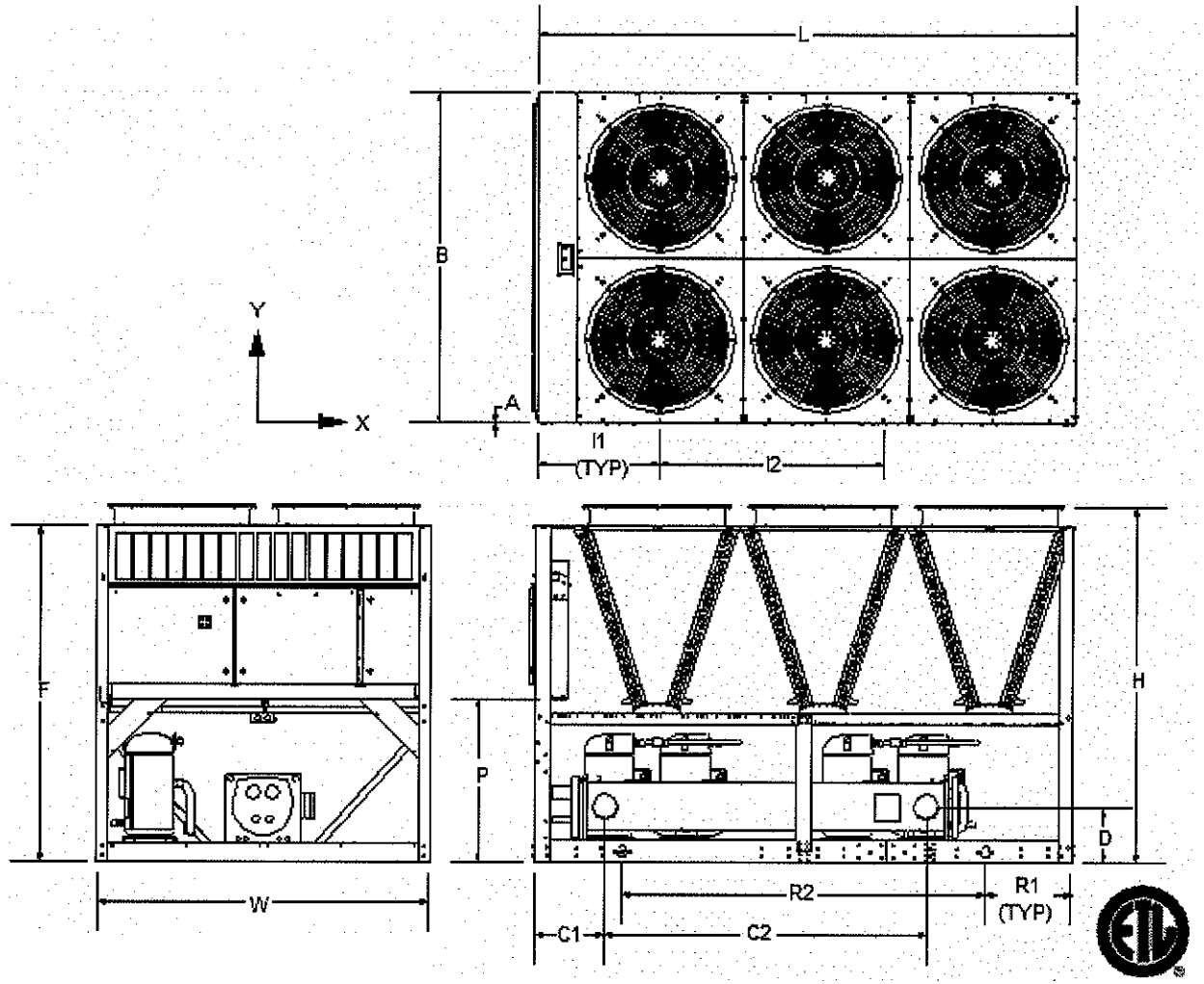

Unit Length (L) (in.)	142.7
Unit Width (W) (in.)	88.0
Unit Height (H) (in.)	104.6
Base to Top of Cabinet (F) (in.)	89.6
Base to Control Panel (P) (in.)	43.9

Evaporator Connection/Size (in)	Evaporator Connection/Size (in.)			Isolator Locations (in.)									
Connection(s) Size	C1 (inlet)	C2 (outlet)	D	I1	I2	I3	I4	I5	I6	I7	I8	A	B
8	22.0	102.0	17.3	7.6	117.2			7.6	117.2			1.4	85.5

Shipping Wt (lbs.)	Operating Wt (lbs.)	Rigging Hole Locations (in.)				Unit COG (in.)			Isolator Information	
		R1	R2	R3	R4	X	Y		Type	Approx. Height (in.)
6449.0	7001.0	23.0	96.0			67.5	50.8		Seismic	9.25

Dimensions – Six Fan Units

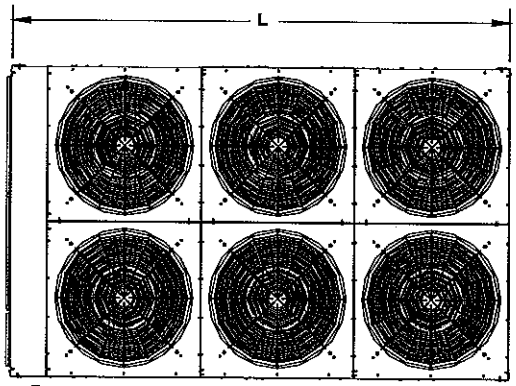

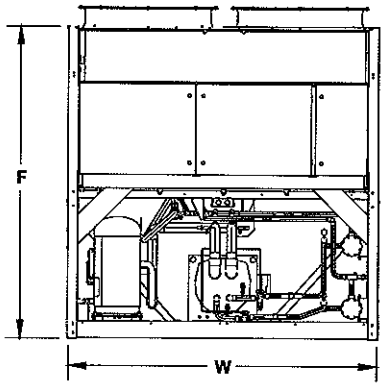

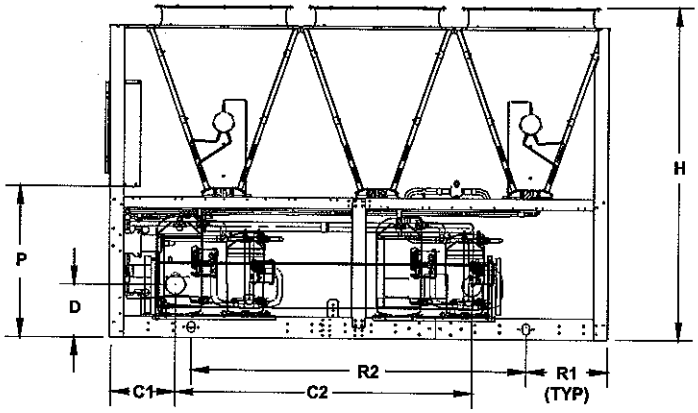

YLAA Model	L (length)	W (width)	H (height)	F	P	D	C1	C2	R2	R1
YLAA0091HE	143.5	88.25	94.2	88.5	42.75	15	18.6	85	96	23
YLAA0101HE	143.5	88.25	94.2	88.5	42.75	15	18.6	85	96	23
YLAA0115SE	143.5	88.25	94.2	88.5	42.75	15	18.6	85	96	23
YLAA0120SE	143.5	88.25	94.2	88.5	42.75	17.25	22	102	96	23

Isolator Locations

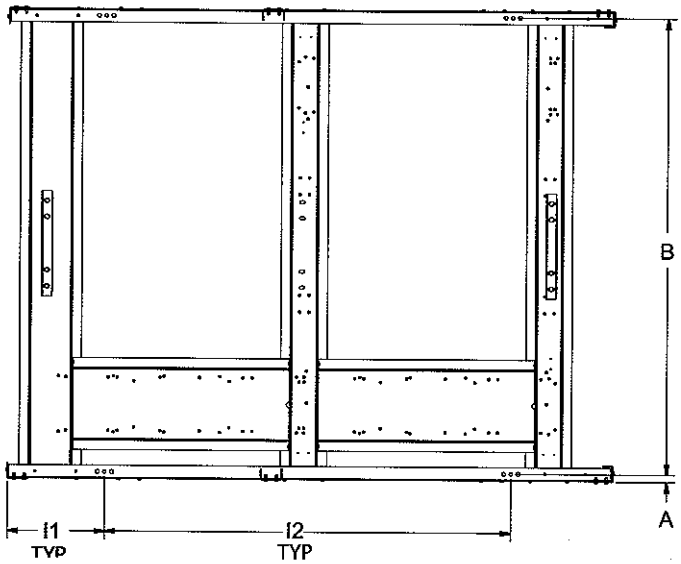

AVM LOCATIONS					
YLAA Model	A	B	C	D	E
YLAA0070SE	19.5	76.6	19.5	1.36	85.5
YLAA0080SE	19.5	76.6	19.5	1.36	85.5
YLAA0090SE	19.5	76.6	19.5	1.36	85.5

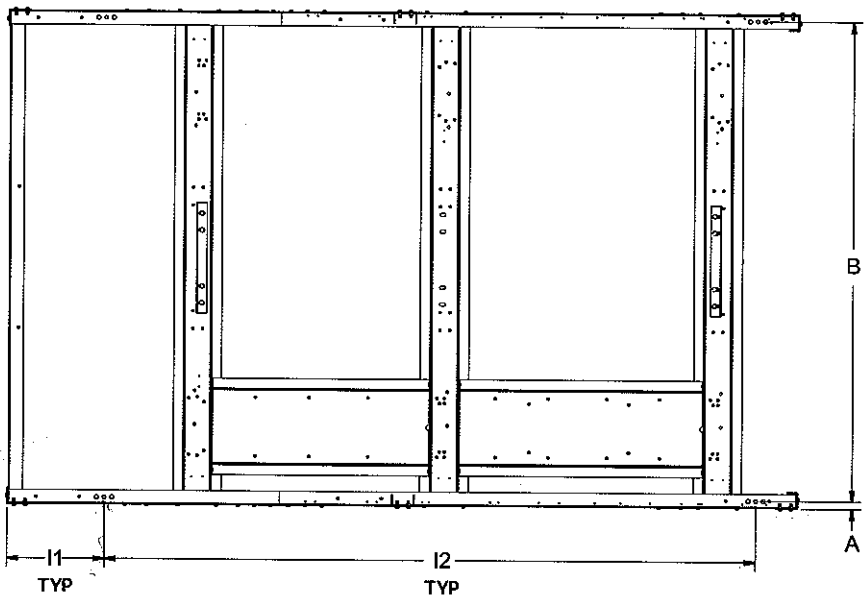

YLAA Model	AVM LOCATIONS					
	I1	I2	I5	I6	A	B
YLAA0091HE	7.6	117.2	7.6	117.2	1.4	85.5
YLAA0101HE	7.6	117.2	7.6	117.2	1.4	85.5
YLAA0115SE	7.6	117.2	7.6	117.2	1.4	85.5
YLAA0120SE	7.6	117.2	7.6	117.2	1.4	85.5