CHILDREN'S SCHOOL ELECTRICAL IMPROVEMENTS

OGDEN - WEBER APPLIED TECHNOLOGY COLLEGE

MAIN CAMPUS

200 NORTH WASHINGTON BLVD
OGDEN, UTAH 84404

State of Utah-Department of Administrative Services

DIVISION OF FACILITIES CONSTRUCTION AND MANAGEMENT

4110 State Office Building / Salt Lake City, Utah 84114 / 538-3018

DFCM PROJECT NO. 08051240

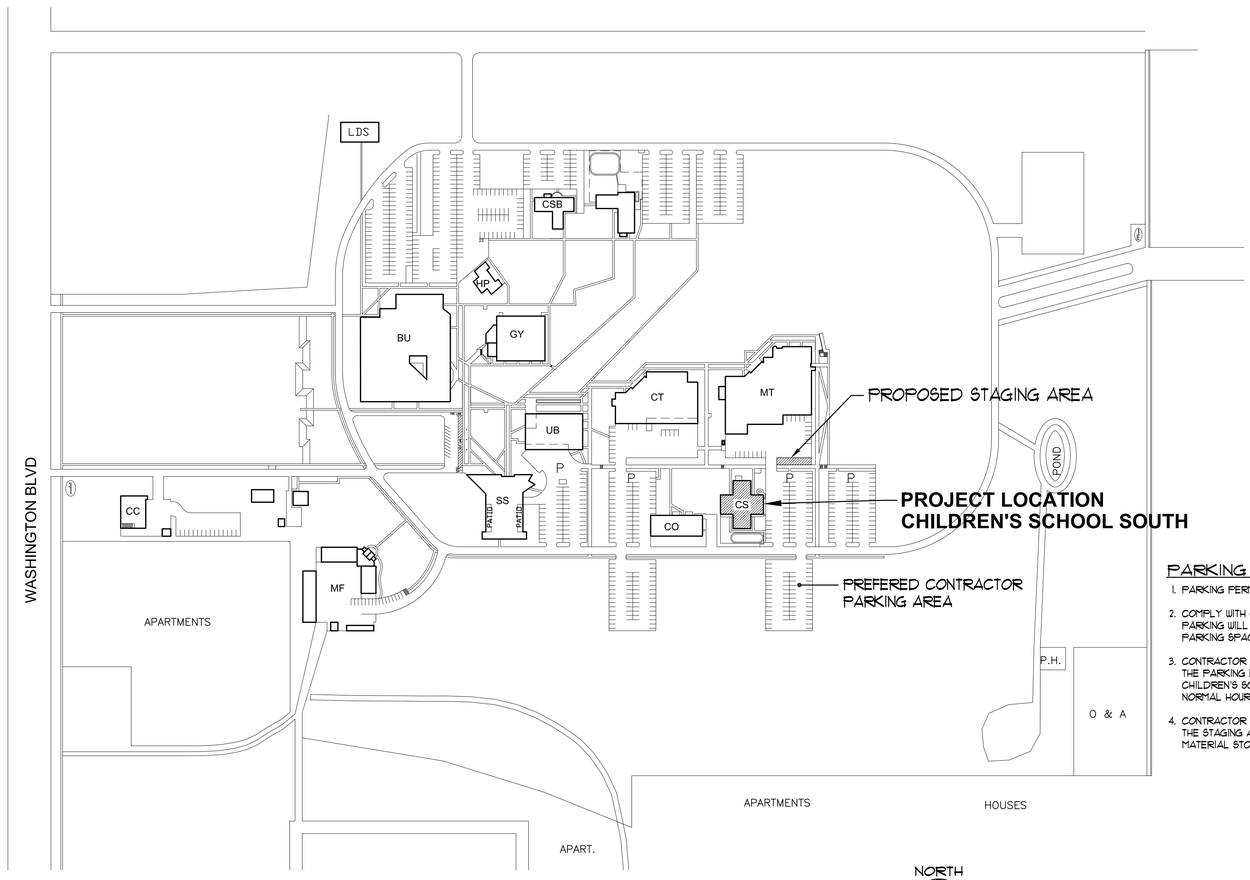

A1 OGDEN-WEBER ATC MAIN CAMPUS PLAN
SCALE: 1" = 200'-0"
0 100' 200' 400'

NORTH

PARKING NOTES:

1. PARKING PERMITS ARE NOT REQUIRED.
2. COMPLY WITH OWATC PARKING REGULATIONS. PARKING WILL BE ALLOWED ONLY IN DEFINED PARKING SPACES.
3. CONTRACTOR PARKING WILL NOT BE ALLOWED IN THE PARKING LOTS EAST AND NORTH OF THE CHILDREN'S SCHOOL DURING THE SCHOOL NORMAL HOURS OF OPERATION.
4. CONTRACTOR PARKING WILL NOT BE ALLOWED IN THE STAGING AREA BUT MAY BE USED FOR MATERIAL STORAGE IN LOCKED ENCLOSURES.

CODE ANALYSIS

APPLICABLE CODES

	Year		Year
International Building Code	2006	National Electrical Code	2008
International Mechanical Code	2006	Uniform Code for Building Conservation	N.A.
International Plumbing Code	2006	ADA Accessibility Guildelines	2006
International Fire Code	2006		
International Energy Conservation Code	2006		

A. Occupancy and Group: E
Change in Use: Yes ____ No X Mixed Occupancy: Yes ____ No X
Special Use and Occupancy (e.g. High Rise, Covered Mall): N.A.

B. Seismic Design Category: N.A. Design Wind Speed: N.A. mph

C. Type of Construction (circle one): Existing
I A I B II A II B III A III B IV HT V A V B

D. Fire Resistance Rating Requirements for the Exterior Walls based on the fire separation distance (in hours):
North: N.A. South: N.A. East: N.A. West: N.A.

E. Mixed Occupancies: N.A. Nonseparated Uses: N.A.

F: Sprinklers:
Required: N.A. Provided: No Type of Sprinkler System: ____

G: Number of Stories: N.A. Building Height: N.A.

H: Actual Area per Floor (square feet): Existing

I: Tabular Area: ____

J: Area Modifications:

a) $A_a = A_t + \left[\frac{A_t I_f}{100}\right] + \left[\frac{A_t I_s}{100}\right]$ $\quad I_f = 100\left[\frac{F}{P} - 0.25\right]\frac{W}{30}$

b) Sum of the Ratio Calculations for Mixed Occupancies:
$\frac{\text{Actual Area}}{\text{Allowable Area}} \leq 1$

c) Total Allowable Area for:
1) One Story: ____
2) Two Story: $A_a(2)$____
3) Three Story: $A_a(3)$____

d) Unlimited Area Building: Yes ____ No ____ Code Section: ____

K. Fire Resistance Rating Requirements for Building Elements (hours).

Element	Hours	Assembly Listing	Element	Hours	Assembly Listing
Exterior Bearing Walls	N.A.		Floors - Ceiling Floors	N.A.	
Interior Bearing Walls	N.A.		Roofs - Ceiling Roofs	N.A.	
Exterior Non-Bearing Walls	N.A.		Exterior Doors and Windows	N.A.	
Structural Frame	N.A.		Shaft Enclosures	N.A.	
Partitions - Permanent	N.A.		Fire Walls	N.A.	
Fire Barriers	N.A.		Fire Partitions	N.A.	
			Smoke Partitions		

L. Design Occupant Load: Existing
Exit Width Required: ____ Exit Width Provided: Existing

M. Minimum Number of Required Plumbing Facilities:
a) Water Closets - Required (m) N.A. (f) N.A. Provided (m) N.A. (f) N.A.
b) Lavatories - Required (m) N.A. (f) N.A. Provided (m) N.A. (f) N.A.
c) Bath Tubs or Showers: N.A.
d) Drinking Fountains: N.A. Service Sinks: N.A.

FOOTNOTES:
1) In case of conflict with the U.S. Department of Justice Federal Registers Parts I - V - ADA Guidelines and specific reference to the International Building Code Accessibility Chapters, the more restrictive requirement shall govern.
2) Additional Code Information shall be provided at the discretion of the Building Official for Complex Buildings. Including, but not limited to:
a) High Rise Requirements.
b) Atriums.
c) Performance Based Criteria.
d) Means or Egress Analysis.
e) Fire Assembly Locator Sheet.
f) Exterior and Interior Accessibility Route.
g) Fire Stopping, Including Tested Design Number.

DRAWING INDEX

SHEET	NUMBER	SHEET TITLE
1	G-001	LOCATION PLANS, CODE CRITERIA, AND DRAWING INDEX
2	ED101	ELECTRICAL DEMOLITION PLAN
3	EL101	NEW LIGHTING PLAN
4	EL102	TUNNEL AND CRAWL SPACE LIGHTING PLAN
5	EP101	PARTIAL POWER PLAN, SINGLE LINE DIAGRAMS, AND PANEL SCHEDULES
6	E-601	SYMBOL LIST, FIXTURE SCHEDULE, AND DETAILS
7	FA101	FIRE ALARM PLAN

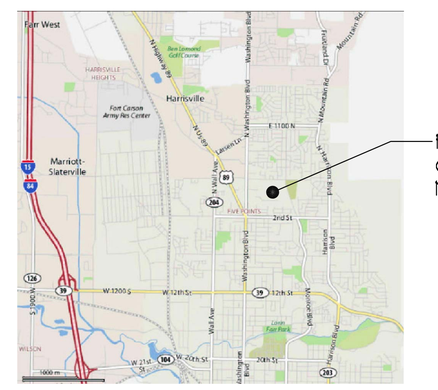

A4 OWATC VICINITY PLAN
NOT TO SCALE

NORTH

PROJECT ENGINEER:
THOMAS & KOLKMAN ENGINEERING CO. INC.
64 WEST 1700 SOUTH
SALT LAKE CITY, UTAH 84115
TELEPHONE: (801) 484-8161
FACSIMILE: (801) 484-3538
Email: grandyb•utahmicro.net

CONSULTANTS:

OWNER:
State of Utah
Department of Administrative Services
Division of Facilities Construction & Management
4110 State Office Building
Salt Lake City, Utah 84114
Phone: (801) 538 - 3018
Fax: (801) 538 - 3267
Internet: http://dfcm.utah.gov

PROJECT:
CHILDREN'S SCHOOL SOUTH ELECTRICAL IMPROVEMENTS

OGDEN - WEBER APPLIED TECHNOLOGY COLLEGE

MAIN CAMPUS
200 NORTH WASHINGTON BLVD.
OGDEN, UTAH 84404

REVISIONS:

MARK	DATE	DESCRIPTION
1	9/30/09	PROJECT MODIFICATION & REVIEW

ISSUE TYPE: CONSTRUCTION DOCUMENTS
ISSUE DATE: AUGUST 3, 2009
DFCM PROJECT NO: 08051240
STATE PROPERTY NO: n.a.
CAD DWG FILE: G-001.dwg
DRAWN BY: WBG.
CHECKED BY: RGK.
COPYRIGHT: STATE OF UTAH

SHEET TITLE:
CODE CRITERA, LOCATION PLANS, AND DRAWING INDEX

SHEET NUMBER:
G-001

SHEET 1 OF 7

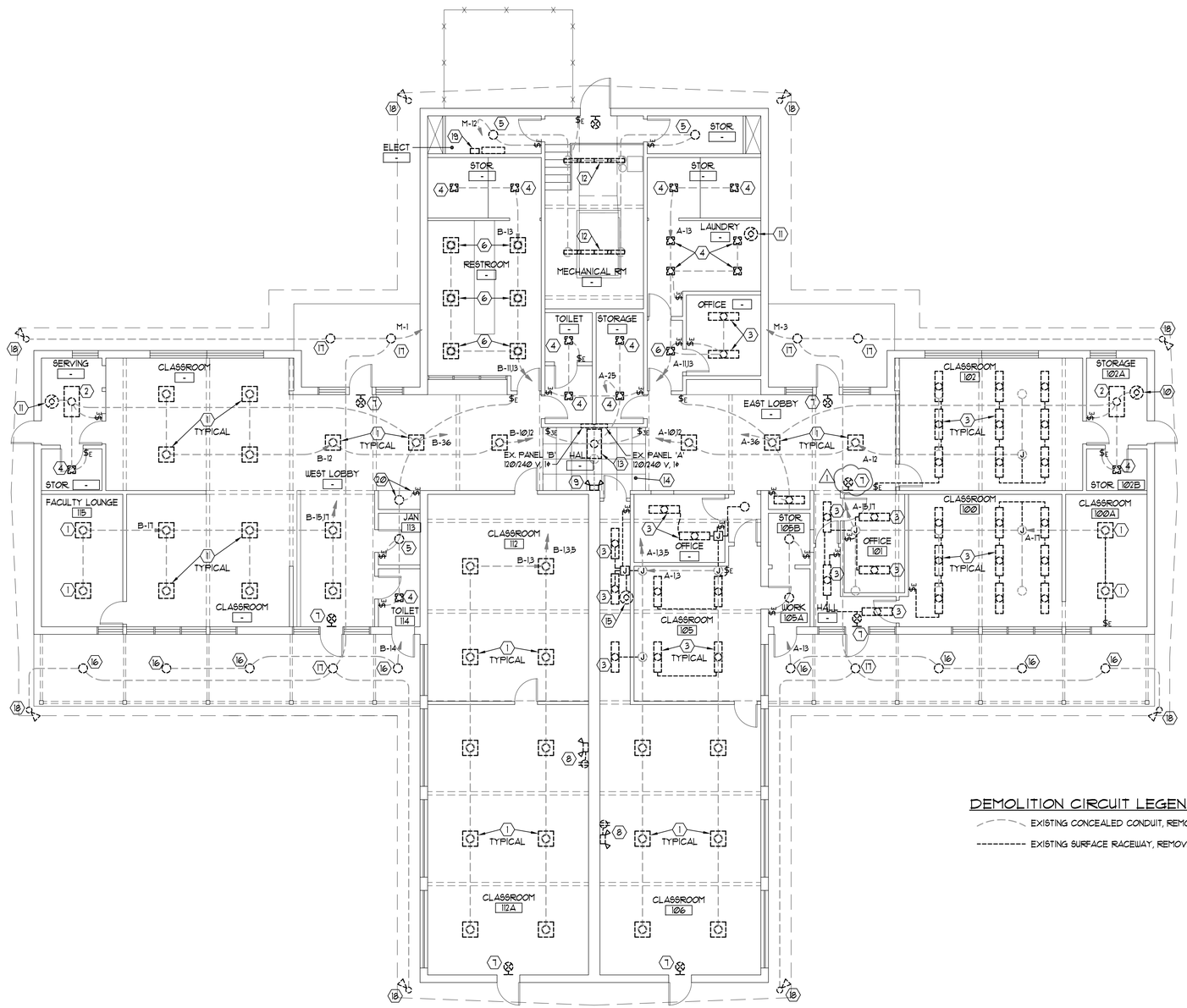

DEMOLITION CIRCUIT LEGEND:

- EXISTING CONCEALED CONDUIT, REMOVE ALL EXISTING WIRING
- EXISTING SURFACE RACEWAY, REMOVE AND REPAIR CEILING

(A1) ELECTRICAL DEMOLITION PLAN

SCALE: 1/8" = 1'-0"

0 4' 8' 16'

NORTH

GENERAL NOTES:

1. LOCATIONS OF EXISTING ELECTRICAL EQUIPMENT, RECEPTACLES, OUTLETS, BRANCH CIRCUIT WIRING, ETC., ARE BASED ON EXISTING BUILDING ELECTRICAL DRAWINGS AND FIELD OBSERVATION OF EXISTING SURFACE CONDITIONS. FIELD VERIFY EXISTING LOCATIONS AND CIRCUITING AND IMMEDIATELY NOTIFY THE ENGINEER OF ANY DISCREPANCIES WHICH MAY ADVERSELY AFFECT COMPLETION OF THE WORK.
2. DEMOLITION IS SHOWN FOR CONTRACTORS REFERENCE ONLY. FIELD VERIFY QUANTITIES AND LOCATIONS OF ALL EXISTING MATERIAL AND EQUIPMENT TO BE REMOVED. REMOVE ALL ABANDONED WIRING, CONDUIT, BOXES, RECEPTACLES, OUTLETS, EQUIPMENT, ETC., ASSOCIATED WITH THE WORK WHETHER SPECIFICALLY SHOWN OR NOT.
3. WHERE REMOVAL OF EXISTING ELECTRICAL EQUIPMENT INTERRUPTS EXISTING BRANCH CIRCUITS TO EXISTING EQUIPMENT TO REMAIN, PROVIDE NEW RACEWAY AND WIRING AS REQUIRED TO RECONNECT THE EXISTING EQUIPMENT.
4. ALL MATERIALS AND EQUIPMENT REMOVED SHALL REMAIN THE PROPERTY OF THE OWNER AND SHALL BE TURNED OVER TO THE OWNER FOR STORAGE OR BE DISPOSED OF BY THE CONTRACTOR AS DIRECTED BY THE OWNER.
5. TAKE ALL PRECAUTIONS NECESSARY TO AVOID DAMAGE TO THE EXISTING BUILDING. REPAIR ALL DAMAGE INCURRED BY DEMOLITION AND NEW CONSTRUCTION TO EXACTLY MATCH SURROUNDING SURFACES AND/OR CONDITIONS WITHOUT ADDITIONAL COST TO THE OWNER.
6. ALL EXISTING EMERGENCY LIGHTING BATTERY UNITS, INCLUDING EXIT LIGHTS WITH EMERGENCY DOWNLIGHT, ARE TO REMAIN IN PLACE UNTIL NEW LIGHTING WITH EMERGENCY LIGHTING BATTERY PACKS ARE INSTALLED AND OPERATIONAL.
7. REMOVE ALL EXISTING SWITCHES AND WIRING SHOWN ON THE DEMOLITION PLAN. EXISTING OUTLET BOXES ARE TO REMAIN FOR INSTALLATION OF NEW SWITCHES AS SHOWN ON THE NEW LIGHTING PLAN, SHEET EL101, UNLESS SPECIFICALLY NOTED OTHERWISE.
8. THOROUGHLY CLEAN EXISTING CEILINGS AND WALLS WHERE EXISTING FIXTURES ARE REMOVED. USE A MILD DETERGENT WHERE NECESSARY TO REMOVE ANY STAINING.

KEYED NOTES:

1. REMOVE EXISTING 2' x 2', 2 LAMP, SURFACE MOUNTED METAL SIDED FLUORESCENT FIXTURE INCLUDING ALL ABANDONED WIRING. REPAIR EXISTING CEILING AS REQUIRED TO MATCH SURROUNDING SURFACES.
2. REMOVE EXISTING 4 FT, 4 LAMP, SURFACE MOUNTED METAL SIDED FLUORESCENT FIXTURE INCLUDING ALL ABANDONED WIRING. REPAIR EXISTING CEILING AS REQUIRED TO MATCH SURROUNDING SURFACES.
3. REMOVE EXISTING 4 FT, 2 LAMP, SURFACE MOUNTED "WRAPAROUND" FLUORESCENT FIXTURE INCLUDING ALL ABANDONED WIRING. REPAIR EXISTING CEILING AS REQUIRED TO MATCH SURROUNDING SURFACES.
4. REMOVE EXISTING RECESSED INCANDESCENT FIXTURE COMPLETE INCLUDING ALL ABANDONED WIRING. REPAIR EXISTING METAL LATHE AND PLASTER CEILING AS REQUIRED FOR INSTALLATION OF NEW RECESSED FIXTURE.
5. REMOVE EXISTING SURFACE MOUNTED INCANDESCENT FIXTURE INCLUDING ALL ABANDONED WIRING. REPAIR EXISTING CEILING AS REQUIRED TO MATCH SURROUNDING SURFACES.
6. REMOVE EXISTING 2' x 2', 2 LAMP, SURFACE MOUNTED METAL SIDED FLUORESCENT FIXTURE AND EXISTING RECESSED INCANDESCENT FIXTURE HOUSING ABOVE. REMOVE ALL ABANDONED WIRING, CONDUIT, BOXES, ETC.. INSTALL NEW FLUSH OUTLET BOX FOR NEW FIXTURE AND RECONNECT EXISTING CONDUIT. REPAIR EXISTING METAL LATHE & PLASTER CEILING TO MATCH SURROUNDING SURFACES.
7. REMOVE EXISTING EXIT LIGHT WITH EMERGENCY DOWNLIGHT. RETAIN EXISTING BRANCH CIRCUIT FOR CONNECTION TO NEW EXIT LIGHT.
8. REMOVE EXISTING EMERGENCY LIGHTING BATTERY UNIT INCLUDING SURFACE METAL RACEWAY AND SURFACE EXTENSION BOX AT RECEPTACLE. REINSTALL RECEPTACLE IN EXISTING FLUSH OUTLET BOX AND PROVIDE NEW COVERPLATE.
9. REMOVE EXISTING EMERGENCY LIGHTING BATTERY UNIT INCLUDING ALL ABANDONED WIRING, CONDUIT, SURFACE RACEWAY, BOXES, ETC..
10. REMOVE ALL WIRING TO EXISTING FAN IN STORAGE ROOM AND ABANDON IN PLACE.
11. CLEAN EXISTING EXHAUST FAN AND LEAVE IN PROPER WORKING ORDER.
12. REMOVE EXISTING 2 LAMP FLUORESCENT STRIPLIGHT INCLUDING ALL ABANDONED WIRING, CONDUIT, BOXES, ETC..
13. REMOVE EXISTING 2' x 4' FLUORESCENT TROFFER INCLUDING ALL ABANDONED WIRING, CONDUIT, BOXES, ETC..
14. REMOVE EXISTING ACOUSTICAL GRID CEILING AND TILES COMPLETE.
15. EXISTING HVAC FAN TO REMAIN.
16. REMOVE EXISTING EXTERIOR SURFACE MOUNTED INCANDESCENT FIXTURE AND ALL WIRING. PROVIDE NEW BLANK COVER PLATE ON EXISTING FLUSH CEILING OUTLET BOX TO MATCH COLOR OF CEILING.
17. REMOVE EXISTING EXTERIOR SURFACE MOUNTED INCANDESCENT FIXTURE AND ALL WIRING. SEE NEW LIGHTING PLAN, SHEET EL101, FOR INSTALLATION OF NEW FIXTURE.
18. EXISTING 70 WATT HIGH PRESSURE SODIUM FLOODLIGHTS TO REMAIN.
19. REMOVE EXISTING CONTACTOR FOR EXTERIOR LIGHTING.
20. FIXTURE AND SWITCH SHOWN OR ORIGINAL BUILDING ELECTRICAL DRAWINGS. SWITCH IS EXISTING. FIXTURE OUTLET BOX IS NOT PRESENT. CONTRACTOR TO VERIFY THAT OUTLET BOX HAS NOT BEEN COVERED AND MAKE BOX ACCESSIBLE.

PROJECT ENGINEER:

THOMAS & KOLKMAN ENGINEERING CO. INC.
64 WEST 1700 SOUTH
SALT LAKE CITY, UTAH 84115
TELEPHONE: (801) 484-8161
FACSIMILE: (801) 484-3538
Email: grandyb•utahmicro.net

CONSULTANTS:

OWNER:

State of Utah
Department of Administrative Services
Division of Facilities Construction & Management
4110 State Office Building
Salt Lake City, Utah 84114
Phone: (801) 538 - 3018
Fax: (801) 538 - 3267
Internet: http://dfcm.utah.gov

PROJECT:

CHILDREN'S SCHOOL SOUTH ELECTRICAL IMPROVEMENTS

OGDEN - WEBER APPLIED TECHNOLOGY COLLEGE

MAIN CAMPUS
200 NORTH WASHINGTON BLVD.
OGDEN, UTAH 84404

REVISIONS:

MARK	DATE	DESCRIPTION
	9/30/09	PROJECT MODIFICATION & REVIEW

ISSUE TYPE: CONSTRUCTION DOCUMENTS
ISSUE DATE: AUGUST 3, 2009
DFCM PROJECT NO: 08051240
STATE PROPERTY NO: n.a.
CAD DWG FILE: E-101.dwg
DRAWN BY: W.B.G.
CHECKED BY: R.G.K.
COPYRIGHT: STATE OF UTAH

SHEET TITLE:
ELECTRICAL DEMOLITION PLAN

SHEET NUMBER:
ED101

SHEET 2 OF 7

CEILING/WALL REPAIR NOTES:

1. REPAIR EXISTING WOOD CEILINGS BY FILLING HOLES WITH WOOD PUTTY COLORED TO MATCH EXISTING CEILING. SAND SMOOTH AFTER PUTTY IS COMPLETELY DRIED. APPLY 2 COATS OF POLYEURATHANE WITH SATIN FINISH IN AREA OF REPAIR WHERE REQUIRED TO MATCH EXISTING CEILING.
2. REPAIR EXISTING METAL LATHE AND PLASTER CEILINGS BY FILLING HOLES WITH NEW CONCRETE PLASTER TO MATCH TEXTURE AND FINISH OF EXISTING PLASTER. PROVIDE NEW METAL LATHE SECURED TO ADJACENT LATHE BY MINIMUM 12 GAUGE GALVANIZED STEEL TIE WIRE WHERE REQUIRED. PROVIDE NEW METAL CEILING CHANNEL WHERE REQUIRED TO SUPPORT METAL LATHE FOR REPAIRS LARGER THAN 24" IN ANY DIMENSION. PAINT CEILING TO LOGICAL BREAK POINT SUCH AS INTERSECTION OF CEILING AND WALL.
3. REPAIR EXISTING WALLS WITH DRYWALL COMPOUND FOR GYPSUM BOARD WALLS OR GROUT FOR CONCRETE WALLS, SANDED TO OBTAIN A SMOOTH FINISH. PAINT WALLS TO LOGICAL BREAK POINT SUCH AS CORNER OF WALL OR INTERSECTION WITH CEILING.

GENERAL NOTES:

1. LOCATIONS OF EXISTING ELECTRICAL EQUIPMENT, RECEPTACLES, OUTLETS, BRANCH CIRCUIT WIRING, ETC, ARE BASED ON EXISTING BUILDING ELECTRICAL DRAWINGS AND FIELD OBSERVATION OF EXISTING SURFACE CONDITIONS. FIELD VERIFY EXISTING LOCATIONS AND CIRCUITING AND IMMEDIATELY NOTIFY THE ENGINEER OF ANY DISCREPANCIES WHICH MAY ADVERSELY AFFECT COMPLETION OF THE WORK.
2. TAKE ALL PRECAUTIONS NECESSARY TO AVOID DAMAGE TO THE EXISTING BUILDING. REPAIR ALL DAMAGE INCURRED BY DEMOLITION AND NEW CONSTRUCTION TO EXACTLY MATCH SURROUNDING SURFACES AND/OR CONDITIONS WITHOUT ADDITIONAL COST TO THE OWNER.
3. COORDINATE NEW FIXTURE AND NEW SURFACE RACEWAY LOCATIONS WITH EXISTING BUILDING STRUCTURE, EXISTING SURFACE RACEWAYS, ETC. REVIEW FIXTURE LOCATIONS WITH PROJECT ENGINEER PRIOR TO INSTALLATION.
4. FIELD COORDINATE EXACT LOCATION OF ALL NEW OCCUPANCY SENSORS WITH PROJECT ENGINEER PRIOR TO INSTALLATION.
5. PROVIDE A SEPARATE NEUTRAL FOR EACH NEW BRANCH. NEW MULTI-WIRE CIRCUITS WILL NOT BE ALLOWED.
6. PROVIDE INSULATED GREEN EQUIPMENT GROUND WIRE IN ALL RACEWAYS WHETHER SPECIFICALLY INDICATED OR NOT.

KEYED NOTES:

1. PROVIDE NEW SURFACE RACEWAY EXTENSION BOX AT EXISTING FLUSH OUTLET BOX FOR TRANSITION FROM EXISTING CONCEALED CONDUIT TO NEW SURFACE RACEWAY SYSTEM. PROVIDE NEW SURFACE RACEWAY TO NEW FIXTURES, SWITCHES, AND OCCUPANCY SENSORS AS INDICATED.
2. INSTALL NEW FIXTURE AT EXISTING FLUSH OUTLET BOX. PROVIDE NEW SURFACE RACEWAY TO ADDITIONAL FIXTURES, SWITCHES, AND OCCUPANCY SENSORS AS INDICATED.
3. INSTALL NEW FIXTURE TO REPLACE EXISTING SURFACE MOUNTED FIXTURE. CLEAN EXISTING CEILING PRIOR TO INSTALLING NEW FIXTURE.
4. INSTALL NEW RECESSED COMPACT FLUORESCENT FIXTURE TO REPLACE EXISTING RECESSECED INCANDESCENT FIXTURE. ENLARGE EXISTING CEILING CUT-OUT AS REQUIRED TO INSTALL NEW FIXTURE. REPAIR EXISTING METAL LATHE AND PLASTER CEILING AS REQUIRED TO MATCH SURROUNDING SURFACES.
5. CHAIN MOUNT NEW FIXTURES BELOW EXISTING EXPOSED DUCTWORK AND CONNECT TO SURFACE RACEWAY JUNCTION BOX WITH FLEXIBLE STEEL CONDUIT. FIELD COORDINATE LOCATIONS TO PROVIDE ACCESS TO DUCT HATCHES AND HVAC FAN.
6. PROVIDE NEW FLUSH OUTLET BOX AT LOCATION OF REMOVED RECESSED INCANDESCENT FIXTURE. EXTEND AND RECONNECT EXISTING CONCEALED CONDUIT ABOVE EXISTING METAL LATHE AND PLASTER CEILING. REPAIR AND PAINT EXISTING CEILING AS REQUIRED TO MATCH SURROUNDING SURFACES.
7. INSTALL NEW FIXTURES IN MECHANICAL ROOM TO REPLACE EXISTING FIXTURES AT THE SAME LOCATION.
8. PROVIDE NEW SWITCH IN EXISTING FLUSH OUTLET BOX. CONNECT TO CONTROL NEW FIXTURES AS INDICATED.
9. PROVIDE NEW SWITCH IN EXISTING FLUSH OUTLET BOX. CONNECT FOR SEPARATE CONTROL OF NEW FIXTURES AND EXISTING EXHAUST FAN.
10. PROVIDE NEW SWITCH IN NEW FLUSH CUT-IN OUTLET BOX IN EXISTING STUD WALL. PROVIDE FLEXIBLE STEEL CONDUIT TO SECOND FLUSH CUT-IN OUTLET BOX NEAR CEILING OR BOTTOM OF GLUE-LAM BEAM WITH SURFACE RACEWAY EXTENSION BOX FOR TRANSITION TO SURFACE RACEWAY SYSTEM. PROVIDE SURFACE RACEWAY SYSTEM TO NEW FIXTURES AS INDICATED.
11. PROVIDE NEW SURFACE MOUNTED SWITCH IN SURFACE RACEWAY SYSTEM ON EXISTING CONCRETE BLOCK WALLS AND CONNECT TO NEW FIXTURES AS INDICATED.
12. PROVIDE NEW SWITCH IN NEW FLUSH CUT-IN OUTLET BOX IN EXISTING STUD WALL. PROVIDE FLEXIBLE STEEL CONDUIT TO ABOVE EXISTING LATHE AND PLASTER CEILING AND CONNECT TO NEW FIXTURES AS INDICATED.
13. PROVIDE NEW SURFACE MOUNTED SWITCH IN SURFACE RACEWAY SYSTEM ON EXISTING CONCRETE BLOCK WALL TO CEILING. PROVIDE SUITABLE FITTING AT CEILING FOR CONNECTION TO FLEXIBLE STEEL CONDUIT AND EXTEND CONDUIT ABOVE CEILING TO NEW FIXTURES AS INDICATED.
14. PROVIDE NEW OUTLET BOX IN EXISTING LATHE AND PLASTER CEILING FOR NEW CEILING MOUNTED OCCUPANCY SENSOR.
15. INSTALL NEW EXIT LIGHT TO REPLACE EXISTING EXIT LIGHT AND RECONNECT EXISTING CIRCUIT USING EXISTING SURFACE RACEWAY SYSTEM. PROVIDE NEW SURFACE OUTLET BOX BEHIND THE NEW EXIT LIGHT.
16. PROVIDE NEW SURFACE MOUNTED EXIT LIGHT ON EXISTING CONCRETE BLOCK WALL AND CONNECT USING NEW SURFACE RACEWAY SYSTEM AS INDICATED.
17. PROVIDE NEW EXIT LIGHT AND FLUSH CUT-IN OUTLET BOX IN EXISTING STUD WALL. PROVIDE TRANSITION TO SURFACE RACEWAY SYSTEM AS DESCRIBED FOR NEW FLUSH SWITCHES IN KEYED NOTE 10 ABOVE.
18. REPLACE EXISTING EXTERIOR LIGHTING CONTACTOR WITH NEW EXTERIOR LIGHTING CONTROL PANEL. SEE CONTROL WIRING DIAGRAM, SEE E-601.
19. EXISTING EXTERIOR LIGHTING CONTROL PHOTOCELL TO REMAIN. RECONNECT TO NEW EXTERIOR LIGHTING CONTROL PANEL.
20. EXISTING 70 WATT HIGH PRESSURE SODIUM FLOODLIGHTS TO REMAIN. RECONNECT TO NEW PHOTOCELL ON-OFF EXTERIOR LIGHTING CONTACTOR.
21. INSTALL NEW EXTERIOR FIXTURE AT EXISTING FLUSH OUTLET BOX. CONNECT TO NEW PHOTOCELL ON - TIME SWITCH OFF LIGHTING CONTACTOR.
22. EXTERIOR EMERGENCY LIGHTING BATTERY UNIT, SEE FIXTURE SCHEDULE. CONNECT TO SAME BRANCH CIRCUIT AS EXTERIOR LIGHTING, AHEAD OF LIGHTING CONTACTOR. SEE EXTERIOR LIGHTING CONTROL WIRING DIAGRAM, SHEET E-601.
23. NEW 2 #10, 1/2" C, 12 VDC, FROM REMOTE EXTERIOR EMERGENCY LIGHT FIXTURE TO BATTERY UNIT IN ELECTRICAL ROOM. FLEXIBLE STEEL CONDUIT MAY BE USED ABOVE EXISTING CEILINGS. PROVIDE EMT CONDUIT IN MECHANICAL AND ELECTRICAL ROOMS. DO NOT INSTALL ANY OTHER WIRING IN THE RACEWAY SYSTEM WITH THE EMERGENCY LIGHTING BRANCH CIRCUIT.
24. NEW 2 #10, 1/2" C, 12 VDC, FROM REMOTE EXTERIOR EMERGENCY LIGHT FIXTURE TO BATTERY UNIT IN ELECTRICAL ROOM. FLEXIBLE STEEL CONDUIT MAY BE USED ABOVE EXISTING CEILINGS. PROVIDE JUNCTION BOX NEAR CEILING WITH SURFACE RACEWAY TO FLOOR. DRILL AND SEAL FLOOR FOR EMT CONDUIT PENETRATION INTO TUNNEL BELOW AND THROUGH TUNNEL AND MECHANICAL ROOM TO ELECTRICAL ROOM. DO NOT INSTALL ANY OTHER WIRING IN THE RACEWAY SYSTEM WITH THE EMERGENCY LIGHTING BRANCH CIRCUIT.
25. INSTALL SURFACE RACEWAY SYSTEM ON WALL NEAR BOTTOM OF EXPOSED GLU-LAM BEAMS.
26. EXISTING HVAC FAN TO REMAIN. RECONNECT EXISTING CIRCUIT. FIELD VERIFY REQUIREMENTS.
27. PROVIDE NEW ACOUSTICAL GRID CEILING TO REPLACE EXISTING CEILING. INSTALL MAIN GRIDS TO SUPPORT FIXTURE AT LOCATION INDICATED.
28. RELOCATE EXISTING SMOKE DETECTOR FROM EXISTING CEILING TO NEW CEILING.

EM PROVIDE EMERGENCY BATTERY PACK IN FLUORESCENT FIXTURES INDICATED AND CONNECT TO THE SAME BRANCH CIRCUIT AS THE LIGHT FIXTURE, AHEAD OF ANY LOCAL SWITCHES AND OCCUPANCY SENSORS. FIXTURE IS TO BE SWITCHED WITH GENERAL ROOM LIGHTING. SEE SPECIFICATION SECTION 16500 FOR BATTERY PACK REQUIREMENTS.

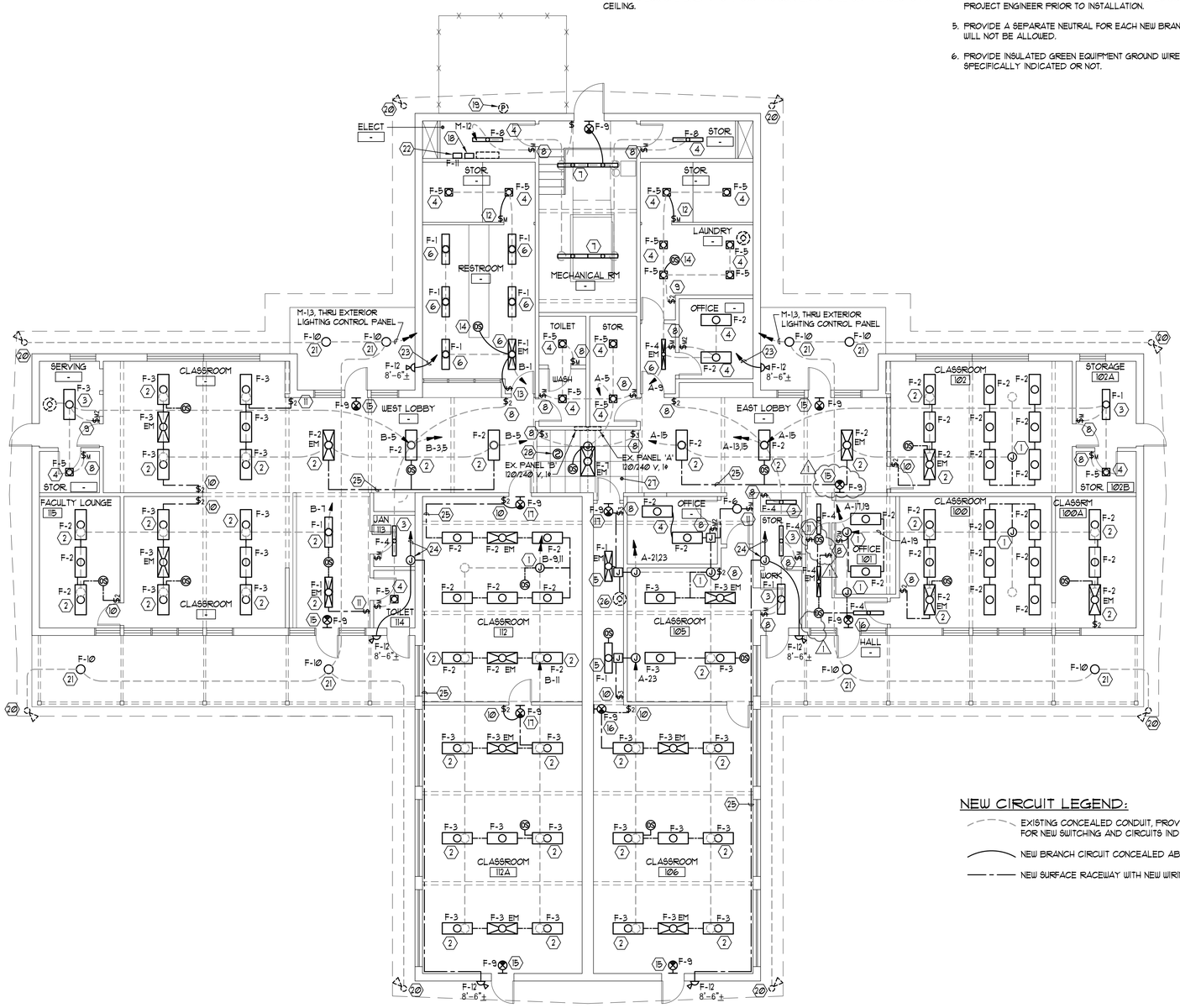

NEW CIRCUIT LEGEND:

- EXISTING CONCEALED CONDUIT, PROVIDE NEW WIRING AS REQUIRED FOR NEW SWITCHING AND CIRCUITS INDICATED.
- NEW BRANCH CIRCUIT CONCEALED ABOVE EXISTING CEILING
- NEW SURFACE RACEWAY WITH NEW WIRING

A1 **NEW LIGHTING PLAN**
SCALE: 1/8" = 1'-0"

NORTH

PROJECT ENGINEER:
THOMAS & KOLKMAN ENGINEERING CO. INC.
64 WEST 1700 SOUTH
SALT LAKE CITY, UTAH 84115
TELEPHONE: (801) 484-8161
FACSIMILE: (801) 484-3538
Email: grandyb•utahmicro.net

CONSULTANTS:

OWNER:
State of Utah
Department of Administrative Services
Division of Facilities Construction & Management
4110 State Office Building
Salt Lake City, Utah 84114
Phone: (801) 538 - 3018
Fax: (801) 538 - 3267
Internet: http://dfcm.utah.gov

PROJECT:
CHILDREN'S SCHOOL SOUTH ELECTRICAL IMPROVEMENTS

OGDEN - WEBER APPLIED TECHNOLOGY COLLEGE

MAIN CAMPUS
200 NORTH WASHINGTON BLVD.
OGDEN, UTAH 84404

REVISIONS:

MARK	DATE	DESCRIPTION
1	9/30/09	PROJECT MODIFICATION & REVIEW

ISSUE TYPE: CONSTRUCTION DOCUMENTS
ISSUE DATE: AUGUST 3, 2009
DFCM PROJECT NO: 08051240
STATE PROPERTY NO: n.a.
CAD DWG FILE: E-101.dwg
DRAWN BY: WBG.
CHECKED BY: RGK.
COPYRIGHT: STATE OF UTAH

SHEET TITLE:
NEW LIGHTING PLAN

SHEET NUMBER:
EL101

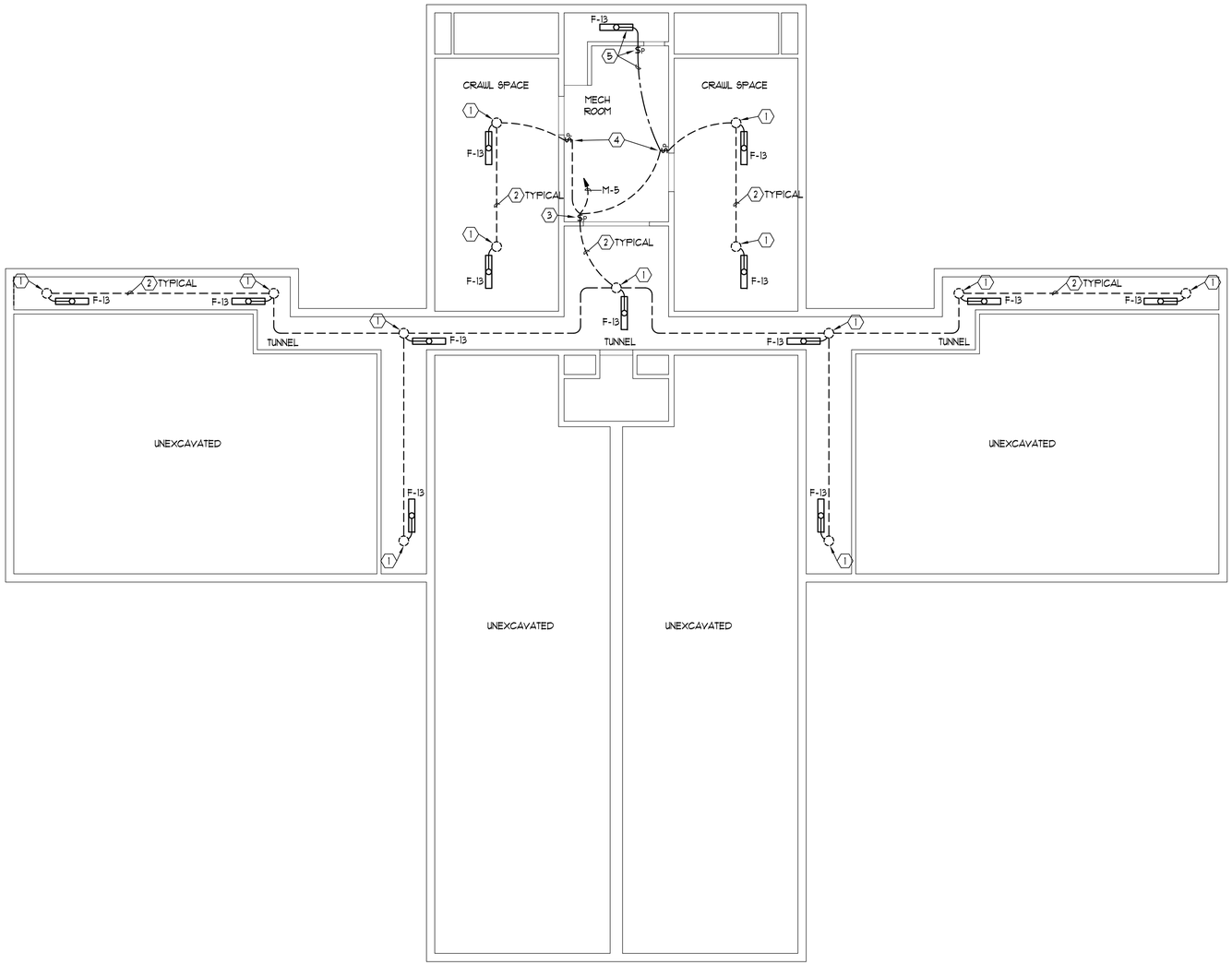

A1 TUNNEL AND CRAWL SPACE LIGHTING PLAN
SCALE: 1/8" = 1'-0"

NORTH

GENERAL NOTES:

1. LOCATIONS OF EXISTING ELECTRICAL EQUIPMENT, RECEPTACLES, OUTLETS, BRANCH CIRCUIT WIRING, ETC., ARE BASED ON EXISTING BUILDING ELECTRICAL DRAWINGS AND FIELD OBSERVATION OF EXISTING SURFACE CONDITIONS. FIELD VERIFY EXISTING LOCATIONS AND CIRCUITING AND IMMEDIATELY NOTIFY THE ENGINEER OF ANY DISCREPANCIES WHICH MAY ADVERSELY AFFECT COMPLETION OF THE WORK.
2. TAKE ALL PRECAUTIONS NECESSARY TO AVOID DAMAGE TO THE EXISTING BUILDING. REPAIR ALL DAMAGE INCURRED BY DEMOLITION AND NEW CONSTRUCTION TO EXACTLY MATCH SURROUNDING SURFACES AND/OR CONDITIONS WITHOUT ADDITIONAL COST TO THE OWNER.
3. COORDINATE NEW FIXTURE LOCATIONS WITH EXISTING BUILDING STRUCTURE, PIPING, EQUIPMENT, ETC. DO NOT BLOCK ANY VALVES, FITTINGS, EQUIPMENT, ETC., WHICH MAY REQUIRE MAINTENANCE.
4. PROVIDE A SEPARATE NEUTRAL FOR EACH NEW BRANCH. NEW MULTI-WIRE CIRCUITS WILL NOT BE ALLOWED.
5. PROVIDE INSULATED GREEN EQUIPMENT GROUND WIRE IN ALL RACEWAYS WHETHER SPECIFICALLY INDICATED OR NOT.

KEYED NOTES:

1. REMOVE EXISTING INCANDESCENT FIXTURE AND PROVIDE NEW EXTENSION ON EXISTING OUTLET BOX AND 1/2" FLEXIBLE STEEL CONDUIT TO NEW F-13 FIXTURE. FIELD COORDINATE EXACT LOCATION OF NEW FIXTURE WITH EXISTING PIPING AND EQUIPMENT. DO NOT BLOCK ANY VALVES, FITTINGS, ETC., WHICH MAY REQUIRE MAINTENANCE.
2. EXISTING BRANCH CIRCUIT CONDUIT TO REMAIN. REPLACE ALL EXISTING WIRING WITH NEW WIRING.
3. REPLACE EXISTING SWITCH CONTROLLING ALL LIGHTING IN TUNNELS AND CRAWL SPACES WITH NEW SWITCH TO CONTROL TUNNEL LIGHTING ONLY.
4. PROVIDE NEW SWITCH TO INDIVIDUALLY CONTROL LIGHTING EACH EXISTING CRAWL SPACE. PROVIDE NEW WIRING, CONDUIT, BOXES, ETC., AS REQUIRED.
5. PROVIDE NEW FIXTURE AND SWITCH FOR EXISTING CRAWL SPACE UNDER STAIR PLATFORM AND CONNECT TO EXISTING BRANCH CIRCUIT AS INDICATED.

PROJECT ENGINEER:
THOMAS & KOLKMAN ENGINEERING CO. INC.
64 WEST 1700 SOUTH
SALT LAKE CITY, UTAH 84115
TELEPHONE: (801) 484-8161
FACSIMILE: (801) 484-3538
Email: grandyb•utahmicro.net

CONSULTANTS:

OWNER:
State of Utah
Department of Administrative Services
Division of Facilities Construction & Management
4110 State Office Building
Salt Lake City, Utah 84114
Phone: (801) 538 - 3018
Fax: (801) 538 - 3267
Internet: http://dfcm.utah.gov

PROJECT:
CHILDREN'S SCHOOL SOUTH ELECTRICAL IMPROVEMENTS

OGDEN - WEBER APPLIED TECHNOLOGY COLLEGE

MAIN CAMPUS
200 NORTH WASHINGTON BLVD.
OGDEN, UTAH 84404

REVISIONS:

MARK	DATE	DESCRIPTION

ISSUE TYPE: CONSTRUCTION DOCUMENTS
ISSUE DATE: SEPT. 30, 2008
DFCM PROJECT NO: 08051240
STATE PROPERTY NO: n.a.
CAD DWG FILE: E-101.dwg
DRAWN BY: W.B.G.
CHECKED BY: R.G.K.
COPYRIGHT: STATE OF UTAH

SHEET TITLE:
TUNNEL AND CRAWL SPACE LIGHTING PLAN

SHEET NUMBER:
EL102

EXISTING PANEL 'A'
SQUARE D TYPE NQOB WITH 'QOB' BREAKERS — 10,000 A.I.C., FULLY RATED
2 POLE 225 AMP MAIN LUGS — 20" WIDE x 5-3/4" DEEP x 35" HIGH ENCLOSURE — 120/240 VOLT, 1 PHASE, 3 WIRE — FLUSH MOUNTED

CIR NO.	BRKR P	BRKR AMPS	DESCRIPTION	NO. LTS	NO. REC	CIRCUIT LOAD	LOAD - VA PHASE A	LOAD - VA PHASE B	CIRCUIT LOAD	NO. REC	NO. LTS	DESCRIPTION	BRKR P	BRKR AMPS	CIR NO.
1	1	20	REC, ADULT HIGH		4	720	1,260		540	3		REC, EAST FOYER	1	20	2
3			EM LTS & REC, ADULT HIGH		4	720		1,080	360	2		REC, INFANT-TODDLER			4
5			LTS, LAUNDRY & OFFICE	9		670	1,670		1,000			UNKNOWN			6
7			FIRE ALARM CONTROL PANEL			200		1,200	1,000			UNKNOWN			8
9			LTS, HALL, STOR. & TOILET	6		330	1,050		720	4		REC, OFFICE & PARENTING			10
11			UNKNOWN			1,000		1,540	540	3		REC, OFFICE			12
13			LTS, LOBBY, STOR, WORK	6		410	410					SPARE (REMOVED CIRCUIT)			14
15			LTS, CLASSROOM 102	11		925		1,925	1,000			UNKNOWN			16
17			LTS, FRONT OFFICE & HALL	5		275	815		540	3		REC, OFFICE & HALLWAY			18
19			LTS, CLASSROOM 100	12		1,080		1,620	540	3		REC, OFFICE			20
21			LTS, CLSSRM 105 & OFFICE	10		815	1,815		1,000			UNKNOWN			22
23			LTS, CLASSROOM 106	9		1080		1,440	360	2		REC, INFANT-TODDLER			24
25			SPARE (REMOVED CIRCUIT)				360		360	2		REC, EXTERIOR			26
27			SPARE (REMOVED CIRCUIT)					360	360	2		REC, EAST FOYER NE EXIT LT			28
29			SPARE (REMOVED CIRCUIT)				360		360	2		REC, ADULT HIGH OFFICE & WC	1	20	30
31			SPARE (REMOVED CIRCUIT)					0		1		RANGE OUTLET, RM 102	2	50	32
33			REC, ADULT HIGH - REFRIG		4	720	720					(NOT USED)	-	-	34
35	1	20	REC, ADULT HIGH		4	720		720				SPARE (REMOVED CIRCUIT)	1	20	36
37	2	30	DRYER			2,500	2,860		360	2		REC, EAST TOILET			38
39	-	-	-			2,500		2,500				SPARE			40
41	1	20	SPARE				0					SPARE	1	20	42
							11,320	12,385							

TOTAL CONNECTED LOAD: 23,705 VA 99 AMPS — FEEDER: EXISTING 3 #3/0, 2" C
CALCULATED FEEDER DEMAND, NEC 220: 23,691 VA 99 AMPS

NOTES
1. REPLACE ALL EXISTING CIRCUIT BREAKERS WITH NEW SQUARE D TYPE 'QOB' CIRCUIT BREAKERS OF RATINGS INDICATED. AT CONTRACTOR'S OPTION, THE PANEL MAY BE REPLACED IN IT'S ENTIRETY, OR NEW INTERIOR MAY BE INSTALLED IN EXISTING ENCLOSURE IF NEC REQUIRED FEEDER BENDING SPACE IS PROVIDED. SPLICING CONDUCTORS WILL NOT BE ALLOWED.
2. FIELD VERIFY EACH EXISTING BRANCH CIRCUIT. PROVIDE NEW TYPEWRITTEN CIRCUIT INDEX TO INDICATE SPECIFIC LOAD AND LOCATION BY ROOM NUMBER FOR EACH BRANCH CIRCUIT.

EXISTING PANEL 'B'
SQUARE D TYPE NQOB WITH 'QOB' BREAKERS — 10,000 A.I.C., FULLY RATED
2 POLE 225 AMP MAIN LUGS — 20" WIDE x 5-3/4" DEEP x 35" HIGH ENCLOSURE — 120/240 VOLT, 1 PHASE, 3 WIRE — FLUSH MOUNTED

CIR NO.	BRKR P	BRKR AMPS	DESCRIPTION	NO. LTS	NO. REC	CIRCUIT LOAD	LOAD - VA PHASE A	LOAD - VA PHASE B	CIRCUIT LOAD	NO. REC	NO. LTS	DESCRIPTION	BRKR P	BRKR AMPS	CIR NO.
1	1	20	LTS, RESTROOM	8		480	480					SPARE (REMOVED CIRCUIT)	1	20	2
3			LTS, LOBBY, JAN, TOILET	5		330		510	180	1		REC, TOILET ROOM			4
5			LTS, NW CLSSRM, SERVING	8		940	940					SPARE (REMOVED CIRCUIT)			6
7			LTS, SW CLSSRM, LOUNGE, HALL	11		1,110		2,110	1,000			UNKNOWN			8
9			LTS, CLASSROOM 112	10		815	1,175		360	2		REC, 4-5 YR OLD NORTH WALL			10
11			LTS, CLASSROOM 112A			1,085		1,445	360	2		REC, 2-3 YR OLD CLASSROOM			12
13			UNKOWN			1,000	2,000		1,000			UNKNOWN			14
15			UNKOWN			1,000		2,000	1,000			UNKNOWN			16
17			REC, 2-3 YR OLD CLASSROOM		4	720	1,720		1,000			UNKNOWN			18
19			REC & EXIT 2-3 YR OLD CLRM		4	720		1,720	1,000			UNKNOWN			20
21			DRINKING FOUNTAIN		1	180	720		540	3		REC, 4-5 YR OLD AREA			22
23			REC, 4-5 YR OLD AREA		3	540		1,080	540	3		REC, 4-5 YR OLD AREA			24
25			UNKOWN			1,000	1,000					SPARE (REMOVED CIRCUIT)			26
27			REC, OUTSIDE WEST		2	360		360				SPARE (REMOVED CIRCUIT)			28
29			SPARE (REMOVED CIRCUIT)				720		720	4		REC, 2-3 YR OLD CLASSROOM			30
31			REC, SERVING		2	360		360				SPARE			32
33			SPARE				0					SPARE (REMOVED CIRCUIT)			34
35			SPARE (REMOVED CIRCUIT)					0				SPARE	1	20	36
37			SPARE				4,000		4,000			RANGE OUTLET, SERVING RM	2	50	38
39			EXIT, REC, WEST FOYER		2	360		4,360	4,000			-	-	-	40
41	1	20	SPARE				360		360	2		EXIT LTS & REC, WEST FOYER	1	20	42
							13,115	13,945							

TOTAL CONNECTED LOAD: 27,060 VA 113 AMPS — FEEDER: EXISTING 3 #3/0, 2" C
CALCULATED FEEDER DEMAND, NEC 220: 26,100 VA 109 AMPS

NOTES
1. REPLACE ALL EXISTING CIRCUIT BREAKERS WITH NEW SQUARE D TYPE 'QOB' CIRCUIT BREAKERS OF RATINGS INDICATED. AT CONTRACTOR'S OPTION, THE PANEL MAY BE REPLACED IN IT'S ENTIRETY, OR NEW INTERIOR MAY BE INSTALLED IN EXISTING ENCLOSURE IF NEC REQUIRED FEEDER BENDING SPACE IS PROVIDED. SPLICING CONDUCTORS WILL NOT BE ALLOWED.
2. FIELD VERIFY EACH EXISTING BRANCH CIRCUIT. PROVIDE NEW TYPEWRITTEN CIRCUIT INDEX TO INDICATE SPECIFIC LOAD AND LOCATION BY ROOM NAME AND NUMBER FOR EACH BRANCH CIRCUIT.

NEW MAIN PANEL 'M'
SQUARE D I-LINE TYPE 'HCM', OR APPROVED EQUAL — 10,000 A.I.C., FULLY RATED
2 POLE 400 AMP MAIN LUGS — MINIMUM 30" W x 8" D ENCLOSURE (NOTE 1) — 120/240 VOLT, 1 PHASE, 3 WIRE — SURFACE MOUNTED

CIR NO.	BRKR P	BRKR AMPS	DESCRIPTION	NO. LTS	NO. REC	CIRCUIT LOAD	LOAD - VA PHASE A	LOAD - VA PHASE B	CIRCUIT LOAD	NO. REC	NO. LTS	DESCRIPTION	BRKR P	BRKR AMPS	CIR NO.
1	1	20	LTS, OUTSIDE - NIGHT LTS	8		1,040	1,040					SPARE	1	20	2
3			LTS, OUTSIDE - TIMED OFF	8		1,040		1,040				SPARE			4
5			LTS, TUNNEL	9		900	900					DOOR BELL			6
7			COND. PUMP			865		1,765	900	5		REC, ELEC & MECH ROOMS			8
9			CLOCKS			200	730		530			CIRCULATING PUMP HOT WATER			10
11	1	20	COMPRESSOR PUMP			865		865				LTS, MECH & ELECT ROOMS	1	20	12
13	2	20	MECH. RM EXHAUST FAN			795	795					SPARE	2	40	14
15	-	-	-			795		795				-	-	-	16
17	2	70	BLOWER FAN			3,220	3,220					SPARE	2	20	18
19	-	-	-			3,220		3,220				-	-	-	20
21	2	100	PANEL 'M2'			2,675	2,685		10			KWH DEMAND METER VOLTAGE	2	15	22
23	-	-	-			1,500		1,510	10			-	-	-	24
25	1	20	SPARE				0					SPARE	1	20	26
27	1		SPACE					0				SPACE	1		28
29	1		SPACE				0					SPACE	1		30
31	1		SPACE					0				SPACE	1		32
33	1		SPACE				0					SPACE	1		34
35	1		SPACE					0				SPACE	1		36
37	2	200	PANEL 'A'			11,320	24,435		13,115			PANEL 'B'	2	200	38
39	-	-	-			12,385		26,330	13,945			-	-	-	40
41	1		SPACE				0					SPACE	1		42
							33,805	35,525							

TOTAL CONNECTED LOAD: 69,330 VA 289 AMPS — FEEDER: 3 #350 KCM, 1 #2 GND, 3" C
CALCULATED FEEDER DEMAND, NEC 220: 65,001 VA 271 AMPS

NOTES
1. INDICATED MINIMUM ENCLOSURE SIZE IS REQUIRED TO ALLOW RECONNECTION OF EXISTING CONDUITS TO NEW ENCLOSURE.
2. SPLICING OF EXISTING BRANCH CIRCUIT AND FEEDER CONDUCTORS WILL BE ALLOWED ONLY BY IN-LINE COMPRESSION CONNECTORS WITH HEAT SHRINK INSULATING KITS.
3. FIELD VERIFY EACH EXISTING BRANCH CIRCUIT. PROVIDE NEW TYPEWRITTEN CIRCUIT INDEX TO INDICATE SPECIFIC LOAD AND LOCATION BY ROOM NUMBER FOR EACH BRANCH CIRCUIT.

NEW PANEL 'M2'
TYPE 'NQOD', BOLT-ON BREAKERS — 10,000 A.I.C., FULLY RATED
2 POLE 100 AMP MAIN LUGS — 120/240 VOLT, 1 PHASE, 3 WIRE — SURFACE MOUNTED

CIR NO.	BRKR P	BRKR AMPS	DESCRIPTION	NO. LTS	NO. REC	CIRCUIT LOAD	LOAD - VA PHASE A	LOAD - VA PHASE B	CIRCUIT LOAD	NO. REC	NO. LTS	DESCRIPTION	BRKR P	BRKR AMPS	CIR NO.
1	2	40	SPARE				500		500			ATC CONTROL	1	20	2
	-	-	(ABANDONED)					500	500			PUMP & HOT WATER CONTROL	1	20	4
3	2	20	SERVING DISHWASHER			1,000	2,175		1,175			RELIEF FAN	1	20	6
	-	-	-			1,000		1,000				SPARE	1	20	8
5	2	100	MAIN ??				0					SPARE	1	20	10
	-	-						0				SPARE	1	20	12
13	1		SPACE				0					SPACE	1		14
15	1		SPACE					0				SPACE	1		16
17	1		SPACE				0					SPACE	1		18
19	1		SPACE					0				SPACE	1		20
							2,675	1,500							

TOTAL CONNECTED LOAD: 4,175 VA 17 AMPS — FEEDER: NEW 3 #2, 1 #8 GND, 1-1/2" C
CALCULATED FEEDER DEMAND, NEC 220: 4,469 VA 19 AMPS

NOTES
1. PROVIDE NEW PANEL 'M2' TO REPLACE EXISTING PANEL 'M2'.
2. FIELD VERIFY EACH EXISTING BRANCH CIRCUIT. PROVIDE NEW TYPEWRITTEN CIRCUIT INDEX TO INDICATE SPECIFIC LOAD AND LOCATION BY ROOM NUMBER FOR EACH BRANCH CIRCUIT.

GENERAL NOTES:

1. LOCATIONS OF EXISTING ELECTRICAL SERVICE EQUIPMENT, FEEDERS, ETC., ARE BASED ON EXISTING BUILDING ELECTRICAL DRAWINGS AND FIELD OBSERVATION OF EXISTING SURFACE CONDITIONS. FIELD VERIFY EXISTING LOCATIONS AND IMMEDIATELY NOTIFY THE ENGINEER OF ANY DISCREPANCIES WHICH MAY ADVERSELY AFFECT COMPLETION OF THE WORK.
2. TAKE ALL PRECAUTIONS NECESSARY TO AVOID DAMAGE TO THE EXISTING BUILDING. REPAIR ALL DAMAGE INCURRED BY DEMOLITION AND NEW CONSTRUCTION TO EXACTLY MATCH SURROUNDING SURFACES AND/OR CONDITIONS WITHOUT ADDITIONAL COST TO THE OWNER.
3. POWER OUTAGES TO THE EXISTING BUILDING WILL NOT BE ALLOWED EXCEPT AS DIRECTED BY OWNER. SUBMIT REQUESTS FOR POWER OUTAGES TO THE OWNER MINIMUM SEVEN (7) DAYS PRIOR TO ANY PROPOSED POWER OUTAGES. DO NOT TAKE ANY POWER OUTAGES WITHOUT OWNER'S PERMISSION.

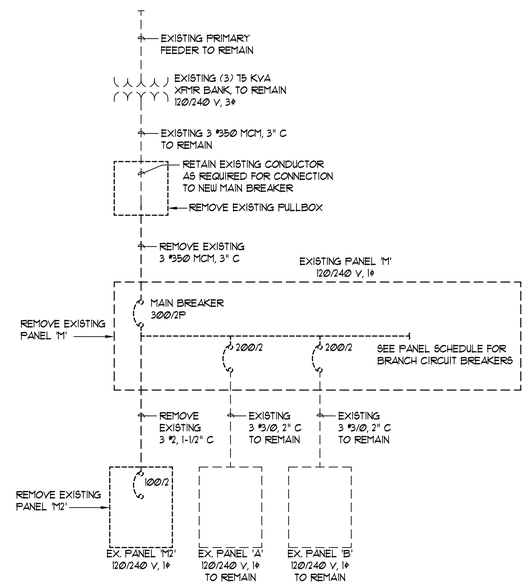

B3 EXISTING SINGLE LINE DIAGRAM
SCHEMATIC

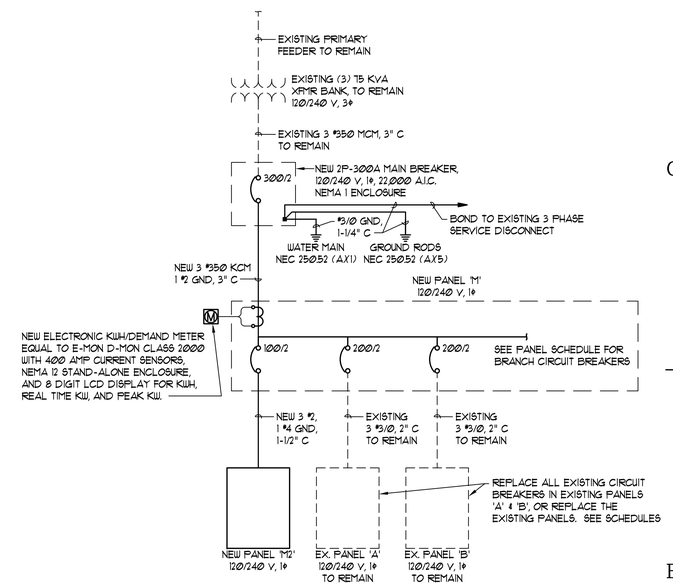

B4 NEW SINGLE LINE DIAGRAM
SCHEMATIC

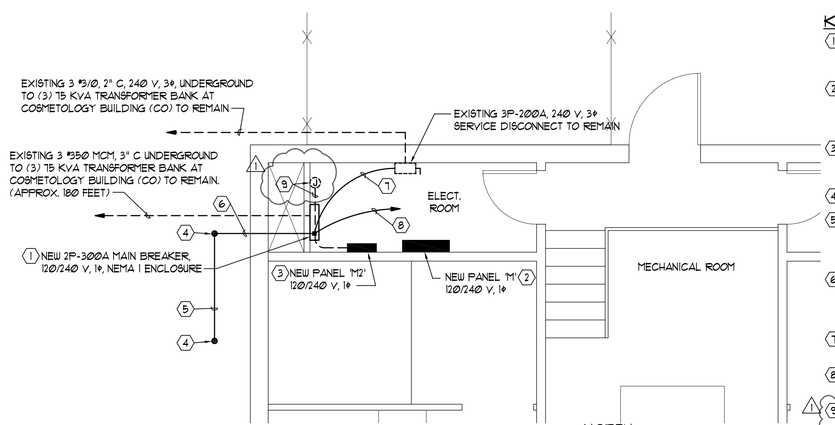

A3 PARTIAL ENLARGED POWER PLAN
SCALE: 1/4" = 1'-0"

KEYED NOTES:

1. PROVIDE NEW MAIN BREAKER TO REPLACE EXISTING PULLBOX. REMOVE WIRE AND CONDUIT FROM PULLBOX TO EXISTING MAIN PANEL. RECONNECT EXISTING SERVICE CONDUCTORS TO NEW MAIN BREAKER.
2. PROVIDE NEW PANEL 'M' TO REPLACE EXISTING MAIN PANEL AT THE SAME LOCATION. RECONNECT ALL EXISTING BRANCH CIRCUITS AND FEEDERS. SPLICING OF EXISTING CONDUCTORS WILL BE ALLOWED ONLY BY IN-LINE COMPRESSION SPLICES WITH HEAT SHRINK INSULATING KITS.
3. PROVIDE NEW PANEL 'M2' TO REPLACE EXISTING PANEL AT THE SAME LOCATION. RECONNECT ALL EXISTING BRANCH CIRCUITS. REPLACE EXISTING FEEDER TO NEW PANEL 'M'.
4. NEW 3/4" x 10'-0" COPPER GROUND ROD. TYPICAL OF 2.
5. NEW #3/0 BARE COPPER CONDUCTOR BURIED 12" BELOW GRADE. CONNECT TO GROUND RODS BY EXOTHERMIC WELD. REMOVE AND REPLACE EXISTING GRASS SOD AS REQUIRED TO INSTALL NEW GROUND RODS AND UNDERGROUND CONDUCTORS.
6. NEW #3/0 BARE COPPER GROUNDING ELECTRODE CONDUCTOR, 1-1/4" CONDUIT FROM GROUND RODS TO NEW MAIN BREAKER. CORE-DRILL EXISTING EXTERIOR BRICK WALL FOR NEW CONDUIT PENETRATION AND SEAL WEATHERTIGHT WITH NON-SHRINK EPOXY GROUT TO MATCH BRICK COLOR.
7. NEW #3/0 GROUNDING ELECTRODE CONDUCTOR, 1-1/4" CONDUIT, BOND TO EXISTING 3 PHASE SERVICE DISCONNECT.
8. NEW #3/0 GROUNDING ELECTRODE CONDUCTOR, 1-1/4" CONDUIT, BOND TO EXISTING MAIN WATER LINE IN MECHANICAL ROOM. FIELD VERIFY EXACT LOCATION.
9. RELOCATE AND RECONNECT EXISTING CIRCUIT TO HOT WATER CIRCULATING PUMP AS REQUIRED TO INSTALL NEW SINGLE PHASE MAIN BREAKER.

PROJECT ENGINEER:
THOMAS & KOLKMAN ENGINEERING CO. INC.
64 WEST 1700 SOUTH
SALT LAKE CITY, UTAH 84115
TELEPHONE: (801) 484-8161
FACSIMILE: (801) 484-3538
Email: grandyb•utahmicro.net

CONSULTANTS:

OWNER:
State of Utah
Department of Administrative Services
Division of Facilities Construction & Management
4110 State Office Building
Salt Lake City, Utah 84114
Phone: (801) 538 - 3018
Fax: (801) 538 - 3267
Internet: http://dfcm.utah.gov

PROJECT:
CHILDREN'S SCHOOL
SOUTH
ELECTRICAL
IMPROVEMENTS

OGDEN - WEBER
APPLIED
TECHNOLOGY COLLEGE

MAIN CAMPUS
200 NORTH WASHINGTON BLVD.
OGDEN, UTAH 84404

REVISIONS:

MARK	DATE	DESCRIPTION
1	9/30/09	PROJECT MODIFICATION & REVIEW

ISSUE TYPE: CONSTRUCTION DOCUMENTS
ISSUE DATE: AUGUST 3, 2009
DFCM PROJECT NO: 08051240
STATE PROPERTY NO: n.a.
CAD DWG FILE: E-101.dwg
DRAWN BY: WBG.
CHECKED BY: RGK.
COPYRIGHT: STATE OF UTAH

SHEET TITLE:
PARTIAL POWER PLAN, SINGLE LINE DIAGRAMS, AND PANEL SCHEDULES

SHEET NUMBER:
EP101

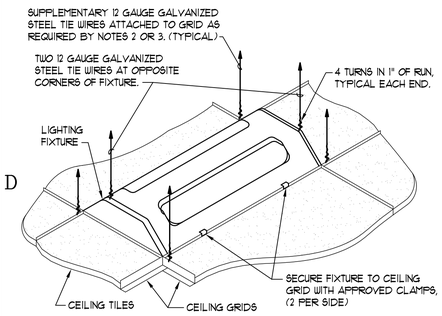

FIXTURE SUPPORT NOTES:

1. ALL LIGHTING FIXTURES SHALL BE POSITIVELY ATTACHED TO THE SUSPENDED CEILING SYSTEM. THE ATTACHMENT DEVICE SHALL HAVE A CAPACITY OF 100% OF THE LIGHTING FIXTURE WEIGHT ACTING ANY DIRECTION.
2. FOR INTERMEDIATE DUTY CEILING SYSTEM, PROVIDE A SUPPLEMENTARY 12 GAUGE HANGER ATTACHED TO THE GRID MEMBERS WITHIN 3" OF EACH CORNER OF EACH FIXTURE AS SHOWN ON DETAIL. TANDEM FIXTURES MAY UTILIZE COMMON WIRES.
3. FOR HEAVY DUTY CEILING SYSTEM, SUPPLEMENTARY HANGERS ARE NOT REQUIRED IF A 48" MODULAR HANGER WIRE PATTERN IS USED AND THE LIGHTING FIXTURE IS SUPPORTED FROM MAIN TEES. SUPPLEMENTARY 12 GAUGE HANGERS ARE REQUIRED WHERE THE FIXTURE IS SUPPORTED FROM CROSS TEES WITH LESS CARRYING CAPACITY THAN THE MAIN TEES.
4. LIGHTING FIXTURES WEIGHING LESS THAN 56 LBS. SHALL HAVE, IN ADDITION TO THE REQUIREMENTS OUTLINED ABOVE, TWO 12 GAUGE HANGERS CONNECTED FROM THE FIXTURE HOUSING TO THE STRUCTURE ABOVE. THESE WIRES MAY BE SLACK.
5. LIGHTING FIXTURES WEIGHING 56 LBS. OR MORE SHALL BE SUPPORTED DIRECTLY FROM THE STRUCTURE ABOVE BY APPROVED HANGERS.
6. PENDANT HUNG LIGHTING FIXTURES SHALL BE SUPPORTED DIRECTLY FROM THE STRUCTURE ABOVE USING 9 GAUGE WIRES OR APPROVED ALTERNATE SUPPORT WITHOUT USING CEILING SUSPENSION SYSTEM FOR DIRECT SUPPORT.
7. COORDINATE SUPPORT REQUIREMENTS AND HANGER WIRE INSTALLATION WITH CEILING CONTRACTOR.

TYPICAL LIGHTING FIXTURE SUPPORT DETAIL
NOT TO SCALE

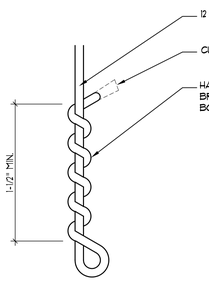

SUSPENDED ACOUSTICAL CEILING HANGER OR BRACE WIRE

(C2) TYPICAL CEILING DETAIL
N.T.S.

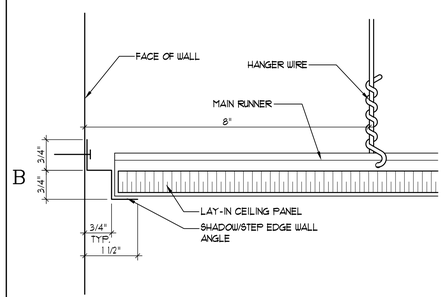

(B1) TYPICAL CEILING DETAIL
SCALE: 6" = 1'-0"

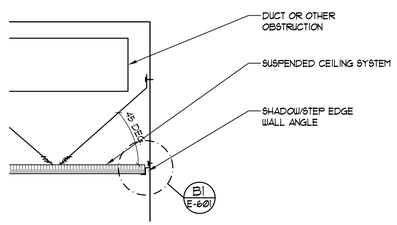

NOTE: WHEN DUCT OR OTHER OBSTRUCTION PREVENTS SPLAY WIRE ATTACHED AT CEILING, OR IF 45° CANNOT BE ACHIEVED THE USE OF SIDEWALL MAY BE USED.

(B2) TYPICAL CEILING DETAIL
SCALE: 2" = 1'-0"

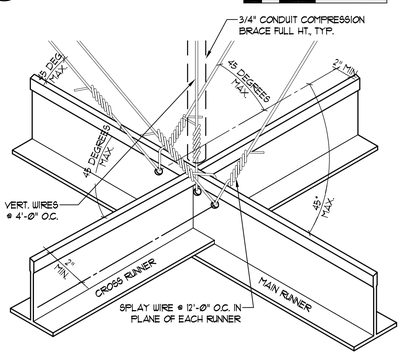

(A1) TYPICAL CEILING DETAIL
N.T.S.

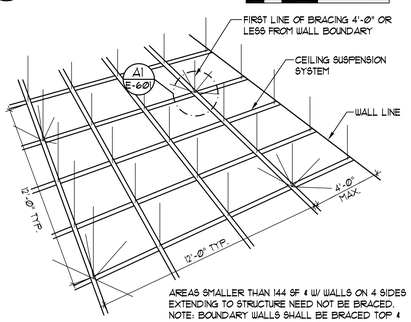

AREAS SMALLER THAN 144 SF & W/ WALLS ON 4 SIDES EXTENDING TO STRUCTURE NEED NOT BE BRACED.
NOTE: BOUNDARY WALLS SHALL BE BRACED TOP & BOTTOM INDEPENDENT OF CEILING.
NOTE: CEILING GRID SHALL BE RIVETED 2 SIDES & SPACES INSTALLED ON OPPOSITE 2 SIDES.

(A2) TYPICAL CEILING DETAIL
N.T.S.

FIXTURE SCHEDULE

SYMBOL	MANUFACTURER	CATALOG NO.	DESCRIPTION	LAMP
F-1	COLUMBIA DAY-BRITE LA LIGHTING LITHONIA LSI METALUX	EWM4-232-EPLWU DWN-232-UNV-1/2-EBL10R WSM100-2-4R-PA-1EBR10L AW-232-MVOLT-GEB10RSL TSW11-232-SSDRL-UE SA-232-A-UNV-ER81LW	4 FT, 2 LAMP SURFACE MOUNTED STRAIGHT SIDE WRAPAROUND FLUORESCENT FIXTURE WITH EXTRUDED ACRYLIC PRISMATIC LENS AND ONE 2 LAMP <10% THD PROGRAMMED START LOW WATTAGE ELECTRONIC BALLAST.	2F32T8/ADV835
F-2	COLUMBIA DAY-BRITE LA LIGHTING LITHONIA LSI METALUX	EWM4-332-EPLWU DWW-332-UNV-1/21-EBL10R WSM200-3-4R-PA-1/2EBR10L AW-332-MVOLT-GEB10RSL TSW16-332-SSDRL2-UE SA-332-A-UNV-ER82LW	4 FT, 3 LAMP SURFACE MOUNTED STRAIGHT SIDE WRAPAROUND FLUORESCENT FIXTURE WITH EXTRUDED ACRYLIC PRISMATIC LENS AND ONE 1 LAMP AND ONE 2 LAMP <10% THD PROGRAMMED START LOW WATTAGE ELECTRONIC BALLASTS WIRED FOR INBOARD - OUTBOARD LAMP OPERATION.	3F32T8/ADV835
F-3	COLUMBIA DAY-BRITE LA LIGHTING LITHONIA LSI METALUX	EWM4-432-EPLWU DWW-432-UNV-2/2-EBL10R WSM200-4-4R-PA-2EBR10L AW-432-MVOLT-GEB10RSL TSW16-432-SSDRL2-UE SA-432-A-UNV-ER82LW	4 FT, 4 LAMP SURFACE MOUNTED STRAIGHT SIDE WRAPAROUND FLUORESCENT FIXTURE WITH EXTRUDED ACRYLIC PRISMATIC LENS AND TWO 2 LAMP <10% THD PROGRAMMED START LOW WATTAGE ELECTRONIC BALLASTS WIRED FOR INBOARD - OUTBOARD LAMP OPERATION.	4F32T8/ADV835
F-4	COLUMBIA DAY-BRITE LA LIGHTING LITHONIA LSI METALUX	PT4-232-EPLWU SJ-132-UNV-1/1-EBL10R CDR100-1-4R-PA-1EBR10L CA-132-MVOLT-GEB10RSL TSW5-132-SSDRL-UE CR-132-A-UNV-ER81LW	4 FT, 1 LAMP SURFACE MOUNTED WRAPAROUND FLUORESCENT FIXTURE WITH ACRYLIC PRISMATIC LENS AND ONE 1 LAMP <10% THD PROGRAMMED START LOW WATTAGE ELECTRONIC BALLAST.	1F32T8/ADV835
F-5	ATLANTIC GOTHAM PEACHTREE	SQ12T226E1/2-PR LAF-2/26TRT-12FW-173-MVOLT PSFT-12-226-PG-FT-SQ	12" SQUARE RECESSED COMPACT FLOURESCENT FIXTURE WITH FLUSH WHITE DOOR, TEMPERED PRISMATIC GLASS LENS, AND <10% THD ELECTRONIC BALLAST.	2CFTR26W/GX24q /835
F-6	GOTHAM HE WILLIAMS LIGHTOLIER OMEGA PORTFOLIO PRESCOLITE	CF11-2/26TRT-10-AR-LD-DWHG-MVOLT PHC11/85-226T-EB-GX24q3-CS-UNV-WH CS8242H-UCL DM10-2H26PLTSC-CSSFF-U C19232-E-P/9250-H CFS932EB-CR-WH	SURFACE MOUNTED COMPACT FLOURESCENT DOWNLIGHT WITH ALUMINUM HOUSING, CLEAR SEMI-SPECULAR REFLECTOR, WHITE FINISH, AND <10% THD ELECTRONIC BALLAST.	2CFTR26W/GX24q /835
F-7	COLUMBIA DAY-BRITE LIGHTOLIER LITHONIA LSI METALUX	ST824-332G-FSA12. 125-EPLWU 2SPG-332-FS21-UNV-1/21-EBL10R XP2GV1332-UNV-P2L 2SP8G-332-A12125-MVOLT-GEB10RSL GA125-332-SD-SSDRL2-UE 2GC8-332-A125-UNV-ER82LW	2' x 4', 3 LAMP, LAY-IN FLUORESCENT FIXTURE WITH FLUSH STEEL DOOR, 0.125" THICK ACRYLIC PRISMATIC LENS, AND ONE 1 LAMP AND TWO 2 LAMP <10% THD PROGRAMMED START LOW WATTAGE ELECTRONIC BALLASTS WIRED FOR INBOARD/OUTBOARD LAMP SWITCHING.	3F32T8/ADV835
F-8	COLUMBIA DAY-BRITE LA LIGHTING LITHONIA LSI METALUX	CS4-232-EPLWU T232-UNV-1/2-EBL10R STR240-2-4R-1EBR10L C232-MVOLT-GEB10RSL S-232-SSDRL-UE SS-232-UNV-ER81LW	4 FT, 2 LAMP SURFACE MOUNTED FLUORESCENT STRIPLIGHT WITH ONE 2 LAMP <10% THD PROGRAMMED START LOW WATTAGE ELECTRONIC BALLAST.	2F32T8/ADV835
F-9	DUAL LITE LIGHTGUARD LIGHTOLIER LITHONIA MCPHILBEN SURE-LITES	CVD-1-R-E-W DX-L-N-1-G-W LD-N-1-G-W LE-W-1-G-120/277-ELN ERSSL-1-W-G CAX-717000-G-W	UNIVERSAL MOUNTED, SINGLE FACE, LIGHT EMITTING DIODE (LED) EXIT LIGHT WITH DIE CAST ALUMINUM HOUSING, WHITE FINISH, GREEN LETTERS ON STENCIL FACE, UNIVERSAL KNOCKOUT CHEVRON ARROWS, NICKEL CADMIUM BATTERY WITH CHARGER AND TEST SWITCH, AND 120/277 DUAL VOLTAGE INPUT.	FURNISHED W/FIXTURE
F-10	HUBBELL LSI RUUD LIGHTING	HT1-CM-S70-HL-FGP-Q-GR PADM-RD-70HPS-73-MT-PLP MCL0S07-M-SILVER	SURFACE MOUNTED HIGH PRESSURE SODIUM FIXTURE WITH SQUARE ALUMINUM HOUSING, FLAT PRISMATIC TEMPERED GLASS LENS, GRAY FINISH, AND 120 VOLT HIGH POWER FACTOR BALLAST.	70 W HPS
F-11	CHLORIDE EVENLITE ISOLITE LIGHTGUARD LIGHTOLIER MCPHILBEN	TMF-100-W-ADTD S4E100-0-SD-TD120 ELS-12-100-0-XX-SD-TD120 V12-100-W-DTTD E4-2-10L--W-SD-T1 ES12L-100-W-SD-TD1	WALL MOUNTED EMERGENCY LIGHTING UNIT WITHOUT LAMP HEADS FOR REMOTE FEED, STEEL HOUSING, MINIMUM 75 WATT 12 VOLT LEAD CALCIUM BATTERY, CHARGER, 120/277 VOLT INPUT, SELF DIAGNOSTIC CIRCUITRY WITH INDICATORS AND TEST SWITCH, AND 15 MINUTE HID TIME DELAY.	NOT REQ'D
F-12	CHLORIDE ISOLITE LIGHTGUARD LIGHTOLIER MCPHILBEN	S-H1212-W-G LRH-1-H12W U-H1212-G ER-2-H12-W-G CCHR1W12G (12V 12W)	WALL MOUNTED REMOTE EMERGENCY LIGHT FIXTURE WITH 12 WATT 12 VOLT HALOGEN LAMP, GASKETED POLYCARBONATE DIFFUSER, AND WHITE FINISH. UL LISTED OUTDOOR WET LOCATION.	FURNISHED W/ FIXTURE
1 F-13	PAULUHN	VP-4-2-1-7-0-EBL10R/ VP1093MTK/ VP1091MTK	CORNER OR WALL MOUNTED WET LOCATION FLUORESCENT FIXTURE WITH FIBERGLASS REINFORCED POLYESTER HOUSING, GASKETED HIGH IMPACT ACRYLIC LENS, 1/2" CONDUIT FEED THROUGH HUBS, EXTERNAL THREADED STUD FOR STAINLESS STEEL MOUNTING BRACKET, AND UNIVERSAL VOLTAGE <10% THD PROGRAMMED START LOW WATTAGE ELECTRONIC BALLAST.	2F32T8/ADV835

NOTES:
1. PROVIDE EXTRA MATERIAL STOCK OF LAMPS AND LENSES. SEE SPECIFICATION SECTION 16500 - LIGHTING.
2. PROVIDE FIXTURES F-1, F-2, F-3 & F-4 WITH END KNOCKOUT FOR CONNECTION TO SURFACE RACEWAY SYSTEM.

SYMBOL LIST

SYMBOL	DESCRIPTION
	NEW CEILING MOUNTED FIXTURE
	NEW WALL MOUNTED FIXTURE
	NEW RECESSED FIXTURE
	NEW FLUORESCENT FIXTURE
	NEW EXIT LIGHT WITH ARROW INDICATING DIRECTION OF EXIT
EM	NEW FIXTURE WITH EMERGENCY LIGHTING BATTERY PACK
	NEW EMERGENCY LIGHTING BATTERY UNIT WITHOUT HEADS
	NEW REMOTE EMERGENCY LIGHTING FIXTURE INDICATING HEADS
	EXISTING CEILING MOUNTED FIXTURE
	EXISTING WALL MOUNTED FIXTURE
	EXISTING RECESSED FIXTURE
	EXISTING FLUORESCENT FIXTURE
	EXISTING FLOODLIGHT
	EXISTING EXIT LIGHT
	EXISTING EMERGENCY LIGHTING BATTERY UNIT INDICATING QUANTIY OF HEADS
$	NEW SINGLE POLE SWITCH
$3	NEW THREE WAY SWITCH
$2	NEW COMBINATION SWITCH - 2 SINGLE POLE SWITCHES
1 $P	NEW SWITCH WITH PILOT LIGHT
$W	NEW OCCUPANCY SENSOR WALL SWITCH
$W2	NEW DUAL LEVEL OCCUPANCY SENSOR WALL SWITCH
OS	NEW CEILING MOUNTED OCCUPANCY SENSOR, LINE VOLTAGE, 2000 WATT
P	EXISTING PHOTOCELL
$E	EXISTING SINGLE POLE SWITCH
$3E	EXISTING THREE WAY SWITCH
J	NEW JUNCTION BOX
J	EXISTING JUNCTION BOX
	EXISTING DUPLEX RECEPTACLE
	EXISTING PANELBOARD
	NEW PANELBOARD
	EXISTING SAFETY SWITCH
A-13 3	NEW BRANCH CIRCUIT HOMERUN INDICATING PANEL AND CIRCUIT NUMBERS
	NEW BRANCH CIRCUIT CONCEALED IN WALL OR CEILING
	NEW BRANCH CIRCUIT, SURFACE RACEWAY EXPOSED ON WALL OR CEILING
J	NEW SURFACE RACEWAY SYSTEM JUNCTION BOX
	EXISTING BRANCH CIRCUIT CONCEALED IN WALL OR CEILING
	EXISTING BRANCH CIRCUIT, SURFACE RACEWAY EXPOSED ON WALL OR CEILING
J	EXISTING SURFACE RACEWAY SYSTEM JUNCTION BOX
	EXISTING MOTOR
F-2	FIXTURE SCHEDULE SYMBOL
1	REFERENCE NOTE SYMBOL
102	ROOM NUMBER
WP	INDICATES ITEM IN WEATHERPROOF (NEMA 3R MINIMUM) ENCLOSURE

EXTERIOR LIGHTING CONTROL EQUIPMENT:

CB1 CONTROL CIRCUIT BREAKER, 120 VOLT, 5 AMP THERMAL MAGNETIC TRIP, RAIL MOUNTED: SQUARE D CLASS 9080, TYPE GCB50. INSTALL IN CABINET.

TS1 TIME SWITCH, 120 VAC, ELECTRONIC, WITH BATTERY BACKUP, 5 AMP SPST: INTERMATIC MODEL ET115-C OR EQUAL. INSTALL IN CABINET.

PC1 EXISTING PHOTOCELL, 2000 WATT, 120 VOLT, WITH SPST CONTACTS.

CR1 INDUSTRIAL CONTROL RELAY WITH 2 N.O. CONTACTS AND 120 VAC COIL: SQUARE D CLASS 8501, TYPE X0120V02 OR EQUAL. INSTALL IN CABINET.

SS1 SELECTOR SWITCH, 3 POSITION, MAINTAINED CONTACT, 3 N.O. & 3 N.C. CONTACTS: SQUARE D CLASS 9001, TYPE K543BH3 WITH 9001-KN36O "HAND-OFF-AUTO" ALUMINUM LEGEND PLATE. INSTALL IN COVER OF CABINET.

LC1 LIGHTING CONTACTOR, ELECTRICALLY HELD, 2 POLE, 20 AMP, 120 VAC COIL:
LC2 SQUARE D CLASS 8903, TYPE L0D2-V02 OR EQUAL. INSTALL IN CABINET.

LIGHTING CONTROL CABINET, 12" W x 20" H x 6" D, NEMA 1 ENCLOSURE WITH HINGED FRONT COVER, FLUSH LATCH AND EQUIPMENT MOUNTING PANEL: WIEGMANN #NC-1220 W/NP1200 PANEL, OR EQUAL.

CONTROL NOTES:

1. USE MINIMUM #14 STRANDED WIRE FOR ALL CONTROL CONDUCTORS. LABEL WIRE ACCORDING TO NUMBER ON CONTROL DIAGRAM. SEE SPECIFICATION SECTION 16195.
2. REFER TO ELECTRICAL PLANS FOR POWER WIRE SIZES.
3. PROVIDE ENGRAVED NAMEPLATE FOR "EXTERIOR LIGHTING CONTROL CABINET" IN ACCORDANCE WITH SPECIFICATION SECTION 16195. PROVIDE SELF-ADHESIVE LABEL TO INCLUDE CIRCUIT NUMBERS OF ALL CONTROL AND POWER CIRCUITS.
4. PROVIDE SELF-ADHESIVE LABELS TO IDENTIFY ALL CONTROL DEVICES ACCORDING TO WIRING DIAGRAM.
5. PROVIDE DEVICES AS SPECIFIED OR EQUAL OF ALLEN BRADLEY, CUTLER HAMMER, GENERAL ELECTRIC, OR SIEMENS. PROVIDE NEMA RATED DEVICES. IEC RATED DEVICES ARE NOT ACCEPTABLE.

PROVIDE 'AS-BUILT' COPY OF WIRING DIAGRAM ON INSIDE FRONT COVER OF LIGHTING CONTROL CABINET.

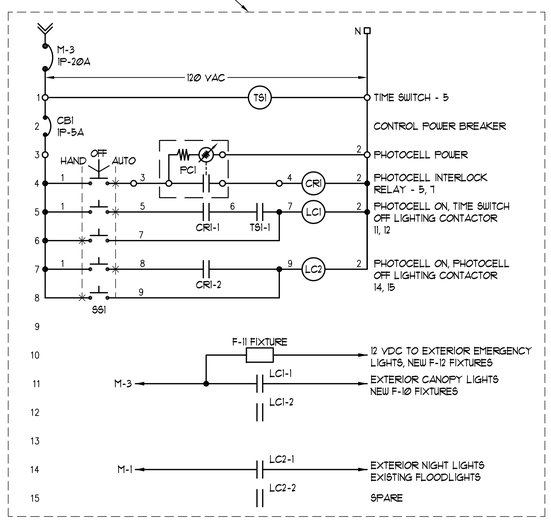

(A3) EXTERIOR LIGHTING CONTROL WIRING DIAGRAM
SCHEMATIC

PROJECT ENGINEER:
THOMAS & KOLKMAN ENGINEERING CO. INC.
64 WEST 1700 SOUTH
SALT LAKE CITY, UTAH 84115
TELEPHONE: (801) 484-8161
FACSIMILE: (801) 484-3538
Email: grandyb•utahmicro.net

CONSULTANTS:

OWNER:
State of Utah
Department of Administrative Services
Division of Facilities Construction & Management
4110 State Office Building
Salt Lake City, Utah 84114
Phone: (801) 538 - 3018
Fax: (801) 538 - 3267
Internet: http://dfcm.utah.gov

PROJECT:
CHILDREN'S SCHOOL SOUTH ELECTRICAL IMPROVEMENTS

OGDEN - WEBER APPLIED TECHNOLOGY COLLEGE

MAIN CAMPUS
200 NORTH WASHINGTON BLVD.
OGDEN, UTAH 84404

REVISIONS:

MARK	DATE	DESCRIPTION
1	9/30/09	PROJECT MODIFICATION & REVIEW

ISSUE TYPE: CONSTRUCTION DOCUMENTS
ISSUE DATE: AUGUST 3, 2009
DFCM PROJECT NO: 08051240
STATE PROPERTY NO: n.a.
CAD DWG FILE: E-601.dwg
DRAWN BY: WBG.
CHECKED BY: RGK.
COPYRIGHT: STATE OF UTAH

SHEET TITLE:
SYMBOL LIST, FIXTURE SCHEDULE, AND DETAILS

SHEET NUMBER:
E-601

FIRE ALARM DEVICE LEGEND

SYMBOL	DESCRIPTION	HEIGHT	NOTES
	NEW FIRE ALARM CONTOL PANEL (FACP)	72" TOP	1, 2
F 1–2	NEW ADDRESSABLE MANUAL PULL STATION, INDICATING EXISTING ADDRESS NUMBER	46" ¢	1, 2
1–49	NEW ADDRESSABLE SMOKE DETECTOR, INDICATING EXISTING ADDRESS NUMBER	CEILING	1
C	NEW ADDRESSABLE CONTROL / RELAY MODULE	AS REQ'D	1
S	NEW STROBE SYNCHRONIZATION MODULE	AS REQ'D	1
R	EXISTING FIRE SAFETY FUNCTION POWER RELAY TO REMAIN		
	EXISTING ADDRESSABLE SMOKE DETECTOR TO BE REMOVED		
	EXISTING ADDRESSABLE DUCT DETECTOR TO BE REMOVED		
	NEW HORN/STROBE, SELECTABLE OUTPUT, SYSTEM SENSOR P2R	84" ¢	2, 3
	EXISTNG HORN/STROBE, 15/75 CD, SYSTEM SENSOR P2415/75	84" ¢	2
75	EXISTNG HORN/STROBE, 75 CD, SYSTEM SENSOR P2475	84" ¢	2
110	EXISTNG HORN/STROBE, 110 CD, SYSTEM SENSOR P2411/0	84" ¢	2
WP	EXISTING WEATHERPROOF HORN, SYSTEM SENSOR H12/24K WITH WBB BACKBOX	84" ¢	2

LEGEND NOTES:

1. NEW FIRE ALARM SYSTEM DEVICES ARE TO REPLACE EXISTING DEVICES AT THE SAME LOCATION UNLESS SPECIFICALLY NOTED OTHERWISE.
2. MOUNTING HEIGHTS ARE APPLICABLE TO NEW DEVICES. NOTIFY THE PROJECT ENGINEER OF ANY EXISTING DEVICES WHICH ARE NOT MOUNTED AT THE SPECIFIED HEIGHTS.
3. SET NEW HORN/STROBE TO CANDELA VALUE INDICATED ON THE FIRE ALARM PLAN.

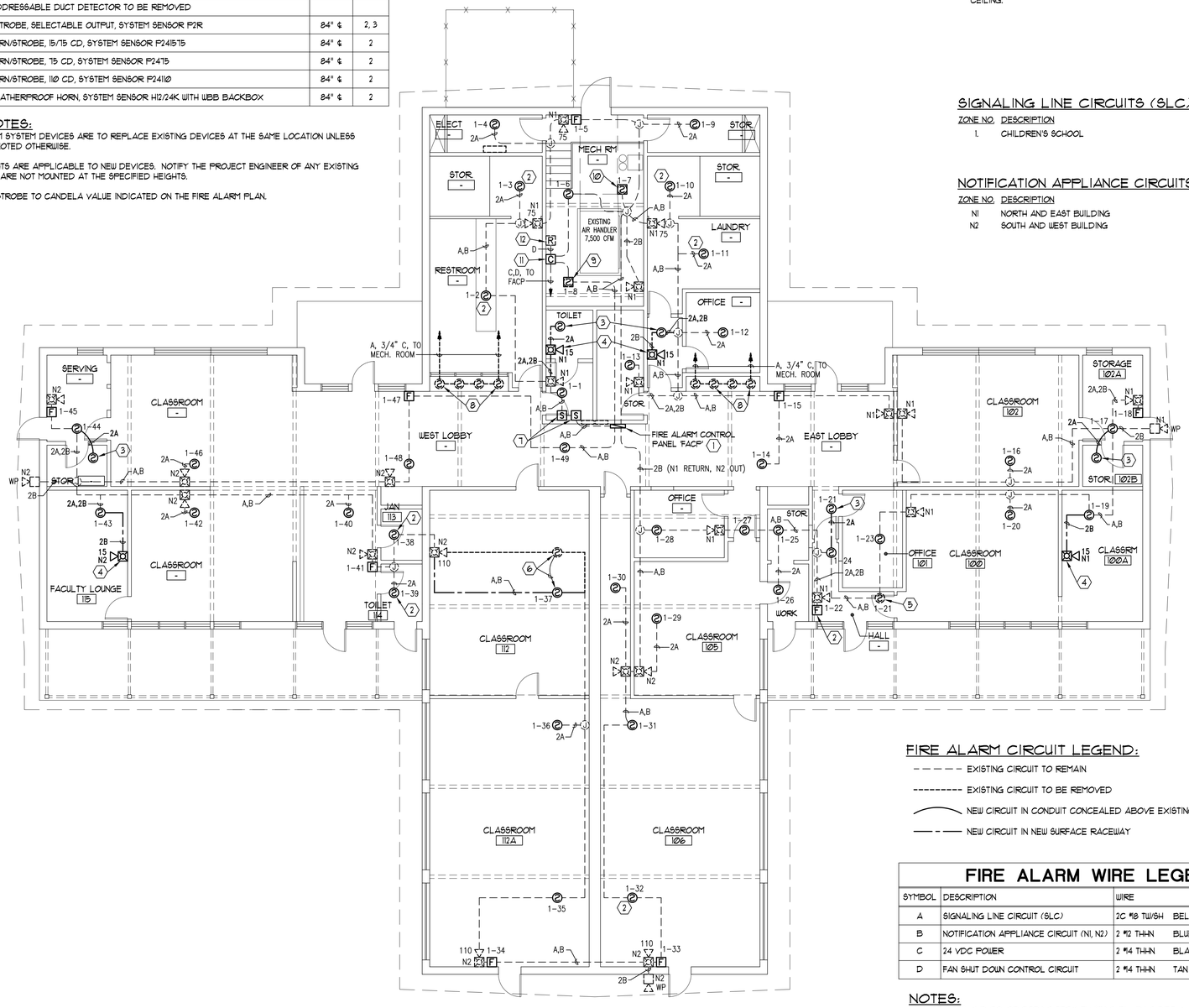

A1 FIRE ALARM PLAN
SCALE: 1/8" = 1'-0"

NORTH

CEILING/WALL REPAIR NOTES:

1. REPAIR EXISTING WOOD CEILINGS BY FILLING HOLES WITH WOOD PUTTY COLORED TO MATCH EXISTING CEILING. SAND SMOOTH AFTER PUTTY IS COMPLETELY DRIED. APPLY 2 COATS OF POLYEURATHANE WITH SATIN FINISH IN AREA OF REPAIR WHERE REQUIRED TO MATCH EXISTING CEILING.
2. REPAIR EXISTING METAL LATHE AND PLASTER CEILINGS BY FILLING HOLES WITH NEW CONCRETE PLASTER TO MATCH TEXTURE AND FINISH OF EXISTING PLASTER. PROVIDE NEW METAL LATHE SECURED TO ADJACENT LATHE BY MINIMUM 12 GAUGE GALVANIZED STEEL TIE WIRE WHERE REQUIRED. PROVIDE NEW METAL CEILING CHANNEL WHERE REQUIRED TO SUPPORT METAL LATHE FOR REPAIRS LARGER THAN 24" IN ANY DIMENSION. PAINT CEILING TO LOGICAL BREAK POINT SUCH AS INTERSECTION OF CEILING AND WALL.
3. REPAIR EXISTING WALLS WITH DRYWALL COMPOUND FOR GYPSUM BOARD WALLS OR GROUT FOR CONCRETE WALLS, SANDED TO OBTAIN A SMOOTH FINISH. PAINT WALLS TO LOGICAL BREAK POINT SUCH AS CORNER OF WALL OR INTERSECTION WITH CEILING.

SIGNALING LINE CIRCUITS (SLC)

ZONE NO.	DESCRIPTION
1.	CHILDREN'S SCHOOL

NOTIFICATION APPLIANCE CIRCUITS (NAC)

ZONE NO.	DESCRIPTION
N1	NORTH AND EAST BUILDING
N2	SOUTH AND WEST BUILDING

FIRE ALARM CIRCUIT LEGEND:

- EXISTING CIRCUIT TO REMAIN
- EXISTING CIRCUIT TO BE REMOVED
- NEW CIRCUIT IN CONDUIT CONCEALED ABOVE EXISTING CEILING
- NEW CIRCUIT IN NEW SURFACE RACEWAY

FIRE ALARM WIRE LEGEND

SYMBOL	DESCRIPTION	WIRE	
A	SIGNALING LINE CIRCUIT (SLC)	2C #18 TW/SH	BELDON 9574 OR 5320FL
B	NOTIFICATION APPLIANCE CIRCUIT (N1, N2)	2 #12 THHN	BLUE (-), ORANGE (+)
C	24 VDC POWER	2 #14 THHN	BLACK (-), RED (+)
D	FAN SHUT DOWN CONTROL CIRCUIT	2 #14 THHN	TAN (-), BROWN (+)

NOTES:

1. WIRE SIZES AND COLOR CODING FROM EXISTING BUILDING FIRE ALARM PLANS. MATCH EXISTING WIRE SIZES AND COLOR CODING IF DIFFERENT.
2. EXISTING WIRING IS INSTALLED IN SURFACE NON-METALLIC RACEWAY SYSTEM EXCEPT WIRING IN MECHANICAL ROOM, CRAWL SPACE, ABOVE CEILINGS, ETC., IS INSTALLED IN MINIMUM 3/4" CONDUIT.
3. PROVIDE NEW WIRING AND WIRING METHODS TO MATCH EXISTING INSTALLATION.

GENERAL NOTES:

1. THE EXISTING BUILDING IS PROTECTED THROUGHOUT BY AN AUTOMATIC AND MANUAL FIRE ALARM SYSTEM WHICH IS TO REMAIN OPERATIONAL THROUGHOUT THE CONSTRUCTION PERIOD.
2. SUBMIT REQUESTS FOR FIRE ALARM SYSTEM OUTAGES TO THE OWNER'S PROJECT MANAGER NOT LESS THAN 7 DAYS PRIOR TO ANY PROPOSED FIRE ALARM OUTAGES. IMMEDIATELY NOTIFY THE PROJECT MANAGER IF THE FIRE ALARM IS UNINTENTIONALLY DISABLED AND IMMEDIATELY MAKE REPAIRS TO RESTORE THE SYSTEM TO AN OPERATIONAL CONDITION.
3. THE CONTRACTOR SHALL MAINTAIN A FIRE WATCH DURING ALL FIRE ALARM SYSTEM OUTAGES IN ACCORDANCE WITH IFC SECTION 901.7.
4. LOCATIONS OF EXISTING FIRE ALARM SYSTEM DEVICES, CIRCUIT WIRING, ETC., ARE BASED ON EXISTING BUILDING FIRE ALARM DRAWINGS AND FIELD OBSERVATION OF EXISTING SURFACE CONDITIONS.
5. THE FIRE ALARM INSTALLATION TECHNICIAN SHALL FIELD VERIFY ALL EXISTING FIRE SYSTEM DEVICE LOCATIONS AND CIRCUITING AND IMMEDIATELY NOTIFY THE ENGINEER OF ANY DISCREPANCIES WHICH MAY ADVERSELY AFFECT COMPLETION OF THE WORK PRIOR BEGINNING ANY WORK ON THE SYSTEM.
6. FIRE ALARM SIGNALING LINE CIRCUITS (SLC) SHALL BE CLASS 'A', STYLE '6' IN ACCORDANCE WITH NFPA 72.
7. FIRE ALARM NOTIFICATION APPLIANCE CIRCUITS (NAC) SHALL BE CLASS 'A' IN ACCORDANCE WITH NFPA 72.
8. TAKE ALL PRECAUTIONS NECESSARY TO AVOID DAMAGE TO THE EXISTING BUILDING. REPAIR ALL DAMAGE INCURRED BY DEMOLITION AND NEW CONSTRUCTION TO EXACTLY MATCH SURROUNDING SURFACES AND/OR CONDITIONS WITHOUT ADDITIONAL COST TO THE OWNER.
9. ALL EXISTING NOTIFICATION APPLIANCES (HORN/STROBES AND HORNS) ARE TO REMAIN.
10. REPLACE ALL EXISTING MANUAL PULL STATIONS WITH NEW PULL STATIONS LISTED FOR USE WITH NEW FIRE ALARM CONTROL PANEL AND RECONNECT EXISTING SIGNALING LINE CIRCUIT WIRING.
11. REPLACE ALL EXISTING AREA SMOKE DETECTOR WITH NEW PHOTOELECTRIC SMOKE DETECTORS LISTED FOR USE WITH NEW FIRE ALARM CONTROL PANEL AND RECONNECT EXISTING SIGNALING LINE CIRCUIT WIRING.

KEYED NOTES:

1. REPLACE EXISTING FIRE ALARM CONTROL PANEL WITH NEW FIRE ALARM CONTROL PANEL. RECONNECT ALL EXISTING CIRCUITS INCLUDING PRIMARY POWER CIRCUIT, SIGNALING LINE CIRCUIT, NOTIFICATION APPLIANCE CIRCUITS, FAN SHUT DOWN CIRCUITS, AND CENTRAL STATION COMMUNICATION CIRCUITS.
2. REPLACE EXISTING HEAT DETECTOR WITH NEW PHOTOELECTRIC SMOKE LISTED FOR USE WITH NEW FIRE ALARM CONTROL PANEL AND RECONNECT EXISTING SIGNALING LINE CIRCUIT WIRING.
3. PROVIDE NEW SMOKE DETECTOR IN EXISTING ROOM WITHOUT SMOKE DETECTOR. CONNECT TO EXISTING SIGNALING LINE CIRCUIT WIRING USING SURFACE RACEWAY SYSTEM OR CONCEALED CONDUIT AS REQUIRED TO MATCH EXISTING WIRING METHODS IN THE SAME AREA.
4. PROVIDE NEW HORN/STROBE IN EXISTING COMMON USE ROOM. CONNECT TO EXISTING NOTIFICATION APPLIANCE CIRCUIT WIRING USING SURFACE RACEWAY SYSTEM TO MATCH EXISTING WIRING METHODS.
5. REMOVE EXISTING SMOKE DETECTOR INCLUDING ABANDONED SURFACE RACEWAY AND WIRING. REPAIR EXISTING CEILING AND WALL AS REQUIRED TO MATCH SURROUNDING SURFACES.
6. REMOVE EXISTING SMOKE DETECTOR INCLUDING ABANDONED WIRING, BOXES, AND SURFACE RACEWAY. PROVIDE NEW SMOKE DETECTOR TO CENTER IN ROOM AND RECONNECT EXISTING CIRCUITS WITH NEW WIRING AND SURFACE RACEWAY AS REQUIRED.
7. REPLACE EXISTING STROBE SYNCHRONIZATION MODULES WITH NEW STROBE SYNCHRONIZATION MODULES AND RECONNECT TO EXISTING NOTIFICATION APPLIANCE CIRCUITS. STROBE SYNCHRONIZATION MAY BE PROVIDED BY NEW FIRE ALARM CONTROL PANEL WITH EXISTING MODULES REMOVED.
8. REMOVE EXISTING SMOKE DETECTORS IN THE RETURN AIR PLENUM INCLUDING ALL ABANDONED WIRING, CONDUIT, BOXES, ETC. ACCESS IS THROUGH THE CRAWL SPACE BELOW. SMOKE DETECTION FOR THE AIR DISTRIBUTION SYSTEM REQUIRED BY INTERNATION MECHANICAL CODE (IMC) SECTION 606.1 WILL BE PROVIDED BY AREA SMOKE DETECTORS IN ALL AREAS OF THE BUILDING SERVED BY THE AIR DISTRIBUTION AS ALLOWED BY THE EXCEPTION TO IMC SECTION 606.2.1.
9. REMOVE EXISTING DUCT SMOKE DETECTOR FROM EXISTING SUPPLY AIR DUCT INCLUDING ALL ABANDONED WIRING, CONDUIT, BOXES, ETC. RECONNECT EXISTING CIRCUITS AS REQUIRED.
10. REMOVE EXISTING DUCT SMOKE DETECTOR FROM EXISTING OUTSIDE AIR DUCT INCLUDING ALL ABANDONED WIRING, CONDUIT, BOXES, ETC. RECONNECT EXISTING CIRCUITS AS REQUIRED.
11. REPLACE EXISTING ADDRESSABLE CONTROL MODULE WITH NEW ADDRESSABLE CONTROL MODULE LISTED FOR USE WITH NEW FIRE ALARM CONTROL PANEL. RECONNECT TO EXISTING SIGNALING LINE CIRCUIT AND 24 VDC POWER TO FAN SHUT DOWN RELAY. PROGRAM TO SHUT DOWN EXISTING AIR HANDLER ON GENRAL FIRE ALARM.
12. EXISTING FAN SHUT DOWN POWER RELAY AND CONNECTION TO AIR HANDLER STARTER TO REMAIN. RECONNECT TO NEW ADDRESSABLE CONTROL MODULE. FIELD VERIFY LOCATION AND CONNECTIONS.

PROJECT ENGINEER:
THOMAS & KOLKMAN ENGINEERING CO. INC.
64 WEST 1700 SOUTH
SALT LAKE CITY, UTAH 84115
TELEPHONE: (801) 484-8161
FACSIMILE: (801) 484-3538
Email: grandyb•utahmicro.net

CONSULTANTS:

OWNER:
State of Utah
Department of Administrative Services
Division of Facilities Construction & Management
4110 State Office Building
Salt Lake City, Utah 84114
Phone: (801) 538 - 3018
Fax: (801) 538 - 3267
Internet: http://dfcm.utah.gov

PROJECT:

CHILDREN'S SCHOOL SOUTH ELECTRICAL IMPROVEMENTS

OGDEN - WEBER APPLIED TECHNOLOGY COLLEGE

MAIN CAMPUS
200 NORTH WASHINGTON BLVD.
OGDEN, UTAH 84404

REVISIONS:

MARK	DATE	DESCRIPTION

ISSUE TYPE: CONSTRUCTION DOCUMENTS
ISSUE DATE: SEPT. 30, 2003
DFCM PROJECT NO: 08051240
STATE PROPERTY NO: n.a.
CAD DWG FILE: E-101.dwg
DRAWN BY: WBG.
CHECKED BY: RGK.
COPYRIGHT: STATE OF UTAH

SHEET TITLE:
FIRE ALARM PLAN

SHEET NUMBER:
FA101