CODE ANALYSIS

APPLICABLE CODES

	Year		Year
International Building Code	2006	National Electrical Code	2005
International Mechanical Code	2006	Uniform Code for Building Conservation	
International Plumbing Code	2006	ADA Accessibility Guidelines	
International Fire Code	2006		
International Energy Conservation Code	2006		

A. Occupancy and Group: EXISTING OFFICE FACILITY _____ _____

Change in Use: Yes _____ No X Mixed Occupancy: Yes _____ No _____

Special Use and Occupancy (e.g. High Rise, Covered Mall): _____

B. Seismic Design Category: _____ Design Wind Speed: _____ mph

C. Type of Construction (circle one):

I/A I/B II/A II/B III/A III/B IV/HT V/A V/B

D. Fire Resistance Rating Requirements for the Exterior Walls based on the fire separation distance (in hours):

North: _____ South: _____ East: _____ West: _____

E. Mixed Occupancies: _____ Nonseparated Uses: _____

F: Sprinklers:

Required: _____ Provided: _____ Type of Sprinkler System: _____

G: Number of Stories: _____ Building Height: _____

H: Actual Area per Floor (square feet): _____

I: Tabular Area: _____

J: Area Modifications:

a) $A_a = A_t + \left[\frac{A_t I_f}{100}\right] + \left[\frac{A_t I_s}{100}\right]$ $I_f = 100\left[\frac{F}{P} - 0.25\right]\frac{W}{30}$

b) Sum of the Ratio Calculations for Mixed Occupancies:

$\frac{\text{Actual Area}}{\text{Allowable Area}} \leq 1$

c) Total Allowable Area for:

1) One Story: _____
2) Two Story: $A_a(2)$_____
3) Three Story: $A_a(3)$_____

d) Unlimited Area Building: Yes _____ No _____ Code Section: _____

K. Fire Resistance Rating Requirements for Building Elements (hours).

Element	Hours	Assembly Listing	Element	Hours	Assembly Listing
Exterior Bearing Walls			Floors - Ceiling Floors		
Interior Bearing Walls			Roofs - Ceiling Roofs		
Exterior Non-Bearing Walls			Exterior Doors and Windows		
Structural Frame			Shaft Enclosures		
Partitions - Permanent			Fire Walls		
Fire Barriers			Fire Partitions		
			Smoke Partitions		

L. Design Occupant Load: _____

Exit Width Required: _____ Exit Width Provided: _____

M. Minimum Number of Required Plumbing Facilities:

a) Water Closets - Required (m) _____ (f) _____ Provided (m) _____ (f) _____
b) Lavatories - Required (m) _____ (f) _____ Provided (m) _____ (f) _____
c) Bath Tubs or Showers: _____
d) Drinking Fountains: _____ Service Sinks: _____

FOOTNOTES:

1) In case of conflict with the U.S. Department of Justice Federal Registers Parts I through V - ADA Guidelines and specific reference to the International Building Code Accessibility Chapters, the more restrictive requirement shall govern.

2) Additional Code Information shall be provided at the discretion of the Building Official for Complex Buildings. Including, but not limited to:

a) High Rise Requirements.
b) Atriums.
c) Performance Based Criteria.
d) Means or Egress Analysis.
e) Fire Assembly Locator Sheet.
f) Exterior and Interior Accessibility Route.
g) Fire Stopping, Including Tested Design Number.

DEPARTMENT OF WORK FORCE MIDVALE DWS ROOFTOP AHU REPLACEMENT DFCM # 08072920

* PROJECT SCOPE IS TO REPLACE EXISTING ROOF TOP UNITS AND ONE MINI SPLIT. THERE ARE NO OTHER CHANGES TO BUILDING, USAGE, ETC.

DIVISION OF FACILITIES CONSTRUCTION AND MANAGEMENT
REVIEWED FOR CODE COMPLIANCE
SIGNATURE: E.C.
DATE: 7-29-08

THE GREAT SEAL OF THE STATE OF UTAH
INDUSTRY 1847 1896

State of Utah—Department of Administrative Services

DIVISION OF FACILITIES CONSTRUCTION AND MANAGEMENT

4110 State Office Building / Salt Lake City, Utah 84114 / 538-3018

DRAWING INDEX:

M000 - TITLE SHEET
MG001- MECHANICAL GENERAL NOTES AND LEGEND
MD101- MECHANICAL DEMOLITION ROOF PLAN
ME101- MECHANICAL ROOF PLAN
ME501- MECHANICAL DETAILS
ME601- MECHANICAL SCHEDULES

MECHANICAL ENGINEER
WHW ENGINEERING, INC.
8619 SANDY PARKWAY
SUITE 101
SANDY, UTAH 84070
PHONE: (801) 466-4021 FAX: (801) 466-8536

PROFESSIONAL ENGINEER
07/25/08
WINWARD M. PACKER
375089
STATE OF UTAH

WHW ENGINEERING INC.
PROFESSIONAL MECHANICAL ENGINEERING
8619 Sandy Parkway Suite 101
SANDY, UTAH 84070
(801)466-4021, FAX: 466-8536
EMAIL: excellence@whw-engineering.com

MECHANICAL LEGEND

SYMBOL	ABR.	DESCRIPTION
GENERAL TERMINOLOGY		
A2		DETAIL NUMBER DESIGNATION CORRESPONDING WITH GRID LOCATION
MA 1		MECHANICAL EQUIPMENT DESIGNATION EQUIPMENT ITEM DESIGNATION
D-1 CFM		REGISTER, GRILL OR DIFFUSER DESIGNATION WITH BALANCING CFM LISTED BELOW
R-1		GRILLE, OR LOUVER DESIGNATION WHERE BALANCING NOT REQUIRE
1		REVISION DESIGNATOR AND NUMBER
1		KEY NOTE DESIGNATOR AND NUMBER
	POC	POINT OF CONNECTION
	POR	POINT OF REMOVAL
GC		GENERAL CONTRACTOR
MC		MECHANICAL CONTRACTOR
ATC		CONTROL CONTRACTOR
EC		ELECTRICAL CONTRACTOR
FPC		FIRE PROTECTION CONTROL
NIC		NOT IN CONTRACT
NTS		NOT TO SCALE
C		COMMON
NC		NORMALLY CLOSED
NO		NORMALLY OPEN

SYMBOL	ABR.	DESCRIPTION
AIR SIDE		
		EXISTING AIR DUCT TO BE REMOVED
		EXISTING AIR DUCT TO REMAIN
		NEW AIR DUCT
		NEW SPIRAL DUCT
		NEW MEDIUM PRESSURE DUCT
		BURIED OR UNDER FLOOR DUCT
		FLEXIBLE AIR DUCT
		LINED DUCT
		VANED ELBOW
		RADIUS ELBOW
		FLEXIBLE AIR DUCT CONNECTION
VD		VOLUME DAMPER
		SUPPLY AIR DIFFUSER
		RETURN AIR, FRESH AIR, AND TRANSFER AIR
		CEILING MOUNTED EXHAUST FAN OR EXHAUST GRILLE
		RETURN OR OUTSIDE AIR DUCT UP
		SUPPLY DUCT UP
		EXHAUST AIR INTAKE UP
		RETURN OR OUTSIDE AIR DUCT DOWN
		SUPPLY DUCT DOWN
		EXHAUST DUCT DOWN
		ROUND DUCT UP
		ROUND DUCT DOWN
	AP	ACCESS PANEL
		EXISTING EQUIPMENT TO BE REMOVED
		EXISTING EQUIPMENT TO REMAIN
		NEW EQUIPMENT
T RTU-1	T-STAT	WALL MOUNTED THERMOSTAT MECHANICAL EQUIPMENT CONTROLLED
SA		SUPPLY AIR
RA		RETURN AIR
EA		EXHAUST AIR
OA		OUTSIDE AIR
MA		MIXED AIR
FA		FRESH AIR
RF		RELIEF AIR

SYMBOL	ABR.	DESCRIPTION
WET SIDE		
		PUMP
		REGULATOR
		UNION
		BUTTERFLY VALVE
		GATE VALVE
	CBV	CIRCUIT BALANCING VALVE
	BV	BALL VALVE
		DIRECTION OF FLOW
		ELBOW UP
		ELBOW DOWN
		TEE UP
		TEE DOWN
		EXISTING PIPING TO BE REMOVED
		EXISTING PIPING TO REMAIN
		NEW PIPING
		PIPE CAP OR PLUG

PLUMBING LEGEND

MEANING	SYMBOL OR ABBREVIATION	MEANING	SYMBOL OR ABBREVIATION
HOT WATER LINE		WALL CLEANOUT	WCO
COLD WATER LINE		CLEANOUT	CO
VENT LINE		CLEANOUT TO GRADE	COTG
WASTE LINE		FLOOR CLEANOUT	FCO
GAS LINE	G	BALL VALVE	
VENT THRU ROOF	VTR	UNION	
CONNECTION TO EXISTING PIPING		REGULATOR	
UNDER FLOOR	UF		

GENERAL NOTES:

G-1 MECHANICAL INFORMATION IS NOT LIMITED TO THE MECHANICAL DRAWINGS. CONTRACTOR SHALL BE RESPONSIBLE FOR INFORMATION ON ALL OTHER CONSTRUCTION DOCUMENTS INCLUDING DRAWINGS BY OTHER DISCIPLINES AND SPECIFICATIONS.

A - EACH DRAWING SHEET AND THE SPECIFICATIONS HAVE BEEN PREPARED TO SUPPLEMENT EACH OTHER AND THEY SHALL BE INTERPRETED AS AN INTEGRAL UNIT WITH ITEMS SHOWN AND NOTED ON ONE AND NOT THE OTHER BEING FURNISHED AND INSTALLED AS THOUGH SHOWN AND CALLED OUT IN ALL PLACES. ITEMS IN SPECIFICATIONS OR DRAWINGS LISTED WHICH ARE DIFFERING IN EFFICIENCY OR QUALITY SHALL BE HELD TO THE GREATEST OF: EFFICIENCY, QUALITY OR GOVERNING CODE.

B - THE CONTRACTOR WILL BE HELD RESPONSIBLE FOR THE INSTALLATION OF THE SYSTEMS ACCORDING TO THE TRUE INTENT AND MEANING OF THE CONTRACT DOCUMENTS.

C - THE CONTRACTOR SHALL INSTALL ALL EQUIPMENT WITH PROPER SERVICE ACCESS AND CLEARANCES ACCORDING TO MANUFACTURERS RECOMMENDATIONS. THE CONTRACTOR SHALL REVIEW SUPPLIERS BID PACKAGES FOR COMPLETENESS AND COMPLIANCE TO THE SPECIFICATIONS, SCHEDULES, AND DESIGN INTENT (ALL EQUIPMENT AND METHODS). THE CONTRACTOR SHALL REMOVE AND REINSTALL CORRECTLY AT HIS OWN EXPENSE ANY EQUIPMENT NOT IN COMPLIANCE.

D - THE CONTRACTOR SHALL CONSULT MANUFACTURERS INSTALLATION INSTRUCTIONS FOR SIZES, METHODS, ACCESSORIES, AND CLEARANCES IN SPACE AVAILABLE PRIOR TO BIDDING PROJECT.

E - ANYTHING NOT CLEAR OR IN CONFLICT WILL BE EXPLAINED BY MAKING APPLICATION TO THE ENGINEER IN WRITING.

G-2 ANY AND ALL ALTERATIONS TO THE SYSTEM SHOWN SHALL BE SUBMITTED TO THE ENGINEER PRIOR TO CHANGES FOR APPROVAL. CONTRACTOR SHALL NOT START ANY CHANGES UNTIL NOTIFIED IN WRITING. IF CHANGES ARE MADE PRIOR TO APPROVAL CONTRACTOR SHALL TAKE ALL RESPONSIBILITY FOR THE CHANGES MADE AND ALL COSTS RELATING TO FAILURE OR REPLACEMENT OF ALTERATIONS.

G-3 CONTRACTOR SHALL FIELD VERIFY ALL DIMENSIONS AND LOCATIONS.

G-4 THE WORKING DRAWINGS ARE DIAGRAMMATIC. THEY DO NOT SHOW EVERY OFFSET, BEND, OR ELBOW NECESSARY FOR THE COMPLETE INSTALLATION IN THE SPACE PROVIDED. ALL LOCATIONS FOR MECHANICAL EQUIPMENT SHALL BE FIELD VERIFIED AND COORDINATED WITH ALL DRAWINGS. THE CONTRACTOR SHALL PROVIDE OR COORDINATE WITH THE GENERAL CONTRACTOR PROVISIONS FOR BLOCKOUTS OR CORE DRILLS THROUGH STRUCTURE.

G-5 THE INSTRUCTION TO "PROVIDE" ALSO INCLUDES INSTALLATION.

G-6 MECHANICAL CONTRACTOR SHALL PROVIDE AND INSTALL SMOKE AND FIRE DAMPERS AS REQUIRED BY LOCAL CODES AND AUTHORITIES.

G-7 SHEET METAL DUCT SIZES SHOWN ON DRAWINGS ARE FREE AREA DIMENSIONS.

G-8 PROVIDE AND INSTALL BALANCING DAMPERS IN ALL SUPPLY AND EXHAUST AIR BRANCH DUCTS. BALANCE TO CFM SHOWN ON PLAN.

G-9 SEE ARCHITECTURAL REFLECTED CEILING PLAN FOR EXACT LOCATION OF DIFFUSERS AND GRILLES.

G-10 PROVIDE TURNING VANES IN ALL ELBOWS OF RECTANGULAR DUCT.

G-11 THE CONTRACTOR SHALL ASSUME ALL RESPONSIBILITY IN HANDLING AND DISPOSING OF REFRIGERANTS, OILS, ETC. ALL SUCH MATERIALS SHALL BE HANDLED, DISPOSED, AND USED IN ACCORDANCE WITH ALL LOCAL, STATE, AND FEDERAL LAWS.

G-12 THE MECHANICAL CONTRACTOR SHALL VERIFY MOTOR VOLTAGES WITH THE ELECTRICAL DRAWING BEFORE ORDERING MOTORIZED EQUIPMENT AND CONTROLS.

G-13 C.F.M. LISTED IS ACTUAL AIR.

G-14 SUPPLIERS SHALL REVIEW ALL DRAWINGS AND THE SPECIFICATIONS PRIOR TO SUBMITTING PRICES TO THE CONTRACTOR. ALL QUESTIONS AND DISCREPANCIES SHALL BE BROUGHT TO THE ENGINEERS ATTENTION PRIOR TO BIDDING.

G-15 CONTRACTOR SHALL THOROUGHLY REVIEW AND SIGN SUBMITTALS FOR COMPLETENESS AND COMPLIANCE TO THE SPECIFICATIONS PRIOR TO ENGINEERS REVIEW. SUPPLIERS SHALL HIGHLIGHT OR MARK ALL INFORMATION REQUIRED TO SHOW COMPLIANCE TO THE SPECIFICATIONS. ALL REQUESTED EXCEPTIONS TO THE SPECIFICATIONS, OR SCHEDULES SHALL BE CLEARLY NOTED AND EXPLAINED. SUBMITTAL REVIEW AND ACCEPTANCE IS FOR DESIGN CONCEPT ONLY, AND DOES NOT AT ANY TIME RELIEVE THE CONTRACTOR OF RESPONSIBILITY TO MEET SPECIFICATIONS, CAPACITIES, OR DESIGN INTENT.

G-16 ALL MECHANICAL SHALL BE INSTALLED AND CONFORM TO THE 2006 EDITION OF THE IMC WITH UTAH ANNOTATIONS AND LOCAL AUTHORITY REQUIREMENTS.

G-17 ALL PIPING, MATERIALS, ETC. SHALL BE NEW AND DOMESTIC MADE UNLESS SPECIFICALLY AUTHORIZED IN WRITING PRIOR TO BID.

State of Utah
Department of Administrative Services
Division of Facilities Construction & Management
4110 State Office Building
Salt Lake City, Utah 84114
Phone: (801) 538 - 3018
Fax: (801) 538 - 3267
Internet: http://www.dfcm.state.ut.us

CONSULTANTS

WHW ENGINEERING INC.
PROFESSIONAL MECHANICAL ENGINEERING
8610 Sandy Parkway Suite 101
SANDY, UTAH 84070
(801)466-4021, FAX 466-8536
EMAIL: excellence@whw-engineering.com

PROJECT NAME & ADDRESS

DEPARTMENT OF WORK FORCE MIDVALE DWS ROOFTOP AHU REPLACEMENT

DFCM No. 08072920

Midvale, Utah

MARK	DATE	REVISION

PROJECT MANAGER: WP
DRAWN BY: STAFF
CHECKED BY: WP
DATE: 07/25/08
WHW JOB NO.: 08040

PROFESSIONAL ENGINEER 07/25/08 WINWARD M. PACKER No. 375080 STATE OF UTAH

SHEET TITLE

MECHANICAL GENERAL NOTES AND LEGEND

SHEET NO.

MG001

SHEET NOTES:

1. EXISTING ROOF TOP UNIT SHALL REMAIN.
2. REMOVE EXISTING ROOF TOP UNIT, EXISTING ROOF CURB SHALL REMAIN.
3. EXISTING GAS LINE SHALL REMAIN FOR REUSE.
4. EXISTING GAS METER TO REMAIN.
5. EXISTING ROOF HATCH.
6. REMOVE EXISTING CONDENSING UNIT AND FAN COIL. FIELD VERIFY EXACT LOCATION.

GENERAL NOTE:

1. RTU REPLACEMENT SHALL BE PHASED. REMOVE AND REPLACE (1) UNIT AT A TIME TO MINIMIZE DOWNTIME AND DISRUPTION TO BUILDING OCCUPANTS.

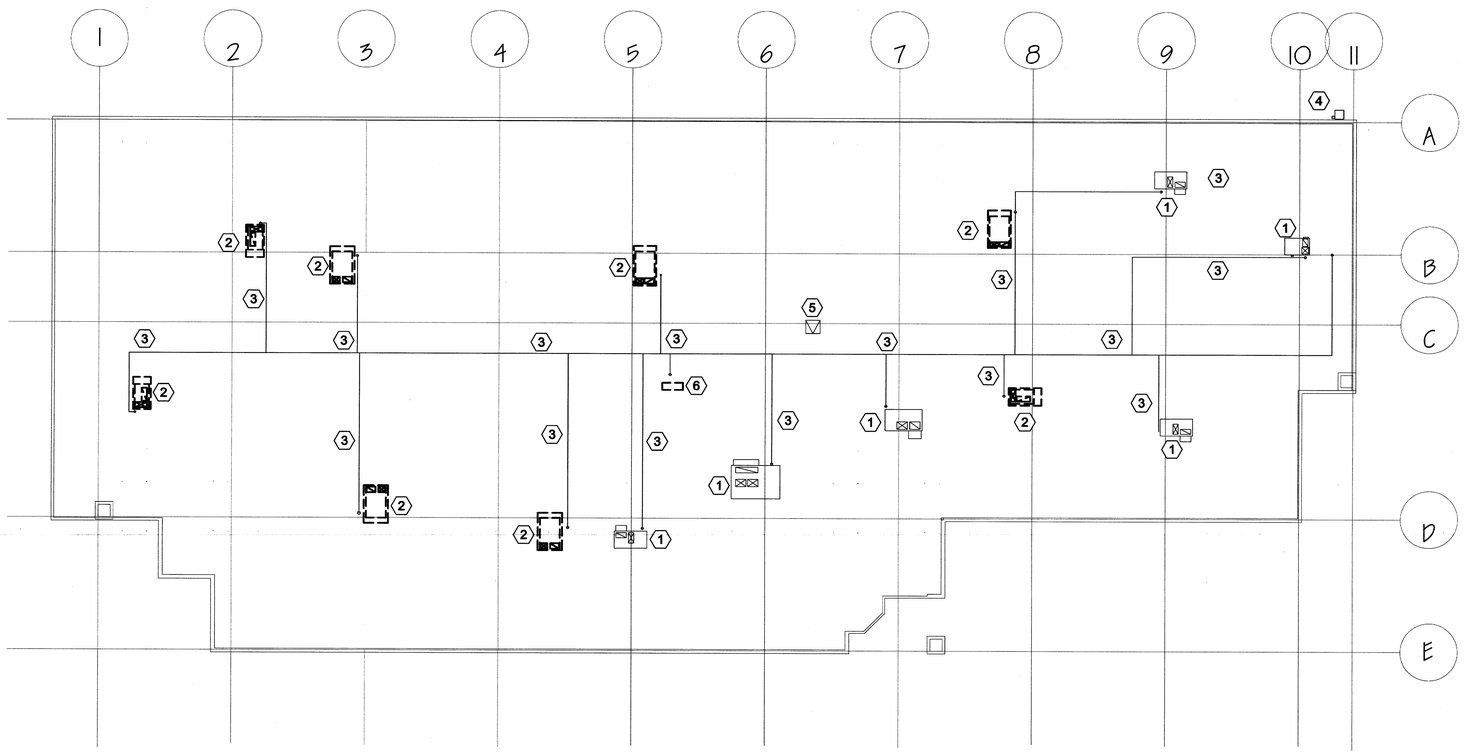

MECHANICAL DEMOLITION ROOF PLAN

SCALE: 1/16" = 1'-0"

State of Utah
Department of Administrative Services

Division of Facilities Construction & Management
4110 State Office Building
Salt Lake City, Utah 84114
Phone: (801) 538 - 3018
Fax: (801) 538 - 3267

Internet: http://www.dfcm.state.ut.us

CONSULTANTS

WHW ENGINEERING INC.
PROFESSIONAL MECHANICAL ENGINEERING
8619 Sandy Parkway Suite 101
SANDY, UTAH 84070
(801)495-4021, FAX 495-6536
EMAIL: excellence@whw-engineering.com

PROJECT NAME & ADDRESS

DEPARTMENT OF WORK FORCE MIDVALE DWS ROOFTOP AHU REPLACEMENT

DFCM No. 08072920

Midvale, Utah

MARK	DATE	REVISION

PROJECT MANAGER: WP
DRAWN BY: STAFF
CHECKED BY: WP
DATE: 07/25/08
WHW JOB NO.: 08040

PROFESSIONAL ENGINEER
07/25/08
WINWARD M. PACKER
07/25/08
STATE OF UTAH

SHEET TITLE

MECHANICAL DEMOLITION ROOF PLAN

SHEET NO.

MD101

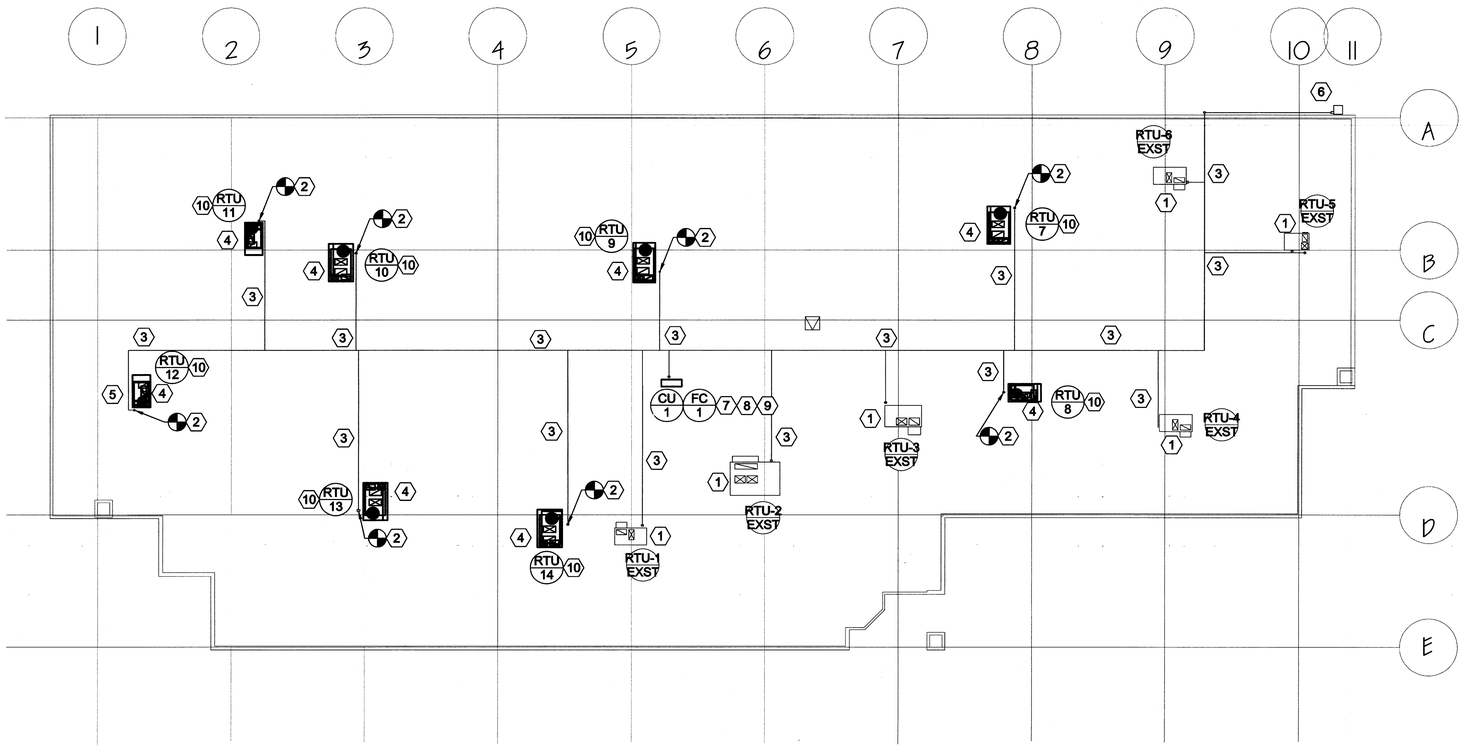

MECHANICAL ROOF PLAN

SCALE: 1/16" = 1'-0"

SHEET NOTES:

1. EXISTING ROOF TOP UNIT TO REMAIN.
2. CONNECT EXISTING GAS LINE TO NEW ROOF TOP UNIT AT THIS APPROXIMATE LOCATION. EXTEND / MODIFY AS NECESSARY. FIELD VERIFY. SEE DETAILS ME501.
3. EXISTING GAS LINE TO REMAIN.
4. MINIMUM OF 10' FROM ECONOMIZER TO PLUMBING AND EXHAUST VENTS OR FLUES.
5. PROVIDE GUARDRAIL AT ANY LOCATION NEW RTU IS WITHIN 10' OF ROOF EDGE. SEE DETAIL ME501.
6. EXISTING GAS METER. TOTAL LOAD TO REMAIN THE SAME.
7. PROVIDE NEW CONDENSING UNIT.
8. PROVIDE NEW FAN COIL IN PLACE OF EXISTING. FIELD VERIFY EXACT LOCATION.
9. ROUTE NEW REFRIGERANT PIPING FROM NEW CU-1 TO NEW FC-1.
10. PROVIDE TRANSITION CURB FROM EXISTING TRANE UNIT TO NEW RTU.

GENERAL NOTES:

1. EXISTING RTU MODEL # FOR CONVERSION CURBS.
   TRANE YCD090C4H0BC
   YCD036C4H0BB
   YCD060C4H0BB
2. FIELD VERIFY EXISTING ELECTRICAL AND NEW RTU REQUIREMENTS PRIOR TO ORDERING EQUIPMENT. RECONNECT TO EXISTING ELECTRICAL. WORK SHALL BE LICENSED ELECTRICIAN.
3. RTU REPLACEMENT SHALL BE PHASED. REMOVE AND REPLACE (1) UNIT AT A TIME TO MINIMIZE DOWNTIME AND DISRUPTION TO BUILDING OCCUPANTS.
4. REPLACE EXISTING THERMOSTATS ASSOCIATED WITH REPLACEMENT ROOFTOP UNITS. FIELD VERIFY EXACT LOCATION OF THERMOSTATS. NEW THERMOSTATS SHALL BE WIRELESS, PROGRAMMABLE PER SPECIFICATIONS.

State of Utah
Department of Administrative Services
Division of Facilities Construction & Management
4110 State Office Building
Salt Lake City, Utah 84114
Phone: (801) 538 - 3018
Fax: (801) 538 - 3267
Internet: http://www.dfcm.state.ut.us

CONSULTANTS

WHW ENGINEERING INC.
PROFESSIONAL MECHANICAL ENGINEERING
8619 Sandy Parkway Suite 101
SANDY, UTAH 84070
(801)495-4021, FAX:495-8538
EMAIL: excellence@whw-engineering.com

PROJECT NAME & ADDRESS

DEPARTMENT OF WORK FORCE MIDVALE DWS ROOFTOP AHU REPLACEMENT

DFCM No. 08072920

Midvale, Utah

MARK	DATE	REVISION

PROJECT MANAGER: WP
DRAWN BY: STAFF
CHECKED BY: WP
DATE: 07/25/08
WHW JOB NO.: 08040

PROFESSIONAL ENGINEER 07/25/08 WINWARD M. PACKER No. 275080 STATE OF UTAH

SHEET TITLE

MECHANICAL ROOF PLAN

SHEET NO.

ME101

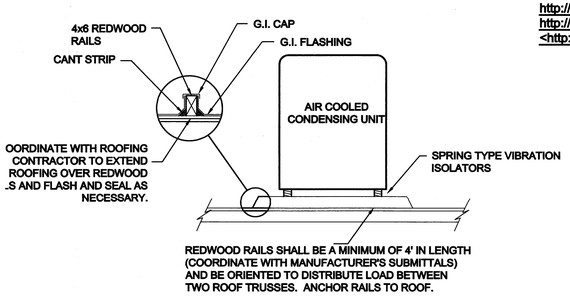

D1 ROOFTOP AIR COOLED CONDENSER DETAIL
SCALE: NONE

PRE-MANUFACTURED GUARD RAIL BY BLUE WATER MANUFACTURING, KEEGUARD, RAILGUARD, OR PRIOR APPROVED EQUAL. SEE THE FOLLOWING MANUFACTURER'S WEBSITES FOR MORE INFORMATION:
http://www.keeguard.com/us/3partspecs.html
http://www.bluewater-mfg.com/
<http://www.railguard.net/roof-railing.asp>

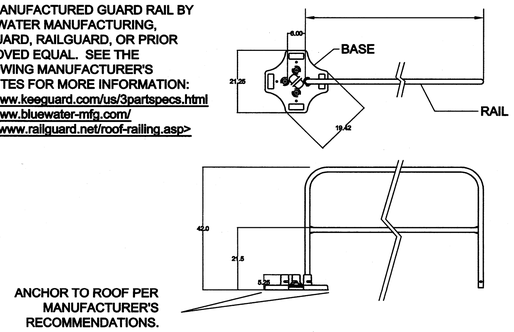

D2 ROOF TOP GUARD RAIL DETAIL - OPTION #1
SCALE: NONE

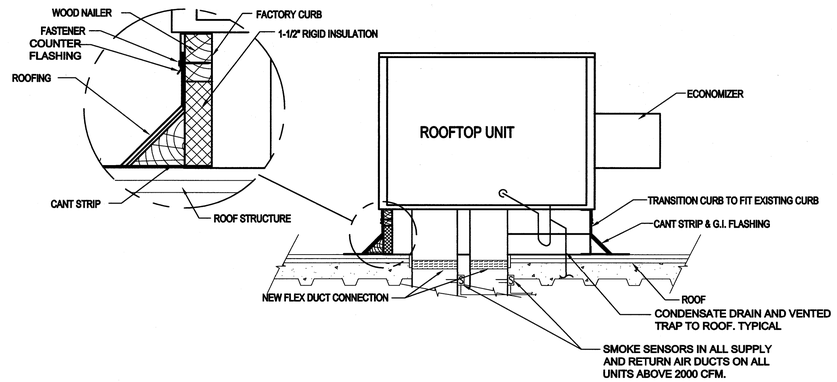

C4 ROOFTOP UNIT DETAIL
SCALE: NONE

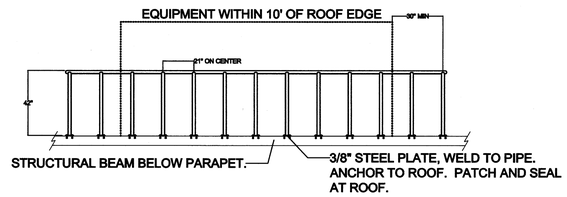

C2 ROOF TOP GUARD RAIL DETAIL - OPTION #2
SCALE: NONE

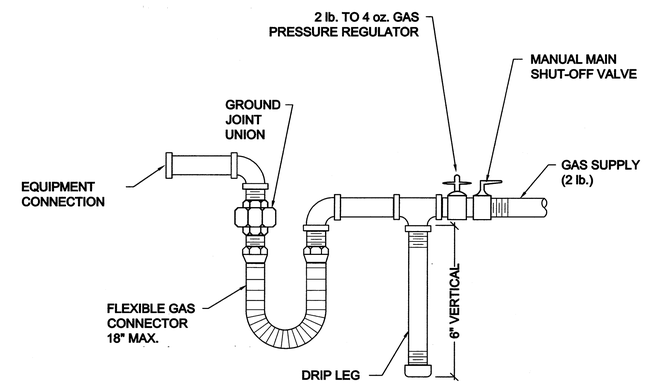

B4 GAS LINE CONNECTION DETAIL
SCALE: NONE

NOTE:
DRY-CHARGED LINE SETS ARE AVAILABLE IN LENGTHS OF 16, 22, 32, & 49 FEET. LENGTHS ARE TO BE KEPT AS SHORT AS POSSIBLE. COILING OF LINES THAT ARE TOO LONG WILL NOT BE ACCEPTABLE AND WILL BE REPLACED AT THE CONTRACTORS EXPENSE. OPTIONAL: HARD REFRIGERANT PIPING. ALL CONNECTIONS ARE TO BE FLARED. CONTRACTOR MAY ALSO USE HARD PIPE AND FITTINGS. SEE SPECIFICATIONS FOR PIPE AND INSULATION.

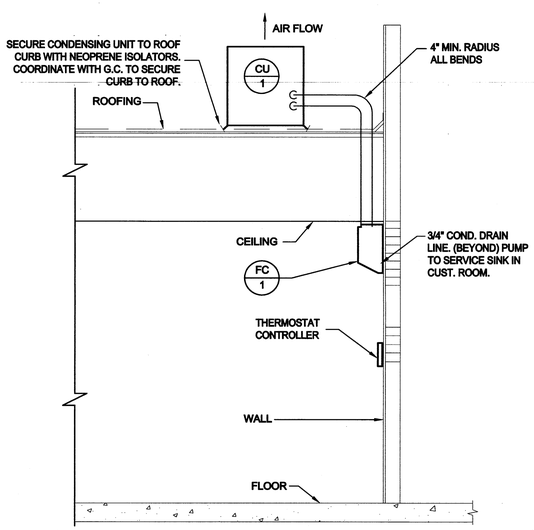

A1 WALL MOUNT AC UNIT DETAIL
SCALE: NONE

GENERAL NOTES:

1. 16 GA GALVANIZED STEEL SEISMIC HOLD DOWN BRACKETS BY MICROMETL OR EQUAL.
2. COORDINATE EXACT DEPTH OF SEISMIC BRACKET WITH ROOFTOP MANUFACTURER.
3. PROVIDE A MINIMUM OF 2 BRACKETS PER SIDE.
4. COORDINATE WITH SPECIFICATIONS SECTION 15074 VIBRATION AND SEISMIC CONTROLS.

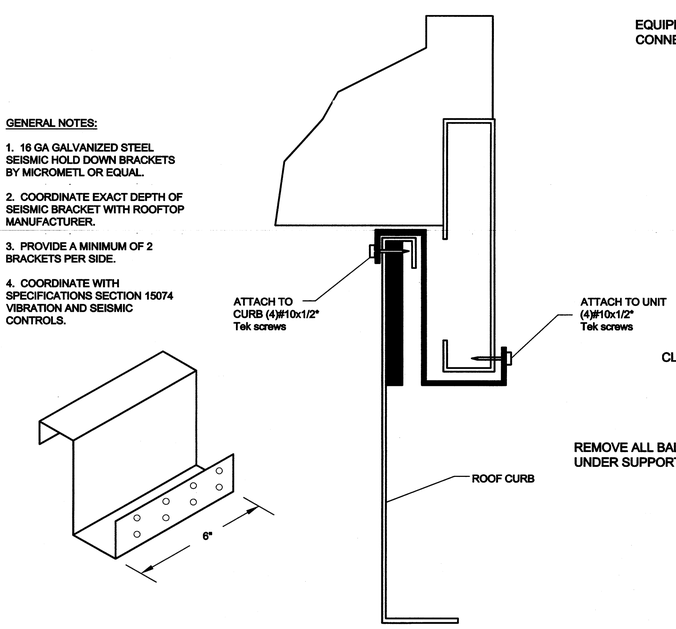

A3 ROOFTOP UNIT SEISMIC BRACKET DETAIL
SCALE: NONE

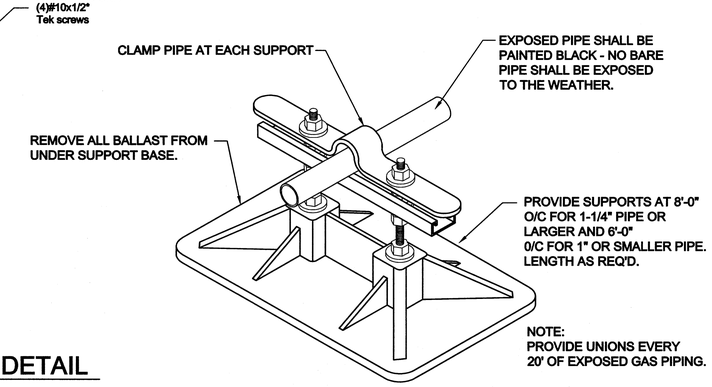

A5 GAS SUPPORT ON ROOF DETAIL
SCALE: NONE

State of Utah
Department of Administrative Services
Division of Facilities Construction & Management
4110 State Office Building
Salt Lake City, Utah 84114
Phone: (801) 538 - 3018
Fax: (801) 538 - 3267
Internet: http://www.dfcm.state.ut.us

CONSULTANTS
WHW ENGINEERING INC.
PROFESSIONAL MECHANICAL ENGINEERING
8619 Sandy Parkway Suite 101
SANDY, UTAH 84070
(801)466-4021, FAX 466-8536
EMAIL: excellence@whw-engineering.com

PROJECT NAME & ADDRESS

DEPARTMENT OF WORK FORCE MIDVALE DWS ROOFTOP AHU REPLACEMENT

DFCM No. 08072920

Midvale, Utah

MARK	DATE	REVISION

PROJECT MANAGER: WP
DRAWN BY: STAFF
CHECKED BY: WP
DATE: 07/25/08
WHW JOB NO.: 08040

PROFESSIONAL ENGINEER 07/25/08 WINWARD M. PACKER No. 375080 STATE OF UTAH

SHEET TITLE
MECHANICAL DETAILS

SHEET NO.
ME501

ROOFTOP AIR CONDITIONER SCHEDULE (GAS HEAT)

SYMBOL	MANUFACTURER & MODEL NUMBER	SA CFM	OSA CFM	E.S.P. IN W.G.	HEATING	COOLING			ELECTRICAL					EER/ SEER	OPER. WT. (LBS)	IPLV	SCHEDULE NOTES
					TOT. MIN. INPUT MBH	AMB. AIR (DB)	AMB. AIR (WB)	MIN. TOTAL MBH	V - Ø - Hz	COMPRESSOR #	COMPRESSOR TOTAL RLA	MCA	MOCP				
RTU 7	TRANE YSC092	3000	600	0.6	166.4	95°	62°	86.1	460-3-60	1	7.1 A	21.5 A	25 A	11.2 EER	1650	12.5 IPLV	1,2,3,4,5,6,7,8
RTU 8	TRANE YSC060	2000	400	0.6	108.2	95°	62°	55.8	460-3-60	1	9.6 A	15.5 A	25 A	13.0 SEER	1050	-	1,2,3,4,5,6,7,8
RTU 9	TRANE YSC092	3000	600	0.6	166.4	95°	62°	86.1	460-3-60	1	7.1 A	21.5 A	25 A	11.2 EER	1650	12.5 IPLV	1,2,3,4,5,6,7,8
RTU 10	TRANE YSC092	3000	600	0.6	166.4	95°	62°	86.1	460-3-60	1	7.1 A	21.5 A	25 A	11.2 EER	1650	12.5 IPLV	1,2,3,4,5,6,7,8
RTU 11	TRANE YSC036	1200	240	0.6	100	95°	62°	34	460-3-60	1	5.1 A	10.1 A	15 A	13.0 SEER	900	-	1,2,3,4,6,7,8
RTU 12	TRANE YSC036	1200	240	0.6	100	95°	62°	34	460-3-60	1	5.1 A	10.1 A	15 A	13.0 SEER	900	-	1,2,3,4,6,7,8
RTU 13	TRANE YSC092	3000	600	0.6	166.4	95°	62°	86.1	460-3-60	1	7.1 A	21.5 A	25 A	11.2 EER	1650	12.5 IPLV	1,2,3,4,5,6,7,8
RTU 14	TRANE YSC092	3000	600	0.6	166.4	95°	62°	86.1	460-3-60	1	7.1 A	21.5 A	25 A	11.2 EER	1650	12.5 IPLV	1,2,3,4,5,6,7,8

1. E.S. P. DOES NOT INCLUDE LOSSES THROUGH ACCESSORIES.
2. RATED MINIMUM INPUT AT ALTITUDE.
3. PROVIDE ONE 15 AMP, 120 VOLT, DUPLEX GFCI SERVICE OUTLET. FACTORY INSTALLED, AND WIRED.
4. BELT DRIVE UNIT
5. PROVIDE SMOKE DETECTOR IN SUPPLY AND RETURN AIR FOR ALL UNITS OVER 2000 CFM.
6. R410A.
7. MINIMUM EFFICIENCY REQUIREMENTS OF ROCKY MOUNTAIN POWER TO BE MET IN ORDER TO QUALIFY FOR CUSTOMER INCENTIVE.
8. PROVIDE WITH TRANSITION SURB TO MATCH EXISTING CURB, SEE ME101 FOR EXISITNG RTU MODEL NUMBERS.

GENERAL NOTE:
FIELD VERIFY EXISTING ELECTRICAL AND NEW RTU REQUIREMENTS PRIOR TO ORDERING EQUIPMENT (IE BREAKER, WIRE SIZE ETC).

SPLIT SYSTEM SCHEDULE - OUTDOOR UNIT

ITEM NO.	MANUFACTURER AND MODEL NO.	CAPACITY BTU/HR		SEER	ELECTRICAL			OPER WT. LBS.	COMMENTS
		HEATING	COOLING		BREAKER SIZE	MCA	V-Ø-Hz		
CU 1	MITSUBISHI PUY-A24	N/A	22,000	13.5	25	18	230-1-60	165	

1. REFRIGERANT 410-A
2. PROVIDE WITH LOW ABMIENT KIT FOR OPERATION TO 0° F.

SPLIT SYSTEM SCHEDULE - INDOOR UNIT

ITEM NO.	MANUFACTURER AND MODEL NO.	CFM	ELECTRICAL			WEIGHT	NOTES
			MCA	AMP	V-Ø-Hz		
FC 1	MITSUBISHI PKA-A24FA	530-705	15	1	208-1-60	53 LBS	1,2,3,4

1. R410A REFRIGERANT
2. PROVIDE CONDENSATE PUMP. ROUTE CONDENSATE TO OUTSIDE.
3. UNIT SHALL BE WALL MOUNTED. FIELD VERIFY EXACT LOCATION.
4. PROVIDE THERMOSTAT.

State of Utah
Department of Administrative Services
Division of Facilities Construction & Management
4110 State Office Building
Salt Lake City, Utah 84114
Phone: (801) 538 - 3018
Fax: (801) 538 - 3267
Internet: http://www.dfcm.state.ut.us

CONSULTANTS

WHW ENGINEERING INC.
PROFESSIONAL MECHANICAL ENGINEERING
8619 Sandy Parkway Suite 101
SANDY, UTAH 84070
(801)495-4021, FAX 495-5536
EMAIL: excellence@whw-engineering.com

PROJECT NAME & ADDRESS

DEPARTMENT OF WORK FORCE MIDVALE DWS ROOFTOP AHU REPLACEMENT

DFCM No. 08072920

Midvale, Utah

MARK	DATE	REVISION

PROJECT MANAGER: WP
DRAWN BY: STAFF
CHECKED BY: WP
DATE: 07/25/08
WHW JOB NO.: 08040

PROFESSIONAL ENGINEER 07/25/08 WINWARD M. PACKER No. 375090 STATE OF UTAH

SHEET TITLE
MECHANICAL SCHEDULES

SHEET NO.
ME601