STARVATION STATE PARK
RECREATION REHABILITATION PHASE I
DFCM # 08085510

State of Utah–Department of Administrative Services

DIVISION OF FACILITIES CONSTRUCTION
AND MANAGEMENT

4110 State Office Building/Salt Lake City, Utah 84114/538–3018

DRAWING LIST

SEQ. NO.	DRAWING NO.	DESCRIPTION
1.	66-400-1726	Drawing List
2.	66-D-58	Location and Vicinity Maps
3.	66-400-1727	Code Analysis (Sheet 1 of 2)
4.	66-400-1728	Code Analysis (Sheet 2 of 2)
5.	66-400-1729	Symbols and General Notes
6.	66-400-1730	Existing Features
7.	66-400-1731	Demolition Plan
8.	66-400-1732	Finished Site Plan
9.	66-400-1733	One Way Road – Plan and Profile
10.	66-400-1734	Campground Road – Plan and Profile
11.	66-400-1735	Accessible Walkway – Plan and Profile
12.	66-400-1736	Finish Grading Points – Campground and Dayuse (Sheet 1 of 2)
13.	66-400-1737	Finish Grading Points – Campground and Dayuse (Sheet 2 of 2)
14.	66-400-1738	Finish Grading Points – Boat Parking
15.	66-400-1739	Asphalt Paving Plan
16.	66-400-1740	New Sewer and Water
17.	66-400-1741	Typical Spur Plans and Shelter Layouts
18.	66-400-1742	Site 18 Layout
19.	66-400-1743	Layout For Sites 21 Through 24
20.	66-400-1744	Site 25 Layout
21.	66-400-1745	Site 26 Layout
22.	66-400-1746	Campground Electrical Plan
23.	66-400-1747	Power Pedestal Details
24.	66-400-1748	Panelboard Details
25.	66-400-1749	Typical Day Use Shelters and Typical Accessible Day Use Shelters
26.	66-400-1750	Volleyball Court and Horseshoes Pit Details
27.	66-400-1751	Typical Pavement and Sidewalk Details
28.	66-400-1752	Typical Shelter Concrete Pads and Sections
29.	66-400-1753	Water System Details
30.	66-400-1754	Sewer System Details
31.	66-400-1755	Typical Utility Trench Cross Sections
32.	66-400-1756	6-Unit Flush Restroom With Showers
33.	66-400-1757	6-Unit Flush Restroom With Showers – Roof Framing and Electrical Plans
34.	66-400-1758	6-Unit Flush Restroom With Showers – Elevations
35.	66-400-1759	6-Unit Flush Restroom With Showers – Wall Section and Details
36.	66-400-1760	6-Unit Flush Restroom
37.	66-400-1761	6-Unit Flush Restroom – Electrical and Roof Framing Plans
38.	66-400-1762	6-Unit Flush Restroom – Elevations
39.	66-400-1763	6-Unit Flush Restroom Wall – Section and Details
40.	66-400-1764	Flush Restroom Accessibility Details
STANDARD DRAWINGS		
41.	40-D-6263	General Notes and Minimum Requirements for Detailing Reinforcement
42.	40-D-7016	Chain Link Fencing – Chain Link Requirements – Soil Installation
INFORMATION DRAWINGS		
43.	C-1	General Site Plan
44.	C-7	Day Use Area – East
45.	C-8	Day Use Area – West
46.	RC-1	Floor Plan, Foundation Plan, Elevations, and Sections – Building 'C'
47.	RM-1	Mechanical – Typical – Rest Rooms A, B, and C
48.	RE-1	Electrical – Typical – Restrooms A, B, and C
49.	FC-1	Fish Cleaning Station
50.	MT-1	Mechanical – Typical – Details and Schedules
51.	1	Site Plan

RECLAMATION
Managing Water in the West

ALWAYS THINK SAFETY

U.S. DEPARTMENT OF THE INTERIOR
BUREAU OF RECLAMATION
CENTRAL UTAH PROJECT
BONNEVILLE UNIT – UTAH

STARVATION STATE PARK
RECREATION REHABILITATION – PHASE I
DRAWING LIST

REV NO

DESIGNED
DRAWN
CHECKED
TECH. APPR. JAY BYTHEWAY–P.E.
ADMIN. APPROVAL
WAYNE XIA
MANAGER T.S.D.

66-400-1726
SHEET 1 OF 1

DATE AND TIME PLOTTED
APRIL 26, 2010 14:24
PLOTTED BY
EMANSEAU

CAD SYSTEM
AutoCAD Rel. 17.2s
CAD FILENAME
DRAWING LIST.DWG

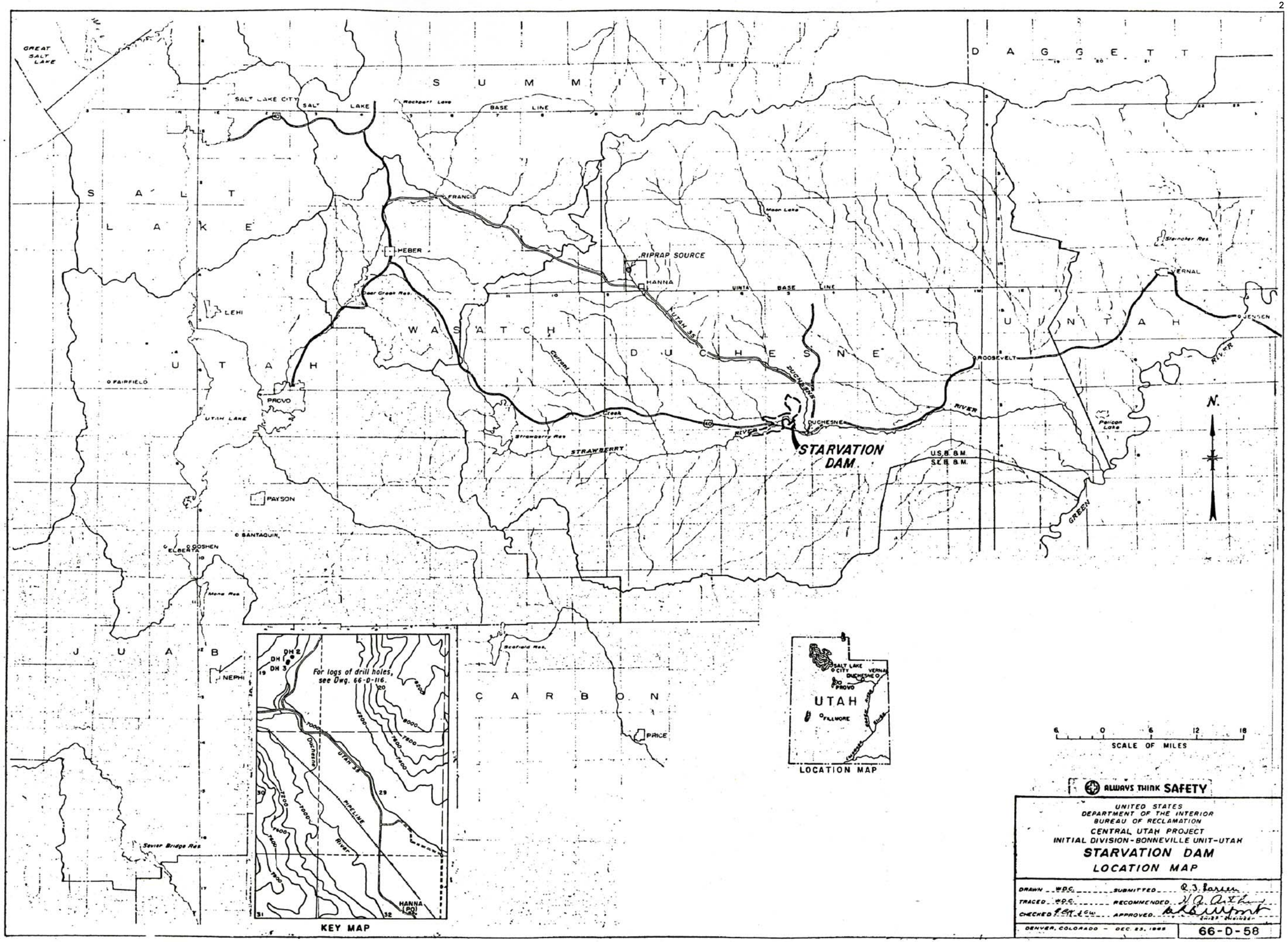
GREAT SALT LAKE
SALT LAKE CITY
SALT LAKE
Rockport Lake
BASE LINE
S U M M I T
D A G G E T T
S A L T L A K E
FRANCIS
HEBER
Deer Creek Res.
RIPRAP SOURCE
HANNA
Moon Lake
UINTA BASE LINE
UTAH 35
DUCHESNE
Current Creek
W A S A T C H
D U C H E S N E
U I N T A H
VERNAL
JENSEN
Steinaker Res.
ROOSEVELT
RIVER
LEHI
FAIRFIELD
PROVO
UTAH LAKE
U T A H
Strawberry Res
STRAWBERRY
DUCHESNE
STARVATION DAM
U.S.B.&M.
S.L.B.&M.
Pelican Lake
N.
GREEN
PAYSON
SANTAQUIN
GOSHEN
ELBERTA
Mona Res.
J U A B
NEPHI
Sevier Bridge Res.
Scofield Res.
C A R B O N
PRICE
For logs of drill holes, see Dwg. 66-D-116.
DH 2
DH 1
DH 3
8000
7800
7600
7400
7200
7000
6800
6600
6400
6200
6000
DUCHESNE
UTAH 35
PIPELINE
RIVER
HANNA (PO)
19
20
29
30
31
32
KEY MAP
SALT LAKE CITY
VERNAL
DUCHESNE
PROVO
UTAH
FILLMORE
LOCATION MAP
6 0 6 12 18
SCALE OF MILES
ALWAYS THINK SAFETY
UNITED STATES
DEPARTMENT OF THE INTERIOR
BUREAU OF RECLAMATION
CENTRAL UTAH PROJECT
INITIAL DIVISION-BONNEVILLE UNIT-UTAH
STARVATION DAM
LOCATION MAP
DRAWN W.D.C.
SUBMITTED
TRACED W.D.C.
RECOMMENDED
CHECKED
APPROVED
DENVER, COLORADO - DEC. 23, 1965
66-D-58

SIX UNIT RESTROOM WITH SHOWERS

CODE ANALYSIS

APPLICABLE CODES

	Year		Year
International Building Code	2006	National Electrical Code	2008
International Mechanical Code	2006	Uniform Code for Building Conservation	1997
International Fuel Gas Code	2006	ADA Accessibility Guidelines	1998
International Plumbing Code	2006	Architectural Barriers Act Accessibility Standards	2006
International Fire Code	2006		
International Energy Conservation Code	2006		

A. Occupancy and Group: A-5

Change in Use: Yes ____ No X Mixed Occupancy: Yes ____ No X
Special Use and Occupancy (e.g. High Rise, Covered Mall): ____

B. Seismic Design Category: C Design Wind Speed: 90 mph

C. Type of Construction (circle one):

I/A I/B II/A II/B III/A III/B IV/HT V/A (V/B)

D. Fire Resistance Rating Requirements for the Exterior Walls based on the fire separation distance (in hours):

North: 0 South: 0 East: 0 West: 0

E. Mixed Occupancies: None Nonseparated Uses: ____

F: Sprinklers:

Required: None Provided: None

Type of Sprinkler System (IBC 903.3.1)____

G: Number of Stories: 1 Building Height: 8 ft.

H: Actual Area per Floor (square feet): 760

I: Tabular Area: (table 503): Unlimited

J: Area Modifications: Not Used

K. Fire Resistance Rating Requirements for Building Elements (hours).
(Tables 601 and 720.1(2))

Element	Hours	Assembly Listing	Element	Hours	Assembly Listing
Exterior Bearing Walls	4	3-1.1	Floors - Ceiling Floors	N/A	
Interior Bearing Walls	4	3-1.1	Roofs - Ceiling Roofs	0	
Exterior Non-Bearing Walls	4	3-1.1	Exterior Doors and Windows	0	
Structural Frame	N/A		Shaft Enclosures	N/A	
Partitions - Permanent	N/A		Fire Walls	N/A	
Fire Barriers	N/A		Fire Partitions	N/A	
			Smoke Partitions	N/A	

L. Design Occupant Load: 15

Exit Width Required: 32" Exit Width Provided: 36"

M. Minimum Number of Required Plumbing Facilities:

a) Water Closets - Required (m) 1 (f) 2 Provided (m) 1 (f) 3
b) Urinals - Required (m) 1 (f) 0 Provided (m) 2 (f) 0
c) Lavatories - Required (m) 1 (f) 1 Provided (m) 2 (f) 2
d) Bath Tubs or Showers: 3
e) Drinking Fountains: * Service Sinks: 1

* Drinking Fountains are prohibited in restrooms as per 410.2 of the IPC

This structure is not heated. Estimated number of people using this facility is 153.

SIX UNIT RESTROOM

CODE ANALYSIS

APPLICABLE CODES

	Year		Year
International Building Code	2006	National Electrical Code	2008
International Mechanical Code	2006	Uniform Code for Building Conservation	1997
International Fuel Gas Code	2006	ADA Accessibility Guidelines	1998
International Plumbing Code	2006	Architectural Barriers Act Accessibility Standards	2006
International Fire Code	2006		
International Energy Conservation Code	2006		

A. Occupancy and Group: A-5

Change in Use: Yes ____ No X Mixed Occupancy: Yes ____ No X
Special Use and Occupancy (e.g. High Rise, Covered Mall): ____

B. Seismic Design Category: C Design Wind Speed: 90 mph

C. Type of Construction (circle one):

I/A I/B II/A II/B III/A III/B IV/HT V/A (V/B)

D. Fire Resistance Rating Requirements for the Exterior Walls based on the fire separation distance (in hours):

North: 0 South: 0 East: 0 West: 0

E. Mixed Occupancies: None Nonseparated Uses: ____

F: Sprinklers:

Required: None Provided: None

Type of Sprinkler System (IBC 903.3.1)____

G: Number of Stories: 1 Building Height: 8 ft.

H: Actual Area per Floor (square feet): 524

I: Tabular Area: (table 503): Unlimited

J: Area Modifications: Not Used

K. Fire Resistance Rating Requirements for Building Elements (hours).
(Tables 601 and 720.1(2))

Element	Hours	Assembly Listing	Element	Hours	Assembly Listing
Exterior Bearing Walls	4	3-1.1	Floors - Ceiling Floors	N/A	
Interior Bearing Walls	4	3-1.1	Roofs - Ceiling Roofs	0	
Exterior Non-Bearing Walls	4	3-1.1	Exterior Doors and Windows	0	
Structural Frame	N/A		Shaft Enclosures	N/A	
Partitions - Permanent	N/A		Fire Walls	N/A	
Fire Barriers	N/A		Fire Partitions	N/A	
			Smoke Partitions	N/A	

L. Design Occupant Load: 10

Exit Width Required: 32" Exit Width Provided: 36"

M. Minimum Number of Required Plumbing Facilities:

a) Water Closets - Required (m) 1 (f) 2 Provided (m) 2 (f) 3
b) Urinals - Required (m) 0 (f) 0 Provided (m) 1 (f) 0
c) Lavatories - Required (m) 1 (f) 1 Provided (m) 2 (f) 2
d) Bath Tubs or Showers: 0
e) Drinking Fountains: * Service Sinks: 1

* Drinking Fountains are prohibited in restrooms as per 410.2 of the IPC

This structure is not heated. Estimated number of people using this facility is 148.

FOOTNOTES:

1) In case of conflict with the U.S. Department of Justice Federal Registers Parts I through V - ADA Guidelines and specific reference to the International Building Code Accessibility Chapters, the more restrictive requirement shall govern.

2) Additional Code Information shall be provided at the discretion of the Building Official for Complex Buildings. Including, but not limited to:
   a) High Rise Requirements.
   b) Atriums.
   c) Performance Based Criteria.
   d) Means or Egress Analysis.
   e) Fire Assembly Locator Sheet.
   f) Exterior and Interior Accessibility Route.
   g) Fire Stopping, Including Tested Design Number.

DEFERRED SUBMITTALS

1. Submit structural drawings and calculations from the manufacturer for the 12x12 and 16x16 shelters to USBR and DFCM for review and approval.
2. Submit the truss manufacturer's calculations for both restrooms to USBR and DFCM for review and approval.
3. Submit overall electrical grounding plan and details.

DESIGN DATA

1. Snow Loading – 43 psf ground
2. Wind Loading – 90 mph exposure C
3. Frost Depth – 18 inches
4. Frost Protection Depth – 30 inches
5. Seismic Category – C
6. Location – 40°11'25" North, 110°27'19" West
7. Elevation – 5770 feet

SPECIAL INSPECTIONS

1. Soils testing as per Section 02302 – Compacting Earth Materials.
2. Concrete testing as per Section 03300 – Cast-in-place Concrete.
3. Epoxy anchored bolts as per Drawing 66-400-1752.
4. Certifications by submittal for bituminous surfacing.
5. Sampling and testing will be done by Reclamation.
6. Precast concrete manufacturers shall be PCI certified.
7. Steel fabricators shall be AISC certified.
8. Wood truss manufacturers shall be inspected quarterly by the International Accreditation Service or an equivalent approved third party inspection service.

NOTE

1. Concrete walkways constructed in this project are subject to ABAAS 705, ABAAS Chapter 4, and ADAAG 4.3

RECLAMATION
Managing Water in the West

ALWAYS THINK SAFETY

U.S. DEPARTMENT OF THE INTERIOR
BUREAU OF RECLAMATION
CENTRAL UTAH PROJECT
BONNEVILLE UNIT – UTAH

STARVATION STATE PARK
RECREATION REHABILITATION – PHASE I
CODE ANALYSIS

REV NO

DESIGNED
DRAWN
CHECKED
TECH. APPR. JAY BYTHEWAY-P.E.
ADMIN. APPROVAL WAYNE XIA MANAGER T.S.D.

66-400-1727
SHEET 1 OF 2

DATE AND TIME PLOTTED APRIL 26, 2010 14:37
PLOTTED BY EMANSEAU

CAD SYSTEM AutoCAD Rel. 17.2s
CAD FILENAME CODE FORMS.DWG

12 BY 12 SHELTERS

CODE ANALYSIS

APPLICABLE CODES

	Year		Year
International Building Code	2006	National Electrical Code	2008
International Mechanical Code	2006	Uniform Code for Building Conservation	1997
International Fuel Gas Code	2006	ADA Accessibility Guidelines	1998
International Plumbing Code	2006	Architectural Barriers Act Accessibility Standards	2006
International Fire Code	2006		
International Energy Conservation Code	2006		

A. Occupancy and Group: A-5

Change in Use: Yes ____ No X Mixed Occupancy: Yes ____ No X

Special Use and Occupancy (e.g. High Rise, Covered Mall): ____

B. Seismic Design Category: C Design Wind Speed: 90 mph

C. Type of Construction (circle one):

I/A I/B II/A II/B III/A III/B IV/HT V/A (V/B)

D. Fire Resistance Rating Requirements for the Exterior Walls based on the fire separation distance (in hours):

North: 0 South: 0 East: 0 West: 0

E. Mixed Occupancies: None Nonseparated Uses: ____

F: Sprinklers:

Required: None Provided: None

Type of Sprinkler System (IBC 903.3.1) ____

G: Number of Stories: 1 Building Height: 8 ft.

H: Actual Area per Floor (square feet): 144

I: Tabular Area: (table 503): Unlimited

J: Area Modifications: Not Used

K. Fire Resistance Rating Requirements for Building Elements (hours). (Tables 601 & 720.1(2))

Element	Hours	Assembly Listing	Element	Hours	Assembly Listing
Exterior Bearing Walls	N/A		Floors - Ceiling Floors	N/A	
Interior Bearing Walls	N/A		Roofs - Ceiling Roofs	0	None
Exterior Non-Bearing Walls	N/A		Exterior Doors and Windows	N/A	
Structural Frame	N/A		Shaft Enclosures	N/A	
Partitions - Permanent	N/A		Fire Walls	N/A	
Fire Barriers	N/A		Fire Partitions	N/A	
			Smoke Partitions	N/A	

L. Design Occupant Load: 8 IBC 1004.7

Exit Width Required: 32" Exit Width Provided: 100"

M. Minimum Number of Required Plumbing Facilities: Not Applicable

This is an open structure that is not heated and has no utilities.

16 BY 16 SHELTERS

CODE ANALYSIS

APPLICABLE CODES

	Year		Year
International Building Code	2006	National Electrical Code	2008
International Mechanical Code	2006	Uniform Code for Building Conservation	1997
International Fuel Gas Code	2006	ADA Accessibility Guidelines	1998
International Plumbing Code	2006	Architectural Barriers Act Accessibility Standards	2006
International Fire Code	2006		
International Energy Conservation Code	2006		

A. Occupancy and Group: A-5

Change in Use: Yes ____ No X Mixed Occupancy: Yes ____ No X

Special Use and Occupancy (e.g. High Rise, Covered Mall): ____

B. Seismic Design Category: C Design Wind Speed: 90 mph

C. Type of Construction (circle one):

I/A I/B II/A II/B III/A III/B IV/HT V/A (V/B)

D. Fire Resistance Rating Requirements for the Exterior Walls based on the fire separation distance (in hours):

North: 0 South: 0 East: 0 West: 0

E. Mixed Occupancies: None Nonseparated Uses: ____

F: Sprinklers:

Required: None Provided: None

Type of Sprinkler System (IBC 903.3.1) ____

G: Number of Stories: 1 Building Height: 8 ft.

H: Actual Area per Floor (square feet): 256

I: Tabular Area: (table 503): Unlimited

J: Area Modifications: Not Used

K. Fire Resistance Rating Requirements for Building Elements (hours). (Tables 601 & 720.1(2))

Element	Hours	Assembly Listing	Element	Hours	Assembly Listing
Exterior Bearing Walls	N/A		Floors - Ceiling Floors	N/A	
Interior Bearing Walls	N/A		Roofs - Ceiling Roofs	0	None
Exterior Non-Bearing Walls	N/A		Exterior Doors and Windows	N/A	
Structural Frame	N/A		Shaft Enclosures	N/A	
Partitions - Permanent	N/A		Fire Walls	N/A	
Fire Barriers	N/A		Fire Partitions	N/A	
			Smoke Partitions	N/A	

L. Design Occupant Load: 12 IBC 1004.7

Exit Width Required: 32" Exit Width Provided: 150"

M. Minimum Number of Required Plumbing Facilities: Not Applicable

This is an open structure that is not heated and has no utilities.

RECLAMATION
Managing Water in the West

ALWAYS THINK SAFETY

U.S. DEPARTMENT OF THE INTERIOR
BUREAU OF RECLAMATION
CENTRAL UTAH PROJECT
BONNEVILLE UNIT - UTAH

STARVATION STATE PARK
RECREATION REHABILITATION - PHASE I
CODE ANALYSIS

REV. NO

DESIGNED
DRAWN
CHECKED
TECH. APPR. JAY BYTHEWAY-P.E.
ADMIN. APPROVAL
WAYNE JOA
MANAGER T.S.O.

66-400-1728

SHEET 2 OF 2

DATE AND TIME PLOTTED APRIL 26, 2010 14:38
PLOTTED BY EMANSEAU

CAD SYSTEM AutoCAD Rel. 17.2s
CAD FILENAME CODE FORMS.DWG

SYMBOLS

- Day use shelter with grill
- ADA day use shelter with grill
- Camp shelter with firering and table
- V — Vault toilet
- Wheelstop
- Drainage
- Existing deciduous tree to remain in place
- Existing evergreen tree to remain in place
- Bush
- Trees to be removed
- Edge of existing trees
- Existing feature to be removed
- Manhole

- —— S —— S —— Buried sewer pipe
- — W — — — W — — Buried waterline
- Pad mount transformer
- —— ✦ —— ✦ —— Buried telephone line
- —— P —— P —— Buried pressure sewer pipe
- —— W —— Buried high voltage cable
- —— 240V —— 240V —— Buried 240V branch circuit
- —— 110V —— 110V —— Buried 110V branch circuit
- —— 3P —— 3P —— Buried 3–phase branch circuit
- Overhead high voltage line
- Tactile surfacing
- 34 — Campsite number
- E — R.V. Power pedestal
- H — Hydrant/riser
- S — Stop and waste valve
- C — Curb valve
- A — Accessible water hydrant

GENERAL NOTES

1. The Contractor shall locate all underground utilities prior to excavation to avoid any service interruptions. Utilities shall be restored to their original condition.
2. The Contractor shall protect all existing facilities during construction and shall replace or restore any facilities damaged as a result of construction activity at their own expense and as directed by the Government Inspector.
3. Coordinates and elevations shown are based on a coordinate system established by the Bureau of Reclamation. Primary control will be set by the Bureau of Reclamation survey crew.
4. Shelters shown to be removed include pedestal grills and tables. The Contractor shall remove existing flush toilet facilities as shown on the drawings.
5. All accessible site concrete and bituminous surfaces are to have a slope less than 1–1/2% in any direction unless noted on the drawings. Accessible routes shall be less than 4–1/2% running slope and 1–1/2% cross slope.
6. Saw cut or tooled groove control joints to the depth of 1/4 the slab thickness.
7. Tactile warning surfaces shall shall have a heavy broom or approved finish and a 70% or greater change in color.

RECLAMATION
Managing Water in the West

ALWAYS THINK SAFETY

U.S. DEPARTMENT OF THE INTERIOR
BUREAU OF RECLAMATION
CENTRAL UTAH PROJECT
BONNEVILLE UNIT – UTAH

STARVATION STATE PARK
RECREATION REHABILITATION – PHASE I
SYMBOLS AND GENERAL NOTES

REV NO

DESIGNED
DRAWN
CHECKED
TECH. APPR. — NAME – TITLE
APPROVED — ADMINISTRATIVE APPROVAL – NAME – TITLE

66–400–1729
SHEET 1 OF 1

DATE AND TIME PLOTTED
APRIL 26, 2010 14:39
PLOTTED BY
EMANSEAU

CAD SYSTEM
AutoCAD Rel. 17.2s
CAD FILENAME
GENERAL SYMBOLS & NOTES.DWG

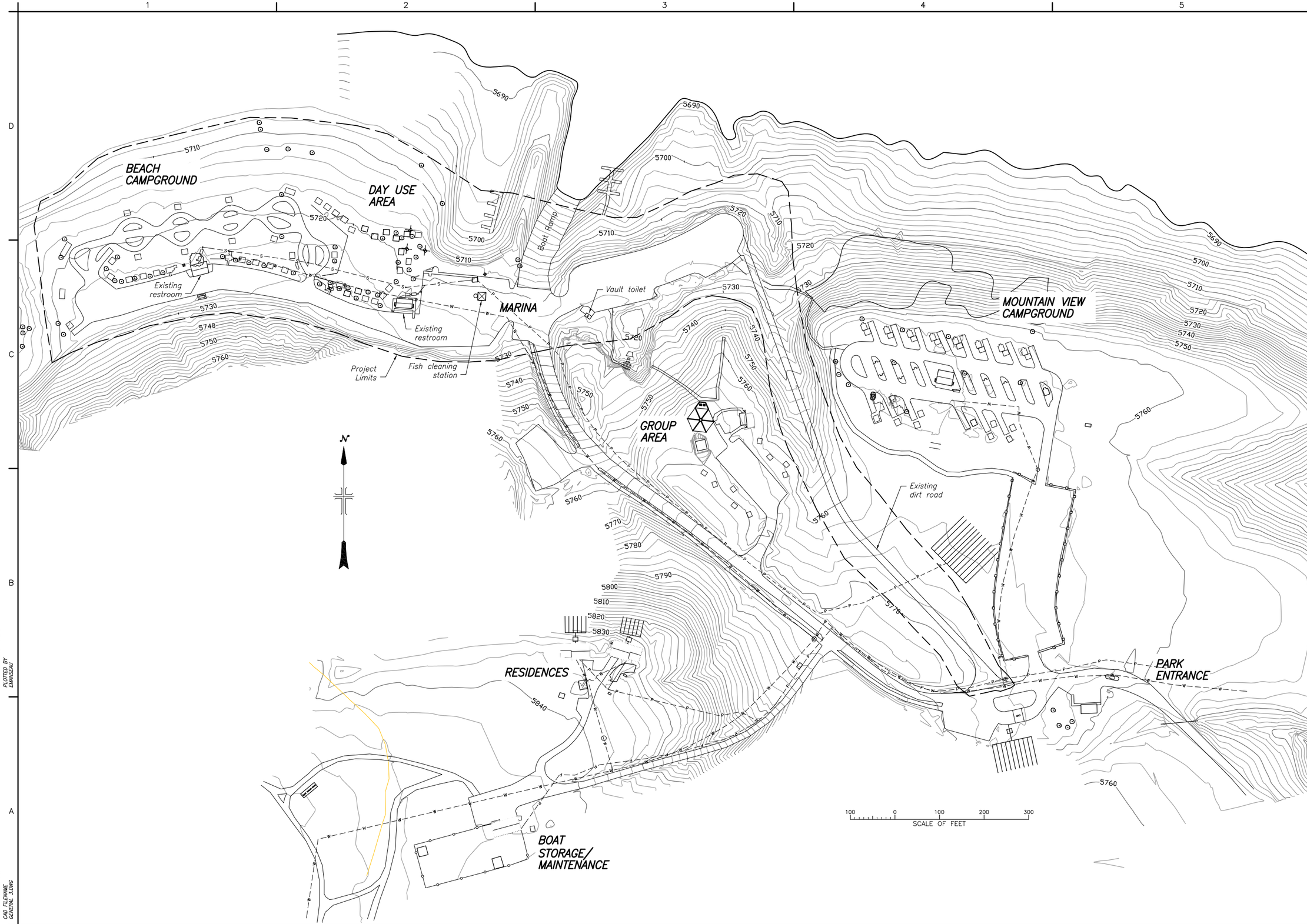

RECLAMATION
Managing Water in the West

ALWAYS THINK SAFETY

U.S. DEPARTMENT OF THE INTERIOR
BUREAU OF RECLAMATION

CENTRAL UTAH PROJECT
BONNEVILLE UNIT – UTAH

STARVATION STATE PARK

RECREATION REHABILITATION – PHASE I

EXISTING FEATURES

REV NO

DESIGNED
DRAWN
CHECKED
TECH. APPR. JAY BYTHEWAY–P.E.
ADMIN. APPROVAL
WAYNE XIA
MANAGER T.S.D.

66–400–1730

SHEET 1 OF 1

DATE AND TIME PLOTTED
APRIL 26, 2010 14:49
PLOTTED BY
EMARSCAU

CAD SYSTEM
AutoCAD Rel. 17.2s
CAD FILENAME
GENERAL 3.DWG

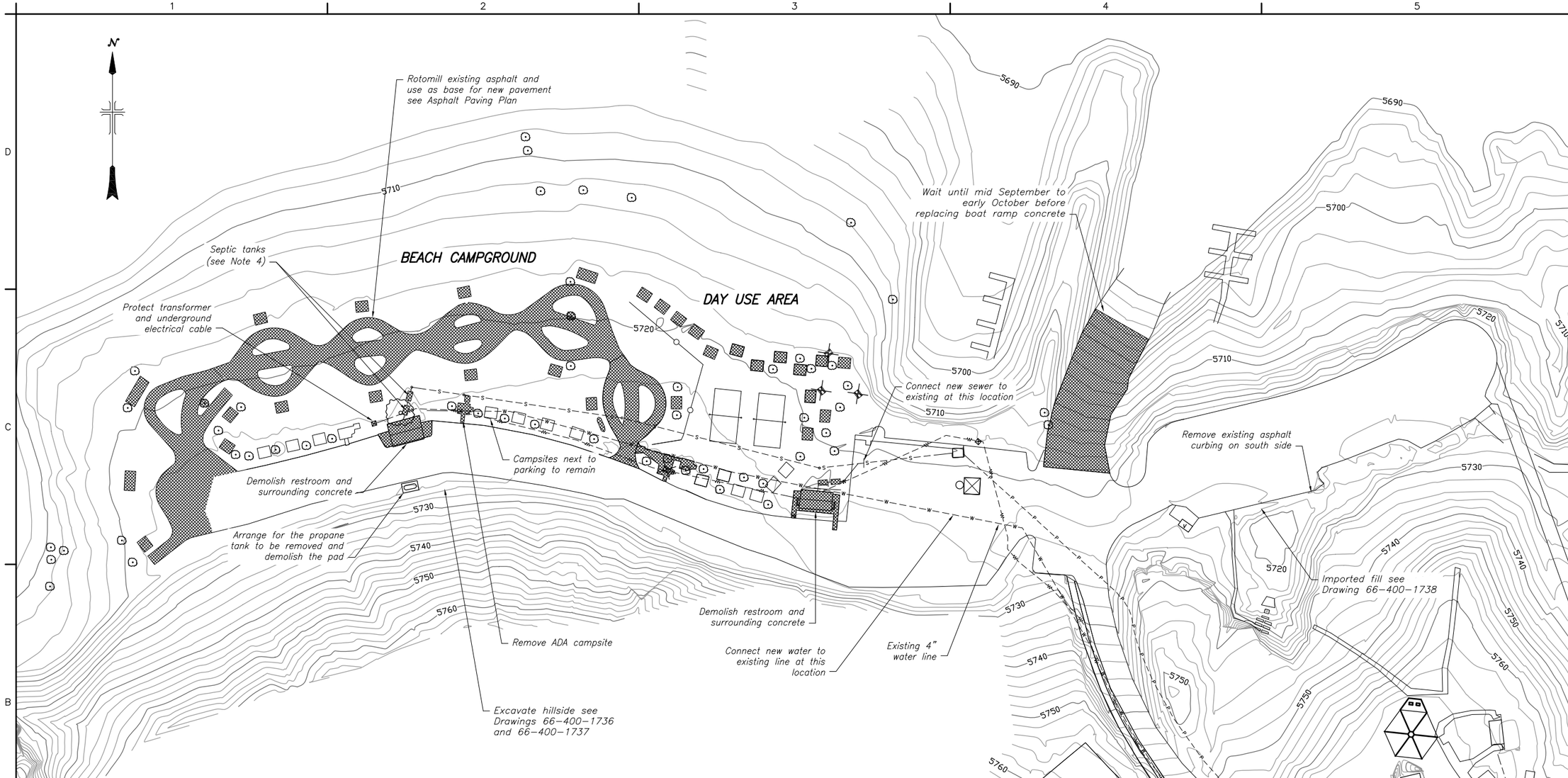

60 0 60 120 180
SCALE OF FEET

NOTES

1. Utility lines shown are approximate.
2. Contact Moon Lake Electric to get exact locations of buried power lines and to disconnect power from demolition area.
3. Abandon existing water and sewer lines beyond connection points.
4. Pump out and remove existing septic tanks.
5. Remove existing grass in day use area after new features have been constructed and replace with new sod.
6. Rocks and boulders to be removed and stockpiled.
7. Restore rocks and boulders to new locations as directed after new features are constructed.
8. Preserve as much vegetation as possible during demolition and construction operations.
9. Saw cut old asphalt as per Drawing 66-400-1739

RECLAMATION
Managing Water in the West

ALWAYS THINK SAFETY

U.S. DEPARTMENT OF THE INTERIOR
BUREAU OF RECLAMATION
CENTRAL UTAH PROJECT
BONNEVILLE UNIT - UTAH

STARVATION STATE PARK
RECREATION REHABILITATION - PHASE I
DEMOLITION PLAN

REV NO

DESIGNED
DRAWN
CHECKED
TECH. APPR. JAY BYTHEWAY-P.E.
ADMIN. APPROVAL
WAYNE XIA
MANAGER T.S.D.

66-400-1731
SHEET 1 OF 1

DATE AND TIME PLOTTED
APRIL 26, 2010 14:52
PLOTTED BY
EMANESCU

CAD SYSTEM
AutoCAD Rel. 17.2s
CAD FILENAME
GENERAL 3.DWG

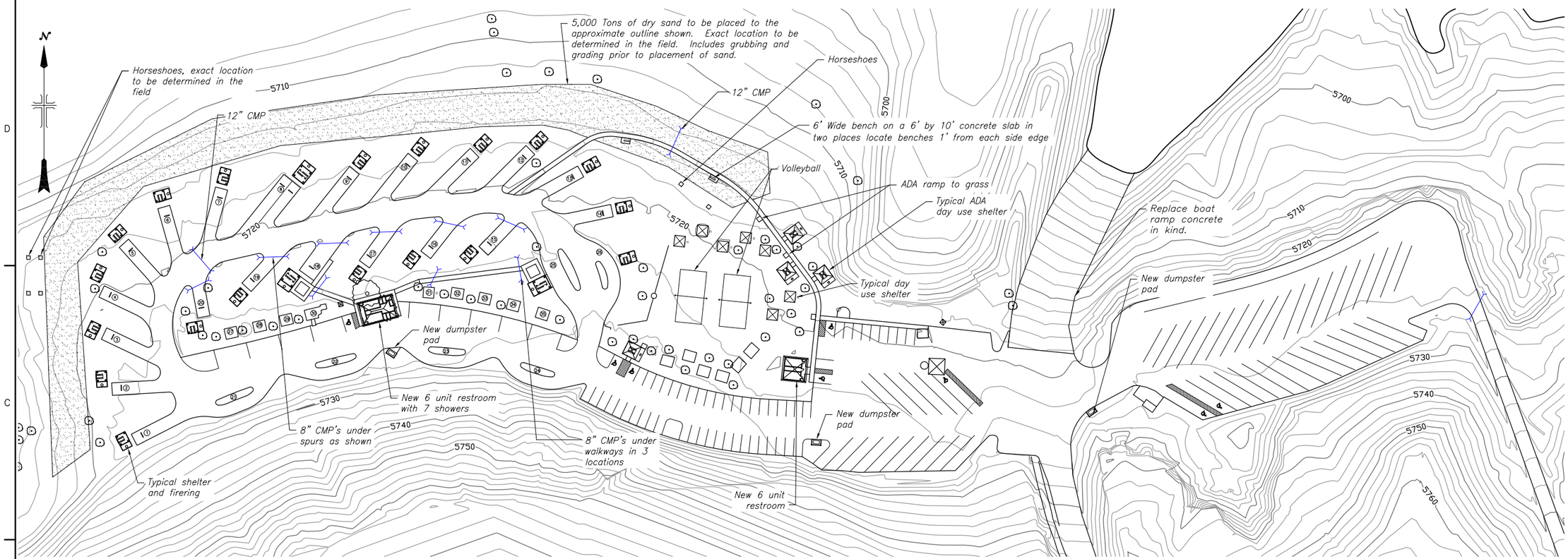

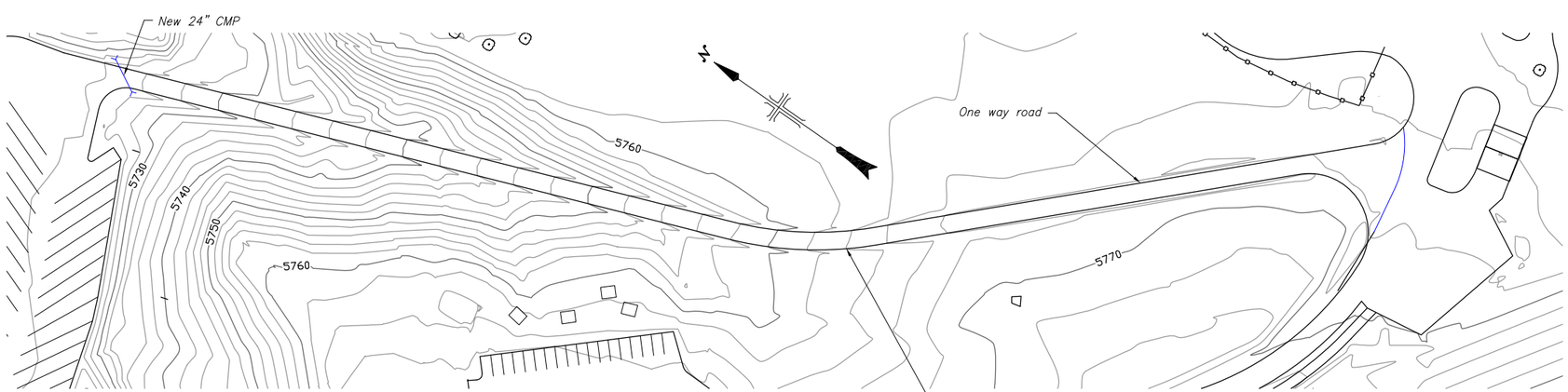

NOTES

1. Day use area to receive new sod and new sprinkler system.
2. Leave erosion control materials in place after construction is finished.
3. Seed campground area with native seed.
4. Place a day use concrete pad and grill at site 31, but no shelter and no shelter footings.
5. Earth quantities: 2460 cubic yards cut and 3430 cubic yards fill.
6. Boat ramp concrete is approximately 7" thick with #6 rebar 12" on center each way in the center of the slab. Apply a rake finish similar to the existing finish and duplicate construction joints.

60 0 60 120 180
SCALE OF FEET

RECLAMATION
Managing Water in the West

ALWAYS THINK SAFETY

U.S. DEPARTMENT OF THE INTERIOR
BUREAU OF RECLAMATION

CENTRAL UTAH PROJECT
BONNEVILLE UNIT – UTAH

STARVATION STATE PARK
RECREATION REHABILITATION – PHASE I
FINISHED SITE PLAN

REV NO

DESIGNED
DRAWN
CHECKED
TECH. APPR. JAY BYTHEWAY–P.E.
ADMIN. APPROVAL
WAYNE KIA
MANAGER T.S.D.

66–400–1732

SHEET 1 OF 1

DATE AND TIME PLOTTED
APRIL 26, 2010 14:54
PLOTTED BY
EMWASDU

CAD SYSTEM
AutoCAD Rel. 17.2s
CAD FILENAME
GENERAL.1.DWG

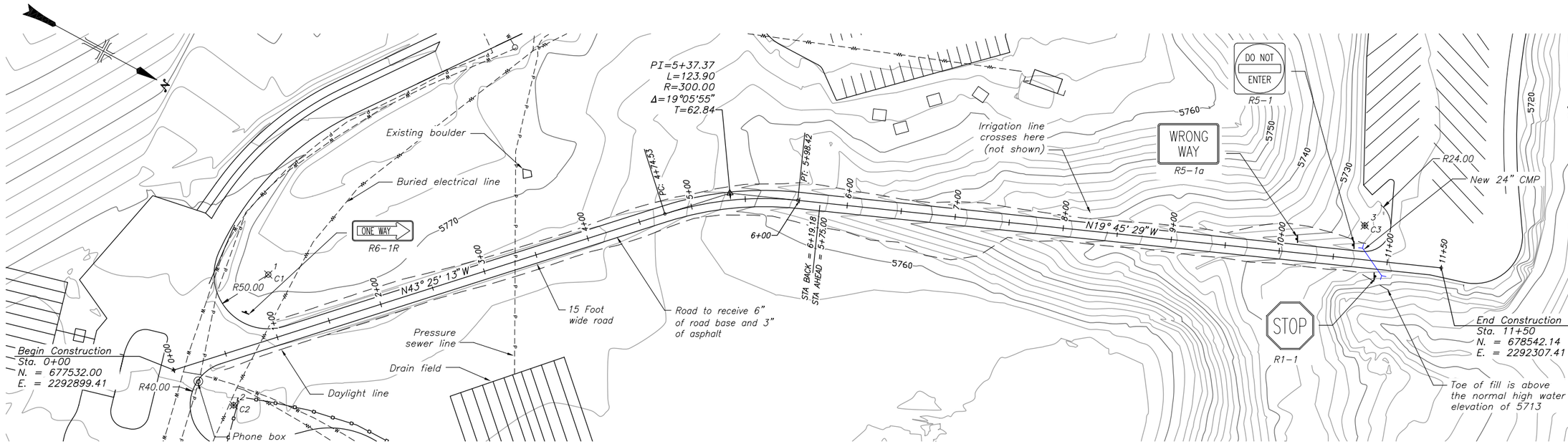

PLAN

CONTROL POINTS				
Point #	Description	Northing	Easting	Elevation
1	C1	677572.09	2292782.30	–
2	C2	677595.60	2292904.62	–
3	C3	678461.72	2292302.82	–

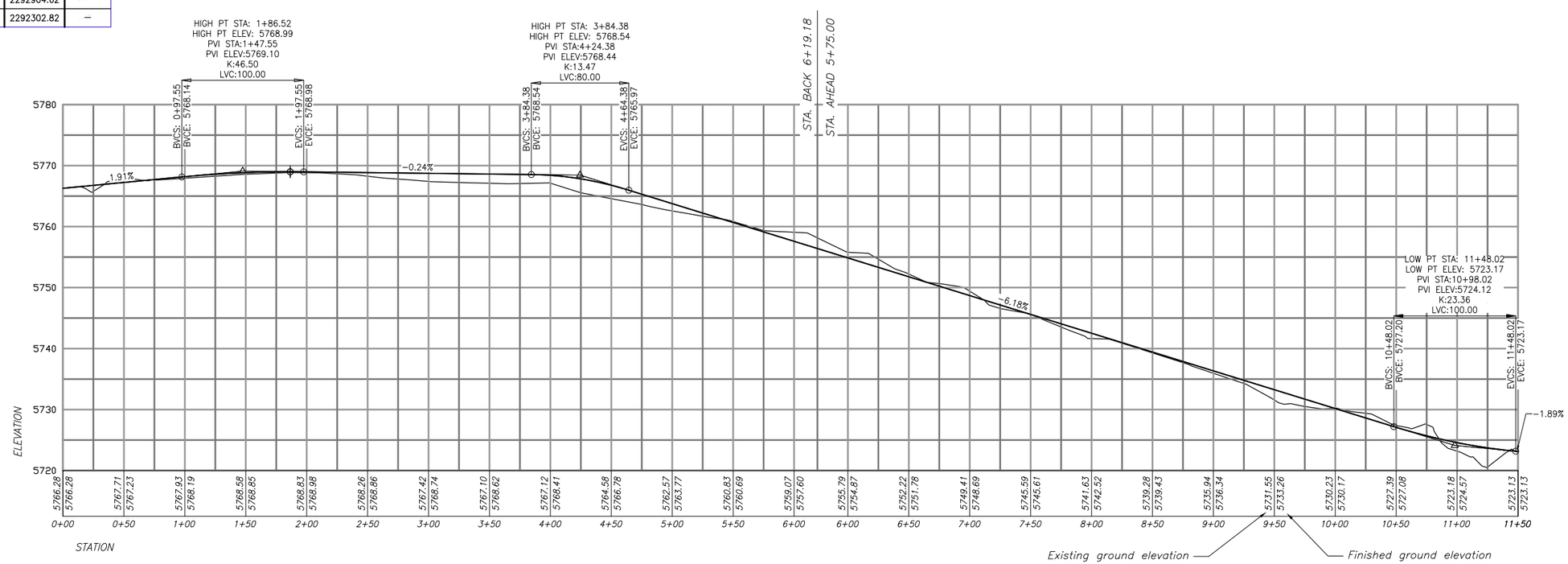

PROFILE

RECLAMATION
Managing Water in the West

ALWAYS THINK SAFETY

U.S. DEPARTMENT OF THE INTERIOR
BUREAU OF RECLAMATION

CENTRAL UTAH PROJECT
BONNEVILLE UNIT – UTAH

STARVATION STATE PARK

RECREATION REHABILITATION – PHASE I

ONE WAY ROAD – PLAN AND PROFILE

REV NO

DESIGNED
DRAWN
CHECKED
TECH. APPR. JAY BYTHEWAY–P.E.
ADMIN. APPROVAL
WAYNE XIA
MANAGER T.S.D.

66–400–1733

SHEET 1 OF 1

DATE AND TIME PLOTTED
APRIL 26, 2010 15:00
PLOTTED BY
EMANSCAU

CAD SYSTEM
AutoCAD Rel. 17.2s
CAD FILENAME
GENERAL 3.DWG

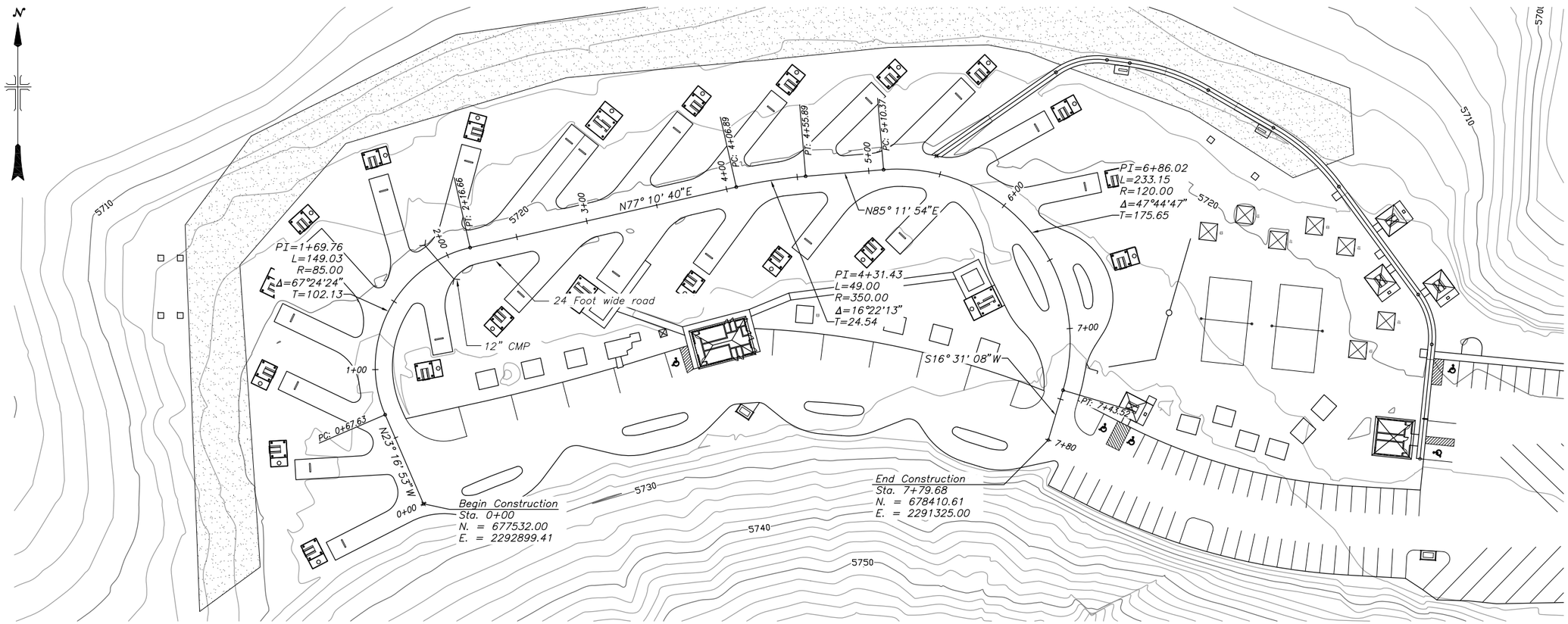

PLAN

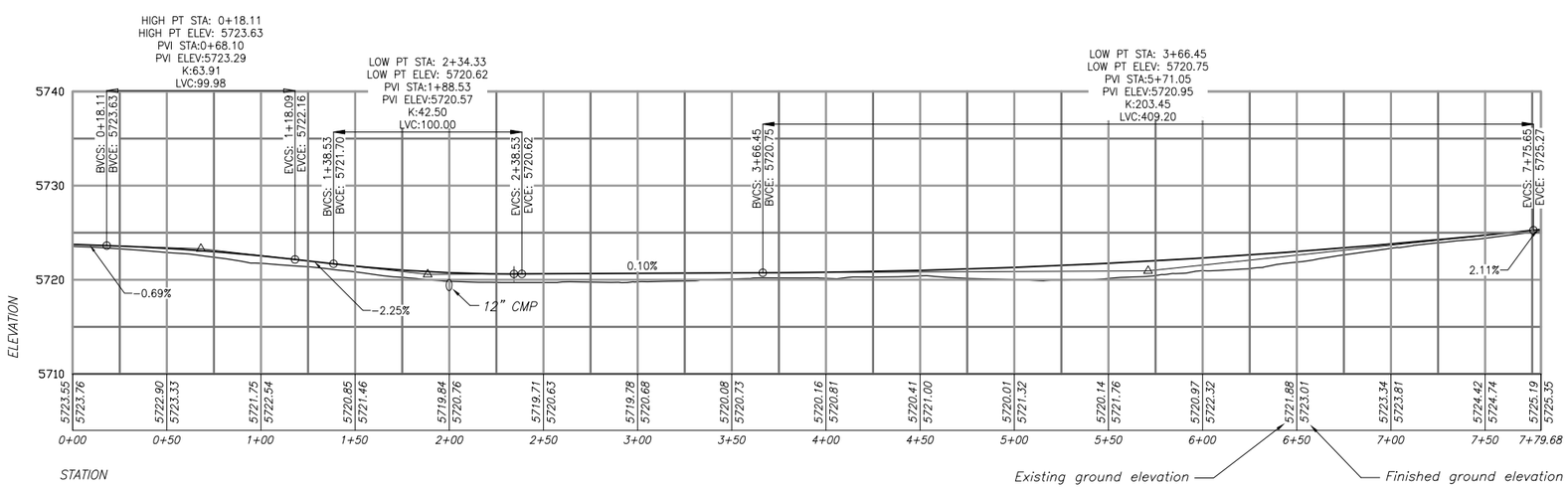

PROFILE

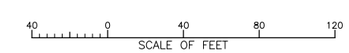

RECLAMATION
Managing Water in the West

ALWAYS THINK SAFETY

U.S. DEPARTMENT OF THE INTERIOR
BUREAU OF RECLAMATION

CENTRAL UTAH PROJECT
BONNEVILLE UNIT – UTAH

STARVATION STATE PARK

RECREATION REHABILITATION – PHASE I

CAMPGROUND ROAD – PLAN AND PROFILE

REV NO

DESIGNED
DRAWN
CHECKED
TECH. APPR. JAY BYTHEWAY–P.E.
ADMIN. APPROVAL
WAYNE JOA
MANAGER T.S.O.

66–400–1734

SHEET 1 OF 1

DATE AND TIME PLOTTED
APRIL 26, 2010 15:03
PLOTTED BY
EMAHSDU

CAD SYSTEM
AutoCAD Rel. 17.2s
CAD FILENAME
GENERAL JLWG

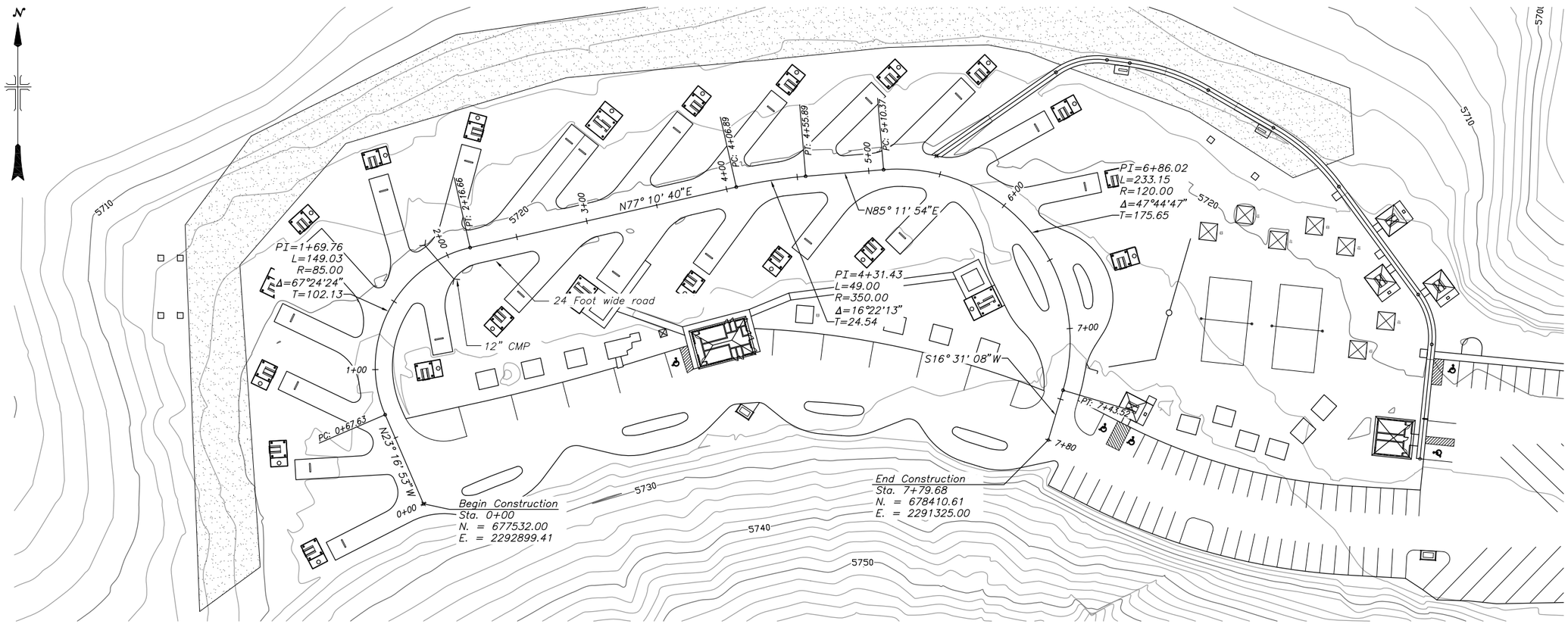

PLAN

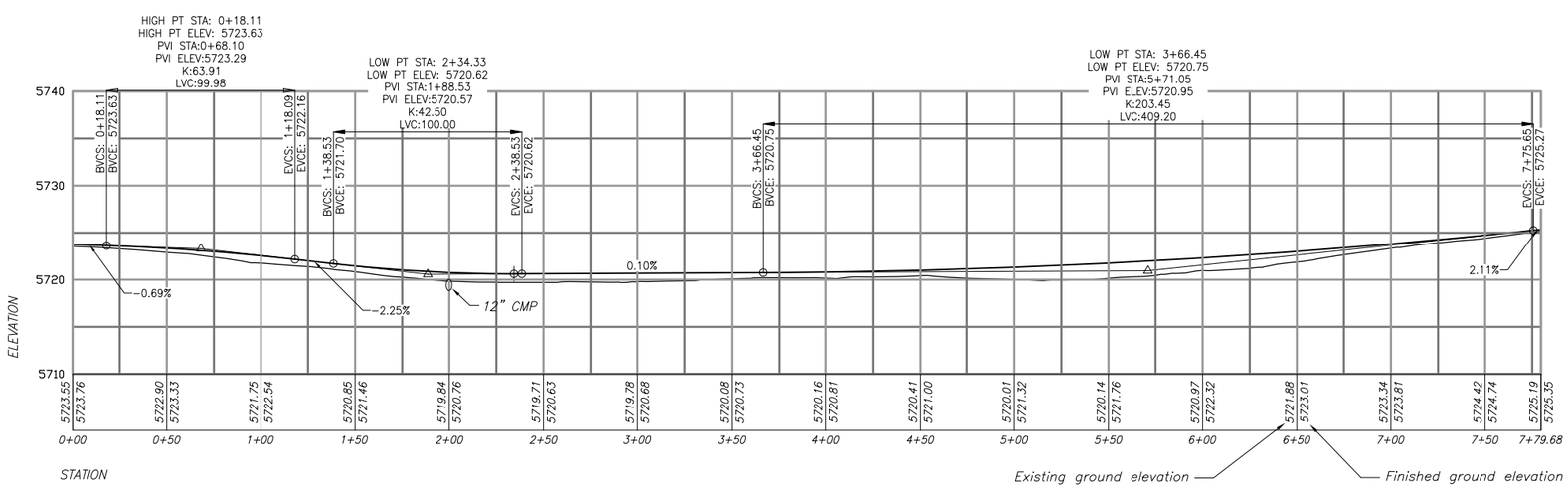

PROFILE

40 0 40 80 120
SCALE OF FEET

RECLAMATION
Managing Water in the West

ALWAYS THINK SAFETY

U.S. DEPARTMENT OF THE INTERIOR
BUREAU OF RECLAMATION

CENTRAL UTAH PROJECT
BONNEVILLE UNIT – UTAH

STARVATION STATE PARK
RECREATION REHABILITATION – PHASE I
CAMPGROUND ROAD – PLAN AND PROFILE

REV NO

DESIGNED
DRAWN
CHECKED
TECH. APPR. JAY BYTHEWAY–P.E.
ADMIN. APPROVAL
WAYNE JOA
MANAGER T.S.O.

66–400–1734

SHEET 1 OF 1

DATE AND TIME PLOTTED
APRIL 26, 2010 15:04
PLOTTED BY
EMAHSDU

CAD SYSTEM
AutoCAD Rel. 17.2s
CAD FILENAME
GENERAL 1.DWG

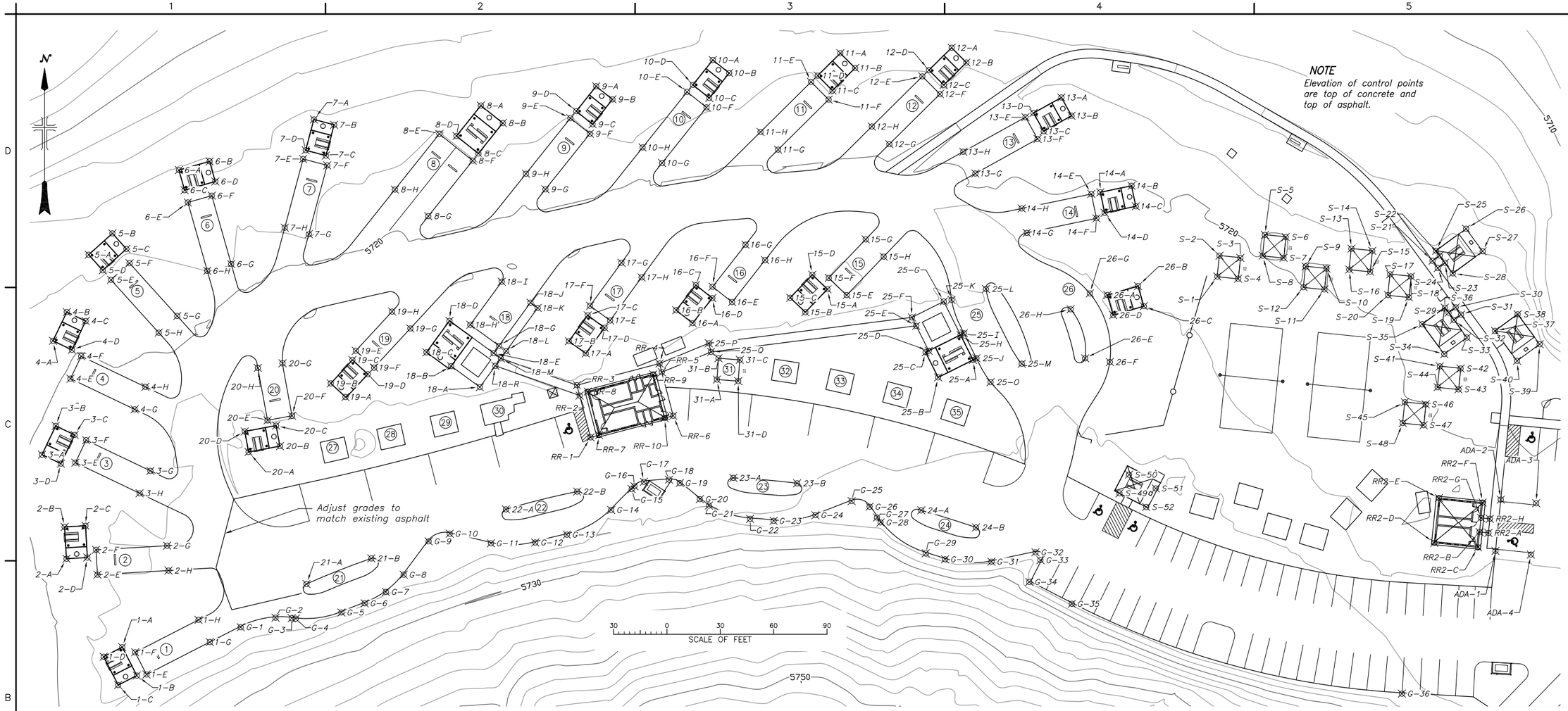

CONTROL POINTS				
Point #	Description	Northing	Easting	Elevation
9000	1–A	678342.14	2290814.55	5722.70
9001	1–B	678326.19	2290822.72	5722.70
9002	1–C	678320.83	2290812.26	5722.70
9003	1–D	678336.78	2290804.09	5722.70
9005	1–E	678326.79	2290828.17	5722.99
9006	1–F	678339.25	2290821.79	5722.99
9007	1–G	678345.03	2290863.77	5722.59
9008	1–H	678357.49	2290857.38	5722.59
9009	2–A	678391.86	2290783.18	5721.60
9010	2–B	678409.75	2290782.14	5721.60
9011	2–C	678410.43	2290793.87	5721.60
9012	2–D	678392.55	2290794.91	5721.60
9013	2–E	678382.91	2290800.61	5721.70
9015	2–F	678396.88	2290799.79	5721.70
9016	2–G	678399.22	2290839.73	5722.10
9017	2–H	678385.24	2290840.54	5722.10
9018	3–A	678450.40	2290769.43	5720.60
9019	3–B	678466.57	2290777.15	5720.60
9020	3–C	678461.50	2290787.76	5720.60
9021	3–D	678445.33	2290780.03	5720.60

CONTROL POINTS				
Point #	Description	Northing	Easting	Elevation
9022	3–E	678445.91	2290788.20	5720.89
9023	3–F	678458.54	2290794.24	5720.89
9024	3–G	678441.30	2290830.33	5721.29
9025	3–H	678428.67	2290824.30	5721.29
9026	4–A	678514.42	2290775.64	5719.70
9027	4–B	678530.59	2290783.37	5719.70
9028	4–C	678525.52	2290793.97	5719.70
9029	4–D	678509.36	2290786.25	5719.70
9030	4–E	678493.13	2290785.42	5720.23
9031	4–F	678505.76	2290791.46	5720.23
9032	4–G	678475.89	2290821.51	5720.63
9033	4–H	678488.52	2290827.55	5720.63
9034	5–A	678562.81	2290795.70	5717.50
9035	5–B	678574.81	2290809.00	5717.50
9036	5–C	678566.08	2290816.87	5717.50
9037	5–D	678554.08	2290803.57	5717.50
9038	5–E	678548.71	2290808.24	5718.99
9039	5–F	678558.09	2290818.64	5718.99
9040	5–G	678528.38	2290845.43	5719.39
9041	5–H	678519.01	2290835.04	5719.39

CONTROL POINTS				
Point #	Description	Northing	Easting	Elevation
9042	6–A	678610.42	2290846.39	5716.20
9043	6–B	678615.30	2290863.63	5716.20
9044	6–C	678599.12	2290849.60	5716.20
9045	6–D	678604.00	2290866.83	5716.20
9046	6–E	678592.23	2290851.42	5717.57
9047	6–F	678596.04	2290864.89	5717.57
9048	6–G	678557.56	2290875.79	5717.97
9049	6–H	678553.74	2290862.32	5717.97
9050	7–A	678638.90	2290922.28	5716.50
9051	7–B	678635.86	2290933.63	5716.50
9052	7–C	678618.55	2290929.00	5716.50
9053	7–D	678621.59	2290917.65	5716.50
9054	7–E	678616.67	2290916.21	5717.40
9055	7–F	678613.05	2290929.73	5717.40
9056	7–G	678574.41	2290919.40	5717.80
9057	7–H	678578.03	2290905.88	5717.80
9058	8–A	678646.70	2291016.10	5717.20
9059	8–B	678636.87	2291028.41	5717.20
9060	8–C	678619.74	2291014.73	5717.20
9061	8–D	678629.58	2291002.42	5717.20

CONTROL POINTS				
Point #	Description	Northing	Easting	Elevation
9062	8–E	678630.72	2290992.78	5718.16
9063	8–F	678615.74	2291011.53	5718.16
9064	8–G	678584.49	2290986.56	5718.56
9065	8–H	678599.48	2290967.81	5718.56
9066	9–A	678657.52	2291080.92	5717.20
9067	9–B	678650.19	2291090.10	5717.20
9068	9–C	678636.19	2291078.91	5717.20
9069	9–D	678643.53	2291069.73	5717.20
9070	9–E	678639.60	2291066.44	5718.16
9071	9–F	678630.86	2291077.37	5718.16
9072	9–G	678599.61	2291052.40	5718.56
9073	9–H	678608.35	2291041.47	5718.56
9074	10–A	678672.31	2291146.49	5717.30
9075	10–B	678664.98	2291155.67	5717.30
9076	10–C	678650.98	2291144.48	5717.30
9077	10–D	678658.31	2291135.30	5717.30
9078	10–E	678654.39	2291132.01	5717.82
9079	10–F	678645.65	2291142.94	5717.82
9080	10–G	678614.40	2291117.97	5719.16
9081	10–H	678623.14	2291107.04	5718.22

CONTROL POINTS				
Point #	Description	Northing	Easting	Elevation
9082	11–A	678676.14	2291218.17	5717.70
9083	11–B	678667.79	2291226.44	5717.70
9084	11–C	678655.18	2291213.72	5717.70
9085	11–D	678663.53	2291205.45	5717.70
9086	11–E	678660.01	2291201.72	5718.44
9087	11–F	678650.06	2291211.57	5718.44
9088	11–G	678621.90	2291183.16	5718.84
9089	11–H	678631.85	2291173.31	5718.84
9090	12–A	678679.23	2291280.73	5717.80
9091	12–B	678670.89	2291289.00	5717.80
9092	12–C	678658.28	2291276.28	5717.80
9093	12–D	678666.62	2291268.00	5717.80
9094	12–E	678663.10	2291264.28	5718.37
9095	12–F	678653.16	2291274.13	5718.37
9096	12–G	678625.00	2291245.72	5718.77
9097	12–H	678634.94	2291235.87	5718.77
9098	13–A	678651.22	2291342.42	5718.90
9099	13–B	678640.95	2291348.12	5718.90
9100	13–C	678632.25	2291332.46	5718.90
9101	13–D	678642.53	2291326.75	5718.90

RECLAMATION
Managing Water in the West

ALWAYS THINK SAFETY

U.S. DEPARTMENT OF THE INTERIOR
BUREAU OF RECLAMATION

CENTRAL UTAH PROJECT
BONNEVILLE UNIT – UTAH

STARVATION STATE PARK

RECREATION REHABILITATION – PHASE I

FINISH GRADING POINTS – CAMPGROUND AND DAYUSE

REV. 1/10

DESIGNED
DRAWN
CHECKED
TECH. APPR. JAY BYTHEWAY–P.E.
ADMIN. APPROVAL
WAYNE XIA
MANAGER T.S.D.

66–400–1736

SHEET 1 OF 2

DATE AND TIME PLOTTED
APRIL 26, 2010 15:10
PLOTTED BY
EMMASEDU

CAD SYSTEM
AutoCAD Rel. 17.2s
CAD FILENAME
GENERAL.DWG

CONTROL POINTS

Point #	Description	Northing	Easting	Elevation
9102	13–E	678640.15	2291322.21	5719.33
9103	13–F	678627.91	2291329.01	5719.33
9104	13–G	678608.50	2291294.03	5719.73
9105	13–H	678620.74	2291287.24	5719.73
9106	14–A	678597.91	2291364.31	5720.30
9107	14–B	678601.57	2291381.85	5720.30
9108	14–C	678590.06	2291384.24	5720.30
9109	14–D	678586.41	2291366.70	5720.30
9110	14–E	678596.99	2291359.26	5720.46
9111	14–F	678583.28	2291362.12	5720.46
9112	14–G	678575.12	2291322.96	5720.86
9113	14–H	678588.83	2291320.10	5720.86
9114	15–A	678543.42	2291210.89	5721.60
9115	15–B	678530.49	2291198.49	5721.60
9116	15–C	678538.63	2291190.01	5721.60
9117	15–D	678551.56	2291202.41	5721.60
9118	15–E	678540.11	2291221.75	5722.06
9119	15–F	678549.80	2291211.64	5722.06
9120	15–G	678571.45	2291232.41	5721.91
9121	15–H	678561.76	2291242.52	5721.91

CONTROL POINTS

Point #	Description	Northing	Easting	Elevation
9122	16–A	678524.35	2291135.13	5721.60
9123	16–B	678531.61	2291125.90	5721.60
9124	16–C	678545.70	2291136.97	5721.60
9125	16–D	678538.43	2291146.21	5721.60
9126	16–E	678536.21	2291157.33	5721.19
9127	16–F	678544.86	2291146.33	5721.19
9128	16–G	678568.44	2291164.87	5720.89
9129	16–H	678559.79	2291175.88	5720.89
9130	17–A	678507.31	2291075.08	5721.50
9131	17–B	678514.24	2291065.59	5721.50
9132	17–C	678528.71	2291076.15	5721.50
9133	17–D	678521.78	2291085.64	5721.50
9134	17–E	678525.84	2291088.77	5721.53
9135	17–F	678534.10	2291077.46	5721.53
9136	17–G	678558.33	2291095.15	5721.23
9137	17–H	678550.08	2291106.45	5721.23
9138	18–A	678488.39	2291015.55	5721.54
9139	18–B	678500.18	2290999.40	5721.54
9140	18–C	678507.92	2290985.54	5721.54
9141	18–D	678525.62	2290998.47	5721.54

CONTROL POINTS

Point #	Description	Northing	Easting	Elevation
9142	18–E	678507.49	2291023.30	5721.54
9143	18–G	678511.63	2291026.32	5721.44
9144	18–H	678523.42	2291010.17	5721.44
9145	18–I	678547.67	2291027.83	5721.14
9146	18–J	678535.86	2291044.01	5721.14
9147	18–K	678532.92	2291048.05	5721.14
9148	18–L	678508.69	2291030.36	5721.44
9149	18–M	678504.55	2291027.34	5721.54
9288	18–R	678500.33	2291024.26	5721.54
9154	19–A	678482.85	2290940.01	5721.75
9155	19–B	678490.47	2290931.76	5721.75
9156	19–C	678503.62	2290943.93	5721.75
9157	19–D	678495.65	2290952.55	5721.75
9158	19–E	678508.83	2290945.84	5721.28
9159	19–F	678499.33	2290956.12	5721.28
9160	19–G	678521.35	2290976.49	5720.98
9161	19–H	678530.86	2290966.21	5720.98
9162	20–A	678451.92	2290885.55	5722.30
9163	20–B	678455.19	2290903.16	5722.30
9164	20–C	678466.74	2290901.02	5722.30

CONTROL POINTS

Point #	Description	Northing	Easting	Elevation
9165	20–D	678463.48	2290883.40	5722.30
9166	20–E	678469.70	2290896.21	5721.49
9167	20–F	678472.25	2290909.98	5721.49
9168	20–G	678501.77	2290904.64	5721.19
9169	20–H	678499.20	2290890.74	5721.79
9204	21–A	678377.65	2290918.09	5723.71
9205	21–B	678392.07	2290954.53	5723.71
9206	22–A	678419.64	2291030.17	5723.71
9207	22–B	678429.65	2291070.23	5723.62
9208	23–A	678437.35	2291158.00	5723.45
9209	23–B	678434.30	2291193.88	5723.78
9210	24–A	678419.07	2291263.65	5724.66
9211	24–B	678409.45	2291294.42	5725.19
9186	25–A	678503.66	2291292.75	5722.37
9187	25–B	678493.85	2291273.15	5722.37
9188	25–C	678507.93	2291266.10	5722.37
9189	25–D	678508.79	2291267.82	5722.37
9190	25–E	678522.83	2291260.79	5722.37
9191	25–F	678527.57	2291258.42	5722.37
9192	25–G	678536.52	2291276.31	5722.37

CONTROL POINTS

Point #	Description	Northing	Easting	Elevation
9193	25–H	678517.74	2291285.70	5722.37
9194	25–I	678518.69	2291287.60	5722.30
9195	25–J	678504.61	2291294.65	5722.46
9200	25–K	678537.43	2291280.67	5722.10
9201	25–L	678543.58	2291300.02	5722.18
9202	25–M	678501.53	2291320.16	5722.75
9203	25–O	678491.17	2291302.62	5722.61
9184	25–P	678513.04	2291144.21	5723.18
9185	25–Q	678508.16	2291145.50	5723.18
9335	26–A	678540.14	2291368.27	5722.00
9336	26–B	678545.15	2291385.47	5722.00
9337	26–C	678533.87	2291388.76	5722.00
9338	26–D	678528.86	2291371.56	5722.00
9232	26–E	678504.59	2291355.74	5723.01
9233	26–F	678502.51	2291369.66	5722.87
9234	26–G	678541.08	2291358.39	5722.66
9235	26–H	678532.16	2291347.61	5722.87
9180	31–A	678492.65	2291148.79	5722.50
9181	31–B	678504.61	2291149.69	5722.50
9182	31–C	678503.71	2291161.65	5722.50

CONTROL POINTS

Point #	Description	Northing	Easting	Elevation
9183	31–D	678491.75	2291160.75	5722.50
9224	ADA–1	678396.27	2291586.41	5721.63
9225	ADA–2	678425.12	2291589.38	5721.20
9226	ADA–3	678423.07	2291609.27	5721.20
9227	ADA–4	678394.22	2291606.30	5721.63
9236	G–1	678353.36	2290881.12	5723.50
9237	G–2	678358.72	2290900.69	5723.50
9238	G–3	678358.43	2290909.80	5723.50
9239	G–4	678358.15	2290912.07	5723.50
9240	G–5	678361.65	2290937.73	5723.50
9241	G–6	678366.83	2290950.79	5723.50
9242	G–7	678373.24	2290962.71	5723.50
9243	G–8	678382.88	2290972.73	5723.50
9244	G–9	678401.65	2290986.76	5723.50
9245	G–10	678405.96	2290998.61	5723.50
9246	G–11	678400.53	2291021.77	5723.50
9247	G–12	678401.00	2291046.69	5723.50
9248	G–13	678405.43	2291064.42	5723.50
9249	G–14	678419.31	2291089.36	5723.52
9250	G–15	678431.04	2291100.88	5723.52

CONTROL POINTS

Point #	Description	Northing	Easting	Elevation
9251	G–16	678432.62	2291102.44	5723.52
9252	G–17	678435.14	2291107.80	5723.52
9253	G–18	678436.31	2291121.87	5723.59
9254	G–19	678434.46	2291127.92	5723.66
9255	G–20	678425.38	2291139.16	5723.80
9256	G–21	678421.77	2291144.26	5723.86
9257	G–22	678414.30	2291167.44	5724.11
9258	G–23	678413.18	2291180.68	5724.24
9259	G–24	678416.36	2291204.15	5724.48
9260	G–25	678424.29	2291224.50	5724.70
9261	G–26	678421.14	2291234.63	5724.70
9262	G–27	678415.03	2291238.76	5724.84
9263	G–28	678412.27	2291240.77	5724.87
9264	G–29	678394.93	2291266.18	5725.19
9265	G–30	678391.56	2291277.02	5725.30
9266	G–31	678390.21	2291303.11	5725.56
9267	G–32	678395.48	2291327.87	5725.56
9268	G–33	678391.08	2291330.64	5725.63
9269	G–34	678378.85	2291324.34	5725.77
9270	G–35	678366.52	2291348.28	5725.50

CONTROL POINTS

Point #	Description	Northing	Easting	Elevation
9271	G–36	678315.99	2291533.80	5724.00
9170	RR–1	678460.13	2291077.78	5723.42
9171	RR–2	678483.63	2291071.62	5723.42
9172	RR–3	678489.47	2291070.09	5723.42
9173	RR–4	678501.63	2291116.53	5723.42
9174	RR–5	678496.75	2291117.81	5723.42
9175	RR–6	678472.29	2291124.21	5723.42
9176	RR–7	678461.39	2291082.62	5723.47
9177	RR–8	678485.90	2291076.20	5723.47
9178	RR–9	678495.53	2291112.96	5723.47
9179	RR–10	678471.02	2291119.38	5723.47
9216	RR2–A	678406.40	2291582.42	5721.49
9217	RR2–B	678406.91	2291577.45	5721.54
9218	RR2–C	678398.29	2291576.56	5721.54
9219	RR2–D	678400.81	2291552.02	5721.54
9220	RR2–E	678426.01	2291554.62	5721.54
9221	RR2–F	678423.49	2291579.16	5721.54
9222	RR2–G	678414.87	2291578.27	5721.54
9223	RR2–H	678414.35	2291583.24	5721.37
9228	S–1	678550.57	2291430.08	5720.90

CONTROL POINTS

Point #	Description	Northing	Easting	Elevation
9229	S–2	678562.26	2291431.28	5720.90
9230	S–3	678561.06	2291442.97	5720.90
9231	S–4	678549.37	2291441.77	5720.90
9289	S–5	678573.98	2291456.80	5720.00
9290	S–6	678572.78	2291468.48	5720.00
9291	S–7	678561.09	2291467.28	5720.00
9292	S–8	678562.29	2291455.59	5720.00
9293	S–9	678556.24	2291479.73	5720.20
9294	S–10	678555.03	2291491.42	5720.20
9295	S–11	678543.34	2291490.22	5720.20
9296	S–12	678544.55	2291478.53	5720.20
9297	S–13	678566.21	2291505.43	5719.60
9298	S–14	678565.01	2291517.12	5719.60
9299	S–15	678553.32	2291515.92	5719.60
9300	S–16	678554.52	2291504.23	5719.60
9301	S–17	678551.81	2291527.21	5719.70
9302	S–18	678550.61	2291538.90	5719.70
9303	S–19	678538.92	2291537.69	5719.70
9304	S–20	678540.12	2291526.01	5719.70
9305	S–21	678559.40	2291551.02	5719.07

CONTROL POINTS

Point #	Description	Northing	Easting	Elevation
9306	S–22	678562.36	2291555.05	5718.90
9307	S–23	678558.33	2291558.01	5718.90
9308	S–24	678555.37	2291553.98	5719.12
9309	S–25	678565.08	2291553.05	5718.90
9310	S–26	678577.43	2291569.88	5718.90
9311	S–27	678564.74	2291579.20	5718.90
9312	S–28	678552.38	2291562.38	5718.90
9313	S–29	678530.25	2291560.02	5719.50
9314	S–30	678533.21	2291564.05	5719.34
9315	S–31	678529.18	2291567.01	5719.38
9316	S–32	678526.22	2291562.98	5719.50
9317	S–33	678516.25	2291570.31	5719.50
9318	S–34	678506.92	2291557.61	5719.50
9319	S–35	678523.75	2291545.26	5719.50
9320	S–36	678533.07	2291557.95	5719.50
9321	S–37	678519.99	2291586.17	5719.40
9322	S–38	678529.32	2291598.86	5719.40
9323	S–39	678512.49	2291611.22	5719.40
9324	S–40	678503.17	2291598.52	5719.40
9325	S–41	678500.04	2291555.10	5719.80

CONTROL POINTS

Point #	Description	Northing	Easting	Elevation
9326	S–42	678498.83	2291566.79	5719.80
9327	S–43	678487.15	2291565.59	5719.80
9328	S–44	678488.35	2291553.90	5719.80
9329	S–45	678479.89	2291535.50	5720.20
9330	S–46	678478.68	2291547.19	5720.20
9331	S–47	678466.99	2291545.99	5720.20
9332	S–48	678468.20	2291534.30	5720.20
9212	S–49	678428.67	2291375.05	5724.85
9213	S–50	678439.12	2291380.42	5724.85
9214	S–51	678431.42	2291395.43	5724.85
9215	S–52	678420.96	2291390.06	5724.85

RECLAMATION
Managing Water in the West

ALWAYS THINK SAFETY

U.S. DEPARTMENT OF THE INTERIOR
BUREAU OF RECLAMATION

CENTRAL UTAH PROJECT
BONNEVILLE UNIT – UTAH

STARVATION STATE PARK

RECREATION REHABILITATION – PHASE I

FINISH GRADING POINTS – CAMPGROUND AND DAYUSE

REV NO

DESIGNED
DRAWN
CHECKED
TECH. APPR. JAY BYTHEWAY–P.E.
ADMIN. APPROVAL
WAYNE XIA
MANAGER T.S.D.

66–400–1737

SHEET 2 OF 2

DATE AND TIME PLOTTED
APRIL 26, 2010 15:13
PLOTTED BY
EMANSEAU

CAD SYSTEM
AutoCAD Rel. 17.2s
CAD FILENAME
GENERAL 3.DWG

CONTROL POINTS				
Point #	Description	Northing	Easting	Elevation
9272	G-37	678380.27	2291978.87	5724.70
9273	G-38	678363.77	2292006.68	5725.02
9274	G-39	678354.25	2292022.74	5725.21
9275	G-40	678378.56	2292111.53	5725.21
9276	G-41	678387.07	2292142.62	5725.21
9277	G-42	678394.80	2292162.20	5725.21
9278	G-43	678443.82	2292270.52	5725.21
9279	G-44	678456.17	2292275.70	5725.21
9280	G-45	678460.18	2292266.11	5725.11
9281	G-46	678464.42	2292256.00	5725.00
9282	G-47	678468.12	2292256.04	5724.95
9283	G-48	678483.14	2292294.45	5724.95
9284	G-49	678469.50	2292324.47	5725.32
9285	G-50	678503.07	2292329.41	5723.13
9286	G-51	678535.51	2292317.76	5722.99
9287	G-52	678567.14	2292310.22	5722.85

N

DATE AND TIME PLOTTED
APRIL 26, 2010 15:14
PLOTTED BY
EMARSCAU

CAD SYSTEM
AutoCAD Rel. 17.2s
CAD FILENAME
GENERAL.DWG

RECLAMATION
Managing Water in the West

ALWAYS THINK SAFETY

U.S. DEPARTMENT OF THE INTERIOR
BUREAU OF RECLAMATION

CENTRAL UTAH PROJECT
BONNEVILLE UNIT - UTAH

STARVATION STATE PARK

RECREATION REHABILITATION - PHASE I

FINISH GRADING POINTS - BOAT PARKING

REV NO

DESIGNED
DRAWN
CHECKED
TECH. APPR. JAY BYTHEWAY-P.E.
ADMIN. APPROVAL
WAYNE XIA
MANAGER T.S.D.

66-400-1738

SHEET 1 OF 1

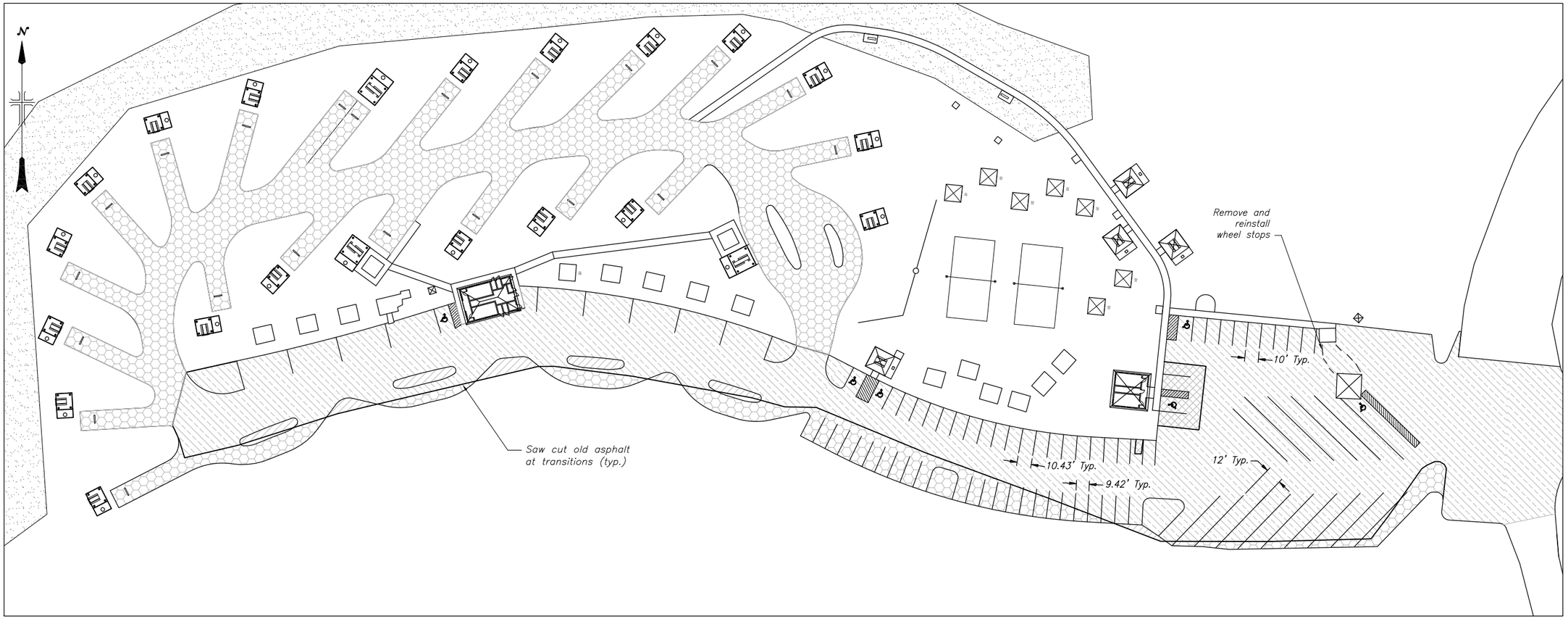

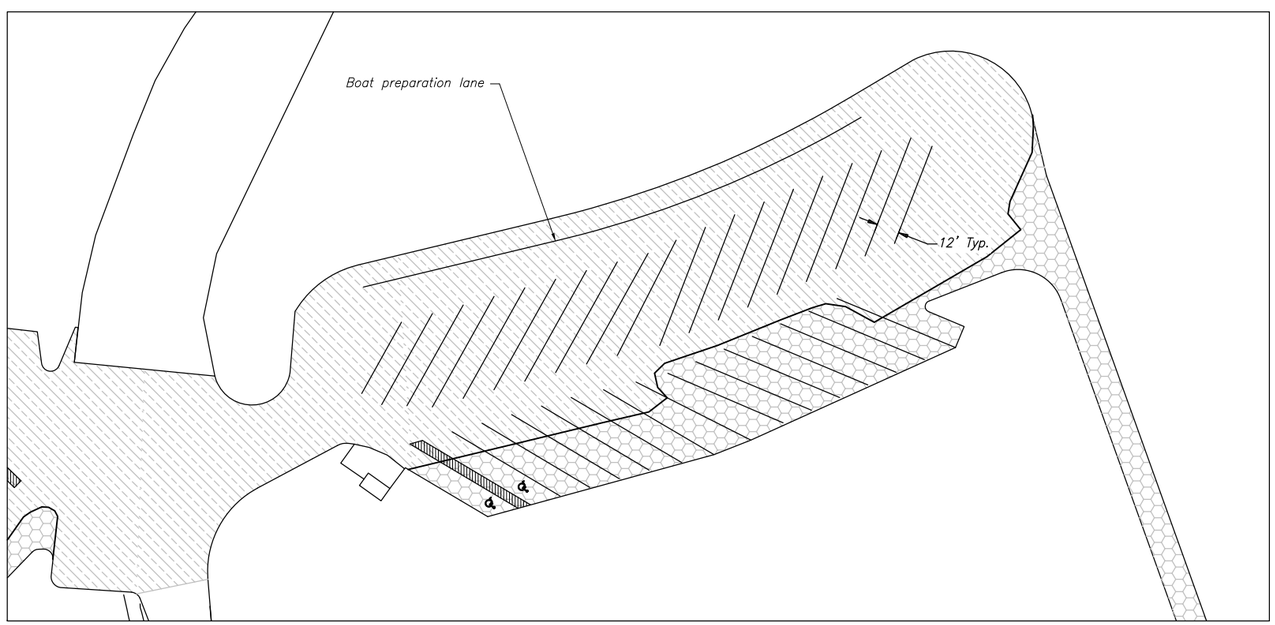

LEGEND

- Areas to receive 2" overlay
- Areas to receive new asphalt
- Existing asphalt to be sawcut and removed
- Existing asphalt to be sawcut, removed, and relayed

NOTES

1. Place leveling courses as needed prior to overlay.
2. Pavement marking lines shown indicate the number and size of parking spaces. Final location of lines are to be determined in the field.

40 0 40 80 120
SCALE OF FEET

RECLAMATION
Managing Water in the West

ALWAYS THINK SAFETY

U.S. DEPARTMENT OF THE INTERIOR
BUREAU OF RECLAMATION

CENTRAL UTAH PROJECT
BONNEVILLE UNIT – UTAH

STARVATION STATE PARK
RECREATION REHABILITATION – PHASE I
ASPHALT PAVING PLAN

REV. NO.

DESIGNED
DRAWN
CHECKED
TECH. APPR. JAY BYTHEWAY–P.E.
ADMIN. APPROVAL
WAYNE XIA
MANAGER T.S.D.

66–400–1739
SHEET 1 OF 1

DATE AND TIME PLOTTED
APRIL 26, 2010 15:15
PLOTTED BY
EMANESCU

CAD SYSTEM
AutoCAD Rel. 17.2s
CAD FILENAME
GENERAL 3.DWG

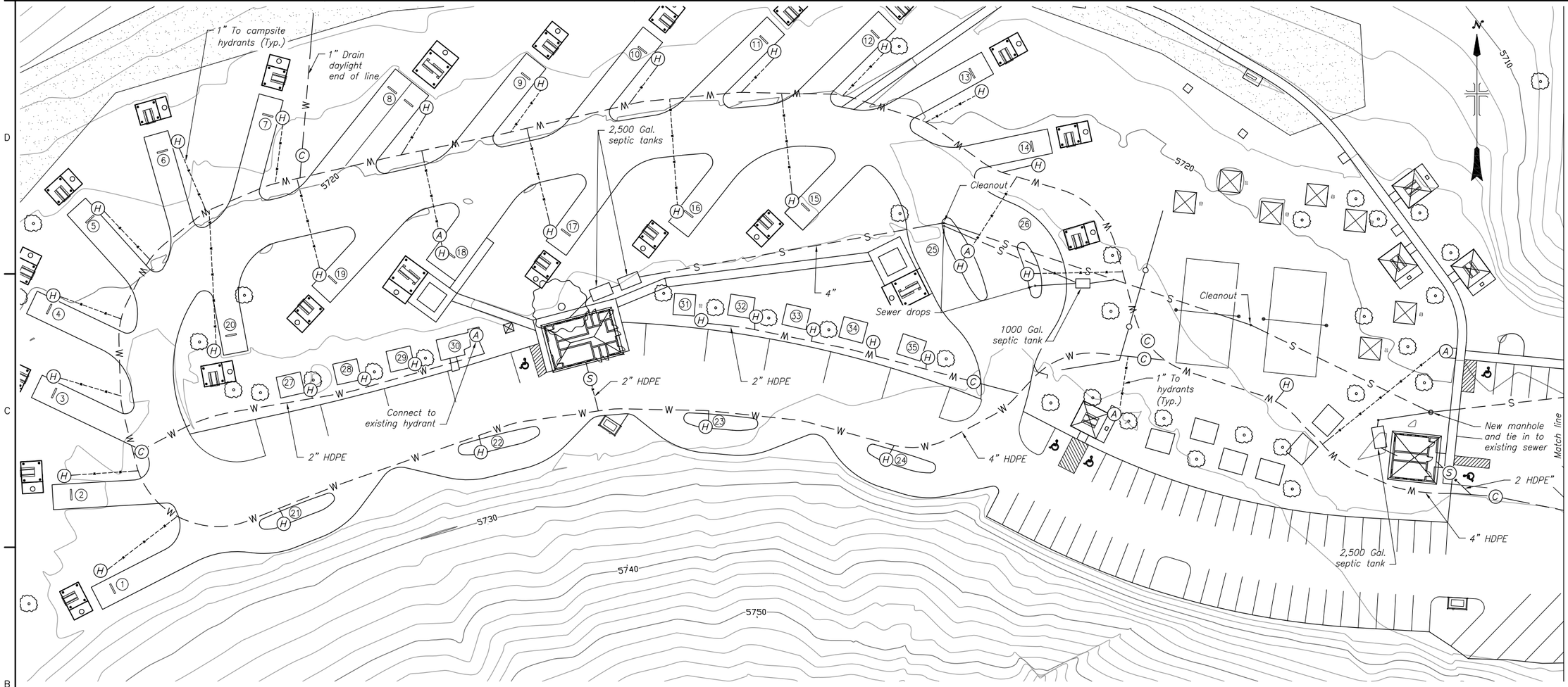

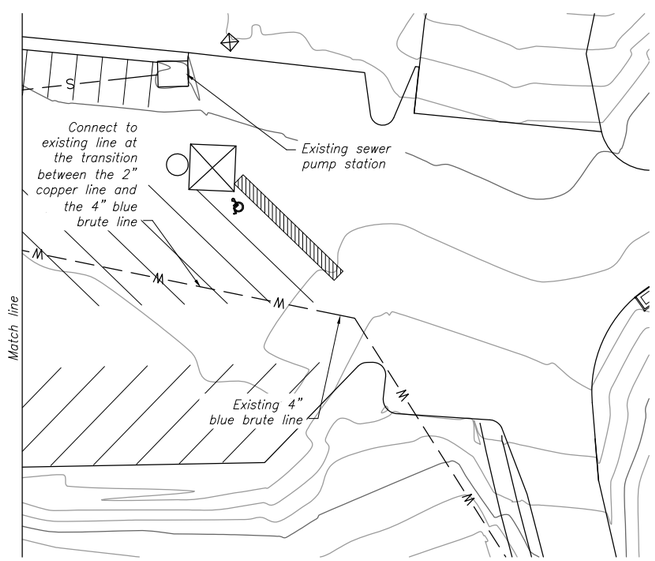

EXPLANATION

(A)	Accessible hydrant
(S)	Stop and waste valve
—W—	Buried HDPE waterline
(H)	Hydrant/riser
(C)	Curb valve – same size as line
	Fire hydrant

30 0 30 60 90
SCALE OF FEET

NOTES

1. Slope water lines to drain towards drains. Minimum grade of slope to be 1 percent. Daylight outlets of drains.
2. Water in the campground loops to be drained before the ground freezes each year.
3. Place sewer cleanouts every 50' and at bends in the line.
4. Slope sewer lines as per Utah onsite waste disposal guidelines.
5. New waterlines to be HDPE pipe.

REFERENCE DRAWINGS

SYMBOLS AND GENERAL NOTES 66-400-1729
EXISTING FEATURES 66-400-1730
WATER SYSTEM DETAILS 66-400-1753
TYPICAL UTILITY TRENCH
CROSS SECTIONS 66-400-1755

RECLAMATION
Managing Water in the West

ALWAYS THINK SAFETY

U.S. DEPARTMENT OF THE INTERIOR
BUREAU OF RECLAMATION

CENTRAL UTAH PROJECT
BONNEVILLE UNIT – UTAH

STARVATION STATE PARK
RECREATION REHABILITATION – PHASE I
NEW SEWER AND WATER

REV NO

DESIGNED
DRAWN
CHECKED
TECH. APPR. JAY BYTHEWAY–P.E.
ADMIN. APPROVAL
WAYNE XIA
MANAGER T.S.D.

66-400-1740
SHEET 1 OF 1

DATE AND TIME PLOTTED
APRIL 26, 2010 15:19
PLOTTED BY
EMARSEAU

CAD SYSTEM
AutoCAD Rel. 17.2s
CAD FILENAME:
GENERAL 5.DWG

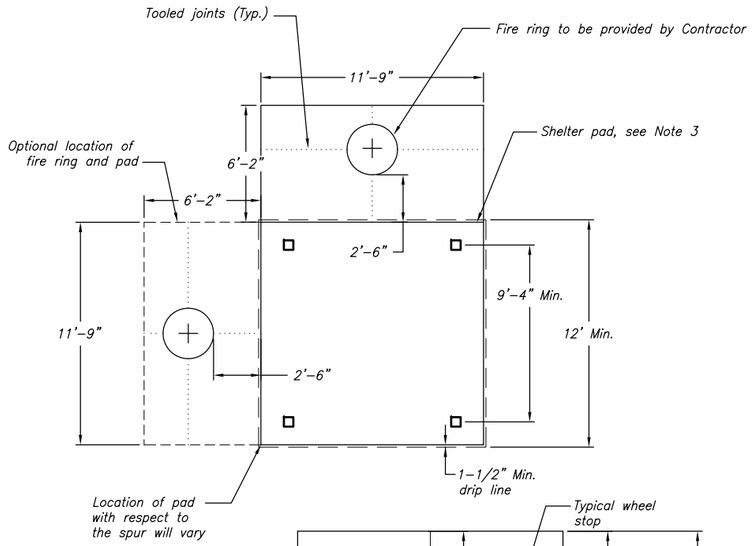

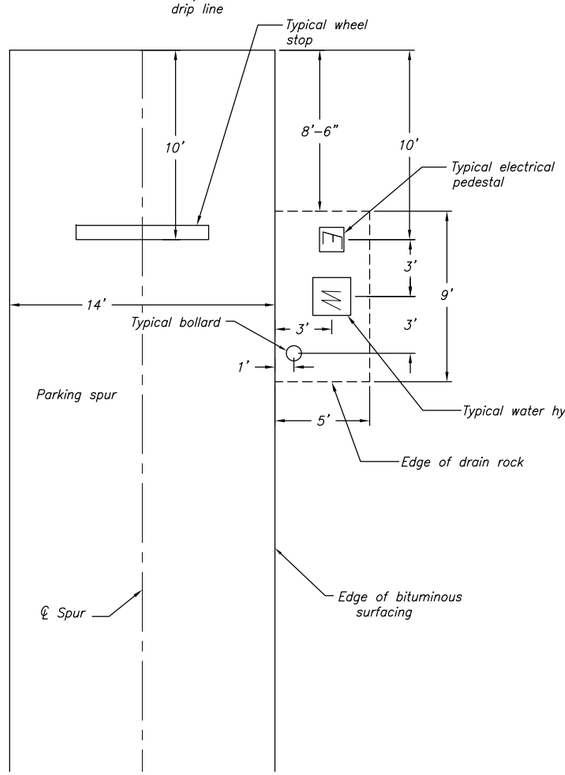

TYPICAL SINGLE SPUR PLAN AND SHELTER LAYOUT

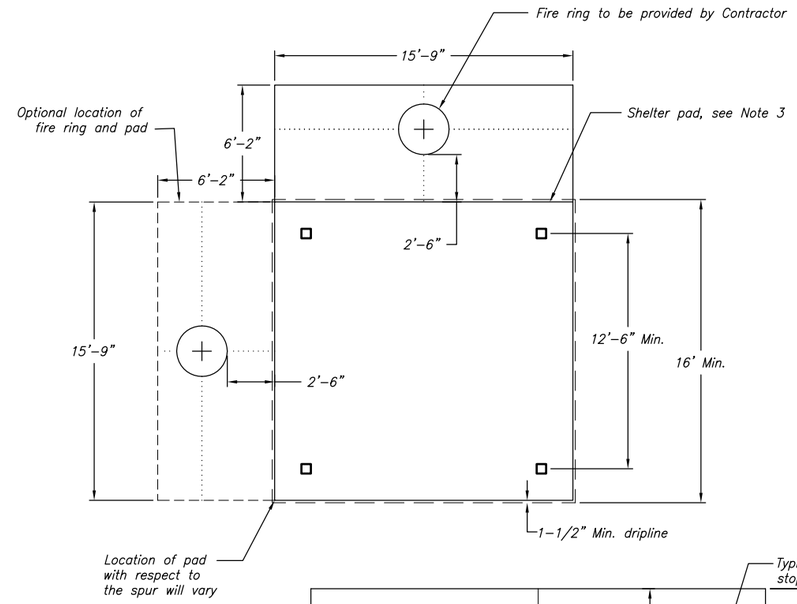

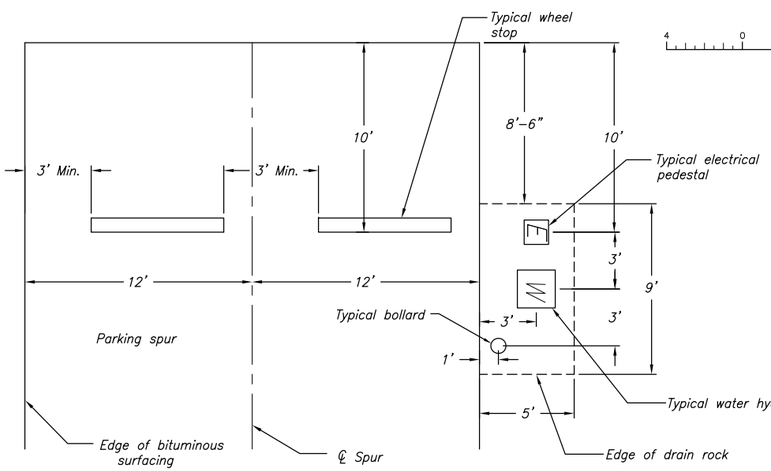

TYPICAL DOUBLE SPUR PLAN AND SHELTER LAYOUT

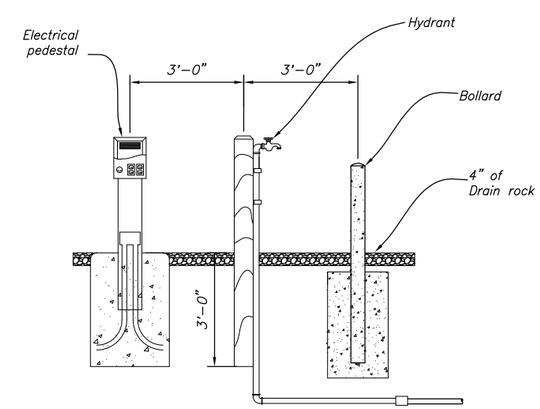

TYPICAL UTILITY ARRANGEMENT

NOTES

1. Actual feature locations may vary slightly from those shown. The Government Surveyors will adjust final stationing and elevations to best fit existing conditions.
2. Fire rings and shelters to be provided by Contractor.
3. The plan shown indicates the desired number of fixtures and approximate dimensions. Minor modifications may be allowed if submitted and approved.

REFERENCE DRAWINGS

SYMBOLS AND GENERAL NOTES 66-400-1729
CAMPGROUND LOOP FINISHED GRADING POINTS .....66-400-1736 AND 66-400-1737
NEW SEWER AND WATER 66-400-1740
TYPICAL SHELTER CONCRETE PADS AND SECTIONS..... 66-400-1752
WATER SYSTEM DETAILS..... 66-400-1753

4 0 4 8 12
SCALE OF FEET

RECLAMATION
Managing Water in the West

ALWAYS THINK SAFETY

U.S. DEPARTMENT OF THE INTERIOR
BUREAU OF RECLAMATION
CENTRAL UTAH PROJECT
BONNEVILLE UNIT - UTAH

STARVATION STATE PARK
RECREATION REHABILITATION - PHASE I
TYPICAL SPUR PLANS AND SHELTER LAYOUTS

REVISIONS

DESIGNED
DRAWN
CHECKED
TECH. APPR. JAY BYTHEWAY-P.E.
ADMIN. APPROVAL
WAYNE XIA
MANAGER T.S.D.

66-400-1741
SHEET 1 OF 1

DATE AND TIME PLOTTED APRIL 26, 2010 15:21
PLOTTED BY EMANSEAU
CAD SYSTEM AutoCAD Rel. 17.2s
CAD FILENAME TYPICAL SPUR PLANS AND SHELTER LAYOUTS.DWG

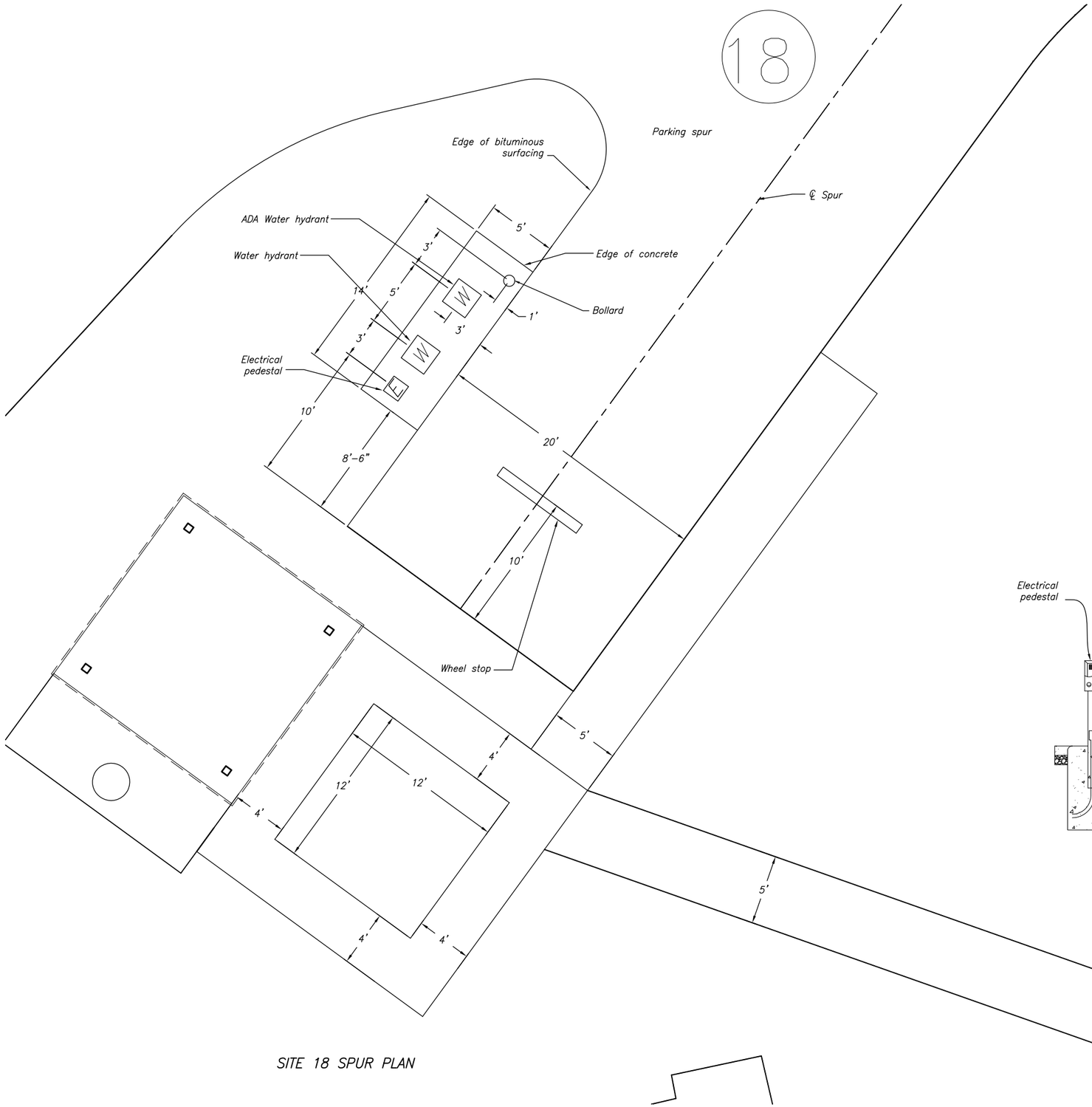

SITE 18 SPUR PLAN

NOTES

1. Actual feature locations may vary slightly from those shown. The Government Surveyors will adjust final stationing and elevations to best fit existing conditions.

2. Fire rings and shelters to be provided by Contractor.

REFERENCE DRAWINGS

SYMBOLS AND GENERAL NOTES 66-400-1729
CAMPGROUND LOOP FINISHED GRADING POINTS .....66-400-1736 AND 66-400-1737
NEW SEWER AND WATER 66-400-1740
TYPICAL SHELTER CONCRETE PADS AND SECTIONS..... 66-400-1752
WATER SYSTEM DETAILS..... 66-400-1753

4 0 4 8 12
SCALE OF FEET

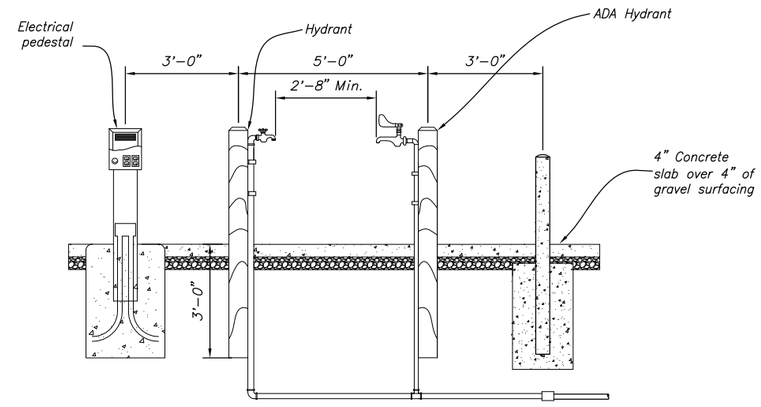

UTILITY ARRANGEMENT FOR SITE 18

RECLAMATION
Managing Water in the West

ALWAYS THINK SAFETY

U.S. DEPARTMENT OF THE INTERIOR
BUREAU OF RECLAMATION

CENTRAL UTAH PROJECT
BONNEVILLE UNIT - UTAH

STARVATION STATE PARK
RECREATION REHABILITATION - PHASE I
SITE 18 LAYOUT

REV NO

DESIGNED
DRAWN
CHECKED
TECH. APPR. JAY BYTHEWAY-P.E.
ADMIN. APPROVAL
WAYNE IVIA
MANAGER T.S.D.

66-400-1742
SHEET 1 OF 1

DATE AND TIME PLOTTED
APRIL 26, 2010 15:22
PLOTTED BY
EMANSEAU

CAD SYSTEM
AutoCAD Rel. 17.2s
CAD FILENAME
TYPICAL SPUR PLANS AND SHELTER LAYOUTS.DWG

NOTES

1. Actual feature locations may vary slightly from those shown. The Government Surveyors will adjust final stationing and elevations to best fit existing conditions.
2. Arc radiuses shown are approximate and may be adjusted to fit each site.

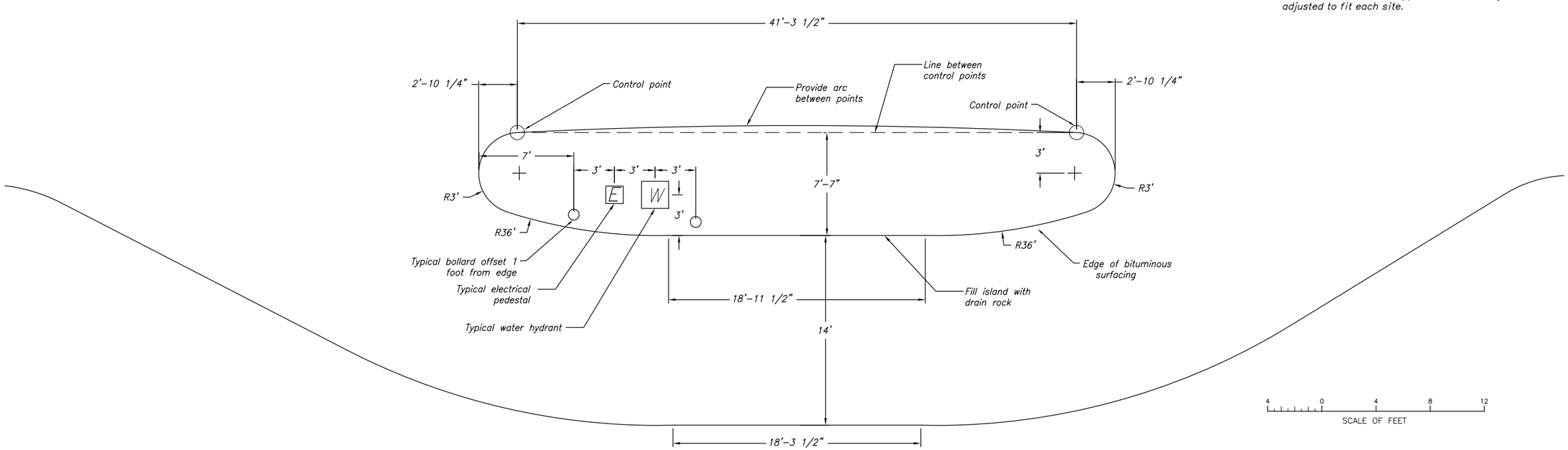

PULL THROUGH PLANS FOR SITES 21 THROUGH 24

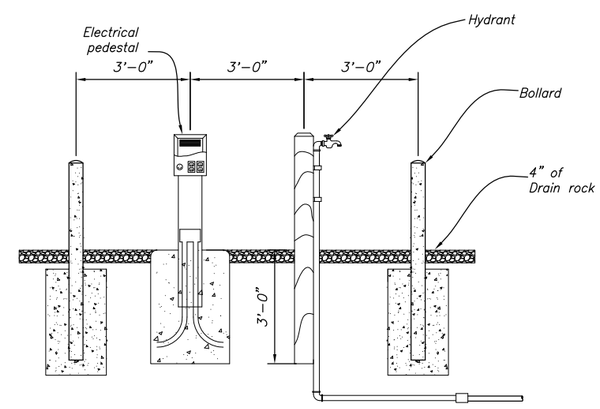

UTILITY ARRANGEMENT FOR SITES 21 THROUGH 24

RECLAMATION
Managing Water in the West

ALWAYS THINK SAFETY

U.S. DEPARTMENT OF THE INTERIOR
BUREAU OF RECLAMATION
CENTRAL UTAH PROJECT
BONNEVILLE UNIT – UTAH

STARVATION STATE PARK
RECREATION REHABILITATION – PHASE I
LAYOUT FOR SITES 21 THROUGH 24

REV NO

DESIGNED
DRAWN
CHECKED
TECH. APPR. JAY BYTHEWAY-P.E.
ADMIN. APPROVAL
WAYNE XIA
MANAGER T.S.D.

66-400-1743
SHEET 1 OF 1

DATE AND TIME PLOTTED
APRIL 26, 2010 15:22
PLOTTED BY
EMANSEAU

CAD SYSTEM
AutoCAD Rel. 17.2s
CAD FILENAME
TYPICAL SPUR PLANS AND SHELTER LAYOUTS.DWG

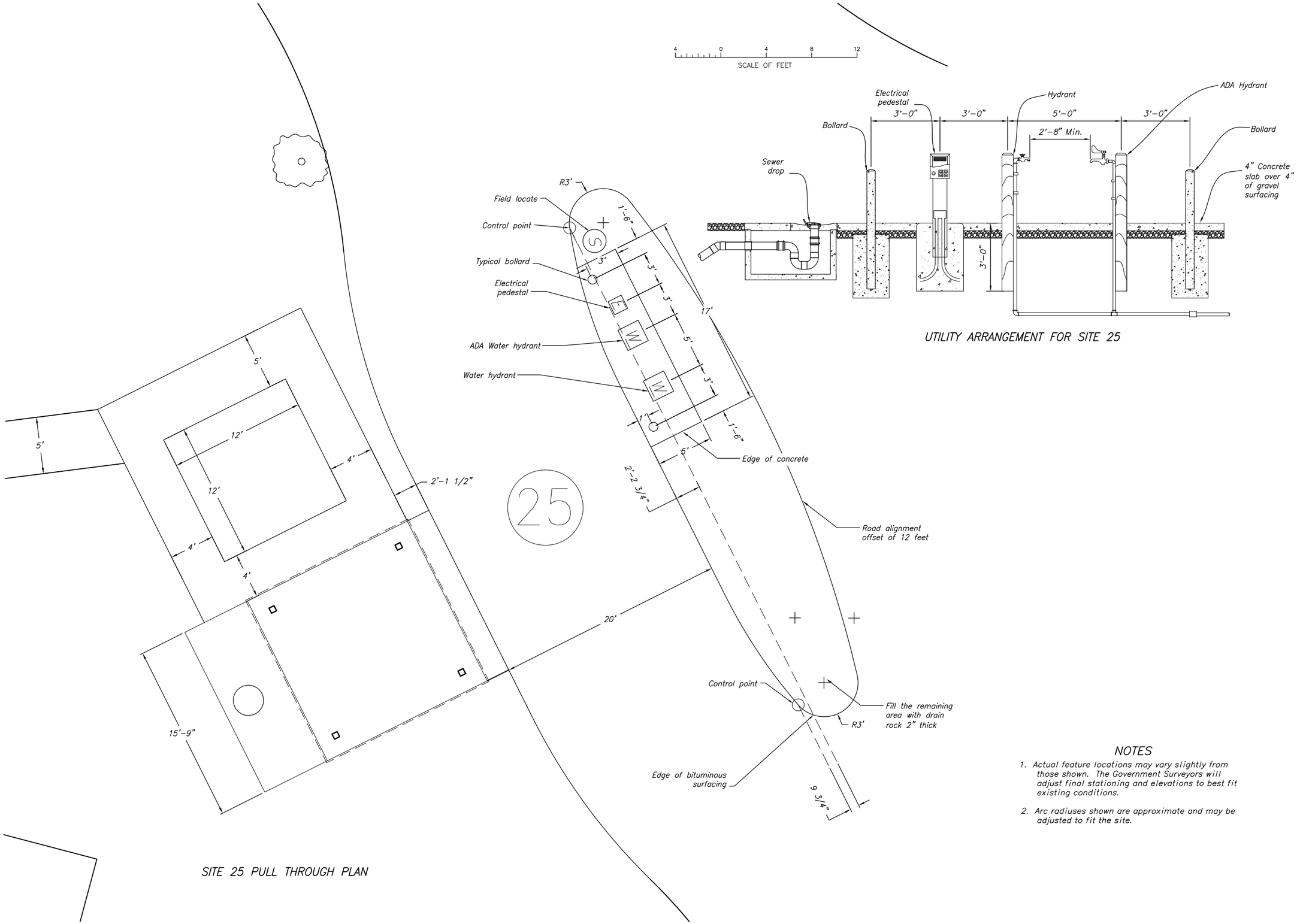

NOTES

1. Actual feature locations may vary slightly from those shown. The Government Surveyors will adjust final stationing and elevations to best fit existing conditions.
2. Arc radiuses shown are approximate and may be adjusted to fit the site.

RECLAMATION
Managing Water in the West

ALWAYS THINK SAFETY

U.S. DEPARTMENT OF THE INTERIOR
BUREAU OF RECLAMATION
CENTRAL UTAH PROJECT
BONNEVILLE UNIT – UTAH

STARVATION STATE PARK
RECREATION REHABILITATION – PHASE I
SITE 25 LAYOUT

REV NO

DESIGNED
DRAWN
CHECKED
TECH. APPR. JAY BYTHEWAY–P.E.
ADMIN. APPROVAL
WAYNE XIA
MANAGER T.S.D.

66–400–1744
SHEET 1 OF 1

DATE AND TIME PLOTTED
APRIL 26, 2010 15:23
PLOTTED BY
EMANSEAU

CAD SYSTEM
AutoCAD Rel. 17.2s
CAD FILENAME
TYPICAL SPUR PLANS AND SHELTER LAYOUTS-25.DWG

NOTES

1. Actual feature locations may vary slightly from those shown. The Government Surveyors will adjust final stationing and elevations to best fit existing conditions.
2. Arc radiuses shown are approximate and may be adjusted to fit the site.

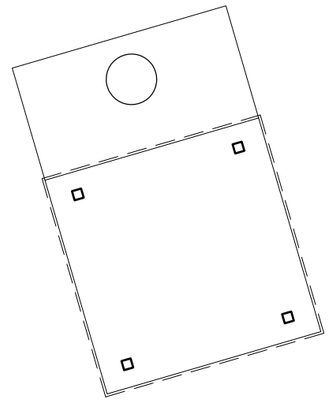

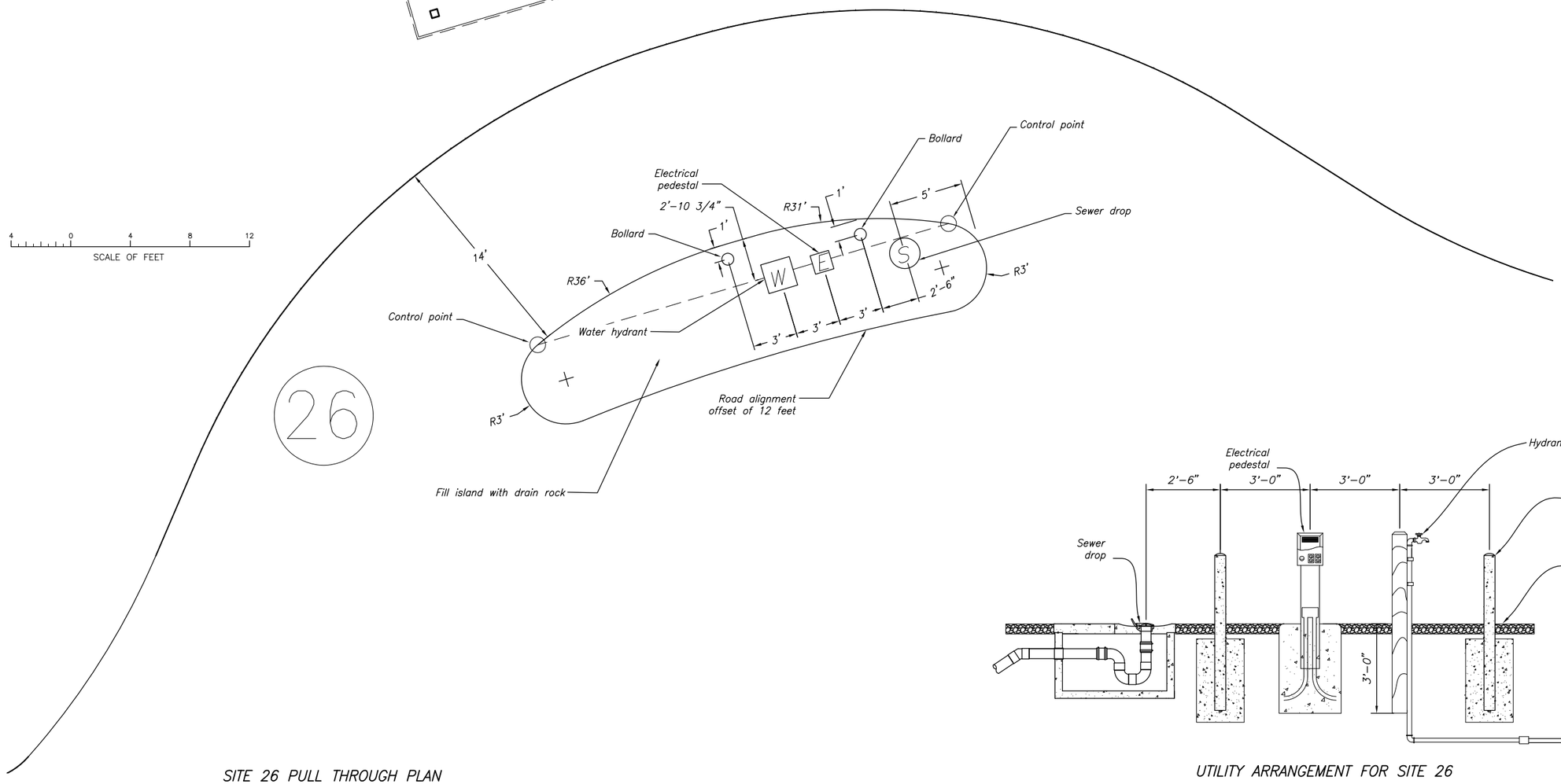

SITE 26 PULL THROUGH PLAN

UTILITY ARRANGEMENT FOR SITE 26

RECLAMATION
Managing Water in the West

ALWAYS THINK SAFETY

U.S. DEPARTMENT OF THE INTERIOR
BUREAU OF RECLAMATION
CENTRAL UTAH PROJECT
BONNEVILLE UNIT – UTAH

STARVATION STATE PARK
RECREATION REHABILITATION – PHASE I
SITE 26 LAYOUT

REV NO

DESIGNED
DRAWN
CHECKED
TECH. APPR. JAY BYTHEWAY-P.E.
ADMIN. APPROVAL
WAYNE XIA
MANAGER T.S.D.

66-400-1745
SHEET 1 OF 1

DATE AND TIME PLOTTED
APRIL 27, 2010 06:00
PLOTTED BY
EMANSEAU

CAD SYSTEM
AutoCAD Rel. 17.2s
CAD FILENAME
TYPICAL SPUR PLANS AND SHELTER LAYOUTS.DWG

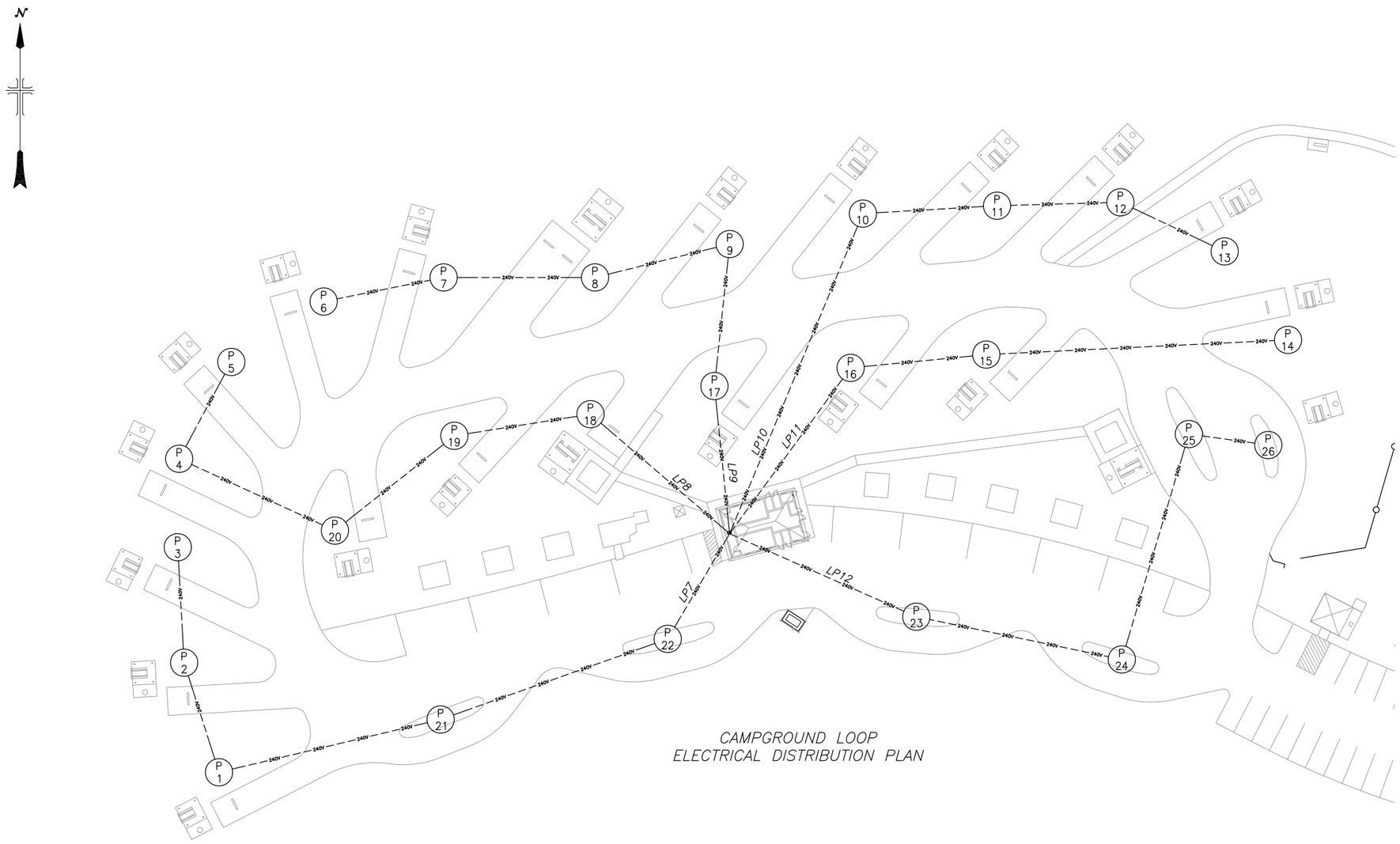

REFERENCE DRAWING

PANELBOARD DETAILS 66–400–1748

POWER PEDESTAL DETAILS 66–400–1747

RECLAMATION
Managing Water in the West

ALWAYS THINK SAFETY

U.S. DEPARTMENT OF THE INTERIOR
BUREAU OF RECLAMATION

CENTRAL UTAH PROJECT
BONNEVILLE UNIT – UTAH

STARVATION STATE PARK

RECREATION REHABILITATION – PHASE I

CAMPGROUND ELECTRICAL PLAN

REV NO

DESIGNED
DRAWN
CHECKED
TECH. APPR. JAY BYTHEWAY–P.E.
ADMIN. APPROVAL
WAYNE XIA
MANAGER T.S.D.

66–400–1746

SHEET 1 OF 1

DATE AND TIME PLOTTED
APRIL 27, 2010 08:01
PLOTTED BY
EMANSEAU

CAD SYSTEM
AutoCAD Rel. 17.2s
CAD FILENAME
ELECTRICAL.DWG

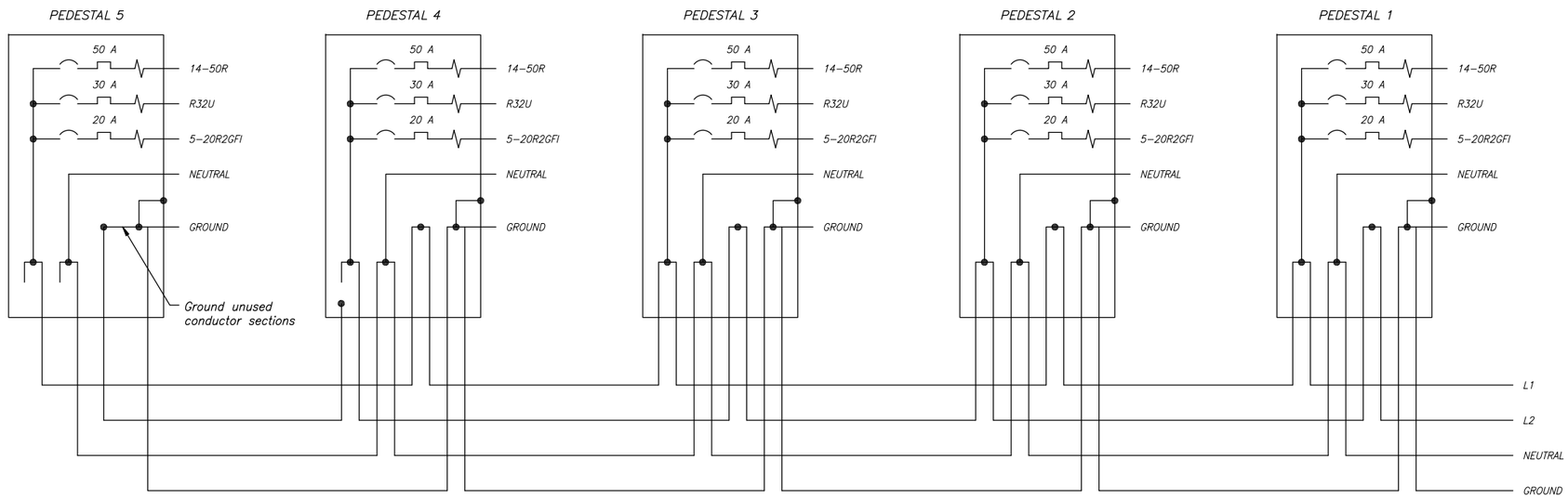

TYPICAL PEDESTAL INTERCONNECTION

SEE NOTE 1

WIRE LENGTHS AND SIZES

STATIONS	WIRE SIZE (AWG/ kcmil)	APPROX. LENGTH (FEET)
CIRCUIT LP7		
PANELBOARD – P22	4/0	61
P22 – P21	4/0	121
P21 – P1	4/0	114
P1 – P2	4/0	58
P2 – P3	4/0	58
CIRCUIT LP8		
PANELBOARD – P18	4/0	92
P18 – P19	4/0	69
P19 – P20	4/0	76
P20 – P4	4/0	86
P4– P5	3/0	55
CIRCUIT LP9		
PANELBOARD – P17	3/0	74
P17 – P9	3/0	71
P9 – P8	3/0	69
P8 – P7	3/0	76
P7 – P6	3/0	61
CIRCUIT LP10		
PANELBOARD – P10	3/0	174
P10 – P11	3/0	67
P11 – P12	2/0	62
P12 – P13	2/0	58
CIRCUIT LP11		
PANELBOARD – P16	2/0	103
P16 – P15	1/0	68
P15 – P14	2/0	151
CIRCUIT LP12		
PANELBOARD – P23	3/0	102
P23 – P24	3/0	105
P24 – P25	2/0	118
P25 – P26	2/0	40

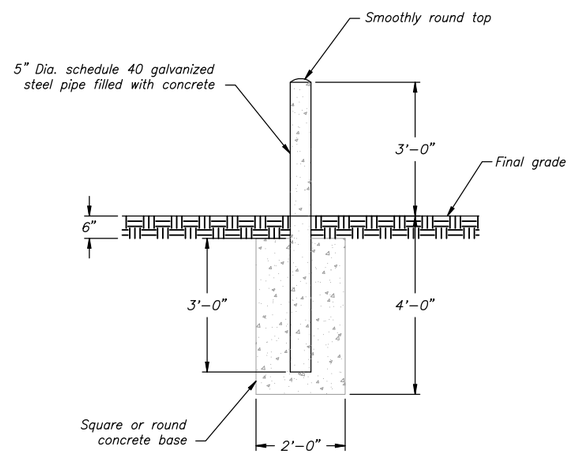

PIPE BOLLARD

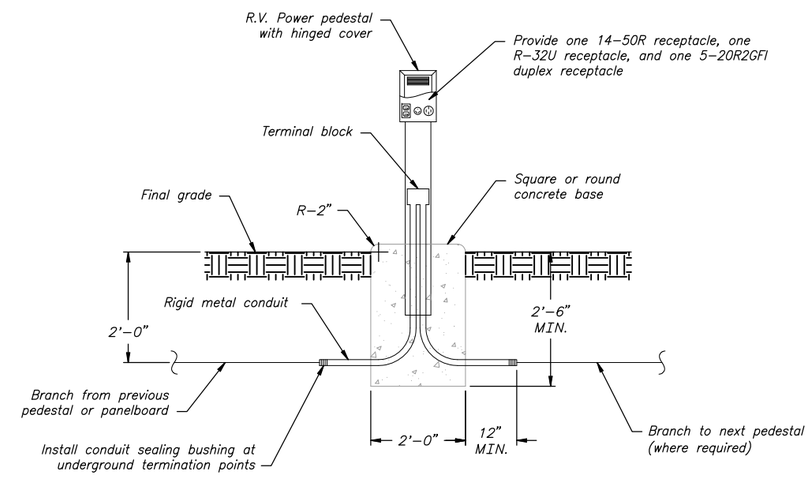

R.V. POWER PEDESTAL – ELEVATION

NOTES

1. Alternate connection of pedestals between phase A and phase B as shown. Odd numbered pedestals connect to L1, even numbered pedestals connect to L2. Number of pedestals varies per circuit.

2. All electrical installations shall meet the 2008 edition of the National Electrical Code.

3. Wire lengths are horizontal approximations, and do not include allowances for splicing, connections, etc. Conductor sizes are approximate – the Contractor shall size all conductors.

REFERENCE DRAWING

CAMPGROUND LOOP
ELECTRICAL DISTRIBUTION PLAN 66–400–1746

PANELBOARD DETAILS 66–400–1748

RECLAMATION
Managing Water in the West

ALWAYS THINK SAFETY

U.S. DEPARTMENT OF THE INTERIOR
BUREAU OF RECLAMATION
CENTRAL UTAH PROJECT
BONNEVILLE UNIT – UTAH

STARVATION STATE PARK
RECREATION REHABILITATION – PHASE I
POWER PEDESTAL DETAILS

REV. NO.

DESIGNED
DRAWN
CHECKED
TECH. APPR. JAY BYTHEWAY–P.E.
ADMIN. APPROVAL
WAYNE XIA
MANAGER T.S.D.

66–400–1747

SHEET 1 OF 1

DATE AND TIME PLOTTED
APRIL 27, 2010 06:02
PLOTTED BY
EMANSSAU

CAD SYSTEM
AutoCAD Rel. 17.2s
CAD FILENAME
ELECTRICAL.DWG

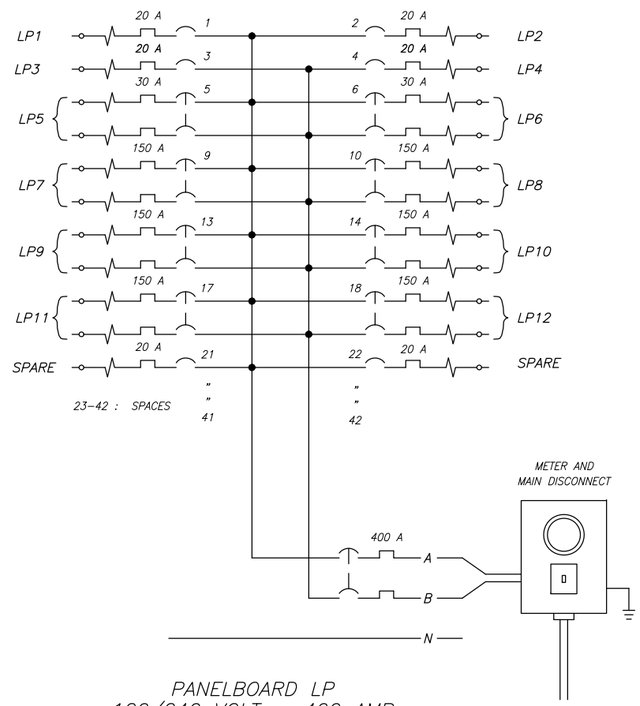

PANELBOARD LP
120/240 VOLT – 400 AMP

PANELBOARD LP
120/240 VOLT, 400 AMP
CAMPGROUND LOOP

CIRCUIT NUMBER	BREAKER NUMBER	VOLTAGE	POLES	AMPS	DESCRIPTION
LP1	1	120	1	20	RESTROOM EXTERIOR LIGHTS AND RECEPTACLES
LP2	2	120	1	20	RESTROOM INTERIOR RECEPTACLES
LP3	3	120	1	20	RESTROOM INTERIOR LIGHTS – MEN/WOMEN
LP4	4	120	1	20	RESTROOM INTERIOR LIGHTS – UTILITY ROOM
LP5	5	240	2	30	RESTROOM HAND DRYERS – MEN
LP6	6	240	2	30	RESTROOM HAND DRYERS – WOMEN
LP7	9	240	2	150	POWER PEDESTALS – CIRCUIT 1
LP8	10	240	2	150	POWER PEDESTALS – CIRCUIT 2
LP9	13	240	2	150	POWER PEDESTALS – CIRCUIT 3
LP10	14	240	2	150	POWER PEDESTALS – CIRCUIT 4
LP11	17	240	2	150	POWER PEDESTALS – CIRCUIT 5
LP12	18	240	2	150	POWER PEDESTALS – CIRCUIT 6
–	21	120	1	20	SPARE
–	22	120	1	20	SPARE
23–42					SPACES

PANELBOARD LOCATIONS

Panelboard LP – Campground loop

NOTES

1. Electrical system to panelboard and connection to utility shall be submitted for approval.
2. Coordinate electrical service connections with the local utility.
3. Electrical installations shall meet the 2008 edition of the National Electrical Code.
4. Breaker numbering and sizes shown are recommendations only. Verify that breakers are properly sized for the equipment furnished.
5. Panelboard LP replaces current panelboard in existing restroom.

REFERENCE DRAWING

CAMPGROUND LOOP
ELECTRICAL DISTRIBUTION PLAN 66–400–1746

POWER PEDESTAL DETAILS 66–400–1747

RECLAMATION
Managing Water in the West

ALWAYS THINK SAFETY

U.S. DEPARTMENT OF THE INTERIOR
BUREAU OF RECLAMATION
CENTRAL UTAH PROJECT
BONNEVILLE UNIT – UTAH

STARVATION STATE PARK
RECREATION REHABILITATION – PHASE I
PANELBOARD DETAILS

REV NO

DESIGNED
DRAWN
CHECKED
TECH. APPR. JAY BYTHEWAY–P.E.
ADMIN. APPROVAL
WAYNE XIA
MANAGER T.S.D.

66–400–1748

SHEET 1 OF 1

DATE AND TIME PLOTTED
APRIL 27, 2010 06:04
PLOTTED BY
EMANSEAU

CAD SYSTEM
AutoCAD Rel. 17.2s
CAD FILENAME
ELECTRICAL.DWG

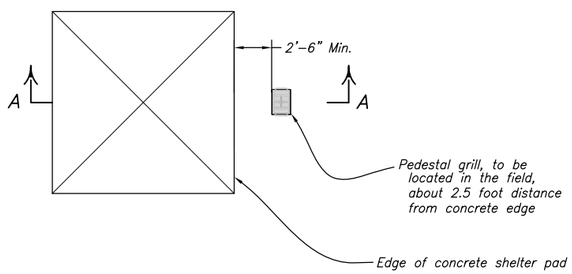

DAY USE SHELTER PLAN

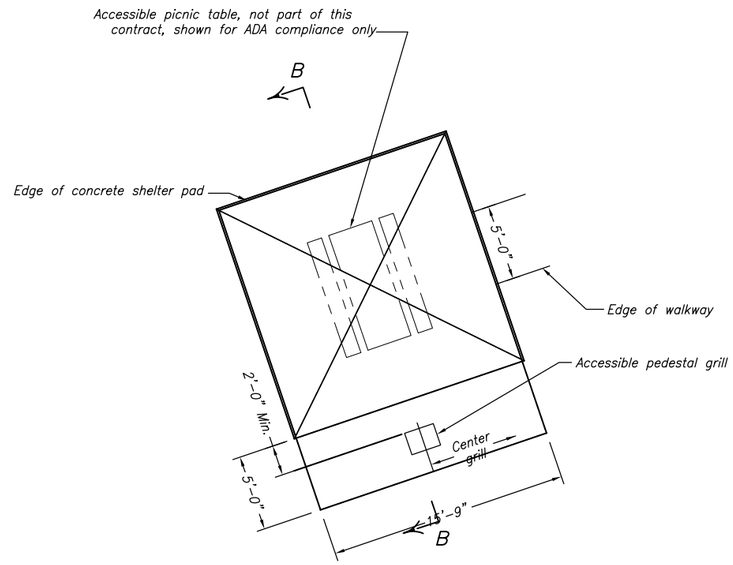

ACCESSIBLE DAY USE SHELTER PLAN

5 0 5 10 15
SCALE OF FEET

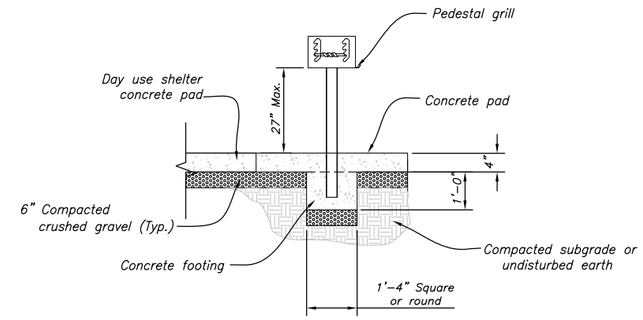

TYPICAL ACCESSIBLE PEDESTAL GRILL ELEVATION

2 0 2 4 6
SCALE OF FEET

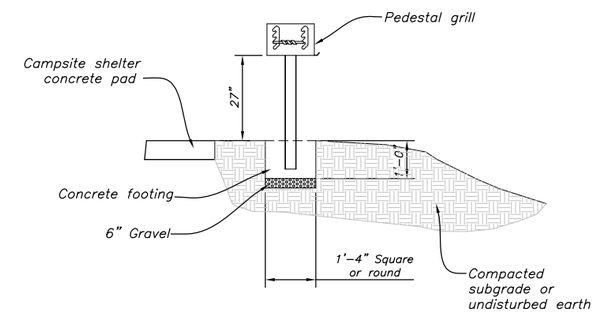

TYPICAL PEDESTAL GRILL ELEVATION

2 0 2 4 6
SCALE OF FEET

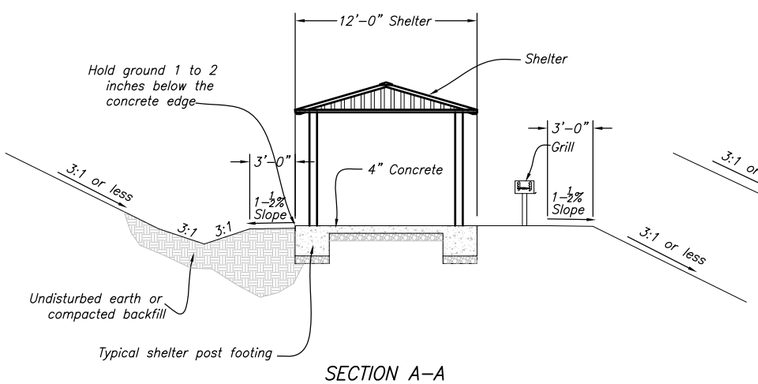

SECTION A–A

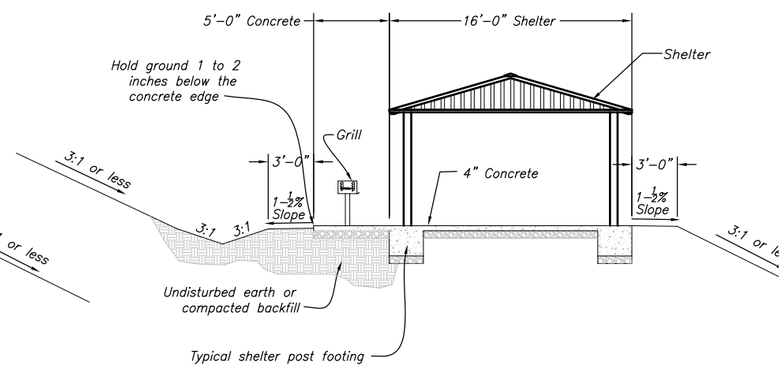

SECTION B–B
(ADA)

REFERENCE DRAWING

TYPICAL SHELTER CONCRETE PADS AND SECTIONS 66–400–1752

NOTES

1. Day use shelters located near the boat parking shall all be accessible.
2. All concrete walks are 4" thick with a 4" crushed gravel base.

RECLAMATION
Managing Water in the West

ALWAYS THINK SAFETY

U.S. DEPARTMENT OF THE INTERIOR
BUREAU OF RECLAMATION
CENTRAL UTAH PROJECT
BONNEVILLE UNIT – UTAH

STARVATION STATE PARK
RECREATION REHABILITATION – PHASE I
TYPICAL DAY USE SHELTERS AND
TYPICAL ACCESSIBLE DAY USE SHELTERS

REV. NO.

DESIGNED
DRAWN
CHECKED
TECH. APPR. JAY BYTHEWAY–P.E.
ADMIN. APPROVAL
WAYNE XIA
MANAGER T.S.D.

66–400–1749
SHEET 1 OF 1

DATE AND TIME PLOTTED
APRIL 27, 2010 06:05
PLOTTED BY
EMANSEAU

CAD SYSTEM
AutoCAD Rel. 17.2s
CAD FILENAME
DAY USE SHELTER DETAILS.DWG

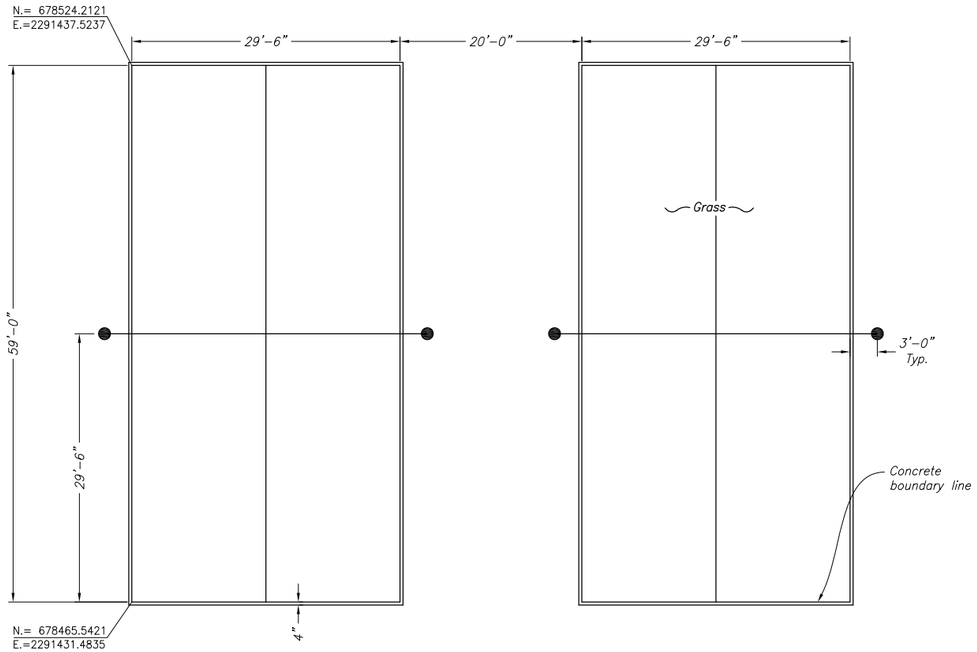

VOLLEYBALL COURT
PLAN

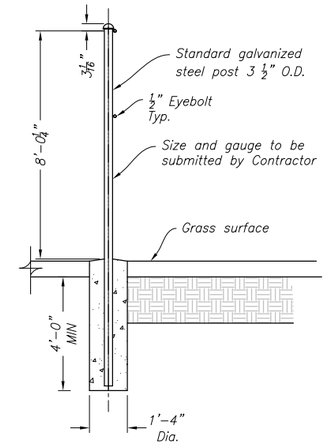

VOLLEYBALL POST DETAIL

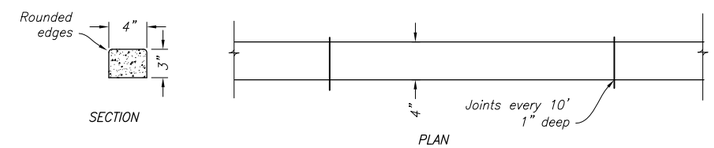

VOLLEYBALL COURT BOUNDARY LINE
PLAN AND SECTION

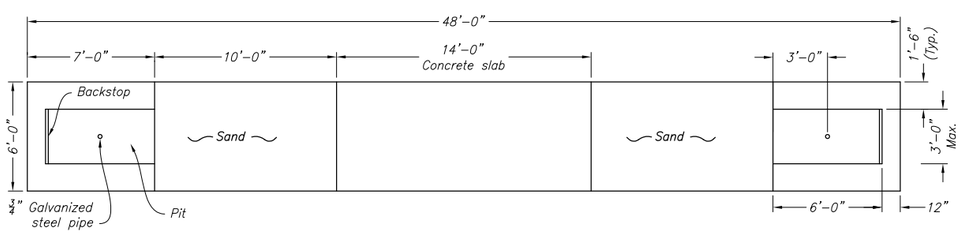

HORSESHOES PIT
PLAN

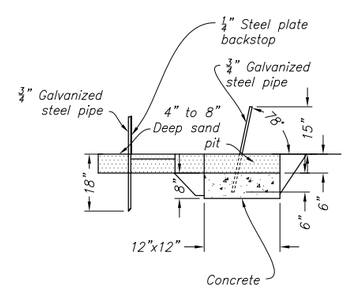

SECTION AT PIT

RECLAMATION
Managing Water in the West

ALWAYS THINK SAFETY

U.S. DEPARTMENT OF THE INTERIOR
BUREAU OF RECLAMATION
CENTRAL UTAH PROJECT
BONNEVILLE UNIT – UTAH

STARVATION STATE PARK
RECREATION REHABILITATION – PHASE I
VOLLEYBALL COURT AND HORSESHOES PIT DETAILS

REV NO

DESIGNED
DRAWN
CHECKED
TECH. APPR. JAY BYTHEWAY–P.E.
ADMIN. APPROVAL
WAYNE XIA
MANAGER T.S.D.

66–400–1750

SHEET 1 OF 1

DATE AND TIME PLOTTED
APRIL 27, 2010 06:1
PLOTTED BY
EMANSEAU

CAD SYSTEM
AutoCAD Rel. 17.2s
CAD FILENAME
VOLLEYBALL COURT.DWG

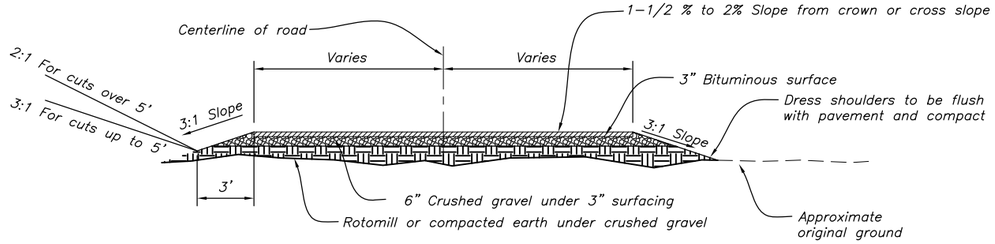

TYPICAL ROAD SECTION

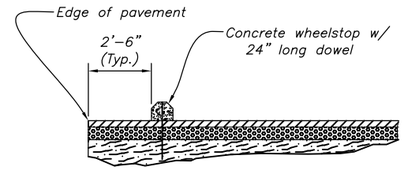

TYPICAL WHEELSTOP

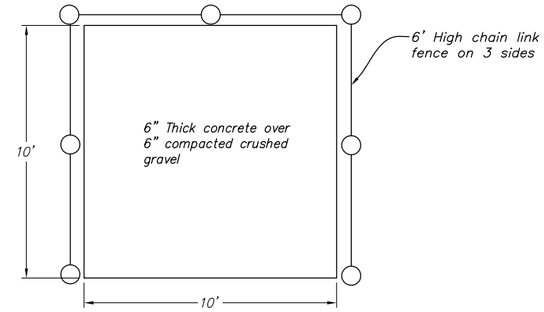

DUMPSTER PAD

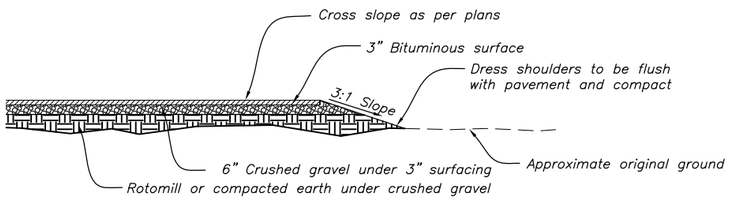

TYPICAL PAVEMENT SECTION

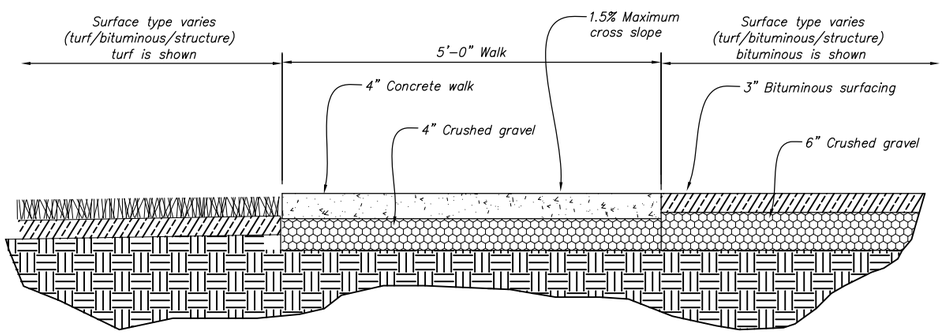

TYPICAL SIDEWALK SECTION

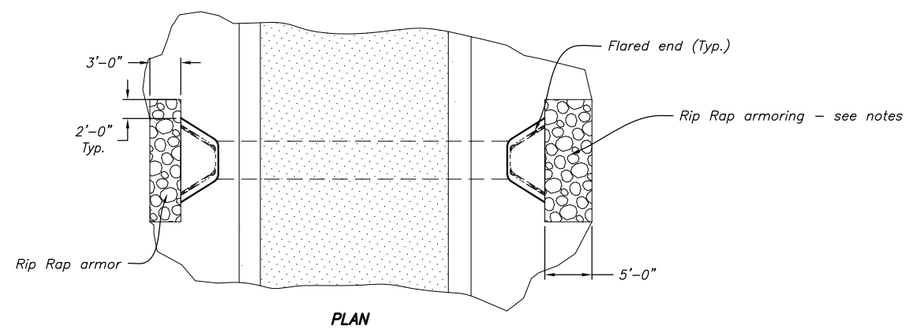

PLAN

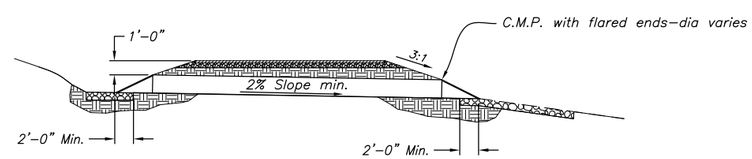

SECTION

TYPICAL CULVERT

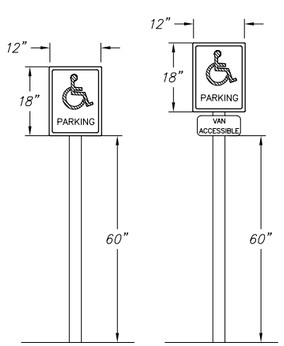

ACCESSIBLE SIGN DETAILS

Embed sign posts 28" in a 30" deep, 8" diameter hole and backfill with concrete.

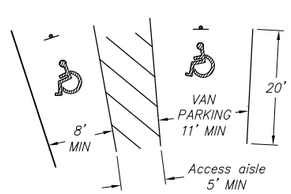

TYPICAL ACCESSIBLE PARKING DETAIL

MAXIMUM GRADE 1.5% in any direction

NOTE: Access aisle shall adjoin an accessible route at the head of the parking spaces.

NOTES

1. This drawing is not to scale.
2. Rip rap armoring on culverts consists of 6"to 8" round river rock placed over geotextile and averaging 12" in thickness.

RECLAMATION
Managing Water in the West

ALWAYS THINK SAFETY

U.S. DEPARTMENT OF THE INTERIOR
BUREAU OF RECLAMATION
CENTRAL UTAH PROJECT
BONNEVILLE UNIT - UTAH

STARVATION STATE PARK

RECREATION REHABILITATION - PHASE I

TYPICAL PAVEMENT AND SIDEWALK DETAILS

REV. NO.

DESIGNED
DRAWN
CHECKED
TECH. APPR. JAY BYTHEWAY-P.E.
ADMIN. APPROVAL WAYNE XIA MANAGER T.S.O.

66-400-1751

SHEET 1 OF 1

DATE AND TIME PLOTTED APRIL 27, 2010 06:11
PLOTTED BY EMANSEAU

CAD SYSTEM AutoCAD Rel. 17.2s
CAD FILENAME TYPICAL PAVEMENT AND SIDEWALK.DWG

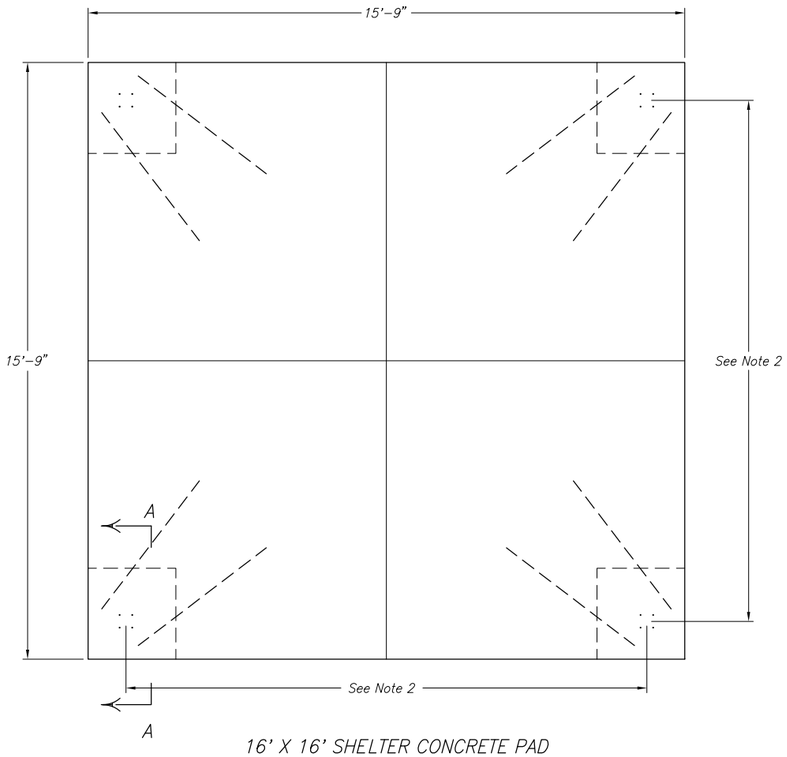

16' X 16' SHELTER CONCRETE PAD

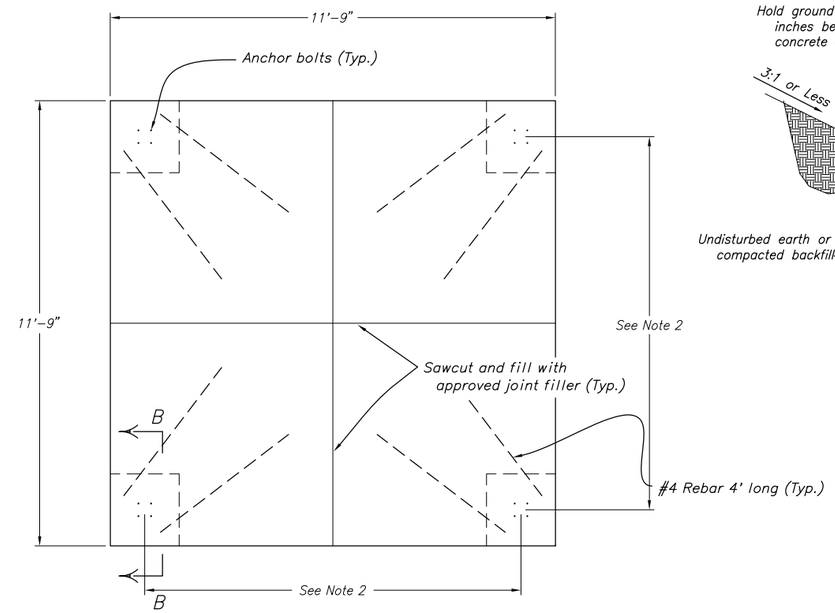

12' X 12' SHELTER CONCRETE PAD

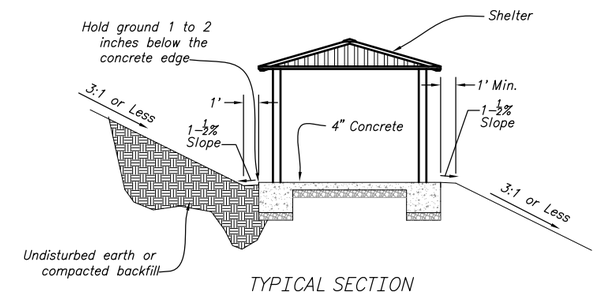

TYPICAL SECTION

SPECIAL INSPECTION OF EPOXY ANCHORED BOLTS

The approved special inspector shall record the following:

1. *Adhesive product description, including the product name and expiration date.*
2. *Mixing procedure and use of proper nozzles.*
3. *Anchor bolt material, grade, diameter, length and cleanliness.*
4. *Required drill bit diameter.*
5. *Hole depth and cleanliness.*
6. *Installation description, including verification of concrete compressive strength by ASTM C 42 methods.*
7. *Substrate temperature.*

NOTES

1. *This drawing is not to scale.*
2. *Anchor bolts to be installed according to manufacturer's recommendations and centered on each footing (furnished and installed by others).*
3. *Epoxy anchor bolts shall be 1/2" dia. Simpson Set or 1/2" dia. Hilti HY–150 epoxy anchors. Epoxy bolts shall be fully threaded, A36 or equivalent with a minimum of 6–1/2" embedment. Clean holes before installing anchors.*
4. *See Drawing No. 40–D–6263 for General Notes and Minimum Requirements for Detailing Reinforcement.*

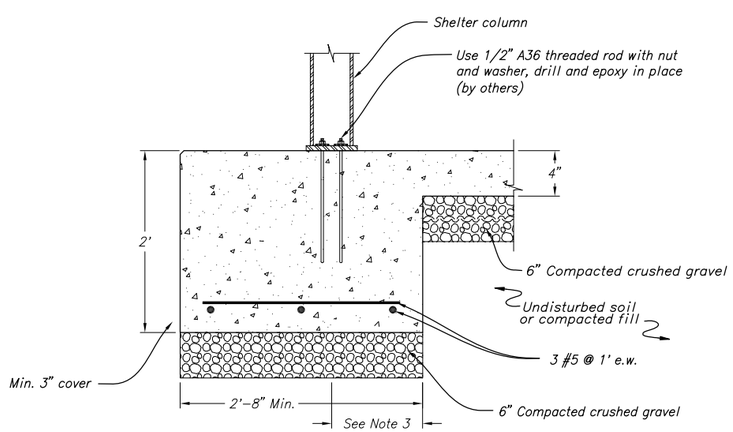

SECTION A–A

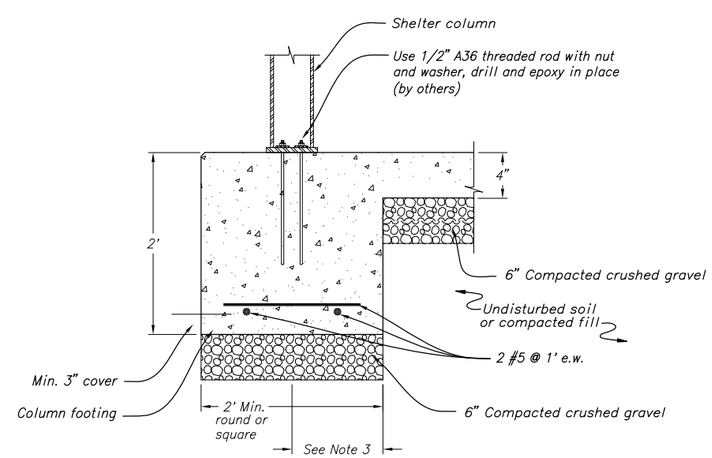

SECTION B–B

RECLAMATION
Managing Water in the West

ALWAYS THINK SAFETY

U.S. DEPARTMENT OF THE INTERIOR
BUREAU OF RECLAMATION
CENTRAL UTAH PROJECT
BONNEVILLE UNIT – UTAH

STARVATION STATE PARK
RECREATION REHABILITATION – PHASE I
TYPICAL SHELTER CONCRETE PADS AND SECTIONS

REV NO

DESIGNED
DRAWN
CHECKED
TECH. APPR. JAY BYTHEWAY–P.E.
ADMIN. APPROVAL
WAYNE KIA
MANAGER T.S.D.

66–400–1752
SHEET 1 OF 1

DATE AND TIME PLOTTED
APRIL 27, 2010 06:12
PLOTTED BY
EMANSEAU

CAD SYSTEM
AutoCAD Rel. 17.2s
CAD FILENAME
TYPICAL SHELTER PADS.DWG

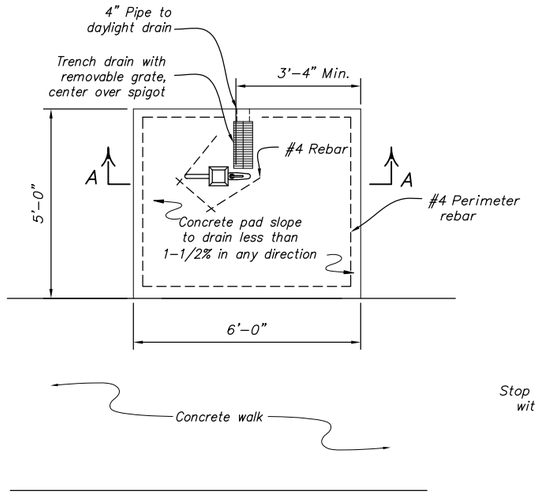

ACCESSIBLE HYDRANT – PLAN

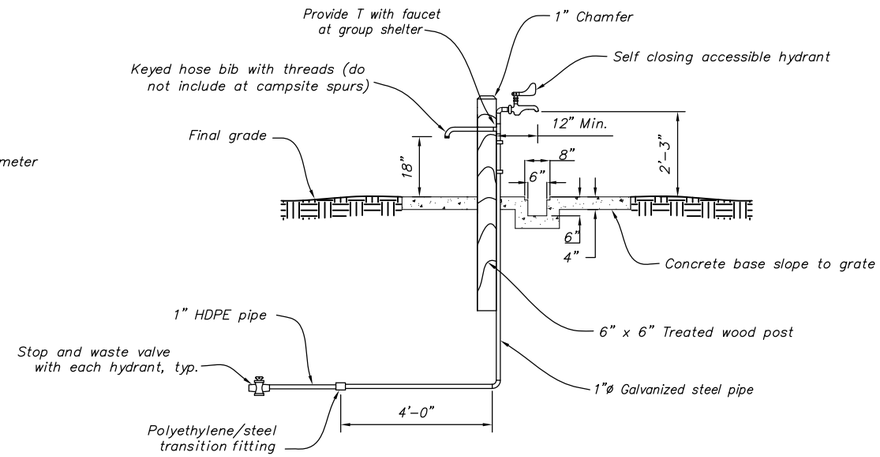

ACCESSIBLE HYDRANT SECTION A–A

(Day Use type hydrant is shown. Camp hydrant is similar only no yard box with drain rock)

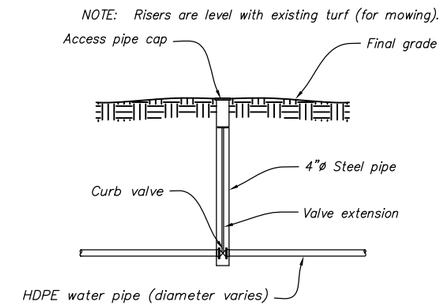

CURB VALVE – ELEVATION

NOTE: Typically used as drain valve or shut off valve.

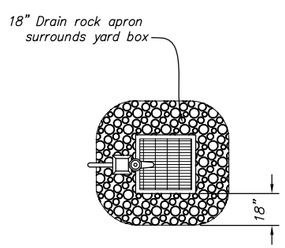

HYDRANT – PLAN

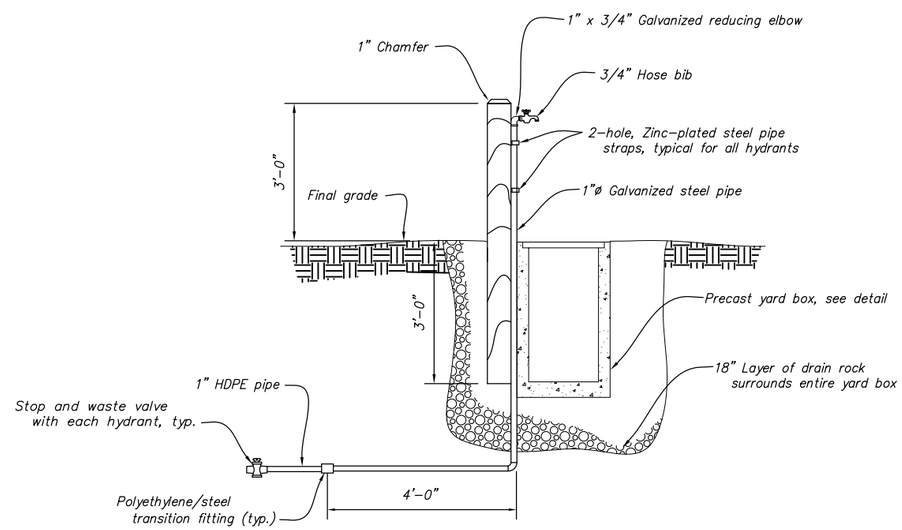

HYDRANT – ELEVATION

(Day Use type hydrant is shown. Camp hydrant is similar only no yard box with drain rock)

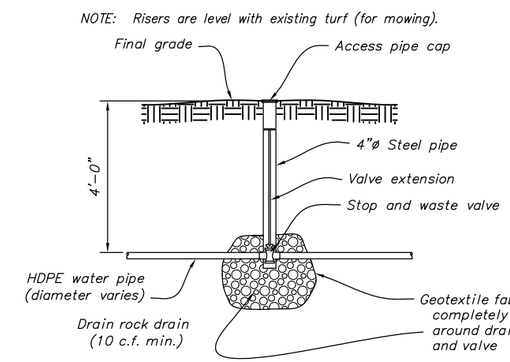

STOP AND WASTE VALVE – ELEVATION

NOTE

1. This drawing is not to scale.

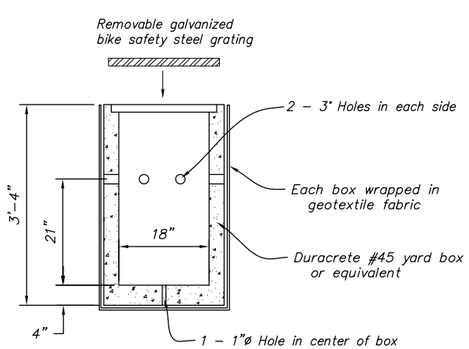

18" X 18" X 36" YARD BOX DETAIL

REFERENCE DRAWINGS

RECLAMATION
Managing Water in the West

ALWAYS THINK SAFETY

U.S. DEPARTMENT OF THE INTERIOR
BUREAU OF RECLAMATION
CENTRAL UTAH PROJECT
BONNEVILLE UNIT – UTAH

STARVATION STATE PARK
RECREATION REHABILITATION – PHASE I
WATER SYSTEM DETAILS

REV NO

DESIGNED
DRAWN
CHECKED
TECH. APPR. JAY BYTHEWAY–P.E.
ADMIN. APPROVAL
WAYNE XIA
MANAGER T.S.D.

66–400–1753

SHEET 1 OF 1

DATE AND TIME PLOTTED APRIL 27, 2010 06:14
PLOTTED BY EMANSEAU

CAD SYSTEM AutoCAD Rel. 17.2s
CAD FILENAME WATER SYSTEM DETAILS.DWG

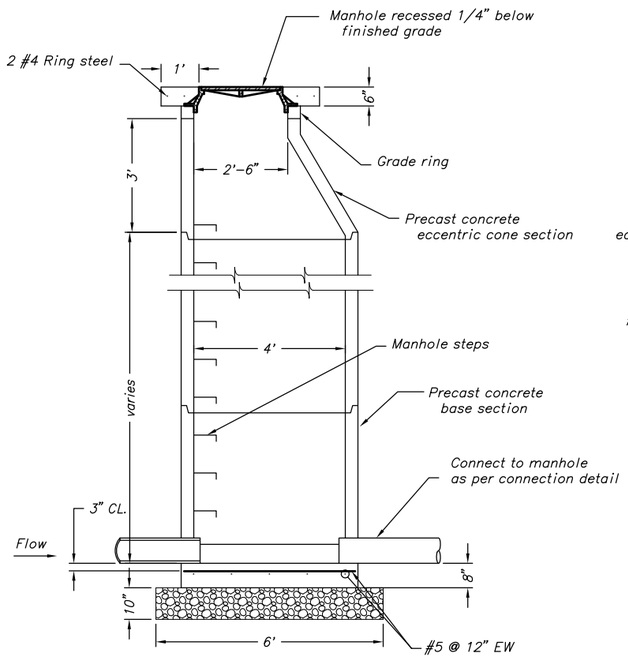

TYPICAL SANITARY SEWER MANHOLE

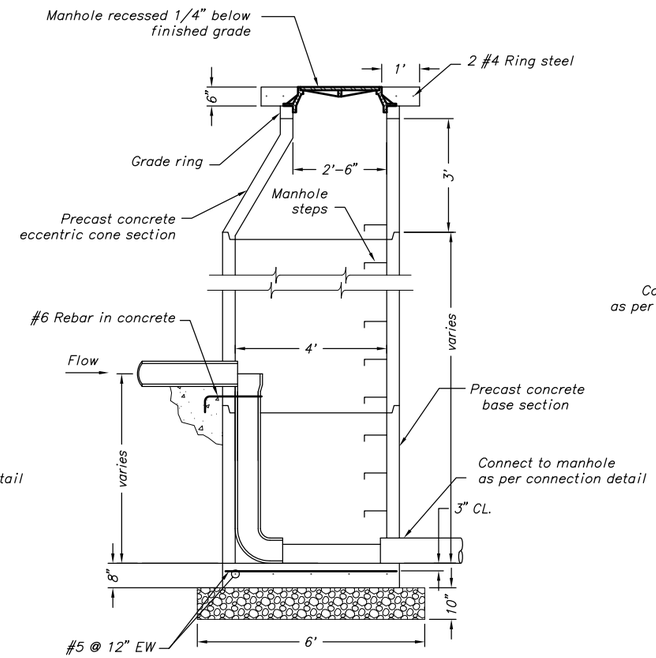

TYPICAL SANITARY DROP SEWER MANHOLE

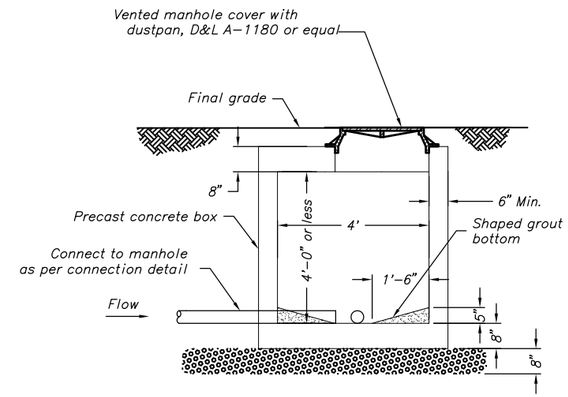

TYPICAL SHORT MANHOLE

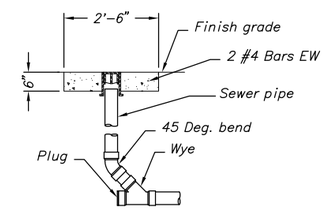

CLEANOUT DETAIL

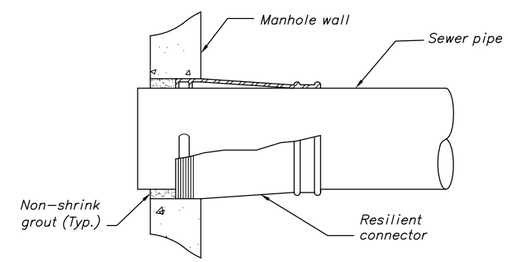

MANHOLE CONNECTION DETAIL

NOTES

1. This drawing is not to scale.
2. Use only septic tanks whose designs have been pre-approved by the State of Utah Division of Water Quality.

REFERENCE DRAWINGS

SYMBOLS AND GENERAL NOTES 66-400-1729
NEW SEWER AND WATER.....66-400-1740

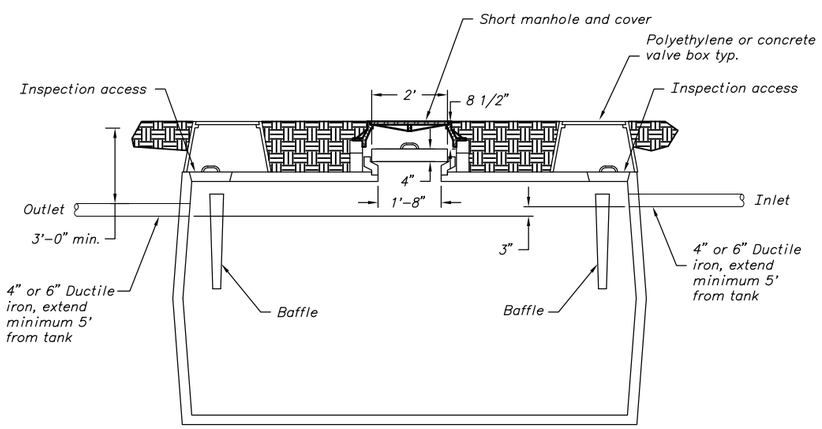

SEPTIC TANK – ELEVATION

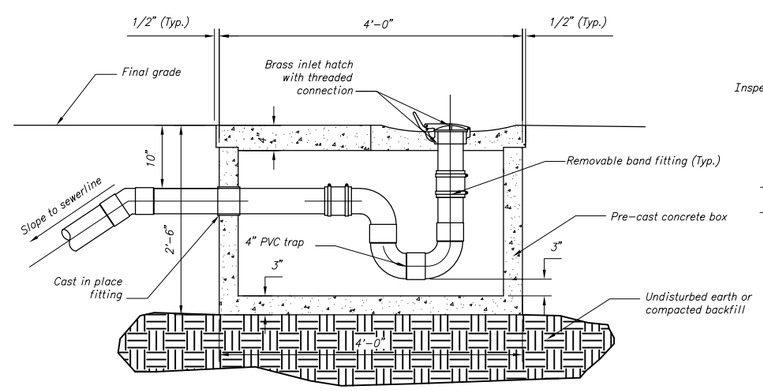

SECTION

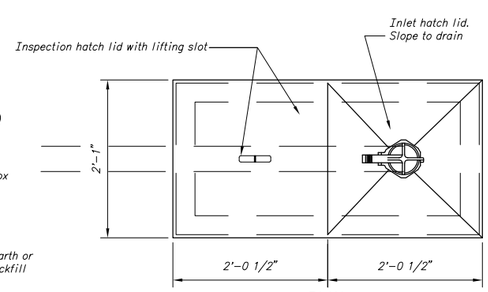

PLAN

TYPICAL CAMPSITE SEWER DROP

RECLAMATION
Managing Water in the West

ALWAYS THINK SAFETY

U.S. DEPARTMENT OF THE INTERIOR
BUREAU OF RECLAMATION
CENTRAL UTAH PROJECT
BONNEVILLE UNIT – UTAH

STARVATION STATE PARK
RECREATION REHABILITATION – PHASE I
SEWER SYSTEM DETAILS

REV NO

DESIGNED
DRAWN
CHECKED
TECH. APPR. JAY BYTHEWAY-P.E.
ADMIN. APPROVAL
WAYNE XIA
MANAGER T.S.O.

66-400-1754
SHEET 1 OF 1

DATE AND TIME PLOTTED APRIL 27, 2010 06:15
PLOTTED BY EMANSEAU

CAD SYSTEM AutoCAD Rel. 17.2s
CAD FILENAME SEWER SYSTEM DETAILS.DWG

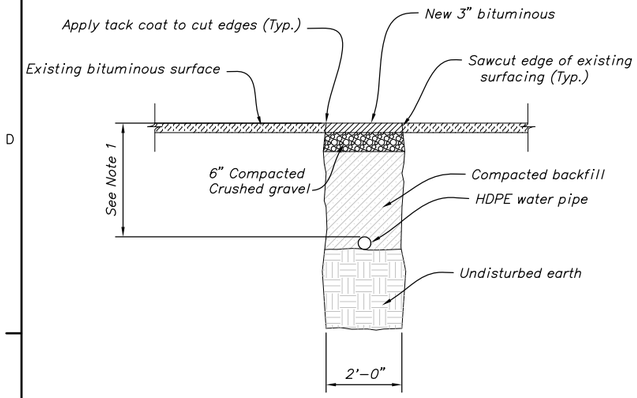

TYPICAL ROAD CROSSING BURIAL DEPTH

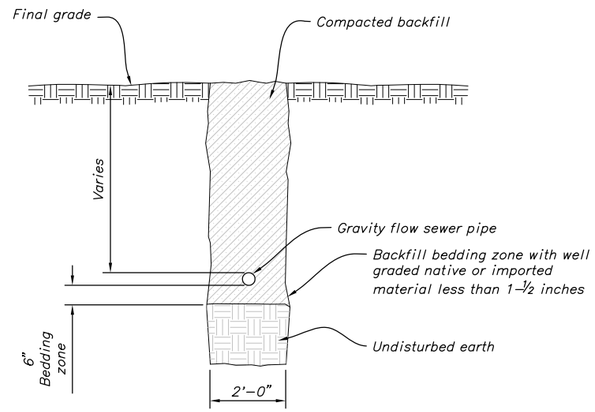

GRAVITY FLOW SEWERLINE BURIAL DEPTH

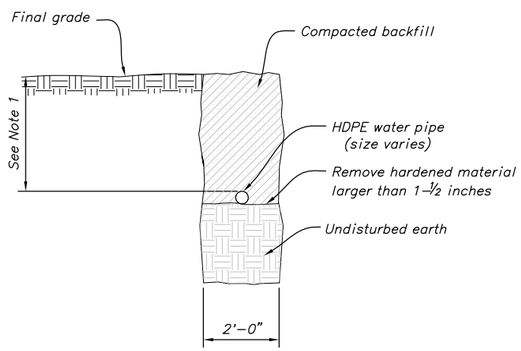

WATERLINE BURIAL DEPTHS

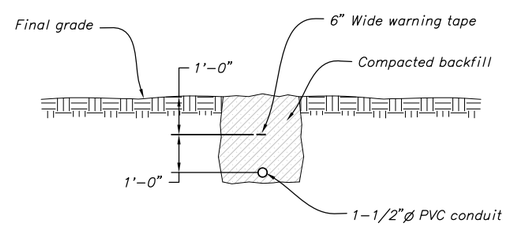

ELECTRICAL CONDUIT BURIAL DEPTH

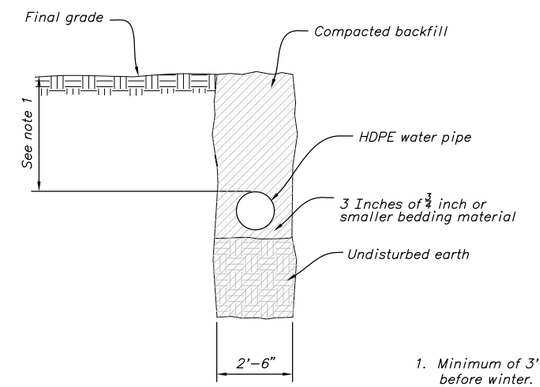

MAIN WATERLINE

NOTES

1. Minimum of 3'–6" of cover for lines that will be drained before winter. Minimum of 4' for lines that will be filled year round.
2. Furnish 1 shutoff rod for every 5 curb valves.
3. Trenching and installation of high voltage electrical lines shall meet all requirements of the local power company and the 2008 NEC.

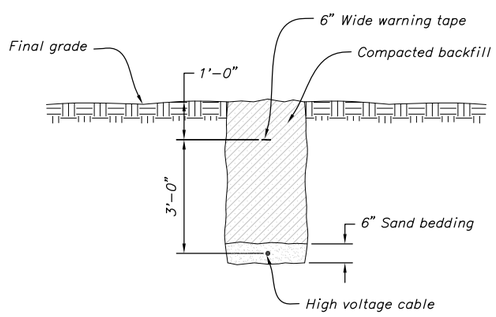

HIGH VOLTAGE CABLE BURIAL DEPTH

See Note 3

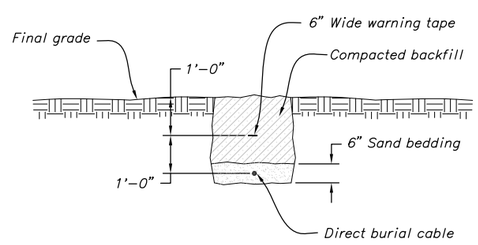

110V AND 120V CABLE BURIAL DEPTH

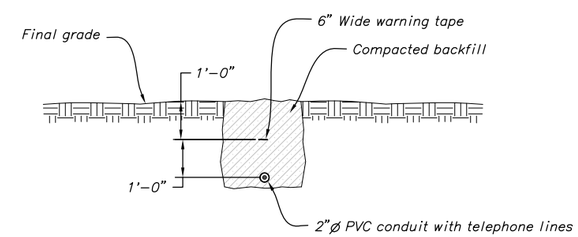

TELEPHONE LINE BURIAL DEPTH

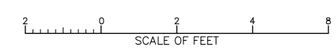

RECLAMATION
Managing Water in the West

ALWAYS THINK SAFETY

U.S. DEPARTMENT OF THE INTERIOR
BUREAU OF RECLAMATION
CENTRAL UTAH PROJECT
BONNEVILLE UNIT – UTAH

STARVATION STATE PARK
RECREATION REHABILITATION – PHASE I
TYPICAL UTILITY TRENCH CROSS SECTIONS

REV NO

DESIGNED
DRAWN
CHECKED
TECH. APPR. JAY BYTHEWAY–P.E.
ADMIN. APPROVAL
WAYNE XIA
MANAGER T.S.D.

66–400–1755

SHEET 1 OF 1

DATE AND TIME PLOTTED
APRIL 27, 2010 06:20
PLOTTED BY
EMANSEAU

CAD SYSTEM
AutoCAD Rel. 17.2s
CAD FILENAME
TYPICAL TRENCH DETAILS.DWG

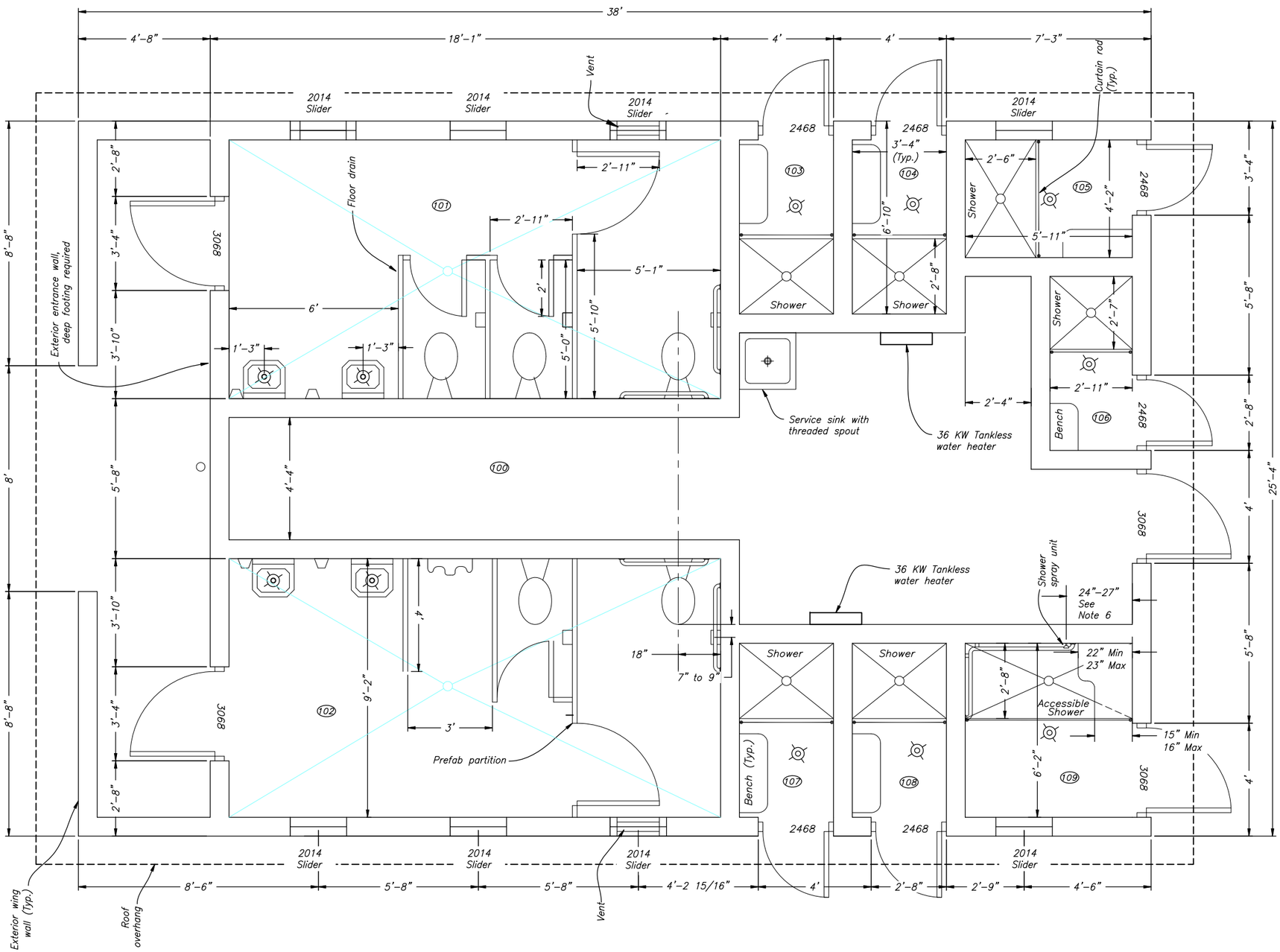

FLOOR PLAN

1 0 1 2 3 4 5
SCALE OF FEET

FINISH KEY DESCRIPTION

F – FLOOR

F1 – Smooth finished concrete with clear sealer (Scofield Cementone or approved equal)

W – WALL

W1 – Unpainted block

W2 – Primer/filler and finish coat paint

C – CEILING

C1 – Waterproof plastic panelling (Parkland Plastics Duro–Therm panels or approved equal)

S – SPECIAL FINISH

S1 – Toilet partitions and accessories

S2 – Shower seat(s)

Solatube skylights

FINISH SCHEDULE

RM #	RM NAME	FLOOR FINISH	WALL FINISH	CEIL. FINISH	SPECIAL FINISH
100	storage	F1	W1	C2	
101	women's	F1	W2	C1	S1
102	men's	F1	W2	C1	S1
103	shower	F1	W2	C1	S2
104	shower	F1	W2	C1	S2
105	shower	F1	W2	C1	S2
106	shower	F1	W2	C1	S2
107	shower	F1	W2	C1	S2
108	shower	F1	W2	C1	S2
109	accessible shower	F1	W2	C1	S2

NOTES

1. Size windows to fit within 1 and½ masonry units wide by 2 masonry units high.
2. End of grab bar at accessible shower shall be located within 3" from edge of seat (in plan), and shall not extend past edge of seat.
3. ADA shower seat shall be folding.
4. Plumbing shall slope to drain for winterizing.
5. Provide trap guard at each floor drain .
6. At accessible shower, locate shower controls and shower spray unit 24" min. and 27" max. from shower side wall. See "Accessible Feature Dimensions" drawing for more information.

RECLAMATION
Managing Water in the West

ALWAYS THINK SAFETY

U.S. DEPARTMENT OF THE INTERIOR
BUREAU OF RECLAMATION
CENTRAL UTAH PROJECT
BONNEVILLE UNIT – UTAH

STARVATION STATE PARK

RECREATION REHABILITATION – PHASE I

SIX UNIT FLUSH RESTROOM WITH SHOWERS

REV. NO.

DESIGNED
DRAWN
CHECKED
TECH. APPR. JAY BYTHEWAY–P.E.
ADMIN. APPROVAL
WAYNE XIA
MANAGER T.S.D.

66–400–1756

SHEET 1 OF 1

DATE AND TIME PLOTTED APRIL 27, 2010 06:23
PLOTTED BY EMANSEAU

CAD SYSTEM AutoCAD Rel. 17.2s
CAD FILENAME 6 STALL RESTROOM WITH 7 SHOWERS.DWG

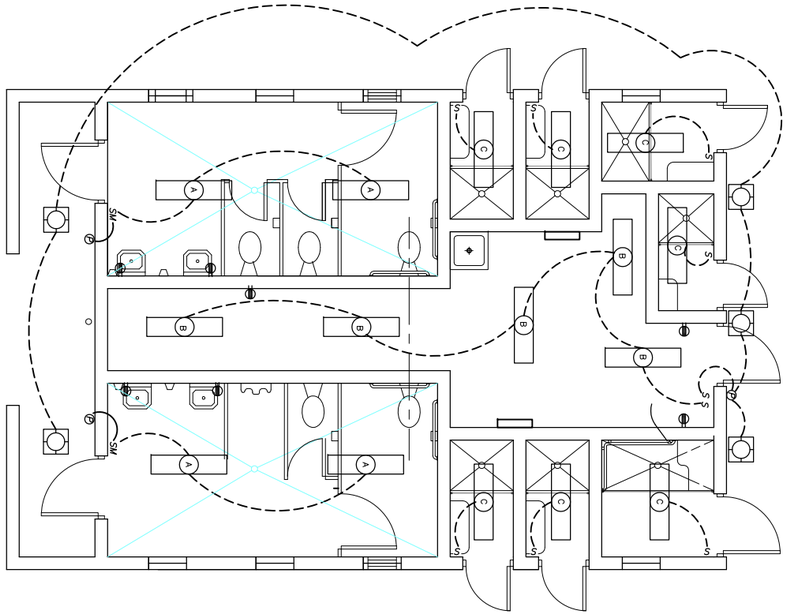

ELECTRICAL PLAN

ELECTRICAL SYMBOLS

- Duplex outlet
- GFCI duplex outlet
- S — Single-pole switch
- Ceiling mounted lighting fixture. Letter in symbol refers to fixture type. Refer to Lighting Schedule for details.
- Recessed compact fluorescent lighting fixture
- Photocell
- SM — Motion sensor switch
- 36 KW Tankless water heater

LIGHTING SCHEDULE

FIXTURE NUMBER	VOLTAGE	WATTS	DESCRIPTION
A	120	64	Vandal resistant, surface mounted, two 32 watt, 4' fluorescent lamps, wrap around lens, low temperature ballast.
B	120	64	Minimum 20 gauge metal housing, surface mounted, two 32 watt, 4' fluorescent lamps, wrap around lens, low temperature ballast.
C	120	64	Vandal resistant, surface mounted, two 32 watt, 4' fluorescent lamps, low temperature ballast, UL listed for wet locations.

NOTES

1. The plan shown indicates the desired number of fixtures and approximate dimensions. Minor modifications to the plan will be allowed if submitted and approved.
2. A minimum of 1 s.f. of vent area is required for each 150 s.f. of projected roof area. A min. of 50% of the vent area will consist of turtle vents, with the remainder consisting of soffit vents.
3. Ventilate bathrooms and shower rooms in accordance with the International Mechanical Code.

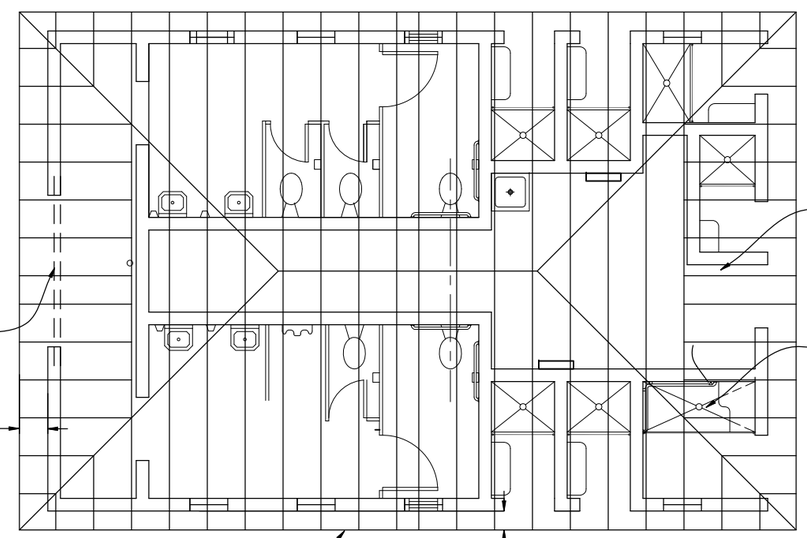

1 0 5 10 15
SCALE OF FEET

ROOF FRAMING PLAN

RECLAMATION
Managing Water in the West

ALWAYS THINK SAFETY

U.S. DEPARTMENT OF THE INTERIOR
BUREAU OF RECLAMATION
CENTRAL UTAH PROJECT
BONNEVILLE UNIT – UTAH

STARVATION STATE PARK
RECREATION REHABILITATION – PHASE I
6 – UNIT FLUSH RESTROOM WITH SHOWERS
ROOF FRAMING AND ELECTRICAL PLANS

REV. NO

DESIGNED
DRAWN
CHECKED
TECH. APPR. JAY BYTHEWAY–P.E.
ADMIN. APPROVAL
WAYNE XIA
MANAGER T.S.D.

66–400–1757
SHEET 1 OF 1

DATE AND TIME PLOTTED
APRIL 27, 2010 06:24
PLOTTED BY
EMARSEAU

CAD SYSTEM
AutoCAD Rel. 17.2s
CAD FILENAME
6 STALL RESTROOM WITH 7 SHOWERS.DWG

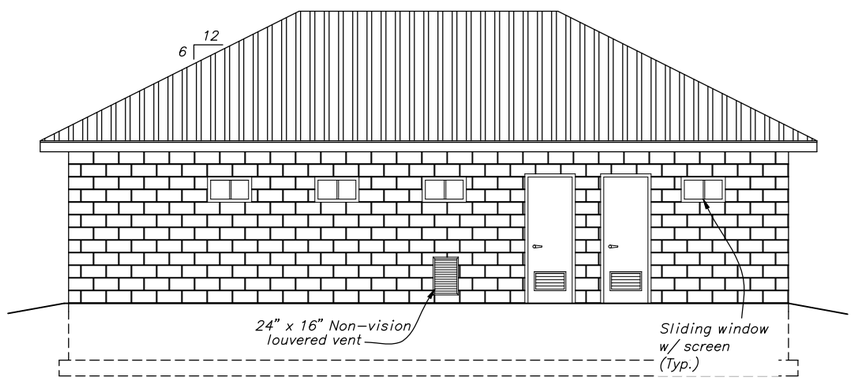

RIGHT ELEVATION

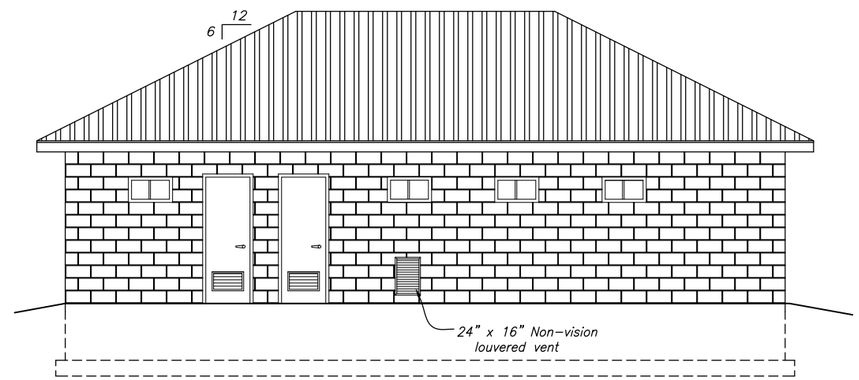

LEFT ELEVATION

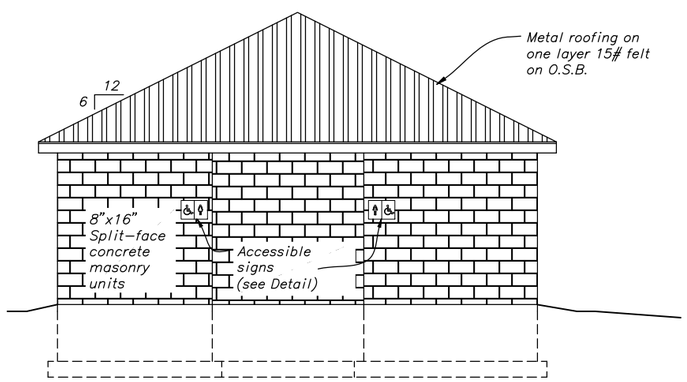

FRONT ELEVATION

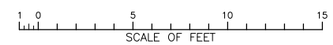

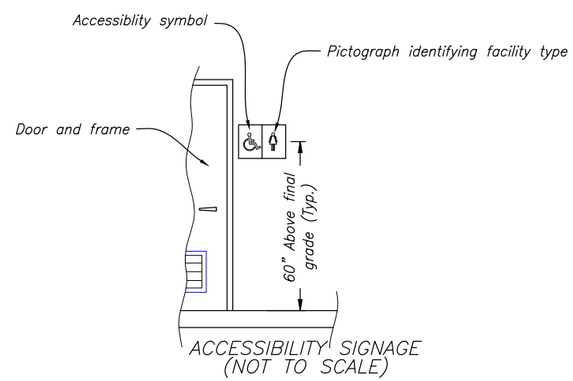

ACCESSIBILITY SIGNAGE (NOT TO SCALE)

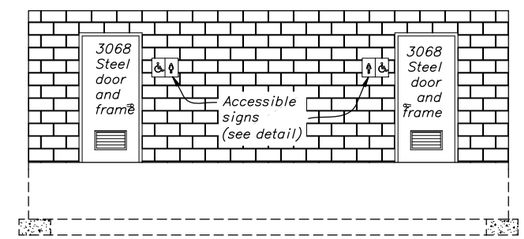

EXTERIOR ENTRANCE WALL ELEVATION

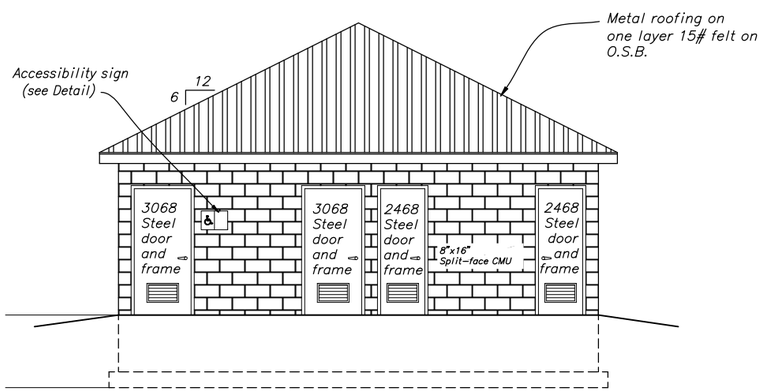

REAR ELEVATION

SIGNAGE NOTES

1. Accessible facilities are required to be identified by the international symbol of accessibility.
2. Letters and sign shall have a width-to-height ratio between 3:5 and 1:1 and a stroke-to-width ratio between 1:5 and 1:10.
3. Characters and symbols shall contrast with their background a minimum of 70%--either light characters on a dark background or dark characters on a light background.
4. Letters and numbers on signs shall be raised $\frac{1}{32}$ inch minimum and shall be sans serif characters.

   Raised characters or symbols shall be at least $\frac{5}{8}$ inch high, but no higher than 2 inch. Symbols or pictographs on signs shall be raised $\frac{1}{32}$ inch minimum.
5. Grade II braille underneath gender symbol.

NOTES

1. The plan shown indicates the desired number of fixtures and approximate dimensions. Minor modifications to the plan will be allowed if submitted and approved.
2. Comply with Americans with Disabilities Act (ADA) accessibility guidelines and the Architectural Barriers Act Accessibility Standards.

RECLAMATION
Managing Water in the West

ALWAYS THINK SAFETY

U.S. DEPARTMENT OF THE INTERIOR
BUREAU OF RECLAMATION
CENTRAL UTAH PROJECT
BONNEVILLE UNIT - UTAH

STARVATION STATE PARK
RECREATION REHABILITATION - PHASE I
6 - UNIT FLUSH RESTROOM WITH SHOWERS
ELEVATIONS

REV NO

DESIGNED
DRAWN
CHECKED
TECH. APPR. JAY BYTHEWAY-P.E.
ADMIN. APPROVAL
WAYNE XIA
MANAGER T.S.D.

66-400-1758

SHEET 1 OF 1

DATE AND TIME PLOTTED APRIL 27, 2010 06:26
PLOTTED BY EMANSEAU

CAD SYSTEM AutoCAD Rel. 17.2s
CAD FILENAME 6 STALL RESTROOM WITH 7 SHOWERS.DWG

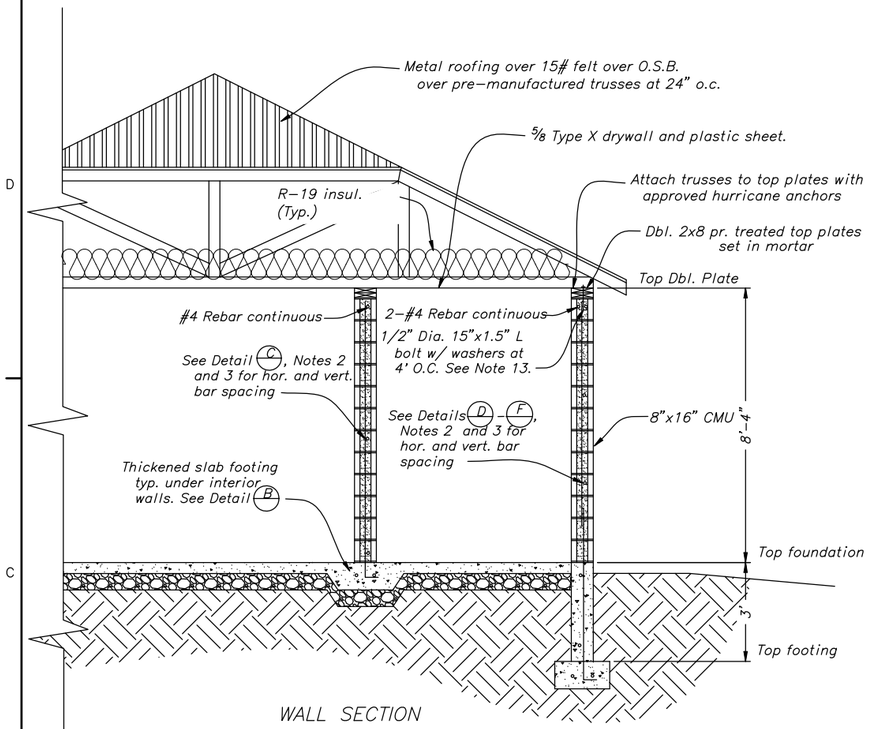

WALL SECTION

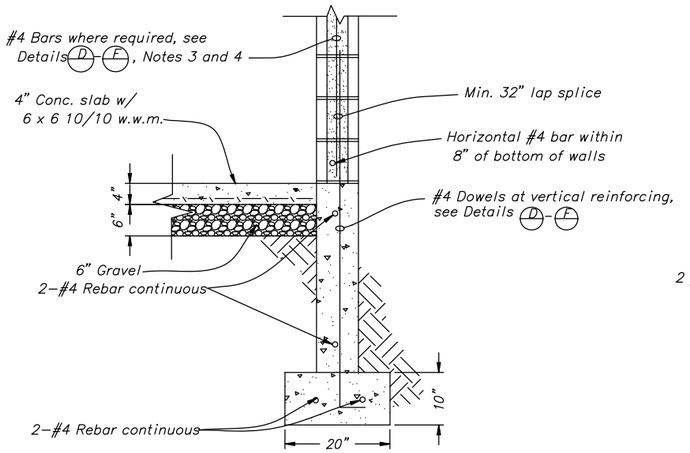

A FOUNDATION DETAIL

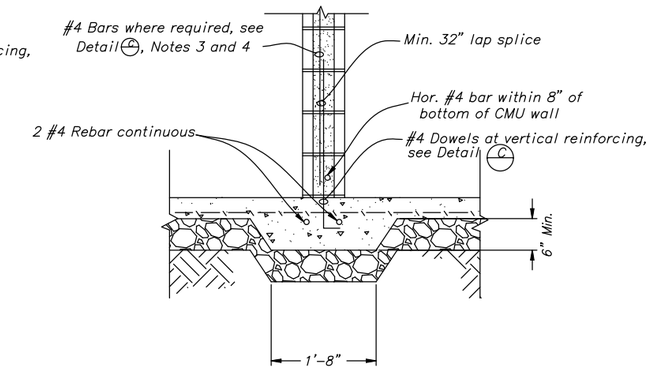

B THICKENED SLAB FOOTING

NOTES

1. The plan shown indicates the desired number of fixtures and approximate dimensions. Minor modifications to the plan will be allowed if submitted and approved.
2. All rebar to be grade 60 #4 bars.
3. #4 Vertical rebar required at corners, and within 8" of top and bottom of walls. #4 rebar required around all wall openings.
4. Space horizontal and vertical rebar as shown. In no case shall rebar spacing exceed 32".
5. Except at wall intersections, hook horizontal bar ends around vert. bars with standard 180 deg. hook (extension=2.5" min).
6. Lap all bar splices 32" min.
7. Minimum bend dia. for all hooked bar=2.5".
8. 2" Min. cover required for protection of all rebar.
9. 1/2" Grout thickness required between bar and CMU.
10. CMU shall conform to ASTM C55 or ASTM C90 and have a min. compressive strength of 1900 psi. Nominal CMU dimension=8"x8"x16".
11. Use only type M or S mortar.
12. Place CMU in running bond.
13. Grout shall conform to ASTM C476 and have a min. compressive strength of 2000 psi at 28 days.
14. Roof anchor bolts shall be ASTM 307 60,000 psi L bolts, spaced at 4' on center. Embed in masonry 9" min. The Contractor shall verify that the bolts are free of debris, oil, and grease prior to installation.
15. Provide std. 180 degree hook at end of horiz. bar, around 2 vert. bars, at end of wall adjacent to openings. Inside dia. of bend at standard hook shall be 3". (Typ.)

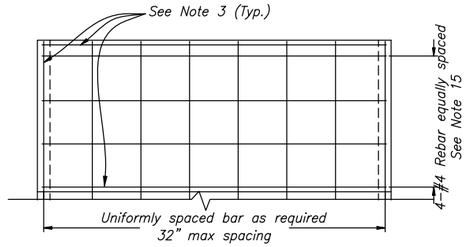

C BAR SPACING DETAIL

TYPICAL INTERIOR WALL AND EXTERIOR WING WALL

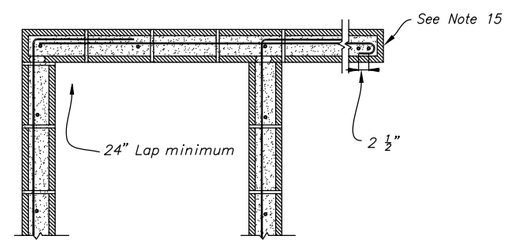

G WALL CONNECTIONS

TYPICAL

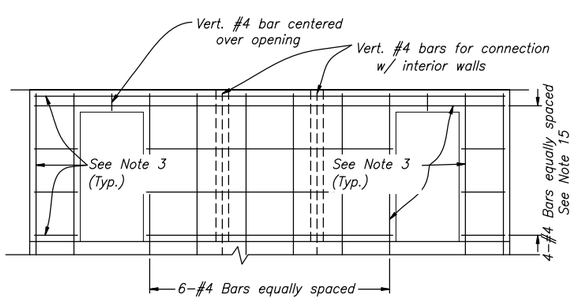

D BAR SPACING DETAIL

FRONT WALL

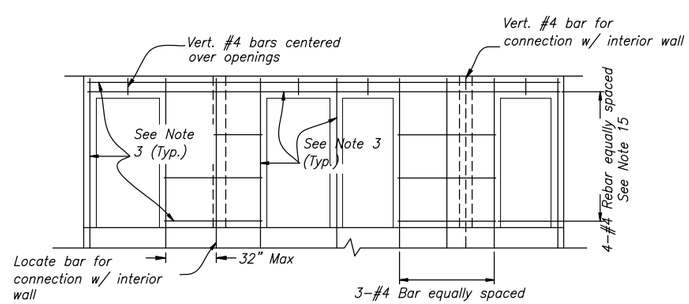

E BAR SPACING DETAIL

REAR WALL

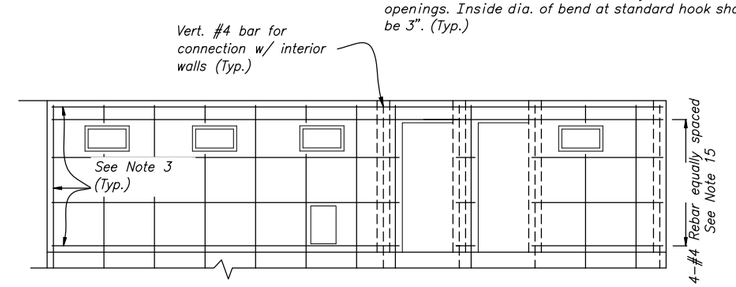

F BAR SPACING DETAIL

SIDE WALLS

THIS DRAWING IS NOT TO SCALE

RECLAMATION
Managing Water in the West

ALWAYS THINK SAFETY

U.S. DEPARTMENT OF THE INTERIOR
BUREAU OF RECLAMATION
CENTRAL UTAH PROJECT
BONNEVILLE UNIT - UTAH

STARVATION STATE PARK
RECREATION REHABILITATION - PHASE I
6 - UNIT FLUSH RESTROOM WITH SHOWERS
WALL SECTION AND DETAILS

REV NO

DESIGNED
DRAWN
CHECKED
TECH. APPR. JAY BYTHEWAY-P.E.
ADMIN. APPROVAL WAYNE XIA MANAGER T.S.D.

66-400-1759

SHEET 1 OF 1

DATE AND TIME PLOTTED APRIL 27, 2010 06:25
PLOTTED BY EMANSEAU

CAD SYSTEM AutoCAD Rel. 17.2s
CAD FILENAME 6 STALL RESTROOM WITH 7 SHOWERS.DWG

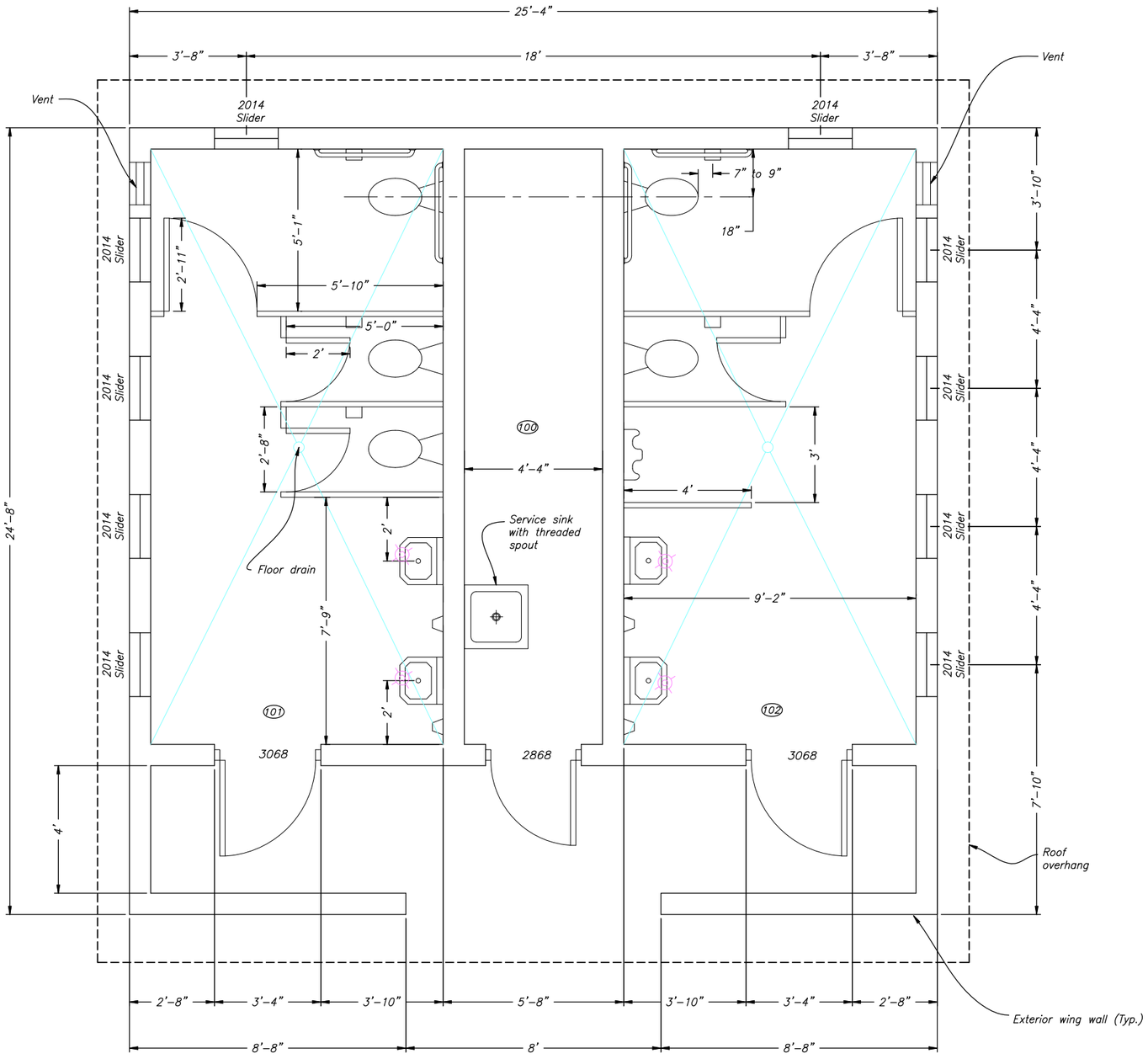

FLOOR PLAN

1 0 1 2 3 4 5
SCALE OF FEET

FINISH KEY DESCRIPTION

F – FLOOR

F1 – Smooth finished concrete with clear sealer (Scofield Cementone or approved equal)

W – WALL

W1 – Unpainted block

W2 – Primer/filler and finish coat paint

C – CEILING

C1 – Waterproof plastic panelling (Parkland Plastics Duro–Therm panels or approved equal)

S – SPECIAL FINISH

S1 – Toilet partitions and accessories

Solatube skylight

FINISH SCHEDULE

RM #	RM NAME	FLOOR FINISH	WALL FINISH	CEIL. FINISH	SPECIAL FINISH
100	storage	F1	W1	C1	
101	women's	F1	W2	C1	S1
102	men's	F1	W2	C1	S1

NOTES

1. Size windows to fit within 1 and ½ masonry units wide by 2 masonry units high.
2. Plumbing shall slope to drain for winterizing.
3. Provide trap guard at each floor drain.

DATE AND TIME PLOTTED APRIL 27, 2010 06:28
PLOTTED BY EMANSEAU

CAD SYSTEM AutoCAD Rel. 17.2s
CAD FILENAME 6 STALL RESTROOM.DWG

RECLAMATION
Managing Water in the West

ALWAYS THINK SAFETY

U.S. DEPARTMENT OF THE INTERIOR
BUREAU OF RECLAMATION
CENTRAL UTAH PROJECT
BONNEVILLE UNIT – UTAH

STARVATION STATE PARK
RECREATION REHABILITATION – PHASE I
6–UNIT FLUSH RESTROOM

REV NO

DESIGNED
DRAWN
CHECKED
TECH. APPR. JAY BYTHEWAY–P.E.
ADMIN. APPROVAL WAYNE XIA MANAGER T.S.D.

66–400–1760

SHEET 1 OF 1

RECLAMATION
Managing Water in the West

LIGHTING SCHEDULE			
FIXTURE NUMBER	VOLTAGE	WATTS	DESCRIPTION
A	120	64	Vandal resistant, surface mounted, two 32 watt, 4' fluorescent lamps, wrap around lens, low temperature ballast.
B	120	64	Minimum 20 gauge metal housing, surface mounted, two 32 watt, 4' fluorescent lamps, wrap around lens, low temperature ballast.
C	120	64	Vandal resistant, surface mounted, two 32 watt, 4' fluorescent lamps, low temperature ballast, UL listed for wet locations.

ELECTRICAL SYMBOLS

- Duplex outlet
- GFCI duplex outlet
- s — Single-pole switch
- (C) — Ceiling mounted lighting fixture. Letter in symbol refers to fixture type. Refer to Lighting Schedule for details.
- Recessed compact fluorescent lighting fixture
- Photocell
- SM — Motion sensor switch

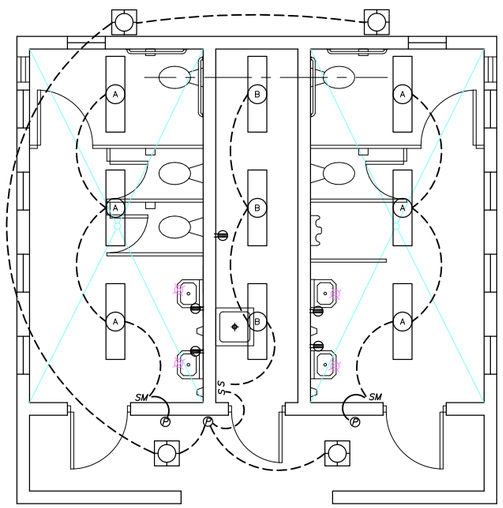

ELECTRICAL PLAN

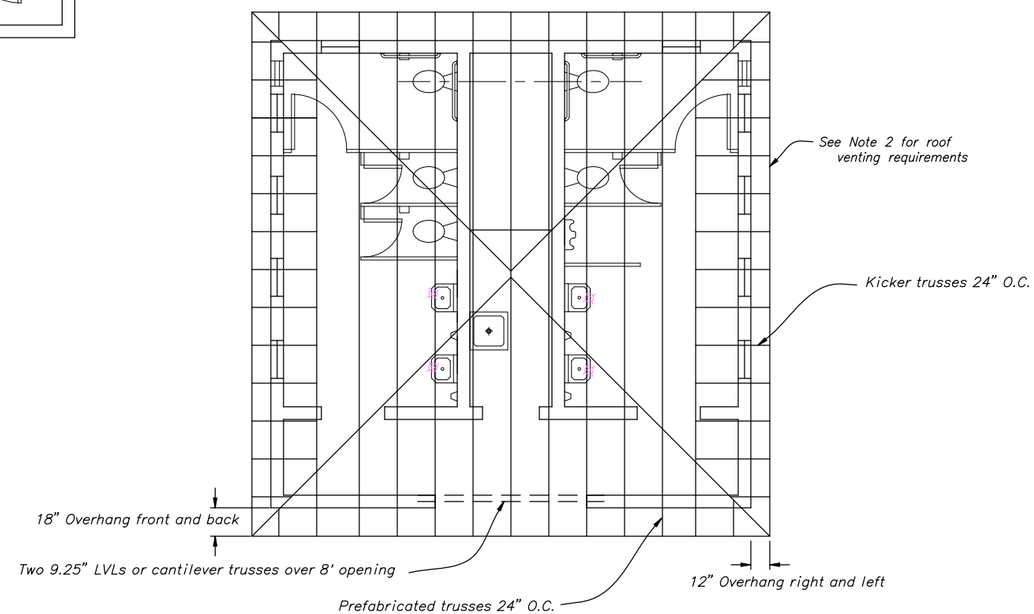

ROOF FRAMING PLAN

NOTES

1. The plan shown indicates the desired number of fixtures and approximate dimensions. Minor modifications to the plan will be allowed if submitted and approved.
2. A minimum of 1 s.f. of vent area is required for each 150 s.f. of projected roof area. A min. of 50% of the vent area will consist of turtle vents, with the remainder consisting of soffit vents.
3. Ventilate bathrooms and shower rooms in accordance with the International Mechanical Code.

1 0 5 10 15
SCALE OF FEET

ALWAYS THINK SAFETY

U.S. DEPARTMENT OF THE INTERIOR
BUREAU OF RECLAMATION
CENTRAL UTAH PROJECT
BONNEVILLE UNIT – UTAH

STARVATION STATE PARK
RECREATION REHABILITATION – PHASE I
6-UNIT FLUSH RR – ELECTRICAL AND ROOF FRAMING PLANS

REV NO

DESIGNED
DRAWN
CHECKED
TECH. APPR. JAY BYTHEWAY–P.E.
ADMIN. APPROVAL
WAYNE XIA
MANAGER T.S.D.

66–400–1761
SHEET 1 OF 1

DATE AND TIME PLOTTED
APRIL 27, 2010 06:29
PLOTTED BY
EMANSEAU

CAD SYSTEM
AutoCAD Rel. 17.2s
CAD FILENAME
6 STALL RESTROOM.DWG

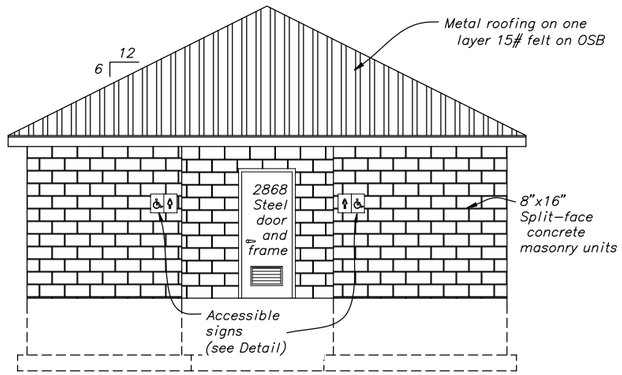

FRONT ELEVATION

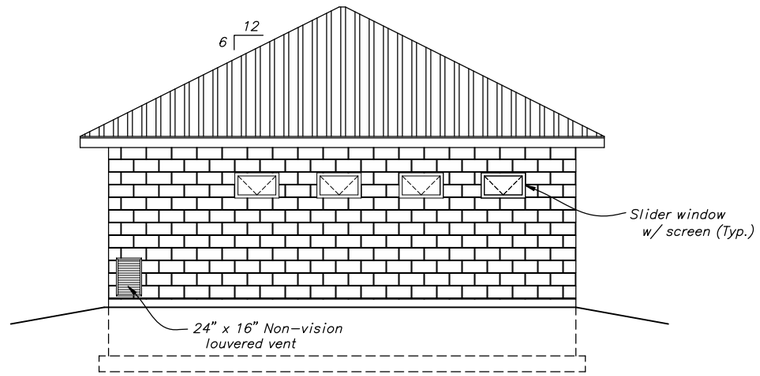

RIGHT ELEVATION

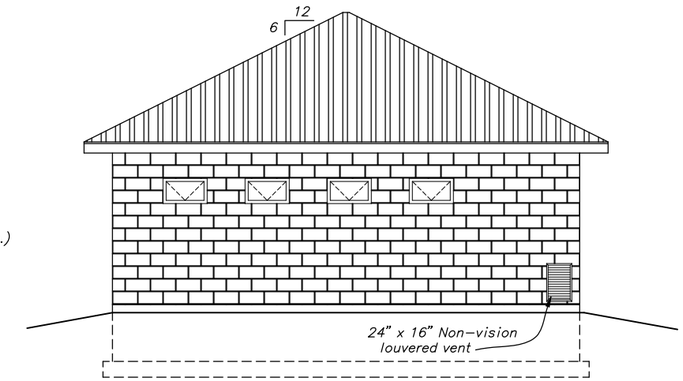

LEFT ELEVATION

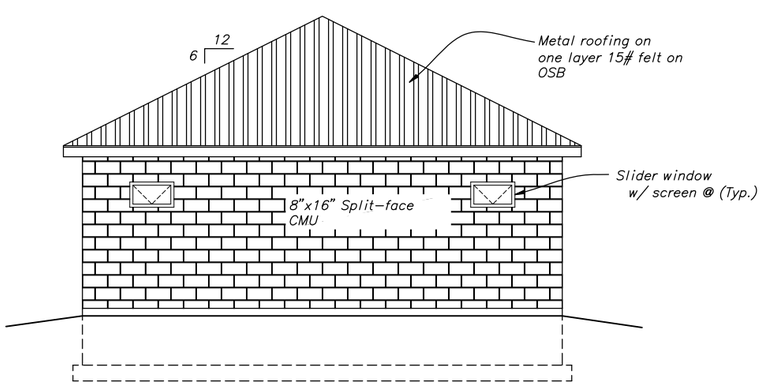

REAR ELEVATION

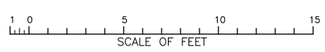

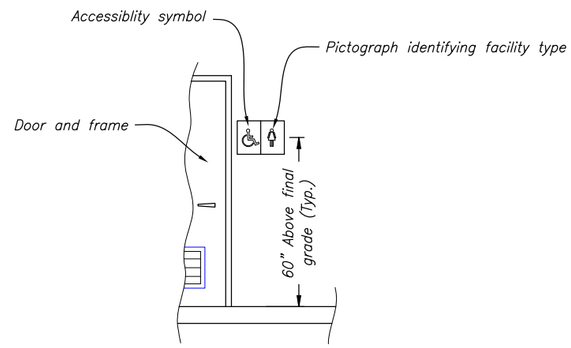

ACCESSIBILITY SIGNAGE
(NO SCALE)

SIGNAGE NOTES

1. Accessible facilities are required to be identified by the international symbol of accessibility.
2. Letters and sign shall have a width-to-height ratio between 3:5 and 1:1 and a stroke-to-width ratio between 1:5 and 1:10.
3. Characters and symbols shall contrast with their background a minimum of 70%--either light characters on a dark background or dark characters on a light background.
4. Letters and numbers on signs shall be raised $\frac{1}{32}$ inch minimum and shall be sans serif characters.

   Raised characters or symbols shall be at least $\frac{5}{8}$ inch high, but no higher than 2 inch. Symbols or

   pictographs on signs shall be raised $\frac{1}{32}$ inch minimum.
5. Grade II braille underneath gender symbol.

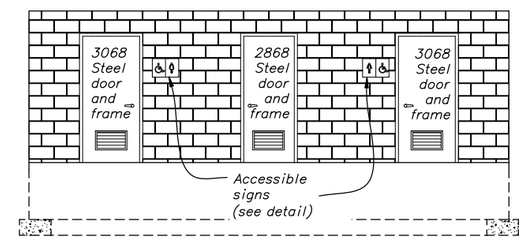

EXTERIOR ENTRANCE WALL ELEVATION

NOTES

1. The plan shown indicates the desired number of fixtures and approximate dimensions. Minor modifications to the plan will be allowed if submitted and approved.
2. Comply with Americans with Disabilities Act (ADA) accessibility guidelines and the Architectural Barriers Act Accessibility Standards.

RECLAMATION
Managing Water in the West

ALWAYS THINK SAFETY

U.S. DEPARTMENT OF THE INTERIOR
BUREAU OF RECLAMATION
CENTRAL UTAH PROJECT
BONNEVILLE UNIT - UTAH

STARVATION STATE PARK
RECREATION REHABILITATION - PHASE I
6-UNIT FLUSH RESTROOM - ELEVATIONS

REV NO

DESIGNED
DRAWN
CHECKED
TECH. APPR. JAY BYTHEWAY-P.E.
ADMIN. APPROVAL
WAYNE XIA
MANAGER T.S.D.

66-400-1762

SHEET 1 OF 1

DATE AND TIME PLOTTED
APRIL 27, 2016 06:52
PLOTTED BY
EMANSEAU

CAD SYSTEM
AutoCAD Rel. 17.2s
CAD FILENAME
6 STALL RESTROOM.DWG

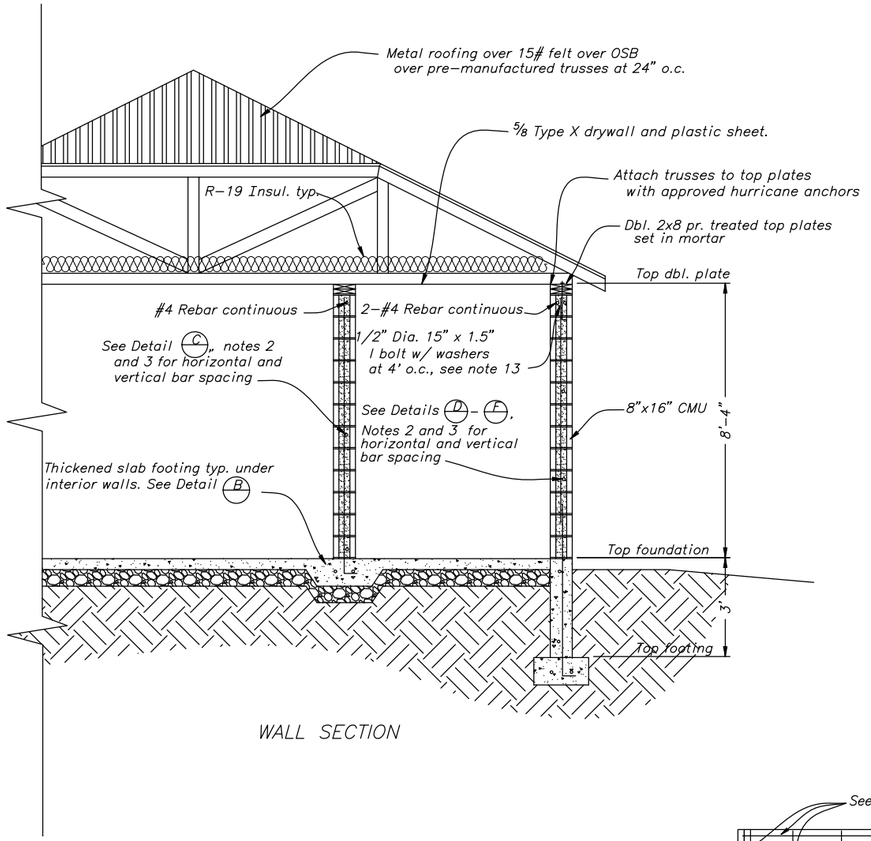

WALL SECTION

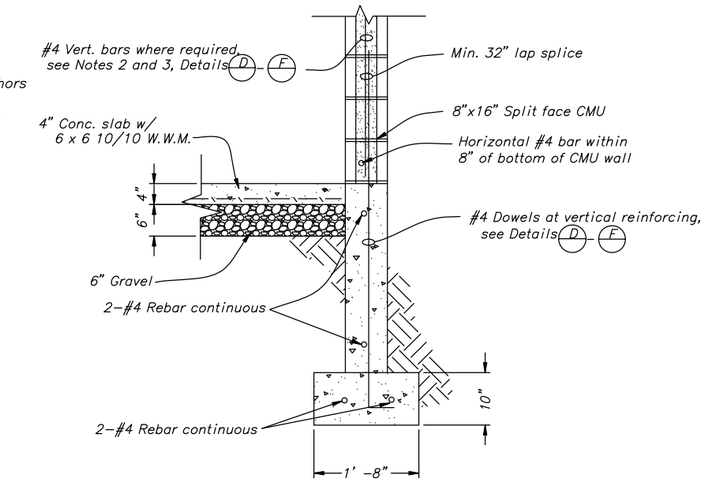

A FOUNDATION DETAIL

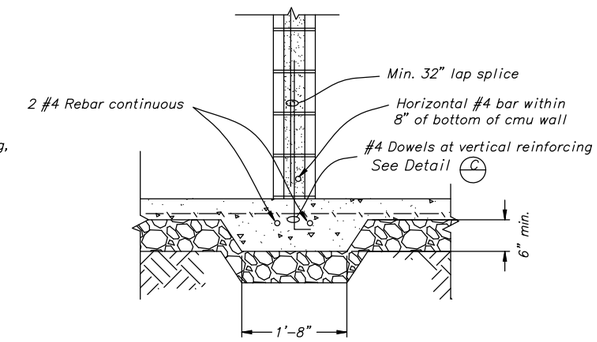

B INTERIOR WALL FOOTING

NOTES

1. The plan shown indicates the desired number of fixtures and approximate dimensions. Minor modifications to the plan will be allowed if submitted and approved.
2. All rebar to be grade 60 #4 bars.
3. #4 vertical rebar required at corners, and within 8" of top and bottom of walls. #4 rebar required around all wall openings.
4. Space horizontal and vertical rebar as shown. In no case shall rebar spacing exceed 32".
5. Except at wall intersections, hook horizontal bar ends around vert. bars with standard 180 deg. hook (extension=2.5" min).
6. Lap all bar splices 32" min.
7. Minimum bend dia. for all hooked bar=2.5".
8. 2" min. cover required for protection of all rebar.
9. ½" grout thickness required between bar and CMU.
10. CMU shall conform to ASTM C55 or ASTM C90 and have a min. compressive strength of 1900 psi. Nominal CMU dimension=8"x8"x16".
11. Use only type M or S mortar.
12. Place CMU in running bond.
13. Grout shall conform to ASTM C476 and have a min. compressive strength of 2000 psi at 28 days.
14. Roof anchor bolts shall be ASTM 307 60,000 psi L bolts, spaced at 4' on center. Embed in masonry 9" min. The Contractor shall verify that the bolts are free of debris, oil, and grease prior to installation.
15. Provide standard 180 degree hook at end of horiz. bar, around 2 vert. bars, at end of wall adjacent to openings. Inside dia. of bend at standard hook shall be 3" (Typ.)

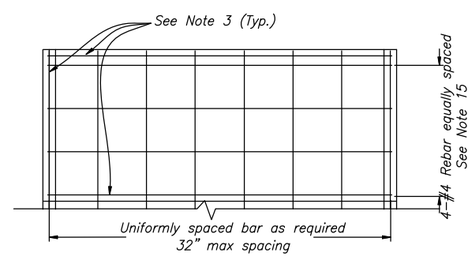

C BAR SPACING DETAIL

INTERIOR WALLS AND EXTERIOR WING WALLS

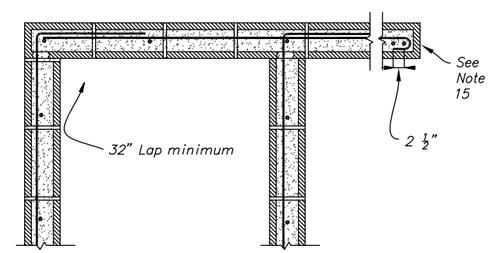

G WALL CONNECTIONS

TYPICAL BOND BEAM

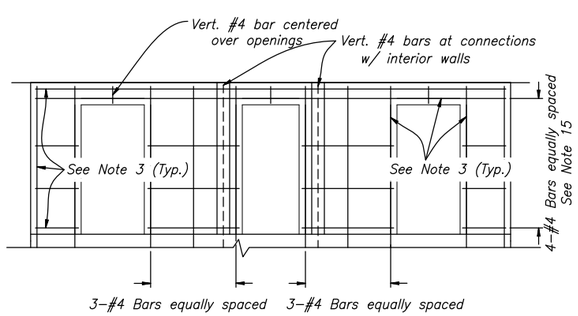

D BAR SPACING DETAIL

FRONT WALL

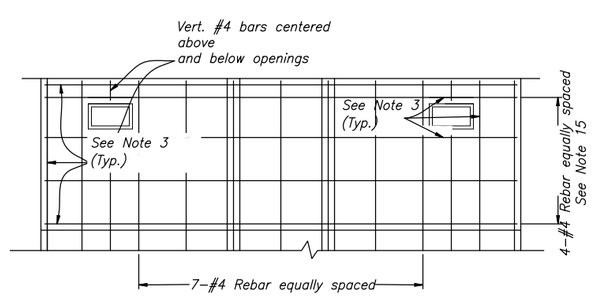

E BAR SPACING DETAIL

REAR WALL

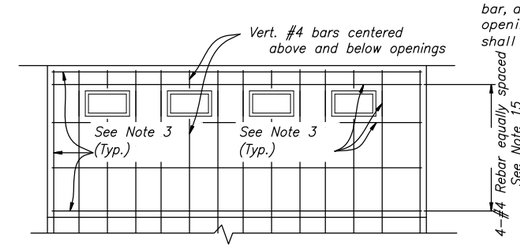

F BAR SPACING DETAIL

SIDE WALLS

THIS DRAWING IS NOT TO SCALE

RECLAMATION
Managing Water in the West

ALWAYS THINK SAFETY

U.S. DEPARTMENT OF THE INTERIOR
BUREAU OF RECLAMATION
CENTRAL UTAH PROJECT
BONNEVILLE UNIT - UTAH

STARVATION STATE PARK

RECREATION REHABILITATION - PHASE I

6-UNIT FLUSH RR WALL SECTION AND DETAILS

REV NO

DESIGNED
DRAWN
CHECKED
TECH. APPR. JAY BYTHEWAY-P.E.
ADMIN. APPROVAL
WAYNE XIA
MANAGER T.S.D.

66-400-1763

SHEET 1 OF 1

DATE AND TIME PLOTTED APRIL 27, 2010 06:53
PLOTTED BY EMANSEAU

CAD SYSTEM AutoCAD Rel. 17.2s
CAD FILENAME 6 STALL RESTROOM.DWG

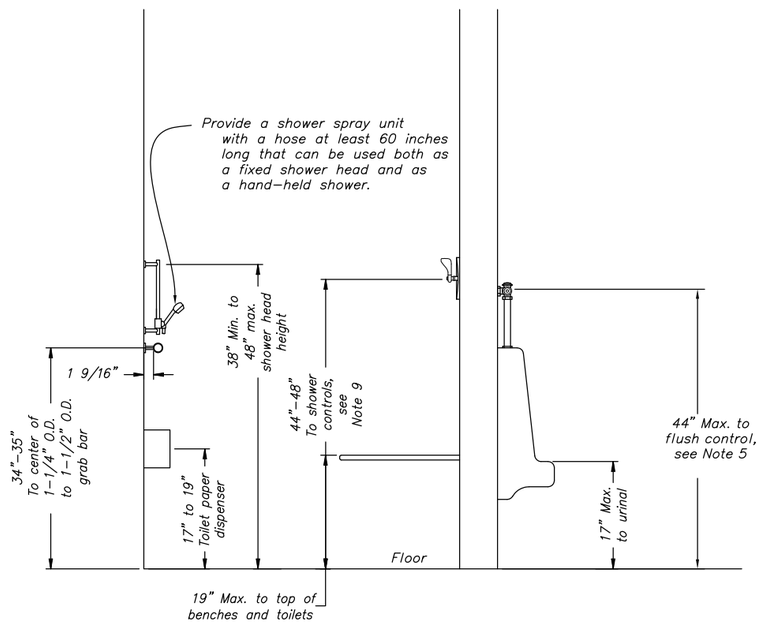

ACCESSIBLE FEATURE DIMENSIONS

Not to scale

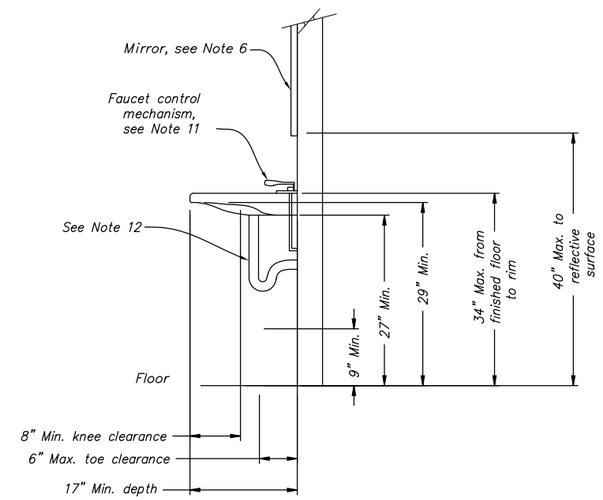

ACCESSIBLE LAVATORY CLEARANCES

Not to scale

ACCESSIBILITY NOTES

1. Comply with Americans with Disabilities Act (ADA) accessibility guidelines and the Architectural Barriers Act Accessibility Standards.
2. The plan shown indicates the desired number of fixtures and approximate dimensions. Minor modifications to the plan will be allowed if submitted and approved.
3. Concrete partitions from floor to 6'-0" height.
4. Provide wall hung, washdown urinal, back mounted. Flushing shall provide a sanitary washdown of the interior. Elongated front required
5. Flush controls on accessible urinal and water closet shall be hand operated or automatic and shall be mounted to a maximum of 44 inches above the finished floor and require not more than 5 lbs. to operate.
6. Mirrors shall be mounted with the bottom edge of the reflecting surface no higher than 40 inches from finish floor.
7. Provide u-shaped handle to inside of accessible stall door for ease of opening door. Handle shall be mounted no higher than 48 inches above finished floor.
8. In accessible stalls and shower areas provide clothes hook or rack no higher than 48 inches.
9. Accessible controls and operating mechanisms shall be operable with one hand and shall not require tight grasping, pinching, or twisting of the wrist. The force required to activate controls shall be no greater than 5 lbs.
10. Toilet paper dispenser in accessible stalls shall be within reach with a min. Height of 19 inches from finished floor to middle of dispenser. Dispensers that control delivery, or that do not permit continuous paper flow, shall not be used.
11. Faucets shall be either lever-operated, push-type, or electronically controlled mechanisms. Self-closing valves are allowed if the faucet remains open at least 10 seconds.
12. Hot water and drain pipes under accessible lavatories shall be insulated or otherwise covered. There shall be no sharp or abrasive surfaces under accessible lavatories.

RECLAMATION
Managing Water in the West

ALWAYS THINK SAFETY

U.S. DEPARTMENT OF THE INTERIOR
BUREAU OF RECLAMATION
CENTRAL UTAH PROJECT
BONNEVILLE UNIT - UTAH

STARVATION STATE PARK

RECREATION REHABILITATION - PHASE I

FLUSH RESTROOM ACCESSIBILITY DETAILS

REV NO

DESIGNED
DRAWN
CHECKED
TECH. APPR. JAY BYTHEWAY-P.E.
ADMIN. APPROVAL
WAYNE XIA
MANAGER T.S.D.

66-400-1764

SHEET 1 OF 1

DATE AND TIME PLOTTED
APRIL 27, 2010 06:54
PLOTTED BY
EMANSEAU

CAD SYSTEM
AutoCAD Rel. 17.2s
CAD FILENAME
FLUSH REST ACCESSIBILITY DETAILS.DWG

GENERAL NOTES 1/

UNLESS OTHERWISE SHOWN ON THE REINFORCEMENT SPECIFICATIONS DRAWINGS, THE DETAILS AND NOTES SHOWN ARE MINIMUM REQUIREMENTS AND TYPICAL FOR ALL REINFORCEMENT DRAWINGS THAT REFER TO THIS DRAWING

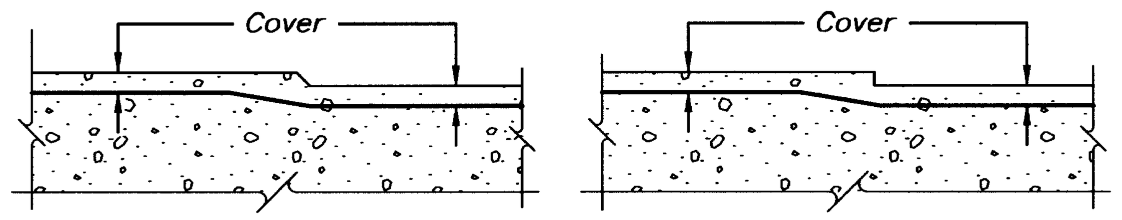

OFFSET LESS THAN 3"

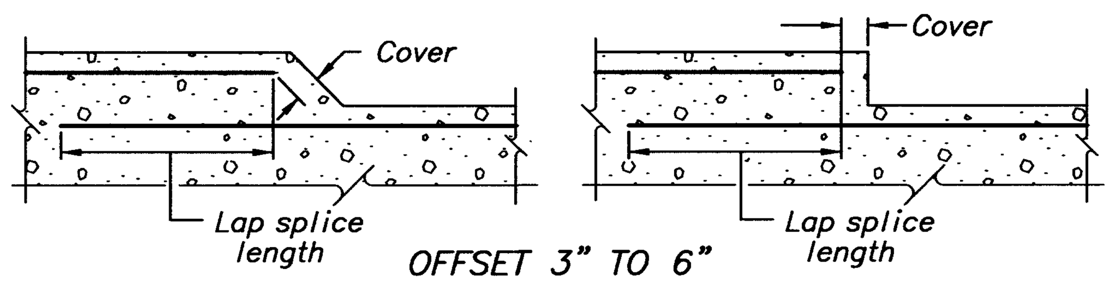

OFFSET 3" TO 6"

NOTE TO DESIGNERS AND DETAILERS: This detail may not be appropriate for tension areas of shallow structural members. If in doubt, use detail for offset greater than 6".

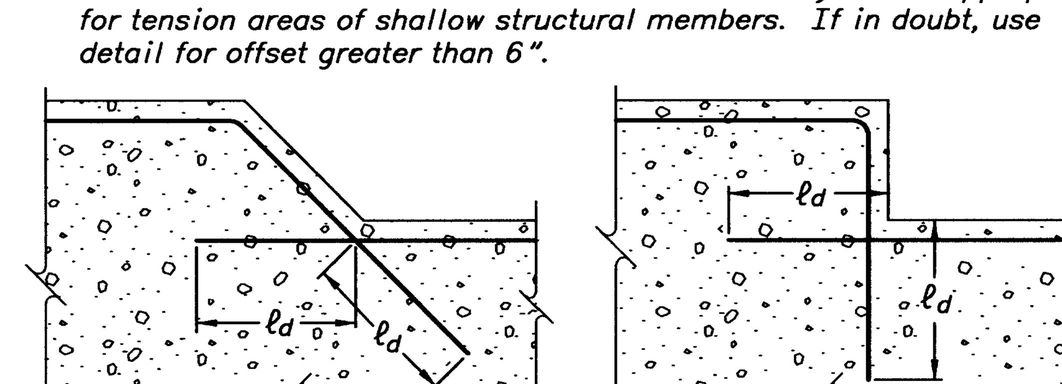

OFFSET GREATER THAN 6"
NONRESTRICTED MEMBER THICKNESS

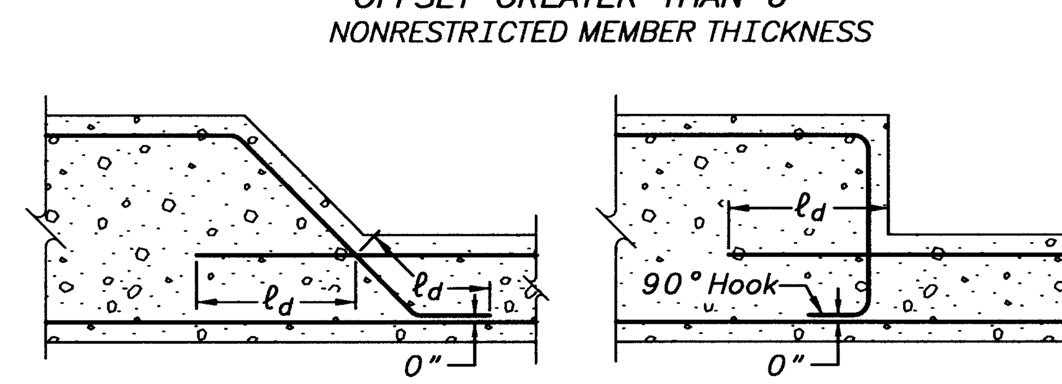

OFFSET GREATER THAN 6"
RESTRICTED MEMBER THICKNESS

TYPICAL OFFSET DETAILS

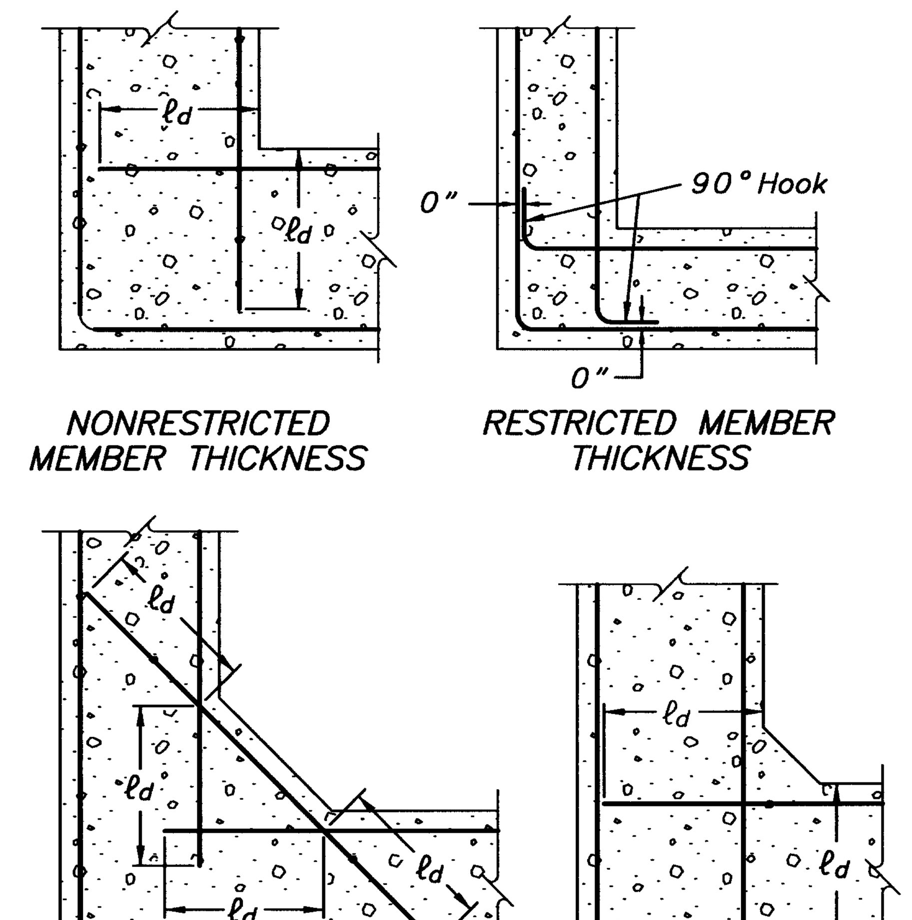

NONRESTRICTED MEMBER THICKNESS — RESTRICTED MEMBER THICKNESS

FILLET 1'-0" OR GREATER — FILLET LESS THAN 1'-0"

TYPICAL CORNER DETAILS

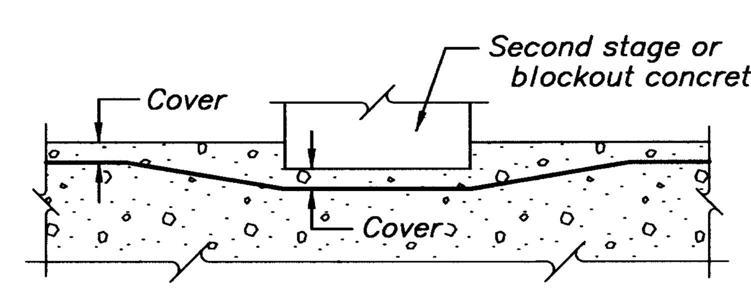

RECESS LESS THAN 3" DEEP

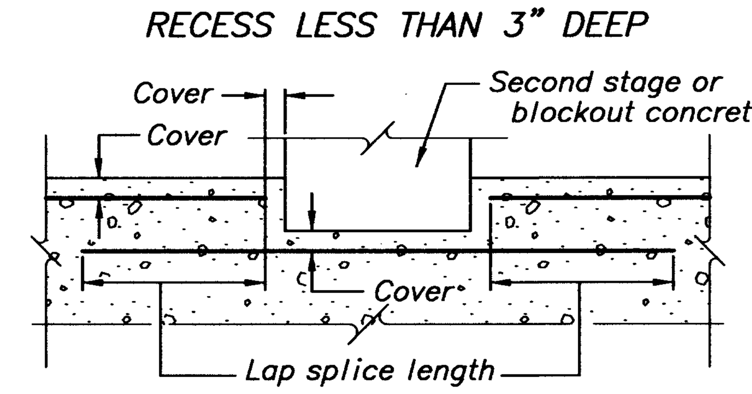

RECESS 3" TO 6" DEEP

NOTE TO DESIGNERS AND DETAILERS: This detail may not be appropriate for tension areas of shallow structural members. If in doubt, use detail for recess greater than 6".

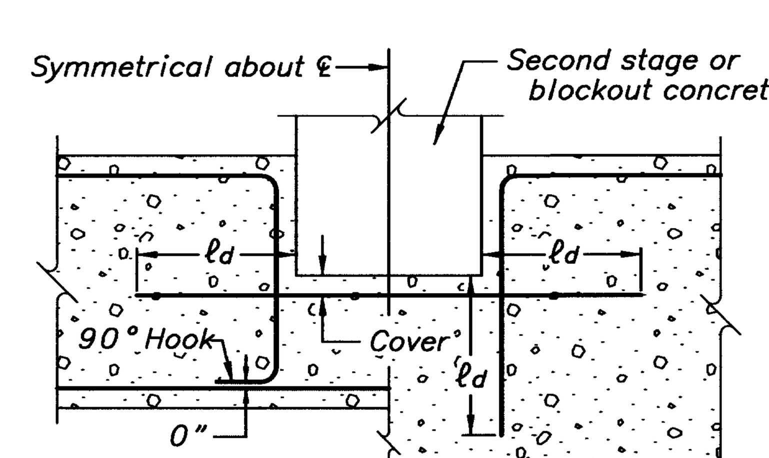

RECESS GREATER THAN 6"

TYPICAL BLOCKOUT RECESS DETAILS

(Second stage concrete shown)

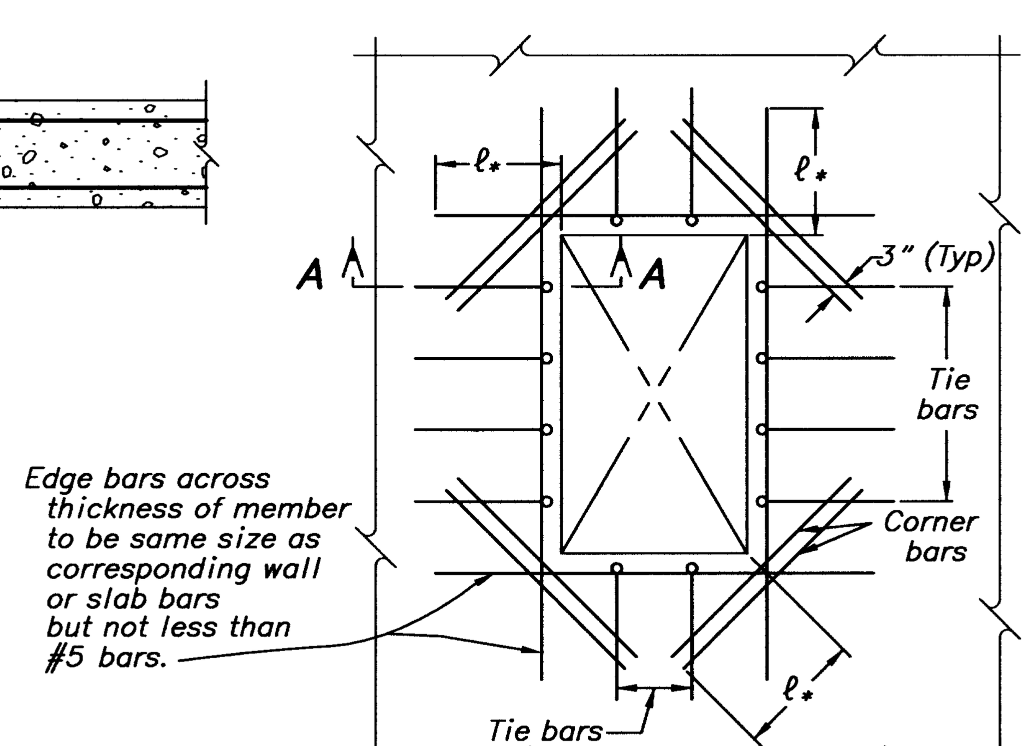

ℓ* = ℓd but not less than 24 inches

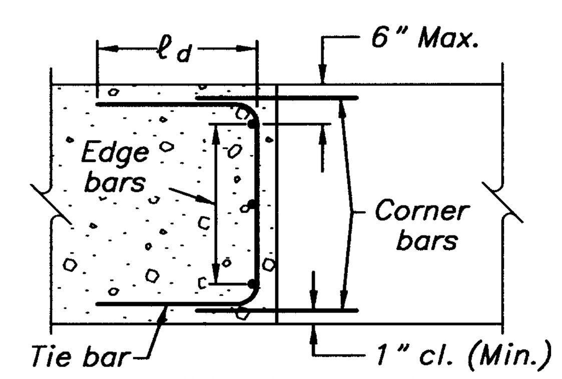

SECTION A-A

OPENINGS :
TABLE FOR ADDITIONAL REINFORCEMENT

MEMBER THICKNESS	TIE BARS	EDGE BARS	CORNER BARS
Less than 9"	None	1 – ctr.	2 – #4 ctr.
9" thru 1'-6"	None	2 – (1 ef)	4 – #4 (2 ef)
1'-7" thru 3'-0"	#4 @ 1-0	3 – eq. spc.	4 – #4 (2 ef)
Over 3'-0"	#6 @ 1-0	Spc. @ 1-0	4 – #5 (2 ef)

Omit edge and tie bars along sides of openings where dimension is less than 1'-6".

Omit corner bars at sides of openings adjacent to floors, walls, or beams.

Omit corner bars if both dimensions of opening are less than 1'-6".

RECESSES :
Use corner bars in face of recesses deeper than 4" if either dimension of recess is equal to or greater than 1'-6".

ADDITIONAL REINFORCEMENT AROUND OPENINGS AND RECESSES

ABBREVIATIONS :

bf = bottom face	br = bottom row	bl = bottom layer
tf = top face	tr = top row	tl = top layer
nf = near face	nr = near row	ml = middle layer
ff = far face	fr = far row	ns = near side
ef = each face	er = each row	fs = far side
if = inside face	ir = inside row	es = each side
of = outside face	or = outside row	ew = each way
	mr = middle row	ec = each corner

spc. = space or spaces
eq. spc. = equally spaced, equal spaces
d_b = nominal diameter of reinforcing bar
uv = uniformly varying lengths of bars between lengths shown
cl. = clear
ctr. = center or centers
add'l = additional
ℓ_d = development length

SYMBOLS :
Bars shown thus —#8@1-0 or —#6@8 indicate a group of the same size bars equally spaced.
An open circle at the end of a bar indicates a bend with the bar turned away from the observer.
A closed circle at the end of a bar indicates a bend with the bar turned towards the observer.
Splices shown thus ═— indicate a lap splice, not a bend in the bar.
■ Mechanical splice

DIMENSIONS :
Dimensions are to the centerline of the bars except for embedment of hooks, which are dimensioned to the outside of the bar.

Clear cover dimensions are marked "cl." and are dimensioned to the outside of the bar.

COVER :
Place the reinforcement so that the clear distance between face of concrete and nearest reinforcement is 1½" for #5 bars and smaller, 2" for #6 bars through #8 bars and 3" for #9 bars through #11 bars. Provide 3" clear distance from face of concrete for all bars when the concrete is placed against earth or rock. Clear distance is to the design dimension line.

Reinforcement parallel to construction joints shall have a minimum of 2" clear cover.

PLACING :
Reinforcement at small openings (max 1'-6") in walls and slabs may be spread apart not more than 1.50 times the bar spacing.

Reinforcement shall be adjusted laterally to maintain a clear distance of at least 1" between the reinforcement and keys, waterstops, anchor bolts, form ties, conduits, and other embedded materials. In heavily reinforced areas, relocation of the embedded material or cutting of reinforcement must be approved.

When bars are bent due to offsets less than 3" and recesses less than 3" deep, the slope of the inclined portion must not exceed 6 to 1.

Reinforcement parallel to anchor bolts or other embedded material shall be placed to maintain a clear distance of at least 1.33 times the maximum size aggregate.

SPACING :
The first and last bars in walls and slabs, stirrups in beams, and ties in columns are to start and end at a maximum of one half of the adjacent bar spacing. The minimum edge spacing shall be the smaller of either $2.5d_b$ or 0.5 of the adjacent bar spacing. For #9 through #11 bars where minimum centerline bar spacing is 6" and the lap splice lengths requiring staggered placement shown in Tables 3-60 and 4-60 are used, the minimum edge spacing shall be 3".

ACCESSORIES :
Bar supports, spacers, and other accessories are not shown on the design drawings. The recommendations of the ACI Detailing Manual-2004 (SP-66), or other approved supporting systems may be used.

DRAWING REFERENCES :
Numerals in parentheses ( ) following notes and section letters or numbers indicate the number of the drawing upon which the section or detail is shown; for example (524) denotes Drawing No. 557-D-524.

STANDARD HOOKS :
1. 180-degree bend plus $4d_b$ extension, but not less than 2½" at the free end of the bar.
2. 90-degree bend plus $12d_b$ extension at free end of the bar.

STIRRUP AND TIE HOOKS :
1. #5 bar and smaller, 90-degree bend plus $6d_b$ extension at the free end of the bar.
2. #6, #7, and #8 bars, 90-degree bend plus $12d_b$ extension at the free end of the bar.
3. #8 bars and smaller, 135-degree bend plus $6d_b$ extension at the free end of the bar.

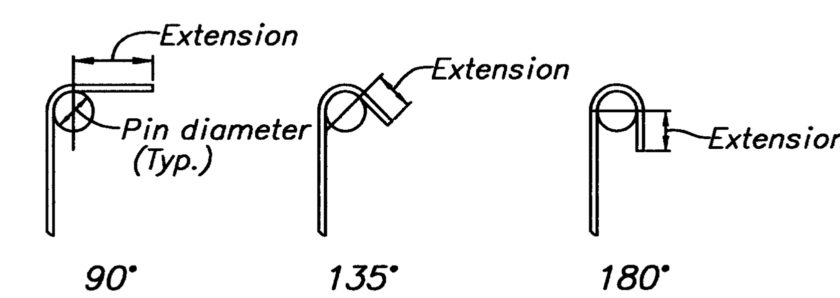

TABLE OF PIN DIAMETERS IN INCHES

BAR NO.	3	4	5	6	7	8	9	10	11
Standard bends	2¼	3	3¾	4½	5¼	6	9½	10¾	12
Stirrup and tie bends	1½	2	2½	4½	5¼	6			

REINFORCEMENT DOWELS :
Dowels indicated on the drawing, such as #8(d), shall be embedded a length equal to ℓ_d and shall have a projection equal to that required for lap splicing to a bar of the same diameter.

PLAIN DOWELS :
Plain dowels across contraction joints shall be smooth bars uniformly coated with a film of oil before concrete placement. Viscosity of the oil shall have a SAE rating of not less than 250.

CODE AND DETAILING REFERENCES :
ACI Building Code Requirements for Structural Concrete (ACI 318-05).
ACI Detailing Manual – 2004 (SP-66)

NOTES TO DESIGNERS AND DETAILERS :
Splice lengths shown in the tables on this drawing are for Class B tension lap splices in accordance with ACI 318-05. Assumed conditions for these tables in addition to the requirements shown on this drawing are uncoated reinforcement, normal weight concrete, and the transverse reinforcement index (K_{tr}) equal to zero. Splices or development lengths other than those shown in the tables must be detailed on the reinforcement specifications drawings.

Some factors which require additional consideration are: Beams or columns with ties, lightweight aggregate concrete, epoxy-coated reinforcement, excess reinforcement, bars in compression, bundled bars, and special seismic provisions per ACI 318-05 (Chapter 21 – Special Provisions For Seismic Design).

The centerline to centerline spacing requirements shown in TABLES 3-60 and 4-60 shall not be used when using crack control criteria for beams and one-way slabs described in ACI 318-05, Section 10.6.4. The spacing requirements shall be calculated using Eq. 10-4.

Recalculation of lap splice lengths and development lengths may be required for changes in combinations of controlling variables per ACI 318-05, Section 12.2.

Lap splices and development lengths for horizontal bars in walls are designated as top bar splices and development lengths unless otherwise noted or detailed on the reinforcement specifications drawings.

Development lengths for deformed bars in tension terminating in a standard hook shall be calculated in accordance with ACI 318-05, Section 12.5. In cases where a restricted member thickness does not allow for the full development length, the designer shall use a reduced tensile capacity

SPLICES :
The minimum length of lap for splicing parallel bars shall be as given in TABLES 3-60 and 4-60.
Staggered splices shall be separated to give 12 inches clear between ends of adjacent splices.
Bars spliced by noncontact lap splices shall not be spaced transversely farther apart than one-fifth the required lap splice length, nor 6" on centers.
When reinforcing bars of different size are to be spliced, the length of lap shall be governed by the smaller diameter bar.
Splices are to be made so that the required clear distances to face of concrete will be maintained.

f'c = 3000 psi — TABLE 3 – 60 — fy = 60,000 psi

Bar size No. *** IP (SM)	MINIMUM ℄ to ℄ BAR SPACING (INCHES)	LAP SPLICE LENGTH (INCHES) TOP BARS *	LAP SPLICE LENGTH (INCHES) OTHER BARS	DEVELOPMENT LENGTH ℓ_d (INCHES) TOP BARS *	DEVELOPMENT LENGTH ℓ_d (INCHES) OTHER BARS
3 (10)	3	17	16	13	12
4 (13)	3	23	18	18	14
5 (16)	4	28	22	22	17
6 (19)	5	34	26	26	20
7 (22)	6	49	38	38	29
8 (25)	6	56	43	43	33
9 (29)	7	63	49	49	38
10 (32)	8	71	55	55	42
11 (36)	9	79	61	61	47
9 (29)	6	63 **	49 **	49	38
10 (32)	6	75 **	58 **	58	45
11 (36)	6	93 **	71 **	71	55

f'c = 4000 psi — TABLE 4 – 60 — fy = 60,000 psi

Bar size No. *** IP (SM)	MINIMUM ℄ to ℄ BAR SPACING (INCHES)	LAP SPLICE LENGTH (INCHES) TOP BARS *	LAP SPLICE LENGTH (INCHES) OTHER BARS	DEVELOPMENT LENGTH ℓ_d (INCHES) TOP BARS *	DEVELOPMENT LENGTH ℓ_d (INCHES) OTHER BARS
3 (10)	3	16	16	12	12
4 (13)	3	20	16	15	12
5 (16)	4	25	19	19	15
6 (19)	5	29	23	23	18
7 (22)	6	43	33	33	25
8 (25)	6	49	37	37	29
9 (29)	7	55	42	42	33
10 (32)	8	62	47	47	37
11 (36)	9	68	53	53	41
9 (29)	6	55 **	42 **	42	33
10 (32)	6	65 **	50 **	50	39
11 (36)	6	80 **	62 **	62	48

TABLES 3-60 and 4-60 generated using ACI 318-05 Eq. 12-1
* Top bars are all horizontal bars so placed that more than 12 inches of fresh concrete is cast below the development length or splice. (See NOTES TO DESIGNERS AND DETAILERS)
** Splices must be staggered.
*** IP = Inch-Pound Bar Size Designation.
SM = Soft Metric Bar Size Designation.

1/ Unless otherwise shown on the reinforcement specifications drawings or this drawing, follow the recommendations established by the ACI Detailing Manual – 2004 (SP-66).

7-23-07 D – AIB, P.E.	REVISED TO CONFORM TO ACI 318-05. ADDED THREE NOTES TO NOTES TO DESIGNERS AND DETAILERS. OTHER MINOR REVISIONS
6-1-03 D – AIB, PE	REVISED TO CONFORM TO ACI 318-99. REVISED SYMBOLS, SPACING, NOTES TO DESIGNERS AND DETAILERS. ADDED SOFT METRIC BAR SIZES IN. TABLES. MINOR REVISIONS.
6-1-97 D – GPG	CONVERTED TO AUTOCADD DRAWING. REVISED TO CONFORM TO ACI 318-95. OTHER MINOR REVISIONS.
2-29-92 D – R.O.A.	TOP BAR DEFINITION REVISED AND MINOR PUNCTUATION REVISION IN PLACING NOTE.
12-7-90 D – J.D.S.	REDRAWN TO NEW DRAFTING STANDARDS. REVISED CONCRETE COVER, NOTES TO DESIGNERS, TABLES, REINFORCEMENT AROUND OPENINGS, AND OTHER MINOR REVISIONS. REVISED TO CONFORM TO ACI 318-89.
9-27-84 D – NFP DG	REVISED PIN DIAMETER TABLE, REFERENCED THE ACI DETAILING MANUAL 1980, ADDED NOTES UNDER PLACING AND STANDARD HOOKS.
12-8-76 D – WRW	MINOR REVISIONS

ALWAYS THINK SAFETY

UNITED STATES
DEPARTMENT OF THE INTERIOR
BUREAU OF RECLAMATION
STANDARD DESIGNS

GENERAL NOTES AND MINIMUM REQUIREMENTS FOR DETAILING REINFORCEMENT

DESIGNED M. F. WARD J. G. STARBUCK — TECHNICAL APPROVAL E. D. MORGAN
DRAWN M. CAMPBELL — SUBMITTED JACK W. HILF
CHECKED GAYLE A. ERICKSON — APPROVED H. G. ARTHUR, ACTING DIRECTOR, DESIGN AND CONSTRUCTION

CADD SYSTEM AutoCAD Rel. 16.1s — CADD FILENAME 40-D-6263 REV 2007-07-23 — DATE AND TIME PLOTTED 2007 14:36
DENVER, COLORADO — JUNE 12, 1972 — 40-D-6263

MLEAVITT FILE PATH: L:\Admin\Drawings\40-D\

K

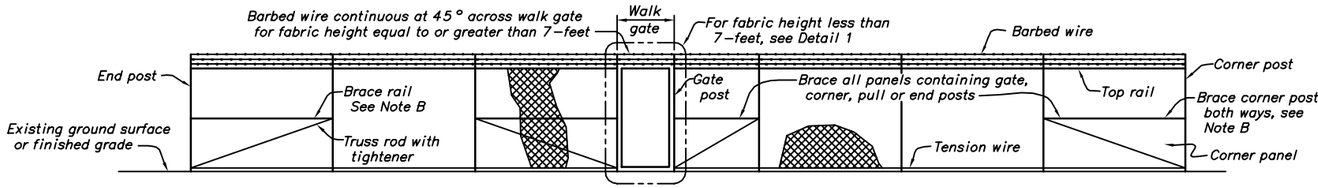

TYPICAL ELEVATION

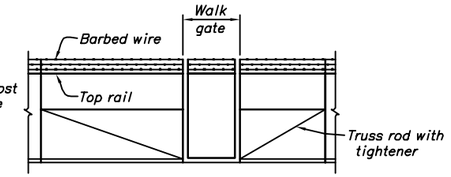

DETAIL 1

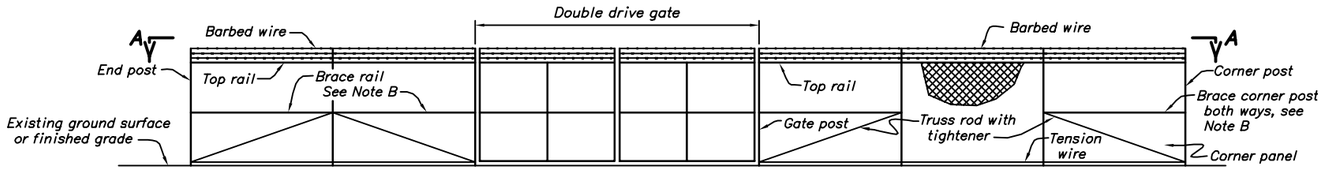

TYPICAL ELEVATION

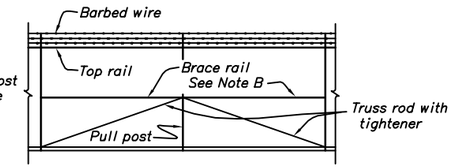

PANELS ADJOINING PULL POST

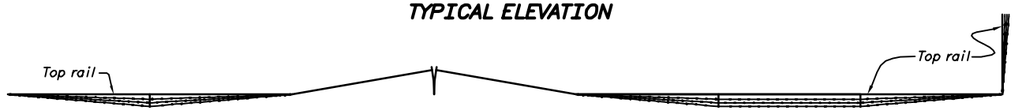

VIEW A-A

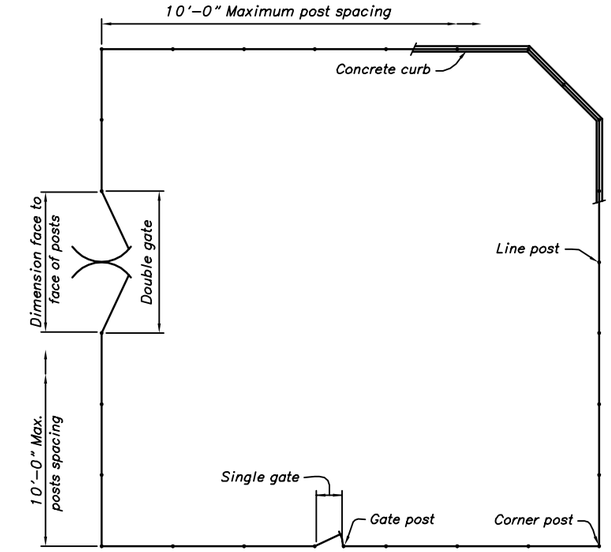

TYPICAL FENCING PLAN

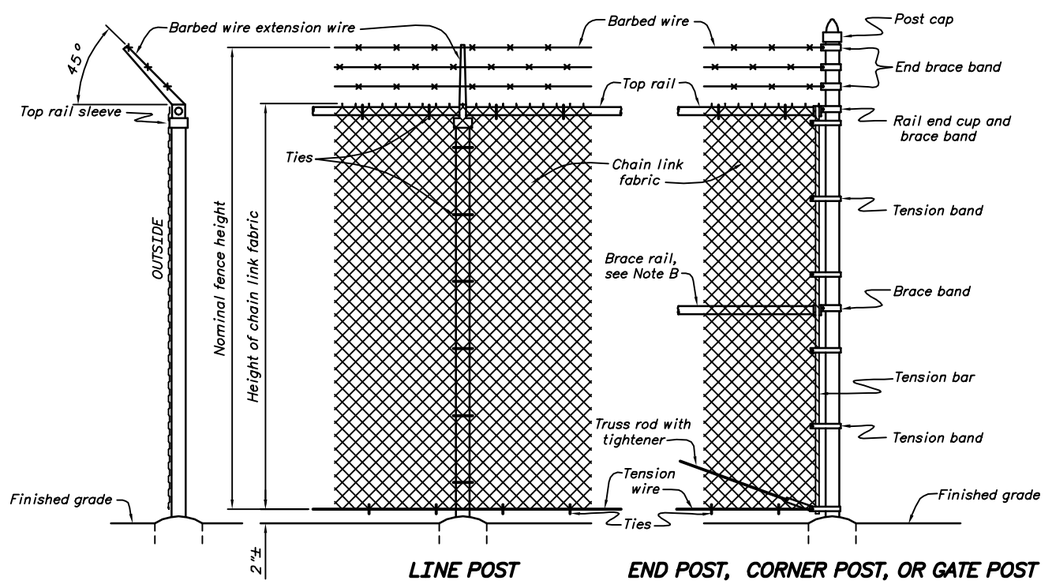

LINE POST

END POST, CORNER POST, OR GATE POST

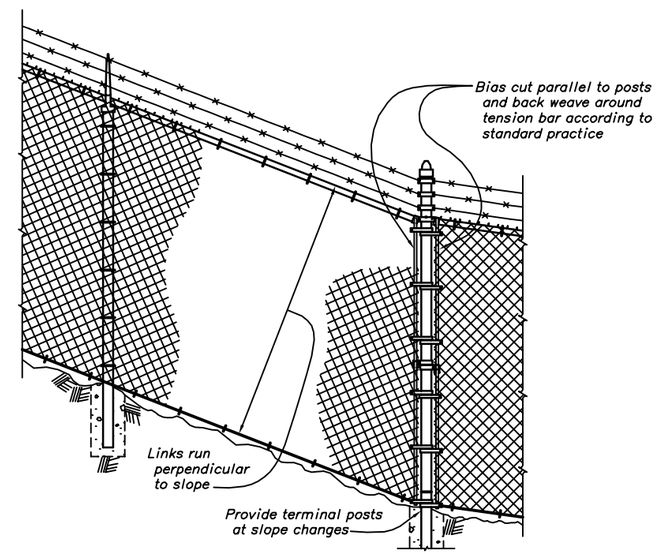

FENCE INSTALLATION ON STEEP SLOPES

NOTES

See specfic site plan for overall fence dimensions and size, location and swing of gates.

Install pull posts at the end of each run, at maximum intervals of 500 feet, and at vertical and horizontal changes in alignment greater than 30 degrees.

Weld all joints between tubular gate frame members or use heavy fittings to provide rigid and watertight connections.

Gate dimensions are face to face of gate posts.

Provide latches, stops and keepers for all gates as specified.

End post, corner posts, and pull posts, are designated as terminal posts.

See site plans for curb details and locations where curb is required.

Chain link fabric shall be attached to fence framework in accordance with the Chain Link Fence Manufacturer's Institute (CLFMI) Product Manual.

Chain link fences are 6 foot high fabric unless otherwise noted on specific site plans.

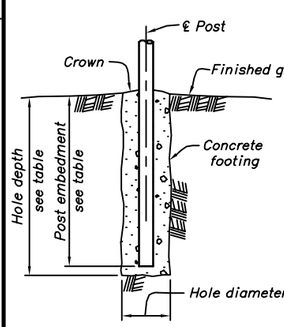

SOIL OR LOOSE ROCK

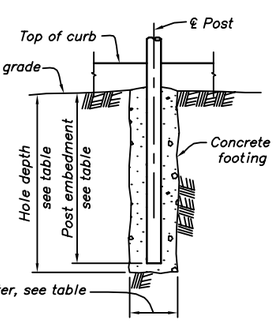

POST FOOTING UNDER CURB

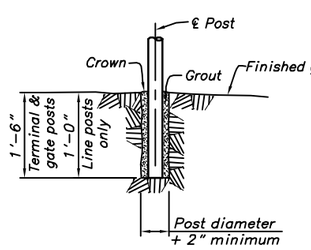

SOLID ROCK

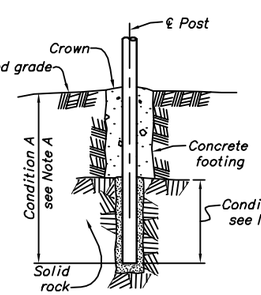

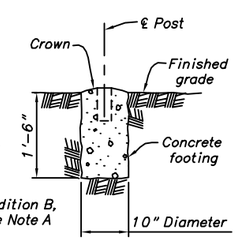

GATE STOP FOOTING

POST FOOTING IN SOLID ROCK WITH OVERBURDEN OF SOIL OR LOOSE ROCK

POST FOOTING SIZES IN SOIL OR LOOSE ROCK

POST	FABRIC HEIGHT OR GATE LEAF WIDTH	HOLE DIAMETER	HOLE DEPTH	POST EMBEDMENT
Line	3 ft. to 4 ft.	6 inches	24 inches	22 inches
Line	5 ft.	8 inches	30 inches	28 inches
Line	6 ft. to 12 ft.	9 inches	38 inches	36 inches
Terminal	3 ft. to 5 ft.	10 inches	32 inches	30 inches
Terminal	6 ft. to 12 ft.	12 inches	38 inches	36 inches
Gate	≦ 6 ft.	12 inches	38 inches	36 inches
Gate	6 ft. to 13 ft.	16 inches	44 inches	42 inches
Gate	> 13 ft.	26 inches	50 inches	48 inches

Condition A: Depth required for footing in soil or loose rock.
Condition B: Depth required for embedment in rock.
Note A: Satisfy the minimum requirements for Condition A or Condition B.
Note B: Brace rails and truss rods are not required for fabric height of 6 feet or less.

ALWAYS THINK **SAFETY**

UNITED STATES
DEPARTMENT OF THE INTERIOR
BUREAU OF RECLAMATION
STANDARD DESIGN

CHAIN LINK FENCING

CHAIN LINK FENCING REQUIREMENTS SOIL INSTALLATION

DESIGNED G E SHERARD TECH. APPR.
DRAWN DL BORING
CHECKED T C GRABER APPROVED
STRUCTURAL AND ARCHITECTURAL GROUP

CADD SYSTEM	CADD FILENAME	DATE AND TIME PLOTTED
AutoCAD Rel. 15.05	40-D-7016.DWG	NOVEMBER 20, 2001 11:57
DENVER, COLORADO MAY 1, 1999		40-D-7016

DBORING

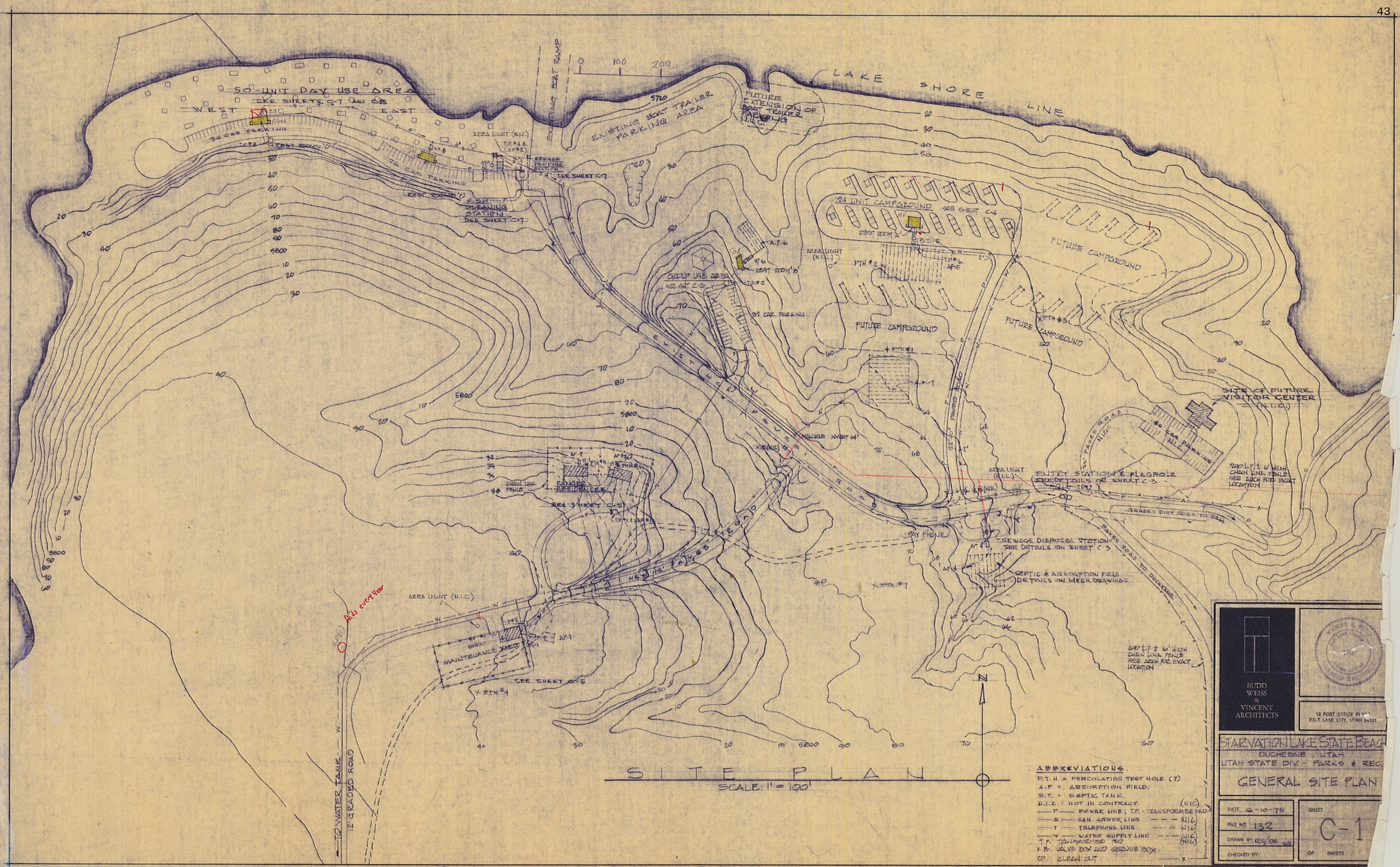

ABBREVIATIONS.

P.T.H = PERCOLATION TEST HOLE. (7)
A.F = ABSORPTION FIELD.
S.T. = SEPTIC TANK.
N.I.C. = NOT IN CONTRACT. (N.I.C.)
—P— POWER LINE; T.P. - TRANSFORMER PAD
—S— SAN. SEWER LINE (N.I.C.)
—T— TELEPHONE LINE (N.I.C.)
—W— WATER SUPPLY LINE (N.I.C.)
T.P. TRANSFORMER PAD (N.I.C.)
V.B. VALVE BOX AND SERVICE BOX
CO CLEAN OUT

BUDD WEISS & VINCENT ARCHITECTS

12 POST OFFICE PLACE
SALT LAKE CITY, UTAH 84101

STARVATION LAKE STATE BEACH
DUCHESNE, UTAH
UTAH STATE DIV. - PARKS & REC.

GENERAL SITE PLAN

DATE 6-10-75
FILE NO. 132
DRAWN BY: R.S./DF
CHECKED BY:

SHEET C-1 OF SHEETS

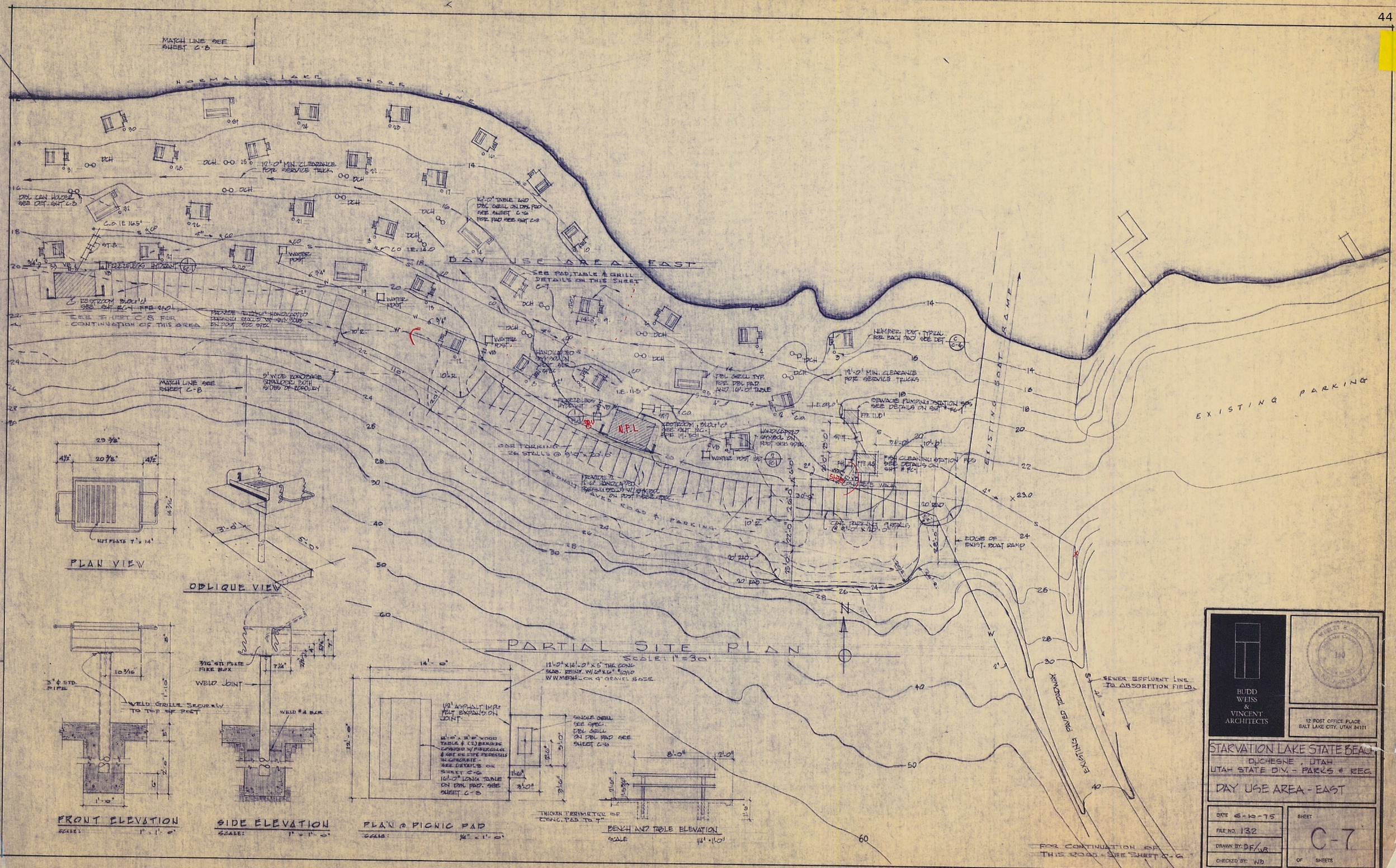
MATCH LINE SEE SHEET C-8
NORMAL LAKE SHORE LINE
12'-0" MIN. CLEARANCE FOR SERVICE TRUCK
DBL CAN HOLDER SEE DET. SHT C-6
DAY USE AREA - EAST
SEE PAD, TABLE & GRILL DETAILS ON THIS SHEET C-7
WATER POST
FREEZELESS HYDRANT
BATHROOM BLDG 'B' SEE SHT. FC-1 FFE 21.0'
SEE SHEET C-8 FOR CONTINUATION OF THIS AREA
PROVIDE 1 HANDICAPPED PARKING STALL W/ SIGN ON POST SEE SPEC.
5' WIDE BARE BASE SHOULDER, PATH SLOPE OF ROADWAY
CAR PARKING 26 STALLS @ 9'-0" x 20'-0"
BATHROOM BLDG 'C' SEE SHT. FC-1 FFE 19.50'
HANDICAPPED SYMBOL ON POST SEE SPEC.
DBL GRILL TYP. FOR DBL PAD AND 16'-0" TABLE
LUMBER POST, TYPICAL FOR EACH PAD SEE DET.
12'-0" MIN. CLEARANCE FOR SERVICE TRUCKS
SEWAGE PUMPING STATION SPS SEE DETAILS ON SHT. FC-1
FISH CLEANING STATION FCS SEE DETAILS ON SHT. FC-1
EXISTING BOAT RAMP
EXISTING PARKING
EDGE OF EXIST. BOAT RAMP
EXISTING GRAVEL ROAD
SEWER EFFLUENT LINE TO ABSORPTION FIELD
FOR CONTINUATION OF THIS ROAD - SEE SHEET C-6
PARTIAL SITE PLAN
SCALE 1" = 30'
PLAN VIEW
HOT PLATE 7" x 14"
OBLIQUE VIEW
FRONT ELEVATION
SCALE: 1" = 1'-0"
SIDE ELEVATION
SCALE: 1" = 1'-0"
3" ϕ STD. PIPE
WELD GRILLE SECURELY TO TOP OF POST
3/16" STL PLATE FIRE BOX
WELD JOINT
WELD #4 BAR
PLAN @ PICNIC PAD
SCALE: 1/4" = 1'-0"
12'-0" x 14'-0" x 5" THK CONC SLAB, REINF. W/ 6" x 6" #10/10 W.W.M. ON 4" GRAVEL BASE
1/2" ASPHALT IMPR. FELT EXPANSION JOINT
8'-0" x 3'-0" WOOD TABLE & CO. BENCHES COVERED W/ FIBERGLASS & SET ON PIPE PEDESTALS IN CONCRETE - SEE DETAILS ON SHEET C-6
16'-0" LONG TABLE ON DBL PAD. SEE SHEET C-8
SINGLE GRILL SEE SPEC. DBL GRILL ON DBL PAD SEE SHEET C-6
THICKEN PERIMETER OF CONC. PAD TO 7"
BENCH AND TABLE ELEVATION
SCALE 1/4" = 1'-0"
BUDD WEISS & VINCENT ARCHITECTS
12 POST OFFICE PLACE SALT LAKE CITY, UTAH 84101
STARVATION LAKE STATE BEACH
DUCHESNE, UTAH
UTAH STATE DIV. - PARKS & REC.
DAY USE AREA - EAST
DATE 6-10-75
FILE NO. 132
DRAWN BY: DF/WB
CHECKED BY: WB
SHEET C-7 OF SHEETS

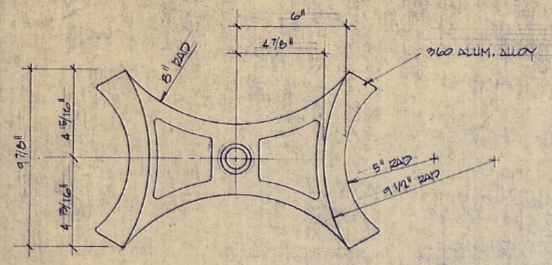

DOUBLE CAN HOLDER BASE - PLAN

SCALE 1/4" = 1"

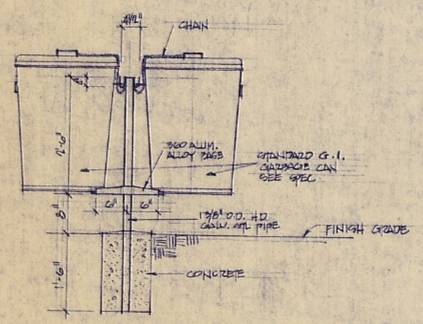

DOUBLE GARBAGE CAN HOLDER

SCALE 3/4" = 1'-0"

STD. MFD. ITEM - SEE SPEC.

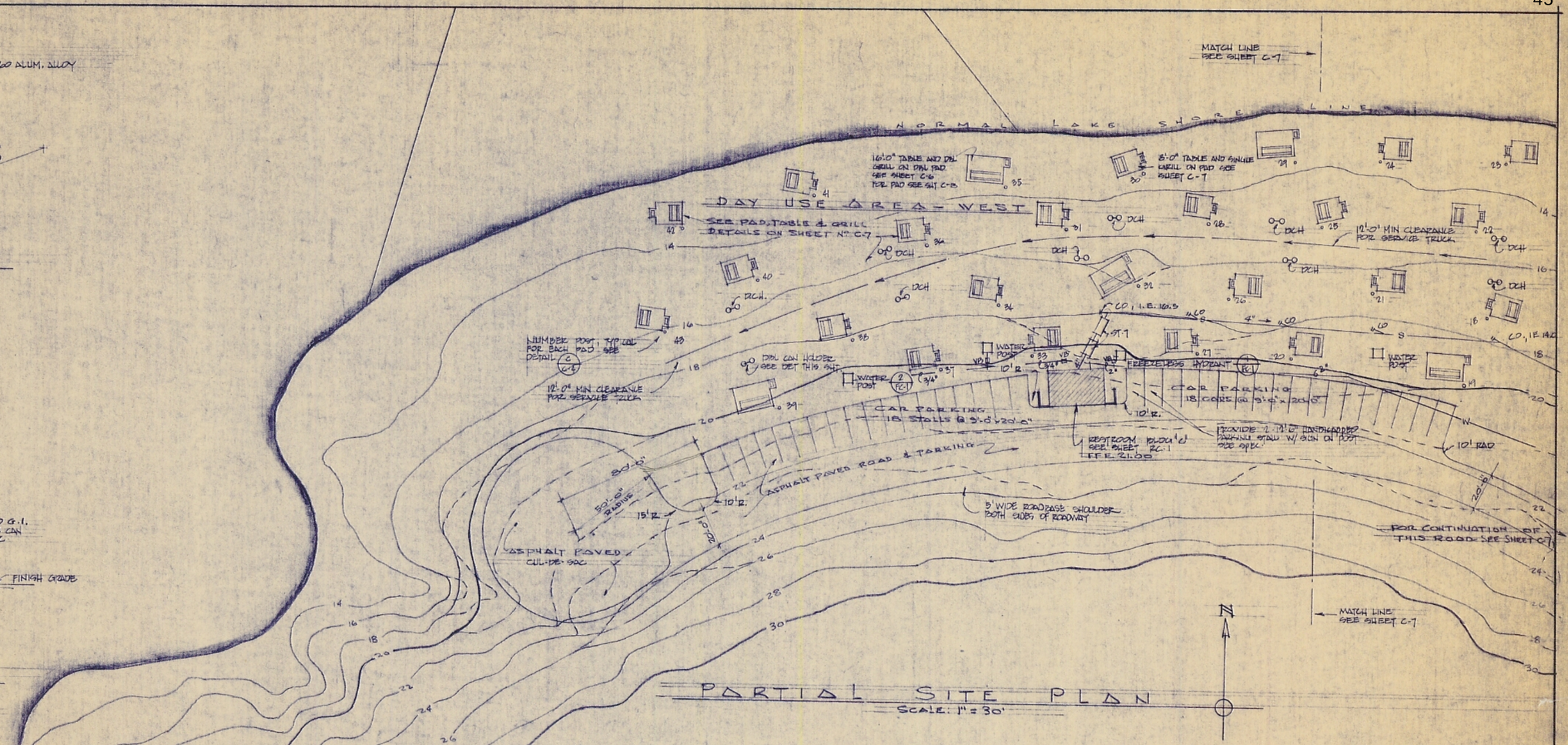

PARTIAL SITE PLAN

SCALE: 1" = 30'

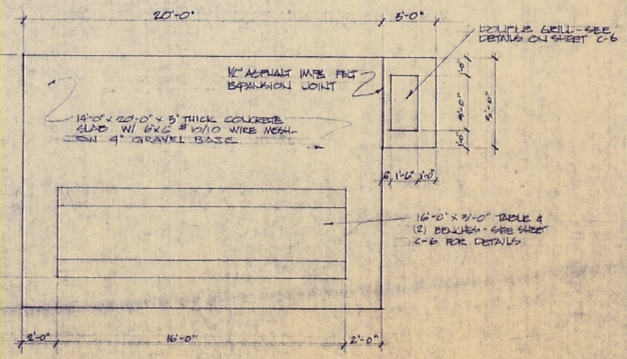

PLAN @ DOUBLE PICNIC PAD

SCALE: 1/4" = 1'-0"

BUDD WEISS & VINCENT ARCHITECTS

WESLEY H. BUDD SALT LAKE COUNTY 140 STATE OF UTAH REGISTERED ARCHITECT

12 POST OFFICE PLACE
SALT LAKE CITY, UTAH 84101

STARVATION LAKE STATE BEACH
DUCHESNE, UTAH
UTAH STATE DIV - PARKS & REC.

DAY USE AREA - WEST

DATE 6-10-75	SHEET
FILE NO. 132	C-8
DRAWN BY: WB	OF SHEETS
CHECKED BY: WB	

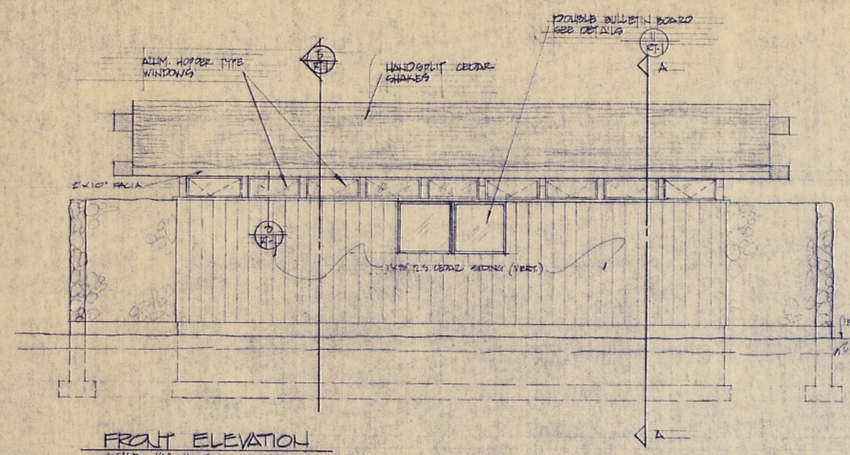

FRONT ELEVATION
SCALE: 1/4" = 1'-0"

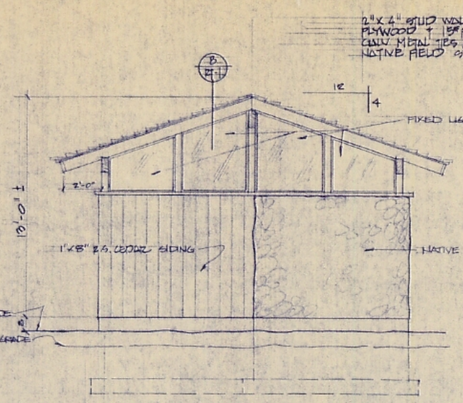

END ELEVATION
SCALE: 1/4" = 1'-0"
NOTE: OPPOSITE END REVERSED

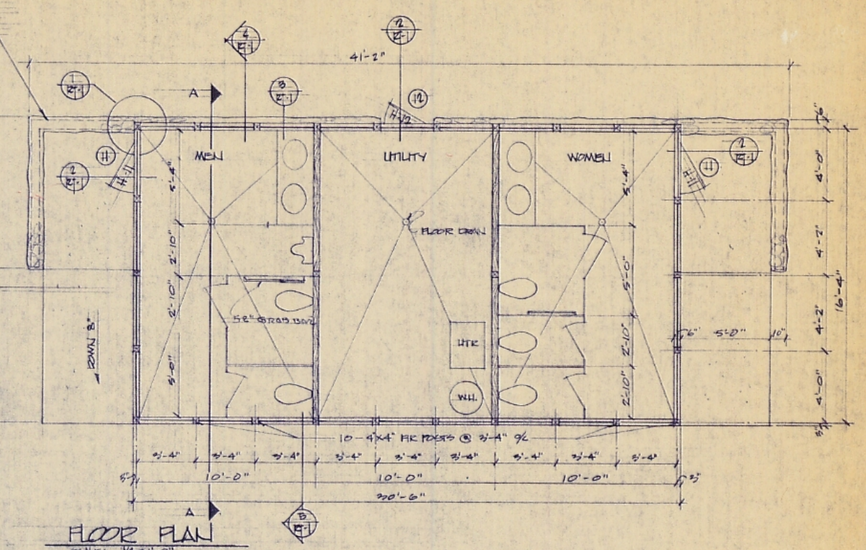

FLOOR PLAN
SCALE: 1/4" = 1'-0"

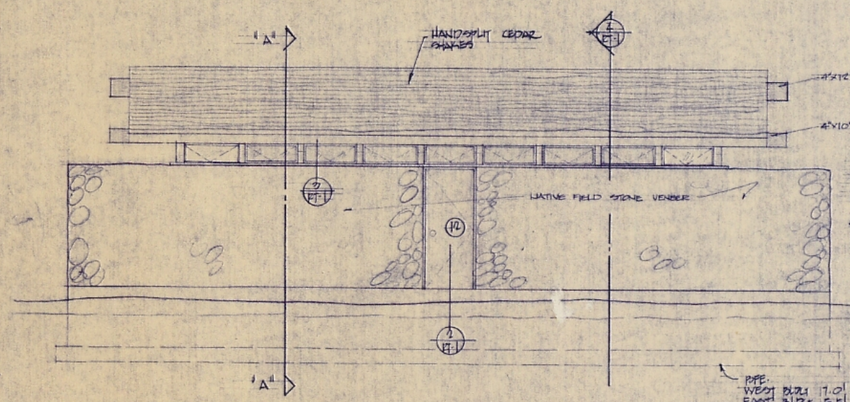

REAR ELEVATION
SCALE: 1/4" = 1'-0"

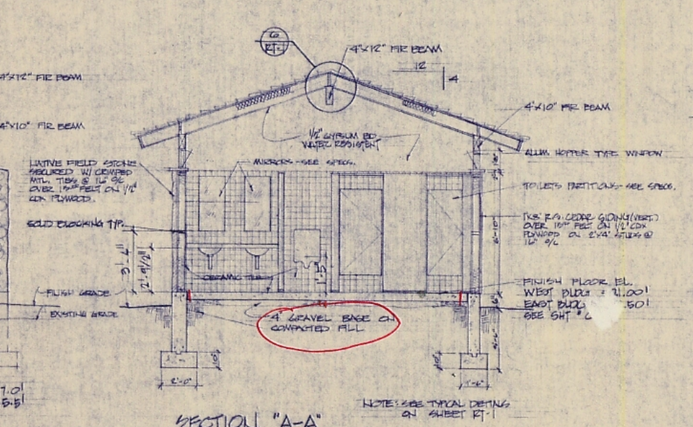

SECTION "A-A"
SCALE: 1/4" = 1'-0"

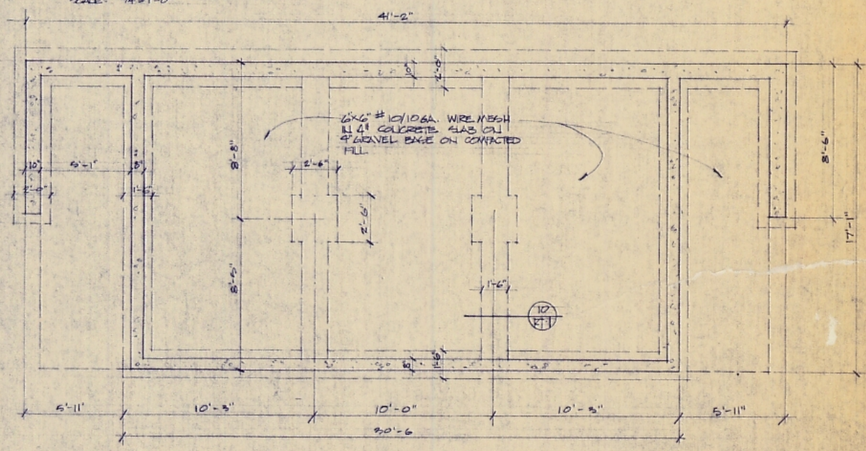

FOOTING & FOUNDATION PLAN
SCALE: 1/4" = 1'-0"

BUDD WEISS & VINCENT ARCHITECTS

12 POST OFFICE PLACE
SALT LAKE CITY, UTAH 84101

STARVATION LAKE STATE BEACH
DUCHESNE, UTAH
UTAH STATE DIV. - PARKS & REC.
FLOOR PLAN, FOUNDATION PLAN
ELEVATIONS, & SECTIONS BLDG. "C"

DATE: 6-10-75	SHEET RC-1
FILE NO. 132	
DRAWN BY: RANT	OF SHEETS
CHECKED BY: WB	

REGISTERED PROFESSIONAL ENGINEER
Edmund W. Allen
No. 2127
STATE OF UTAH

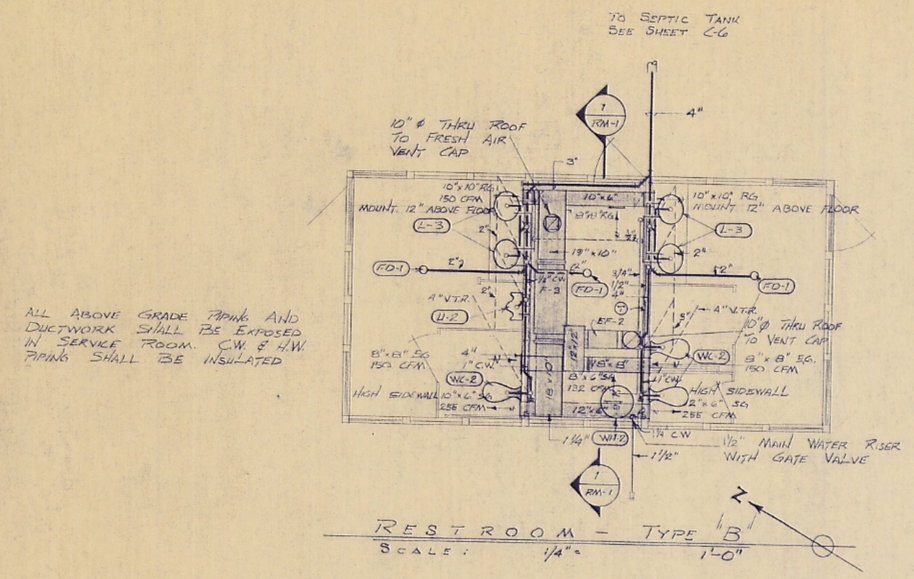

ALL ABOVE GRADE PIPING AND DUCTWORK SHALL BE EXPOSED IN SERVICE ROOM. C.W. & H.W. PIPING SHALL BE INSULATED

RESTROOM - TYPE "B"
SCALE: 1/4" = 1'-0"

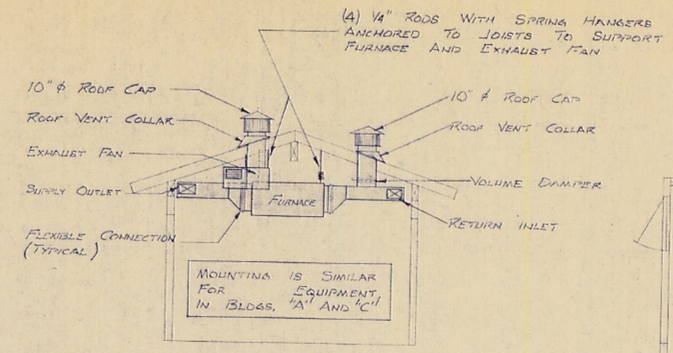

SECTION
SCALE: 1/4" = 1'-0"

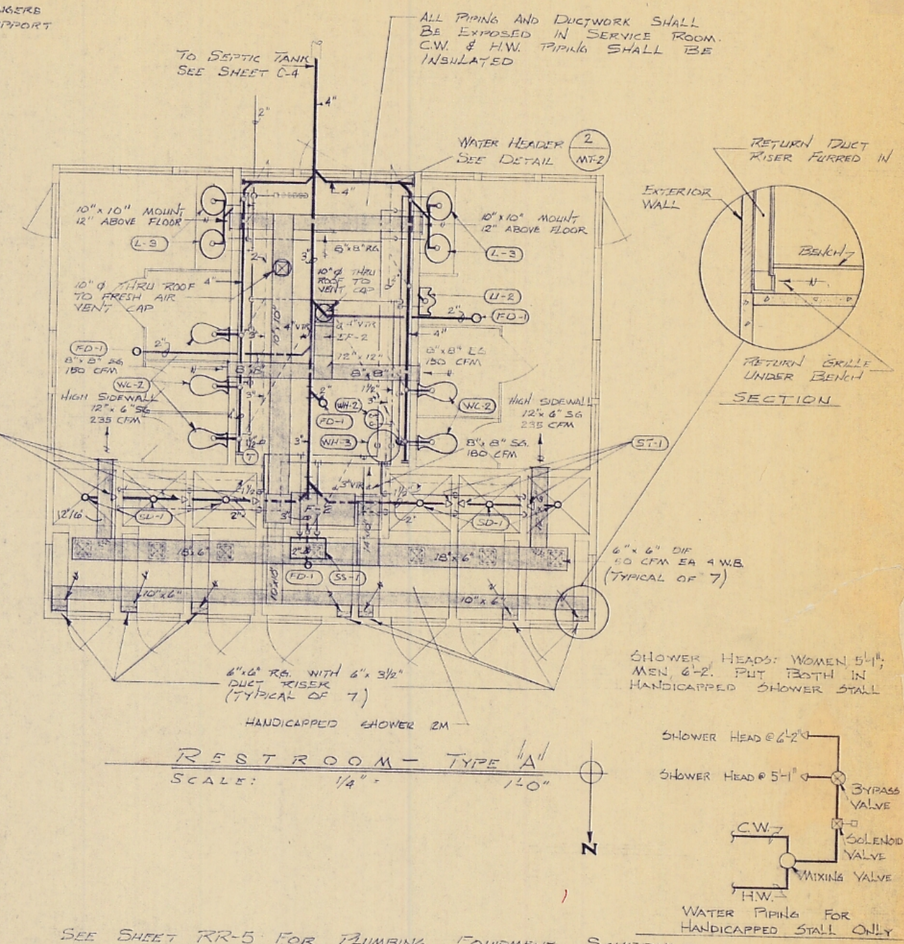

RESTROOM - TYPE "A"
SCALE: 1/4" = 1'-0"

SHOWER HEADS: WOMEN 5'-4"; MEN, 6'-2". PUT BOTH IN HANDICAPPED SHOWER STALL

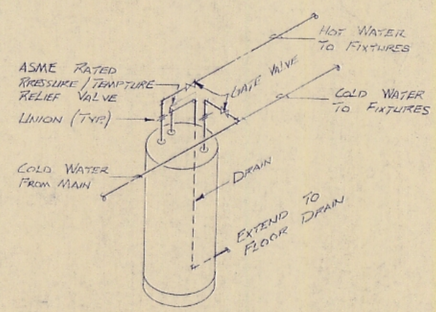

HOT WATER HEATER PIPING DETAIL
NOT TO SCALE

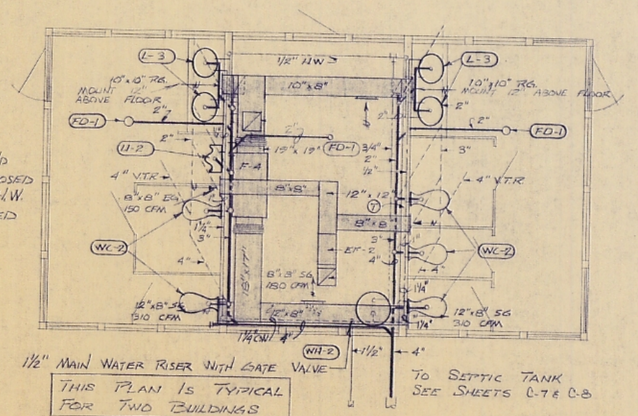

ALL ABOVE GRADE PIPING AND DUCTWORK SHALL BE EXPOSED IN SERVICE ROOM. C.W. & H.W. PIPING SHALL BE INSULATED

THIS PLAN IS TYPICAL FOR TWO BUILDINGS

RESTROOM - TYPE "C"
SCALE: 1/4" = 1'-0"

EAST UNIT — WEST UNIT

WATER PIPING FOR HANDICAPPED STALL ONLY

SEE SHEET RR-5 FOR PLUMBING EQUIPMENT SCHEDULE

GRILLE SCHEDULE

SG	SUPPLY GRILLE, EXTRUDED ALUMINUM HORIZONTAL BARS, FLANGE FRAME, TAMPER PROOF MOUNTING, ADJUSTABLE DEFLECTORS AND OPPOSED BLADE DAMPERS. TITUS 1707-35
DIF	CEILING DIFFUSER, DIRECTIONAL LOUVER WITH FLAT FLANGE FRAME, REMOVABLE CORE, OPPOSED BLADE DAMPERS, TAMPER PROOF MOUNTING, ALUMINUM. TITUS TDC
RG	RETURN GRILLE, EXTRUDED ALUMINUM HORIZONTAL BARS, FLANGE FRAME, TAMPER PROOF MOUNTING. TITUS 1700
EG	EXHAUST GRILLE, SAME AS RG.

MECHANICAL EQUIPMENT SCHEDULE

F-2	ELECTRIC FURNACE, 1000 CFM, 820 RPM @ .30 S.P., 5000 FT. ELEV., 1/4 HP MOTOR BELT DRIVE. ELECTRIC HEAT 20 KW, 68,000 BTU, 4 STEPS CONTROL, 240V, 1PH, 60c. LENNOX ES2-681
F-3	ELECTRIC FURNACE, 600 CFM, 625 RPM @ .30 S.P., 5000 FT. ELEV., 1/4 HP MOTOR, BELT DRIVE. ELECTRIC HEAT, 10 KW, 34000 BTU, 2 STEPS CONTROL, 240V, 1PH, 60c. LENNOX ES2-341
F-4	ELECTRIC FURNACE, 800 CFM, 780 RPM @ .30 S.P., 5000 FT. ELEV., 1/4 HP MOTOR BELT DRIVE. ELECTRIC HEAT 15 KW, 51,000 BTU, 3 STEPS CONTROL, 240V, 1PH, 60c. LENNOX ES2-511
WH-2	ELECTRIC WATER HEATER 50 GAL. CAP. 10 YR. WARRANTY (2) 4.5 KW ELEMENTS, 240V, 1PH, 60c. NATIONAL NR6-52
WH-3	ELECTRIC WATER HEATER, 250 GAL. CAP. 10 YR. WARRANTY (3) 18 KW ELEMENTS, 240V, 1PH, 60c. NATIONAL ER6L-250C
EF-2	EXHAUST FAN 300 CFM, 1550 RPM, 1/20 HP 2956 TS, .031 BHP 120V, 1PH, 60c. GREENHECK SQD-18D

BUDD WEISS & VINCENT ARCHITECTS

CRAIG W. WEISS 3601

12 POST OFFICE PLACE
SALT LAKE CITY, UTAH 84101

STARVATION LAKE STATE BEACH
DUCHESNE, UTAH
UTAH STATE DIVISION OF PARKS & REC.

MECHANICAL - TYPICAL REST ROOMS A, B, & C

DATE 4-10-75	SHEET RM-1
FILE NO. 132	OF SHEETS
DRAWN BY: RRP	
CHECKED BY: CWW	

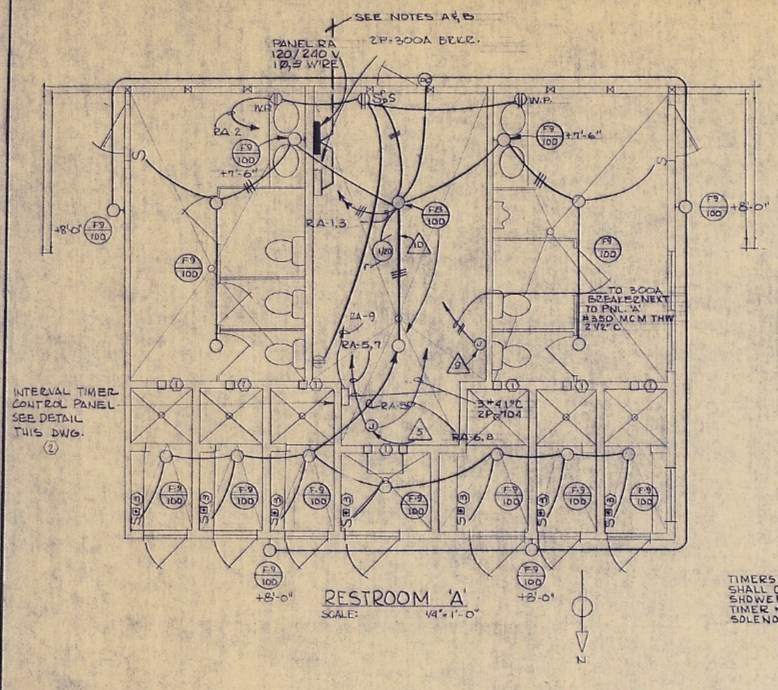

RESTROOM 'A'
SCALE: 1/4" = 1'-0"

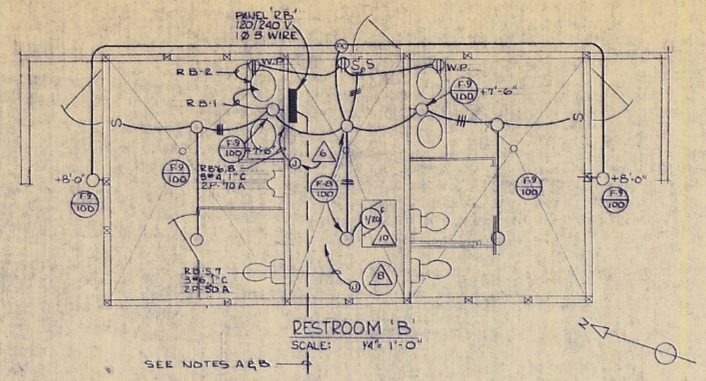

RESTROOM 'B'
SCALE: 1/4" = 1'-0"

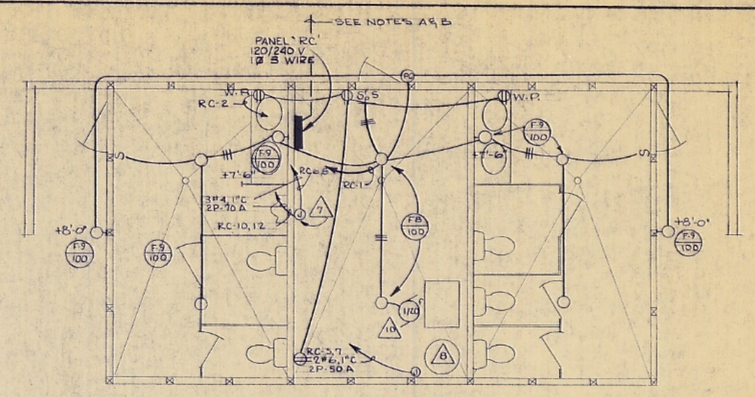

RESTROOM 'C'
SCALE: 1/4" = 1'-0"
(TYPICAL FOR TWO LOCATIONS)

FIXTURE SCHEDULE

F-8 BRYANT, CAT. #5228 KEYLESS PORCELAIN LAMP HOLDER. LAMP WATTAGE AS SHOWN.

F-9 KENALL, #3663 VANDAL-PROOF, SURFACE MOUNTED 1-100 W I.F. INCANDESCENT WITH OPAL ENCLOSURE

MECHANICAL EQUIPMENT SCHEDULE

ELEC. SYM.	MECH. NO.	DESCRIPTION	LOAD	VOLTS	PHASE
5	F-2	ELECTRIC FURNACE 2 CKTS REQUIRED	20 KW + 1/4 HP	240	1
6	F-8	ELECTRIC FURNACE	10 KW + 1/4 HP	240	1
7	F-4	ELECTRIC FURNACE 2 CKTS REQUIRED	15 KW + 1/4 HP	240	1
8	WH-2	WATER HEATER	9 KW	240	1
9	WH-3	WATER HEATER	54 KW	240	1
10	EF-2	EXHAUST FAN	1/20 HP	120	1

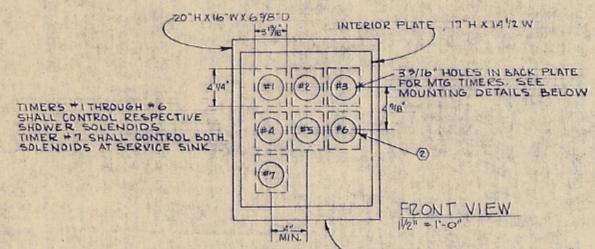

TIMERS #1 THROUGH #6 SHALL CONTROL RESPECTIVE SHOWER SOLENOIDS. TIMER #7 SHALL CONTROL BOTH SOLENOIDS AT SERVICE SINK

FRONT VIEW
1 1/2" = 1'-0"

PANEL ENCLOSURE CIRCLE A.W. #AW 20166-1 NEMA I WITH HINGED DOOR

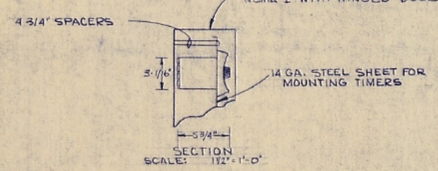

SECTION
SCALE: 1 1/2" = 1'-0"

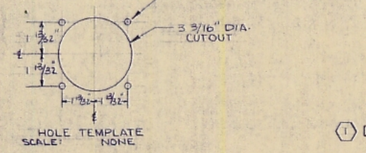

HOLE TEMPLATE
SCALE: NONE

TIMER MOUNTING DETAILS

INTERVAL TIMER CONTROL PANEL

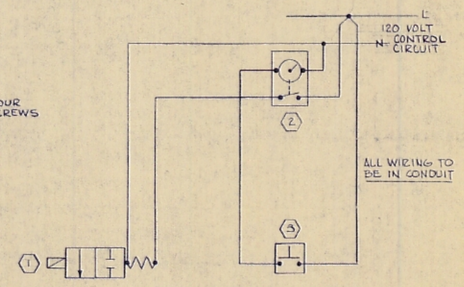

TYPICAL SHOWER WATER CONTROL DIAGRAM
SCHEMATIC

NOTES:

1. ASCO #8210 D9 HW SOLENOID CONTROL VALVE 2 WAY, NORMALLY CLOSED, 3/4" PIPE, 120V, A.C., 60 HERTZ. FURNISHED & WIRED BY ELECTRICAL CONTRACTOR, INSTALLED IN SHOWER RISER BY PLUMBER. SERVICE SINK WILL REQUIRE ONE FOR HOT AND ONE FOR COLD WATER LINES.
2. EAGLE INTERVAL TIMER BULLETIN 125, CAT. #HP54A6 120 VOLT, 10 MIN. TIMED DURATION. AUTOMATICALLY RESETS AT END OF TIMED PERIOD.
3. FURNAS #50AA2D FLUSH MOUNTED PUSH BUTTON STATION, MOMENTARY CONTACT, WITH 2#12, 1/2"C TO INTERNAL TIMER CONTROL PANEL.

A SEE DWG. #MY-3 FOR POWER RISER DIAGRAM
B SEE DWG. #C-1 FOR BUILDING & TRANSFORMER LOCATIONS.
C SEE DWG. #RR-6 FOR SYMBOL SCHEDULE
D ALL RECEPTACLES SHALL BE W.P. MOUNTED +48" UNLESS INDICATED OTHERWISE

NOTE:
BREAKERS INDICATED L.O. ARE TO BE LOCK OUT TYPE.

PANEL 'RA' 120/240 V, 1 Ø, 3-W, S/N, SQ 'D' TYPE 'NQOB'
2P-150 AMP MAIN B.K.R. MIN. 18,000 A.I.C. SURFACE MTD.

AMPS	POLE	DESCRIPTION	CIR WATTS	Nº OUT	CIR Nº	LOAD A	LOAD B	CIR Nº	Nº OUT	CIR WATTS	DESCRIPTION	POLE	AMPS	
20	1	LIGHTING	1560	13	1	2160		2	4	800	CONV. OUTLETS	1	20	
20	1	LIGHTING	700	7	3		1700	4		1000	SPARE	1	20	
70	2	FURNACE	5000	1	5	10335		6	1	5335	FURNACE	2	70	L.O. L.O.
—	—	——	5000		7		10335	8		5335	——	—	—	
20	1	SHOWER PANEL	100		9	100		10			SPACE	1		
		SPACE			11			12						
					PHASE TOTALS	12595	12035							

CONNECTED LOAD: 24630 WATTS 102 AMP
ESTIMATED DEMAND: 23,000 WATTS 100 AMP

PANEL 'RB' 120/240 V, 1 Ø, 3-W, S/N, SQ 'D' TYPE 'NQOB'
2P-150 AMP MAIN B.K.R. MIN. 10,000 A.I.C. SURFACE MTD.

AMPS	POLE	DESCRIPTION	CIR WATTS	Nº OUT	CIR Nº	LOAD A	LOAD B	CIR Nº	Nº OUT	CIR WATTS	DESCRIPTION	POLE	AMPS	
20	1	LIGHTING	1160	11	1	1760		2	5	600	CONV. OUTLETS	1	20	
20	1	SPARE	1000		3		2000	4		1000	SPARE	1	20	
50	2	WATER HEATER	4500	1	5	9835		6	1	5335	FURNACE	2	70	L.O. L.O.
—	—	——	4500		7		9835	8		5335	——	—	—	
	1	SPACE			9			10			SPACE	1		
					11			12						
					PHASE TOTALS	11595	11835							

CONNECTED LOAD: 23430 WATTS 98 AMP
ESTIMATED DEMAND: 21,000 WATTS 87 AMP

WEST RESTROOM 'C' PANEL SHALL HAVE 2P-175A MAIN BREAKER. EAST RESTROOM 'C' PANEL SHALL HAVE 2P-225A MAIN LUGS

PANEL 'RC' 120/240 V, 1 Ø, 3-W, S/N, SQ 'D' TYPE 'NQOB'
MIN. 10,000 A.I.C. SURFACE MOUNTED

AMPS	POLE	DESCRIPTION	CIR WATTS	Nº OUT	CIR Nº	LOAD A	LOAD B	CIR Nº	Nº OUT	CIR WATTS	DESCRIPTION	POLE	AMPS	
20	1	LIGHTING	1160	11	1	1960		2	4	800	CONV. OUTLETS	1	20	
20	1	SPARE	1000		3		2000	4		1000	SPARE	1	20	
50	2	WATER HEATER	4500	1	5	9500		6	1	5000	FURNACE	2	70	L.O.
—	—	——	4500	—	7		9500	8		5000	——	—	—	
	1	SPACE			9	5670		10	1	5670	FURNACE	2	70	L.O.
					11		5670	12		5670	——	—	—	
					13			14			SPACE	1		
					15			16						
					17			18						
		PHASE TOTALS:				17130	17170							

CONNECTED LOAD: 34300 WATTS 145 AMP
ESTIMATED DEMAND: 32600 WATTS 133 AMP

REGISTERED PROFESSIONAL ENGINEER
Lic. No. 773
F. CYRUS BATES
STATE OF UTAH

BEDD WEISS & VINCENT ARCHITECTS

12 POST OFFICE PLACE
SALT LAKE CITY, UTAH 84101

STARVATION LAKE STATE BEACH
DUCHESNE, UTAH
UTAH STATE DIVISION OF PARKS & REC
ELECTRICAL - TYPICAL
REST ROOMS A, B, & C

DATE 6-10-75	SHEET RE-1
FILE NO. 132	
DRAWN BY: S.W.	
CHECKED BY: F.B.	OF SHEETS

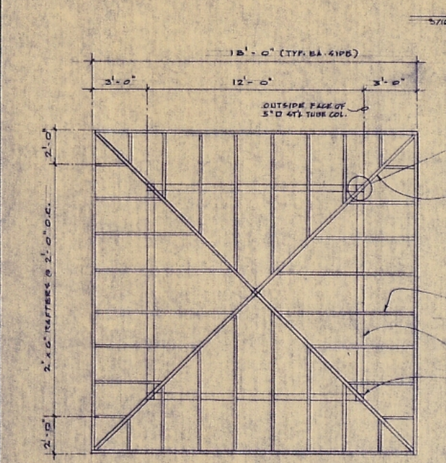

ROOF FRAMING PLAN

SCALE: 1/4" = 1'-0"

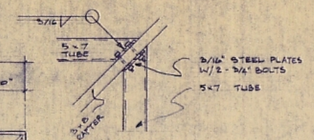

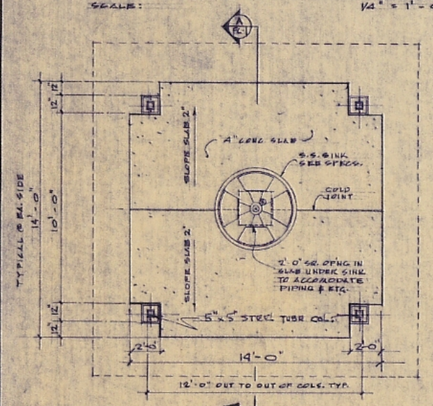

FLOOR PLAN

SCALE: 1/4" = 1'-0"

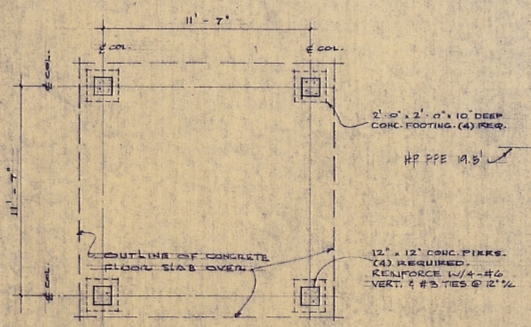

FOOTING & PIER PLAN

SCALE: 1/4" = 1'-0"

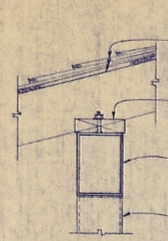

DETAIL @ TUBE BEAMS

SCALE: 1 1/2" = 1'-0"

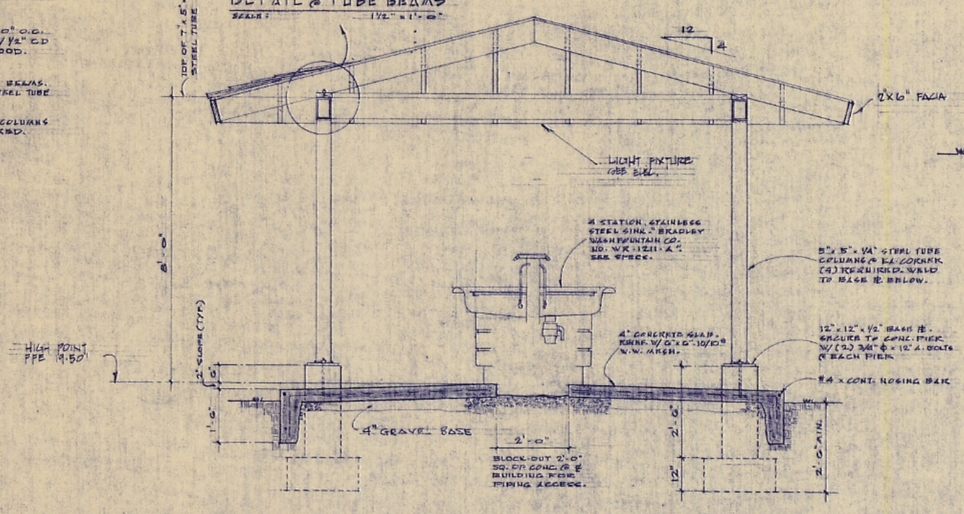

(A) FC-1 SECTION THRU FISH CLEANING STATION

SCALE: 1/2" = 1'-0"

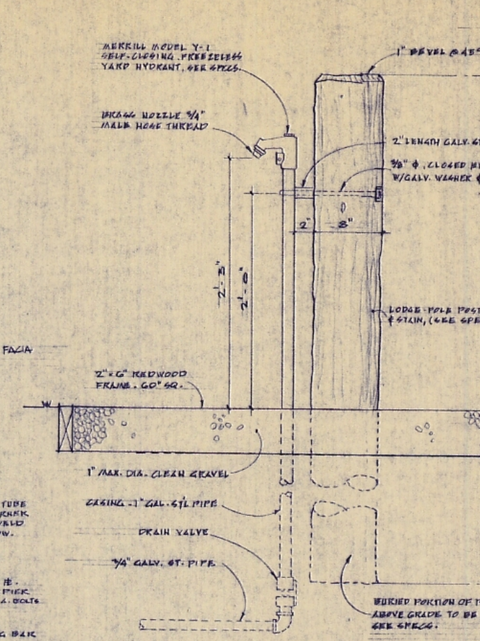

(1) FC-1 FREEZELESS HYDRANT

SCALE: 1 1/2" = 1'-0"

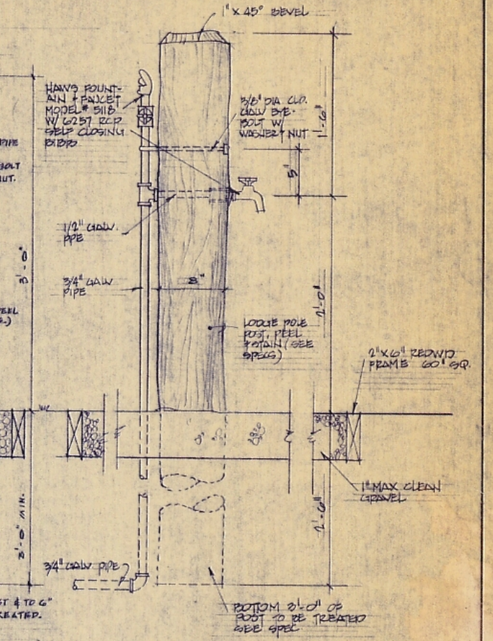

(2) FC-1 WATER POST

SCALE 1 1/2" = 1'-0"

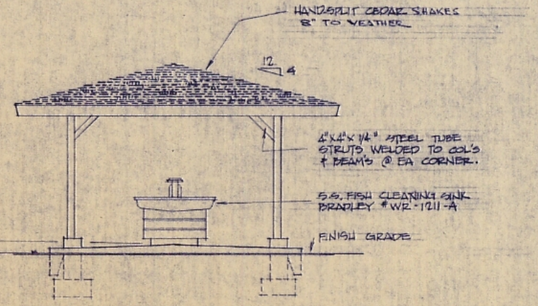

TYPICAL ELEVATION

SCALE: 1/4" = 1'-0"

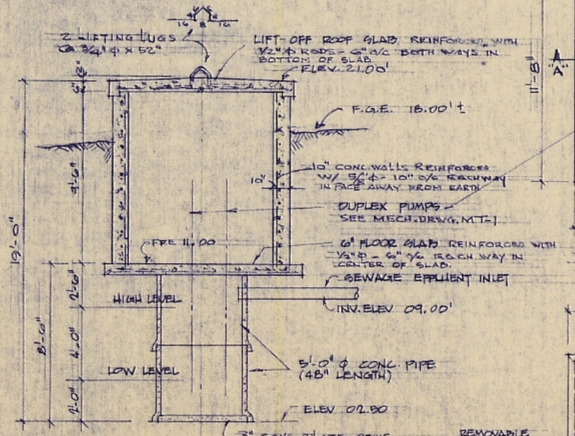

SECTION "A-A"

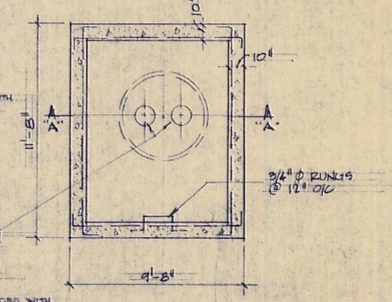

FLOOR PLAN

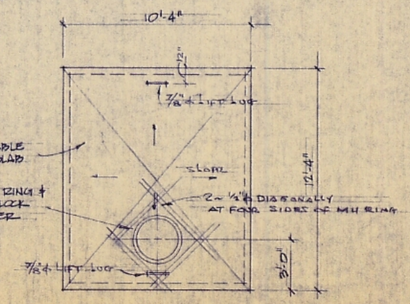

ROOF PLAN

SEWAGE PUMPING STATION

SCALE: 1/4" = 1'-0"

SEE ALSO MECH. DRAWING MT-1

REGISTERED PROFESSIONAL ENGINEER Edmund W. Allen No. 2127 STATE OF UTAH

BUDD WEISS & VINCENT ARCHITECTS

12 POST OFFICE PLACE SALT LAKE CITY, UTAH 84101

STARVATION LAKE STATE BEACH
DUCHESNE, UTAH
UTAH STATE DIV. - PARKS & REC.

FISH CLEANING STATION

DATE 6-10-75	SHEET
FILE NO. 132	FC-1
DRAWN BY: DO/LR	OF SHEETS
CHECKED BY: WD	

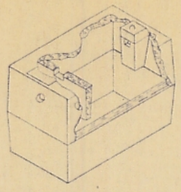

NOTE
1- ALL JOINTS SEALED WITH ASPHALT IMPREGNATED ROPE
2- PRECAST CONCRETE SECTIONS REINFORCED WITH 6x6 / 6x6 WELDED FABRIC.

QUANTITY	SEPTIC TANK	DIMENSION A	B	C	D	CAPACITY GALLONS
1	ST-1	96"	62"	64"	56"	1000
1	ST-2	96"	62"	64"	56"	1000
1	ST-3	96"	62"	64"	56"	1000
2	ST-4	126"	68"	72"	64"	1750
3	ST-5	144"	78"	67"	56"	2000
2	ST-6	120"	60"	64"	56"	1250
2	ST-7	126"	68"	72"	64"	1750
2	ST-8	126"	68"	72"	64"	1750
1	ST-9	126"	68"	72"	62"	1500

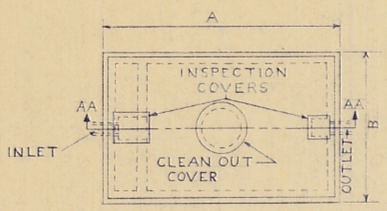

TOP VIEW

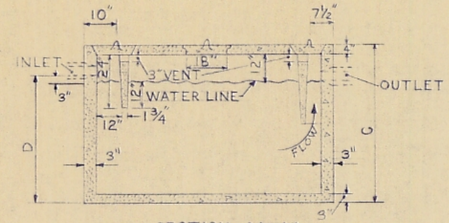

SECTION AA AA

SEPTIC TANK DETAIL (5 / MT-1)

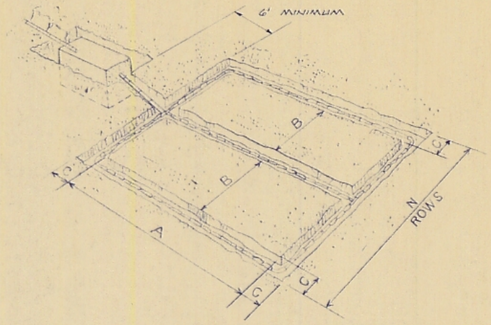

TYPE I ABSORPTION FIELD INSTALLATION - LEVEL TOPOG. (3 / MT-1)

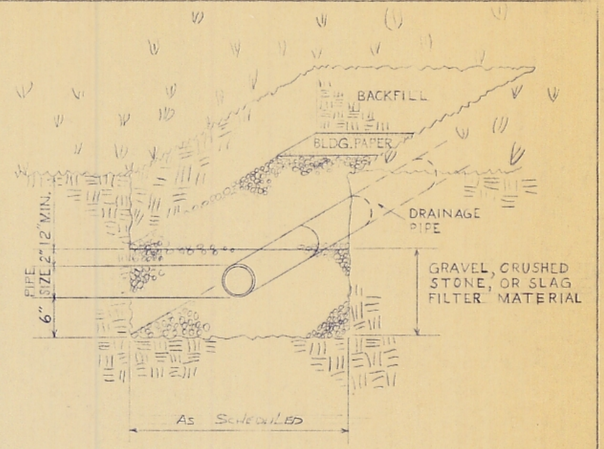

ABSORPTION TRENCH DETAIL (1 / MT-1)
NOT TO SCALE

ABSORPTION FIELD	DIMENSION A	B	C	N ROWS
AF-1	20'	7½'	2'	3
AF-4	80	7½'	3'	9
AF-5	80	7½'	3'	21
AF-6	80	7½'	3'	6
AF-7	100	7½'	3'	14

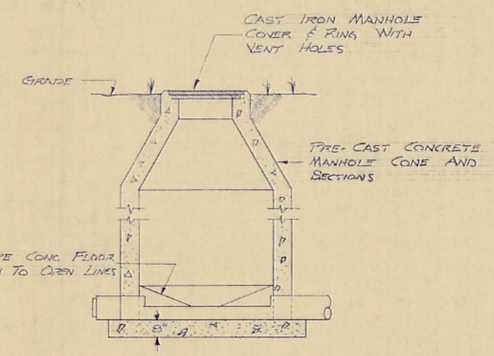

MANHOLE DETAIL (6 / MT-1)
NOT TO SCALE

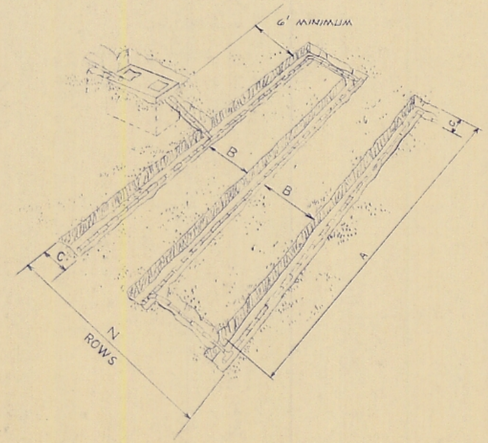

TYPE II ABSORPTION FIELD INSTALLATION - SLOPE (4 / MT-1)

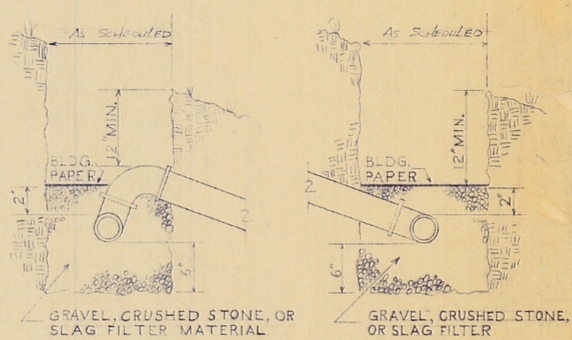

TYPE II ABSORPTION FIELD TRENCH DETAIL (2 / MT-1)
NOT TO SCALE

ABSORPTION FIELD	DIMENSION A	B	C	N ROWS
AF-2	40'	7½'	3'	3
AF-3	40'	7½'	3'	3

SEWAGE EJECTOR STATION EQUIPMENT	
DP-1	DUPLEX PUMP - SEWAGE EJECTOR, EACH 75 GPM, 90 FT HEAD, 9" IMPELLAR, 1750 RPM, 10 H.P., 240V, 3PH, 60c. COMPLETE WITH STARTERS, DISCONNECTS, MECHANICAL ALTERNATOR, HIGH WATER ALARM, SELECTOR SWITCH, EXTERNAL ALARM BELL, SUMP COVER WITH MANHOLE, ALL BUILT FOR CLASS I, DIVISION II, GROUP C HAZARDOUS ATMOSPHERE. WEIL CNA-4
EF-5	EXHAUST FAN - UTILITY VENT SET, 268 CFM, ¼" S.P., 1160 RPM, DIRECT DRIVE, ¼ HP MOTOR, 115V, 1PH, 60c, BUILT TO CLASS I, DIVISION II GROUP C HAZARDOUS ATMOSPHERE, GREENHECK 60M

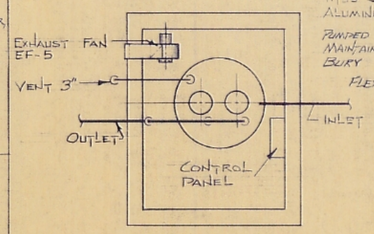

PLAN

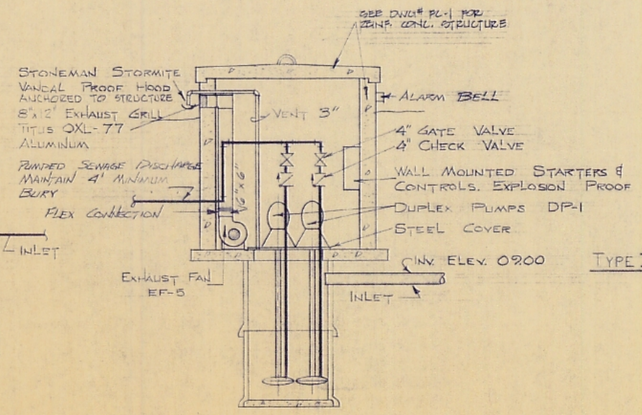

SECTION

SEWAGE EJECTOR DETAIL (7 / MT-1)
—NOT—TO—SCALE—

BUDD WEISS & VINCENT ARCHITECTS

CRAIG W. MORRIS 3601 REGISTERED PROFESSIONAL ENGINEER STATE OF UTAH

12 POST OFFICE PLACE
SALT LAKE CITY, UTAH 84101

STARVATION LAKE STATE BEACH
DUCHESNE, UTAH
UTAH STATE DIVISION OF PARK AND REC
MECHANICAL - TYPICAL DETAILS & SCHEDULES

DATE	6-10-75
FILE NO.	102
DRAWN BY:	RR
CHECKED BY:	

SHEET MT-1 OF SHEETS

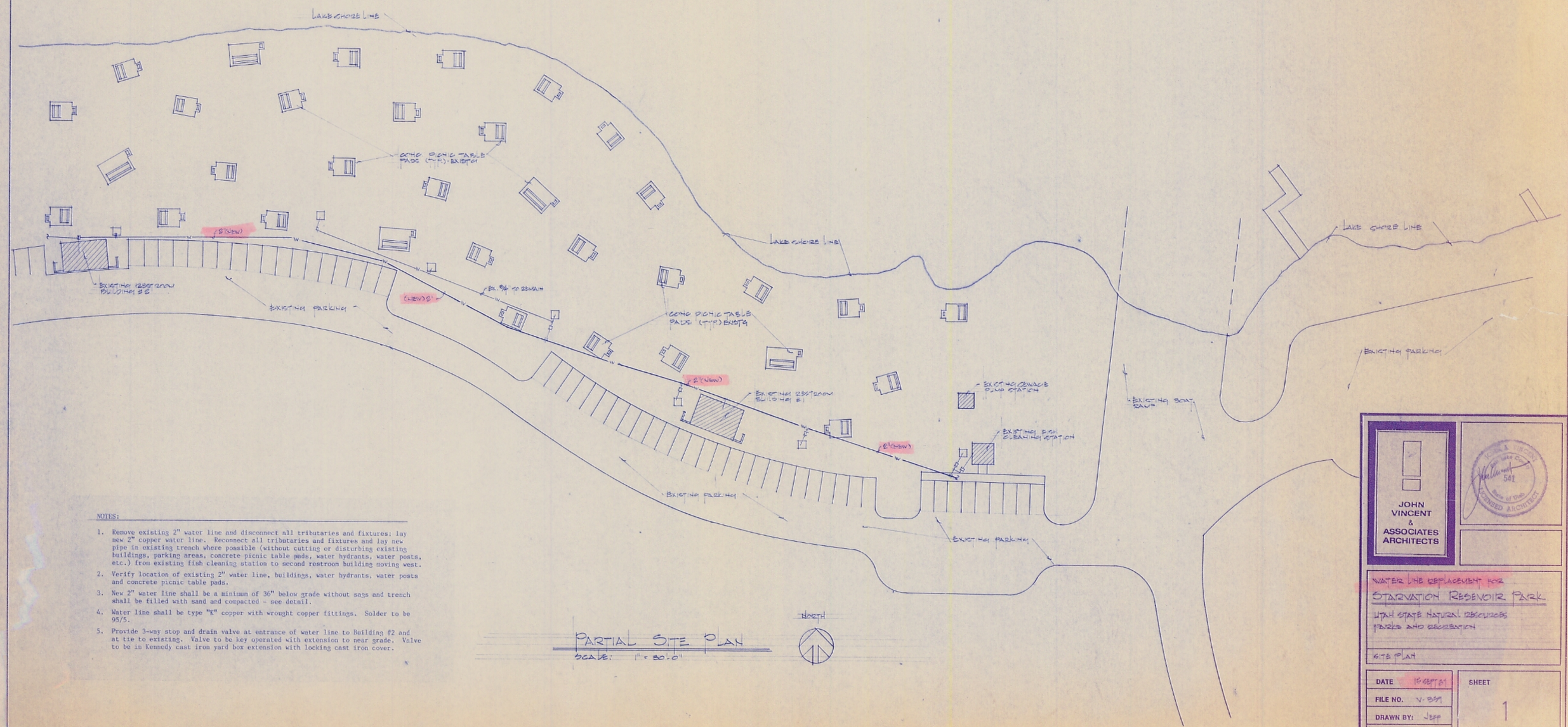

PARTIAL SITE PLAN
SCALE: 1" = 80'-0"

NOTES:

1. Remove existing 2" water line and disconnect all tributaries and fixtures; lay new 2" copper water line. Reconnect all tributaries and fixtures and lay new pipe in existing trench where possible (without cutting or disturbing existing buildings, parking areas, concrete picnic table pads, water hydrants, water posts, etc.) from existing fish cleaning station to second restroom building moving west.
2. Verify location of existing 2" water line, buildings, water hydrants, water posts and concrete picnic table pads.
3. New 2" water line shall be a minimum of 36" below grade without sags and trench shall be filled with sand and compacted - see detail.
4. Water line shall be type "K" copper with wrought copper fittings. Solder to be 95/5.
5. Provide 3-way stop and drain valve at entrance of water line to Building #2 and at tie to existing. Valve to be key operated with extension to near grade. Valve to be in Kennedy cast iron yard box extension with locking cast iron cover.

JOHN VINCENT & ASSOCIATES ARCHITECTS

JOHN VINCENT 541 STATE OF UTAH LICENSED ARCHITECT

WATER LINE REPLACEMENT FOR
STARVATION RESERVOIR PARK
UTAH STATE NATURAL RESOURCES
PARKS AND RECREATION

SITE PLAN

DATE	15 SEPT 89
FILE NO.	V-389
DRAWN BY:	JEFF
CHECKED BY:	J.V.

SHEET 1 OF SHEETS