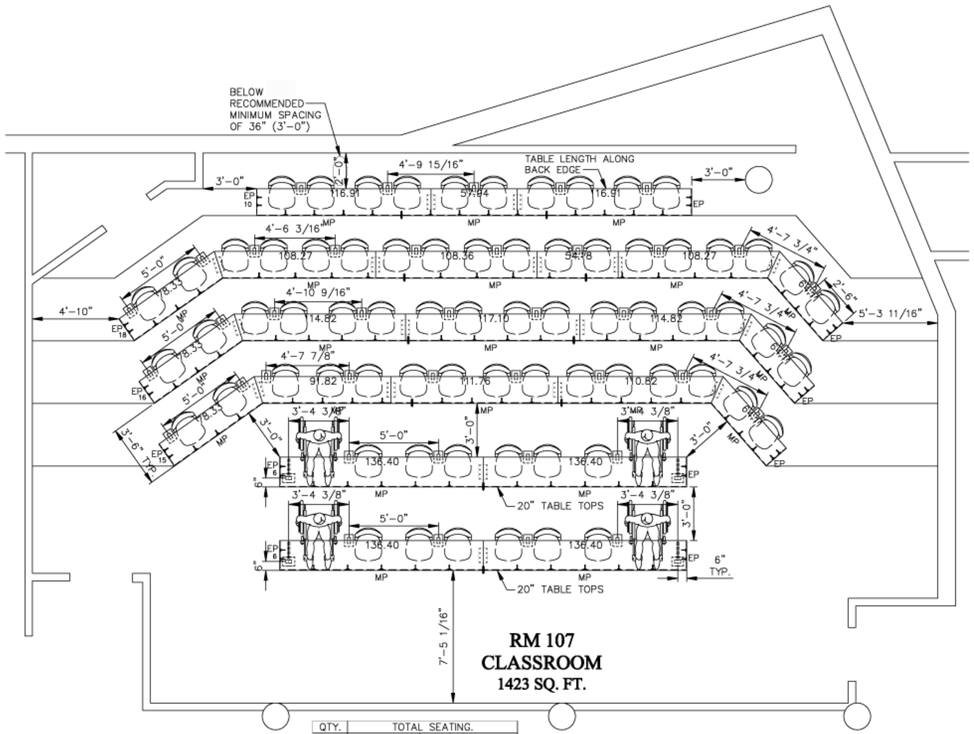

QTY.	TOTAL SEATING.
71	SEATS
45.5	TABLE LINEAL FEET @ 20"
147	TABLE LINEAL FEET @ 18"
4	END PANEL @ 12" BY 18.375"
8	END PANEL @ 12" BY 16.375"
4	BASES
4	HDCP AREAS

SEATING LAYOUT

1/4" = 1'-0"

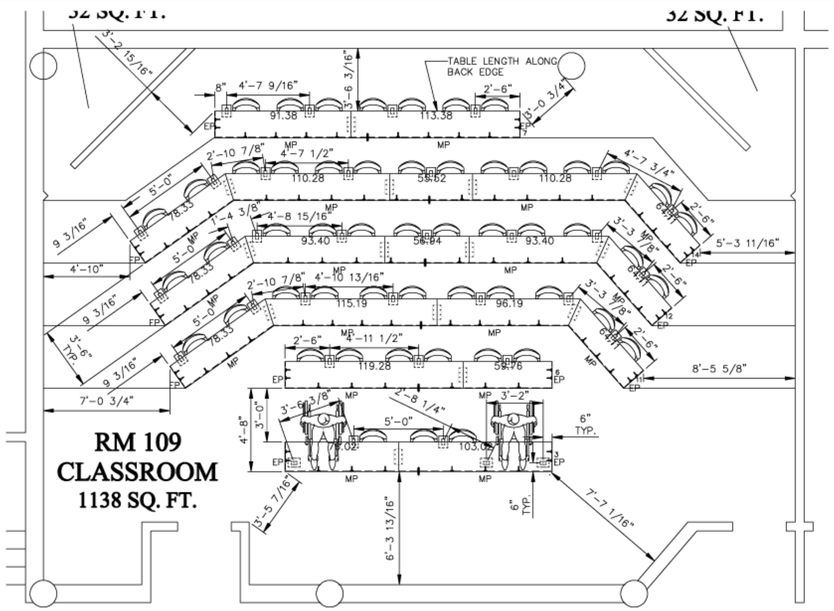

QTY.	TOTAL SEATING.
53	SEATS
129	TABLE LINEAL FEET @ 18"
15	TABLE LINEAL FEET @ 20"
10	END PANEL @ 12" BY 16.375"
2	END PANEL @ 12" BY 18.375"
3	BASES
2	HDCP AREAS (4 REQ'D)

NOTE:
THE MINIMUM KNEE CLEARANCE FOR AN ADA LOCATION WITH A MODESTY PANEL IS 19" DEEP. A 20" TABLE DEPTH IS REQUIRED TO ACCOMMODATE THE ADA AREA OR AN OPTION IS TO OMIT THE MODESTY PANEL AT THE ADA AREA TO MAINTAIN CONSISTENT TABLE DEPTH.

NOTE:
PLEASE REVIEW SEATING LAYOUT WITH LOCAL FIRE INSPECTOR TO VERIFY COMPLIANCE WITH ALL LOCAL BUILDING CODES.

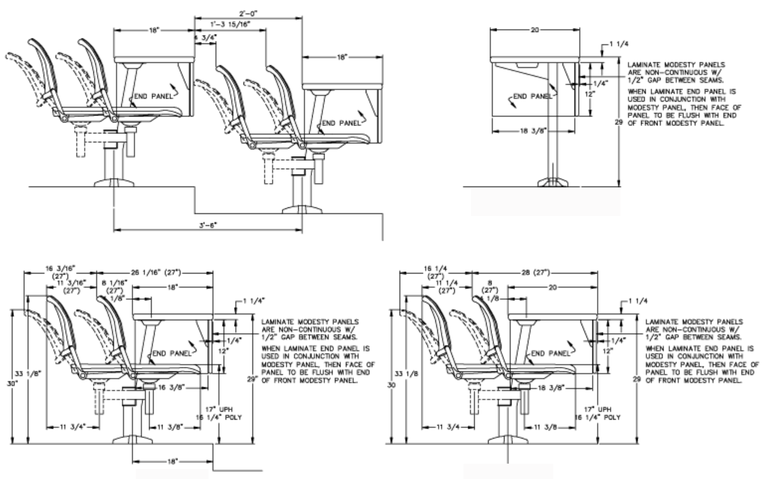

ELEVATION

3/4"=1'-0"

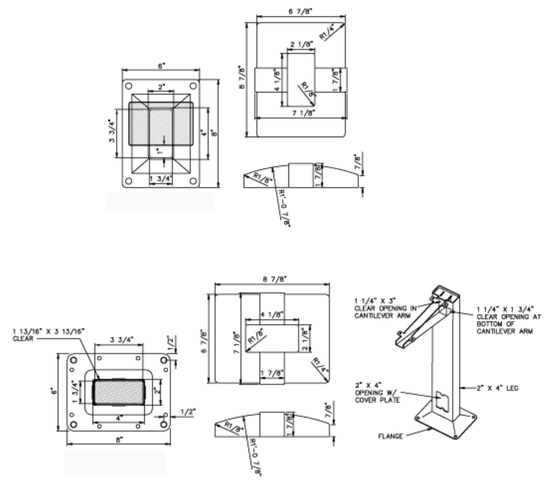

LEGEND

- P = POWER STUB IN FLOOR
- D = DATA STUB IN FLOOR
- (54) = POWER CONNECTOR & TROUGH (ACTUAL LENGTH)
- 54E = ELECTRICAL CONNECTOR
- 26T = TROUGH (ACTUAL LENGTH)
- = CIRCUIT (RECEPTACLE 1, 2, 3 or 4)
- = POWER INFEED (L.R.C) LEFT, RIGHT or CENTER
- = SHROUD & POWERUP MODULE (L.R.C) LEFT, RIGHT or CENTER
- = UNDER WORKSURFACE SHROUD & POWERUP MODULE (L.R.C) LEFT, RIGHT or CENTER
- = FPCPB BASE
- = FPCPS BASE
- = MODESTY PANEL BRACKET
- = MODESTY PANEL SPLIT
- WP = WORKING POINT
- MP = MODESTY PANEL
- EP = END PANEL
- = JOINT PLATE
- 1 = TABLE MARKER
- 1 = MODESTY PANEL MARKER

FIELD VERIFICATION
These shop drawings incorporate building information compiled from various sources associated with this project and deemed as reliable. Conditions directly affecting the product or its installation must be field verified.

PROJECT TITLE:
SOUTHERN UTAH UNIVERSITY

FLOOR/AREA:
ROOMS 107 & 109