STATE OF UTAH, DIVISION OF FACILITIES CONSTRUCTION AND MANAGEMENT

# UTAH STATE DEVELOPMENT CENTER

## BOILER REPLACEMENT/BUILDING REPAIRS

## 870 NORTH 860 EAST AMERICAN FORK, UTAH

PROJECT NUMBER: 08194410

State of Utah—Department of Administrative Services

**DIVISION OF FACILITIES CONSTRUCTION AND MANAGEMENT**

4110 State Office Building/Salt Lake City, Utah 84114/538-3018

## PROJECT LOCATION MAP

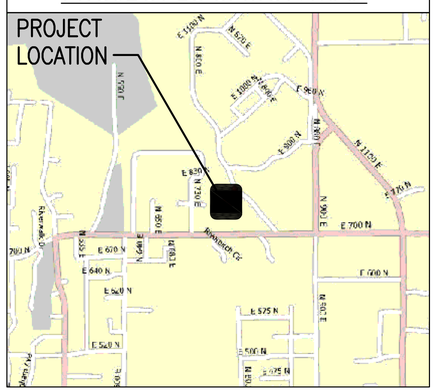


## DEFERRED SUBMITTAL LIST

1. TEMPORARY IRRIGATION SYSTEM DESIGN
   ANTICIPATED SUBMITTAL DATE: 6 MONTHS FROM PROJECT START DATE
2. STEEL STAIR ENGINEERING AND DETAILS
   ANTICIPATED SUBMITTAL DATE: 1 MONTH FROM PROJECT START DATE
3. FIRE ALARM SUBMITALS
   ANTICIPATED SUBMITTAL DATE: 2-3 MONTH FROM PROJECT START DATE

## LIST OF CONSULTANTS

| | |
|---|---|
| **CIVIL & LANDSCAPE**<br>McNEIL GROUP<br>GARY SEVERS<br>6895 SOUTH 900 EAST<br>MIDVALE, UTAH 84010<br>801-255-7700 | **STRUCTURAL ENGINEER:**<br>WCA STRUCTURAL ENGINEERING, INC<br>KEN WILMORE, P.E.<br>442 NORTH MAIN STREET, SUITE 200<br>BOUNTIFUL, UTAH 84010<br>801-298-1118 |
| **UTILITY & SEWER**<br>McNEIL GROUP<br>SCOTT MCNEIL<br>6895 SOUTH 900 EAST<br>MIDVALE, UTAH 84010<br>801-255-7700 | **MECHANICAL ENGINEER:**<br>WHW ENGINEERING, INC.<br>STEVE WADSWORTH<br>8619 SANDY PARKWAY, SUITE101<br>SANDY, UTAH 84070<br>801-466-4021 |
| **ARCHITECT:**<br>TRACY STOCKING & ASSOCIATES<br>MALCOLM CAMPBELL, AIA - PROJECT ARCH.<br>17 EXCHANGE PLACE<br>SALT CITY CITY, UTAH 84111<br>801-463-7108 | **ELECTRICAL ENGINEER:**<br>ENVISION ENGINEERING<br>FRANCIS ROSADO, P.E.<br>244 WEST 300 NORTH, SUITE 100<br>SALT LAKE CITY, UTAH 84103<br>801-534-1130 |

## INDEX OF DRAWINGS


GI001 GENERAL INFORMATION
GI002 GENERAL INFORMATION

**CIVIL**
C001 GENERAL NOTES
C101 SITE PLAN & DEMOLITION
C201 GRADING & DRAINAGE PLAN
C202 EROSION CONTROL PLAN
C301 PLANTING AND IRRIGATION PLAN
C401 SITE UTILITY PLAN
C402 SANITARY SEWER PLAN & PROFILE
C403 SANITARY SEWER PLAN & PROFILE
C501 SITE DETAILS
C502 EROSION CONTROL DETAILS
C503 MISCELLANEOUS UTILITY DETAILS

**ARCHITECTURAL**
AS101 ARCHITECTURAL SITE PLAN
A101 MAIN FLOOR PLAN
A102 EQUIPMENT PLATFORM & MEZZANINE PLAN
A103 ROOF PLAN
A104 ROOF DETAILS
A105 CONTROL JOINT PLAN
A310 ELEVATIONS
A311 ELEVATIONS
A312 EXTERIOR DETAILS
A320 BUILDING SECTIONS
A321 WALL SECTIONS
A322 STAIR SECTION
A401 MAIN FLOOR REFLECTED CEILING PLAN
A402 MEZZANINE REFLECTED CEILING PLAN & CEILING DETAILS
A601 DOOR & WINDOW SCHEDULES & DETAILS
A602 FINISH SCHEDULE
A603 INTERIOR ELEVATIONS

**STRUCTURAL**
SG100 GENERAL NOTES
SG101 GENERAL NOTES
SE101 FOOTING AND FOUNDATION PLAN
SE201 ROOF FRAMING PLAN
SE501 DETAILS
SE502 DETAILS
SE503 DETAILS

**MECHANICAL**
MG001 GENERAL NOTES AND LEGEND
MS101 MECHANICAL UTILITIES PLAN
ME101 BOILER PLANT FLOOR PLAN
ME102 MEZZANINE FURNACE PLAN
ME201 BOILER PLANT ELEVATION PLAN
ME202 BOILER PLANT ELEVATION PLAN
ME203 TUNNEL PIPING ELEVATION PLAN
ME501 MECHANICAL DETAILS
ME502 MECHANICAL DETAILS
ME503 MECHANICAL DETAILS
ME504 MECHANICAL DETAILS
ME505 MECHANICAL DETAILS
ME601 MECHANICAL SCHEDULES
ME602 MECHANICAL SCHEDULES
ME901 PIPING ISOMETRICS
ME902 PIPING ISOMETRICS
ME903 PIPING ISOMETRICS
PG001 GENERAL NOTES AND LEGEND
PE101 BOILER PLANT PLUMBING PLAN
PE102 BOILER PLANT ROOF PLAN
PE501 PLUMBING DETAILS & SCHEDULES
PE502 PLUMBING DETAILS & SCHEDULES
PE901 PLUMBING ISOMETRICS

**ELECTRICAL**
EG001 SYMBOL SCHEDULE
EG002 SYMBOL & LIGHT FIXTURE SCHEDULE
ES101 SITE PLAN
EL101 MAIN LEVEL LIGHTING PLAN
EL102 UPPER LEVEL LIGHTING PLAN
EP101 POWER PLAN
EP601 EQUIPMENT SCHEDULE
EP701 ONE-LINE DIAGRAM
EP801 PANELBOARD SCHEDULES
EP802 PANELBOARD SCHEDULE


## CODE ANALYSIS

**APPLICABLE CODES**

| | Year | | Year |
|---|---|---|---|
| International Building Code | 2006 | National Electrical Code | 2008 |
| International Mechanical Code | 2006 | Uniform Code for Building Conservation | NA |
| International Plumbing Code | 2006 | ADA Accessibility Guidelines | 2003 |
| International Fire Code | 2006 | | |
| International Energy Conservation Code | 2006 | | |

A. Occupancy and Group: S-1

Change in Use: Yes ____ No X Mixed Occupancy: Yes ____ No X
Special Use and Occupancy (e.g. High Rise, Covered Mall): ____

B. Seismic Design Category: D Design Wind Speed: 90 mph

C. Type of Construction (circle one):

I/A I/B II/A II/B III/A III/B IV/HT V/A **V/B**

D. Fire Resistance Rating Requirements for the Exterior Walls based on the fire separation distance (in hours):

North: 0 South: 0 East: 0 West: 1 hour

E. Mixed Occupancies: NONE Nonseparated Uses: NONE

F: Sprinklers:

Required: NO Provided: NO Type of Sprinkler System: ____

G: Number of Stories: 2 Building Height: 26'

H: Actual Area per Floor (square feet): 4,274 S.F.

I: Tabular Area: 9,000 S.F. (IBC TABLE 503)

J: Area Modifications:

a) $A_a = A_1 + [A_1 \times I_f] + [A_1 \times I_s]$ $\qquad I_f = \left[\frac{F}{P} - 0.25\right]\frac{W}{30}$

=9,000 + [ 9,000 x .5] + [ 9,000 x 0 ]
=13,500 S.F. $\qquad = \left[\frac{284}{284} - 0.25\right]\frac{20}{30} = 0.5$

b) Sum of the Ratio Calculations for Mixed Occupancies:

$\frac{\text{Actual Area}}{\text{Allowable Area}} \leq 1 \qquad \frac{4{,}274}{13{,}500} = .32 \leq 1$

c) Total Allowable Area for:
1) One Story: 13,500 S.F.
2) Two Story: $A_a(2)$ 27,000 S.F.
3) Three Story: $A_a(3)$ N/A

d) Unlimited Area Building: Yes ____ No X Code Section: ____

K. Fire Resistance Rating Requirements for Building Elements (hours).

| Element | Hours | Assembly Listing | Element | Hours | Assembly Listing |
|---|---|---|---|---|---|
| Exterior Bearing Walls | 0 | IBC Tbl. 720 Item 3-1.4 | Floors - Ceiling Floors | 0 | |
| Interior Bearing Walls | 0 | | Roofs - Ceiling Roofs | 0 | |
| Exterior Non-Bearing Walls | 0 | | Exterior Doors and Windows | 0 | |
| Structural Frame | 0 | | Shaft Enclosures | NA | |
| Partitions - Permanent | 0 | | Fire Walls | NA | |
| Fire Barriers | NA | | Fire Partitions | NA | |
| | | | Smoke Partitions | NA | |

L. Design Occupant Load: 19 (300 SF / OCC.)

Exit Width Required: 36" Exit Width Provided: 36"

M. Minimum Number of Required Plumbing Facilities:

a) Water Closets - Required (m) 1 (f) ____ Provided (m) 1 (f) ____
b) Lavatories - Required (m) 1 (f) ____ Provided (m) 1 (f) ____
c) Bath Tubs or Showers: 0
d) Drinking Fountains: 1 Service Sinks: 1

FOOTNOTES:

1) In case of conflict with the U.S. Department of Justice Federal Registers Parts I through V - ADA Guidelines and specific reference to the International Building Code Accessibility Chapters, the more restrictive requirement shall govern.

2) Additional Code Information shall be provided at the discretion of the Building Official for Complex Buildings. Including, but not limited to:
   a) High Rise Requirements.
   b) Atriums.
   c) Performance Based Criteria.
   d) Means or Egress Analysis.
   e) Fire Assembly Locator Sheet.
   f) Exterior and Interior Accessibility Route.
   g) Fire Stopping, Including Tested Design Number.

TRACY STOCKING & ASSOCIATES


State of Utah
Department of Administrative Services
Division of Facilities Construction & Management
4110 State Office Building
Salt Lake City, Utah 84114
Phone: (801) 538 - 3018
Fax: (801) 538 - 3267
http://dfcm.utah.gov


CREATED BY:

BUILDING NAME:
Utah State Development Center
870 North 860 East
American Fork, Utah

PROJECT TITLE:
Boiler Replacement/ Building Repairs

| MARK | DATE | DESCRIPTION |
|---|---|---|
| | | |

ISSUE TYPE: REVIEW

ISSUE DATE: MAY 2009

DFCM PROJECT NO: 08194410
CAD PROJECT NO:
CAD DWG FILE:
DRAWN BY: STAFF
CHK'D BY: MDC
COPYRIGHT: STATE OF UTAH

SHEET TITLE
GENERAL INFORMATION

SHEET NUMBER
GI001

## GENERAL NOTES

1. The General Contractor, all suppliers and subcontractors will follow the direction of the Owner to maintain undisturbed all areas of the site that are outside the project limit line.
2. The purpose of the contract documents is to describe the design intent of the proposed improvements. In order to fully understand the scope of the work involved the general and sub contractors are responsible for visiting the site and studying the contract documents prior to bidding or commencing work. The General and sub contractors will be responsible for providing all work and materials related to the construction described, whether fully specified or not, such as fasteners, connectors, caulking, hardware, finishes and other such work that would constitute a complete application.
3. The contractor and subcontractors shall verify all dimensions and conditions at the site and work performed by other trades. Do not scale drawings. If dimensions are in question the Contractor or subcontractor shall be responsible for obtaining clarification from the architect prior to continuing construction of the area in question.
4. Dimensions are to be to the centerline of steel, the nominal face of concrete or masonry and the finish face of studs, unless otherwise noted.
5. All details, sections, and notes shown on the drawings are intended to be typical and shall apply to similar situations elsewhere unless noted or shown otherwise. Notes and details on drawings shall take precedence over these general notes. If general notes and specifications appear to be in conflict contact architect for clarification before proceeding with construction.
6. During and after construction the contractor and/or owner shall keep the loads on the structure within the limits of the design loads.
7. "Typ." or "Typical", as used in these documents, mean that the condition is the same or representative for all similar conditions unless otherwise noted. Details are usually keyed and noted "typical" only when they first occur and are representative for similar conditions throughout, unless noted otherwise.
8. Furnish every thing necessary and incidental for proper and satisfactory completion of all work specified, indicated or shown in the contract documents.
9. All exposed surfaces that have been modified, installed or affected by the construction process shall be cleaned, vacuumed or dusted in order to leave the premises ready for occupancy with no further cleaning necessary by the owner.
10. Patch and repair all finished surfaces damaged by construction to the satisfaction of the owner.

## ABBREVIATIONS

| | |
|---|---|
| A/C | Air conditioning |
| ACOUST. | Acoustical |
| ADJ. | Adjustable |
| ALLOW. | Allowance |
| ALUM. | Aluminum |
| ANOD. | Anodized |
| APPROP. | Appropriate |
| APPROX. | Approximate |
| B.U.R. | Built up roof |
| BLDG. | Building |
| BLK. | Block |
| BRK. | Brick |
| C.I. | Cast iron |
| C.J. | Control joint |
| C.M.U. | Concrete masonry unit |
| CLG. | Ceiling |
| COL. | Column |
| COOR. | Coordinate |
| CONC. | Concrete |
| CONST. | Construction |
| CONTR. | Contractor |
| CONT. | Continuous |
| D.F. | Drinking fountain |
| DIA. | Diameter |
| DIM. | Dimension |
| DN. | Down |
| DWG. | Drawing |
| DWG. | Drawings |
| DTL. | Detail |
| EA. | Each |
| E.F. | Exhaust fan |
| E.I.F.S. | Exterior insulation finish system |
| E.J. | Expansion joint |
| ELECT. | Electric, Electrical |
| ELEV. | Elevation |
| EQ. | Equal |
| E.W. | Each way |
| EXIST. | Existing |
| EXT. | Exterior |
| F.D. | Floor drain |
| F.E. | Fire extinguisher |
| FDN. | Foundation |
| FIN. | Finish |
| FLR. | Floor |
| F.R. | Fire rated |
| F.S.R. | Flexible sheet roofing |
| FTG. | Footing |
| G | Gas |
| G.I. | Galvanized iron |
| GA. | Gauge |
| GAL. | Galvanized |
| GRD. | Grade |
| GYP. BD. | Gypsum board |
| G.L.B. | Glued laminated beam |
| H.B. | Hose bib |
| HD. | Head |
| H.M. | Hollow metal |
| HORIZ. | Horizontal |
| I.D. | Inside diameter |
| INCL. | Included |
| INT. | Interior |
| IRRIG. | Irrigation |
| INSUL. | Insulation |
| M.R. | Moisture resistant |
| MFR | Manufacturer |
| MAX. | Maximum |
| MECH. | Mechanical |
| MIN. | Minute |
| M.D.F. | Medium Density Fiberboard |
| N.I.C. | Not in contract |
| N.T.S. | Not to scale |
| NO. | Number |
| # | Number |
| O.C. | On center |
| O.D. | Outside diameter |
| OFD. | Overflow drain |
| OPN'G | Opening |
| OPHD | Opposite hand |
| P.L. | Plastic Laminate |
| PLYWD. | Plywood |
| PNT. | Paint |
| PNTD. | Painted |
| PTD. | Painted |
| PR. | Pair |
| PROJ. | Project |
| R.C.M.U. | Reinforced concrete masonry unit |
| R.D. | Roof drain |
| REG. | Regular |
| R.S. | Rough-sawn |
| RAD. | Radius |
| REINF. | Reinforcing |
| REQ'D. | Required |
| REV. | Revised, Revision, Reversed |
| RM. | Room |
| R.O. | Rough opening |
| S | Sewer line |
| S.C. | Solid core |
| SCHED. | Schedule |
| SD. | Schedule |
| SHT. | Sheet |
| SIM. | Similar |
| SPEC. | Specification |
| STD. | Standard |
| STL. | Steel |
| STRUCT. | Structural |
| SYST. | System |
| T & B | Top and bottom |
| T & G | Tongue and groove |
| T.O. | Top of |
| T.O.F. | Top of footing |
| T.O.W. | Top of wall |
| TYP. | Typical |
| T.S. | Steel tube column |
| U.N.O. | Unless noted otherwise |
| VERT. | Vertical |
| V.I.F. | Verify In Field |
| W | Water |
| WD. | Wood |
| W/ | With |
| W.P. | Waterproof |
| W.R. | Water resistant |
| W.W.F. | Welded wire fabric |
| W.W.M. | Welded wire mesh |

## SYMBOLS

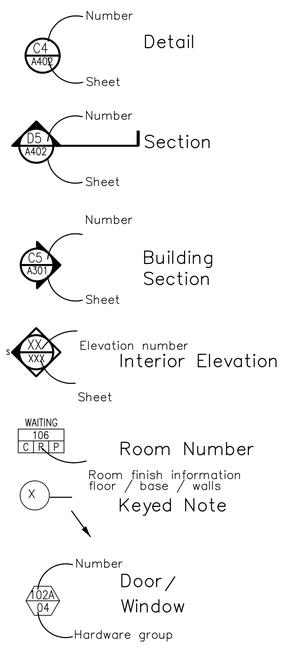


## GENERAL WALL TYPE NOTES

A – SUBSTITUTE CEMENT BACKER BOARD IN LIEU OF GYPSUM BOARD BEHIND ALL CERAMIC AND/OR STONE WALL TILE.

B – COORDINATE W/ FINISH SCHEDULE FOR WALL FINISH MATERIALS

## WALL TYPES

### WALL TYPE 1

**RATING:**

| | TEST | VALUE |
|---|---|---|
| FIRE | NA | N/A |
| SOUND | N/A | N/A |

**FRAME:**

| | SIZE | GAUGE | SPACING |
|---|---|---|---|
| CONCRETE | VARIES–SEE STRUCTURAL | | |

**FACING:**

| MATERIAL | THICKNESS |
|---|---|
| – | – |

**NOTES:** SEAL AROUND ALL PENETRATIONS W/ UL–LISTED SEALANTS

SKETCH:

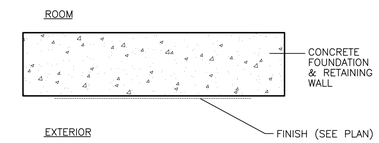


### WALL TYPE 2

**RATING:**

| | TEST | VALUE |
|---|---|---|
| FIRE | N/A | N/A |
| SOUND | N/A | N/A |

**FRAME:**

| | SIZE | GAUGE | SPACING |
|---|---|---|---|
| METAL | 2–1/2" | 24 | 16" O.C. |
| CONCRETE/CMU | 8" | – | – |

**FACING:**

| MATERIAL | THICKNESS |
|---|---|
| 1 LAYER GWB–TYPE "X" | 5/8" |

**NOTES:** 2" POLYISO INSULATION, R–5/INCH 6 MIL POLYETHYLENE VAPOR BARRIER

SKETCH:

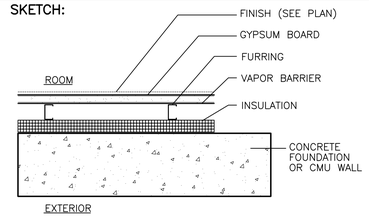


### WALL TYPE 3

**RATING:**

| | TEST | VALUE |
|---|---|---|
| FIRE | NA | N/A |
| SOUND | N/A | N/A |

**FRAME:**

| | SIZE | GAUGE | SPACING |
|---|---|---|---|
| CMU | 8" | – | – |

**FACING:**

| MATERIAL | THICKNESS |
|---|---|
| – | – |

**NOTES:** SEAL AROUND ALL PENETRATIONS W/ UL–LISTED SEALANTS

SKETCH:

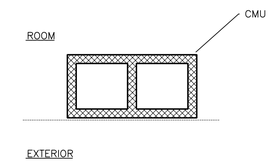


### WALL TYPE 4

**RATING:**

| | TEST | VALUE |
|---|---|---|
| FIRE | N/A | 0 |
| SOUND | N/A | N/A |

**FRAME:**

| | SIZE | GAUGE | SPACING |
|---|---|---|---|
| METAL | 3–5/8" | 20 | 16" O.C. |

**FACING:**

| MATERIAL | THICKNESS |
|---|---|
| 1 LAYER GB–TYPE "X" | 5/8" |
| 1 LAYER GB–TYPE "X" | 5/8" |
| – | – |

**NOTES:** SOUND–BATT INSULATION AT ALL OFFICE AND RESTROOM WALLS

SKETCH:

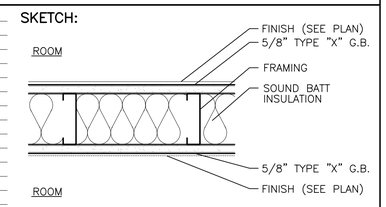


### WALL TYPE 5

**RATING:**

| | TEST | VALUE |
|---|---|---|
| FIRE | N/A | 0 |
| SOUND | N/A | N/A |

**FRAME:**

| | SIZE | GAUGE | SPACING |
|---|---|---|---|
| METAL | 5–1/2" | 20 | 16" O.C. |

**FACING:**

| MATERIAL | THICKNESS |
|---|---|
| 1 LAYER GB–TYPE "X" | 5/8" |
| 1 LAYER GB–TYPE "X" | 5/8" |
| – | – |

**NOTES:** SOUND–BATT INSULATION AT ALL OFFICE AND RESTROOM WALLS

SKETCH:

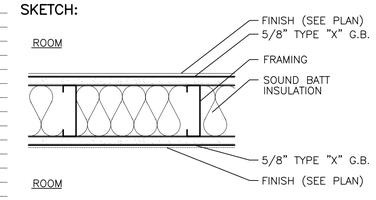


### WALL TYPE 6
1–HOUR FIRE

**RATING:**

| | TEST | VALUE |
|---|---|---|
| FIRE | U419 | 1–HR |
| SOUND | U419 | 40 STC |

**FRAME:**

| | SIZE | GAUGE | SPACING |
|---|---|---|---|
| METAL | 3–5/8" | 20 | 16" O.C. |

**FACING:**

| MATERIAL | THICKNESS |
|---|---|
| 2 LAYERS GB–TYPE "X" | 5/8" |

**NOTES:** EXTEND TO CONCRETE ROOF, FLOOR & SIDES, FIRE–STOP ALL PENETRATIONS W/ UL–LISTED SEALANTS

SKETCH:

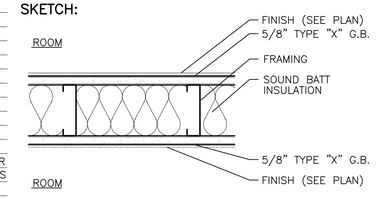


TRACY STOCKING & ASSOCIATES


**State of Utah**
Department of Administrative Services

Division of Facilities Construction & Management
4110 State Office Building
Salt Lake City, Utah 84114
Phone: (801) 538 - 3018
Fax: (801) 538 - 3267

http://dfcm.utah.gov


CREATED BY:

BUILDING NAME:

Utah State Development Center
870 North 860 East
American Fork, Utah

PROJECT TITLE:

Boiler Replacement/ Building Repairs

| MARK | DATE | DESCRIPTION |
|---|---|---|

ISSUE TYPE: REVIEW

ISSUE DATE: MAY 2009

DFCM PROJECT NO: 08194410
CAD PROJECT NO:
CAD DWG FILE:
DRAWN BY: STAFF
CHK'D BY: MDC
COPYRIGHT: STATE OF UTAH

SHEET TITLE

GENERAL INFORMATION

SHEET NUMBER

GI002

SHEET 2 OF 2

## GENERAL NOTES

### 1.1 COMPLIANCE

1. ALL WORK TO CONFORM TO GOVERNING MUNICIPALITY'S STANDARDS, SPECIFICATIONS AND REQUIREMENTS.
2. ALL CONSTRUCTION AND MATERIALS SHALL BE IN ACCORDANCE WITH THESE CONTRACT DOCUMENTS AND THE MOST RECENT, ADOPTED EDITIONS OF THE FOLLOWING: INTERNATIONAL BUILDING CODE (IBC), THE INTERNATIONAL PLUMBING CODE, STATE DRINKING WATER REGULATIONS, APWA MANUAL OF STANDARD PLANS AND SPECIFICATIONS, ADA ACCESSIBILITY GUIDELINES.
3. ALL CONSTRUCTION SHALL BE AS SHOWN ON THESE PLANS. ANY REVISIONS MUST HAVE PRIOR WRITTEN APPROVAL.

### 1.2 PERMITTING AND INSPECTIONS

1. PRIOR TO STARTING CONSTRUCTION, THE CONTRACTOR SHALL BE RESPONSIBLE FOR MAKING SURE THAT ALL REQUIRED PERMITS AND APPROVALS HAVE BEEN OBTAINED. NO CONSTRUCTION OR FABRICATION SHALL BEGIN UNTIL THE CONTRACTOR HAS RECEIVED THOROUGHLY REVIEWED PLANS AND OTHER DOCUMENTS APPROVED BY ALL OF THE PERMITTING AUTHORITIES.
2. CONTRACTOR IS RESPONSIBLE FOR SCHEDULING AND NOTIFYING ARCHITECT/ENGINEER OR INSPECTING AUTHORITY 48 HOURS IN ADVANCE OF COVERING UP ANY PHASE OF CONSTRUCTION REQUIRING OBSERVATION.
3. ANY WORK IN THE PUBLIC RIGHT-OF-WAY WILL REQUIRE PERMITS FROM THE APPROPRIATE, CITY, COUNTY OR STATE AGENCY CONTROLLING THE ROAD AND WITH APPROPRIATE INSPECTIONS.

### 1.3 COORDINATION & VERIFICATION

1. ALL DIMENSIONS, GRADES & UTILITY DESIGNS SHOWN ON THE PLANS SHALL BE VERIFIED BY THE CONTRACTOR PRIOR TO CONSTRUCTION. CONTRACTOR SHALL NOTIFY ARCHITECT/ENGINEER OF ANY DISCREPANCIES PRIOR TO PROCEEDING WITH CONSTRUCTION FOR NECESSARY PLAN OR GRADE CHANGES. NO EXTRA COMPENSATION SHALL BE PAID TO THE CONTRACTOR FOR WORK HAVING TO BE REDONE DUE TO DIMENSIONS OR GRADES SHOWN INCORRECTLY ON THESE PLANS, IF NOT VERIFIED AND NOTIFICATION OF CONFLICTS HAVE NOT BEEN BROUGHT TO THE ATTENTION OF THE ARCHITECT/ENGINEER.
2. CONTRACTOR MUST VERIFY ALL EXISTING CONDITIONS BEFORE BIDDING AND BRING UP ANY QUESTIONS BEFOREHAND. NO ALLOWANCE WILL BE MADE FOR DISCREPANCIES OR OMISSIONS THAT CAN BE EASILY OBSERVED.
3. CONTRACTOR TO COORDINATE WITH ALL OTHER DISCIPLINES, INCLUDING BUT NOT LIMITED TO: LANDSCAPE PLANS, SITE ELECTRICAL SITE LIGHTING PLANS AND ELECTRICAL SERVICE TO THE BUILDING(S), MECHANICAL PLANS FOR LOCATION OF SERVICES TO THE BUILDING(S), INCLUDING FIRE PROTECTION, ARCHITECTURAL SITE PLAN FOR DIMENSIONS, ACCESSIBLE ROUTES, ETC., NOT SHOWN ON CIVIL PLANS.
4. CONTRACTOR IS TO COORDINATE LOCATION OF NEW TELEPHONE SERVICE, GAS SERVICE, CABLE, ETC. TO BUILDING WITH THE APPROPRIATE UTILITY COMPANY. FOR TELEPHONE, CONTRACTOR TO FURNISH CONDUIT, PLYWOOD BACKBOARD, AND GROUND WIRE, AS REQUIRED.

### 1.4 SAFETY AND PROTECTION

1. CONTRACTOR IS SOLELY RESPONSIBLE FOR THE MEANS AND METHODS OF CONSTRUCTION,
2. CONTRACTOR IS RESPONSIBLE FOR THE SAFETY OF THE PROJECT AND SHALL MEET ALL OSHA REQUIREMENTS.
3. CONTRACTOR IS RESPONSIBLE FOR CONFORMING TO LOCAL AND FEDERAL CODES GOVERNING SHORING AND BRACING OF EXCAVATIONS AND TRENCHES, AND FOR THE PROTECTION OR WORKERS AND PUBLIC.
4. CONTRACTOR SHALL TAKE ALL MEASURES NECESSARY TO PROTECT ALL EXISTING PUBLIC AND PRIVATE PROPERTY, ROADWAYS, AND UTILITY IMPROVEMENTS. DAMAGE TO EXISTING IMPROVEMENTS CAUSED BY THE CONTRACTOR MUST BE REPAIRED BY THE CONTRACTOR AT HIS/HER EXPENSE TO THE SATISFACTION OF THE OWNER OF SAID IMPROVEMENTS.
5. CONTRACTOR IS REQUIRED TO KEEP ALL CONSTRUCTION ACTIVITIES WITHIN THE APPROVED PROJECT LIMITS. THIS INCLUDES, BUT IS NOT LIMITED TO, VEHICLE AND EQUIPMENT STAGING, MATERIAL STORAGE AND LIMITS OF TRENCH EXCAVATION.
6. IT IS THE CONTRACTOR'S RESPONSIBILITY TO OBTAIN PERMISSION AND/OR EASEMENTS FROM THE APPROPRIATE GOVERNMENT AGENCY AND/OR INDIVIDUAL PROPERTY OWNER(S) FOR WORK OR STAGING OUTSIDE OF THE PROJECT LIMITS.
7. CONTRACTOR SHALL PROVIDE BARRICADES, SIGNS, FLASHERS, OTHER EQUIPMENT AND FLAG PERSONS NECESSARY TO INSURE THE SAFETY OF WORKERS AND VISITORS. ALL CONSTRUCTION SIGNING, BARRICADING, AND TRAFFIC DELINEATION SHALL CONFORM TO THE "MANUAL ON UNIFORM TRAFFIC CONTROL DEVICES", LATEST EDITION.
8. CONTRACTOR SHALL COMPLY WITH LOCAL NOISE ORDINANCE STANDARDS.
9. CONTRACTOR IS RESPONSIBLE FOR DUST CONTROL ACCORDING TO GOVERNING AGENCY STANDARDS.
10. CONTRACTOR SHALL TAKE ALL NECESSARY AND PROPER PRECAUTIONS TO PROTECT ADJACENT PROPERTIES FROM ANY AND ALL DAMAGE THAT MAY OCCUR FROM STORM WATER RUNOFF AND/OR DEPOSITION OF DEBRIS RESULTING FROM ANY AND ALL WORK IN CONNECTION WITH CONSTRUCTION. SUBMIT A STORM WATER POLLUTION PREVENTION PLAN, IF REQUIRED.
11. WORK IN PUBLIC STREETS, ONCE BEGUN, SHALL BE PROSECUTED TO COMPLETION WITHOUT DELAY AS TO PROVIDE MINIMUM INCONVENIENCE TO ADJACENT PROPERTY OWNERS AND TO THE TRAVELING PUBLIC.
12. CONTRACTOR SHALL PROVIDE ALL NECESSARY HORIZONTAL AND VERTICAL TRANSITIONS BETWEEN NEW CONSTRUCTION AND EXISTING SURFACES TO PROVIDE FOR PROPER DRAINAGE AND FOR INGRESS AND EGRESS TO NEW CONSTRUCTION.
13. NATURAL VEGETATION AND SOIL COVER SHALL NOT BE DISTURBED PRIOR TO ACTUAL CONSTRUCTION OF A REQUIRED FACILITY OR IMPROVEMENT. MASS CLEARING OF THE SITE IN ANTICIPATION OF CONSTRUCTION SHALL BE AVOIDED. CONSTRUCTION TRAFFIC SHALL BE LIMITED TO ONE APPROACH TO THE SITE. THE APPROACH SHALL BE DESIGNATED BY THE OWNER OR GOVERNING AGENCY.
14. THE CONTRACTOR SHALL TAKE REASONABLE MEASURE TO PROTECT EXISTING IMPROVEMENTS FROM DAMAGE AND ALL SUCH IMPROVEMENTS DAMAGED BY THE CONTRACTOR'S OPERATION SHALL BE REPAIRED OR RECONSTRUCTED TO THE ENGINEER/OWNER'S SATISFACTION AT THE EXPENSE OF THE CONTRACTOR.

## GENERAL NOTES CONTINUED

### 1.5 MATERIALS

1. SITE CONCRETE SHALL BE A MINIMUM 6.5 BAG MIX, 4000 P.S.I. @ 28 DAYS, 4" MAXIMUM SLUMP WITH 5 + OR – 1% AIR ENTRAINMENT, UNLESS SPECIFIED OTHERWISE. –SEE SPECIFICATION
   A. SLABS-ON-GRADE WILL BE TYPICALLY SCORED (1/4 THE DEPTH) AT INTERVALS NOT TO EXCEED THEIR WIDTH OR 12 TIMES THEIR DEPTH, WHICHEVER IS LESS. SCORING WILL BE PLACED TO PREVENT RANDOM CRACKING. FULL DEPTH EXPANSION JOINTS WILL BE PLACED AGAINST ANY OBJECT DEEMED TO BE FIXED, CHANGES IN DIRECTION AND AT EQUAL INTERVALS NOT TO EXCEED 50 FEET.
   B. CONCRETE WATERWAYS, CURBWALLS, MOWSTRIPS, CURB AND GUTTER, ETC. WILL TYPICALLY BE SCORED (1/4 THE DEPTH AT INTERVALS NOT TO EXCEED 10 FEET AND HAVE FULL DEPTH EXPANSION JOINTS AT EQUAL SPACING NOT TO EXCEED 50 FEET.
   C. UNLESS OTHERWISE NOTED, ALL SLABS-ON-GRADE WILL HAVE A MINIMUM 8" TURNED-DOWN EDGE TO HELP CONTROL FROST HEAVE.
   D. UNLESS OTHERWISE NOTED, ALL ON-GRADE CONCRETE WILL BE PLACED ON A MINIMUM 4" GRAVEL BASE OVER A WELL COMPACTED (90%) SUBGRADE.
   E. ALL EXPOSED SURFACES WILL HAVE A TEXTURED FINISH, RUBBED OR BROOMED. ANY "PLASTERING" OF NEW CONCRETE WILL BE DONE WHILE IT IS STILL "GREEN".
   F. ALL JOINTS (CONTROL, CONSTRUCTION OR EXPANSION JOINTS, ETC.) WILL BE SEALED WITH A ONE PART POLYURETHANE SEALANT (SEE SPECIFICATION).
2. ASPHALTIC CONCRETE PAVEMENT SHALL BE A MINIMUM 3" OVER 6" OF COMPACTED (95%) ROAD BASE OVER PROPERLY PREPARED AND COMPACTED (90%) SUBGRADE, UNLESS NOTED OTHERWISE. –SEE SPECIFICATIONS, AND DETAIL 'D1' SHEET C5.01
   A. ASPHALT COMPACTION SHALL BE A MINIMUM 96% (MARSHALL DESIGN).
   B. SURFACE COARSE SHALL BE ½ " MINUS. MIX DESIGN TO BE SUBMITTED FOR APPROVAL AT LEAST TWO WEEKS PRIOR TO ANTICIPATED PAVING SCHEDULE.
   C. AC PAVEMENT TO BE A ¼" ABOVE LIP OF ALL GUTTER AFTER COMPACTION.
   D. THICKNESSES OVER 3" WILL BE LAID IN TWO LIFTS WITH THE FIRST LIFT BEING AN APPROVED ¾" MINUS DESIGN.

### 1.6 GRADING / SOILS

1. SITE GRADING SHALL BE PERFORMED IN ACCORDANCE WITH THESE PLANS AND SPECIFICATIONS AND THE RECOMMENDATIONS SET FORTH IN THE SOILS REPORT, WHICH BY REFERENCE ARE A PART OF THE REQUIRED CONSTRUCTION DOCUMENTS AND IN CASE OF CONFLICT SHALL TAKE PRECEDENCE, UNLESS SPECIFICALLY NOTED OTHERWISE ON THE PLANS, OR IN THE SPECIFICATIONS. THE CONTRACTOR SHALL NOTIFY THE ENGINEER OF ANY DISCREPANCY BETWEEN THE SOILS REPORT AND THESE PLANS AND SPECIFICATIONS.
2. THE CONTRACTOR SHALL BE RESPONSIBLE FOR REMOVING AND REPLACING ALL SOFT, YIELDING OR UNSUITABLE MATERIALS AND REPLACING WITH SUITABLE MATERIALS AS SPECIFIED IN THE SOILS REPORT.
3. ALL EXCAVATED OR FILLED AREAS SHALL BE COMPACTED TO 95% OF MODIFIED PROCTOR MAXIMUM DENSITY PER ASTM TEST D-1557, EXCEPT UNDER BUILDING FOUNDATIONS WHERE IT SHALL BE 98% MIN. OF MAXIMUM DENSITY. MOISTURE CONTENT AT TIME OF PLACEMENT SHALL NOT EXCEED 2% ABOVE NOR 3% BELOW OPTIMUM.
4. CONTRACTOR SHALL SUBMIT A COMPACTION REPORT PREPARED BY A QUALIFIED REGISTERED SOILS ENGINEER, VERIFYING THAT ALL FILLED AREAS AND SUBGRADE AREAS WITH THE BUILDING PAD AREA AND AREAS TO BE PAVED, HAVE BEEN COMPACTED IN ACCORDANCE WITH THESE PLANS AND SPECIFICATIONS AND THE RECOMMENDATIONS SET FORTH IN THE SOILS REPORT.
5. SITE CLEARING SHALL INCLUDE THE LOCATING AND REMOVAL OF ALL UNDERGROUND TANKS, PIPES, VALVES, ETC.
6. ALL EXISTING VALVES, MANHOLES, ETC. SHALL BE RAISED OR LOWERED TO GRADE AS REQUIRED.

### 1.7 UTILITIES

1. THE LOCATIONS OF UNDERGROUND FACILITIES SHOWN ON THESE PLANS ARE BASED ON FIELD SURVEYS AND LOCAL UTILITY COMPANY RECORDS. IT SHALL BE THE CONTRACTOR'S FULL RESPONSIBILITY TO CONTACT THE VARIOUS UTILITY COMPANIES EITHER DIRECT OR THROUGH BLUE STAKE TO LOCATE THEIR FACILITIES PRIOR TO STARTING CONSTRUCTION.
2. CONTRACTOR TO VERIFY BY POTHOLING BOTH THE VERTICAL AND HORIZONTAL LOCATION OF ALL EXISTING UTILITIES PRIOR TO INSTALLING ANY NEW LINES. NO ADDITIONAL COMPENSATION SHALL BE PAID TO THE CONTRACTOR FOR DAMAGE AND REPAIR TO THESE FACILITIES CAUSED BY HIS WORK FORCE.
3. CONTRACTOR MUST START AT LOW END OF ALL NEW GRAVITY UTILITY LINES. MECHANICAL SUB-CONTRACTOR MUST BE PROVIDED CIVIL SITE DRAWINGS FOR COORDINATION AND TO CHECK THE FLOW FROM THE LOWEST POINT IN BUILDING TO THE FIELD VERIFIED CONNECTION AT THE EXISTING MAIN. NO EXTRA COMPENSATION IS TO BE PAID TO THE CONTRACTOR FOR WORK HAVING TO BE REDONE DUE TO FAILURE TO COMPLY WITH THESE REQUIREMENTS.
4. CONTRACTOR IS TO VERIFY LOCATION, DEPTH, SIZE, TYPE, AND OUTSIDE DIAMETERS OF UTILITIES IN THE FIELD BY POTHOLING A MINIMUM OF 300 FEET AHEAD, PIPELINE CONSTRUCTION TO AVOID CONFLICTS WITH DESIGNED PIPELINE GRADE AND ALIGNMENT. EXISTING UTILITY INFORMATION SHOWN ON PLANS OR OBTAINED FROM UTILITY COMPANIES OR BLUE STAKED MUST BE ASSUMED AS APPROXIMATE, REQUIRING FIELD VERIFICATION.
5. CULINARY WATER AND FIRE SERVICE LINES TO BE CONSTRUCTED IN ACCORDANCE WITH LOCAL GOVERNING MUNICIPALITY STANDARDS AND SPECIFICATIONS.
6. SANITARY SEWER MAINS AND LATERALS TO BE CONSTRUCTED IN ACCORDANCE WITH LOCAL GOVERNING MUNICIPALITY SEWER DISTRICT STANDARDS AND SPECIFICATIONS.
7. STORM SEWER TO BE CONSTRUCTED IN ACCORDANCE WITH THE GOVERNING MUNICIPALITY STANDARDS AND SPECIFICATIONS.
8. ALL STORM DRAIN AND IRRIGATION CONDUITS SHALL BE INSTALLED WITH WATER TIGHT JOINTS AND CONNECTIONS.
9. ALL STORM DRAIN PIPE PENETRATIONS INTO BOXES SHALL BE CONSTRUCTED WITH WATER TIGHT SEALS ON THE OUTSIDE AND GROUTED SMOOTH WITH A NON-SHRINK GROUT ON THE INSIDE. CONDUITS SHALL BE CUT OFF FLUSH WITH THE INSIDE OF THE BOX.
10. NO CHANGE IN THE DESIGN OF UTILITIES AS SHOWN WILL BE MADE BY THE CONTRACTOR WITHOUT THE WRITTEN APPROVAL OF THE GOVERNING MUNICIPALITY, OR OTHER AUTHORITY HAVING JURISDICTION OVER THAT UTILITY.
11. ALL STORM DRAIN CONDUITS AND BOXES SHALL BE CLEAN AND FREE OF ROCKS, DIRT, AND CONSTRUCTION DEBRIS PRIOR TO FINAL INSPECTION.

## GENERAL NOTES CONTINUED

### 1.8 SURVEY CONTROL

1. CONTRACTOR MUST PROVIDE A REGISTERED LAND SURVEYOR OR PERSONS UNDER THE SUPERVISION OF A REGISTERED LAND SURVEYOR TO SET STAKES FOR THE ALIGNMENT AND GRADE OF EACH MAIN AND/OR FACILITY AS SHOWN ON THE PLANS. THE STAKES SHALL BE MARKED WITH THE HORIZONTAL LOCATION (STATION) AND VERTICAL LOCATION (GRADE) WITH CUTS AND/OR FILLS TO THE APPROVED GRADE OF THE MAIN AND OR FACILITY AS SHOWN ON THE PLANS.
2. THE CONTRACTOR SHALL PROTECT ALL STAKES AND MARKERS FOR VERIFICATION PURPOSES.
3. CONTRACTOR WILL BE RESPONSIBLE FOR FURNISHING, MAINTAINING, OR RESTORING ALL MONUMENTS AND REFERENCE MARKS WITHIN THE PROJECT SITE.

### 1.9 AMERICAN DISABILITIES ACT

1. PEDESTRIAN / ADA ROUTES SHALL MEET THE FOLLOWING SPECIFICATIONS:
   *ROUTES SHALL HAVE A 2.00% (1:50) MAXIMUM CROSS SLOPE.
   *ROUTES SHALL HAVE A 5.00% (1:20) MAXIMUM RUNNING SLOPE.
   *RAMPS SHALL HAVE A 8.33% (1:12) MAXIMUM RUNNING SLOPE.
2. ADA PARKING STALLS AND ADJACENT ROUTES SHALL HAVE A 2.00% MAXIMUM SURFACE SLOPE IN ANY DIRECTION.
3. THE CONTRACTOR SHALL ADHERE TO THE ABOVE SPECIFICATIONS. IN THE EVENT OF A DISCREPANCY IN THE CONSTRUCTION DOCUMENTS, THE CONTRACTOR SHALL NOTIFY THE ARCHITECT/ENGINEER PRIOR TO ANY CONSTRUCTION.

## LEGEND

| NEW | EXISTING | | NEW | EXISTING | |
|---|---|---|---|---|---|
| | | SUBJECT PROPERTY LINE | TRANS | TRANS | POWER TRANSFORMER |
| X | X | FENCE LINE | | | LIGHT POLE |
| P | P | POWER LINE | | | TELEPHONE RISER |
| T | T | TELEPHONE LINE | | | WATER MANHOLE |
| G | G | NATURAL GAS LINE | | | WATER VALVE |
| W | W | WATER LINE | | | WATER METER |
| S | S | SANITARY SEWER LINE | | | FIRE HYDRANT |
| SD | SD | STORM DRAIN LINE | | | SANITARY SEWER MANHOLE |
| IRR | IRR | IRRIGATION LINE | SSCO | SSCO | SANITARY SEWER CLEANOUT |
| 4572 | 4572 | CONTOUR LINE | | | STORM DRAIN CATCH BASIN |
| | | CURB & GUTTER (STD) | | | GRATE |
| | | CURB & GUTTER (OUTFALL) | 44.00 TOC | 4321.28 | SPOT ELEVATION |
| | | BUILDING | | | FLOW DIRECTION |
| | | CONCRETE PAVEMENT | | | DECIDUOUS TREE |
| | | STD. DUTY ASPHALT | | | SIGN |
| | | 1 1/2" CRUSHED GRAVEL | | EM | ELECTRICAL METER |
| | | 3/4" ROAD BASE | | GM | GAS METER |
| | | 1 1/2" WASH GRAVEL | | | AC UNIT |

## ABBREVIATIONS

| | | | | | |
|---|---|---|---|---|---|
| AC | AIR CONDITIONING | IE | INVERT ELEVATION | SDCB | STORM DRAIN CATCH BASIN |
| BC | BUILDING | IRR | IRRIGATION | S | SOUTH |
| B&C | BAR & CAP | LF | LINEAR FEET | SAD | SEE ARCHITECTURAL DRAWINGS |
| BM | BENCHMARK | LIP | LIP OF CURB | SS | SANITARY SEWER |
| BOW | BACK OF WALK | MAX | MAXIMUM | SD | STORM DRAIN |
| C | CENTERLINE | MIN | MINIMUM | SEC | SECTION |
| CP | CONTROL POINT | MON | MONUMENT | SPEC | SPECIFICATION |
| CU FT | CUBIC FOOT | N | NORTH | SQ | SQUARE |
| CU YD | CUBIC YARD | NG | NATURAL GROUND | SQ FT | SQUARE FEET |
| CONC | CONCRETE | NOTE | SEE NOTE | SQ YD | SQUARE YARD |
| CONST | CONSTRUCTION | NTS | NOT TO SCALE | STA | STATION |
| CMP | CORRUGATED METAL PIPE | OG | ORIGINAL GROUND | STD | STANDARD |
| DIA or Ø | DIAMETER | PC | POINT OF CURVATURE | STM | STORM |
| E | EAST | PCC | POINT OF COMPOUND CURVE | T | TOWNSHIP |
| EOA | EDGE OF ASPHALT | PI | POINT OF INTERSECTION | TBC | TOP BACK OF CURB |
| EOC | EDGE OF CONCRETE | PRC | POINT OF REVERSE CURVE | TBR | TOP BACK OF RETAINING WALL |
| ELEV | ELEVATION | PT | POINT OF TANGENCY | TOA | TOP OF ASPHALT |
| EX | EXISTING | POC | POINT OF CONNECTION | TOC | TOP OF CONCRETE |
| FFE | FINISHED FLOOR ELEVATION | PWR | POWER | TOE | TOE OF SLOPE |
| FG | FINISHED GRADE | P | PROPERTY LINE | TOP | TOP OF BANK |
| FT | FEET | PVC | POLYVINYL CHLORIDE PIPE | TOS | TOP OF SIDEWALK |
| FL | FLOW LINE | R | RANGE | TOW | TOP OF WALL |
| FOW | FRONT OF WALK | RCP | REINFORCED CONCRETE PIPE | TRANS | TRANSFORMER |
| GB | GRADE BREAK | RD | ROOF DRAIN | U.N.O. | UNLESS NOTED OTHERWISE |
| HDPE | HIGH DENSITY POLYETHYLENE | REV | REVISION | WTR | WATER |
| HW | HIGH WATER | ROW | RIGHT-OF-WAY | WV | WATER VALVE |
| HWY | HIGHWAY | | | W | WEST |

## SHEET INDEX


| SHEET NO. | SHEET TITLE |
|---|---|
| C001 | GENERAL NOTES |
| C101 | SITE PLAN & DEMOLITION |
| C201 | GRADING AND DRAINAGE PLAN |
| C202 | EROSION CONTROL PLAN |
| C301 | PLANTING AND IRRIGATION PLAN |
| C401 | SITE UTILITY PLAN |
| C402 | SANITARY SEWER PLAN & PROFILE |
| C403 | SANITARY SEWER PLAN & PROFILE |
| C501 | SITE DETAILS |
| C502 | EROSION CONTROL DETAILS |
| C503 | UTILITY DETAILS |

## VICINITY MAP

N.T.S.

AVOID CUTTING UNDERGROUND UTILITIES. IT'S COSTLY.
Call BEFORE YOU Dig
1-800-662-4111

NOTICE!
THE CONTRACTOR SHALL BE RESPONSIBLE FOR THE LOCATION, PROTECTION, AND RESTORATION OF ALL BURIED OR ABOVE GROUND UTILITIES, SHOWN OR NOT SHOWN ON THE PLANS.


McNEIL GROUP
Designing for the Future Since 1983



State of Utah
Department of Administrative Services
Division of Facilities Construction & Management
4110 State Office Building
Salt Lake City, Utah 84114
Phone: (801) 538 - 3018
Fax: (801) 538 - 3267
http://dfcm.utah.gov


CREATED BY:

BUILDING NAME:
Utah State Development Center
870 North 860 East
American Fork, Uath

PROJECT TITLE:
Boiler Replacement/ Building Repairs

| MARK | DATE | DESCRIPTION |
|---|---|---|

ISSUE TYPE: REVIEW

ISSUE DATE: MAY 27, 2009

DFCM PROJECT NO: 08194410
CAD PROJECT NO: 20060.DWG
CAD DWG FILE:290060.DWG
DRAWN BY: BE
CHK'D BY: GWS
COPYRIGHT: STATE OF UTAH

SHEET TITLE
GENERAL NOTES

SHEET NUMBER
C001

## SITE DEMOLITION PLAN

0 50 100 200
Scale in Feet Scale: 1"=50'

NORTH

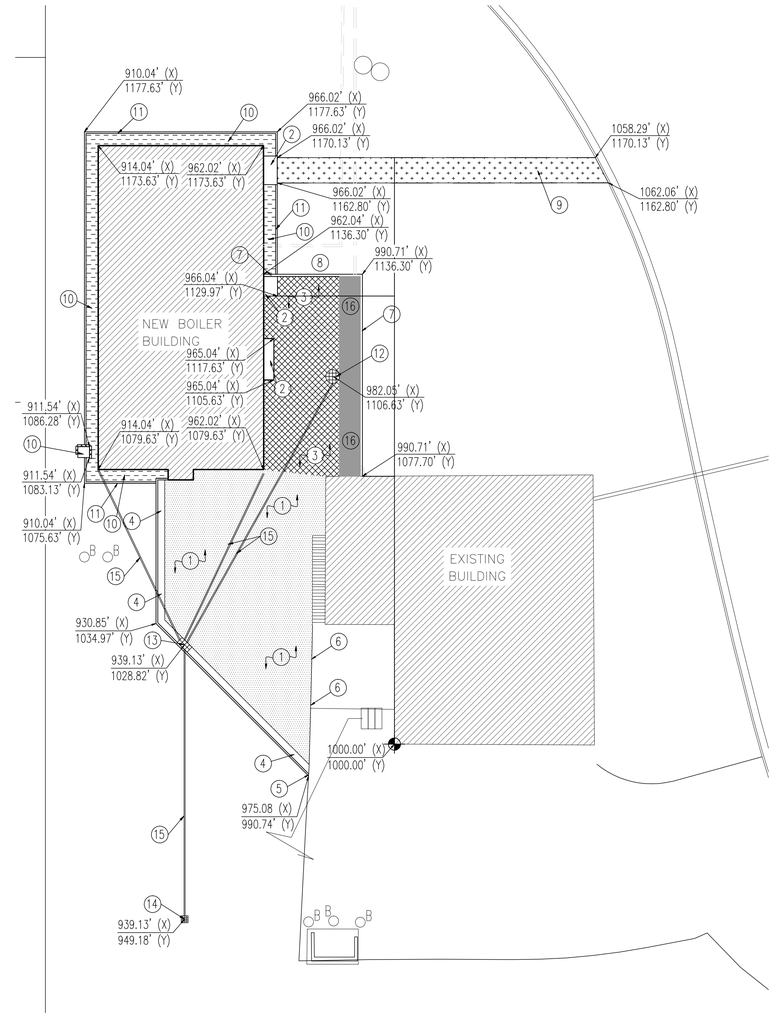


## OVERALL SITE & LAYOUT PLAN

0 20 40 80
Scale in Feet Scale: 1" =20'

NORTH

NORTH Y-AXIS
WEST X-AXIS
EAST X-AXIS
SOUTH Y-AXIS

**GENERAL NOTES:**
ALL DIMENSIONS ARE TO THE FACE OF CURB, UNLESS OTHERWISE NOTED

SEE LANDSCAPE PLANS FOR IRRIGATION AND PLANTING

ALL WORK TO COMPLY WITH DFCM STANDARDS AND SPECIFICATIONS

ALL IMPROVEMENTS MUST COMPLY WITH ADA STANDARDS AND RECOMMENDATIONS.

**KEYED NOTES:**
PROVIDE, INSTALL AND/OR CONSTRUCT THE FOLLOWING PER THE SPECIFICATIONS GIVEN OR REFERENCED AND THE DETAILS NOTED AND AS SHOWN ON THE CONSTRUCTION DRAWINGS:

**SCOPE OF WORK**

1. 8" MIN. ROAD BASE WITH 3" MIN. STANDARD DUTY ASPHALT PAVEMENT.
2. 5" THICK CONCRETE PAVEMENT WITH 4" THICK GRANULAR BASE.
3. 3" MIN. 1-1/2" CRUSHED GRAVEL WITH MIRI-FI OVER 8" MIN. ROAD BASE
4. 30" CONCRETE RELEASE CURB AND GUTTER.
5. TAPER CONCRETE CURB & GUTTER TO 0" FOR TRANSITION TO EXISTING ASPHALT AREA.
6. SAWCUT EXISTING ASPHALT FOR SMOOTH TRANSITION AND INSTALL TACK COAT ON PRIOR TO ASPHALT INSTALLATION.
7. NEW CONCRETE RETAINING WALL AS PER ARCHITECTURE PLANS
8. NEW CONCRETE TUNNEL AS PER ARCHITECTURE PLAN
9. NEW 7'.0" WIDE GRAVEL PATH. USE 3" ROAD BASE AT A DEPTH OF 6" WITH 1-1/2" CRUSHED GRAVEL AT A DEPTH OF 3" ON TOP OF ROAD BASE.
10. NEW 1-1/2" GRAVEL MULCH INSTALLED AT A DEPTH OF 4" OVER DEWITT-PRO WEED BARRIER. GRAVEL TO MATCH THE COLOR THE EXTERIOR OF THE BUILDING.
11. CONCRETE MOW STRIP.
12. NEW 4'x4'x3' CATCH BASIN IN GRAVEL AREA WITH CIRCULAR BICYCLE SAFE GRATE.
13. NEW 4'x2'x3' CONCRETE CATCH BASIN INSTALLED IN CURB AND GUTTER.
14. NEW 2'x2'x3' CONCRETE SUMP/BUBBLE UP BOX IN LANDSCAPE AREA.
15. NEW PVC PIPE WITH 18" MIN. COVER.
16. EXISTING TUNNEL
17. NEW 3'-6" BY 3'-6" AT A DEPTH OF 5" CONDENSER CONCRETE PAD WITH KEYSTONE BLOCK RETAINING WALL.

**KEYED NOTES:**

PROVIDE, INSTALL AND/OR CONSTRUCT THE FOLLOWING PER THE SPECIFICATIONS GIVEN OR REFERENCED AND THE DETAILS NOTED AND AS SHOWN ON THE CONSTRUCTION DRAWINGS:

**DEMOLITION SCOPE OF WORK:**

1. AREA TO BE GRUB AND PREPARED TO RECEIVE NEW LANDSCAPE.
2. TREE AND STUMP TO BE REMOVED FROM SITE. REPAIR ANY DAMAGE CAUSED BY REMOVAL OF TREES.
3. EXISTING TREE TO REMAIN AND BE PROTECTED
4. REPLACE EXISTING GRAVEL WITH 3" OF TOPSOIL.

AVOID CUTTING UNDERGROUND UTILITIES. IT'S COSTLY.
Call BEFORE YOU Dig
1-800-662-4111

NOTICE!
THE CONTRACTOR SHALL BE RESPONSIBLE FOR THE LOCATION, PROTECTION, AND RESTORATION OF ALL BURIED OR ABOVE GROUND UTILITIES, SHOWN OR NOT SHOWN ON THE PLANS.

McNEIL GROUP
Designing for the Future Since 1985


**State of Utah**
Department of Administrative Services
Division of Facilities Construction & Management
4110 State Office Building
Salt Lake City, Utah 84114
Phone: (801) 538 - 3018
Fax: (801) 538 - 3267
http://dfcm.utah.gov


CREATED BY:

BUILDING NAME:
Utah State Development Center
870 North 860 East
American Fork, Uath

PROJECT TITLE:
Boiler Replacement/ Building Repairs

| MARK | DATE | DESCRIPTION |
|---|---|---|

ISSUE TYPE: REVIEW

ISSUE DATE: MAY 27, 2009

DFCM PROJECT NO: 08194410
CAD PROJECT NO:290060.dwg
CAD DWG FILE:290060.dwg
DRAWN BY: BE
CHK'D BY: RD/GWS
COPYRIGHT: STATE OF UTAH

SHEET TITLE
SITE PLAN & DEMOLITION

SHEET NUMBER
C101

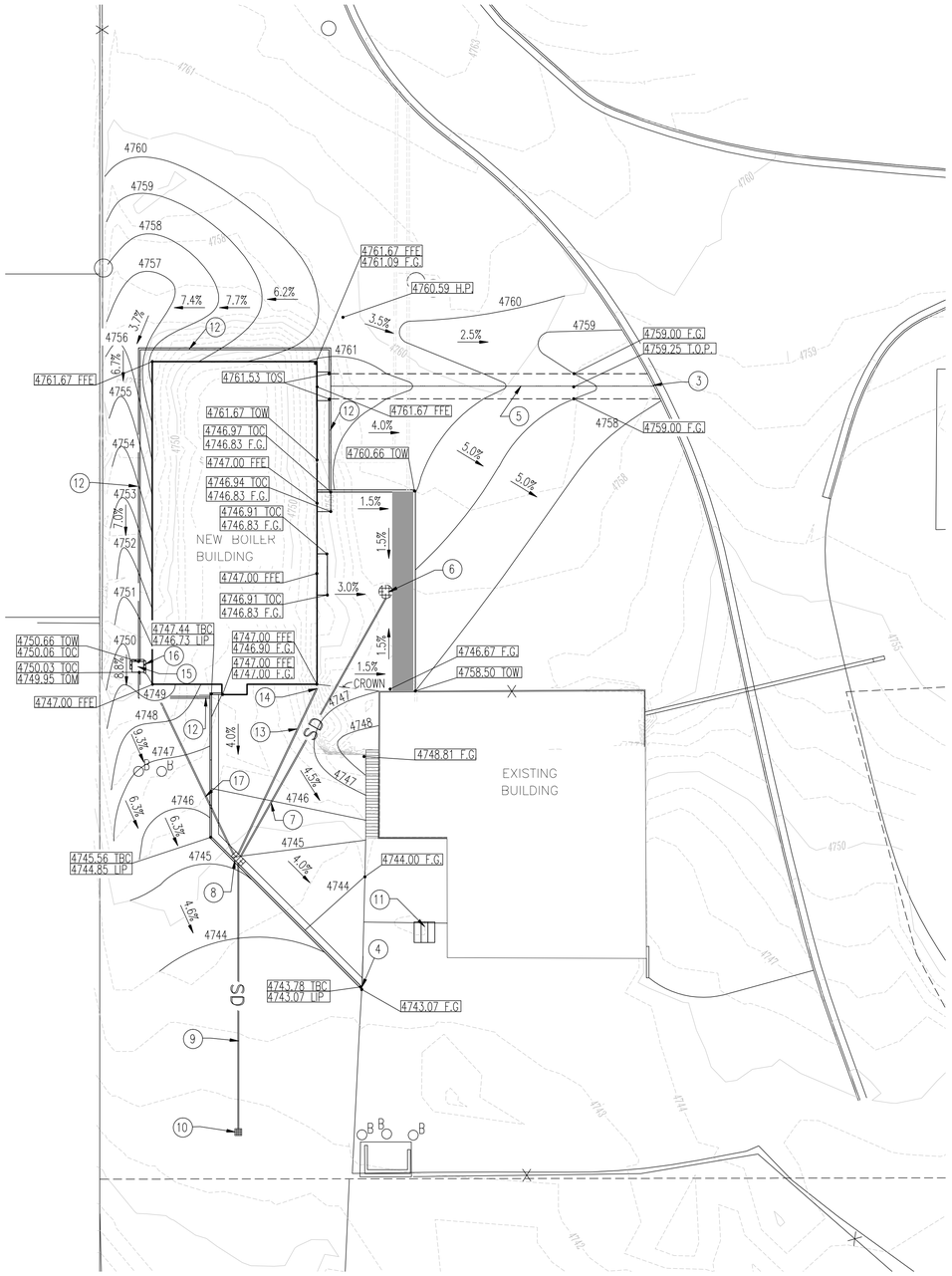


## GRADING & DRAINAGE PLAN

Scale in Feet — 0, 20, 40, 80

Scale: 1" =20'

## GENERAL NOTES:

SITE GRADING SHALL BE PERFORMED IN ACCORDANCE WITH THESE PLANS AND SPECIFICATIONS AND THE RECOMMENDATIONS SET FORTH IN THE SOILS REPORT THE CONTRACTOR SHALL BE RESPONSIBLE FOR REMOVING AND REPLACING ALL SOFT, YIELDING OR UNSUITABLE MATERIALS AND REPLACING WITH SUITABLE MATERIALS AS SPECIFIED IN THE SOILS REPORT. ALL EXCAVATED OR FILLED AREAS SHALL BE COMPACTED TO 95% OF MODIFIED PROCTOR MAXIMUM DENSITY PER ASTM TEST D-1557 EXCEPT UNDER BUILDING FOUNDATION WHERE IT SHALL BE 98% MIN. OF MAXIMUM DENSITY. MOISTURE CONTENT AT TIME OF PLACEMENT SHALL NOT EXCEED 2% ABOVE NOR 3% BELOW OPTIMUM. CONTRACTOR SHALL SUBMIT A COMPACTION REPORT PREPARED BY A QUALIFIED REGISTERED SOILS ENGINEER, VERIFYING THAT ALL FILLED AREAS AND SUBGRADE AREAS WITHIN THE BUILDING PAD AREA AND AREAS TO BE PAVED, HAVE BEEN COMPACTED IN ACCORDANCE WITH THESE PLANS & SPECS AND THE RECOMMENDATIONS SET FORTH IN THE SOILS REPORT.

THE CONTRACTOR IS TO USE BEST MANAGEMENT PRACTICES FOR PROVIDING EROSION CONTROL FOR CONSTRUCTION OF THIS PROJECT. SPECIFIC NOTES AND DETAILS SHOWN ON SHEETS C2.02 AND C5.02 SHALL BE USED IN COMBINATION WITH OTHER ACCEPTED LOCAL PRACTICES.

EXISTING UNDERGROUND UTILITIES AND IMPROVEMENTS ARE SHOWN IN THEIR APPROXIMATE LOCATIONS BASED UPON RECORD INFORMATION AVAILABLE AT THE TIME OF PREPARATION OF PLANS. LOCATIONS MAY NOT HAVE BEEN VERIFIED IN THE FIELD AND NO GUARANTEE IS MADE AS TO ACCURACY OR COMPLETENESS OF THE INFORMATION SHOWN. IT SHALL BE RESPONSIBILITY OF THE CONTRACTOR TO DETERMINE THE EXISTENCE AND LOCATION OF THOSE UTILITIES SHOWN ON THESE PLANS OR INDICATED IN THE FIELD BY LOCATING SERVICES. ANY ADDITIONAL COSTS INCURRED AS A RESULT OF CONTRACTOR'S FAILURE TO VERIFY LOCATIONS OF EXISTING UTILITIES PRIOR TO BEGINNING OF CONSTRUCTION IN THEIR VICINITY SHALL BE BORNE BY THE CONTRACTOR AND ASSUMED INCLUDED IN THE CONTRACT.

ALL FACILITIES CONFORM TO DFCM DESIGN AND CONSTRUCTION STANDARDS AND STORM WATER MASTER PLAN.

## KEYED NOTES:

PROVIDE, INSTALL AND/OR CONSTRUCT THE FOLLOWING PER THE SPECIFICATIONS GIVEN OR REFERENCED AND THE DETAILS NOTED AND AS SHOWN ON THE CONSTRUCTION DRAWINGS:

## SCOPE OF WORK

1. GRADE SITE TO ELEVATIONS AND CONTOURS SHOWN ON PLAN.
2. FINISH FLOOR ELEVATION ARE SHOWN ON PLAN
3. TIE GRAVEL PATH INTO EXISTING CURB WALL
4. TRANSITION NEW CURB & GUTTER TO 0" AT EXISTING ASPHALT AREA. SEE DETAIL D/C501
5. CROWN GRAVEL PATH 3" IN CENTER.
6. INSTALL NEW CATCH BASIN WITH A 24" MANHOLE COVER AS PER DETAIL F/C501.
   TOG=4745.99 IE OUT=4744.16
7. 86 LF 4" PVC STORM DRAIN @ 1.2% SLOPE 18" BELOW GRADE.
8. STORM DRAIN AREA INLET WITH HEAVY DUTY BICYCLE SAFE GRATE PER DETAIL E/C501.
   TOG=4745.00 IE IN FROM CATCH BASIN=4743.17 IE OUT=4742.33
   IE IN FROM WEST FOUNDATION DRAIN=4742.95
   IE IN FROM EAST FOUNDATION DRAIN=4742.45
9. 78 LF 6" PVC STORM DRAIN @ 3.8% 18" BELOW GRADE.
10. NEW 2'x2'x3' CONCRETE SUMP/BUBBLE UP BOX IN LANDSCAPE AREA. SEE DETAIL E/C501.
    TOG=4741.69 IE IN=4739.43
11. PROTECT EXISTING CATCH BASIN AND STORM DRAIN PIPE. IF DAMAGED REPAIR TO EXISTING CONDITION
12. CONCRETE MOW STRIP. SEE DETAIL B/C501
13. 54.5 LF 4" PVC STORM DRAIN @ 1.0% SLOPE 18" BELOW GRADE.
14. TIE ROOF DRAIN INTO FOUNDATION DRAIN WITH CLEAN OUT BOX. I.E. AWAY FROM BUILDING TO BE NO LOWER THAN 4743.00
15. CONCRETE PAD SEE DETAIL G/C5.01
16. KEYSTONE RETAINING WALL SEE DETAIL G/C5.01.
17. 55 LF 4" PVC STORM DRAIN @ 1.0% SLOPE 18" BELOW GRADE. I.E. AWAY FROM BUILDING TO BE NO LOWER THAN 4743.50

AVOID CUTTING UNDERGROUND UTILITIES. IT'S COSTLY.
Call BEFORE YOU Dig
1-800-662-4111

NOTICE!
THE CONTRACTOR SHALL BE RESPONSIBLE FOR THE LOCATION, PROTECTION, AND RESTORATION OF ALL BURIED OR ABOVE GROUND UTILITIES, SHOWN OR NOT SHOWN ON THE PLANS.

McNEIL GROUP
Designing for the Future Since 1983
5 4698 SOUTH 2300 EAST HOLLADAY, UTAH 84117
TEL: (801) 943-7755 FAX: (801) 943-8101
E-MAIL: info@mcneilgroup.com WEB SITE AT www.mcneilgroup.com

**State of Utah**
Department of Administrative Services

Division of Facilities Construction & Management
4110 State Office Building
Salt Lake City, Utah 84114
Phone: (801) 538 - 3018
Fax: (801) 538 - 3267

http://dfcm.utah.gov

CREATED BY:

BUILDING NAME:
Utah State Development Center
870 North 860 East
American Fork, Uath

PROJECT TITLE:
Boiler Replacement/ Building Repairs

| MARK | DATE | DESCRIPTION |
|---|---|---|

ISSUE TYPE: REVIEW

ISSUE DATE: MAY 27, 2009

DFCM PROJECT NO: 08194410
CAD PROJECT NO: 290060.dwg
CAD DWG FILE: 290060.dwg
DRAWN BY:BE
CHK'D BY: RD/GWS
COPYRIGHT: STATE OF UTAH

SHEET TITLE
GRADING & DRAINAGE PLAN

SHEET NUMBER
C201

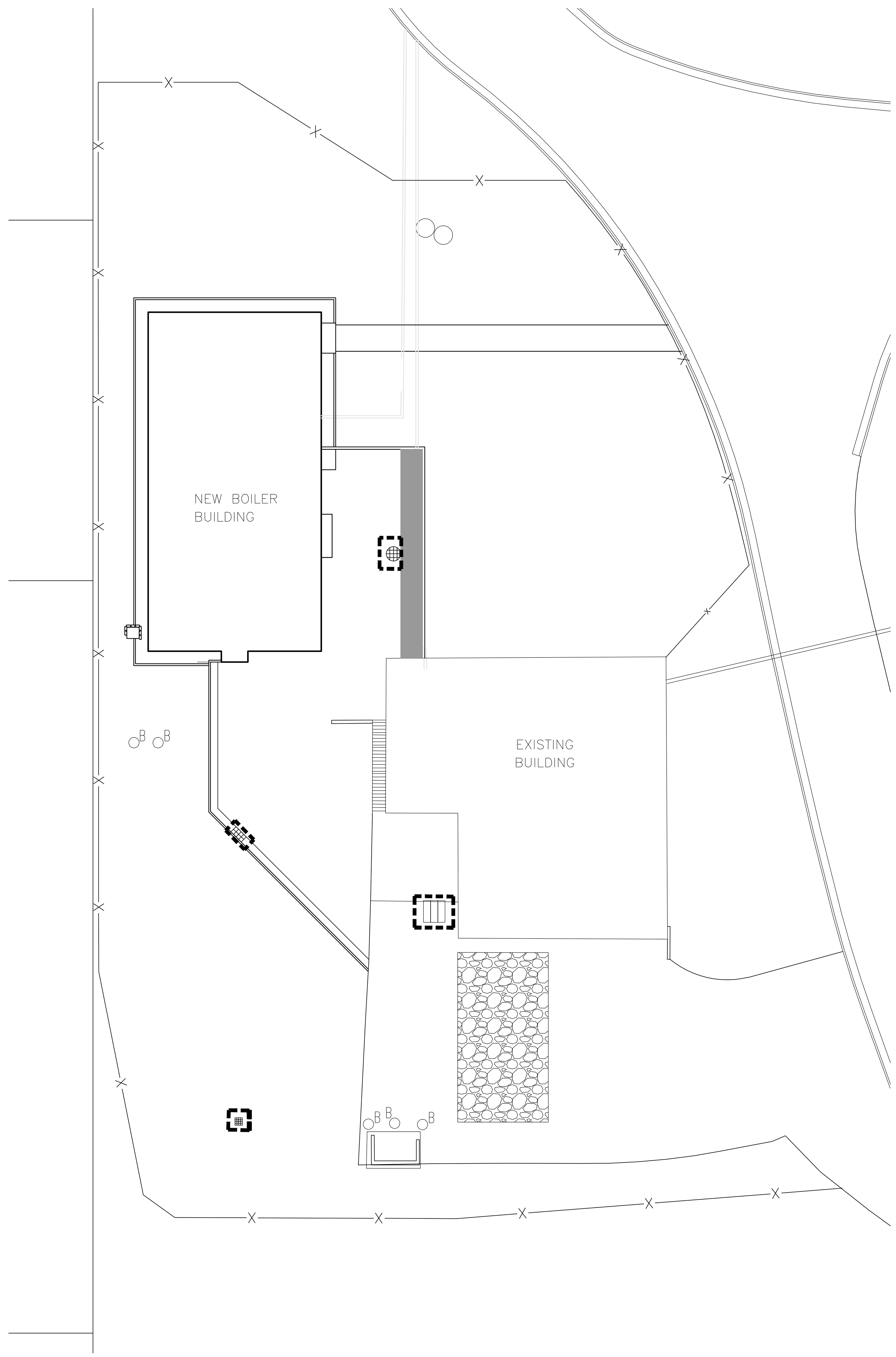


## EROSION CONTROL PLAN

Scale in Feet 0 20 40 80 Scale: 1" =20'

NORTH

## GENERAL NOTES:

1. **INTENT OF EROSION CONTROL PLAN:**
BY CONTRACT WITH THE CONTRACTOR THE PROPERTY OWNER HAS DELEGATED HIS OBLIGATION TO INSURE COMPLIANCE WITH ALL APPLICABLE STORM WATER REGULATIONS TO EFFECTIVELY PREVENT THE POTENTIALLY NEGATIVE IMPACTS OF THIS PROJECT'S CONSTRUCTION ACTIVITIES ON STORM WATER QUALITY. THE INTENT OF THIS EROSION CONTROL IS TO HELP THE CONTRACTOR IN SECURING THE NECESSARY PERMITS. CONTRACTOR WILL MODIFY THIS PLAN AS REQUIRED TO MEET LOCAL REQUIREMENTS.

2. **BEST MANAGEMENT PRACTICES (BMP's):**
THE CONTRACTOR IS TO USE BEST MANAGEMENT PRACTICES FOR PROVIDING EROSION CONTROL FOR CONSTRUCTION OF THIS PROJECT. SPECIFIC DETAILS SHOWN SHALL BE USED IN COMBINATION WITH OTHER ACCEPTED LOCAL PRACTICES. THE MAINTENANCE OF THE BMP'S IS THE RESPONSIBILITY OF THE PERMITTEE, AND FAILURE TO PROPERLY INSTALL OR MAINTAIN THE BMP'S MAY RESULT IN ENFORCEMENT ACTION BY THE GOVERNING AGENCIES. IF INSTALLED BMP'S FAIL, THEY MUST BE REPAIRED OR REPLACED WITH AN ACCEPTABLE ALTERNATE WITHIN 24 HOURS, OR AS SOON AS SAFE TO DO SO.

3. **PERMITS AND APPROVALS:**
CONTRACTOR SHALL SECURE ALL NECESSARY PERMITS PER THE STATE AND ENVIRONMENTAL PROTECTION AGENCY'S (EPA) NATIONAL POLLUTANT DISCHARGE ELIMINATION SYSTEM (NPDES) REQUIREMENTS BEFORE STARTING CONSTRUCTION. ALL MATERIALS AND WORKMANSHIP SHALL CONFORM TO THE LOCAL AGENCY'S EROSION CONTROL STANDARDS AND SPECIFICATIONS AND ALL WORK SHALL BE SUBJECT TO INSPECTION BY THE AGENCY HAVING JURISDICTION. ALSO, INSPECTORS WILL HAVE THE RIGHT TO CHANGE THE FACILITIES AS NEEDED.

4. **EXISTING UTILITIES:**
THE CONTRACTOR SHALL BE RESPONSIBLE FOR FIELD VERIFYING THE LOCATIONS OF ALL EXISTING UTILITIES. IF CONFLICTS OCCUR, THE CONTRACTOR SHALL NOTIFY THE ARCHITECT/ENGINEER PRIOR TO CONSTRUCTION TO DETERMINE IF ANY FIELD ADJUSTMENTS SHOULD BE MADE.

5. **DUST CONTROL:**
THE CONTRACTOR SHALL PROVIDE ADEQUATE DUST CONTROL. BLOWING DUST MUST BE CONTROLLED AT ALL TIMES. INSTALLATION OF A SILT FENCE AND SITE WATERING SHALL BE USED TO CONTROL DUST. THE USE OF MOTOR OILS AND OTHER PETROLEUM BASED OR TOXIC LIQUIDS FOR DUST SUPPRESSION IS ABSOLUTELY PROHIBITED.

6. **FIELD MODIFICATIONS:**
THE CONTRACTOR SHALL MODIFY EROSION CONTROL MEASURES TO ACCOMMODATE PROJECT PLANNING. ADDITIONAL EROSION CONTROL MEASURES MAY BE REQUIRED DUE TO UNFORESEEN PROBLEMS OR IF THE PLAN DOES NOT FUNCTION AS INTENDED. A REPRESENTATIVE OF THE GOVERNING AGENCIES MAY REQUIRE ADDITIONAL CONTROL DEVISES UPON INSPECTION OF PROPOSED FACILITIES.

7. **SCHEDULING:**
CONTRACTOR SHOULD FOLLOW A SPECIFIED WORK SCHEDULE THAT COORDINATES THE TIMING OF LAND–DISTURBING ACTIVITIES. THE REMOVAL OF SURFACE GROUND COVER LEAVES A SITE VULNERABLE TO ACCELERATED EROSION. THEREFORE:

A. LIMIT LAND CLEARING AND RESTORE PROTECTIVE COVER QUICKLY.

B. SCHEDULE PROJECTS TO DISTURB ONLY SMALL PORTIONS OF THE SITE AT ANY ONE TIME.

C. COMPLETE GRADING AS SOON AS POSSIBLE AND IMMEDIATELY STABILIZE THE DISTURBED PORTION BEFORE GRADING THE NEXT AREA.

D. PRACTICE STAGED SEEDING IN ORDER TO RE–VEGETATE CUT AND FILL SLOPES AS THE WORK PROGRESSES.

E. STABILIZE OPEN TRENCHES AS SOON AS POSSIBLE.

F. SEQUENCE TRENCHING PROJECTS SO THAT MOST OPEN PORTIONS OF THE TRENCH ARE CLOSED BEFORE NEW TRENCHING IS BEGUN.

G. DURING THE RAINY SEASON THE AMOUNT OF EXPOSED SOIL ALLOWED AT ONE TIME SHALL NOT EXCEED THAT WHICH CAN BE ADEQUATELY PROTECTED BY THE PROPERTY OWNER IN THE EVENT OFA RAINSTORM.

H. 100% OF ALL SUPPLIES NEEDED FOR BMP MEASURES SHALL BE RETAINED ON THE JOB SITE IN A MANNER THAT ALLOWS FULL DEPLOYMENT AND COMPLETE INSTALLATION IN 48 HOURS OR LESS OF A FORECAST RAIN.

I. WHEN GRADING OPERATIONS HAVE BEEN COMPLETED AND THE DISTURBED GROUND SHALL BE LEFT "OPEN" FOR 30 DAYS OR MORE THE AREA SHALL BE FURROWED PARALLEL TO THE CONTOURS OFTHE AREA.

8. **MAINTENANCE:**
A. ALL EROSION CONTROL MEASURES SHALL BE MAINTAINED IN FULLY FUNCTIONAL CONDITION UNTIL FINAL STABILIZATION OF THE SITE.

B. ALL EROSION AND SEDIMENTATION CONTROL MEASURES SHALL BE CHECKED BY A QUALIFIED PERSON
AT LEAST ONCE EVERY SEVEN CALENDAR DAYS AND WITHIN 24 HOURS OF THE END OF A RAINFALL EVENT. ANY NEEDED CLEANING AND REPAIRS SHALL BE DONE IMMEDIATELY UPON DISCOVERY.

C THE CONTRACTOR SHALL BE RESPONSIBLE FOR ADJUSTING THE EROSION CONTROL MEASURES (SILT FENCES, STRAW BALES, ETC.) DUE TO GRADE CHANGES DURING THE DEVELOPMENT OF THE PROJECT.

D. THE OWNER'S REPRESENTATIVE SHALL MAKE ROUTINE CHECKS ON ALL EROSION CONTROL MEASURES
TO DETERMINE IF REPAIRS OR SEDIMENT REMOVAL IS NECESSARY. DUE TO CONDITIONS THAT MAY ARISE IN THE FIELD, ADDITIONAL CONTROL MAY BE DETERMINED TO BE NECESSARY.

E. SILT FENCE BARRIERS SHALL BE INSPECTED IMMEDIATELY AFTER EACH RAINFALL AND AT THE LEAST DAILY DURING PROLONGED RAINFALL. CLOSE ATTENTION SHALL BE PAID TO THE REPAIR OF DAMAGED SILT FENCES, END RUNS, AND UNDERCUTTING BENEATH SILT FENCING. NECESSARY REPAIRS TO BARRIERS OR REPLACEMENT OF SILT FENCING SHALL BE ACCOMPLISHED PROMPTLY.

F. SEDIMENT DEPOSITS SHOULD BE REMOVED AFTER EACH RAINFALL. THEY MUST BE REMOVED WHEN THE LEVEL OF DEPOSITION REACHES APPROXIMATELY ONE–HALF THE HEIGHT OF THE BARRIER.

G. ALL OFF–SITE CONSTRUCTION SHALL BE STABILIZED AT THE END OF EACH WORKING DAY. THIS INCLUDES BACKFILLING OF TRENCHES FOR UTILITY CONSTRUCTION AND PLACEMENT OF BITUMINOUS PAVING FOR ROAD CONSTRUCTION.

## GENERAL NOTES (CONTINUED):

9. **STREETS:**
THE CONTRACTOR IS RESPONSIBLE FOR KEEPING THE STREETS CLEAN AND FREE FROM DEBRIS DEPOSITED BY TRAFFIC FROM THE SITE. CONTRACTOR SHALL USE VEHICLE TRACKING CONTROL AT ALL LOCATIONS WHERE VEHICLES WILL ENTER OR EXIT THE SITE. CONTROL FACILITIES SHALL BE MAINTAINED WHILE CONSTRUCTION IS IN PROGRESS, MOVED WHEN NECESSARY, AND REMOVED WHEN THE SITE IS PAVED.

10. **WASH WATER:**
ALL WASH WATER (CONCRETE TRUCKS, VEHICLE CLEANING, ETC.) SHALL BE DISPOSED OF IN A MANNER THAT PREVENTS CONTACT WITH STORM WATER DISCHARGES FROM THE SITE. ALL UTILITY LINES SHALL BE CLEANED OF DIRT AND DEBRIS PRIOR TO BEING PUT INTO SERVICE. DOWNGRADE LINES MUST BE PROTECTED FROM WASH–WATER DURING THE CLEANING TO AVOID CONTAMINATION AND COMPROMISING OUTFALL CLEANLINESS.

11. **LIMITS OF DISTURBANCE:**
THE LIMITS OF DISTURBANCE ARE TO BE STAKED BEFORE STARTING ANY CONSTRUCTION.

12. **EROSION CONTROL MEASURES:**
A. ALL BUILDING PADS TO BE DIKED AND THE DIKES MAINTAINED TO PREVENT WATER FROM FLOWING FROM THE PAD UNTIL THE STREETS AND DRIVEWAYS ARE PAVED AND WATER CAN FLOW FROM THE PADS WITHOUT CAUSING EROSION, OR CONSTRUCT DRAINAGE FACILITIES TO THE SATISFACTION OF THE GOVERNING AGENCY THAT WILL ALLOW WATER TO DRAIN FROM THE PAD WITHOUT CAUSING EROSION.

B. TOPS OF ALL SLOPES TO BE DIKED OR TRENCHED TO PREVENT WATER FROM FLOWING OVER THE CREST OF SLOPES.

C. MANUFACTURED SLOPES AND PADS SHALL BE ROUNDED VERTICALLY AND HORIZONTALLY AS APPROPRIATE TO BLEND WITH THE SURROUNDING TOPOGRAPHY.

D. APPROVED SLOPE PROTECTION MEASURES SHALL PROCEED IMMEDIATELY BEHIND THE EXPOSURE OF CUT SLOPES AND/OR THE CREATION OF EMBANKMENT SLOPES.

E. CATCH BASINS, DE–SILTING BASINS AND STORM DRAIN SYSTEM SHALL BE INSTALLED TO THE SATISFACTION OF THE GOVERNING AGENCIES.

F. SAND BAG CHECK DAMS TO BE PLACED IN A MANNER APPROVED BY THE GOVERNING AGENCIES IN UNPAVED STREETS WITH GRADIENTS IN EXCESS OF 2% AND ON OR IN OTHER GRADED OR EXCAVATED AREAS AS REQUIRED BY THE GOVERNING AGENCIES.

13. **SILTATION AND SEDIMENT CONTROL MEASURES:**
A. SEDIMENT BASINS SHALL BE PROVIDED AT THE LOWER END OF EVERY DRAINAGE AREA PRODUCING SEDIMENT RUNOFF. THE BASINS SHALL BE MAINTAINED AND CLEANED AFTER EVERY RUNOFF PRODUCING STORM. THE BASINS SHOULD BE SEMI–PERMANENT STRUCTURES THAT WOULD REMAIN UNTIL SOIL STABILIZING VEGETATION HAS BECOME WELL ESTABLISHED ON ALL ERODIBLE SLOPES.

B. SEWER OR STORM DRAIN TRENCHES THAT ARE CUT THROUGH BASIN DIKES OR BASIN INLET DIKES SHALL BE PLUGGED WITH SANDBAGS FROM TOP OF PIPE TO TOP OF DIKE.

C. AFTER SEWER UTILITY TRENCHES ARE BACK–FILLED AND COMPACTED, THE SURFACES OVER SUCH TRENCHES SHALL BE MOUNDED SLIGHTLY TO PREVENT CHANNELING OF WATER IN THE TRENCH AREA. CARE SHOULD BE EXERCISED TO PROVIDE FOR CROSS FLOW AT FREQUENT INTERVALS WHERE TRENCHES ARE NOT ON THE CENTERLINE OF A CROWNED STREET.

D. PROVIDE A SANDBAG SILT BASIN OR TRAP BY EVERY STORM DRAIN INLET TO PREVENT SEDIMENT FROM ENTERING DRAINAGE SYSTEM.

E. ANY PROPOSED ALTERNATIVE CONTROL MEASURES MUST BE APPROVED IN ADVANCE BY ALL RESPONSIBLE AGENCIES, I.E., CITY ENGINEER, DEPARTMENT OF FLOOD CONTROL, ETC.

14. **LONG–TERM MAINTENANCE (POST CONSTRUCTION):**
A. EROSION CONTROL STRUCTURES BELOW SODDED AREAS MAY BE REMOVED ONCE SOD AND FINAL LANDSCAPING ARE IN PLACE. EROSION CONTROL STRUCTURES BELOW SEEDED AREAS MUST REMAIN IN PLACE UNTIL THE ENTIRE AREA HAS ESTABLISHED A MATURE COVERING OF HEALTHY VEGETATION. EROSION CONTROL IN PROPOSED PAVEMENT AREAS SHALL REMAIN IN PLACE UNTIL PAVEMENT IS COMPLETE.

B. EMPLOYEES OF THE FACILITY MUST BE TRAINED TO MAINTAIN THE PROPERTY SO THE STORM WATER DOES NOT COME IN CONTACT WITH ANY POLLUTANTS. THE FOLLOWING PRECAUTIONS SHALL BE PERFORMED BY THE EMPLOYEE'S:

1) PERIODIC INSPECTIONS OF THE CATCH BASIN SEDIMENT TRAPS INCLUDING CLEANING WHEN THE TRAP IS MORE THAN HALF FULL. INSPECTIONS MUST BE DONE AFTER EVERY MAJOR RAINFALL, OR ONCE EVERY 6 MONTHS AS A MINIMUM. DISPOSAL OF ANY REMOVED GREASE OR OIL MUST BE DONE IN ACCORDANCE WITH CURRENT ENVIRONMENTAL REGULATIONS.

2) LITTER, DEBRIS, AND CHEMICALS MUST BE PICKED UP OR MOVED INDOORS PRIOR TO ANTICIPATED STORM EVENTS (FORECASTED BY LOCAL WEATHER REPORTS), OR OTHERWISE PREVENTED FROM BECOMING A POLLUTANT SOURCE FOR STORM WATER DISCHARGES.

3) PARKING AREAS MUST BE KEPT FREE FROM AUTOMOBILE FLUIDS (OIL, ANTIFREEZE, ETC.) SO THEY DO NOT WASH INTO STORM DRAIN SYSTEM. SPILLS MAY BE SOAKED UP WITH SAWDUST OR LIKE MATERIAL AND PROPERLY DISPOSED OF.

## SCOPE OF WORK:

PROVIDE, INSTALL AND/OR CONSTRUCT THE FOLLOWING PER THE SPECIFICATIONS GIVEN OR REFERENCED AND THE DETAILS NOTED AND AS SHOWN ON THE CONSTRUCTION DRAWINGS:

- INSTALL SEDIMENT BARRIER PER DETAIL C/C502. TYPICAL ALL STORM DRAIN BOXES (INLETS, C/O'S, DRAIN BASINS, ETC.)
- INSTALL TEMPORARY CONSTRUCTION ENTRANCE PER DETAIL A/C502.
- LIMITS OF DISTURBANCE, PROVIDE SILT FENCE PER DETAIL B/C502.

AVOID CUTTING UNDERGROUND UTILITIES. IT'S COSTLY.
Call BEFORE YOU Dig
1–800–662–4111

NOTICE!
THE CONTRACTOR SHALL BE RESPONSIBLE FOR THE LOCATION, PROTECTION, AND RESTORATION OF ALL BURIED OR ABOVE GROUND UTILITIES, SHOWN OR NOT SHOWN ON THE PLANS.

McNEIL GROUP
Designing for the Future Since 1983

**State of Utah**
Department of Administrative Services
Division of Facilities Construction & Management
4110 State Office Building
Salt Lake City, Utah 84114
Phone: (801) 538 - 3018
Fax: (801) 538 - 3267
http://dfcm.utah.gov

CREATED BY:

BUILDING NAME:
Utah State Development Center
870 North 860 East
American Fork, Uath

PROJECT TITLE:
Boiler Replacement/ Building Repairs

| MARK | DATE | DESCRIPTION |
|---|---|---|

ISSUE TYPE: REVIEW

ISSUE DATE: MAY 27, 2009

DFCM PROJECT NO: 08194410
CAD PROJECT NO: 290060.dwg
CAD DWG FILE: 290060.dwg
DRAWN BY: BE
CHK'D BY:RD/GWS
COPYRIGHT: STATE OF UTAH

SHEET TITLE
EROSION CONTROL PLAN

SHEET NUMBER
C202

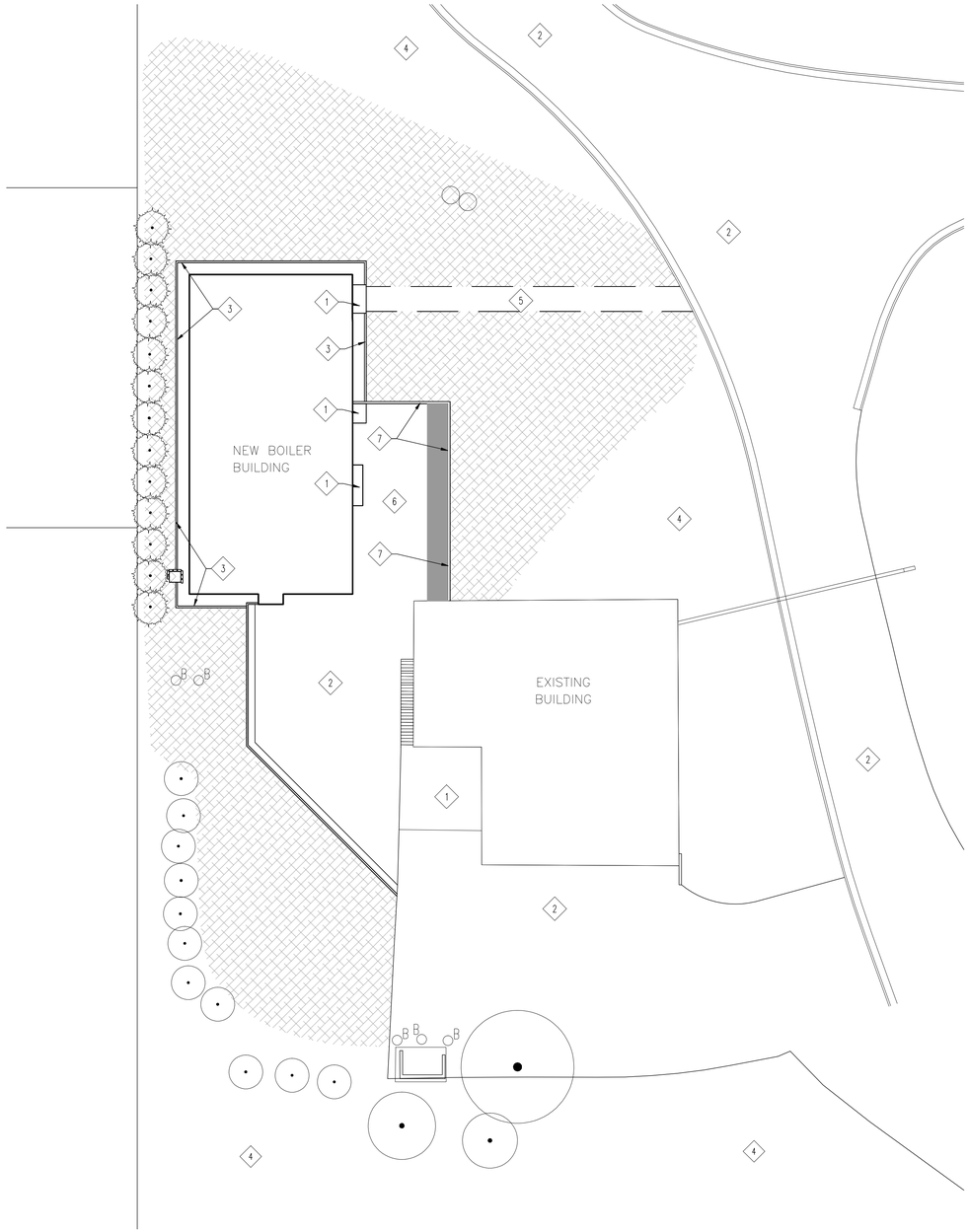


## PLANT_SCHEDULE

| TREES | QTY | BOTANICAL | COMMON | CONT | SIZE | DETAIL |
|---|---|---|---|---|---|---|
| | 16 | EXISTING TREE | | | | |
| | 15 | JUNIPERUS SCOPULORUM 'GREY GLEAM' | ROCKY MOUNTAIN JUNIPER | 15 GAL | 7' H | A/301 |

NATIVE SEED

| | |
|---|---|
| BROMUS MARGINATUS | MOUNTAIN BROME |
| PSEUDOROEGNERIA SPICATA | BLUE BUNCH WHEATGRASS |
| FESTUCA IDAHOENSIS | IDAHO FESCUE |
| POA AMPLA | BIG BLUEGRASS |
| PASCOPYRUM SMITHII | WESTERN WHEATGRASS |
| NASSELLA VIRIDULA | GREEN NEEDLEGRASS |
| ELYMUS LANCEOLATUS | THICKSPIKE WHEATGRASS |
| BOUTELOUA GRACILIS | BLUE GRAMA |

SEED PLANTING NOTE

SPREAD NATIVE SEED MIX AT 8.0 LBS PER 1000 SQ FT.

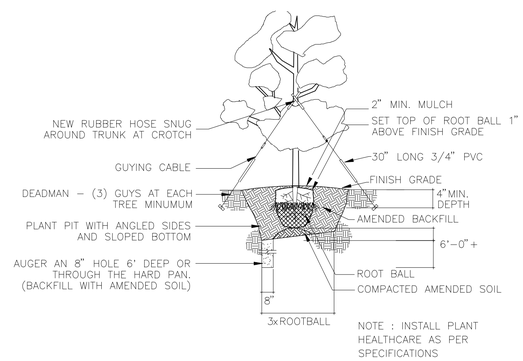


NOTE : INSTALL PLANT HEALTHCARE AS PER SPECIFICATIONS

A EVERGREEN TREE PLANTING
1/4" = 1'-0"

## PLANTING REFERENCE NOTES

1. CONCRETE PAVING
2. ASPHALT PARKING
3. CONCRETE MOWSTRIP
4. PROTECT EXISTING LANDSCAPE. IF DAMAGED, REPAIR LANDSCAPE AND IRRITATION SYSTEM BACK TO ORIGINAL CONDITION
5. GRAVEL PATH
6. GRAVEL PAVING
7. RETAINING WALL

## IRRIGATION NOTES

LANDSCAPE CONTRACTOR TO PROVIDE TEMPORARY IRRIGATION SYSTEM TO GERMINATE AND ESTABLISH NATIVE SEED AND NEW TREES FOR A PERIOD OF TWO YEARS. ALL NEW IRRIGATION HEADS MUST HAVE HEAD TO HEAD COVERAGE LANDSCAPE CONTRACTOR TO INSTALL IRRIGATION SYSTEM AND ITS COMPONENTS TO MEET LOCAL MUNICIPALITY AND/OR STATE REQUIREMENTS. A NEW 1-1/2" IRRIGATION STUB WILL BE PROVIDE FOR THE IRRIGATION SYSTEM. LANDSCAPE CONTRACTOR TO COORDINATE WITH GENERAL CONTRACTOR AND OWNER ON EXACT LOCATION OF P.O.C, BACKFLOW PREVENTOR, CONTROLLER AND POWER SUPPLIED TO THE CONTROLLER.

PLANTING & IRRIGATION PLAN

0 20 40 80
Scale in Feet Scale: 1" =20'

NORTH

AVOID CUTTING UNDERGROUND UTILITIES. IT'S COSTLY.
Call BEFORE YOU Dig
1-800-662-4111

NOTICE!
THE CONTRACTOR SHALL BE RESPONSIBLE FOR THE LOCATION, PROTECTION, AND RESTORATION OF ALL BURIED OR ABOVE GROUND UTILITIES, SHOWN OR NOT SHOWN ON THE PLANS.

McNEIL GROUP
Designing for the Future Since 1985

State of Utah
Department of Administrative Services
Division of Facilities Construction & Management
4110 State Office Building
Salt Lake City, Utah 84114
Phone: (801) 538 - 3018
Fax: (801) 538 - 3267
http://dfcm.utah.gov

CREATED BY:

BUILDING NAME:
Utah State Development Center
870 North 860 East
American Fork, Uath

PROJECT TITLE:
Boiler Replacement/ Building Repairs

| MARK | DATE | DESCRIPTION |
|---|---|---|

ISSUE TYPE: REVIEW

ISSUE DATE: MAY 27, 2009

DFCM PROJECT NO: 08194410
CAD PROJECT NO: 290060.dwg
CAD DWG FILE: 290060.dwg
DRAWN BY:BE
CHK'D BY:RD/GWS
COPYRIGHT: STATE OF UTAH

SHEET TITLE
PLANTING & IRRIGATION PLAN

SHEET NUMBER
C301

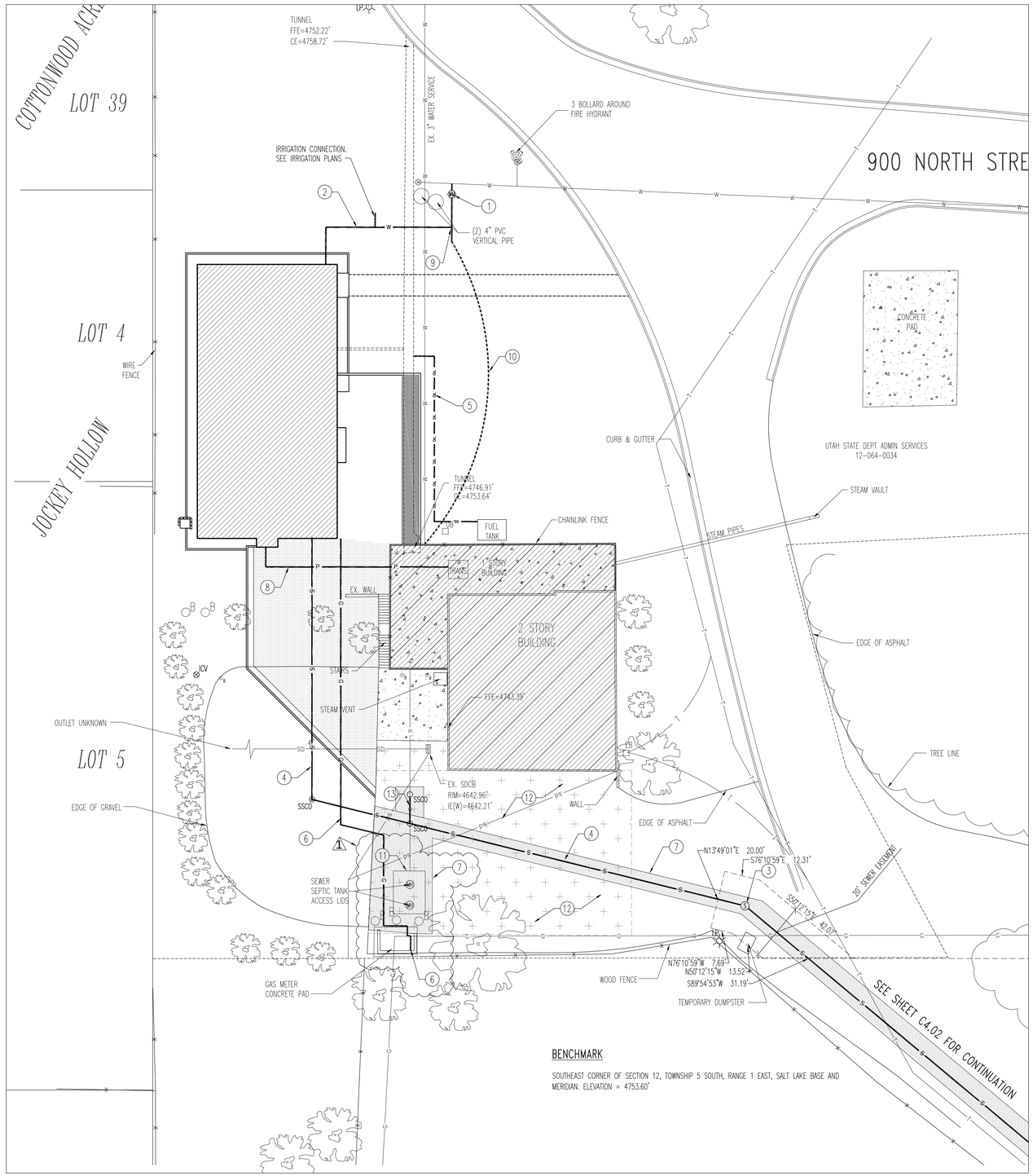


## BENCHMARK

SOUTHEAST CORNER OF SECTION 12, TOWNSHIP 5 SOUTH, RANGE 1 EAST, SALT LAKE BASE AND MERIDIAN. ELEVATION = 4753.60'

## UTILITIES

1. THE FOLLOWING UTILITIES ARE KNOWN TO BE LOCATED WITHIN THE LIMITS OF THIS PROJECT:

| COMPANY | CONTACT | PHONE |
|---|---|---|
| QWEST - TELEPHONE | DARREN KELLER | (801) 356 6975 |
| PACIFIC CORP - POWER | DENNIS PATTEN | (801) 756 1344 |
| COMCAST - CABLE | SHERYL PEARSON | (801) 401 3023 |
| QUESTAR GAS - GAS | STEVE ADAMS | (801) 324 3383 |
| AMERICAN FORK CITY - WATER | STEVE PARKER | (801) 763 3050 |
| AMERICAN FORK CITY - SEWER | AARON BREMS | (801) 404 6126 |
| AMERICAN FORK CITY - STORM | MARK CODDINGTON | (801) 404 6362 |
| AMERICAN FORK CITY - SWPPP | MARK CODDINGTON | (801) 404 6362 |
| AMERICAN FORK CITY - P.I. | JAY BREMS | (801) 404 6129 |

2. THE CONTRACTOR SHALL GIVE NOTICE OF INTENT TO CONSTRUCT TO BLUE STAKE (TELEPHONE NUMBER 800_662-4111) AT LEAST 2 WORKING DAYS BEFORE START OF CONSTRUCTION.

3. THE IDENTITY AND LOCATIONS OF EXISTING UNDERGROUND UTILITIES IN THE CONSTRUCTION AREA HAVE BEEN SHOWN ON THE APPROVED CONSTRUCTION DRAWINGS AS ACCURATELY AS PROVIDED BY THE OWNER OF THE UNDERGROUND UTILITY. THE CITY OF AMERICAN FORK AND THE CITY ENGINEER ASSUMES NO RESPONSIBILITY FOR THE ACCURACY OR DEPTHS OF UNDERGROUND FACILITIES SHOWN ON THE APPROVED CONSTRUCTION DRAWINGS. IF DAMAGE IS CAUSED, THE CONTRACTOR SHALL BE RESPONSIBLE FOR REPAIR OF THE SAME AND FOR ANY RESULTING CONTINGENT DAMAGE.

4. LOCATION, SUPPORT, PROTECTION AND RESTORATION OF ALL EXISTING UTILITIES AND APPURTENANCES, WHETHER SHOWN OR NOT SHOWN ON THE APPROVED CONSTRUCTION DRAWINGS, SHALL BE THE RESPONSIBILITY OF THE CONTRACTOR.

5. WHEN UNKNOWN OR INCORRECTLY LOCATED UNDERGROUND UTILITIES ARE ENCOUNTERED DURING CONSTRUCTION, THE CONTRACTOR SHALL IMMEDIATELY NOTIFY THE OWNER AND THE CITY ENGINEER.

## SANITARY SEWERS

1. SANITARY SEWAGE COLLECTION SYSTEMS SHALL BE CONSTRUCTED IN ACCORDANCE WITH THE RULES, REGULATIONS, STANDARDS AND SPECIFICATIONS OF THE CITY OF AMERICAN FORK, PUBLIC WORKS DEPARTMENT AND THE UTAH DEPARTMENT OF HEALTH CODE AND REGULATIONS.

2. THE MINIMUM REQUIREMENTS FOR SANITARY SEWER PIPE WITH DIAMETERS 15 INCHES AND SMALLER SHALL BE REINFORCED CONCRETE PIPE ASTM C76 CLASS 3, OR PVC SEWER PIPE ASTM D3034, SDR 35.

3. PIPE FOR 6-INCH DIAMETER HOUSE SERVICE LINES SHALL BE PVC PIPE ASTM D3034, SDR 35. PVC PIPE SHALL NOT BE USED AT DEPTHS GREATER THAN 28 FEET. PIPE MATERIALS AND RELATED STRUCTURES SHALL BE SHOP TESTED IN ACCORDANCE WITH CITY OF AMERICAN FORK CONSTRUCTION INSPECTION DIVISION QUALITY CONTROL REQUIREMENTS.

4. ALL MANHOLE LIDS SHALL BE PROVIDED WITH CONTINUOUS SELF_SEALING GASKETS.

5. THE APPROVED CONSTRUCTION DRAWINGS SHALL SHOW WHERE BOLT_DOWN LIDS ARE REQUIRED.

6. SANITARY SEWER MANHOLES SHALL BE PRECAST CONCRETE OR AS APPROVED BY THE CITY ENGINEER AND CONFORM TO THE CITY OF AMERICAN FORK SANITARY MANHOLE STANDARD DRAWING. MANHOLE LIDS SHALL INCLUDE THE WORD SEWER.

7. ALL PVC SEWER PIPES SHALL BE DEFLECTION TESTED NO LESS THAN 60 DAYS AFTER COMPLETION OF BACKFILLING OPERATIONS.

7. AT THE DETERMINATION OF THE CITY ENGINEER, THE CONTRACTOR MAY BE REQUIRED TO PERFORM A TV INSPECTION OF THE SANITARY SEWER SYSTEM PRIOR TO FINAL ACCEPTANCE BY THE CITY. THIS WORK SHALL BE COMPLETED BY THE CONTRACTOR AT HIS EXPENSE.

8. VISIBLE LEAKS OR OTHER DEFECTS OBSERVED OR DISCOVERED DURING TV INSPECTION SHALL BE REPAIRED TO THE SATISFACTION OF THE ENGINEER.

9. ROOF DRAINS, FOUNDATION DRAINS, FIELD TILE OR OTHER CLEAN WATER CONNECTIONS TO THE SANITARY SEWER SYSTEM ARE STRICTLY PROHIBITED ACCORDING TO THE AMERICAN FORK CODE OF ORDINANCES.

10. ALL WATER LINES SHALL BE LOCATED AT LEAST 10 FEET HORIZONTALLY AND 18 INCHES VERTICALLY, FROM SANITARY SEWERS AND STORM SEWERS, TO THE GREATEST EXTENT PRACTICABLE.

11. WHERE SANITARY SEWERS CROSS WATER MAINS OR OTHER SEWERS OR OTHER UTILITIES, TRENCH BACKFILL SHALL BE PLACED BETWEEN THE PIPES CROSSING AND SHALL BE COMPACTED GRANULAR MATERIAL ACCORDING TO THE CITY STANDARD SPECIFICATIONS. IN THE EVENT THAT A WATER LINE MUST CROSS WITHIN 18 INCHES OF A SANITARY SEWER, THE SANITARY SEWER SHALL BE CONCRETE ENCASED OR CONSIST OF DUCTILE IRON PIPE MATERIAL.

12. EXISTING SANITARY SEWER FLOWS SHALL BE MAINTAINED AT ALL TIMES. COSTS FOR PUMPING AND BYPASSING SHALL BE INCLUDED IN THE CONTRACTOR'S UNIT PRICE BID FOR THE RELATED ITEMS.

13. THE CONTRACTOR SHALL FURNISH ALL MATERIAL, EQUIPMENT, AND LABOR TO MAKE CONNECTIONS TO EXISTING MANHOLES.

14. ALL SEWER LINES SHALL BE PLACED AT A MINIMUM DEPTH OF 4 FEET MEASURED FROM TOP OF FINISHED GRADE TO TOP OF SEWER LINE.

## SEWER EASEMENT DESCRIPTION

AN EASEMENT FOR THE PURPOSE OF THE INSTALATION, REPAIR, & MAINTAINENCE OF A SANITARY SEWER MANHOLE, SAID EASEMENT BEING DESCRIBED MORE PARTICULARLY AS FOLLOWS:

BEGINNING AT A POINT ON THE NORTHERLY LINE OF THE AMERICAN FORK CITY PARCEL, SAID POINT BEING NORTH 00°01'16" EAST ALONG THE SECTION LINE 659.20 FEET, MORE OR LESS, AND WEST 1083.96 FEET, MORE OR LESS, FROM THE SOUTHEAST CORNER OF SECTION 12, TOWNSHIP 5 SOUTH, RANGE 1 EAST, SALT LAKE BASE AND MERIDIAN, AND RUNNING THENCE SOUTH 89°54'53" WEST ALONG SAID NORTHERLY LINE 31.19 FEET; THENCE NORTH 50°12'15" WEST 13.52 FEET; THENCE NORTH 76°10'59" WEST 7.69 FEET; THENCE NORTH 13°49'01" EAST 20.00 FEET; THENCE SOUTH 76°10'59" EAST 12.31 FEET; THENCE SOUTH 50°12'15" EAST 42.07 FEET TO THE POINT OF BEGINNING

AVOID CUTTING UNDERGROUND UTILITIES. IT'S COSTLY.
**Call** BEFORE YOU **Dig**
1-800-662-4111

NOTICE!
THE CONTRACTOR SHALL BE RESPONSIBLE FOR THE LOCATION, PROTECTION, AND RESTORATION OF ALL BURIED OR ABOVE GROUND UTILITIES, SHOWN OR NOT SHOWN ON THE PLANS.

NORTH

SCALE: 1" = 20'

0 10 20 30 40 60 80 100

## GENERAL NOTES:

CONTRACTOR IS TO COORDINATE ALL UTILITIES WITH MECHANICAL DRAWINGS.

ALL NEW WATER CONSTRUCTION TO BE DONE IN ACCORDANCE WITH LOCAL GOVERNING MUNICIPALITY STANDARDS & SPECIFICATIONS.

ALL NEW SANITARY SEWER CONSTRUCTION TO BE DONE IN ACCORDANCE WITH LOCAL GOVERNING MUNICIPALITY STANDARDS & SPECIFICATIONS.

CONTRACTOR IS TO COORDINATE LOCATIONS OF NEW TELEPHONE SERVICE TO BUILDING WITH QWEST. A PVC CONDUIT, PLYWOOD BACKBOARD, AND GROUND WIRE IS REQUIRED FOR SERVICE THROUGH PROPERTY, COORDINATE SIZES AND LOCATION WITH QWEST.

CONTRACTOR IS TO SUBMIT SITE PLAN TO QUESTAR GAS FOR DESIGN OF GAS LINE SERVICE TO BUILDING. CONTRACTOR TO COORDINATE WITH QUESTAR GAS FOR CONTRACTOR LIMITS OF WORK VERSES QUESTAR GAS LIMITS.

LOCATION OF ALL UNDERGROUND UTILITIES SHOWN ARE APPROXIMATE LOCATIONS. CONTRACTOR IS TO VERIFY CONNECTION POINTS WITH EXISTING UTILITIES. CONTRACTOR IS RESPONSIBLE FOR ANY DAMAGE CAUSED TO EXISTING UTILITIES AND UTILITY STRUCTURE THAT ARE TO REMAIN.

## KEYED NOTES:

PROVIDE, INSTALL AND/OR CONSTRUCT THE FOLLOWING PER THE SPECIFICATIONS GIVEN OR REFERENCED AND THE DETAILS NOTED AND AS SHOWN ON THE CONSTRUCTION DRAWINGS:

1. 2" WATER SERVICE METER SET PER AMERICAN FORK CITY STANDARD DETAIL 15.5, SHEET C503.
2. 2" TYPE 'K' COPPER WATER SERVICE LINE. CONNECT TO EXISTING WATER MAIN PER AMERICAN FORK CITY STANDARD DETAIL 15.3, SHEET C503.
3. 4' DIAMETER SANITARY SEWER MANHOLE PER AMERICAN FORK CITY STANDARD DETAIL 15.13, SHEET C503.
4. 6" PVC SDR-35 SANITARY SEWER LATERAL, INCLUDING NEW CLEANOUTS AT 100-FOOT MAXIMUM SPACING. SEE AMERICAN FORK CITY STANDARD DETAIL 15.22, SHEET C5.03 FOR TRENCHING. SEE AMERICAN FORK CITY STANDARD DETAIL 15.5, SHEET C503 FOR CLEANOUTS.
5. (2) 2" DOUBLE WALL STEEL OIL PIPELINES. SEE MECHANICAL PLANS FOR PIPE SPECIFICATIONS AND INSTALLATION DETAILS.
6. NATURAL GAS LINE PIPING FROM NEW METER CONNECTION TO NEW BOILER PLANT. GAS LINE CONNECTION SEE MECHANICAL DRAWING SHEET ME505. CONTRACTOR TO COORDINATE SIZE, DESIGN, AND INSTALLATION WITH QUESTAR GAS.
7. SAWCUT EXISTING ASPHALT, REMOVE AND LEGALLY DISPOSE OF. PATCH WITH NEW ASPHALT MATCHING EXISTING THICKNESSES.
8. POWER LINE. COORDINATE WITH ELECTRICAL PLANS FOR SIZE, TYPE AND CONNECTIONS ALONG WITH CROSSING ROOF OF EXISTING BUILDING.
9. 2" TEE & MEULLER STOP & WASTE, 2" TYPE 'K' COPPER WATER SERVICE STUB TO GROUND SURFACE TO ALLOW FOR CONNECTION OF TEMPORARY 2" POLY WATER BYPASS LINE.
10. 2" POLY WATER BYPASS LINE (TEMPORARY). CONTRACTOR TO COORDINATE CONSTRUCTION, BUILDING CONNECTION, AND REMOVAL WITH OWNER.
11. EXISTING SEPTIC SEWER TANK TO BE REMOVED AND LEGALLY DISPOSED OF.
12. CONTRACTOR TO LOCATE EXISTING STORM DRAIN AND UTILITY LINES AND PROTECT DURING CONSTRUCTION OF NEW SEWER LINE. ANY DAMAGE TO EXISTING LINES IS TO BE REPAIRED AT CONTRACTOR'S EXPENSE.
13. CONNECT EXISTING SEWER STUB TO PROPOSED 6" SEWER STUB WITH 15' SECTION OF 6" PVC SDR-35 AS SHOWN. SEE AMERICAN FORK CITY STANDARD DETAIL 15.22, SHEET C5.03 FOR TRENCHING. SEE AMERICAN FORK CITY STANDARD DETAIL 15.5, SHEET C503 FOR CLEANOUTS. REMOVE AND LEGALLY DISPOSE OF PORTION OF EXISTING STUB SOUTH OF CONNECTION.


McNEIL GROUP
Designing for the Future Since 1983
6895 SOUTH 900 EAST MIDVALE, UTAH 84047
TEL: (801) 255-7700 FAX (801) 255-8071
E-MAIL info@mcneilbrg.com WEB SITE AT www.mcneilgroup.com



State of Utah
Department of Administrative Services
Division of Facilities Construction & Management
4110 State Office Building
Salt Lake City, Utah 84114
Phone: (801) 538 - 3018
Fax: (801) 538 - 3267
http://dfcm.utah.gov


CREATED BY:

BUILDING NAME:

Utah State Development Center
870 North 860 East
American Fork, Uath

PROJECT TITLE:

Boiler Replacement/ Building Repairs

| MARK | DATE | DESCRIPTION |
|---|---|---|
| 1 | 05/14/09 | STATE COMMENTS |

ISSUE TYPE: REVIEW

ISSUE DATE: MAY 27, 2009

DFCM PROJECT NO: 08194410
CAD PROJECT NO: 290060
CAD DWG FILE: 290060-SWR
DRAWN BY: KAP
CHK'D BY: CHECKED
COPYRIGHT: STATE OF UTAH

SHEET TITLE

SITE UTILITY PLAN

SHEET NUMBER

C 401



S:\2009Files\290060\CIVIL\Prod Dwg\290060-Swr.dwg Jun 18, 2009 - 2:17pm

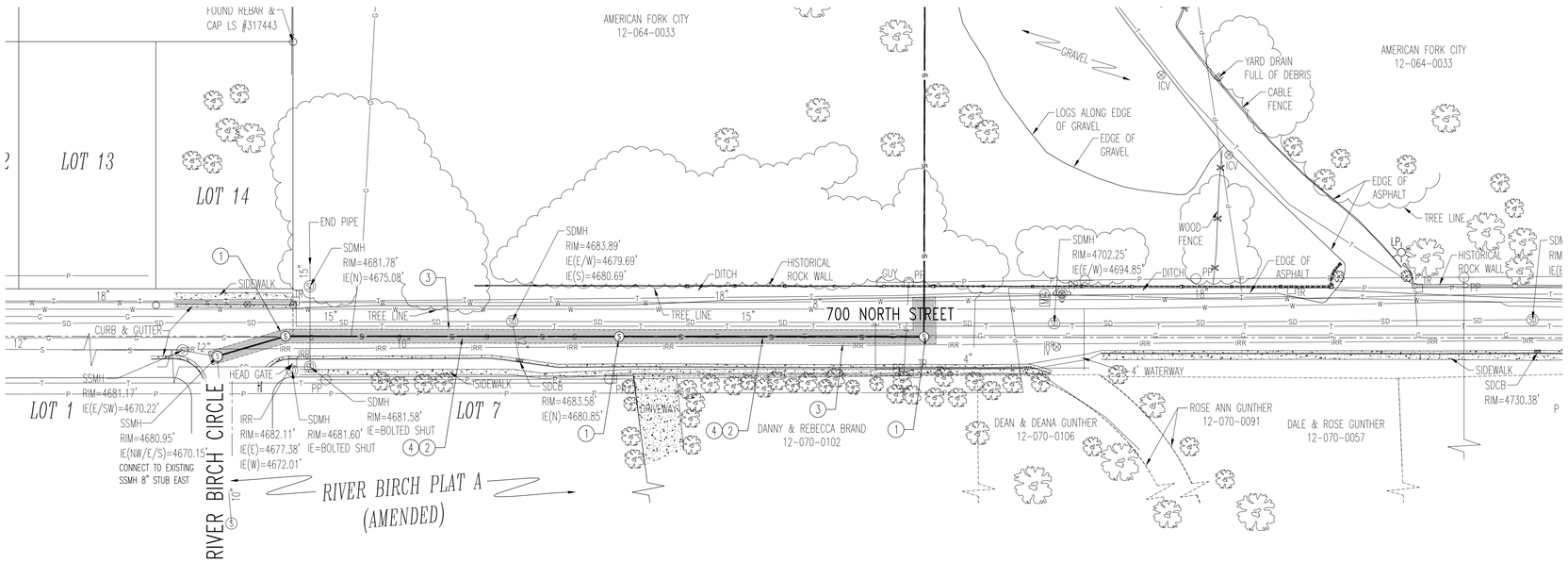


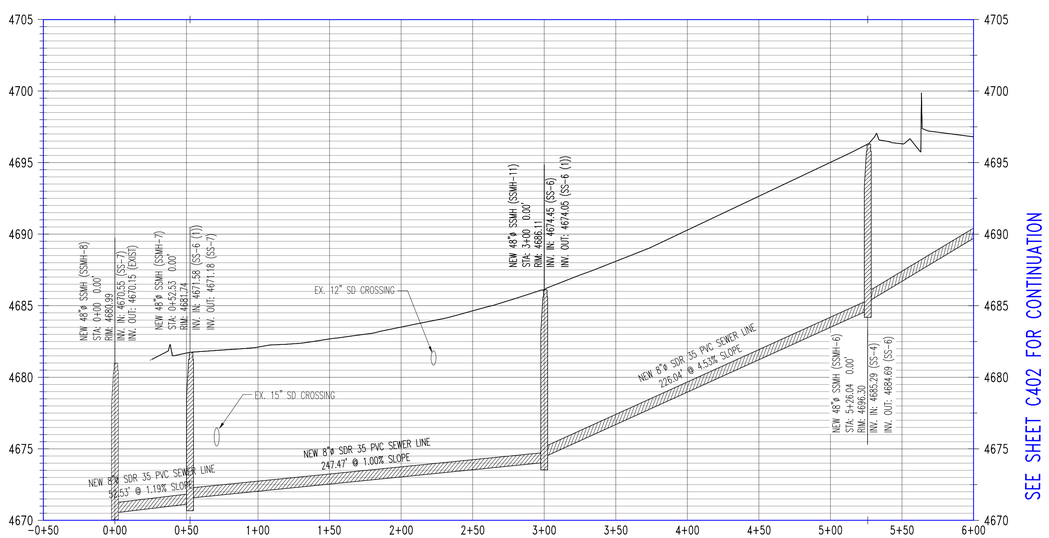


SEE SHEET C402 FOR CONTINUATION

NORTH

SCALE: 1" = 50

0 25 50 75 100 150 200 250

**GENERAL NOTES:**

ALL NEW SANITARY SEWER CONSTRUCTION TO BE DONE IN ACCORDANCE WITH AMERICAN FORK CITY STANDARDS & SPECIFICATIONS.

LOCATION OF ALL UNDERGROUND UTILITIES SHOWN ARE APPROXIMATE LOCATIONS. CONTRACTOR IS TO VERIFY CONNECTION POINTS WITH EXISTING UTILITIES. CONTRACTOR IS RESPONSIBLE FOR ANY DAMAGE CAUSED TO EXISTING UTILITIES AND UTILITY STRUCTURE THAT ARE TO REMAIN.

**KEYED NOTES:**

PROVIDE, INSTALL AND/OR CONSTRUCT THE FOLLOWING PER THE SPECIFICATIONS GIVEN OR REFERENCED AND THE DETAILS NOTED AND AS SHOWN ON THE CONSTRUCTION DRAWINGS:

1. 4' DIAMETER SANITARY SEWER MANHOLE PER AMERICAN FORK CITY STANDARD DETAIL 15.13, SHEET C5.03.
2. 8" PVC SDR-35 SANITARY SEWER LINE, INCLUDING ALL FITTINGS. SEE AMERICAN FORK CITY STANDARD DETAIL 15.22, SHEET C5.03 FOR TRENCHING.
3. SAWCUT EXISTING ASPHALT, REMOVE EXISTING ASPHALT AND LEGALLY DISPOSE OF. PATCH PER APWA STANDARD PLAN 255.
4. RELOCATE EXISTING 4" NATURAL GAS LINE BY QUESTAR GAS. CONTRACTOR TO COORDINATE ALL WORK WITH QUESTAR GAS.

AVOID CUTTING UNDERGROUND UTILITIES. IT'S COSTLY.
Call BEFORE YOU Dig
1-800-662-4111

NOTICE!
THE CONTRACTOR SHALL BE RESPONSIBLE FOR THE LOCATION, PROTECTION, AND RESTORATION OF ALL BURIED OR ABOVE GROUND UTILITIES, SHOWN OR NOT SHOWN ON THE PLANS.

McNEIL GROUP
Designing for the Future Since 1983
6895 SOUTH 900 EAST MIDVALE, UTAH 84047
TEL.(801) 255-7700 FAX.(801) 255-8071
E-MAIL info@mcneilengg.com WEB SITE AT www.mcneil-group.com

State of Utah
Department of Administrative Services
Division of Facilities Construction & Management
4110 State Office Building
Salt Lake City, Utah 84114
Phone: (801) 538 - 3018
Fax: (801) 538 - 3267
http://dfcm.utah.gov

CREATED BY:

BUILDING NAME:
Utah State Development Center
870 North 860 East
American Fork, Uath

PROJECT TITLE:
Boiler Replacement/ Building Repairs

| MARK | DATE | DESCRIPTION |
|---|---|---|
| 1 | 05/14/09 | STATE COMMENTS |

ISSUE TYPE: REVIEW

ISSUE DATE: MAY 27, 2009

DFCM PROJECT NO: 08194410
CAD PROJECT NO: 290060
CAD DWG FILE: 290060-SWR
DRAWN BY: KAP
CHK'D BY: CHECKED
COPYRIGHT: STATE OF UTAH

SHEET TITLE
SANITARY SEWER PLAN & PROFILE

SHEET NUMBER
C 402



S:\2009Files\290060\CIVIL\Prod Dwg\290060-Sewr.dwg Jun 18, 2009 - 2:18pm

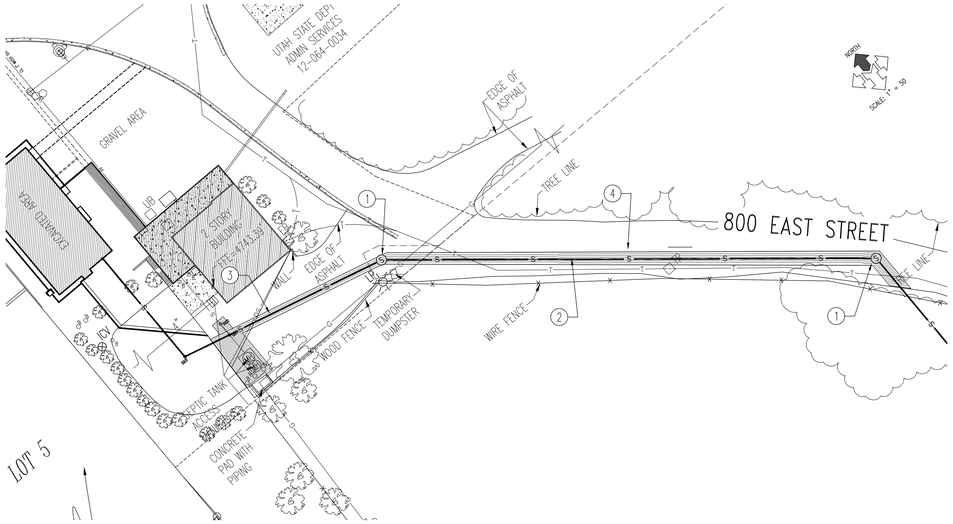


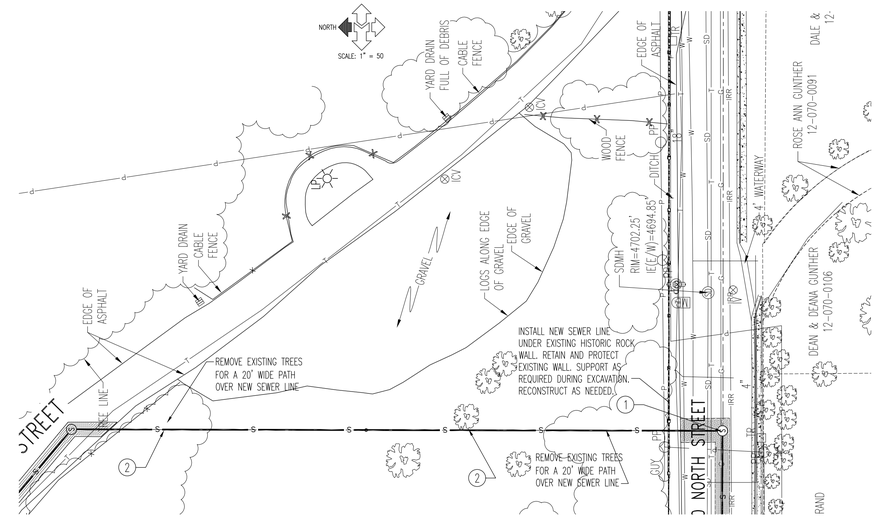


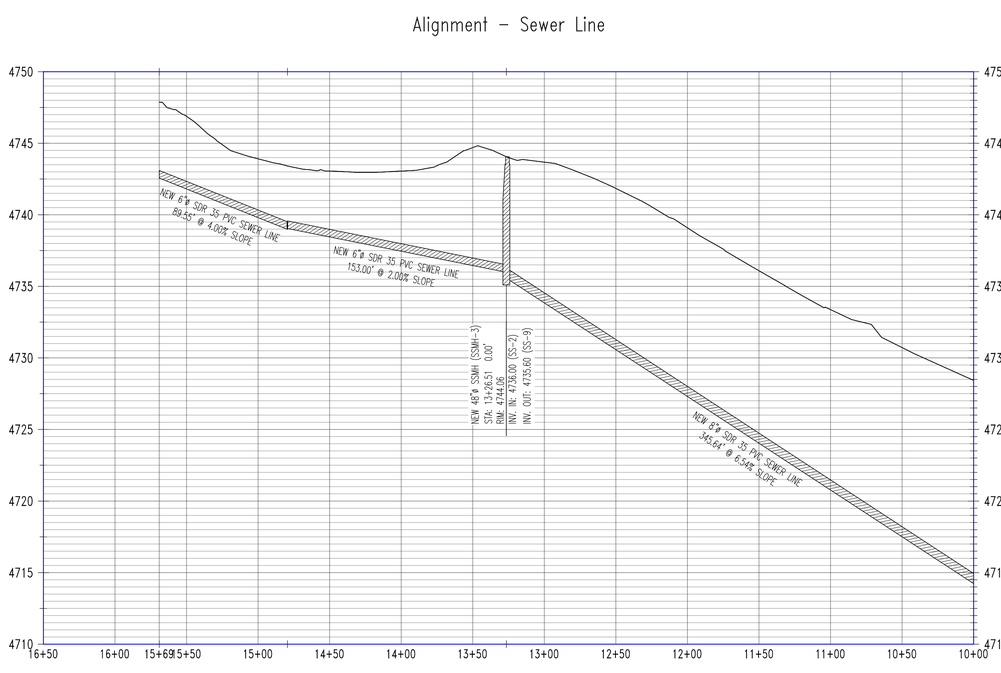


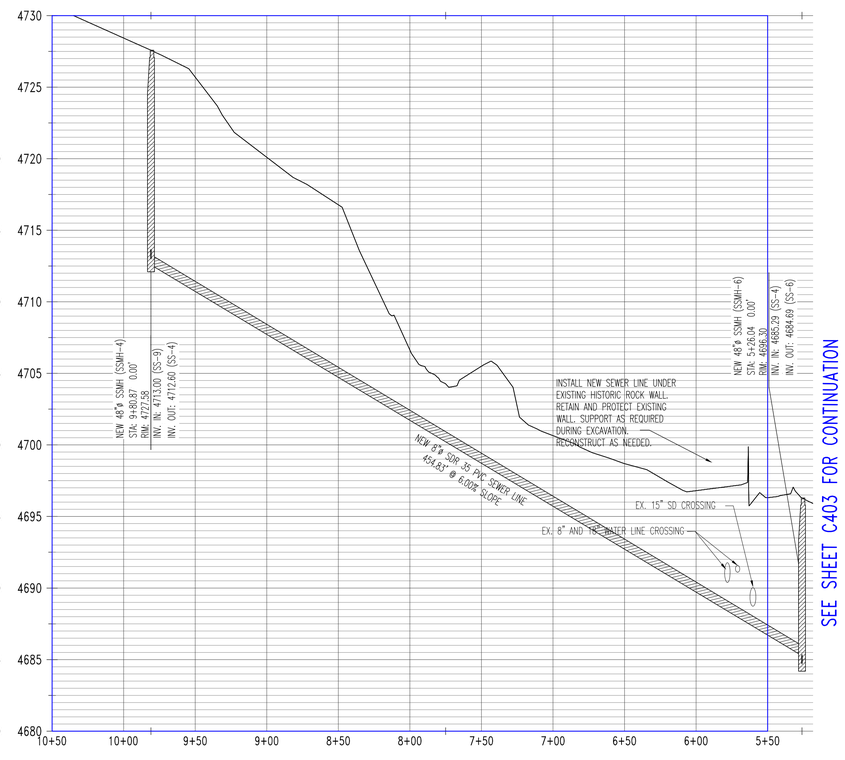


SEE SHEET C403 FOR CONTINUATION

GENERAL NOTES:

ALL NEW SANITARY SEWER CONSTRUCTION TO BE DONE IN ACCORDANCE WITH AMERICAN FORK CITY STANDARDS & SPECIFICATIONS.

LOCATION OF ALL UNDERGROUND UTILITIES SHOWN ARE APPROXIMATE LOCATIONS. CONTRACTOR IS TO VERIFY CONNECTION POINTS WITH EXISTING UTILITIES. CONTRACTOR IS RESPONSIBLE FOR ANY DAMAGE CAUSED TO EXISTING UTILITIES AND UTILITY STRUCTURE THAT ARE TO REMAIN.

KEYED NOTES:

PROVIDE, INSTALL AND/OR CONSTRUCT THE FOLLOWING PER THE SPECIFICATIONS GIVEN OR REFERENCED AND THE DETAILS NOTED AND AS SHOWN ON THE CONSTRUCTION DRAWINGS:

1. 4' DIAMETER SANITARY SEWER MANHOLE PER AMERICAN FORK CITY STANDARD DETAIL 15.13, SHEET C503.
2. 8" PVC SDR-35 SANITARY SEWER LINE, INCLUDING ALL FITTINGS. SEE AMERICAN FORK CITY STANDARD DETAIL 15.22, SHEET C503 FOR TRENCHING.
3. 6" PVC SDR-35 SANITARY SEWER LATERAL, INCLUDING NEW CLEANOUTS AT 100-FOOT MAXIMUM SPACING. SEE AMERICAN FORK CITY STANDARD DETAIL 15.22, SHEET C503 FOR TRENCHING. SEE AMERICAN FORK CITY STANDARD DETAIL 15.15, SHEET C503 FOR CLEANOUTS.
4. SAWCUT EXISTING ASPHALT, REMOVE EXISTING ASPHALT AND LEGALLY DISPOSE OF. PATCH PER APWA STANDARD PLAN 255.

AVOID CUTTING UNDERGROUND UTILITIES. IT'S COSTLY.
Call BEFORE YOU Dig
1-800-662-4111

NOTICE!
THE CONTRACTOR SHALL BE RESPONSIBLE FOR THE LOCATION, PROTECTION, AND RESTORATION OF ALL BURIED OR ABOVE GROUND UTILITIES, SHOWN OR NOT SHOWN ON THE PLANS.

McNEIL GROUP
Designing for the Future Since 1983
6895 SOUTH 900 EAST MIDVALE, UTAH 84047
TEL: (801) 255-7700 FAX: (801) 255-8071
E-MAIL: info@mcneilengg.com WEB SITE AT www.mcneil-group.com

State of Utah
Department of Administrative Services
Division of Facilities Construction & Management
4110 State Office Building
Salt Lake City, Utah 84114
Phone: (801) 538 - 3018
Fax: (801) 538 - 3267
http://dfcm.utah.gov

CREATED BY:

BUILDING NAME:
Utah State Development Center
870 North 860 East
American Fork, Uath

PROJECT TITLE:
Boiler Replacement/ Building Repairs

| MARK | DATE | DESCRIPTION |
|---|---|---|
| 1 | 05/14/09 | STATE COMMENTS |

ISSUE TYPE: REVIEW

ISSUE DATE: MAY 27, 2009

DFCM PROJECT NO: 08194410
CAD PROJECT NO: 290060
CAD DWG FILE: 290060-SWR
DRAWN BY: KAP
CHK'D BY: CHECKED
COPYRIGHT: STATE OF UTAH

SHEET TITLE
SANITARY SEWER PLAN & PROFILE

SHEET NUMBER
C 403



S:\2009Files\290060\CIVIL\Prod Dwg\290060-Swr.dwg Jun 18, 2009 - 2:17pm

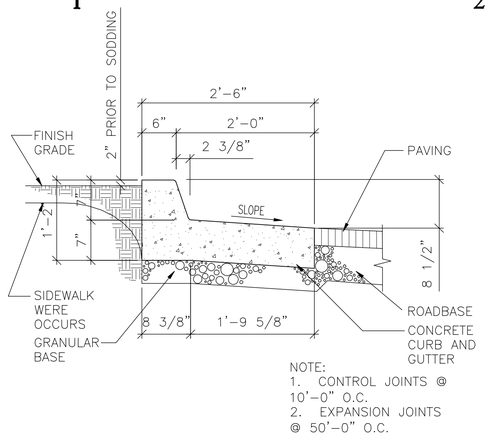


## RELEASE CURB AND GUTTER (A)

SCALE: 1" = 1'-0"

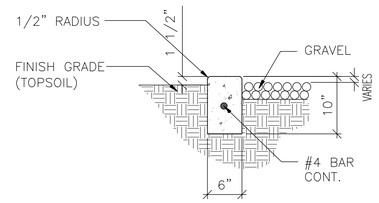


## CURB/MOWSTRIP DETAIL (B)

SCALE: 1" = 1'-0"

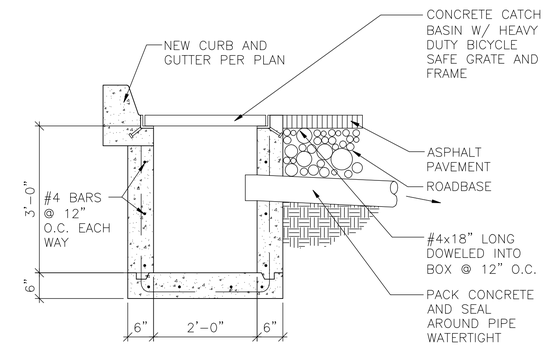


## CATCH BASIN DETAIL (C)

SCALE: 3/4" = 1'-0"

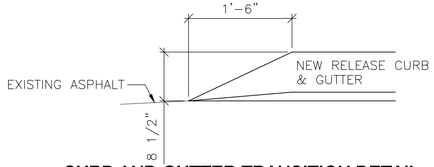


## CURB AND GUTTER TRANSITION DETAIL (D)

SCALE: 1" = 1'-0"

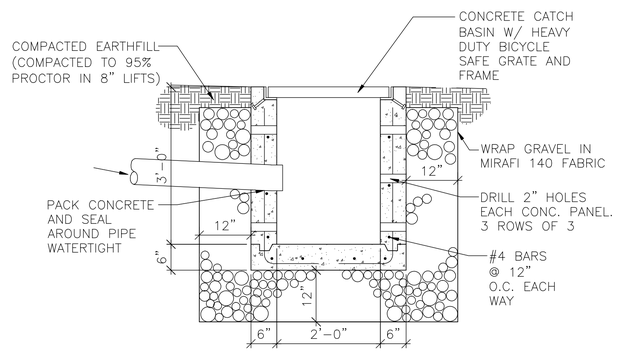


## SUMP / BUBBLE UP BOX DETAIL (E)

SCALE: 3/4" = 1'-0"

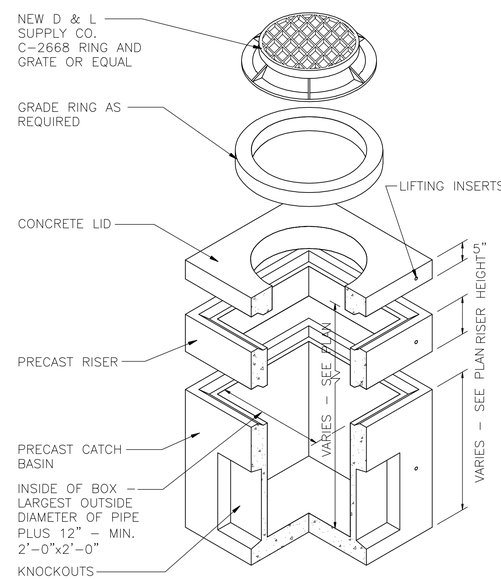


NOTES:
1. CATCH BASINS SHALL BE DESIGNED TO MEET ASTM C858 WITH AASHTO HS-20 LOADING.
2. PIPE OPENINGS TO BE SIZED AND LOCATED AS REQUIRED.
3. DURACRETE, OR EQUAL.

## STD CATCH BASIN (F)

SCALE: N.T.S.

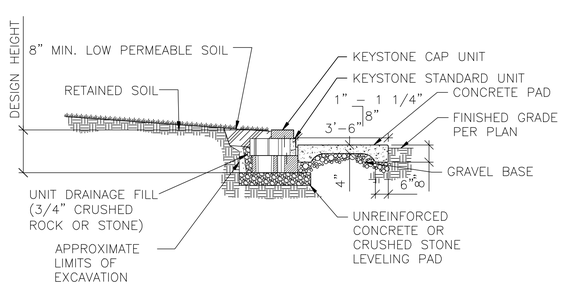


## SECTION A/C PAD (G)

SCALE: 3/8" = 1'-0"

AVOID CUTTING UNDERGROUND UTILITIES. IT'S COSTLY.
Call BEFORE YOU Dig
1-800-662-4111

NOTICE!
THE CONTRACTOR SHALL BE RESPONSIBLE FOR THE LOCATION, PROTECTION, AND RESTORATION OF ALL BURIED OR ABOVE GROUND UTILITIES, SHOWN OR NOT SHOWN ON THE PLANS.

McNEIL GROUP
Designing for the Future Since 1983


State of Utah
Department of Administrative Services
Division of Facilities Construction & Management
4110 State Office Building
Salt Lake City, Utah 84114
Phone: (801) 538 - 3018
Fax: (801) 538 - 3267
http://dfcm.utah.gov


CREATED BY:

BUILDING NAME:
Utah State Development Center
870 North 860 East
American Fork, Uath

PROJECT TITLE:
Boiler Replacement/ Building Repairs

| MARK | DATE | DESCRIPTION |
|---|---|---|

ISSUE TYPE: REVIEW

ISSUE DATE: MAY 27, 2009

DFCM PROJECT NO: 08194410
CAD PROJECT NO:290060.dwg
CAD DWG FILE:290060.dwg
DRAWN BY:BE
CHK'D BY:RD/GWS
COPYRIGHT: STATE OF UTAH

SHEET TITLE
SITE DETAILS

SHEET NUMBER
C501

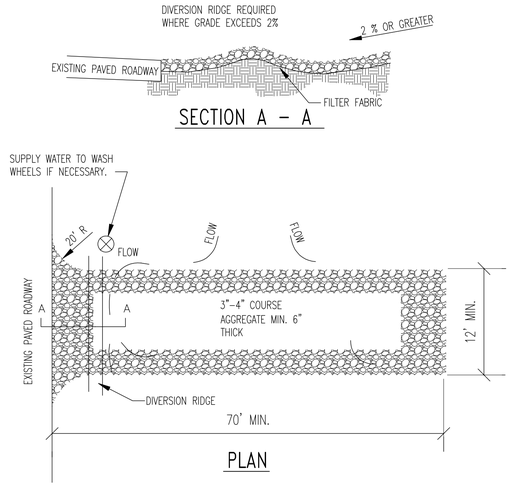


NOTES:
1. THE ENTRANCE SHALL BE MAINTAINED IN A CONDITION THAT WILL PREVENT TRACKING OR FLOWING OF SEDIMENT ONTO PUBLIC RIGHTS- OF-WAY. THIS MAY REQUIRE TOP DRESSING, REPAIR AND/OR CLEANOUT OF ANY MEASURES USED TO TRAP SEDIMENT.
2. WHEN NECESSARY, WHEELS SHALL BE CLEANED PRIOR TO ENTRANCE ONTO PUBLIC RIGHT-OF-WAY.
3. WASHING IS REQUIRED, IT SHALL BE DONE ON AN AREA STABILIZED WITH CRUSHED STONE THAT DRAINS INTO AN APPROVED SEDIMENT TRAP OR SEDIMENT BASIN.

## TEMP. GRAVEL CONST. ENTRANCE / EXIT (A)

SCALE: N.T.S.

TEMPORARY GRAVEL CONSTRUCTION ENTRANCE/EXIT

CONSTRUCTION SPECIFICATIONS:
THE AGGREGATE SIZE FOR CONSTRUCTION OF THE PAD SHALL BE 2-TO 3- INCH STONE. PLACE THE GRAVEL TO THE SPECIFIC GRADE AND DIMENSIONS SHOWN ON THE PLANS, AND SMOOTH IT. THE THICKNESS OF THE PAD SHALL NOT BE LESS THAN 6 INCHES. USE GEOTEXTILE FABRICS, IF NECESSARY, TO IMPROVE STABILITY OF THE FOUNDATION IN LOCATIONS SUBJECT TO SEEPAGE OR HIGH WATER TABLE. THE WIDTH OF THE PAD SHALL NOT BE LESS THAN THE FULL WIDTH OF ALL POINTS OF INGRESS OR EGRESS AND IN ANY CASE SHALL NOT BE LESS THAN 12 FEET WIDE. THE LENGTH OF THE PAD SHALL BE AS REQUIRED, BUT NOT LESS THAN 50.

LOCATE CONSTRUCTION ENTRANCES AND EXITS TO LIMIT SEDIMENT LEAVING THE SITE AND TO PROVIDE FOR MAXIMUM UTILITY BY ALL CONSTRUCTION VEHICLES. AVOID ENTRANCES WHICH HAVE STEEP GRADES AND ENTRANCES AT CURVES IN PUBLIC ROADS. THE ENTRANCE SHALL BE MAINTAINED IN A CONDITION THAT WILL PREVENT TRACKING OR FLOWING OF SEDIMENT ONTO PUBLIC RIGHTS OF WAY. THIS MAY REQUIRE PERIODIC TOP DRESSING WITH ADDITIONAL STONE AS CONDITIONS DEMAND, AND REPAIR AND/OR CLEANOUT OF ANY MEASURES USED TO TRAP SEDIMENT. ALL SEDIMENT SPILLED, DROPPED, WASHED OR TRACKED ONTO PUBLIC RIGHTS-OF-WAY SHALL BE REMOVED IMMEDIATELY. PROVIDE DRAINAGE TO CARRY WATER TO A SEDIMENT TRAP OR OTHER SUITABLE OUTLET. WHEN NECESSARY, WHEELS SHALL BE CLEANED TO REMOVE SEDIMENT PRIOR TO ENTRANCE ONTO PUBLIC RIGHTS-OF-WAY. WHEN WASHING IS REQUIRED, IT SHALL BE DONE ON AN AREA STABILIZED WITH CRUSHED STONE THAT DRAINS INTO AN APPROVED SEDIMENT TRAP OR SEDIMENT BASIN. ALL SEDIMENT SHALL BE PREVENTED FROM ENTERING ANY STORM DRAIN, DITCH OR WATERCOURSE THROUGH USE OF SAND BAGS, GRAVEL, STRAW BALES, OR OTHER APPROVED METHODS.

MAINTENANCE:
MAINTAIN THE GRAVEL PAD IN A CONDITION TO PREVENT MUD OR SEDIMENT FROM LEAVING THE CONSTRUCTION SITE. REPLACE GRAVEL MATERIAL WHEN SURFACE VOIDS ARE VISIBLE. AFTER EACH RAINFALL, INSPECT ANY STRUCTURE USED TO TRAP SEDIMENT AND CLEAN IT OUT AS NECESSARY. IMMEDIATELY REMOVE ALL OBJECTIONABLE MATERIALS SPILLED, WASHED, OR TRACKED ONTO PUBLIC ROADWAYS. REMOVE ALL SEDIMENT DEPOSITED ON PAVED ROADWAYS WITHIN 24 HOURS.

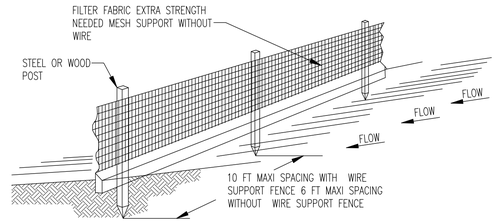


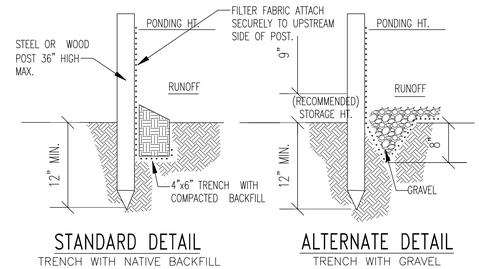


NOTE:
1. INSPECT AND REPAIR FENCE AFTER EACH STORM EVENT AND REMOVE SEDIMENT WHEN NECESSARY.
2. REMOVED SEDIMENT SHALL BE DEPOSITED TO AN AREA THAT WILL NOT CONTRIBUTE SEDIMENT OFF-SITE AND CAN BE PERMANENTLY STABILIZED.
3. SILT FENCE SHALL BE PLACED ON SLOPE CONTOURS TO MAXIMIZE PONDING EFFICIENCY.

## SILT FENCE (B)

SCALE: N.T.S.

SILT FENCE

CONSTRUCTION SPECIFICATIONS:
THE HEIGHT OF A SILT FENCE SHALL NOT EXCEED 36 INCHES. STORAGE HEIGHT SHALL NEVER EXCEED 18". THE FENCE LINE SHALL FOLLOW THE CONTOUR AS CLOSELY AS POSSIBLE. IF POSSIBLE, THE FILTER FABRIC SHALL BE CUT FROM A CONTINUOUS ROLL TO AVOID THE USE OF JOINTS. WHEN JOINTS ARE NECESSARY, FILTER CLOTH SHALL BE SPLICED ONLY AT A SUPPORT POST, WITH A MINIMUM 6-INCH OVERLAP AND BOTH ENDS SECURELY FASTENED TO THE POST.

POSTS SHALL BE SPACED A MAXIMUM OF 10 FEET APART AND DRIVEN SECURELY INTO THE GROUND (MINIMUM OF 12 INCHES). WHEN EXTRA STRENGTH FABRIC IS USED WITHOUT THE WIRE SUPPORT FENCE, POST SPACING SHALL NOT EXCEED 6 FEET. TURN THE ENDS OF THE FENCE UPHILL.

A TRENCH SHALL BE EXCAVATED APPROXIMATELY 4 INCHES WIDE AND 6 INCHES DEEP ALONG THE LINE OF POSTS AND UPSLOPE FROM THE BARRIER.

WHEN STANDARD-STRENGTH FILTER FABRIC IS USED, A WIRE MESH SUPPORT FENCE SHALL BE FASTENED SECURELY TO THE UPSLOPE SIDE OF THE POSTS USING HEAVY DUTY WIRE STAPLES AT LEAST 1 INCH LONG, TIE WIRES OR HOG RINGS. THE WIRE SHALL EXTEND INTO THE TRENCH A MINIMUM OF 2 INCHES AND SHALL NOT EXTEND MORE THAN 36 INCHES ABOVE THE ORIGINAL GROUND SURFACE.

THE STANDARD-STRENGTH FILTER FABRIC SHALL BE STAPLED OR WIRED TO THE FENCE, AND 6 INCHES OF THE FABRIC SHALL EXTEND INTO THE TRENCH. THE FABRIC SHALL NOT EXTEND MORE THAN 36 INCHES ABOVE THE ORIGINAL GROUND SURFACE. FILTER FABRIC SHALL NOT BE STAPLED TO EXISTING TREES.

WHEN EXTRA-STRENGTH FILTER FABRIC AND CLOSER POST SPACING ARE USED, THE WIRE MESH SUPPORT FENCE MAY BE ELIMINATED. IN SUCH A CASE, THE FILTER FABRIC IS STAPLED OR WIRED DIRECTLY TO THE POSTS.

THE TRENCH SHALL BE BACKFILLED AND THE SOIL COMPACTED OVER THE TOE OF THE FILTER FABRIC.

SILT FENCES PLACED AT THE TOE OF A SLOPE SHALL BE SET AT LEAST 6 FEET FROM THE TOE IN ORDER TO INCREASE PONDING VOLUME.

SILT FENCES SHALL BE REMOVED WHEN THEY HAVE SERVED THEIR USEFUL PURPOSE, BUT NOT BEFORE THE UPSLOPE AREA HAS BEEN PERMANENTLY STABILIZED, AND ANY SEDIMENT STORED BEHIND THE SILT FENCE HAS BEEN REMOVED.

INSPECTION AND MAINTENANCE:
SILT FENCES AND FILTER BARRIERS SHALL BE INSPECTED WEEKLY AND AFTER EACH SIGNIFICANT STORM (1" IN 24 HR.). ANY REQUIRED REPAIRS SHALL BE MADE IMMEDIATELY. SEDIMENT SHALL BE REMOVED WHEN IT REACHES 1/3 HEIGHT OF THE FENCE OR 9 INCHES MAXIMUM.

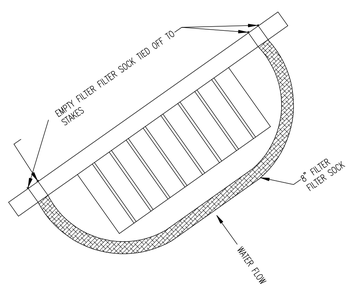


## FILTER SOCK PROTECTION (C)

SCALE: N.T.S.

## FILTERSOCK SPECIFICATION:

FILTREXX FILTERSOCK INSTALLATION AND MAINTENANCE

1.0 DESCRIPTION: THIS WORK SHALL CONSIST OF FURNISHING, INSTALLING, MAINTAINING AND DISPERSING (IF NEEDED) A WATER PERMEABLE COMPOST FILTER SOCK (FILTREXX FILTERSOCK) TO CONTAIN SOIL EROSION AND SEDIMENT BY REMOVING SOIL PARTICLES FROM WATER MOVING OFF SITE INTO ADJACENT WATERWAYS OR STORM WATER DRAINAGE SYSTEMS. FILTERSOCKS WILL BE USED AS A FORM OF INLET PROTECTION FOR OPERATIONAL STORM DRAINAGE SYSTEMS.

2.0 COMPOST PRODUCTS USED TO FILL FILTREXX FILTERSOCKS

1. COMPOST: COMPOST USED FOR FILTREXX FILTERSOCKS SHALL BE WEED FREE AND DERIVED FROM A WELL-DECOMPOSED SOURCE OF ORGANIC MATTER. THE COMPOST SHALL BE PRODUCED USING AN AEROBIC COMPOSTING PROCESS MEETING CFR 503 REGULATIONS, INCLUDING TIME AND TEMPERATURE DATA INDICATING EFFECTIVE WEED SEED, PATHOGEN AND INSECT LARVAE KILL. THE COMPOST SHALL BE FREE OF ANY REFUSE, CONTAMINANTS OR OTHER MATERIALS TOXIC TO PLANT GROWTH. NON-COMPOSTED PRODUCTS WILL NOT BE ACCEPTED. TEST METHODS FOR THE ITEMS BELOW SHOULD FOLLOW USCC TMECC GUIDELINES FOR LABORATORY PROCEDURES:

A. PH – 5.0-8.0 IN ACCORDANCE WITH TMECC 04.11-A, "ELECTROMETRIC PH DETERMINATIONS FOR COMPOST"

B. PARTICLE SIZE – 99 % PASSING A 1" SIEVE, 90 % PASSING A _" SIEVE AND A MINIMUM OF 70 % GREATER THAN THE 3/8" SIEVE. A TOTAL OF 98 % SHALL NOT EXCEED 3 INCHES IN LENGTH, IN ACCORDANCE WITH TMECC 02.02-B, "SAMPLE SIEVING FOR AGGREGATE SIZE CLASSIFICATION"

C. MOISTURE CONTENT OF LESS THAN % IN ACCORDANCE WITH STANDARDIZED TEST METHODS FOR 60 MOISTURE DETERMINATION.

D. MATERIAL SHALL BE RELATIVELY FREE % BY DRY WEIGHT) OF INERT OR FOREIGN MAN MADE (<1 MATERIALS.

E. A SAMPLE SHALL BE SUBMITTED TO THE ENGINEER FOR APPROVAL PRIOR TO BEING USED AND MUST COMPLY WITH ALL LOCAL, STATE AND FEDERAL REGULATIONS.

3.0 CONSTRUCTION AND INSTALLATION OF FILTREXX FILTERSOCKS:

1. FILTREXX FILTERSOCKS WILL BE USED AS A FORM OF INLET PROTECTION ON CONSTRUCTION SITES WHICH REQUIRE PROTECTION AGAINST SEDIMENT LADEN WATER AFTER STORM DRAINS BECOME OPERATIONAL.
2. FILTREXX FILTERSOCKS WILL BE PLACED AT LOCATIONS INDICATED ON PLANS AS DIRECTED BY THE ENGINEER. FILTERSOCKS SHOULD BE INSTALLED IN A PATTERN THAT ALLOWS COMPLETE PROTECTION OF THE INLET AREA
3. INSTALLATION OF FILTREXX FILTERSOCKS WILL ENSURE A MINIMAL OVERLAP OF AT LEAST ONE FOOT ON EITHER SIDE OF THE OPENING BEING PROTECTED. THE FILTERSOCKS WILL BE ANCHORED TO THE SOIL BEHIND THE CURB USING STABLES, STAKES OR OTHER DEVICES CAPABLE OF HOLDING THE FILTERSOCK IN PLACE.
4. STANDARD SIZES OF FILTERSOCKS FOR INLET PROTECTION WILL BE 8" DIAMETER PRODUCTS. IN SEVERE FLOW SITUATIONS, LARGER FILTERSOCKS MAY BE RECOMMENDED BY THE ENGINEER.
5. FILTERSOCKS SHALL BE CONSTRUCTED OF A WOVEN MATERIAL AND FILLED WITH A COMPOST PRODUCT THAT PASSES THE CRITERIA LISTED IN SECTION 2.
6. IF THE FILTERSOCKS BECOME CLOGGED WITH DEBRIS AND SEDIMENT, THEY SHALL BE MAINTAINED SO AS TO ASSURE A PROPER DRAINAGE AND WATER FLOW INTO THE STORM DRAIN. IN SEVERE STORM EVENTS, OVERFLOW OF THE FILTERSOCK MAY BE ACCEPTABLE IN ORDER TO KEEP THE AREA FROM FLOODING.
7. THE FILTERSOCKS SHALL BE POSITIONED SO AS TO PROVIDE COMPLETE PHYSICAL BARRIER TO THE DRAIN ITSELF, ALLOWING SEDIMENT TO COLLECT ON THE OUTSIDE OF THE FILTERSOCKS. SEE ATTACHED SCHEMATIC FOR FILTREXX FILTERSOCK INSTALLATION.
8. FOR AREAS WHERE FILTERSOCKS ARE TO BE LEFT AS A PERMANENT PART OF THE LANDSCAPE, FILTERSOCKS MAY BE SEEDED DURING TIME OF MANUFACTURE TO CREATE A LIVING SOCK. FOR SEEDING OPTIONS, THE ENGINEER MAY SIMPLY REPLACE ALL LANGUAGE ABOVE WITH "LIVING FILTREXX FILTERSOCKS"

4.0 MAINTENANCE:

1. THE CONTRACTOR SHALL MAINTAIN FILTREXX FILTERSOCKS IN A FUNCTIONAL CONDITION AT ALL TIMES AND IT SHALL BE ROUTINELY INSPECTED.
2. WHERE THE FILTERSOCK REQUIRES REPAIR, IT WILL BE ROUTINELY REPAIRED.
3. THE CONTRACTOR SHALL REMOVE SEDIMENTS COLLECTED AT THE BASE OF THE FILTERSOCK WHEN THEY REACH 1/3 OF THE EXPOSED HEIGHT OF THE FILTERSOCK, OR AS DIRECTED BY THE ENGINEER.
4. THE FILTREXX FILTERSOCK WILL BE DISPERSED ON SITE WHEN NO LONGER REQUIRED, AS DETERMINED BY THE ENGINEER. THE NETTING MATERIAL WILL BE DISPOSED OF IN NORMAL TRASH CONTAINERS OR REMOVED BY THE CONTRACTOR.
5. REGULAR MAINTENANCE INCLUDES LIFTING THE FILTREXX FILTERSOCKS AND CLEANING UNDER THEM AS SEDIMENT COLLECTS.

5.0 METHOD OF MEASUREMENT:

BID ITEMS SHALL SHOW MEASUREMENT AS 'FILTREXX FILTERSOCK' PER LINEAR FOOT, INSTALLED OR PER INLET, AS SPECIFIED BY THE ENGINEER.

6.0 PERFORMANCE:

1. CONTRACTOR IS RESPONSIBLE FOR ESTABLISHING A WORKING EROSION CONTROL SYSTEM AND MAY, WITH APPROVAL OF THE ENGINEER, WORK OUTSIDE THE MINIMUM CONSTRUCTION REQUIREMENTS AS NEEDED.
2. WHERE THE FILTERSOCK DETERIORATES OR FAILS, IT WILL BE REPAIRED OR REPLACED WITH A MORE EFFECTIVE ALTERNATIVE.
3. CONTRACTOR IS REQUIRED TO BE A CERTIFIED FILTREXX INSTALLER AS DETERMINED BY FILTREXX INTERNATIONAL, LLC (440-926-8041 OR VISIT WEBSITE AT FILTREXX.COM). CERTIFICATION SHALL BE CONSIDERED CURRENT IF APPROPRIATE IDENTIFICATION IS SHOWN DURING TIME OF BID OR AT TIME OF APPLICATION.

7.0 APPLICATION GUIDELINES:

1. FILTREXX FILTERSOCKS SHALL EITHER BE MADE ON SITE OR DELIVERED TO THE JOBSITE USING A 3 MIL TUBULAR HDPE KNITTED MESH NETTING MATERIAL, FILLED WITH COMPOST PASSING THE ABOVE SPECIFICATIONS FOR COMPOST PRODUCTS AS OUTLINED IN 2.0.
2. FILTREXX FILTERSOCKS NETTING MATERIALS ARE AVAILABLE ONLY FROM FILTREXX INTERNATIONAL, LLC AND ARE THE ONLY CERTIFIED MESH MATERIALS ACCEPTED IN CREATING FILTREXX PRODUCTS ON SITE OR AS DELIVERED TO THE JOB SITE. STANDARD FILTREXX COLOR CODING SYSTEMS INCLUDE YELLOW AND BLACK STRIPED MESH NETTING WITH 3/8" MESH OPENINGS FOR INLET PROTECTION. OTHER COLORS ARE ONLY ACCEPTABLE AS APPROVED BY BOTH THE ENGINEER AND FILTREXX INTERNATIONAL, LLC.

3. CONTRACTOR IS REQUIRED TO BE A CERTIFIED FILTREXX INSTALLER AS DETERMINED BY FILTREXX INTERNATIONAL, LLC (440-926-8041 OR VISIT WEBSITE AT FILTREXX.COM). CERTIFICATION SHALL BE CONSIDERED CURRENT IF APPROPRIATE IDENTIFICATION IS SHOWN DURING TIME OF BID OR AT TIME OF APPLICATION.

8.0 AVAILABLE VENDORS

FILTREXX FILTERSOCKS MAY BE PURCHASED FROM THE FOLLOWING CERTIFIED FILTREXX INSTALLERS:

WINDSWEPT ORGANIX INC.
WORK: 480-963-4638 FAX:
408-940-4261 850 SOUTH BOGLE
AVE, SUITE 2 CHANDLER, AZ
85225

AVOID CUTTING UNDERGROUND UTILITIES. IT'S COSTLY.
Call BEFORE YOU Dig
1-800-662-4111

NOTICE! (A)
THE CONTRACTOR SHALL BE RESPONSIBLE FOR THE LOCATION, PROTECTION, AND RESTORATION OF ALL BURIED OR ABOVE GROUND UTILITIES, SHOWN OR NOT SHOWN ON THE PLANS.

McNEIL GROUP
Designing for the Future Since 1983


State of Utah
Department of Administrative Services
Division of Facilities Construction & Management
4110 State Office Building
Salt Lake City, Utah 84114
Phone: (801) 538 - 3018
Fax: (801) 538 - 3267
http://dfcm.utah.gov


CREATED BY:

BUILDING NAME:
Utah State Development Center
870 North 860 East
American Fork, Uath

PROJECT TITLE:
Boiler Replacement/ Building Repairs

| MARK | DATE | DESCRIPTION |
|---|---|---|

ISSUE TYPE: REVIEW

ISSUE DATE: MAY 29, 2009

DFCM PROJECT NO: 08194410
CAD PROJECT NO:290060.dwg
CAD DWG FILE: 290060.dwg
DRAWN BY:BE
CHK'D BY:RD/GWS
COPYRIGHT: STATE OF UTAH

SHEET TITLE
EROSION CONTROL DETAILS

SHEET NUMBER
C502

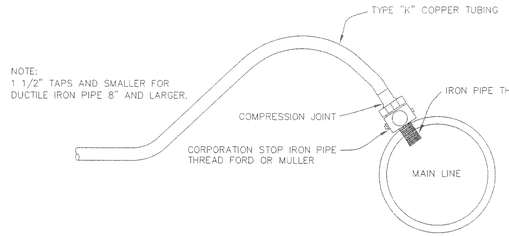


OPTION #2

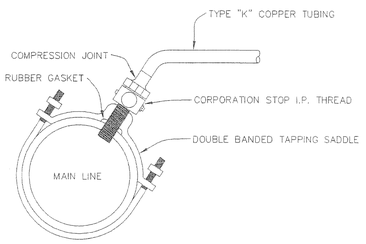


OPTION #1

| | | | |
|---|---|---|---|
| DRAWN: JRP<br>REVISED:<br>DATE: JULY 2002<br>SCALE: VARIES | Northern ENGINEERING • LAND PLANNING • CONSTRUCTION MANAGEMENT<br>1040 E. 800 N.<br>OREM, UTAH 84057<br>(801) 802-8992 | AMERICAN FORK CITY | STANDARD DETAIL FOR: TYPICAL WATERMAN TAPS | DRAWING NO. 15.3 |

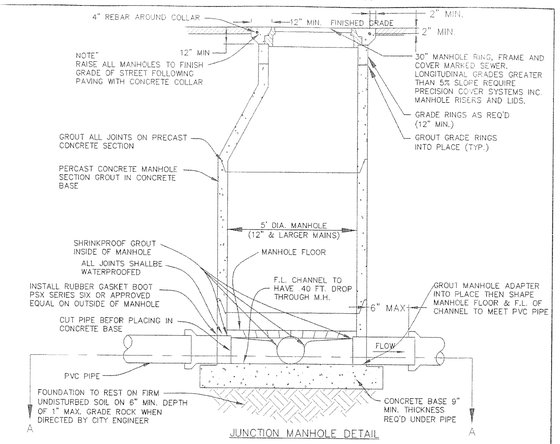


JUNCTION MANHOLE DETAIL
-NTS-

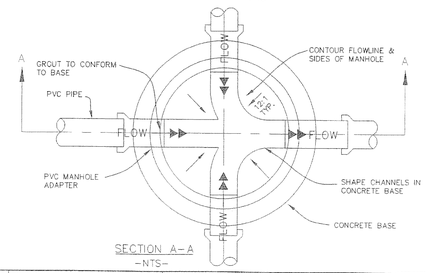


SECTION A-A
-NTS-

| | | | |
|---|---|---|---|
| DRAWN: JRP<br>REVISED:<br>DATE: JULY 2002<br>SCALE: VARIES | Northern ENGINEERING • LAND PLANNING • CONSTRUCTION MANAGEMENT<br>1040 E. 800 N.<br>OREM, UTAH 84057<br>(801) 802-8992 | AMERICAN FORK CITY | STANDARD DETAIL FOR: SANITARY SEWER JUNCTION MANHOLE DETAIL | DRAWING NO. 15.13 |

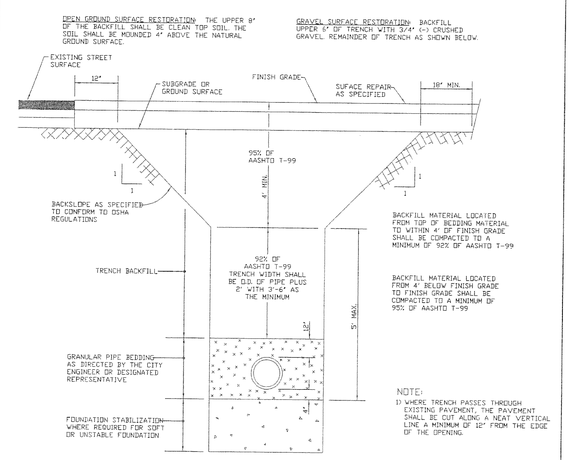


TYPICAL TRENCH DETAIL
-NTS-

| | | | |
|---|---|---|---|
| DRAWN: JRP<br>REVISED:<br>DATE: MAY 2002<br>SCALE: VARIES | Northern ENGINEERING • LAND PLANNING • CONSTRUCTION MANAGEMENT<br>1040 E. 800 N.<br>OREM, UTAH 84057<br>(801) 802-8992 | AMERICAN FORK CITY | STANDARD DETAIL FOR: TYPICAL TRENCH DETAIL | DRAWING NO. 15.22 |

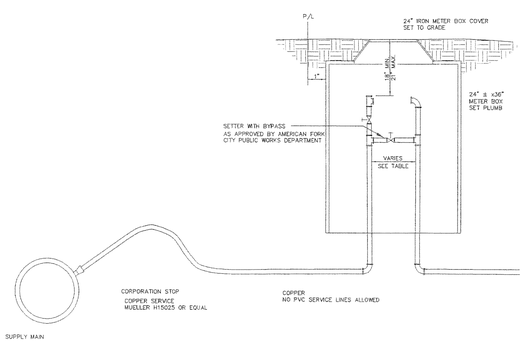


| SPACING TABLE | |
|---|---|
| SIZE | SPACING |
| 3/4" | 7 1/2" |
| 1" | 10 3/4" |
| 1 1/2" | 13" |
| 2" | 17" |

| | | | |
|---|---|---|---|
| DRAWN: JRP<br>REVISED:<br>DATE: MAY 2002<br>SCALE: VARIES | Northern ENGINEERING • LAND PLANNING • CONSTRUCTION MANAGEMENT<br>1040 E. 800 N.<br>OREM, UTAH 84057<br>(801) 802-8992 | AMERICAN FORK CITY | STANDARD DETAIL FOR: CULINARY WATER SERVICE CONNECTION | DRAWING NO. 15.5 |

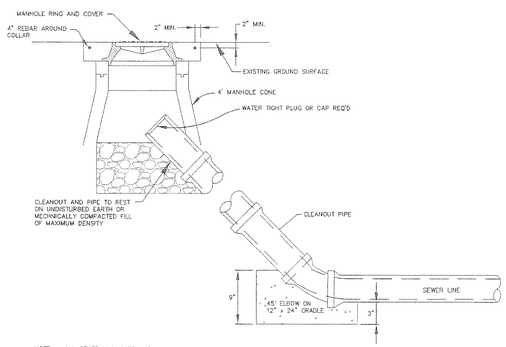


NOTE: ALL SEWER MANHOLES AND
CLEANOUTS SHALL BE ACCESSIBLE
BY MAINTENANCE PUMPER TRUCK.

| | | | |
|---|---|---|---|
| DRAWN: JRP<br>REVISED:<br>DATE: MAY 2002<br>SCALE: VARIES | Northern ENGINEERING • LAND PLANNING • CONSTRUCTION MANAGEMENT<br>1040 E. 800 N.<br>OREM, UTAH 84057<br>(801) 802-8992 | AMERICAN FORK CITY | STANDARD DETAIL FOR: SEWER CLEANOUT SEWER PIPE INSTALLATION | DRAWING NO. 15.15 |


State of Utah
Department of Administrative Services
Division of Facilities Construction & Management
4110 State Office Building
Salt Lake City, Utah 84114
Phone: (801) 538 - 3018
Fax: (801) 538 - 3267
http://dfcm.utah.gov


CREATED BY:

BUILDING NAME:
Utah State Development Center
870 North 860 East
American Fork, Uath

PROJECT TITLE:
Boiler Replacement/ Building Repairs

| MARK | DATE | DESCRIPTION |
|---|---|---|
| 1 | 05/14/09 | STATE COMMENTS |

ISSUE TYPE: REVIEW

ISSUE DATE: MAY 27, 2009

DFCM PROJECT NO: 08194410
CAD PROJECT NO: 290060
CAD DWG FILE: 290060-SWR
DRAWN BY: KAP
CHK'D BY: CHECKED
COPYRIGHT: STATE OF UTAH

SHEET TITLE
MISCELLANEOUS UTILITY DETAILS

SHEET NUMBER
C 503

SHEET 11 OF 11


McNEIL GROUP
Designing for the Future Since 1983
6895 SOUTH 900 EAST MIDVALE, UTAH 84047
TEL.(801) 255-7700 FAX.(801) 255-8071
E-MAIL info@mcneilengr.com WEB SITE AT www.mcneil-group.com


S:\2009Files\290060\CIVIL\Prod Dwg\290060-Swr.dwg Jun 18, 2009 - 2:16pm

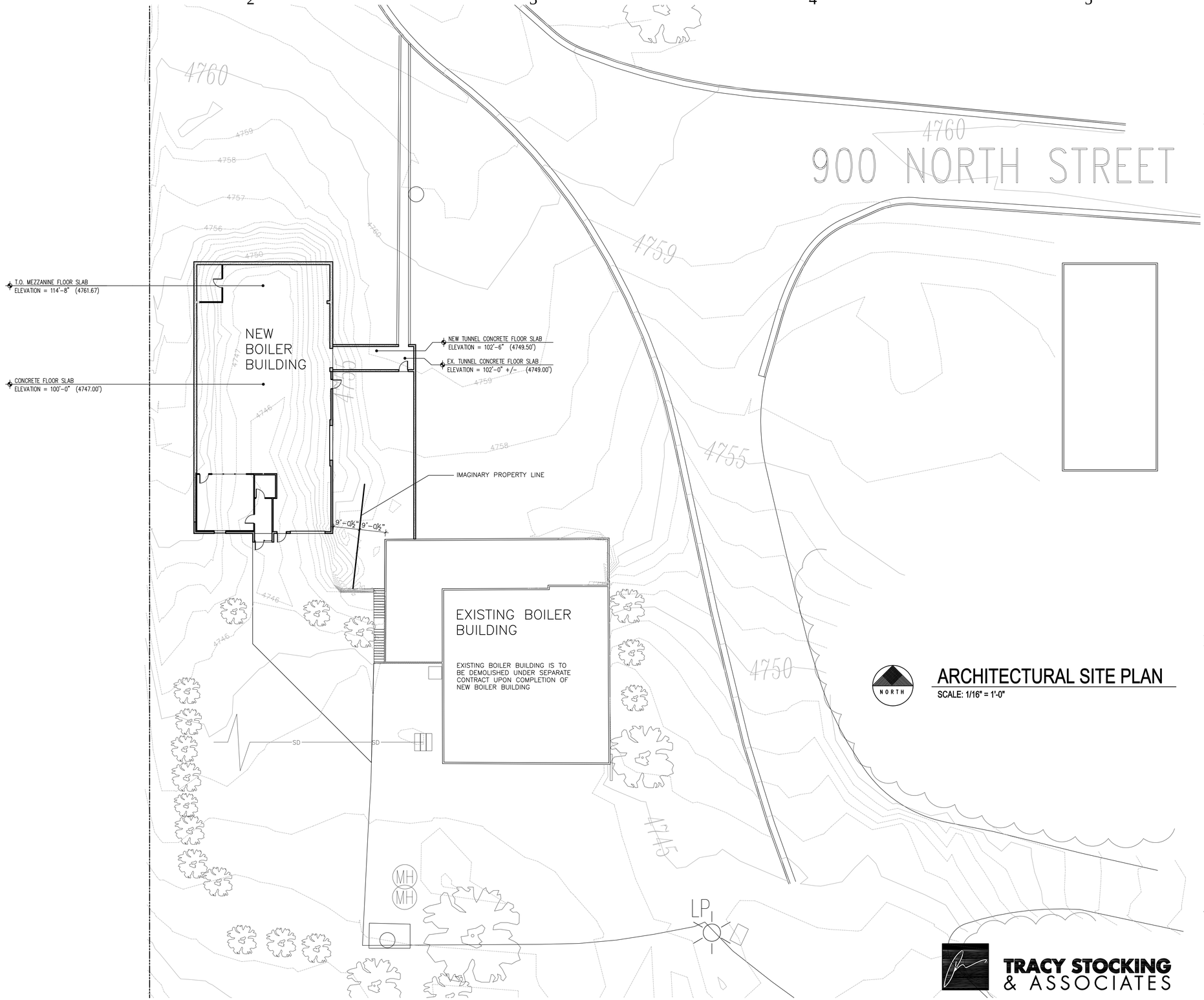


## ARCHITECTURAL SITE PLAN

SCALE: 1/16" = 1'-0"

TRACY STOCKING & ASSOCIATES


**State of Utah**
Department of Administrative Services

Division of Facilities Construction & Management
4110 State Office Building
Salt Lake City, Utah 84114
Phone: (801) 538 - 3018
Fax: (801) 538 - 3267

http://dfcm.utah.gov


CREATED BY:

STATE OF UTAH TRACY O. STOCKING 4/3/09 135781 LICENSED ARCHITECT

BUILDING NAME:

Utah State Development Center
870 North 860 East
American Fork, Utah

PROJECT TITLE:

Boiler Replacement/ Building Repairs

| MARK | DATE | DESCRIPTION |
|---|---|---|
| | | |

ISSUE TYPE: REVIEW

ISSUE DATE: MAY 2009

DFCM PROJECT NO: 08194410
CAD PROJECT NO:
CAD DWG FILE:
DRAWN BY: STAFF
CHK'D BY: MDC

COPYRIGHT: STATE OF UTAH

SHEET TITLE

ARCHITECTURAL SITE PLAN

SHEET NUMBER

AS101

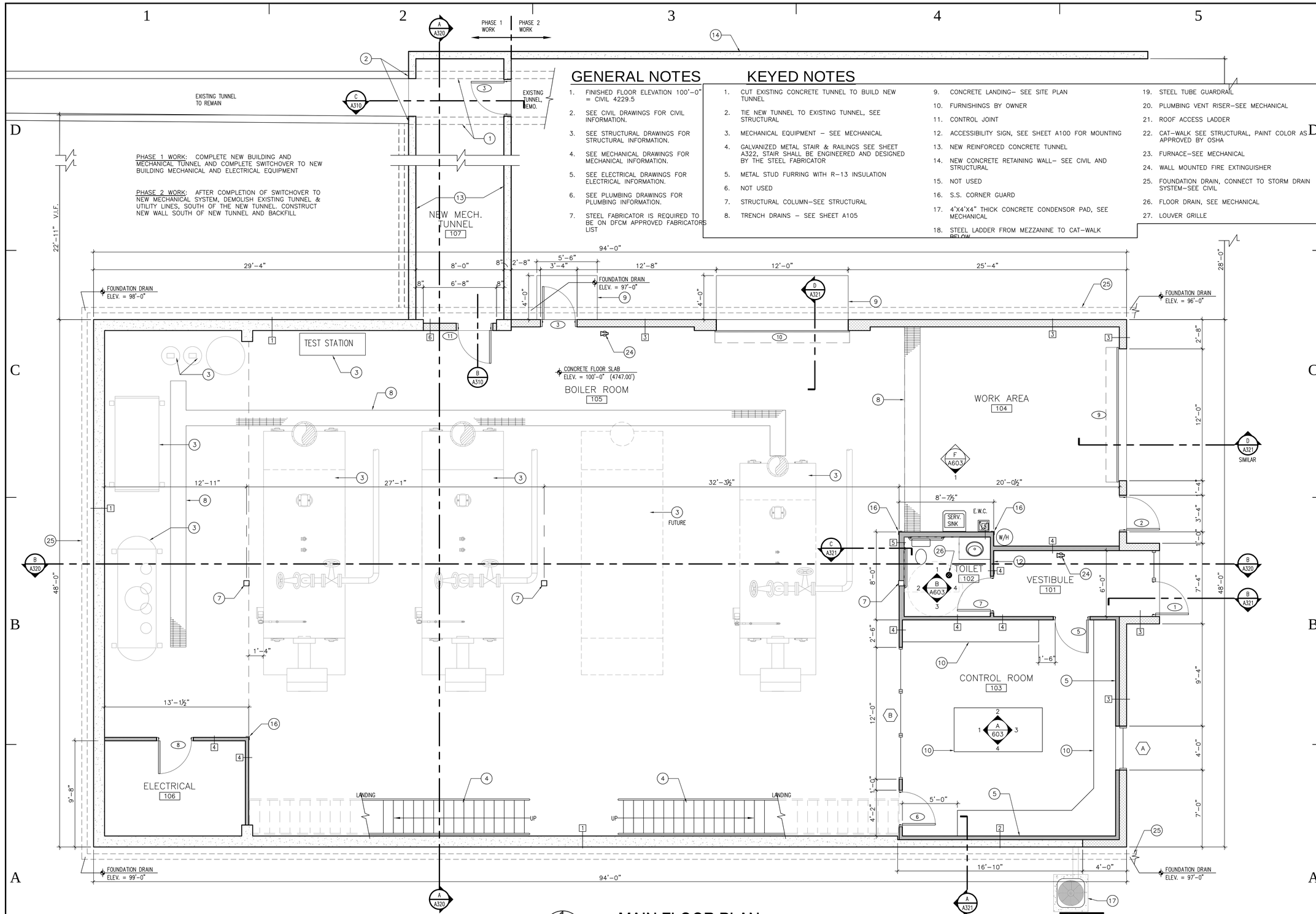


## GENERAL NOTES

1. FINISHED FLOOR ELEVATION 100'-0" = CIVIL 4229.5
2. SEE CIVIL DRAWINGS FOR CIVIL INFORMATION.
3. SEE STRUCTURAL DRAWINGS FOR STRUCTURAL INFORMATION.
4. SEE MECHANICAL DRAWINGS FOR MECHANICAL INFORMATION.
5. SEE ELECTRICAL DRAWINGS FOR ELECTRICAL INFORMATION.
6. SEE PLUMBING DRAWINGS FOR PLUMBING INFORMATION.
7. STEEL FABRICATOR IS REQUIRED TO BE ON DFCM APPROVED FABRICATORS LIST

## KEYED NOTES

1. CUT EXISTING CONCRETE TUNNEL TO BUILD NEW TUNNEL
2. TIE NEW TUNNEL TO EXISTING TUNNEL, SEE STRUCTURAL
3. MECHANICAL EQUIPMENT – SEE MECHANICAL
4. GALVANIZED METAL STAIR & RAILINGS SEE SHEET A322, STAIR SHALL BE ENGINEERED AND DESIGNED BY THE STEEL FABRICATOR
5. METAL STUD FURRING WITH R-13 INSULATION
6. NOT USED
7. STRUCTURAL COLUMN–SEE STRUCTURAL
8. TRENCH DRAINS – SEE SHEET A105
9. CONCRETE LANDING– SEE SITE PLAN
10. FURNISHINGS BY OWNER
11. CONTROL JOINT
12. ACCESSIBILITY SIGN, SEE SHEET A100 FOR MOUNTING
13. NEW REINFORCED CONCRETE TUNNEL
14. NEW CONCRETE RETAINING WALL– SEE CIVIL AND STRUCTURAL
15. NOT USED
16. S.S. CORNER GUARD
17. 4'X4'X4" THICK CONCRETE CONDENSOR PAD, SEE MECHANICAL
18. STEEL LADDER FROM MEZZANINE TO CAT-WALK BELOW
19. STEEL TUBE GUARDRAIL
20. PLUMBING VENT RISER–SEE MECHANICAL
21. ROOF ACCESS LADDER
22. CAT-WALK SEE STRUCTURAL, PAINT COLOR AS APPROVED BY OSHA
23. FURNACE–SEE MECHANICAL
24. WALL MOUNTED FIRE EXTINGUISHER
25. FOUNDATION DRAIN, CONNECT TO STORM DRAIN SYSTEM–SEE CIVIL
26. FLOOR DRAIN, SEE MECHANICAL
27. LOUVER GRILLE

# MAIN FLOOR PLAN

SCALE: 1/4" = 1'-0"

TRACY STOCKING & ASSOCIATES


State of Utah
Department of Administrative Services
Division of Facilities Construction & Management
4110 State Office Building
Salt Lake City, Utah 84114
Phone: (801) 538 - 3018
Fax: (801) 538 - 3267
http://dfcm.utah.gov


CREATED BY:

STATE OF UTAH TRACY O. STOCKING 4/3/09 135781 LICENSED ARCHITECT

BUILDING NAME:

Utah State Development Center
870 North 860 East
American Fork, Utah

PROJECT TITLE:

Boiler Replacement/ Building Repairs

| MARK | DATE | DESCRIPTION |
|---|---|---|

ISSUE TYPE: REVIEW

ISSUE DATE: MAY 2009

DFCM PROJECT NO: 08194410
CAD PROJECT NO:
CAD DWG FILE:
DRAWN BY: STAFF
CHK'D BY: MDC
COPYRIGHT: STATE OF UTAH

SHEET TITLE

MAIN FLOOR PLAN

SHEET NUMBER

A101

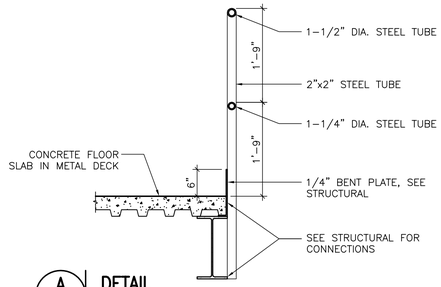


A / A102 **DETAIL**
SCALE: 3/4" = 1'-0"

## GENERAL NOTES

1. FINISHED FLOOR ELEVATION 100'-0" = CIVIL 4229.5
2. SEE CIVIL DRAWINGS FOR CIVIL INFORMATION.
3. SEE STRUCTURAL DRAWINGS FOR STRUCTURAL INFORMATION.
4. SEE MECHANICAL DRAWINGS FOR MECHANICAL INFORMATION.
5. SEE ELECTRICAL DRAWINGS FOR ELECTRICAL INFORMATION.
6. SEE PLUMBING DRAWINGS FOR PLUMBING INFORMATION.
7. STEEL FABRICATOR IS REQUIRED TO BE ON DFCM APPROVED FABRICATORS LIST

## KEYED NOTES

1. CUT EXISTING CONCRETE TUNNEL TO BUILD NEW TUNNEL
2. TIE NEW TUNNEL TO EXISTING TUNNEL, SEE STRUCTURAL
3. MECHANICAL EQUIPMENT – SEE MECHANICAL
4. GALVANIZED METAL STAIR & RAILINGS SEE SHEET A322, STAIR SHALL BE ENGINEERED AND DESIGNED BY THE STEEL FABRICATOR
5. METAL STUD FURRING WITH R-13 INSULATION
6. NOT USED
7. STRUCTURAL COLUMN-SEE STRUCTURAL
8. TRENCH DRAINS – SEE SHEET A105
9. CONCRETE LANDING– SEE SITE PLAN
10. FURNISHINGS BY OWNER
11. CONTROL JOINT
12. ACCESSIBILITY SIGN, SEE SHEET A100 FOR MOUNTING
13. NEW REINFORCED CONCRETE TUNNEL
14. NEW CONCRETE RETAINING WALL– SEE CIVIL AND STRUCTURAL
15. NOT USED
16. S.S. CORNER GUARD
17. 4'X4'X4" THICK CONCRETE CONDENSOR PAD, SEE MECHANICAL
18. STEEL LADDER FROM MEZZANINE TO CAT-WALK BELOW
19. STEEL TUBE GUARDRAIL
20. PLUMBING VENT RISER-SEE MECHANICAL
21. ROOF ACCESS LADDER
22. CAT-WALK SEE STRUCTURAL, PAINT COLOR AS APPROVED BY OSHA
23. FURNACE-SEE MECHANICAL
24. WALL MOUNTED FIRE EXTINGUISHER
25. FOUNDATION DRAIN, CONNECT TO STORM DRAIN SYSTEM-SEE CIVIL
26. FLOOR DRAIN, SEE MECHANICAL
27. LOUVER GRILLE
28. PROVIDE METAL WALL SIGN WITH 1" HIGH LETTERING, MOUNTED 48" A.A.F. TO READ "MECHANICAL EQUIPMENT PLATFORM – NO STORAGE"

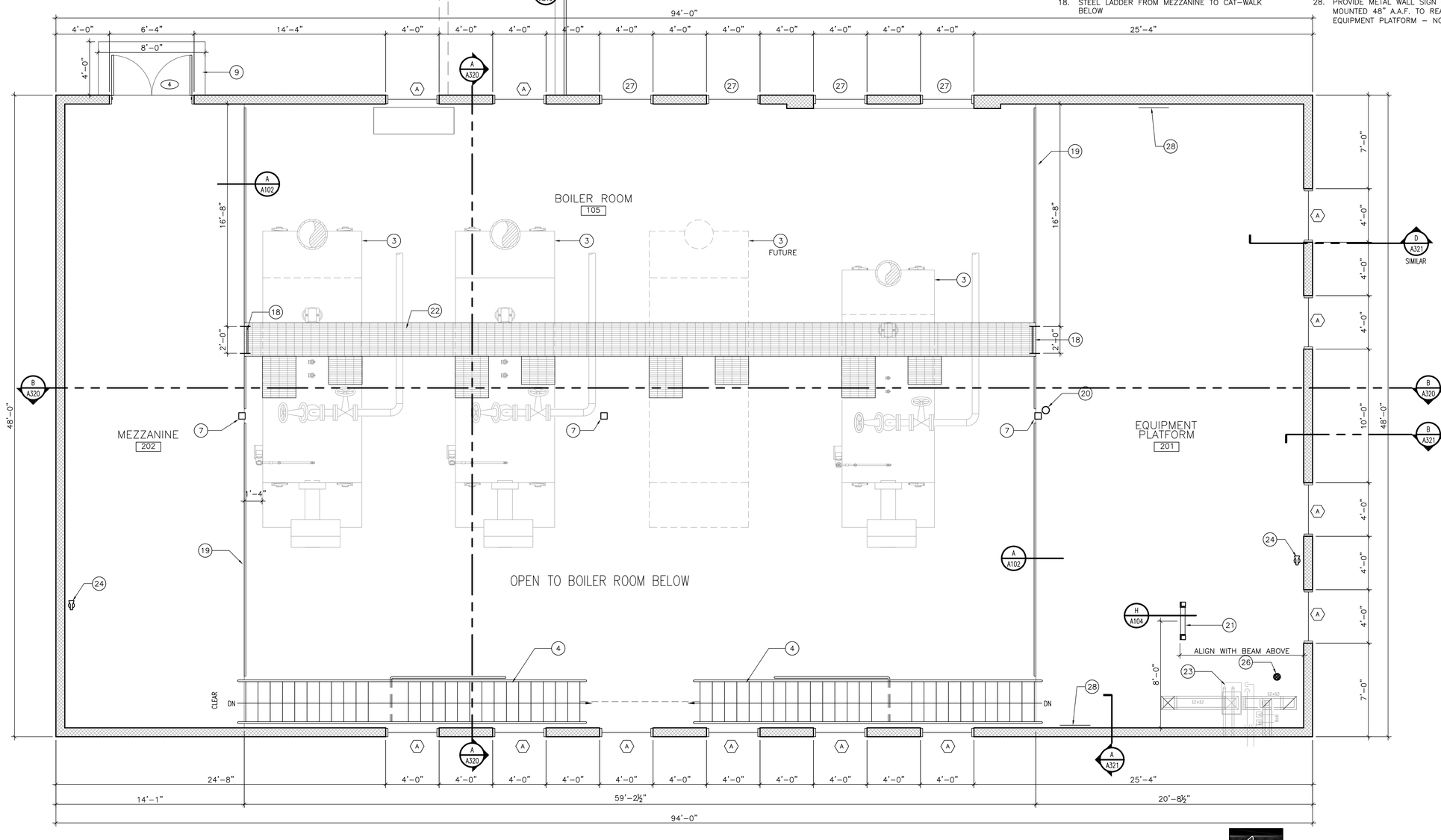


## MEZZANINE FLOOR PLAN
SCALE: 1/4" = 1'-0"

TRACY STOCKING & ASSOCIATES

**State of Utah**
Department of Administrative Services

Division of Facilities Construction & Management
4110 State Office Building
Salt Lake City, Utah 84114
Phone: (801) 538 - 3018
Fax: (801) 538 - 3267

http://dfcm.utah.gov

CREATED BY:

BUILDING NAME:
Utah State Development Center
870 North 860 East
American Fork, Utah

PROJECT TITLE:
Boiler Replacement/ Building Repairs

| MARK | DATE | DESCRIPTION |
|---|---|---|

ISSUE TYPE: REVIEW
ISSUE DATE: MAY 2009
DFCM PROJECT NO: 08194410
CAD PROJECT NO:
CAD DWG FILE:
DRAWN BY: STAFF
CHK'D BY: MDC
COPYRIGHT: STATE OF UTAH

SHEET TITLE
MEZZANINE FLOOR PLAN

SHEET NUMBER
A102

SHEET 3 OF 17

## GENERAL NOTES

1. ALL PENETRATIONS ARE NOT SHOWN, SEE MECHANICAL AND PLUMBING DRAWINGS –SEE DETAIL C/A104 FOR PIPE PENETRATION FLASHING
2. TYPICAL ROOF SLOPE = 1/4:12, (APPROX)
3. ROOF SYSTEM: 60 MIL PVC SINGLE PLY ROOF MEMBRANE, MECHANICALLY ATTACHED, OVER RIGID INSULATION.
4. SEE PLUMBING FOR ROOF DRAIN PIPING

## LEGEND

- TAPERED INSULATION CRICKET– SLOPE 1/4" PER FOOT
- ROOF DRAIN W/ CAST IRON STRAINER, SEE DETAIL A/A104
- OVERFLOW DRAIN W/ CAST IRON STRAINER, SEE DETAIL A/A104
- WALK PAD WITH 1/2" PROTECTION BOARD UNDER MEMBRANE

## KEYED NOTES

1. SCUPPER – SEE DETAIL G/A104
2. ROOF DRAINS, PRIMARY & SECONDARY
3. MECHANICAL EQUIPMENT VENT, PIPE OR CONDUIT. VERIFY LOCATION AND QUANTITY
4. MECHANICAL EQUIPMENT FLUE, SEE MECHANICAL
5. NOT USED
6. OVERFLOW DRAIN LINE AND OUTLET
7. ROOF HATCH WITH LADDER ACCESS
8. ENTRY CANOPY, WITH FULLY ADHERED PVC ROOF MEMBRANE
9. SEE STRUCTURAL FOR DECK REINFORCING AROUND LARGE ROOF PENETRATIONS

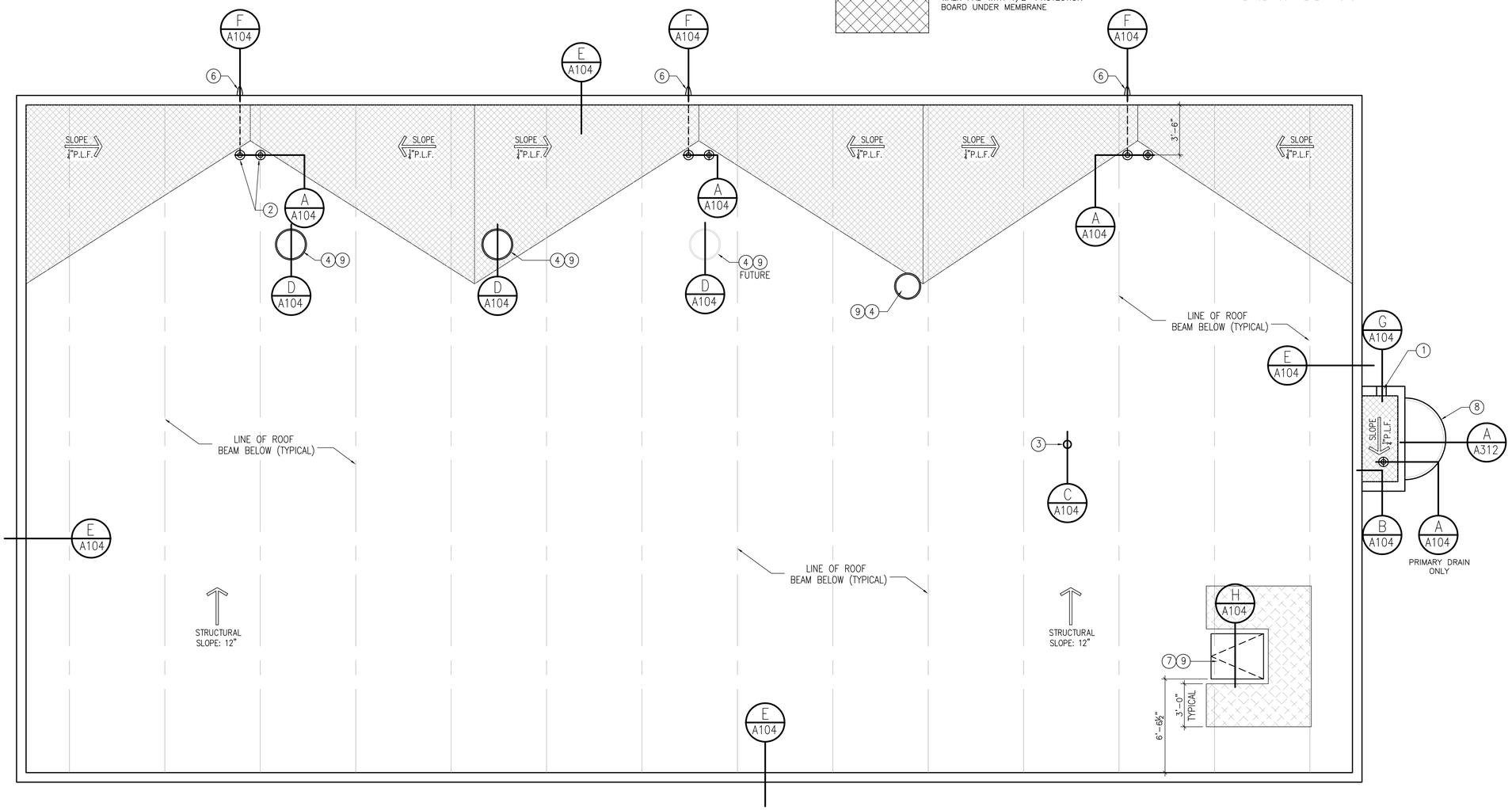


## ROOF PLAN

SCALE: 1/4" = 1'-0"

TRACY STOCKING & ASSOCIATES

State of Utah
Department of Administrative Services


Division of Facilities Construction & Management
4110 State Office Building
Salt Lake City, Utah 84114
Phone: (801) 538 - 3018
Fax: (801) 538 - 3267
http://dfcm.utah.gov


CREATED BY:

BUILDING NAME:

Utah State Development Center
870 North 860 East
American Fork, Utah

PROJECT TITLE:

Boiler Replacement/ Building Repairs

| MARK | DATE | DESCRIPTION |
|---|---|---|

ISSUE TYPE: REVIEW

ISSUE DATE: MAY 2009

DFCM PROJECT NO: 08194410
CAD PROJECT NO:
CAD DWG FILE:
DRAWN BY: STAFF
CHK'D BY: MDC
COPYRIGHT: STATE OF UTAH

SHEET TITLE

ROOF PLAN

SHEET NUMBER

A103

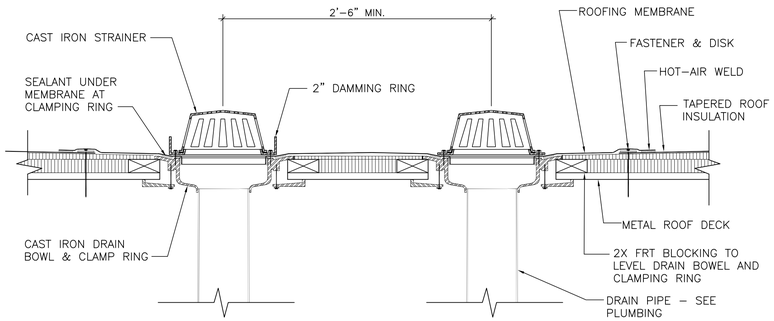


A A104 ROOF DRAIN DETAIL
NOT TO SCALE

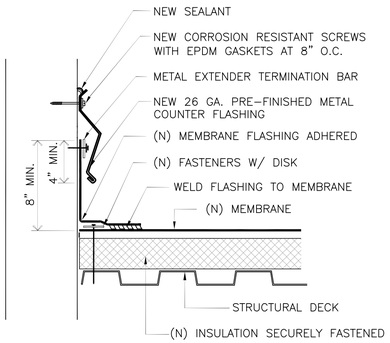


B A104 ROOF FLASHING DETAIL
NOT TO SCALE

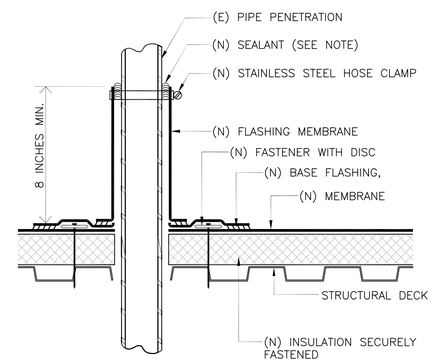


C A104 ROOF PENETRATION DETAIL
NOT TO SCALE

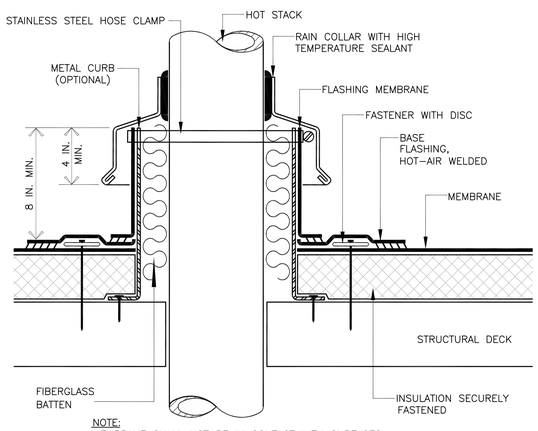


NOTE:
MEMBRANE SHALL NOT BE IN CONTACT WITH SURFACES HAVING SUSTAINED TEMPERATURES ABOVE 160° F.

D A104 HEATED STACK FLASHING DETAIL
NOT TO SCALE

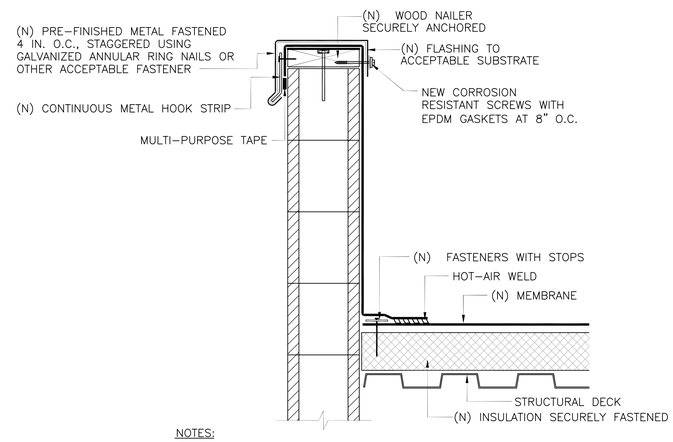


NOTES:
1) NAILERS SHALL BE SECURELY ANCHORED TO THE DECK TO RESIST A MINIMUM FORCE OF 300 POUNDS PER LINEAR FOOT. REFER TO FACTORY MUTUAL DATA SHEET 1-49.

E A104 ROOF DETAIL
NOT TO SCALE

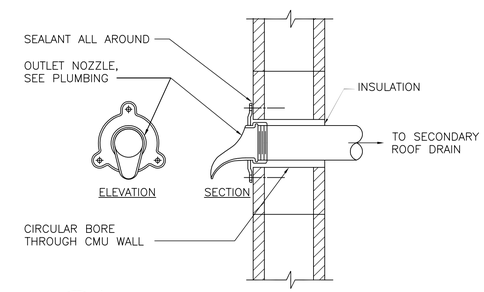


F A104 OUTLET NOZZLE DETAIL
NOT TO SCALE

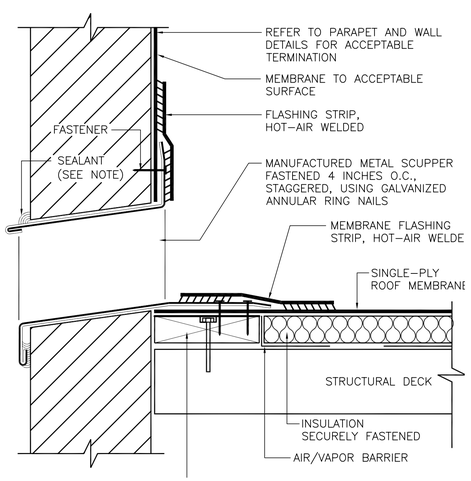


G A104 ROOF SCUPPER DETAIL
NOT TO SCALE

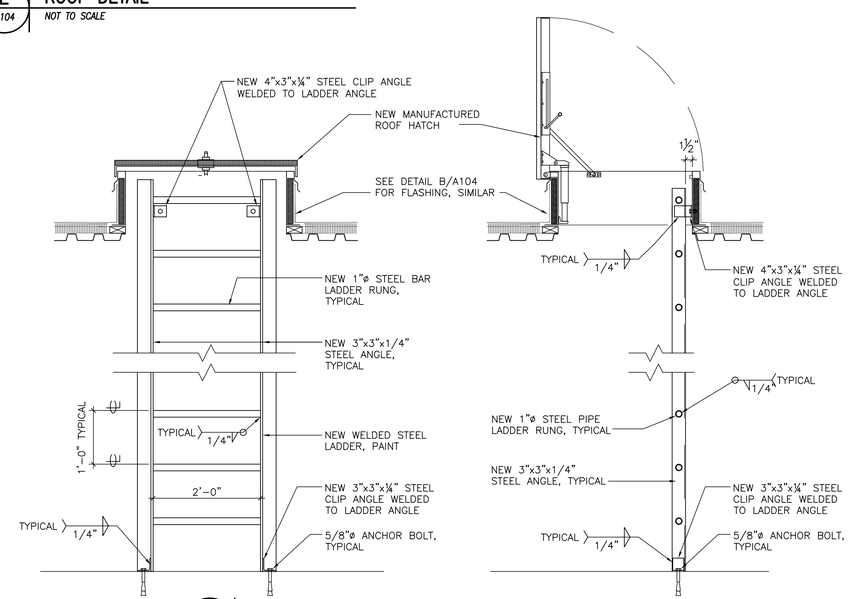


H A104 ROOF SCUTTLE DETAIL
NOT TO SCALE

TRACY STOCKING & ASSOCIATES


State of Utah
Department of Administrative Services
Division of Facilities Construction & Management
4110 State Office Building
Salt Lake City, Utah 84114
Phone: (801) 538 - 3018
Fax: (801) 538 - 3267
http://dfcm.utah.gov


CREATED BY:

BUILDING NAME:
Utah State Development Center
870 North 860 East
American Fork, Utah

PROJECT TITLE:
Boiler Replacement/ Building Repairs

| MARK | DATE | DESCRIPTION |
|---|---|---|
| | | |

ISSUE TYPE: REVIEW
ISSUE DATE: MAY 2009
DFCM PROJECT NO: 08194410
CAD PROJECT NO:
CAD DWG FILE:
DRAWN BY: STAFF
CHK'D BY: MDC
COPYRIGHT: STATE OF UTAH

SHEET TITLE
ROOF DETAILS

SHEET NUMBER
A104

## KEYED NOTES

1. BOILER FOOTING – SEE STRUCTURAL & MECHANICAL
2. STRUCTURAL COLUMN – SEE STRUCTURAL
3. TRENCH DRAINS
4. CONTROL JOINT – ALIGN WITH STRUCTURAL COLUMN
5. CONTROL JOINT – ALIGN WITH FACE OF WALL
6. CONTROL JOINT – INTEGRAL WITH SIDE WALL OF TRENCH DRAIN
7. CONTROL JOINT IN FIELD – CENTER BETWEEN ADJACENT CONTROL JOINTS, WALLS OR EDGE OF CONCRETE




A / A105 TRENCH DRAIN DETAIL
NO SCALE

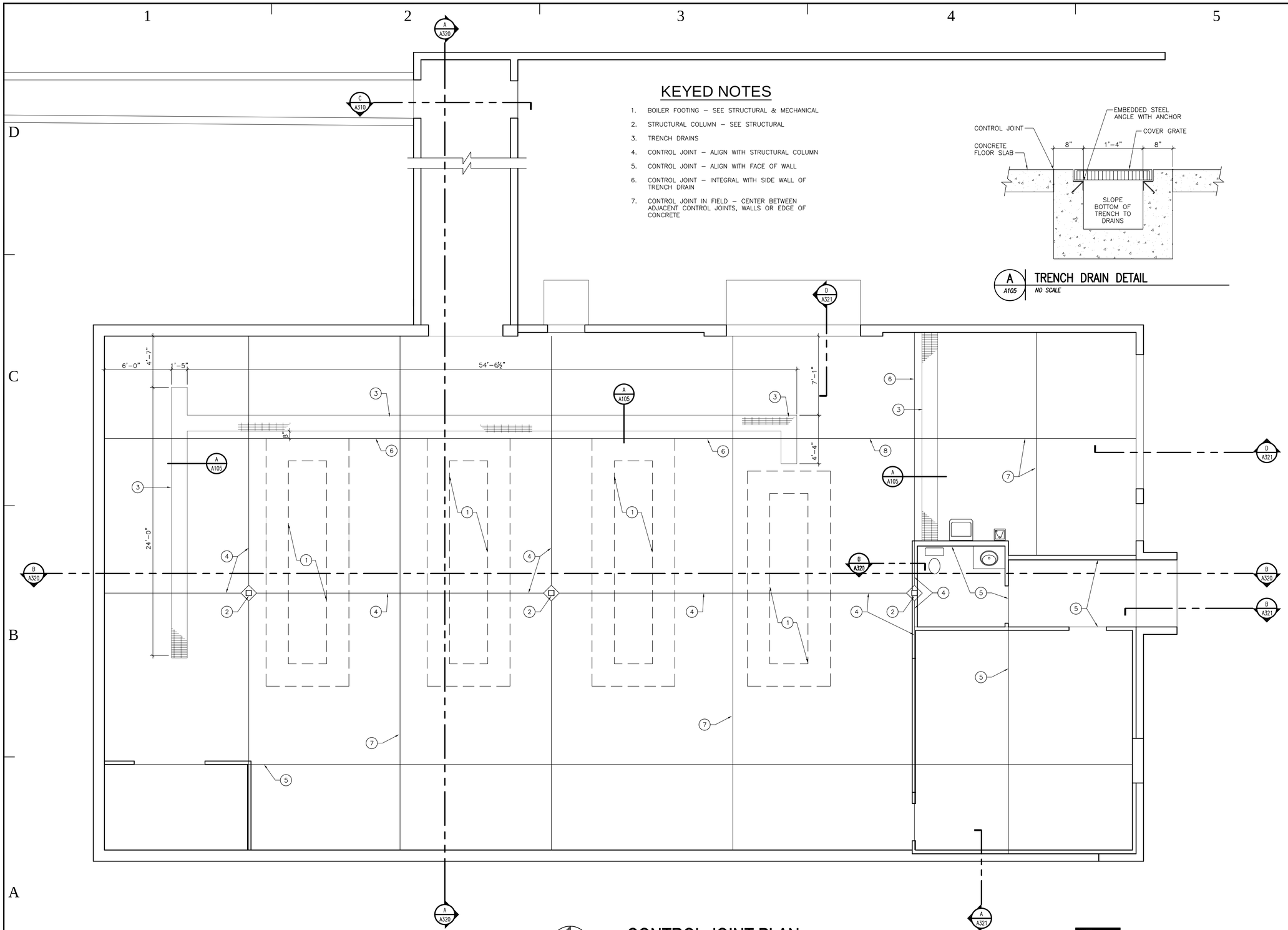


## CONTROL JOINT PLAN
SCALE: 1/4" = 1'-0"

NORTH

TRACY STOCKING & ASSOCIATES


State of Utah
Department of Administrative Services
Division of Facilities Construction & Management
4110 State Office Building
Salt Lake City, Utah 84114
Phone: (801) 538 - 3018
Fax: (801) 538 - 3267
http://dfcm.utah.gov


CREATED BY:

STATE OF UTAH TRACY D. STOCKING 4/3/09 135781 LICENSED ARCHITECT

BUILDING NAME:
Utah State Development Center
870 North 860 East
American Fork, Utah

PROJECT TITLE:
Boiler Replacement/ Building Repairs

| MARK | DATE | DESCRIPTION |
|---|---|---|

ISSUE TYPE: REVIEW

ISSUE DATE: MAY 2009

DFCM PROJECT NO: 08194410
CAD PROJECT NO:
CAD DWG FILE:
DRAWN BY: STAFF
CHK'D BY: MDC
COPYRIGHT: STATE OF UTAH

SHEET TITLE
CONTROL JOINT PLAN

SHEET NUMBER
A105

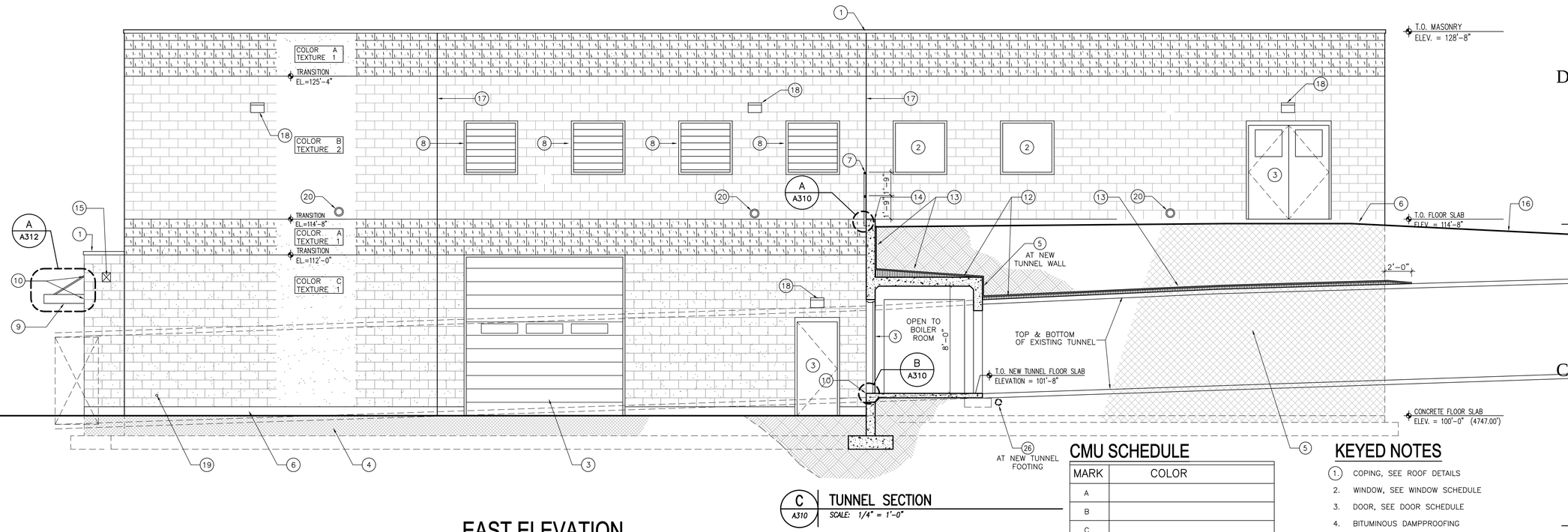


## EAST ELEVATION

SCALE: 1/4" = 1'-0"



C A310 **TUNNEL SECTION**

SCALE: 1/4" = 1'-0"

## CMU SCHEDULE

| MARK | COLOR |
|---|---|
| A | |
| B | |
| C | |

| MARK | TEXTURE |
|---|---|
| 1 | SPLIT FACE |
| 2 | STANDARD |

## KEYED NOTES

1. COPING, SEE ROOF DETAILS
2. WINDOW, SEE WINDOW SCHEDULE
3. DOOR, SEE DOOR SCHEDULE
4. BITUMINOUS DAMPPROOFING
5. FOUNDATION DRAINAGE AND WATERPROOFING SYSTEM
6. PARGE COAT EXPOSED CONCRETE
7. 1 1/2"ø STEEL PIPE GUARD RAIL, GALVANIZED
8. LOUVER GRILLE
9. CANOPY OVER ENTRY
10. GROUT SOLID CMU @ CANOPY ATTACHMENTS
11. CONCRETE RETAINING WALL
12. EPS TAPERED INSULATION, 1/4" PER FOOT, SLOPE EAST & WEST OVER EXISTING TUNNEL
13. 60 MIL EPDM WATER PROOFING OVER NEW TUNNEL & OVER EXISTING TO 24" NORTH OF NORTH WALL OF BUILDING
14. 3/4" CHAMFER, TOP OF WALL, BOTH SIDES
15. THRU WALL SCUPPER SEE ROOF PLAN AND DETAILS
16. FINISH GRADE
17. MASONRY CONTROL JOINT
18. EXTERIOR LIGHT – SEE ELECTRICAL
19. GAS LINE THROUGH WALL – SEE MECHANICAL
20. ROOF OVERFLOW DRAIN OUTLET
21. MECHANICAL VENT–SEE MECHANICAL
22. MECHANICAL EQUIPMENT– SEE MECHANICAL
23. 4" THICK CONCRETE CONDENSER PAD–SEE SITE PLAN
24. SHEET METAL SHROUD OVER MECHANICAL EQUIPMENT PIPING, PRE–FINISHED TO MATCH MASONRY COLOR (USE STANDARD COLORS)–SEE MECHANICAL
25. FURNACE INTAKE/CONCENTRIC EXHAUST –SEE MECHANICAL
26. DRAIN PIPE SET IN 3/4" GRAVEL

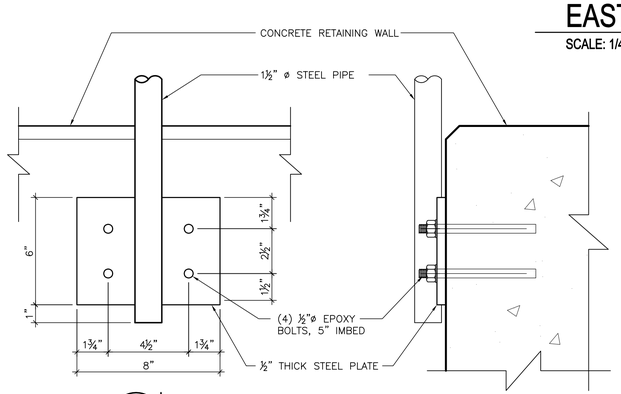


A A310 **GUARDRAIL DETAIL**

SCALE: 3" = 1'-0"

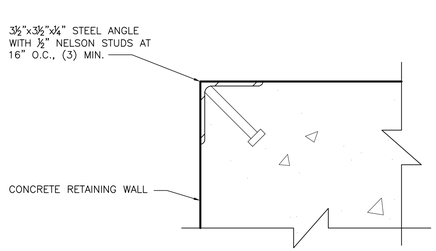


B A310 **LEDGE PROTECTION DETAIL**

SCALE: 3" = 1'-0"

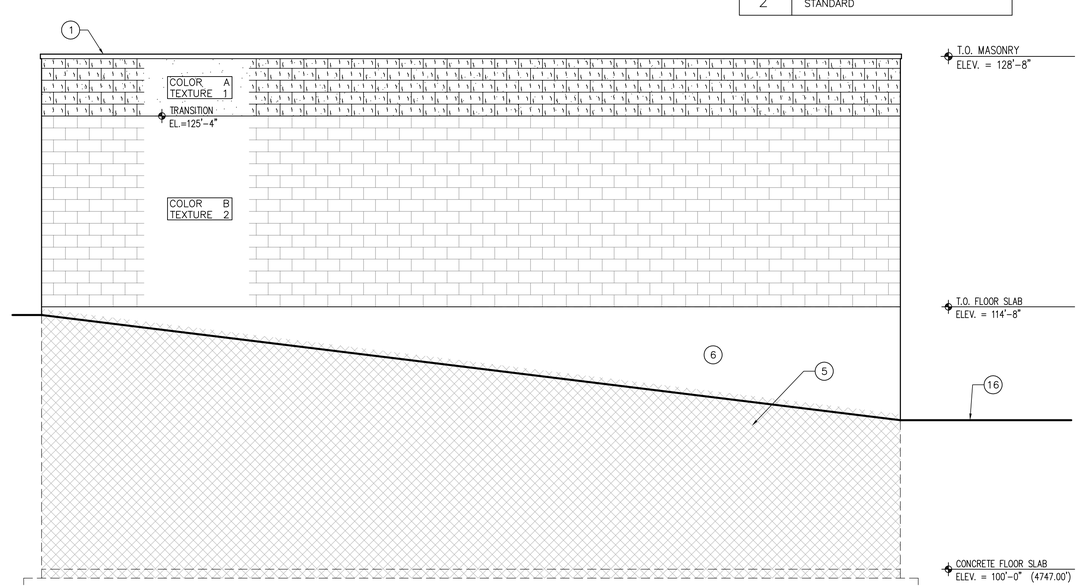


## NORTH ELEVATION

SCALE: 1/4" = 1'-0"

TRACY STOCKING & ASSOCIATES


**State of Utah**
Department of Administrative Services

Division of Facilities Construction & Management
4110 State Office Building
Salt Lake City, Utah 84114
Phone: (801) 538 - 3018
Fax: (801) 538 - 3267

http://dfcm.utah.gov


CREATED BY:

STATE OF UTAH TRACY D. STOCKING 4/3/09 135781 LICENSED ARCHITECT

BUILDING NAME:

Utah State Development Center
870 North 860 East
American Fork, Utah

PROJECT TITLE:

Boiler Replacement/ Building Repairs

| MARK | DATE | DESCRIPTION |
|---|---|---|

ISSUE TYPE: REVIEW

ISSUE DATE: MAY 2009

DFCM PROJECT NO: 08194410
CAD PROJECT NO:
CAD DWG FILE:
DRAWN BY: STAFF
CHK'D BY: MDC
COPYRIGHT: STATE OF UTAH

SHEET TITLE

ELEVATIONS

SHEET NUMBER

A310

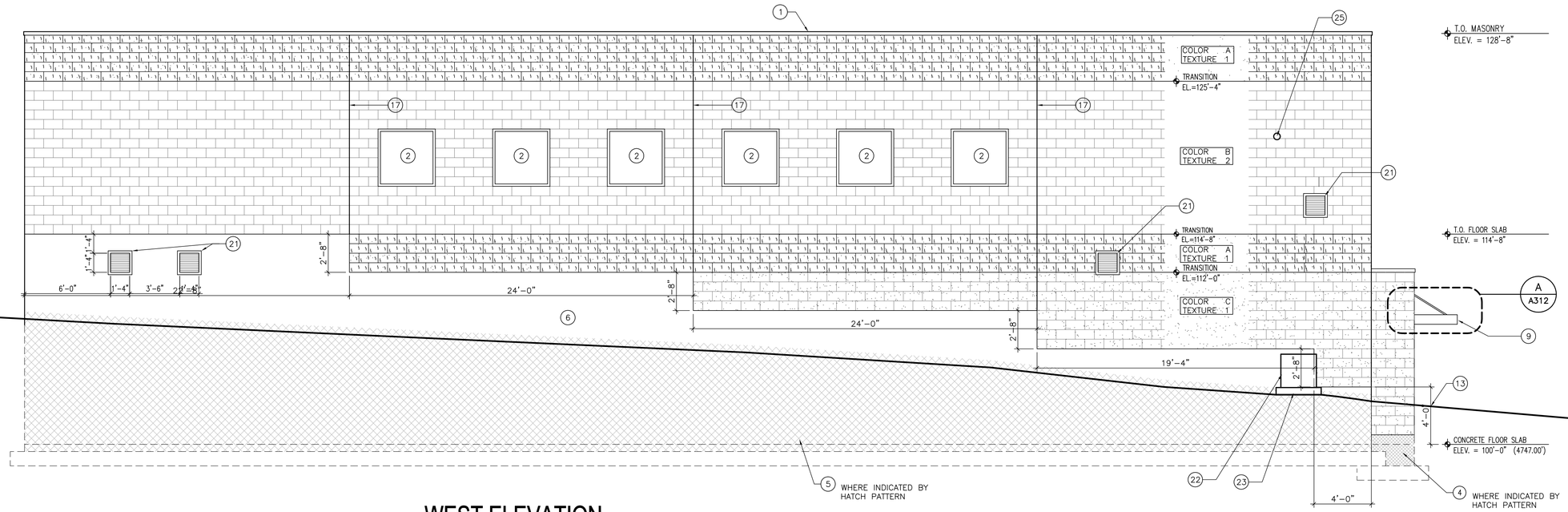


## WEST ELEVATION

SCALE: 1/4" = 1'-0"

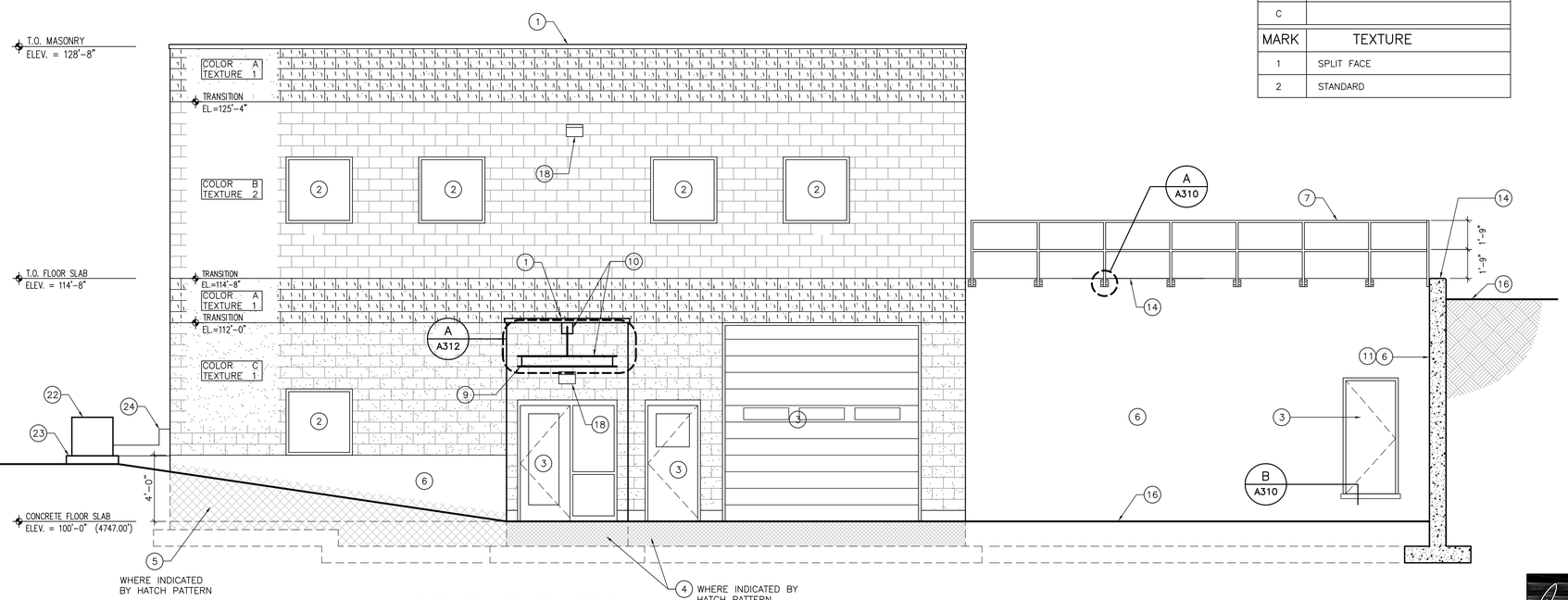


## SOUTH ELEVATION

SCALE: 1/4" = 1'-0"

## CMU SCHEDULE

| MARK | COLOR |
|---|---|
| A | |
| B | |
| C | |

| MARK | TEXTURE |
|---|---|
| 1 | SPLIT FACE |
| 2 | STANDARD |

## KEYED NOTES

1. COPING, SEE ROOF DETAILS
2. WINDOW, SEE WINDOW SCHEDULE
3. DOOR, SEE DOOR SCHEDULE
4. BITUMINOUS DAMPPROOFING
5. FOUNDATION DRAINAGE AND WATERPROOFING SYSTEM
6. PARGE COAT EXPOSED CONCRETE
7. 1 1/2"ø STEEL PIPE GUARD RAIL, GALVANIZED
8. LOUVER GRILLE
9. CANOPY OVER ENTRY
10. GROUT SOLID CMU @ CANOPY ATTACHMENTS
11. CONCRETE RETAINING WALL
12. EPS TAPERED INSULATION, 1/4" PER FOOT, SLOPE EAST & WEST OVER EXISTING TUNNEL
13. 60 MIL EPDM WATER PROOFING OVER NEW TUNNEL & OVER EXISTING TO 24" NORTH OF NORTH WALL OF BUILDING
14. 3/4" CHAMFER, TOP OF WALL, BOTH SIDES
15. THRU WALL SCUPPER SEE ROOF PLAN AND DETAILS
16. FINISH GRADE
17. MASONRY CONTROL JOINT
18. EXTERIOR LIGHT – SEE ELECTRICAL
19. GAS LINE THROUGH WALL – SEE MECHANICAL
20. ROOF OVERFLOW DRAIN OUTLET
21. MECHANICAL VENT–SEE MECHANICAL
22. MECHANICAL EQUIPMENT– SEE MECHANICAL
23. 4" THICK CONCRETE CONDENSER PAD–SEE SITE PLAN
24. SHEET METAL SHROUD OVER MECHANICAL EQUIPMENT PIPING, PRE–FINISHED TO MATCH MASONRY COLOR (USE STANDARD COLORS)–SEE MECHANICAL
25. FURNACE INTAKE/CONCENTRIC EXHAUST –SEE MECHANICAL
26. DRAIN PIPE SET IN 3/4" GRAVEL

TRACY STOCKING & ASSOCIATES


**State of Utah**
Department of Administrative Services

Division of Facilities Construction & Management
4110 State Office Building
Salt Lake City, Utah 84114
Phone: (801) 538 - 3018
Fax: (801) 538 - 3267

http://dfcm.utah.gov


CREATED BY:

BUILDING NAME:

Utah State Development Center
870 North 860 East
American Fork, Utah

PROJECT TITLE:

Boiler Replacement/ Building Repairs

| MARK | DATE | DESCRIPTION |
|---|---|---|

ISSUE TYPE: REVIEW

ISSUE DATE: MAY 2009

DFCM PROJECT NO: 08194410
CAD PROJECT NO:
CAD DWG FILE:
DRAWN BY: STAFF
CHK'D BY: MDC
COPYRIGHT: STATE OF UTAH

SHEET TITLE

ELEVATIONS

SHEET NUMBER

A311

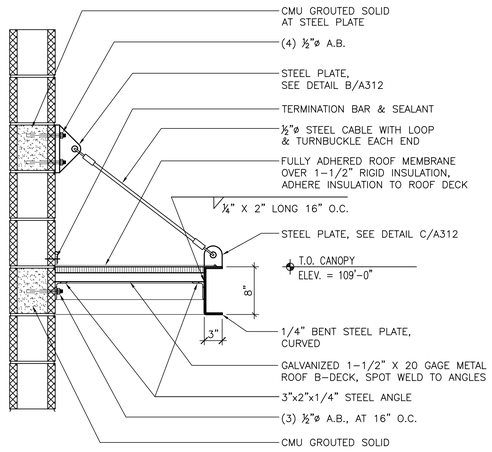


SECTION

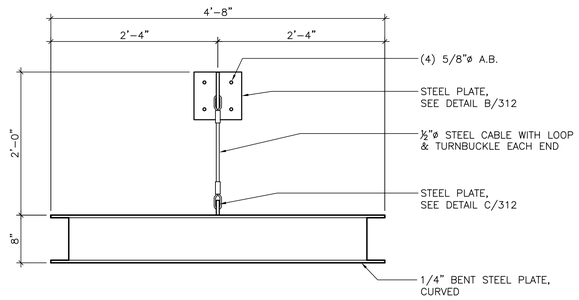


FRONT ELEVATION

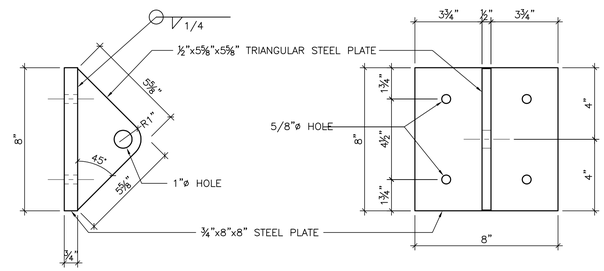


SIDE VIEW

FRONT VIEW

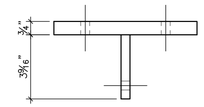


TOP VIEW

B A312 **CANOPY DETAIL**
*SCALE: 1" = 1'-0"*

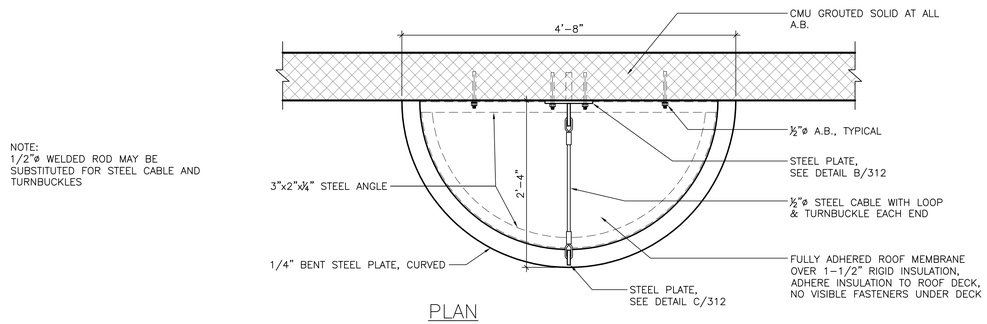


NOTE:
1/2"ø WELDED ROD MAY BE SUBSTITUTED FOR STEEL CABLE AND TURNBUCKLES

PLAN

A A312 **CANOPY DETAIL**
*SCALE: 1" = 1'-0"*

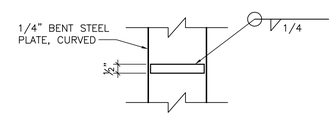


TOP VIEW

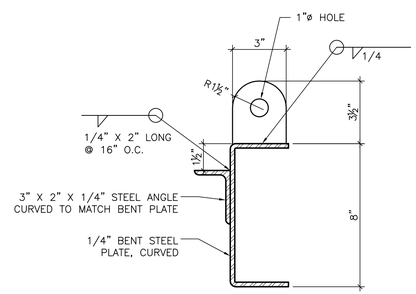


SIDE VIEW

C A312 **CANOPY DETAIL**
*SCALE: 1" = 1'-0"*

## GENERAL NOTES

1. ALL STEEL FABRICATION SHALL BE SHOP PRIMED.
2. ALL CONNECTIONS SHALL BE WELDED UNLESS NOTED OTHER WISE
3. ARCHITECTURAL DRAWINGS SHOW DESIGN INTENT ONLY. FABRICATOR SHALL INCLUDE ALL NECESSARY PARTS AND APPURTENANCES. SUBMIT SHOP DRAWINGS FOR APPROVAL PRIOR TO FABRICATION.
4. PAINT ALL STEEL, ALL SIDES

TRACY STOCKING & ASSOCIATES


**State of Utah**
Department of Administrative Services
Division of Facilities Construction & Management
4110 State Office Building
Salt Lake City, Utah 84114
Phone: (801) 538 - 3018
Fax: (801) 538 - 3267
http://dfcm.utah.gov


CREATED BY:

STATE OF UTAH TRACY R. STOCKING 435791 LICENSED ARCHITECT 4/3/09

BUILDING NAME:
Utah State Development Center
870 North 860 East
American Fork, Utah

PROJECT TITLE:
Boiler Replacement/ Building Repairs

| MARK | DATE | DESCRIPTION |
|---|---|---|

ISSUE TYPE: REVIEW

ISSUE DATE: MAY 2009

DFCM PROJECT NO: 08194410
CAD PROJECT NO:
CAD DWG FILE:
DRAWN BY: STAFF
CHK'D BY: MDC
COPYRIGHT: STATE OF UTAH

SHEET TITLE
EXTERIOR DETAILS

SHEET NUMBER
A312

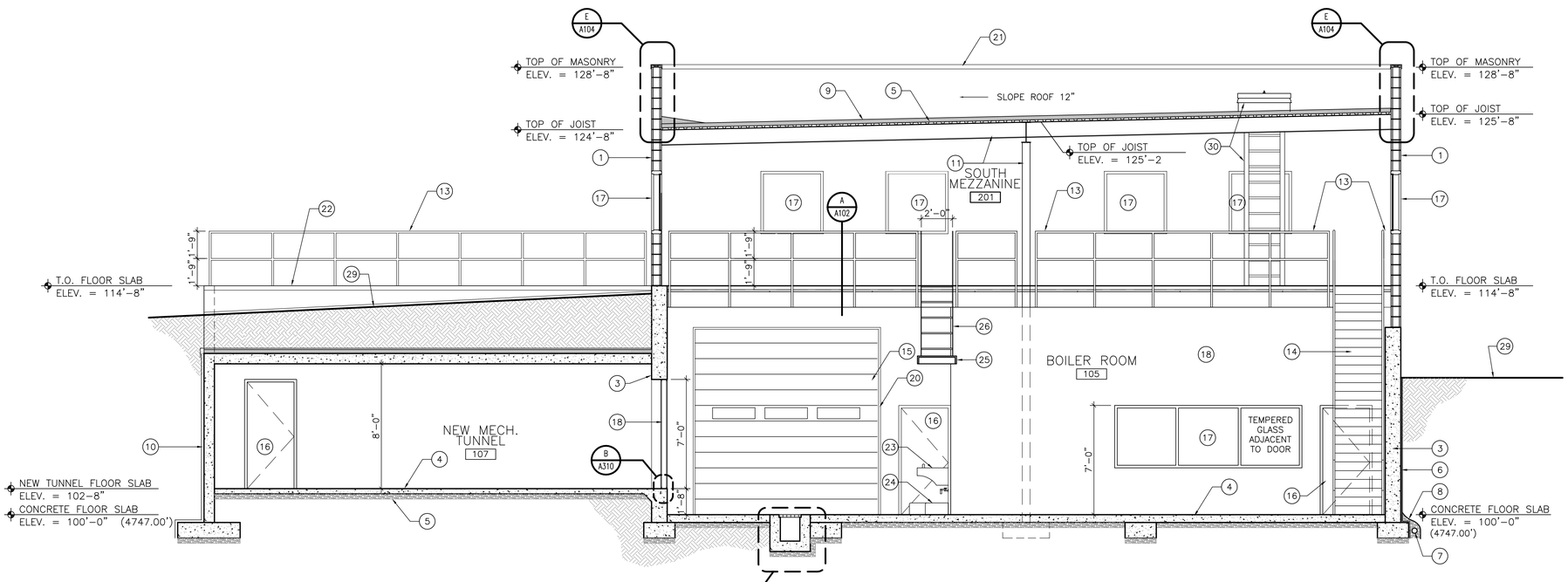


A 1/4"=1'-0" BUILDING SECTION

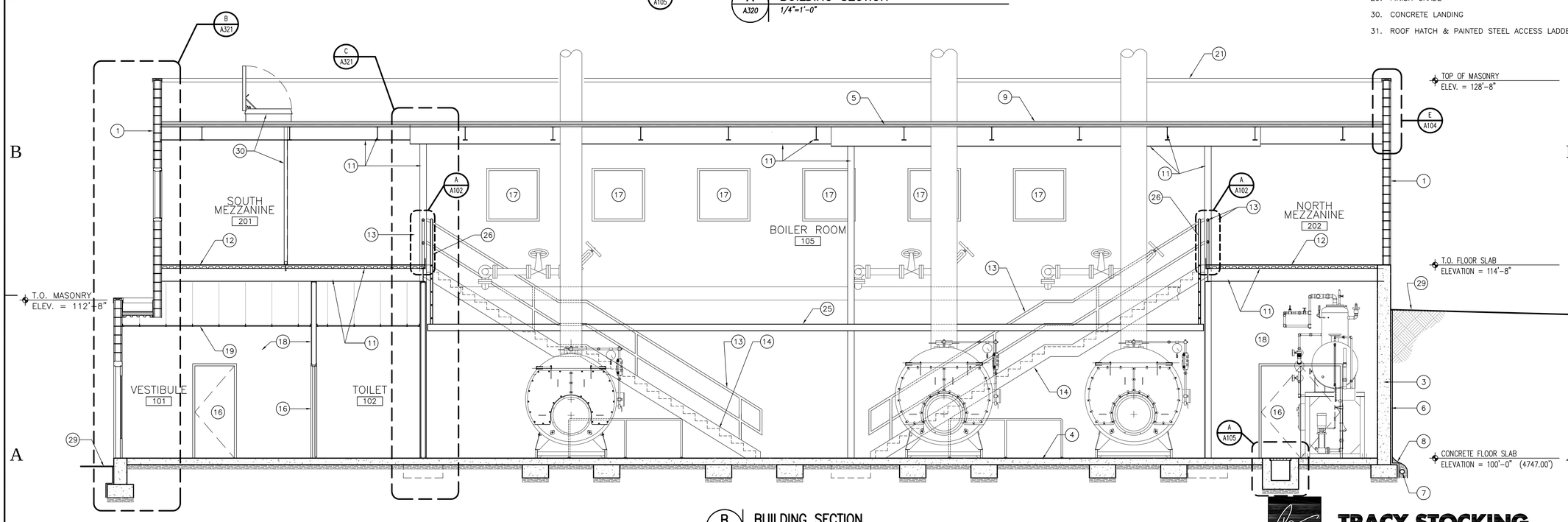


B 1/4"=1'-0" BUILDING SECTION

## KEYED NOTES

1. CMU WALL, SEE STRUCTURAL. INSULATE UN-GROUTED CELLS W/ LOOSE FILL INSULATION
2. CMU HEADER AND PIER @ EAST COILING DOOR – SEE STRUCTURAL
3. CONCRETE FOUNDATION WALL – SEE STRUCTURAL
4. CONCRETE FLOOR SLAB OVER COMPACTED BASE – SEE STRUCTURAL
5. VAPOR BARRIER
6. FOUNDATION DRAINAGE AND WATER PROOFING SYSTEM, SEE ELEVATIONS FOR EXTENT
7. DRAIN PIPE SET IN 3/4" GRAVEL
8. FILTER FABRIC
9. SINGLE PLY ROOF MEMBRANE OVER RIGID ROOF INSULATION
10. BITUMINOUS DAMP PROOFING WITHOUT DRAINAGE AND WATER PROOFING SYSTEM AT SOUTH ELEVATION ONLY
11. STRUCTURE – SEE STRUCTURAL DRAWINGS
12. CONCRETE FLOOR SLAB IN METAL DECK, SEE STRUCTURAL
13. STEEL PIPE GUARDRAIL, GALVANIZED
14. GALVANIZED METAL STAIR & RAILINGS SEE SHEET A322, STAIR SHALL BE DESIGNED AND ENGINEERED BY THE STEEL FABRICATOR
15. COILING DOOR – SEE DOOR SCHEDULE
16. DOOR – SEE DOOR SCHEDULE
17. WINDOW – SEE WINDOW SCHEDULE
18. METAL STUD WALL – SEE FLOOR PLAN
19. LAY-IN ACOUSTIC CEILING SYSTEM
20. BENT STEEL PLATE AROUND COILING DOOR OPENING – SEE E&F/A601
21. METAL COPING
22. 3/4" CHAMFER TOP OF BOTH SIDES OF WALL
23. DRINKING FOUNTAIN, SEE PLUMBING
24. SERVICE SINK, SEE PLUMBING
25. CATWALK, SEE STRUCTURAL
26. CATWALK LADDER, SEE STRUCTURAL
27. METAL STUD FURRING – SEE WALL TYPE
28. INSULATION – SEE WALL TYPE
29. FINISH GRADE
30. CONCRETE LANDING
31. ROOF HATCH & PAINTED STEEL ACCESS LADDER

TRACY STOCKING & ASSOCIATES


**State of Utah**
Department of Administrative Services

Division of Facilities Construction & Management
4110 State Office Building
Salt Lake City, Utah 84114
Phone: (801) 538 - 3018
Fax: (801) 538 - 3267

http://dfcm.utah.gov


CREATED BY:

STATE OF UTAH TRACY D. STOCKING 135781 4/3/09 LICENSED ARCHITECT

BUILDING NAME:

Utah State Development Center
870 North 860 East
American Fork, Utah

PROJECT TITLE:

Boiler Replacement/ Building Repairs

| MARK | DATE | DESCRIPTION |
|---|---|---|

ISSUE TYPE: REVIEW

ISSUE DATE: MAY 2009

DFCM PROJECT NO: 08194410
CAD PROJECT NO:
CAD DWG FILE:
DRAWN BY: STAFF
CHK'D BY: MDC
COPYRIGHT: STATE OF UTAH

SHEET TITLE

BUILDING SECTION

SHEET NUMBER

A320

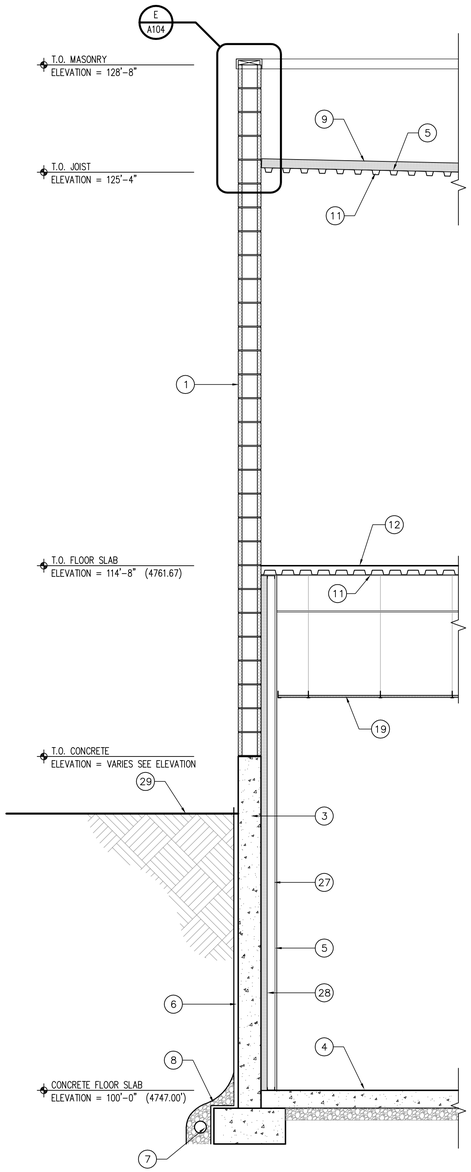


A A321 WALL SECTION
1/2"=1'-0"

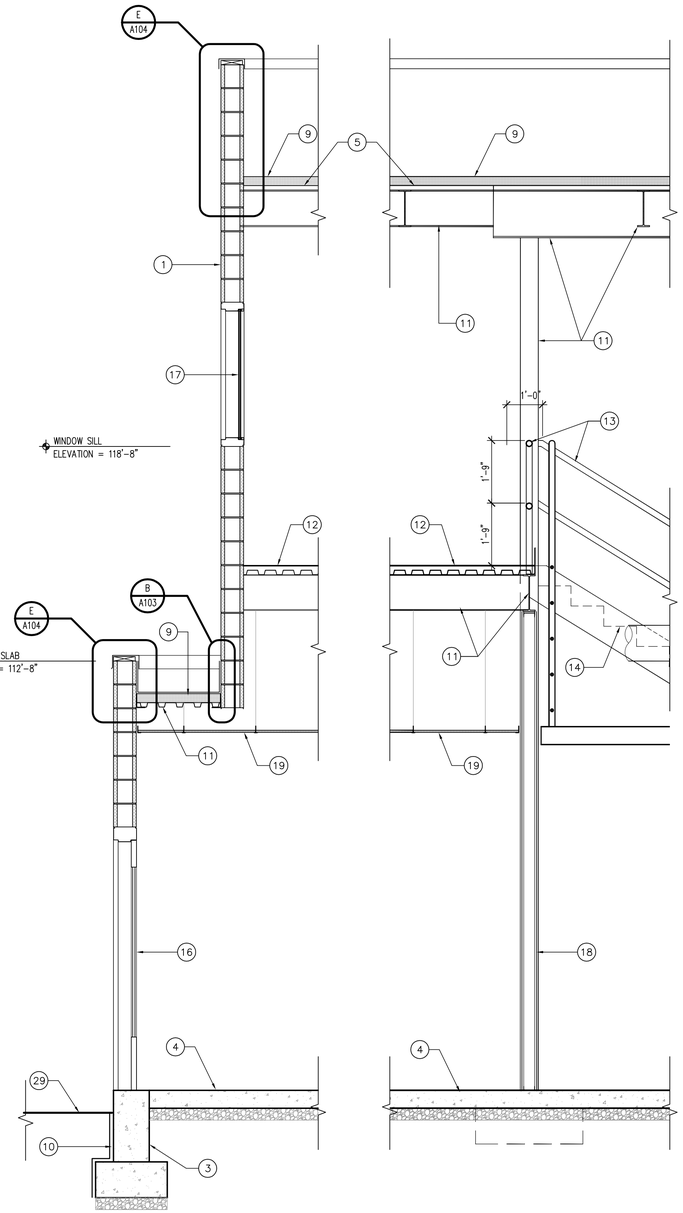


B A321 WALL SECTION
1/2"=1'-0"

C A321 WALL SECTION
1/2"=1'-0"

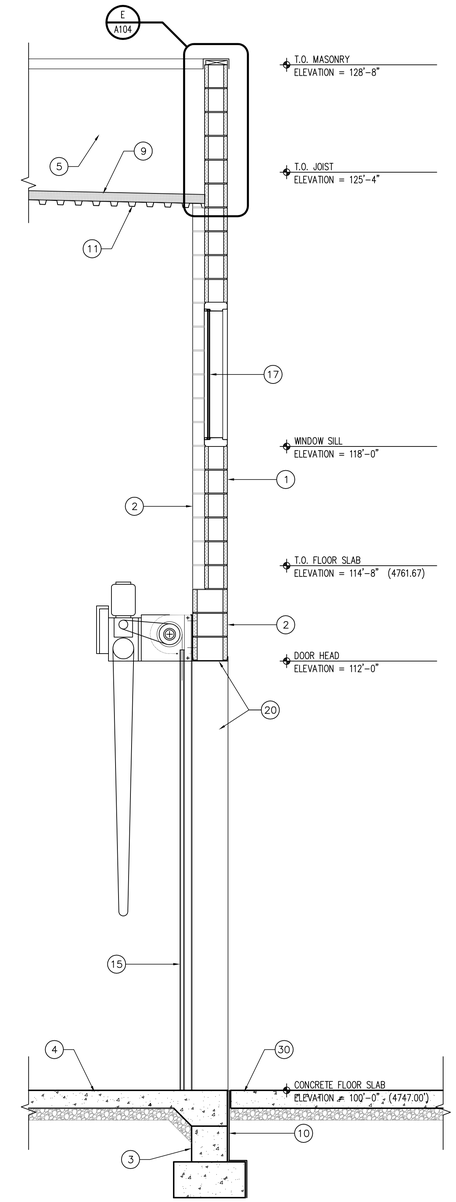


D A321 WALL SECTION
1/2"=1'-0"

## GENERAL NOTES

1. FINISHED FLOOR ELEVATION 100'-0" = CIVIL 4747.00'
2. SEE CIVIL DRAWINGS FOR CIVIL INFORMATION.
3. SEE STRUCTURAL DRAWINGS FOR STRUCTURAL INFORMATION.
4. SEE MECHANICAL DRAWINGS FOR MECHANICAL INFORMATION.
5. SEE ELECTRICAL DRAWINGS FOR ELECTRICAL INFORMATION.
6. SEE PLUMBING DRAWINGS FOR PLUMBING INFORMATION.

## KEYED NOTES

1. CMU WALL, SEE STRUCTURAL. INSULATE UN-GROUTED CELLS W/ LOOSE FILL INSULATION
2. CMU HEADER AND PIER @ EAST COILING DOOR – SEE STRUCTURAL
3. CONCRETE FOUNDATION WALL – SEE STRUCTURAL
4. CONCRETE FLOOR SLAB OVER COMPACTED BASE – SEE STRUCTURAL
5. VAPOR BARRIER
6. FOUNDATION DRAINAGE AND WATER PROOFING SYSTEM, SEE ELEVATIONS FOR EXTENT
7. DRAIN PIPE SET IN 3/4" GRAVEL
8. FILTER FABRIC
9. SINGLE PLY ROOF MEMBRANE OVER RIGID ROOF INSULATION
10. BITUMINOUS DAMP PROOFING WITHOUT DRAINAGE AND WATER PROOFING SYSTEM AT SOUTH ELEVATION ONLY
11. STRUCTURE – SEE STRUCTURAL DRAWINGS
12. CONCRETE FLOOR SLAB IN METAL DECK, SEE STRUCTURAL
13. STEEL PIPE GUARDRAIL, GALVANIZED
14. GALVANIZED METAL STAIR & RAILINGS SEE SHEET A322, STAIR SHALL BE DESIGNED AND ENGINEERED BY THE STEEL FABRICATOR
15. COILING DOOR – SEE DOOR SCHEDULE
16. DOOR – SEE DOOR SCHEDULE
17. WINDOW – SEE WINDOW SCHEDULE
18. METAL STUD WALL – SEE FLOOR PLAN
19. LAY-IN ACOUSTIC CEILING SYSTEM
20. BENT STEEL PLATE AROUND COILING DOOR OPENING – SEE E&F/A601
21. METAL COPING
22. 3/4" CHAMFER TOP OF BOTH SIDES OF WALL
23. DRINKING FOUNTAIN, SEE PLUMBING
24. SERVICE SINK, SEE PLUMBING
25. CATWALK, SEE STRUCTURAL
26. CATWALK LADDER, SEE STRUCTURAL
27. METAL STUD FURRING – SEE WALL TYPE
28. INSULATION – SEE WALL TYPE
29. FINISH GRADE
30. CONCRETE LANDING
31. ROOF HATCH & PAINTED STEEL ACCESS LADDER

TRACY STOCKING & ASSOCIATES


State of Utah
Department of Administrative Services
Division of Facilities Construction & Management
4110 State Office Building
Salt Lake City, Utah 84114
Phone: (801) 538 - 3018
Fax: (801) 538 - 3267
http://dfcm.utah.gov


CREATED BY:

BUILDING NAME:
Utah State Development Center
870 North 860 East
American Fork, Utah

PROJECT TITLE:
Boiler Replacement/ Building Repairs

| MARK | DATE | DESCRIPTION |
|---|---|---|

ISSUE TYPE: REVIEW
ISSUE DATE: MAY 2009
DFCM PROJECT NO: 08194410
CAD PROJECT NO:
CAD DWG FILE:
DRAWN BY: STAFF
CHKD BY: MDC
COPYRIGHT: STATE OF UTAH

SHEET TITLE
WALL SECTIONS

SHEET NUMBER
A321

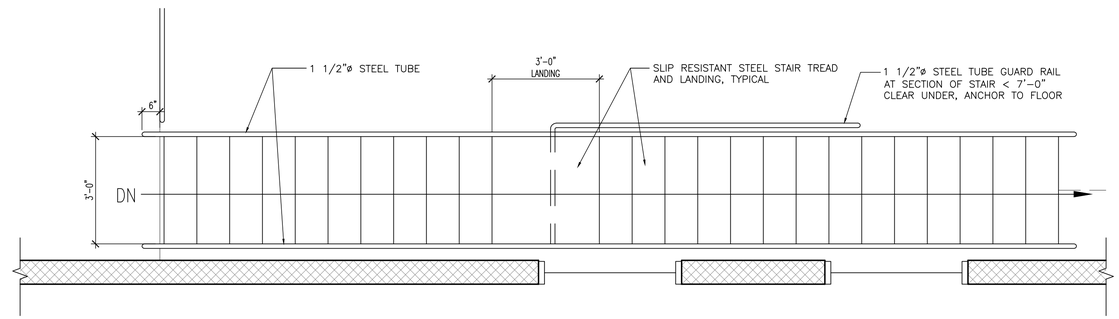


B A322 ENLARGED STAIR PLAN
1/2"=1'-0"

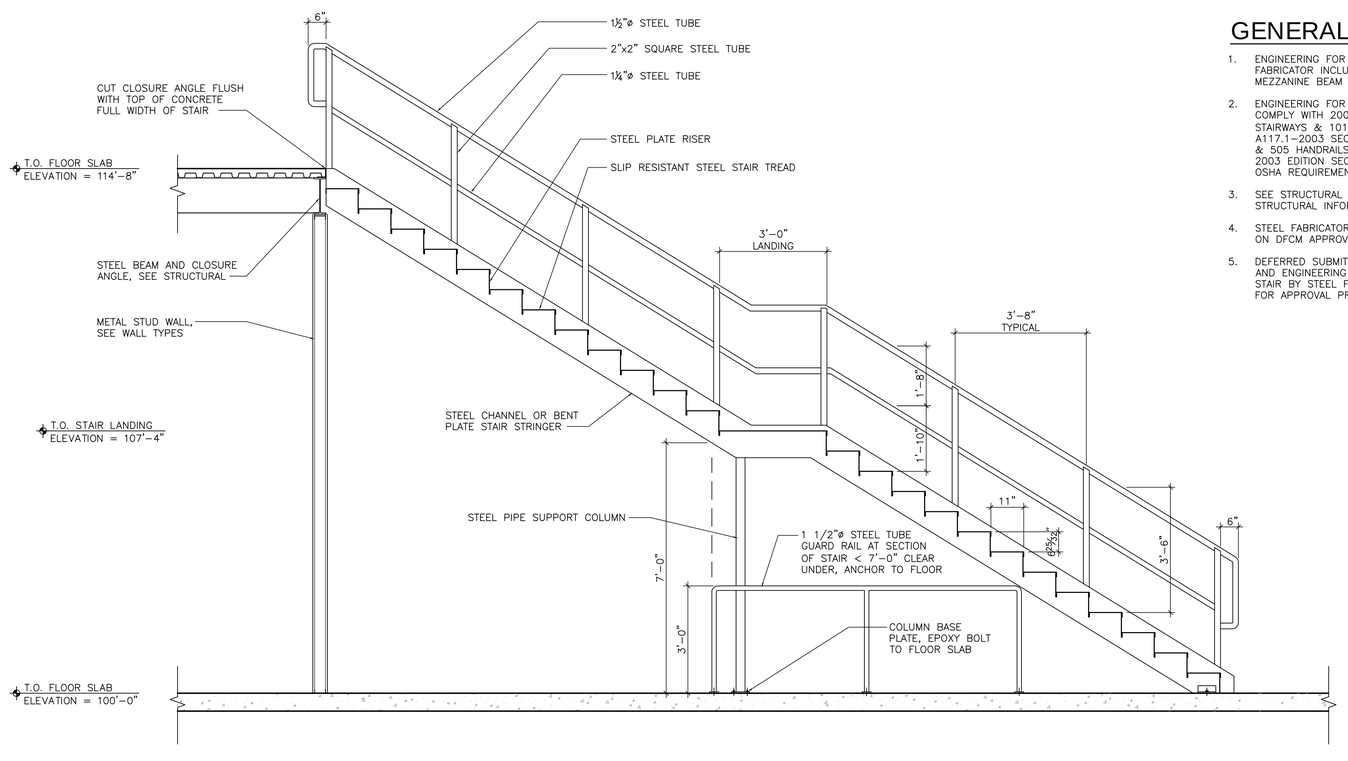


A A322 STAIR SECTION
1/2"=1'-0"

## GENERAL NOTES

1. ENGINEERING FOR STEEL STAIR BY STAIR FABRICATOR INCLUDING ATTACHMENT AT MEZZANINE BEAM AND FLOOR
2. ENGINEERING FOR STEEL STAIR SHALL COMPLY WITH 2006 IBC SECTIONS 1009 STAIRWAYS & 1012 HANDRAILS; ICC/ANSI A117.1–2003 SECTIONS 504 STAIRWAYS & 505 HANDRAILS; LIFE SAFETY CODE 2003 EDITION SECTION 7.2.2 STAIRS AND OSHA REQUIREMENTS FOR STAIRS
3. SEE STRUCTURAL DRAWINGS FOR STRUCTURAL INFORMATION.
4. STEEL FABRICATOR IS REQUIRED TO BE ON DFCM APPROVED FABRICATORS LIST
5. DEFERRED SUBMITTAL: SHOP DRAWINGS AND ENGINEERING DRAWINGS FOR STEEL STAIR BY STEEL FABRICATOR, SUBMIT FOR APPROVAL PRIOR TO FABRICATION

TRACY STOCKING & ASSOCIATES


**State of Utah**
Department of Administrative Services

Division of Facilities Construction & Management
4110 State Office Building
Salt Lake City, Utah 84114
Phone: (801) 538 - 3018
Fax: (801) 538 - 3267

http://dfcm.utah.gov


CREATED BY:

STATE OF UTAH TRACY D. STOCKING 4/3/09 135781 LICENSED ARCHITECT

BUILDING NAME:

Utah State Development Center
870 North 860 East
American Fork, Utah

PROJECT TITLE:

Boiler Replacement/ Building Repairs

| MARK | DATE | DESCRIPTION |
|---|---|---|

ISSUE TYPE: REVIEW

ISSUE DATE: MAY 2009

DFCM PROJECT NO: 08194410
CAD PROJECT NO:
CAD DWG FILE:
DRAWN BY: STAFF
CHK'D BY: MDC
COPYRIGHT: STATE OF UTAH

SHEET TITLE

STAIR SECTION

SHEET NUMBER

A322

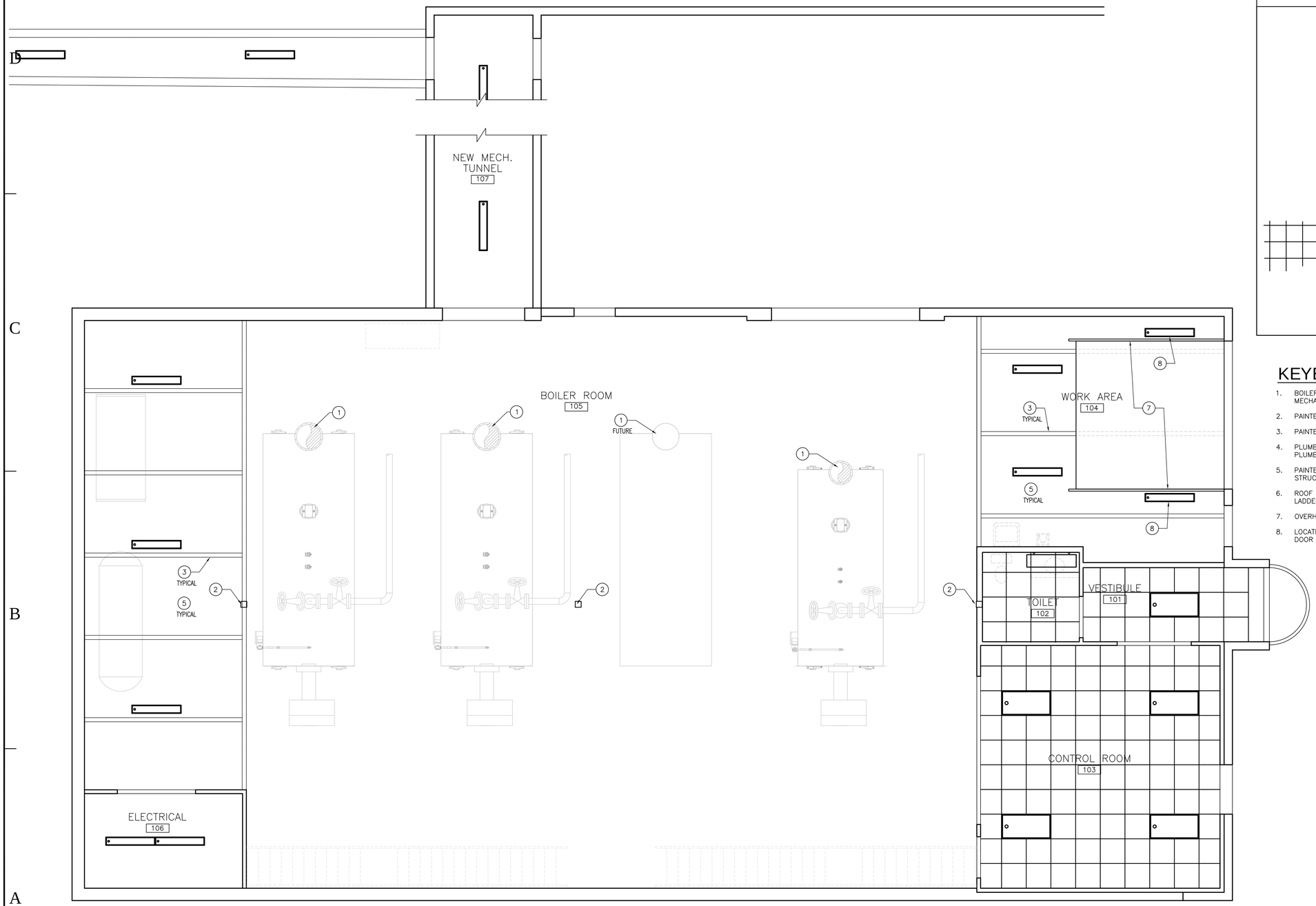


## LEGEND

- 24"X24" LAY-IN TROFFER LIGHT FIXTURE
- WALL MOUNTED LIGHT FIXTURE
- CEILING MOUNTED FLOURESCENT LIGHT FIXTURE
- 24"X48" LAY-IN TROFFER LIGHT FIXTURE
- HVAC SUPPLY GRILLE
- HVAC RETURN GRILLE
- 2X2 SUSPENDED ACOUSTICAL CEILING GRID
- ACCESS DOOR

## KEYED NOTES

1. BOILER FLUE THROUGH ROOF, SEE MECHANICAL
2. PAINTED STEEL COLUMN, SEE STRUCTURAL
3. PAINTED STEEL BEAM, SEE STRUCTURAL
4. PLUMBING VENT STACK THROUGH ROOF, SEE PLUMBING
5. PAINTED EXPOSED METAL DECK, SEE STRUCTURAL
6. ROOF HATCH AND PAINTED STEEL ACCESS LADDER
7. OVERHEAD DOOR AND TRACKS
8. LOCATE LIGHT FIXTURES OUTSIDE OVERHEAD DOOR AREA

NORTH

## MAIN LEVEL REFLECTED CEILING PLAN

SCALE: 1/4" = 1'-0"

TRACY STOCKING & ASSOCIATES


State of Utah
Department of Administrative Services
Division of Facilities Construction & Management
4110 State Office Building
Salt Lake City, Utah 84114
Phone: (801) 538 - 3018
Fax: (801) 538 - 3267
http://dfcm.utah.gov


CREATED BY:

STATE OF UTAH TRACY O. STOCKING 4/3/09 135781 LICENSED ARCHITECT

BUILDING NAME:

Utah State Development Center
870 North 860 East
American Fork, Utah

PROJECT TITLE:

Boiler Replacement/ Building Repairs

| MARK | DATE | DESCRIPTION |
|---|---|---|

ISSUE TYPE: REVIEW

ISSUE DATE: MAY 2009

DFCM PROJECT NO: 08194410
CAD PROJECT NO:
CAD DWG FILE:
DRAWN BY: STAFF
CHK'D BY: MDC

COPYRIGHT: STATE OF UTAH

SHEET TITLE

REFLECTED CEILING PLAN

SHEET NUMBER

A401

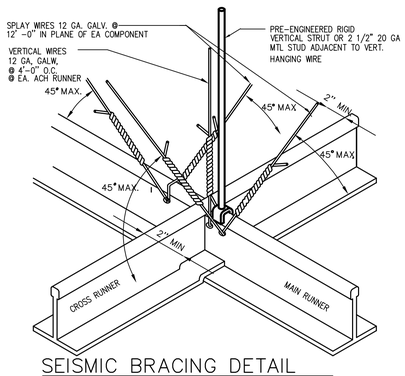


SEISMIC BRACING DETAIL

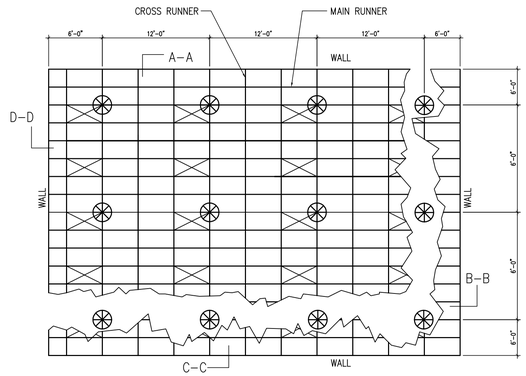


TYP. SUSPENDED CEILING SUPPORT

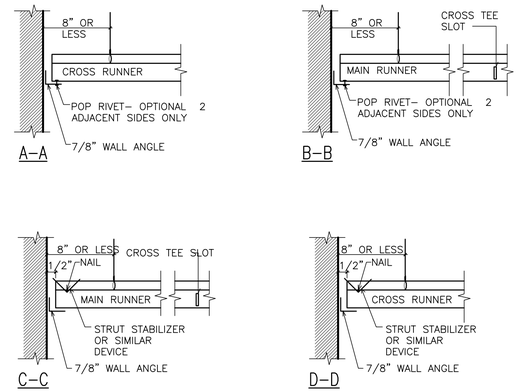


A / A402 SUSPENDED CEILING DETAILS

NOT TO SCALE

## CEILING GENERAL NOTES:

1. NEW 2X4 SUSPENDED CEILING SHALL BE INSTALLED AS PER U.B.C – 1997 EDITION REGARDING SEISMIC BRACING.
2. COORDINATE CEILING INSTALLATION WITH OTHER TRADES AFFECTED (HVAC, ELECTRIC, PLUMBING ETC...).

## CEILING SUSPENSION SYSTEM NOTES:

1. STRUCTURAL CLASSIFICATION SHALL BE "HEAVY DUTY."
2. MAIN RUNNERS AND CARRING CHANELS SHALL BE LEVEL TO WITHING ⅛" IN 12'-0".
3. SUSPENSION WIRES SHALL BE NOT MORE THAN 1 IN 6 OUT OF PLUMB.
4. ALL CEILING MOUNTED LIGHT FIXTURES SHALL BE ATTACHED TO SUSPENDED CEILING GRID, IN ADDITION 12 GA. HANGER WIRES SHALL BE ATTACHED TO THE GRID WITHIN 3" OF EACH CORNER OF THE FIXTURE. TWO ADDITIONAL WIRES SHALL BE CONNECTED TO THE LIGHT HOUSING AND TO THE STRUCTURE ABOVE (THESE WIRES MAY BE SLACK).
5. WIRES SHALL NOT ATTACH TO OR BEND AROUND INTERFERING MATERIAL OR EQUIPMENT, NOR SHALL THEY BE CLOSER THAN 6" FROM ANY UN-BRACED HORIZONTAL PIPING OR DUCTWORK. A TRAPEZE OR SIMILAR DEVICE SHALL BE USED WHERE OBSTRUCTIONS OCCUR.

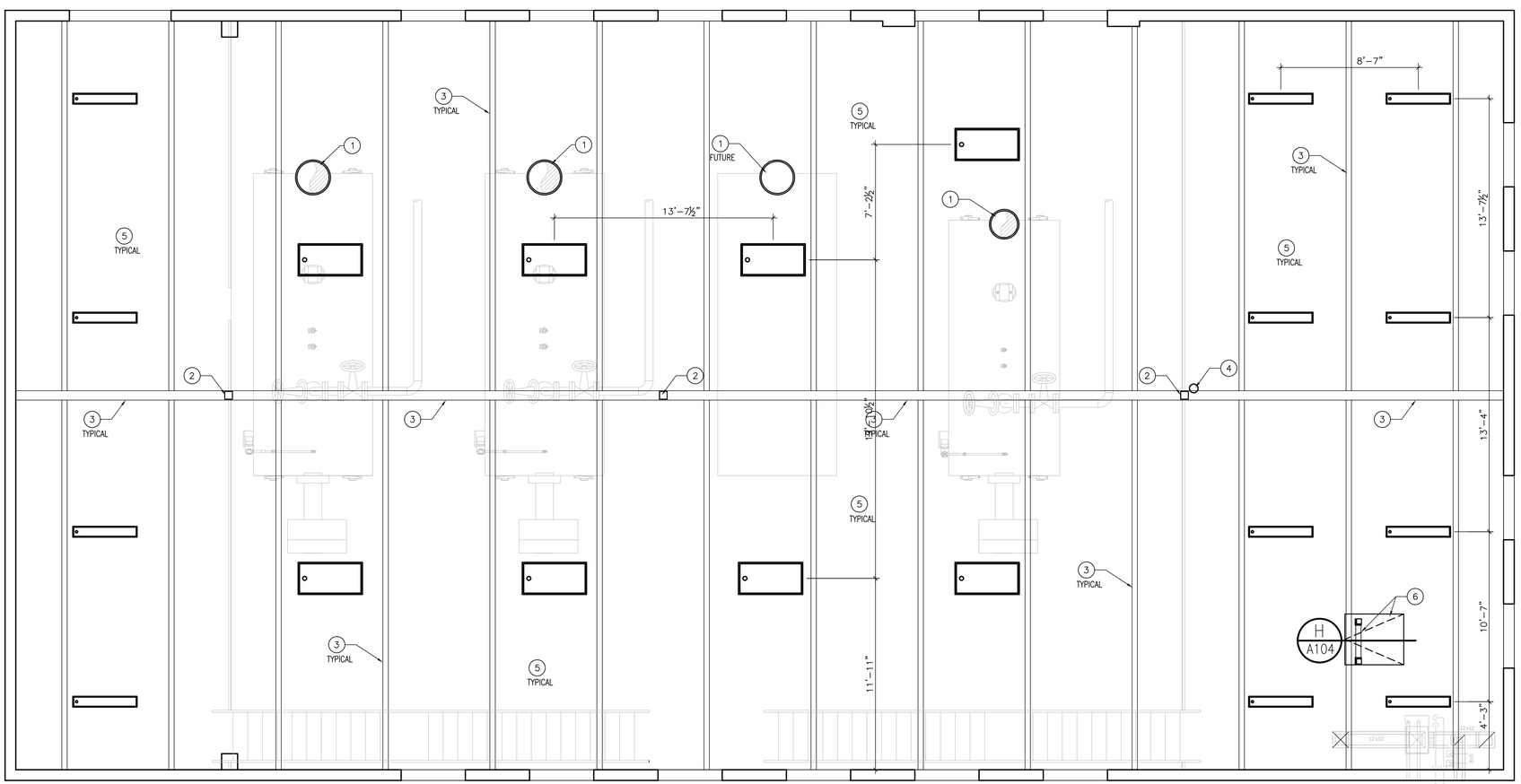


## LEGEND

- 24"X24" LAY-IN TROFFER LIGHT FIXTURE
- WALL MOUNTED LIGHT FIXTURE
- CEILING MOUNTED FLOURESCENT LIGHT FIXTURE
- 24"X48" LAY-IN TROFFER LIGHT FIXTURE
- HVAC SUPPLY GRILLE
- HVAC RETURN GRILLE
- 2X2 SUSPENDED ACOUSTICAL CEILING GRID
- ACCESS DOOR

## KEYED NOTES

1. BOILER FLUE THROUGH ROOF, SEE MECHANICAL
2. PAINTED STEEL COLUMN, SEE STRUCTURAL
3. PAINTED STEEL BEAM, SEE STRUCTURAL
4. PLUMBING VENT STACK THROUGH ROOF, SEE PLUMBING
5. PAINTED EXPOSED METAL DECK, SEE STRUCTURAL
6. ROOF HATCH AND PAINTED STEEL ACCESS LADDER

NORTH

UPPER LEVEL REFLECTED CEILING PLAN

SCALE: 1/4" = 1'-0"

TRACY STOCKING & ASSOCIATES


State of Utah
Department of Administrative Services
Division of Facilities Construction & Management
4110 State Office Building
Salt Lake City, Utah 84114
Phone: (801) 538 - 3018
Fax: (801) 538 - 3267
http://dfcm.utah.gov


CREATED BY:

BUILDING NAME:

Utah State Development Center
870 North 860 East
American Fork, Utah

PROJECT TITLE:

Boiler Replacement/ Building Repairs

| MARK | DATE | DESCRIPTION |
|---|---|---|

ISSUE TYPE: REVIEW

ISSUE DATE: MAY 2009

DFCM PROJECT NO: 08194410
CAD PROJECT NO:
CAD DWG FILE:
DRAWN BY: STAFF
CHK'D BY: MDC
COPYRIGHT: STATE OF UTAH

SHEET TITLE

REFLECTED CLG. PLAN & DETAILS

SHEET NUMBER

A402

# WINDOW SCHEDULE

| MARK | ROUGH OPENING | FRAME TYPE | GLASS | FRAME FINISH TYPE | DETAILS JAMB | DETAILS HEAD | DETAILS SILL | REMARKS |
|---|---|---|---|---|---|---|---|---|
| A | 4'-0" X 4'-0" | 2 | DBL PANE/ LOW-E | MILL | A/A601 | A/A601 | B/A601 | ALUM. FRAME |
| B | 12'-0" X 4'-0" | 1 | DBL PANE/ LOW-E | PAINT | J/A601 | J/A601 | J/A601 | PROVIDE TEMPERED GLASS WITHIN 30" OF DOOR |

# DOOR SCHEDULE

| MARK | | FIRE RATE | TYPE | SIZE WIDTH | SIZE HEIGHT | SIZE THICK. | DOOR MAT'L | DOOR FIN. | FRAME MAT'L | FRAME FIN. | FRAME TYPE | HDWR. GROUP | DETAILS HEAD | DETAILS JAMB | DETAILS THRESHOLD | REMARKS |
|---|---|---|---|---|---|---|---|---|---|---|---|---|---|---|---|---|
| 1 | MAIN ENTRANCE | NONE | 1 | 3'-0" | 7'-0" | 1 3/4" | HM/GLASS | PAINT | HM | PAINT | 5 | 1 | C/A601 | D/A601 | E/A601 | INSULATED, TEMPERED GLASS IN DOOR & SIDE LIGHT |
| 2 | ENTRANCE | NONE | 3 | 3'-0" | 7'-0" | 1 3/4" | HM/GLASS | PAINT | HM | PAINT | 1 | 1 | C/A601 | D/A601 | E/A601 | INSULATED, TEMPERED GLASS IN DOOR |
| 3 | BOILER PLANT | NONE | 2 | 3'-0" | 7'-0" | 1 3/4" | HM | PAINT | HM | PAINT | 1 | 1 | C/A601 | D/A601 | E/A601 | INSULATED |
| 4 | MEZZANINE | NONE | 3 | 6'-0" | 7'-0" | 1 3/4" | HM/GLASS | PAINT | HM | PAINT | 2 | 2 | C/A601 | D/A601 | E/A601 | DOUBLE DOOR, INSULATED, TEMPERED GLASS IN DOOR |
| 5 | CONTROL ROOM | NONE | 1 | 3'-0" | 7'-0" | 1 3/4" | HM/GLASS | PAINT | HM | PAINT | 3 | 3 | F/A601 | F/A601 | N/A | INSULATED, TEMPERED GLASS IN DOOR & SIDE LIGHT |
| 6 | CONTROL ROOM | NONE | 1 | 3'-0" | 7'-0" | 1 3/4" | HM/GLASS | PAINT | HM | PAINT | 3 | 4 | F/A601 | F/A601 | N/A | INSULATED, TEMPERED GLASS IN DOOR |
| 7 | RESTROOM | NONE | 2 | 3'-0" | 7'-0" | 1 3/4" | HM | PAINT | HM | PAINT | 3 | 5 | F/A601 | F/A601 | N/A | INSULATED |
| 8 | ELECTRICAL | NONE | 4 | 3'-0" | 7'-0" | 1 3/4" | HM | PAINT | HM | PAINT | 3 | 4 | F/A601 | F/A601 | N/A | 12"X18" LOUVER |
| 9 | ROLL-UP | NONE | 5 | 12'-0" | 12'-0" | 1 3/4" | METAL | PAINT | HM | PAINT | 6 | – | G/A601 | H/A601 | N/A | OVERHEAD, LOW PROFILE CEILING MOUNT TRACK, INSULATED |
| 10 | ROLL-UP | NONE | 5 | 12'-0" | 12'-0" | 1 3/4" | METAL | PAINT | HM | PAINT | 6 | – | G/A601 | H/A601 | N/A | OVERHEAD, WALL MOUNT TRACK, INSULATED |
| 11 | TUNNEL | 1 HR | 2 | 3'-0" | 7'-0" | 1 3/4" | HM | PAINT | HM | PAINT | 3 | 4 | F/A601 | F/A601 | B/A310 | |

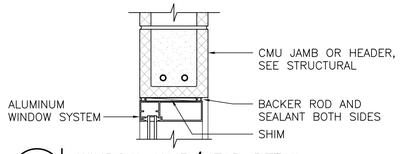


A A601 WINDOW JAMB/HEAD DETAIL
1"=1'-0"

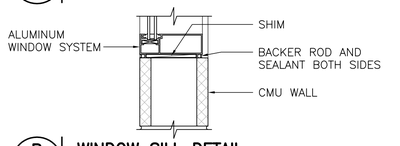


B A601 WINDOW SILL DETAIL
1"=1'-0"

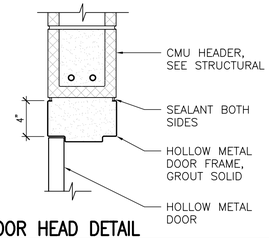


C A601 DOOR HEAD DETAIL
1"=1'-0"

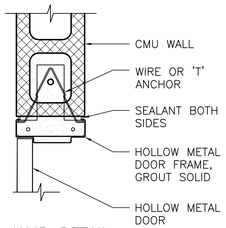


D A601 DOOR JAMB DETAIL
1"=1'-0"

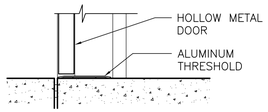


E A601 THRESHOLD DETAIL
1"=1'-0"

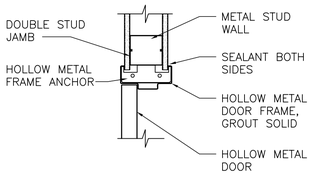


F A601 DOOR HEAD/JAMB DETAIL
1"=1'-0"

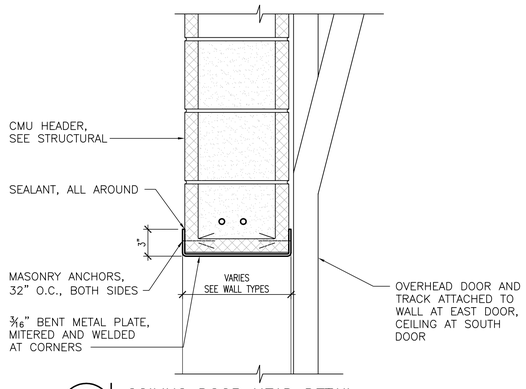


G A601 COILING DOOR HEAD DETAIL
1"=1'-0"

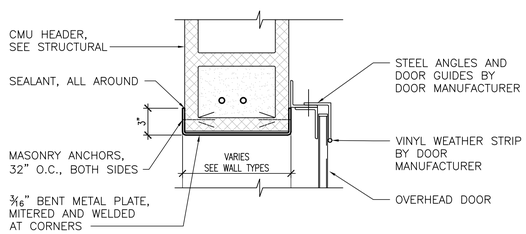


H A601 COILING DOOR JAMB DETAIL
1"=1'-0"

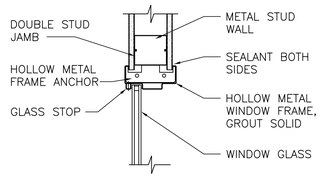


J A601 H.M. WINDOW HEAD/JAMB DETAIL
1"=1'-0"

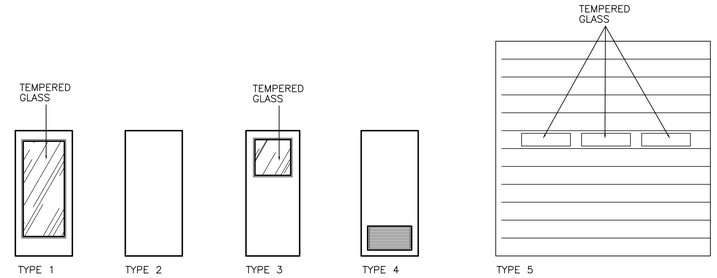


– A601 DOOR TYPES
1/4"=1'-0"

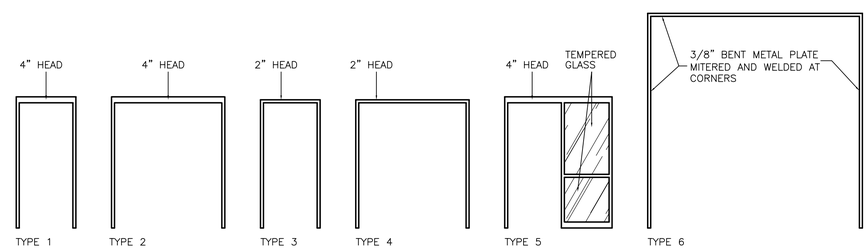


– A601 FRAME TYPES
1/4"=1'-0"

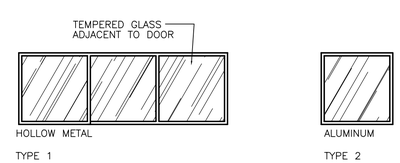


– A601 WINDOW TYPES
1/4"=1'-0"

TRACY STOCKING & ASSOCIATES


State of Utah
Department of Administrative Services
Division of Facilities Construction & Management
4110 State Office Building
Salt Lake City, Utah 84114
Phone: (801) 538 - 3018
Fax: (801) 538 - 3267
http://dfcm.utah.gov


CREATED BY:

BUILDING NAME:
Utah State Development Center
870 North 860 East
American Fork, Utah

PROJECT TITLE:
Boiler Replacement/ Building Repairs

| MARK | DATE | DESCRIPTION |
|---|---|---|

ISSUE TYPE: REVIEW

ISSUE DATE: MAY 2009

DFCM PROJECT NO: 08194410
CAD PROJECT NO:
CAD DWG FILE:
DRAWN BY: STAFF
CHK'D BY: MDC
COPYRIGHT: STATE OF UTAH

SHEET TITLE
DOOR & WINDOW SCHEDULE

SHEET NUMBER
A601

## FINISH SCHEDULE

| NUMBER | ROOM | NORTH WALL | EAST WALL | SOUTH WALL | WEST WALL | FLOOR | BASE | CEILING | CEILING HEIGHT | REMARKS |
|---|---|---|---|---|---|---|---|---|---|---|
| 101 | VESTIBULE | P–GYP | P–CMU/P–GYP | ST | P–CMU/P–GYP | S–CONC | V | LAY–IN | 10'–0" | S4, S11 |
| 102 | TOILET | CT/P–GYP | CT/P–GYP | CT/P–GYP | CT/P–GYP | CT | CT | LAY–IN | 10'–0" | S6, S7, S9 |
| 103 | CONTROL ROOM | P–GYP | P–GYP | P–GYP | P–GYP | S–CONC | V | LAY–IN | 10'–0" | S1 |
| 104 | WORK AREA | – | P–CMU | P–CMU | P–GYP/CT | S–CONC | NONE | P–STRC | 14'–5" * | S2, S3, S5 |
| 105 | BOILER ROOM | P–CONC | P–CONC/P–CMU | P–GYP | P–CONC/P–CMU | S–CONC | NONE | P–STRC | 24'–8" TO 25'–8" * | S4 |
| 106 | ELECTRICAL | P–CONC | P–GYP | P–GYP | P–CONC | S–CONC | NONE | P–STRC | 14'–5" * | S8, S10 |
| 107 | NEW TUNNEL | P–CONC | P–CONC | P–CONC | P–CONC | S–CONC | NONE | P–CONC | 8'–0" | |
| 201 | EQUIPMENT PLATFORM | – | P–CMU | P–CMU | P–CMU | S–CONC | NONE | P–STRC | 10'–0" TO 11'–0" * | S4 |
| 202 | MEZZANINE | P–CMU | P–CMU | – | P–CMU | S–CONC | NONE | P–STRC | 10'–0" TO 11'–0" * | S4 |

* TO BOTTOM OF DECK, DOES NOT INCLUDE BEAMS

### FLOOR

| | |
|---|---|
| S–CONC | SEALED CONCRETE |
| CT | CERAMIC TILE |

### WALLS

| | |
|---|---|
| P–CONC | PAINTED CONCRETE |
| P–CMU | PAINTED CMU |
| P–GYP | PAINTED GYPSUM BOARD |
| CT | CERAMIC TILE |
| ST | STORE FRONT |

### BASE

| | |
|---|---|
| N | NONE |
| V | VINYL |
| CT | COVED CERAMIC TILE |

### CEILING

| | |
|---|---|
| LAY–IN | ACOUSTICAL TILE CEILING SUSPENSION SYSTEM, SEE REFLECTED CEILING PLAN |
| P–STRC | PAINTED, EXPOSED STRUCTURAL SYSTEM |
| P–CONC | PAINTED, EXPOSED CONCRETE |

### SPECIAL TRIM OR EQUIPMENT

| | |
|---|---|
| S1 | CABINETS |
| S2 | ELECTRIC WATER COOLER |
| S3 | SERVICE SINK |
| S4 | WALL MOUNTED FIRE EXTINGUISHER |
| S5 | CUSTODIAL UTILITY SHELF, SEE PROJECT MANUAL |
| S6 | RESTROOM FIXTURES |
| S7 | RESTROOM ACCESSORIES |
| S8 | ELECTRICAL PANELS |
| S9 | CERAMIC TILE WAINSCOT |
| S10 | TELECOMMUNICATIONS BOARD |
| S11 | FIRE ALARM PANEL |

TRACY STOCKING & ASSOCIATES


State of Utah
Department of Administrative Services
Division of Facilities Construction & Management
4110 State Office Building
Salt Lake City, Utah 84114
Phone: (801) 538 - 3018
Fax: (801) 538 - 3267
http://dfcm.utah.gov


CREATED BY:

STATE OF UTAH TRACY O. STOCKING 135781 LICENSED ARCHITECT 4/3/09

BUILDING NAME:

Utah State Development Center
870 North 860 East
American Fork, Utah

PROJECT TITLE:

Boiler Replacement/ Building Repairs

| MARK | DATE | DESCRIPTION |
|---|---|---|

ISSUE TYPE: REVIEW

ISSUE DATE: MAY 2009

DFCM PROJECT NO: 08194410
CAD PROJECT NO:
CAD DWG FILE:
DRAWN BY: STAFF
CHK'D BY: MDC
COPYRIGHT: STATE OF UTAH

SHEET TITLE

FINISH SCHEDULE

SHEET NUMBER

A602

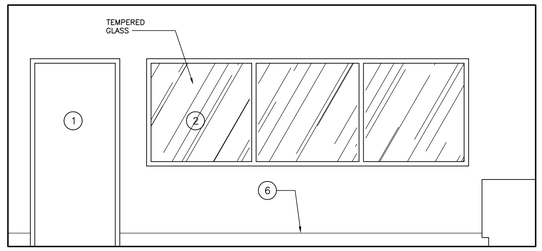


1

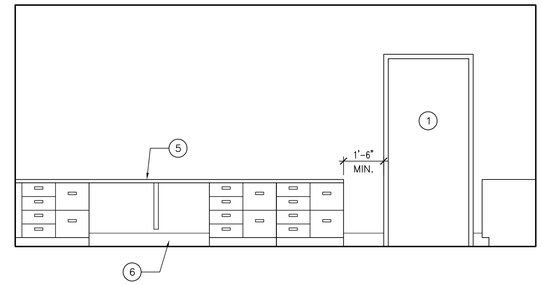


2

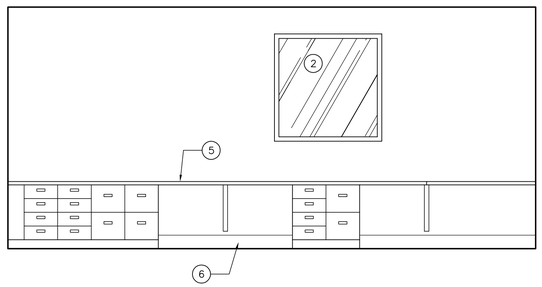


3

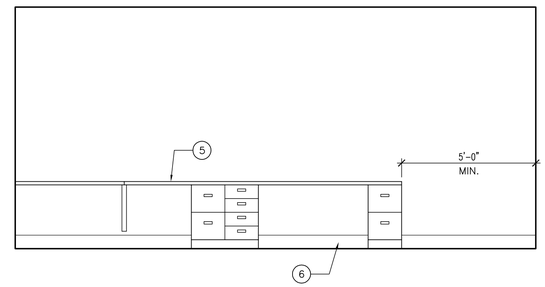


4

A A603 CONTROL ROOM ELEVATIONS
SCALE: 3/8"=1'-0"

## KEYED NOTES

1. DOOR, SEE SCHEDULE
2. WINDOW, SEE SCHEDULE
3. PLASTIC LAMINATE COUNTER TOP
4. FRP WALL PANEL
5. SYSTEMS FURNITURE BY OWNER
6. BASE, SEE FINISH SCHEDULE
7. COUNTERTOP SUPPORT BRACKET
8. WATER CLOSET
9. COUNTER MOUNTED LAV. W/ PIPE INSULATION KIT– SEE PLUMBING
10. 18" X 30" MIRROR W/ S.S. FRAME – SEE MOUNTING STANDARDS
11. PAPER TOWEL DISPENSER – SEE MOUNTING STANDARDS (FOIO)
12. UTILITY SHELF AND HOOK STRIP
13. CERAMIC TILE BASE
14. GRAB BARS – SEE MOUNTING STANDARDS
15. TISSUE DISPENSER – SEE MOUNTING STANDARDS (FOIO)
16. SOAP DISPENSER – SEE MOUNTING STANDARDS (FOIO)
17. CORNER GUARD
18. WATER COOLER
19. UTILITY SINK

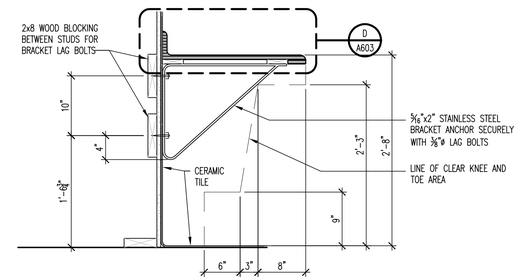


C A603 COUNTERTOP SUPPORT DETAIL
SCALE: 1" = 1'-0"

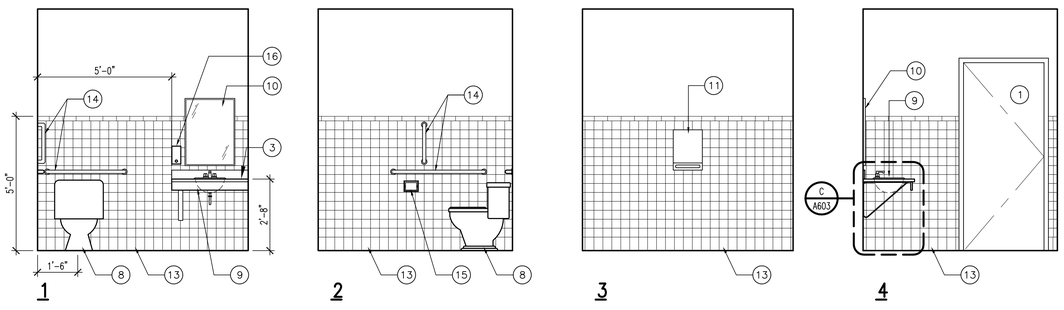


B A603 RESTROOM ELEVATIONS
SCALE: 3/8" = 1'-0"

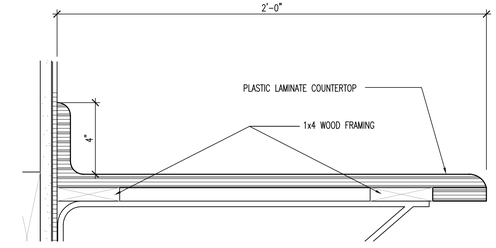


D A603 COUNTERTOP DETAIL
SCALE: 3" = 1'-0"

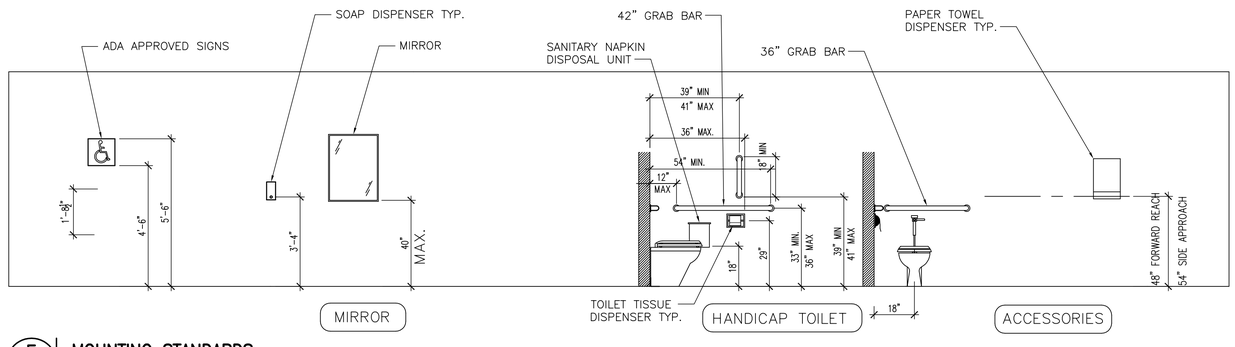


E A603 MOUNTING STANDARDS
SCALE: 3/8" = 1'-0"

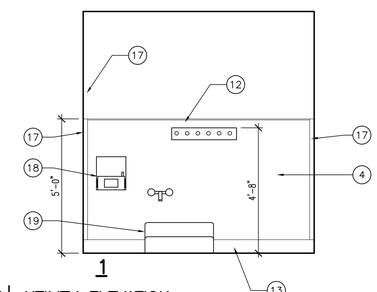


F A603 UTILITY ELEVATION
SCALE: 3/8" = 1'-0"

TRACY STOCKING & ASSOCIATES

**State of Utah**
Department of Administrative Services

Division of Facilities Construction & Management
4110 State Office Building
Salt Lake City, Utah 84114
Phone: (801) 538 - 3018
Fax: (801) 538 - 3267

http://dfcm.utah.gov

CREATED BY:

STATE OF UTAH TRACY O. STOCKING 4/3/09 135781 LICENSED ARCHITECT

BUILDING NAME:

Utah State Development Center
870 North 860 East
American Fork, Utah

PROJECT TITLE:

Boiler Replacement/ Building Repairs

| MARK | DATE | DESCRIPTION |
|---|---|---|

ISSUE TYPE: REVIEW

ISSUE DATE: MAY 2009

DFCM PROJECT NO: 08194410
CAD PROJECT NO:
CAD DWG FILE:
DRAWN BY: STAFF
CHK'D BY: MDC
COPYRIGHT: STATE OF UTAH

SHEET TITLE

INTERIOR ELEVATIONS

SHEET NUMBER

A603

# GENERAL NOTES FOR STRUCTURAL SHEETS

## BASIS OF DESIGN

1. BUILDING CODE ..... 2006 IBC
2. OCCUPANCY CATEGORY ..... III
3. GRAVITY DESIGN:
   DEAD LOADS:
   Roofs ..... 25 psf
   Floors ..... 60 psf
   LIVE LOADS:
   Roofs ..... 20 psf
   Mezzanine Heavy Storage ..... 250 psf
   Mezzanine Light Storage ..... 125 psf
   SNOW LOADS:
   Snow load on ground, Pg ..... 43.8 psf
   Snow load on flat roof, Pf ..... 33 psf
   Exposure factor, Ce ..... 1.0
   Importance factor, Is ..... 1.1
   Thermal factor, Ct ..... 1.0
4. WIND DESIGN:
   Basic wind speed ..... 90 mph
   Importance factor, Iw ..... 1.15
   Exposure ..... B
5. SEISMIC DESIGN:
   Importance factor, Ie ..... 1.25
   Mapped Spectral response accelerations:
   Ss & S1 ..... 1.25 & 0.53
   Site class ..... D
   Spectral response coefficients:
   SDs & SD1 ..... 0.84 & 0.53
   Seismic Design Category ..... D
   Basic Seismic-Force-Resisting System:
   Bearing wall systems, Special reinforced masonry shear walls
   Seismic response coefficient, Cs ..... 0.15 WSD
   Response modification factor, R ..... 5
   Analysis procedure ..... Equivalent Lateral Force
5. SOILS:
   Soil bearing pressure ..... 2700 psf Increases w/ Footing Width
   Lateral earth pressure ..... 61 psf At Rest Pressure
   Minimum frost cover ..... 30 inches
6. ABBREVIATIONS:
   EOR = Engineer of record. See professional stamp this page.
   UNO = Unless noted otherwise
   (E) = Existing condition
   (N) = New construction

## GENERAL

1. THE GENERAL CONTRACTOR SHALL:
   A. Be familiar with the contract documents and insure that subcontractors are familiar with their portion of the work. Submit a written request to the Arch/EOR for approval before proceeding with any changes.
   B. Verifies site conditions and dimensions at the site. If they differ from the contract documents, notify the Arch/EOR prior to fabrication/construction of affected elements. Existing condition information on the drawings is based on best knowledge acquired during the design phase and may differ from actual conditions. Affected details may require redesign.
   C. Report to the Arch/EOR modifications made to the structure.
   D. Be responsible for safety and protection on and around the job site and adjacent properties.
2. THE GENERAL CONTRACTOR SHALL COORDINATE:
   A. And verify locations, weights and sizes of mechanical units, equipment, etc. prior to the fabrication and erecting of structural supporting elements. Report sizes and locations that differ from those shown on the drawings to the Arch/EOR for review. Additional framing maybe required.
   B. Roof, floor, and wall openings required for mechanical, etc. which are not shown on the structural drawings with the Arch/EOR.
   C. Any structural situation not covered by the drawings with the Arch/EOR.
   D. Doors, windows, walls, elevations, slopes, stairs, curbs, drains, recesses, depressions, railings, waterproofing, finishes, chamfers, kerfs, pads, landscape walls, trenches in slabs, etc. with the structural work.
   E. Inspections, testing, and structural observations as work proceeds. Notify the EOR 48 hours prior to any required structural observations.
3. CONTRACT DOCUMENTS & DRAWINGS:
   A. These structural notes complement the specifications and the drawings.
   B. Specific details, sections and notes shown on the drawings govern over these general notes and typical details.
   C. Contract documents take precedence over shop drawings, UNO.
   D. Apply typical or similar details, sections and notes to similar situations on the drawings where specific details are not referenced.
   E. Drawings and details have been prepared to visually represent information provided in scaled form. However, DO NOT scale plans or details for dimensional information.
   F. Refer to architectural drawings for dimensions.
4. BUILDING CODE COMPLIANCE: Construction, inspection, materials, testing, and workmanship shall conform to the requirements of the governing building code.
5. CONSTRUCTION SEQUENCE, SHORING, AND BRACING REQUIREMENTS: The general contractor is responsible for the method, means, and sequence of structural erection, UNO. He shall provide adequate temporary shoring or bracing for all structural elements until the entire structural system is completed. Design of shoring and bracing is by others at no additional cost to the owner.
6. OMISSIONS, CONFLICTS & DISCREPANCIES:
   A. Bring omissions, conflicts or discrepancies between the elements of the contract documents to the attention of the Arch/EOR before proceeding with work involved.
   B. In case of conflicts or discrepancies, follow the most stringent requirements as directed by the Arch/EOR.
7. MISCELLANEOUS:
   A. During and after construction, builder and/owner shall keep loads on the structure within the limits of this design. See Basis of Design.
   B. Site observations by WCA's field representative shall neither be construed as inspection nor approval of construction.
   C. Stairs shall be per the architectural drawings. Steel fabricator shall submit stair shop drawings for the Arch/EOR to review.
8. SUBMITTALS:
   A. Make submittals in a timely manner. WCA's review is for general compliance only and is not intended as approval. Contractor is responsible for verifying sizes, dimensions and elevations on submittals as related to the contract documents.
   B. Submit the following items for review prior to proceeding with the work:

      Concrete material Certifications & mix designs.
      Masonry material Certifications, grout & mortar designs.
      Shop Drawings:
      Reinforcing steel
      Steel deck
      Steel stairs
      Structural steel
      Special loads on the structure.
      Roof, floor and wall openings not shown on the drawings.
      Welding procedures and certifications.
      Other (as directed by the EOR)

   C. Allow two weeks for the review of submittals by the EOR.
   D. Have EOR approved shop drawings & materials on site before construction of those components begins.
   E. Substitutions are not allowed unless approved by the EOR. Submit requests for structural substitutions to the Arch/EOR.

## SPECIAL INSPECTION AND TESTING

1. SEE SHEET **SG101** for required verification & inspection of :
   A. Steel construction.
   B. Concrete construction
   C. Masonry construction.
   D. Geotech (soils) work.

## FOUNDATIONS

1. SOILS REPORT:
   A. Foundations and retaining wall systems have been designed following the recommendations contained in a soils report prepared by: RB & G ENGINEERING, INC
      1435 West 820 North
      Provo, Utah 84601-1343
      Phone 801-521-5771
      Dated: March 2009

      Obtain a copy from the architect. This design assumes the recommendations contained in this report are being followed.
   B. If soil conditions vary from the report or if the report has been amended, etc., the contractor shall immediately inform the EOR. Foundations as shown on the drawings may require revision.
2. Soil preparation under footings and slabs-on-grade shall be in accordance with the soils report.
3. The general contractor is responsible for soil excavation, back fill and support of adjacent properties during earthwork.
4. All walls (except cantilevered retaining walls) shall be adequately brace against lateral movement prior to backfilling. Design and erection of bracing/shoring is the general contractor's responsibility. Bracing shall remain in place until supporting structural elements are in place and have attained full strength. If walls are not braced, DO NOT backfill until suspended floor is in place and concrete has attained full strength.

## REINFORCING STEEL

1. CODES AND STANDARDS. Comply with:
   A. CRSI "Manual of Standard Practice".
   B. ACI "Detailing Manual", ACI 315 (or SP-66),
2. MATERIALS:
   A. New stock deformed rebar: ASTM A615, Grade 60, except as noted.
      a. Field bent dowels: ASTM A615, Grade 40 or ASTM A706, Grade 60, Low-Alloy Steel. Reduce spacing of grade 40 dowels by 1/3.
      b. Welded rebar: ASTM A706, Grade 60, Low-Alloy Steel.
      c. Deformed bar anchors (DBA's): See materials under section 'Structural Steel'
   B. Masonry joint wire: ASTM A82.
   C. Use mechanical splice couplers capable of developing 125% of the specified bar strength.
3. CONSTRUCTION:
   A. Detail, bolster, and support all rebar. Tie bars securely with proper clearances before casting concrete.
   B. Use rebar free of loose flaky rust, scale, grease, oil, dirt, and other materials, which affect or impair bond.
   C. Place rebar continuous in walls, beams, columns, slabs, footings, etc.
   D. Minimum lap splices (Inches), for normal weight concrete and masonry with strengths specified per 'General Structural Notes', UNO:

| | #3 | #4 | #5 | #6 | #7 | #8 | #9 | #10 | #11 |
|---|---|---|---|---|---|---|---|---|---|
| Concrete: | 24" | 24" | 24" | 26" | 36" | 44" | 48" | 56" | 62" |
| Masonry: | 24" | 24" | 30" | 36" | 42" | 48" | 54" | * | * |

*Use mechanical splice couplers

   In suspended slabs and beams, make top bar splices at mid-spans and bottom bar splices at supports, UNO.

   E. Make cold bends. DO NOT use heat. Bends in the fabricator's shop, UNO. DO NOT unbend or rebend a previously bent bar.
   F. Minimum concrete cover: (securely position and anchor rebar prior to pour)

      Cast against and permanently exposed to earth ..... 3"
      Exposed to earth or weather:
      #6 and larger ..... 2"
      #5 and smaller ..... 1-1/2"
      NOT exposed to earth or weather:
      Slabs, walls and joist, #11 & smaller ..... 3/4"
      Beams, columns: Main reinforcing or ties ..... 1-1/2"
      Slabs-On-Grade (SOG) ..... Center of slab, UNO

   G. In masonry, place and position rebar according to the structural drawings while laying units. Secure against displacement at intervals not to exceed the following:

      #4 and smaller ..... 6'-0"
      #5 and larger ..... 10'-0"

   H. DO NOT weld reinforcing unless specifically noted. Use E-90XX electrodes and ASTM A706 reinforcing. Comply with AWS requirements.
   I. Use epoxy coated reinforcing when specifically noted. Increase lap splice lengths by a factor of 1.2.

## EPOXY

1. PRODUCT:
   A. Epoxy for Concrete Connections shall be:
      1. "Hit RE 500" by Hilti Corporation
      2. "Set-XP" by Simpson Strong Tie
   B. Epoxy for Masonry Connections shall be:
      1. "Hit RE 500" or "Hit HY 150 Max" by Hilti Corporation (grouted cells)
      2. "Hit HY 20" by Hilti Corporation (un-grouted cells, with screen tubes)
      3. "Set Epoxy-Tie" by Simpson Strong Tie
      4. "Powers-Fast" by Powers Fasteners
2. INSTALLATION:
   A. All drilled holes for anchors rods 1" in diameter and smaller shall be 1/8" larger than the anchor rod being installed. All drilled holes for anchor rods greater than 1" in diameter shall be 1/4" larger than the bar or anchor rod being installed.
   B. After drilling the proper size hole, clean the walls and bottom of the drilled hole of all dust and debris using a nylon brush in conjunction with oil free compressed air. The hole shall be free of dust, debris and standing water.
   C. Follow all manufacturers' recommendations for epoxy installation.

## CONCRETE

1. CODES AND STANDARDS. Comply with the following Codes:
   A. ACI 301, "Specifications for Structural Concrete for Buildings".
   B. ACI 318, "Building Code Requirements for Reinforced Concrete".
   C. ACI 347, "Recommended Practice for Concrete Form Work".
2. MATERIALS shall conform to the following:
   A. Cement: ASTM C150, Type I, Portland Cement.
   B. Hard rock aggregates: ASTM C33
   C. Water shall be potable.
   D. Air entrainment: ASTM C260
   E. Fly ash: ASTM C618
   F. Calcium chloride SHALL NOT be used.
3. MIX DESIGNS:
   A. Place only one type of concrete at any given time.
   B. The maximum slump shall be 4" w/o plasticizer added.
   C. Use pea gravel and/or plasticizer in congested areas.
   D. Limit fly ash to 20% of the total cement.
   E. Concrete mixes shall conform to the following:

| TYPE OF CONCRETE MEMBER | 28 DAY STRENGTH (psi) | MAX. W/C (ratio) | MAX. DRY WEIGHT (pcf) | MAX. AGGREGATE SIZE (inches) | AIR (%) | MIN. CEMENT PER YD. (lbs) |
|---|---|---|---|---|---|---|
| Footings: | 3000 | 0.50 | 150 | 3/4 | 3 ±1 | 517 |
| Foundation walls and grade beams: | 4000 | 0.45 | 150 | 3/4 | 3 ±1 | 564 |
| Slabs on grade: | 4000 | 0.47 | 150 | 1.5* | 3 ±1 | 564 |
| Suspended slabs: Normal Wt. | 4000 | 0.45 | 150 | 3/4 | 3 ±1 | 564 |
| Concrete poured over steel deck: Normal Wt. | 4000 | 0.45 | 150 | 3/4 | 0 to 3 | 564 |
| Columns: | 4000 | 0.45 | 150 | 3/4 | 3 ±1 | 564 |
| Beams: | 4000 | 0.45 | 150 | 3/4 | 3 ±1 | 564 |
| Walls: | 4000 | 0.45 | 150 | 3/4 | 3 ±1 | 564 |

*Well-graded Aggregates required (1.5"=> course >3/8", medium, and fines <#8) Follow ACI 302 for sand gradation.

4. CONSTRUCTION:
   A. Mechanically vibrate concrete during placement.
   B. Prior to placing concrete, check with trades to insure proper placement of openings, block outs, sleeves, curbs, conduits, bolts, inserts, embeds, dowels, etc. Place anchor bolts and dowels prior to casting concrete, UNO.
   C. Form construction joints and bulkheads with a key way. Intentionally roughen contact surfaces (new or existing) at construction joints prior to casting adjacent pours, UNO.
   D. Add additional reinforcing too sides of floor and wall opening, equivalent to the bars cut by the opening with half to each side of the opening or (2) #5 bars, whichever is greater, UN0. Bars parallel to the principal reinforcing shall run full length of the span. End bars in the other direction with a standard hook. Add (2) #5 x 5'-0" diagonal bars at every corner.
   E. DO NOT allow penetrations through any beam, joist, column, pier, footing, or jamb without the EOR's approval. Otherwise, re-rout the penetration.
5. FOOTINGS:
   A. Bear footings on properly prepared materials.
   B. Center footings on the wall or column above, UNO.
   C. Bear exterior footings below the effects of frost. See Basis of Design.
   D. Provide 2x4 beveled key in continuous wall footings.
   E. Stagger footing construction joints from wall construction joints above by at least 6 feet.
   F. Provide corner bars in continuous footings at corners and intersections.
   G. Add (2) #6 or (3) #5 lengthwise top bars in addition to footing schedule reinforcement at continuous footings without concrete foundation walls directly above (door openings, etc.).
   H. DO NOT allow penetrations through any concrete footing. At utilities, step the footing down below the conflict and add a concrete wall, pier or column that extends to the footing. Consult with the EOR.
   I. Backfill bearing surfaces that are undermined during construction with a lean concrete mix (1000 psi min.).
6. SLABS ON GRADE (SOG):
   A. Minimum Interior Office slab-on-grade requirements:
      4 inches thickness.
      4 inch layer of free-draining gravel base.
      #4 bars at 24" o.c. both ways, UNO. Chair rebar for proper placement.
   B. Minimum Interior Boiler slab-on-grade requirements:
      6 inches thickness.
      4 inch layer of free-draining gravel base.
      #5 bars at 18" o.c. both ways, UNO. Chair rebar for proper placement.
   C. Place large areas of interior slabs-on-grade in strips not to exceed 120 feet in length nor 20 feet in width. Subdivide by construction or contraction (control) joints into roughly squares whose sides DO NOT exceed 10 feet in either direction.
   D. See Architectural for exterior slabs on grade, UNO.
7. WALLS:
   A. Place vertical reinforcing in the center of walls (UNO) unless each face (E.F.) is specified. When each face is specified, splice the horizontal reinforcing of each curtain at different locations.
   B. Dowel vertical reinforcing to the structure below and above with the same bar size and spacing, UNO.
   C. Terminate horizontal reinforcing at the ends of walls or openings with a standard hook or corner type bars. Provide corner bars of the size and spacing as the horizontal reinforcing at intersections and corners.
   D. Build penetrations into the wall before pouring concrete. Have the penetrations reviewed by the EOR prior to installation unless detailed on the plans.
   E. Provide drains at the base of retaining and basement walls.
   F. Concrete walls not specially noted on the plans shall be reinforced as follows:

| WALL THICKNESS | VERTICAL REINFORCING | HORIZONTAL REINFORCING | TOP & BOT. HORZ. REINFORCING |
|---|---|---|---|
| 8" | #5 @ 14" o.c. | #5 @ 14" o.c. | |
| 10" | #5 @ 12" o.c. | #5 @ 12" o.c. | |
| 12" | #4 @ 12" o.c.,E.F. | #4 @ 12" o.c.,E.F. | |

   See plans, schedules, and details for other reinforcing.
8. COLUMNS:
   A. Splice vertical reinforcing a minimum length of 40 bar diameters. Splices shall occur at floor levels, UNO.
   B. Space lateral ties in columns at 1/2 the regular spacing but not more than 6 inches on center at the top and bottom of the column for a distance of 1/6 the clear column height, the minimum column plan dimension, or 18 inches, whichever is greater.
   C. At column cross-sectional changes, offset longitudinal bars at floor levels. Slope the inclined bars, at the offset, no more than 1 in 6. Provide lateral ties one foot below, above and thru the offset at 3" o.c., UNO.
9. SUSPENDED SLABS, BEAMS, JOISTS, OR CONCRETE OVER STEEL DECK:
   A. Place large areas of suspended slab so that the maximum extent of any individual casting does not exceed 65 feet in either direction, UNO.

## STEEL STUD FRAMING

1. PRODUCT:
   A. Stud type and size as shown on the plans are per the "Steel Stud Manufacturer's Association" catalog. Alternate systems will be considered if the contractor identifies & provides equivalent sections as those shown on the plans. The alternate system must be approved by the EOR before installation.
   B. Prime paint carbon steel and accessories with rust inhibitive paint meeting performance requirements of TT-P-636C. If this requirement can not be met, use galvanized materials.
2. MATERIALS:
   A. 18-gauge & lighter studs, tracks & joists: Fy = 33 ksi min.
   B. 16-gauge & heavier studs, tracts & joists: Fy = 50 ksi min.
   C. Carbon Steel: Fy = 33 or 50 ksi, ASTM A1003
      Galvanized Steel: Fy = 33 ksi, ASTM A653 SS Grade 33
      Fy = 50 ksi, ASTM A653 SS Grade 50, Class 1 or 3
3. CONNECTIONS: Fasten components by field welding, UNO. Touch-up welds with paint. Touch-up welds of galvanized steel with zinc-rich paint.
4. CONSTRUCTION:
   A. Anchor tracks to the supporting structure w/ 5/8" dia. bolts @ 32" o.c., UNO.
   B. Anchor studs to adjacent walls with w/ Hilti X-ZF 27 P8 (or equal) powder actuated fasteners at 16" o.c., UNO.
   C. Butt-weld abutting lengths of track to a common structural element or each other, UNO.
   D. Plumb, align and securely attach studs to flanges of both upper and lower tracks. Bearing walls must be framed with studs seated against the track webs (No gaps).
   E. Frame headers and supporting studs at wall openings.
   F. Install jack studs or cripples below windowsills, above window and door heads, and elsewhere to furnish support and securely attached to connecting members.
5. SHOP DRAWINGS: Prior to fabrication or framing the contractor shall submit erection drawings and design calculations prepared by the manufacturer or supplier for review by the structural engineer. Construction shall follow the approved shop drawings.

## MASONRY

1. CODES AND STANDARDS: Comply with ACI 530, "Building Code Requirements for Masonry Structures".
2. MATERIALS:
   A. Minimum net area compressive strength of masonry, f'm = 2000 psi.
      1. Determine the compressive strength of masonry by either of the two following methods:
         a. Unit strength method.
            1. Lightweight concrete masonry units. ASTM C90, Grade N, Type 1. Minimum compressive strength = 2800 psi at 28 days (net area).
            2. Grout shall conform to ASTM C476 with a minimum compressive strength of 3000 psi at 28 days. Use a fluid consistent grout, which may contain additional pea gravel if grout spaces are 4" or more in every direction. Limit fly ash to 20% of the total cement.
         b. Prism test method.
            1. Minimum compressive strength of masonry prism tests at 28 days, f'm as specified above.
   B. Type "S" Portland cement-lime mortar. Minimum compressive strength = 1800 psi at 28 days. No additives.
1. CONSTRUCTION:
   A. Store masonry under cover at the job site.
   B. Fully bed face shells.
   C. Tool Mortar joints concave.
   D. DO NOT use mortar for grout.
   E. DO NOT use any frozen materials.
   F. Use either low or high lift grouting procedures.
   G. Consolidate grout by mechanical vibration during placing and reconsolidated after excess moisture has been absorbed but before workability is lost (45 minutes max.).
   H. Grout solid cells containing rebar, bolts, anchors, etc.
   I. Grout steel joist and steel beam pockets solid, UNO.
   J. Provide 1" of grout around bolts in side shells.
   K. DO NOT allow penetration through any beam, column, pier, or jamb without the EOR's approval. Otherwise, re-route penetrations at those locations.
   L. Prior to placing masonry, check with trades to insure proper placement of openings, block outs, sleeves, conduits, bolts, inserts, embeds, dowels, etc.
4. WALLS:
   A. Use running bond. Build corners and intersections as an integral unit.
   B. Dowel vertical reinforcing to the structure below and above with the same size bar and spacing, UNO.
   C. Place vertical reinforcing at the centerline of the wall unless each face (E.F.) is specified, UNO.
   D. Provide vertical reinforcing in grouted cells at corners and intersections.
   E. Terminate horizontal reinforcing at wall ends or openings with standard hooks or corner type bars. Provide corner bars of the same size bar and spacing as the horizontal reinforcing at corners and intersections.
   F. Make horizontal bars continuous where concrete walls, columns, or pilasters interfaces. Provide a key between the masonry and concrete. Grout key solid.
   G. Construct bond beams at the top course and at floor and roof diaphragm interfaces.
   H. Construct penetrations thru walls as they are being laid. Add 2-#5 bars in grouted cells on all sides of opening which exceed 24 inches in either direction, UNO. Extend vertical edge bars the full height of the wall between floor or roof support. Extend horizontal edge bars 24 inches beyond the opening edges.
   I. DO NOT place construction or expansion joints in beams, headers, columns or supports, UNO.
   J. Reinforce masonry walls as follows, UNO.

| WALL THICKNESS | VERTICAL REINFORCING | HORIZONTAL REINFORCING |
|---|---|---|
| 8" | 1-#5 at 32" o.c. | 2-#4 at 48" o.c. |

   Add ladder-type joint reinforcing of 2-#9 wires (3-#9 wires with veneer) at 16" o.c. horizontally in all masonry walls.

   See plans, schedules, and details for other reinforcing. Modify these reinforcing spacing as necessary such that they are less than one third the height or one third the length of the wall, whichever is smaller (see ACI 530 1.14.2.2.5(a))

5. BEAMS:
   A. Build beams as an integral part of their supports. No toothing or doweling is permitted. Provide masonry units with one opened end (No back-to-back end shells). Grout beams solid the full depth as shown in the masonry beam schedule.
   B. Reinforcing in the masonry beam schedule is in addition to standard wall reinforcing.
   C. Place horizontal top bars in the top 4 inches of the beam and extend 72 bar diameters beyond the edge of the opening or terminate with a hook. Splice bars at mid-spans, UNO.
   D. Place horizontal bottom bars in the bottom 4 inches of the beam and extend 24 inches beyond the edge of the opening or terminate with a hook. Splice bars at supports, UNO.
   E. Hook vertical stirrups around bottom horizontal bars. Also hook them around the top horizontal bars or extend them into the wall above the beam a minimum of 48 bar diameters. Grout solid.
   F. Use the following masonry beam sizes in non-bearing masonry walls, UNO:

| OPENING WIDTH | BEAM WIDTH | BEAM DEPTH | HORIZ. REINF. |
|---|---|---|---|
| Up to 4'-0" | match wall | 16" | (2) #5 BOT. |
| Up to 8'-0" | match wall | 24" | (2) #5 T & B |
| Up to 10'-0" | match wall | 32" | (2) #5 T & B |

   For wider openings consult with the EOR.

6. COLUMNS: Grout wall jambs (sides of openings) piers & columns solid the full height of member (floor to floor, etc.). Reinforce wall jambs with (2) #5 vertical bars for each grouted cell (one cell for each 4'-0" of span or portion thereof) with a #5 placed at each side face of the wall jamb, UNO.

## STRUCTURAL STEEL

1. CODES AND STANDARDS: Comply with:
   A. AISC "Specification for Structural Steel Buildings & Commentary".
   B. AISC "Code of Standard Practice" excluding sections 7.5.4, and 7.11.5.
   C. AWS "Structural Welding Code", exclude items conflicting with AISC.
2. MATERIALS SHALL CONFORM AS FOLLOWS:
   A. Wide Flange beams: ASTM A992, Fy = 50 ksi.
   B. Wide Flange columns: ASTM A992, Fy = 50 ksi.
   C. Misc. shapes & plates: ASTM A53, Fy = 36 ksi.
   D. Hollow Structural Sections: ASTM A500, Fy = 46 ksi, Gr. B.
   E. Pipe: ASTM A53, Fy = 35 ksi, Gr. B.
   F. High strength bolts: ASTM A325
   G. Anchor rods: ASTM F1554, Fy = 36 ksi.
   H. Other bolts: ASTM A307 or better.
   I. Welded anchors studs (WAS, HAS): ASTM A108, Fu = 65 ksi.
   J. Deformed bar anchors (DBA's): ASTM A496, Fy = 70 ksi, DO NOT substitute reinforcing for DBA's.
3. CONSTRUCTION:
   A. Fabricate in an approved fabricator's shop.
   B. Fabricate beams with incidental camber up, UNO.
   C. Use 6000 psi (minimum at 28-day) non-shrink liquid grout beneath bearing plates. Place grout per manufacturer's recommendations prior to loading member.
   D. Add deformed bar anchors to structural sections embedded in concrete or masonry, UNO. Use the same size and spacing as the adjacent reinforcing bars. Minimum length of bars shall be 48 bar diameters but not less than 24 inches.
4. BOLTED CONNECTIONS:
   A. Use 3/4" diameter bolts in Std. holes (bolt diameter + 1/16"), UNO.
   B. Steel-to-steel connections: Use ASTM A325 type "N" connections, UNO.
   C. Other connections: Use ASTM A307 bolts or better except for anchor rods, UNO.
   D. Use hardened washers beneath the turned element of the bolt or nut. Use beveled hardened washers where the outer face of bolted parts has a slope greater than one in twenty with respect to the plane normal to the bolts axis. At oversized holes, use hardened washers or plates at least 5/16" thick conforming to ASTM F436.
   E. Tighten bolts until all plies of the joint are in firm contact. Snug tight condition, UNO.
   F. Enlarge bolt holes by reaming. DO NOT torch cut.
5. WELDED CONNECTIONS:
   A. Perform welding and cutting by AWS certified welders in accordance with ANSI/AWS D1.1 (latest edition).
   B. For typical shop & field welds, use filler metals with nominal 70 ksi tensile strength having:
      a. Matching material for multiple pass welds.
      b. A diffusible hydrogen limit of H16 or less.
      c. A CVN toughness of 20 ft-lbs at 0 deg. F.
   C. Use pre-qualified procedures.
   D. Weld intersecting steel shapes together, which are not connected with bolts, with all-around fillet welds, UNO.
   E. Weld studs and DBA's according to Manufacturer's specs.
   F. Wherever possible use shop welds. The contractor shall coordinate field and shop welds between shop fabrication and the steel erector.
   G. Remove slag from welds.

## STEEL DECK

1. PRODUCT:
   A. See plans for deck size and gauge, etc.
   B. Manufacture deck and accessories from cold rolled steel conforming to ASTM A653 SS Grade 33 (galvanized G60) ROOF & ASTM A653 SS Grade 80 (Form Deck) FLOORS, and conform to the Steel Deck Institute and AISC Standards.
2. CONSTRUCTION:
   A. Install deck with a minimum of 3 spans, UNO. Where such layout is impossible, decking must meet design criteria for simple span condition.
   B. Provide 2" minimum deck bearing and 4" lap at splice locations. Provide structural support (angles, etc.) around the perimeter of all deck openings.
   C. DO NOT bend or mar deck.
   D. Store decking off the ground with one end elevated. Cover with waterproof material and ventilate to avoid condensation.
3. DECK WELDING REQUIREMENTS:
   A. See plans for welding pattern.
   B. Weld to framing members with E60XX or E70XX electrodes.
   C. Use 3/4" diameter puddle welds. Penetrate all deck layers with weld metal and have proper fusion to the supporting steel.
   D. Crimp side seams before welding side laps or use Verco's Punchlok system w/ connections @ 12" o.c. max. Engage all layers of the deck material. (A standard button punch can NOT be used in place of Verco's Punchlok.)
   E. Overlap end laps at least 2" directly over a single steel support. Place welds 1" from the edge of the deck or more.
   F. Welds 3/8" x 1.5" long may replace 3/4" diameter welds.


State of Utah
Department of Administrative Services
Division of Facilities Construction & Management
4110 State Office Building
Salt Lake City, Utah 84114
Phone: (801) 538 - 3018
Fax: (801) 538 - 3267
http://dfcm.utah.gov

CREATED BY:

WCA Structural Engineering inc.
442 North Main Street, Suite 200
Bountiful, Utah 84010
e-mail: wca@wcaeng.com
(801) 298-1118, Office 298-1122 Fax


LICENSED CERTIFIED STRUCTURAL ENGINEER
No.160916
KENNETH PAUL WILLMORE
STATE OF UTAH

BUILDING NAME:
Utah State Development Center
870 North 860 East
American Fork, Uath

PROJECT TITLE:
Boiler Replacement/ Building Repairs

| MARK | DATE | DESCRIPTION |
|---|---|---|

ISSUE TYPE: REVIEW

ISSUE DATE: APRIL 15, 2009

DFCM PROJECT NO: 08194410
CAD PROJECT NO:
CAD DWG FILE:
DRAWN BY:
CHK'D BY:
COPYRIGHT: STATE OF UTAH

SHEET TITLE
GENERAL NOTES

SHEET NUMBER
SG100

## GENERAL NOTES FOR STRUCTURAL SHEETS CONTINUED

### SPECIAL INSPECTION AND TESTING

1. INSPECTIONS: Provide special inspection by an independent agency in accordance with IBC Chapter 17 and as outlined in the tables to the right:

2. TESTING: The owner will provide testing by qualified testing personnel in accordance with IBC Chapter 17 and as outlined in the tables to the right:

3. THE CONTRACTOR SHALL:

   A. Coordinate testing. DO NOT proceed with subsequent work until inspections and testing has been approved.
   B. Copy inspection reports/testing results to the Arch/EOR and owner before work proceeds.
   C. Correct deficient work at no additional cost to the owner.

**IBC TABLE 1704.3 STEEL CONSTRUCTION**

| VERIFICATION & INSPECTION | CONTINUOUS | PERIODIC | REFERENCED STANDARD* | IBC REFERENCE |
|---|---|---|---|---|
| 1. Material verification of hight-strength bolts, nuts and washers: | | | | |
| a. Identification makings to conform to ASTM standards specified in the approved construction documents. | - | X | ASTM material specs; ASTM 360, Section A3.3 | - |
| b. Manufacturer's certificate of compliance required. | - | X | - | - |
| 2. Inspection of high-strength bolting: | | | | |
| a. Bearing-type connections. | - | X | AISC 360, Section M2.5 | 1704.3.3 |
| 3. Material verification of structural steel: | | | | |
| a. Identification markings to conform to ASTM standards specified in the approved construction documents. | - | - | ASTM A 6 or ASTM A 568 | 1708.4 |
| b. Manufactures certificate of compliance required. | - | - | ASTM A 6 or ASTM A 568 | |
| 4. Material verification of weld filler materials: | | | | |
| a. Identification markings to conform to ASTM standards specified in the approved construction documents. | - | - | AISC 360, Section A3.5 | - |
| b. Manufactures certificate of compliance required. | - | - | - | |
| 5. Inspection of welding: | | | | |
| 1) Single-pass fillet welds <= 5/16" | - | X | AWS D1.1 | 1704.3.1 |
| 2) Floor & roof deck welds. | - | X | AWS D1.1 | - |
| 6. Inspection of steel frame joint details for compliance with approved construction documents: | | X | - | 1704.3.2 |
| a. Details such as bracing & stiffening. | - | - | | |
| b. Member location. | - | - | | |
| c. Application of joint details at each connection. | - | | | |

**IBC TABLE 1704.5.1 MASONRY LEVEL 1 SPECIAL INSPECTION**

| | FREQUENCY of INSPECTION | | REFERENCE for CRITERIA | | |
|---|---|---|---|---|---|
| | Continuous during task | Periodically during task | IBC section | ACI 530/ASCE 6/TMS 602* | ACI 530.1/ASCE 6/TMS 602* |
| 1. As masonry construction begins, the following shall be verified to ensure compliance: | | | | | |
| a. Proportions of site-prepared mortar. | - | X | - | - | Art. 2.6A |
| b. Construction of mortar joints. | - | X | - | - | Art. 3.3B |
| c. Location of reinforcement, connectors & anchorages. | - | X | - | - | Art. 3.4, 3.6A |
| 2. The inspection program shall verify: | | | | | |
| a. Size & location of structural elements. | - | X | - | - | Art. 3.3G |
| b. Type, size & location of anchors, including other details of anchorage of masonry to structural members, frames or other construction. | - | X | - | Sec. 1.2.2(e), 2.1.4.3.1.6 | - |
| c. Specified size, grade & type of reinf. | - | X | - | Sec. 1.13 | Art. 2.4, 3.4 |
| d. Masonry protection for temperature >90°F or < 40° F. | - | X | Sec. 21043, 2104.4 | - | Art. 1.8C, 1.8D |
| 3. Prior to grouting, the following shall be verified to ensure compliance: | | | | | |
| a. Grout space is clean. | - | X | - | - | Art. 3.2D |
| b. Placement of reinforcement & connectors. | - | X | - | Sec. 1.13 | Art. 3.4 |
| c. Proportions of site-prepared grout. | - | X | - | - | Art. 2.6B |
| d. Construction of mortar joints. | - | X | - | - | Art. 3.3B |
| 4. Grout placement shall be verified to ensure compliance with code & construction document provisions. | X | - | - | - | Art. 3.5 |
| 5. Preparation of any required grout specimens, mortar specimens &/or prisms shall be observed. | X | - | Sec. 2105.2.2, 2105.3 | - | Art. 1.4 |
| 6. Compliance with required inspection provisions of the construction documents & the approved submittals shall be verified. | - | X | - | - | Art. 1.5 |

**IBC TABLE 1704.4 CONCRETE CONSTRUCTION**

| VERIFICATION & INSPECTION | CONTINUOUS | PERIODIC | REFERENCED STANDARD* | IBC REFERENCE |
|---|---|---|---|---|
| 1. Inspection of reinforcing steel and placement. | - | X | ACI 318: 3.5, 7.1-7.7 | 1913.4 |
| 2. Inspect bolts to be installed in concrete prior to & during placement of concrete where allowable loads have been increased. | X | - | - | 1911.5 |
| 3. Verifying use of required design mix. | - | X | ACI 318: Ch 4, 5.2-5.4 | 1904.2.2, 1913.2, 1913.3 |
| 4. At the time fresh concrete is sampled ... for strength test, perform slump & air content test, and determine the temperature of the concrete. | X | - | ASTM C 172 ASTM C 31 ACI 318: 5.9, 5.8 | 1913.10 |
| 5. Inspection for maintenance of specified curing temperature & techniques. | - | X | ACI 318: 5.11-5.13 | 1913.9 |
| 6. Verification of in-situ concrete strength prior to removal of shores & forms from beams & structural slabs. | - | X | ACI 318: 6.2 | - |
| 7. Inspect formwork for shape, location & dimensions of the concrete members being formed. | - | X | ACI 318: 6.1.1 | - |

**IBC TABLE 1704.7 - SOILS**

| VERIFICATION & INSPECTION | CONTINUOUS DURING TASK | PERIODIC DURING TASK |
|---|---|---|
| 1. Verity materials below footings are adequate to archive the design bearing capacity. | - | X |
| 2. Verity excavations are extended to proper depth & have reached proper materials | - | X |
| 3. Perform classification & testing of controlled fill materials. | - | X |
| 4. Verify use of proper materials, densities & lift thicknesses during placement & compaction of controlled fill. | X | X |
| 5. Prior to placement of controlled fill, observe subgrade & verity that site has been prepared properly. | - | X |


State of Utah
Department of Administrative Services
Division of Facilities Construction & Management
4110 State Office Building
Salt Lake City, Utah 84114
Phone: (801) 538 - 3018
Fax: (801) 538 - 3267
http://dfcm.utah.gov

CREATED BY:

Structural Engineering inc.
442 North Main Street, Suite 200
Bountiful, Utah 84010
e-mail: wca@wcaeng.com
(801) 298-1118, Office 298-1122 Fax

LICENSED CERTIFIED STRUCTURAL ENGINEER
No. 160916
KENNETH PAUL WILLMORE
STATE OF UTAH


BUILDING NAME:

Utah State Development Center
870 North 860 East
American Fork, Uath

PROJECT TITLE:

Boiler Replacement/ Building Repairs

| MARK | DATE | DESCRIPTION |
|---|---|---|

ISSUE TYPE: REVIEW

ISSUE DATE: APRIL 15, 2009

DFCM PROJECT NO: 08194410
CAD PROJECT NO:
CAD DWG FILE:
DRAWN BY:
CHK'D BY:

COPYRIGHT: STATE OF UTAH

SHEET TITLE

GENERAL NOTES

SHEET NUMBER

SG101

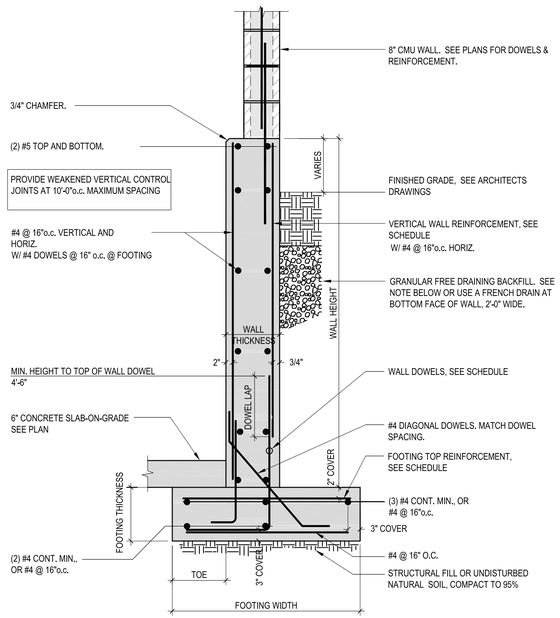


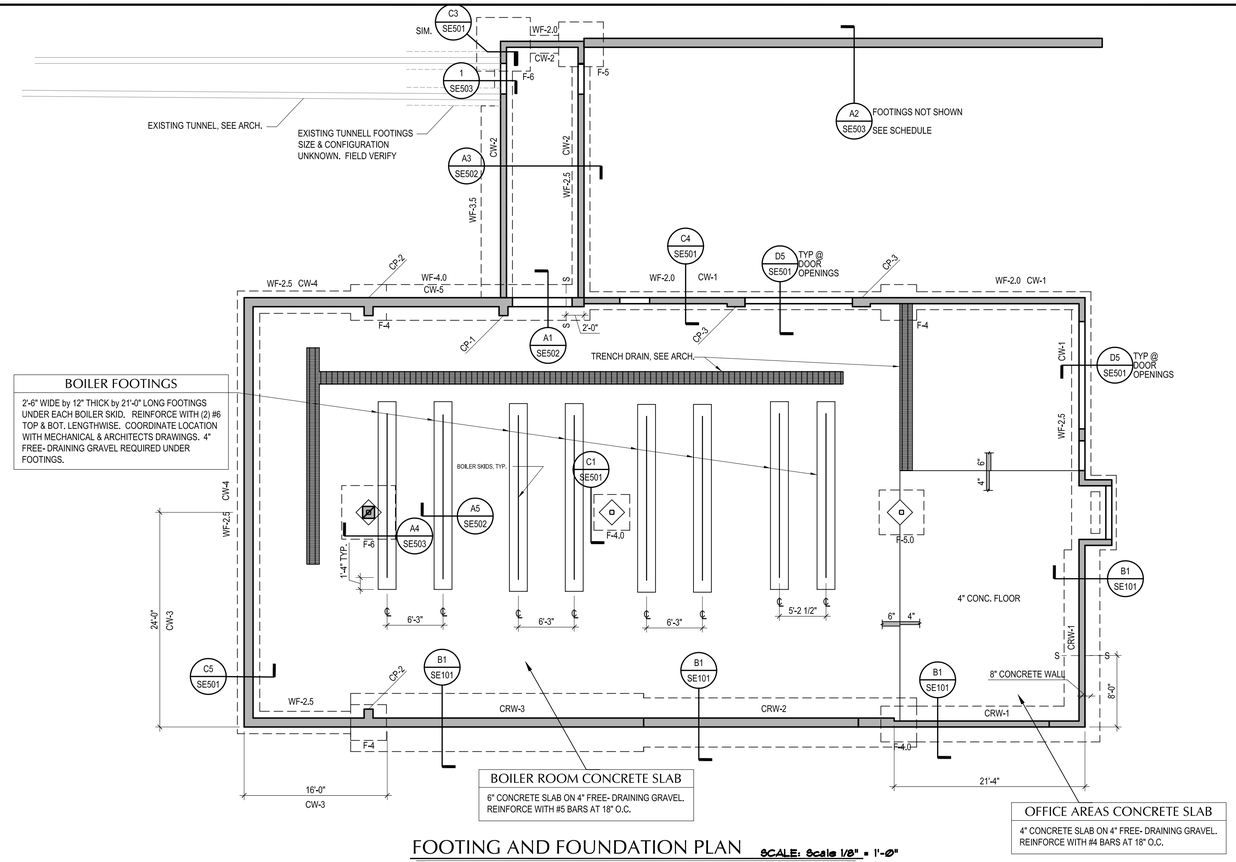


BOILER FOOTINGS

2'-6" WIDE by 12" THICK by 21'-0" LONG FOOTINGS UNDER EACH BOILER SKID. REINFORCE WITH (2) #6 TOP & BOT. LENGTHWISE. COORDINATE LOCATION WITH MECHANICAL & ARCHITECTS DRAWINGS. 4" FREE- DRAINING GRAVEL REQUIRED UNDER FOOTINGS.

BOILER ROOM CONCRETE SLAB

6" CONCRETE SLAB ON 4" FREE- DRAINING GRAVEL. REINFORCE WITH #5 BARS AT 18" O.C.

OFFICE AREAS CONCRETE SLAB

4" CONCRETE SLAB ON 4" FREE- DRAINING GRAVEL. REINFORCE WITH #4 BARS AT 18" O.C.

## FOOTING AND FOUNDATION PLAN

SCALE: Scale 1/8" = 1'-0"

## RETAINING WALL SCHEDULE

| MARK | | CRW-1 | CRW-2 | CRW-3 | NOT USED | NOT USED |
|---|---|---|---|---|---|---|
| WALL | HEIGHT | VARIES | 9'-4" | 12'-0" | . | . |
| | THICKNESS | 8" | 12" | 12" | . | . |
| FOOTING | THICKNESS | 12" | 12" | 14" | . | . |
| | WIDTH | 4'-6" | 5'-6" | 6'-4" | . | . |
| | TOE LENGTH | 1'-8" | 2'-3" | 2'-8" | . | . |
| VERTICAL WALL REINF. | | #5 @ 16"o.c. | #5 @ 16"o.c. | #5 @ 16"o.c. | . | . |
| | WALL DOWEL | #6 @ 16"o.c. | #7 @ 16"o.c. | #7 @ 16"o.c. | . | . |
| | DOWEL LAP | 30" | 30" | 30" | . | . |
| FOOTING TOP REINFORCEMENT | | #5 @ 16"o.c. | #5@ 16"o.c. | #5 @ 16"o.c. | . | . |

BACK FILL PLACED BEHIND RETAINING WALLS SHALL BE NON-COHESIVE, GRANULAR AND FREE DRAINING AND FREE OF CLAY, DEBRIS OR ORGANIC MATTER. COMPACTED TO 95% OF MAXIMUM DENSITY.

B1 / SE101 CONCRETE RETAINING WALLS SCHEDULE

NO SCALE

## CONCRETE BEAM SCHEDULE

| MARK | WIDTH | DEPTH | HORIZONTAL REINF. | TIE SETS | NOTES |
|---|---|---|---|---|---|
| CB-1 | 0'-8" | 1'-6" | (2) #6 TOP AND BOT. | #4 CLOSED TIES @ 8"O.C. | |
| CB-2 | 1'-0" | 2'-0" | (2) #8 CONTINUOUS TOP<br>(2) #8 CONTINUOUS BOT. | #4 CLOSED TIES @ 8" O.C. | EXTEND HORZ. REBAR TO NORTH WALL. |

1. PROVIDE SPLICES IN HORIZONTAL TOP REINFORCING AT MID SPAN ONLY, TYPICAL, U.N.O.
2. PROVIDE SPLICES IN HORIZONTAL BOTTOM REINFORCING AT SUPPORTS ONLY, TYPICAL, U.N.O.
3. EXTEND TOP BARS A MINIMUM OF 60 BAR DIAMETERS BEYOND THE FACE OF THE OPENING OR TERMINATE WITH A STANDARD HOOK, TYPICAL, U.N.O.
4. EXTEND BOTTOM BARS A MINIMUM OF 24" BEYOND THE FACE OF THE OPENING OR TERMINATE WITH A STANDARD HOOK, TYPICAL, U.N.O.
5. STIRRUPS SHALL HAVE TIE CAPS WITH SIZE AND SPACING TO MATCH STIRRUPS. TIE CAPS SHALL HAVE A 135 DEGREE HOOK ON ONE END AND A 90 DEGREE HOOK ON THE OTHER. ALTERNATE.
6. THE FIRST TIE SET ADJACENT TO THE SUPPORT SHALL BE PLACED WITHIN A DISTANCE NOT GREATER THAN ONE HALF THE TYPICAL SPACING OF THE ADJACENT TIES FROM THE FACE OF THE SUPPORT.
7. PROVIDE VERTICAL CONSTRUCTION JOINTS IN MIDDLE THIRD OF SPAN ONLY, TYPICAL, U.N..O. DO NOT PLACE CONSTRUCTION JOINTS AT OR NEAR FACE OF SUPPORTS.
8. PENETRATIONS THROUGH CONCRETE BEAMS ARE NOT ALLOWED.

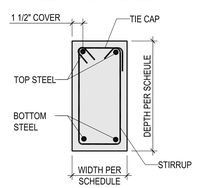


## CONCRETE PIER SCHEDULE

| MARK | WIDTH | LENGTH | VERTICAL REINF. | TIE SETS | NOTES |
|---|---|---|---|---|---|
| CP-1 | 1'-0" | 2'-0" | (4) #8 | #4 TIES @ 12"o.c. | |
| CP-2 | 1'-0" | 2'-0" | (4) #9 | #4 TIES @ 10"o.c. W/(3) @ 2"o.c. TOP | |
| CP-3 | 1'-0" | 2'-0" | (6) #6 | #4 TIES @ 12"o.c. | |

1. VERTICAL BARS SHALL TERMINATE IN A STANDARD 90 DEGREE HOOK UNLESS APPROVED OTHERWISE BY THE STRUCTURAL ENGINEER.
2. VERTICAL REINFORCING SHALL SPLICE AT FLOOR LEVELS ONLY, TYP., U.N.O.
3. WHEN USED, THE MAXIMUM OFFSET FOR INCLINED BARS SHALL BE 3 INCHES. THE MAXIMUM SLOPE FOR INCLINED BARS SHALL BE 1:6.
4. PROVIDE DOWELS WITH STANDARD HOOKS TO THE STRUCTURE BELOW TO MATCH THE VERTICAL REINFORCING IN THE COLUMN ABOVE, TYP., U.N.O.
5. PROVIDE A MINIMUM OF TWO SETS OF TIES IN THE TOP FIVE INCHES OF EVERY COLUMN, TYP., U.N.O. PROVIDE TIE SETS AT ONE-HALF THE SPACING SHOWN IN THE SCHEDULE FOR A MINIMUM OF 1/6 THE CLEAR SPAN. THE MAXIMUM CROSS SECTIONAL DIMENSION OF THE COLUMN, OR 18 INCHES, TOP AND BOTTOM, TYP., U.N.O.
6. COLD JOINTS SHALL OCCUR AT FLOOR LEVELS ONLY, TYP., U.N.O.
7. PROVIDE CHAMFERS AT ALL CORNERS OF ALL COLUMNS, TYP., U.N.O.
8. PENETRATIONS THROUGH CONCRETE COLUMNS IS NOT ALLOWED, TYP. U.N.O.

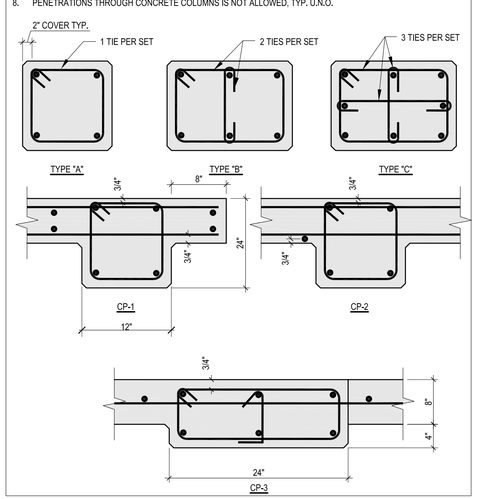


## CONCRETE WALL SCHEDULE

| MARK | THICKNESS | VERTICAL REINF. | HORIZONTAL REINF. | NOTES |
|---|---|---|---|---|
| CW-1 | 8" | #4 @ 18" O.C. | #4 @ 12" O.C. | (2) #5 TOP & BOTTOM, TYPE 'A' |
| CW-2 | 8" | #6 @ 12" O.C. | #5 @ 18" O.C. | (2) #5 TOP & BOTTOM, TYPE 'C' |
| CW-3 | 12" | #7 @ 16" O.C. INSIDE FACE | #5 @ 14" O.C. | (2) #5 TOP & BOTTOM, TYPE 'C' |
| CW-4 | 12" | #7 @ 12" O.C. INSIDE FACE | #5 @ 14" O.C. | (2) #5 TOP & BOTTOM, TYPE 'C' |
| CW-5 | 12" | #5 @ 16" O.C. INSIDE AND SOIL FACE | #8 @ 12" O.C. SOIL SIDE AND INSIDE FACE | (2) #8 TOP TYPE 'D' |

1. ALL WALLS ARE MARK CW-1, U.N.O..
2. CONTRACTOR TO VERIFY ALL WALL THICKNESSES W/ ARCHITECT.
3. PROVIDE CORNER BARS AT ALL CORNERS AND INTERSECTING WALLS. SEE DETAIL D2/SE501.
4. WHEN A SINGLE CURTAIN OF REINFORCING IS SPECIFIED, PLACE THE VERTICAL REINFORCING IN THE CENTER OF THE WALL, TYPICAL, U.N.O..
5. WHEN A DOUBLE CURTAIN OF REINFORCING IS SPECIFIED, PLACE EACH CURTAIN OF STEEL AT THE FACE OF THE WALL WITH MINIMUM COVER AS SPECIFIED IN THE GENERAL NOTES. PLACE THE VERTICAL REINFORCING CLOSEST TO THE FORMS, TYPICAL, U.N.O..
6. PROVIDE DOWELS WITH STANDARD HOOKS TO THE STRUCTURE BELOW WITH SIZE AND SPACING TO ATTACH THE VERTICAL REINFORCING IN THE WALL ABOVE.
7. SPLICE VERTICAL REINFORCING AT FLOOR LEVELS ONLY, TYPICAL, U.N.O..
8. SPLICES IN HORIZONTAL REINFORCING IN ONE CURTAIN SHALL BE STAGGERED FROM SPLICES IN THE OPPOSITE CURTAIN A MINIMUM OF FOUR FEET.

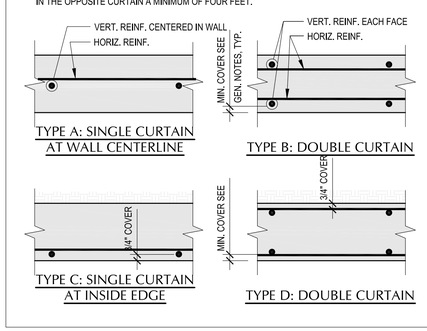


## FOOTING SCHEDULE

| MARK | SIZE WIDTH | SIZE LENGTH | SIZE THICK | BOTTOM REINFORCING | TOP REINFORCING | NOTES |
|---|---|---|---|---|---|---|
| WF-2.0 | 2'-0" | CONT. | 1'-0" | (2) #5 CONTINUOUS | NONE | |
| WF-2.5 | 2'-6" | CONT. | 1'-0" | (3) #5 CONTINUOUS | NONE | |
| WF-3.5 | 3'-6" | CONT. | 1'-0" | (3) #5 CONTINUOUS<br>#5 @ 14" O.C. CW | NONE | |
| WF-4.0 | 4'-0" | CONT. | 1'-0" | (2) #5 CONTINUOUS<br>#5 @ 14" O.C. CW | (2) #5 CONT.<br>#5 @ 14" O.C. CW | |
| F-4.0 | 4'-0" | 4'-0" | 1'-2" | (4) #5 EW | NONE | |
| F-5.0 | 5'-0" | 5'-0" | 1'-4" | (5) #5 EW | NONE | |
| F-6.0 | 6'-0" | 6'-0" | 1'-6" | (6) #6 EW | (6) #6 EW | |

C.W. = CROSSWISE E.W. = EACH WAY L.W. = LENGTHWISE

1. ALL FOOTINGS ARE MARK WF-2.0, U.N.O..
2. BEAR FOOTINGS ON PROPERLY PREPARED MATERIAL.
3. BEAR EXTERIOR FOOTINGS BELOW THE EFFECTS OF FROST.
4. CENTER FOOTINGS BELOW THE WALL AND/OR COLUMN ABOVE, TYPICAL UNO.
5. PROVIDE 2x4 BEVELED KEYWAYS IN CONTINUOUS WALL FOOTINGS, UNO
6. PROVIDE 3" CLEAR CONCRETE COVER AT BOTTOM REINF., UNO.
7. PROVIDE DOWELS WITH STANDARD HOOK FROM FOOTINGS TO ANY REINFORCED ELEMENT ABOVE, DOWEL SIZE TO MATCH VERTICAL REINFORCING IN ELEMENT ABOVE, UNO
8. ANY INCREASE IN THE SIZE OF FOOTINGS FOR CONSTRUCTION CONVENIENCE, MAY REQUIRE ADDITIONAL REINFORCING. COORDINATE WITH THE EOR
9. S------S. DENOTES AN ELEVATION STEP IN FOOTING, SEE DETAIL D4/SE501
10. ALL FOOTINGS TO BEAR ON ENGINEERED FILL. SEE SOILS REPORT.


State of Utah
Department of Administrative Services
Division of Facilities Construction & Management
4110 State Office Building
Salt Lake City, Utah 84114
Phone: (801) 538 - 3018
Fax: (801) 538 - 3267
http://dfcm.utah.gov

CREATED BY:

Structural Engineering inc.
442 North Main Street, Suite 200
Bountiful, Utah 84010
e-mail: wca@wcaeng.com
(801) 298-1118, Office 298-1122 Fax

LICENSED CERTIFIED STRUCTURAL ENGINEER
No.160916
KENNETH PAUL WILLMORE
STATE OF UTAH


BUILDING NAME:

Utah State Development Center
870 North 860 East
American Fork, Uath

PROJECT TITLE:

Boiler Replacement/ Building Repairs

| MARK | DATE | DESCRIPTION |
|---|---|---|

ISSUE TYPE: REVIEW

ISSUE DATE: APRIL 15, 2009

DFCM PROJECT NO: 08194410
CAD PROJECT NO:
CAD DWG FILE:
DRAWN BY:
CHK'D BY:

COPYRIGHT: STATE OF UTAH

SHEET TITLE

FOOTING AND FOUNDATION PLAN

SHEET NUMBER

SE101

## ROOF DECKS

1. SEE GENERAL NOTES: "STEEL DECK" FOR ADDITIONAL INFORMATION.

2. CONNECTIONS: WELD DECK TO SUPPORTING FRAMING MEMBERS WITH EITHER AN E60 OR E70 ELECTRODE WITH PUDDLE WELDS HAVING A FUSION AREA NOT LESS THAN 3/4" EFFECTIVE DIAMETER AS FOLLOWS (WELDS SHALL PENETRATE ALL LAYERS OF DECK AND HAVE PROPER FUSION TO THE SUPPORTING MEMBERS.):
   A. @ EACH FLUTE & TWO AT PANEL LAPS (ONE EACH SIDE OF SEAM).
   B. 6" O.C. @ ALL SUPPORTS PARALLEL TO DECK CORRUGATIONS.
   C. FASTEN SIDE LAPS BY ONE OF THE FOLLOWING:
      a. HSB TYPE DECK: TOP SEAM WELDS AT 18" O.C., CRIMP SIDE SEAMS BEFORE WELDING SIDE LAPS. ENGAGE ALL LAYERS OF THE DECK MATERIAL.
      b. PLB TYPE DECK: VERCO'S PUNCHLOK SYSTEM W/ CONNECTIONS @ 12" O.C. MAX. ENGAGE ALL LAYERS OF THE DECK MATERIAL. (A STANDARD BUTTON PUNCH CAN NOT BE USED IN PLACE OF VERCO'S PUNCHLOK.)

3. ROOF DECK: VERCO TYPE HSB-36 WITH SHEARTRANZ, 20 GAGE, GALVANIZED G60, 36" WIDE, 1.5" DEEP, HAVING
   MINIMUM I = 0.216 IN^4, +S = 0.235 IN^3 AND -S = 0.248 IN^3.

4. ALL ROOF DECKING TO BE THREE SPANS MINIMUM, U.N.O.

5. THE REQUIRED ALLOWABLE DIAPHRAGM SHEAR IS 1000 plf WITH A DECK SPAN OF 6'-8". ANY SUBSTITUTION OF THE ABOVE DECK CONNECTIONS SHALL MEET OR EXCEED THE ALLOWABLE DIAPHRAGM SHEAR. CONTACT THE E.O.R. PRIOR TO SUBSTITUTING ANY CONNECTION SPECIFIED.

## MEZZANINE FLOOR DECK

1. SEE GENERAL NOTES: "STEEL DECK" FOR ADDITIONAL INFORMATION.

2. CONNECTIONS: WELD DECK TO SUPPORTING FRAMING MEMBERS WITH EITHER AN E60 OR E70 ELECTRODE WITH PUDDLE WELDS HAVING A FUSION AREA NOT LESS THAN 3/4" EFFECTIVE DIAMETER AS FOLLOWS (WELDS SHALL PENETRATE ALL LAYERS OF DECK AND HAVE PROPER FUSION TO THE SUPPORTING MEMBERS.):
   A. @ EACH FLUTE & TWO AT PANEL LAPS (ONE EACH SIDE OF SEAM).
   B. 6" O.C. @ ALL SUPPORTS PARALLEL TO DECK CORRUGATIONS.
   A. FASTEN SIDE LAPS BY ONE OF THE FOLLOWING:
      a. TOP SEAM WELDS AT 18" O.C., CRIMP SIDE SEAMS BEFORE WELDING SIDE LAPS. ENGAGE ALL LAYERS OF THE DECK MATERIAL.
      b. VERCO'S PUNCHLOK SYSTEM W/ CONNECTIONS @ 12" O.C. MAX. ENGAGE ALL LAYERS OF THE DECK MATERIAL. (A STANDARD BUTTON PUNCH CAN NOT BE USED IN PLACE OF VERCO'S PUNCHLOK.)

3. FLOOR DECK: VERCO TYPE B FORMLOK (COMPOSITE), 20 GAGE, GALVANIZED G60, 36" WIDE, 1.5" DEEP, HAVING MINIMUM I = 0.216 IN^4, +S = 0.235 IN^3 & -S = 0.248 IN^3. TOTAL DECK AND CONCRETE DEPTH IS 4.5".

4. REINFORCE CONCRETE WITH #4 AT 16" O.C. EACH WAY.

5. ALL FLOOR DECKING TO BE THREE SPANS MINIMUM, UNO.

6. TYPICAL HEADED STUD CALL OUT: W16 x 40 (#), WHERE (#) INDICATES THE NUMBER OF 3/4"Ø x 3.5" HEADED STUDS SPACED EQUALLY OVER THE BEAM . STUDS SHALL BE PLACED IN THE VALLEY OF FLUTED DECK.

7. THE REQUIRED ALLOWABLE DIAPHRAGM SHEAR IS 1200 plf WITH A DECK SPAN OF 6'-0". ANY SUBSTITUTION OF THE ABOVE DECK CONNECTIONS SHALL MEET OR EXCEED THE ALLOWABLE DIAPHRAGM SHEAR. CONTACT THE E.O.R. PRIOR TO SUBSTITUTING ANY CONNECTION SPECIFIED.

## MASONRY BEAM SCHEDULE

| MARK | WIDTH | DEPTH | TYPE | HORIZONTAL. REINF. | STIRRUPS | NOTES |
|---|---|---|---|---|---|---|
| MB-1 | 8" | 16" | A | (2) #5 BOTTOM | | |
| MB-2 | 8" | 24" | A | (2) #5 BOTTOM & (2) #4 TOP | | |
| MB-3 | 8" | 24" | A | (2) #5 BOTTOM & (2) #4 TOP | (2) #3 STIRRUPS @ 8" O.C. | |
| MB-4 | 8" | 48" | A | (2) #5 TOP & BOTTOM | (2) #4 STIRRUPS @ 16" O.C. | |
| MB-5 | 12" | 24" | A | (2) #7 TOP & BOTTOM | (2) #3 STIRRUPS @ 8" O.C. | |

1. SOLID GROUT ALL CELLS, TYPICAL.
2. USE OPEN ENDED UNITS THROUGHOUT MASONRY BEAM. BACK-TO-BACK END SHELLS ARE NOT ALLOWED.
3. TYPICAL HORIZONTAL REINFORCING DETAILING: SPLICES TOP BARS AT MID SPAN ONLY. EXTEND TOP BARS A MINIMUM OF 4'-0" BEYOND THE FACE THE OPENING OR TERMINATE WITH A STANDARD HOOK, UNO. SPLICE BOTTOM BARS AT SUPPORTS ONLY. EXTEND BOTTOM BARS A MINIMUM OF 24" BEYOND THE FACE OF THE OPENING OR TERMINATE WITH A STANDARD HOOK, UNO.
4. HOOK STIRRUPS AROUND HORIZONTAL TOP & BOTTOM BARS. PLACE THE FIRST STIRRUP 4" FROM THEIR SUPPORTS.
5. EXTEND VERTICAL WALL REINFORCING TO BOTTOM OF BEAM IN ADDITION TO BEAM STIRRUPS.
6. EXTEND THE END SUPPORTS VERTICAL STEEL THE FULL HEIGHT OF THE WALL. (LEVEL TO LEVEL)
7. PROVIDE VERTICAL WALL CONTROL JOINTS ABOVE BEAMS NEAR BEAM MID-SPANS ONLY, UNO. DO NOT PLACE CONTROL JOINTS AT OR NEAR FACE OF SUPPORTS OR EXTEND JOINTS THRU THE BEAMS.
8. DO NOT ALLOW PENETRATIONS THROUGH MASONRY BEAMS.
9. SEE GENERAL NOTES FOR ADDITIONAL INFORMATION.

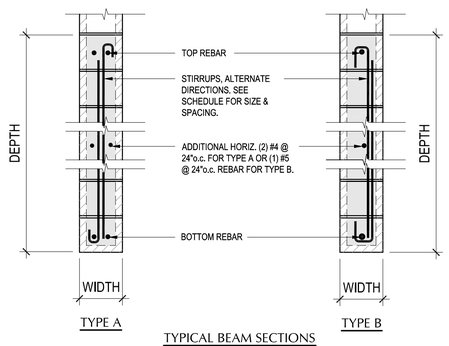


TYPICAL BEAM SECTIONS

## MASONRY PIER SCHEDULE

| MARK | WIDTH | LENGTH | VERT. REINF. | TIE SETS | NOTES |
|---|---|---|---|---|---|
| MP-1 | 8" | 1'-4" | (4) #5 | #2 @ 8" O.C. | SEE DETAIL D2/SE503 |
| MP-2 | 8" | 2'-0" | (6) #5 | #2 @ 8" O.C. | SEE DETAIL D2/SE503. |
| MP-3 | 8" | 2'-8" | (8) #5 | #2 @ 8" O.C. | SEE DETAIL D3/SE503. |
| MP-4 | 8" | 4'-0" | (12) #5 | #2 @ 8" O.C. | SEE DETAIL D4/SE503. |
| MP-5 | 12" | 2'-0" | (6) #6 | #3 @ 8" O.C. | SEE DETAIL D5/SE503. |

1. SOLID GROUT ALL CELLS, TYPICAL.
2. COLUMN TIES:
   A. SINGLE BLOCK COLUMNS: PLACE TIES WITHIN THE MORTAR JOINT, UNO.
   B. MULTI WIDE BLOCK COLUMNS: PLACE TIES INSIDE OF FACE SHELLS 2" ABOVE OR BELOW MORTAR JOINTS. USE "H" BLOCK and/or NOTCH WEB MEMBERS AS REQUIRED.
   C. ADD (2) SETS OF TIES INSIDE THE FACE SHELLS AT THE TOP OF ALL COLUMNS TO ENCLOSE ANCHOR BOLTS, STUDS OR DBA'S WHEN THEY OCCUR. USE SAME TIE SIZE AS SCHEDULE. UNO.
3. REMOVE BACK-TO-BACK FACE SHELLS. ALTERNATE REMOVED FACE SHELLS, COURSE BY COURSE.
4. DOWEL VERTICAL PIER REINFORCEMENT TO STRUCTURE BELOW WITH MATCHING BARS. EXTEND VERTICAL REINFORCEMENT TO FOOTING. IF FOUNDATION WALL EXTENDS ABOVE FLOOR SLAB, ADD PIER TIES IN FOUNDATION WALL FROM FLOOR SLAB TO MASONRY PIER.
5. FOR BAR LAP OR SPLICE LENGTHS SEE THE GENERAL STRUCTURAL NOTES, SHEET SG100.
6. DO NOT ALLOW PENETRATIONS THRU THE COLUMN.
7. HORIZONTAL WALL STEEL:
   A. AT PIERS WITHIN THE WALL, RUN HORIZONTAL WALL STEEL THRU THE COLUMN.
   B. AT PIERS AT THE END OF THE WALL OR AT WALL OPENINGS, RUN HORIZONTAL WALL STEEL THRU COLUMN TO THE FAR FACE OF PIER AND TERMINATE WITH A STD. HOOK.

## MASONRY WALL SCHEDULE

| MARK | THICK | VERTICAL REINF. | HORIZONTAL REINF. | WALL CONSTRUCTION NOTES |
|---|---|---|---|---|
| MW-1 | 8" | (1) #5 @ 32" O.C. | (2) #4 @ 48" O.C. | RUNNING BOND |
| MW-2 | 8" | (1) #5 @ 24" O.C. | (2) #4 @ 24" O.C. | RUNNING BOND |
| MW-3 | 8" | (2) #5 @ 32" O.C. | (2) #4 @ 48" O.C. | RUNNING BOND |

1. ALL MASONRY WALLS ARE MW-1, UNO.
2. TERMINATE ALL REINFORCING (BOTH VERTICAL AND HORIZONTAL) WITH A STANDARD HOOK, OR APPROVED EQUAL.
3. DO NOT SOLID GROUT WALLS UNLESS SPECIFICALLY NOTED ON PLANS.
4. SOLID GROUT ALL CELLS WITH REINFORCING AND/OR EMBEDS, TYPICAL.
5. LAY BLOCK IN RUNNING BOND, TYPICAL, UNO.
6. TOOL MORTAR JOINTS CONCAVE, TYPICAL, UNO.
7. PROVIDE MINIMUM COVER FOR REINFORCING PER THE GENERAL NOTES.
8. PROVIDE CORNER BARS AT CORNERS AND INTERSECTING WALLS.
9. DOWEL TO THE STRUCTURE BELOW WITH BARS MATCHING THE VERTICAL WALL REINFORCING, UNO.
10. PLACE VERTICAL REINFORCING IN THE CENTER OF THE WALL UNLESS EACH FACE IS SPECIFIED.
11. REMOVE BACK-TO-BACK FACE SHELLS AT INTERSECTING WALLS. ALTERNATE REMOVED FACE SHELLS, COURSE BY COURSE.
12. ADD LADDER-TYPE JOINT REINFORCING OF 2-#9 WIRES (3-#9 WIRES WITH VENEER) AT 16" O.C. HORIZONTALLY IN ALL MASONRY WALLS.

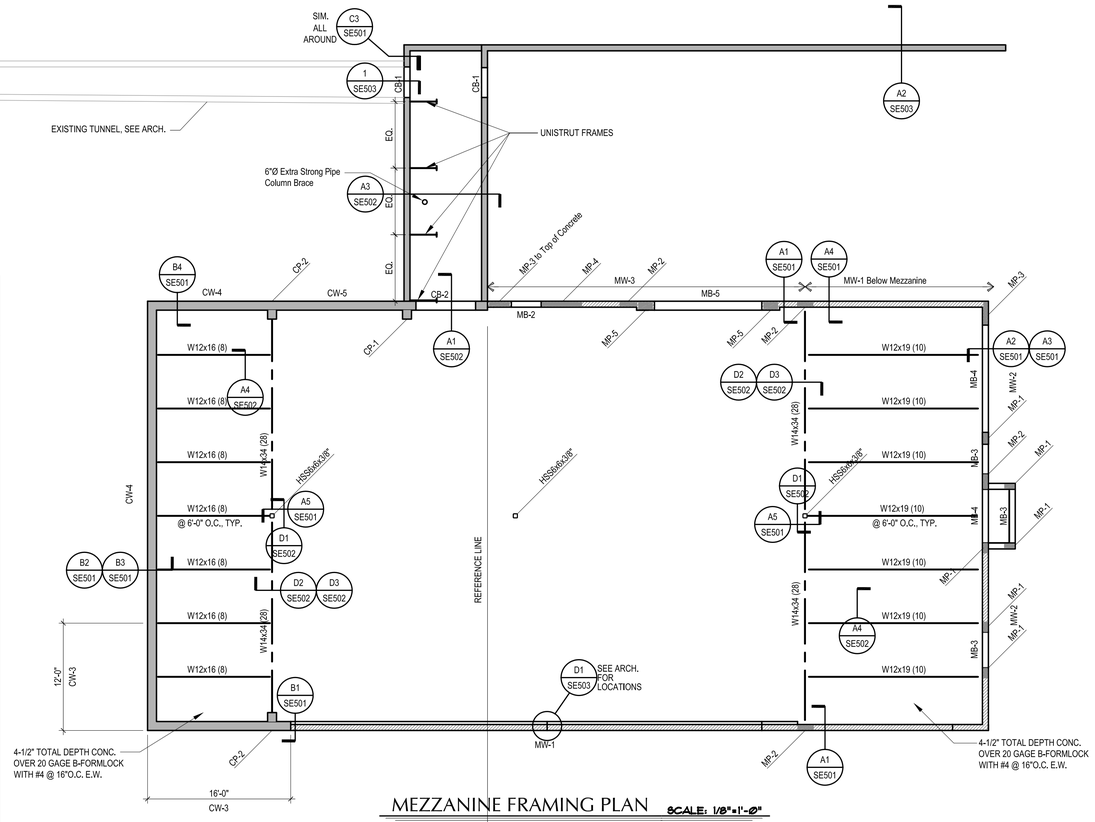


MEZZANINE FRAMING PLAN SCALE: 1/8"=1'-0"

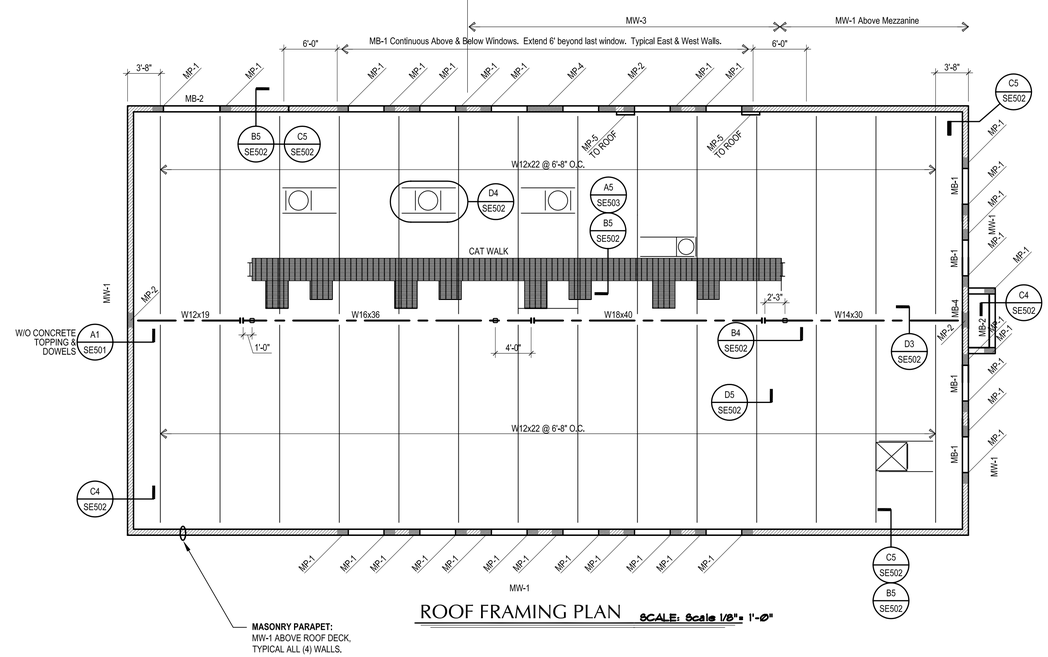


ROOF FRAMING PLAN SCALE: Scale 1/8"= 1'-0"


State of Utah
Department of Administrative Services
Division of Facilities Construction & Management
4110 State Office Building
Salt Lake City, Utah 84114
Phone: (801) 538 - 3018
Fax: (801) 538 - 3267
http://dfcm.utah.gov

CREATED BY:

Structural Engineering inc.
442 North Main Street, Suite 200
Bountiful, Utah 84010
e-mail: wca@wcaeng.com
(801) 298-1118, Office 298-1122 Fax


LICENSED CERTIFIED STRUCTURAL ENGINEER No.160916 KENNETH PAUL WILLMORE STATE OF UTAH

BUILDING NAME:

Utah State Development Center
870 North 860 East
American Fork, Uath

PROJECT TITLE:

Boiler Replacement/ Building Repairs

| MARK | DATE | DESCRIPTION |
|---|---|---|

ISSUE TYPE: REVIEW

ISSUE DATE: APRIL 15, 2009

DFCM PROJECT NO: 08194410
CAD PROJECT NO:
CAD DWG FILE:
DRAWN BY:
CHK'D BY:
COPYRIGHT: STATE OF UTAH

SHEET TITLE

ROOF FRAMING PLAN

SHEET NUMBER

SE201

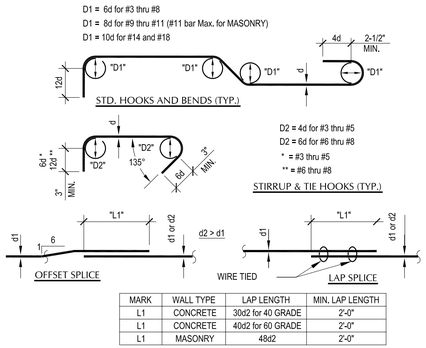


| MARK | WALL TYPE | LAP LENGTH | MIN. LAP LENGTH |
|---|---|---|---|
| L1 | CONCRETE | 30d2 for 40 GRADE | 2'-0" |
| L1 | CONCRETE | 40d2 for 60 GRADE | 2'-0" |
| L1 | MASONRY | 48d2 | 2'-0" |

D1 SE501 TYPICAL HOOKS & BENDS
NO SCALE

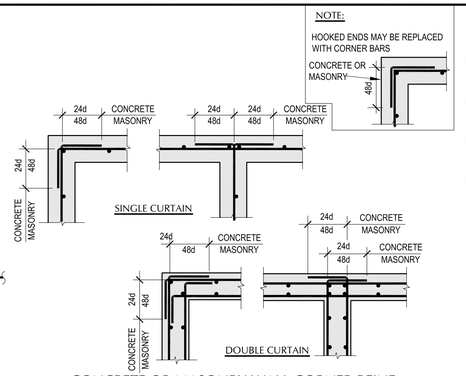


D2 SE501 CONCRETE OR MASONRY WALL CORNER REINF.
NO SCALE

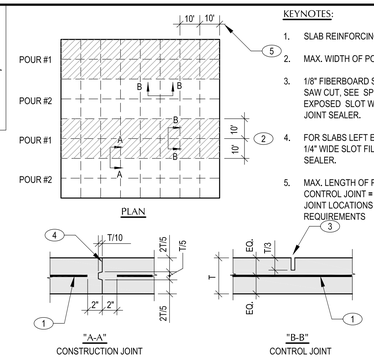


KEYNOTES:

1. SLAB REINFORCING
2. MAX. WIDTH OF POUR = 20'-0"
3. 1/8" FIBERBOARD STRIP, ZIP STRIP, OR SAW CUT, SEE SPECIFICATIONS. AT EXPOSED SLOT WITH SLAB, USE 1/4" JOINT SEALER.
4. FOR SLABS LEFT EXPOSED, PROVIDE 1/4" WIDE SLOT FILLED WITH JOINT SEALER.
5. MAX. LENGTH OF POUR WITHOUT CONTROL JOINT = 10'-0" COORDINATE JOINT LOCATIONS WITH ARCHITECTS REQUIREMENTS

D3 SE501 SLAB ON GRADE JOINT
NO SCALE

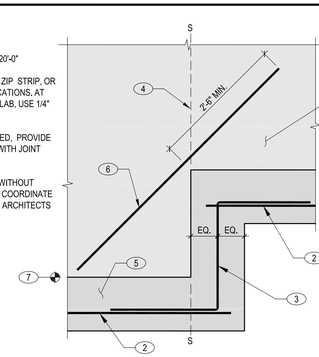


KEYNOTES:

1. CONCRETE FOUNDATION WALL, SEE PLAN
2. FOOTING REINFORCING, SEE PLAN & SCHEDULE
3. "Z" SHAPED BARS TO MATCH SIZE & SPACING OF FOOTING REINFORCING
4. STEP IN FOOTING, SEE PLAN FOR LOCATION. INDIACED BY: "S-------S"
5. FOOTING, SEE PLAN & SCHEDULE
6. (2) #6 DIAGONAL BARS
7. TOP OF FOOTING, SEE ARCH.

D4 SE501 FOOTING STEP, TYPICAL SEE PLAN S------S
NO SCALE

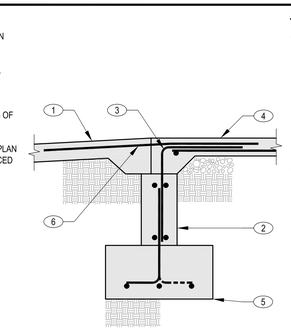

KEYNOTES:

1. EXTERIOR SLAB, SEE ARCH
2. CONCRETE FOUNDATION WALL, SEE PLAN. W/ (2) #5 CONT. T & B EXTEND TOP BARS 2'-0" PAST EDGE OF OPENING, TYP.
3. #4 DOWELS @ 18"o.c. 2'-0" 1'-6"
4. INTERIOR CONCRETE SLAB-ON -GRADE. SEE PLAN
5. FOOTING, SEE PLAN AND SCHEDULE FOR SIZE AND REINF.
6. #4x4'-0" LONG DOWELS @ 24"o.c.

D5 SE501 DETAIL @ DOORS, TYP.
NO SCALE

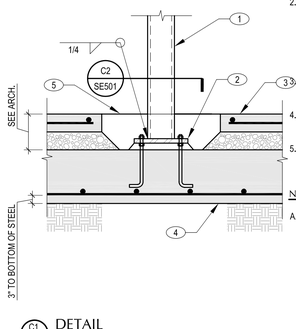


KEYNOTES:

1. STEEL COLUMN, SEE PLAN
2. 3/4" BASE PLATE COL. WIDTH + 6" x COL. DEPTH + 6" WITH (4) 3/4"Ø ANCHOR RODS ON 1-1/2" NON SHRINK GROUT WITH LEVELING NUTS. EXTEND ANCHOR RODS TO BOTTOM STEEL IN FOOTINGS.
3. CONCRETE SLAB ON GRADE, SEE PLAN
4. FOOTING, SEE PLAN AND SCHEDULE FOR SIZE AND REINF.
5. 2'-4" SQUARE ISOLATION NO REINF. REQ'D. POUR AFTER DEAD LOADS ARE IN PLACE

NOTES:

A. COORDINATE TOP OF FOOTING AND TOP OF SLAB WITH ARCH.

C1 SE501 DETAIL
NO SCALE

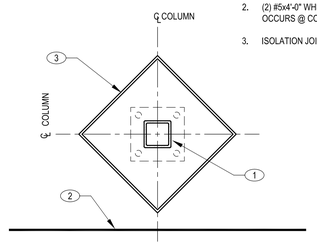


KEYNOTES:

1. INTERIOR COLUMNS, SEE PLAN
2. (2) #5x4'-0" WHEN NO CONTROL JOINT OCCURS @ CORNER
3. ISOLATION JOINT

C2 SE501 ISOLATION JOINT
NO SCALE

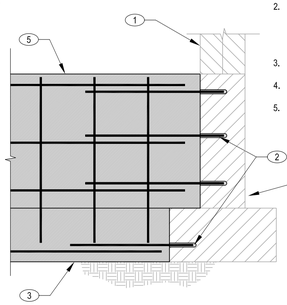

KEYNOTES:

1. EXISTING WALL
2. NEW #5 x 24"HORIZ DOWELS, TO MATCH NEW FOUNDATION AND STEM WALL STEEL. DRILL & EPOXY 6" MIN. INTO EXISTING FOOTING OR FOUNDATION
3. NEW FOOTING, SEE PLAN
4. EXISTING FOUNDATION
5. NEW CONCRETE WALL, SEE PLAN

C3 SE501 TYPICAL NEW to EXISTING CONECTION
NO SCALE

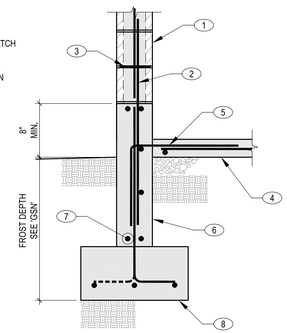


KEYNOTES:

1. MASONRY WALL, SEE PLAN
2. DOWELS TO MATCH VERT. REINF. IN MASONRY WALL
3. LADDER-TYPE JOINT REINFORCING, MASORNY WALL SCHEDULE
4. CONCRETE SLAB, SEE PLAN
5. #4 DOWELS @ 24"o.c. 2'-6" 1'-6"
6. CONCRETE WALL, SEE PLAN
7. (2) #5 x CONT. TOP & BOTTOM.
8. FOOTING, SEE PLAN AND SCHEDULE FOR SIZE AND REINF.

C4 SE501 8" CMU on CONCRETE FOUNDATION WALL
NO SCALE

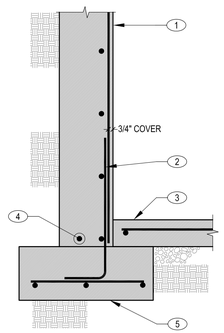


KEYNOTES:

1. CONCRETE FOUNDATION WALL, SEE PLAN
2. DOWELS TO MATCH VERT. REINF. IN CONCRETE WALL. 2'-6" 1'-6"
3. CONCRETE SLAB, SEE PLAN
4. (2) #5 x CONT. TOP & BOTTOM.
5. FOOTING, SEE PLAN AND SCHEDULE FOR SIZE AND REINF.

C5 SE501 CONCRETE FOUNDATION
NO SCALE

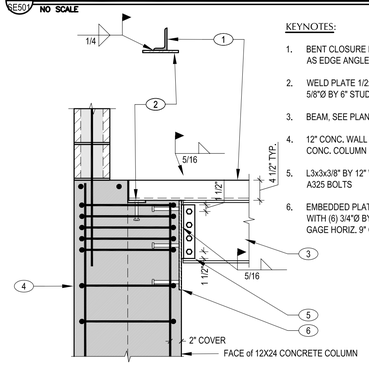


KEYNOTES:

1. BENT CLOSURE PLATE. USED AS EDGE ANGLE 1/4x4.5x2
2. WELD PLATE 1/2x4x8" WITH (2) 5/8"Ø BY 6" STUDS
3. BEAM, SEE PLAN
4. 12" CONC. WALL WITH 12x24 CONC. COLUMN
5. L3x3x3/8" BY 12" WITH (4) 3/4"Ø A325 BOLTS
6. EMBEDDED PLATE 5/8x10x20 WITH (6) 3/4"Ø BY 6" STUDS 6" GAGE HORIZ. 9" GAGE VERT.

B1 SE501 GIRDER to COLUMN CONNECTION
NO SCALE

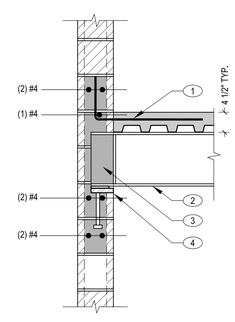


KEYNOTES:

1. #5 DOWELS by 4'-0", SEE PLAN FOR SPACING.
2. L3x3x5/16" BY 8" W/ (2) 3/4"Ø A325 BOLTS
3. PLATE 1/2x12x12" WITH (4) 5/8"Ø BY 4" STUDS

B2 SE501 BEAM to WALL CONNECTION
NO SCALE

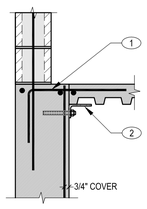


KEYNOTES:

1. #4 DOWELS @ 16"O.C., TYP. 2'-6" 12"
2. L5x3x1/4" BY 5'-6" (LLH) BETWEEN BEAMS. W/ 3/4"Ø EPOXIED THREADED ROD A.B. @ 20"O.C. W/ 4" EMBEDMENT.

NOTE: ANGLE IS SHORTER @ END SPANS

B3 SE501 DECK to WALL CONNECTION
NO SCALE

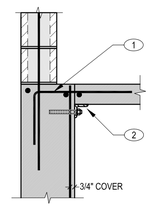


KEYNOTES:

1. #4 DOWELS @ 16"O.C., TYP. 2'-6" 12"

L3x3x5/16" CONT. W/ 3/4"Ø EPOXIED THREADED ROD A.B. @ 16"O.C. W/ 4" EMBEDMENT.

KEYNOTES:

1. #5 DOWELS (4'-0"), SEE PLAN FOR SPACING
2. L3x3x5/16" BY 8" WITH (2) 3/4"Ø BOLTS
3. PLATE 1/2x12x12" WITH (4) 5/8"Ø BY 5" STUDS

B4 SE501 DECK to WALL CONNECTION
NO SCALE

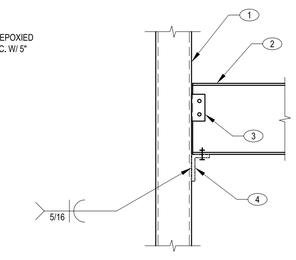


KEYNOTES:

1. COL. SEE PLAN
2. BEAM, SEE PLAN
3. PLATE 5/16x3.5x6 W/ (2) 3/4"Ø BOL
4. L5x3.5x5/8" BY 6" LLV

B5 SE501 NOT USED
NO SCALE

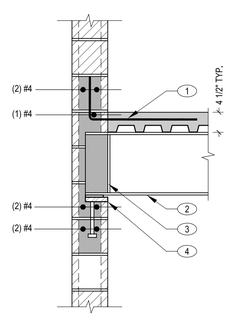


KEYNOTES:

1. #4 DOWELS @ 24"O.C. 10" 24"
2. STEEL GIRDER W/ 3/8" STIFFENER PLATES AT INTERIOR FACE OF WALL.
3. GROUT BEAM POCKET SOLID.
4. BEARING PLATE 3/4x5x12" WITH (2) 3/4"Ø by 8" STUDS. ADD TOP BEARING PLATE 1/4x4x11" OVER 3/4" PLATE. WELD PLATES TOGETHER W/ 1/2" LONG 1/4" FILLETS @ 4"O.C. ALL AROUND.

A1 SE501 GIRDER to CMU COLUMN CONNECTION
NO SCALE




KEYNOTES:

1. #4 DOWELS @ 24"O.C. 10" 24"
2. STEEL BEAM W/ 1/4" STIFFENER PLATES AT INTERIOR FACE OF WALL.
3. GROUT BEAM POCKET SOLID.
4. BEARING PLATE 3/4x5x12" WITH (2) 3/4"Ø by 8" STUDS. ADD TOP BEARING PLATE 1/4x4x11" OVER 3/4" PLATE. WELD PLATES TOGETHER W/ 1/2" LONG 1/4" FILLETS @ 4"O.C. ALL AROUND.

A2 SE501 BEAM to CMU WALL CONNECTION
NO SCALE

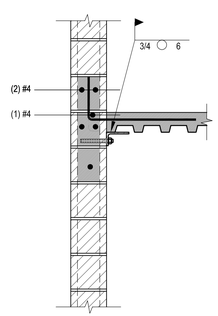


KEYNOTES:

1. #4 DOWELS @ 24"O.C. 10" 24"

L5x3x1/4" BY 5'-6" (LLH) BETWEEN BEAMS. W/ 3/4"Ø EPOXIED THREADED ROD A.B. @ 20"O.C. W/ 5" EMBEDMENT.

NOTE: ANGLE IS SHORTER @ END SPANS

A3 SE501 DECK to CMU WALL CONNECTION
NO SCALE

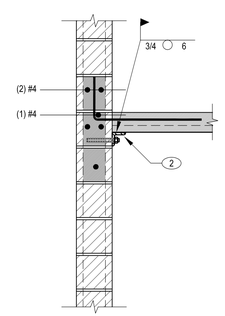


KEYNOTES:

1. #4 DOWELS @ 24"O.C. 10" 24"

L3x3x1/4" BY CONT. W/ 3/4"Ø EPOXIED THREADED ROD A.B. @ 16"O.C. W/ 5" EMBEDMENT.

A4 SE501 DECK to CMU WALL CONNECTION
NO SCALE

A5 SE501 FLOOR JOIST TO STEEL COLUMN
NO SCALE


State of Utah
Department of Administrative Services
Division of Facilities Construction & Management
4110 State Office Building
Salt Lake City, Utah 84114
Phone: (801) 538 - 3018
Fax: (801) 538 - 3267
http://dfcm.utah.gov

CREATED BY:

Structural Engineering inc.
442 North Main Street, Suite 200
Bountiful, Utah 84010
e-mail: wca@wcaeng.com
(801) 298-1118, Office 298-1122 Fax


LICENSED CERTIFIED STRUCTURAL ENGINEER No.160916 KENNETH PAUL WILLMORE STATE OF UTAH

BUILDING NAME:

Utah State Development Center
870 North 860 East
American Fork, Uath

PROJECT TITLE:

Boiler Replacement/ Building Repairs

| MARK | DATE | DESCRIPTION |
|---|---|---|

ISSUE TYPE: REVIEW

ISSUE DATE: APRIL 15, 2009

DFCM PROJECT NO: 08194410
CAD PROJECT NO:
CAD DWG FILE:
DRAWN BY:
CHK'D BY:
COPYRIGHT: STATE OF UTAH

SHEET TITLE

DETAILS

SHEET NUMBER

SE501

KEYNOTES:

1. COL. SEE PLAN
2. BEAM, SEE PLAN
3. KNIFE PLATE 1/2x6x14 _W/ (4) 3/4"Ø BOLTS
4. L6x4x3/4" BY 8" LLV

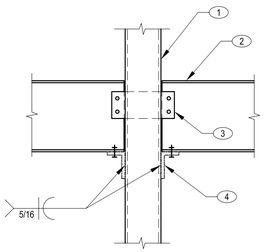


D1 SE502 GIRDER - COLUMN CONNECTION
NO SCALE

KEYNOTES:

1. HSS 2x2x1/4" HANDRAIL POST @ 6'-0"O.C. MAX. SEE ARCH
2. CLOSURE L10.5x2x1/4" BENT PLATE
3. CONC. SLAB ON METAL DECK, SEE PLAN
4. #4 BY 24" DBA @ 16"O.C. TOP. CENTER (1) @ CENTERLINE OF POST
5. DECK DIRECTION MAY BE 90° SEE PLAN
6. STEEL BEAM, SEE PLAN.

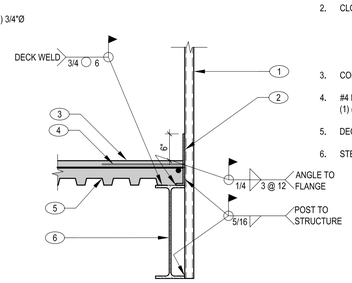


D2 SE502 MEZZANINE HANDRAIL CONNECTION
NO SCALE

KEYNOTES:

1. GIRDER BEAM, SEE PLAN. GIRDER DEPTH VARIES. WHEN THE GIRDER IS DEEPER THAN THE SIDE BEAM, DO NOT COPE BOTTOM FLANGE OF SIDE BEAM.
2. SIDE BEAM, SEE PLAN.
3. ANGLE L3.5x3.5x5/16", SEE SCHEDULE FOR LENGTH AND NUMBER OF BOLTS. ANGLE MAYBE BOLTED OR WELDED TO GIRDER WEB.

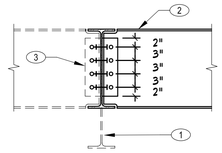


| SIDE BEAM SIZE | ANGLE LENGTH | No. 3/4"Ø A325 BOLTS / ROW |
|---|---|---|
| W10 | 7" | 2 |
| W12 | 7" | 2 |
| W14 | 10" | 3 |
| W16 | 10" | 3 |
| W18 | 10" | 3 |
| W24 | 13" | 4 |

D3 SE502 BEAM TO GIRDER CONNECTION
NO SCALE

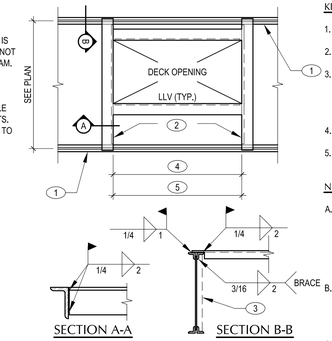


KEYNOTES:

1. STEEL ROOF JOIST (TYP.)
2. 6x4x5/16" ANGLE (LLV)
3. 2x2x1/4" ANGLE BRACE FROM ANGLE BEARING TO BOTTOM CHORD PANEL POINT (NOT REQ'D IF ANGLE BEARS AT TOP CHORD PANEL POINT)
4. L3x3x1/4 FROM 1'-0" TO 3'-0" SPAN
5. L6x4x5/16 FROM 3'-0" TO 10'-0" SPAN.

NOTE:

A. USE THIS DETAIL AT OPENINGS 12" OR GREATER. OPENINGS LESS THAN 12" SHALL BE REINFORCED WITH 16 GAUGE PLATE, 10" LARGER THAN OPENING IN ALL DIRECTIONS & FASTENED TO DECK @ 6"o.c.
B. IF ROOF TOP UNITS ARE NOT SHOWN ON THE FRAMING PLAN, CONTRACTOR IS TO COORDINATE WEIGHTS AND LOCATIONS WITH JOIST SUPPLIER.
C. FLOOR SLAB or ROOF DECK NOT SHOWN

D4 SE502 TYP. DECK OPENING DETAIL
NO SCALE

KEYNOTES:

1. ROOF JOIST, SEE PLAN
2. ROOF DECK, SEE PLAN

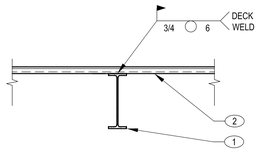


D5 SE502 ROOF DECK TO ROOF JOIST
NO SCALE

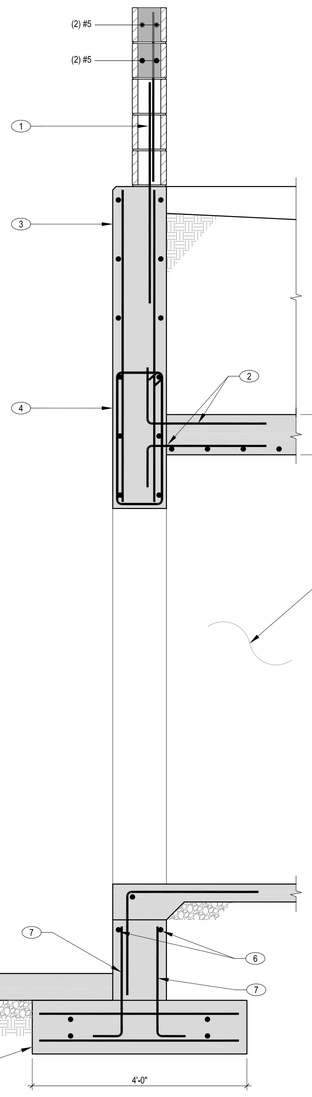


KEYNOTES:

1. #5 DOWELS, SEE PLANS
2. #5 DOWELS @ 16"O.C. TOP AND BOTTOM
   12
   2'-6"
3. 12" CONC. WALL WITH #8 @ 12"O.C. EACH FACE AND #5 @ 16"O.C. EACH FACE.
   CHAMFER TOP INSIDE CORNER.
4. CONC. BEAM, SEE PLANS
5. PIPE TUNNEL
6. (2) #8 CONT.
7. #5 DOWELS @ 16"O.C. EACH FACE
8. FOOTING , SEE PLAN

A1 SE502 TUNNEL DOOR THRU FOUNDATION WALL
NO SCALE

KEYNOTES CONTINUED:

11. 6"Ø EXTRA STRONG PIPE BRACE. W/ 3/4x7.5x13 BEARING PLATES TOP & BOT. W/ (2) 3/4"Ø ANCHOR BOLTS.

    TOP of PIPE IS SLEEVED OVER A 5"Ø EXTRA STRONG PIPE 14 INCHES LONG. PROVIDE A 3/4" GAP BETWEEN THE TOP PLATE & THE PIPE BRACE.

NOTE: PIPE COLUMN CAN BE LOCATED ON EITHER SIDE OF THE MECHANICAL PIPING. COORDINATE WITH MECHANICAL.

KEYNOTES:

1. (2) #5 TOP AND BOTTOM @ ALL WALLS (AS SHOWN).
2. #5 @ 16"O.C. VERT. WITH 30" DOWEL LENGTH INTO WALL BELOW W/ #5 @ 18"O.C. HORIZ. CHAMFER TOP CORNERS.
3. #5 DOWELS @ 16"O.C. (TOP OF SLAB)
   30"
   30"
4. 9" CONCRETE DECK W/ #6 @ 16"O.C. C.W. & #5 @ 16"O.C. L.W.
5. 8" CONCRETE WALLS W/ #6 @ 12"O.C. VERT. & #5 @ 18"O.C. HORIZ. SEE WALL SECTION FOR VERTICAL BAR LOCATION.
6. 4" SLAB ON GRADE
7. #6 DOWELS @ 12"O.C.
8. #6 @ 12"O.C. DOWELS. EXTEND TO TUNNEL FLOOR SLAB
9. BASE PLATE 1/2x6x6" WITH (2) 1/2Ø BY 4" A.B.
10. SIDE PLATE 1/4x2x4" WITH (2) 3/8"Ø SCREWS (UNISTRUT) EACH SIDE

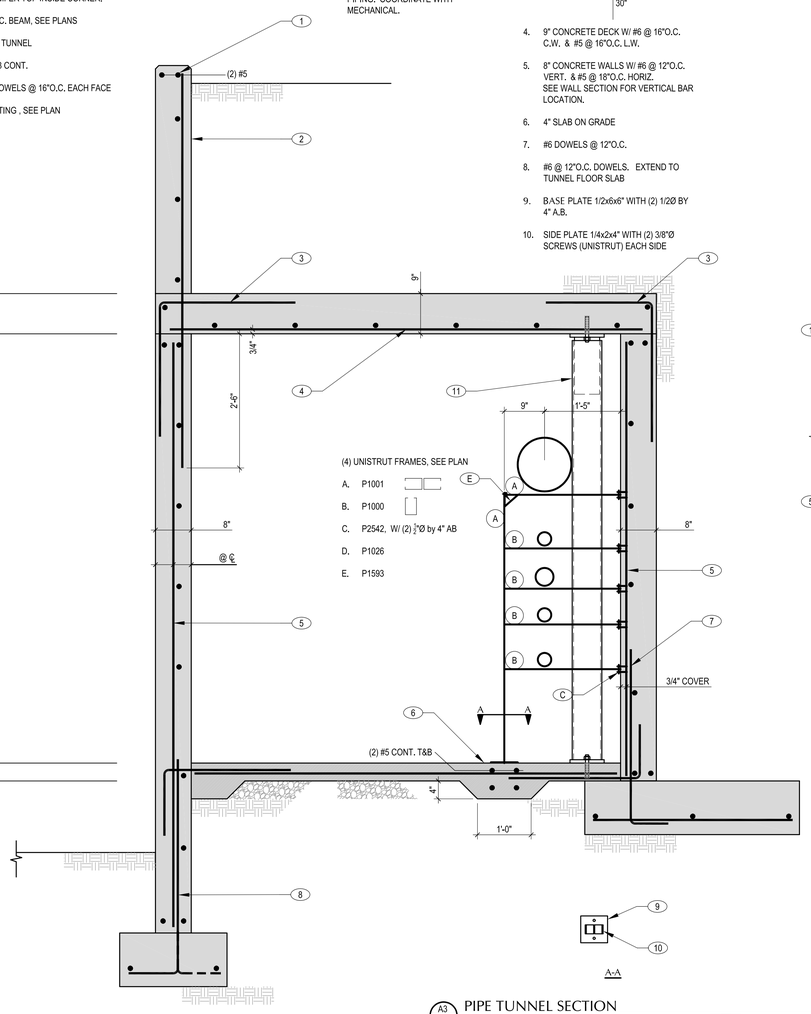


A3 SE502 PIPE TUNNEL SECTION
NO SCALE

KEYNOTES:

1. MASONRY WALL, SEE PLAN W/ (2) #4 BARS CONT. TOP OF WALL
2. ROOF DECK, SEE PLAN
3. (2) #5 BARS CONT. AT DECK BEARING
4. L3x3x1/4" CONT. W/ 3/8x4x12" EMBED PLATES @ 1/3 POINTS BETWEEN JOISTS SPACED. AT JOIST SPACED 3'-0" O.C., PLACE (1) EMBED PLATE @ CENTERLINE BETWEEN JOIST. PLATES TO HAVE (2) 3/4"Ø x 5" W.A.S.

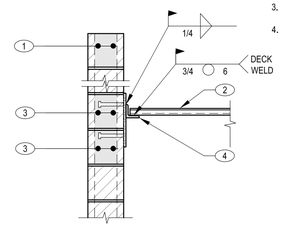


C4 SE502 ROOF DECK - PERPENDICULAR TO WALL
NO SCALE

KEYNOTES:

1. MASONRY WALL, SEE PLAN W/ (2) #4 BARS CONT. TOP OF WALL
2. ROOF DECK, SEE PLAN
3. (2) #5 BARS CONT. AT DECK BEARING
4. L5x3x1/4" (LLH) CONT. W/ 3/8x4x12" EMBED PLATE @ 1/3 POINTS BETWEEN JOISTS SPACED @ 6'-0" O.C. & @ CENTERLINE BETWEEN JOIST @ 3'-0" O.C., PLATE TO HAVE (2) 3/4"Ø x 5" W.A.S.

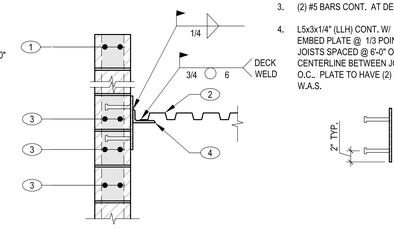


C5 SE502 ROOF DECK - PARALLEL to WALL
NO SCALE

KEYNOTES:

1. STEEL CANTILEVERED BEAM. ROOF DECK & JOIST NOT SHOWN, SEE PLAN. DROP-IN BEAM DEPTH VARIES.
2. 1/2" STIFFENER PLATE EACH SIDE @ CENTERLINE OF COLUMN.
3. COLUMN CAP PLATE 3/4 x 7 x 12 W/ (4) 3/4Ø A325 BOLTS.
4. STEEL TUBE COLUMN, SEE PLANS
5. 1/2"x 6.5" WIDE SPLICE PLATE. SEE PLAN AND TABLE BELOW FOR PLATE HEIGHT & NUMBER OF BOLTS REQUIRED.

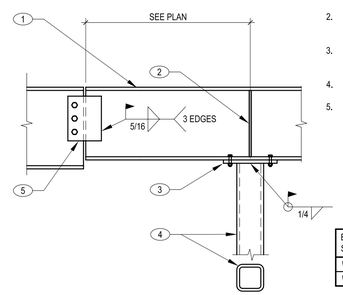


| BEAM SIZE | PLATE HEIGHT | No. 3/4"Ø A325 BOLTS / ROW |
|---|---|---|
| W12 | 7" | 2 |
| W18 | 10" | 3 |

B4 SE502 CANTILEVERED BEAM CONNECTION
NO SCALE

KEYNOTES:

1. MASONRY WALL, SEE PLAN
2. ROOF DECK, SEE PLAN
3. SEE DETAIL C5/SE502 FOR DECK CONNECTION
4. STEEL JOIST, SEE PLAN
5. CHANNEL EMBEDMENT C8x13.75 by 1'-0" w/ (4) 5/8"Ø by 5" STUDS. W/ 3/8x 3.5x8 SHEAR PLATE W/ (2) 3/4"Ø A325 THRU BOLTS.

NOTES:

A. VERTICAL WALL REINFORCING NOT SHOWN.
B. DECK BEARING ELEVATION VARIES FROM WALL TO WALL, SEE ARCH.

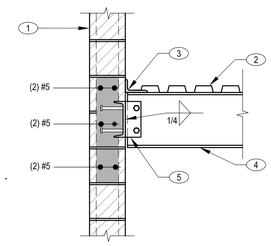


B5 SE502 ROOF BEAM to CMU WALL CONNECTION
NO SCALE

KEYNOTES:

1. CONCRETE FILLED COMPOSITE STEEL DECK, SEE PLAN
2. FLOOR BEAM W/ STEEL STUDS. SEE PLAN FOR BEAM SIZE & STUDS.

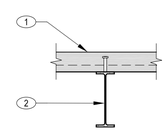

A4 SE502 BEAM - DECK CONNECTION
NO SCALE

KEYNOTES:

1. BOILER SKID BEAM, TYP. W/ 7/8"Ø ANCHOR RODS INTO PRE-DRILLED HOLES. EPOXY 8" INTO FOOTING. BOLTS PER BOILER REQUIREMENTS
2. SLAB-ON-GRADE, SEE PLAN
3. BOILER FOOTING, SEE PLAN

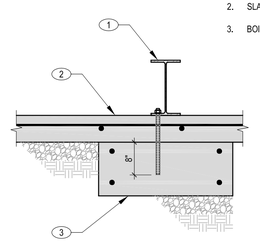


A5 SE502 DETAIL
NO SCALE


State of Utah
Department of Administrative Services
Division of Facilities Construction & Management
4110 State Office Building
Salt Lake City, Utah 84114
Phone: (801) 538 - 3018
Fax: (801) 538 - 3267
http://dfcm.utah.gov

CREATED BY:

Structural Engineering inc.
442 North Main Street, Suite 200
Bountiful, Utah 84010
e-mail: wca@wcaeng.com
(801) 298-1118, Office 298-1122 Fax


LICENSED CERTIFIED STRUCTURAL ENGINEER
No. 160916
KENNETH PAUL WILLMORE
STATE OF UTAH

BUILDING NAME:

Utah State Development Center
870 North 860 East
American Fork, Uath

PROJECT TITLE:

Boiler Replacement/ Building Repairs

| MARK | DATE | DESCRIPTION |
|---|---|---|

ISSUE TYPE: REVIEW

ISSUE DATE: APRIL 15, 2009

DFCM PROJECT NO: 08194410
CAD PROJECT NO:
CAD DWG FILE:
DRAWN BY:
CHK'D BY:
COPYRIGHT: STATE OF UTAH

SHEET TITLE

DETAILS

SHEET NUMBER

SE502

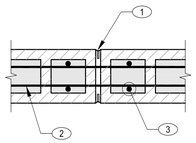


SEE ARCH. FOR LOCATION

KEYNOTES:

1. SAW-CUT JOINT 1" DEEP FULL HEIGHT OF WALL. FILL JOINT WITH MORTAR OR CAULK
2. RUN HORIZ. WALL REINF. CONTINUOUS THRU JOINT. DO NOT CUT ANY REINF.
3. TYP. VERTICAL WALL REINF. IN CELL EACH SIDE OF CONTROL JOINT

NOTES:

A. PROVIDE VERTICAL CONTROL JOINTS AT 20' O.C. (MAXIMUM) U.N.O. ON THE DRAWINGS. NO CONTROL JOINTS WILL BE ALLOWED IN MASONRY BEAMS, COLUMNS, OR JAMBS U.N.O.

B. IF CONTROL JOINT IS SPECIFIED IN MASONRY BEAM/LINTEL THEN, CONTROL JOINTS SHALL BE LOCATED AT MIDSPAN & SHALL HAVE MORTAR TO FILL COMPLETE HEAD JOINT. DO NOT CUT REINF. AT BOND BEAMS OR DESIGNATED MASONRY BEAMS/LINTELS.

C. ALL CELLS ARE SHOWN AS FULLY GROUTED. THIS REPRESENTS BOND BEAM CELLS.

D1 SE502 VERTICAL MASONRY WALL CONTROL JOINT - PLAN VIEW
NO SCALE

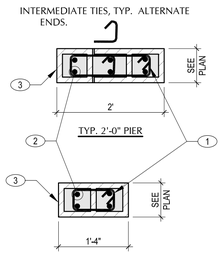


KEYNOTES:

1. CLOSED TIES AS SHOWN, SEE SCHEDULE.
   AT WINDOWS: TIES ONLY REQ'D. 16" BELOW TO 16" ABOVE WINDOWS
2. VERTICAL BARS WITH MATCHING DOWELS INTO FOOTINGS/FOUNDATION, SEE SCHEDULE.
3. CMU PIER, SEE PLAN.

NOTES:

A. PROVIDE OPENED END UNITS TYPICAL AT ALL PIERS.

D2 SE502 MASONRY PIERS
NO SCALE

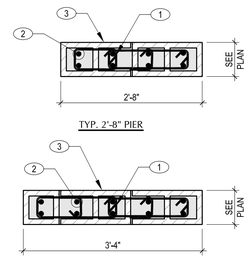


KEYNOTES:

1. CLOSED TIES AS SHOWN, SEE SCHEDULE. AT WINDOWS: TIES ONLY REQ'D. 16" BELOW TO 16" ABOVE WINDOWS
2. VERTICAL BARS WITH MATCHING DOWELS INTO FOOTINGS/FOUNDATION, SEE SCHEDULE.
3. CMU PIER, SEE PLAN.

NOTES:

A. PROVIDE OPENED END UNITS TYPICAL AT ALL PIERS.

D3 SE502 MASONRY PIERS
NO SCALE

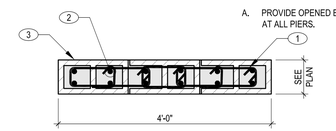


KEYNOTES:

1. CLOSED TIES AS SHOWN, SEE SCHEDULE. AT WINDOWS: TIES ONLY REQ'D. 16" BELOW TO 16" ABOVE WINDOWS
2. VERTICAL BARS WITH MATCHING DOWELS INTO FOOTINGS/FOUNDATION, SEE SCHEDULE.
3. CMU PIER, SEE PLAN.

NOTES:

A. PROVIDE OPENED END UNITS TYPICAL AT ALL PIERS.

D4 SE502 MASONRY PIERS
NO SCALE

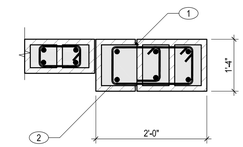


KEYNOTES:

1. CLOSED TIES AS SHOWN, FULL HEIGHT. SEE SCHEDULE.
2. VERTICAL BARS WITH MATCHING DOWELS INTO FOOTINGS/FOUNDATION, SEE SCHEDULE.

NOTES:

A. PROVIDE OPENED END UNITS TYPICAL AT ALL PIERS.

D5 SE502 MASONRY PIERS
NO SCALE

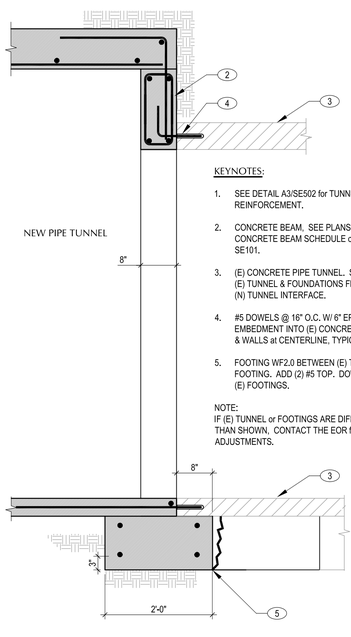


KEYNOTES:

1. SEE DETAIL A3/SE502 for TUNNEL REINFORCEMENT.
2. CONCRETE BEAM. SEE PLANS & CONCRETE BEAM SCHEDULE on SHEET SE101.
3. (E) CONCRETE PIPE TUNNEL. SAW CUT (E) TUNNEL & FOUNDATIONS FLUSH at (N) TUNNEL INTERFACE.
4. #5 DOWELS @ 16" O.C. W/ 6" EPOXY EMBEDMENT INTO (E) CONCRETE SLAB & WALLS at CENTERLINE, TYPICAL.
5. FOOTING WF2.0 BETWEEN (E) TUNNEL FOOTING. ADD (2) #5 TOP. DOWEL into (E) FOOTINGS.

NOTE:
IF (E) TUNNEL or FOOTINGS ARE DIFFERENT THAN SHOWN, CONTACT THE EOR for ADJUSTMENTS.

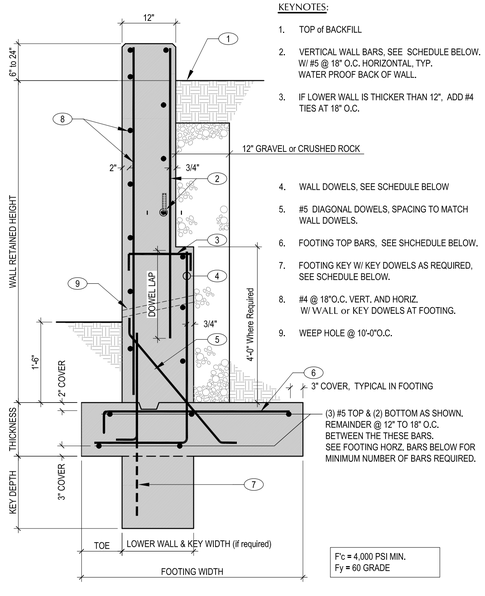


KEYNOTES:

1. TOP of BACKFILL
2. VERTICAL WALL BARS, SEE SCHEDULE BELOW. W/ #5 @ 18" O.C. HORIZONTAL, TYP. WATER PROOF BACK OF WALL.
3. IF LOWER WALL IS THICKER THAN 12", ADD #4 TIES AT 18" O.C.
4. WALL DOWELS, SEE SCHEDULE BELOW
5. #5 DIAGONAL DOWELS, SPACING TO MATCH WALL DOWELS.
6. FOOTING TOP BARS, SEE SHCHEDULE BELOW.
7. FOOTING KEY W/ KEY DOWELS AS REQUIRED, SEE SCHEDULE BELOW.
8. #4 @ 18"O.C. VERT. AND HORIZ. W/ WALL or KEY DOWELS AT FOOTING.
9. WEEP HOLE @ 10'-0"O.C.

F'c = 4,000 PSI MIN.
Fy = 60 GRADE

RETAINING WALL SCHEDULE

| MARK | | NONE | NONE | NONE | NONE | NONE |
|---|---|---|---|---|---|---|
| WALL DIMENSIONS | RET. HEIGHT | 8'-0" | 10'-0" | 12'-0" | 14'-0" | 16'-0" |
| | LOWER WALL WIDTH | 12" | 12" | 12" | 16" | 16" |
| FOOTING DIMENSIONS | THICKNESS | 12" | 14" | 14" | 14" | 16" |
| | TOE | 2'-3" | 3'-0" | 3'-0" | 4'-0" | 5'-0" |
| | WIDTH | 6'-0" | 8'-6" | 8'-6" | 9'-0" | 10'-8" |
| KEY DIMENSIONS | DEPTH | NA | NA | 16" | 32" | 40" |
| | WIDTH | NA | NA | 12" | 16" | 16" |
| WALL REINF. | VERT. BARS | #5 @ 18"o.c. | #5 @ 16"o.c. | #6 @ 18"o.c. | #6 @ 18"o.c. | #6 @ 14"o.c. |
| | WALL DOWELS | #6 @ 18"o.c. | #7 @ 16"o.c. | #7 @ 9"o.c. | #8 @ 9"o.c. | #8 @ 7"o.c. |
| | DOWEL LAP | 24" | 24" | 36" | 36" | 36" |
| FOOTING REINF. | TOP BARS | #5 @ 18"o.c. | #7 @ 16"o.c. | #8 @ 18"o.c. | #7 @ 18"o.c. | #7 @ 14"o.c. |
| | BOT. BARS | NONE | NONE | NONE | NONE | NONE |
| | KEY DOWELS | NA | NA | #5 @ 18"o.c. | #6 @ 18"o.c. | #6 @ 18"o.c. |
| | HORZ. BARS | (5) #5 CONT. | (9) #5 CONT. | (9) #5 CONT. | (9) #5 CONT. | (12) #5 CONT. |

BACK FILL PLACED BEHIND RETAINING WALLS SHALL BE NON-COHESIVE, GRANULAR AND FREE DRAINING AND FREE OF CLAY, DEBRIS OR ORGANIC MATTER. COMPACTED TO 95% OF MAXIMUM DENSITY.

NOTES:

A. ALL HANDRAIL WELDS SHALL BE GROUND SMOOTH AND PAINTED PER OSHA & DFCM STANDARDS.

B. STEEL DETAILER TO PROVIDE ALL CATWALK DETAILS.

KEYNOTES:

1. ROOF BEAMS @ 6'-8"O.C.
2. HSS 2x2x3/16 TENSION COLUMNS. ATTACH TO CENTERLINE OF ROOF BEAMS
3. TOP HANDRAILS, 1-1/2"Ø STD PIPE, TYP.
4. BOT. RAILS, 1-1/4"Ø STD PIPE
5. TOE PLATE 1/4" BY 6" ABOVE GRATING, CONTINUOUS, TYP. WELD PLATE TO TOP OF CHANNEL W/ 1/4" FILLETS 2" @ 16" O.C. BETWEEN COLUMNS.
6. C6x13
7. HSS 2x2x3/16 BRACE @ 13'4" O.C.

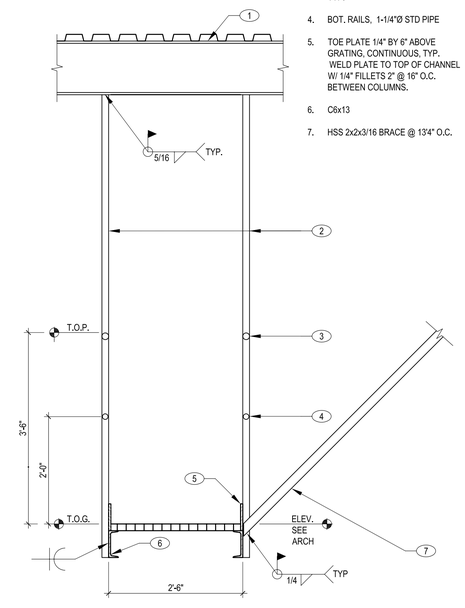


B5 SE502 GENERAL CATWALK FRAMING
NO SCALE

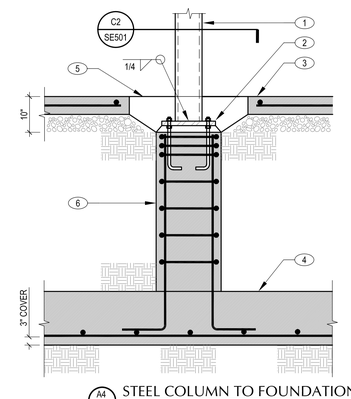


KEYNOTES:

1. STEEL COLUMN, SEE PLAN
2. 3/4" BASE PLATE COL. WIDTH > 6" x COL. DEPTH + 6" WITH (4) 3/4"Ø ANCHOR RODS ON 1-1/2" NON SHRINK GROUT WITH LEVELING NUTS. EXTEND ANCHOR RODS 8" INTO PIER or FOOTINGS.
3. CONCRETE SLAB ON GRADE, SEE PLAN
4. FOOTING, SEE PLAN AND SCHEDULE FOR SIZE AND REINF. TOP OF FOOTING 1'-0" BELOW BOTTOM OF BOILER FOOTING. BOILER FOOTING NOT SHOWN.
5. 2'-4" SQUARE ISOLATION JOINT. NO REINF. REQ'D. POUR AFTER DEAD LOADS ARE IN PLACE.
6. 16x16 CONCRETE PIER WITH (4) #6 VERTICAL & #4 TIES @ 8" O.C. W/ (3) TIES @ 2" O.C. @ TOP.

NOTES:

A. CONTRACTOR: COORDINATE TOP OF CONCRETE AND TOP OF SLAB.

A4 SE502 STEEL COLUMN TO FOUNDATION CONN.
NO SCALE

KEYNOTES:

1. ROOF BEAMS @ 6'-8"O.C.
2. HSS 2x2x3/16 TENSION COLUMNS. ATTACH TO CENTERLINE OF ROOF BEAMS
3. L6x3.5x$\frac{5}{16}$ BETWEEN ROOF JOIST.

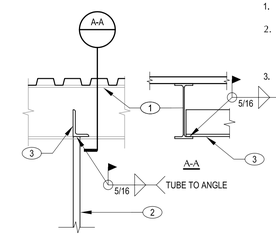


A5 SE502 BETWEEN BEAMS - CATWALK COLUMN CONN.
NO SCALE


State of Utah
Department of Administrative Services
Division of Facilities Construction & Management
4110 State Office Building
Salt Lake City, Utah 84114
Phone: (801) 538 - 3018
Fax: (801) 538 - 3267
http://dfcm.utah.gov

CREATED BY:
Structural Engineering inc.
442 North Main Street, Suite 200
Bountiful, Utah 84010
e-mail: wca@wcaeng.com
(801) 298-1118, Office 298-1122 Fax


LICENSED CERTIFIED STRUCTURAL ENGINEER
No. 160916
KENNETH PAUL WILLMORE
STATE OF UTAH

BUILDING NAME:
Utah State Development Center
870 North 860 East
American Fork, Uath

PROJECT TITLE:
Boiler Replacement/ Building Repairs

| MARK | DATE | DESCRIPTION |
|---|---|---|

ISSUE TYPE: REVIEW

ISSUE DATE: APRIL 15, 2009

DFCM PROJECT NO: 08194410
CAD PROJECT NO:
CAD DWG FILE:
DRAWN BY:
CHK'D BY:
COPYRIGHT: STATE OF UTAH

SHEET TITLE
DETAILS

SHEET NUMBER
SE503

# MECHANICAL LEGEND

| SYMBOL | ABR. | DESCRIPTION |
|---|---|---|
| GENERAL TERMINOLOGY | | |
| A / ME-101 | | SECTION LETTER DESIGNATION / SECTION DRAWN ON THIS SHEET |
| A2 | | DETAIL NUMBER DESIGNATION CORRESPONDING WITH GRID LOCATION |
| AH / 1 | | MECHANICAL EQUIPMENT DESIGNATION / EQUIPMENT ITEM DESIGNATION |
| 1 | | REVISION DESIGNATOR AND NUMBER |
| 1 | | KEY NOTE DESIGNATOR AND NUMBER |
| | POC | POINT OF CONNECTION |
| | POR | POINT OF REMOVAL |
| AFF | | ABOVE FINISHED FLOOR |
| ℄ EL. | | CENTER LINE ELEVATION |
| GC | | GENERAL CONTRACTOR |
| MC | | MECHANICAL CONTRACTOR |
| EC | | ELECTRICAL CONTRACTOR |
| CC | | CONTROLS CONTRACTOR |
| NIC | | NOT IN CONTRACT |
| NTS | | NOT TO SCALE |
| SYMBOL | ABR. | DESCRIPTION |
| | | EXISTING EQUIPMENT TO BE REMOVED |
| | | EXISTING EQUIPMENT TO REMAIN |
| | | NEW EQUIPMENT |

| SYMBOL | ABR. | DESCRIPTION |
|---|---|---|
| WET SIDE | | |
| | | UNION |
| | | MANUAL ACTUATOR (BALL, BUTTERFLY, NEEDLE, ETC. VALVES) |
| | | MANUAL ACTUATOR (GATE, GLOBE, S&D, OS&Y, ETC. VALVES) |
| | | THREADED OR SWEAT VALVE CONNECTION |
| | | NEEDLE VALVE |
| | | FLANGED VALVE CONNECTION |
| | | BUTTERFLY VALVE |
| | | GATE VALVE |
| | | CHECK VALVE |
| | | GLOBE VALVE |
| | PRV | PRESSURE REDUCING VALVE |
| | CBV | CIRCUIT BALANCING VALVE |
| | BV | BALL VALVE |
| P | PRV | PRESSURE RELIEF VALVE |
| | | AUTOMATIC AIR VENT |
| | | MANUAL AIR VENT |
| | | STRAINER |
| | | STRAINER W/ PLUGGED BLOW OFF |
| | VTI | VENTURI |
| | | PRESSURE GAUGE AND GAUGE COCK - WATER |
| | | THERMOMETER AND THERMOWELL |
| | TW | THERMOWELL |
| | | DIRECTION OF FLOW |
| | | PRESSURE GAUGE WITH SIPHON LOOP STEAM |

| SYMBOL | ABR. | DESCRIPTION |
|---|---|---|
| WET SIDE CONT | | |
| | | SLOPE |
| | | ELBOW UP |
| | | ELBOW DOWN |
| | | TEE UP |
| | | TEE DOWN |
| | | EXISTING PIPING TO BE REMOVED |
| | | EXISTING PIPING TO REMAIN |
| | | NEW PIPING |
| | | PIPE CAP OR PLUG |
| | | CONCENTRIC REDUCER |
| | | ECCENTRIC REDUCER |
| | | EXPANSION JOINT |
| G | | NATURAL GAS PIPING |
| | CW | CULINARY COLD WATER |
| D | | EQUIPMENT DRAIN |
| CR | | CONDENSATE RETURN |
| HPR | | HIGH PRESSURE RETURN |
| PC | | PUMPED CONDENSATE |
| | | GLOBE VALVE |
| BFW | | BOILER FEEDWATER |
| FOS | | FUEL OIL SUPPLY |
| FOR | | FUEL OIL RETURN |
| AA | | ATOMIZATION AIR |
| | BPV | BACK PRESSURE VALVE OIL |
| MU | MU | MAKE-UP WATER |
| HPS | HPS | HIGH PRESSURE STEAM |
| MPS | MPS | MEDIUM PRESSURE STEAM |
| EQ | | EARTH QUAKE VALVE |
| PS | | PIPE SUPPORT |

## GENERAL NOTES:

G-1 MECHANICAL INFORMATION IS NOT LIMITED TO THE MECHANICAL DRAWINGS. CONTRACTOR SHALL BE RESPONSIBLE FOR INFORMATION ON ALL OTHER CONSTRUCTION DOCUMENTS INCLUDING DRAWINGS BY OTHER DISCIPLINES AND SPECIFICATIONS.

A - EACH DRAWING SHEET AND THE SPECIFICATIONS HAVE BEEN PREPARED TO SUPPLEMENT EACH OTHER AND THEY SHALL BE INTERPRETED AS AN INTEGRAL UNIT WITH ITEMS SHOWN AND NOTED ON ONE AND NOT THE OTHER BEING FURNISHED AND INSTALLED AS THOUGH SHOWN AND CALLED OUT IN ALL PLACES. ITEMS IN SPECIFICATIONS OR DRAWINGS LISTED WHICH ARE DIFFERING IN EFFICIENCY OR QUALITY SHALL BE HELD TO THE GREATEST OF: EFFICIENCY, QUALITY OR GOVERNING CODE.

B - THE CONTRACTOR WILL BE HELD RESPONSIBLE FOR THE INSTALLATION OF THE SYSTEMS ACCORDING TO THE TRUE INTENT AND MEANING OF THE CONTRACT DOCUMENTS.

C - THE CONTRACTOR SHALL INSTALL ALL EQUIPMENT WITH PROPER SERVICE ACCESS AND CLEARANCES ACCORDING TO MANUFACTURERS RECOMMENDATIONS. THE CONTRACTOR SHALL REVIEW SUPPLIERS BID PACKAGES FOR COMPLETENESS AND COMPLIANCE TO THE SPECIFICATIONS, SCHEDULES, AND DESIGN INTENT (ALL EQUIPMENT AND METHODS). THE CONTRACTOR SHALL REMOVE AND REINSTALL CORRECTLY AT HIS OWN EXPENSE ANY EQUIPMENT NOT IN COMPLIANCE.

D - THE CONTRACTOR SHALL CONSULT MANUFACTURERS INSTALLATION INSTRUCTIONS FOR SIZES, METHODS, ACCESSORIES, AND CLEARANCES IN SPACE AVAILABLE PRIOR TO BIDDING PROJECT.

E - ANYTHING NOT CLEAR OR IN CONFLICT WILL BE EXPLAINED BY MAKING APPLICATION TO THE ENGINEER IN WRITING.

G-2 ANY AND ALL ALTERATIONS TO THE SYSTEM SHOWN SHALL BE SUBMITTED TO THE ENGINEER PRIOR TO CHANGES FOR APPROVAL. CONTRACTOR SHALL NOT START ANY CHANGES UNTIL NOTIFIED IN WRITING. IF CHANGES ARE MADE PRIOR TO APPROVAL CONTRACTOR SHALL TAKE ALL RESPONSIBILITY FOR THE CHANGES MADE AND ALL COSTS RELATING TO FAILURE OR REPLACEMENT OF ALTERATIONS.

G-3 CONTRACTOR SHALL FIELD VERIFY ALL DIMENSIONS AND LOCATIONS.

G-4 THE WORKING DRAWINGS ARE DIAGRAMMATIC. THEY DO NOT SHOW EVERY OFFSET, BEND, OR ELBOW NECESSARY FOR THE COMPLETE INSTALLATION IN THE SPACE PROVIDED. ALL LOCATIONS FOR MECHANICAL EQUIPMENT SHALL BE FIELD VERIFIED AND COORDINATED WITH ALL DRAWINGS. THE CONTRACTOR SHALL PROVIDE OR COORDINATE WITH THE GENERAL CONTRACTOR PROVISIONS FOR BLOCKOUTS OR CORE DRILLS THROUGH STRUCTURE.

G-5 THE INSTRUCTION TO "PROVIDE" ALSO INCLUDES INSTALLATION.

G-6 SHEET METAL DUCT SIZES SHOWN ON DRAWINGS ARE FREE AREA DIMENSIONS.

G-7 THE MECHANICAL CONTRACTOR SHALL VERIFY MOTOR VOLTAGES WITH THE ELECTRICAL DRAWING BEFORE ORDERING MOTORIZED EQUIPMENT AND CONTROLS.

G-8 SUPPLIERS SHALL REVIEW ALL DRAWINGS AND THE SPECIFICATIONS PRIOR TO SUBMITTING PRICES TO THE CONTRACTOR. ALL QUESTIONS AND DISCREPANCIES SHALL BE BROUGHT TO THE ENGINEERS ATTENTION PRIOR TO BIDDING.

G-9 CONTRACTOR SHALL THOROUGHLY REVIEW AND SIGN SUBMITTALS FOR COMPLETENESS AND COMPLIANCE TO THE SPECIFICATIONS PRIOR TO ENGINEERS REVIEW. SUPPLIERS SHALL HIGHLIGHT OR MARK ALL INFORMATION REQUIRED TO SHOW COMPLIANCE TO THE SPECIFICATIONS. ALL REQUESTED EXCEPTIONS TO THE SPECIFICATIONS, OR SCHEDULES SHALL BE CLEARLY NOTED AND EXPLAINED. SUBMITTAL REVIEW AND ACCEPTANCE IS FOR DESIGN CONCEPT ONLY, AND DOES NOT AT ANY TIME RELIEVE THE CONTRACTOR OF RESPONSIBILITY TO MEET SPECIFICATIONS, CAPACITIES, OR DESIGN INTENT.

G-10 ALL MECHANICAL AND PLUMBING SHALL BE INSTALLED AND CONFORM TO THE 2006 EDITION OF THE IMC AND IPC WITH UTAH ANNOTATIONS AND REQUIREMENTS.

G-11 THIS CONTRACTOR SHALL BE RESPONSIBLE FOR THE DRAINING DOWN AND RE-FILLING OF ALL SYSTEMS NECESSARY TO COMPLETE THE WORK OUTLINED BY THIS PROJECT.

G-12 ALL PIPING, MATERIALS, ETC. SHALL BE NEW AND DOMESTIC MADE UNLESS SPECIFICALLY AUTHORIZED IN WRITING PRIOR TO BID.

TRACY STOCKING & ASSOCIATES


State of Utah
Department of Administrative Services
Division of Facilities Construction & Management
4110 State Office Building
Salt Lake City, Utah 84114
Phone: (801) 538 - 3018
Fax: (801) 538 - 3267
http://dfcm.utah.gov

CREATED BY:
WHW ENGINEERING INC.
PROFESSIONAL MECHANICAL ENGINEERING
8619 Sandy Parkway Suite 101
SANDY, UTAH 84070
(801)466-4021, FAX 466-8536
EMAIL: excellence@whw-engineering.com


BUILDING NAME:
Utah State Development Center
870 North 860 East
American Fork, Uath

PROJECT TITLE:
Boiler Replacement/ Building Repairs

| MARK | DATE | DESCRIPTION |
|---|---|---|

ISSUE TYPE: REVIEW

ISSUE DATE: MAY __, 2009

DFCM PROJECT NO: 08194410
CAD PROJECT NO:
CAD DWG FILE:
DRAWN BY: LGD
CHK'D BY: SLW
COPYRIGHT: STATE OF UTAH

SHEET TITLE
GENERAL NOTES AND LEGEND

SHEET NUMBER
MG001

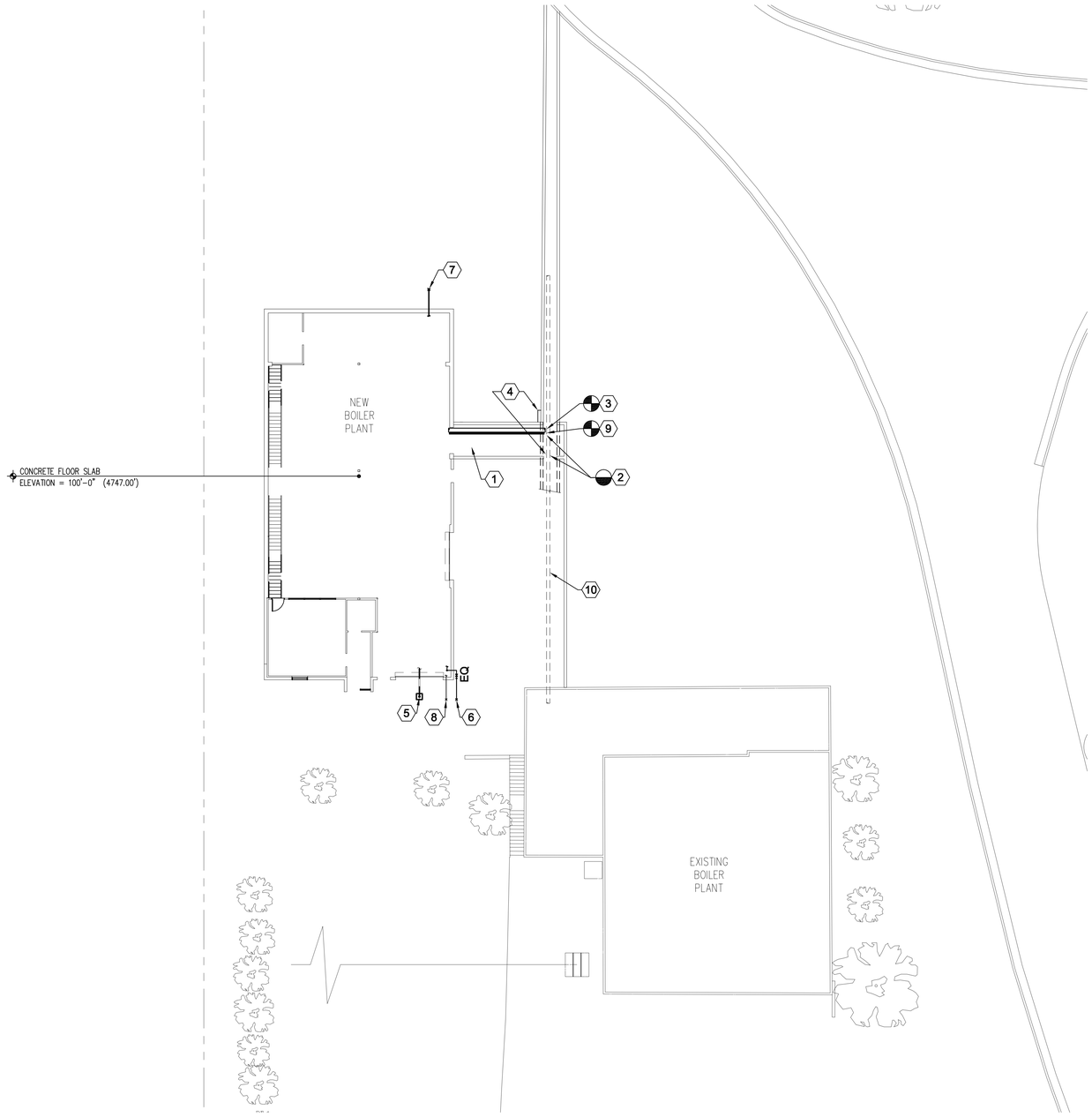


## MECHANICAL UTILITIES SITE PLAN

SCALE: 1/16" = 1'-0"

SHEET NOTES:

1. NEW 8'-0" WIDE TUNNEL, CONNECT TO EXISTING TUNNEL. SEE ARCHITECTURAL FOR CONSTRUCTION DESIGN AND DETAILS.
2. AFTER NEW CONNECTIONS TO EXISTING PIPING REMOVE ALL EXISTING STEAM AND CONDENSATE PIPING FROM THIS POINT TO END OF THE NEW RETAINING WALL.
3. PROVIDE NEW CONNECTIONS INTO EXISTING STEAM PIPING AND FOUR (4) CONDENSATE PIPING RETURNS.
4. REMOVE EXISTING CULINARY HOT WATER FROM NEW RETAINING WALL TO 3'-0" NORTH OF NEW TUNNEL.
5. 4" SEWER FROM NEW BOILER PLANT. END 5'-0" FROM BUILDING WITH A COTG. SEE ARCHITECTURAL OR CIVIL SITE PLAN FOR CONTINUATION.
6. RAISE UP GAS PIPING ON OUTSIDE OF BUILDING. PROVIDE EARTHQUAKE VALVE AND EXTEND THRU THE WALL. ROUTE GAS TO 5'-0" OUTSIDE BUILDING. SEE ARCHITECTURAL OR CIVIL SITE PLAN FOR EXTERIOR CONTINUATION AND SHEET ME101 FOR INTERIOR CONTINUATION.
7. PROVIDE NEW 2" WATER INTO NEW BOILER PLANT. SEE SHEET PE101 FOR CONTINUATION INSIDE BUILDING. SEE ARCHITECTURAL OR CIVIL SITE PLANS FOR LOCATION OF SITE WATER LOCATION. THIS CONTRACTOR SHALL EXTEND 5'-0" OUTSIDE BUILDING.
8. 4" STORM DRAIN PIPING TO 5'-0" OUTSIDE BUILDING. SEE ARCHITECTURAL OR CIVIL SITE PLANS FOR SITE CONTINUATION. DRAIN INVERT AT CONNECTION SHALL BE ELEVATION 4379.0.
9. CONNECT TO 2" FOS AND 2" FOR IN TUNNEL AND EXTEND TO BOILER PLANT. SEE CIVIL SITE UTILITY PLAN FOR EXACT LOCATION. SEE SHEET ME101 FOR FUEL OIL PIPING INSIDE BOILER PLANT.
10. PIPING FROM RETAINING WALL TO EXISTING BOILER PLANT SHALL REMAIN AT THIS TIME.

TRACY STOCKING & ASSOCIATES


State of Utah
Department of Administrative Services

Division of Facilities Construction & Management
4110 State Office Building
Salt Lake City, Utah 84114
Phone: (801) 538 - 3018
Fax: (801) 538 - 3267

http://dfcm.utah.gov

CREATED BY:

WHW ENGINEERING INC.
PROFESSIONAL MECHANICAL ENGINEERING
8619 Sandy Parkway Suite 101
SANDY, UTAH 84070
(801)466-4021, FAX 466-8536
EMAIL: excellence@whw-engineering.com


BUILDING NAME:

Utah State Development Center
870 North 860 East
American Fork, Uath

PROJECT TITLE:

Boiler Replacement/ Building Repairs

| MARK | DATE | DESCRIPTION |
|---|---|---|

ISSUE TYPE: REVIEW

ISSUE DATE: MAY __, 2009

DFCM PROJECT NO: 08194410
CAD PROJECT NO:
CAD DWG FILE:
DRAWN BY: LGD
CHK'D BY: SLW
COPYRIGHT: STATE OF UTAH

SHEET TITLE

MECHANICAL UTILITIES PLAN

SHEET NUMBER

MS101

SHEET NOTES:

36 END OF MAIN TRAP. SEE DETAIL C3/ME501.

37 STEAM PRESSURE REDUCING STATION. SEE DETAIL C2/ME504.

38 BFW DROP TO CONTROL STATION. PROVIDE FLOW METER IN DROP.

39 OIL PUMP PROVIDED AND INSTALLED BY BOILER MANUFACTURER. COORDINATE WITH BOILER MANUFACTURER FOR CONNECTION SIZES.

40 AIR COMPRESSORS PROVIDED AND INSTALLED BY BOILER MANUFACTURER. COORDINATE WITH BURNER MANUFACTURER FOR PIPING CONNECTIONS AND SIZES.

41 PROVIDE 1/2" SCH. 40 THRED-O-LETS IN BOILER FEED WATER PIPING FOR CHEMICAL TREATMENT CONNECTIONS.

42 PROVIDE STEAM FIRED UNIT HEATERS. SEE DETAIL A1/ME503. 6 TYPICAL.

43 PROVIDE 3"x3"x2-1/2" TEE, 2-1/2" NIPPLE & 2-1/2" GAS BALL VALVE FOR FUTURE CONNECTION. PLUG VALVE.

44 1/2" GAS PIPING TO FURNACE F-1. SEE SHEET ME102 FOR CONTINUATION.

45 PROVIDE 1-1/2"x1-1/2"x1-1/4" TEES, 1-1/4" NIPPLES AND 1-1/4" OIL BALL VALVES FOR FUTURE CONNECTION. PLUG BALL VALVE.

46 PROVIDE 2-1/2"x2-1/2"x2" TEE, 2" NIPPLE AND BALL VALVE FOR FUTURE CONNECTION OF BOILER FEED WATER. PLUG BALL VALVE.

47 IF ADDED ALTERNATE #1 IS NOT ACCEPTED, THE STEAM, OIL PIPING, GAS PIPING, AND BFW SHALL BE VALVED AND CAPPED FOR FUTURE CONNECTION.

48 EMERGENCY SHUT-DOWN OF BOILERS. SEE ELECTRICAL DRAWINGS.

49 STEAM FLOW METER. INSTALL PER MANUFACTURERS INSTRUCTIONS AND AT RECOMMENDED PIPE LENGTHS UPSTREAM AND DOWN STREAM OF METER.

SHEET NOTES:

27 2"Ø BOILER FEEDWATER PIPING. SEE ISOMETRIC A2/ME902 FOR PIPING CONNECTION TO BOILERS. CODE PIPE TO AND INCLUDING GATE VALVE AND CHECK VALVE PROVIDED BY BOILER MANUFACTURER.

28 NON-RETURN VALVE, SPOOL WITH DRAIN AND GATE VALVE SHALL BE PROVIDED AND INSTALLED BY BOILER MANUFACTURER. DUE TO THE REQUIRED HEIGHT OF THE STEAM HEADER, THIS CONTRACTOR SHALL PROVIDE AND INSTALL NEW CODE PIPING INLET BETWEEN BOILER CONNECTION AND NON RETURN VALVE. RE-INSTALL THE VALVES AND SPOOLS TO THE NEW CODE PIPING.

29 LOW WATER CUT OFF, GAUGE GLASS, AND TRAIN PROVIDED AND INSTALLED BY BOILER MANUFACTURER. CONTRACTOR SHALL PROVIDE DRAIN AND BALL VALVE.

30 2" F.O.S. AND 2" F.O.R. FROM CONNECTION IN EXISTING TUNNEL. ROUTE IN NEW TUNNEL SUPPORTED FROM UNISTRUT. RISE UP AND ROUTE TO BOILERS. SEE SHEET ME202

31 SEE FUEL OIL ISOMETRIC B2/ME903 FOR VALVES, PIPING ETC.

32 DROP 3/4" DRAIN FROM CODE VALVE TO FLOOR AND TRENCH DRAIN.

33 BURNERS SHOWN ARE POWER FLAME. SEE SCHEDULE SHEET ME601.

34 8" FGR DUCT FROM BURNER TO BOILER CONNECTION BY BOILER MANUFACTURER. CONTRACTOR SHALL RE-INSTALL DUCT IF IT NEEDS TO BE DISCONNECTED FOR INSTALLATION OR SHIPPING OF BOILER.

35 BOILER FEED WATER CONTROL STATION. SEE ISOMETRIC A2/ME902. CONTROL VALVE PROVIDED BY BOILER MANUFACTURER AND INSTALLED BY CONTRACTOR.

SHEET NOTES:

14 PROVIDE NEW 12"Ø STEAM MAIN TO NEW CONNECTION INTO EXISTING STEAM MAIN LOCATED IN EXISTING TUNNEL. SEE SHEET ME203.

15 BOILER STACK THRU ROOF. SEE ARCHITECTURAL FOR ROOF PENETRATION DETAIL. STACK SHALL BE SIZED PER BOILER OUTLET. SIZES SHOWN ARE FOR THE SUPERIOR BOILER NOTED ON SCHEDULE.

16 INSTALL BOILERS ON NEW REINFORCED CONCRETE PAD. PAD WILL BE FLUSH WITH FLOOR. SEE STRUCTURAL DRAWINGS.

17 PROVIDE NEW SOFTENERS AND BRINE TANK. SEE ISOMETRIC B2/ME901 AND PIPING PLAN ON SHEET PE101.

18 PROVIDE NEW CHEMICAL TREATMENT STATION.

19 PROVIDE NEW CONDENSATE RETURN PIPING FROM EXISTING TUNNEL. CONNECT TO EXISTING CONDENSATE PIPING IN EXISTING TUNNEL AND EXTEND AS SHOWN TO 6" HEADER. SEE SHEET ME202 & ME203.

20 SEE PLUMBING PLAN PE101 FOR WATER PIPING TO SOFTENERS, SURGE TANK MAKE-UP, BOILER BLOW DOWN SEPARATORS, AND SAMPLE COOLERS. SEE ISOMETRIC C3/PE901.

21 RELIEF VALVES-EXTEND RELIEF PIPING THRU-ROOF. SEE DETAIL C4/ME501 FOR ELBOW AND ARCHITECTURAL DRAWINGS FOR PIPING PENETRATIONS THRU ROOF DETAIL. ALSO TERMINATION DETAIL A2/PE502.

22 2-1/2"Ø STEAM SUPPLY TO DEAERATOR.

23 BOILER MANHOLES PROVIDED BY BOILER MANUFACTURER.

24 12"x12" SA DUCT FROM FURNACE F-1 ABOVE. SEE SHEET ME102 FOR SOURCE.

25 12"x12" RA DUCT TO FURNACE F-1 ABOVE. SEE SHEET ME102 FOR CONTINUATION.

26 REFRIGERANT PIPE RISER, LOCATE IN FURRED SPACE OF WALL. SEE SHEET ME102 FOR CONTINUATION.

SHEET NOTES:

1 PROVIDE NEW BOILERS B-1 AND B-2. SEE ME201 AND PE101 FOR ELEVATIONS AND BOILER PIPING. BOILER B-3 SHALL BE BID AS ADD ALTERNATE #1.

2 CATWALK, HANDRAILS ETC. BY STRUCTURAL. SEE STRUCTURAL DRAWINGS FOR DETAILS.

3 PACKAGED CONDENSATE SURGE TANK CT-1 AND PUMP SET. SEE ISOMETRIC A3/ME901.

4 PACKAGED DEAERATOR DA-1 AND PUMP SET. SEE ISOMETRIC A2/ME901.

5 PROVIDE NEW 12"Ø STEAM HEADER. SEE DETAIL BI/ME503 FOR SUPPORT DETAIL.

6 6" COMPANION AND BLIND FLANGES FOR FUTURE CONNECTION.

7 PROVIDE 12"Ø CAP.

8 PROVIDE 6"-300# GATE VALVE WITH CHAIN WHEEL OPERATION. EXTEND CHAIN TO 6'-6" AFF.

9 NEW GAS SUPPLY FROM EXISTING GAS METER. SEE SITE PLAN FOR CONTINUATION. GAS PRESSURE IS APPROXIMATELY 17 PSIG.

10 RISE GAS PIPING OUT OF GROUND, PROVIDE EARTHQUAKE VALVE AND SLEEVE THRU WALL.

11 RISE UP WALL AND EXTEND GAS PIPING TO BOILERS.

12 DROP GAS LINE DOWN AND EXTEND TO GAS TRAIN. SEE GAS PIPING ISOMETRIC SHEET C3/ME902. GAS TRAIN SHALL BE PROVIDED AND INSTALLED ON BOILER STRUCTURE BY BOILER MANUFACTURER. IF FOR ANY REASON ON SITE THE GAS TRAIN MUST BE REMOVED, THIS CONTRACTOR SHALL RE-INSTALL IN THE SAME MANNER AS BOILER MANUFACTURER. GAS DROP SHALL NOT INTERFERE WITH OPENING OF REAR BOILER DOORS.

13 TRENCH DRAINS, SEE ARCHITECTURAL FOR DETAIL AND SHEET PE101.

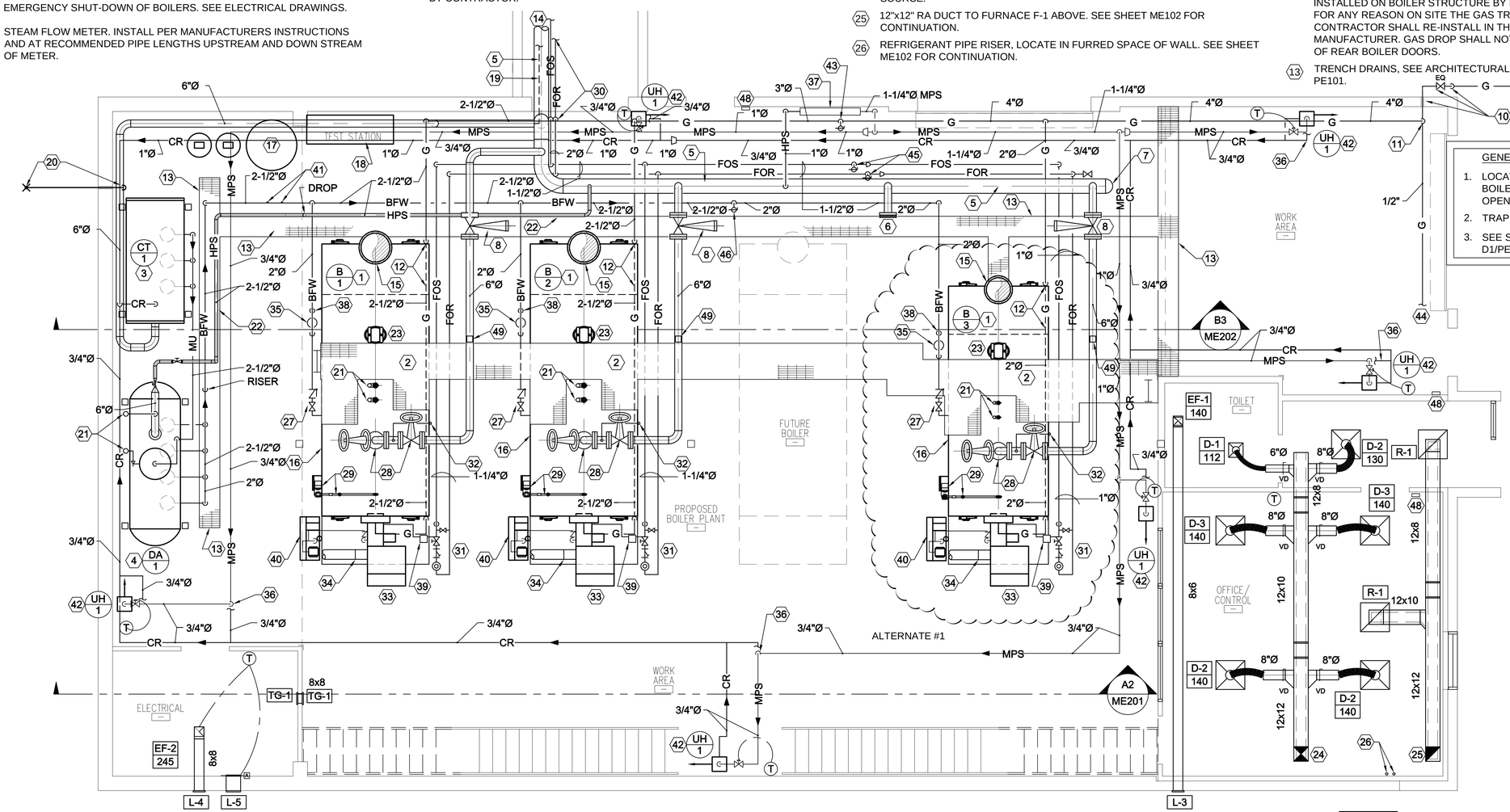


GENERAL NOTES:

1. LOCATE PIPING, EQUIPMENT ETC. SO BOILER BACK AND FRONT DOORS CAN OPEN UP ALL THE WAY.
2. TRAP ALL STEAM PIPING LOW SPOTS.
3. SEE SEISMIC DETAILS C1 AND D1/PE502.

BOILER PLANT FLOOR PLAN

SCALE: 1/4" = 1'-0"

TRACY STOCKING & ASSOCIATES


State of Utah
Department of Administrative Services
Division of Facilities Construction & Management
4110 State Office Building
Salt Lake City, Utah 84114
Phone: (801) 538 - 3018
Fax: (801) 538 - 3267
http://dfcm.utah.gov

CREATED BY:
WHW ENGINEERING INC.
PROFESSIONAL MECHANICAL ENGINEERING
8619 Sandy Parkway Suite 101
SANDY, UTAH 84070
(801)466-4021, FAX 466-8536
EMAIL: excellence@whw-engineering.com


BUILDING NAME:

Utah State Development Center
870 North 860 East
American Fork, Uath

PROJECT TITLE:

Boiler Replacement/ Building Repairs

| MARK | DATE | DESCRIPTION |
|---|---|---|

ISSUE TYPE: REVIEW

ISSUE DATE: MAY __, 2009

DFCM PROJECT NO: 08194410
CAD PROJECT NO:
CAD DWG FILE:
DRAWN BY: LGD
CHK'D BY: SLW
COPYRIGHT: STATE OF UTAH

SHEET TITLE

BOILER PLANT FLOOR PLAN

SHEET NUMBER

ME101

SHEET NOTES:

27 1/2" GAS PIPING TO FURNACE. SEE SHEET ME101 FOR CONTINUATION.

28 SUPPORT GAS PIPING FROM WALL WITH UNISTRUT AND PIPE CLAMP. SEE DETAIL C1/ME501. PROVIDE CLAMPS EVERY 10'.

29 DROP 1/2" GAS PIPING TO FURNACE CONNECTION. SEE GAS CONNECTION TO FURNACE DETAIL A3/PE502. COORDINATE GAS CONNECTION LOCATION WITH ACTUAL FURNACE PROVIDED.

SHEET NOTES:

14 TURNING VANES TYPICAL IN RECTANGULAR DUCT.

15 REFRIGERANT PIPING. SEE ISOMETRIC DETAIL C1/ME502.

16 2" PVC COMBUSTION AIR AND 2" PVC FLUE. COMBINE INTO ONE CONCENTRIC TERMINATION KIT THRU WALL. SEE DETAIL A4/ME501.

17 MEZZANINE FLOOR.

18 OUTSIDE SOUTH WALL.

19 12"x12" RA DROP TO CEILING SPACE BELOW. SEE SHEET ME101 FOR CONTINUATION.

20 12"x12" SA DROP TO CEILING SPACE BELOW. SEE SHEET ME101 FOR CONTINUATION.

21 FRESH AIR INTAKE LOUVER L-1. SEE LOUVER SCHEDULE ME602 FOR SIZE.

22 PROVIDE 4" THK CONCRETE PAD FOR CONDENSING UNIT. CONCRETE SHALL HAVE 4" SPACE BETWEEN UNIT AND EDGE OF CONCRETE ALL SIDES.

23 WRAP FA DUCT. SEE SPECIFICATIONS.

24 ONE PIECE SUCTION TRAP. SEE DETAIL B3/ME502 FOR REFRIGERANT CONNECTION TO COIL.

25 NEW FLOOR DRAIN. SEE SHEET PE101 FOR CONTINUATION.

26 PIPE SUPPORT. SEE DETAIL C1/ME504.

SHEET NOTES:

1 12x12 SA DUCT TO DIFFUSERS. SEE SHEET ME101 FOR CONTINUATION.

2 12x12 RA DUCT FROM RA GRILLES. SEE SHEET ME101 FOR CONTINUATION.

3 NEW FURNACE F-1. SEE SCHEDULE SHEET ME602. SEE DRAIN DETAIL A4/ME502.

4 NEW DX COOLING COIL CC-1 MOUNTED ON FURNACE. SEE SCHEDULE SHEET ME602.

5 NEW CONDENSING UNIT CU-1. SEE SCHEDULE SHEET ME602.

6 1" DUCT LINER. SEE DETAIL C1/ME503.

7 SLEEVE THRU WALL. SEAL AIR AND WATER TIGHT.

8 FLEX CONNECTION.

9 PLACE FURNACE ON ISOLATION PADS, ONE AT EACH CORNER.

10 PROVIDE SLIDE FILTER RACK IN RA DUCT. SIZE FILTERS AND NUMBER PER MANUFACTURER'S RECOMMENDATIONS.

11 MANUAL 8"x6" FA DAMPER. SET FOR THE OFFICE, RESTROOM, AND VEST. FA REQUIREMENTS OF 160 CFM.

12 AUTO FRESH AIR DAMPER INTERCONNECT WITH FURNACE SO WHEN FURNACE IS IN THE OCCUPIED MODE, THE DAMPER WILL OPEN AND WHEN THE FURNACE IS IN THE UNOCCUPIED MODE THE DAMPER CLOSES.

13 SUPPORT REFRIGERANT PIPING AT BOTTOM OF RISERS, MIDWAY UP WALL AND AT TOP.

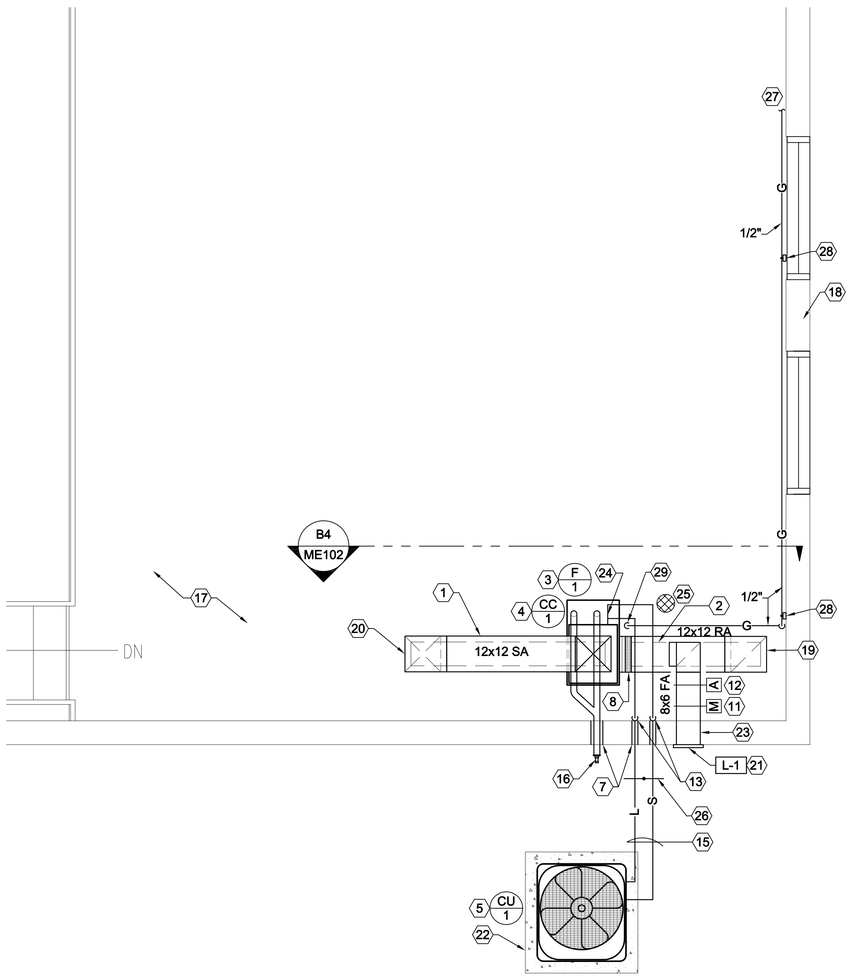


BOILER PLANT MEZZANINE FURNACE PLAN
SCALE: 1/2" = 1'-0"

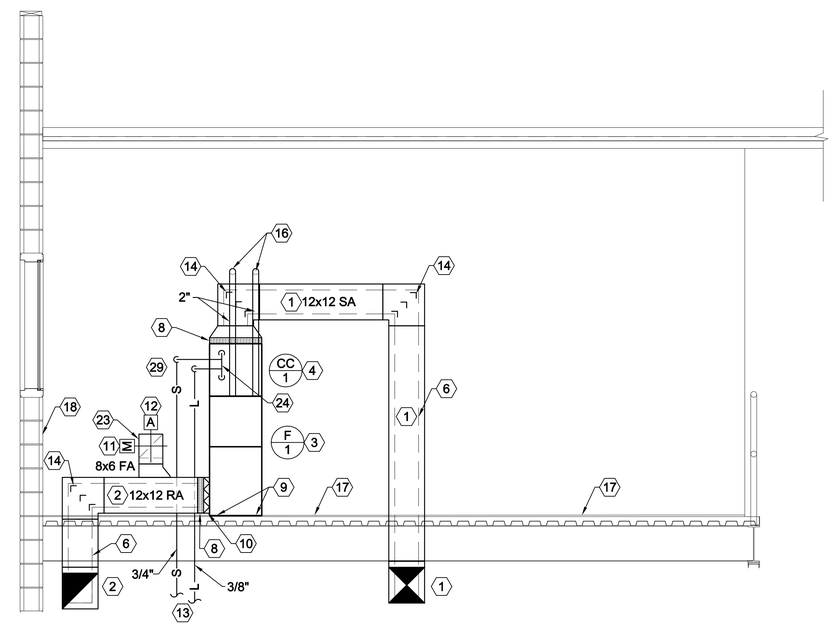


B4 SECTION MEZZANINE FURNACE PLAN
SCALE: 1/2" = 1'-0"

TRACY STOCKING & ASSOCIATES

State of Utah
Department of Administrative Services

Division of Facilities Construction & Management
4110 State Office Building
Salt Lake City, Utah 84114
Phone: (801) 538 - 3018
Fax: (801) 538 - 3267

http://dfcm.utah.gov

CREATED BY:

WHW ENGINEERING INC.
PROFESSIONAL MECHANICAL ENGINEERING
8619 Sandy Parkway Suite 101
SANDY, UTAH 84070
(801)466-4021, FAX 466-8536
EMAIL: excellence@whw-engineering.com

BUILDING NAME:

Utah State Development Center
870 North 860 East
American Fork, Uath

PROJECT TITLE:

Boiler Replacement/ Building Repairs

| MARK | DATE | DESCRIPTION |
|---|---|---|

ISSUE TYPE: REVIEW

ISSUE DATE: MAY __, 2009

DFCM PROJECT NO: 08194410
CAD PROJECT NO:
CAD DWG FILE:
DRAWN BY: LGD
CHK'D BY: SLW
COPYRIGHT: STATE OF UTAH

SHEET TITLE

MEZZANINE FURNACE PLAN

SHEET NUMBER

ME102

SHEET NOTES:

22. FUEL OIL PUMP PROVIDED AND INSTALLED BY BURNER CONTRACTOR. IF PUMP IS SHIPPED LOOSE, THE CONTRACTOR SHALL INSTALL. CONTRACTOR SHALL COORDINATE WITH BURNER MANUFACTURER FOR PIPING REQUIREMENTS FROM PUMP TO BURNER. CONTRACTOR SHALL PROVIDE ALL PIPING.
23. STEAM UNIT HEATER. SEE DETAIL A1/ME503. MOUNT BOTTOM OF ALL UNIT HEATERS 12'-9± AFF.
24. MEDIUM PRESSURE STEAM. SEE SHEET ME101 FOR LOCATIONS AND SIZES. ROUTE STEAM PIPING AT 14'-0"± ℄ AFF. AT HIGHEST POINT.
25. MEDIUM PRESSURE CONDENSATE RETURN. SEE SHEET ME101 FOR LOCATIONS AND SIZES. ROUTE CONDENSATE PIPING AT 12-3"± ℄ AFF. AT HIGHEST POINT.
26. 6" - 300# FLANGE AND BLIND FLANGE FOR FUTURE BOILER LOCATION.
27. PROVIDE 2-1/2"x2-1/2"x2" TEE, NIPPLE AND GATE VALVE FOR CONNECTION TO FUTURE BOILER.
28. 1-1/2"Ø PUMPED CONDENSATE CONNECTION FROM CONDENSATE TRANSFER PUMPS. SEE SHEET ME101 FOR CONTINUATION.
29. TWO 1/2" THRED-O-LET FOR CHEMICAL FEED CONNECTIONS TO BFW.
30. VENT FROM DEARATOR. ROUTE NEXT TO WALL. SEE ARCHITECTURAL DETAILS FOR PIPE PENETRATIONS THRU ROOF.
31. ROUTE 12" HPS MAIN 14'-9"± ℄ AFF. AT HIGHEST POINT.
32. ROUTE 6" HPS FROM BOILERS 16'-4"± ℄ AFF. AT HIGHEST POINT.
33. ROUTE GAS PIPING 13'-0"± ℄ AFF.
34. ROUTE RELIEF VALVE DISCHARGE PIPING THRU-ROOF. SEE ARCHITECTURAL DETAILS FOR ROOF PENETRATION.
35. PROVIDE 1-1/2"x1-1/2"x1-1/4" TEE, 1-1/4" NIPPLE AND 1-1/4" OIL BALL VALVE FOR CONNECTION TO FUTURE BOILER PLUG VALVE.

SHEET NOTES:

13. PROVIDE AND INSTALL GAS METER IN GAS LINE DROP. SEE ISOMETRIC C3/ME902 FOR PIPING DETAILS.
14. NON CODE DRAIN PIPING AND BALL VALVE PROVIDED AND INSTALLED BY MECHANICAL CONTRACTOR.
15. 2-1/2"Ø BOILER FEED WATER HEADER. SEE ISOMETRIC A2/ME901 FOR PIPING DETAILS. ROUTE B.F.W. AT 10'-6"± ℄ AFF.
16. DEARATOR SHALL BE PROVIDED AS A PACKAGED UNIT. DEAERATOR AND INSTALLATION BY MECHANICAL CONTRACTOR. SEE SCHEDULE SHEET ME601 AND ISOMETRIC A2/ME901.
17. 6" GATE VALVES, 300# WITH CHAIN WHEEL.
18. FUEL OIL SUPPLY AND AND FUEL OIL RETURN. ROUTE AT 10'-9"± ℄ AFF.
19. RELIEF VALVES. SEE DETAIL C4/ME501.
20. BOILER FEED WATER FLOW METER.
21. AIR COMPRESSOR FOR AIR ATOMIZATION. PROVIDED BY BURNER MANUFACTURER, INSTALLED BY CONTRACTOR. COORDINATE WITH BURNER MANUFACTURER FOR PIPING REQUIRED. PROVIDE CHECK VALVE AND BALL VALVE BETWEEN COMPRESSOR AND BURNER CONNECTION.

SHEET NOTES:

6. CONNECTION SPOOL AND DRAIN PROVIDED AND INSTALLED BY BOILER MANUFACTURER. THIS CONTRACTOR SHALL REMOVE AND RE-INSTALL AND CONNECT TO DRAIN VALVE AND EXTENT DRAIN PIPING TO TRENCH DRAIN.
7. 300# GATE VALVE PROVIDED AND INSTALLED BY BOILER MANUFACTURER. THIS CONTRACTOR SHALL REMOVE AND RE-INSTALL DUE TO THE STEAM RISER BEING EXTENDED.
8. BECAUSE THE DESIGN CALLS FOR NEW CODE PIPING FROM THE BOILER CONNECTION TO THE CODE VALVES. MECHANICAL CONTRACTOR SHALL REMOVE CODE PIPING INSTALLATION FROM BOILER MANUFACTURER AND EXTEND NEW CODE PIPING UP TO ELEVATION SHOWN.
9. NEW 6" CODE PIPING BY MECHANICAL CONTRACTOR.
10. WATER COLUMN CUTOFF/PUMP CONTROL, GAUGE GLASS ETC. PROVIDED BY BOILER MANUFACTURER. CONTRACTOR SHALL EXTEND DRAIN FROM VALVE TO TRENCH DRAIN.
11. HANDRAILS, MID RAILS, AND KICK PLATES ARE REQUIRED BUT NOT SHOWN FOR CLARITY. SEE ARCHITECTURAL AND STRUCTURAL DETAILS.
12. GAS DROP TO GAS TRAIN. GAS TRAIN PROVIDED AND INSTALLED BY BOILER MANUFACTURER.

SHEET NOTES:

1. NEW SCOTCH MARINE TYPE FIRE TUBE BOILERS. PROVIDED AND INSTALLED BY CONTRACTOR.
2. CONTRACTOR SHALL BE RESPONSIBLE FOR LOCATING ALL CONNECTIONS TO ALL BOILER AND BURNER FITTINGS AND CONNECTIONS. CONTRACTOR SHALL COORDINATE WITH BOILER AND BURNER MANUFACTURERS AND STUDY INSTALLATION INSTRUCTION MANUALS BEFORE INSTALLATION.
3. CONCRETE FOOTING UNDER EACH SIDE OF BOILER AND EQUIPMENT BY GENERAL CONTRACTOR. SEE STRUCTURAL DRAWINGS. THIS CONTRACTOR SHALL COORDINATE WITH GENERAL CONTRACTOR FOR TIE-DOWN BOLTS AND LOCATIONS. THIS CONTRACTOR SHALL ORDER WITH THE BOILER, SEISMIC WIDE FLANGE SKIDS WITH BOLT HOLES ALREADY DRILLED.
4. CATWALK BY GENERAL CONTRACTOR. SEE ARCHITECTURAL AND STRUCTURAL DRAWINGS.
5. 300# NON-RETURN AND STOP ANGLE VALVE. PROVIDED BY BOILER MANUFACTURER REMOVED AND RE-INSTALLED BY MECHANICAL CONTRACTOR DUE TO THE STEAM RISER BEING RAISED.

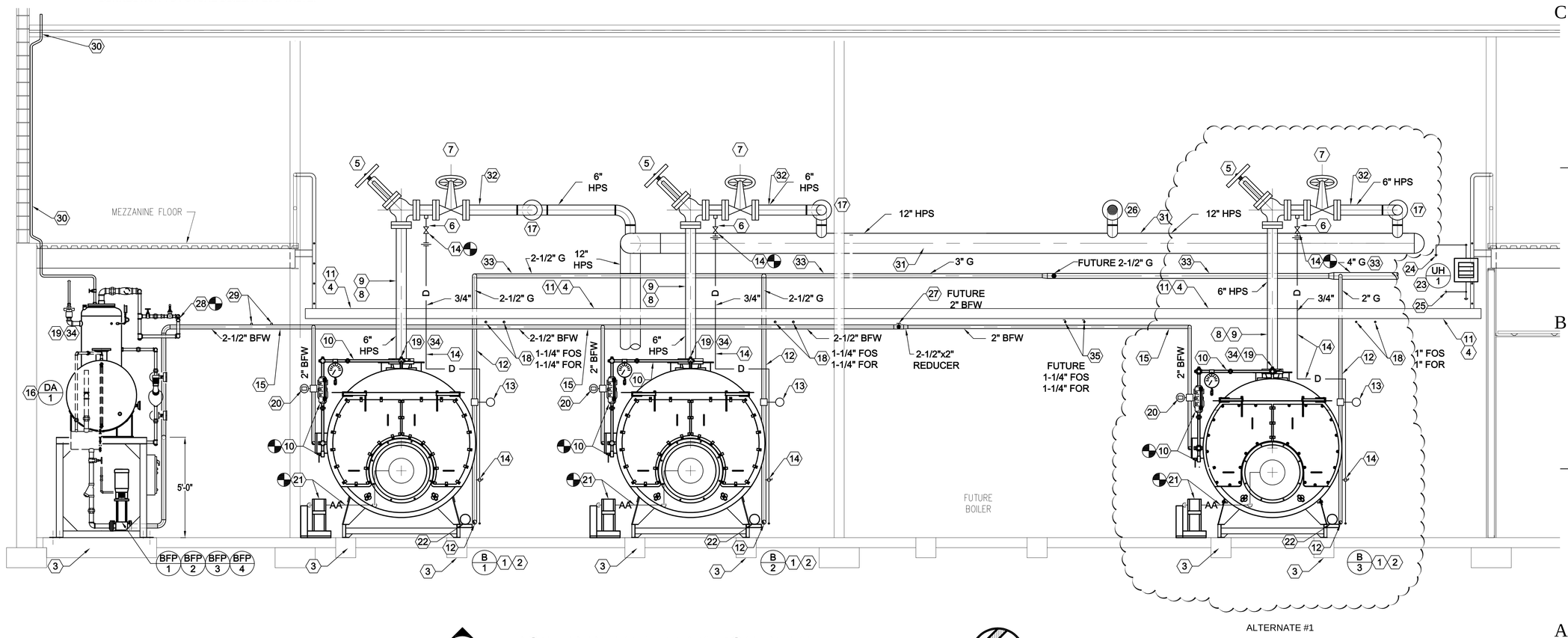


A2 ME101

## BOILER PLANT ELEVATION PLAN

SCALE: 3/8" = 1'-0"

TRACY STOCKING & ASSOCIATES

State of Utah
Department of Administrative Services


Division of Facilities Construction & Management
4110 State Office Building
Salt Lake City, Utah 84114
Phone: (801) 538 - 3018
Fax: (801) 538 - 3267
http://dfcm.utah.gov


CREATED BY:


WHW ENGINEERING INC.
PROFESSIONAL MECHANICAL ENGINEERING
8619 Sandy Parkway Suite 101
SANDY, UTAH 84070
(801)466-4021, FAX 466-8536
EMAIL: excellence@whw-engineering.com


BUILDING NAME:

Utah State Development Center
870 North 860 East
American Fork, Uath

PROJECT TITLE:

Boiler Replacement/ Building Repairs

| MARK | DATE | DESCRIPTION |
|---|---|---|

ISSUE TYPE: REVIEW

ISSUE DATE: MAY __, 2009

DFCM PROJECT NO: 08194410
CAD PROJECT NO:
CAD DWG FILE:
DRAWN BY: LGD
CHK'D BY: SLW
COPYRIGHT: STATE OF UTAH

SHEET TITLE

BOILER PLANT ELEVATION PLAN

SHEET NUMBER

ME201

SHEET NOTES:

24. 1"Ø LOW PRESSURE CONDENSATE RETURN.
25. 3/4"Ø LOW PRESSURE CONDENSATE RETURN.
26. 1-1/4"Ø LOW PRESSURE RETURN INTO CONDENSATE TANK WITH VALVE AND UNION,
27. IF ALTERNATE #1 IS NOT ACCEPTED. PROVIDE GATE VALVE AND CAP FOR FUTURE CONNECTION.
28. PROVIDE 6" DRIP LEG FROM BOTTOM OF STEAM DROP AND FROM DRIP LEG PROVIDE END OF MAIN TRAP ASSEMBLY. SEE DETAIL C3/ME501.
29. IF ALTERNATE #1 IS NOT ACCEPTED PROVIDE GATE VALVE AND BLIND FLANGE FOR FUTURE.

SHEET NOTES:

12. MANDOOR. SEE ARCHITECTURAL DRAWINGS.
13. ROLL-UP DOOR. SEE ARCHITECTURAL DRAWINGS.
14. NEW TUNNEL ENTRANCE INTO BUILDING. SEE ARCHITECTURAL DRAWINGS.
15. PROVIDE 2-1/2"x2-1/2"x2" TEE, 2" NIPPLE AND 2" GATE VALVE FOR FUTURE BOILER CAP VALVE.
16. UNISTRUT SUPPORT IN NEW TUNNEL. SEE STRUCTURAL DETAILS. 4 REQUIRED. SEE ALSO SHEET ME203.
17. 6"Ø SCHEDULE 80 CONDENSATE RETURN HEADER. SUPPORT OFF WALL OR FLOOR.
18. 2-1/2" BOILER FEED WATER HEADER SUPPLY.
19. 2-1/2" HPS TO DEAERATOR. SEE ME101 FOR CONTINUATION.
20. STEAM FIRED UNIT HEATER. SEE DETAIL A1/ME503. MOUNT 12'-9" TO BOTTOM OF UNIT.
21. 2" FUEL OIL SUPPLY AND RETURN FROM TUNNEL. SEE FUEL OIL ISOMETRIC B2/ME903.
22. 6" PIPING WITH 300# FLANGE AND 300# BLIND FLANGE FOR FUTURE CONNECTION.
23. SUPPORT FROM WALL.

SHEET NOTES:

1. 12"Ø STEAM HEADER TO TUNNEL.
2. 2" BOILER FEED WATER TO BOILERS. SEE BOILER FEED WATER ISOMETRIC A2/ME902 FOR DETAILS.
3. 3" CONDENSATE RETURN FROM SYSTEM.
4. 4" CONDENSATE RETURN FROM SYSTEM.
5. 3" CONDENSATE RETURN FROM SYSTEM.
6. 3" CONDENSATE RETURN FROM SYSTEM.
7. PACKAGED CONDENSATE SURGE TANK AND PUMPS. SEE ISOMETRIC A3/ME901.
8. SOFTENERS SEE SCHEDULE ME601 AND ISOMETRIC B2/ME901.
9. BRINE TANK 42"Ø x 60" HIGH. SEE SCHEDULE.
10. GATE VALVES, SAME SIZE AS LINE SIZE.
11. 2" WATER SUPPLY TO BUILDING. DROP DOWN TO WATER PRV STATION AND HEADER. SEE ISOMETRIC A3 AND C3/PE901. COORDINATE WITH CIVIL DRAWINGS FOR ELEVATIONS OF WATER ENTRANCE INTO THE BUILDING.

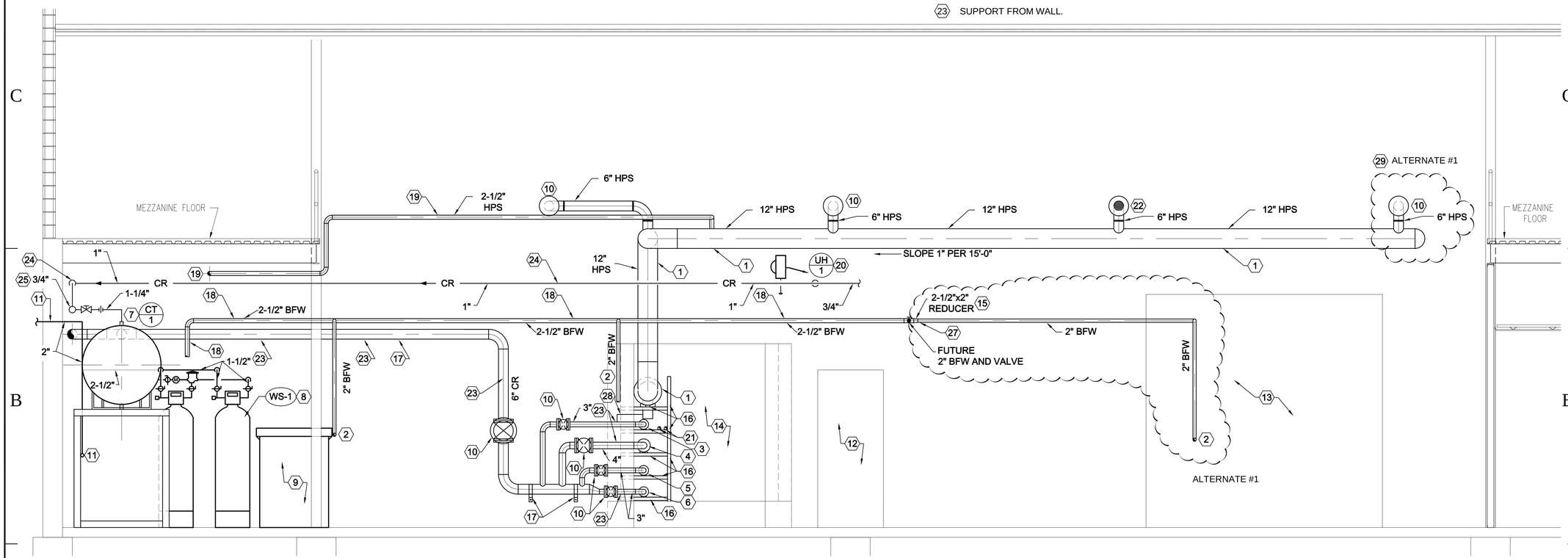


B3 / ME101 BOILER PLANT ELEVATION PLAN

SCALE: 3/8" = 1'-0"

TRACY STOCKING & ASSOCIATES


State of Utah
Department of Administrative Services

Division of Facilities Construction & Management
4110 State Office Building
Salt Lake City, Utah 84114
Phone: (801) 538 - 3018
Fax: (801) 538 - 3267

http://dfcm.utah.gov

CREATED BY:

WHW ENGINEERING INC.
PROFESSIONAL MECHANICAL ENGINEERING
8619 Sandy Parkway Suite 101
SANDY, UTAH 84070
(801)466-4021, FAX 466-8536
EMAIL: excellence@whw-engineering.com


BUILDING NAME:

Utah State Development Center
870 North 860 East
American Fork, Uath

PROJECT TITLE:

Boiler Replacement/ Building Repairs

| MARK | DATE | DESCRIPTION |
|---|---|---|

ISSUE TYPE: REVIEW

ISSUE DATE: MAY __, 2009

DFCM PROJECT NO: 08194410
CAD PROJECT NO:
CAD DWG FILE:
DRAWN BY: LGD
CHK'D BY: SLW
COPYRIGHT: STATE OF UTAH

SHEET TITLE

BOILER PLANT ELEVATION PLAN

SHEET NUMBER

ME202

SHEET NOTES:

6. NEW PIPING TIE-INS AT THIS LOCATION. FIELD VERIFY EXACT LOCATION WITH EXISTING CONDITIONS.
7. NEW PIPE ANCHOR FOR STEAM AND CONDENSATE PIPING. SEE STRUCTURAL DRAWINGS FOR DETAIL.
8. PROVIDE NEW PIPE GUIDES AND SUPPORTS AT THESE LOCATIONS. SEE DETAIL.
9. 12"x10" REDUCING LONG RADIUS WELD ELL.
10. NEW 12"Ø HPS STEAM, 3" CONDENSATE RETURN, 4" CONDENSATE RETURN, 3" CONDENSATE RETURN, AND 3" CONDENSATE RETURN. SEE A2 THIS SHEET.

SHEET NOTES:

1. REMOVE EXISTING PIPING SUPPORT AT THIS LOCATION.
2. EXISTING PIPE SUPPORTS SHALL REMAIN.
3. EXISTING PIPE SUPPORTS SHALL BE REMOVED UNDER PHASE II DEMOLITION.
4. EXISTING PIPING FROM THIS POINT TO EXISTING BOILER PLANT SHALL BE REMOVED UNDER PHASE II DEMOLITION.
5. REMOVE EXISTING PIPING BETWEEN THESE TWO POINTS DURING NEW BOILER ROOM PIPING TIE-INS.

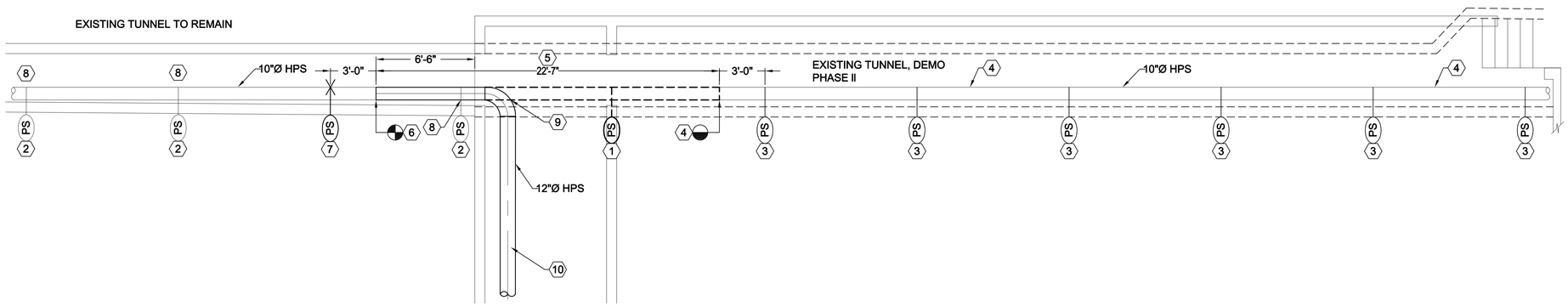


C2 EXISTING TUNNEL PIPING TIE-IN

SCALE: 1/4" = 1'-0"

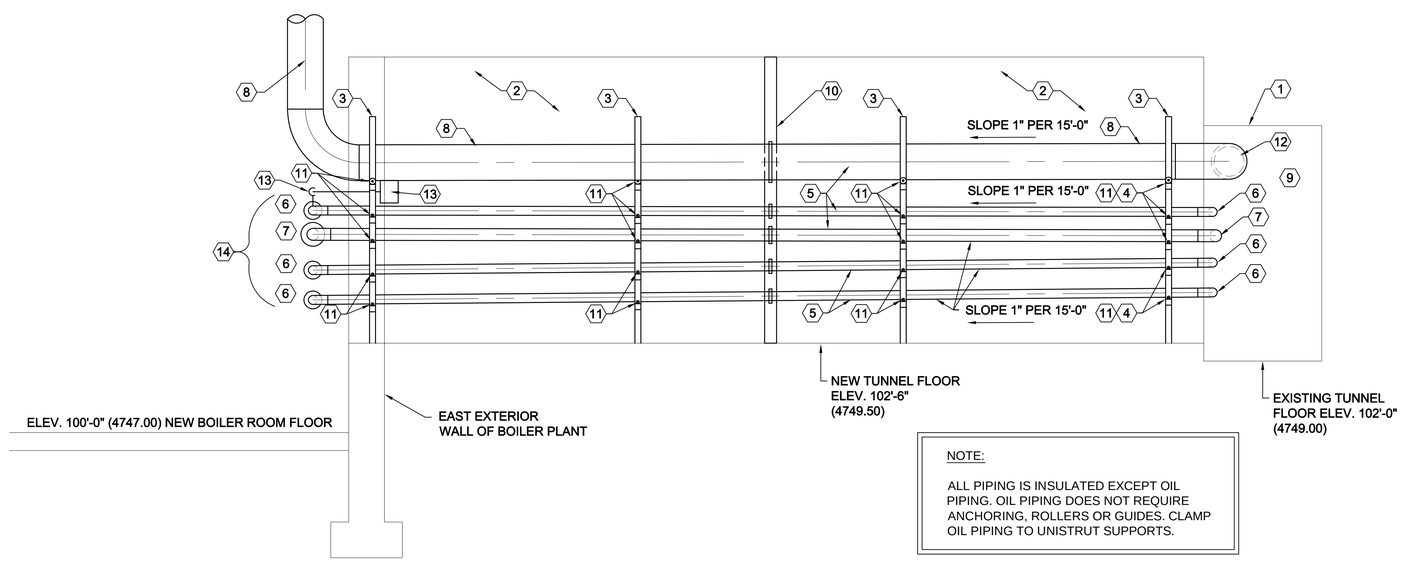


NOTE:

ALL PIPING IS INSULATED EXCEPT OIL PIPING. OIL PIPING DOES NOT REQUIRE ANCHORING, ROLLERS OR GUIDES. CLAMP OIL PIPING TO UNISTRUT SUPPORTS.

A2 TUNNEL PIPING ELEVATION AND ANCHORS PLAN

SCALE: 1/2" = 1'-0"

SHEET NOTES:

1. EXISTING STEAM TUNNEL.
2. NEW STEAM AND UTILITY TUNNEL.
3. NEW UNISTRUT SUPPORTS FOR PIPING. SEE STRUCTURAL DRAWINGS FOR EXACT LOCATIONS.
4. PROVIDE B-LINE PIPE SADDLES AND ROLLERS AT EACH SUPPORT FOR EACH PIPE. TYPICAL EACH SUPPORT. SEE DETAIL A3/ME504 AND DETAIL B1/ME503.
5. SLOPE STEAM AND CONDENSATE PIPING 2" FROM NEW 90° ELL. IN EXISTING TUNNEL TO NEW BUILDING ENTRANCE.
6. 3"Ø CONDENSATE RETURN PIPING.
7. 4"Ø CONDENSATE RETURN PIPING.
8. 12"Ø HP STEAM MAIN.
9. CONTRACTOR SHALL HAVE SPOOLS MADE ETC. FOR QUICK STEAM SHUT-DOWN TURNAROUND FOR NEW TIE-INS. THESE TIE-INS SHALL NOT BE MADE UNTIL NEW BOILER PLANT IS UP AND READY FOR START UP.
10. NEW PIPE ANCHOR IN CENTER OF NEW TUNNEL. SEE STRUCTURAL DRAWINGS.
11. PROVIDE PIPE GUIDES ON ALL SUPPORTS FOR EVERY PIPE EXCEPT OIL PIPING. SEE DETAIL A3/ME504.
12. 12"x10" LONG RADIUS REDUCING ELL.
13. 6"Ø DRIP LEG AND END OF MAIN TRAP ASSEMBLY. SEE DETAIL C3/ME501 FOR TRAP PIPING DETAIL.
14. PROVIDE FIRE CAULKING WHERE PIPING PENETRATES WALL OR DOOR THAT SEPARATES TUNNEL FROM BOILER ROOM. SEE ARCHITECTURAL DRAWINGS FOR SEPARATION LOCATION AND DETAIL.

TRACY STOCKING & ASSOCIATES


State of Utah
Department of Administrative Services
Division of Facilities Construction & Management
4110 State Office Building
Salt Lake City, Utah 84114
Phone: (801) 538 - 3018
Fax: (801) 538 - 3267
http://dfcm.utah.gov

CREATED BY:
WHW ENGINEERING INC.
PROFESSIONAL MECHANICAL ENGINEERING
8619 Sandy Parkway Suite 101
SANDY, UTAH 84070
(801)466-6021, FAX 466-8536
EMAIL: excellence@whw-engineering.com


BUILDING NAME:

Utah State Development Center
870 North 860 East
American Fork, Uath

PROJECT TITLE:

Boiler Replacement/ Building Repairs

| MARK | DATE | DESCRIPTION |
|---|---|---|

ISSUE TYPE: REVIEW

ISSUE DATE: MAY __, 2009

DFCM PROJECT NO: 08194410
CAD PROJECT NO:
CAD DWG FILE:
DRAWN BY: LGD
CHK'D BY: SLW
COPYRIGHT: STATE OF UTAH

SHEET TITLE

TUNNEL PIPING ELEVATION PLAN

SHEET NUMBER

ME203

NOTE:

1. WHEN HANGER RODS ARE LOCATED WHERE THERE ARE NOT STEEL SUPPORTS DIRECTLY ABOVE THE RODS. CONTRACTOR SHALL SPAN BETWEEN JOISTS WITH 2x2x1/4" ANGLES BACK TO BACK WITH RODS LOCATED BETWEEN THE ANGLES.
2. TRAPEZE HANGERS ARE ALSO APPROVED FOR USE WHERE MULTIPAL PIPES ARE ROUTED NEXT TO EACH OTHER AT THE SAME ELEVATIONS. SEE SPECIFICATIONS.

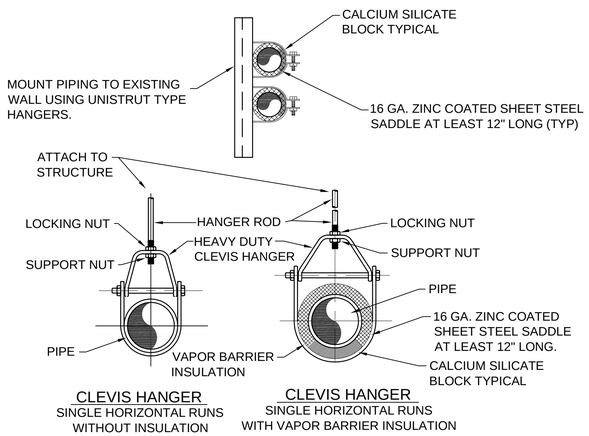


C1 PIPE HANGER DETAIL
SCALE: NONE

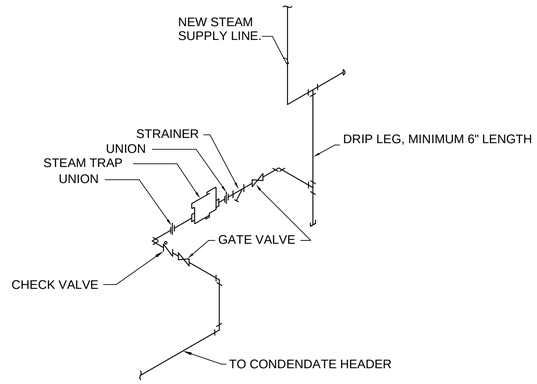


C3 STEAM TRAP DETAIL
SCALE: NONE

NOTE:

COORDINATE ROOF PENETRATION AND PIPE RISER WITH LOCATION OF JOISTS, ROOF,AND STRUCTURE. SEE ARCYHITECTURAL ROOF PLAN SHEET A103.

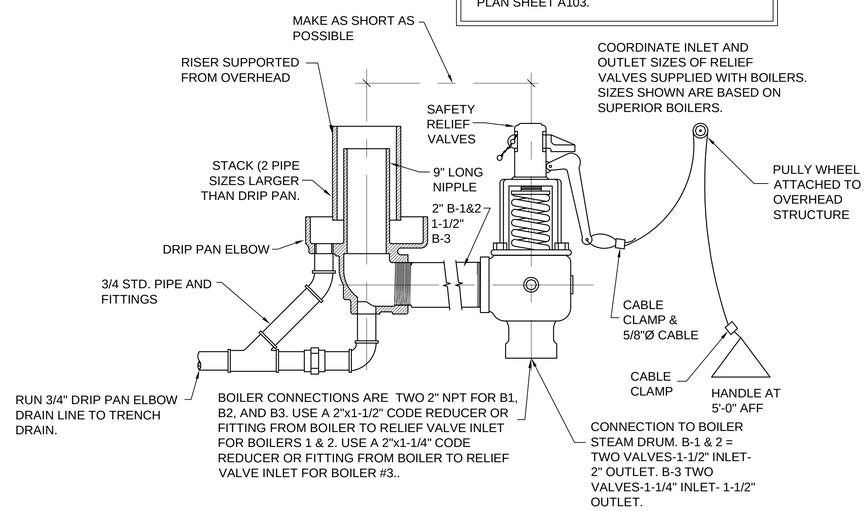


C4 SAFETY VALVE DETAIL
SCALE: NONE

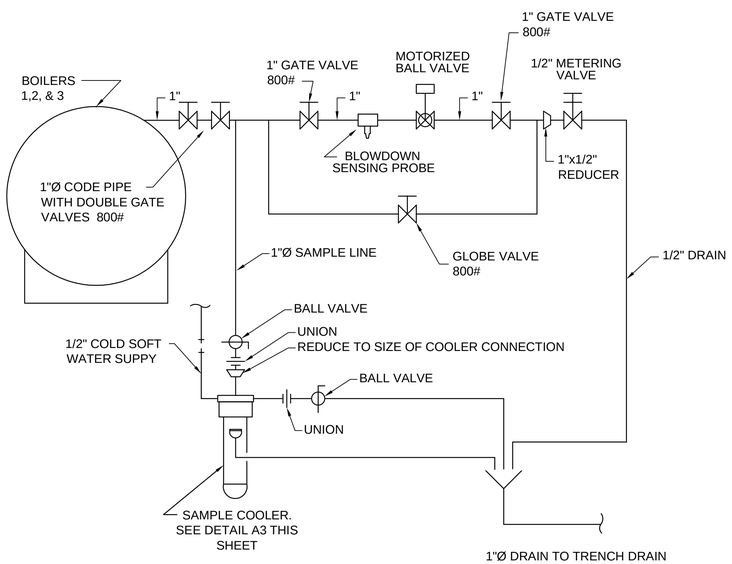


A1 SURFACE BLOW-OFF DETAIL
SCALE: NONE

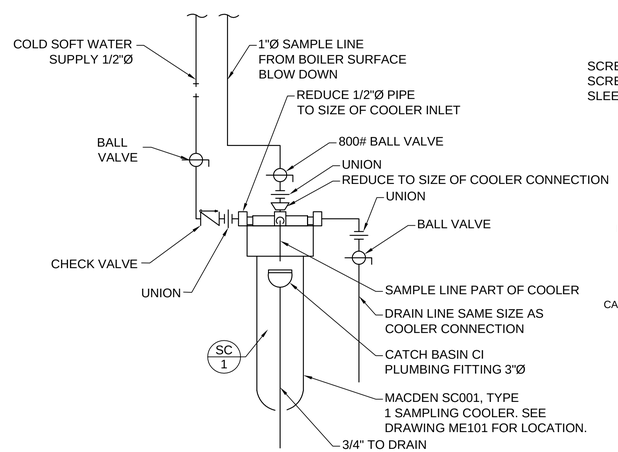


A3 BOILER SAMPLING COOLER DETAIL
SCALE: NONE

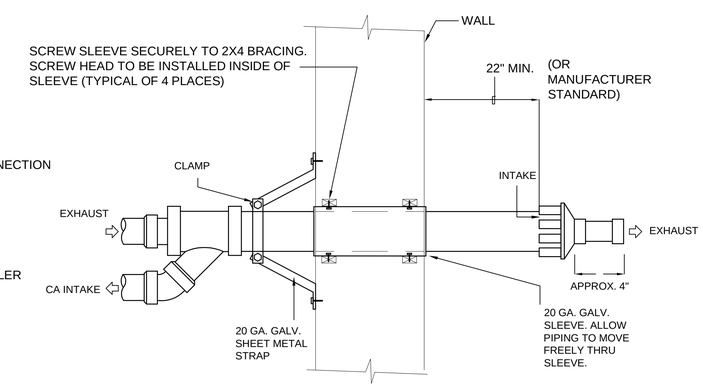


A4 CONCENTRIC WALL TERMINATION DETAIL
SCALE: NONE

TRACY STOCKING & ASSOCIATES

State of Utah
Department of Administrative Services

Division of Facilities Construction & Management
4110 State Office Building
Salt Lake City, Utah 84114
Phone: (801) 538 - 3018
Fax: (801) 538 - 3267

http://dfcm.utah.gov

CREATED BY:

WHW ENGINEERING INC.
PROFESSIONAL MECHANICAL ENGINEERING
8619 Sandy Parkway Suite 101
SANDY, UTAH 84070
(801)466-4021, FAX 466-8536
EMAIL: excellence@whw-engineering.com

BUILDING NAME:

Utah State Development Center
870 North 860 East
American Fork, Uath

PROJECT TITLE:

Boiler Replacement/ Building Repairs

| MARK | DATE | DESCRIPTION |
|---|---|---|

ISSUE TYPE: REVIEW

ISSUE DATE: MAY __, 2009

DFCM PROJECT NO: 08194410
CAD PROJECT NO:
CAD DWG FILE:
DRAWN BY: LGD
CHK'D BY: SLW
COPYRIGHT: STATE OF UTAH

SHEET TITLE

MECHANICAL DETAILS

SHEET NUMBER

ME501

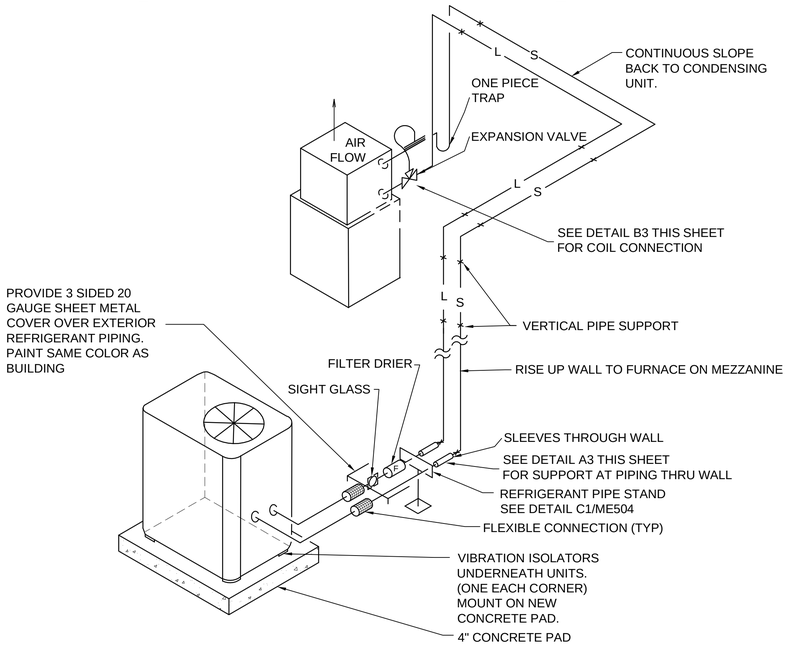


C1 TYPICAL REFRIGERANT SCHEME
SCALE: NONE

| REFRIGERANT PIPING LEGEND | |
|---|---|
| SYMBOL | D E S C R I P T I O N |
| | EXPANSION VALVE. |
| | MOISTURE INDICATING SIGHT GLASS |
| | FLEXIBLE CONNECTION |
| F | FILTER DRIER |
| | PIPE SUPPORT. SEE DETAIL |
| | EXTERIOR PIPE SUPPORT. SEE DETAIL |
| | TRAP. ONE PIECE FACTORY FABRICATED |
| | DIRECTION OF SLOPE DOWN |
| S | SUCTION LINE |
| L | LIQUID LINE |

| REFRIGERANT PIPE SIZES | | |
|---|---|---|
| CONDENSING UNIT | LIQUID | SUCTION |
| CU 1 | 3/8" | 3/4" |

VERIFY PIPE SIZING WITH MANUFACTURER'S RECOMMENDATION. ENGINEER SHALL BE CONTACTED IF MANUFACTURERS RECOMMENDATIONS ARE DIFFERENT THAN THE ABOVE SIZES. FOLLOW MANUFACTURERS RECOMMENDATIONS TO INSURE MANUFACTURER WARRANTY IS EFFECTIVE UNLESS DIRECTED OTHERWISE BY ENGINEER.

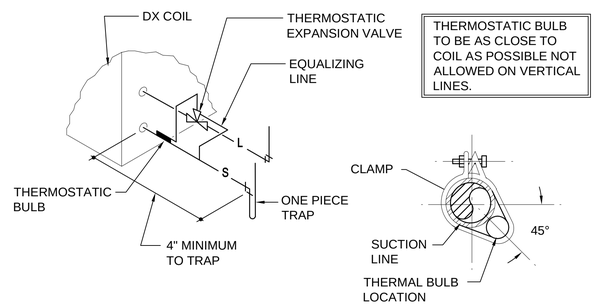


B3 SINGLE REFRIGERANT COIL CONNECTION DETAIL
SCALE: NONE

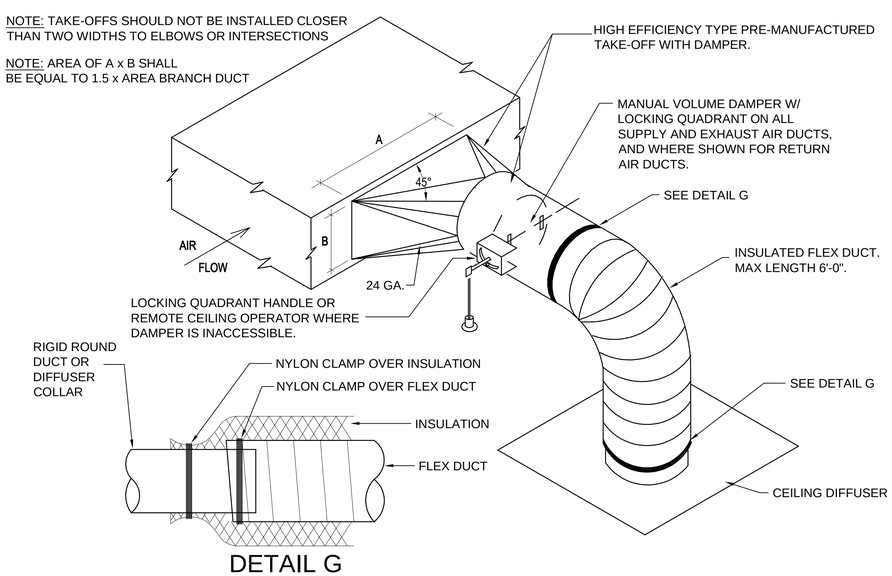


DETAIL G
SCALE: NONE

A1 SQUARE-TO-ROUND TAKE-OFF DETAIL
SCALE: NONE

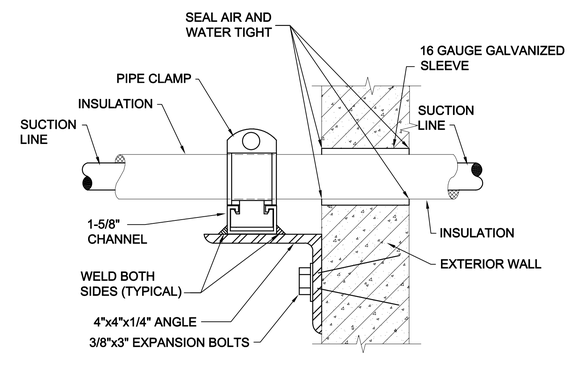


A3 REFRIGERANT PIPE SUPPORT AT WALL
SCALE: NONE

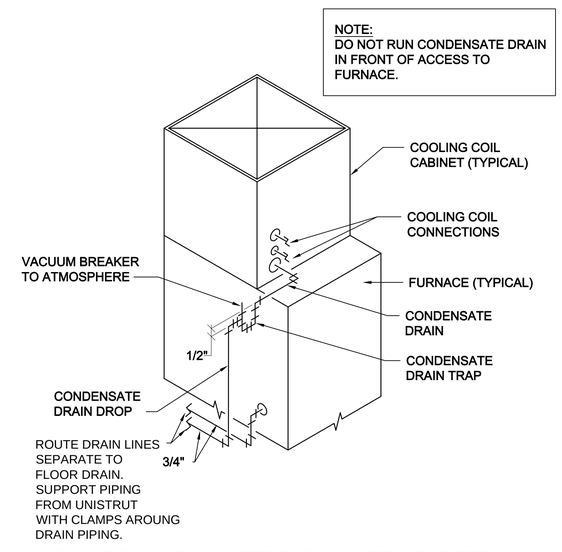


A4 CONDENSATE DRAIN TRAP DETAIL
SCALE: NONE

TRACY STOCKING & ASSOCIATES


State of Utah
Department of Administrative Services
Division of Facilities Construction & Management
4110 State Office Building
Salt Lake City, Utah 84114
Phone: (801) 538 - 3018
Fax: (801) 538 - 3267
http://dfcm.utah.gov

CREATED BY:
WHW ENGINEERING INC.
PROFESSIONAL MECHANICAL ENGINEERING
8619 Sandy Parkway Suite 101
SANDY, UTAH 84070
(801)466-4021, FAX 466-8536
EMAIL: excellence@whw-engineering.com


BUILDING NAME:
Utah State Development Center
870 North 860 East
American Fork, Uath

PROJECT TITLE:
Boiler Replacement/ Building Repairs

| MARK | DATE | DESCRIPTION |
|---|---|---|

ISSUE TYPE: REVIEW

ISSUE DATE: MAY __, 2009

DFCM PROJECT NO: 08194410
CAD PROJECT NO:
CAD DWG FILE:
DRAWN BY: LGD
CHK'D BY: SLW
COPYRIGHT: STATE OF UTAH

SHEET TITLE
MECHANICAL DETAILS

SHEET NUMBER
ME502

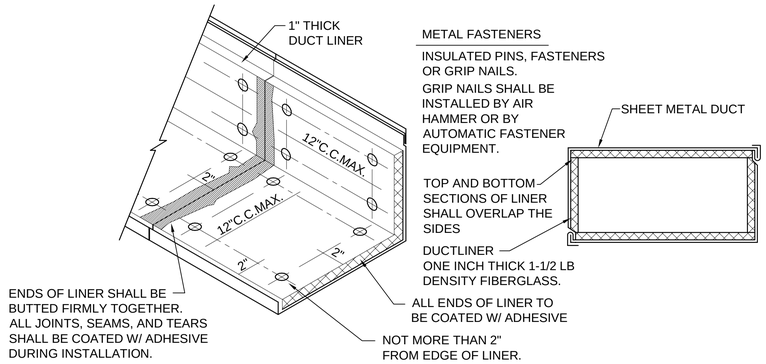


## C1 DUCT LINER DETAIL
SCALE: NONE

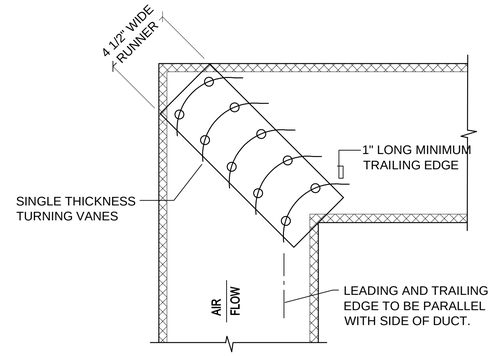


## C3 SINGLE THICKNESS TURNING VANE DETAIL
SCALE: NONE

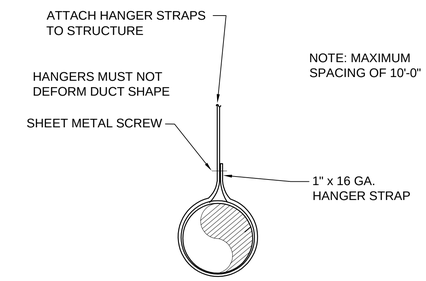


## C4 ROUND DUCT SUPPORT DETAIL
SCALE: NONE

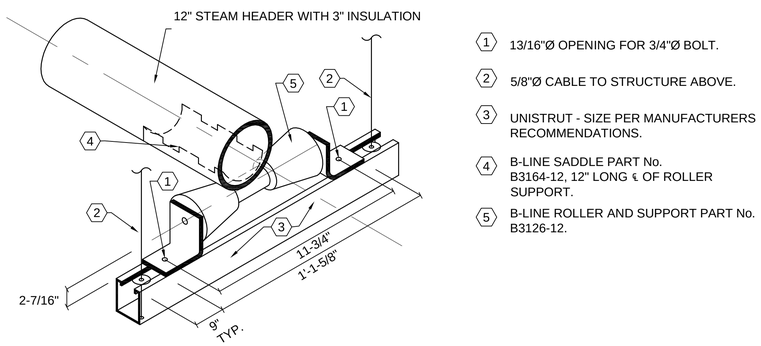


## B1 STEAM HEADER PIPE ROLLER SUPPORT DETAIL
SCALE: NONE

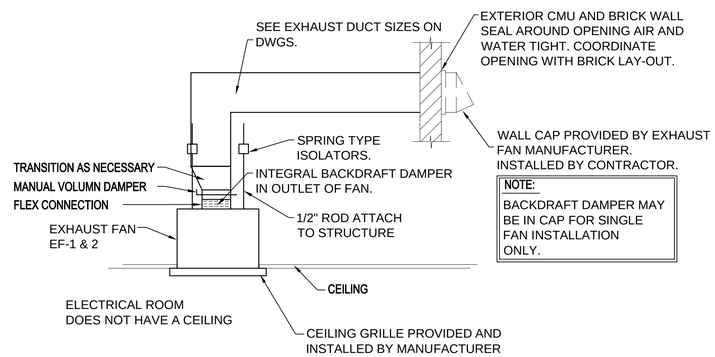


## B3 CEILING EXHAUST FAN DETAIL
SCALE: NONE

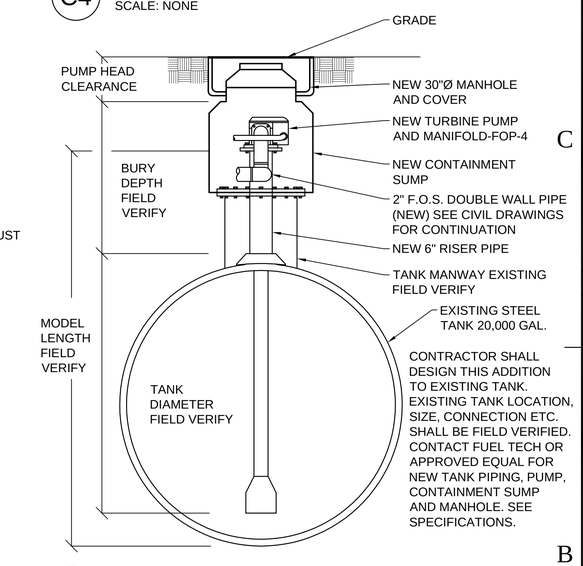


## B4 FUEL OIL PUMP SYSTEM DETAIL
SCALE: NONE

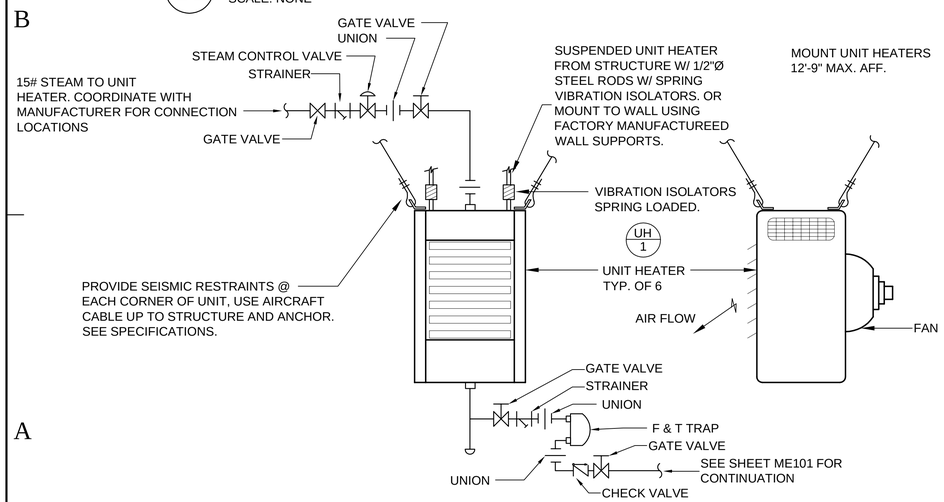


## A1 STEAM UNIT HEATER DETAIL
SCALE: NONE

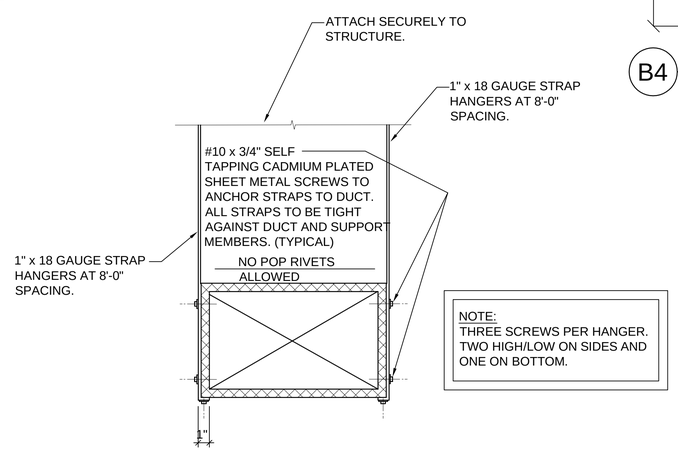


## A3 DUCT STRAP HANGER DETAIL
SCALE: NONE

TRACY STOCKING & ASSOCIATES


State of Utah
Department of Administrative Services
Division of Facilities Construction & Management
4110 State Office Building
Salt Lake City, Utah 84114
Phone: (801) 538 - 3018
Fax: (801) 538 - 3267
http://dfcm.utah.gov

CREATED BY:
WHW ENGINEERING INC.
PROFESSIONAL MECHANICAL ENGINEERING
8619 Sandy Parkway Suite 101
SANDY, UTAH 84070
(801)466-4021, FAX 466-8536
EMAIL: excellence@whw-engineering.com


BUILDING NAME:
Utah State Development Center
870 North 860 East
American Fork, Uath

PROJECT TITLE:
Boiler Replacement/ Building Repairs

| MARK | DATE | DESCRIPTION |
|---|---|---|

ISSUE TYPE: REVIEW

ISSUE DATE: MAY __, 2009

DFCM PROJECT NO: 08194410
CAD PROJECT NO:
CAD DWG FILE:
DRAWN BY: LGD
CHK'D BY: SLW
COPYRIGHT: STATE OF UTAH

SHEET TITLE
MECHANICAL DETAILS

SHEET NUMBER
ME503

NOTE:
RUN STEEL COVER CONTINUOUS FROM CONDENSING UNIT TO PENETRATIONS AT BUILDING WALL.

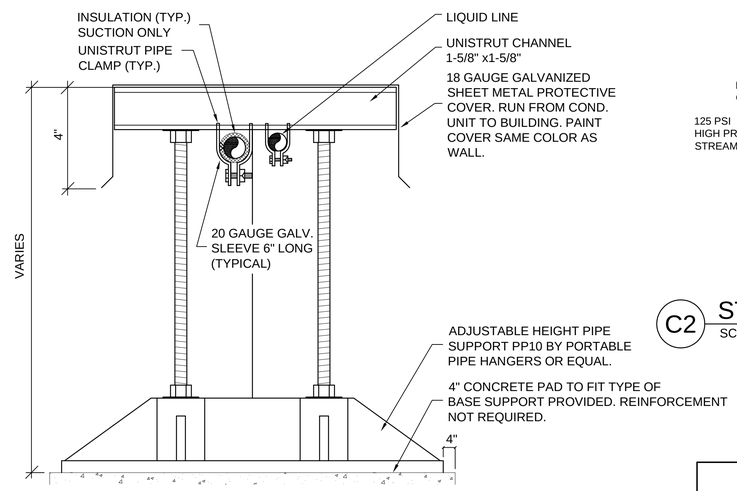


C1 EXTERIOR REFRIGERANT PIPE SUPPORT
SCALE: NONE

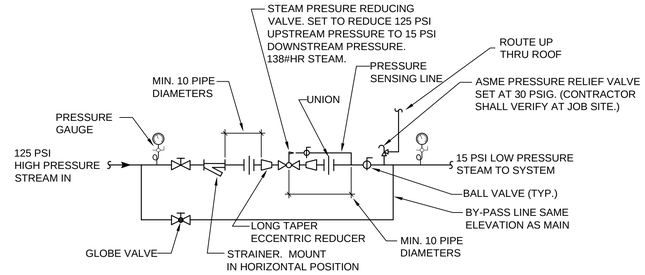


C2 STEAM PRESSURE REDUCING STATION DETAIL
SCALE: NONE

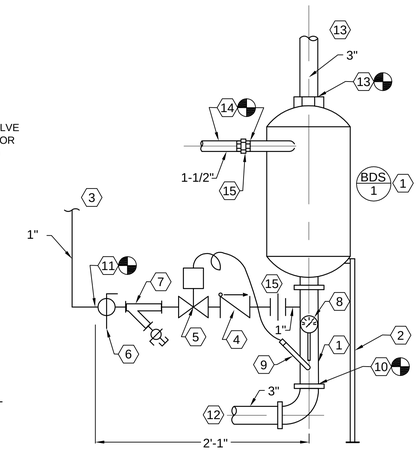


C4 BOILER BLOWDOWN SEPARATOR DETAIL
SCALE: NONE

SOFTENER SHEET NOTES:

1. PACKAGED BOILER BLOWDOWN SEPARATOR AND COOLER. TYPICAL OF THREE.
2. LEGS FOR SEPARATOR SUPPORT. TYPICAL OF THREE(3). OTHERS LEFT OFF FOR CLARITY OF PIPING.
3. 1"Ø COLD WATER SUPPLY. SEE SHEET PE101 FOR CONTINUATION.
4. CHECK VALVE PROVIDED AS PART OF THE PACKAGE.
5. TEMPERATURE REGULATING VALVE PART OF PACKAGE.
6. SHUT-OFF VALVE PART OF PACKAGE.
7. STRAINER PART OF PACKAGE.
8. THERMOMETER PART OF PACKAGE.
9. TEMPERATURE SENSING PROBE PART OF PACKAGE.
10. 3" CONNECTION TO PACKAGED DRAIN BY CONTRACTOR.
11. 1" COLD WATER CONNECTION TO PACKAGED COLD WATER CONNECTION BY CONTRACTOR.
12. 3" DRAIN TO TRENCH DRAIN. SEE SHEET ME101 FOR CONTINUATION.
13. 3" VENT THRU-ROOF. CONTRACTOR SHALL CONNECT TO PACKAGED VENT CONNECTION. SEE ARCHITECTURAL DETAILS FOR PIPING ROOF PENETRATIONS.
14. 1-1/2" BOILER BLOWDOWN PIPING CONNECT TO PACKAGE BLOWDOWN CONNECTION BY CONTRACTOR. SEE DETAIL A1 THIS SHEET FOR CONTINUATION.
15. UNION.

TABLE 1

| PIPE SIZE | USAGE | INSULATION THICKNESS | A | B | C | ROLLER MODEL | SADDLE MODEL |
|---|---|---|---|---|---|---|---|
| 3" | PUMPED CONDENSATE | 2" | 1-7/16" | 6-1/4" | 4-3/8" | B-LINE B3126-4-6 | B-LINE B3162-3 |
| 4" | PUMPED CONDENSATE | 2" | 1-13/16" | 8-1/2" | 7-3/16" | B-LINE B3126-8-10 | BILINE B3162-4 |
| 12" | STEAM | 3" | 2-5/8" | 12-3/8" | 12" | B-LINE B3126-16-20 | B-LINE B3164-12 |

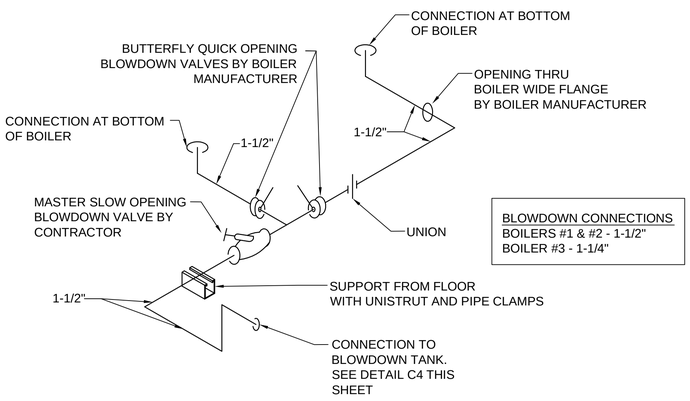


BLOWDOWN CONNECTIONS
BOILERS #1 & #2 - 1-1/2"
BOILER #3 - 1-1/4"

A1 BLOWDOWN PIPING DETAIL
SCALE: NONE

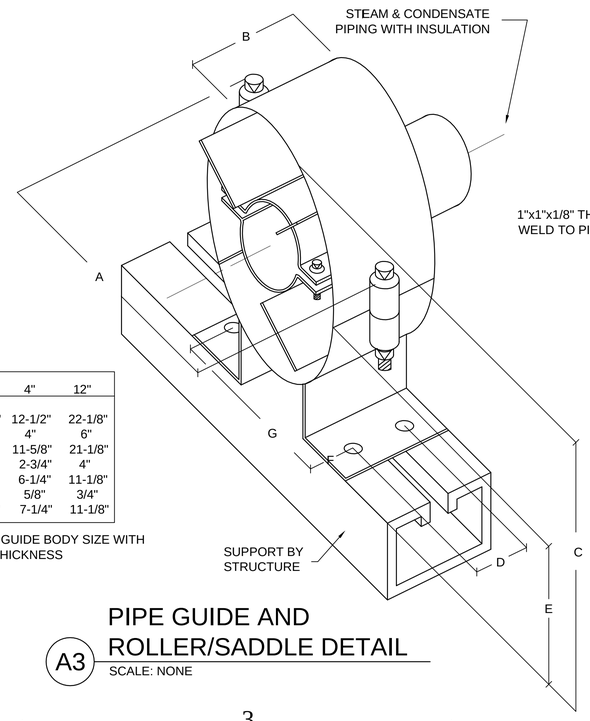


| PIPE: | 3" | 4" | 12" |
|---|---|---|---|
| A | 10-3/8" | 12-1/2" | 22-1/8" |
| B | 3" | 4" | 6" |
| C | 9-1/2" | 11-5/8" | 21-1/8" |
| D | 1-3/4" | 2-3/4" | 4" |
| E | 5-1/4" | 6-1/4" | 11-1/8" |
| F | 5/8" | 5/8" | 3/4" |
| G | 6-1/4" | 7-1/4" | 11-1/8" |

COORDINATE GUIDE BODY SIZE WITH INSULATION THICKNESS

A3 PIPE GUIDE AND ROLLER/SADDLE DETAIL
SCALE: NONE

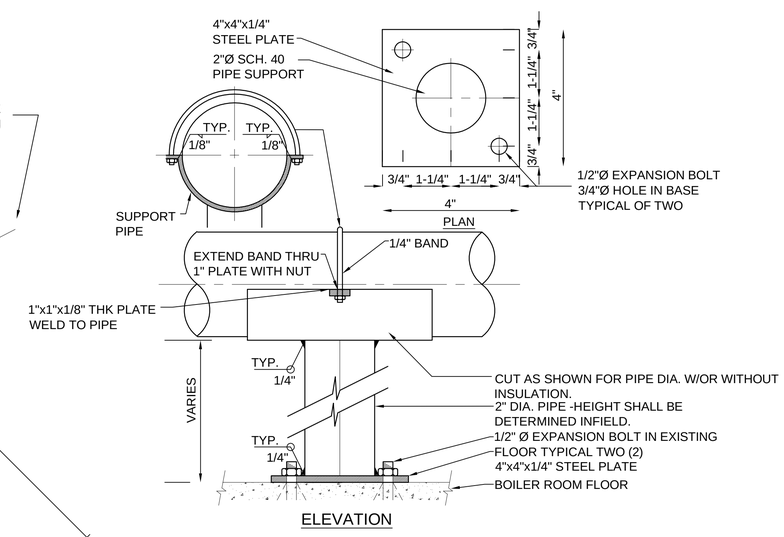


A4 FLOOR PIPING SUPPORT DETAIL
SCALE: NONE

TRACY STOCKING & ASSOCIATES


State of Utah
Department of Administrative Services
Division of Facilities Construction & Management
4110 State Office Building
Salt Lake City, Utah 84114
Phone: (801) 538 - 3018
Fax: (801) 538 - 3267
http://dfcm.utah.gov

CREATED BY:
WHW ENGINEERING INC.
PROFESSIONAL MECHANICAL ENGINEERING
8619 Sandy Parkway Suite 101
SANDY, UTAH 84070
(801)466-4021, FAX 466-8536
EMAIL: excellence@whw-engineering.com


BUILDING NAME:
Utah State Development Center
870 North 860 East
American Fork, Uath

PROJECT TITLE:
Boiler Replacement/ Building Repairs

| MARK | DATE | DESCRIPTION |
|---|---|---|

ISSUE TYPE: REVIEW

ISSUE DATE: MAY __, 2009

DFCM PROJECT NO: 08194410
CAD PROJECT NO:
CAD DWG FILE:
DRAWN BY: LGD
CHK'D BY: SLW
COPYRIGHT: STATE OF UTAH

SHEET TITLE
MECHANICAL DETAILS

SHEET NUMBER
ME504

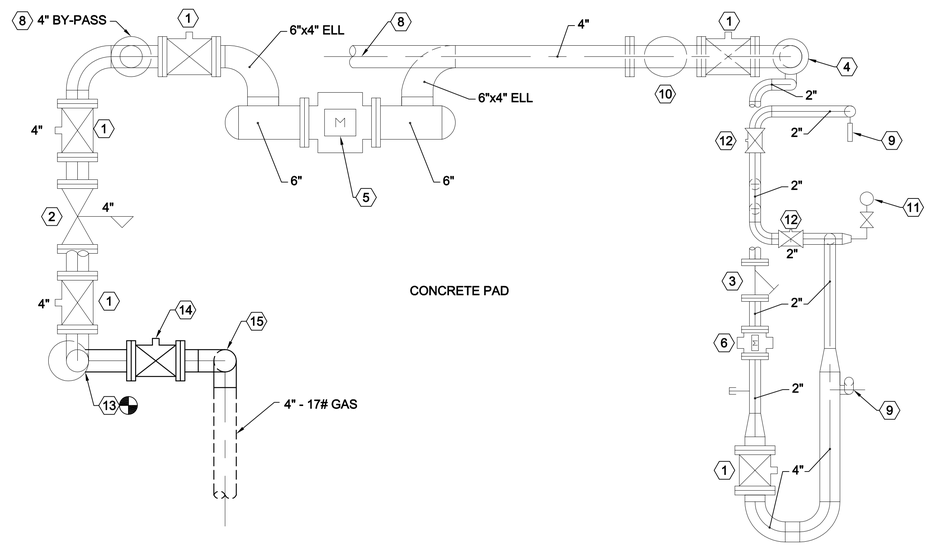


## C2 EXISTING GAS HEADER PLAN DETAIL

SCALE: 3/4" = 1'-0"

EXISTING GAS HEADER SHEET NOTES:

1. EXISTING 4" PLUG VALVES.
2. EXISTING 4" PRV VALVE FROM 45 PSI TO 17 PSI.
3. EXISTING 2" STRAINER.
4. EXISTING 6" HIGH PRESSURE GAS SUPPLY TO METER SET.
5. EXISTING 6" GAS METER HIGH PRESSURE.
6. EXISTING 2" GAS METER.
7. EXISTING 2" 5 PSI GAS TO LAUNDRY BUILDING.
8. EXISTING 4" BY-PASS.
9. EXISTING PRV VALVE- 45 PSI TO 5 PSI.
10. EXISTING BASKET TYPE STRAINER.
11. PLUGGED PRV.
12. 2" PLUG VALVE
13. PROVIDE NEW 4" CONNECTION TO EXISTING 8"Ø GAS LINE.
14. PROVIDE NEW 4" PLUG VALVE.
15. DROP 4" GAS LINE UNDER GROUND AT THIS POINT. DRILL THROUGH CONCRETE.
16. 4"-17 LB. GAS LINE TO NEW BOILER PLANT. FIELD VERIFY ROUTING AROUND BURIED SEWER SEPTIC TANK. SEE CIVIL SITE UTILITY PLAN SHEET C401 FOR CONTINUATION.

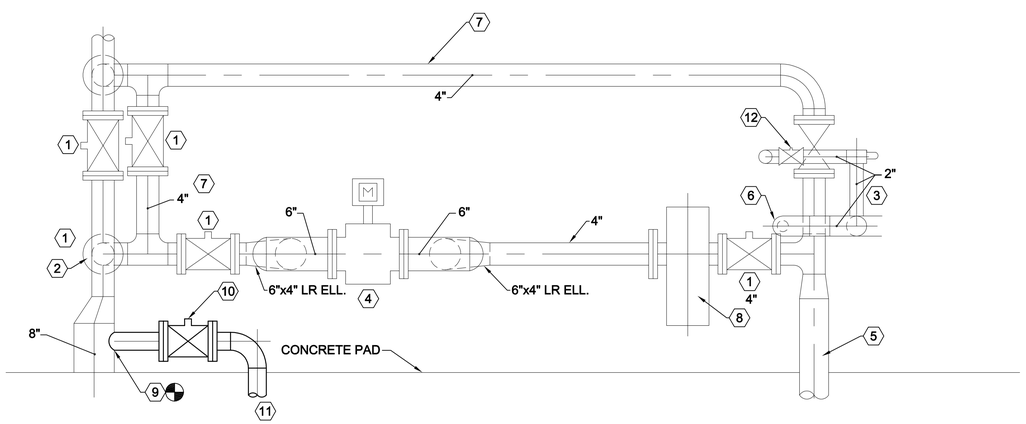


## A2 EXISTING GAS HEADER ELEVATION DETAIL

SCALE: 3/4" = 1'-0"

EXISTING GAS HEADER ELEVATION SHEET NOTES:

1. EXISTING 4" PLUG VALVES.
2. EXISTING 45 PSI TO 17 PSI PRV SERVING EXISTING BOILER PLANT.
3. EXISTING 45 PSI TO 5 PSI PRV SERVING LAUNDRY BUILDING.
4. EXISTING 6" METER.
5. EXISTING 6" HIGH PRESSURE GAS SUPPLY TO METER SET.
6. EXISTING 2" METER.
7. EXISTING 4" BY-PASS.
8. EXISTING 4" BASKET STRAINER.
9. PROVIDE NEW 4" GAS CONNECTION INTO EXISTING 8" GAS SUPPLY TO EXISTING BOILER PLANT.
10. PROVIDE NEW 4" PLUG VALVE.
11. SEE CIVIL SITE UTILITY PLAN C401 FOR CONTINUATION TO NEW BOILER PLANT GAS TIE-IN.
12. 2" PLUG VALVE

TRACY STOCKING & ASSOCIATES


State of Utah
Department of Administrative Services

Division of Facilities Construction & Management
4110 State Office Building
Salt Lake City, Utah 84114
Phone: (801) 538 - 3018
Fax: (801) 538 - 3267

http://dfcm.utah.gov

CREATED BY:

WHW ENGINEERING INC.
PROFESSIONAL MECHANICAL ENGINEERING
8619 Sandy Parkway Suite 101
SANDY, UTAH 84070
(801)466-6021, FAX 466-8536
EMAIL: excellence@whw-engineering.com


BUILDING NAME:

Utah State Development Center
870 North 860 East
American Fork, Uath

PROJECT TITLE:

Boiler Replacement/ Building Repairs

| MARK | DATE | DESCRIPTION |
|---|---|---|

ISSUE TYPE: REVIEW

ISSUE DATE: MAY __, 2009

DFCM PROJECT NO: 08194410
CAD PROJECT NO:
CAD DWG FILE:
DRAWN BY: LGD
CHK'D BY: SLW
COPYRIGHT: STATE OF UTAH

SHEET TITLE

MECHANICAL DETAILS

SHEET NUMBER

ME505

## BLOWDOWN SEPARATOR

| SYMBOL | NO. | HEIGHT | DIAM. | INLET | DRAIN | VENT | AUTOMATIC AFTERCOOLER HEIGHT | DIA. | DRAIN | WATER INLET |
|---|---|---|---|---|---|---|---|---|---|---|
| BDS 1 | 3 | 29-11/16" | 14" | 1-1/2" SCREWED | 3" SCREWED | 3" SCREWED | 12" | 3" | 3" | 1" * |

1. PROVIDE WITH SUPPORT LEGS SO DIMENSION FROM FLOOR TO VENT OULET IS 4'-5-11/16."
2. DIMENSIONS BASED ON A LATTNER MODEL 1450 SEPARATOR AND MODEL 301A AUTO AFTERCOOLER.

* TWO BASE BID - ONE ALTERNATE #1

## WATER SOFTENER SCHEDULE

| SYMBOL | FLOW PEAK GPM | NORMAL FLOW GPM | CAPACITY KGR | RESIN CU. FT. | MINERAL TANK SIZE | BRINE TANK SIZE | MAKE AND MODEL | NOTES |
|---|---|---|---|---|---|---|---|---|
| WS-1 | 58 | 43 | 210 | 7(EA) TANK | 21" X 62" | 42" X 60" | PACIFIC TWIN METER A954TA-210 | 1,2,3 |

1. 24V/1Ø/60 HZ OUTLET.
2. PROVIDE WITH WATER METER - 1-1/2" BRONZE TURBINE.
3. SEE PIPING ISOMETRICS D2/ME901.

## EQUIPMENT SCHEDULE

| SYMBOL | ITEM | STORAGE CAPACITY | CAPACITY | ELECTRICAL V-Ø-Hz | REMARKS/MANUFACTURER |
|---|---|---|---|---|---|
| DA 1 | DEAERATOR | 600 GAL. | 30, 000 LBS/HR | 460-3-60 | PACKAGED UNIT INCLUDING TANK, PUMPS, PIPING WIRING, CONTROL PANEL AND FRAME. LOCKWOOD PRODUCTS MODEL 3055 |
| CT 1 | CONDENSATE RECEIVER TANK | 700 GAL. | | 460-3-60 | PACKAGED UNIT INCLUDING TANK, PUMPS, PIPING WIRING, CONTROL PANEL AND FRAME. LOCKWOOD PRODUCTS |

## STEAM FIRED UNIT HEATER SCHEDULE

| SYMBOL | BTUH | STEAM PSIG | CFM | OUTLET VELOCITY FPM | HP | RPM | STEAM #/HR | CONDENSATE LB/HR | FINAL AIR TEMPERATURE OF | VOLTS | AMPS |
|---|---|---|---|---|---|---|---|---|---|---|---|
| UH 1 | 21,420 | 15 LB | 340 | 625 | 1/60 | 1550 | 22 | 23 | 107° | 115/60/1 | 0.8 |

1. SIZE BASE ON 15 PSIG STEAM AT 60°F EAT, - MODINE MODEL HS-18.
2. MAX MOUNTING HEIGHT - 12'-9".

## BOILER SCHEDULE

| SYMBOL | DESIGN CAPACITY # 1HR | DESIGN PRESSURE PSIG | OPERATING PRESSURE PSIG | FURNACE VOL. (CU. FT.) | TYPE | BOILER HP | STEAM STORAGE VOLUME CU. FT. | ASME TOTAL BOILER HEATING SURFACE SQ. FT. | BURNER FORCED DRAFT FAN MOTOR HP | WEIGHT LBS. EMPTY | HYDRO | MAKE AND MODEL |
|---|---|---|---|---|---|---|---|---|---|---|---|---|
| B 1 | 12,075 | 250 | 95 - 100 | 95.32 | WETBACK SCOTCH MARINE | 350 | 49.04 | 1765 | 7.5 | 28,700 | 52,499 | SUPER SEMINOLE SUPERIOR-1750 3-PASS |
| B 2 | 12,075 | 250 | 95 - 100 | 95.32 | WETBACK SCOTCH MARINE | 350 | 49.04 | 1765 | 7.5 | 28,700 | 52,499 | SUPER SEMINOLE SUPERIOR-1750 3-PASS |
| B 3 | 8,625 | 250 | 95 - 100 | 68.81 | WETBACK SCOTCH MARINE | 250 | 34.53 | 1282 | 5.0 | 22,300 | 38,911 | SUPER SEMINOLE SUPERIOR-1250 3-PASS |

1. BOILERS SHALL BE FITTED WITH POWER FLAME BURNERS MODEL LNICM9A-GO-30 FOR BOILER #3 AND MODEL LNICM9B-GO-30 FOR BOILERS #1 & #2.
2. PROVIDE 120V CONTROL CIRCUIT.
3. PROVIDE SERVICE FOR 7.5 AND 5.0 HP FAN MOTORS.

ALTERNATE #1

## FUEL OIL PUMP SCHEDULE

| SYMBOL | TYPE | MAKE / MODEL | GPM | P.S.I. | MOTOR V - Ø - Hz | HP | SERVICE | SCHEDULE NOTES |
|---|---|---|---|---|---|---|---|---|
| FOP 1 | ROTARY POSITIVE DISPLACEMENT | BY BURNER MANUFACTURER | 3.5 | 150 | 120-1-60 | 1/2 | #2 FUEL OIL | 1,2 |
| FOP 2 | ROTARY POSITIVE DISPLACEMENT | BY BURNER MANUFACTURER | 3.5 | 150 | 120-1-60 | 1/2 | #2 FUEL OIL | 1,2 |
| FOP 3 | ROTARY POSITIVE DISPLACEMENT | BY BURNER MANUFACTURER | 2.5 | 150 | 120-1-60 | 1/2 | #2 FUEL OIL | 1,2 |
| FOP 4 | SUBMERSIBLE TURBINE PUMP | FRANKLIN FUELING PETRO PUMP STP-75-VL2-7 WITH 7" RISER | 26 | - | 460-1-60 | 3/4 | #2 FUEL OIL | 1,2 |

1. SEE SPECIFICATIONS FOR OTHER APPROVED MANUFACTURERS. PROVIDED BY BURNER MANUFACTURER INSTALLED BY MECHANICAL CONTRACTOR IF NOT INSTALLED UPON ARRIVAL FROM THE BOILER MANUFACTURER.
2. PUMPS SHALL BE USED FOR PUMPING #2 FUEL OIL.

## PUMP SCHEDULE

| SYMBOL | SERVICE | MAKE / MODEL | GPM | FT. HEAD | SUCTION SIZE | DISCHARGE SIZE | STAGES | MOTOR V - Ø - Hz | HP | RPM | WEIGHT LBS | TYPE | SCHEDULE NOTES |
|---|---|---|---|---|---|---|---|---|---|---|---|---|---|
| BFP 1 | BOILER FEED WATER | GRUNDFOS SERIES CR | 47 | 346 | 2" | 2" | 9 | 460/3/60 | 7.5 | 3450 | PART OF PACKAGE | MULTISTAGE VERTICAL CENTRIFUGAL | 1,2,3 |
| BFP 2 | BOILER FEED WATER | GRUNDFOS SERIES CR | 47 | 346 | 2" | 2" | 9 | 460/3/60 | 7.5 | 3450 | PART OF PACKAGE | MULTISTAGE VERTICAL CENTRIFUGAL | 1,2,3 |
| BFP 3 | BOILER FEED WATER | GRUNDFOS SERIES CR | 47 | 346 | 2" | 2" | 9 | 460/3/60 | 7.5 | 3450 | PART OF PACKAGE | MULTISTAGE VERTICAL CENTRIFUGAL | 1,2,3 |
| BFP 4 | BOILER FEED WATER | GRUNDFOS SERIES CR | 34 | 346 | 1 1/4" | 1 1/4" | 15 | 460/3/60 | 5.0 | 3450 | PART OF PACKAGE | MULTISTAGE VERTICAL CENTRIFUGAL | 1,2,3 |
| CTP 5 | CONDENSATE TRANSFER | GRUNDFOS SERIES CR | 75 | 70 | 2" | 2" | 2 | 460/3/60 | 5.0 | 3450 | PART OF PACKAGE | MULTISTAGE VERTICAL CENTRIFUGAL | 1,2,3 |
| CTP 6 | CONDENSATE TRANSFER | GRUNDFOS SERIES CR | 75 | 70 | 2" | 2" | 2 | 460/3/60 | 5.0 | 3450 | PART OF PACKAGE | MULTISTAGE VERTICAL CENTRIFUGAL | 1,2,3 |
| CTP 7 | CONDENSATE TRANSFER | GRUNDFOS SERIES CR | 75 | 70 | 2" | 2" | 2 | 460/3/60 | 5.0 | 3450 | PART OF PACKAGE | MULTISTAGE VERTICAL CENTRIFUGAL | 1,2,3 |

1. ALL PUMPS SHALL BE SIZED FOR MAXIMUM EFFICIENCY.
2. ALL PUMPS NOTED ABOVE SHALL BE PART OF THE DEAERATOR AND SURGE TANK PACKAGES. PUMPS SHALL BE PURCHASED AND INSTALLED FOR THE TWO PACKAGES BY THE RESPECTIVE MANUFACTURERS.
3. PUMP DISCHARGE PIPING, VALVES ETC. BY CONTRACTOR IF NOT PART OF PACKAGE. COORDINATE WITH MANUFACTURERS.

TRACY STOCKING & ASSOCIATES


State of Utah
Department of Administrative Services
Division of Facilities Construction & Management
4110 State Office Building
Salt Lake City, Utah 84114
Phone: (801) 538 - 3018
Fax: (801) 538 - 3267
http://dfcm.utah.gov

CREATED BY:
WHW ENGINEERING INC.
PROFESSIONAL MECHANICAL ENGINEERING
8619 Sandy Parkway Suite 101
SANDY, UTAH 84070
(801)466-4021, FAX 466-8536
EMAIL: excellence@whw-engineering.com


BUILDING NAME:
Utah State Development Center
870 North 860 East
American Fork, Uath

PROJECT TITLE:
Boiler Replacement/ Building Repairs

| MARK | DATE | DESCRIPTION |
|---|---|---|

ISSUE TYPE: REVIEW

ISSUE DATE: MAY __, 2009

DFCM PROJECT NO: 08194410
CAD PROJECT NO:
CAD DWG FILE:
DRAWN BY: LGD
CHK'D BY: SLW
COPYRIGHT: STATE OF UTAH

SHEET TITLE
MECHANICAL SCHEDULES

SHEET NUMBER
ME601

## COOLING COIL SCHEDULE

| SYMBOL | No. REQUIRED | MIN. REQUIRED CAPACITY | COND. ENT. EVAP. | | CFM | MANUF. & MODEL # | SCHEDULE NOTES |
|---|---|---|---|---|---|---|---|
| | | TOT. MBH | DB °F | WB °F | | | |
| CC 1 | 1 | 24 | 80 | 67 | 800 | SEE NOTE 2 | 1,2,3 |

1. COMPLETE WITH FACTORY COIL BOX AND COIL.
2. MANUFACTURER BASED ON TRANE MODEL 2/4TXCA024AC3HCA. SEE SPECIFICATIONS FOR APPROVED MANUFACTURERS.
3. CAPACITIES SHOWN ARE FOR SINGLE COILS.

## EXHAUST FAN SCHEDULE

| SYMBOL | TYPE | SERVES | C.F.M. | STATIC PRESSURE IN. WG. | MAX NOISE SONES | MOTOR | | | COMMENTS | MANUFACTURER |
|---|---|---|---|---|---|---|---|---|---|---|
| | | | | | | V - Ø - Hz | WATTS | RPM | | |
| EF 1 | CEILING MTD. EXHAUST | MAIN FLOOR RESTROOM | 140 | .375 | 3.3 | 115/1/60 | 77 | 1050 | CEILING GRILLE | PENN ZEPHYR Z85 |
| EF 2 | INLINE EXHAUST | ELECTRICAL ROOM | 245 | .375 | 5.1 | 115/1/60 | 130 | 1550 | NO CEILING HANG FROM STRUCTURE | PENN ZEPHYR Z8H |

## FURNACE SCHEDULE

| SYMBOL | No. REQUIRED | MIN. REQUIRED OUTPUT BTU/HR | MINIMUM S.C.F.M. | EXT. STATIC PRESSURE IN W.G. | MOTOR | | | COMMENTS | SCHEDULE NOTES |
|---|---|---|---|---|---|---|---|---|---|
| | | | | | V - Ø - Hz | MIN. HP | SPEED | | |
| F 1 | 1 | 38,000 | 800 | .50 | 115/1/60 | BLOWER FAN 1/5. COMBUSTION FAN 1/55-1.0A | 1075 | POWER CONNECTION 4.8 AMPACITY MAX PROTECTION 15 AMPS | 1,2,3,4,5,6 |

1. SEA LEVEL RATING.
2. FURNACE SYMBOLS CORRESPOND WITH CONDENSING UNIT AND COOLING COIL SYMBOLS.
3. SEE SPECIFICATIONS FOR APPROVED MANUFACTURERS. THIS DESIGN BASED ON TRANE MODEL TUX1B040A9241A
4. PROVIDE RETURN AIR SIDE EXTERNAL FILTER RACK.
5. MAY VARY ACCORDING TO MANUFACTURER.
6. PROVIDE WITH CONCENTRIC VENT TERMINATION KIT.

## REGISTER, LOUVER & GRILLE SCHEDULE

| SYMBOL | TYPE | SERVICE | MAX CFM | NOMINAL SIZE | THROAT SIZE | CEILING TYPE | SCHEDULE NOTES |
|---|---|---|---|---|---|---|---|
| R-1 | CEILING | RETURN | 180 | 8/8 | 8/8 | LAY-IN | 1,2,3,4 |
| R-2 | CEILING | RETURN | 600 | 10/10 | 10/10 | LAY-IN | 1,2,3,4 |
| TG-1 | SIDEWALL | TRANSFER AIR | 245 | 8/8 | 8/8 | N/A | 1,2,3,4 |
| L-1 | SIDEWALL | FRESH AIR | 160 | 16/16 | 16/16 | N/A | 3,5,6 |
| L-2 | SIDEWALL | VENTILATION AND COMBUSTION AIR | N/A | 48/48 | 48/48 | N/A | 3,5,6 |
| L-3 | SIDEWALL | EXHAUST | 140 | 16/16 | 16/16 | N/A | 3,5,6 |
| L-4 | SIDEWALL | EXHAUST | 245 | 16/16 | 16/16 | N/A | 3,5,6 |
| L-5 | SIDEWALL | FREASH AIR | 245 | 16/16 | 16/16 | N/A | 3,5,6 |

REGISTER. LOUVER AND DIFFUSER SCHEDULE NOTES:

1. MAXIMUM NC = 25 @ MAXIMUM CFM NOTED.
2. SHALL BE PRICE 535 OR EQUAL BY OTHER APPROVED MANUFACTURERS.
3. SEE SPECIFICATIONS FOR APPROVED MANUFACTURERS.
4. FINISH SHALL BE STANDARD WHITE.
5. COLOR TO BE SPECIFIED BY ARCH
6. RUSKIN ELF811 OR EQUAL. PROVIDE WITH BIRD SCREEN AND KYNAR FINISH.

## DIFFUSER SCHEDULE

| SYMBOL | TYPE | MAX CFM | FACE SIZE | NECK SIZE | CEILING TYPE | BLOW | PATTERN | SCHEDULE NOTES |
|---|---|---|---|---|---|---|---|---|
| D-1 CFM | CEILING | 120 | 6X6 | 6"Ø | LAY-IN | 4--WAY | | 1,2,3,4,5 |
| D-2 CFM | CEILING | 140 | 9X9 | 8"Ø | LAY-IN | 4--WAY | | 1,2,3,4,5 |
| D-3 CFM | CEILING | 140 | 9X9 | 8"Ø | LAY-IN | 3--WAY | | 1,2,3,4,5 |

1. PROVIDE LAY-IN CEILING AND BORDER / MODULE AS REQUIRED. SEE ARCHITECTURAL CEILING PLANS.
2. MAXIMUM NC 25 AT CFM LISTED.
3. PROVIDE TRANSITION TO DIFFUSER NECK SIZE AS REQUIRED TO DUCT WORK SHOWN ON PLAN.
4. DIFFUSER SHALL BE PRICE MODEL SMD OR EQUAL BY APPROVED MANUFACTURER IN SPECIFICATIONS.
5. FINISH SHALL BE STANDARD WHITE.

## CONDENSING UNIT SCHEDULE

| SYMBOL | AREA SERVED | MIN SIZE (TONS) | COMPRESSOR MOTOR | | | MCA | MOCP | MANUF. & MODEL # | SCHEDULE NOTES |
|---|---|---|---|---|---|---|---|---|---|
| | | | No. | RLA (EACH) | LRA (EACH) | | | | |
| CU 1 | OFFICE, VEST TOILET ROOM | 2 | 1 | 8.8 | 57.8 | 12 | 20 | SEE NOTE 4 | 1,2,3,4,5,6 |

1. REFRIGERANT R410.
2. AT DESIGN CONDITIONS AND 95° F EAT.
3. CONDENSING UNIT SYMBOLS CORRESPOND WITH FURNACE SYMBOLS.
4. SEE SPECIFICATIONS FOR APPROVED MANUFACTURERS. THIS DESIGN BASED ON TRANE MODEL 4TTB3024A.
5. ELECTRIC SERVICE: 208/1Ø/60HZ
6. OUTDOOR FAN - 3150 CFM - 1 MOTOR 1/8 HP - 208/1ϕ/60, FLA = 0.7

TRACY STOCKING & ASSOCIATES


State of Utah
Department of Administrative Services
Division of Facilities Construction & Management
4110 State Office Building
Salt Lake City, Utah 84114
Phone: (801) 538 - 3018
Fax: (801) 538 - 3267
http://dfcm.utah.gov

CREATED BY:
WHW ENGINEERING INC.
PROFESSIONAL MECHANICAL ENGINEERING
8619 Sandy Parkway Suite 101
SANDY, UTAH 84070
(801)466-4021, FAX 466-8536
EMAIL: excellence@whw-engineering.com


BUILDING NAME:
Utah State Development Center
870 North 860 East
American Fork, Uath

PROJECT TITLE:
Boiler Replacement/ Building Repairs

| MARK | DATE | DESCRIPTION |
|---|---|---|

ISSUE TYPE: REVIEW

ISSUE DATE: MAY __, 2009

DFCM PROJECT NO: 08194410
CAD PROJECT NO:
CAD DWG FILE:
DRAWN BY: LGD
CHK'D BY: SLW
COPYRIGHT: STATE OF UTAH

SHEET TITLE
MECHANICAL SCHEDULES

SHEET NUMBER
ME602

DEAERATOR SHEET NOTES:

1. NEW PACKAGED DEAERATOR SYSTEM INCLUDING TANK, PUMPS, MAKE-UP WATER MANIFOLD, PUMP SUCTION PIPING, FRAME AND CONTROLS.
2. LEVEL CONTROLLER BY DEAERATOR MANUFACTURER.
3. HIGH/LOW LEVEL WATER ALARMS BY DEAERATOR MANUFACTURER.
4. VERTICAL PUMPS BY DEAERATOR MANUFACTURER.
5. 2" DRAIN TO TRENCH DRAIN BY CONTRACTOR.
6. PUMP DISCHARGE PIPING, CHECK VALVES, BALL VALVES, AND BALANCING VALVES, ETC. BY CONTRACTOR.
7. 12"x16" MANWAY BY DEAERATOR MANUFACTURER.
8. CONDENSATE WATER MAKE-UP MANIFOLD INCLUDING PIPING, VALVES, AUTO MAKE-UP REGULATION VALVE AND STRAINER, PROVIDED BY DEAERATOR MANUFACTURER.
9. DIAL THERMOMETER BY DEAERATOR MANUFACTURER.
10. PRESSURE GAUGE AND ANTI-SIPHON STEM BY DEAERATOR MANUFACTURER.
11. VENT LINE AND VALVE AND PIPING THRU-ROOF BY CONTRACTOR.
12. OVERFLOW TRAP BY DEAERATOR MANUFACTURER.
13. GAUGE GLASS BY DEAERATOR MANUFACTURER.
14. CONNECT NEW 2-1/2"Ø PUMPED CONDENSATE FROM SURGE TANK AT THIS POINT. SEE ISOMETRIC A3 THIS SHEET FOR SOURCE. REDUCE TO SIZE OF MANUFACTURERS INLET.
15. CONNECT NEW 6" STEAM SUPPLY TO DEAERATOR AT THIS LOCATION. SEE SHEET ME101.
16. SEE SHEET ME101 FOR CONTINUATION OF BOILER FEED WATER TO BOILERS.
17. SEE SHEET ME101 FOR CONTINUATION OF STEAM PIPING TO STEAM HEADER.
18. PRESSURE GAUGES BY CONTRACTOR.
19. STEAM SENSING LINE CONNECTION PROVIDED BY DEAERATOR MANUFACTURER. SENSING LINE FROM TOWER TO AND INCLUDING CONNECTION TO VALVE BY CONTRACTOR.
20. STEAM CONTROL VALVE PROVIDED BY DEAERATOR MANUFACTURER INSTALLED BY CONTRACTOR.
21. BACK PRESSURE RELIEF VALVES OR VALVE PROVIDED BY DEAERATOR MANUFACTURER, INSTALLED BY CONTRACTOR.
22. SENTINEL RELIEF VALVE. PROVIDED BY DEAERATOR MANUFACTURER INSTALLED BY CONTRACTOR. EXTEND RELIEF LINE THRU ROOF.
23. VACUUM BREAKER PROVIDED BY DEAERATOR MANUFACTURER.
24. STRAINER PROVIDED BY DEAERATOR MANUFACTURER INSTALLED BY CONTRACTOR.
25. 300# GATE VALVE BY CONTRACTOR.

NOTES:

1. CONTRACTOR SHALL INSTALL ALL ITEMS SHIPPED LOOSE REGARDLESS OF WHAT NOTE INDICATES. COORDINATE WITH DEAERATOR MANUFACTURER FOR ITEMS NOT SHIPPED ATTACHED TO VESSEL.

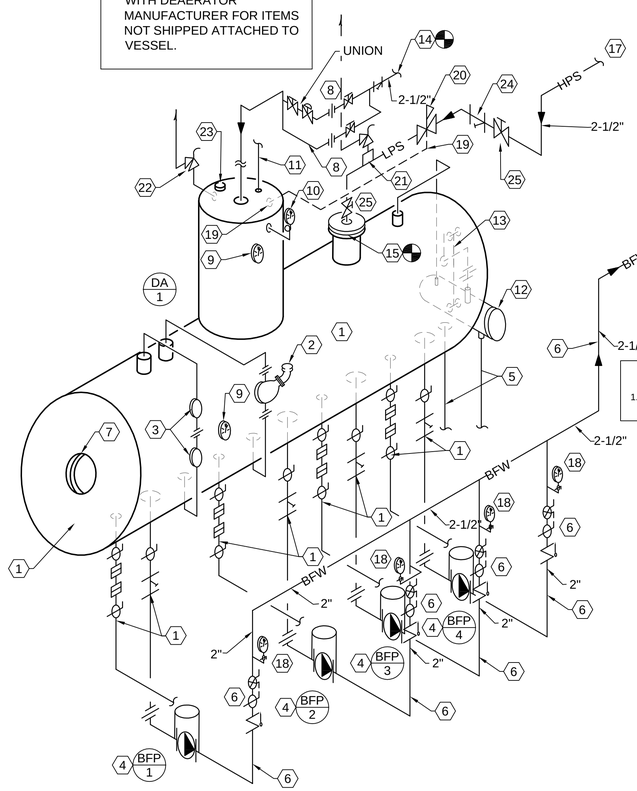


A2 DEAERATOR PIPING ISOMETRIC
SCALE: NONE

NOTES:

1. SEE SOFTENER SCHEDULE SHEET ME601.

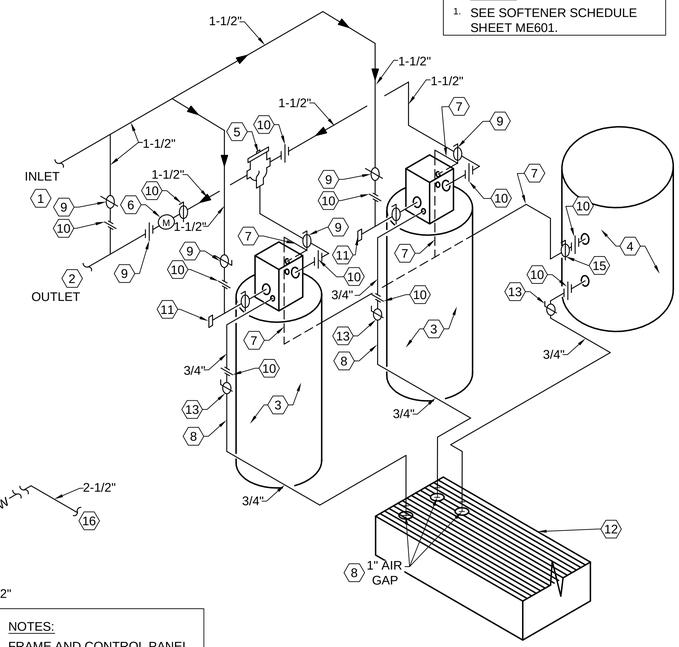


NOTES:

1. FRAME AND CONTROL PANEL NOT SHOWN FOR CLARITY.

B2 SOFTENER PIPING ISOMETRIC
SCALE: NONE

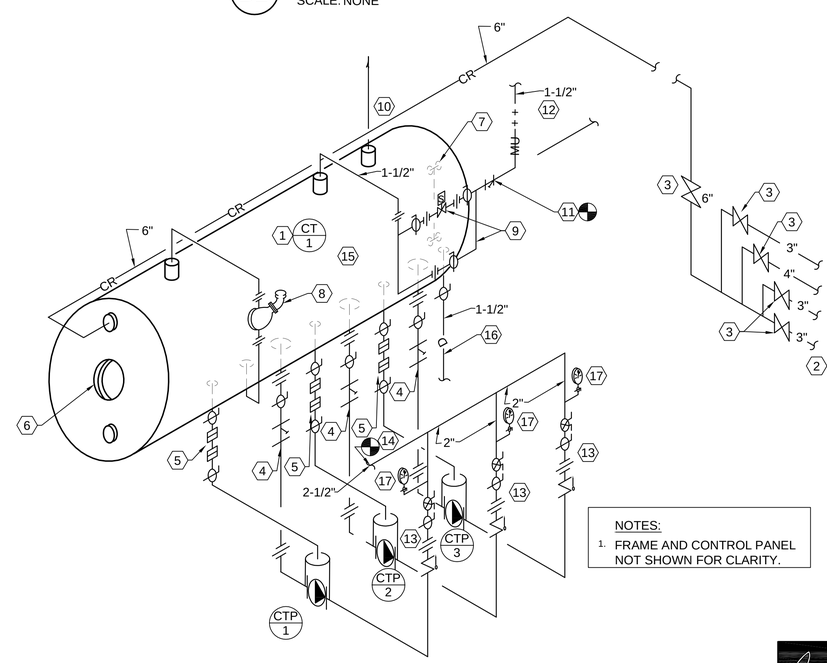


NOTES:

1. FRAME AND CONTROL PANEL NOT SHOWN FOR CLARITY.

A3 CONDENSATE SURGE TANK PIPING ISOMETRIC
SCALE: NONE

SOFTENER SHEET NOTES:

1. 1-1/2"Ø WATER INLET FROM WATER HEADER.
2. 1-1/2"Ø SOFT WATER OUTLET TO CONDENSATE SURGE TANK AND SAMPLE COOLERS.
3. 21"Ø x 62" HIGH MINERAL TANKS.
4. 42"Ø x 60" HIGH BRIAN TANK.
5. ALTERNATOR, PROVIDED WITH SOFTENER INSTALLED BY CONTRACTOR.
6. 1-1/2" METER, PROVIDED WITH SOFTENER INSTALLED BY CONTRACTOR.
7. 1/2" BRINE TUBING BY SOFTENER MANUFACTURER. CONTRACTOR SHALL COORDINATE WITH SOFTENER MANUFACTURER FOR INSTALLATION OF TUBING IF NOT INSTALLED BY SOFTENER MANUFACTURER..
8. 3/4" DRAIN, TERMINATE 1" ABOVE TRENCH DRAIN GRATE. PROVIDE 3"Ø HOLE IN TRENCH GRADING.
9. 1-1/2" BALL VALVE.
10. 1-1/2" AND 3/4" UNIONS.
11. VACUUM BREAKER, PROVIDED WITH SOFTENER INSTALLED BY CONTRACTOR.
12. TRENCH DRAIN. SEE SHEET ME101 FOR PLAN LAYOUT.
13. 3/4" BALL VALVES LOCKED NORMALLY OPEN.
14. 1-1/2" BY-PASS.
15. 1/2" BALL VALVE AND UNION BY CONTRACTOR.

STORAGE TANK NOTES:

1. PACKAGED CONDENSATE SURGE TANK C/W 700 GAL. SURGE TANK, PUMP, SUCTION PIPING, HIGH AND LOW WATER SWITCHES, TANK GAUGE, GAUGE GLASS, MAKE-UP WATER, CONTROL PANEL, AND FRAME.
2. CONDENSATE RETURN PIPING FROM TUNNEL. SEE SHEET ME202 FOR CONTINUATION.
3. CONDENSATE RETURN GATE VALVES. SAME SIZE AS PIPING.
4. PUMP SUCTION PIPING INCLUDING BALL VALVES, STRAINERS, UNIONS SHALL BE PROVIDED BY PACKAGE MANUFACTURER.
5. BY-PASS PIPING, ORIFICE, UNIONS AND VALVES PROVIDED AND INSTALLED BY PACKAGE MANUFACTURER.
6. TANK MANWAY MINIMUM 11"x15" BY MANUFACTURER.
7. GAUGE GLASS BY PACKAGE MANUFACTURER.
8. WATER LEVEL CONTROLLER BY PACKAGE MANUFACTURER.
9. MAKE-UP WATER CONTROL STATION C/W AUTO VALVE, REDUCERS,BALL VALVES, UNIONS,BY-PASS, AND STRAINER PROVIDED BY PACKAGE MANUFACTURER.
10. 3" VENT THRU ROOF.
11. CONNECT TO STRAINER WITH 1-1/2" SOFT WATER MAKE-UP. REDUCE TO 1-1/4' INLET.
12. 1-1/2" SOFT WATER MAKE-UP TO SURGE TANK. SEE SHEET PE101.
13. DISCHARGE PIPING C/W UNIONS, CHECK VALVE, GATE VALVE, AND BALANCING VALVE SHALL BE PROVIDED AND INSTALLED TO POINT SHOWN.
14. CONNECT NEW 2-1/2' MU PIPING TO DEAERATOR. SEE A2 THIS SHEET FOR CONTINUATION.
15. PLUG ALL TANK OPENINGS NOT USED.
16. 1-1/2" DRAIN TO TRENCH DRAIN BY CONTRACTOR.
17. PRESSURE GAUGE BY MECHANICAL CONTRACTOR.

TRACY STOCKING & ASSOCIATES


State of Utah
Department of Administrative Services
Division of Facilities Construction & Management
4110 State Office Building
Salt Lake City, Utah 84114
Phone: (801) 538 - 3018
Fax: (801) 538 - 3267
http://dfcm.utah.gov

CREATED BY:
WHW ENGINEERING INC.
PROFESSIONAL MECHANICAL ENGINEERING
8619 Sandy Parkway Suite 101
SANDY, UTAH 84070
(801)466-4021, FAX 466-8536
EMAIL: excellence@whw-engineering.com


BUILDING NAME:
Utah State Development Center
870 North 860 East
American Fork, Uath

PROJECT TITLE:
Boiler Replacement/ Building Repairs

| MARK | DATE | DESCRIPTION |
|---|---|---|

ISSUE TYPE: REVIEW

ISSUE DATE: MAY __, 2009

DFCM PROJECT NO: 08194410
CAD PROJECT NO:
CAD DWG FILE:
DRAWN BY: LGD
CHK'D BY: SLW
COPYRIGHT: STATE OF UTAH

SHEET TITLE
PIPING ISOMETRICS

SHEET NUMBER
ME901

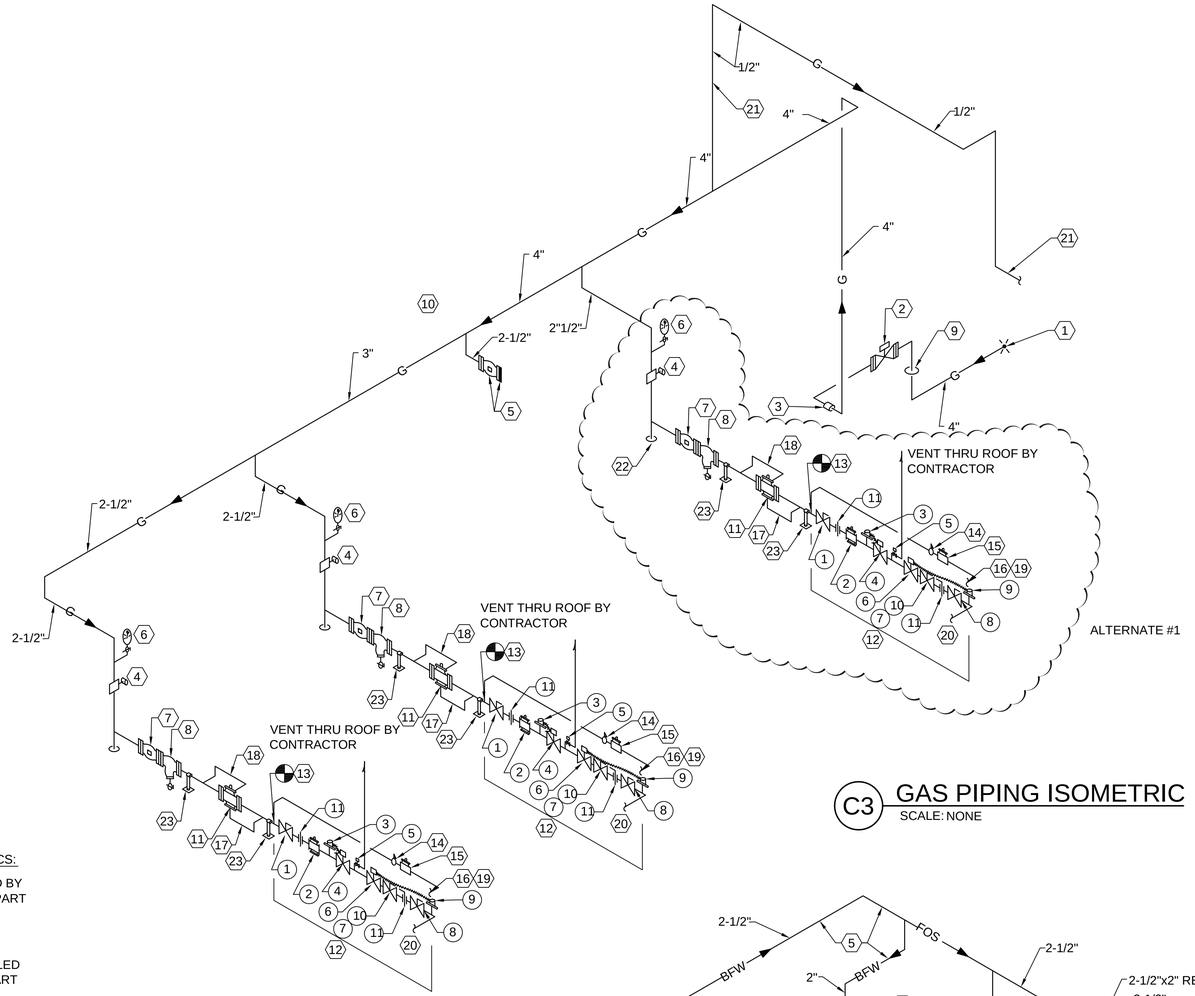


## C3 GAS PIPING ISOMETRIC

SCALE: NONE

GAS PIPING SHEET NOTES:

1. CONNECT TO YARD GAS LINE PROVIDED BY OTHERS. SEE SHEET ME101 FOR CONTINUATION. FIELD VERIFY LOCATION OF YARD LINE. SIZE GAS FOR 54,436 CFH @ 5LB.
2. PROVIDE NEW EXTERIOR EARTHQUAKE VALVE.
3. PENETRATION THRU WALL. PROVIDE SLEEVE. SEE SPECIFICATIONS FOR SLEEVES. SEAL AIR AND WATER TIGHT.
4. METERS FOR BOILERS #1 AND #2 SHALL BE SIZED FOR 14,165 CFH EACH. BOILER #3 SHALL BE SIZED FOR 10,461 CFH. ALL AT 5 PSIG.
5. PROVIDE NEW 2-1/2" 150 # FLANGED PLUG VALVE FOR FUTURE BOILER. PROVIDE BLIND FLANGE.
6. PRESSURE GAUGE WITH VALVE. 0 TO 30 PSIG.
7. PROVIDE NEW 2-1/2" - 150 # FLG'D PLUG VALVE FOR BOILERS #1 AND 2 AND 2" - 150# FLG'D PLUG VALVE FOR BOILER #3.
8. PROVIDE NEW 150 # STRAINER AND STRAINER BLOWDOWN BALL VALVE. SIZE SAME AS GAS LINE.
9. GAS RISER OUT OF GROUND. SEE ME101 FOR LOCATION.
10. SUPPORT FROM CLEVIS TYPE HANGER. SEE SHEET ME101 FOR HANGER LOCATIONS AND DETAIL C1/ME501.
11. PROVIDE NEW GAS PRESSURE REDUCING VALVE SIZED FOR 17 PSIG UPSTREAM AND ADJUSTABLE DOWNSTREAM PRESSURE. COORDINATE WITH BURNER MANUFACTURER FOR BURNER GAS PRESSURE REQUIREMENTS AND THE REQUIREMENTS FOR THIS VALVE.
12. GAS TRAIN ATTACHED TO BOILER STRUCTURE. PROVIDED BY BOILER MANUFACTURER. GAS TRAIN SHALL INCLUDE"
    - 1 MAIN SHUT-OFF VALVE
    - 2 GAS PRESSURE REGULATOR
    - 3 LOW GAS PRESSURE SWITCH
    - 4 2ND SAFETY VALVE
    - 5 NORMALY OPEN VENT VALVE
    - 6 SAFETY GAS VALVE
    - 7 MANUAL LEAK TEST VALVE
    - 8 SHUT-OFF VALVE
    - 9 HIGH GAS PRESSURE SWITCH
    - 10 TEST OPENING
    - 11 UNION

    IF ANY PART OF THE GAS TRAIN PROVIDED BY THE BOILER MANUFACTURER IS SHIPPED LOOSE, IT WILL BE THE RESPONSIBILITY OF THE CONTRACTOR TO INSTALL THESE ITEMS. COORDINATE WITH BOILER MANUFACTURER.
13. GAS PILOT TAKE-OFF BY CONTRACTOR IF NOT PART OF GAS TRAIN. COORDINATE WITH BOILER MANUFACTURER.
14. PILOT GAS SHUT-OFF VALVE, PROVIDED AND INSTALLED BY CONTRACTOR.
15. PILOT GAS PRESSURE REGULATOR, PROVIDED AND INSTALLED BY CONTRACTOR IF NOT PART OF GAS TRAIN. COORDINATE WITH BOILER MANUFACTURER.
16. TO BURNER.
17. GAS PRESSURE REGULATORS REQUIRE A LENGTH OF FIVE(5) PIPE DIAMETERS OF STRAIGHT UNINTERRUPTED PIPE ON OUTLET SIDE.
18. CONNECT PIPING FROM MAIN PR VALVE AND PILOT INTO GAS PIPING BY CONTRACTOR.
19. PILOT TO BURNER CONNECTION BY BOILER MANUFACTURER.
20. GAS TO BURNER CONNECTION BY BOILER MANUFACTURER.
21. GAS LINE TO FURNACE. SEE DETAIL A3/PE502 FOR CONNECTION DETAIL TO FURNACE..
22. DIRT LEG - SAME SIZE AS GAS PIPING.
23. PIPE SUPPORT FROM FLOOR CONSISTING OF PIPE, FLOOR PLATE AND PIPE HOLDER. SEE DETAIL A4/ME504.

BOILER FEED WATER PIPING ISOMETRICS:

1. BOILER FEED WATER PUMPS PROVIDED BY THE DEAERATOR MANUFACTURER AS PART OF THE DEAERATOR PACKAGE. PUMPS SHALL BE GRUNDFOS.
2. SUCTION PIPING INCLUDING VALVE, STRAINER ETC. PROVIDED AND INSTALLED BY DEAERATOR MANUFACTURER AS PART OF THE DEAERATOR PACKAGE.
3. BY-PASS PIPING AND BY-PASS ORIFICE FOR EACH PUMP. PROVIDED AND INSTALLED BY DEAERATOR MANUFACTURER AS PART OF THE DEAERATOR PACKAGE.
4. COMPANION FLANGE AND DISCHARGE PIPING INCLUDING CHECK VALVE AND GATE VALVE. PROVIDED AND INSTALLED BY CONTRACTOR. TYPICAL OF FOUR.
5. 2-1/2" DIAMETER BOILER FEED WATER. SEE SHEET ME101 FOR PLAN VIEW AND SHEET ME201 FOR ELEVATIONS.
6. BOILER FEED WATER CONTROL VALVE BY CONTRACTOR AS PART OF THE CONTROLS PACKAGE .
7. CONTROL VALVE MANIFOLD BY CONTRACTOR. MANIFOLD SHALL INCLUDE GATE VALVES, REDUCERS, BY-PASS WITH GATE VALVE, UNIONS ETC.
8. CONNECT TO BOILER FEED WATER PIPING PROVIDED BY BOILER MANUFACTURER.
9. CHECK VALVE, GATE VALVE, AND PIPING CONNECTION TO BOILER SHALL BE CODE PIPING TO CHECK VALVE AND PROVIDED BY BOILER MANUFACTURER.
10. PRESSURE GAUGE TYPICAL OF FOUR. 0 TO 200 PSIG.
11. 2" GATE VALVE AND END PLUG FOR FUTURE CONNECTION TO FUTURE BOILER.

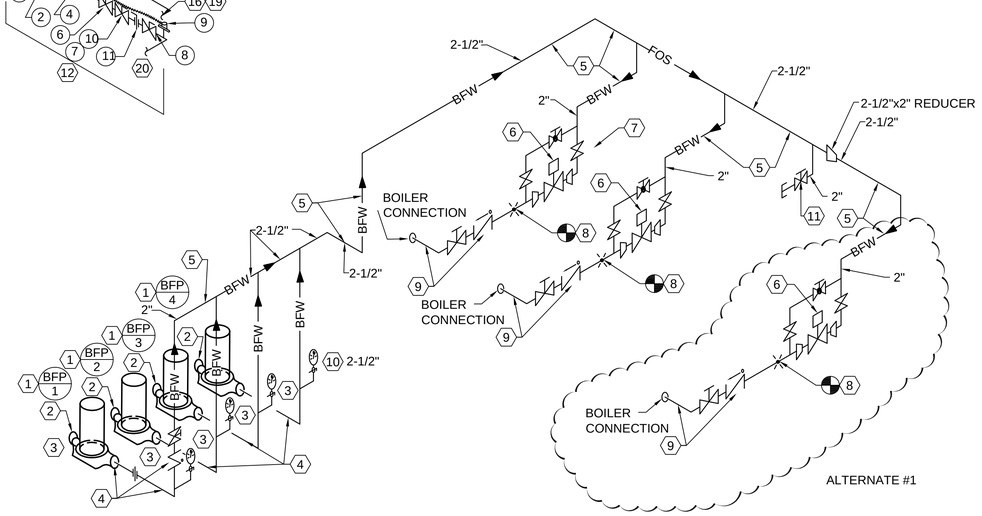


## A2 BOILER FEED WATER PIPING ISOMETRIC

SCALE: NONE

TRACY STOCKING & ASSOCIATES


State of Utah
Department of Administrative Services
Division of Facilities Construction & Management
4110 State Office Building
Salt Lake City, Utah 84114
Phone: (801) 538 - 3018
Fax: (801) 538 - 3267
http://dfcm.utah.gov

CREATED BY:
WHW ENGINEERING INC.
PROFESSIONAL MECHANICAL ENGINEERING
8619 Sandy Parkway Suite 101
SANDY, UTAH 84070
(801)466-4021, FAX 466-8536
EMAIL: excellence@whw-engineering.com


BUILDING NAME:

Utah State Development Center
870 North 860 East
American Fork, Uath

PROJECT TITLE:

Boiler Replacement/ Building Repairs

| MARK | DATE | DESCRIPTION |
|---|---|---|

ISSUE TYPE: REVIEW

ISSUE DATE: MAY __, 2009

DFCM PROJECT NO: 08194410
CAD PROJECT NO:
CAD DWG FILE:
DRAWN BY: LGD
CHK'D BY: SLW
COPYRIGHT: STATE OF UTAH

SHEET TITLE

PIPING ISOMETRICS

SHEET NUMBER

ME902

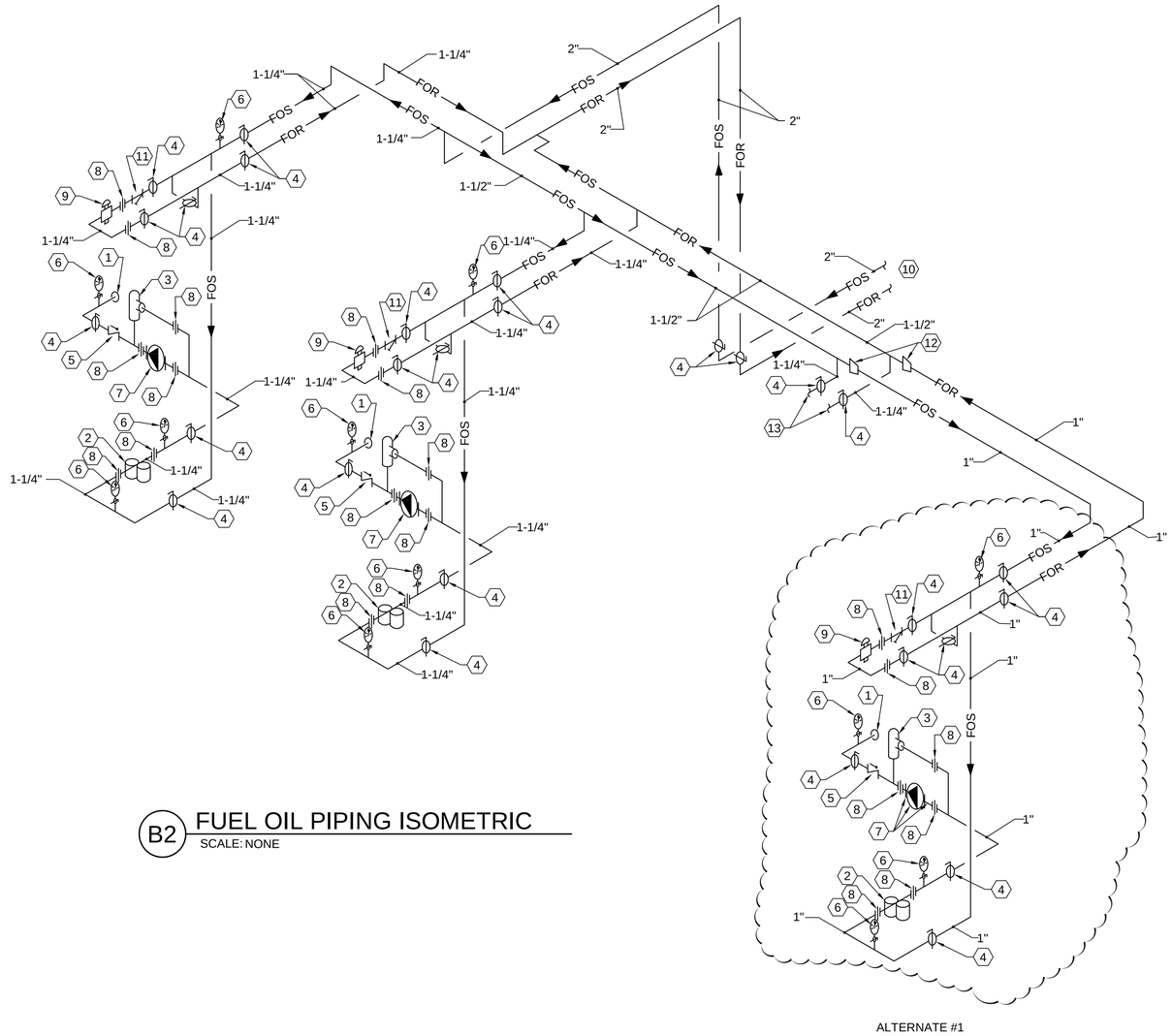


B2 FUEL OIL PIPING ISOMETRIC
SCALE: NONE

FUEL OIL SHEET NOTES:

1. CONNECT TO BURNER FUEL OIL INLET CONNECTION. COORDINATE WITH BURNER MANUFACTURER FOR OIL TIE IN POINT.
2. PROVIDE NEW DUAL BASKET STRAINER. SAME SIZE AS PIPING.
3. PROVIDE NEW PUMP RELIEF VALVE AND PIPING IF PUMPS DO NOT HAVE AN INTERNAL RELIEF SYSTEM.
4. NEW BALL VALVE 600 # S.W. SAME SIZE AS PIPING.
5. NEW CHECK VALVE 600 # S.W. SAME SIZE AS PIPING.
6. NEW PRESSURE GAUGES WITH VALVES. 0 TO 180 PSIG.
7. NEW FUEL OIL PUMPS. PROVIDED AND INSTALLED BY BOILER MANUFACTURER PIPED BY CONTRACTOR. FUEL OIL PIPING SHALL BE REDUCED TO MATCH PUMP INLET AND OUTLET SIZES.
8. PROVIDE NEW SCHEDULE 80 UNIONS.
9. PROVIDE NEW BACK PRESSURE VALVE.
10. NEW FUEL OIL PIPING FROM TUNNEL. SEE SITE UTILITY PLAN AND SHEET ME101 FOR CONTINUATION.
11. STRAINER - 600 # S.W.
12. 1-1/2"x1" REDUCER.
13. PROVIDE TEE NIPPLE AND BALL VALVE FOR FUTURE BOILER.

TRACY STOCKING & ASSOCIATES

State of Utah
Department of Administrative Services
Division of Facilities Construction & Management
4110 State Office Building
Salt Lake City, Utah 84114
Phone: (801) 538 - 3018
Fax: (801) 538 - 3267
http://dfcm.utah.gov

CREATED BY:
WHW ENGINEERING INC.
PROFESSIONAL MECHANICAL ENGINEERING
8619 Sandy Parkway Suite 101
SANDY, UTAH 84070
(801)466-4021, FAX 466-8536
EMAIL: excellence@whw-engineering.com

BUILDING NAME:
Utah State Development Center
870 North 860 East
American Fork, Uath

PROJECT TITLE:
Boiler Replacement/ Building Repairs

| MARK | DATE | DESCRIPTION |
|---|---|---|

ISSUE TYPE: REVIEW

ISSUE DATE: MAY __, 2009

DFCM PROJECT NO: 08194410
CAD PROJECT NO:
CAD DWG FILE:
DRAWN BY: LGD
CHK'D BY: SLW
COPYRIGHT: STATE OF UTAH

SHEET TITLE
PIPING ISOMETRICS

SHEET NUMBER
ME903

## PLUMBING LEGEND

| MEANING | SYMBOL OR ABBREVIATION | MEANING | SYMBOL OR ABBREVIATION |
|---|---|---|---|
| HOT WATER LINE | — - - — | WALL CLEANOUT | WCO |
| COLD WATER LINE | — - — | CLEANOUT(END OF LINE) | CO |
| VENT LINE | — — V — V — — | FLOOR CLEANOUT | FCO |
| WASTE LINE | — — — — — | BALL VALVE | — ⊕ — |
| GAS LINE | — G — | UNION | — ⊣⊢ — |
| VENT THRU ROOF | VTR | BACK FLOW PREVENTOR | — ⊙ — |
| UNDER FLOOR | UF | REGULATOR | Ⓡ |
| SANITARY SEWER | — — SS — — | CLEANOUT TO GRADE | COTG |
| PRIMARY ROOF DRAIN | — PRD — | MAKE-UP WATER | — MU — |
| SECONDARY ROOF DRAIN | — SRD — | SOFT WATER | — + + — |

PLUMBING GENERAL NOTES:

G-1 ALL PLUMBING SHALL BE INSTALLED AND CONFORM TO THE 2006 EDITION OF THE INTERNATIONAL PLUMBING CODE (IPC) WITH UTAH ANNOTATIONS AND DFCM REQUIREMENTS.

G-2 ALL PIPING MATERIALS SHALL MEET ALL REQUIREMENTS OF IPC AND LOCAL AUTHORITY. PLASTIC PIPING SHALL BE ALLOWED ONLY WHERE ALLOWED BY DFCM.

G-3 GAS PIPING INSTALLATION SHALL BE IN STRICT ACCORDANCE WITH GAS COMPANY REGULATIONS, NFPA CODE REQUIREMENTS, AND IGC.

G-4 ALL MATERIALS SHALL BE NEW AND SHALL BE DOMESTIC MADE UNLESS SPECIFICALLY APPROVED OTHERWISE IN WRITING BY ARCHITECT OR OWNER.

G-5 PROVIDE VACUUM BREAKERS AND BACK FLOW PREVENTERS WHERE REQUIRED BY CODE OR WHERE THERE MAY BE ANY POSSIBLE CHANCE FOR CROSS CONTAMINATION. PREVENTERS SHALL BE INSTALLED IN ACCORDANCE WITH IPC.

G-6 ALL PLUMBING INFORMATION IS NOT LIMITED TO THE PLUMBING DRAWINGS. CONTRACTOR SHALL BE RESPONSIBLE FOR INFORMATION ON ALL OTHER CONSTRUCTION DOCUMENTS INCLUDING SPECIFICATIONS, ARCHITECTURAL DRAWING, STRUCTURAL DRAWINGS, MECHANICAL DRAWINGS, AND ELECTRICAL DRAWINGS.

G-7 THE WORKING DRAWINGS ARE DIAGRAMMATIC. BECAUSE OF THE SMALL SCALE OF THE DRAWING, THEY DO NOT SHOW EVERY OFFSET, BEND OR ELBOW NECESSARY FOR THE COMPLETE INSTALLATION IN THE SPACE PROVIDED. ALL PIPING SHALL BE CHECKED AND COORDINATED WITH THE SPECIFICATIONS, ARCHITECTURAL, STRUCTURAL, MECHANICAL, AND ELECTRICAL DRAWINGS.

G-8 COORDINATE ALL PIPING AND PLUMBING EQUIPMENT WITH ALL OTHER TRADES AND/OR CONTRACTORS PRIOR TO INSTALLATION.

G-9 ANY AND ALL ALTERATIONS TO THE SYSTEM SHOWN SHALL BE SUBMITTED TO THE ENGINEER PRIOR TO CHANGES FOR APPROVAL. CONTRACTOR SHALL NOT START ANY CHANGES UNTIL NOTIFIED IN WRITING. IF CHANGES ARE MADE PRIOR TO APPROVAL CONTRACTOR SHALL TAKE ALL RESPONSIBILITY FOR THE CHANGES MADE AND ALL COSTS RELATING TO FAILURE OR REPLACEMENT OF ALTERATIONS.

G-10 GAS LINE FITTINGS SHALL BE STANDARD WELD AND SCREWED FITTINGS.

G-11 ALL WATER SYSTEMS SHALL MEET THE REQUIREMENTS OF ANSI/NSF STANDARD 61 SECTION 9 (1998), CONCERNING METAL CONTAMINANTS IN THE WATER SYSTEM.

G-12 WATER PIPING SHALL NOT BE ROUTED IN OUTSIDE WALLS OR ON EXTERIOR SIDE OF BUILDING INSULATION ENVELOPE.

TRACY STOCKING & ASSOCIATES


State of Utah
Department of Administrative Services

Division of Facilities Construction & Management
4110 State Office Building
Salt Lake City, Utah 84114
Phone: (801) 538 - 3018
Fax: (801) 538 - 3267

http://dfcm.utah.gov

CREATED BY:

WHW ENGINEERING INC.
PROFESSIONAL MECHANICAL ENGINEERING
8619 Sandy Parkway Suite 101
SANDY, UTAH 84070
(801)466-4021, FAX 466-8536
EMAIL: excellence@whw-engineering.com


BUILDING NAME:

Utah State Development Center
870 North 860 East
American Fork, Uath

PROJECT TITLE:

Boiler Replacement/ Building Repairs

| MARK | DATE | DESCRIPTION |
|---|---|---|

ISSUE TYPE: REVIEW

ISSUE DATE: MAY __, 2009

DFCM PROJECT NO: 08194410
CAD PROJECT NO:
CAD DWG FILE:
DRAWN BY: LGD
CHK'D BY: SLW
COPYRIGHT: STATE OF UTAH

SHEET TITLE

GENERAL NOTES AND LEGEND

SHEET NUMBER

PG001

SHEET NOTES:

26. 1" DROP TO BLOW DOWN SEPARATOR. SEE DETAIL C4/ME504.
27. DROP WATER LINE DOWN TO COLD WATER PRV STATION AND DISTRIBUTION HEADER. SEE DETAIL ISOMETRIC A3/PE901.
28. BACK FLOW PREVENTER WITH DRAIN.
29. DROP 1-1/2" SOFT WATER MAKE-UP TO CONDENSATE SURGE TANK. SEE ISOMETRIC A3/ME901.
30. 1-1/4"x1" TEE, 1" NIPPLE, 1" BALL VALVE, UNION, AND CAP FOR FUTURE CONNECTION.
31. 3/4"x3/4"x1/2" TEE, 1/2" NIPPLE, 1/2" BALL VALVE, UNION, AND CAP FOR FUTURE CONNECTION.
32. 1-1/2"x3/4" REDUCER.
33. 3/4"x1/2" REDUCER.
34. 1-1/4"x1" REDUCER.
35. EMERGENCY EYE WASH, HEATER, AND MIXING VALVE. SEE DETAIL B4/PE502.
36. 3" BLOWDOWN SEPARATOR VENT THRU ROOF.

SHEET NOTES:

19. 2" WATER LINE TO 5'-0" OUTSIDE BUILDING. SEE CIVIL OR ARCHITECTURAL SITE UTILITY PLAN FOR SOURCE AND TIE IN CONNECTION.
20. SEE ISOMETRICS SHEET PE901 FOR THIS AREA.
21. FLOOR DRAIN DROP IN MEZZANINE FLOOR ABOVE. SEE ME102 FOR DRAIN LOCATION
22. SOFTENERS(TWO) SEE PIPING ISOMETRIC B2/ME901.
23. BRINE TANK(ONE) SEE PIPING ISOMETRIC B2/ME901.
24. SEE ME101 FOR CONTINUATION OF GAS PIPING TO BOILERS. RISE UP WALL TO ELEVATION SHOWN ON ME101.
25. 1/2" DROP TO SAMPLE COOLER. SEE DETAIL A3/ME501.

SHEET NOTES:

12. ROUTE WATER PIPING A MINIMUM OF 12'-6" ABOVE FLOOR.
13. 3" PRIMARY ROOF DRAIN. SEE SHEET A103 FOR EXACT LOCATIONS.
14. 3" SECONDARY ROOF DRAIN. SEE SHEET A103 FOR EXACT LOCATIONS.
15. ROUTE 3" PRIMARY ROOF DRAIN AS HIGH AS POSSIBLE AND ROUTE ON SOUTH END OF BUILDING. SLOPE AT 1/8"/FT.
16. 4" PRIMARY ROOF DRAIN DROP. ROUTE TO 5'-0" OUTSIDE BUILDING. SEE SITE PLAN FOR CONTINUATION.
17. 2" PRIMARY ROOF DRAIN DROP AND ROUTE DOWN OUTSIDE WALL TO 12" ABOVE GRADE.
18. ROUTE 3" SECONDARY ROOF DRAIN LINE THRU WALL AND DAY LIGHT. SEE ARCHITECTURAL FOR DETAIL THRU WALL AND DETAIL B3/PE502.

SHEET NOTES:

6. RAISE UP GAS PIPING ON OUTSIDE OF BUILDING. PROVIDE EARTHQUAKE VALVE AND EXTEND THRU THE WALL. ROUTE GAS TO 5'-0" OUTSIDE BUILDING. SEE CIVIL OR ARCHITECTURAL SITE PLAN FOR CONTINUATION.
7. 3" DOME DRAINS AT BOTTOM OF TRENCH DRAIN. DOME SHALL BE CAST IRON. SLOPE BOTTOM OF TRENCH TO DRAINS.
8. ROUTE WATER PIPING UNDER MEZZANINE TO SOFTENER. SEE SOFTENER PIPING DETAIL B2/ME901.
9. PROVIDE HOSE BIBB HB-1 LOCATED ON TOP OF 3" HEADER.
10. ROUTE WATER PIPING UNDER MEZZANINE.
11. ROUTE VISIBLE VENT PIPING RISERS UP THRU MEZZANINE FLOOR UP WALL. CONNECT VENTS AS HIGH AS POSSIBLE.

SHEET NOTES:

1. NEW 8'-0" WIDE x 8'-0" HIGH TUNNEL SHALL CONNECT TO EXISTING TUNNEL. SEE ARCHITECTURAL FOR CONSTRUCTION DESIGN AND DETAILS OF TUNNEL. SEE SHEET ME203 FOR PIPING IN TUNNEL.
2. ROUTE 3" WASTE PIPING IN THE CEILING SPACE FROM DRAIN IN MEZZANINE.
3. DROP 3" WASTE PIPE DOWN WALL AS SHOWN.
4. OFFSET VENT AWAY FROM EDGE OF ROOF BEFORE PENETRATING ROOF SO VENT IS NOT VISIBLE.
5. 4" WASTE FROM NEW BOILER PLANT. TERMINATE 5'-0" FROM BUILDING WITH A COTG. SEE DETAIL A2/PE501. SEE CIVIL OR ARCHITECTURAL SITE PLAN FOR CONTINUATION.

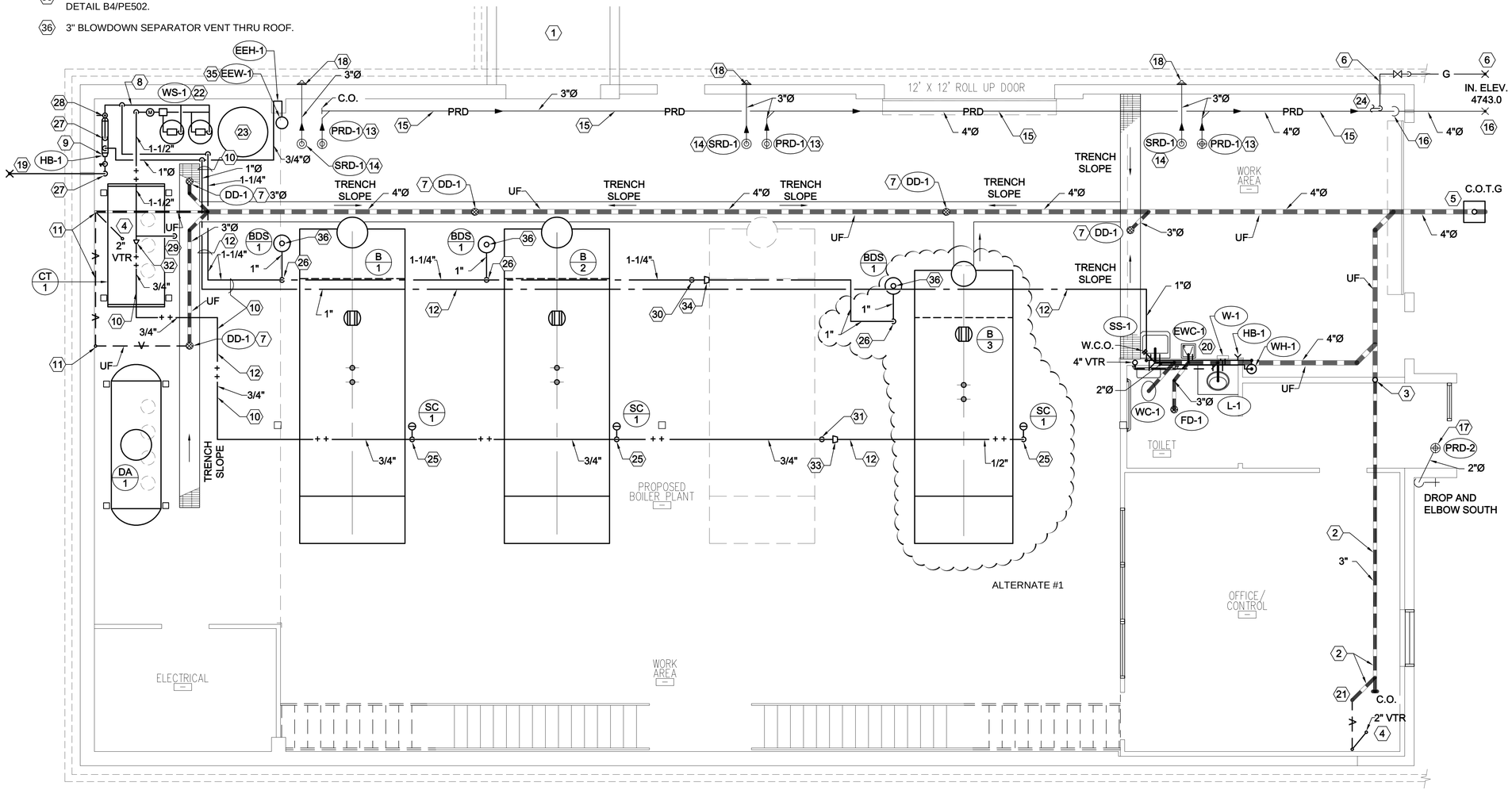


BOILER PLANT PLUMBING PLAN

SCALE: 1/4" = 1'-0"

TRACY STOCKING & ASSOCIATES


State of Utah
Department of Administrative Services

Division of Facilities Construction & Management
4110 State Office Building
Salt Lake City, Utah 84114
Phone: (801) 538 - 3018
Fax: (801) 538 - 3267

http://dfcm.utah.gov

CREATED BY:

WHW ENGINEERING INC.
PROFESSIONAL MECHANICAL ENGINEERING
8619 Sandy Parkway Suite 101
SANDY, UTAH 84070
(801)466-4021, FAX 466-8536
EMAIL: excellence@whw-engineering.com


BUILDING NAME:

Utah State Development Center
870 North 860 East
American Fork, Uath

PROJECT TITLE:

Boiler Replacement/ Building Repairs

| MARK | DATE | DESCRIPTION |
|---|---|---|

ISSUE TYPE: REVIEW

ISSUE DATE: MAY __, 2009

DFCM PROJECT NO: 08194410
CAD PROJECT NO:
CAD DWG FILE:
DRAWN BY: LGD
CHK'D BY: SLW
COPYRIGHT: STATE OF UTAH

SHEET TITLE

BOILER PLANT PLUMBING PLAN

SHEET NUMBER

PE101

SHEET NOTES:

11. DO NOT CUT HOLE FOR FUTURE BOILER STACK SHOWN AS FYI ONLY.
12. 4" RELIEF VALVE ROOF PENETRATIONS FROM DEAERATOR. SEE ARCHITECTURAL FOR DETAILS OF ROOF PENETRATIONS. SEE DETAIL A2/PE502 FOR DETAILS OF RELIEF VALVE PIPING ABOVE ROOF AND PIPING TERMINATION.
13. 3" VENT LINE PENETRATIONS THRU ROOF FROM BLOWDOWN SEPARATORS. SEE ARCHITECTURAL FOR DETAILS OF ROOF PENETRATIONS. SEE DETAIL A2/PE502 FOR DETAIL OF VENT PIPING ABOVE ROOF AND TERMINATION.
14. GAS VENT LINE PENETRATION THRU ROOF FROM GAS TRAIN. SEE ARCHITECTURAL FOR DETAILS OF ROOF PENETRATIONS.

ALTERNATE #1

SHEET NOTES:

7. 20" BOILER STACK FROM BOILER #3. COORDINATE ROOF OPENING SIZE WITH BOILER PURCHASED AND EXACT LOCATION OF BOILER. SEE ARCHITECTURAL ROOF PLAN DRAWINGS FOR ROOF PENETRATION DETAILS.
8. 24" BOILER STACK FROM BOILER #1 & #2. COORDINATE ROOF OPENING SIZE WITH BOILER PURCHASED AND EXACT LOCATION OF BOILER. SEE ARCHITECTURAL ROOF PLAN DRAWINGS FOR ROOF PENETRATION DETAILS.
9. 4" & 3" RELIEF VALVE ROOF PENETRATIONS FROM BOILERS. SEE ARCHITECTURAL ROOF PLAN FOR DETAILS ON ROOF PENETRATIONS. SEE DETAIL A2/PE502 FOR DETAIL OF RELIEF VALVE PIPING ABOVE ROOF AND PIPING TERMINATION.
10. 3" VENT FROM CONDENSATE SURGE TANK. SEE ARCHITECTURAL DRAWINGS FOR DETAILS OF PIPING PENETRATIONS THRU ROOF.

SHEET NOTES:

1. 3" PRIMARY ROOF DRAIN, SEE SCHEDULE SHEET PE501 AND ARCHITECTURAL ROOF PLAN FOR EXACT LOCATIONS AND DETAILS OF INSTALLATION.
2. 3" SECONDARY ROOF DRAIN, SEE SCHEDULE SHEET PE501 AND ARCHITECTURAL ROOF PLAN FOR EXACT LOCATION AND DETAILS OF INSTALLATION.
3. TERMINATE SECONDARY ROOF DRAIN LINE THRU PARAPET TO DRAIN NOZZLE EQUAL TO ZURN Z-199. SEE DETAIL B3/PE502.
4. SEE SHEET PE101 FOR CONTINUATION OF 3" DROP THRU ROOF.
5. OPENING IN PARAPET WALL WILL ACT AS SECONDARY DRAIN. INSTALL OPENING 2" ABOVE PRIMARY DRAIN.
6. 2" PRIMARY ROOF DRAIN. SEE CONTINUATION OF 2" DROP THRU ROOF ON SHEET PE101.

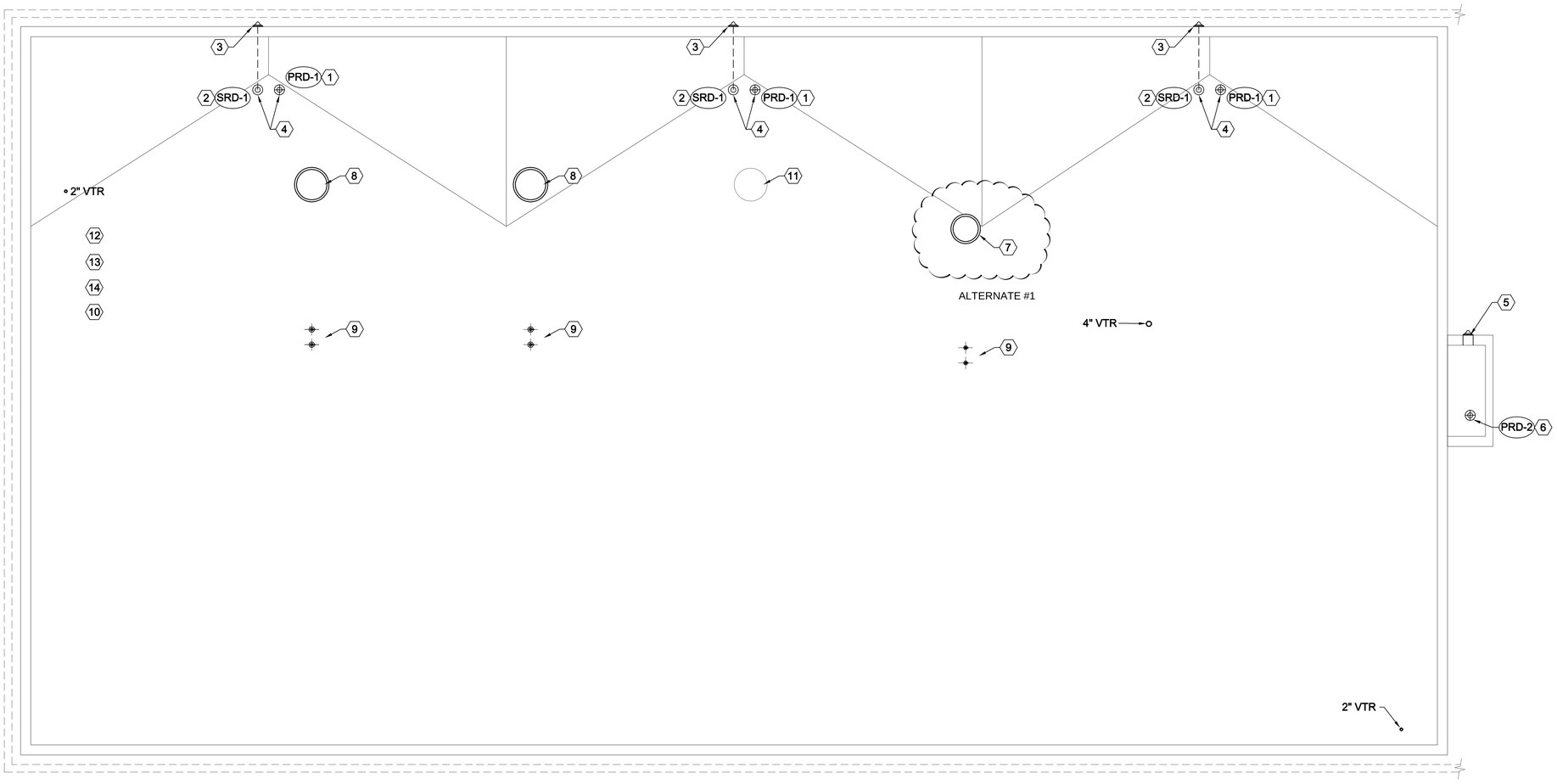


BOILER PLANT ROOF PLAN
SCALE: 1/4" = 1'-0"

TRACY STOCKING & ASSOCIATES


State of Utah
Department of Administrative Services
Division of Facilities Construction & Management
4110 State Office Building
Salt Lake City, Utah 84114
Phone: (801) 538 - 3018
Fax: (801) 538 - 3267
http://dfcm.utah.gov

CREATED BY:
WHW ENGINEERING INC.
PROFESSIONAL MECHANICAL ENGINEERING
8619 Sandy Parkway Suite 101
SANDY, UTAH 84070
(801)466-4021, FAX 466-8536
EMAIL: excellence@whw-engineering.com


BUILDING NAME:
Utah State Development Center
870 North 860 East
American Fork, Uath

PROJECT TITLE:
Boiler Replacement/ Building Repairs

| MARK | DATE | DESCRIPTION |
|---|---|---|

ISSUE TYPE: REVIEW

ISSUE DATE: MAY __, 2009

DFCM PROJECT NO: 08194410
CAD PROJECT NO:
CAD DWG FILE:
DRAWN BY: LGD
CHK'D BY: SLW
COPYRIGHT: STATE OF UTAH

SHEET TITLE
BOILER PLANT ROOF PLAN

SHEET NUMBER
PE102

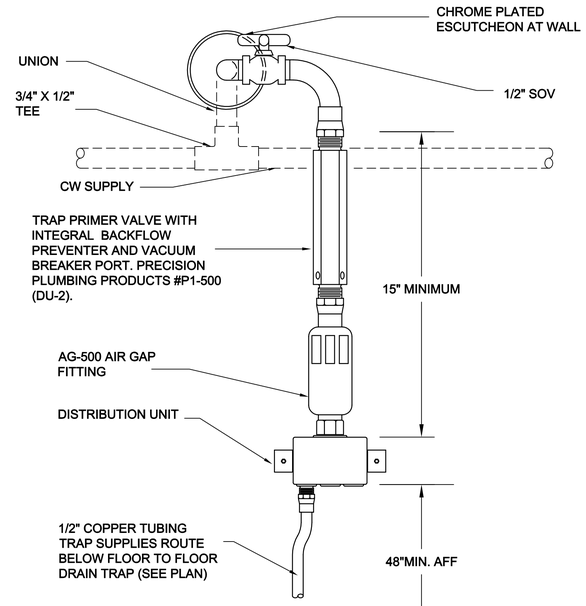


C1 TRAP PRIMER DETAIL
SCALE: NONE

## WATER HEATER SCHEDULE

| SYMBOL | MAXIMUM KW/ BTUH | GPH RECOVERY 90°F | STORAGE CAPACITY | RELIEF VALVE | | COMMENTS |
|---|---|---|---|---|---|---|
| | | | | BTU RATING | PRESSURE | |
| WH-1 | 3 KW/3,000 | 14 | 5 GALLONS | PER MANUFACTURERS RECOMMENDATIONS | | A.O. SMITH MODEL DSE-5 |
| EEH-1 | 8-40 AMP BREAKER | - | - | PER MANUFACTURERS RECOMMENDATIONS | | CHRONOMITE MODEL-E-80EW |

1. 208/3Ø/60 - FLCA - 8.3

## PLUMBING FIXTURE SCHEDULE

| SYMBOL | FIXTURE | INDIVIDUAL LINE SIZES | | | | | REMARKS |
|---|---|---|---|---|---|---|---|
| | | TRAP | WASTE | VENT | COLD WATER | HOT WATER | |
| WC-1 | WATER CLOSET | INT | 3" | 2" | 1" | - | FLOOR MOUNTED, FLUSH VALVE. |
| L-1 | LAVATORY | 1-1/4" | 1-1/4" | 1-1/2" | 1/2" | 1/2" | CABINET MOUNTED |
| SS-1 | SERVICE SINK | 3" | 3" | 2" | 3/4" | 3/4" | WALL MOUNTED/FAUCET W/ VACUUM BREAKER |
| EWC-1 | ELECTRIC WATER COOLER | 1-1/4" | 1-1/4" | 1-1/2" | 1/2" | - | WALL MTD. ADA ACCESSABLE |
| FD-1 | FLOOR DRAIN | 3" | 3" | 2" | - | - | PROVIDE WITH TRAP PRIMER SEE DETAIL A3 THIS SHEET |
| HB-1 | HOSE BIB | - | - | - | 3/4" | - | INTERIOR. |
| DD-1 | DOME DRAIN | 3" | 3" | - | - | - | LOCATED IN TRENCH DRAIN |
| PRD-1 | PRIMARY ROOF DRAIN | - | 3" | - | - | - | C.I. SEE DETAIL ON ARCHITECTURAL DRAWINGS |
| PRD-2 | PRIMARY ROOF DRAIN | - | 2" | - | - | - | C.I. SEE DETAIL ON ARCHITECTURAL DRAWINGS |
| SRD-1 | SECONDARY ROOF DRAIN | - | 3" | - | - | - | C.I. SEE DETAIL ON ARCHITECTURAL DRAWINGS |
| EEW-1 | EMERGENCY EYE WASH | - | INDIRECT 1-1/4 | - | 1" | - | C/W MIXING VALVE AND HEATER |
| W-1 | WASHER FITTING | - | 2" | 1-1/2" | 1/2" | 1/2" | GUY-GRAY WALL MOUNTED |

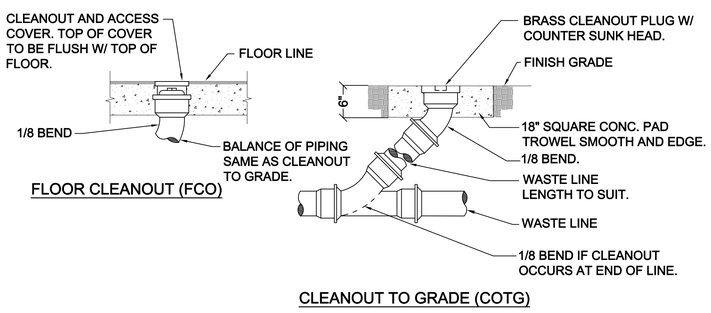


A2 CLEAN-OUT DETAILS
SCALE: NONE

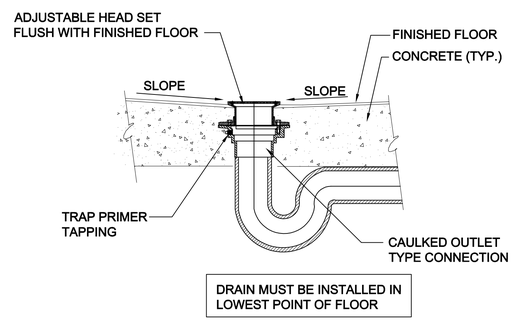


A3 FLOOR DRAIN DETAIL
SCALE: NONE

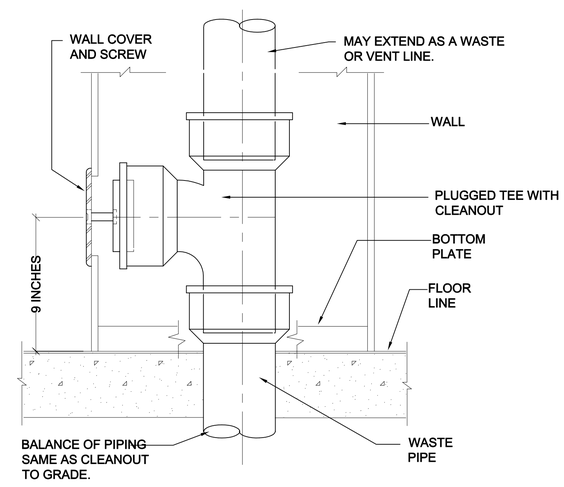


A4 WALL CLEAN-OUT DETAIL
SCALE: NONE

TRACY STOCKING & ASSOCIATES


State of Utah
Department of Administrative Services
Division of Facilities Construction & Management
4110 State Office Building
Salt Lake City, Utah 84114
Phone: (801) 538 - 3018
Fax: (801) 538 - 3267
http://dfcm.utah.gov

CREATED BY:
WHW ENGINEERING INC.
PROFESSIONAL MECHANICAL ENGINEERING
8619 Sandy Parkway Suite 101
SANDY, UTAH 84070
(801)466-4021, FAX 466-8536
EMAIL: excellence@whw-engineering.com


BUILDING NAME:
Utah State Development Center
870 North 860 East
American Fork, Uath

PROJECT TITLE:
Boiler Replacement/ Building Repairs

| MARK | DATE | DESCRIPTION |
|---|---|---|

ISSUE TYPE: REVIEW
ISSUE DATE: MAY __, 2009
DFCM PROJECT NO: 08194410
CAD PROJECT NO:
CAD DWG FILE:
DRAWN BY: LGD
CHK'D BY: SLW
COPYRIGHT: STATE OF UTAH

SHEET TITLE
PLUMBING DETAILS & SCHEDULES

SHEET NUMBER
PE501

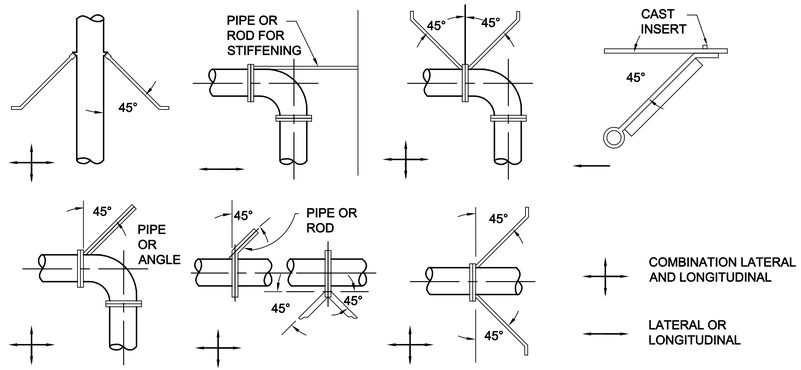


C1 SEISMIC SWAY BRACING DETAILS
SCALE: NONE

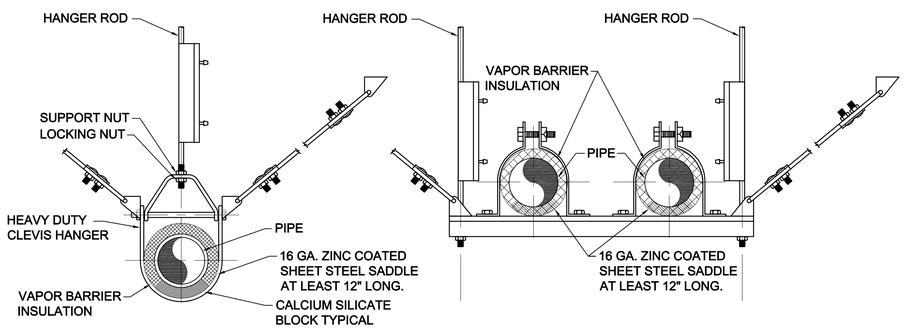


B1 SEISMIC SWAY BRACING DETAILS
SCALE: NONE

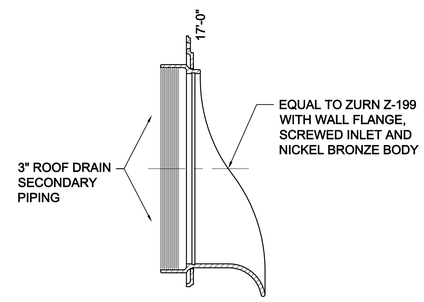


B3 THREADED DOWN SPOUT
SCALE: NONE

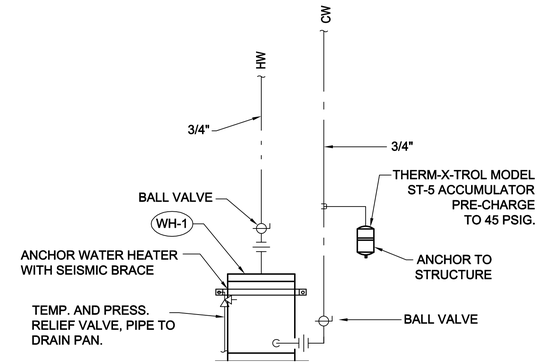


C4 ELECTRIC WATER HEATER DETAIL
SCALE: NONE

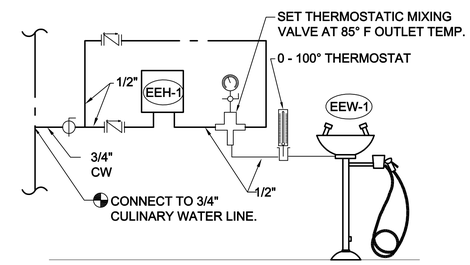


B4 EMERGENCY EYE WASH DETAIL
SCALE: NONE

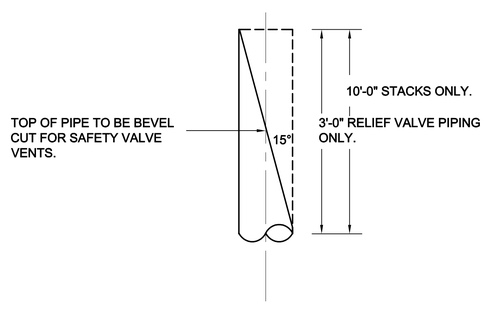


A2 RELIEF PIPING TERMINATION DETAIL
SCALE: NONE

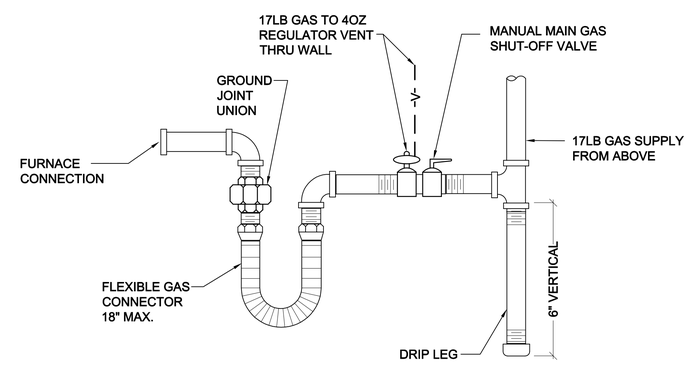


A3 GAS LINE CONNECTION DETAIL
SCALE: NONE

TRACY STOCKING & ASSOCIATES


State of Utah
Department of Administrative Services
Division of Facilities Construction & Management
4110 State Office Building
Salt Lake City, Utah 84114
Phone: (801) 538 - 3018
Fax: (801) 538 - 3267
http://dfcm.utah.gov

CREATED BY:
WHW ENGINEERING INC.
PROFESSIONAL MECHANICAL ENGINEERING
8619 Sandy Parkway Suite 101
SANDY, UTAH 84070
(801)466-4021, FAX 466-8536
EMAIL: excellence@whw-engineering.com


BUILDING NAME:
Utah State Development Center
870 North 860 East
American Fork, Uath

PROJECT TITLE:
Boiler Replacement/ Building Repairs

| MARK | DATE | DESCRIPTION |
|---|---|---|

ISSUE TYPE: REVIEW

ISSUE DATE: MAY __, 2009

DFCM PROJECT NO: 08194410
CAD PROJECT NO:
CAD DWG FILE:
DRAWN BY: LGD
CHK'D BY: SLW
COPYRIGHT: STATE OF UTAH

SHEET TITLE
PLUMBING DETAILS & SCHEDULES

SHEET NUMBER
PE502

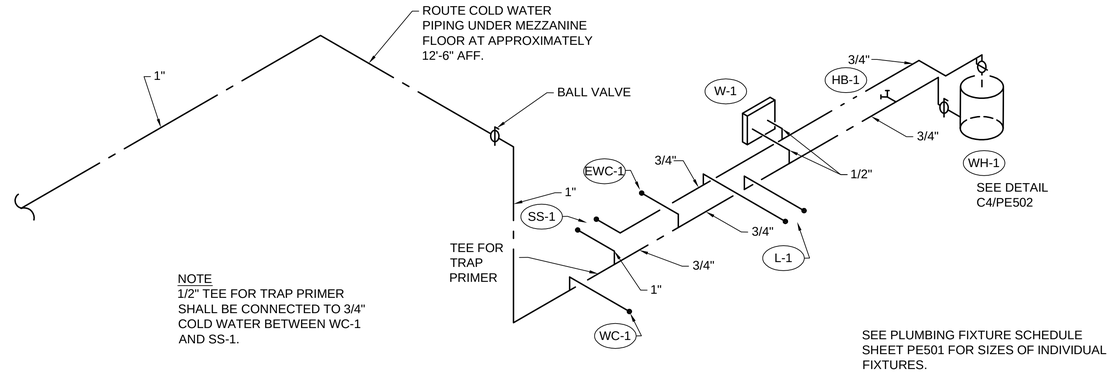


NOTE
1/2" TEE FOR TRAP PRIMER SHALL BE CONNECTED TO 3/4" COLD WATER BETWEEN WC-1 AND SS-1.

SEE PLUMBING FIXTURE SCHEDULE SHEET PE501 FOR SIZES OF INDIVIDUAL FIXTURES.

## C3 WATER ISOMETRIC AT RESTROOM AREA

SCALE: NONE

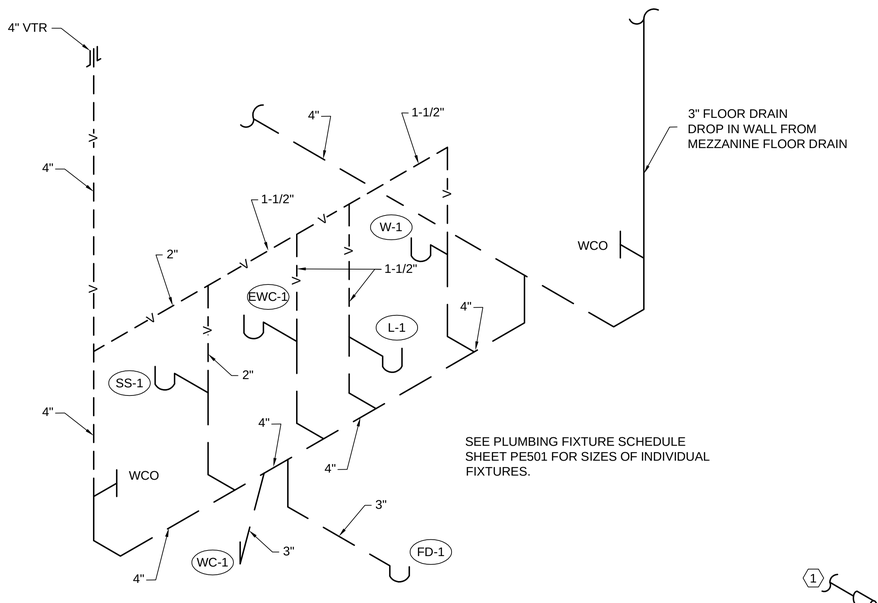


SEE PLUMBING FIXTURE SCHEDULE SHEET PE501 FOR SIZES OF INDIVIDUAL FIXTURES.

## B1 SEWER AND VENT ISOMETRIC AT RESTROOM AREA

SCALE: NONE

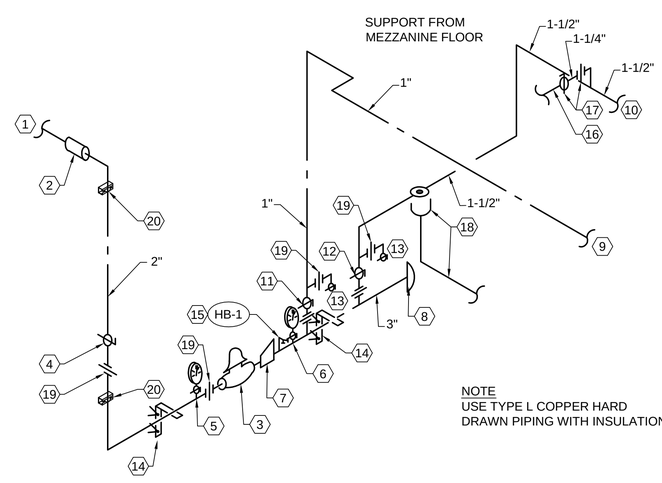


NOTE
USE TYPE L COPPER HARD DRAWN PIPING WITH INSULATION.

## A3 WATER PRV STATION ISOMETRIC

SCALE: NONE

WATER PRV SHEET NOTES:

1. 2" WATER SUPPLY TO BOILER PLANT. SEE CIVIL SITE UTILITY PLAN FOR SOURCE.
2. SLEEVE THRU WALL AIR AND WATER TIGHT.. SEE SPECIFICATIONS.
3. WATER PRV WITH INTEGRAL STRAINER. PRV TO REDUCE UPSTREAM PRESSURE TO 65 PSIG DOWNSTREAM PRESSURE.
4. MAIN BUILDING 2" SHUT-OFF BALL VALVE.
5. PRESSURE GAUGE WITH 0 TO 150 PSIG C/W GAUGE COCK.
6. PRESSURE GAUGE WITH VALVE 0 TO 100 PSIG C/W GAUGE COCK.
7. 3"x2" REDUCER.
8. 3" CAP.
9. 1"Ø TO PLUMBING FIXTURES. SEE SHEET PE101 FOR CONTINUATION.
10. 1-1/2" TO WATER SOFTENER. SEE PE101 FOR CONTINUATION.
11. 1" BALL VALVE.
12. 1-1/2" BALL VALVE.
13. 1/2" DRAIN AND BALL VALVE.
14. SUPPORT FROM WALL. USE 3/4" EXPANSION CONCRETE BOLTS.
15. HOSE BIBB 3/4".
16. 1-1/4" WATER PIPING TO BLOWDOWN SEPARATORS. SEE SHEET PE101 FOR CONTINUATION.
17. 1-1/4" BALL VALVE AND UNION.
18. BACK FLOW PREVENTOR WITH DRAIN LINE TO TRENCH DRAIN.
19. UNIONS - TYPICAL.
20. CLAMP PIPING TO WALL. SEE DETAIL C1/ME501.

TRACY STOCKING & ASSOCIATES


State of Utah
Department of Administrative Services
Division of Facilities Construction & Management
4110 State Office Building
Salt Lake City, Utah 84114
Phone: (801) 538 - 3018
Fax: (801) 538 - 3267
http://dfcm.utah.gov

CREATED BY:
WHW ENGINEERING INC.
PROFESSIONAL MECHANICAL ENGINEERING
8619 Sandy Parkway Suite 101
SANDY, UTAH 84070
(801)466-4021, FAX 466-8536
EMAIL: excellence@whw-engineering.com


BUILDING NAME:
Utah State Development Center
870 North 860 East
American Fork, Uath

PROJECT TITLE:
Boiler Replacement/ Building Repairs

| MARK | DATE | DESCRIPTION |
|---|---|---|

ISSUE TYPE: REVIEW

ISSUE DATE: MAY __, 2009

DFCM PROJECT NO: 08194410
CAD PROJECT NO:
CAD DWG FILE:
DRAWN BY: LGD
CHK'D BY: SLW
COPYRIGHT: STATE OF UTAH

SHEET TITLE
PLUMBING ISOMETRICS

SHEET NUMBER
PE901

## LIGHTING SYMBOLS

1. LIGHT FIXTURE SYMBOLS ARE GENERAL IN NATURE AND MAY BE SHOWN ON THE DRAWINGS IN VARIOUS SIZES AND SHAPES. REFER TO THE LIGHT FIXTURE SCHEDULE FOR SPECIFICATION INFORMATION.
2. ARROWS INDICATE AIMING DIRECTION.

| SYMBOL | DESCRIPTION | MOUNTING | REMARKS |
|---|---|---|---|
| | ARM-MOUNTED SINGLE-HEAD LIGHT FIXTURE AND POLE | AS SPECIFIED OR DETAILED | |
| | ARM-MOUNTED DOUBLE-HEAD LIGHT FIXTURE AND POLE | AS SPECIFIED OR DETAILED | |
| | POST-TOP SINGLE-HEAD, LIGHT FIXTURE AND POLE | AS SPECIFIED OR DETAILED | |
| | WALL-MOUNTED FIXTURE | AS SPECIFIED OR DETAILED | REFER TO ARCHITECTURAL EXTERIOR ELEVATIONS FOR MOUNTING HEIGHT |
| | LIGHT BOLLARD | AS SPECIFIED OR DETAILED | |
| | FLOOD LIGHT | AS SPECIFIED OR DETAILED | |
| | RECESSED WALL FIXTURE OR STEP LIGHT | AS SPECIFIED OR DETAILED | REFER TO ARCHITECTURAL EXTERIOR ELEVATIONS FOR MOUNTING HEIGHT |
| | FLUORESCENT LIGHT FIXTURES | AS SPECIFIED OR DETAILED | |
| | PARABOLIC - LOUVERED LIGHT FIXTURES | AS SPECIFIED OR DETAILED | |
| | RECESSED INDIRECT FLUORESCENT LIGHT FIXTURES | AS SPECIFIED OR DETAILED | |
| | WALL-MOUNTED LINEAR FLUORESCENT LIGHT FIXTURE | AS SPECIFIED OR DETAILED | |
| | FLUORESCENT LINEAR WALL WASHER | AS SPECIFIED OR DETAILED | |
| | RECESSED DOWN LIGHT | AS SPECIFIED OR DETAILED | |
| | RECESSED WALL-WASHER OR DIRECTIONAL DOWNLIGHT | AS SPECIFIED OR DETAILED | IF SHOWN, ARROW INDICATES AIMING DIRECTION |
| | SURFACE OR PENDANT-MOUNTED LIGHT FIXTURE | AS SPECIFIED OR DETAILED | |
| | WALL-MOUNTED LIGHT FIXTURE | AS SPECIFIED OR DETAILED | REFER TO ARCHITECTURAL EXTERIOR ELEVATIONS FOR MOUNTING HEIGHT |
| | TRACK OR MONO-POINT LIGHT FIXTURE | AS SPECIFIED OR DETAILED | IF SHOWN, ARROW INDICATES AIMING DIRECTION |
| | WALL SCONCE | AS SPECIFIED OR DETAILED | |
| | FLUORESCENT EGRESS LIGHT FIXTURE | AS SPECIFIED OR DETAILED | THIS IS AN EXAMPLE OF AN EGRESS LIGHT FIXTURE. EGRESS LIGHT FIXTURES ARE HALF-SHADED DIAGONALLY. |
| | FLUORESCENT EMERGENCY (NON-EGRESS) LIGHT FIXTURE | AS SPECIFIED OR DETAILED | THIS IN AN EXAMPLE OF AN EMERGENCY (NON-EGRESS) LIGHT FIXTURE. EMERGENCY FIXTURES ARE FULLY-SHADED. |
| | CEILING MOUNTED EXIT SIGN | CEILING | DARKENED PORTION OF SIGN INDICATES FACE(S); ARROW(S) INDICATE CHEVRON DIRECTION(S) |
| | WALL-MOUNTED EXIT SIGN | WALL ABOVE DOOR | |
| | WALL-MOUNTED EXIT SIGN W/ EMERGENCY LIGHT FIXTURE | WALL ABOVE DOOR | |
| TC | TIME CLOCK | | |
| | EMERGENCY LIGHT FIXTURE | AS NOTED | |
| S | LIGHT SENSOR | ON CEILING | |
| P | ELECTRIC PHOTOCELL | N/A | MOUNT ON ROOF FACING NORTH SKY |
| XX | LIGHT FIXTURE CALLOUT (LETTER DENOTES FIXTURE TYPE) | | |

## TELEPHONE / DATA SYMBOLS

| SYMBOL | DESCRIPTION | MOUNTING | REMARKS |
|---|---|---|---|
| | TELEPHONE OUTLET | +18" | |
| | DATA OUTLET | +18" | |
| | COMBINATION TELEPHONE/DATA OUTLET | +18" | |
| | TELEPHONE TERMINAL BOARD | TOP AT 72" | |

## FIRE ALARM SYMBOLS

| SYMBOL | DESCRIPTION | MOUNTING | REMARKS |
|---|---|---|---|
| | | | |
| FSD | FIRE/SMOKE DAMPER | TOP AT 72" | |
| H | HEAT DETECTOR | CEILING | |
| S | SMOKE DETECTOR | CEILING | |
| S | DUCT SMOKE DETECTOR | SIDE OF DUCT | |
| F | FIRE ALARM MANUAL STATION | +48" | |
| Z | CONTROL MODULE | AT DEVICE(S) TO BE CONTROLLED | |
| I | MONITOR MODULE | AT DEVICE(S) TO MONITOR | |
| H | AUDIO HORN | MOUNT AT LESSOR OF EITHER 80" AFF OR 6" BELOW CEILING. | SUBSCRIPT 'WP' INDICATES THAT A WEATHER PROOF BACK BOX IS REQ. SUBSCRIPT 'C' INDICATES CEILING MOUNTING. NUMERIC SUBSCRIPT INDICATES CANDELLA RATING OF STROBE (I.E. - 15, 75, 110) |
| H | MINI AUDIO HORN | | |
| S | FIRE ALARM VISUAL STROBE | | |
| S | FIRE ALARM AUDIO/VISUAL HORN/STROBE | | |
| H | MINI AUDIO/VISUAL HORN/STROBE | | |
| | | | |

## ELECTRICAL SYMBOL SCHEDULE GENERAL NOTES

1. MOUNT ALL OUTLETS, DEVICES, AND EQUIPMENT AT HEIGHTS INDICATED BELOW, UNLESS NOTED OTHERWISE ON THE DRAWINGS. UNLESS NOTED OTHERWISE, HEIGHTS ARE GIVEN FROM FINISHED FLOOR TO CENTER OF OUTLET BOX.
2. WHERE OUTLETS, DEVICES, AND EQUIPMENT ARE NOTED BY SUBSCRIPTS, REFER TO ABBREVIATION SCHEDULE FOR DEFINED REQUIREMENTS.
3. WHERE OUTLETS, DEVICES AND EQUIPMENT ARE NOTED BY THE SUBSCRIPT 'A', MOUNT AT 4" ABOVE COUNTER. IF COUNTER HAS A BACK SPLASH, MOUNT AT 4" ABOVE BACK SPLASH. REFER TO ARCHITECTURAL INTERIOR ELEVATIONS AND COORDINATE WITH CASEWORK SUPPLIER.
4. NOT ALL ELECTRICAL SYMBOLS MAY BE USED.

## GENERAL SYMBOLS

| SYMBOL | DESCRIPTION | REMARKS |
|---|---|---|
| XX | KEYED NOTE | |
| 1 E-1 | DETAIL REFERENCE | TOP NUMBER INDICATES DETAIL NUMBER; BOTTOM LETTER-NUMBER INDICATES DRAWING SHEET WHERE DETAIL IS SHOWN; WHERE NOT SPECIFICALLY REFERENCED, DETAIL IS GENERAL IN NATURE AND SHALL APPLY WHERE APPLICABLE. |
| 2 E-2 | ELEVATION REFERENCE | TOP NUMBER INDICATES ELEVATION NUMBER; BOTTOM LETTER-NUMBER INDICATES WHERE ELEVATION IS SHOWN. |
| 3 E-3 | SECTION REFERENCE | TOP NUMBER INDICATES SECTION NUMBER; BOTTOM LETTER NUMBER INDICATES WHERE SECTION IS SHOWN. |
| 100 | ARCHITECTURAL ROOM NUMBER | |
| AHU 1 | EQUIPMENT NAME / NUMBER | TOP NUMBER ABBREVIATES EQUIPMENT NAME OR TYPE; BOTTOM NUMBER INDICATES EQUIPMENT NUMBER. REFER TO EQUIPMENT SCHEDULE. |
| 1 | REVISION NUMBER | USED TO DENOTE CHANGES EITHER ISSUED BY ADDENDUM OR DURING CONSTRUCTION AND TO DENOTE RECORD DRAWING CHANGES. |
| | BREAKLINE | USED TO BREAK DRAWINGS. |

## BRANCH CIRCUITING SYMBOLS

| SYMBOL | DESCRIPTION | REMARKS |
|---|---|---|
| | 1 CIRCUIT, 2 WIRE BRANCH CIRCUIT HOME RUN TO PANEL | ARROWS: NUMBER OF ARROWS INDICATES NUMBER OF CIRCUITS REQUIRED. SHORT CROSS LINES: NUMBER OF SHORT CROSS LINES INDICATES NUMBER OF PHASE, TRAVELER, AND/OR SWITCHED CONDUCTORS REQUIRED IF GREATER THAN 1 (ONE). LONG CROSS LINES: NUMBER OF LONG CROSS LINES INDICATES NUMBER OF NEUTRAL CONDUCTORS REQUIRED FOR MULTI-WIRE HOME RUNS. EQUIPMENT GROUND AND ISOLATED GROUND CONDUCTORS: EQUIPMENT GROUND AND ISOLATED GROUND CONDUCTORS ARE NOT SHOWN, BUT ARE REQUIRED AS NOTED ON THE DRAWINGS OR IN THE SPECIFICATIONS. |
| | 2 CIRCUIT, 3 WIRE BRANCH CIRCUIT HOME RUN TO PANEL | |
| | 3 CIRCUIT, 4 WIRE BRANCH CIRCUIT HOME RUN TO PANEL | |
| | MULTIPLE WIRE BRANCH CIRCUITING BETWEEN FIXTURES, SWITCHES, DEVICES, ETC. | |
| | BRANCH CIRCUITING (U.N.O.) TURNED UP OR TOWARDS OBSERVER. | |
| | BRANCH CIRCUITING (U.N.O.) TURNED DOWN OR AWAY FROM OBSERVER. | |
| | BRANCH CIRCUITING (U.N.O.) CONTINUATION | |
| | CONDUIT STUB-IN | CAP AND MARK |
| | INCOMING SERVICE | |
| J | JUNCTION BOX | MOUNT AS NOTED. SUBSCRIPT 'F' INDICATES TO PROVIDE A FLOOR BOX WITH BLANK COVERPLATE |

## ELECTRONIC SYSTEM GENERAL SYMBOLS

| SYMBOL | DESCRIPTION | MOUNTING | REMARKS |
|---|---|---|---|
| PANEL NAME | ELECTRONIC SYSTEM PANELBOARD (SURFACE MOUNT) | TOP AT 72" | ELECTRONIC SYSTEMS MAY INCLUDE BUT ARE NOT SPECIFICALLY LIMITED TO, TELEPHONE, DATA, TELEVISION, LIGHTING CONTROL, CLOCKS, FIRE ALARM, ACCESS CONTROL, SECURITY, CCTV, SOUND SYSTEM, NURSE CALL, OR INTERCOM. |
| PANEL NAME | ELECTRONIC SYSTEM PANELBOARD (FLUSH MOUNT) | TOP AT 72" | |
| | ELECTRONIC SYSTEM TERMINAL BOARD | TOP AT 72" | |

## ELECTRICAL SHEET INDEX


| | |
|---|---|
| EG001 | SYMBOL SCHEDULE |
| EG002 | SYMBOL & LIGHT FIXTURE SCHEDULE |
| ES101 | SITE PLAN |
| EL101 | MAIN LEVEL LIGHTING PLAN |
| EL102 | UPPER LEVEL LIGHTING PLAN |
| EP101 | POWER PLAN |
| EP601 | EQUIPMENT SCHEDULE |
| EP701 | ONE-LINE DIAGRAM |
| EP801 | PANEL SCHEDULES |
| EP802 | PANEL SCHEDULES |


## ABBREVIATION SCHEDULE

NOTE: NOT ALL ABBREVIATIONS MAY BE USED.

| | | | |
|---|---|---|---|
| A | ABOVE COUNTER | ISO | ISOLATED |
| A | AMP OR AMPS | KVA | KILO VOLT AMPERES |
| ADJ | ADJACENT | KW | KILOWATTS |
| AFF | ABOVE FINISHED FLOOR | LFMC | LIQUID-TIGHT METAL CONDUIT |
| AHJ | AUTHORITY HAVING JURISDICTION | LFNC | LIQUID-TIGHT NONMETAL CONDUIT |
| AL | ALUMINUM | MCA | MINIMUM CIRCUIT AMPS |
| C | CONDUIT | MLO | MAIN LUGS ONLY |
| CB | CIRCUIT BREAKER | N.C. | NORMALLY CLOSED |
| CKT | CIRCUIT | N.I.C. | NOT IN CONTRACT |
| C.O.'S | CONVENIENCE OUTLETS | NL. | NIGHT LIGHT |
| CU | COPPER | N.O. | NORMALLY OPEN |
| EA | EACH | O.C. | ON CENTER(S) |
| ELEC | ELECTRICAL | OCP | OVER CURRENT PROTECTION |
| EM | EMERGENCY | QTY | QUANTITY |
| EMT | ELECTRIC METALLIC TUBING | R | REMOVE |
| ENT | ELECTRIC NONMETALLIC TUBING | REQ. | REQUIREMENTS |
| EQUIP | EQUIPMENT | RMC | RIGID METAL CONDUIT |
| EWC | ELECTRIC WATER COOLER | RNC | RIGID NONMETALLIC CONDUIT |
| E. EX | EXISTING | RR | REMOVE AND RELOCATE |
| EXP | EXPLOSION PROOF | SS | SURGE SUPPRESSION |
| FA | FIRE ALARM | SCP | SECURITY CONTROL PANEL |
| FACP | FIRE ALARM CONTROL PANEL | TR | TAMPER RESISTANT |
| FLA | FULL LOAD AMPS | TYP | TYPICAL |
| FMC | FLEXIBLE METAL CONDUIT | TVSS | TRANSIENT VOLTAGE SURGE SUPPRESSOR |
| FOB | FREIGHT ON BOARD | UF | UNDER FLOOR |
| GND | GROUND CONDUCTOR | UG | UNDERGROUND |
| HOA | HAND-OFF-AUTO | U.N.O. | UNLESS NOTED OTHERWISE |
| HP | HORSE POWER | W/ | WITH |
| IG | ISOLATED GROUND | WP | WEATHER PROOF |
| IMC | INTERMEDIATE METAL CONDUIT | XFMR | TRANSFORMER |
| INS | INSULATED | | |

## GENERAL PROJECT NOTES:

1. DIVISION 26000 CONTRACTOR IS RESPONSIBLE FOR READING AND APPLYING WHAT IS IN THE SPECIFICATIONS TO THIS PROJECT. ANYTHING THAT IS NOT INCLUDED ON THE PROJECT THAT IS CALLED OUT IN THE SPECIFICATION SHALL BE LISTED ON THE SUBSTANTIAL COMPLETION PUNCHLIST. THE CONTRACTOR WILL BE REQUIRED TO REMEDY THESE DEFICIENCIES WITHOUT ADDITIONAL COSTS TO OWNER. THERE WILL BE NO EXCEPTIONS.
2. THE CONTRACTOR MAY SCHEDULE A PRE-CONSTRUCTION MEETING , AT THEIR DISCRETION, WITH THE ELECTRICAL ENGINEER TO REVIEW THE DRAWINGS AND SPECIFICATIONS. THE MEETING SHALL BE A MAXIMUM OF ONE HOUR AND SHALL TAKE PLACE AT THE ENGINEER'S OFFICE.
3. THE FOLLOWING ITEMS ARE SOME OF THE REQUIREMENTS THAT ARE LISTED IN THE SPECIFICATIONS. THESE ITEMS ARE NOT ALL INCLUSIVE, AND THE CONTRACTOR IS RESPONSIBLE FOR COMPLIANCE TO ALL REQUIREMENTS OF THE SPECIFICATIONS:
   - A. INSULATED THROAT CONNECTORS OR PLASTIC BUSHINGS SHALL BE UTILIZED FOR ALL CONDUIT SIZES USED ON THIS PROJECT.
   - B. A #10 AWG NEUTRAL CONDUCTOR WILL BE PROVIDED FOR ALL FLUORESCENT LIGHTING CIRCUITS.
   - C. THE CONTRACTOR IS RESPONSIBLE FOR UPSIZING CONDUCTORS FOR VOLTAGE DROP PER THE NEC REGARDLESS OF WHETHER IT IS SHOWN ON THE PLANS OR NOT.
   - D. THE CONTRACTOR SHALL LABEL ALL ELECTRICAL EQUIPMENT AS IT IS CALLED OUT IN THE SPECIFICATIONS.
   - E. THE CONTRACTOR SHALL PROVIDE SEISMIC SUPPORT AND BRACING FOR ALL LIGHT FIXTURES AND ELECTRICAL EQUIPMENT AS REQUIRED BY APPLICABLE LOCAL AND NATIONAL CODES.
4. THE CONTRACTOR SHALL FOLLOW THE PANELBOARD SCHEDULES AS INDICATED IN THE DRAWINGS. EACH CIRCUIT BREAKER HAS BEEN ASSIGNED TO A SPECIFIC AREA OF THE BUILDING. NO DEVIATION WILL BE ALLOWED WITHOUT WRITTEN APPROVAL FROM THE ELECTRICAL ENGINEER.
5. AT A MINIMUM THE CONTRACTOR SHALL INSTALL THE WIRE SIZE AS CALLED OUT ON THE PANELBOARD SCHEDULES. HOWEVER, THE CONTRACTOR IS RESPONSIBLE TO ENSURE THE WIRE IS SIZED LARGE ENOUGH TO ALLOW FOR VOLTAGE DROP.
6. THE CONTRACTOR SHALL VERIFY ALL MECHANICAL OVERCURRENT DEVICES FOR THE ACTUAL MECHANICAL EQUIPMENT SUPPLIED ON THE JOB, PRIOR TO RELEASE OF ANY ELECTRICAL DISTRIBUTION EQUIPMENT. CONTACT THE ELECTRICAL ENGINEER WITH ANY DISCREPANCIES.
7. THE CONTRACTOR SHALL VISIT THE SITE BEFORE SUBMITTING THE BID, AND SHALL EXAMINE ALL PHYSICAL CONDITIONS WHICH MAY BE MATERIAL TO THE PERFORMANCE OF HIS WORK. NO ADDITIONAL PAYMENTS WILL BE ALLOWED TO THE CONTRACTOR AS A RESULT OF EXTRA WORK MADE NECESSARY BY HIS FAILURE TO DO SO. ANY CASE OF DISCREPANCY OR LACK OF CLARITY SHALL BE PROMPTLY IDENTIFIED TO THE OWNER'S REPRESENTATIVE AND THE ENGINEER FOR CLARIFICATION.

TRACY STOCKING & ASSOCIATES


State of Utah
Department of Administrative Services
Division of Facilities Construction & Management
4110 State Office Building
Salt Lake City, Utah 84114
Phone: (801) 538 - 3018
Fax: (801) 538 - 3267
http://dfcm.utah.gov

CREATED BY:
ENVISION ENGINEERING
Direction. Then Velocity.
244 West 300 North, Suite 100
Salt Lake City, Utah 84103
801.534.1130 ph 801.534.1080 fax


BUILDING NAME:
Utah State Development Center
870 North 860 East
American Fork, Uath

PROJECT TITLE:
Boiler Replacement/ Building Repairs

PROFESSIONAL ENGINEER 6698428 FRANCIS ROSADO 2009.6.18 STATE OF UTAH

| MARK | DATE | DESCRIPTION |
|---|---|---|
| | | |

ISSUE TYPE: REVIEW

ISSUE DATE: MAY 2009

DFCM PROJECT NO: 08194410
CAD PROJECT NO:
CAD DWG FILE:
DRAWN BY:
CHK'D BY:
COPYRIGHT: STATE OF UTAH

SHEET TITLE
SYMBOL SCHEDULE

SHEET NUMBER
EG001



W:\2008-176.00 - USDC Boiler Replacement & Heating Plant\Elec\EG001.dwg, 6/18/2009 5:38:02 PM, jdodson,
Envision Engineering, P.C.

## LIGHT FIXTURE SCHEDULE

| TYPE | MANUFACTURER | SERIES | DESCRIPTION | VOLTAGE | LOAD (VA) | MOUNTING | LAMPS NUMBER | LAMPS TYPE | LAMPS WATTS | LAMPS COLOR (KELVIN) | LAMPS CRI | REMARKS |
|---|---|---|---|---|---|---|---|---|---|---|---|---|
| CR4 | DAY-BRITE COLUMBIA | TS KL | SPECIFICATION INDUSTRIAL TURRET DIMENSIONS: 4'L X 7-5/8"W WHITE STEEL BODY WIRE GUARD ELECTRONIC BALLAST(S): QTY: 1; THD: <10% | 120/277 | 64 | CHAIN OR SURFACE | 2 | 48" LINEAR T8 FLUORESCENT | 32 | 3500 | 86 | |
| GA2 | DAY-BRITE COLUMBIA | 2SPG ST8 | SPECIFICATION PREMIUM TROFFER DIMENSIONS: 2'W X 4'L X 3-11/16"D DOOR FRAME: FLUSH WHITE STEEL DIFFUSER TYPE: .125" THICK #12 PATTERN ACRYLIC ELECTRONIC BALLAST(S): QTY: 1; THD: <10% | 120/277 | 64 | LAY-IN GRID | 2 | 48" LINEAR T8 FLUORESCENT | 32 | 3500 | 86 | |
| GA3 | DAY-BRITE COLUMBIA | 2SPG ST8 | SPECIFICATION PREMIUM TROFFER DIMENSIONS: 2'W X 4'L X 3-11/16"D DOOR FRAME: FLUSH WHITE STEEL DIFFUSER TYPE: .125" THICK #12 PATTERN ACRYLIC ELECTRONIC BALLAST(S): QTY: 1; THD: <10% | 120/277 | 96 | LAY-IN GRID | 3 | 48" LINEAR T8 FLUORESCENT | 32 | 3500 | 86 | |
| PF1 | DAY-BRITE COLUMBIA | FBF LHR4 | HIGH BAY FLUORESCENT DIMENSIONS: 21"W X 4'L X 2-3/4"D WHITE STEEL BODY 95% SPECULAR AL REFLECTOR ELECTRONIC BALLAST(S): QTY: 2; THD: <10% | 120/277 | 325 | PENDANT | 6 | 46" LINEAR T5HO FLUORESCENT | 54 | 3500 | 86 | |
| WF3 | DAY-BRITE COLUMBIA | WB WAL | FLUORESCENT WALL BRACKET DIMENSIONS: 4-1/2"W X 4'L X 4-1/4"H WHITE STEEL BODY W/ END CAPS DIFFUSER TYPE: .125" THICK #12 PATTERN ACRYLIC ELECTRONIC BALLAST(S): QTY: 2; THD: <10% | 120/277 | 64 | RECESSED | 2 | 48" LINEAR T8 FLUORESCENT | 32 | 3500 | 86 | |
| X1 | MCPHILBEN DUAL LITE | 6OML CVD | DIE-CAST AL EXIT SIGN WITH POLYCABONATE FACE OPERATION: EMERGENCY - AC ONLY FACE TYPE: STENCIL HOUSING COLOR: WHITE NUMBER OF FACES: 1 LETTER COLOR: GREEN | 120/277 | 25 | UNIVERSAL | 1 | LAMP INCLUDED | 25 | N/A | N/A | |
| WM1 | GARDCO HUBBELL | 101 TWSL | ARCHITECTURAL CUT OFF SCONCE TRAPEZOIDAL WEDGE SHAPE METAL HALIDE WITH FORWARD THROW DISTRIBUTION OPTICS HOUSING COLOR: BRONZE WALL MOUNTED BOX FOR SURFACE MOUNTING WET LOCATION RATED PULSE START UNIVERSAL VOLTAGE BALLAST | 277 | 277 | WALL | 1 | 250PS MH | 250 | 3000 | 80 | |
| WM2 | GARDCO HUBBELL | 111 TWSMC | ARCHITECTURAL CUT OFF SCONCE TRAPEZOIDAL WEDGE SHAPE FLUORESCENT WITH MEDIUM THROW DISTRIBUTION OPTICS HOUSING COLOR: BRONZE WALL MOUNTED BOX FOR SURFACE MOUNTING WET LOCATION RATED UNIVERSAL VOLTAGE BALLAST | 277 | 42 | WALL | 1 | 42W TT | 42 | 3500 | 86 | |

## BIDDING REQUIREMENTS

1. BID ONLY PRODUCTS THAT ARE SPECIFIED OR APPROVED BY ADDENDUM.
2. PACKAGING OF LIGHT FIXTURES WITH OTHER SYSTEMS IS NOT ALLOWED.
3. WHEN ONLY ONE PRODUCT IS APPROVED FOR BIDDING, THE PRICE FOR THAT ITEM SHALL BE BROKEN OUT SEPARATELY WHEN SUBMITTING PRICING TO VARIOUS DISTRIBUTORS AND/OR CONTRACTORS.
4. WHEN A CONTRADICTION EXISTS BETWEEN A SPECIFIC MODEL NUMBER AND THE DESCRIPTION, THE DESCRIPTION SHALL GOVERN.

## LIGHT FIXTURE PRIOR APPROVAL REQUIREMENTS

1. PRIOR APPROVAL IS REQUIRED BEFORE BIDDING THIS PROJECT.
2. PRIOR APPROVALS SHALL BE SUBMITTED TO THE ELECTRICAL ENGINEER'S OFFICE AT LEAST (8) EIGHT WORKING DAYS BEFORE THE BID. PRIOR APPROVALS RECEIVED AFTER THIS TIME PERIOD SHALL BE REJECTED.
3. PRIOR APPROVALS SHALL BE SIGNED BY A PRINCIPAL OF THE SUBMITTING ORGANIZATION STATING THAT THEY HAVE PREPARED AND/OR REVIEWED THE SUBMITTAL AND THAT THE PRODUCTS PROPOSED ARE EQUIVALENT TO THOSE SPECIFIED. ANY EXCEPTIONS SHALL BE SO NOTED.
4. ITEMS THAT ARE SUBMITTED AND HAVE BEEN APPROVED WILL BE LISTED IN THE ADDENDUM(S). VERBAL APPROVAL WILL NOT BE GIVEN ON ANY ITEM.
5. IT IS NOT THE RESPONSIBILITY OF THE ELECTRICAL ENGINEER TO NOTIFY THE SUBMITTING PARTY OF ERRORS IN THE SUBMITTAL. NOTIFICATION OF ERRORS BY THE ELECTRICAL ENGINEER PRIOR TO ISSUANCE OF THE ADDENDUM(S) MAY NOT BE GIVEN.
6. PRIOR APPROVALS SHALL CONSIST OF TWO SETS OF CUT SHEETS DESCRIBING THE PRODUCTS BEING SUBMITTED AS EQUIVALENTS. FAXES ARE NOT ACCEPTABLE. ALL SPECIFICATION INFORMATION SHALL BE CLEARLY MARKED, WITH NON-APPLICABLE INFORMATION CROSSED OUT. COMPLETE PHOTOMETRIC DATA SHALL BE PROVIDED. PRODUCTS WITHOUT PHOTOMETRIC DATA WILL BE NOT BE APPROVED.

## LIGHT FIXTURE GENERAL NOTES

1. REFER TO THE ARCHITECTURAL REFLECTED CEILING PLANS FOR LOCATIONS OF LIGHT FIXTURES. BRING ALL DISCREPANCIES OF LOCATIONS AND QUANTITIES TO THE ATTENTION OF THE ARCHITECT AND ELECTRICAL ENGINEER PRIOR TO BIDDING.
2. REFER TO ARCHITECTURAL ELEVATIONS FOR MOUNTING HEIGHTS AND LOCATIONS OF LIGHT FIXTURES. BRING ALL DISCREPANCIES TO THE ATTENTION OF THE ARCHITECT PRIOR TO BIDDING.
3. REFER TO THE SPECIFICATIONS FOR OTHER LIGHT FIXTURE, BALLAST, AND LAMP REQUIREMENTS AND ACCEPTABLE MANUFACTURERS.
4. REFER TO ARCHITECTURAL DRAWINGS FOR LOUVER REQUIREMENTS (IF ANY).
5. CONFIRM AVAILABLE MOUNTING DEPTHS OF ALL LIGHT FIXTURES AND COMPARE WITH DEPTHS SHOWN ON SHOP DRAWING. BRING ALL POTENTIAL CONFLICT AREAS TO THE ATTENTION OF THE ARCHITECT AND ELECTRICAL ENGINEER PRIOR TO RELEASE.

## LIGHT FIXTURE ABBREVIATION SCHEDULE

NOTE: NOT ALL ABBREVIATIONS WILL NECESSARILY BE USED.

| | |
|---|---|
| A.F.F. | ABOVE FINISHED FLOOR |
| WALL@CLG. | WALL MOUNT AT CORNER OF WALL AND CEILING |
| CCBA | CUSTOM PAINTED COLOR AS SELECTED BY THE ARCHITECT |
| SCBA | STANDARD PAINTED COLOR AS SELECTED BY THE ARCHITECT |
| CFBA | CUSTOM FINISH AS SELECTED BY THE ARCHITECT |
| SFBA | STANDARD FINISH AS SELECTED BY THE ARCHITECT |
| MOD | MODIFY STANDARD LIGHT FIXTURE AS INDICATED |

## WIRING DEVICE SYMBOLS

| SYMBOL | DESCRIPTION | MOUNTING | REMARKS |
|---|---|---|---|
| $ | SINGLE-POLE TOGGLE SWITCH | +48" | |
| $a | SINGLE-POLE TOGGLE SWITCH | +48" | SUBSCRIPT KEYS SWITCH TO FIXTURES CONTROLLED. |
| $2 | DOUBLE-POLE TOGGLE SWITCH | +48" | |
| $3 | THREE-WAY TOGGLE SWITCH | +48" | |
| $4 | FOUR-WAY TOGGLE SWITCH | +48" | |
| $K | KEY-OPERATED SINGLE-POLE TOGGLE SWITCH | +48" | |
| $P | SINGLE-POLE TOGGLE SWITCH WITH PILOT LIGHT | +48" | |
| $DIM | DIMMER SWITCH | +48" | RATE DIMMER SWITCH FOR MAXIMUM POSSIBLE WATTAGE |
| $TIM | TIMER SWITCH | +48" | |
| $$ | (2) SINGLE-POLE TOGGLE SWITCH | +48" | DUAL LEVEL SWITCH OUTBOARD LAMPS SEPARATELY FROM INBOARD LAMPS. |
| $LV | LOW VOLTAGE MOMENTARY CONTACT SWITCH | +48" | |
| $3PM | 3-POSITION MOMENTARY CONTACT SWITCH | +48" | REFER TO DETAIL UP-ON; CENTER-NEUTRAL; DOWN-OFF |
| $3PN | 3-POSITION MAINTAINED CONTACT SWITCH | +48" | UP-ON; CENTER-OFF; DOWN-ON |
| C/W | OCCUPANCY SENSOR | AS NOTED | CEILING MOUNTED WITH SUBSCRIPT 'C'; WALL-MOUNTED WITH SUBSCRIPT 'W' |
| | SPLIT-WIRED DUPLEX RECEPTACLE | +18" | |
| | SIMPLEX RECEPTACLE | +18" | |
| | DUPLEX RECEPTACLE | +18" | |
| | FOURPLEX RECEPTACLE | +18" | |
| | 125/250V RECEPTACLE | +18" | RANGE -- NEMA 14-50R DRYER -- NEMA 14-30R |
| | GROUND FAULT CIRCUIT INTERRUPTER DUPLEX RECEPTACLE | +18" | |
| | GROUND FAULT CIRCUIT INTERRUPTER FOURPLEX RECEPTACLE | +18" | |
| | EMERGENCY DUPLEX RECEPTACLE | +18" | |
| | EMERGENCY FOURPLEX RECEPTACLE | +18" | |
| | MULTI-OUTLET ASSEMBLY | 4" ABOVE BACKSPLASH | |
| | POWER / TELEPHONE POLE | FLOOR/CEILING | |
| | CORD DROP WITH DUPLEX RECEPTACLE | +18" | REFER TO DETAIL |
| (5-20R) | SPECIAL PURPOSE OUTLET | +18" | SUBSCRIPT IN PARENTHESIS INDICATES NEMA CONFIGURATION IF SHOWN. REFER TO DRAWINGS AND/OR EQUIPMENT SCHEDULES. CONFIRM EXACT CONFIGURATION WITH OWNER PRIOR TO INSTALLATION. |

## GEAR AND CONTROL SYMBOLS

| SYMBOL | DESCRIPTION | MOUNTING | REMARKS |
|---|---|---|---|
| $T | MANUAL STARTER WITH THERMAL OVERLOAD(S) | AT EQUIPMENT | |
| | ELECTRIC MOTOR | | |
| | NON-FUSED DISCONNECT SWITCH | +60" | |
| F | FUSED DISCONNECT SWITCH | +60" | |
| | CIRCUIT BREAKER AND ENCLOSURE | +60" | |
| | MAGNETIC STARTER | +60" | |
| | COMBINATION MAGNETIC STARTER / NON-FUSED DISCONNECT | +60" | |
| | COMBINATION MAGNETIC STARTER / FUSED DISCONNECT | +60" | |
| | COMB. MAGNETIC STARTER / MOTOR CIRCUIT PROTECTOR (MCP) | +60" | |
| VFD | COMB. VARIABLE FREQUENCY DRIVE / MOTOR CIRCUIT PROTECTOR (MCP) | FLOOR OR WALL AS SPECIFIED | TOP AT +12" IF WALL MOUNTED |
| RVS | REDUCED VOLTAGE STARTER | FLOOR OR WALL AS SPECIFIED | TOP AT +12" IF WALL MOUNTED |
| | LOAD CENTER (SURFACE-MOUNTED) | TOP AT +12" | 14"W X 3"D |
| | LOAD CENTER (FLUSH-MOUNTED) | TOP AT +12" | 14"W X 3"D |
| | LIGHTING AND APPLIANCE PANELBOARD (SURFACE-MOUNTED) | TOP AT +12" | 20"W X 6"D |
| | LIGHTING AND APPLIANCE PANELBOARD (FLUSH-MOUNTED) | TOP AT +12" | 20"W X 6"D |
| | POWER DISTRIBUTION PANELBOARD | WALL | THESE SYMBOLS ARE GENERAL IN NATURE AND MAY VARY IN SIZE AND SHAPE TO SUIT APPLICATION. |
| | SWITCHBOARD | FLOOR | CROSS HATCHING INDICATES "MAIN PANELBOARD OR SWITCHBOARD" NAME IS INDICATED IN SEMI-QUOTES (I.E. "L2A", "MDP") |
| | METER BASE | TOP AT +12" | |
| | OPEN - STOP - CLOSE SWITCH | +60" | FURNISH SWITCH UNLESS FURNISHED BY ANOTHER DIVISION. INSTALL AND CONNECT COMPLETE. REFER TO RELATED SPECIFICATION SECTIONS. |
| T | HVAC THERMOSTAT | +60" | PROVIDED BY DIVISION 15000 U.N.O. |
| | HAND - OFF - AUTO SWITCH | +60" | |
| GF | GROUND FAULT PROTECTION | | |

TRACY STOCKING & ASSOCIATES


State of Utah
Department of Administrative Services
Division of Facilities Construction & Management
4110 State Office Building
Salt Lake City, Utah 84114
Phone: (801) 538 - 3018
Fax: (801) 538 - 3267
http://dfcm.utah.gov

CREATED BY:
ENVISION ENGINEERING
Direction. Then Velocity.
244 West 300 North, Suite 100
Salt Lake City, Utah 84103
801.534.1130 ph 801.534.1080 fax


BUILDING NAME:
Utah State Development Center
870 North 860 East
American Fork, Uath

PROJECT TITLE:
Boiler Replacement/ Building Repairs

PROFESSIONAL ENGINEER 6698428 FRANCIS ROSADO 2009.6.18 STATE OF UTAH

| MARK | DATE | DESCRIPTION |
|---|---|---|

ISSUE TYPE: REVIEW

ISSUE DATE: MAY 2009

DFCM PROJECT NO: 08194410
CAD PROJECT NO:
CAD DWG FILE:
DRAWN BY:
CHK'D BY:
COPYRIGHT: STATE OF UTAH

SHEET TITLE
SYMBOL & LIGHT FIXTURE SCHEDULE

SHEET NUMBER
EG002



W:\2008-176.00 - USDC Boiler Replacement & Heating Plant\Elec\EG002.dwg, 6/18/2009 5:37:53 PM, jdodson, Envision Engineering, P.C.

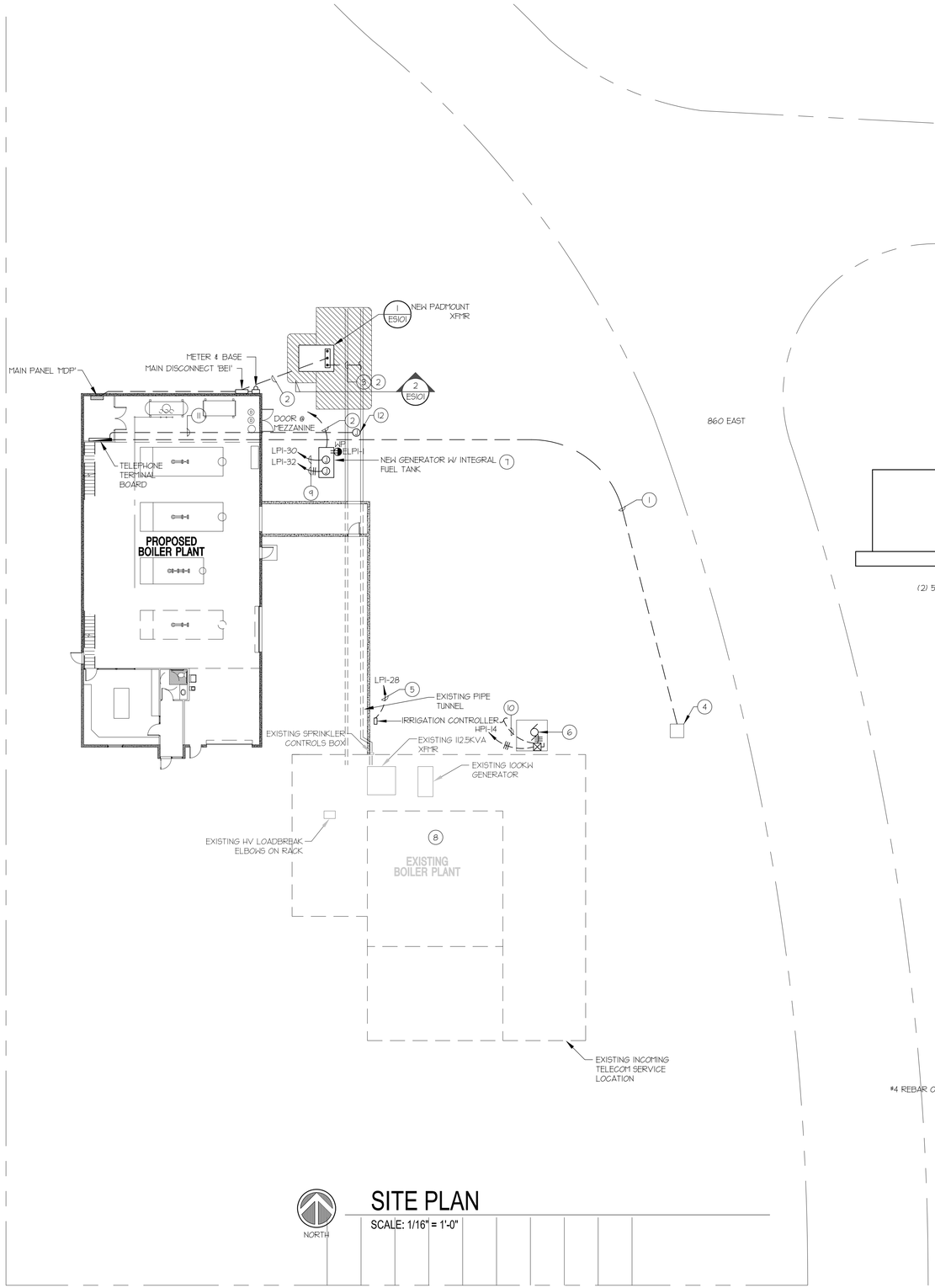


## SITE PLAN

SCALE: 1/16" = 1'-0"

## KEYED NOTES:

1. EXTEND 4"C. WITH (3) 1-1/4" INNER DUCTS (WITH PULL ROPES) TO PULL BOX. TELECOM CABLING SHALL BE PROVIDED BY DTS UNDER A SEPERATE CONTRACT BY THE OWNER.
2. REFER TO ONE-LINE FOR ADDITIONAL REQUIREMENTS AND INFORMATION.
3. EXTEND CONDUITS TO EXISTING UTILITY TUNNEL. REFER TO DETAIL 2/ES101.
4. APPROXIMATE LOCATION OF EXISTING IN GRADE TELECOM PULL BOX. VERIFY EXACT LOCATION IN THE FIELD PRIOR TO BID. PROVIDE REQUIRED CORE DRILLING AND SEAL CONDUIT PENETRATIONS.
5. EXTEND 1" C. WITH 2 #2 AND 1 #10 GND THWN, CU.
6. REMOTE OIL PUMP LOCATED IN MANHOLE. VERIFY EXACT LOCATION AND ELECTRICAL REQUIREMENTS PRIOR TO ROUGH-IN.
7. PROVIDE CONCRETE PAD FOR GENERATOR AS RECOMMENDED BY THE GENERATOR MANUFACTURER.
8. LOCATIONS OF EXISTING EQUIPMENT SHOWN FOR REFERENCE ONLY.
9. CIRCUITS FOR GENERATOR BATTERY CHARGER AND ENGINE BLOCK HEATER. VERIFY ACTUAL GENERATOR REQUIREMENTS PRIOR TO WORK.
10. RACEWAY FOR CONTROL WIRING. EXTEND 1" C. WITH PULL ROPE TO BOILER CONTROLS UNIT AS INDICATED ON MECHANICAL SHEETS.
11. EXTEND 3/4"C. (WITH FIRE ALARM SIGNAL CABLES RECOMMEDED BY FACP MANUFACTURER) TO JUNCTION BOX IN TUNNEL.
12. PROVIDE JUNCTION BOX FOR FIRE ALARM SIGNAL CABLES. INTERCEPT EXISTING CONDUITS AND CABLES IN TUNNEL FOR EXISTING BOILER PLANT AND MAKE ALL REQUIRED CONNECTIONS. COORDINATE SWITCHOVER WITH THE OWNER. REFER TO SHEET EP101 FOR ADDITIONAL REQUIREMENTS AND INFORMATION.

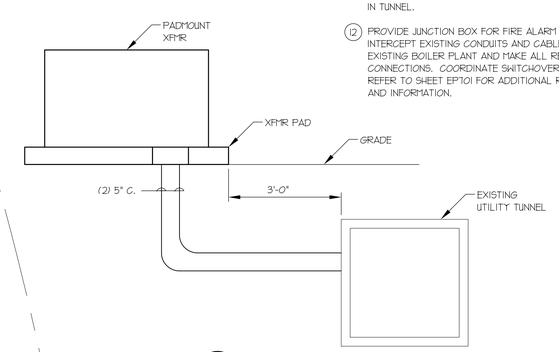


2 SECTION - LOOKING NORTH
SCALE: NONE

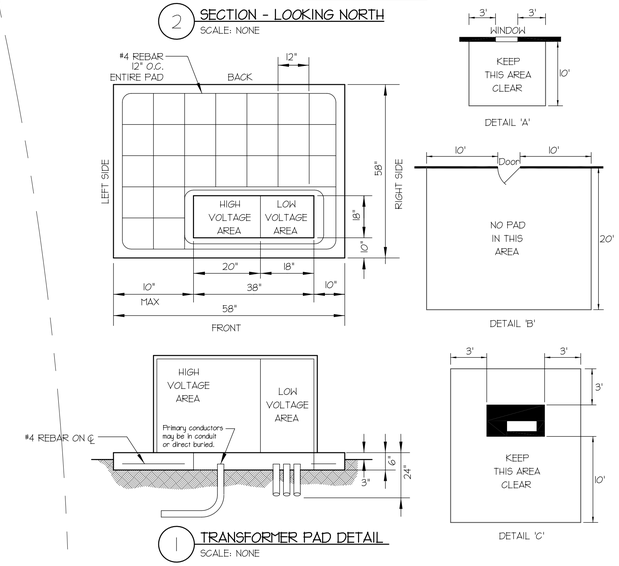


1 TRANSFORMER PAD DETAIL
SCALE: NONE

TRACY STOCKING & ASSOCIATES


State of Utah
Department of Administrative Services
Division of Facilities Construction & Management
4110 State Office Building
Salt Lake City, Utah 84114
Phone: (801) 538 - 3018
Fax: (801) 538 - 3267
http://dfcm.utah.gov

CREATED BY:
ENVISION ENGINEERING
Direction. Then Velocity.
244 West 300 North, Suite 100
Salt Lake City, Utah 84103
801.534.1130 ph 801.534.1080 fax


BUILDING NAME:
Utah State Development Center
870 North 860 East
American Fork, Uath

PROJECT TITLE:
Boiler Replacement/ Building Repairs

PROFESSIONAL ENGINEER 6698428 FRANCIS ROSADO 2009.6.18 STATE OF UTAH

| MARK | DATE | DESCRIPTION |
|---|---|---|

ISSUE TYPE: REVIEW

ISSUE DATE: MAY 2009

DFCM PROJECT NO: 08194410
CAD PROJECT NO:
CAD DWG FILE:
DRAWN BY:
CHK'D BY:
COPYRIGHT: STATE OF UTAH

SHEET TITLE
SITE PLAN

SHEET NUMBER
ES101



W:\2008-176.00 - USDC Boiler Replacement & Heating Plant\Elec\ES101.dwg, 6/18/2009 5:37:44 PM, jdodson, Envision Engineering, P.C.

| OCCUPANCY SENSOR LEGEND | | | | | |
|---|---|---|---|---|---|
| SYMBOL | LOCATION USED | TECHNOLOGY | COVERAGE SQ/FT | WATT STOPPER CATALOG NUMBER | MOUNTING |
| ◐h | RESTROOM | ULTRASONIC | 1000' MAX | UT-300-2<br>UT-355-2 | CENTER IN SPACE |

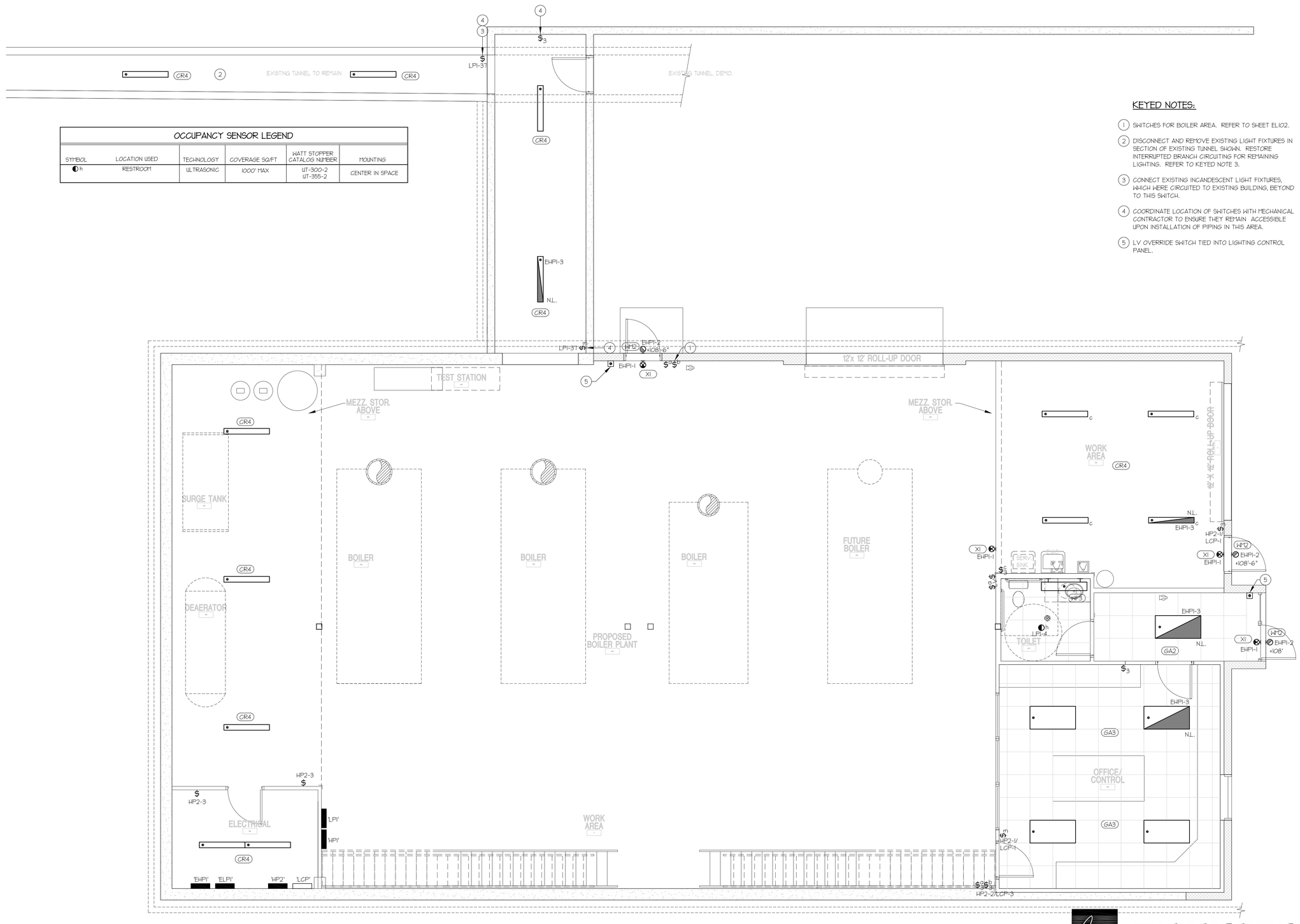


## KEYED NOTES:

1. SWITCHES FOR BOILER AREA. REFER TO SHEET EL102.
2. DISCONNECT AND REMOVE EXISTING LIGHT FIXTURES IN SECTION OF EXISTING TUNNEL SHOWN. RESTORE INTERRUPTED BRANCH CIRCUITING FOR REMAINING LIGHTING. REFER TO KEYED NOTE 3.
3. CONNECT EXISTING INCANDESCENT LIGHT FIXTURES, WHICH WERE CIRCUITED TO EXISTING BUILDING, BEYOND TO THIS SWITCH.
4. COORDINATE LOCATION OF SWITCHES WITH MECHANICAL CONTRACTOR TO ENSURE THEY REMAIN ACCESSIBLE UPON INSTALLATION OF PIPING IN THIS AREA.
5. LV OVERRIDE SWITCH TIED INTO LIGHTING CONTROL PANEL.

NORTH

# MAIN LEVEL LIGHTING PLAN

SCALE: 1/4" = 1'-0"

TRACY STOCKING & ASSOCIATES


State of Utah
Department of Administrative Services

Division of Facilities Construction & Management
4110 State Office Building
Salt Lake City, Utah 84114
Phone: (801) 538 - 3018
Fax: (801) 538 - 3267

http://dfcm.utah.gov

CREATED BY:

ENVISION ENGINEERING
Direction. Then Velocity.
244 West 300 North, Suite 100
Salt Lake City, Utah 84103
801.534.1130 ph 801.534.1080 fax


BUILDING NAME:

Utah State Development Center
870 North 860 East
American Fork, Uath

PROJECT TITLE:

Boiler Replacement/ Building Repairs

PROFESSIONAL ENGINEER 6698428 FRANCIS ROSADO 2009.6.18 STATE OF UTAH

| MARK | DATE | DESCRIPTION |
|---|---|---|

ISSUE TYPE: REVIEW

ISSUE DATE: MAY 2009

DFCM PROJECT NO: 08194410
CAD PROJECT NO:
CAD DWG FILE:
DRAWN BY:
CHK'D BY:
COPYRIGHT: STATE OF UTAH

SHEET TITLE

MAIN LEVEL LIGHTING PLAN

SHEET NUMBER

EL101

SHEET 4 OF 10

W:\2008-176.00 - USDC Boiler Replacement & Heating Plant\Elec\EL101.dwg, 6/18/2009 5:37:35 PM, jdodson, Envision Engineering, P.C.

GENERAL NOTES:

1. ADDITIONAL EXTERIOR LIGHT FIXTURES ARE INDICATED ON THE MAIN LEVEL LIGHTING PLAN.

KEYED NOTES:

1. CONNECT THE 2 LAMP BALLAST TO THE EMERGENCY EGRESS LIGHTING CIRCUIT EHPI-2.

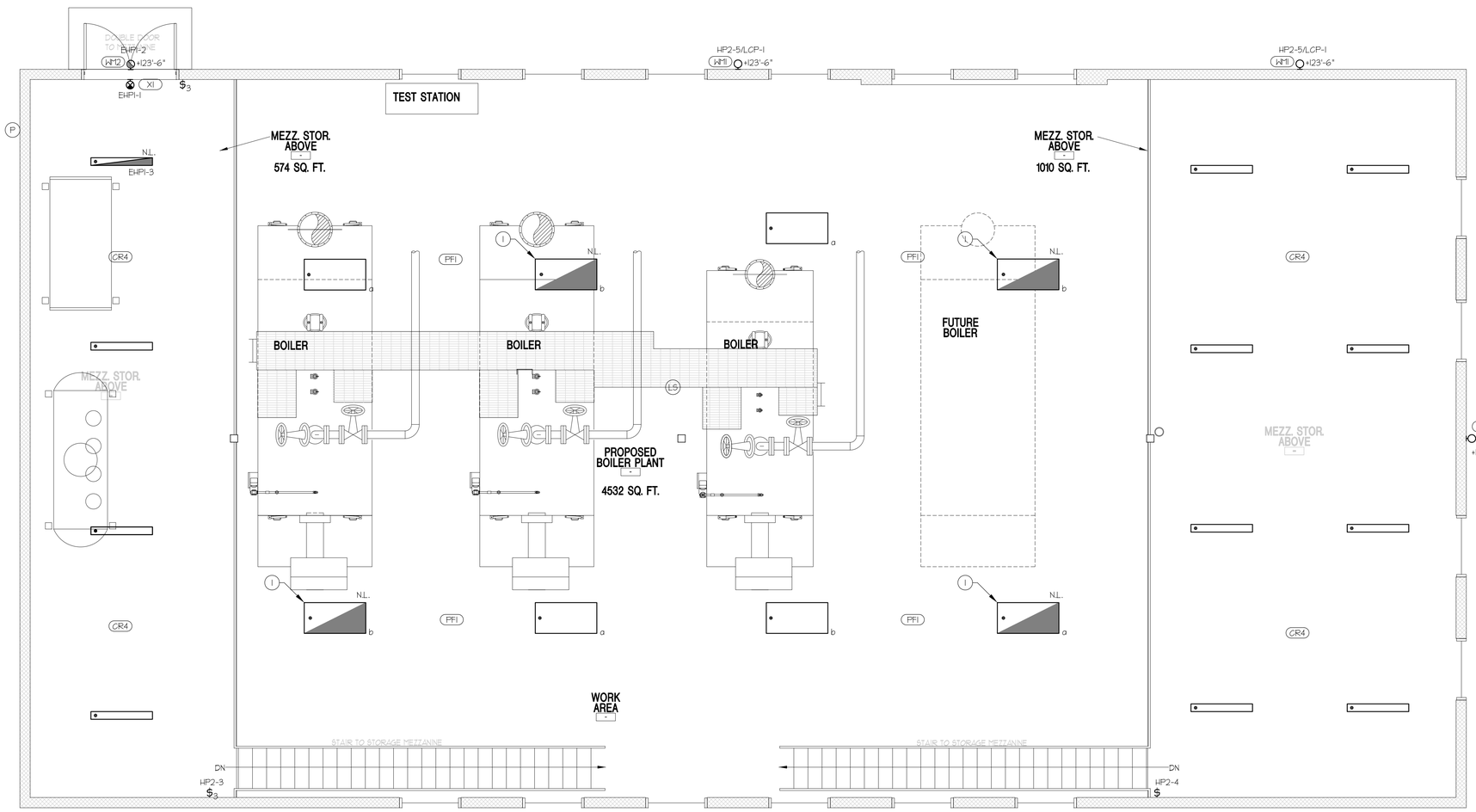


NORTH

## UPPER LIGHTING PLAN

SCALE: 1/4" = 1'-0"

TRACY STOCKING & ASSOCIATES


State of Utah
Department of Administrative Services

Division of Facilities Construction & Management
4110 State Office Building
Salt Lake City, Utah 84114
Phone: (801) 538 - 3018
Fax: (801) 538 - 3267

http://dfcm.utah.gov


CREATED BY:


ENVISION ENGINEERING
Direction. Then Velocity.
244 West 300 North, Suite 100
Salt Lake City, Utah 84103
801.534.1130 ph 801.534.1080 fax


BUILDING NAME:

Utah State Development Center
870 North 860 East
American Fork, Uath

PROJECT TITLE:

Boiler Replacement/ Building Repairs

PROFESSIONAL ENGINEER 6698428 FRANCIS ROSADO 2009.6.18 STATE OF UTAH

| MARK | DATE | DESCRIPTION |
|---|---|---|

ISSUE TYPE: REVIEW

ISSUE DATE: MAY 2009

DFCM PROJECT NO: 08194410
CAD PROJECT NO:
CAD DWG FILE:
DRAWN BY:
CHK'D BY:
COPYRIGHT: STATE OF UTAH

SHEET TITLE

UPPER LIGHTING PLAN

SHEET NUMBER

EL102

SHEET 5 OF 10

W:\2008-176.00 - USDC Boiler Replacement & Heating Plant\Elec\EL102.dwg, 6/18/2009 5:37:26 PM, jdodson, Envision Engineering, P.C.

## GENERAL NOTES:

1. ELECTRICAL CONTRACTOR SHALL PROVIDE ALL REQUIRED RACEWAYS TO SUPPORT MECHANICAL SYSTEM REQUIREMENTS. REFER TO MECHANICAL DRAWINGS AND COORDINATE INSTALLATION WITH MECHANICAL CONTRACTOR IN THE FIELD.

## KEYED NOTES:

1. MOUNT OUTLET FOR EWC AT MANUFACTURERS RECOMMENDED HEIGHT.
2. 120V CONTROL POWER TO BOILERS. COORDINATE LOCATION WITH MECHANICAL CONTRACTOR.
3. PROVIDE 3-BUTTON CONTROLLER COMPLETE WITH WIRING AS RECOMMENDED BY ROLL-UP DOOR MANUFACTURER.
4. PROVIDE BOILER KILL SWITCH. (PILLA #GS120NI OR APPROVED EQUIVALENT) EXTEND CONDUIT TO BOILER CONTROLS. COORDINATE WORK WITH MECHANICAL CONTRACTOR. LV WIRING TO BE PROVIDED BY THE MECHANICAL CONTRACTOR.
5. WELDING OUTLET. VERIFY EXACT LOCATION WITH THE OWNER.
6. EXTEND 3/4" C. WITH PULL ROPE TO TELEPHONE TERMINAL BOARD.
7. DISCONNECT FOR EYE WASH STATION HEATER. COORDINATE LOCATION WITH PIPING DRAWINGS.
8. WIRE FAN TO SWITCH ON WITH LIGHTS.
9. PROVIDE JUNCTION BOX FOR FUTURE CCTV CAMERA. CONFIRM LOCATION WITH THE OWNER PRIOR TO ROUGH-IN. EXTEND 3/4" C. WITH PULL ROPE TO TELEPHONE TERMINAL BOARD.
10. OUTLET FOR FUTURE CCTV CAMERA. CONFIRM LOCATION WITH OWNER.

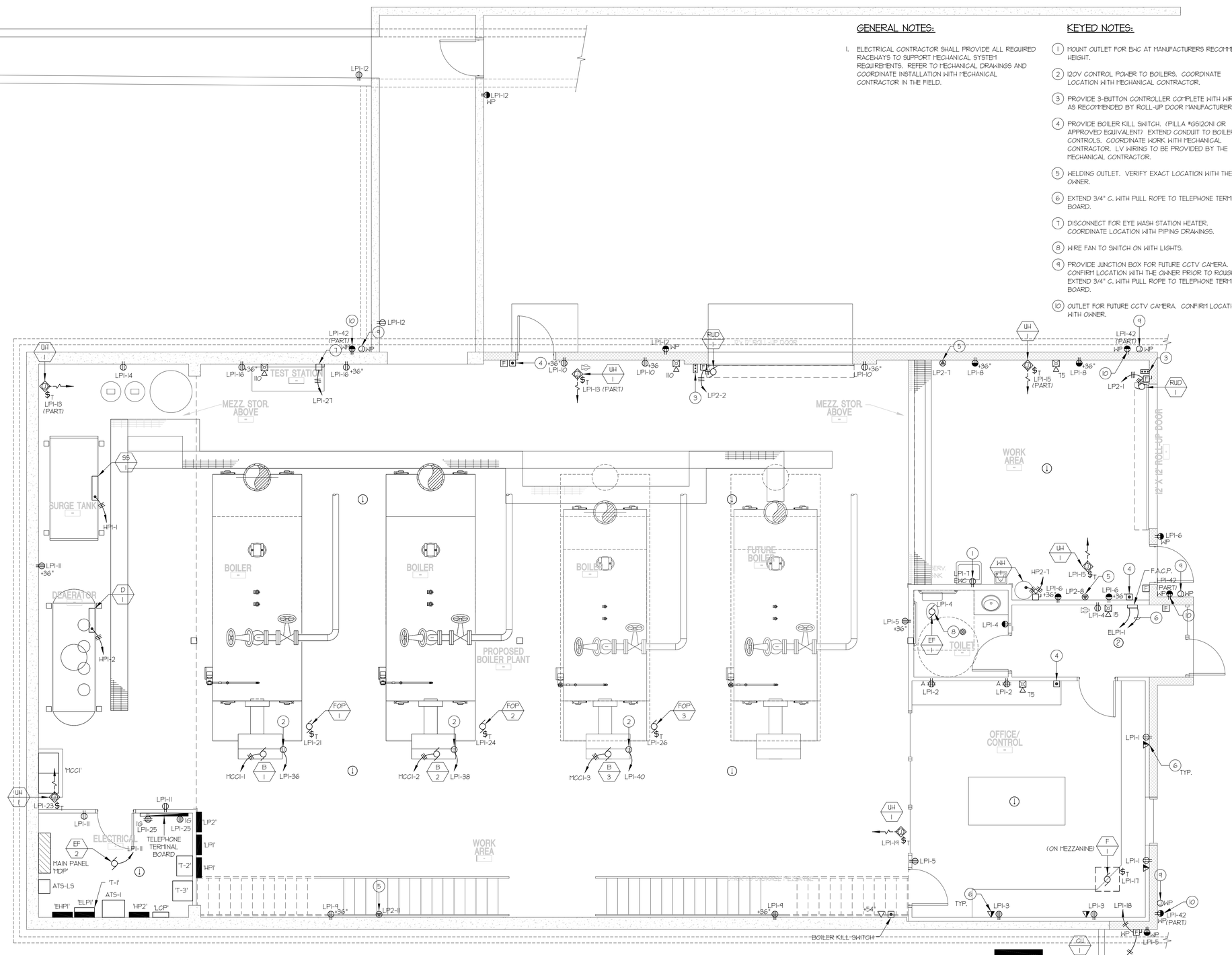


# MAIN LEVEL POWER PLAN

SCALE: 1/4" = 1'-0"

NORTH

TRACY STOCKING & ASSOCIATES


State of Utah
Department of Administrative Services
Division of Facilities Construction & Management
4110 State Office Building
Salt Lake City, Utah 84114
Phone: (801) 538 - 3018
Fax: (801) 538 - 3267
http://dfcm.utah.gov

CREATED BY:
ENVISION ENGINEERING
Direction. Then Velocity.
244 West 300 North, Suite 100
Salt Lake City, Utah 84103
801.534.1130 ph 801.534.1080 fax


BUILDING NAME:
Utah State Development Center
870 North 860 East
American Fork, Uath

PROJECT TITLE:
Boiler Replacement/ Building Repairs

PROFESSIONAL ENGINEER 6695428 FRANCIS ROSADO 2009.6.18 STATE OF UTAH

| MARK | DATE | DESCRIPTION |
|---|---|---|

ISSUE TYPE: REVIEW

ISSUE DATE: MAY 2009

DFCM PROJECT NO: 08194410
CAD PROJECT NO:
CAD DWG FILE:
DRAWN BY:
CHK'D BY:
COPYRIGHT: STATE OF UTAH

SHEET TITLE
MAIN LEVEL POWER PLAN

SHEET NUMBER
EP101

SHEET 6 OF 10

W:\2008-176.00 - USDC Boiler Replacement & Heating Plant\Elec\EP101.dwg, 6/18/2009 5:37:17 PM, jdodson, Envision Engineering, P.C.

# EQUIPMENT SCHEDULE

| UNIT NAME | DESCRIPTION | LOAD | TYPE | VOLTAGE | PHASE | AMPERAGE | CONDUIT SIZE | WIRES NO. | WIRES SIZE | STARTER / DISCONNECT/ CONNECTION AT UNIT NOTE | STARTER SIZE | OCP SIZE | OCP POLES | DISCONNECT SIZE | DISCONNECT POLES | POWER FACTOR CORRECTION CAPACITOR (KVAR) | REMARKS |
|---|---|---|---|---|---|---|---|---|---|---|---|---|---|---|---|---|---|
| B-1 | BOILER FAN | 7.5 | HP | 480 | 3 | 11 | 3/4" | 3 | 12 | 4A | NEMA 1 | 20 | 3 | 30 | 3 | | |
| B-2 | BOILER FAN | 7.5 | HP | 480 | 3 | 11 | 3/4" | 3 | 12 | 4A | NEMA 1 | 20 | 3 | 30 | 3 | | |
| B-3 | BOILER FAN | 7.5 | HP | 480 | 3 | 11 | 3/4" | 3 | 12 | 4A | NEMA 1 | 20 | 3 | 30 | 3 | | |
| CU-1 | CONDENSING UNIT | 12 | MCA | 208 | 1 | 10.2 | 3/4" | 2 | 12 | 10A | INCLUDED | 20 | 2 | 30 | 2 | | NEMA 3R |
| D-1 | DEAERATOR | 27.5 | HP | 480 | 3 | 42 | 1" | 3 | 4 | 12A | INCLUDED | 60 | 3 | 30 | 3 | | |
| EF-1 | EXHAUST FAN | 77 | WATTS | 120 | 1 | 1 | 3/4" | 2 | 12 | 1A | - | - | - | 1 HP | - | | |
| EF-2 | EXHAUST FAN | 132 | WATTS | 120 | 1 | 1.1 | 3/4" | 2 | 12 | 1A | - | - | - | 1 HP | - | | |
| F-1 | FURNACE | 1/5 | HP | 120 | 1 | 9.8 | 3/4" | 2 | 12 | 1A | - | - | - | 1 HP | - | | |
| FOP-1 | FUEL OIL PUMP | 1/2 | HP | 120 | 1 | 9.8 | 3/4" | 2 | 12 | 1A | - | - | - | 1 HP | - | | |
| FOP-2 | FUEL OIL PUMP | 1/2 | HP | 120 | 1 | 9.8 | 3/4" | 2 | 12 | 1A | - | - | - | 1 HP | - | | |
| FOP-3 | FUEL OIL PUMP | 1/2 | HP | 120 | 1 | 9.8 | 3/4" | 2 | 12 | 1A | - | - | - | 1 HP | - | | |
| ROP-1 | REMOTE OIL PUMP | 3/4 | HP | 480 | 3 | 1.6 | 1" | 3 | 10 | 4A | NEMA SIZE 1 | 15 | 3 | - | - | | NEMA 4 |
| RUD-1 | ROLL-UP DOOR | 1/3 | HP | 208 | 1 | 4.6 | 3/4" | 2 | 12 | 10A | - | 15 | 2 | 30 | 2 | | |
| S-1 | SURGE SYSTEM | 15 | HP | 480 | 3 | 24 | 3/4" | 3 | 10 | 12A | INCLUDED | 35 | 3 | 60 | 3 | | |
| UH-1 | UNIT HEATER | 1/25 | HP | 120 | 1 | 1 | 3/4" | 2 | 12 | 1A | - | - | - | 1 HP | - | | |
| WH-1 | WATER HEATER | 6 | KW | 208 | 3 | 16.7 | 3/4" | 3 | 12 | 9A | - | - | - | 30 | 3 | | |
| WS-1 | WATER SOFTENER | 200 | WATTS | 120 | 1 | 1.7 | 3/4" | 2 | 12 | 13A | - | - | - | - | - | | |

SIZE ALL FUSES IN ACCORDANCE WITH MANUFACTURER'S RECOMMENDATIONS.

STARTER / DISCONNECT NOTES:

1. MANUAL STARTER WITH THERMAL OVERLOAD
2. MANUAL STARTER WITH THERMAL OVERLOAD PROTECTION & LOW VOLTAGE RELAY / CONTACTOR FOR ATC CONTROL
3. COMBINATION MAGNETIC STARTER / FUSED DISCONNECT
4. COMBINATION MAGNETIC STARTER / MOTOR CIRCUIT PROTECTOR (MCP)
5. COMBINATION VARIABLE FREQUENCY DRIVE / MOTOR CIRCUIT PROTECTOR (MCP)
6. REDUCED VOLTAGE STARTER
7. COMBINATION TWO-SPEED STARTER / FUSED DISCONNECT
8. COMBINATION TWO-SPEED STARTER / MOTOR CIRCUIT PROTECTOR (MCP)
9. NON-FUSED DISCONNECT SWITCH
10. FUSED DISCONNECT SWITCH
11. BREAKER AND ENCLOSURE
12. DIRECT CONNECTION
13. DUPLEX RECEPTACLE OUTLET
14. SPECIAL PURPOSE OUTLET
15. SHUNT-TRIP BREAKER AND ENCLOSURE
16. TOGGLE SWITCH
17. MAGNETIC STARTER

INSTALLATION NOTES:

A. FURNISHED, INSTALLED, & CONNECTED UNDER DIVISION 16.
B. FURNISHED & INSTALLED UNDER ANOTHER DIVISION REQUIRING CONNECTIONS UNDER DIVISION 16.
C. FURNISHED UNDER ANOTHER DIVISION BUT INSTALLED AND CONNECTED UNDER DIVISION 16.
D. FURNISHED, INSTALLED, & CONNECTED UNDER ANOTHER DIVISION
E. FURNISHED BY OWNER, INSTALLED & CONNECTED BY DIVISION 16

TRACY STOCKING & ASSOCIATES


State of Utah
Department of Administrative Services
Division of Facilities Construction & Management
4110 State Office Building
Salt Lake City, Utah 84114
Phone: (801) 538 - 3018
Fax: (801) 538 - 3267
http://dfcm.utah.gov


CREATED BY:


ENVISION ENGINEERING
Direction. Then Velocity.
244 West 300 North, Suite 100
Salt Lake City, Utah 84103
801.534.1130 ph 801.534.1080 fax


BUILDING NAME:

Utah State Development Center
870 North 860 East
American Fork, Uath

PROJECT TITLE:

Boiler Replacement/ Building Repairs

| MARK | DATE | DESCRIPTION |
|---|---|---|

ISSUE TYPE: REVIEW

ISSUE DATE: MAY 2009

DFCM PROJECT NO: 08194410
CAD PROJECT NO:
CAD DWG FILE:
DRAWN BY:
CHK'D BY:
COPYRIGHT: STATE OF UTAH

SHEET TITLE

EQUIPMENT SCHEDULE

SHEET NUMBER

EP601



W:\2008-176.00 - USDC Boiler Replacement & Heating Plant\Elec\EP601.dwg, 6/18/2009 5:37:08 PM, jdodson, Envision Engineering, P.C.

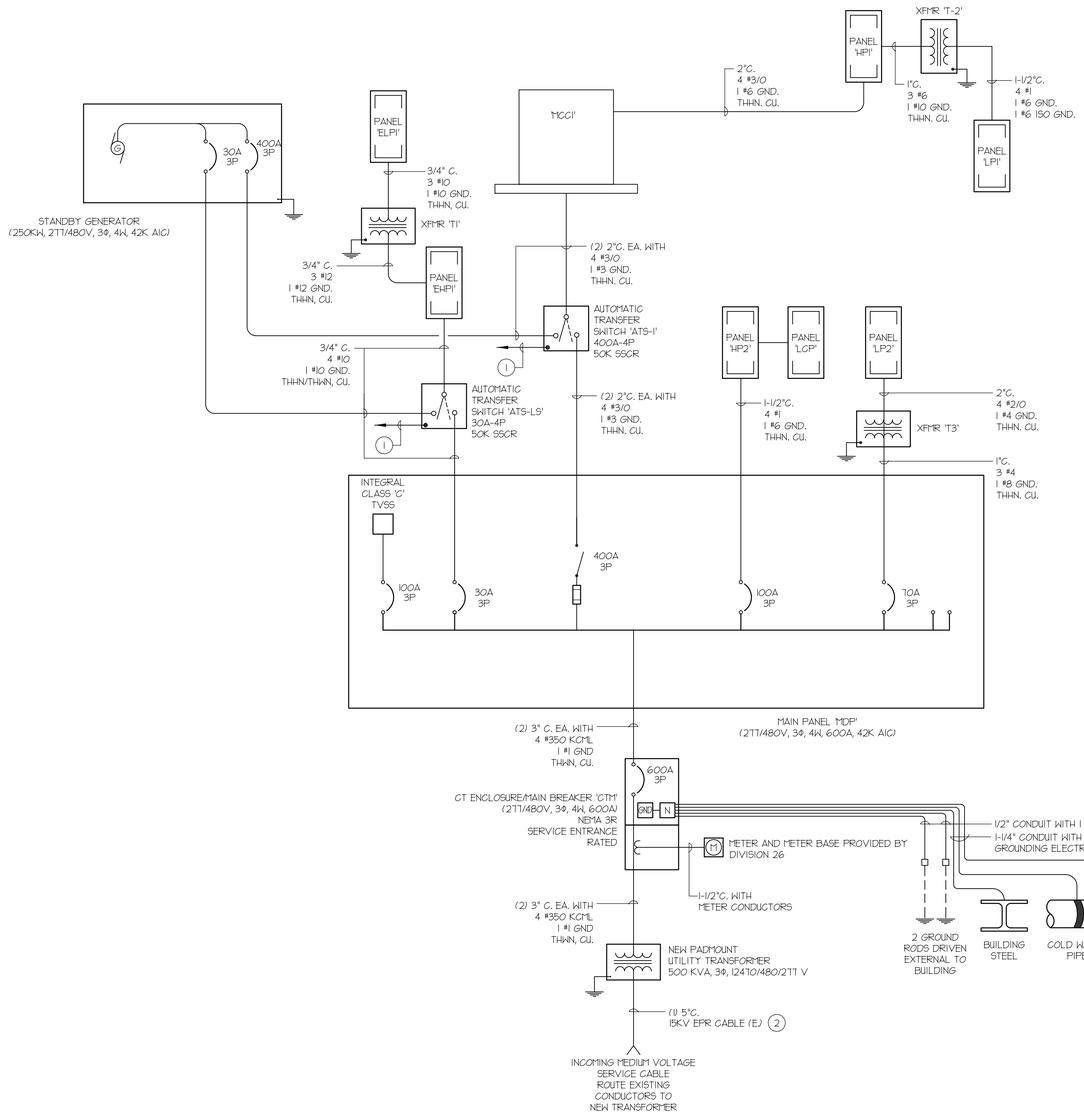


1 ONE-LINE DIAGRAM
SCALE: NONE

## ONE-LINE DIAGRAM KEYED NOTES:

1. EXTEND 3/4" C. WITH GENERATOR MANUFACTURER RECOMMENDED WIRES TO GENERATOR. MAKE ALL REQUIRED CONNECTIONS FOR COMPLETE INSTALLATION.
2. REFER TO SITE PLAN FOR ADDITIONAL INFORMATION AND REQUIREMENTS.

## FIRE ALARM SYSTEM NOTES:

1. EXTEND 3/4" C. WITH (2) MANUFACTURERS RECOMMENDED FIRE ALARM CABLES (FOR REMOTE MONITORING) TO TELEPHONE TERMINAL BOARD. REFER TO ELECTRICAL SITE PLAN FOR ADDITIONAL INFORMATION AND REQUIREMENTS.
2. EXTEND 3/4" C. WITH 1 #18 TSP TO ADDRESSABLE FIRE ALARM INITIATING DEVICE LOOP.
3. EXTEND 3/4" C. WITH 2 #12 AWG TO INDICATING DEVICES.
4. PROVIDE MONITOR MODULES FOR REMOTE MONITORING. REFER TO KEYED NOTE 1 ABOVE.

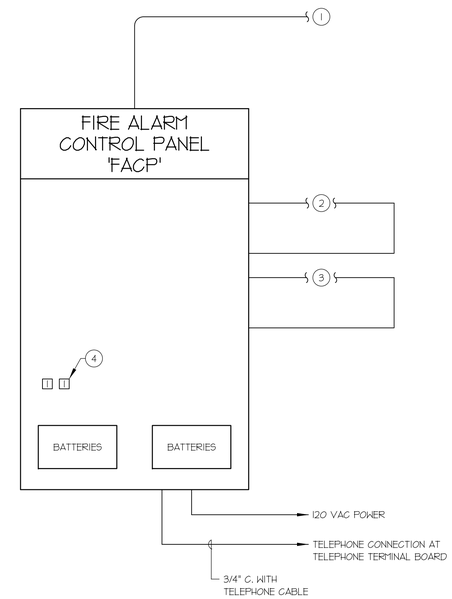


2 FIRE ALARM SYSTEM RISER DIAGRAM
SCALE: NONE

### TRANSFORMER SCHEDULE

| NAME | TYPE | KVA | PRIMARY VOLTAGE | PRIMARY CONNECTION | SECONDARY VOLTAGE | SECONDARY CONNECTION | GROUNDING ELECTRODE CONDUCTOR SIZE | GROUNDING ELECTRODE CONDUCTOR TYPE | K FACTOR | ELECTRO-STATIC SHIELD | MOUNTING | REMARKS |
|---|---|---|---|---|---|---|---|---|---|---|---|---|
| T-1 | | 9 | 480 | DELTA | 120/208 | WYE | #8, 3/4"C. | CU, EMT | 1 | NO | WALL | |
| T-2 | | 30 | 480 | DELTA | 120/208 | WYE | #6, 3/4"C. | CU, EMT | 1 | NO | FLOOR | |
| T-3 | | 45 | 480 | DELTA | 120/208 | WYE | #4, 3/4"C. | CU, EMT | 1 | NO | FLOOR | |

TRACY STOCKING & ASSOCIATES


State of Utah
Department of Administrative Services
Division of Facilities Construction & Management
4110 State Office Building
Salt Lake City, Utah 84114
Phone: (801) 538 - 3018
Fax: (801) 538 - 3267
http://dfcm.utah.gov

CREATED BY:
ENVISION ENGINEERING
Direction. Then Velocity.
244 West 300 North, Suite 100
Salt Lake City, Utah 84103
801.534.1130 ph 801.534.1080 fax


BUILDING NAME:
Utah State Development Center
870 North 860 East
American Fork, Uath

PROJECT TITLE:
Boiler Replacement/ Building Repairs

PROFESSIONAL ENGINEER 6698428 FRANCIS ROSADO 2009.6.18 STATE OF UTAH

| MARK | DATE | DESCRIPTION |
|---|---|---|

ISSUE TYPE: REVIEW

ISSUE DATE: MAY 2009

DFCM PROJECT NO: 08194410
CAD PROJECT NO:
CAD DWG FILE:
DRAWN BY:
CHK'D BY:
COPYRIGHT: STATE OF UTAH

SHEET TITLE
ONE-LINE DIAGRAM

SHEET NUMBER
EP701



W:\2008-176.00 - USDC Boiler Replacement & Heating Plant\Elec\EP701.dwg, 6/18/2009 5:37:00 PM, jdodson, Envision Engineering, P.C.

## LIGHTING AND APPLIANCE PANELBOARD SCHEDULE

PANEL NAME: HP1 TYPE: NF CIRCUIT BREAKERS: [X] BOLT ON [ ] PLUG ON 277 / 480 VOLTAGE 3 PH 4 W

[X] ENGRAVED NAME TAGS BUS MATERIAL: [ ] ALUM BUS [X] CU BUS GROUND: [X] GROUND BUS [ ] ISOL GND BUS NEUTRAL: [X] 100% [ ] 200% LUGS: [X] MAIN [ ] SUB-FEED [ ] FEED-THROUGH MAIN BREAKER: [ ] AMPS ____ BUS AMPS: 225

### BRANCH BREAKERS

| NOTES | ITEM | AMP | POLE | WIRE SIZE | CIR. NO. | LEFT PHASE LOAD A | B | C | RIGHT PHASE LOAD A | B | C | CIR. NO. | AMP | POLE | WIRE SIZE | ITEM | NOTES |
|---|---|---|---|---|---|---|---|---|---|---|---|---|---|---|---|---|---|
| | SURGE SYSTEM | 35 | 3 | 8 | 1 | 6650 | | | 11635 | | | 2 | 60 | 3 | 12 | DEAERATOR | |
| | - | - | - | - | 3 | | 6650 | | | 11635 | | 4 | - | - | 12 | - | |
| | | - | - | - | 5 | | | 6650 | | | 11635 | 6 | - | - | | | |
| | SPARE | 20 | 1 | | 7 | | | | 945 | | | 8 | 15 | 3 | 10 | REMOTE OIL PUMP | |
| | SPARE | 20 | 1 | | 9 | | | | | 945 | | 10 | - | - | - | - | |
| | SPARE | 20 | 1 | | 11 | | | | | | 945 | 12 | - | - | - | - | |
| | SPARE | 20 | 1 | | 13 | | | | | | | 14 | 20 | 1 | | SPARE | |
| | | 20 | 1 | | 15 | | | | | | | 16 | 20 | 1 | | SPARE | |
| | | 20 | 1 | | 17 | | | | | | | 18 | 20 | 1 | | SPARE | |
| | | 20 | 1 | | 19 | | | | 12000 | | | 20 | 70 | 3 | 4 | XFMR (LP1) | |
| | | 20 | 1 | | 21 | | | | | 12000 | | 22 | - | - | - | - | |
| | | 20 | 1 | | 23 | | | | | | 12000 | 24 | - | - | - | - | |
| | | | | | | 6650 | 6650 | 6650 | 24580 | 24580 | 24580 | | | | | | |
| | | | | | | 31230 | 31230 | 31230 | TOTAL | | | | | | | | |
| | | | | | | 113 | 113 | 113 | AMPS / PHASE | | | | | | | | |

FRONT: [X] STANDARD [ ] HINGED [ ] DOOR-IN-DOOR

MOUNTING: [ ] FLUSH [X] SURFACE [ ] SURFACE W/ SKIRT ABOVE [ ] SURFACE W/ SKIRT BELOW

TVSS: [X] NONE [ ] CATEGORY "C" [ ] CATEGORY "B" [ ] CATEGORY "A"

NEMA RATING: [X] NEMA 1 [ ] NEMA 3R [ ] NEMA 4X [ ] NEMA 12 [ ] STAINLESS STEEL

TOTAL CONNECTED LOAD: 93,690

SHORT CIRCUIT RATING: [ ] SERIES - RATED [X] FULLY - RATED

42,000 AMPS RMS SYM

REFER TO ONE-LINE DIAGRAM FOR FEEDER, CONDUIT AND CONDUCTOR SIZES

## LIGHTING AND APPLIANCE PANELBOARD SCHEDULE

PANEL NAME: LP1 TYPE: NQOD CIRCUIT BREAKERS: [X] BOLT ON [ ] PLUG ON 120 / 208 VOLTAGE 3 PH 4 W

[X] ENGRAVED NAME TAGS BUS MATERIAL: [ ] ALUM BUS [X] CU BUS GROUND: [X] GROUND BUS [X] ISOL GND BUS NEUTRAL: [X] 100% [ ] 200% LUGS: [ ] MAIN [ ] SUB-FEED [ ] FEED-THROUGH MAIN BREAKER: [X] AMPS 100 BUS AMPS: 225

### BRANCH BREAKERS

| NOTES | ITEM | AMP | POLE | WIRE SIZE | CIR. NO. | LEFT PHASE LOAD A | B | C | RIGHT PHASE LOAD A | B | C | CIR. NO. | AMP | POLE | WIRE SIZE | ITEM | NOTES |
|---|---|---|---|---|---|---|---|---|---|---|---|---|---|---|---|---|---|
| | OUTLETS OFFICE | 20 | 1 | 12 | 1 | 600 | | | 600 | | | 2 | 20 | 1 | 12 | OUTLETS OFFICE | |
| | OUTLETS OFFICE | 20 | 1 | 12 | 3 | | 600 | | | 360 | | 4 | 20 | 1 | 12 | OUTLETS ENTRY, RESTROOM | |
| | EXTERIOR OUTLETS | 20 | 1 | 12 | 5 | | | 360 | | | 540 | 6 | 20 | 1 | 12 | OUTLETS SHOP AREA | |
| 1 | EHC | 20 | 1 | 12 | 7 | 600 | | | 360 | | | 8 | 20 | 1 | 12 | OUTLETS SHOP AREA | |
| | OUTLETS BOILER W. AREA | 20 | 1 | 12 | 9 | | 540 | | | 540 | | 10 | 20 | 1 | 12 | OUTLETS BOILER E. AREA | |
| | OUTLETS N. AREA | 20 | 1 | 12 | 11 | | | 540 | | | 540 | 12 | 20 | 1 | 12 | OUTLETS TUNNEL, E. EXT. | |
| | UH-1 (EAST UNITS) | 15 | 1 | 12 | 13 | 240 | | | 400 | | | 14 | 20 | 1 | 12 | WATER SOFTNER | |
| | UH-1 (SHOP UNITS) | 15 | 1 | 12 | 15 | | 240 | | | 360 | | 16 | 20 | 1 | 12 | OUTLETS TEST STATION | |
| | FURNACE F-1 | 20 | 1 | 12 | 17 | | | 600 | | | 1050 | 18 | 20 | 2 | 10 | CU-1 | |
| | UH-1 (SW UNITS) | 15 | 1 | 12 | 19 | 120 | | | 1050 | | | 20 | - | - | - | - | |
| | FOP-1 | 20 | 1 | 12 | 21 | | 1200 | | | | | 22 | 20 | 1 | | SPARE | |
| | UH-1 (NW UNITS) | 15 | 1 | 12 | 23 | | | 120 | | | 1200 | 24 | 20 | 1 | 12 | FOP-2 | |
| | TELECOM OUTLETS | 20 | 1 | 12 | 25 | 540 | | | 1200 | | | 26 | 20 | 1 | 12 | FOP-3 | |
| | EYE WASH STN. | 40 | 3 | 8 | 27 | | 2670 | | | 500 | | 28 | 20 | 1 | 10 | IRRIGATION CONTROLLER | |
| | - | - | - | - | 29 | | | 2670 | | | 500 | 30 | 20 | 1 | 10 | GEN BATT CHRGR | |
| | - | - | - | - | 31 | 2670 | | | 1500 | | | 32 | 20 | 1 | 10 | GEN BLOCK HEATER | |
| | SPARE | 20 | 1 | | 33 | | | | | 1500 | | 34 | 20 | 1 | | - | |
| | SPARE | 20 | 1 | | 35 | | | | | | 600 | 36 | 20 | 1 | 12 | BOILER CNTRLS | |
| | TUNNEL LIGHTS | 20 | 1 | 12 | 37 | 800 | | | 600 | | | 38 | 20 | 1 | 12 | BOILER CNTRLS | |
| | SPARE | 20 | 1 | | 39 | | | | | 600 | | 40 | 20 | 1 | 12 | BOILER CNTRLS | |
| | SPARE | 20 | 1 | | 41 | | | | | | 720 | 42 | 20 | 1 | 12 | CCTV | |
| | | | | | | 5570 | 5250 | 4290 | 5710 | 3860 | 5150 | | | | | | |
| | | | | | | 11280 | 9110 | 9440 | TOTAL | | | | | | | | |
| | | | | | | 94 | 76 | 79 | AMPS / PHASE | | | | | | | | |

FRONT: [X] STANDARD [ ] HINGED [ ] DOOR-IN-DOOR

MOUNTING: [ ] FLUSH [X] SURFACE [ ] SURFACE W/ SKIRT ABOVE [ ] SURFACE W/ SKIRT BELOW

TVSS: [X] NONE [ ] CATEGORY "C" [ ] CATEGORY "B" [ ] CATEGORY "A"

NEMA RATING: [X] NEMA 1 [ ] NEMA 3R [ ] NEMA 4X [ ] NEMA 12 [ ] STAINLESS STEEL

TOTAL CONNECTED LOAD: 29,830

SHORT CIRCUIT RATING: [ ] SERIES - RATED [X] FULLY - RATED

10,000 AMPS RMS SYM

REFER TO ONE-LINE DIAGRAM FOR FEEDER, CONDUIT AND CONDUCTOR SIZES

## LIGHTING AND APPLIANCE PANELBOARD SCHEDULE

PANEL NAME: HP2 TYPE: NF CIRCUIT BREAKERS: [X] BOLT ON [ ] PLUG ON 277 / 480 VOLTAGE 3 PH 4 W

[X] ENGRAVED NAME TAGS BUS MATERIAL: [ ] ALUM BUS [X] CU BUS GROUND: [X] GROUND BUS [ ] ISOL GND BUS NEUTRAL: [X] 100% [ ] 200% LUGS: [X] MAIN [ ] SUB-FEED [ ] FEED-THROUGH MAIN BREAKER: [ ] AMPS ____ BUS AMPS: 100

### BRANCH BREAKERS

| NOTES | ITEM | AMP | POLE | WIRE SIZE | CIR. NO. | LEFT PHASE LOAD A | B | C | RIGHT PHASE LOAD A | B | C | CIR. NO. | AMP | POLE | WIRE SIZE | ITEM | NOTES |
|---|---|---|---|---|---|---|---|---|---|---|---|---|---|---|---|---|---|
| | SPARE | 20 | 1 | | 1 | | | | 1540 | | | 2 | 20 | 3 | 10 | LIGHTS BOILER AREA | |
| | LIGHTS WEST AREA | 20 | 1 | 12 | 3 | | 3050 | | | 1310 | | 4 | - | - | - | LIGHTS EAST AREA | |
| | EXT. BLDG LIGHTS | 20 | 1 | 12 | 5 | | | 3050 | | | | 6 | 20 | 1 | | SPARE | |
| | WH-1 | 15 | 3 | 12 | 7 | 2000 | | | | | | 8 | 20 | 1 | | SPARE | |
| | - | - | - | - | 9 | | 2000 | | | | | 10 | 20 | 1 | | SPARE | |
| | - | - | - | - | 11 | | | 2000 | | | | 12 | 20 | 1 | | SPARE | |
| | | | | | | 2000 | 5050 | 5050 | 1540 | 1310 | 0 | | | | | | |
| | | | | | | 3540 | 6360 | 5050 | TOTAL | | | | | | | | |
| | | | | | | 13 | 23 | 18 | AMPS / PHASE | | | | | | | | |

FRONT: [X] STANDARD [ ] HINGED [ ] DOOR-IN-DOOR

MOUNTING: [ ] FLUSH [X] SURFACE [ ] SURFACE W/ SKIRT ABOVE [ ] SURFACE W/ SKIRT BELOW

TVSS: [X] NONE [ ] CATEGORY "C" [ ] CATEGORY "B" [ ] CATEGORY "A"

NEMA RATING: [X] NEMA 1 [ ] NEMA 3R [ ] NEMA 4X [ ] NEMA 12 [ ] STAINLESS STEEL

TOTAL CONNECTED LOAD: 14,150

SHORT CIRCUIT RATING: [ ] SERIES - RATED [X] FULLY - RATED

42,000 AMPS RMS SYM

REFER TO ONE-LINE DIAGRAM FOR FEEDER, CONDUIT AND CONDUCTOR SIZES

## LIGHTING AND APPLIANCE PANELBOARD SCHEDULE

PANEL NAME: LP2 TYPE: NQOD CIRCUIT BREAKERS: [X] BOLT ON [ ] PLUG ON 120 / 208 VOLTAGE 3 PH 4 W

[X] ENGRAVED NAME TAGS BUS MATERIAL: [ ] ALUM BUS [X] CU BUS GROUND: [X] GROUND BUS [X] ISOL GND BUS NEUTRAL: [X] 100% [ ] 200% LUGS: [ ] MAIN [ ] SUB-FEED [ ] FEED-THROUGH MAIN BREAKER: [X] AMPS 175 BUS AMPS: 225

### BRANCH BREAKERS

| NOTES | ITEM | AMP | POLE | WIRE SIZE | CIR. NO. | LEFT PHASE LOAD A | B | C | RIGHT PHASE LOAD A | B | C | CIR. NO. | AMP | POLE | WIRE SIZE | ITEM | NOTES |
|---|---|---|---|---|---|---|---|---|---|---|---|---|---|---|---|---|---|
| | RUD-1 | 15 | 2 | 12 | 1 | 600 | | | 600 | | | 2 | 15 | 2 | 12 | RUD-1 | |
| | - | - | - | - | 3 | | 600 | | | 600 | | 4 | - | - | - | - | |
| | SPARE | 20 | 1 | | 5 | | | | | | | 6 | 20 | 1 | | SPARE | |
| | WELDING OUTLET | 50 | 2 | 6 | 7 | 5000 | | | 5000 | | | 8 | 50 | 2 | 6 | WELDING | |
| | - | - | - | - | 9 | | 5000 | | | 5000 | | 10 | - | - | - | - | |
| | SPARE | 20 | 1 | | 11 | | | | | | | 12 | 20 | 1 | | SPARE | |
| | SPARE | 20 | 1 | | 13 | | | | | | | 14 | 20 | 1 | | SPARE | |
| | WELDING OUTLET | 50 | 3 | 6 | 15 | | 5000 | | | | | 16 | 20 | 1 | | SPARE | |
| | - | - | - | - | 17 | | | 5000 | | | | 18 | 20 | 1 | | SPARE | |
| | SPARE | 20 | 1 | | 19 | | | | | | | 20 | 20 | 1 | | SPARE | |
| | SPARE | 20 | 1 | | 21 | | | | | | | 22 | 20 | 1 | | SPARE | |
| | SPARE | 20 | 1 | | 23 | | | | | | 720 | 24 | 20 | 1 | | SPARE | |
| | | | | | | 5600 | 10600 | 5000 | 5600 | 5600 | 720 | | | | | | |
| | | | | | | 11200 | 16200 | 5720 | TOTAL | | | | | | | | |
| | | | | | | 93 | 135 | 48 | AMPS / PHASE | | | | | | | | |

FRONT: [X] STANDARD [ ] HINGED [ ] DOOR-IN-DOOR

MOUNTING: [ ] FLUSH [X] SURFACE [ ] SURFACE W/ SKIRT ABOVE [ ] SURFACE W/ SKIRT BELOW

TVSS: [X] NONE [ ] CATEGORY "C" [ ] CATEGORY "B" [ ] CATEGORY "A"

NEMA RATING: [X] NEMA 1 [ ] NEMA 3R [ ] NEMA 4X [ ] NEMA 12 [ ] STAINLESS STEEL

TOTAL CONNECTED LOAD: 33,120

SHORT CIRCUIT RATING: [ ] SERIES - RATED [X] FULLY - RATED

10,000 AMPS RMS SYM

REFER TO ONE-LINE DIAGRAM FOR FEEDER, CONDUIT AND CONDUCTOR SIZES

PANELBOARD SCHEDULE NOTES:
1. PROVIDE CLASS A GROUND FAULT INTERRUPTER TYPE CIRCUIT BREAKER.
2. PROVIDE ARC FAULT CIRCUIT INTERRUPTER TYPE CIRCUIT BREAKER.
3. PROVIDE 30 MILLIAMPERE EQUIPMENT GROUNG FAULT PROTECTOR TYPE CIRCUIT BREAKER.
4. PROVIDE SHUNT-TRIP TYPE CIRCUIT BREAKER WITH 120V COIL.
5. PROVIDE HACR RATED CIRCUIT BREAKER.
6. PROVIDE HANDLE CLAMP FOR HOLDING CIRCUIT BREAKER IN THE "ON" OR "OFF" POSITION.
7. PROVIDE SWITCHING RATED CIRCUIT BREAKER.
8. PROVIDE NEW CIRCUIT BREAKER IN EXISTING PANELBOARD (WHERE PANEL IS INDICATED AS EXISTING) OF SAME MANUFACTURER AND A.I.C. RATING AS EXISTING.
9. EXISTING LOAD.

PANEL LEGEND

| | |
|---|---|
| HP1 | LP1 |
| HP2 | LP2 |

TRACY STOCKING & ASSOCIATES


State of Utah
Department of Administrative Services
Division of Facilities Construction & Management
4110 State Office Building
Salt Lake City, Utah 84114
Phone: (801) 538 - 3018
Fax: (801) 538 - 3267
http://dfcm.utah.gov

CREATED BY:
ENVISION ENGINEERING
Direction. Then Velocity.
244 West 300 North, Suite 100
Salt Lake City, Utah 84103
801.534.1130 ph 801.534.1080 fax


BUILDING NAME:
Utah State Development Center
870 North 860 East
American Fork, Uath

PROJECT TITLE:
Boiler Replacement/ Building Repairs

PROFESSIONAL ENGINEER 6698428 FRANCIS ROSADO 2009.6.18 STATE OF UTAH

| MARK | DATE | DESCRIPTION |
|---|---|---|

ISSUE TYPE: REVIEW

ISSUE DATE: MAY 2009

DFCM PROJECT NO: 08194410
CAD PROJECT NO:
CAD DWG FILE:
DRAWN BY:
CHK'D BY:
COPYRIGHT: STATE OF UTAH

SHEET TITLE
PANELBOARD SCHEDULES

SHEET NUMBER
EP801



W:\2008-176.00 - USDC Boiler Replacement & Heating Plant\Elec\EP801.dwg, 6/18/2009 5:36:51 PM, jdodson, Envision Engineering, P.C.

## MOTOR CONTROL CENTER SCHEDULE

PANEL NAME: MCC1

| | | | | | |
|---|---|---|---|---|---|
| X | MAIN LUGS | 480 | VOLTS | 42 | KAIC |
| | MAIN BREAKER | 400 | AMPS | 1 | NEMA WIRE CLASS |
| | SERVICE ENTRANCE | 3 | PHASE | 1A | NEMA ENCLOSURE |
| X | ENGRAVED NAMEPLATES RATED | 4 | WIRE | BOTTOM | ENTRY |

| MCC UNIT | EQUIPMENT NO. / DESCRIPTION | | LOAD | TYPE | DEVICE OR STARTER | INDICATING LIGHTS ON | INDICATING LIGHTS STOPPED | CONTROL | AUX CONTACTS | CONTROL POWER | OVERLOAD RELAY | COMMENTS |
|---|---|---|---|---|---|---|---|---|---|---|---|---|
| 1 | B-1 | BOILER PUMP | 7.5 | HP | FVNR | RED | GREEN | HOA | 2 N.O. 2 N.C. | CPT | SOLID STATE | PROVIDE POWER FACTOR CORRECTION CAPACITOR. |
| 2 | B-2 | BOILER PUMP | 7.5 | HP | FVNR | RED | GREEN | HOA | 2 N.O. 2 N.C. | CPT | SOLID STATE | PROVIDE POWER FACTOR CORRECTION CAPACITOR. |
| 3 | B-3 | BOILER PUMP | 7.5 | HP | FVNR | RED | GREEN | HOA | 2 N.O. 2 N.C. | CPT | SOLID STATE | PROVIDE POWER FACTOR CORRECTION CAPACITOR. |
| 4 | - | PANEL 'HP1' | 200 | A | THERMAL MAGNETIC BREAKER | - | - | - | - | - | - | |
| 5 | - | SPARE | 100 | A | THERMAL MAGNETIC BREAKER | - | - | - | - | - | - | |
| 6 | - | SPARE | 10 | HP | FVNR | RED | GREEN | HOA | 2 N.O. 2 N.C. | CPT | SOLID STATE | |
| 7 | | 12" BLANK SPACE | | | | | | | | | | |
| 8 | | 12" BLANK SPACE | | | | | | | | | | |

ABBREVIATIONS:
N.O. NORMALLY OPEN
N.C. NORMALLY CLOSED
FVNR FULL VOLTAGE NON REVERSING
FVR FULL VOLTAGE REVERSING

NOTES:
1 REFER TO SPECIFICATION FOR ADDITIONAL INFORMATION AND REQUIREMENTS FOR THIS OVER CURRENT PROTECTION DEVICES.
2 REFER TO SPECIFICATIONS FOR ADDITIONAL INFORMATION AND REQUIREMENTS FOR STARTER AND VFD EQUIPMENT.
3 REFER TO EQUIPMENT SCHEDULE FOR CONDUCTOR, DISCONNECT REQUIREMENTS, ETC.

## LIGHTING RELAY PANEL SCHEDULE

| | |
|---|---|
| Panel Address: | - |
| Panel Name: | LCP |
| Location: | Elec. Room |
| Transformer Voltage: | 277 |
| Mounting: | SURFACE |
| NEMA Type: | NEMA 1 |

| Relay | Circuit | Lights Controlled | Switch/OS | Channel A | B | C | D | E | F | G | H |
|---|---|---|---|---|---|---|---|---|---|---|---|
| 1 | HP2-5 | EXTERIOR LIGHTS | | x | | | | | | | |
| 2 | | SPARE | | | | | | | | | |
| 3 | HP2-2 | BOILER ROOM LIGHTS | | | x | | | | | | |
| 4 | | SPARE | | | | | | | | | |
| 5 | | | | | | | | | | | |
| 6 | | | | | | | | | | | |
| 7 | | | | | | | | | | | |
| 8 | | | | | | | | | | | |

| Channel | LOAD Description | PROGRAM REQUIREMENTS |
|---|---|---|
| A | EXTERIOR LIGHTS | PHOTOCELL ON TIMED OFF |
| B | BOILER MAIN AREA LIGHTS | TIMED ON / DAY LIGHT |
| | | HARVESTING / TIMED OFF |
| C | | |
| D | | |
| E | | |
| F | | |
| G | | |
| H | | |

GENERAL NOTES:
1. PROGRAM SYSTEM TO MEET REQUIREMENTS OF 2006 IECC.
2. CONFIRM SWITCHING SCHEME WITH THE OWNER PRIOR TO PROGRAMMING THE SYSTEM.
3. PROVIDE LEVITON ZMAX, HUBBELL LX8 OR APPROVED EQUIVALENT LC PANEL. IN PUT LIGHT SENSOR (#PCIND-000 OR APPROVED EQUIVALENT SET TO 50 FOOT CANDLES) IN BOILER ROOM AREA.
4. EXTERIOR PHOTOCELL INPUT.

## LIGHTING AND APPLIANCE PANELBOARD SCHEDULE

PANEL NAME: EHP1 TYPE: NF CIRCUIT BREAKERS: X BOLT ON / PLUG ON 277 / 480 VOLTAGE 3 PH 4 W

X ENGRAVED NAME TAGS BUS MATERIAL: ALUM BUS / X CU BUS GROUND: X GROUND BUS / ISOL GND BUS NEUTRAL: X 100% / 200% LUGS: X MAIN / SUB-FEED / FEED-THROUGH MAIN BREAKER: AMPS ____ BUS AMPS: 100

### BRANCH BREAKERS

| NOTES | ITEM | AMP | POLE | WIRE SIZE | CIR. NO. | LEFT PHASE LOAD A | B | C | RIGHT PHASE LOAD A | B | C | CIR. NO. | AMP | POLE | WIRE SIZE | ITEM | NOTES |
|---|---|---|---|---|---|---|---|---|---|---|---|---|---|---|---|---|---|
| | EXIT SIGNS | 20 | 1 | 12 | 1 | 500 | | | 150 | | | 2 | 20 | 3 | 12 | EXTERIOR EGRESS LTS | |
| | SPARE | 20 | 1 | | 3 | | | | | | | 4 | 20 | 1 | | SPARE | |
| | SPARE | 20 | 1 | | 5 | | | | | | | 6 | 20 | 1 | | SPARE | |
| | BLANK | 20 | 1 | | 7 | | | | 1000 | | | 8 | 15 | 3 | 12 | XFMR T-1' | |
| | BLANK | 20 | 1 | | 9 | | | | | 1000 | | 10 | - | - | - | - | |
| | BLANK | 20 | 1 | | 11 | | | | | | 1000 | 12 | - | - | - | - | |
| | | | | | | 500 | 0 | 0 | 1150 | 1000 | 1000 | | | | | | |
| | | | | | | 1650 | 1000 | 1000 | TOTAL | | | | | | | | |
| | | | | | | 6 | 4 | 4 | AMPS / PHASE | | | | | | | | |

FRONT: X STANDARD / HINGED / DOOR-IN-DOOR

MOUNTING: FLUSH / X SURFACE / SURFACE W/ SKIRT ABOVE / SURFACE W/ SKIRT BELOW

TVSS: X NONE / CATEGORY "C" / CATEGORY "B" / CATEGORY "A"

NEMA RATING: X NEMA 1 / NEMA 3R / NEMA 4X / NEMA 12 / STAINLESS STEEL

TOTAL CONNECTED LOAD: 3,650

SHORT CIRCUIT RATING: SERIES - RATED / X FULLY - RATED

42,000 AMPS RMS SYM

REFER TO ONE-LINE DIAGRAM FOR FEEDER , CONDUIT AND CONDUCTOR SIZES

## LIGHTING AND APPLIANCE PANELBOARD SCHEDULE

PANEL NAME: ELP1 TYPE: NQOD CIRCUIT BREAKERS: X BOLT ON / PLUG ON 120 / 208 VOLTAGE 3 PH 4 W

X ENGRAVED NAME TAGS BUS MATERIAL: ALUM BUS / X CU BUS GROUND: X GROUND BUS / ISOL GND BUS NEUTRAL: X 100% / 200% LUGS: X MAIN / SUB-FEED / FEED-THROUGH MAIN BREAKER: X AMPS 30 BUS AMPS: 100

### BRANCH BREAKERS

| NOTES | ITEM | AMP | POLE | WIRE SIZE | CIR. NO. | LEFT PHASE LOAD A | B | C | RIGHT PHASE LOAD A | B | C | CIR. NO. | AMP | POLE | WIRE SIZE | ITEM | NOTES |
|---|---|---|---|---|---|---|---|---|---|---|---|---|---|---|---|---|---|
| | EXIT SIGNS | 20 | 1 | 12 | 1 | 500 | | | 150 | | | 2 | 20 | 3 | 12 | EXTERIOR EGRESS LTS | |
| | SPARE | 20 | 1 | | 3 | | | | | | | 4 | 20 | 1 | | SPARE | |
| | SPARE | 20 | 1 | | 5 | | | | | | | 6 | 20 | 1 | | SPARE | |
| | BLANK | 20 | 1 | | 7 | | | | 1000 | | | 8 | 15 | 3 | 12 | XFMR T-1' | |
| | BLANK | 20 | 1 | | 9 | | | | | 1000 | | 10 | - | - | - | - | |
| | BLANK | 20 | 1 | | 11 | | | | | | 1000 | 12 | - | - | - | - | |
| | | | | | | 500 | 0 | 0 | 1150 | 1000 | 1000 | | | | | | |
| | | | | | | 1650 | 1000 | 1000 | TOTAL | | | | | | | | |
| | | | | | | 14 | 8 | 8 | AMPS / PHASE | | | | | | | | |

FRONT: X STANDARD / HINGED / DOOR-IN-DOOR

MOUNTING: FLUSH / X SURFACE / SURFACE W/ SKIRT ABOVE / SURFACE W/ SKIRT BELOW

TVSS: X NONE / CATEGORY "C" / CATEGORY "B" / CATEGORY "A"

NEMA RATING: X NEMA 1 / NEMA 3R / NEMA 4X / NEMA 12 / STAINLESS STEEL

TOTAL CONNECTED LOAD: 3,650

SHORT CIRCUIT RATING: SERIES - RATED / X FULLY - RATED

10,000 AMPS RMS SYM

REFER TO ONE-LINE DIAGRAM FOR FEEDER , CONDUIT AND CONDUCTOR SIZES

PANELBOARD SCHEDULE NOTES:
1. PROVIDE CLASS A GROUND FAULT INTERRUPTER TYPE CIRCUIT BREAKER.
2. PROVIDE ARC FAULT CIRCUIT INTERRUPTER TYPE CIRCUIT BREAKER.
3. PROVIDE 30 MILLIAMPERE EQUIPMENT GROUNG FAULT PROTECTOR TYPE CIRCUIT BREAKER.
4. PROVIDE SHUNT-TRIP TYPE CIRCUIT BREAKER WITH 120V COIL.
5. PROVIDE HACR RATED CIRCUIT BREAKER.
6. PROVIDE HANDLE CLAMP FOR HOLDING CIRCUIT BREAKER IN THE "ON" OR "OFF" POSITION.
7. PROVIDE SWITCHING RATED CIRCUIT BREAKER.
8. PROVIDE NEW CIRCUIT BREAKER IN EXISTING PANELBOARD (WHERE PANEL IS INDICATED AS EXISTING) OF SAME MANUFACTURER AND A.I.C. RATING AS EXISTING.
9. EXISTING LOAD.

## PANEL LEGEND

| | |
|---|---|
| MCC1 | EHP1 |
| LCP | ELP1 |

TRACY STOCKING & ASSOCIATES


State of Utah
Department of Administrative Services
Division of Facilities Construction & Management
4110 State Office Building
Salt Lake City, Utah 84114
Phone: (801) 538 - 3018
Fax: (801) 538 - 3267
http://dfcm.utah.gov

CREATED BY:
ENVISION ENGINEERING
Direction. Then Velocity.
244 West 300 North, Suite 100
Salt Lake City, Utah 84103
801.534.1130 ph 801.534.1080 fax


BUILDING NAME:
Utah State Development Center
870 North 860 East
American Fork, Uath

PROJECT TITLE:
Boiler Replacement/ Building Repairs

PROFESSIONAL ENGINEER 6698428 FRANCIS ROSADO 2009.6.18 STATE OF UTAH

| MARK | DATE | DESCRIPTION |
|---|---|---|

ISSUE TYPE: REVIEW

ISSUE DATE: MAY 2009

DFCM PROJECT NO: 08194410
CAD PROJECT NO:
CAD DWG FILE:
DRAWN BY:
CHK'D BY:
COPYRIGHT: STATE OF UTAH

SHEET TITLE
PANELBOARD SCHEDULES

SHEET NUMBER
EP802



W:\2008-176.00 - USDC Boiler Replacement & Heating Plant\Elec\EP802.dwg, 6/18/2009 5:36:17 PM, jdodson, Envision Engineering, P.C.