State of Utah

JON M. HUNTSMAN, JR.
Governor

GARY R. HERBERT
Lieutenant Governor

Department of Administrative Services
KIMBERLY K. HOOD
Executive Director

Division of Facilities Construction and Management
DAVID G. BUXTON
Director

ADDENDUM NO. 2

Date:	July 16, 2009		
To:	Contractors		
From:	Craig Wessman – Project Manager		
Reference:	Boiler Replacement and Building Repairs Utah State Developmental Center – American Fork, Utah DFCM Project No. 08194410		
Subject:	**Addendum No. 2**		
Pages	Addendum Cover Sheet	1	page
	Architect's Addendum	34	pages
	Total	35	pages

Note: This Addendum shall be included as part of the Contract Documents. Items in this Addendum apply to all drawings and specification sections whether referenced or not involving the portion of the work added, deleted, modified, or otherwise addressed in the Addendum. Acknowledge receipt of this Addendum in the space provided on the Bid Form. Failure to do so may subject the Bidder to Disqualification.

While we contend that SB220 should only be potentially applicable to a contract issued after the effective date of said bill, this is to clarify that for purposes of this contract, regardless of the execution or effective dates of this contract, the status of Utah Law and remedies available to the State of Utah and DFCM, as it relates to any matter referred to or affected by said SB220, shall be the Utah law in effect at the time of the issuance of this Addendum.

2.1 SCHEDULE CHANGES: No changes to Project Schedule

2.2 GENERAL ITEMS:

2.2.1 See attached Architect's Addendum – specs/drawings/clarifications

State of Utah
Division of Facilities Construction and Management
USDC Boiler Replacement
Project Number: 08194410

Addendum Number 1
July15, 2008

This Addendum forms a part of the Contract Documents and modifies the original Bidding Documents and/or prior Addenda as noted below. All conditions, requirements, materials and workmanship are to be as described in the Contract Documents unless specifically stated otherwise.

This Addendum consists of 3 page(s) and the attached revised Electrical Drawings, and the attached Specification Sections 26 0182. This addendum also includes the attached Mechanical Addendum #1.

1. Changes to prior Addenda
   NA

2. Changes to bidding requirements
   NA

3. Changes to Specifications:
   A. Section 07 5419 – PVC Roofing: *Change* the Approved Roofing Contractors to include the 1020 list of pre-qualified Roofing Contractors, as well as the 2009 list. Both lists are not in the Specifications, but may be found on the DFCM web-site.
   B. Section 23 0900 – Controls: *Add* this entire section which was missing from the project manual.
   C. Section 260610.2.1 Emergency Electrical Systems Manufacturers
      a. Section 2.1.A: Engine Generator Sets: *Add* Generac Power Systems.
      b. Section 2.1.B: Automatic Transfer Switches: *Add* Generac Power Systems.
   D. Section 260182 Pad-Mounted Transformer
      a. *Delete* previously issued specification in its entirety.
      b. *Refer to attached new* transformer specification 260182 dated July 13, 2009.

4. Changes to drawings
   A. Sheet C401: *Modify* the last General Note to change the last sentence to read: "Contractor is responsible for any damage caused to existing utilities and utility structure that are identified on

the Site Utility Plan, marked by Blue Stakes, or identified by USDC maintenance staff".

B. Sheet AS101 – Architectural Site Plan: *Add* the requirement to in-fill the opening where the existing tunnel will be removed with CMU. The opening dimension is approximately 5' wide by 8' tall.

C. Sheet EG002: Light Fixture Schedule: *Add* alternative suppliers for light fixtures. Refer to attached revised sheet.

D. Sheet EG701: One-Line Diagram
   a. ATS-LS: *Change* to 60A.
   b. Generator: *Change* one breaker to 60A
   c. Emergency branch feeders: *Change* to 60A.
   d. Main Panel MDP: *Change* overcurrent device for ATS-LS to 60A-3P fused switch.
   e.

E. Sheet EP802: Panelboard Schedules
   a. Panels EHP1: *Change* to Bussmann EP panels. Add 30A main breaker.
   b. Panels ELP1: *Change* to Bussmann EP panels.

5. Clarifications and Instructions:

A. The current boiler plant can stand on its own for normal and emergency power (generator) during construction. Since the new plant requires a new pad-mount transformer and generator this equipment can be installed without the existing plant going down with the exception of primary or medium voltage terminations for the new transformer. During this time, the existing plant can continue on its generator power and this is merely coordination which needs to occur during the final completion stage with the owner. The scope of electrical work shown on the Bidding Documents reflects the required staging or phasing of electrical work.

B. On Sheet A602 the note with the * at the bottom of the Finish Schedule is only to clarify that the height of the ceiling does not include any beams. This does not mean that the beams aren't to be painted.

C. The Soils Report did not identify any inadequate soil conditions. The report is available for all bidders to download on the web-site.

D. The existing tunnel width and location is shown on A101 – Main Floor plan. The height and elevation is shown on C/A310. The thickness and reinforcing of the concrete are un-know. For bidding purposes assume the following: Floor: 6" concrete w/ #4 bars at 24" each way. Walls and Roof: 12" concrete with #5 bars at 12"

each way. Also assume there is a footing under each wall – 12" deep x 36" wide with (3) # 5 bars continuous.

E. Demolition of the existing tunnel – including all piping and electrical – between the new connecting tunnel and the existing boiler plant is included in this contract. This demolition must occur after the successful start-up and testing of the new boilers. The existing opening that will be left where the tunnel connected to the existing building shall be in-filled with 8" cmu.

F. The new retaining wall which runs South between the new connecting tunnel and the existing building does not dowel into the existing building.

End of Addendum

SECTION 260182

MEDIUM-VOLTAGE TRANSFORMERS

PART 1 - GENERAL

1.1 RELATED DOCUMENTS

A. Drawings and general provisions of the Contract, including General and Supplementary Conditions and Division 01 Specification Sections, apply to this Section.

1.2 SUMMARY

A. This Section includes the following types of transformers with medium-voltage primaries:

1. Pad-mounted, liquid-filled transformers.

1.3 DEFINITIONS

A. NETA ATS: Acceptance Testing Specification.

1.4 SUBMITTALS

A. Product Data: Include rated nameplate data, capacities, weights, dimensions, minimum clearances, installed devices and features, location of each field connection, and performance for each type and size of transformer indicated.

B. Shop Drawings: Diagram power wiring.

C. Coordination Drawings: Floor plans, drawn to scale, on which the following items are shown and coordinated with each other, based on input from installers of the items involved:

1. Underground primary and secondary conduit stub-up location.
2. Dimensioned concrete base, outline of transformer, and required clearances.
3. Ground rod and grounding cable locations.

D. Manufacturer Seismic Qualification Certification: Submit certification that transformer assembly and components will withstand seismic forces defined in Division 16 Section "Electrical Support and Seismic Restraints" Include the following:

1. Basis for Certification: Indicate whether withstand certification is based on actual test of assembled components or on calculation.

   a. The term "withstand" means "the unit will remain in place without separation of any parts from the device when subjected to the seismic forces specified."

2. Dimensioned Outline Drawings of Equipment Unit: Identify center of gravity and locate and describe mounting and anchorage provisions.
3. Detailed description of equipment anchorage devices on which the certification is based and their installation requirements.

E. Qualification Data: For testing agency.

F. Source quality-control test reports.

G. Field quality-control test reports.

H. Follow-up service reports.

I. Operation and Maintenance Data: For transformer and accessories to include in emergency, operation, and maintenance manuals.

1.5 QUALITY ASSURANCE

A. Testing Agency Qualifications: An independent testing agency, with the experience and capability to conduct the testing indicated, that is a member company of the InterNational Electrical Testing Association or is a nationally recognized testing laboratory (NRTL) as defined by OSHA in 29 CFR 1910.7, and that is acceptable to authorities having jurisdiction.

1. Testing Agency's Field Supervisor: Person currently certified by the InterNational Electrical Testing Association or the National Institute for Certification in Engineering Technologies to supervise on-site testing specified in Part 3.

B. Product Options: Drawings indicate size, profiles, and dimensional requirements of transformers and are based on the specific system indicated. Refer to Division 01 Section "Product Requirements."

C. Electrical Components, Devices, and Accessories: Listed and labeled as defined in NFPA 70, Article 100, by a testing agency acceptable to authorities having jurisdiction, and marked for intended use.

D. Comply with IEEE C2.

E. Comply with ANSI C57.12.10, ANSI C57.12.28, IEEE C57.12.70, and IEEE C57.12.80.

F. Comply with NFPA 70.

1.6 DELIVERY, STORAGE, AND HANDLING

A. Store transformers protected from weather and so condensation will not form on or in units. Provide temporary heating according to manufacturer's written instructions.

1.7 PROJECT CONDITIONS

A. Service Conditions: IEEE C37.121, usual service conditions except for the following:

1. Altitudes above 5000 feet

1.8 COORDINATION

A. Coordinate size and location of concrete bases. Cast anchor-bolt inserts into bases. Concrete, reinforcement, and formwork requirements are specified in Division 03.

PART 2 - PRODUCTS

2.1 MANUFACTURERS

A. Manufacturers: Subject to compliance with requirements, provide products by one of the following:

1. Cooper Industries; Cooper Power Systems Division.
2. GE Electrical Distribution & Control.
3. Cutler Hammer
4. Siemens
5. Square D
6. Federal Pacific Transformers

2.2 PAD-MOUNTED, LIQUID-FILLED TRANSFORMERS

A. Description: ANSI C57.12.13, ANSI C57.12.26, IEEE C57.12.00,[**IEEE C57.12.22,**] pad-mounted, 2-winding transformers. Windings shall be copper only. Finish shall be light gray or green. A nitrogen blanket per manufacturer's recommendation shall be provided.

B. Insulating Liquid: Less flammable, edible-seed-oil based, and UL listed as complying with NFPA 70 requirements for fire point of not less than 300 deg C when tested according to ASTM D 92. Liquid shall be biodegradable and nontoxic.

C. Insulation Temperature Rise: 55 deg C when operated at rated kVA output in a 40 deg C ambient temperature. Transformer shall be rated to operate at rated kilovolt ampere in an average ambient temperature of 30 deg C over 24 hours with a maximum ambient temperature of 40 deg C without loss of service life expectancy.

D. Basic Impulse Level: 95 kV.

E. Full-Capacity Voltage Taps: Four 2.5 percent taps, 2 above and 2 below rated high voltage; with externally operable tap changer for de-energized use and with position indicator and padlock hasp.

F. High-Voltage Switch: 200 A, make-and-latch rating of 10-kA RMS, symmetrical, arranged for loop feed with 3-phase, 4-position, gang-operated, load-break switch that is oil immersed in transformer tank with externally operated handle.

G. Surge Arresters: Distribution class, one for each primary phase; complying with IEEE C62.11 and NEMA LA 1; support from tank wall within high-voltage compartment. Transformers shall have three arresters for loop-feed circuits.

H. High-Voltage Terminations and Equipment: Dead front with universal-type bushing wells for dead-front bushing-well inserts, complying with IEEE 386 and including the following:

1. Bushing-Well Inserts: One for each high-voltage bushing well.
2. Surge Arresters: Dead-front, elbow-type, metal-oxide-varistor units.
3. Parking Stands: One for each high-voltage bushing well.
4. Portable Insulated Bushings: Arranged for parking insulated, high-voltage, load-break cable terminators; one for each primary feeder conductor terminating at transformer.

I. Accessories:

1. Drain Valve: 1 inch, with sampling device.
2. Dial-type thermometer.
3. Liquid-level gage.
4. Pressure-vacuum gage.
5. Pressure Relief Device: Self-sealing with an indicator.
6. Mounting provisions for low-voltage current transformers.
7. Mounting provisions for low-voltage potential transformers.
8. Busway terminal connection at low-voltage compartment.
9. Alarm contacts for gages and thermometer listed above.
10. Filling plug and filter.
11. Oil temperature gage.

2.3 IDENTIFICATION DEVICES

A. Nameplates: Engraved, laminated-plastic or metal nameplate for each transformer, mounted with corrosion-resistant screws.

2.4 SOURCE QUALITY CONTROL

A. Factory Tests: Perform design and routine tests according to standards specified for components. Conduct transformer tests according to IEEE C57.12.90.

B. Factory Tests: Perform the following factory-certified tests on each transformer:

1. Resistance measurements of all windings on rated-voltage connection and on tap extreme connections.
2. Ratios on rated-voltage connection and on tap extreme connections.
3. Polarity and phase relation on rated-voltage connection.
4. No-load loss at rated voltage on rated-voltage connection.
5. Excitation current at rated voltage on rated-voltage connection.
6. Impedance and load loss at rated current on rated-voltage connection and on tap extreme connections.
7. Applied potential.
8. Induced potential.
9. Temperature Test: If transformer is supplied with auxiliary cooling equipment to provide more than one rating, test at lowest kilovolt-ampere Class OA or Class AA rating and highest kilovolt-ampere Class OA/FA or Class AA/FA rating.

    a. Temperature test is not required if record of temperature test on an essentially duplicate unit is available.

10. Owner will witness all required factory tests. Notify Architect at least 14 days before date of tests and indicate their approximate duration.

PART 3 - EXECUTION

3.1 EXAMINATION

A. Examine areas and conditions for compliance with requirements for medium-voltage transformers.

B. Examine roughing-in of conduits and grounding systems to verify the following:

1. Wiring entries comply with layout requirements.
2. Entries are within conduit-entry tolerances specified by manufacturer and no feeders will have to cross section barriers to reach load or line lugs.

C. Examine concrete bases for suitable mounting conditions where transformers will be installed.

D. Verify that ground connections are in place and that requirements in Division 26 Section "Grounding" have been met. Maximum ground resistance shall be 5 ohms at location of transformer.

E. Proceed with installation only after unsatisfactory conditions have been corrected.

3.2 INSTALLATION

A. Install transformers on concrete bases.

1. Anchor transformers to concrete bases according to manufacturer's written instructions, seismic codes at Project, and requirements in Division 26 Section "Electrical Support and Seismic Restraints."
2. Construct concrete bases of dimensions indicated, but not less than 4 inches larger in both directions than supported unit and 4 inches high.
3. Install dowel rods to connect concrete bases to concrete floor. Unless otherwise indicated, install dowel rods on 18-inch centers around full perimeter of base.
4. Install epoxy-coated anchor bolts, for supported equipment, that extend through concrete base and anchor into structural concrete floor.
5. Place and secure anchorage devices. Use supported equipment manufacturer's setting drawings, templates, diagrams, instructions, and directions furnished with items to be embedded.
6. Tack-weld or bolt transformers to channel-iron sills embedded in concrete bases. Install sills level and grout flush with floor or base.

B. Maintain minimum clearances and workspace at equipment according to manufacturer's written instructions and NFPA 70.

3.3 IDENTIFICATION

A. Identify field-installed wiring and components and provide warning signs in accordance with all manufacturers' requirements.

3.4 CONNECTIONS

A. Ground equipment according to Division 26 Section "Grounding."

B. Connect wiring according to Division 16 Section "Conductors and Cables."

3.5 FIELD QUALITY CONTROL

A. Manufacturer's Field Service: Engage a factory-authorized service representative to inspect field-assembled components and equipment installation, including connections, and to assist in field testing. Report results in writing.

B. Testing Agency: Engage a qualified testing and inspecting agency to perform the following field tests and inspections and prepare test reports:

C. Perform the following field tests and inspections and prepare test reports:

1. After installing transformers but before primary is energized, verify that grounding system at substation is tested at specified value or less.
2. After installing transformers and after electrical circuitry has been energized, test for compliance with requirements.
3. Perform visual and mechanical inspection and electrical test stated in NETA ATS. Certify compliance with test parameters.
4. Test and adjust controls and safeties. Replace damaged and malfunctioning controls and equipment.

D. Remove and replace malfunctioning units and retest as specified above.

E. Test Reports: Prepare written reports to record the following:

1. Test procedures used.
2. Test results that comply with requirements.
3. Test results that do not comply with requirements and corrective actions taken to achieve compliance with requirements.

3.6 FOLLOW-UP SERVICE

A. Voltage Monitoring and Adjusting: If requested by Owner, perform the following voltage monitoring after Substantial Completion but not more than six months after Final Acceptance:

1. During a period of normal load cycles as evaluated by Owner, perform seven days of three-phase voltage recording at secondary terminals of each transformer. Use voltmeters with calibration traceable to National Institute of Science and Technology standards and with a chart speed of not less than 1 inch per hour. Voltage unbalance greater than 1 percent between phases, or deviation of any phase voltage from nominal value by more than plus or minus 5 percent during test period, is unacceptable.
2. Corrective Actions: If test results are unacceptable, perform the following corrective actions, as appropriate:

   a. Adjust transformer taps.
   b. Prepare written request for voltage adjustment by electric utility.

3. Retests: After corrective actions have been performed, repeat monitoring until satisfactory results are obtained.
4. Report: Prepare written report covering monitoring and corrective actions performed.

END OF SECTION 260182

LIGHT FIXTURE SCHEDULE

TYPE	MANUFACTURER	SERIES	DESCRIPTION	VOLTAGE	LOAD (VA)	MOUNTING	LAMPS NUMBER	LAMPS TYPE	LAMPS WATTS	LAMPS COLOR (KELVIN)	LAMPS CRI	REMARKS
CR4	DAY-BRITE COLUMBIA WILLIAMS METALUX LITHONIA	TS KL 82 DIMN AFST	SPECIFICATION INDUSTRIAL TURRET DIMENSIONS: 4'L X 7-5/8"W WHITE STEEL BODY WIRE GUARD ELECTRONIC BALLAST(S): QTY: 1; THD: <10%	120/277	64	CHAIN OR SURFACE	2	48" LINEAR T8 FLUORESCENT	32	3500	86	
GA2	DAY-BRITE COLUMBIA WILLIAMS METALUX LITHONIA	2SPG ST8 LPT 2GC8 2SP8	SPECIFICATION PREMIUM TROFFER DIMENSIONS: 2'W X 4'L X 3-11/16"D DOOR FRAME: FLUSH WHITE STEEL DIFFUSER TYPE: .125" THICK #12 PATTERN ACRYLIC ELECTRONIC BALLAST(S): QTY: 1; THD: <10%	120/277	64	LAY-IN GRID	2	48" LINEAR T8 FLUORESCENT	32	3500	86	
GA3	DAY-BRITE COLUMBIA WILLIAMS METALUX LITHONIA	2SPG ST8 LPT 2GC8 2SP8	SPECIFICATION PREMIUM TROFFER DIMENSIONS: 2'W X 4'L X 3-11/16"D DOOR FRAME: FLUSH WHITE STEEL DIFFUSER TYPE: .125" THICK #12 PATTERN ACRYLIC ELECTRONIC BALLAST(S): QTY: 1; THD: <10%	120/277	96	LAY-IN GRID	3	48" LINEAR T8 FLUORESCENT	32	3500	86	
PF1	DAY-BRITE COLUMBIA WILLIAMS METALUX LITHONIA	FBF LHR4 AL 2HB IB	HIGH BAY FLUORESCENT DIMENSIONS: 21"W X 4'L X 2-3/4"D WHITE STEEL BODY 95% SPECULAR AL REFLECTOR ELECTRONIC BALLAST(S): QTY: 2; THD: <10%	120/277	325	PENDANT	6	46" LINEAR T5HO FLUORESCENT	54	3500	86	
WF3	DAY-BRITE COLUMBIA WILLIAMS METALUX LITHONIA	WB WAL 29 BE WP	FLUORESCENT WALL BRACKET DIMENSIONS: 4-1/2"W X 4'L X 4-1/4"H WHITE STEEL BODY W/ END CAPS DIFFUSER TYPE: .125" THICK #12 PATTERN ACRYLIC ELECTRONIC BALLAST(S): QTY: 2; THD: <10%	120/277	64	RECESSED	2	48" LINEAR T8 FLUORESCENT	32	3500	86	
X1	MCPHILBEN DUAL LITE EXITRONIX ISOLITE LITHONIA	6OML CVD 4OOU MAX LE	DIE-CAST AL EXIT SIGN WITH POLYCABONATE FACE OPERATION: EMERGENCY - AC ONLY FACE TYPE: STENCIL HOUSING COLOR: WHITE NUMBER OF FACES: 1 LETTER COLOR: GREEN	120/277	25	UNIVERSAL	1	LAMP INCLUDED	25	N/A	N/A	
WM1	GARDCO HUBBELL TRACI-LITE LUMARK NULITE	101 TWSL TLIIOEX MPIP EJL	ARCHITECTURAL CUT OFF SCONCE TRAPEZOIDAL WEDGE SHAPE METAL HALIDE WITH FORWARD THROW DISTRIBUTION OPTICS HOUSING COLOR: BRONZE WALL MOUNTED BOX FOR SURFACE MOUNTING WET LOCATION RATED PULSE START UNIVERSAL VOLTAGE BALLAST	277	277	WALL	1	250PS MH	250	3000	80	
WM2	GARDCO HUBBELL TRACI-LITE LUMARK NULITE	III TWSMG TL110 PLIP EJL	ARCHITECTURAL CUT OFF SCONCE TRAPEZOIDAL WEDGE SHAPE FLUORESCENT WITH MEDIUM THROW DISTRIBUTION OPTICS HOUSING COLOR: BRONZE WALL MOUNTED BOX FOR SURFACE MOUNTING WET LOCATION RATED UNIVERSAL VOLTAGE BALLAST	277	42	WALL	1	42W TT	42	3500	86	

BIDDING REQUIREMENTS

1. BID ONLY PRODUCTS THAT ARE SPECIFIED OR APPROVED BY ADDENDUM.
2. PACKAGING OF LIGHT FIXTURES WITH OTHER SYSTEMS IS NOT ALLOWED.
3. WHEN ONLY ONE PRODUCT IS APPROVED FOR BIDDING, THE PRICE FOR THAT ITEM SHALL BE BROKEN OUT SEPARATELY WHEN SUBMITTING PRICING TO VARIOUS DISTRIBUTORS AND/OR CONTRACTORS.
4. WHEN A CONTRADICTION EXISTS BETWEEN A SPECIFIC MODEL NUMBER AND THE DESCRIPTION, THE DESCRIPTION SHALL GOVERN.

LIGHT FIXTURE PRIOR APPROVAL REQUIREMENTS

1. PRIOR APPROVAL IS REQUIRED BEFORE BIDDING THIS PROJECT.
2. PRIOR APPROVALS SHALL BE SUBMITTED TO THE ELECTRICAL ENGINEER'S OFFICE AT LEAST (8) EIGHT WORKING DAYS BEFORE THE BID. PRIOR APPROVALS RECEIVED AFTER THIS TIME PERIOD SHALL BE REJECTED.
3. PRIOR APPROVALS SHALL BE SIGNED BY A PRINCIPAL OF THE SUBMITTING ORGANIZATION STATING THAT THEY HAVE PREPARED AND/OR REVIEWED THE SUBMITTAL AND THAT THE PRODUCTS PROPOSED ARE EQUIVALENT TO THOSE SPECIFIED. ANY EXCEPTIONS SHALL BE SO NOTED.
4. ITEMS THAT ARE SUBMITTED AND HAVE BEEN APPROVED WILL BE LISTED IN THE ADDENDUM(S). VERBAL APPROVAL WILL NOT BE GIVEN ON ANY ITEM.
5. IT IS NOT THE RESPONSIBILITY OF THE ELECTRICAL ENGINEER TO NOTIFY THE SUBMITTING PARTY OF ERRORS IN THE SUBMITTAL. NOTIFICATION OF ERRORS BY THE ELECTRICAL ENGINEER PRIOR TO ISSUANCE OF THE ADDENDUM(S) MAY NOT BE GIVEN.
6. PRIOR APPROVALS SHALL CONSIST OF TWO SETS OF CUT SHEETS DESCRIBING THE PRODUCTS BEING SUBMITTED AS EQUIVALENTS. FAXES ARE NOT ACCEPTABLE. ALL SPECIFICATION INFORMATION SHALL BE CLEARLY MARKED, WITH NON-APPLICABLE INFORMATION CROSSED OUT. COMPLETE PHOTOMETRIC DATA SHALL BE PROVIDED. PRODUCTS WITHOUT PHOTOMETRIC DATA WILL BE NOT BE APPROVED.

LIGHT FIXTURE GENERAL NOTES

1. REFER TO THE ARCHITECTURAL REFLECTED CEILING PLANS FOR LOCATIONS OF LIGHT FIXTURES. BRING ALL DISCREPANCIES OF LOCATIONS AND QUANTITIES TO THE ATTENTION OF THE ARCHITECT AND ELECTRICAL ENGINEER PRIOR TO BIDDING.
2. REFER TO ARCHITECTURAL ELEVATIONS FOR MOUNTING HEIGHTS AND LOCATIONS OF LIGHT FIXTURES. BRING ALL DISCREPANCIES TO THE ATTENTION OF THE ARCHITECT PRIOR TO BIDDING.
3. REFER TO THE SPECIFICATIONS FOR OTHER LIGHT FIXTURE, BALLAST, AND LAMP REQUIREMENTS AND ACCEPTABLE MANUFACTURERS.
4. REFER TO ARCHITECTURAL DRAWINGS FOR LOUVER REQUIREMENTS (IF ANY).
5. CONFIRM AVAILABLE MOUNTING DEPTHS OF ALL LIGHT FIXTURES AND COMPARE WITH DEPTHS SHOWN ON SHOP DRAWING. BRING ALL POTENTIAL CONFLICT AREAS TO THE ATTENTION OF THE ARCHITECT AND ELECTRICAL ENGINEER PRIOR TO RELEASE.

LIGHT FIXTURE ABBREVIATION SCHEDULE

NOTE: NOT ALL ABBREVIATIONS WILL NECESSARILY BE USED.

A.F.F.	ABOVE FINISHED FLOOR
WALL@CLG.	WALL MOUNT AT CORNER OF WALL AND CEILING
CCBA	CUSTOM PAINTED COLOR AS SELECTED BY THE ARCHITECT
SCBA	STANDARD PAINTED COLOR AS SELECTED BY THE ARCHITECT
CFBA	CUSTOM FINISH AS SELECTED BY THE ARCHITECT
SFBA	STANDARD FINISH AS SELECTED BY THE ARCHITECT
MOD	MODIFY STANDARD LIGHT FIXTURE AS INDICATED

WIRING DEVICE SYMBOLS

SYMBOL	DESCRIPTION	MOUNTING	REMARKS
$	SINGLE-POLE TOGGLE SWITCH	+48"	
$a	SINGLE-POLE TOGGLE SWITCH	+48"	SUBSCRIPT KEYS SWITCH TO FIXTURES CONTROLLED.
$2	DOUBLE-POLE TOGGLE SWITCH	+48"	
$3	THREE-WAY TOGGLE SWITCH	+48"	
$4	FOUR-WAY TOGGLE SWITCH	+48"	
$K	KEY-OPERATED SINGLE-POLE TOGGLE SWITCH	+48"	
$P	SINGLE-POLE TOGGLE SWITCH WITH PILOT LIGHT	+48"	
$DIM	DIMMER SWITCH	+48"	RATE DIMMER SWITCH FOR MAXIMUM POSSIBLE WATTAGE
$TIM	TIMER SWITCH	+48"	
$S	(2) SINGLE-POLE TOGGLE SWITCH	+48"	DUAL LEVEL SWITCH OUTBOARD LAMPS SEPARATELY FROM INBOARD LAMPS.
$LV	LOW VOLTAGE MOMENTARY CONTACT SWITCH	+48"	
$3PM	3-POSITION MOMENTARY CONTACT SWITCH	+48"	REFER TO DETAIL UP-ON; CENTER-NEUTRAL; DOWN-OFF
$3PN	3-POSITION MAINTAINED CONTACT SWITCH	+48"	UP-ON; CENTER-OFF; DOWN-ON
C/W	OCCUPANCY SENSOR	AS NOTED	CEILING MOUNTED WITH SUBSCRIPT 'C'; WALL-MOUNTED WITH SUBSCRIPT 'W'
	SPLIT-WIRED DUPLEX RECEPTACLE	+18"	
	SIMPLEX RECEPTACLE	+18"	
	DUPLEX RECEPTACLE	+18"	
	FOURPLEX RECEPTACLE	+18"	
	125/250V RECEPTACLE	+18"	RANGE -- NEMA 14-50R DRYER -- NEMA 14-30R
	GROUND FAULT CIRCUIT INTERRUPTER DUPLEX RECEPTACLE	+18"	
	GROUND FAULT CIRCUIT INTERRUPTER FOURPLEX RECEPTACLE	+18"	
	EMERGENCY DUPLEX RECEPTACLE	+18"	
	EMERGENCY FOURPLEX RECEPTACLE	+18"	
	MULTI-OUTLET ASSEMBLY	4" ABOVE BACKSPLASH	
	POWER / TELEPHONE POLE	FLOOR/CEILING	
	CORD DROP WITH DUPLEX RECEPTACLE	+18"	REFER TO DETAIL
(5-20R)	SPECIAL PURPOSE OUTLET	+18"	SUBSCRIPT IN PARENTHESIS INDICATES NEMA CONFIGURATION IF SHOWN. REFER TO DRAWINGS AND/OR EQUIPMENT SCHEDULES. CONFIRM EXACT CONFIGURATION WITH OWNER PRIOR TO INSTALLATION.

GEAR AND CONTROL SYMBOLS

SYMBOL	DESCRIPTION	MOUNTING	REMARKS
$T	MANUAL STARTER WITH THERMAL OVERLOAD(S)	AT EQUIPMENT	
	ELECTRIC MOTOR		
	NON-FUSED DISCONNECT SWITCH	+60"	
F	FUSED DISCONNECT SWITCH	+60"	
	CIRCUIT BREAKER AND ENCLOSURE	+60"	
	MAGNETIC STARTER	+60"	
	COMBINATION MAGNETIC STARTER / NON-FUSED DISCONNECT	+60"	
	COMBINATION MAGNETIC STARTER / FUSED DISCONNECT	+60"	
	COMB. MAGNETIC STARTER / MOTOR CIRCUIT PROTECTOR (MCP)	+60"	
VFD	COMB. VARIABLE FREQUENCY DRIVE / MOTOR CIRCUIT PROTECTOR (MCP)	FLOOR OR WALL AS SPECIFIED	TOP AT +72" IF WALL MOUNTED
RVS	REDUCED VOLTAGE STARTER	FLOOR OR WALL AS SPECIFIED	TOP AT +72" IF WALL MOUNTED
	LOAD CENTER (SURFACE-MOUNTED)	TOP AT +72"	14"W X 3"D
	LOAD CENTER (FLUSH-MOUNTED)	TOP AT +72"	14"W X 3"D
	LIGHTING AND APPLIANCE PANELBOARD (SURFACE-MOUNTED)	TOP AT +72"	20"W X 6"D
	LIGHTING AND APPLIANCE PANELBOARD (FLUSH-MOUNTED)	TOP AT +72"	20"W X 6"D
	POWER DISTRIBUTION PANELBOARD	WALL	THESE SYMBOLS ARE GENERAL IN NATURE AND MAY VARY IN SIZE AND SHAPE TO SUIT APPLICATION.
	SWITCHBOARD	FLOOR	CROSS HATCHING INDICATES "MAIN PANELBOARD OR SWITCHBOARD" NAME IS INDICATED IN SEMI-QUOTES (I.E. "L2A", "MDP")
	METER BASE	TOP AT +72"	
	OPEN - STOP - CLOSE SWITCH	+60"	
T	HVAC THERMOSTAT	+60"	PROVIDED BY DIVISION 15000 U.N.O.
	HAND - OFF - AUTO SWITCH	+60"	
GF	GROUND FAULT PROTECTION		

TRACY STOCKING & ASSOCIATES

State of Utah
Department of Administrative Services
Division of Facilities Construction & Management
4110 State Office Building
Salt Lake City, Utah 84114
Phone: (801) 538 - 3018
Fax: (801) 538 - 3267
http://dfcm.utah.gov

CREATED BY:
ENVISION ENGINEERING
Direction. Then Velocity.
244 West 300 North, Suite 100
Salt Lake City, Utah 84103
801.534.1130 ph 801.534.1080 fax

BUILDING NAME:
Utah State Development Center
870 North 860 East
American Fork, Uath

PROJECT TITLE:
Boiler Replacement/ Building Repairs

PROFESSIONAL ENGINEER 6698428 FRANCIS ROSADO 2009.6.18 STATE OF UTAH

MARK	DATE	DESCRIPTION
1	7-13-09	ADDENDUM #1

ISSUE TYPE: REVIEW

ISSUE DATE: MAY 2009

DFCM PROJECT NO: 08194410
CAD PROJECT NO:
CAD DWG FILE:
DRAWN BY:
CHK'D BY:
COPYRIGHT: STATE OF UTAH

SHEET TITLE
SYMBOL & LIGHT FIXTURE SCHEDULE

SHEET NUMBER
EG002

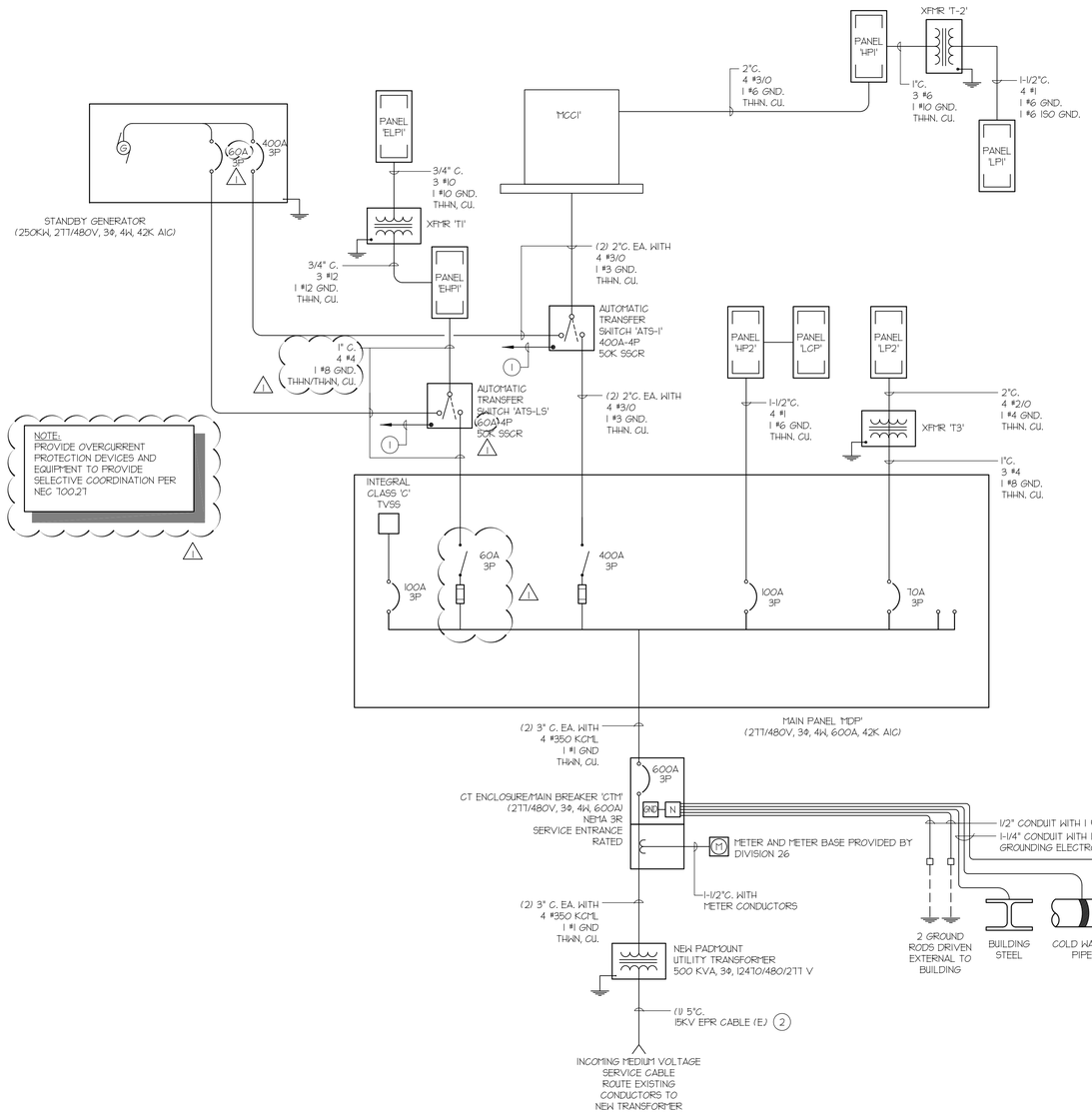

1 ONE-LINE DIAGRAM
SCALE: NONE

ONE-LINE DIAGRAM KEYED NOTES:

1. EXTEND 3/4" C. WITH GENERATOR MANUFACTURER RECOMMENDED WIRES TO GENERATOR. MAKE ALL REQUIRED CONNECTIONS FOR COMPLETE INSTALLATION.
2. REFER TO SITE PLAN FOR ADDITIONAL INFORMATION AND REQUIREMENTS.

TRANSFORMER SCHEDULE

NAME	TYPE	KVA	PRIMARY VOLTAGE	PRIMARY CONNECTION	SECONDARY VOLTAGE	SECONDARY CONNECTION	GROUNDING ELECTRODE CONDUCTOR SIZE	GROUNDING ELECTRODE CONDUCTOR TYPE	K FACTOR	ELECTRO-STATIC SHIELD	MOUNTING	REMARKS
T-1		9	480	DELTA	120/208	WYE	#8, 3/4"C.	CU, EMT	1	NO	WALL	
T-2		30	480	DELTA	120/208	WYE	#6, 3/4"C.	CU, EMT	1	NO	FLOOR	
T-3		45	480	DELTA	120/208	WYE	#4, 3/4"C.	CU, EMT	1	NO	FLOOR	

FIRE ALARM SYSTEM NOTES:

1. EXTEND 3/4" C. WITH (2) MANUFACTURERS RECOMMENDED FIRE ALARM CABLES (FOR REMOTE MONITORING) TO TELEPHONE TERMINAL BOARD. REFER TO ELECTRICAL SITE PLAN FOR ADDITIONAL INFORMATION AND REQUIREMENTS.
2. EXTEND 3/4" C. WITH 1 #18 TSP TO ADDRESSABLE FIRE ALARM INITIATING DEVICE LOOP.
3. EXTEND 3/4" C. WITH 2 #12 AWG TO INDICATING DEVICES.
4. PROVIDE MONITOR MODULES FOR REMOTE MONITORING. REFER TO KEYED NOTE 1 ABOVE.

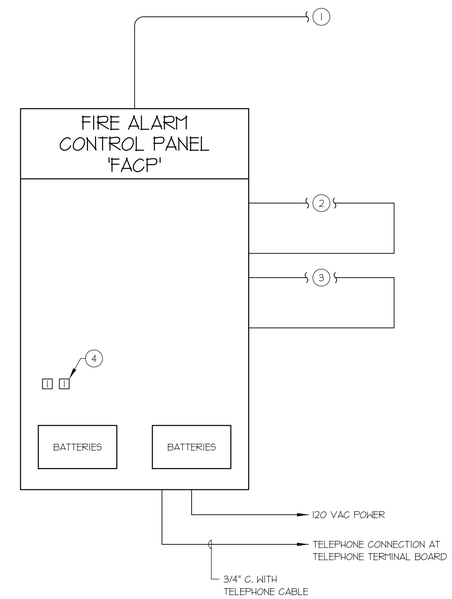

2 FIRE ALARM SYSTEM RISER DIAGRAM
SCALE: NONE

TRACY STOCKING & ASSOCIATES

State of Utah
Department of Administrative Services
Division of Facilities Construction & Management
4110 State Office Building
Salt Lake City, Utah 84114
Phone: (801) 538 - 3018
Fax: (801) 538 - 3267
http://dfcm.utah.gov

CREATED BY:

ENVISION ENGINEERING
Direction. Then Velocity.
244 West 300 North, Suite 100
Salt Lake City, Utah 84103
801.534.1130 ph 801.534.1080 fax

BUILDING NAME:

Utah State Development Center
870 North 860 East
American Fork, Uath

PROJECT TITLE:

Boiler Replacement/ Building Repairs

PROFESSIONAL ENGINEER 669828 FRANCIS ROSADO 2009.6.18 STATE OF UTAH

MARK	DATE	DESCRIPTION
1	7-13-09	ADDENDUM #1

ISSUE TYPE: REVIEW

ISSUE DATE: MAY 2009

DFCM PROJECT NO: 08194410
CAD PROJECT NO:
CAD DWG FILE:
DRAWN BY:
CHK'D BY:
COPYRIGHT: STATE OF UTAH

SHEET TITLE

ONE-LINE DIAGRAM

SHEET NUMBER

EP701

MOTOR CONTROL CENTER SCHEDULE

PANEL NAME: MCC1

X	MAIN LUGS	480	VOLTS	42	KAIC
	MAIN BREAKER	400	AMPS	1	NEMA WIRE CLASS
	SERVICE ENTRANCE	3	PHASE	1A	NEMA ENCLOSURE
X	ENGRAVED NAMEPLATES RATED	4	WIRE	BOTTOM	ENTRY

MCC UNIT	EQUIPMENT NO. / DESCRIPTION		LOAD	TYPE	DEVICE OR STARTER	INDICATING LIGHTS ON	INDICATING LIGHTS STOPPED	CONTROL	AUX CONTACTS	CONTROL POWER	OVERLOAD RELAY	COMMENTS
1	B-1	BOILER PUMP	7.5	HP	FVNR	RED	GREEN	HOA	2 N.O. 2 N.C.	CPT	SOLID STATE	PROVIDE POWER FACTOR CORRECTION CAPACITOR.
2	B-2	BOILER PUMP	7.5	HP	FVNR	RED	GREEN	HOA	2 N.O. 2 N.C.	CPT	SOLID STATE	PROVIDE POWER FACTOR CORRECTION CAPACITOR.
3	B-3	BOILER PUMP	7.5	HP	FVNR	RED	GREEN	HOA	2 N.O. 2 N.C.	CPT	SOLID STATE	PROVIDE POWER FACTOR CORRECTION CAPACITOR.
4	-	PANEL 'HP1'	200	A	THERMAL MAGNETIC BREAKER	-	-	-	-	-	-	
5	-	SPARE	100	A	THERMAL MAGNETIC BREAKER	-	-	-	-	-	-	
6	-	SPARE	10	HP	FVNR	RED	GREEN	HOA	2 N.O. 2 N.C.	CPT	SOLID STATE	
7		12" BLANK SPACE										
8		12" BLANK SPACE										

ABBREVIATIONS:
N.O. NORMALLY OPEN
N.C. NORMALLY CLOSED
FVNR FULL VOLTAGE NON REVERSING
FVR FULL VOLTAGE REVERSING

NOTES:
1 REFER TO SPECIFICATION FOR ADDITIONAL INFORMATION AND REQUIREMENTS FOR THIS OVER CURRENT PROTECTION DEVICES.
2 REFER TO SPECIFICATIONS FOR ADDITIONAL INFORMATION AND REQUIREMENTS FOR STARTER AND VFD EQUIPMENT.
3 REFER TO EQUIPMENT SCHEDULE FOR CONDUCTOR, DISCONNECT REQUIREMENTS, ETC.

LIGHTING RELAY PANEL SCHEDULE

Panel Address:	-
Panel Name:	LCP
Location:	Elec. Room
Transformer Voltage:	277
Mounting:	SURFACE
NEMA Type:	NEMA 1

Relay	Circuit	Lights Controlled	Switch/OS	Channel A	B	C	D	E	F	G	H
1	HP2-5	EXTERIOR LIGHTS		x							
2		SPARE									
3	HP2-2	BOILER ROOM LIGHTS			x						
4		SPARE									
5											
6											
7											
8											

Channel	LOAD Description	PROGRAM REQUIREMENTS
A	EXTERIOR LIGHTS	PHOTOCELL ON TIMED OFF
B	BOILER MAIN AREA LIGHTS	TIMED ON / DAY LIGHT
		HARVESTING / TIMED OFF
C		
D		
E		
F		
G		
H		

GENERAL NOTES:
1. PROGRAM SYSTEM TO MEET REQUIREMENTS OF 2006 IECC.
2. CONFIRM SWITCHING SCHEME WITH THE OWNER PRIOR TO PROGRAMMING THE SYSTEM.
3. PROVIDE LEVITON ZMAX, HUBBELL LX8 OR APPROVED EQUIVALENT LC PANEL. IN PUT LIGHT SENSOR (#PCIND-000 OR APPROVED EQUIVALENT SET TO 50 FOOT CANDLES) IN BOILER ROOM AREA.
4. EXTERIOR PHOTOCELL INPUT.

LIGHTING AND APPLIANCE PANELBOARD SCHEDULE

PANEL NAME: EHP1 TYPE: BUSSMANN EP 1 CIRCUIT BREAKERS: X BOLT ON / PLUG ON 277 / 480 VOLTAGE 3 PH 4 W
X ENGRAVED NAME TAGS BUS MATERIAL: ALUM BUS / X CU BUS GROUND: X GROUND BUS / ISOL GND BUS NEUTRAL: X 100% / 200% LUGS: X MAIN / SUB-FEED / FEED-THROUGH MAIN BREAKER: X AMPS 30A 1
BUS AMPS: 100

BRANCH BREAKERS

NOTES	ITEM	AMP	POLE	WIRE SIZE	CIR. NO.	LEFT PHASE LOAD A	B	C	RIGHT PHASE LOAD A	B	C	CIR. NO.	AMP	POLE	WIRE SIZE	ITEM	NOTES
	EXIT SIGNS	20	1	12	1	500			150			2	20	3	12	EXTERIOR EGRESS LTS	
	SPARE	20	1		3							4	20	1		SPARE	
	SPARE	20	1		5							6	20	1		SPARE	
	BLANK	20	1		7				1000			8	15	3	12	XFMR T-1	
	BLANK	20	1		9					1000		10	-	-	-	-	
	BLANK	20	1		11						1000	12	-	-	-	-	
						500	0	0	1150	1000	1000						
						1650	1000	1000	TOTAL								
						6	4	4	AMPS / PHASE								

FRONT: X STANDARD / HINGED / DOOR-IN-DOOR
MOUNTING: FLUSH / X SURFACE / SURFACE W/ SKIRT ABOVE / SURFACE W/ SKIRT BELOW
TVSS: X NONE / CATEGORY "C" / CATEGORY "B" / CATEGORY "A"
NEMA RATING: X NEMA 1 / NEMA 3R / NEMA 4X / NEMA 12 / STAINLESS STEEL
TOTAL CONNECTED LOAD: 3,650
SHORT CIRCUIT RATING: SERIES - RATED / X FULLY - RATED
42,000 AMPS RMS SYM

REFER TO ONE-LINE DIAGRAM FOR FEEDER , CONDUIT AND CONDUCTOR SIZES

LIGHTING AND APPLIANCE PANELBOARD SCHEDULE

PANEL NAME: ELP1 TYPE: BUSSMANN EP 1 CIRCUIT BREAKERS: X BOLT ON / PLUG ON 120 / 208 VOLTAGE 3 PH 4 W
X ENGRAVED NAME TAGS BUS MATERIAL: ALUM BUS / X CU BUS GROUND: X GROUND BUS / ISOL GND BUS NEUTRAL: X 100% / 200% LUGS: X MAIN / SUB-FEED / FEED-THROUGH MAIN BREAKER: X AMPS 30
BUS AMPS: 100

BRANCH BREAKERS

NOTES	ITEM	AMP	POLE	WIRE SIZE	CIR. NO.	LEFT PHASE LOAD A	B	C	RIGHT PHASE LOAD A	B	C	CIR. NO.	AMP	POLE	WIRE SIZE	ITEM	NOTES
	EXIT SIGNS	20	1	12	1	500			150			2	20	3	12	EXTERIOR EGRESS LTS	
	SPARE	20	1		3							4	20	1		SPARE	
	SPARE	20	1		5							6	20	1		SPARE	
	BLANK	20	1		7				1000			8	15	3	12	XFMR T-1	
	BLANK	20	1		9					1000		10	-	-	-	-	
	BLANK	20	1		11						1000	12	-	-	-	-	
						500	0	0	1150	1000	1000						
						1650	1000	1000	TOTAL								
						14	8	8	AMPS / PHASE								

FRONT: X STANDARD / HINGED / DOOR-IN-DOOR
MOUNTING: FLUSH / X SURFACE / SURFACE W/ SKIRT ABOVE / SURFACE W/ SKIRT BELOW
TVSS: X NONE / CATEGORY "C" / CATEGORY "B" / CATEGORY "A"
NEMA RATING: X NEMA 1 / NEMA 3R / NEMA 4X / NEMA 12 / STAINLESS STEEL
TOTAL CONNECTED LOAD: 3,650
SHORT CIRCUIT RATING: SERIES - RATED / X FULLY - RATED
10,000 AMPS RMS SYM

REFER TO ONE-LINE DIAGRAM FOR FEEDER , CONDUIT AND CONDUCTOR SIZES

PANELBOARD SCHEDULE NOTES:
1. PROVIDE CLASS A GROUND FAULT INTERRUPTER TYPE CIRCUIT BREAKER.
2. PROVIDE ARC FAULT CIRCUIT INTERRUPTER TYPE CIRCUIT BREAKER.
3. PROVIDE 30 MILLIAMPERE EQUIPMENT GROUNG FAULT PROTECTOR TYPE CIRCUIT BREAKER.
4. PROVIDE SHUNT-TRIP TYPE CIRCUIT BREAKER WITH 120V COIL.
5. PROVIDE HACR RATED CIRCUIT BREAKER.
6. PROVIDE HANDLE CLAMP FOR HOLDING CIRCUIT BREAKER IN THE "ON" OR "OFF" POSITION.
7. PROVIDE SWITCHING RATED CIRCUIT BREAKER.
8. PROVIDE NEW CIRCUIT BREAKER IN EXISTING PANELBOARD (WHERE PANEL IS INDICATED AS EXISTING) OF SAME MANUFACTURER AND A.I.C. RATING AS EXISTING.
9. EXISTING LOAD.

PANEL LEGEND

MCC1	EHP1
LCP	ELP1

TRACY STOCKING & ASSOCIATES

State of Utah
Department of Administrative Services
Division of Facilities Construction & Management
4110 State Office Building
Salt Lake City, Utah 84114
Phone: (801) 538 - 3018
Fax: (801) 538 - 3267
http://dfcm.utah.gov

CREATED BY:
ENVISION ENGINEERING
Direction. Then Velocity.
244 West 300 North, Suite 100
Salt Lake City, Utah 84103
801.534.1130 ph 801.534.1080 fax

BUILDING NAME:
Utah State Development Center
870 North 860 East
American Fork, Uath

PROJECT TITLE:
Boiler Replacement/ Building Repairs

PROFESSIONAL ENGINEER 6698428 FRANCIS ROSADO 2009.6.18 STATE OF UTAH

MARK	DATE	DESCRIPTION
1	7-13-09	ADDENDUM #1

ISSUE TYPE: REVIEW
ISSUE DATE: MAY 2009
DFCM PROJECT NO: 08194410
CAD PROJECT NO:
CAD DWG FILE:
DRAWN BY:
CHK'D BY:
COPYRIGHT: STATE OF UTAH

SHEET TITLE
PANELBOARD SCHEDULES

SHEET NUMBER
EP802

ADDENDUM

Project Name: Boiler Replacement/Building Repairs Addendum No.: 1

DFCM Project # 08194410 Date: July 15, 209

From: WHW Engineering Inc
8619 South Sandy Parkway
Sandy, Utah 84070
Phone (80) 466-4021 Fax (801) 466-8536

To: Tracy Stocking & Associates

This Addendum forms and becomes a part of the Contract Documents and modifies the original Bidding Documents dated June 09 as noted below. Acknowledge receipt of this Addendum in the space provided on the Bid Form. Failure to do so may subject the Bidder to disqualification.

This Addendum consists of 21 pages.

I - CHANGES TO PRIOR ADDENDA: N/A

II - CHANGES TO BIDDING REQUIREMENTS: Added Alternate #1

III - CHANGES TO AGREEMENT & OTHER CONTRACT FORMS: Added Alternate #1

IV – CHANGES/CLARIFICATIONS TO CONDITIONS OF THE CONTRACT: N/A

V - CHANGES/CLARIFICATIONS TO MECHANICAL SPECIFICATIONS:

Item V-1. Section 230700 paragraph 1.2 - A add boiler breeching to scope summary.

Item V-2. Section 230700 paragraph 3.11 - B - 4 - Remove “and trap piping” from sentence so number 4 reads “ Steam Traps.”

Item V-3. Section 235100 - stacks, add the following option:
Provide a UL listed insulated stack with stainless steel material used for the interior stack and an aluminized steel material for the exterior stack with a 1 inch air insulation space between the interior and exterior stack. Approved manufacturers:
a. Van Packer
b. Schebler
c. Heat Fab
d. Prior approved equal

Item V-4. Add section 230900 - “Instrumentation and Controls”

Item V-5. Section 235316 paragraph 2.2 - J and K delete paragraph J. Paragraph K-1 change boiler to boilers.

Item V-6. Section 235316 paragraph 2.3 - H and I - Delete paragraph H

Item V-7. Section 235316 paragraph 1.4 - B-2 delete this requirement. This is covered in section 230548.

Item V-8. Section 235316 paragraph 1.4 - B - 4 and 5. Delete these requirements. These are covered in section 230548.

Item V-9. Section 235316 paragraph 2.2 - C shall read “Adjustable or solid spray valves.”

Item V-10. Section 235316 paragraph 2.2 - I - 1 - change NEMA 250 enclosure to NEMA 12. Paragraph 2.3 - G - 1 change NEMA 250 to NEMA 12.

Item V-11. Section 235316 paragraph 2.2 F- 5 modulating valve shall be electric.

Item V-12. Section 235239 paragraph 2.2 - A - 3. Change the 250 psig design pressure to 150 psig design pressure. Paragraph 2.5 B design up pressure from 250 psig to 150 psig.

Item V-13. Section 235239 paragraph 2.2 B-1 change natural gas supply pressure from 17 psig to 5 psig.

Item V-14. Section 235239 paragraph 2.4 - D - 5th line down, Change the 17 psig gas pressure to minimum 5 psig gas pressure.

Item V-15. Section 235316 - paragraph 1.6 - C - change note to read " Deliver deaerator and surge tank packages as factory assembled units with protective coverings, delete "crating".

Item V-16. Section 230900 - Paragraph 1.5 change the LMV51 to LMV52 in paragraphs G, H, I, J - 1, 2a and b, 3, 4, 9, 10, 17 - b, 19 - a & c.

VI - CHANGES/CLARIFICATIONS TO DRAWINGS:

Item VI-1. General: Clarification do not provide blowdown valves on strainers up stream of steam traps for safety purposes. Use plugs only.

Item VI-2. Sheet ME 901 - Isometric A3 - note 13. All items indicated in note 13 shall be by mechanical contractor. Note 13 change note to read - "Discharge piping c/w unions, check valves, gate valves, and balancing valves shall be provided and installed by contractor. Bypass line and pressure valve shall be provided by manufacturer. Coordinate with manufacturer. Pressure gauges provided and installed by contractor.

Item VI-3. Clarification: Sheet ME901 - Isometric A2 - The high pressure steam piping from steam header to PRV on deaerator is 2 1/2" diameter. The low pressure steam piping from the PRV to the deaerator is 6" diameter. See also plan view sheet ME101. Low pressure steam requires larger piping than the high pressure steam for the same capacity.

Item VI-4. Clarification: Sheet 902 - isometric C-3 this isometric requires this contractor to provide the earthquake valve. The tie-in connection to the gas meter piping set is provided by the General Contractor, see civil drawings. See sheet ME505 C2 and A2.

Item VI-5. Sheet MS101 - Note 10; change note to read " Piping from retaining wall to existing boiler plant shall be removed after new tie-ins."

Item VI-6. Sheet MS101 - Note 2 ; change note to read " After new connections to existing piping remove all existing steam and condensate piping from new tie in point to existing boiler plant."

Item VI-7. Sheet ME203 - Note 3; change note to read "Existing piping supports shall be removed after new tie-ins."

Item VI-8. Sheet ME 203 - Note 4; change note to read "Existing piping from this point to existing boiler plant shall be removed after new tie ins."

Item VI-9. Sheet ME 601 - Boiler schedule - Change boiler design pressure from 250 psig to 150 psig.

Item VI-10. Section 231123 Clarification - New gas pressure to new boiler plant shall be 5 psig not 17psig.

Item VI-11. Sheet ME101 - Note 37 - Add to note "Provide dirt leg and trap at steam riser. Use bucker trap and connect to overhead condensate return piping.

Item VI-12. Sheet ME501 - detail C4. Change the 5/8" diameter cable to 3/8" diameter cable.

PRIOR APPROVALS

THE FOLLOWING ITEMS, AS SUBMITTED, ARE CONSIDERED, IN GENERAL AND IN NAME ONLY, AS EQUAL TO THOSE ITEMS SPECIFIED. THIS REVIEW DOES NOT RELIEVE THE CONTRACTOR OR SUPPLIER OF THE RESPONSIBILITY OF CONFORMING TO THE DRAWINGS AND SPECIFICATIONS, NOR DOES IT RELIEVE THE CONTRACTOR OF THE REQUIREMENTS OF THE SPECIFICATIONS FOR COORDINATION WITH OTHER TRADES. ALL DIMENSIONS SHALL BE CONFIRMED AND CORRELATED AT THE JOBSITE. THE CONTRACTOR SHALL BE RESPONSIBLE FOR VERIFYING EXISTING CONDITIONS AND THE SUITABILITY OF "EQUAL" PRODUCTS FOR THE SPECIFIED APPLICATION.

Description	**Manufacturer**
Steam Traps	Watson McDainel
Back Draft Dampers	Leader
Volume Dampers	Leader, Greenheck, NCA
High Efficiency Take-off	Clifco
Motorized Control Damper	Leader, Cesco, NCA
Flex Connections	FloFab
Check Valve	MetraFlex
Vacuum Breaker	McDonnell and Miller
Strainers	MetraFlex, FloFab
Water Heaters	Rheem, Bradford White
Balancing Valves	FloFab
Instantaneous Water Heater	EEmax
Water Cooler	Sunroc, Oasis
Faucet	Zurn Aqua spec
P-trap	Zurn traps, stops & supplies
Toilet Seat	ProFlo
Manual Air Vents	FloFab
Auto Air Vents	FloFab
Gauge Cocks	FloFab
Registers, Grilles Diffusers	Carnes, Anemostat
Inline Exhaust Fan	Carnes, Broan
Louvers	Cesco, NCA
Mixing Valve	Lawler
Eye Wash	Speakman
Venturi	FloFab
Ceiling Exhaust Fan	Broan

SECTION 230900 - INSTRUMENTATION AND CONTROLS

PART 1 - GENERAL

1.1 RELATED DOCUMENTS

A. Drawings and general provisions of the Contract, including General and Supplementary Conditions and Division 1 Specification Sections, apply to this Section.

1.2 SUMMARY

A. This Section includes:

1. Control equipment for the furnace HVAC system components, and unit heater controls.
2. Central Boiler plant automation system.
3. Burner linkage - Less Burner Control system.
4. Systems may be provided and installed by two separate contractors or one contractor for all portions of work required.

1.3 SEQUENCE OF CONTROL AND SYSTEMS IDENTIFICATION

A. Furnace

1. Furnace: Programmable wall mounted thermostat shall control the temperature of the control room, toilet room and entrance. The fresh air auto damper shall be set by the time clock to close the outside air auto damper during unoccupied mode and open during occupied mode. The manual damper in the outside air duct shall be set to the cfm shown on the drawings.
2. The programmable thermostat shall control the furnace during occupied and unoccupied modes. Adjustable with time clock. Temperatures for these modes are also adjustable. Weekends, holidays etc. are also adjustable through the thermostat.

B. Unit Heaters

1. Unit heaters shall be controlled from wall mounted heating only thermostats. A two - way modulating steam control valve shall modulate the steam valve open or closed depending on the indoor temperature and set point of the thermostat.

1.4 CENTRAL BOILER PLANT AUTOMATION SYSTEM

A. This system shall be a complete packaged control system based on Plant Master Controls with individual boiler monitoring, SCADA monitoring computer, software and alarm notification.

B. Provide operator screens, plant master control panel with individual boiler monitoring and computer hardware and software.

C. Installing control panels as needed.

D. Installing a UPS system for the controls.

E. Programming of the PLC control panel.

F. Configuration and programming of SCADA monitoring and alarm call out systems.

G. Providing an installing conduit, cable and wiring for the controls system. Provide terminations and landings for all wiring at instruments and control panels.

H. Control contractor shall provide project management, start-up services, coordination between boiler supplier and combustion controls, project closeout and record drawings.

I. Contractor shall provide training for the operators and maintenance personnel.

J. Maintain the existing notification alarm and contact system for the boiler operators, on or off campus for any problems with the boiler system.

K. Each boiler shall be provided with the following instrumentation:

1. Boiler drum level - Differential pressure
2. Steam flow meter - Vortex
3. Boiler drum steam pressure transmitter - Gauge pressure
4. Boiler drum temperature transmitter - RTD/transmitter
5. Stack Temperature - Type K/transmitter
6. Current Transmitter - FD fan - current transmitter
7. Continuous blow down systems - Conductivity
8. Building combustion air damper actuator and linkage.
9. Building combustion air damper limit.
10. Feedwater flow meter - Vortex
11. Furnace draft pressure - Draft pressure.
12. FD fan/flue pressure - Differential pressure.
13. Stack O2 analyzer.
14. Coordinate with controls provided with deaerator package and condensate surge tank package. Do not duplicate controls.

L. Plant Control instrumentation shall be the following:

1. Steam Header flow meter - Vortex
2. Steam Header pressure - garage pressure
3. Feedwater pressure - garage pressure
4. Steam Header temperature - RTD/transmitter
5. Feedwater supply temperature - RTD/transmitter
6. Surge tank level - Differential pressure
7. Deaerator pressure - gauge pressure
8. Make-up water flow meter - Magnetic flow meter
9. Emergency stop notification

10. Building combustion air damper actuators
11. Building combustion air damper limit.
12. Building Ventilation damper actuator.

1.5 BURNER LINKAGE - LESS BURNER CONTROL SYSTEM

A. If burner controls are provided by a different contractor than the building systems contractor, both contractors shall coordinate items shown in paragraph 1.4 above to avoid duplication.

B. This specifications is based on the Siemens burner control system. Wetco is also approved to bid a linkage - less burner control system based from this specification.

C. LMV Burner Control

1. The Siemens LMV Series Burner Control shall be an integrated burner control, which includes a fully modulating flame safeguard, fuel-air ratio control system, valve proving system, fault annunciator, and a PID pressure/temperature controller. All connections shall be plug type connectors for easy removal and replacement. The plug sockets shall be “keyed to ensure the plugs cannot be misconnected in the wrong sockets. All parameters shall be stored in a non volatile memory in the control unit. The parameters shall also be stored in the AZL display as a redundant back up. The parameters shall be protected from tampering with four different levels of password protection (user level, service level, OEM level, and manufacturer’s level). The parameters shall be uploaded/downloaded between the LMV control and AZL display for easy configuration. All parameter programming shall be performed via the keypad on the AZL display. Controls shall have worldwide approvals (U.L., CSA, CE, etc.) 120 volt 60 Hertz power input.

D. AZL Programming/Annunciator Display

1. Current burner status shall be viewed through the AZL display. Status shall include flame signal strength, firing rate, setpoint, etc. Upon burner start-up and shut-down, the AZL shall display the various changes in the ignition sequence (i.e., fan energized, driving to high-fire for pre-purge, purging, ignition energized, post - purge, etc.) Lockout and fault history shall be viewed from the AZL. All annunciations shall be in plain English text. The parameter selections shall be user - friendly and menu-based. The parameters shall be password protected with four different access levels as described in paragraph C-1 above. The AZL shall have connections for modbus communications, and a serial port for optional computer software.

E. QRI Flame Detector

1. The QRI flame detector shall use an infrared detection to monitor the flame. It shall be designed to detect the infrared wavelengths and shall also detect the random “flickering” pattern associated with a flame. The QRI Flame detector shall be able to discriminate between the infarared produced by an actual flame versus that generated from glowing refractory or other hot surfaces. The QRI

detector shall filter out all flickering from line voltage 60 Hertz sources. The QRI detector shall be immune to false signals generated from fluorescent lights, and ignition spark rods. The flame signal amplifier shall be built into the scanner to provide a higher strength signal between the scanner and the flame safeguard. This feature shall increase its immunity against electrical noise interference or lost flame signals (due to weak signals or long runs of wire to the flame safeguard). The scanner shall be solid - state and self checking. It shall be suitable for boilers in continuous operation. Its self - checking mechanism shall have no moving parts or shutters.

F. SQM4 Acutators

1. The LMV system shall provide accurate parallel positioning via the SQM4 actuators. The SQM4 actuators shall be driven via a digital Can-bus signal. Their movements shall be accurate to a tenth of one degree. The actuators shall provide a digital feedback signal to insure they are in the correct position throughout the modulating range. If any actuator falls out of position, the burner shall be locked out. The actuator's potentiometer shall not be susceptible to burner vibrations. The actuators shall not require any potentiometer calibration or "zero - ing" upon intial start-up. They shall not required any wiring changes to reverse direction of movement. Direction of rotation, stroke timing, etc. shall be adjustable and configured through the AZL keypad display. The SQM4 actuators shall be available in three torque ratings (27, 180, and 320 in lbs) capable of handling the specified burners. The actuator shafts shall include a flat side to help prevent slippage. The medium and high torque versions shall include keyways to prevent any slippage.

G. Provide the LMV51 electronic linkageless, microprocessor-based burner management unit for the control and supervision of the dual-fuel forced draft burners specified and scheduled on the drawings, with modulating gas and oil.

H. The LMV51 burner management system shall manage the burner systems and control by utilizing an integrated configurable gas valve proving system, electronic fuel/air ration control (FARC) with up to four actuators adjusting, air, gas, oil and FGR and shall have provisions for an optional PID temperature/pressure control function (load controller).

I. All of the burner management system's major components, specifically the base unit (LMV51), the display and operating unit (AZL) and the actuators (SQM4) shall communicate over a reliable safety bus.

J. Major Functions

1. The LMV51 shall employ two microprocessors offering a very high level of safety and reliability, for monitoring the software, the program, and the control sequences.
2. The burner control shall also employ ultra-accurate SQM4 actuators having the following features.

   a. Characteristics and settings defined by the LMV51
   b. Shall be controlled by digital signals on a safety bus from the LMV51.

c. Shall be driven by stepper motors
d. Shall have a resolution of 1/10 of a degree, or 900 repeatable positions, within 90 deg of rotation.
e. Shall be equipped with two factory calibrated feedback potentiometers.
f. Shall be capable of clock-wise or counter clock-wise rotation.
g. Available in at least 3 torque ranges including, 30, 180, and 300 in/lbs.
h. Shall not require any field adjustment.
i. Shall not require any switch wiring.
j. Shall not require any switch setting.

3. All safety - related digital outpouts of the LMV51 shall be permanently monitored via a contact feedback network.
4. The LMV51 shall provide burner-flame safeguard control approved for continuous duty applications, using optical solid state IR flame sensor technology including:

   a. Provisions for flame supervision using flickering infrared flame detectors (QRI).
   b. Provisions for flame supervision using ionization probes.
   c. The flame detector or probe shall also house the flame amplifier, eliminating reliability issues associated with remote amplifier flame sensor wiring.
   d. Shall provide immunity to glowing refractory and 60 HZ lighting.
   e. The QRI IR flame sensor shall incorporate self-checking features and be specified for continuous duty.

5. Manufacturer shall be able to select from a total of seven fuel valve configurations.
6. A large number of individual parameterization choices (program times, configuration of inputs/outputs, etc.) shall allow optimum adaptations to the specific fuel train configurations.
7. A burner switch shall be provided for a standard low fire shutdown.
8. An emergency stop switch shall be provided, for a immediate shutdown, which is wired directly in the fuel valve circuit.
9. The LMV51 can be replaced, and then re-commissioned by downloading the commissioning parameters from a backup in the AZL programming and display unit, or a PC, and shall not require re-programming.
10. The LMV51 shall provide electronic fuel/air ration control (FARC) with 15 points that can be added, deleted, or adjusted while running or in standby.
11. A separate display and operating unit (AZL), shall be provided with a LCD display and four buttons.

    a. Designed for front panel mounting.
    b. Display shall have a 4 line by 16 character LCD display with menu driven text in English.
    c. Shall provide straightforward operation, and continuously show the process variable, current setpoint, load and flame signal.
    d. Shall have a real time clock.

12. The AZL shall afford a convenient readout of:

a. Burner settings.
b. Operating state.
c. Parameters of the burner control.

13. The AZL display and operating unit shall interface through three ports:

    a. Safety bus Modbus connection to the LMV51 burner control base unit.
    b. COM1 optional connection to a PC with ACS450 software.
    c. COM2 optional connection to a BMS using an external e-bus interface.

14. The parameter setting levels for the burner shall be password - protected to prevent unauthorized access.
15. The plant operator shall be able to adjust user level settings, such as setpoints on site, without a password.
16. When performing diagnostics, the AZL shall show at least 21 faults, and the last 9 lockouts, with the following information:

    a. Fault code number.
    b. English word message.
    c. Operating state.
    d. Point in time the fault occurred

17. The AZL shall be connected to the safety network, using a 9-pin sub-D type port, allowing the operator to:

    a. Select a language for the AZL.
    b. Commission the LMV51 burner control.
    c. Convenient programming of burner settings.
    d. Process visualization.
    e. Choose which additional COM port you wish to use.
    f. Provides power to the AZL.

18. The AZL shall be able to permit one additional port, COM1 or COM2 to be used, at the same time.
19. COM1 shall be a sub-D 9-pin RS-232 serial port, designed to communicate with PC commissioning software ACS450 the following operating functions are provided:

    a. Readout of settings, operating status, error types, and point in time the errors occur (from the LMV51).
    b. Graphical presentation of diagnostic data.
    c. Parameterization of the LMV51.
    d. Trend/data recording.
    e. Printout functions for documenting the plant settings.
    f. Program update of the AZL.

20. COM2 shall be an RJ45 socket, modbus port, on the AZL, and be capable of being used as digital interface, for building management systems (BMS) or touch screen displays.

21. The external modbus interface shall provide electrical isolation and include a power supply, and be designed to provide the following functions.

    a. Hours of operation.
    b. Operating display
    c. Current fuel type
    d. Current operating phase
    e. Input status
    f. Output status including alarms
    g. Actual value of the temperature or pressure
    h. Temperature or pressure setpoint
    i. Contents of lockout and error storages.
    j. Select the type of fuel
    k. Set the date and the time of day
    l. Only non-safety-related date may be changed via the BMS.

22. Burner control shall be able to accept an analog setpoint from a BMS, and settings shall be password protected to prevent unauthorized access.

1.6 MODULATING FEEDWATER CONTROL SYSTEM

A. General

1. Each boiler shall be equipped with a Modulating Feedwater Control having functionality equal to a Siemens Differential Pressure (DP) based Modulating Feedwater Control System.

B. Functionality

1. The MFCS differential pressure sensor shall have the following features/functionalities.

    a. Minimum sending accuracy of 0.20% of span. (span = 100 in H20, accuracy = 0.20 in H20)
    b. Sensing element free of moving parts.
    c. Maximum sensor working pressure of 2300 PSI.
    d. Level sensor mounting below sightglass or water column.

2. The MFCS controller shall have the following features/functionalities:

    a. Display showing current water level and water level setpoint.
    b. Programmable High Water Alarm.
    c. Programmable Low Water Alarm.
    d. Feedwater Valve modulation through a PID loop algorithm.
    e. PID loop adaptation.

3. The MFCS feedwater valve shall have the following features/functionalities:

    a. A high temperature, cavitation resistant, stainless steel trim.
    b. Maximum feedwater valve leakage of 0.01% at rated DP.

c. Minimum working temperature of 300° F.
d. Minimum working pressure of 335 PSIG at 300° F.
e. Mechanical Manual Override, so that the feedwater valve can be opened or closed by hand.

1.7 SUBMITTALS

A. Product Data: Include manufacturer's technical literature for each control device. Indicate dimensions, capacities, performance characteristics, electrical characteristics, finishes for materials, and installation and startup instructions for each type of product indicated.

1. DDC System Hardware: Bill of materials of equipment indicating quantity, manufacturer, and model number. Include technical data for operator workstation equipment, interface equipment, control units, transducers/transmitters, sensors, actuators, valves, relays/switches, control panels, and operator interface equipment.
2. Control System Software: Include technical data for operating system software, operator interface, color graphics, and other third-party applications.
3. Controlled Systems: Instrumentation list with element name, type of device, manufacturer, model number, and product data. Include written description of sequence of operation including schematic diagram.

B. Shop Drawings: Detail equipment assemblies and indicate dimensions, weights, loads, required clearances, method of field assembly, components, and location and size of each field connection.

1. Bill of materials of equipment indicating quantity, manufacturer, and model number.
2. Schematic flow diagrams showing fans, pumps, dampers, valves, and control devices.
3. Wiring Diagrams: Power, signal, and control wiring.
4. Details of control panel faces, including controls, instruments, and labeling.
5. Schedule of dampers including size, leakage, and flow characteristics.
6. Schedule of valves including flow characteristics.

C. Qualification Data: For Installer and manufacturer.

D. Field quality-control test reports.

E. Operation and Maintenance Data: For control system to include in operation, and maintenance manuals. In addition to items specified in Division 1 Section "Operation and Maintenance Data," include the following:

1. Maintenance instructions and lists of spare parts for each type of control device.
2. Interconnection wiring diagrams with identified and numbered system components and devices.
3. Keyboard illustrations and step-by-step procedures indexed for each operator function.
4. Calibration records and list of set points.

1.8 QUALITY ASSURANCE

A. Installer Qualifications: Control system manufacturer's authorized representative who is trained and approved for installation of system components required for this Project.

B. Electrical Components, Devices, and Accessories: Listed and labeled as defined in NFPA 70, Article 100, by a testing agency acceptable to authorities having jurisdiction, and marked for intended use.

1.9 DELIVERY, STORAGE, AND HANDLING

A. Factory-Mounted Components: Where control devices specified in this Section are indicated to be factory mounted on equipment, arrange for shipping of control devices to equipment manufacturer.

B. System Software: Update to latest version of software at Project completion.

1.10 COORDINATION

A. Coordinate location of all control components.

B. Coordinate supply of conditioned electrical branch circuits for control units and operator workstation.

C. Coordinate equipment with Division 16 Section "Electrical Power Monitoring and Control" to achieve compatibility of communication interfaces.

1.11 EXTRA MATERIALS

A. Furnish extra materials described below that match products installed and that are packaged with protective covering for storage and identified with labels describing contents.

1. Maintenance Materials: One thermostat adjusting key(s).

PART 2 - PRODUCTS

2.1 MANUFACTURERS

A. In other Part 2 articles where titles below introduce lists, the following requirements apply to product selection:

1. Manufacturers: Subject to compliance with requirements, provide products by one of the manufacturers specified.

2.2 CONTROL SYSTEM

A. Manufacturers:

1. Wetco Inc.
2. Siemens Linkage - Less Burner control system.

B. Control system shall consist of a programmable thermostat for the furnace and heating only thermostats for the unit heaters, control valves, transmitters, damper actuators, meters, indicators, actuators, final control elements, interface equipment, other apparatus, accessories, and software.

C. Control system shall include the following:

1. Furnace and Unit Heater Controls.
2. Combustion air controls with interlocks between burners and outside dampers.
3. Steam System Boiler Room Controls
4. Burner Linkage - Less Controls.

2.3 CONTROL EQUIPMENT

A. Operator Workstation: One desk top computer with minimum configuration as follows:

1. Motherboard: With 8 integrated USB 2.0 ports, integrated Intel Pro 10/100 (Ethernet), integrated audio, bios, and hardware monitoring.
2. Processor: Intel Pentium 4, MHz.
3. Random-Access Memory: 1 GB.
4. Graphics: Video adapter, minimum 1600 x 1200 pixels, 128-MB video memory, with TV out.
5. Monitor: 19 inches**,** LCD flat panel color.
6. Keyboard: QWERTY, 105 keys in ergonomic shape.
7. Floppy-Disk Drive: 1.44 MB.
8. Hard-Disk Drive: 80 GB.
9. CD-ROM Read/Write Drive: 48x24x48.
10. Mouse: Three button, optical.
11. Uninterruptible Power Supply: 940 VA540 Watts.
12. Operating System: Microsoft Windows XP Professional with high-speed Internet access.

    a. ASHRAE 135 Compliance: Workstation shall use ASHRAE 135 protocol and communicate using ISO 8802-3 (Ethernet) datalink/physical layer protocol.
    b. LonWorks Compliance: Control units shall use LonTalk protocol and communicate using EIA/CEA 709.1 datalink/physical layer protocol or as required by supplier.

13. Printer: Color Laser-jet type as follows:

    a. Print Head: 1200 x 1200 dpi resolution.
    b. Paper Handling: Minimum of 250 sheet trays.

c. Print Speed: Minimum of 120 characters per second.

2.4 THERMOSTATS

A. Manufacturers:

1. Trane
2. Honeywell
3. Johnson Service.
4. York.

B. Combination Thermostat and Fan Switches: Line-voltage thermostat with push-button or lever-operated fan switch.

1. Label switches "FAN ON-OFF".
2. Mount on wall.

C. Electric, solid-state, microcomputer-based room thermostat (furnace).

1. Automatic switching from heating to cooling.
2. Preferential rate control to minimize overshoot and deviation from set point.
3. Set up for four separate temperatures per day.
4. Instant override of set point for continuous or timed period from 1 hour to 31 days.
5. Short-cycle protection.
6. Programming based on every day of week.
7. Selection features include degree F display, 24-hour clock, keyboard disable, and fan on-auto.
8. Battery replacement without program loss.
9. Thermostat display features include the following:

   a. Time of day.
   b. Actual room temperature.
   c. Programmed temperature.
   d. Programmed time.
   e. Duration of timed override.
   f. Day of week.
   g. System mode indications include "heating," "off," "fan auto," and "fan on."

D. Line-Voltage, On-Off Thermostats: (Unit Heater) Bimetal-actuated, open contact or bellows-actuated, enclosed, snap-switch or equivalent solid-state type, with heat anticipator; listed for electrical rating; with concealed set-point adjustment, 55 to 85 deg F set-point range, and 2 deg F maximum differential.

1. Electric Heating Thermostats: Equip with off position on dial wired to break ungrounded conductors.

2.5 ACTUATORS

A. Electric Motors: Size to operate with sufficient reserve power to provide smooth modulating action or two-position action.

1. Comply with requirements in Division 15 Section "Motors."
2. Permanent Split-Capacitor or Shaded-Pole Type: Gear trains completely oil immersed and sealed. Equip spring-return motors with integral spiral-spring mechanism in housings designed for easy removal for service or adjustment of limit switches, auxiliary switches, or feedback potentiometer.
3. Nonspring-Return Motors for Valves Larger Than NPS 2-1/2: Size for running torque of 150 in. x lbf and breakaway torque of 300 in. x lbf.
4. Spring-Return Motors for Valves Larger Than NPS 2-1/2: Size for running and breakaway torque of 150 in. x lbf.
5. Nonspring-Return Motors for Dampers Larger Than 25 Sq. Ft.: Size for running torque of 150 in. x lbf and breakaway torque of 300 in. x lbf.
6. Spring-Return Motors for Dampers Larger Than 25 Sq. Ft.: Size for running and breakaway torque of 150 in. x lbf.

B. Electronic Actuators: Direct-coupled type designed for minimum 60,000 full-stroke cycles at rated torque.

1. Manufacturers:

   a. Belimo Aircontrols (USA), Inc.
   b. Prior approved equal.

2. Valves: Size for torque required for valve close off at maximum pump differential pressure.
3. Dampers: Size for running torque calculated as follows:

   a. Parallel-Blade Damper with Edge Seals: 7 inch-lb/sq. ft. of damper.
   b. Opposed-Blade Damper with Edge Seals: 5 inch-lb/sq. ft. of damper.

4. Coupling: V-bolt and V-shaped, toothed cradle.
5. Overload Protection: Electronic overload or digital rotation-sensing circuitry.
6. Fail-Safe Operation: Mechanical, spring-return mechanism. Provide external, manual gear release on nonspring-return actuators.
7. Power Requirements (Two-Position Spring Return): 24 or 120-V ac.
8. Power Requirements (Modulating): Maximum 10 VA at 24-V ac or 8 W at 24-V dc.
9. Proportional Signal: 2- to 10-V dc or 4 to 20 mA, and 2- to 10-V dc position feedback signal.
10. Temperature Rating: Minus 22 to plus 122 deg F.
11. Run Time: 12 seconds open, 5 seconds closed.
12. Linkage shall also be provided as an alarm to the operators that the motor and interlock to burner is proven but the linkage is not opening or closing the damper.
13. Each burner shall be interlocked with a combustion air damper so when burner is started the damper for that burner is opened and when the burner is off the damper shall close.

14. The building ventilation dampers shall be controlled by a building static pressure controller (adjustable).

2.6 CONTROL VALVES

A. Manufacturers:

1. Yamas.
2. Honeywell.
3. Johnson Service.
4. Prior approved equal.

B. Control Valves: Factory fabricated, of type, body material, and pressure class based on maximum pressure and temperature rating of piping system, unless otherwise indicated.

C. Hydronic system globe valves shall have the following characteristics:

1. NPS 2 and Smaller: Class 250 bronze body, bronze trim, rising stem, renewable composition disc, and screwed ends with backseating capacity repackable under pressure.
2. NPS 2-1/2 and Larger: Class 125 iron body, bronze trim, rising stem, plug-type disc, flanged ends, and renewable seat and disc.
3. Internal Construction: Replaceable plugs and stainless-steel or brass seats.

    a. Single-Seated Valves: Cage trim provides seating and guiding surfaces for plug on top and bottom.

4. Sizing: 3-psig maximum pressure drop at design flow rate or the following:

    a. Two-Way Modulating: Either the value specified above or twice the load pressure drop, whichever is more.

5. Flow Characteristics: Two-way valves shall have equal percentage characteristics; three-way valves shall have linear characteristics.
6. Close-Off (Differential) Pressure Rating: Combination of actuator and trim shall provide minimum close-off pressure rating of 150 percent of total system (pump) head for two-way valves and 100 percent of pressure differential across valve or 100 percent of total system (pump) head.

D. Steam system globe valves shall have the following characteristics:

1. NPS 2 and Smaller: Class 125 bronze body, bronze trim, rising stem, renewable composition disc, and screwed ends with backseating capacity repackable under pressure.
2. NPS 2-1/2 and Larger: Class 125 iron body, bronze trim, rising stem, plug-type disc, flanged ends, and renewable seat and disc.
3. Internal Construction: Replaceable plugs and stainless-steel seats.

a. Single-Seated Valves: Cage trim provides seating and guiding surfaces for plug on top and bottom of guided plugs.

4. Sizing: For pressure drop based on the following services:

a. Two Position: 20 percent of inlet pressure.
b. Modulating 15-psig Steam: 80 percent of inlet steam pressure.

5. Flow Characteristics: Modified linear characteristics.
6. Close-Off (Differential) Pressure Rating: Combination of actuator and trim shall provide minimum close-off pressure rating of 150 percent of operating (inlet) pressure.

E. Butterfly Valves: 200-psig, 150-psig maximum pressure differential, ASTM A 126 cast-iron or ASTM A 536 ductile-iron body and bonnet, extended neck, stainless-steel stem, field-replaceable EPDM or Buna N sleeve and stem seals.

1. Body Style: Wafer or Lug.
2. Sizing: 1-psig maximum pressure drop at design flow rate.

F. Terminal Unit Control Valves: Bronze body, bronze trim, two or three ports as indicated, replaceable plugs and seats, and union and threaded ends.

1. Rating: Class 125 for service at 125 psig and 250 deg F operating conditions.
2. Sizing: 3-psig maximum pressure drop at design flow rate, to close against pump shutoff head.
3. Flow Characteristics: Two-way valves shall have equal percentage characteristics; three-way valves shall have linear characteristics.

2.7 DAMPERS

A. Manufacturers:

1. Air Balance Inc.
2. Ruskin.
3. Dampers provided by Controls Contractor.
4. Prior approved equal.

B. Dampers: AMCA-rated, parallel or opposed-blade design; 0.108-inch- minimum thick, galvanized-steel or 0.125-inch- minimum thick, extruded-aluminum frames. Damper blades shall not be less than 0.064-inch- thick galvanized steel with maximum blade width of 8 inches and length of 48 inches.

1. Secure blades to 1/2-inch- diameter, zinc-plated axles using zinc-plated hardware, with blade bearings, blade-linkage hardware of zinc-plated steel and brass, ends sealed against spring-stainless-steel blade bearings, and thrust bearings at each end of every blade.
2. Operating Temperature Range: From minus 40 to plus 200 deg F.
3. Edge Seals, Low-Leakage Applications: Use inflatable blade edging or replaceable rubber blade seals and spring-loaded stainless-steel side seals,

rated for leakage at less than 10 cfm per sq. ft. of damper area, at differential pressure of 4-inch wg when damper is held by torque of 50 in. x lbf; when tested according to AMCA 500D.

2.8 CONTROL CABLE

A. Electronic and fiber-optic cables for control wiring are specified in Division 16 Section "Voice and Data Communication Cabling."

PART 3 - EXECUTION

3.1 EXAMINATION

A. Verify that power supply is available to control units and operator workstation.

3.2 INSTALLATION

A. Install software in control units and operator workstation(s). Implement all features of programs to specified requirements and as appropriate to sequence of operation.

B. Connect and configure equipment and software to achieve sequence of operation specified.

C. Verify location of thermostats, and other exposed controllers with Drawings before installation. Install devices 48 inches and actual conditions above the floor.

D. Install automatic dampers according to Division 15 Section "Duct Accessories."

E. Install damper motors on outside of duct for furnace fresh air, not in locations exposed to outdoor temperatures. Install combustion air and ventilation air damper motors on wall.

F. Install labels and nameplates to identify control components according to Division 15 Section "Mechanical Identification."

G. Install hydronic instrument wells, valves, and other accessories according to Division 15 Section "Hydronic Piping."

H. Install steam and condensate instrument wells, valves, and other accessories according to Division 15 Section "Steam and Condensate Piping."

I. Install refrigerant instrument wells, valves, and other accessories according to Division 15 Section "Refrigerant Piping."

J. Install duct volume-control dampers according to Division 15 Sections specifying air ducts.

K. Install electronic and fiber-optic cables according to Division 16 Section "Voice and Data Communication Cabling."

3.3 ELECTRICAL WIRING AND CONNECTION INSTALLATION

A. Install raceways, boxes, and cabinets according to Division 16 Section "Raceways and Boxes."

B. Install building wire and cable according to Division 16 Section "Conductors and Cables."

C. Install signal and communication cable according to Division 16 Section "Voice and Data Communication Cabling."

1. Install exposed cable in raceway.
2. Install concealed cable in raceway.
3. Bundle and harness multiconductor instrument cable in place of single cables where several cables follow a common path.
4. Fasten flexible conductors, bridging cabinets and doors, along hinge side; protect against abrasion. Tie and support conductors.
5. Number-code or color-code conductors for future identification and service of control system, except local individual room control cables.
6. Install wire and cable with sufficient slack and flexible connections to allow for vibration of piping and equipment.

3.4 FIELD QUALITY CONTROL

A. Manufacturer's Field Service: Engage a factory-authorized service representative to inspect, test, and adjust field-assembled components and equipment installation, including connections, and to assist in field testing. Report results in writing.

B. Perform the following field tests and inspections and prepare test reports:

1. Operational Test: After electrical circuitry has been energized, confirm proper unit operation. Remove and replace malfunctioning units and retest.
2. Test and adjust controls and safeties.
3. Test calibration of electronic controllers by disconnecting input sensors and stimulating operation with compatible signal generator.
4. Test each point through its full operating range to verify that safety and operating control set points are as required.
5. Test each control loop to verify stable mode of operation and compliance with sequence of operation. Adjust PID actions.
6. Test each system for compliance with sequence of operation.
7. Test software and hardware interlocks.

C. DDC Verification:

1. Verify that instruments are installed before calibration, testing, and loop checks.
2. Check instruments for proper location and accessibility.

3. Check instrument installation for direction of flow, elevation, orientation, insertion depth, and other applicable considerations.
4. Check instrument tubing for proper fittings, slope, material, and support.
5. Check flow instruments. Inspect tag number and line and bore size, and verify that inlet side is identified and that meters are installed correctly.
6. Check pressure instruments, piping slope, installation of valve manifold, and self-contained pressure regulators.
7. Check temperature instruments and material and length of sensing elements.
8. Check control valves. Verify that they are in correct direction.
9. Check system as follows:

    a. Verify that controller power supply is from emergency power supply.
    b. Verify that wires at control panels are tagged with their service designation and approved tagging system.
    c. Verify that spare I/O capacity has been provided.
    d. Verify that controllers are protected from power supply surges.

D. Replace damaged or malfunctioning controls and equipment and repeat testing procedures.

3.5 ADJUSTING

A. Calibrating and Adjusting:

1. Calibrate instruments.
2. Make three-point calibration test for both linearity and accuracy for each analog instrument.
3. Calibrate equipment and procedures using manufacturer's written recommendations and instruction manuals. Use test equipment with accuracy at least double that of instrument being calibrated.
4. Control System Inputs and Outputs:

    a. Check analog inputs at 0, 50, and 100 percent of span.
    b. Check analog outputs using milliampere meter at 0, 50, and 100 percent output.
    c. Check digital inputs using jumper wire.
    d. Check digital outputs using ohmmeter to test for contact making or breaking.
    e. Check resistance temperature inputs at 0, 50, and 100 percent of span using a precision-resistant source.

5. Flow:

    a. Set differential pressure flow transmitters for 0 and 100 percent values with 3-point calibration accomplished at 50, 90, and 100 percent of span.
    b. Manually operate flow switches to verify that they make or break contact.

6. Pressure:

    a. Calibrate pressure transmitters at 0, 50, and 100 percent of span.

b. Calibrate pressure switches to make or break contacts, with adjustable differential set at minimum.

7. Temperature:

a. Calibrate resistance temperature transmitters at 0, 50, and 100 percent of span using a precision-resistance source.
b. Calibrate temperature switches to make or break contacts.

8. Stroke and adjust control valves and dampers without positioners, following the manufacturer's recommended procedure, so that valve or damper is 100 percent open and closed.
9. Stroke and adjust control valves and dampers with positioners, following manufacturer's recommended procedure, so that valve and damper is 0, 50, and 100 percent closed.
10. Provide diagnostic and test instruments for calibration and adjustment of system.
11. Provide written description of procedures and equipment for calibrating each type of instrument. Submit procedures review and approval before initiating startup procedures.

3.6 DEMONSTRATION

A. Engage a factory-authorized service representative to train Owner's maintenance personnel to adjust, operate, and maintain instrumentation and controls.

END OF SECTION 15900