UTAH STATE DEVELOPMENTAL CENTER
AUDITORIUM REROOF

895 N. 900 E. AMERICAN FORK,UT 84003

SYMBOLS LEGEND

ROOM IDENTIFICATION NUMBER	ROOM NAME / NUM
DOOR NUMBER	XXX
REFERENCE NOTE	X
GLAZING TYPE	X
PARTITION WALL TYPE	X
INTERIOR ELEVATION	SHADE INDICATES ELEVATED WALL; ELEVATION NUMBER; SHEET NUMBER; WALL NUMBER
INTERIOR ELEVATION	SECTION NUMBER; SHEET NUMBER
WALL SECTION	SECTION NUMBER; SHEET NUMBER
EXTERIOR ELEVATION	ELEVATION NUMBER; SHEET NUMBER
DETAIL	DETAIL NUMBER; SHEET NUMBER
DETAIL TITLE	A1 DETAIL 1" = 1'-0"
REVISION DELTA	2 REVISION NUMBER

MATERIAL LEGEND

- GYPSUM BOARD OR CONCRETE SURFACE
- CONCRETE
- STUD WALL
- GRAVEL
- COMPACTED FILL AND/OR EARTH
- CMU (CONCRETE MASONRY UNIT)
- BATT INSULATION
- RIGID INSULATION

ABBREVIATIONS

AFF	- ABOVE FINISHED FLOOR
BUR	- BUILT UP ROOF
CONC	- CONCRETE
CMU	- CONCRETE MASONRY UNIT
EIFS	- EXTERIOR INSULATED FINISH SYSTEM
EQ	- EQUAL
MAX	- MAXIMUM
MIN	- MINIMUM
NIC	- NOT IN CONTRACT
O.C.	- ON CENTER
SPEC	- SPECIFICATION
SIM	- SIMILAR
TYP	- TYPICAL
T. O.	- TOP OF
B. O.	- BOTTOM OF
RE.	- REFERENCE

DRAWING INDEX

COVER SHEET

ARCHITECTURAL

A-101 ROOF PLAN
A-501 ROOF DETAILS

MECHANICAL

PL-101 PLUMBING LAYOUT

CODE ANALYSIS

APPLICABLE CODES

	Year		Year
International Building Code	2006	National Electrical Code	2006
International Mechanical Code	N/A	Uniform Code for	
International Plumbing Code	2006	Building Conservation	N/A
International Fire Code	2006	ADA Accessibility	
International Energy Conservation Code	N/A	Guildelines	N/A

A. Occupancy and Group: I-4

Change in Use: Yes ____ No NO Mixed Occupancy: Yes ____ No X
Special Use and Occupancy (e.g. High Rise, Covered Mall): ____

B. Seismic Design Category: ____ Design Wind Speed: 100 mph

C. Type of Construction (circle one):

I	I	II	II	III	III	IV	V	V
A	B	A	(B)	A	B	HT	A	B

D. Fire Resistance Rating Requirements for the Exterior Walls based on the fire separation distance (in hours):

North: N/A South: N/A East: N/A West: N/A

E. Mixed Occupancies: NO Nonseparated Uses: NO

F: Sprinklers:

Required: NO Provided: NO Type of Sprinkler System: NONE

G: Number of Stories: 2 Building Height: APPROX. 36 FT

H: Actual Area per Floor (square feet): 10,000 SF MAIN FLOOR

I: Tabular Area: X

J: Area Modifications:

a) $A_a = A_t + \left[\frac{A_t I_f}{100}\right] + \left[\frac{A_t I_s}{100}\right]$ $\quad I_f = 100\left[\frac{F}{P} - 0.25\right]\frac{W}{30}$

b) Sum of the Ratio Calculations for Mixed Occupancies:

$\frac{\text{Actual Area}}{\text{Allowable Area}} \leq 1$

c) Total Allowable Area for:
1) One Story: ____
2) Two Story: A (2) ____
3) Three Story: A (3) ____

d) Unlimited Area Building: Yes ____ No X Code Section: ____

K. Fire Resistance Rating Requirements for Building Elements (hours).

Element	Hours	Assembly Listing	Element	Hours	Assembly Listing
Exterior Bearing Walls	0	-	Floors - Ceiling Floors	0	-
Interior Bearing Walls	0	-	Roofs - Ceiling Roofs	0	-
Exterior Non-Bearing Walls	0	-	Exterior Doors and Windows	0	-
Structural Frame	0	-	Shaft Enclosures	N/A	-
Partitions - Permanent	0	-	Fire Walls	0	-
Fire Barriers	0	-	Fire Partitions	0	-
			Smoke Partitions	0	-

L. Design Occupant Load: XX
Exit Width Required: XX Exit Width Provided: XX

M. Minimum Number of Required Plumbing Facilities:
a) Water Closets - Required (m) XX (f) XX Provided (m) XX (f) XX
b) Lavatories - Required (m) XX (f) XX Provided (m) XX (f) XX
c) Bath Tubs or Showers: XX
d) Drinking Fountains: XX Service Sinks: XX

FOOTNOTES:

1) In case of conflict with the U.S. Department of Justice Federal Registers Parts I through 3:- ADA Guidelines and specific reference to the International Building Code Accessibility Chapters, the more restrictive requirement shall govern.

2) Additional Code Information shall be provided at the discretion of the Building Official for Complex Buildings. Including, but not limited to:
a) High Rise Requirements.
b) Atriums.
c) Performance Based Criteria.
d) Means or Egress Analysis.
e) Fire Assembly Locator Sheet.
f) Exterior and Interior Accessibility Route.
g) Fire Stopping, Including Tested Design Number.

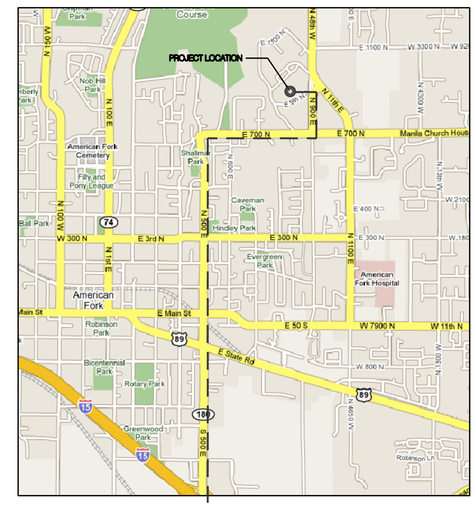

VICINITY MAP
895 N. 900 E., AMERICAN FORK, UT 84003

N

CONSTRUCTION DOCUMENTS
SEPT 12, 2008

STATE OF UTAH
DEPARTMENT OF ADMINISTRATIVE SERVICES
DIVISION OF FACILITIES CONSTRUCTION AND MANAGEMENT
4110 STATE OFFICE BUILDING / SALT LAKE CITY, UTAH 84114 /
801.538.3018 / WWW.DFCM.STATE.UT.US

DFCM PROJECT NO. 08196410

FFKR ARCHITECTS
bogue building
730 pacific avenue
salt lake city
Utah 84104
801-521-6186
801-539-1916
ffkr.com

UTAH STATE DEVELOPMENTAL CENTER
AUDITORIUM REROOF

SEAL

DATE	STATUS

PROJECT NUMBER	08052
CAD DWG FILE	
DRAWN BY	DK
CHECKED BY	BL, RJ
SCALE	

COVER

C3 PHOTO 1

C4 PHOTO 2

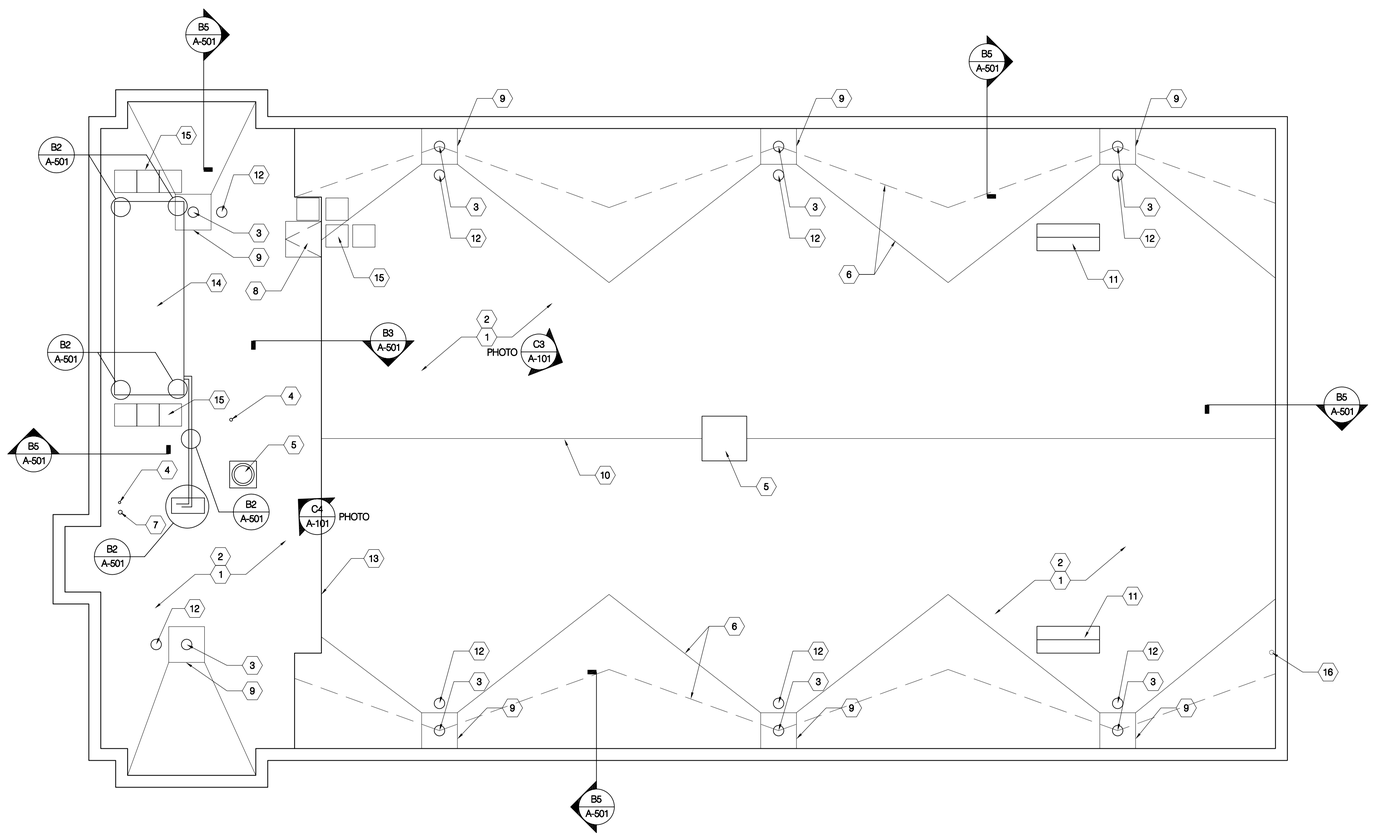

A2 ROOF PLAN

1/8" = 1'-0"

0 8' 16'

REFERENCE NOTES

1. EXISTING BUR WITH GRAVEL, INSULATION AND WALL/CURB CANTS TO BE REMOVED - SEE NEW VS EXISTING DETAIL A4/A-501
2. NEW ADHERED SINGLE PLY EPDM MEMBRANE SYSTEM - SEE DETAIL A4/A-501
3. EXISTING PRIMARY ROOF DRAIN SYSTEM TO REMAIN - SEE DETAIL C4/A-501
4. EXISTING PLUMBING VENT PIPE (SHOWN AS SOLID CIRCLE TYP) TO REMAIN - PROVIDE EXTENSIONS FOR PIPE AS REQUIRED TO GIVE A MIN. OF 12" FROM TOP OF PIPE TO NEW ROOFING SURFACE - REFER TO DETAIL C2/A-501
5. EXISTING MECHANICAL EQUIPMENT - TEMPORARILY REMOVE AND SET ASIDE FOR REINSTALLATION - RAISE CURB AS REQUIRED TO ACHIEVE 8" MIN. DIM. FROM TOP OF CURB TO SURFACE OF NEW ROOFING.- REINSTALL UNIT - REMOVAL AND REINSTALLATION OF POWERED UNITS SHALL BE DONE BY QUALIFIED LICENSED MECHANICS ONLY
6. EXISTING CRICKETS TO BE REMOVED AND REPLACED W/ NEW FACTORY TAPERED CRICKET SYSTEM - NEW CRICKET VALLEY TO ACHIEVE 1/8" PER FOOT SLOPE MIN.
7. EXISTING FLUE TO REMAIN - FLASH PER DETAIL C5/A-501 - FLASH IF REQUIRED
8. EXISTING ROOF ACCESS HATCH TO REMAIN
9. 4'x4" DRAIN SUMP (NEW)
10. RIDGE LINE
11. EXISTING SMOKE HATCH - TEMPORARILY REMOVE AND SET ASIDE FOR REINSTALLATION - RAISE CURB AS REQUIRED TO ACHIEVE 8" MIN. DIM. FROM TOP OF CURB TO SURFACE OF NEW ROOFING.- REINSTALL UNIT
12. NEW SECONDARY ROOF DRAIN - TYP.
13. HIGHER ROOF TO LOW ROOF LINE
14. EXISTING A/C UNIT TO REMAIN IN PLACE
15. PROVIDE 30"x30" WALKPADS AS SHOWN
16. SECONDARY ROOF DRAIN DROP - SEE MECH & ARCH DETAIL A2/A-501

GENERAL NOTES

1. EXISTING SLOPE IS IN THE EXISTING STRUCTURE
2. ALL NEW WOOD OR PLYWOOD THAT COMES IN CONTACT WITH CONCRETE OR MASONRY SHALL BE PRESERVATIVE TREATED
3. IT IS THE CONTRACTORS RESPONSIBILITY TO MEET ALL OF THE REQUIREMENTS OF THE ROOFING SYSTEM MANUFACTURERER FOR THE 20 YEAR WARRANTY - AS PER DFCM REQUIREMENTS - SEE DFCM WEBSITE
4. THE CONTRACTOR IS TO PROVIDE A PROPOSAL FOR THE LOCATION OF THE STAGING AREAS WHICH IS TO BE APPROVED BY THE OWNER AND ARCHITECT - CONTRACTOR STAGING AREA IS TO BE PROVIDED WITH A SECURE, LOCKED 6'-0" TALL TEMPORARY CHAIN LINK FENCE. ALL GAPS IN FENCE TO BE MAINTAINED LESS THAN 4". REMOVE AND SECURE ALL LADDERS AT THE END OF EACH DAY. DUMPSTER MUST BE KEPT IN LOCKED FENCED AREA
5. PROTECT ALL EXISTING IMPROVEMENTS INCLUDING LANDSCAPING, SPRINKLING SYSTEMS, SIDEWALKS, PARKING AREAS, SURROUNDING ROOS ETC. - ANY DAMAGE TO EXISTING IMPROVEMENTS SHALL BE REPAIRED TO ORIGINAL OR BETTER THAN ORIGINAL CONDITION (TO THE SATISFACTION OF THE OWNER AND ARCHITECT)

FFKR ARCHITECTS

bogue building
730 pacific avenue
salt lake city
Utah 84104

o 801-521-6186
f 801-539-1916
ffkr.com

UTAH STATE DEVELOPMENTAL CENTER
AUDITORIUM REROOF

SEAL

DATE	STATUS

PROJECT NUMBER	08052
CAD DWG FILE	
DRAWN BY	DK
CHECKED BY	BL, RJ
SCALE	AS NOTED

ROOF PLAN

A-101

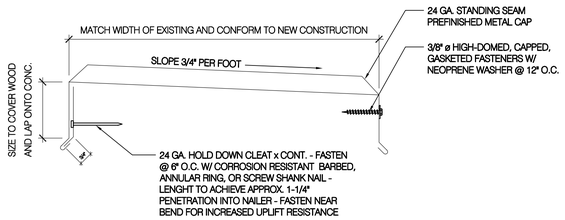

C1 TYP. METAL CAP DETAIL
NOT TO SCALE

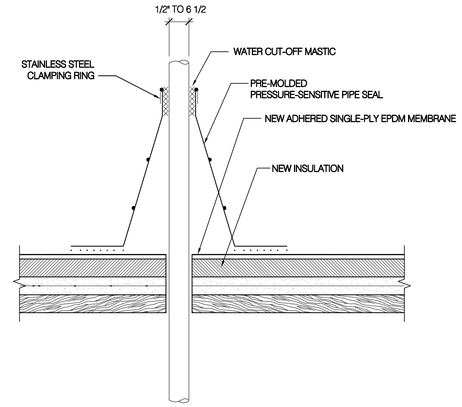

C2 TYP VENT PIPE/CONDUIT DETAIL
NOT TO SCALE

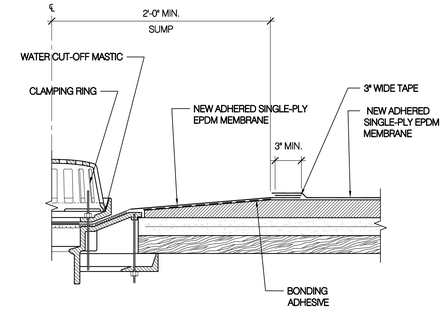

C4 ROOF DRAIN DETAIL
NOT TO SCALE

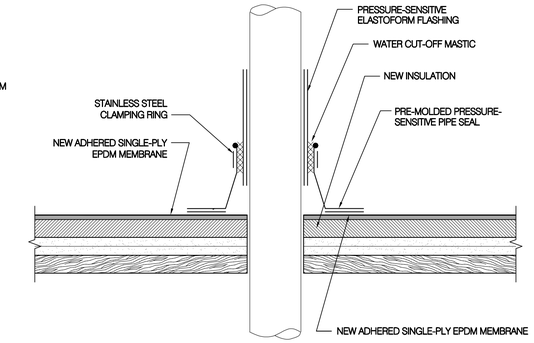

C5 TYP FLUE FLASHING DETAIL
NOT TO SCALE

NOTES:
1. 180° F MAX TEMPERATURE
2. POURABLE SEALER MUST CONTACT PRIMED PRESSURE-SENSITIVE ELASTOFORM FLASHING AND DECK MEMBRANE
3. DECK FLANGE MUST BE CONTINUOUS WITH ROUNDED CORNERS
4. POURABLE SEALER POCKET MAY BE ROUND
5. POURABLE SEALER POCKET TO BE 1" MIN ROM ANY PENETRATION ON ANY SIDE
6. POURABLE SEALER MUST COMPLETELY FILL POURABLE SEALER POCKET TO PREVENT PONDING OF WATER
7. POURABLE SEALER TO BE MIN 2" DEEP
8. ALL DEBRIS (PAINT, RUST, LEAD, OTHER FLASHINGS, ETC.) MUST BE REMOVED FROM THE PENETRATION
9. ON MECHANICALLY-FASTENED ROOFING SYSTEM, ADDITIONAL MEMBRANE SECUREMENT IS REQUIRED. REFER TO SPECIFICATION
10. PENETRATIONS, MEMBRANE, FLASHING AND METAL DAM (INSIDE POCKET) MUST BE PRIMED PRIOR TO APPLYING POURABLE SEALER

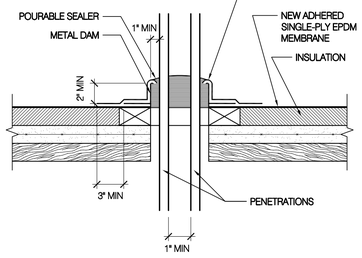

B2 FIELD FABRICATED POURABLE SEALER POCKET
NOT TO SCALE

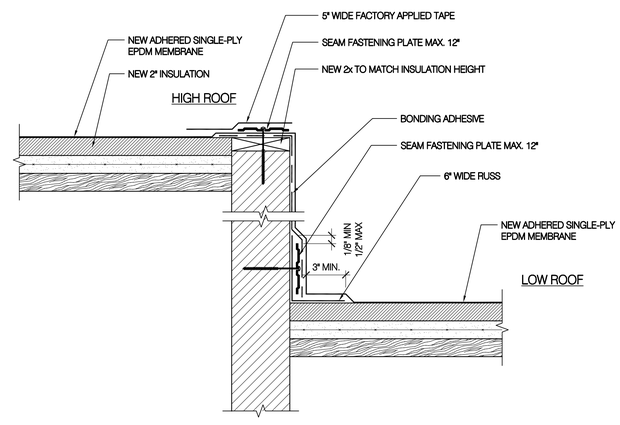

B3 ROOF ELEVATION CHANGE DETAIL
NOT TO SCALE

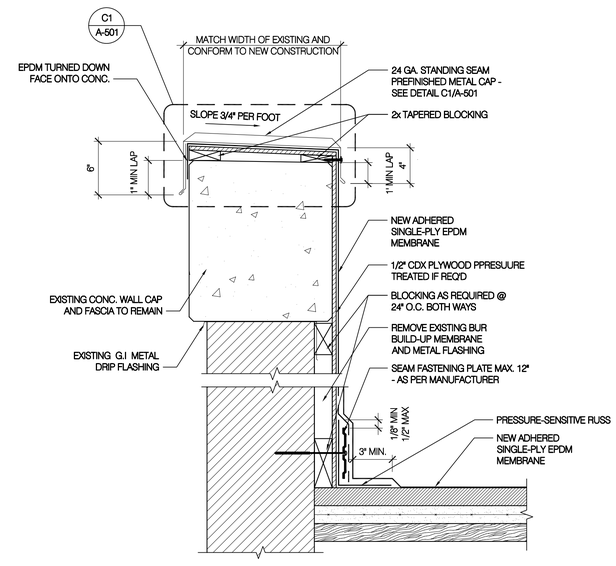

B5 WALL CAP DETAIL
NOT TO SCALE

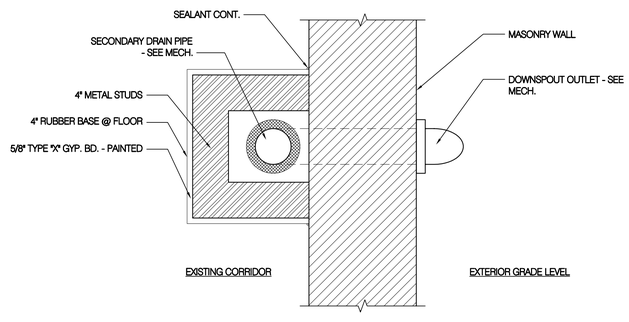

A2 SECONDARY ROOF DRAIN PIPE DETAIL
NOT TO SCALE

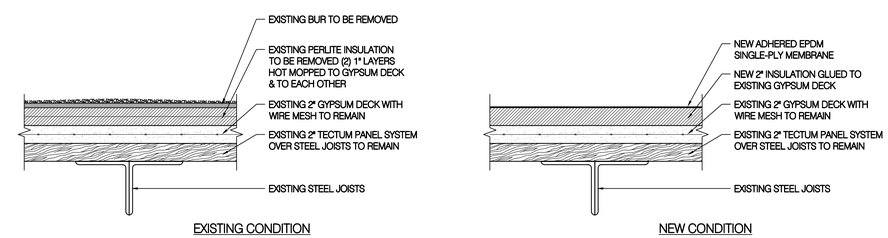

A4 NEW VS EXISTING DETAIL
NOT TO SCALE

FFKR ARCHITECTS
bogue building
730 pacific avenue
salt lake city
Utah 84104
o 801-521-6186
f 801-539-1916
ffkr.com

UTAH STATE DEVELOPMENTAL CENTER
AUDITORIUM REROOF

SEAL

DATE	STATUS

PROJECT NUMBER	08052
CAD DWG FILE	
DRAWN BY	DK
CHECKED BY	BL, RJ
SCALE	AS NOTED

DETAILS

A-501

PLUMBING FIXTURE SCHEDULE

ID	FIXTURE	CW (IN)	HW (IN)	W (IN)	V (IN)	NOTES	DESCRIPTION
DSN-1	DOWNSPOUT NOZZLE					SEE PLANS	DOWNSPOUT NOZZLE: SMITCH FIGURE 1770 DOWNSPOUT NOZZLE, CAST BRONZE BODY AND FLANGE
RDO-1	ROOF DRAIN OVERFLOW					SEE PLANS	OVERFLOW ROOF DRAIN: SMITH FIGURE 1010-ERC CAST IRON BODY WITH FLASHING CLAMP, GRAVEL STOP, CAST IRON DOME, 2" HIGH WATER COLLAR, EXTENSION, SUMP RECEIVER AND UNDERDECK CLAMP.

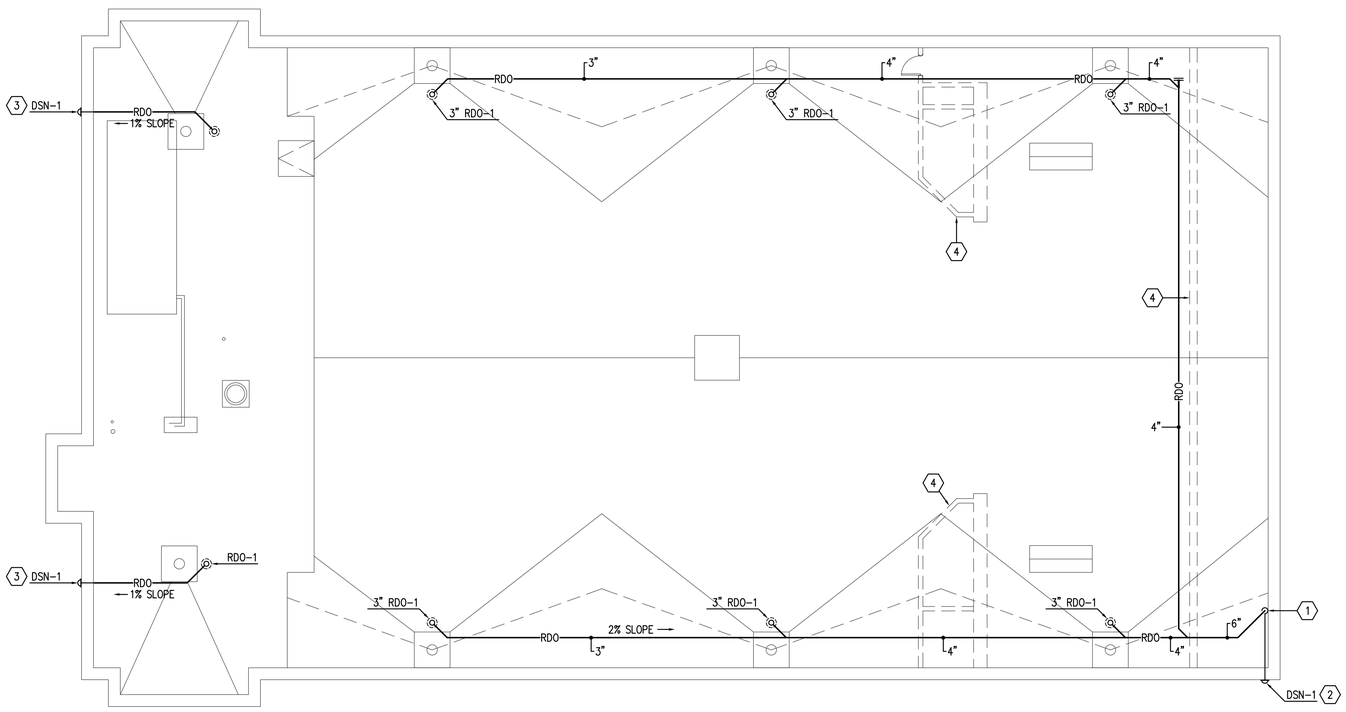

A2 ROOF PLUMBING PLAN
1/8" = 1'-0"
0 8' 16'

LEGEND

—RDO—	ROOF DRAIN OVERFLOW
	RISER – DOWN (ELBOW)
◎	ROOF DRAIN
↑	DOWNSPOUT NOZZLE
—‖	CLEAN-OUT

KEY NOTES

1. DROP ROOF DRAIN OVERFLOW DOWN IN CORNER OF CORRIDOR. FIELD DETERMINE EXACT LOCATION OF DROP. COORDINATE WITH EXISTING CONDITIONS AND NEW FURRING.
2. INSTALL DOWNSPOUT NOZZLE APPROXIMATLY 12"–16" INCHES ABOVE GRADE. FIELD DETERMINE.
3. INSTALL DOWNSPOUT NOZZLE UP HIGH.
4. EXISTING MASONRY WALLS.

GENERAL NOTES

1. SLEEVE PIPING THRU WALLS/FOUNDATIONS WHERE REQUIRED.
2. PLUMBING DRAWINGS ARE SCHEMATIC IN NATURE. FIELD VERIFY EXACT ROUTING & COORDINATE WITH ALL OTHER TRADES.
3. NO PIPING TO RUN OVER ELECTRICAL PANELS, VFD'S, OR MCC'S.
4. SLEEVE/CONFIGURE CMU WALLS FOR EMBEDDED PIPING AND PIPE PENETRATIONS AS REQUIRED.

FFKR ARCHITECTS
bogue building
730 pacific avenue
salt lake city
Utah 84104
o 801-521-6186
f 801-539-1916
ffkr.com

UTAH STATE DEVELOPMENTAL CENTER AUDITORIUM REROOF

SEAL

DATE	STATUS
09-11-08	

PROJECT NUMBER	08280
CAD DWG FILE	
DRAWN BY	EL
CHECKED BY	SR
SCALE	1/8" = 1'-0"

ROOF PLUMBING PLAN

PL-101

VAN BOERUM & FRANK ASSOCIATES INC.
WWW.VBFA.COM CONSULTING ENGINEERS
Salt Lake City · Logan · St. George · Tempe · Pocatello
330 South 300 East 801.530.3148 T
Salt Lake City, UT 84111 801.530.3150 F
VBFA Project Number:8280_

FARLEY ENGINEERING, llc

STRUCTURAL ENGINEERING CONSULTANTS

Sheet Number _____

Job Number _____

Date ___/___/___

By: _____

TITLE: UTAH STATE DEVELOPMENTAL CENTER
AUDITORIUM RE-ROOF

EXISTING ROOF WEIGHT

FIBERGLASS INSULATION = 3.0 #'s

BUILT UP ROOF (3) PLY = 5.6 #'s

8.6 PSF

NEW ROOF WEIGHT

2" INSULATION = 2.0 #'s

SINGLE-PLY = 2.0 #'s

4.0 PSF

CONCLUSION: NEW ROOF TO BE ADDED WEIGHS LESS THAN EXISTING ROOF PORTIONS TO BE REMOVED, THEREFOR THERE IS NO ADDITIONAL WEIGHT ADDED TO THE EXISTING STRUCTURE.

PROFESSIONAL STRUCTURAL ENGINEER
DOUGLAS M. FARLEY
318831
9/15/08
STATE OF UTAH

Telephone: (801) 274-3151 1917 East Osage Orange Ave, Holladay UT 84124 Fax: (801) 274-3150
Email: farleyeng@qwest.net