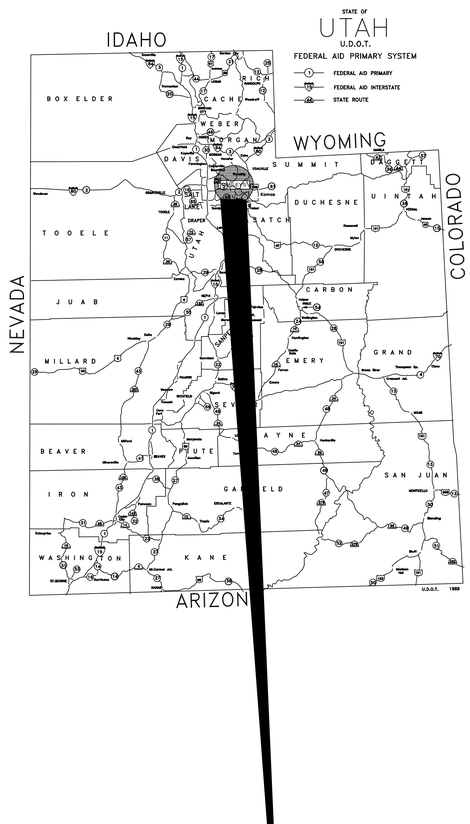

6072 E. EMIGRATION CANYON ROAD
PARLEY'S CANYON, UTAH

UDOT MAINTENANCE STATION #2434

6072 E. EMIGRATION CANYON ROAD
I-80 EXIT 134
PARLEYS CANYON, UTAH

DFCM PROJECT #08211900

CONSTRUCTION DOCUMENTS

JANUARY, 2009

PREPARED BY

ARCHIPLEX GROUP
architecture · planning · design services
255 Crossroad Square
Salt Lake City, UT 84115
P:(801) 961-7070
F:(801) 961-7373
Ralph Stanislaw

CONSULTANTS

STRUCTURAL
BHB Consulting Engineers
244 West 300 North
Suite 202
Salt Lake City, Utah 84103
Telephone: (801) 355-5656
Fax: (801) 355-5950
Gerald McKenzie
geraldb@bhbengineers.com

CIVIL
PEPG Engineering
8805 S. Sandy Parkway
Sandy, Utah 84070
Telephone: (801) 562-2521
Fax: (801) 562-2551
Darrin Smith
Darrin@pepg.net

ELECTRICAL
PVE Inc.
1040 North 2200 West
Salt Lake City, UT 84116
Telephone: (801) 359-3158
Fax: (801) 521-4114
Roger Riddle
rkriddle@pve-ut.com

MECHANICAL
PVE Inc.
1040 North 2200West
Salt Lake City, UT 84116
Telephone: (801) 359-3158
Fax: (801) 521-4114
Alan Spendlove
adspendlove@pve-ut.com

CODE ANALYSIS

APPLICABLE CODES

	Year		Year
International Building Code	2006	National Electrical Code	2005
International Mechanical Code	2006	Uniform Code for	
International Plumbing Code	2006	Building Conservation	N.A.
International Fire Code	2006	ADA Accessibility	
International Energy		Guildelines	2002
Conservation Code	2006		

A. Occupancy and Group: S1 (REPAIR GARAGE) B (OFFICES ACCESSORY) S2 (VEHICLE STORAGE) _____ _____

Change in Use: Yes _____ No X Mixed Occupancy: Yes X No _____

Special Use and Occupancy (e.g. High Rise, Covered Mall): N.A.

B. Seismic Design Category: D Design Wind Speed: 90 mph

C. Type of Construction (circle one):

I A | I B | II A | II B | III A | III B | IV HT | V A | (V B)

D. Fire Resistance Rating Requirements for the Exterior Walls based on the fire separation distance (in hours):

North: 0 South: 0 East: 0 West: 0

E. Mixed Occupancies: YES Nonseparated Uses: YES

F: Sprinklers: Group S-1 + B Fire Area = 10,733 Group S-2 Fire Area = 4,600

3 HOUR FIRE BARRIER PROVIDED PER TABLE 706.3.9

Required: NO Provided: NO Type of Sprinkler System: N.A.

(TOTAL FIRE AREA EXCEEDS 12,000 S.F.)

G: Number of Stories: 1 Building Height: 26'-0"

H: Actual Area per Floor (square feet): 15,333 SF

I: Tabular Area: 9000 SF

J: Area Modifications:

a) $A_a = A_t + \left[\frac{A_t I_f}{100}\right] + \left[\frac{A_t I_s}{100}\right]$ $\qquad I_f = 100\left[\frac{F}{P} - 0.25\right]\frac{W}{30}$

$$15333\ SF = 9000 + \left[\frac{9000\ (75)}{100}\right] + \left[\frac{9000\ (0)}{100}\right]$$

b) Sum of the Ratio Calculations for Mixed Occupancies:

$$\frac{\text{Actual Area}}{\text{Allowable Area}} \leq 1 \quad \frac{15{,}200\ SF}{15750\ SF} = .965$$

c) Total Allowable Area for:

1) One Story: 15750 SF
2) Two Story: $A_a(2)$ N.A.
3) Three Story: $A_a(3)$ N.A.

d) Unlimited Area Building: Yes _____ No X Code Section: _____

K. Fire Resistance Rating Requirements for Building Elements (hours).

Element	Hours	Assembly Listing	Element	Hours	Assembly Listing
Exterior Bearing Walls	0	N.A.	Floors - Ceiling Floors	0	N.A.
Interior Bearing Walls	0	N.A.	Roofs - Ceiling Roofs	0	N.A.
Exterior Non-Bearing Walls	0	N.A.	Exterior Doors and Windows	0	N.A.
Structural Frame	0	N.A.	Shaft Enclosures	0	N.A.
Partitions - Permanent	0	N.A.	Fire Walls	0	N.A.
Fire Barriers	3	N.A.	Fire Partitions	0	N.A.
Incidental Storage	1	UL419	Smoke Partitions	0	N.A.

L. Design Occupant Load: 37* (Per IBC TABLE 1004.1.2 Using 500 S.F. per Occupant for garages, 100 S.F. for office areas) S1= 29 B= 8

Exit Width Required: 7.2" Exit Width Provided: 36"

M. Minimum Number of Required Plumbing Facilities: *UNISEX (IBS SECTION 2902.2 EXPECTION 2)

Actual Occupant Load: 14 BASED ON ACTUAL UDOT STAFFING

a) Water Closets - Required 1 unisex Provided (m) _____ (f) _____
b) Lavatories - Required 1* Provided 1*
c) Bath Tubs or Showers: 1 (EMERGENCY EYEWASH)
d) Drinking Fountains: 1 Service Sinks: 1

MAXIMUM EMPLOYEES PERMITTED = 15

GENERAL NOTE:

1. CONSTRUCTION OF NEW STATE BUILDINGS AND REMODELING 0F EXISTING BUILDINGS SHALL COMPLY WITH ALL THE REQUIREMENTS OF THE DFCM STANDARDS, INCLUDING ENHANCED ACCESSIBILITY. THE DFCM STANDARDS CAN BE FOUND AT THE FOLLOWING WEB SITE: www.dfcm.utah.gov.

2. EVERY STRUCTURE, AND PORTION THEREOF, INCLUDING NONSTRUCTURAL COMPONENTS THAT ARE PERMANENTLY ATTACHED TO STRUCTURES AND THEIR SUPPORTS AND ATTACHMENTS, SHALL BE DESIGNED AND CONSTRUCTED TO RESIST TO EFFECTS OF EARTHQUAKE MOTIONS IN ACCORDANCE WITH ASCE 7-05. REFERENCE IBC SECTION 1613.1

CLIENT

UDOT CONNECTING COMMUNITIES
STATION #2434
6072 E. EMIGRATION CANYON RD.
PARLEY'S CANYON, UTAH

DESIGNER

ARCHIPLEX GROUP
architecture · planning · design services
255 Crossroad Square
Salt Lake City, UT 84115
P:(801) 961-7070
F:(801) 961-7373

CONSULTANTS

REGISTRATION

STATE OF UTAH
RALPH M. STANISLAW
05-350618-0301
LICENSED ARCHITECT

ISSUE

MARK	DATE	DESCRIPTION
	01-09	Revised Contruction Doc.
	10-08	Construction Documents
	8-20-08	90% Review Submittal

ARCHIPLEX PROJECT NO:	0728.02
DFCM PROJECT NO:	08211900
DRAWN BY:	A. PHILLIPS
CHECKED BY:	R. STANISLAW
SCALE:	NONE
DATE:	JANUARY, 2009

KEY PLAN

SHEET TITLE

COVER SHEET

G000

© 2004 ARCHIPLEX GROUP

GENERAL NOTES

1. CONTRACTOR IS RESPONSIBLE FOR VERIFYING ALL DIMENSIONS AND CONDITIONS AT THE SITE BEFORE SUBMITTING A BID OR PROCEEDING WITH ANY PORTION OF THE WORK.
2. WHENEVER QUESTIONS ARISE OR CONDITIONS ARE ENCOUNTERED WHICH ARE NOT COVERED BY OR ARE IN CONFLICT WITH THE CONTRACT DOCUMENTS, CONSULT WITH THE ARCHITECT PRIOR TO TAKING ANY FURTHER ACTION.
3. ALL DIMENSIONS ARE TO FACE OF MASONRY OR FACE OF STUD, U.N.O.
4. DO NOT SCALE DRAWINGS FOR DIMENSIONS.
5. DIMENSIONS NOTED AS N.T.S. ARE TO BE FIELD VERIFIED.
6. ALL WOOD IN CONTACT WITH OR WITHIN 8" OF SOILS IS TO BE FIELD TREATED FOR MOISTURE, RODENT AND INSECT PROTECTION.
7. THE CONTRACTOR SHALL COORDINATE THE SEQUENCING OF WORK WITH THE OWNER AND ARCHITECT TO MEET THE OWNERS SCHEDULE.
8. CONTRACTOR SHALL LEAVE WORK AREAS BROOM CLEAN AND FREE OF TOOLS, EQUIPMENT, ETC., AT THE END OF EACH SHIFT. ALL CONSTRUCTION ACTIVITY SHALL BE CONTAINED WITHIN CONSTRUCTION BARRICADES OR FENCES. CONTRACTOR SHALL PROTECT OWNERS EXISTING CONSTRUCTION AND EQUIPMENT ADJACENT TO NEW CONSTRUCTION. CONTRACTOR SHALL CLEAN ALL SURFACES TO "LIKE NEW" CONDITION AT THE COMPLETION OF
9. PROVIDE WATER SUPPLY ROUGH-IN AND ELECTRICAL SUPPLY TO IRRIGATION CONTROLS. PROVIDE PVC SLEEVE UNDER PAVEMENTS AND WALKS

GRAPHIC SYMBOLS

- ASPHALT
- EARTH
- SAND
- CONC. W/ FINISH
- TILE W/ BED
- BRICK
- CMU
- LIMESTONE
- WOOD (BLOCKING)
- WOOD FRAMING
- STEEL
- RIGID INSULATION
- PLASTER
- COMP. FILLER
- METAL LATH
- GRAVEL
- CONCRETE
- CAST STONE
- MARBLE
- GRANITE
- STONE
- PLYWOOD
- WOOD FINISH
- ALUMINUM
- BATT INSULATION
- ACOUSTICAL TILE
- BACKER ROD AND FILLER
- GYPSUM BOARD
- FENCE

ARCHITECTURAL LEGEND

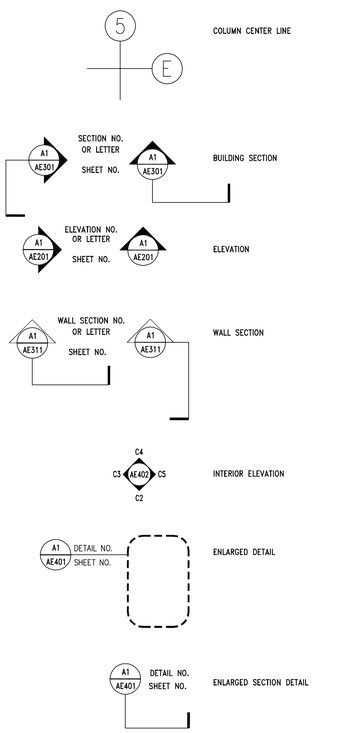

ABBREVIATIONS

ALT.	ALTERNATE
ALUM.	ALUMINUM
A.B.	ANCHOR BOLT
&	AND
ARCH.	ARCHITECTURAL
@	AT OR AT THE
BM.	BEAM
BLK.	BLOCK
BLKG.	BLOCKING
BD.	BOARD
BOT.	BOTTOM
BLDG.	BUILDING
CLKG.	CAULKING
C.I.	CAST IRON
CLG.	CEILING
CEM.	CEMENT
CTR.	CENTER
	CENTER LINE
CER.	CERAMIC
C.T.	CERAMIC TILE
CFCI	CONTRACTOR FURNISH, CONTRACTOR INSTALL
CFOI	CONTRACTOR FURNISH, OWNER INSTALLED
CLR.	CLEAR (...ANCE)
CLO.	CLOSET
COL.	COLUMN
CONC.	CONCRETE
CMU	CONCRETE MASONRY UNIT
CONN.	CONNECTION
CONSTR.	CONSTRUCTION
CONT.	CONTINUE/CONTINUOUS
CONTR.	CONTRACTOR
C.J.	CONTROL JOINT
CORR.	CORRIDOR
CNTR.	COUNTER
CTSK.	COUNTERSUNK
DET.	DETAIL
DIA.	DIAMETER
DIM.	DIMENSION
DN.	DOWN
D.S.	DOWNSPOUT
DWG.	DRAWING
D.F.	DRINKING FOUNTAIN
EA.	EACH
ELEC.	ELECTRIC (AL)
ELEV./EL.	ELEVATION
EQ.	EQUAL
EQUIP.	EQUIPMENT
EXP.	EXPANSION
EXT.	EXTERIOR
EW	EACH WAY
FIN.	FINISH
F.A.	FIRE ALARM
F.E.	FIRE EXTINGUISHER
F.E.C.	F.E. CABINET
FLR./FL.	FLOOR
F.D.	FLOOR DRAIN
FTG.	FOOTING
FDN.	FOUNDATION
GALV.	GALVANIZED
G.I.	GALVANIZED IRON
GA.	GAUGE
GL.	GLASS
GR.	GRADE
GND.	GROUND
GYP.	GYPSUM
GYP. BD.	GYPSUM BOARD
HDWR.	HARDWARE
HDWD.	HARDWOOD
HT.	HEIGHT
H.P.	HIGH POINT
HORIZ.	HORIZONTAL
H.B.	HOSE BIBB
HM	HOLLOW METAL
HR.	HOURS (FIRE RATING)
IN.	INCH
I.D.	INSIDE DIAMETER
INUSL.	INSULATION
INT.	INTERIOR
JAN.	JANITOR
JT.	JOINT
J-BOX	JUNCTION BOX
KIT.	KITCHEN
LAM.	LAMINATE
LAV.	LAVATORY
LT.	LIGHT
L.P.	LOW POINT
MAINT.	MAINTENANCE
MFR.	MANUFACTURER
M.O.	MASONRY OPENING
MAX.	MAXIMUM
MECH.	MECHANICAL
MEMB.	MEMBRANE
MEN	MEN'S TOILET
MTL./MET.	METAL
MIN.	MINIMUM
MIR.	MIRROR
MISC.	MISCELLANEOUS
MTD.	MOUNTED
MUL.	MULLION
NOM.	NOMINAL
N.	NORTH
N.I.C.	NOT IN CONTRACT
N.T.S.	NOT TO SCALE
NO. OR #	NUMBER
OFOI	OWNER FURNISH, OWNER INSTALL
OFCI	OWNER FURNISH, CONTRACTOR INSTALL
OFF.	OFFICE
O.C.	ON CENTER
OPNG.	OPENING
OPP.	OPPOSITE
OPP. H.	OPPOSITE HAND
O.D.	OUTSIDE DIAMETER
PTD.	PAINTED
PR.	PAIR
PART.	PARTITION
PED.	PEDESTRIAN
PLAS.	PLASTER
P. LAM.	PLASTIC LAMINATE
PL	PLATE
PM	PRESSED METAL
PLYWD.	PLYWOOD
PT.	POINT
Q.T.	QUARRY TILE
RAD.	RADIUS
R.W.L.	RAIN WATER LEADER
RE:	REFER TO
REFL.	REFLECTED
REINF.	REINFORCING
REQ.	REQUIRED
REV.	REVISED
R.	RISER
R.D.	ROOF DRAIN
RM.	ROOM
R.O.	ROUGH OPENING
SCHED.	SCHEDULE
SEAL.	SEALANT
SECT.	SECTION
S.SK.	SERVICE SINK
SHT.	SHEET
SIM.	SIMILAR
SL./SLP.	SLOPE
S.C.	SOLID CORE
SPEC.	SPECIFICATIONS
SQ.	SQUARE
STD.	STANDARD
STL.	STEEL
STOR.	STORAGE
STRUCT.	STRUCTURAL/STRUCTURE
SYM.	SYMMETRICAL
S.STL	STAINLESS STEEL
TEL.	TELEPHONE
TEMP.	TEMPORARY/TEMPERED
THK.	THICK (NESS)
T & G	TONGUE AND GROOVE
T/CONC.	TOP OF CONCRETE
T/CURB	TOP OF CURB
T.O.P.	TOP OF PLATE
T/WALL	TOP OF WALL
T.	TREAD
TYP.	TYPICAL
UNF.	UNFINISHED
U.N.O.	UNLESS NOTED OTHERWISE
VAR.	VARY OR VARIES
VERT.	VERTICAL
V.T.R.	VENT THROUGH ROOF
W/	WITH
WD.	WOOD
WP.	WATERPROOF
WSCT.	WAINSCOT
W/O	WITHOUT
W.P.	WORKING POINT
W.R.	WATER RESISTANT

INDEX OF DRAWINGS

G000	COVER SHEET
G001	GENERAL NOTES, ABBREVIATIONS, SYMBOLS, LEGEND & SHEET INDEX
G002	MASTER KEYNOTE LIST

CIVIL

C100	DEMOLITION PLAN
C200	SITE AND UTILITY PLAN
C300	GRADING AND DRAINAGE PLAN
C301	RETAINING WALL PLAN AND PROFILE
C302	SANDER RACK PLAN AND PROFILE
C400	EROSION CONTROL PLAN
C401	EROSION CONTROL TYPICAL SECTIONS AND DETAILS
C500	TYPICAL SECTIONS AND DEATLS
C501	TYPICAL SECIONS AND DETAILS

LANDSCAPING

L100	LANDSCAPE PLAN
L101	LANDSCAPE NOTES AND SCHEDULE
L102	LANDSCAPE DETAILS

ARCHITECTURAL

AE101	FIRST FLOOR AND MEZZANINE PLAN
AE121	REFLECTED CEILING PLANS
AE141	ROOF PLAN
AE201	EXTERIOR ELEVATIONS
AE301	BUILDING SECTIONS
AE311	WALL SECTIONS
AE312	WALL SECTIONS
AE313	WALL SECTIONS
AE401	ENLARGED RESTROOM FLOOR PLAN, INT. ELEVTATIONS AND DETAILS
AE402	ENLARGED MAINTENANCE BAY AND INTERIOR ELEVATIONS
AE403	STAIR PLAN, SECTION ELEVATION & DETAILS
AE501	WALL TYPES
AE502	SIGNAGE AND MISC. DETAILS
AE503	MISC. DETAILS
AE601	DOOR SCHEDULE AND DETAILS
AE602	WINDOW FRAME TYPES, GLAZING & FINISH SCHEDULES AND DETAILS
AE701	WASH RACK PLAN, SECTION & ELEVATIONS
AE702	SITE STRUCTURES, MOTORIZED GATE PLAN & ELEVATION
AE703	SITE STRUCTURES, SANDER RACK PLAN, SECTION & ELEVATION

STRUCTURAL

SJ001	GENERAL STRUCTURE NOTES
SB101	FOOTING AND FOUNDATION PLAN
SB501	FOOTING AND FOUNDATION DETAILS
SB502	FOOTING AND FOUNDATION DETAILS
SB503	FOOTING AND FOUNDATION DETAILS
SB601	SCHEDULES
SF101	OUT BUILDING PLANS AND DETAILS
SF111	ROOF FRAMING PLAN
SF501	MEZZANINE/STAIR DETAILS
SF511	ROOF FRAMING DETAILS
SF112	ROOF FRAMING DETAILS
SF601	SCHEDULES

MECHANICAL

M001	MECHANICAL SCHEDULES
M201	MECHANICAL FLOOR PLAN
M601	MECHANICAL DETAILS
M602	MECHANICAL DETAILS
P001	PLUMBING SCHEDULES
P201	PLUMBING FLOOR PLAN
P601	PLUMBING DETAILS
P602	PLUMBING DETAILS

ELECTRICAL

E101	ELECTRICAL SYMBOLS AND NOTES
E102	ELECTRICAL SITE PLAN
E201	ELECTRICAL LIGHTING PLAN
E301	ELECTRICAL POWER PLAN
E302	SNOW MELT
E401	ELECTRICAL SCHEDULES & RISERS
E501	ELECTRICAL DETAILS
E502	ELECTRICAL DETAILS

COM. CHECKS

COMP101	COMPLIANCE CERTIFICATE
COMP201	COMPLIANCE CERTIFICATE

CLIENT

UDOT CONNECTING COMMUNITIES

STATION #2434
6072 E. EMIGRATION CANYON RD.
PARLEY'S CANYON, UTAH

DESIGNER

ARCHIPLEX GROUP
architecture · planning · design services
255 Crossroad Square
Salt Lake City, UT 84115
P:(801) 961-7070
F:(801) 961-7373

CONSULTANTS

REGISTRATION

STATE OF UTAH
RALPH M. STANISLAW
06-318688-2001
LICENSED ARCHITECT

ISSUE

MARK	DATE	DESCRIPTION
	01-09	Revised Contruction Doc.
	10-08	Construction Documents
	8-20-08	90% Review Submittal

ARCHIPLEX PROJECT NO:	0728.02
DFCM PROJECT NO:	08211900
DRAWN BY:	A. PHILLIPS
CHECKED BY:	R. STANISLAW
SCALE:	NONE
DATE:	JANUARY, 2009

KEY PLAN

SHEET TITLE

GENERAL NOTES, ABBREVIATIONS, LEGENDS AND DRAWING INDEX

G001

© 2004 ARCHIPLEX GROUP

MASTER KEYNOTE LIST – (APPLIES TO ARCHITECTURAL DRAWINGS ONLY)

DIVISION 1 GENERAL REQUIREMENTS

DIVISION 2 SITEWORK

02200 EARTHWORK

02200.A0 COMPACTED FILL
02200.B0 GRAVEL BASE
02200.C0 SAND

02512 ZERO VOIDS ASPHALT PAVING

02512.A0 ZERO VOIDS ASPHALT PAVING (THICKNESS)

02513 ASPHALT CONCRETE PAVING

02513.A0 ASPHALT CONCRETE PAVING

02822 CHAIN LINK FENCES & GATES

02822.A1 CANTILEVERED GATE
02822.B1 2" # GATE FRAME
02822.C1 NEW 6' HIGH CHAIN LINK FENCE – SEE CIVIL
02822.D1 TENSION TIE WIRE
02822.E1 LINE POSTS @ 10'-0" O.C.
02822.F1 2" DIAMOND MESH STEEL FABRIC
02822.G0 3 LINE BARBED WIRE
02822.H0 VERTICAL VINYL FENCE SLATS – COLOR BY ARCHITECT

02831 HORIZONTAL SLIDING GATE OPERATORS

02831.A1 PHYSICAL TRAVEL STOP
02831.B1 HYDRAULIC SLIDE GATE OPERATOR W/AUDIO ALARM
02831.C1 UNDERGROUND OBSTRUCTION LOOP
02831.D1 GATE SENSORS
02831.E1 KEY PAD ACCESS ON PEDESTAL
02831.F1 CARD READER ON PEDESTAL
02831.G1 FIRE ACCESS & KNOX BOX ON PEDESTAL
02831.H1 GATE RECEIVER POCKET

DIVISION 3 CONCRETE

03053 CONCRETE WATER PROOFING ADMIXTURE

03053.A0 CONCRETE WATER PROOFING ADMIXTURE

03054 OLIOPHOBIC TOPICAL CONCRETE SEALER

03054.A0 OLIOPHOBIC TOPICAL SEALER

03055 SALT AND WATER BARRIER FOR EXTERIOR CONCRETE

03055.A0 SALT AND WATER BARRIER

03300 CAST-IN-PLACE CONCRETE

03300.A0 CONCRETE – SLAB ON GRADE
03300.A1 CONCRETE SLAB-ON-GRADE – SEE STRUCTURAL
03300.A2 CONCRETE SLAB-ON-GRADE (THICKNESS)
03300.B1 CONCRETE SLAB – RESTRUCTURAL
03300.B2 CONCRETE SLAB (THICKNESS)
03300.C0 FOOTING
03300.C1 FOOTING – SEE STRUCTURAL
03300.D0 CONCRETE PAD
03300.E0 CONCRETE RETAINING WALL WITH CULTURED STONE FACING – COORD. WITH CIVIL & STRUCTURAL
03300.F0 CAST-IN-PLACE REINFORCED CONCRETE
03300.G0 CONCRETE OVER METAL DECK – SEE STRUCTURAL
03300.H0 FOUNDATION WALL – SEE STRUCTURAL
03300.M1 CONCRETE PIER – SEE STRUCTURAL
03300.J0 REINFORCING
03300.J1 REINFORCING – SEE STRUCTURAL
03300.J2 #4 BARS CONTINUOUS (QUANTITY)
03300.J3 #5 BARS CONTINUOUS (QUANTITY)
03300.K1 CONCRETE PIPE BASE
03300.L1 30# FELT
03300.M1 MOISTURE BARRIER
03300.N0 CONCRETE CURB
03300.P3 CONTROL JOINT – SEE STRUCTURAL
03300.P4 CONSTRUCTION JOINT
03300.P5 ISOLATION JOINT
03300.P6 CHAMFER JOINT
03300.P7 SAWCUT CONSTRUCTION JOINT, TYP.
03300.P8 CHAMFER EDGE
03300.Q1 CONCRETE BOLLARD PAINTED (SEE STRUTURAL)
03300.R0
03300.T1 CONCRETE @ STAIR TREAD

DIVISION 4 MASONRY

04200 UNIT MASONRY

04200.A0 CMU
04200.A2 CMU (SIZE)
04200.A3 SPLIT FACE (SIZE)
04200.B0 GROUT SOLID
04200.C0 BOND BEAM (SHAPE)
04200.C1 BOND BEAM – SEE STRUCTURAL
04200.D1 CMU LINTEL – SEE STRUCTURAL
04200.G1 REINFORCING – SEE STRUCTURAL
04200.K2 ANCHOR BOLTS (DIAMETER, SPACING)
04200.M0 WEEP HOLES
04200.N0 METAL FLASHING
04200.Q0 INSULATED BLOCK
04200.R0 MASONRY CONTROL JOINT

DIVISION 5 METALS

05120 STRUCTURAL STEEL

05120.A0 STEEL BEAM – SEE STRUCTURAL
05120.A1 STEEL BEAM – SEE STRUCTURAL – GALVANIZED
05120.A2 STEEL BEAM – SEE STRUCTURAL – PRIMED AND PAINTED
05120.B1 STEEL COLUMN – SEE STRUCTURAL – GALVANIZED
05120.B2 STEEL COLUMN – SEE STRUCTURAL – PRIMED AND PAINTED
05120.C1 TUBE STEEL BEAM – SEE STRUCTURAL – GALVANIZED
05120.D1 TUBE STEEL COLUMN – SEE STRUCTURAL
05120.D2 TUBE STEEL COLUMN – SEE STRUCTURAL – PRIMED AND PAINTED

05220 STEEL JOISTS AND JOIST GIRDERS

05220.A1 STEEL JOISTS – SEE STRUCTURAL
05220.A2 STEEL JOISTS – SEE STRUCTURAL – PRIMED AND PAINTED
05220.B2 STEEL GIRDERS – SEE STRUCTURAL – PRIMED AND PAINTED

05310 STEEL DECK

05310.A1 METAL DECK – SEE STRUCTURAL

05400 COLD-FORMED METAL FRAMING

05400.A1 6" STRUCTURAL STEEL STUDS – SEE STRUCTURAL DRAWINGS FOR SPACING AND GAUGE
05400.A2 3 5/8" STRUCTURAL STEEL STUDS – SEE STRUCTURAL DRAWINGS FOR SPACING AND GAUGE
05400.X1 STEEL STUD
05400.X2 STEEL TRACK
05400.X3 STEEL JOIST – SEE STRUCTURAL

05500 METAL FABRICATIONS

05500.A1 ANGLE – SEE STRUCTURAL
05500.A2 STEEL ANGLE (SIZE) – GALVANIZED
05500.A3 STEEL ANGLE (SIZE)
05500.B0 CLIP ANGLE
05500.B2 CLIP ANGLE (SIZE)
05500.C1 SHEET METAL ANGLE – 22 GA. – GALVANIZED (SIZE)
05500.D0 CHANNEL (SIZE)
05500.D1 CHANNEL – SEE STRUCTURAL
05500.D2 HAT CHANNEL (SIZE)
05500.D3 CHANNEL – PRIMED AND PAINTED – SEE STRUCTURAL
05500.E0 PLATE (SIZE)
05500.E1 PLATE – SEE STRUCTURAL
05500.E2 PLATE (SIZE) – GALVANIZED
05500.E3 BENT PLATE – SEE STRUCTURAL
05500.F1 THRU BOLT (DIAMETER)
05500.G1 BENT BAR TAB (THICKNESS)
05500.G2 BARTAB (THICKNESS)
05500.H1 LAG BOLTS (DIAMETER)
05500.J1 PIPE BOLLARD (DIAMETER) – GALV. & PAINTED
05500.M1 CHECKERED PLATE (SIZE) GALVANIZED
05500.P0 ANCHOR BOLT(S)
05500.V0 FLOOR PLATE
05500.X1 STEEL STUD (SEE STRUCTURAL)
05500.X2 STEEL RUNNER (SEE STRUCTURAL)
05500.Y0 AIR DUCT SCREEN
05500.Y1 AIR DUCT SCREEN – PAINTED
05500.Z0 CHAIN – GALVANIZED

05510 METAL STAIRS

05510.A1 LADDER RUNGS
05510.B0 LADDER RAILS
05510.C0 LADDER MOUNTING BRACKET
05510.D1 RUBBER SHOE AT BOTTOM OF EACH RAIL
05510.E1 NON SKID SURFACE @ NOSING
05510.F0 STEEL STRINGER – (SIZE)
05510.F1 STEEL STRINGER – (SIZE) – PAINTED
05510.G1 3/16" STEEL CLOSURE PLATE – PAINTED
05510.H0 CONC. FILLED METAL PAN STAIR – PAINTED
05510.H1 PRE-FORMED, CONC. FILLED METAL PAN STAIR TREAD – (SIZE) – PAINTED
05510.J1 METAL PAN STAIR SUPPORT – (SIZE) – PAINTED
05510.J2 PAN ANCHORAGE – (SIZE) – PAINTED
05510.K1 STEEL CHANNEL DECK SUPPORT – PAINTED

05521 PIPE & TUBE RAILINGS

05521.A1 1 1/2" O.D. STEEL GUARDRAIL
05521.A2 PIPE GUARDRAIL (DIAMETER) – GALVANIZED
05521.A3 1 1/2" O.D. PIPE GUARDRAIL – GALVANIZED
05521.A4 1 1/2" O.D. PIPE GUARDRAIL – PAINTED
05521.B1 1 1/2" O.D. HANDRAIL
05521.B2 PIPE HANDRAIL (DIAMETER) – GALVANIZED
05521.B3 1 1/2" O.D. PIPE HANDRAIL – GALVANIZED
05521.B4 1 1/2" O.D. PIPE GUARDRAIL – PAINTED
05521.C2 ESCUTCHEON WITH EASED EDGES (SIZE)
05521.D1 PIPE RAIL SUPPORT – PAINTED
05521.E1 1" I.D. PIPE RAILING ANCHOR – GALVANIZED
05521.F1 1/2" DIA. THRU BOLT

05530 GRATINGS

05530.A0 TRENCH FRAME – GALVANIZED
05530.A1 STEEL GRATE 22-W-4 (SIZE) GALVANIZED
05530.B0 ALUMINUM BAR PANELS
05530.C1 METAL GRATE PANEL – GALV.
05530.C2 METAL GRATE TREAD – GALV.

DIVISION 6 WOOD AND PLASTICS

06105 MISCELLANEOUS CARPENTRY

06105.L2 BLOCKING AS REQUIRED
06105.P1 2X4
06105.P2 2X6
06105.P6 4X4
06105.P9 2 x FRAMING, FIRE TREATED
06105.P10 PRESSURE TREATED WOOD TIMBER (SIZE)
06105.P11 2 x BLOCKING
06105.Q2 SHIM AS REQUIRED
06105.R2 SHEATHING – PLYWOOD (THICKNESS) GRADE (SIZE)
06105.R3 PLYWOOD PANEL (THICKNESS) – MECHANICALY FASTENED THROUGH INSULATION INTO CMU WALL
06105.R4 PLYWOOD PANEL (THICKNESS)
06105.V1 EXTERIOR GRADE PLYWOOD (THICKNESS)
06105.V6 PEGBOARD (THICKNESS)
06105.Z0 ANCHOR AS REQUIRED

06402 INTERIOR ARCHITECTURAL WOODWORK

06402.A0 SILL
06402.B1 PLASTIC LAMINATE BACKSPLASH (HEIGHT)
06402.C1 PAINT GRADE WOOD CAP (THICK)
06402.D1 3/4" PARTICLE BOARD W/MELANINE FINISH
06402.E1 WIRE PULL
06402.F1 PROVIDE WHITE MELAMINE FINISH @ ALL INTERIOR SURFACES
06402.G1 3/4" PARTICLE BOARD CABINET TOP W/PLAM (FINISH)
06402.G2 3/4" PARTICLE BOARD CABINET BASE W/PLAM (FINISH)
06402.G3 3/4" PARTICLE BOARD CABINET TOP
06402.H0 SHELF(VES)
06402.H1 ADJUSTABALE SHELVES (FINISH)
06402.H2 SHELVING (DEPTH)
06402.J1 RECESSED SHELF BRACKETS
06402.K0 BASE UNIT (FINISH)
06402.K2 BASE UNIT W/ADJ. SHELF(VES) (FINISH)
06402.K3 BASE UNIT W/DRAWERS (FINISH)
06402.K4 BASE UNIT W/DRAWER & ADJ. SHELF(VES) (FINISH)
06402.L1 WALL UNIT (FINISH)
06402.L2 WALL UNIT W/ADJ. SHELF(VES) (FINISH)
06402.P0 COUNTERTOP
06402.M1 3/4" PARTICLE BOARD SCREEN (FINISH)
06402.P2 COUNTERTOP – P. LAM. ON 3/4" PLYWOOD
06402.X0 WORKBENCH (DEPTH)

06651 SOLID SURFACE FABRICATIONS

06651.A0 1/2" WHITE SOLID SURFACE WINDOW SILL
06651.B0 SOLID SURFACE COUNTER TOP
06651.C0 SOLID SURFACE BACKSPLASH

DIVISION 7 THERMAL AND MOISTURE PROTECTION

07110 SHEET MEMBRANE WATER PROOFING SYSTEM

07110.A0 SELF ADHESIVE MEMBRANE WATERPROOFING
07110.B0 PRE-FABRICATED DRAINAGE COMPOSITE MATERIAL

07190 WATER REPELLANTS

07190.A0 CLEAR WATER RESISTANT COATING

07210 BUILDING INSULATION

07210.A1 BATT INSULATION (R-VALUE)
07210.B0 RIGID INSULATION
07210.B1 RIGID INSULATION (R-VALUE)
07210.C0 RIGID INSULATION FOIL FACED W/VAPOR BARRIER
07210.C1 RIGID INSULATION (CONTINUOUSLY ADHERED TO CMU) W/FOIL FACED VAPOR BARRIER TOWARDS INTERIOR (R-VALUE)
07210.D0 VAPOR BARRIER
07210.E0 FOUNDATION WALL INSULATION (THICKNESS)

07410 MANUFACTURED ROOF PANELS

07410.A0 STANDING SEAM METAL ROOF
07410.A1 RAIN GUTTER W/CONTINUOUS HEAT TAPE
07410.A2 DOWNSPOUT W/CONTINUOUS HEAT TAPE
07410.B0 FASTENER
07410.B1 METAL REGLET
07410.C0 ROOFING FELT
07410.E0 BREAK METAL
07410.G0 FLASHING, FINISH TO MATCH LOUVER COLOR
07410.G1 FLASHING, FINISH TO MATCH ROOF COLOR
07410.G2 FLASHING, FINISH TO MATCH WINDOW
07410.H0 METAL SIDING
07410.H1 METAL WALL PANEL
07410.H2 ALUMINUM CLAD WALL PANEL
07410.J2 JAMB TRIM
07410.J3 SILL FLASHING
07410.K0 SEALANT
07410.L0 METAL FACIA
07410.M1 METAL SOFFIT
07410.M2 ICE & WATER SHEILD
07410.P1 PANEL TRIM
07410.P2 RAKE TRIM
07410.P3 CORNER TRIM
07410.Q1 CLIP
07410.R1 METAL EAVE CLOSURE
07410.S1 STANDING SEAM METAL ROOF RIDGE
07410.T1 STANDING SEAM METAL ROOF CANOPY

07729 ROOF SNOW GUARDS

07729.A0 STANDING SEAM METAL ROOF 2 PIPE SNOWGUARD SYSTEM

07841 PENETRATION FIRESTOPPING

07841.A0 PENETRATION FIRE STOPPING
07841.B0 PACKING MATERIAL

07901 JOINT SEALANTS

07901.A0 CONT. SEALANT
07901.B0 ASPHALT SATURATED FIBERBOARD
07901.C0 CONT. CAULK
07901.D0 JOINT FILLER
07901.G0 BACKER ROD
07901.H1 CONCRETE JOINT WATER PROOF SEALANT
07901.H2 JOINT SEALANT

DIVISION 8 DOORS AND WINDOWS

08111 STANDARD STEEL DOORS AND FRAMES

08111.A0 PRESSED METAL FRAME
08111.A1 GROUT-FILLED PRESSED METAL FRAME
08111.B0 HOLLOW METAL DOOR
08111.C0 JAMB ANCHOR

08360 SECTIONAL OVERHEAD DOORS

08360.A0 HEAVY DUTY OVERHEAD SECTIONAL DOOR
08360.B0 3" HEAVY DUTY OVERHEAD SECTIONAL DOOR TRACK
08360.C0 WEATHERSTRIPPING
08360.D0 DOOR GUIDE

08521 HORIZONTAL VINYL (PVC) WINDOWS

08521.B0 FIXED VINYL WINDOW
08521.C0 VINYL WINDOW W/SLIDING GLASS PANEL

08710 DOOR HARDWARE

08710.A0 THRESHOLD
08710.B0 DOOR SWEEP
08710.C0 WEATHERSTRIPPING

08800 GLAZING

08800.C0 WIRE GLASS
08800.G1 CLEAR INSULATING GLASS (SIZE)
08800.G3 OPAQUE INSULATING GLASS

DIVISION 9 FINISHES

09255 GYPSUM BOARD ASSEMBLIES

09255.A1 GYPSUM BOARD (THICKNESS)
09255.A2 WATER RESISTANT GYPSUM BOARD (THICKNESS)
09255.B2 TYPE 'X' GYPSUM BOARD (THICKNESS)
09255.C3 CEMENT BOARD (THICKNESS)
09255.H0 METAL STUD
09255.H1 METAL STUDS (SIZE, SPACING)
09255.J0 METAL RUNNER
09255.K0 DOUBLE STUDS
09255.K1 DOUBLE STUDS (GAGE)
09255.L1 7/8" X 1-3/8" METAL ANGLE
09255.L2 2-1/2" X 2-1/2" METAL ANGLE
09255.M2 METAL CORNER BEAD (TYP)
09255.P0 Z-FURRING CHANNEL
09255.Q0 7/8" METAL FURRING CHANNEL
09255.R2 CHANNEL (SIZE, SPACING)
09255.S1 8 GA. WIRE HANGERS (SPACING)
09255.S2 18 GA. WIRE TIES
09255.S3 18 GA. METAL MOUNTING STRIPS
09255.S4 14 GA. STAINLESS STEEL COUNTER TOP (FINISH)
09255.U1 SUSPENDED CEILING SYSTEM
09255.U2 CROSS CHANNEL
09255.U3 3/4" CONDUIT COMPRESSION BRACE
09255.V0 EDGE TRIM (TYP)
09255.V2 LC-BEAD (PREFERRED USG 200-A TRIM)
09255.V4 VINYL TRIM

09300 TILE

09300.A1 FLOOR TILE – SEE FINISH SCHED.
09300.B1 WALL TILE – SEE FINISH SCHED.
09300.B2 PROVIDE TILE FRAME AROUND FIXTURE
09300.C0 TILE BASE
09300.D1 BULLNOSE TRIM UNIT
09300.E1 1/2" x 6" TILE TRIM PIECE – SEE FINISH SCHED.
09300.G1 MORTAR BED
09300.G4 WATERPROOF MEMBRANE

09511 ACOUSTICAL PANEL CEILINGS

09511.A0 LAY-IN ACOUSTICAL CEILING SYSTEM
09511.A1 HEAVY DUTY "T" BAR GRID SYSTEM
09511.A2 CEILING SUSPENSION SYSTEM – MAIN RUNNER
09511.A3 CEILING SUSPENSION SYSTEM – CROSS RUNNER
09511.B1 VERTICAL WIRE HANGER (SIZE)
09511.B2 BRACING WIRE (SIZE)
09511.C1 COMPRESSION STRUTS
09511.D1 METAL ANGLE EDGE
09511.E1 LAY IN ACOUSTICAL CEILING PANEL

09660 RESILIENT TILE FLOORING

09660.A1 VINYL COMPOSITION TILE
09660.B1 VINYL TRANSITION STRIP

09678 RESILIENT WALL BASE AND ACCESSORIES

09678.E1 RUBBER BASE (SIZE)

09900 PAINTING

09900.A1 PAINT – SEE FINISH SCHED.
09900.B1 GALVANIZED METAL PRIMER

DIVISION 10 SPECIALTIES

10100 VISUAL DISPLAY BOARDS

10100.C0 MARKER BOARD

10155 TOILET COMPARTMENTS

10155.A0 TOILET STALL PARTITION
10155.B0 URINAL STALL PARTITION

10425 SIGNS

10425.A0 ROOM SIGNAGE
10425.A1 OIL SIGNAGE
10425.B1 WELDING SIGNAGE
10425.C1 ACCESSIBLE SIGNAGE
10425.D1 ACCESSIBLE/UNISEX RESTROOM SIGNAGE

10500 METAL LOCKERS AND STORAGE CABINETS

10500.A0 METAL LOCKERS (WIDTH)
10500.B0 METAL STORAGE CABINETS W/HOLD DOWN ANCHORS

10522 FIRE EXTINGUISHERS AND ACCESSORIES

10522.A0 FIRE EXTINGUISHER

10800 TOILET AND BATH ACCESSORIES

10800.B0 PAPER TOWEL DISPENSER & WASTE RECEPTACLE
10800.B1 SEMI-RECESSED PAPER TOWEL DISPENSER & WASTE RECEPTACLE
10800.C0 TOILET TISSUE DISPENSER
10800.C1 RECESSED TOILET TISSUE DISPENSER/SAN. NAP. DISPOSAL
10800.D0 MOP RACK
10800.D1 MOP SINK
10800.D2 MOP SINK FAUCET
10800.E0 GRAB BAR
10800.E1 GRAB BAR (SHOWER)
10800.F0 ROBE HOOK
10800.F1 DOUBLE PRONG ROBE HOOK
10800.H0 SOAP DISPENSER
10800.H1 SOAP DISH
10800.P1 SHOWER CURTAIN ROD
10800.P2 SHOWER CURTAIN
10800.Q1 ADA COMPLIANT SHOWER HEAD
10800.R1 FRAMED MIRROR (SIZE)
10800.T1 FOLDING SHOWER SEAT
10800.T0 METAL SHELF (SIZE)

DIVISION 11 EQUIPMENT

11151 MOBILE LIFT

11151.A0 MOBILE LIFT – NOT IN CONTRACT – OWNER FINISHED

DIVISION 12 FURNISHINGS

12511 HORIZONTAL LOUVER BLINDS

12511.A0 HORIZONTAL LOUVER BLINDS

DIVISION 13 SPECIAL CONSTRUCTION

13100 FUEL ISLAND REQUIREMENTS

13100.A0 FUEL DISPENSER
13100.A1 UNLEADED/DIESEL FUEL DISPENSER
13100.B0 FIRE PROTECTED FUEL STORAGE TANK – UL2085
13100.B1 SINGLE SPLIT TANK 2000 GAL. UNLEADED FUEL & 6000 GAL. DEISEL FUEL FIRE PROTECTED FUEL STORAGE TANK – UL-2085.
13100.C0 FUEL SERVICE CARD READER – COORDINATE WITH FLEET SERVICES

DIVISION 14 CONVEYING SYSTEMS

14620 TROLLEY HOIST

14620.A0 TROLLEY HOIST (SIZE)

DIVISION 15 EQUIPMENT

15000 MECHANICAL

15000.A0 GAS METER – SEE PLUMBING DRAWINGS
15050.A1 MECH. PENETRATIONS
15250.A1 PIPE INSULATION AT ALL EXPOSED PIPE
15410.A0 URINAL
15410.A1 URINAL, ACCESSIBLE
15410.B0 SINK FAUCET
15410.B1 SINK FAUCET W/ADA LEVER HANDLES
15410.C0 UTILITY SINK
15410.D1 FLOOR SINK
15410.E0 TRENCH DRAIN SLOPE TO DRAIN
15410.E1 DRAIN W/ SEDIMENT BUCKET
15410.E2 FLOOR DRAIN
15410.F0 TOILET
15410.G0 ADA ACCESSIBLE SHOWER HEAD – SEE MECHANICAL
15412.A0 EMERGENCY SHOWER & EYE WASH
15452.A1 DRINKING FOUNTAIN
15455.A0 WATER SOFTNER SYSTEM
15486.A1 FUEL FIRED WATER HEATER
15490.A0 WASTE OIL PUMP
15490.B0 WASTE OIL CARTS
15490.C0 WASTE OIL PIT
15490.D0 600 GAL WASTE OIL TANK – C.F.C.I.
15491.A0 AIR COMPRESSOR
15491.B0 OVERHEAD LUBE REEL
15491.C0 OVERHEAD HOSE REEL
15600.A0 NATURAL GAS RADIANT HEATING SYSTEM – SEE MECHANICAL
15611.A1 NATURAL GAS FIRED FURNACE – SEE MECHANICAL
15670.A1 CONDENSER UNIT – SEE MECHANICAL
15820.A0 BACKDRAFT DAMPER – SEE MECHANICAL
15838.A0 EXHAUST FAN – SEE MECHANICAL
15838.A1 EXHAUST FAN VENT – SEE MECHANICAL
15861.A1 MECHANICAL DUCTWORK SEE MECHANICAL
15887.A1 LOUVER W/ BIRD SCREEN – SEE MECHANICAL
15887.B1 INTAKE GRAVITY HOOD – SEE MECHANICAL

DIVISION 16 ELECTRICAL

16000 ELECTRICAL

16128.A0 LOW VOLTAGE DE-ICING SNOW MELTING CABLE SYSTEM
16128.B0 LOW VOLTAGE DE-ICING CABLING BOARD W/PRE CUT GROOVES
16128.C0 LOW VOLTAGE DE-ICING CABLE
16128.D0 LOW VOLTAGE DE-ICING CABLE PROTECTOR
16128.E0 ATTACHMENT AS PER MANUFACTURER RECOMENDATIONS
16210.A1 ELECTRICAL METER – SEE ELECTRICAL DRAWINGS
16411.A1 EMERGENCY DISCONNECT – SEE ELECTRICAL
16442.A0 ELECTRICAL PANEL
16510.A0 INTERIOR LIGHTS
16510.B0 WALL MOUNTED INTERIOR LIGHTS
16510.C0 INTERIOR SOFFIT CAN LIGHTS – SEE ELECTRICAL
16520.B1 EXTERIOR WALL MOUNTED LIGHTS
16520.B2 EXTERIOR WALL MOUNTED FLOOD LIGHTS
16520.B3 EXTERIOR FLOOD LIGHTS – MOUNT TO STEEL COLUMN

CLIENT

UDOT CONNECTING COMMUNITIES

STATION #2434
6072 E. EMIGRATION CANYON RD.
PARLEY'S CANYON, UTAH

DESIGNER

ARCHIPLEX GROUP
architecture · planning · design services
255 Crossroad Square
Salt Lake City, UT 84115
P:(801) 961-7070
F:(801) 961-7373

CONSULTANTS

REGISTRATION

STATE OF UTAH
RALPH M. STANISLAW
06-210619-0301
LICENSED ARCHITECT

ISSUE

MARK	DATE	DESCRIPTION
	01-09	Revised Contruction Doc.
	10-08	Construction Documents
	8-20-08	90% Review Submittal

ARCHIPLEX PROJECT NO:	0728.02
DFCM PROJECT NO:	08211900
DRAWN BY:	A. PHILLIPS
CHECKED BY:	R. STANISLAW
SCALE:	NONE
DATE:	JANUARY, 2009

KEY PLAN

SHEET TITLE

MASTER KEYNOTE LIST

G002

© 2004 ARCHIPLEX GROUP

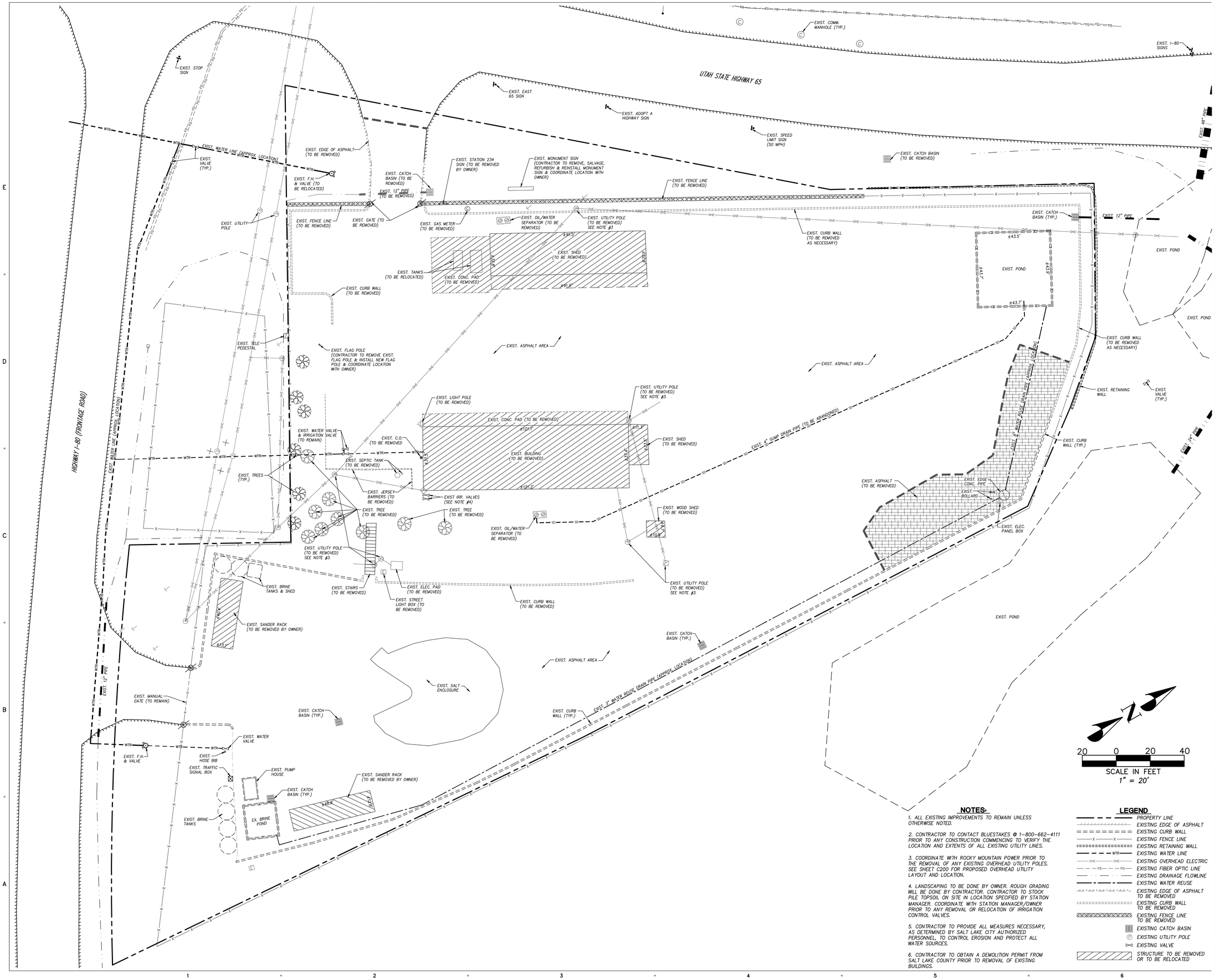

NOTES:

1. ALL EXISTING IMPROVEMENTS TO REMAIN UNLESS OTHERWISE NOTED.
2. CONTRACTOR TO CONTACT BLUESTAKES @ 1-800-662-4111 PRIOR TO ANY CONSTRUCTION COMMENCING TO VERIFY THE LOCATION AND EXTENTS OF ALL EXISTING UTILITY LINES.
3. COORDINATE WITH ROCKY MOUNTAIN POWER PRIOR TO THE REMOVAL OF ANY EXISTING OVERHEAD UTILITY POLES. SEE SHEET C200 FOR PROPOSED OVERHEAD UTILITY LAYOUT AND LOCATION.
4. LANDSCAPING TO BE DONE BY OWNER. ROUGH GRADING WILL BE DONE BY CONTRACTOR. CONTRACTOR TO STOCK PILE TOPSOIL ON SITE IN LOCATION SPECIFIED BY STATION MANAGER. COORDINATE WITH STATION MANAGER/OWNER PRIOR TO ANY REMOVAL OR RELOCATION OF IRRIGATION CONTROL VALVES.
5. CONTRACTOR TO PROVIDE ALL MEASURES NECESSARY, AS DETERMINED BY SALT LAKE CITY AUTHORIZED PERSONNEL, TO CONTROL EROSION AND PROTECT ALL WATER SOURCES.
6. CONTRACTOR TO OBTAIN A DEMOLITION PERMIT FROM SALT LAKE COUNTY PRIOR TO REMOVAL OF EXISTING BUILDINGS.

LEGEND

- PROPERTY LINE
- EXISTING EDGE OF ASPHALT
- EXISTING CURB WALL
- EXISTING FENCE LINE
- EXISTING RETAINING WALL
- EXISTING WATER LINE
- EXISTING OVERHEAD ELECTRIC
- EXISTING FIBER OPTIC LINE
- EXISTING DRAINAGE FLOWLINE
- EXISTING WATER REUSE
- EXISTING EDGE OF ASPHALT TO BE REMOVED
- EXISTING CURB WALL TO BE REMOVED
- EXISTING FENCE LINE TO BE REMOVED
- EXISTING CATCH BASIN
- EXISTING UTILITY POLE
- EXISTING VALVE
- STRUCTURE TO BE REMOVED OR TO BE RELOCATED

CLIENT

UDOT CONNECTING COMMUNITIES

STATION #2434
6072 E. EMIGRATION CANYON RD.
PARLEY'S CANYON, UTAH

DESIGNER

ARCHIPLEX GROUP
architecture · planning · design services
255 Crossroad Square
Salt Lake City, UT 84115
P:(801) 961-7070
F:(801) 961-7373

CONSULTANTS

PEPG ENGINEERING, L.L.C.
8805 S. SANDY PARKWAY ● SANDY, UT 84070
PHONE: (801) 562-2521 ● FAX: (801) 562-2551

REGISTRATION

REGISTERED PROFESSIONAL ENGINEER
No. 272207
DARRIN N. SMITH
9-3-2009
STATE OF UTAH

ISSUE		
	01-09	Revised Construction Doc.
	10-08	Construction Documents
	8-20-08	90% Review Submittal
MARK	DATE	DESCRIPTION

ARCHIPLEX PROJECT NO:	0728.02
DFCM PROJECT NO:	08211900
PEPG PROJECT NO:	6600.0816
DRAWN BY:	BCB
CHECKED BY:	DRS
SCALE:	1"=20'
DATE:	JANUARY, 2009

KEY PLAN

SHEET TITLE

DEMOLITION PLAN

C100

© 2004 ARCHIPLEX GROUP

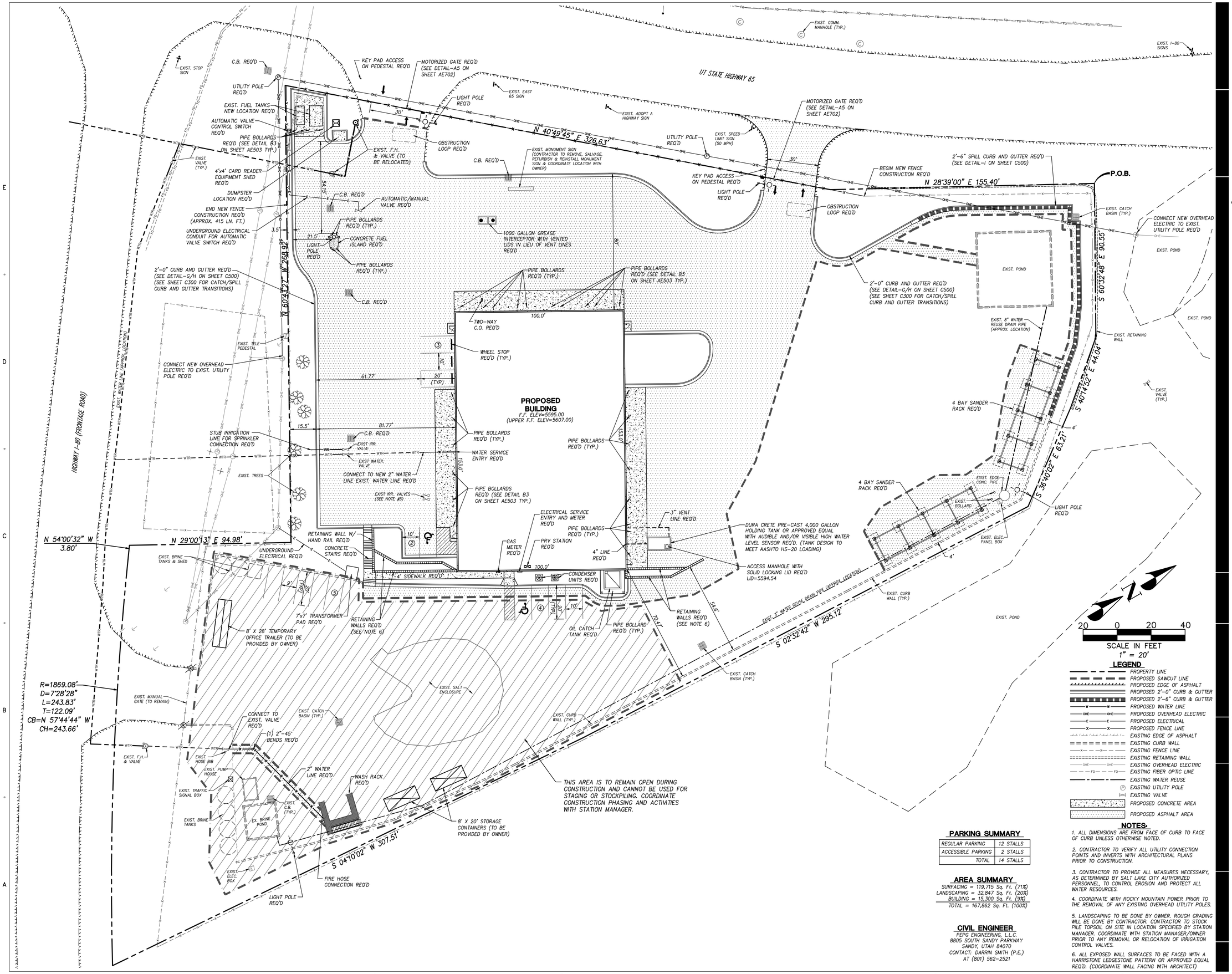

LEGEND

- PROPERTY LINE
- PROPOSED SAWCUT LINE
- PROPOSED EDGE OF ASPHALT
- PROPOSED 2'-0" CURB & GUTTER
- PROPOSED 2'-6" CURB & GUTTER
- PROPOSED WATER LINE
- PROPOSED OVERHEAD ELECTRIC
- PROPOSED ELECTRICAL
- PROPOSED FENCE LINE
- EXISTING EDGE OF ASPHALT
- EXISTING CURB WALL
- EXISTING FENCE LINE
- EXISTING RETAINING WALL
- EXISTING OVERHEAD ELECTRIC
- EXISTING FIBER OPTIC LINE
- EXISTING WATER REUSE
- EXISTING UTILITY POLE
- EXISTING VALVE
- PROPOSED CONCRETE AREA
- PROPOSED ASPHALT AREA

PARKING SUMMARY

REGULAR PARKING	12 STALLS
ACCESSIBLE PARKING	2 STALLS
TOTAL	14 STALLS

AREA SUMMARY

SURFACING = 119,715 Sq. Ft. (71%)
LANDSCAPING = 32,847 Sq. Ft. (20%)
BUILDING = 15,300 Sq. Ft. (9%)
TOTAL = 167,862 Sq. Ft. (100%)

CIVIL ENGINEER

PEPG ENGINEERING, L.L.C.
8805 SOUTH SANDY PARKWAY
SANDY, UTAH 84070
CONTACT: DARRIN SMITH (P.E.)
AT (801) 562-2521

NOTES:

1. ALL DIMENSIONS ARE FROM FACE OF CURB TO FACE OF CURB UNLESS OTHERWISE NOTED.
2. CONTRACTOR TO VERIFY ALL UTILITY CONNECTION POINTS AND INVERTS WITH ARCHITECTURAL PLANS PRIOR TO CONSTRUCTION.
3. CONTRACTOR TO PROVIDE ALL MEASURES NECESSARY, AS DETERMINED BY SALT LAKE CITY AUTHORIZED PERSONNEL, TO CONTROL EROSION AND PROTECT ALL WATER RESOURCES.
4. COORDINATE WITH ROCKY MOUNTAIN POWER PRIOR TO THE REMOVAL OF ANY EXISTING OVERHEAD UTILITY POLES.
5. LANDSCAPING TO BE DONE BY OWNER. ROUGH GRADING WILL BE DONE BY CONTRACTOR. CONTRACTOR TO STOCK PILE TOPSOIL ON SITE IN LOCATION SPECIFIED BY STATION MANAGER. COORDINATE WITH STATION MANAGER/OWNER PRIOR TO ANY REMOVAL OR RELOCATION OF IRRIGATION CONTROL VALVES.
6. ALL EXPOSED WALL SURFACES TO BE FACED WITH A HARRISTONE LEDGESTONE PATTERN OR APPROVED EQUAL REQ'D. (COORDINATE WALL FACING WITH ARCHITECT)

CLIENT

UDOT CONNECTING COMMUNITIES

STATION #2434
6072 E. EMIGRATION CANYON RD.
PARLEY'S CANYON, UTAH

DESIGNER

ARCHIPLEX GROUP
architecture · planning · design services
255 Crossroad Square
Salt Lake City, UT 84115
P:(801) 961-7070
F:(801) 961-7373

CONSULTANTS

PEPG ENGINEERING, L.L.C.
8805 S. SANDY PARKWAY • SANDY, UT 84070
PHONE: (801) 562-2521 • FAX: (801) 562-2551

REGISTRATION

REGISTERED PROFESSIONAL ENGINEER — No. 271201 — DARRIN A. SMITH — 2-3-2009 — STATE OF UTAH

ISSUE

MARK	DATE	DESCRIPTION
	01-09	Revised Construction Doc.
	10-08	Construction Documents
	8-20-08	90% Review Submittal

ARCHIPLEX PROJECT NO:	0728.02
DFCM PROJECT NO:	08211900
PEPG PROJECT NO:	6600.0816
DRAWN BY:	BCB
CHECKED BY:	DRS
SCALE:	1"=20'
DATE:	JANUARY, 2009

KEY PLAN

SHEET TITLE

SITE & UTILITY PLAN

C200

© 2004 ARCHIPLEX GROUP

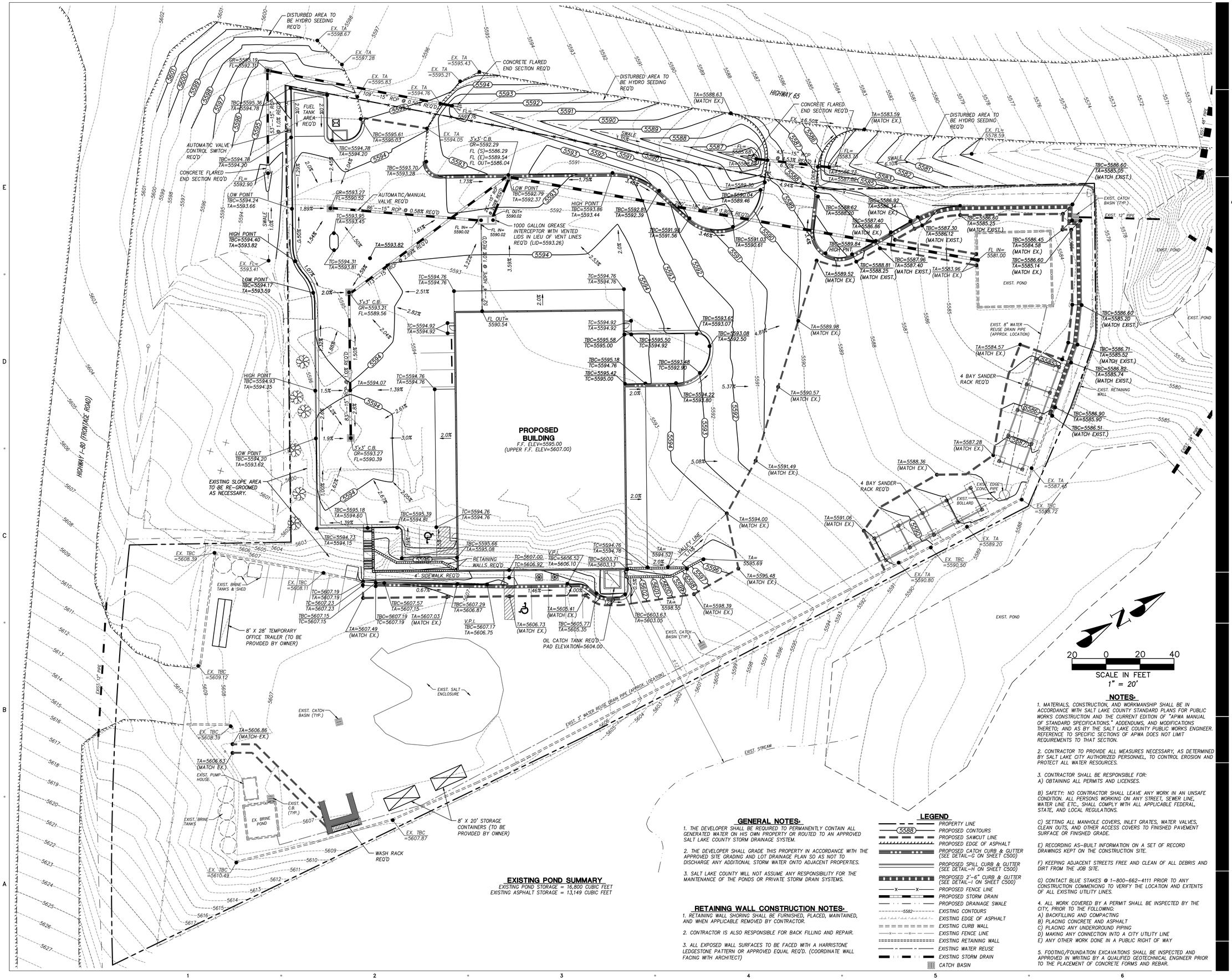

GENERAL NOTES:

1. THE DEVELOPER SHALL BE REQUIRED TO PERMANENTLY CONTAIN ALL GENERATED WATER ON HIS OWN PROPERTY OR ROUTED TO AN APPROVED SALT LAKE COUNTY STORM DRAINAGE SYSTEM.
2. THE DEVELOPER SHALL GRADE THIS PROPERTY IN ACCORDANCE WITH THE APPROVED SITE GRADING AND LOT DRAINAGE PLAN SO AS NOT TO DISCHARGE ANY ADDITIONAL STORM WATER ONTO ADJACENT PROPERTIES.
3. SALT LAKE COUNTY WILL NOT ASSUME ANY RESPONSIBILITY FOR THE MAINTENANCE OF THE PONDS OR PRIVATE STORM DRAIN SYSTEMS.

RETAINING WALL CONSTRUCTION NOTES:

1. RETAINING WALL SHORING SHALL BE FURNISHED, PLACED, MAINTAINED, AND WHEN APPLICABLE REMOVED BY CONTRACTOR.
2. CONTRACTOR IS ALSO RESPONSIBLE FOR BACK FILLING AND REPAIR.
3. ALL EXPOSED WALL SURFACES TO BE FACED WITH A HARRISTONE LEDGESTONE PATTERN OR APPROVED EQUAL REQ'D. (COORDINATE WALL FACING WITH ARCHITECT)

EXISTING POND SUMMARY

EXISTING POND STORAGE = 16,800 CUBIC FEET
EXISTING ASPHALT STORAGE = 13,149 CUBIC FEET

LEGEND

- PROPERTY LINE
- 5588 PROPOSED CONTOURS
- PROPOSED SAWCUT LINE
- PROPOSED EDGE OF ASPHALT
- PROPOSED CATCH CURB & GUTTER (SEE DETAIL-G ON SHEET C500)
- PROPOSED SPILL CURB & GUTTER (SEE DETAIL-H ON SHEET C500)
- PROPOSED 2'-6" CURB & GUTTER (SEE DETAIL-I ON SHEET C500)
- PROPOSED FENCE LINE
- PROPOSED STORM DRAIN
- PROPOSED DRAINAGE SWALE
- 5582 EXISTING CONTOURS
- EXISTING EDGE OF ASPHALT
- EXISTING CURB WALL
- EXISTING FENCE LINE
- EXISTING RETAINING WALL
- EXISTING WATER REUSE
- EXISTING STORM DRAIN
- CATCH BASIN

NOTES:

1. MATERIALS, CONSTRUCTION, AND WORKMANSHIP SHALL BE IN ACCORDANCE WITH SALT LAKE COUNTY STANDARD PLANS FOR PUBLIC WORKS CONSTRUCTION AND THE CURRENT EDITION OF "APWA MANUAL OF STANDARD SPECIFICATIONS," ADDENDUMS, AND MODIFICATIONS THERETO; AND AS BY THE SALT LAKE COUNTY PUBLIC WORKS ENGINEER. REFERENCE TO SPECIFIC SECTIONS OF APWA DOES NOT LIMIT REQUIREMENTS TO THAT SECTION.
2. CONTRACTOR TO PROVIDE ALL MEASURES NECESSARY, AS DETERMINED BY SALT LAKE CITY AUTHORIZED PERSONNEL, TO CONTROL EROSION AND PROTECT ALL WATER RESOURCES.
3. CONTRACTOR SHALL BE RESPONSIBLE FOR:
   A) OBTAINING ALL PERMITS AND LICENSES.
   B) SAFETY: NO CONTRACTOR SHALL LEAVE ANY WORK IN AN UNSAFE CONDITION. ALL PERSONS WORKING ON ANY STREET, SEWER LINE, WATER LINE ETC., SHALL COMPLY WITH ALL APPLICABLE FEDERAL, STATE, AND LOCAL REGULATIONS.
   C) SETTING ALL MANHOLE COVERS, INLET GRATES, WATER VALVES, CLEAN OUTS, AND OTHER ACCESS COVERS TO FINISHED PAVEMENT SURFACE OR FINISHED GRADE.
   E) RECORDING AS-BUILT INFORMATION ON A SET OF RECORD DRAWINGS KEPT ON THE CONSTRUCTION SITE.
   F) KEEPING ADJACENT STREETS FREE AND CLEAN OF ALL DEBRIS AND DIRT FROM THE JOB SITE.
   G) CONTACT BLUE STAKES @ 1-800-662-4111 PRIOR TO ANY CONSTRUCTION COMMENCING TO VERIFY THE LOCATION AND EXTENTS OF ALL EXISTING UTILITY LINES.
4. ALL WORK COVERED BY A PERMIT SHALL BE INSPECTED BY THE CITY, PRIOR TO THE FOLLOWING:
   A) BACKFILLING AND COMPACTING
   B) PLACING CONCRETE AND ASPHALT
   C) PLACING ANY UNDERGROUND PIPING
   D) MAKING ANY CONNECTION INTO A CITY UTILITY LINE
   E) ANY OTHER WORK DONE IN A PUBLIC RIGHT OF WAY
5. FOOTING/FOUNDATION EXCAVATIONS SHALL BE INSPECTED AND APPROVED IN WRITING BY A QUALIFIED GEOTECHNICAL ENGINEER PRIOR TO THE PLACEMENT OF CONCRETE FORMS AND REBAR.

CLIENT

UDOT CONNECTING COMMUNITIES

STATION #2434
6072 E. EMIGRATION CANYON RD.
PARLEY'S CANYON, UTAH

DESIGNER

ARCHIPLEX GROUP
architecture · planning · design services
255 Crossroad Square
Salt Lake City, UT 84115
P:(801) 961-7070
F:(801) 961-7373

CONSULTANTS

PEPG ENGINEERING, L.L.C.
8825 S. SANDY PARKWAY • SANDY, UT 84070
PHONE: (801) 562-2521 • FAX: (801) 562-2551

REGISTRATION

REGISTERED PROFESSIONAL ENGINEER — No. 277207 — DARRIN R. SMITH — 2-3-2009 — STATE OF UTAH

ISSUE

MARK	DATE	DESCRIPTION
	01-09	Revised Construction Doc.
	10-08	Construction Documents
	8-20-08	90% Review Submittal

ARCHIPLEX PROJECT NO:	0728.02
DFCM PROJECT NO:	08211900
PEPG PROJECT NO:	6600.0816
DRAWN BY:	BCB
CHECKED BY:	DRS
SCALE:	1"=20'
DATE:	JANUARY, 2009

KEY PLAN

SHEET TITLE

GRADING & DRAINAGE PLAN

C300

© 2004 ARCHIPLEX GROUP

SCALE IN FEET
HORIZONTAL: 1" = 10'
VERTICAL: 1" = 10'

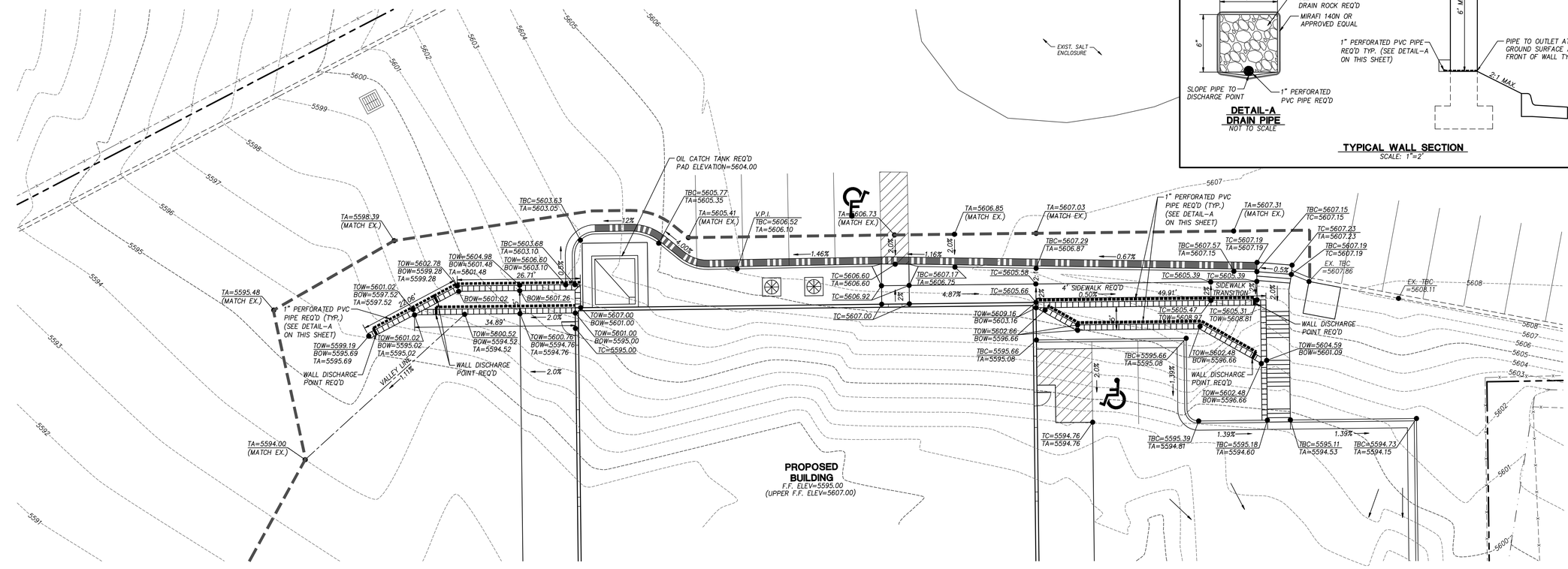

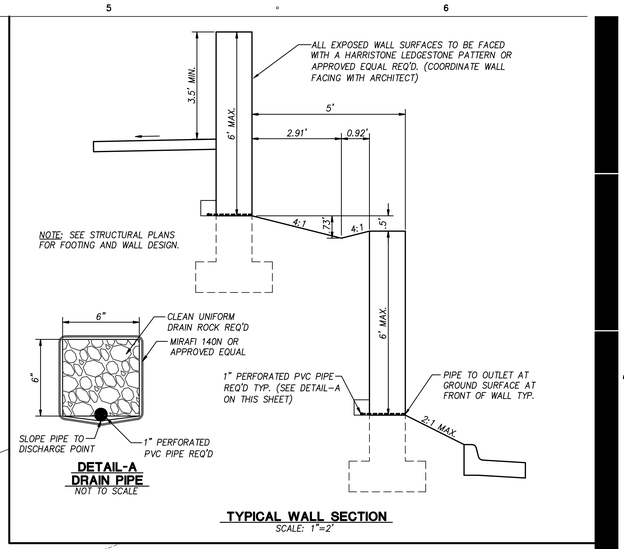

DETAIL-A
DRAIN PIPE
NOT TO SCALE

TYPICAL WALL SECTION
SCALE: 1"=2'

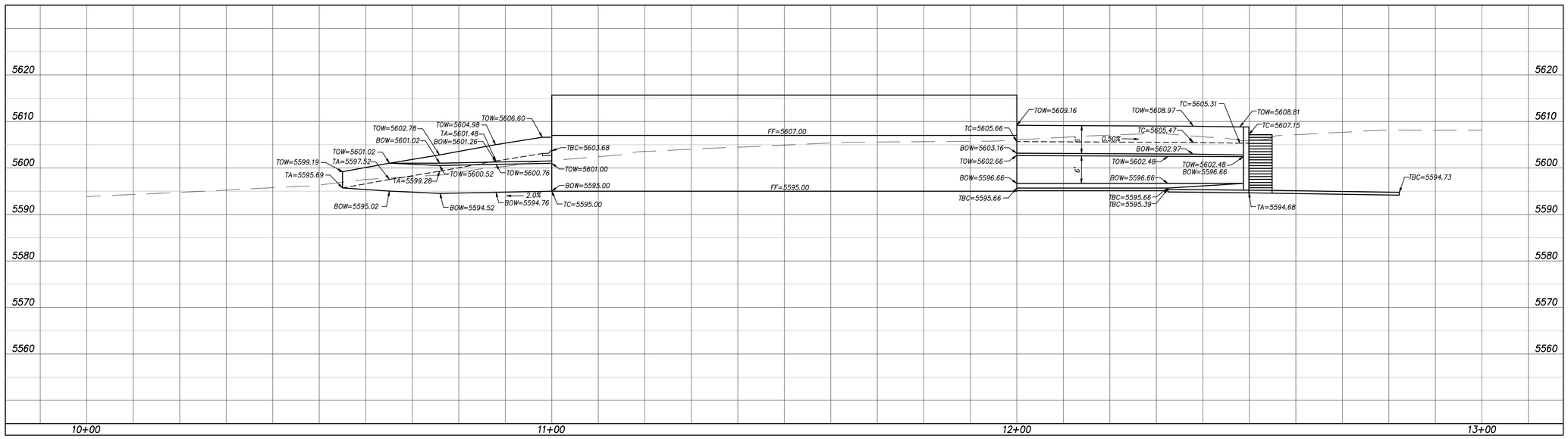

CLIENT

UDOT CONNECTING COMMUNITIES

STATION #2434
6072 E. EMIGRATION CANYON RD.
PARLEY'S CANYON, UTAH

DESIGNER

ARCHIPLEX GROUP
architecture · planning · design services
255 Crossroad Square
Salt Lake City, UT 84115
P:(801) 961-7070
F:(801) 961-7373

CONSULTANTS

PEPG ENGINEERING, L.L.C.
8925 S. SANDY PARKWAY • SANDY, UT 84070
PHONE: (801) 562-2521 • FAX: (801) 562-2551

REGISTRATION

REGISTERED PROFESSIONAL ENGINEER
No. 271007
DARRIN R. SMITH
2-3-2009
STATE OF UTAH

ISSUE

MARK	DATE	DESCRIPTION
	01-09	Revised Construction Doc.
	10-08	Construction Documents
	8-20-08	90% Review Submittal

ARCHIPLEX PROJECT NO:	0728.02
DFCM PROJECT NO:	08211900
PEPG PROJECT NO:	6600.0816
DRAWN BY:	BCB
CHECKED BY:	DRS
SCALE:	1"=10'
DATE:	JANUARY, 2009

KEY PLAN

SHEET TITLE

RETAINING WALL PLAN & PROFILE

C301

© 2004 ARCHIPLEX GROUP

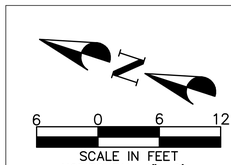

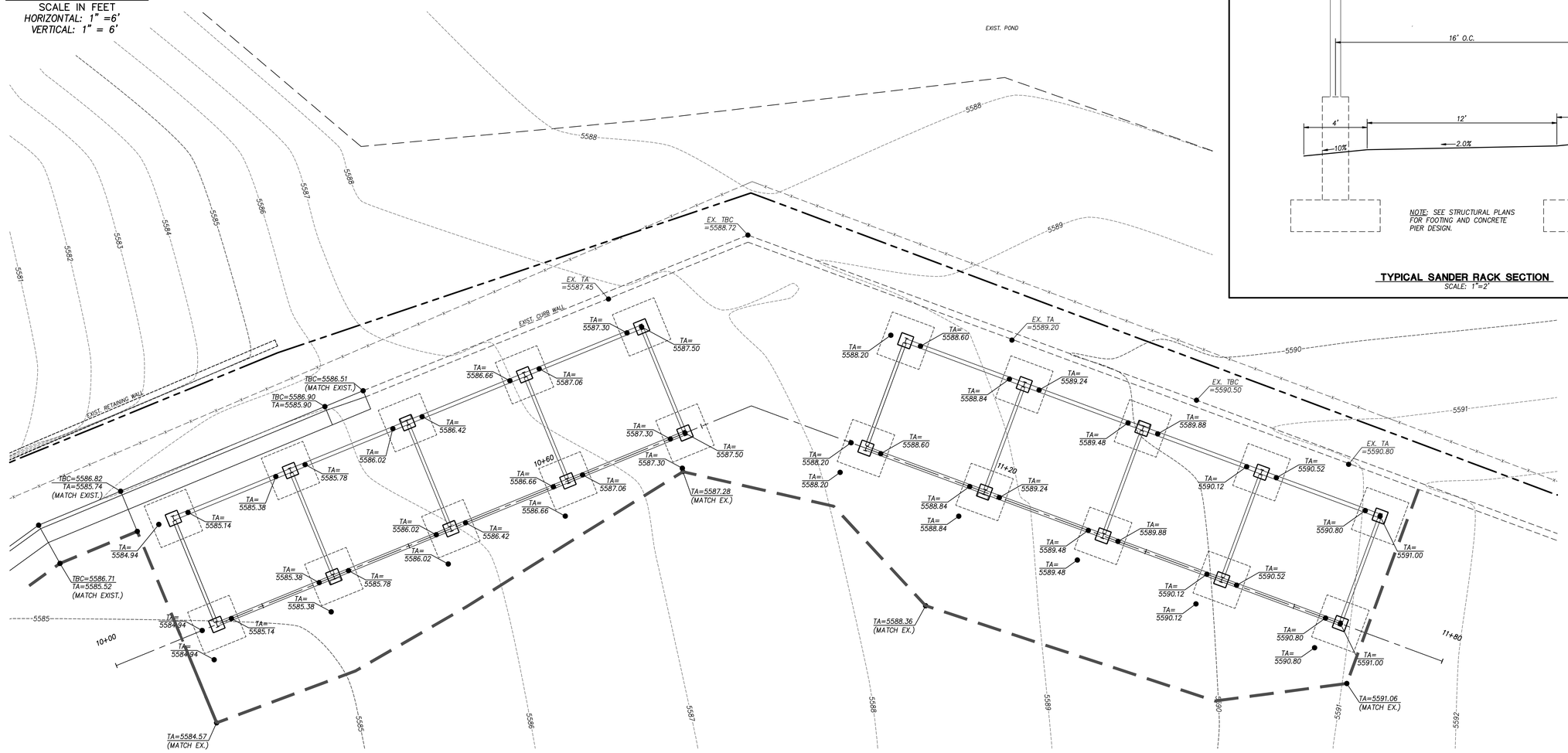

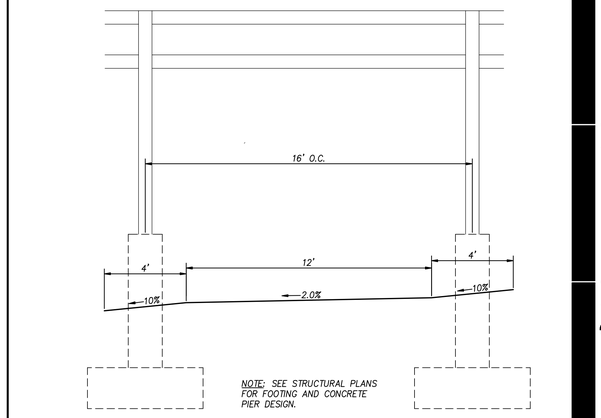

TYPICAL SANDER RACK SECTION
SCALE: 1"=2'

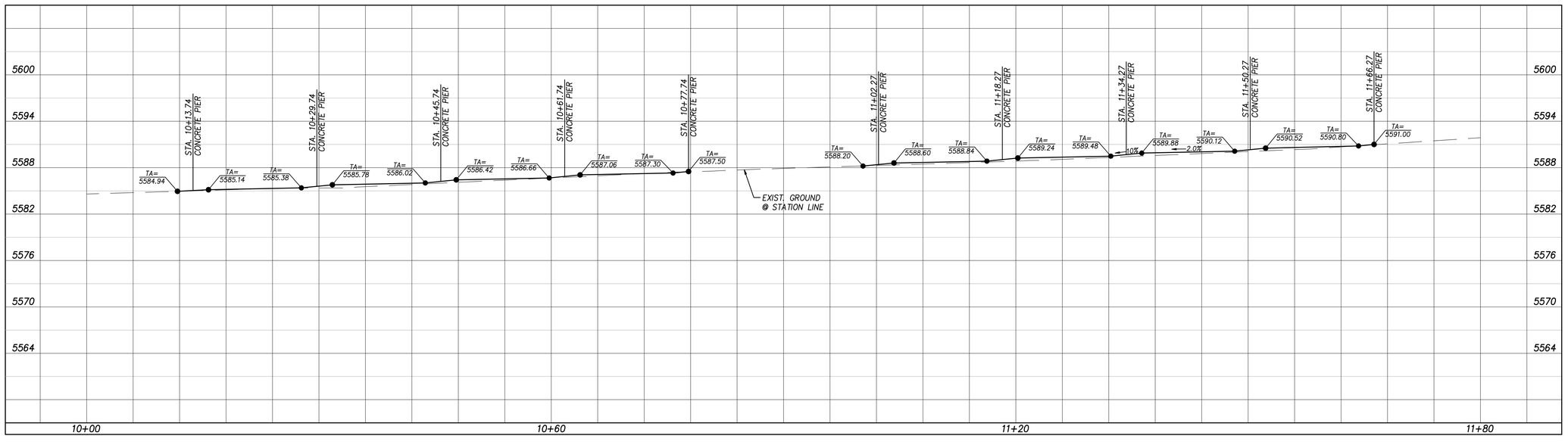

CLIENT

UDOT CONNECTING COMMUNITIES

STATION #2434
6072 E. EMIGRATION CANYON RD.
PARLEY'S CANYON, UTAH

DESIGNER

ARCHIPLEX GROUP
architecture · planning · design services
255 Crossroad Square
Salt Lake City, UT 84115
P:(801) 961-7070
F:(801) 961-7373

CONSULTANTS

PEPG ENGINEERING, L.L.C.
9805 S. SANDY PARKWAY • SANDY, UT 84070
PHONE: (801) 562-2521 • FAX: (801) 562-2551

REGISTRATION

ISSUE

MARK	DATE	DESCRIPTION
	01-09	Revised Construction Doc.
	10-08	Construction Documents
	8-20-08	90% Review Submittal

ARCHIPLEX PROJECT NO:	0728.02
DFCM PROJECT NO:	08211900
PEPG PROJECT NO:	6600.0816
DRAWN BY:	BCB
CHECKED BY:	DRS
SCALE:	1"=6'
DATE:	JANUARY, 2009

KEY PLAN

SHEET TITLE

SANDER RACK PLAN & PROFILE

C302

© 2004 ARCHIPLEX GROUP

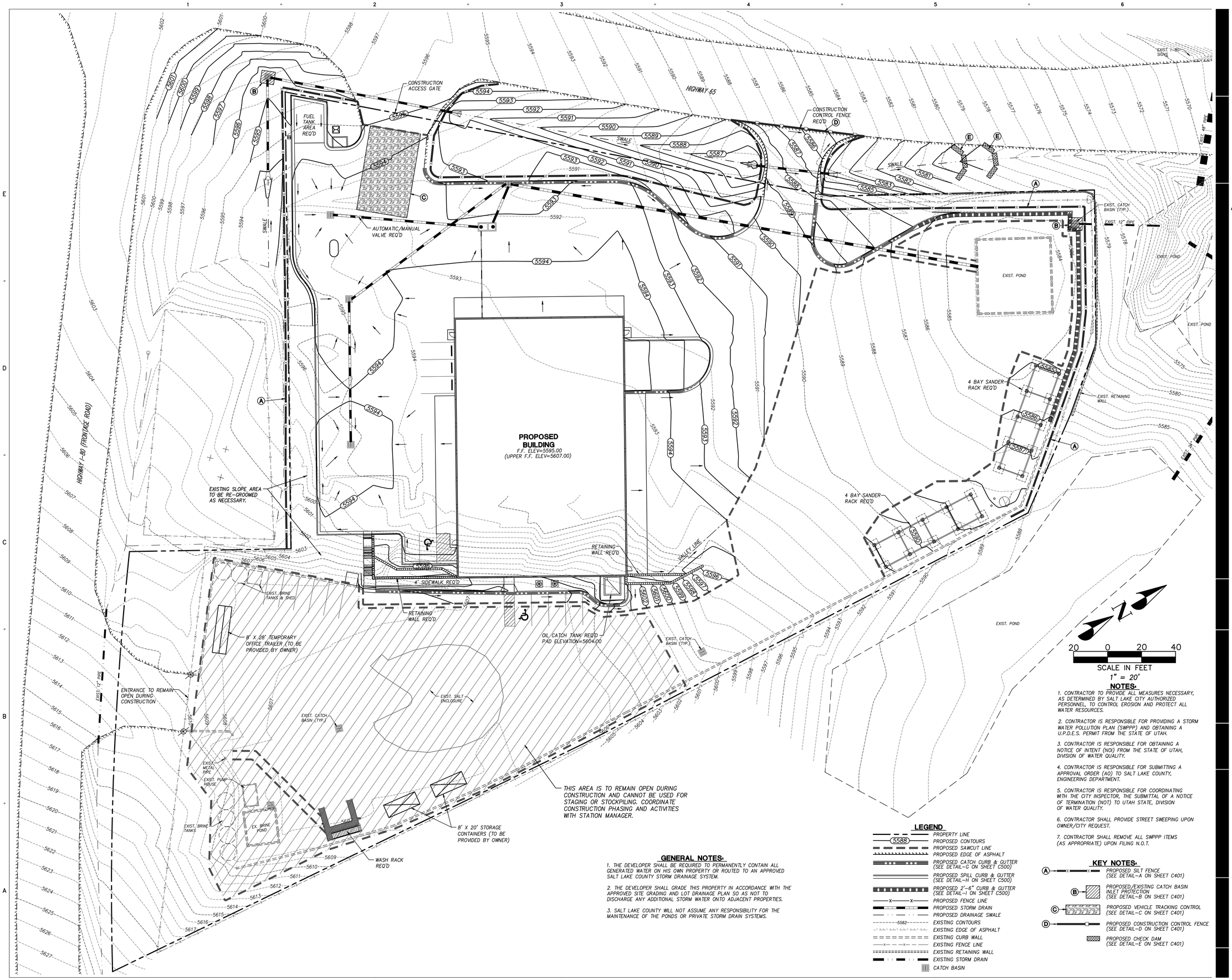

NOTES:

1. CONTRACTOR TO PROVIDE ALL MEASURES NECESSARY, AS DETERMINED BY SALT LAKE CITY AUTHORIZED PERSONNEL, TO CONTROL EROSION AND PROTECT ALL WATER RESOURCES.
2. CONTRACTOR IS RESPONSIBLE FOR PROVIDING A STORM WATER POLLUTION PLAN (SWPPP) AND OBTAINING A U.P.D.E.S. PERMIT FROM THE STATE OF UTAH.
3. CONTRACTOR IS RESPONSIBLE FOR OBTAINING A NOTICE OF INTENT (NOI) FROM THE STATE OF UTAH, DIVISION OF WATER QUALITY.
4. CONTRACTOR IS RESPONSIBLE FOR SUBMITTING A APPROVAL ORDER (AO) TO SALT LAKE COUNTY, ENGINEERING DEPARTMENT.
5. CONTRACTOR IS RESPONSIBLE FOR COORDINATING WITH THE CITY INSPECTOR, THE SUBMITTAL OF A NOTICE OF TERMINATION (NOT) TO UTAH STATE, DIVISION OF WATER QUALITY.
6. CONTRACTOR SHALL PROVIDE STREET SWEEPING UPON OWNER/CITY REQUEST.
7. CONTRACTOR SHALL REMOVE ALL SWPPP ITEMS (AS APPROPRIATE) UPON FILING N.O.T.

GENERAL NOTES:

1. THE DEVELOPER SHALL BE REQUIRED TO PERMANENTLY CONTAIN ALL GENERATED WATER ON HIS OWN PROPERTY OR ROUTED TO AN APPROVED SALT LAKE COUNTY STORM DRAINAGE SYSTEM.
2. THE DEVELOPER SHALL GRADE THIS PROPERTY IN ACCORDANCE WITH THE APPROVED SITE GRADING AND LOT DRAINAGE PLAN SO AS NOT TO DISCHARGE ANY ADDITIONAL STORM WATER ONTO ADJACENT PROPERTIES.
3. SALT LAKE COUNTY WILL NOT ASSUME ANY RESPONSIBILITY FOR THE MAINTENANCE OF THE PONDS OR PRIVATE STORM DRAIN SYSTEMS.

LEGEND

- PROPERTY LINE
- 5588 PROPOSED CONTOURS
- PROPOSED SAWCUT LINE
- PROPOSED EDGE OF ASPHALT
- PROPOSED CATCH CURB & GUTTER (SEE DETAIL-G ON SHEET C500)
- PROPOSED SPILL CURB & GUTTER (SEE DETAIL-H ON SHEET C500)
- PROPOSED 2'-6" CURB & GUTTER (SEE DETAIL-I ON SHEET C500)
- PROPOSED FENCE LINE
- PROPOSED STORM DRAIN
- PROPOSED DRAINAGE SWALE
- 5582 EXISTING CONTOURS
- EXISTING EDGE OF ASPHALT
- EXISTING CURB WALL
- EXISTING FENCE LINE
- EXISTING RETAINING WALL
- EXISTING STORM DRAIN
- CATCH BASIN

KEY NOTES:

- (A) PROPOSED SILT FENCE (SEE DETAIL-A ON SHEET C401)
- (B) PROPOSED/EXISTING CATCH BASIN INLET PROTECTION (SEE DETAIL-B ON SHEET C401)
- (C) PROPOSED VEHICLE TRACKING CONTROL (SEE DETAIL-C ON SHEET C401)
- (D) PROPOSED CONSTRUCTION CONTROL FENCE (SEE DETAIL-D ON SHEET C401)
- PROPOSED CHECK DAM (SEE DETAIL-E ON SHEET C401)

CLIENT

UDOT CONNECTING COMMUNITIES

STATION #2434
6072 E. EMIGRATION CANYON RD.
PARLEY'S CANYON, UTAH

DESIGNER

ARCHIPLEX GROUP
architecture · planning · design services
255 Crossroad Square
Salt Lake City, UT 84115
P:(801) 961-7070
F:(801) 961-7373

CONSULTANTS

PEPG ENGINEERING, L.L.C.
9865 S. SANDY PARKWAY • SANDY, UT 84070
PHONE: (801) 562-2521 • FAX: (801) 562-2551

REGISTRATION

LICENSED PROFESSIONAL ENGINEER — DARRIN R. SMITH — REG. #172207 — 2-3-2009 — STATE OF UTAH

ISSUE

MARK	DATE	DESCRIPTION
	01-09	Revised Construction Doc.
	10-08	Construction Documents
	8-20-08	90% Review Submittal

ARCHIPLEX PROJECT NO:	0728.02
DFCM PROJECT NO:	08211900
PEPG PROJECT NO:	6600.0816
DRAWN BY:	BCB
CHECKED BY:	DRS
SCALE:	1"=20'
DATE:	JANUARY, 2009

KEY PLAN

SHEET TITLE

EROSION CONTROL PLAN

C400

© 2004 ARCHIPLEX GROUP

NARRATIVE: THIS PLAN MAY BE USED FOR THE CONSTRUCTION OF A STORM WATER BEST MANAGEMENT PRACTICE (BMP). IT IS NOT INCLUSIVE OF ALL PRACTICES AVAILABLE AND IS ONLY SPECIFIC TO THE CONSTRUCTION OF THIS TYPE. MAINTENANCE OF THIS TYPE OF INSTALLATION IS IMPORTANT AND SHOULD BE CONTINUOUSLY MONITORED BY THE CONTRACTOR AND ENGINEER. DETAILS SHOWN HERE HIGHLIGHT IMPORTANT PARTS OF CONSTRUCTION, AND SHOULD BE MODIFIED AS NEEDED.

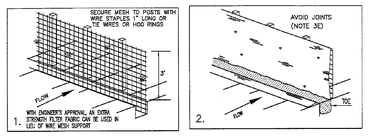

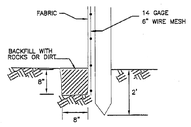

TOE DETAIL

A SILT FENCE
SEE APWA STANDARD PLAN NO. 122 FOR NOTES
(NOT TO SCALE)

NARRATIVE: THIS PLAN MAY BE USED FOR THE CONSTRUCTION OF A STORM WATER BEST MANAGEMENT PRACTICE (BMP). IT IS NOT INCLUSIVE OF ALL PRACTICES AVAILABLE AND IS ONLY SPECIFIC TO THE CONSTRUCTION OF THIS TYPE. MAINTENANCE OF THIS TYPE OF INSTALLATION IS IMPORTANT AND SHOULD BE CONTINUOUSLY MONITORED BY THE CONTRACTOR AND ENGINEER. DETAILS SHOWN HERE HIGHLIGHT IMPORTANT PARTS OF CONSTRUCTION, AND SHOULD BE MODIFIED AS NEEDED.

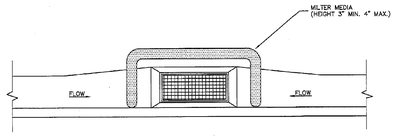

DROP INLET PROTECTION DETAIL

INLET PROTECTION OPTION #1-GRAVEL SOCK

NARRATIVE: THIS PLAN MAY BE USED FOR THE CONSTRUCTION OF A STORM WATER BEST MANAGEMENT PRACTICE (BMP). IT IS NOT INCLUSIVE OF ALL PRACTICES AVAILABLE AND IS ONLY SPECIFIC TO THE CONSTRUCTION OF THIS TYPE. MAINTENANCE OF THIS TYPE OF INSTALLATION IS IMPORTANT AND SHOULD BE CONTINUOUSLY MONITORED BY THE CONTRACTOR AND ENGINEER. DETAILS SHOWN HERE HIGHLIGHT IMPORTANT PARTS OF CONSTRUCTION, AND SHOULD BE MODIFIED AS NEEDED.

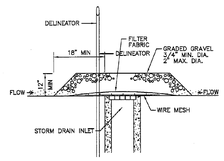

DROP INLET PROTECTION

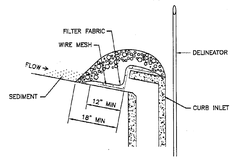

CURB INLET PROTECTION

INLET PROTECTION OPTION #2-GRAVEL

B INLET PROTECTION DETAIL OPTIONS
SEE APWA STANDARD PLAN NO. 124 FOR NOTES
(NOT TO SCALE)

NARRATIVE: THIS PLAN MAY BE USED FOR THE CONSTRUCTION OF A STORM WATER BEST MANAGEMENT PRACTICE (BMP). IT IS NOT INCLUSIVE OF ALL PRACTICES AVAILABLE AND IS ONLY SPECIFIC TO THE CONSTRUCTION OF THIS TYPE. MAINTENANCE OF THIS TYPE OF INSTALLATION IS IMPORTANT AND SHOULD BE CONTINUOUSLY MONITORED BY THE CONTRACTOR AND ENGINEER. DETAILS SHOWN HERE HIGHLIGHT IMPORTANT PARTS OF CONSTRUCTION, AND SHOULD BE MODIFIED AS NEEDED.

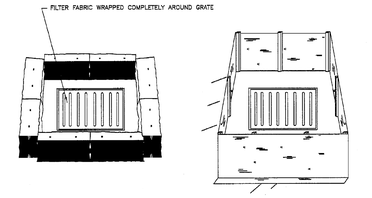

STRAW BALE BARRIER
(PLAN No. 121)

SILT FENCE
(PLAN No. 122)

INLET PROTECTION OPTION #3FENCE OR STRAW BALE

NARRATIVE: THIS PLAN MAY BE USED FOR THE CONSTRUCTION OF A STORM WATER BEST MANAGEMENT PRACTICE (BMP). IT IS NOT INCLUSIVE OF ALL PRACTICES AVAILABLE AND IS ONLY SPECIFIC TO THE CONSTRUCTION OF THIS TYPE. MAINTENANCE OF THIS TYPE OF INSTALLATION IS IMPORTANT AND SHOULD BE CONTINUOUSLY MONITORED BY THE CONTRACTOR AND ENGINEER. DETAILS SHOWN HERE HIGHLIGHT IMPORTANT PARTS OF CONSTRUCTION, AND SHOULD BE MODIFIED AS NEEDED.

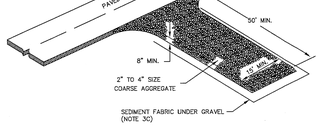

C STABILIZED ROADWAY ENTRANCE
SEE APWA STANDARD PLAN NO. 126 FOR NOTES
(NOT TO SCALE)

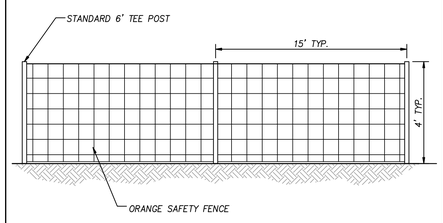

D ACCESS CONTROL FENCE
(NOT TO SCALE)

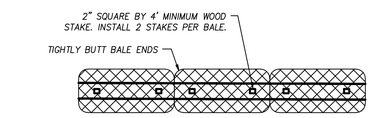

PLAN VIEW

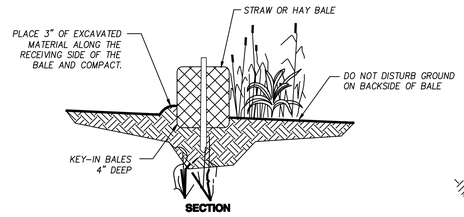

SECTION

CHECK DAM OPTION #1-STRAW BALE

NOTES STRAW BALE BARRIER
1. PLACE STRAW BALE BARRIERS BEFORE BEGINNING EARTH DISTURBING ACTIVITIES.
2. DO NOT PLACE STRAW BALE BARRIERS ACROSS NATURAL STREAM BEDS.
3. MAINTAIN A PROPERLY FUNCTIONING STRAW BALE BARRIER THROUGHOUT THE DURATION OF THE PROJECT OR UNTIL DISTURBED AREAS HAVE BEEN SEEDED AND MULCHED.
4. AFTER SURROUNDING AREAS HAVE BEEN STABILIZED, REMOVE BALES AND STAKES AND LEVEL AND SEED THE AREA. BALES MAY BE BUSTED APART AND SPREAD AS MULCH.

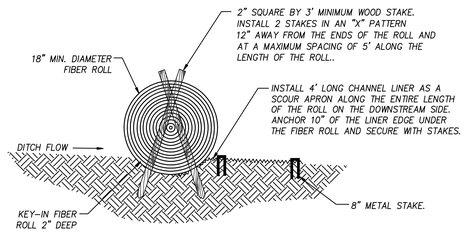

SECTION A-A

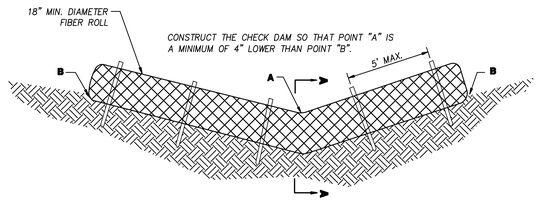

CHECK DAM OPTION #2-FIBER ROLL

MATERIAL QUANTITY CHART		
DITCH SIDE SLOPE	LENGTH OF FIBER ROLL REQUIRED FOR HALF OF DITCH	CUBIC YARDS OF STONE REQUIRED FOR HALF OF DITCH
2:1	4.5'	0.25
3:1	6'	0.35
4:1	8'	0.5
6:1	11.5'	0.7
8:1	15'	1.0
10:1	18.5'	1.2
12:1	22.5'	1.4

EXAMPLE: A CUT DITCH WITH A 6:1 FORE SLOPE AND A 2:1 BACK SLOPE WOULD REQUIRE A 16' MIN. FIBER ROLL OR 0.95 CUBIC YARDS MIN. OF STONE

NOTES FOR CHECK DAMS:
1. PLACE A CHECK DAM AT EVERY 2' DROP IN ELEVATION ALONG THE CUT DITCH.
2. A 9" TO 12" DIAMETER FIBER ROLL CAN BE USED IN PLACE OF THE 18" ROLL PROVIDED A ROLL IS INSTALLED AT EVERY ONE-FOOT DROP IN ELEVATION ALONG THE CUT DITCH.
3. PLACE CHECK DAMS PERPENDICULAR TO THE FLOW LINE OF THE DITCH.
4. DO NOT PLACE CHECK DAMS ACROSS NATURAL STREAM BEDS.
5. DO NOT USE STONE CHECK DAMS WITHIN CLEAR ZONES.
6. CONSTRUCT CHECK DAMS SO THAT WATER DOES NOT FLOW AROUND THE ENDS OF THE DAM.
7. REMOVE SEDIMENT AS IT ACCUMULATES AND PLACE IT IN A STABLE AREA APPROVED BY THE ENGINEER.
8. AFTER SURROUNDING AREAS HAVE BEEN SEEDED AND MULCHED, SPREAD ROCK FROM CHECK DAMS TO LINE CUT DITCH AND BREAK APART FIBER ROLLS AND SPREAD THE STRAW OVER SEEDED AREAS.

E CHECK DAM
(NOT TO SCALE)

CLIENT

UDOT CONNECTING COMMUNITIES

STATION #2434
6072 E. EMIGRATION CANYON RD.
PARLEY'S CANYON, UTAH

DESIGNER

ARCHIPLEX GROUP
architecture · planning · design services
255 Crossroad Square
Salt Lake City, UT 84115
P:(801) 961-7070
F:(801) 961-7373

CONSULTANTS

PEPG ENGINEERING, L.L.C.
8925 S. SANDY PARKWAY • SANDY, UT 84070
PHONE: (801) 562-2521 • FAX: (801) 562-2551

REGISTRATION

ISSUE

MARK	DATE	DESCRIPTION
	01-09	Revised Contruction Doc.
	10-08	Construction Documents
	8-20-08	90% Review Submittal

ARCHIPLEX PROJECT NO:	0728.02
DFCM PROJECT NO:	08211900
PEPG PROJECT NO:	6600.0816
DRAWN BY:	BCB
CHECKED BY:	DRS
SCALE:	AS NOTED
DATE:	JANUARY, 2009

KEY PLAN

SHEET TITLE

EROSION CONTROL TYPICAL SECTIONS & DETAILS

C401

© 2004 ARCHIPLEX GROUP

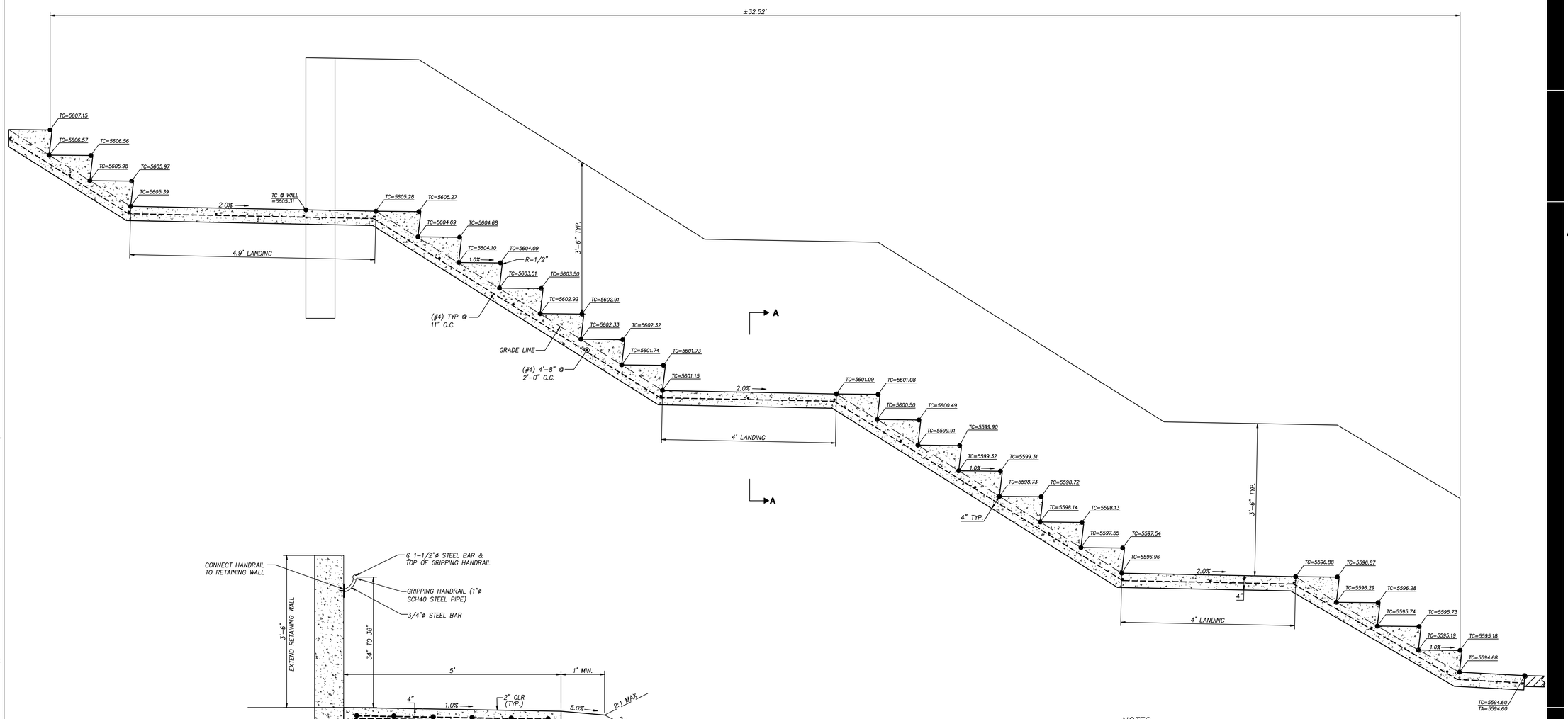

SECTION A-A
SCALE: 1"=1'

CONCRETE STAIRS AND HANDRAIL DETAIL
SCALE: 1"=1'

NOTES:
1. FLIGHTS OF STAIRS SHOULD BE SHORT (MAX 20 STEPS PER FLIGHT BEFORE A LANDING IS REQUIRED).
2. AVOID FEWER THAN 2 STEPS PER FLIGHT.
3. STEPS IN FLIGHT MUST HAVE UNIFORM TREAD RUNS AND UNIFORM RISER HEIGHTS WITH TOLERANCE OF ±3/8".
4. TREADS SHALL BE 12" MAX. RISERS SHALL BE 7" MAX.
5. LANDINGS BETWEEN FLIGHTS OF STEPS MUST HAVE SAME WIDTH AS STEPS AND A MIN LENGTH OF 4'-0".
6. HANDRAIL SHALL BE CONTINUOUS ACROSS LANDINGS BETWEEN FLIGHTS OF STEPS.
7. HANDRAIL SHALL BE GALVANIZED AFTER FABRICATION.
8. PIPE MATERIAL SHALL BE ASTM A53.
9. REINFORCING STEEL SHALL BE ASTM A615 GR 60.
10. PIPE DIAMETERS SHOWN ARE "NOMINAL" DIAMETERS AS GIVEN IN AMERICAN INSTITUTE OF STEEL CONSTRUCTION MANUAL.
11. CONCRETE: MINIMUM 3,000 psi COMPRESSIVE STRENGTH AT 28 DAYS.

DETAIL-G
2'-0" CATCH CURB AND GUTTER
SCALE: 1"=1'

DETAIL-H
2'-0" SPILL CURB AND GUTTER
SCALE: 1"=1'

DETAIL-I
2'-6" SPILL CURB AND GUTTER
SCALE: 1"=1'

NOTES:
1. ASPHALT PAVEMENT DESIGN IS BASED ON THE SOILS REPORT PREPARED BY PEPG ENGINEERING, LLC ON AUGUST 21, 2008 – PROJECT NO. 6600.0816.
2. THE 4" ASPHALT LAYER SHOULD CONSIST OF (2)-2" LAYERS OF MINUS 3/4" HOT MIX ASPHALT, COMPACTED TO 95% OF MAXIMUM DENSITY (BASED ON 50 BLOW MARSHALL NUMBER).

DETAIL-J
ASPHALT PAVING SECTION
SCALE: 1"=1'

NOTES:
1. CONCRETE PAVEMENT DESIGN IS BASED ON THE SOILS REPORT PREPARED BY PEPG ENGINEERING, LLC ON AUGUST 21, 2008 – PROJECT NO. 6600.0816.
2. THE CONCRETE USED IN AREAS WHERE TRUCKS WILL BE PARKED, OR WILL MOVE OVER THE SURFACE, WILL BE A MINIMUM 5,000 psi COMPRESSIVE STRENGTH CONCRETE (28 DAY BREAK) PLACED 8" THICK WITH EPOXY COATED #4 REINFORCING BARS PLACED 12" ON CENTER BOTH WAYS.

DETAIL-K
TRUCK BEARING CONCRETE PAVING SECTION
SCALE: 1"=1'

CLIENT

UDOT CONNECTING COMMUNITIES

STATION #2434
6072 E. EMIGRATION CANYON RD.
PARLEY'S CANYON, UTAH

DESIGNER

ARCHIPLEX GROUP
architecture · planning · design services
255 Crossroad Square
Salt Lake City, UT 84115
P:(801) 961-7070
F:(801) 961-7373

CONSULTANTS

PEPG ENGINEERING, L.L.C.
8825 S. SANDY PARKWAY • SANDY, UT 84070
PHONE: (801) 562-2521 • FAX: (801) 562-2551

REGISTRATION

REGISTERED PROFESSIONAL ENGINEER
CERTIFICATE NO. 176207
DARRIN R. SMITH
2-3-2009
STATE OF UTAH

ISSUE

MARK	DATE	DESCRIPTION
	01-09	Revised Construction Doc.
	10-08	Construction Documents
	8-20-08	90% Review Submittal

ARCHIPLEX PROJECT NO:	0728.02
DFCM PROJECT NO:	08211900
PEPG PROJECT NO:	6600.0816
DRAWN BY:	BCB
CHECKED BY:	DRS
SCALE:	AS NOTED
DATE:	JANUARY, 2009

KEY PLAN

SHEET TITLE

TYPICAL SECTIONS & DETAILS

C500

© 2004 ARCHIPLEX GROUP

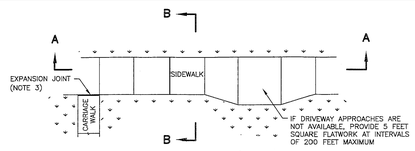

PLAN

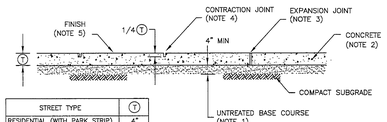

STREET TYPE	T
RESIDENTIAL (WITH PARK STRIP)	4"
RESIDENTIAL (NO PARK STRIP)	6"
OTHER	
REPLACEMENTS MATCH EXISTING, 4" MIN.	

SEE DRIVEWAY APPROACH PLANS FOR SIDEWALK THICKNESS AT DRIVEWAYS

SECTION A–A

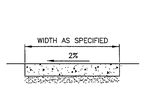

SECTION B–B

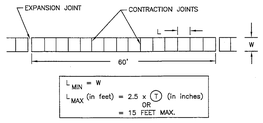

SIDEWALK JOINT DETAIL

(A) CONCRETE SIDEWALK

SEE APWA STANDARD PLAN NO. 231 FOR NOTES
(NOT TO SCALE)

LANDING AT SIDEWALK LEVEL

NARRATIVE:
- SITE CONDITIONS WILL VARY. CONFIGURATION OF RAMP AND LANDING MAY BE CHANGED, BUT THEY MUST MEET DIMENSIONS AND SLOPES SHOWN HERE.
- GRADE BREAKS AT ENDS OF RAMPS MUST BE PERPENDICULAR TO THE DIRECTION OF PEDESTRIAN TRAVEL.
- USE OF FLARES, CURB WALLS, ETC., ARE AT ENGINEER'S DISCRETION.
- LENGTH OF ANY RAMP NOT REQUIRED TO EXCEED 15 FEET.

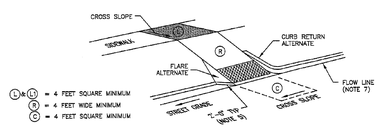

EXAMPLE 1

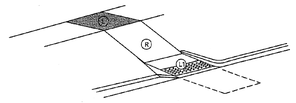

EXAMPLE 2

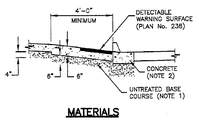

MATERIALS

		RUNNING SLOPE	CROSS SLOPE
LANDING	L	STREET GRADE	1:48 (2%)
	L1	1:48 (2%)	STREET GRADE
RAMP	R	1:12 (8.33%)	STREET GRADE
CLEAR SPACE	C	1:20 (5%)	STREET GRADE

CROSS SLOPE IS PERPENDICULAR TO DIRECTION OF PEDESTRIAN TRAVEL. RUNNING SLOPE IS IN THE DIRECTION OF PEDESTRIAN TRAVEL.

MAXIMUM SLOPES

(B) TANGENT CURB CUT ASSEMBLY

SEE APWA STANDARD PLAN NO. 236 FOR NOTES
(NOT TO SCALE)

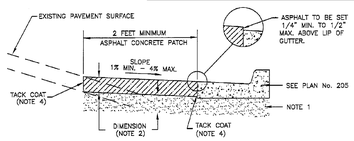

CASE 1 – POSITIVE STREET SLOPE TIE–IN

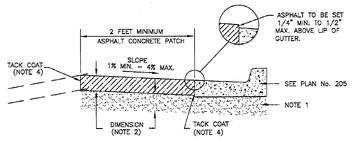

CASE 2 – NEGATIVE STREET SLOPE TIE–IN

(C) ASPHALT CONCRETE PAVEMENT TIE–IN

SEE APWA STANDARD PLAN NO. 251 FOR NOTES
(NOT TO SCALE)

SHALLOW EXCAVATION

(LESS THAN 48 INCHES FROM PAVEMENT SURFACE TO BOTTOM OF EXCAVATION)

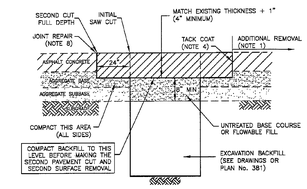

EXAMPLE 1
(ASPHALT RESTORATION)

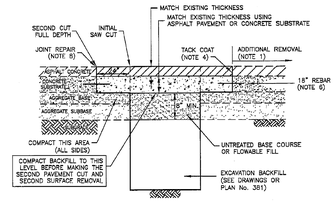

EXAMPLE 2
(COMPOSITE RESTORATION)

(D) ASPHALT CONCRETE "T" PATCH

SEE APWA STANDARD PLAN NO. 255 FOR NOTES
(NOT TO SCALE)

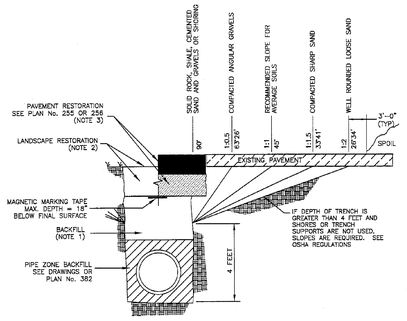

SECTION

(E) TRENCH BACKFILL

SEE APWA STANDARD PLAN NO. 381 FOR NOTES
(NOT TO SCALE)

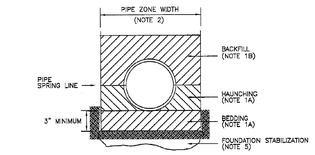

INSTALLATION

CONCRETE PIPE: FOLLOW ASTM C 1479
"STANDARD PRACTICE FOR INSTALLATION OF PRECAST CONCRETE SEWER, STORM DRAIN, AND CULVERT PIPE USING STANDARD INSTALLATIONS."

PVC AND HDPE PIPE: FOLLOW ASTM D 2321
"STANDARD PRACTICE FOR UNDERGROUND INSTALLATION OF THERMOPLASTIC PIPE FOR SEWERS AND OTHER GRAVITY-FLOW APPLICATIONS"

CORRUGATED METAL PIPE: FOLLOW ASTM A 798
"STANDARD PRACTICE FOR INSTALLING FACTORY-MADE CORRUGATED STEEL PIPE FOR SEWERS AND OTHER APPLICATIONS."

VITRIFIED CLAY PIPE: FOLLOW ASTM C 12.
"STANDARD RECOMMENDED PRACTICE FOR INSTALLING VITRIFIED CLAY PIPE LINES."

(F) PIPE ZONE BACKFILL

SEE APWA STANDARD PLAN NO. 382 FOR NOTES
(NOT TO SCALE)

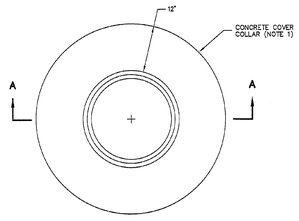

PLAN

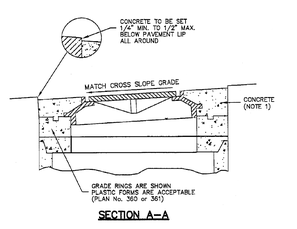

SECTION A–A

(G) CONCRETE COVER COLLAR FOR MANHOLE

SEE APWA STANDARD PLAN NO. 413 FOR NOTES
(NOT TO SCALE)

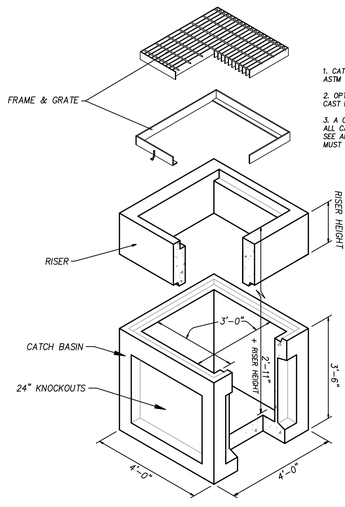

NOTES:

1. *CATCH BASINS MUST BE DESIGNED TO MEET ASTM C858 WITH AASHTO HS–20 LOADING.*
2. *OPTIONAL GRATING OR COVER MATERIAL MAY BE CAST IN AS REQUIRED.*
3. *A CONCRETE COVER COLLAR IS REQUIRED FOR ALL CATCH BASINS. FOR COVER COLLAR DETAIL, SEE APWA PLAN NO. 362. EDGES OF ASPHALT MUST BE SAWCUT TO A CLEAN EDGE.*

*USE STANDARD PRECAST CATCH BASINS.

(H) 3'x3' CATCH BASIN

(NOT TO SCALE)

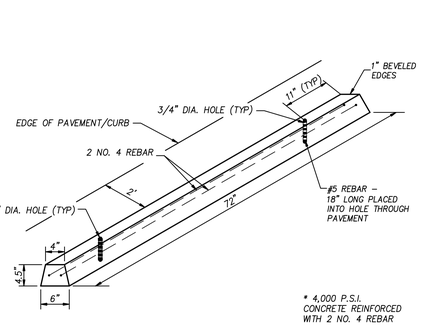

(J) CONCRETE WHEEL STOP

(NOT TO SCALE)

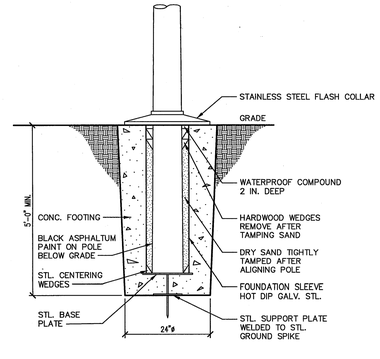

(K) TYPICAL FLAGPOLE BASE

(NOT TO SCALE)

CLIENT

UDOT CONNECTING COMMUNITIES

STATION #2434
6072 E. EMIGRATION CANYON RD.
PARLEY'S CANYON, UTAH

DESIGNER

ARCHIPLEX GROUP
architecture · planning · design services
255 Crossroad Square
Salt Lake City, UT 84115
P:(801) 961-7070
F:(801) 961-7373

CONSULTANTS

PEPG ENGINEERING, L.L.C.
8925 S. SANDY PARKWAY • SANDY, UT 84070
PHONE: (801) 562-2521 • FAX: (801) 562-2551

REGISTRATION

REGISTERED PROFESSIONAL ENGINEER — DARRIN R. SMITH — No. 272207 — 2-3-2009 — STATE OF UTAH

ISSUE

MARK	DATE	DESCRIPTION
	01–09	Revised Contruction Doc.
	10–08	Construction Documents
	8–20–08	90% Review Submittal

ARCHIPLEX PROJECT NO:	0728.02
DFCM PROJECT NO:	08211900
PEPG PROJECT NO:	6600.0816
DRAWN BY:	BCB
CHECKED BY:	DRS
SCALE:	AS NOTED
DATE:	JANUARY, 2009

KEY PLAN

SHEET TITLE

TYPICAL SECTIONS & DETAILS

C501

© 2004 ARCHIPLEX GROUP

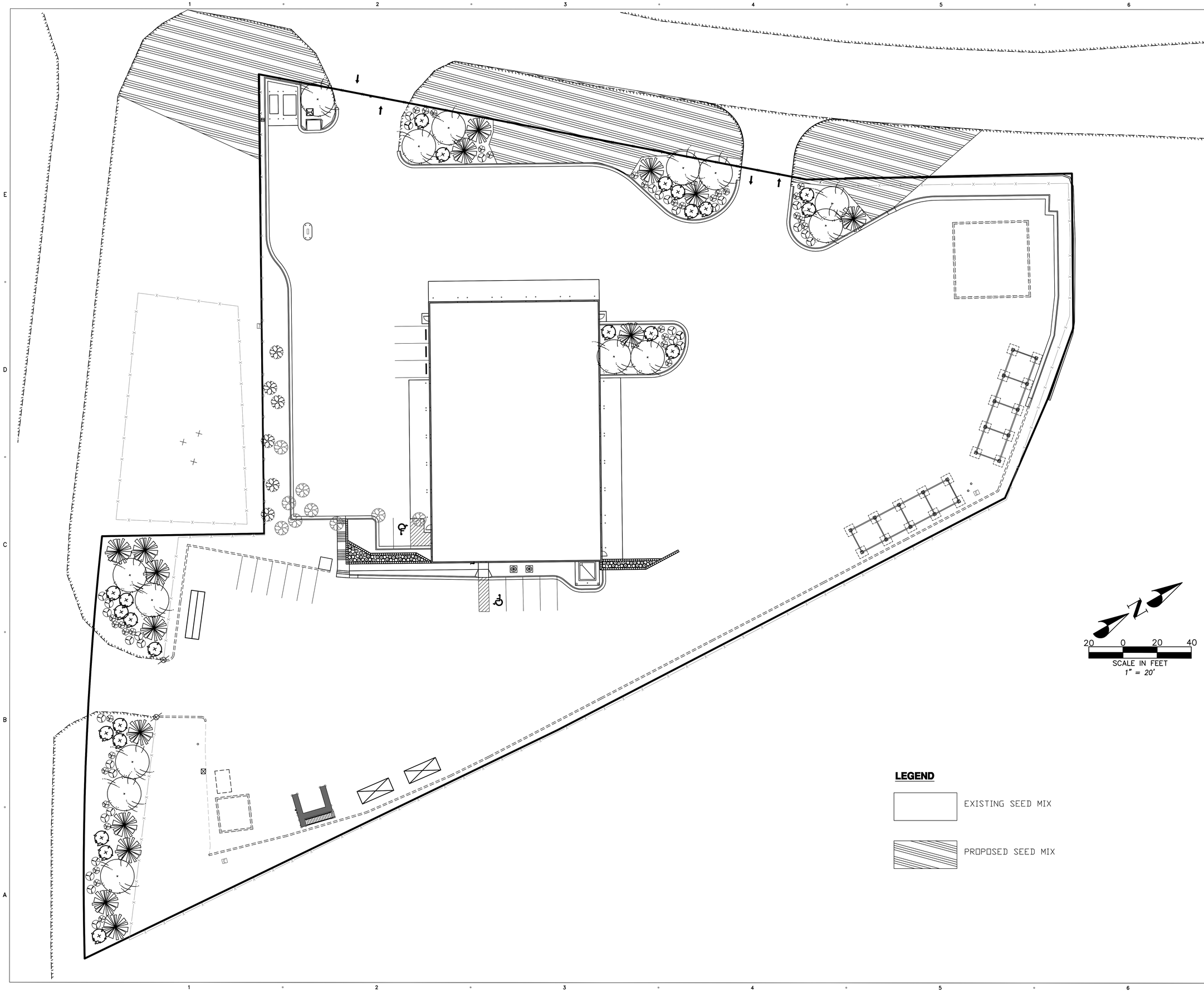

CLIENT

UDOT CONNECTING COMMUNITIES

STATION #2434
6072 E. EMIGRATION CANYON RD.
PARLEY'S CANYON, UTAH

DESIGNER

ARCHIPLEX GROUP
architecture · planning · design services
255 Crossroad Square
Salt Lake City, UT 84115
P:(801) 961-7070
F:(801) 961-7373

CONSULTANTS

PEPG ENGINEERING, L.L.C.
8805 S. SANDY PARKWAY • SANDY, UT 84070
PHONE: (801) 562-2521 • FAX: (801) 562-2551

REGISTRATION

LICENSED LANDSCAPE ARCHITECT
JEFFREY CARTER STOKES
No. 378428
12-17-08
STATE OF UTAH

ISSUE

MARK	DATE	DESCRIPTION
	01-09	Revised Construction Doc.
	10-08	Construction Documents
	8-20-08	90% Review Submittal

ARCHIPLEX PROJECT NO:	0728.02
DFCM PROJECT NO:	08211900
PEPG PROJECT NO:	6600.0816
DRAWN BY:	EAB
CHECKED BY:	JCS
SCALE:	1"=20'
DATE:	JANUARY, 2009

KEY PLAN

SHEET TITLE

LANDSCAPE PLAN

L100

© 2004 ARCHIPLEX GROUP

GENERAL NOTES:

1. CONTRACTOR IS RESPONSIBLE TO VERIFY ALL PLANT & MATERIAL QUANTITIES. THE SCHEDULE IS INTENDED AS A REFERENCE ONLY. SEE ENLARGED PLANTING PLANS FOR SHRUB AND PLANT LOCATIONS. QUANTITIES IN SCHEDULE ARE ESTIMATES ONLY.

2. OWNER AND/OR LANDSCAPE ARCHITECT IS TO APPROVE ALL LANDSCAPE MATERIALS PRIOR TO INSTALLATION WITH PRIOR NOTICE OF 48 HOURS. OWNER AND OR LANDSCAPE ARCHITECT RESERVES THE RIGHT TO REJECT LANDSCAPE MATERIALS INCLUDING PLANTS THROUGHOUT THE CONSTRUCTION PERIOD.

3. PROVIDE MATCHING SIZES AND FORMS OF LIKE SHRUB SPECIES AS SHOWN ON DRAWINGS.

4. APPLY 6" OF TOPSOIL IN ALL PLANTING AREAS. A SOIL TEST SHALL BE DONE TO VERIFY QUALITY. CONTRACTOR TO AMEND TOP SOIL AS NECESSARY FROM SOIL REPORT TO COMPLY WITH ACCEPTABLE SOIL STANDARDS AND SPECIFICATIONS. SEE SPECIFICATIONS FOR DEPTH OF TOP SOIL.

5. THE LANDSCAPE & IRRIGATION CONTRACTOR IS RESPONSIBLE FOR ENSURING THAT THEY OBTAIN ANY & ALL DRAWINGS, SPECIFICATIONS, CHANGE ORDERS & AS-BUILDS APPLICABLE TO CONTRACTORS SCOPE OF WORK PRIOR TO & DURING CONSTRUCTION ON SITE. CONFLICTING OR VAGUE INFORMATION SHALL BE NOTED AND SUBMITTED TO OWNER AND LANDSCAPE ARCHITECT FOR CLARIFICATION.

6. CONTRACTOR IS RESPONSIBLE TO REPLACE ALL DAMAGED NEW & EXISTING LANDSCAPE, INCLUDING BUT NOT LIMITED TO ALL PLANTS, TOPSOIL, WEED BARRIER, CURBING, WALKS, ETC.

7. CONTRACTOR SHALL TIE ALL PROPOSED LANDSCAPE MATERIALS WITH EXISTING INCLUDING BUT NOT LIMITED TO ALL PLANTS, TOPSOIL, WEED BARRIER, CURBING, WALKS, ETC.

8. APPLY AT LEAST 4" OF MULCH UNDER ALL TREES AND SHRUBS.

9. APPLY A PRE-EMERGENT AROUND ALL NEW TREES AND SHRUBS.

10. OWNER TO PROVIDE SUPPLEMENTAL MANUAL WATERING ON ALL NEW PLANTS DURING THE ESTABLISHMENT PERIOD UP TO 4 MONTHS.

11. CONTRACTOR SHALL CAREFULLY STUDY AND INSPECT CIVIL AND ARCHITECTURAL PLANS AS-BUILTS DRAWING AND VISUALLY INSPECT. MAKE ON-SITE ADJUSTMENTS TO LANDSCAPE BASED OF FINAL DIMENSIONS AND LAYOUTS OF SITE AND BUILDINGS. PROVIDE A UNIT PRICE CREDIT FOR ANY PLANTS, AREA, OR PORTIONS OF THE LANDSCAPE OMMITED.

12. ANY PORTIONS OF THE LANDSCAPE NOT SHOWN OR CLEARLY IDENTIFIED BY THE LANDSCAPE CONSTRUCTION DOCUMENTS SHALL BE IDENTIFIED, AND A REQUEST FOR INFORMATION AND OR CHANGE ORDER SHALL BE SUBMITTED TO OWNERS REPRESENTATIVE TO ADDRESS.

GENERAL CONSTRUCTION NOTES:

1. CONTRACTOR SHALL SECURE ALL NECESSARY PERMITS BEFORE CONSTRUCTION.

2. CONTRACTOR SHALL ADHERE TO ALL LOCAL, STATE, AND/OR FEDERAL LAWS PERTAINING TO THE PROJECT'S WORK.

3. IT IS THE RESPONSIBILITY OF THE CONTRACTOR TO COORDINATE ALL CONSTRUCTION ELEMENTS WITH OTHER TRADES PRIOR TO INSTALLATION AND BECOME FAMILIAR WITH THE LOCATION OF UNDERGROUND SERVICES AND IMPROVEMENTS.

4. THE CONTRACTOR SHALL EXAMINE THE SITE AND FULLY DETERMINE THE CONDITIONS UNDER THIS CONTRACT. NO ALLOWANCE WILL BE MADE FOR FAILURE OF BIDDERS TO ASCERTAIN ALL ASPECTS OF THE PROJECT.

5. PRIOR TO DIGGING, EXCAVATION, OR UNDERGROUND WORK, CONTRACTOR SHALL LOCATE AND PROTECT EXISTING UTILITIES AND SUBSURFACE SYSTEMS. CONTRACTOR SHALL ASSUME RESPONSIBILITY FOR REPAIR AND EXPENSES INCURRED TO UTILITIES THAT BECOME DAMAGED AS A RESULT OF HIS WORK.

6. CONTRACTOR SHALL INSPECT WITH OWNER'S REPRESENTATIVE ALL PAVEMENT, SIDEWALK AND CURB DEFECTS PRIOR TO BEGINNING WORK. ALL HARDSCAPE SHALL BE RE-INSPECTED DURING FINAL INSPECTION. ANY DAMAGED AREAS SHALL BE REPAIRED AT CONTRACTOR'S EXPENSE.

7. IT SHALL BE THE CONTRACTOR'S RESPONSIBILITY TO DETERMINE THE QUANTITIES AND MATERIALS REQUIRED TO COMPLETE THE WORK IN ACCORDANCE WITH THE PLANS. CONTRACTOR SHALL PROVIDE OWNER/LANDSCAPE ARCHITECT ACTUAL AMOUNTS REQUIRED FOR FINISHED INSTALLATION.

8. CONTRACTOR SHALL BE RESPONSIBLE FOR MAINTAINING GRADES AS ESTABLISHED BY THE PROJECT ENGINEER. RUNOFF AND DRAINAGE FLOWS SHALL NOT BE ALTERED OR IMPEDED.

9. THE CONTRACTOR SHALL FURNISH ALL LABOR, TOOLS, EQUIPMENT, MATERIALS, EMPLOYEE AND SUBCONTRACTOR SUPERVISION FOR IT'S PORTION OF THE PROJECT TO IMPLEMENT PLANS AND SPECIFICATIONS.

10. THE CONTRACTOR ASSUMES ALL RISKS IN THE PERFORMANCE OF THE WORK AND RESPONSIBILITY FOR LOSS AND EXPENSE RESULTING FROM ON-SITE INJURY.

11. THE CONTRACTOR IS RESPONSIBLE FOR SUPERVISION, SAFETY, ADMINISTRATION, SCHEDULING, COORDINATION AND MANAGEMENT OF SUBCONTRACTORS.

12. THE CONTRACTOR SHALL PROTECT ALL PERSONS NEAR OR ON THE PREMISES FROM UNREASONABLE RISK OF INJURY. PROVIDE WARNING SIGNS, LIGHTS, BARRICADES, RAILINGS, FLAGMEN OR OTHER NECESSARY SAFEGUARD.

13. OWNER / LANDSCAPE ARCHITECT INSPECTIONS SHALL NOT BE DEEMED SUPERVISION OF CONTROL OF CONSTRUCTION BY CONTRACTOR OR SUBCONTRACTORS.

14. ALL CONTRACTS SHALL BE WRITTEN DIRECTLY BETWEEN CONTRACTOR AND OWNER. SPECIFIC TERMS OF WORK SHALL BE NEGOTIATED DIRECTLY BETWEEN PARTIES.

15. OWNER / LANDSCAPE ARCHITECT SHALL REVIEW SHOP DRAWINGS, PRODUCT DATA AND SAMPLES SUBMITTED BY THE CONTRACTOR FOR THE SOLE PURPOSE OF COMPLIANCE WITH THE DESIGN CONCEPT AND WITH INFORMATION GIVEN IN THE CONTRACT DOCUMENTS. OWNER AND LANDSCAPE ARCHITECT ASSUMES NO LIABILITY FOR CHANGES THAT HAVE NOT BEEN REVIEWED AND AUTHORIZED IN WRITING.

16. WHERE TWO OR MORE REQUIREMENTS CREATE OVERLAPPING CONDITIONS, CONFLICTING MINIMUMS OR LEVELS OF QUALITY, ALL OR THE MORE STRINGENT REQUIREMENTS OR THE HIGHER QUALITY LEVEL IS INTENDED, AND SHALL BE ENFORCED. CONFLICTING REQUIREMENTS SHALL BE REFERRED TO THE LANDSCAPE ARCHITECT OR OWNER'S REPRESENTATIVE WHOSE INTERPRETATION WILL BE FINAL.

17. WALKS AND PLANTERS SHOWN ON LANDSCAPE PLANS ARE FOR LAYOUT REFERENCE ONLY. REFER TO CIVIL PLANS FOR HORIZONTAL AND VERTICAL CONTROL

18. IT IS THE RESPONSIBILITY OF THE CONTRACTOR TO ENSURE THAT THE MOST CURRENT PLANS & SPECIFICATIONS ARE USED & CONVEYED TO ALL SUB- CONTRACTORS AS APPLICABLE.

PLANT SCHEDULE

*ALL QUANTITIES SHOWN ON SCHEDULE ARE ESTIMATES ONLY

SYMBOL n.t.s.	BOTANICAL NAME / COMMON NAME	QTY.	SIZE	NOTES/REQUIREMENTS
	Landscape Contractor shall be required to obtain the exact plant material shown by Botanical Name and reference, any substitutions or variations shall be approved by Landscape Architect prior to installation.	Landscape contractor shall verify on plans all plant quanties.	Report to Owner and or Landscape Architect any problems obtaining specified plant size.	All plants to be planted as shown on plan. Any discrepencies between actual conditions & plans shall be reported to Owner &/or Landscape Architect.
	TREES			
	PINUS EDULIS/ PINYON PINE	15	6'	All trees must be uniformly sized see notes/specifications
	QUERCUS GAMBELII/ GAMBEL OAK	14	2" cal.	All trees must be uniformly sized see notes/specifications
	EXISTING TREES/ TO REMAIN	6		
	EXISTING TREES/ TO BE REMOVED	9		
	SHRUBS			
	ARTEMISIA TRIDENTATA/ BIG SAGEBRUSH	22	5 gal.	uniformally sized see notes/specifications
	PURSHIA MEXICANA/ CLIFFROSE	34	5 gal.	uniformally sized see notes/specifications
	RHUS TRILOBATA/ OAKLEAF SUMAC	33	5 gal.	uniformally sized see notes/specifications
	PERENNIALS			
	PENSTEMON EATONII/ FIRECRACKER PENSTEMON	13	1 gal.	uniformally sized see notes/specifications
	PENSTEMON PALMERII/ PALMER PENSTEMON	25	1 gal.	uniformally sized see notes/specifications
	PENSTEMON SPECIOSUS/ SHOWY PENSTEMON	31	1 gal.	uniformally sized see notes/specifications
	TURF			
	NEW SEED MIX - AS FOLLOWS: ROADCREST @ 10 LB. PER ACRE SMOOTH BROME @ 7 LB. PER ACRE WESTERN WHEATGRASS @ 5 LB. PER ACRE	± 0.39 acres 16,906 sq. ft.		To be planted in disturbed areas to match existing seed mix areas.
	EXISTING SEED MIX - AS FOLLOWS: ROADCREST @ 10 LB. PER ACRE SMOOTH BROME @ 7 LB. PER ACRE WESTERN WHEATGRASS @ 5 LB. PER ACRE			To remain and blend in with proposed seed mix areas.

CLIENT

UDOT CONNECTING COMMUNITIES

STATION #2434
6072 E. EMIGRATION CANYON RD.
PARLEY'S CANYON, UTAH

DESIGNER

ARCHIPLEX GROUP
architecture · planning · design services
255 Crossroad Square
Salt Lake City, UT 84115
P:(801) 961-7070
F:(801) 961-7373

CONSULTANTS

PEPG ENGINEERING, L.L.C.
9805 S. SANDY PARKWAY • SANDY, UT 84070
PHONE: (801) 562-2521 • FAX: (801) 562-2551

REGISTRATION

JEFFREY A. BITCHES No. 378425 STATE OF UTAH LICENSED LANDSCAPE ARCHITECT

ISSUE

MARK	DATE	DESCRIPTION
	01-09	Revised Construction Doc.
	10-08	Construction Documents
	8-20-08	90% Review Submittal

ARCHIPLEX PROJECT NO:	0728.02
DFCM PROJECT NO:	08211900
PEPG PROJECT NO:	6600.0816
DRAWN BY:	EAB
CHECKED BY:	DRS
SCALE:	1"=20'
DATE:	JANUARY, 2009

KEY PLAN

SHEET TITLE

LANDSCAPE NOTES & SCHEDULE

L101

© 2004 ARCHIPLEX GROUP

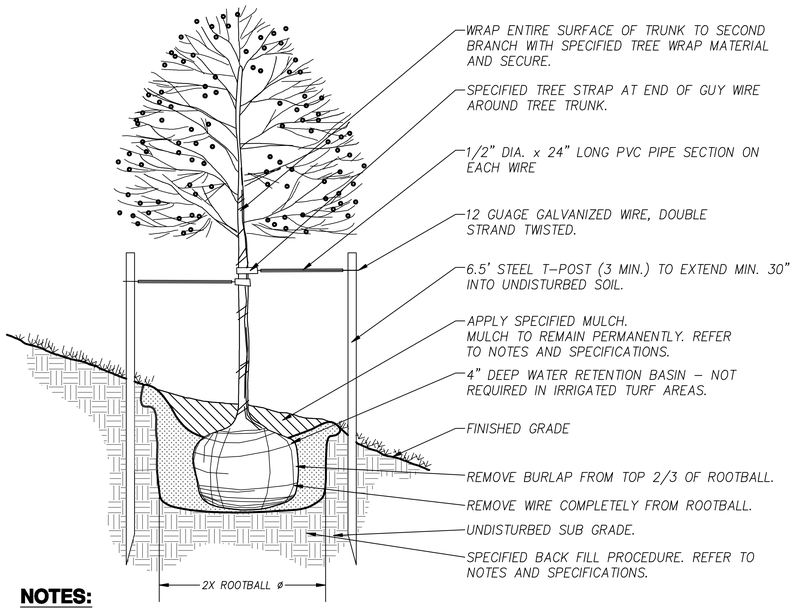

NOTES:

1. CUT BACK SLOPE TO PROVIDE A FLAT SURFACE FOR PLANTING.
2. DO NOT CUT LEADER. PRUNE DAMAGED OR DEAD WOOD IMMEDIATLY PRIOR TO PLANTING.
3. ANY BROKEN OR CRUMBLING ROOTBALL WILL BE REJECTED. REMOVING THE CONTAINER WILL NOT BE AN EXCUSE FOR DAMAGED ROOTBALL.
4. HOLE SHOULD HAVE ROUGHENED SIDES.

TREE PLANTING ON SLOPE 1

(NO SCALE)

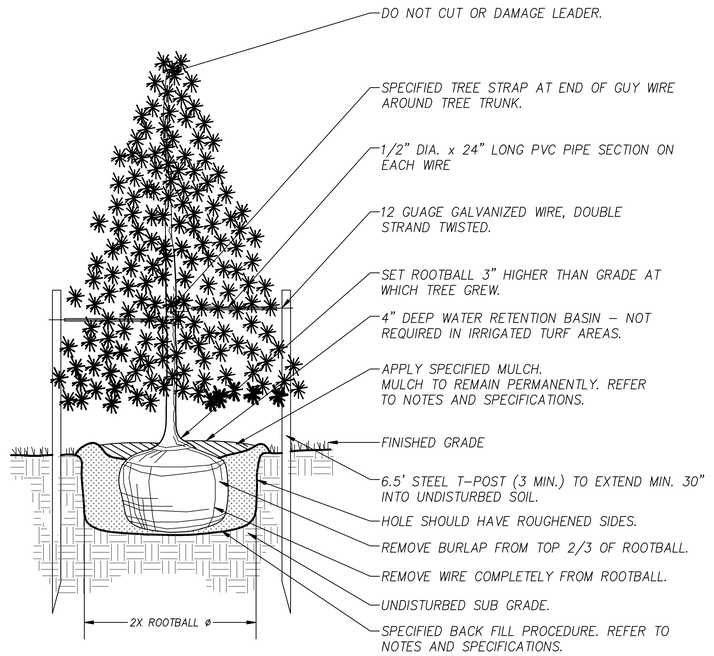

EVERGREEN TREE PLANTING 2

(NO SCALE)

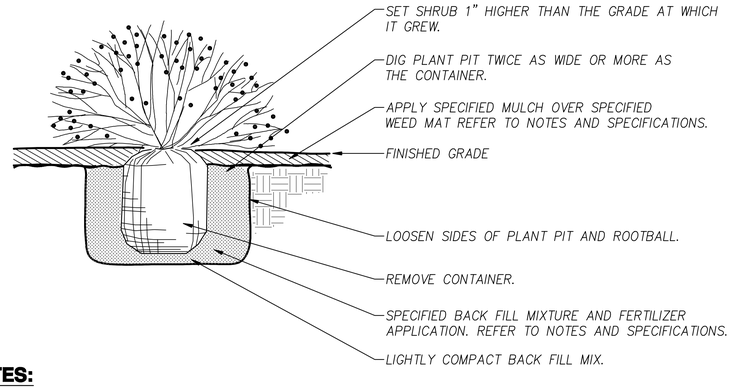

NOTES:

1. PRUNE ALL DAMAGED OR DEAD WOOD IMMEDIATLY PRIOR TO PLANTING.
2. ALL JUNIPER PLANTS SHOULD BE PLANTED SO TOP OF ROOT MASS OCCURS AT FINISHED GRADE OF MULCH LAYER.
3. ANY BROKEN OR CRUMBLING ROOTBALL WILL BE REJECTED. REMOVING THE CONTAINER WILL NOT BE AN EXCUSE FOR DAMAGED ROOTBALL.
4. TYPICAL SHURB PIT DEPTH=DEPTH OF BALL +3".

SHRUB PLANTING 3

(NO SCALE)

CLIENT

UDOT CONNECTING COMMUNITIES

STATION #2434
6072 E. EMIGRATION CANYON RD.
PARLEY'S CANYON, UTAH

DESIGNER

ARCHIPLEX GROUP
architecture · planning · design services
255 Crossroad Square
Salt Lake City, UT 84115
P:(801) 961-7070
F:(801) 961-7373

CONSULTANTS

PEPG ENGINEERING, L.L.C.
9805 S. SANDY PARKWAY ● SANDY, UT 84070
PHONE: (801) 562-2521 ● FAX: (801) 562-2551

REGISTRATION

LICENSED LANDSCAPE ARCHITECT
JEFFREY LARSEN
STONES
No. 378228
12-17-09
STATE OF UTAH

ISSUE

MARK	DATE	DESCRIPTION
	01-09	Revised Construction Doc.
	10-08	Construction Documents
	8-20-08	90% Review Submittal

ARCHIPLEX PROJECT NO:	0728.02
DFCM PROJECT NO:	08211900
PEPG PROJECT NO:	6600.0816
DRAWN BY:	EAB
CHECKED BY:	DRS
SCALE:	1"=20'
DATE:	JANUARY, 2009

KEY PLAN

SHEET TITLE

LANDSCAPE DETAILS

L102

© 2004 ARCHIPLEX GROUP

GENERAL NOTES

1. FIELD VERIFY ALL EXISTING CONDITIONS AND THEIR COMPATIBILITY WITH NEW CONSTRUCTION PRIOR TO THE COMMENCEMENT OF WORK. COORDINATE DISCREPANCIES WITH ARCHITECT.

2. DO NOT SCALE DRAWINGS.

3. SEE CIVIL, STRUCTURAL, MECHANICAL AND ELECTRICAL DRAWINGS FOR MORE INFORMATION.

4. PROVIDE BACKING BEHIND ALL SURFACE MOUNTED EQUIPMENT AND/OR FIXTURES PER DETAIL C2/AE401

5. SEE SHEET A1/AE501 FOR INTERIOR PARTITION WALL TYPES.

6. TWO BOLLARDS REQUIRED PER SECTIONAL DOOR JAMB. ALIGN WITH DOOR JAMB, SEE DETAILS A3 & B3/AE503.

7. SEE SHEET AE602 FOR WINDOW FRAME TYPES & DETAILS.

8. SEE STRUCTURAL DRAWINGS FOR CONSTRUCTION/CONTROL JOINT LOCATIONS IN CONCRETE SLAB.

9. ALL DIMENSIONS ARE TO FACE OF WALL, UNLESS NOTED OTHERWISE.

10. PROVIDE 03053.A0 AT ALL CONCRETE CURBS, PIERS, SLABS, STEM WALL ETC. U.N.O.

11. PROVIDE 03054.A0 OVER ENTIRE FLOOR SLAB AT ROOMS 101, 102, 103, 106, & STAIRS.

KEYNOTES

03053.A0 CONCRETE WATER PROOFING ADMIXTURE
03054.A0 OLIOPHOBIC TOPICAL SEALER
03055.A0 SALT AND WATER BARRIER
03300.A1 CONCRETE SLAB-ON-GRADE - SEE STRUCTURAL
03300.D0 CONCRETE PAD
03300.G0 CONCRETE OVER METAL DECK - SEE STRUCTURAL
03300.H0 FOUNDATION WALL SEE STRUTURAL
03300.H1 CONCRETE PIER - SEE STRUCTURAL
03300.N0 CONCRETE CURB

04200.A2 CMU (SIZE)
04200.R0 MASONRY CONTROL JOINT

05120.B2 STEEL COLUMN - SEE STRUTURAL - GALVANIZED
05120.D1 TUBE STEEL COLUMN - SEE STRUCTURAL
05120.D2 TUBE STEEL COLUMN - SEE STRUTURAL - PRIMED AND PAINTED
05500.J1 PIPE BOLLARD (DIAMETER) GALVANIZED & PAINTED
05510.H0 CONCRETE FILLED METAL PAN STAIR - PAINTED

06402.H1 ADJUSTABLE SHELVES (FINISH)
06402.X0 WORKBENCH (DEPTH)
06651.B0 SOLID SURFACE COUNTER TOP

07410.A2 DOWNSPOUT W/CONTINUOUS HEAT TAPE
07410.T1 STANDING SEAM METAL ROOF CANOPY

08360.A0 HEAVY DUTY OVERHEAD SECTIONAL DOOR

10100.C0 MARKER BOARD (L X H)
10425.A0 ROOM SIGNAGE
10425.A1 OIL SIGNAGE
10425.B1 WELDING SIGNAGE
10425.C1 ACCESSIBLE SIGNAGE
10425.D1 ACCESSIBLE/UNISEX RESTROOM SIGNAGE
10500.A0 METAL LOCKERS (WIDTH)
10500.B0 METAL STORAGE CABINETS - W/HOLD DOWN ANCHORS
10522.A0 FIRE EXTINGUISHER

11151.A0 MOBILE LIFT - NIC - OWNER FURNISHED

12511.A0 HORIZONTAL LOUVER BLINDS

14620.A0 TROLLEY HOIST (SIZE) SEE STRUCTURAL

15000.A0 GAS METER - SEE PLUMBING DRAWINGS
15410.C0 UTILITY SINK
15410.D1 FLOOR SINK
15410.E0 TRENCH DRAIN - SLOPE TO DRAIN
15412.A0 EMERGENCY SHOWER & EYE WASH
15452.A1 DRINKING FOUNTAIN
15486.A1 FUEL FIRED WATER HEATER
15490.C0 WASTE OIL PIT
15490.D0 600 GAL/ WASTE OIL TANK - O.F.C.I.
15491.A0 AIR COMPRESSOR
15491.C0 OVERHEAD HOSE REELS
15611.A1 NATURAL GAS FIRED FURNACE - SEE MECHANICAL
15670.A1 CONDENSER UNIT - SEE MECHANICAL
15820.A0 BACKDRAFT DAMPER - SEE MECHANICAL
15838.A0 EXHAUST FAN - SEE MECHANICAL
15861.A1 MECHANICAL DUCTWORK - SEE MECHANICAL
15887.A1 LOUVER WITH BIRD SCREEN - SEE MECHANICAL
15887.B1 INTAKE GRAVITY HOOD - SEE MECHANICAL

16210.A1 ELETRICAL METER - SEE ELECTRICAL DRAWINGS
16411.A1 EMERGENCY DISCONNECT - SEE ELECTRICAL
16442.A0 ELECTRICAL PANEL - SEE ELECTRICAL DRAWINGS

A1 | FLOOR PLAN - LEVEL 1
AE101 | REF. SCALE: 1/8" = 1'-0"

A5 | FLOOR PLAN - LEVEL 2
AE101 | REF. SCALE: 1/8" = 1'-0"

CLIENT

UDOT CONNECTING COMMUNITIES
STATION #2434
6072 E. EMIGRATION CANYON RD.
PARLEY'S CANYON, UTAH

DESIGNER

ARCHIPLEX GROUP
architecture · planning · design services
255 Crossroad Square
Salt Lake City, UT 84115
P:(801) 961-7070
F:(801) 961-7373

CONSULTANTS

REGISTRATION

STATE OF UTAH LICENSED ARCHITECT — RALPH M. STANISLAW 95-310818-0301

ISSUE

MARK	DATE	DESCRIPTION
	01-09	Revised Contruction Doc.
	10-08	Construction Documents
	8-20-08	90% Review Submittal

ARCHIPLEX PROJECT NO:	0728.02
DFCM PROJECT NO:	08211900
DRAWN BY:	A. PHILLIPS
CHECKED BY:	R. STANISLAW
SCALE:	1/8" = 1'-0"
DATE:	JANUARY, 2009

KEY PLAN

SHEET TITLE

FIRST FLOOR AND MEZZANINE PLAN

AE101

© 2004 ARCHIPLEX GROUP

CEILING SYMBOLS

- PAINTED GYP. BD. CEILING
- 2' x 4' FLUORESCENT LIGHT FIXTURE, SEE ELECT. DRAWINGS FOR TYPE.
- 1' x 4' FLUORESCENT LIGHT FIXTURE
- 1' x 8' FLUORESCENT LIGHT FIXTURE
- RETURN AIR GRILLE – HORIZONTAL (SEE MECH. DRAWINGS)
- SUPPLY AIR GRILLE – HORIZONTAL (SEE MECH. DRAWINGS)
- RADIANT HEAT SYSTEM (SEE MECH. DRAWINGS)
- EXHAUST FAN (SEE MECH. DRAWINGS)
- EXIT SIGN
- EXTERIOR WALL MOUNTED LIGHTS

REFLECTED CEILING PLAN LEGEND

ROOM # — 131
TYPE — C
ELEVATION — VARIES
A.F.F.

TYPE A	EXPOSED STRUCTURE – PAINTED
TYPE B	5/8" GYPSUM BOARD ON METAL SUSPENSION SYSTEM – PAINTED
TYPE C	2' X 4' LAY – IN CEILING GRID SYSTEM WITH ACOUSTICAL PANELS

GENERAL NOTES

1. SEE MECHANICAL AND ELECTRICAL DRAWINGS FOR ADDITIONAL LIGHTING AND DIFFUSER INFORMATION.
2. CEILING HEIGHT SHOWN IN ROOM TAG INDICATES HEIGHT OF DOMINANT CEILING FINISH. SEE NOTES FOR ADDITIONAL CEILING FINISH INFORMATION.
3. SEE DETAIL A3 & B2/AE502 FOR SEISMIC BRACING DETAIL.
4. ROOF STRUCTURE NOT SHOWN FOR CLARITY.
5. COORDINATE LOCATION OF OVERHEAD DOOR TRACKS WITH LIGHTING FIXTURES TO INSURE PROPER OPERATION OF OVERHEAD DOORS.

KEYNOTES

04200.A2	CMU (SIZE)
05120.A2	STEEL BEAM – SEE STRUCTURAL – PRIMED AND PAINTED
05120.B2	STEEL COLUMN – SEE STRUCTURAL – PRIMED AND PAINTED
05120.D1	TUBE STEEL COLUMN – SEE STRUCTURAL
05120.D2	TUBE STEEL COLUMN – SEE STRUCTURAL – PRIMED AND PAINTED
07410.A2	DOWNSPOUT W/CONTINUOUS HEAT TPAE
07410.T1	STANDING SEAM METAL ROOF CANOPY
08360.B0	3" HEAVY DUTY OVERHEAD SECTIONAL DOOR TRACK
09900.A1	PAINT – SEE FINISH SCHEDULE
14620.A0	TROLLEY HOIST (SIZE) SEE STRUCTURAL
15491.B0	OVERHEAD LUBE REELS
15491.C0	OVERHEAD HOSE REELS
15600.A0	NATURAL GAS RADIANT HEATING SYSTEM – SEE MECHANICAL
15838.A0	EXHAUST FAN – SEE MECHANICAL
15861.A1	MECHANICAL DUCTWORK – SEE MECHANICAL
15887.A1	LOUVER W/BIRD SCREEN – SEE MECHANICAL
15887.B1	INTAKE GRAVITY HOOD – SEE MECHANICAL
16510.A0	INTERIOR LIGHTS
16510.B0	WALL MOUNTED INTERIOR LIGHTS
16510.C0	INTERIOR SOFFIT CAN LIGHTS – SEE ELECTIRCAL
16520.B1	EXTERIOR WALL MOUNTED LIGHTS
16520.B2	EXTERIOR WALL MOUNTED FLOOD LIGHTS

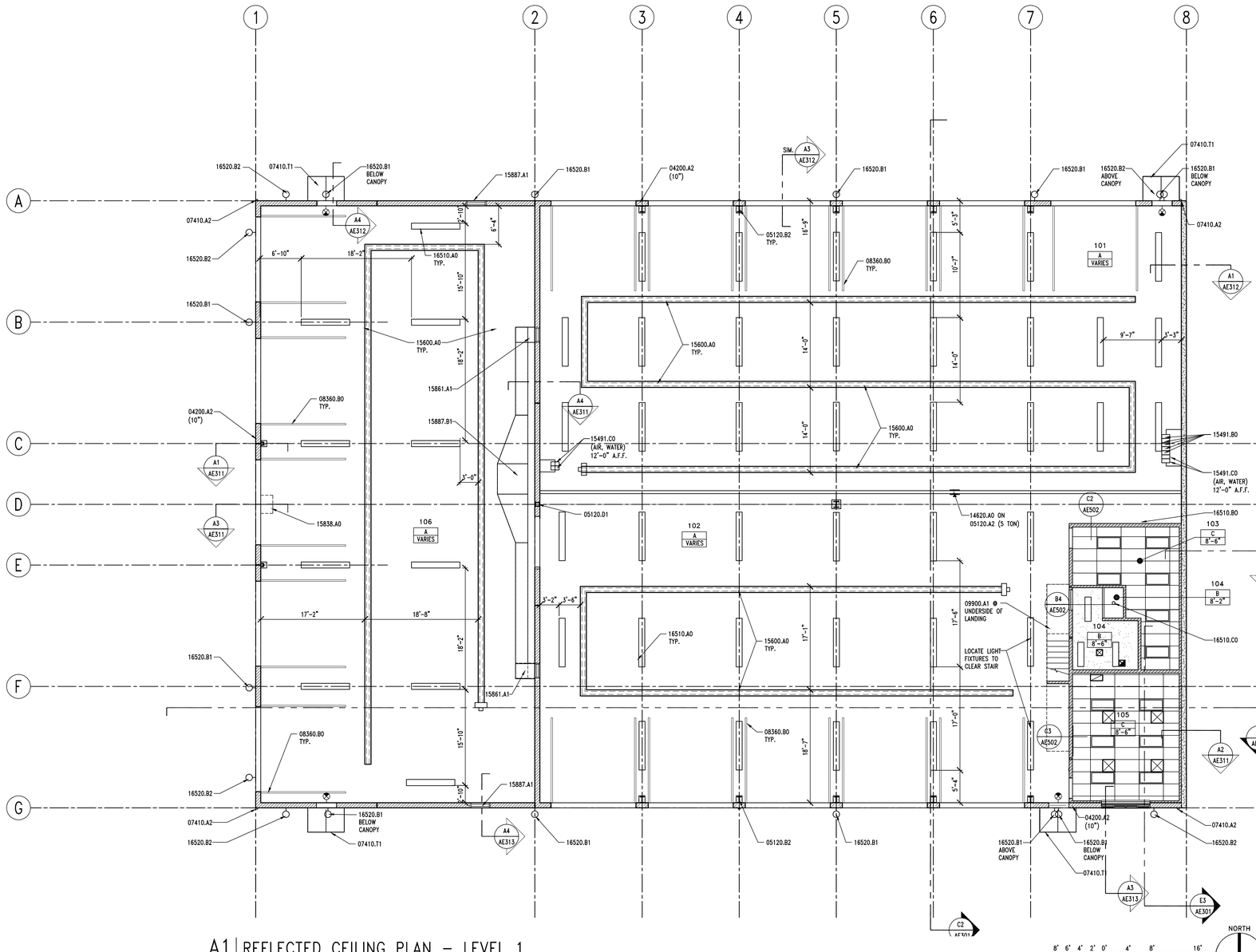

A1 | REFLECTED CEILING PLAN – LEVEL 1

AE121 | REF. | SCALE: 1/8" = 1'-0"

8' 6' 4' 2' 0' 4' 8' 16'

NORTH

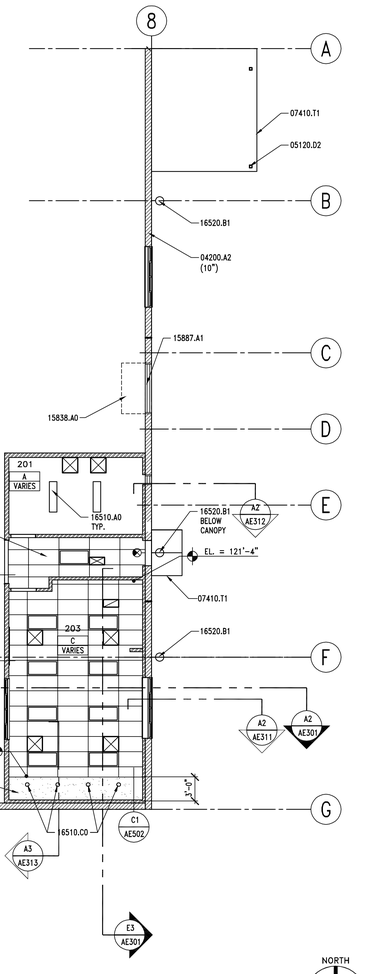

A5 | REFLECTED CEILING PLAN – LEVEL 2

AE121 | REF. | SCALE: 1/8" = 1'-0"

8' 6' 4' 2' 0' 4' 8' 16'

NORTH

1. DE ICING SYSTEM?

CLIENT

UDOT CONNECTING COMMUNITIES

STATION #2434
6072 E. EMIGRATION CANYON RD.
PARLEY'S CANYON, UTAH

DESIGNER

ARCHIPLEX GROUP
architecture · planning · design services
255 Crossroad Square
Salt Lake City, UT 84115
P:(801) 961-7070
F:(801) 961-7373

CONSULTANTS

REGISTRATION

STATE OF UTAH
RALPH M. STANISLAW
96-310819-0501
LICENSED ARCHITECT

ISSUE

MARK	DATE	DESCRIPTION
	01-09	Revised Contruction Doc.
	10-08	Construction Documents
	8-20-08	90% Review Submittal

ARCHIPLEX PROJECT NO:	0728.02
DFCM PROJECT NO:	08211900
DRAWN BY:	A. PHILLIPS
CHECKED BY:	R. STANISLAW
SCALE:	1/8" = 1'-0"
DATE:	JANUARY, 2009

KEY PLAN

SHEET TITLE

REFLECTED CEILING PLAN

AE121

© 2004 ARCHIPLEX GROUP

KEYNOTES

07729.A0	STANDING SEAM METAL ROOR 2 PIPE SNOWGUARD SYSTEM
07410.A0	STANDING SEAM METAL ROOF
07410.A1	RAIN GUTTER W/CONTINUOUS HEAT TAPE
07410.C0	ROOFING FELT
07410.M2	ICE AND WATER SHIELD
07410.P2	RAKE TRIM
07410.S1	STANDING SEAM METAL ROOF RIDGE
07410.T1	STANDING SEAM METAL CANOPY
15887.B1	INTAKE GRAVITY HOOD - SEE MECHANICAL
16128.A0	LOW VOLTAGE DE-ICING SNOW MELTING CABLE SYSTEM

GENERAL NOTES

1. FIELD VERIFY ALL EXISTING CONDITIONS AND THEIR COMPATIBILITY WITH NEW CONSTRUCTION PRIOR TO THE COMMENCEMENT OF WORK. COORDINATE DISCREPANCIES WITH ARCHITECT.

2. DO NOT SCALE DRAWINGS.

3. SEE CIVIL, STRUCTURAL, MECHANICAL AND ELECTRICAL DRAWINGS FOR MORE INFORMATION.

4. SEE SHEET AE201 FOR EXTERIOR FINISH COLORS.

5. SEE STRUCTURAL DRAWINGS FOR CANOPY DETAILS.

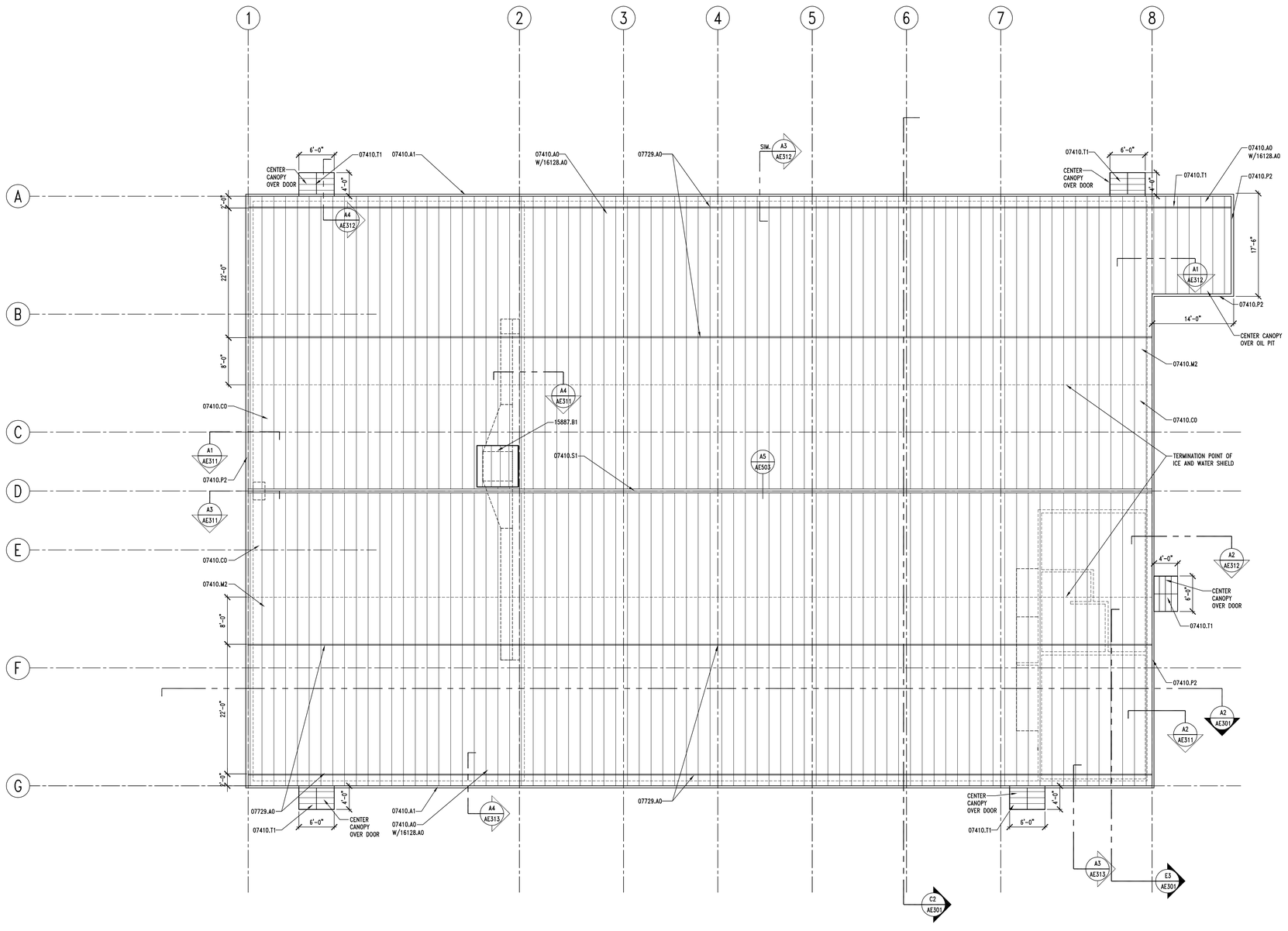

A2 ROOF PLAN

AE141 | REF.

SCALE: 1/8" = 1'-0"

NORTH

8' 6' 4' 2' 0' 4' 8' 16'

CLIENT

UDOT CONNECTING COMMUNITIES

STATION #2434
6072 E. EMIGRATION CANYON RD.
PARLEY'S CANYON, UTAH

DESIGNER

ARCHIPLEX GROUP
architecture · planning · design services
255 Crossroad Square
Salt Lake City, UT 84115
P:(801) 961-7070
F:(801) 961-7373

CONSULTANTS

REGISTRATION

STATE OF UTAH
RALPH M. STANISLAW
06-210619-0501
LICENSED ARCHITECT

ISSUE

MARK	DATE	DESCRIPTION
	01-09	Revised Contruction Doc.
	10-08	Construction Documents
	8-20-08	90% Review Submittal

ARCHIPLEX PROJECT NO:	0728.02
DFCM PROJECT NO:	08211900
DRAWN BY:	A. PHILLIPS
CHECKED BY:	R. STANISLAW
SCALE:	1/8" = 1'-0"
DATE:	JANUARY, 2009

KEY PLAN

SHEET TITLE

ROOF PLAN

AE141

© 2004 ARCHIPLEX GROUP

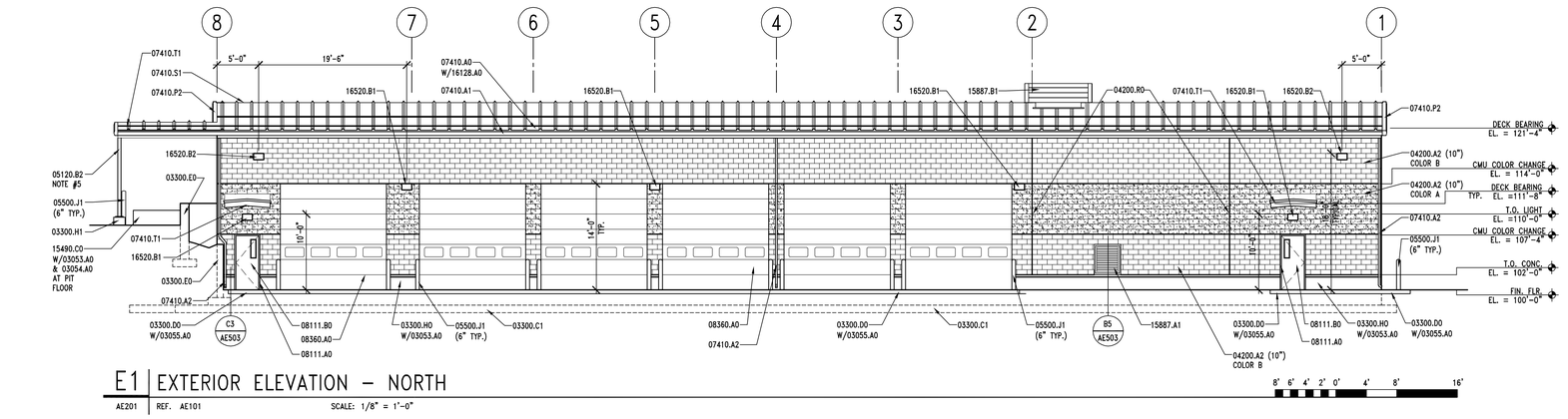

E1 EXTERIOR ELEVATION – NORTH

AE201 REF. AE101 SCALE: 1/8" = 1'-0"

8' 6' 4' 2' 0' 4' 8' 16'

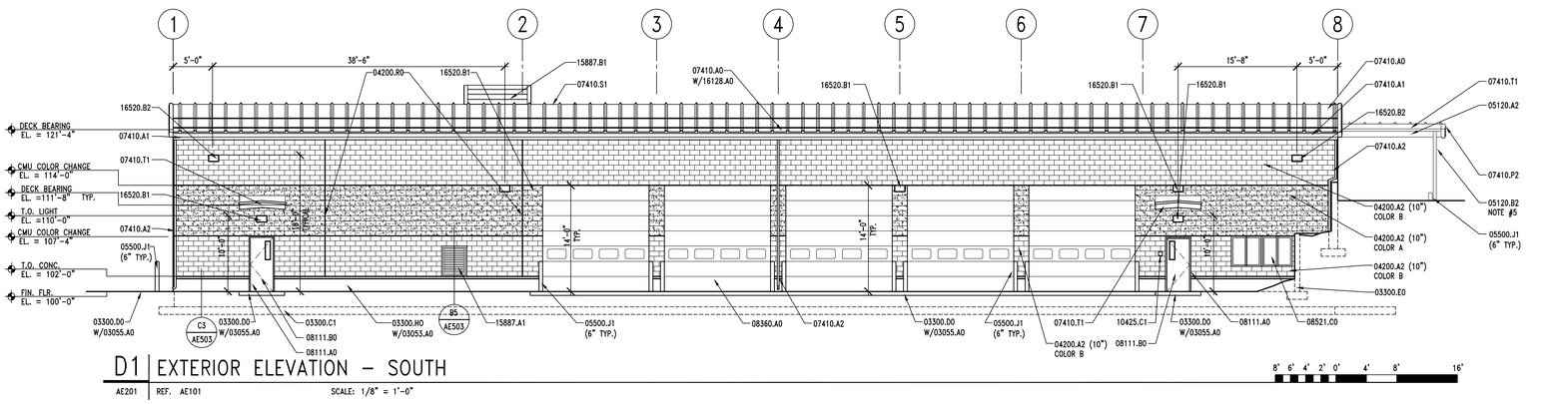

D1 EXTERIOR ELEVATION – SOUTH

AE201 REF. AE101 SCALE: 1/8" = 1'-0"

8' 6' 4' 2' 0' 4' 8' 16'

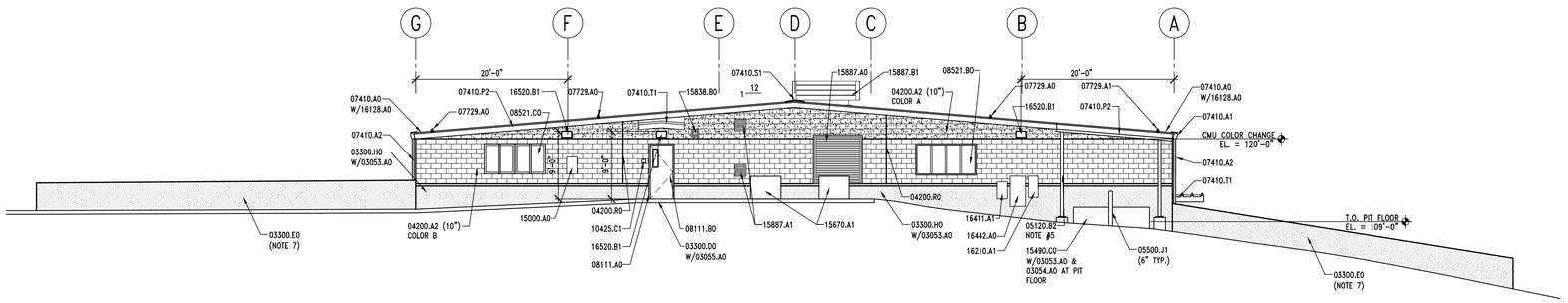

B1 EXTERIOR ELEVATION – EAST

AE201 REF. AE101 07729.A0 SCALE: 1/8" = 1'-0"

8' 6' 4' 2' 0' 4' 8' 16'

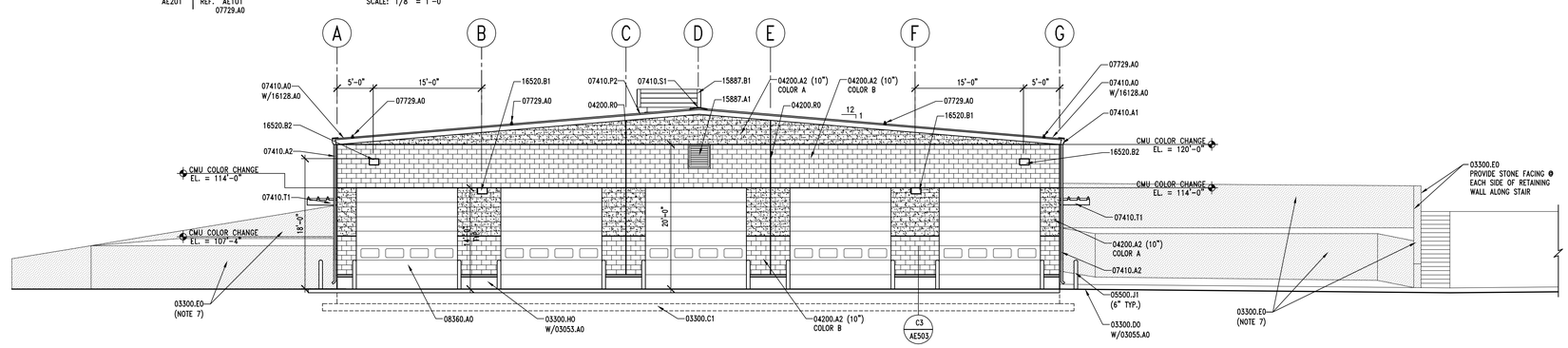

A1 EXTERIOR ELEVATION – WEST

AE201 REF. AE101 SCALE: 1/8" = 1'-0"

8' 6' 4' 2' 0' 4' 8' 16'

EXTERIOR ELEVATION KEYNOTES

03053.A0 CONCRETE WATER PROOFING ADMIXTURE
03054.A0 OLIOPHOBIC TOPICAL SEALER
03055.A0 SALT AND WATER BARRIER
03300.C1 FOOTING – SEE STRUCTURAL
03300.D0 CONCRETE PAD
03300.E0 CONCRETE RETAINING WALL WITH CULTURED STONE FACING – COORD. WITH CIVIL & STRUCTURAL
03300.H0 FOUNDATION WALL – SEE STRUCTURAL
03300.H1 CONCRETE PIER – SEE STRUCTURAL

04200.A2 CMU (SIZE)
04200.R0 MASONRY CONTROL JOINT

05120.A2 STEEL BEAM – SEE STRUCTURAL – PRIMED AND PAINTED
05120.B2 STEEL COLUMN – SEE STRUCTURAL – PRIMED & PAINTED
05500.J1 PIPE BOLLARD (DIAMETER) GALVANIZED AND PAINTED

07190.A0 CLEAR WATER RESISTANT COATING
07410.A0 STANDING SEAM METAL ROOF
07410.A1 RAIN GUTTER W/CONTINUOUS HEAT TAPE
07410.A2 DOWNSPOUT W/CONTINUOUS HEAT TAPE
07410.P2 RAKE TRIM
07410.S1 STANDING SEAM METAL ROOF RIDGE
07410.T1 STANDING SEAM METAL CANOPY
07729.A0 STANDING SEAM METAL ROOF 2 PIPE SNOW GUARD SYSTEM

08111.A0 PRESSED METAL FRAME
08111.B0 HOLLOW METAL DOOR
08360.A0 HEAVY DUTY OVERHEAD SECTIONAL DOOR
08521.B0 FIXED VINYL WINDOW
08521.C0 VINYL WINDOW W/SLIDING GLASS PANEL

10425.C1 ACCESSIBLE SIGNAGE

15000.A0 GAS METER – SEE PLUMBING DRAWINGS
15490.C0 WASTE OIL PIT
15670.A1 CONDENSER UNIT – SEE MECHANICAL
15838.A0 EXHAUST FAN – SEE MECHANICAL
15838.B0 VENT
15838.A1 EXHAUST FAN VENT – SEE MECHANICAL
15887.A1 LOUVER WITH BIRD SCREEN – SEE MECHANICAL
15887.B1 INTAKE GRAVITY HOOD – SEE MECHANICAL

16128.A0 LOW VOLTAGE DE-ICING SNOW MELTING SYSTEM
16210.A1 ELECTRICAL METER – SEE ELECTRICAL
16411.A1 EMERGENCY DISCONNECT – SEE ELECTRICAL
16442.A0 ELECTRICAL PANEL
16520.B1 EXTERIOR WALL MOUNTED LIGHTS
16520.B2 EXTERIOR WALL MOUNTED FLOOD LIGHTS

GENERAL NOTES

1. FIELD VERIFY ALL EXISTING CONDITIONS AND THEIR COMPATIBILITY WITH NEW CONSTRUCTION PRIOR TO THE COMMENCEMENT OF WORK. COORDINATE DISCREPANCIES WITH ARCHITECT.

2. DO NOT SCALE DRAWINGS.

3. SEE SHEET AE602 FOR WINDOW TYPES AND DETAILS.

4. SEE STRUCTURAL, MECHANICAL AND ELECTRICAL DRAWINGS FOR MORE INFORMATION.

5. PAINT ALL EXPOSED, EXTERIOR STEEL AT OIL PIT CANOPY – COLOR TO MATCH TRIM.

6. SEE AE101 FOR CONTROL JOINT DIMENSIONS

7. CULTURED STONE FACING AT ALL CONCRETE RETAINING WALLS – RANDOM ASHLAR PATTERN TO MATCH HARRISTONE LEDGESTONE PATTERN – HAZELWOOD COLOR

EXTERIOR COLOR SCHEDULE

(04200.A2) CMU: COLOR A & B BY ARCHITECT
(05500.J1) BOLLARDS: OSHA SAFETY YELLOW
(07410.A0) METAL ROOF: COLOR BY ARCHITECT
(07410.A1 & 07410.P2) GUTTERS & RAKE TRIM: SILICONIZED POLYESTER FINISH COLOR BY ARCHITECT.
(07410.A2) DOWNSPOUTS: SILICONIZED POLYESTER FINISH – COLOR BY ARCHITECT
(08111.B0) DOORS & FRAMES: KYNAR 500 WHITE
(08521.B0) WINDOW FRAMES: KYNAR 500 WHITE
(15490.C0) WASTE OIL PIT: OSHA SAFETY RED
(15838.A0) EXHAUST FAN: PRE-FINISHED KYNAR 500 WHITE
(15838.A1) EXHAUST FAN VENT: PRE-FINISHED KYNAR 500 WHITE
(15887.A1) LOUVERS: PRE-FINISHED KYNAR 500 WHITE
(16520.B1 & 16520.B2) EXTERIOR LIGHT FIXTURES: WHITE

RANDOM ASHLAR PATTERN

CLIENT

UDOT CONNECTING COMMUNITIES

STATION #2434
6072 E. EMIGRATION CANYON RD.
PARLEY'S CANYON, UTAH

DESIGNER

ARCHIPLEX GROUP
architecture · planning · design services
255 Crossroad Square
Salt Lake City, UT 84115
P:(801) 961-7070
F:(801) 961-7373

CONSULTANTS

REGISTRATION

STATE OF UTAH
RALPH M. STANISLAW
95-210619-0301
LICENSED ARCHITECT

ISSUE

MARK	DATE	DESCRIPTION
	01-09	Revised Contruction Doc.
	10-08	Construction Documents
	8-20-08	90% Review Submittal

ARCHIPLEX PROJECT NO:	0728.02
DFCM PROJECT NO:	08211900
DRAWN BY:	A. PHILLIPS
CHECKED BY:	R. STANISLAW
SCALE:	1/8" = 1'-0"
DATE:	JANUARY, 2009

KEY PLAN

SHEET TITLE

EXTERIOR ELEVATIONS

AE201

© 2004 ARCHIPLEX GROUP

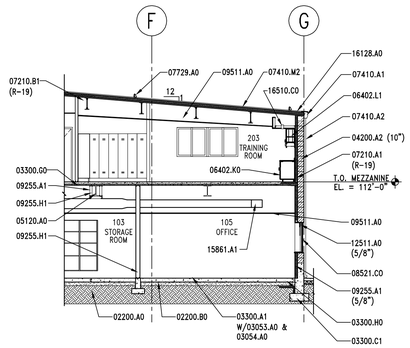

E3 BUILDING SECTION

AE301 | REF. AE101 | SCALE: 1/8" = 1'-0"

8' 6' 4' 2' 0' 4' 8' 16'

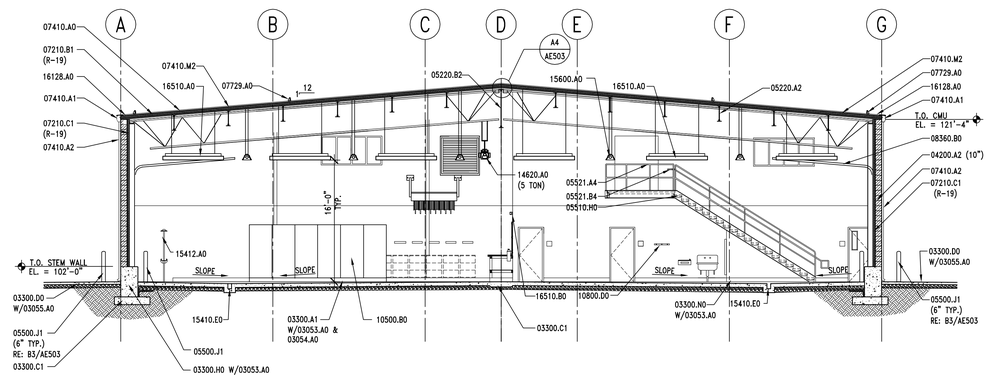

C2 BUILDING SECTION

AE301 | REF. AE101 | SCALE: 1/8" = 1'-0"

8' 6' 4' 2' 0' 4' 8' 16'

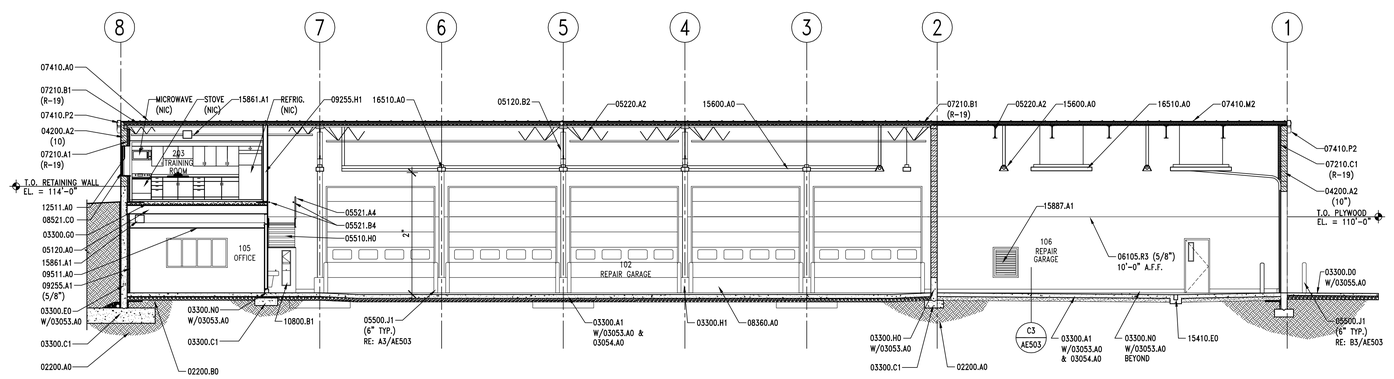

A2 BUILDING SECTION

AE301 | REF. AE101 | SCALE: 1/8" = 1'-0"

8' 6' 4' 2' 0' 4' 8' 16'

BUILDING SECTION KEYNOTES

02200.A0 COMPACTED FILL
02200.B0 GRAVEL BASE

03053.A0 CONCRETE WATER PROOFING ADMIXTURE
03054.A0 OLIOPHOBIC TOPICAL SEALER
03055.A0 SALT AND WATER BARRIER
03300.A1 CONCRETE SLAB-ON-GRADE - SEE STRUCTURAL
03300.C1 FOOTING - SEE STRUCTURAL
03300.D0 CONCRETE PAD
03300.E0 CONCRETE RETAINING WALL - SEE STRUCTURAL
03300.G0 CONCRETE OVER METAL DECK - SEE STRUCTURAL
03300.H0 FOUNDATION WALL - SEE STRUCTURAL
03300.H1 CONCRETE PIER - SEE STRUCTURAL
03300.N0 CONCRETE CURB

04200.A2 (SIZE)

05120.A0 STEEL BEAM - SEE STRUCTURAL
05120.B2 STEEL COLUMN - SEE STRUCTURAL - PRIMED AND PAINTED
05220.A2 STEEL JOISTS - SEE STRUCTURAL - PRIMED AND PAINTED
05500.J1 PIPE BOLLARD (DIAMETER) GALV. AND PAINTED
05510.H0 CONC. FILLED METAL PAN STAIR - PAINTED
05521.A4 1 1/2" O.D. PIPE GUARDRAIL - PAINTED
05521.B4 1 1/2" O.D. HANDRAIL - PAINTED

06105.R3 PLYWOOD PANEL (THICKNESS)
06402.K0 BASE UNIT (FINISH)
06402.L1 WALL UNIT (FINISH)

07210.A1 BATT INSULATION (R-VALUE)
07210.B1 RIGID INSULATION (R-VALUE)
07210.C1 RIGID INSULATION (CONTINUOUSLY ADHERED TO CMU) W/FOIL FACED VAPOR BARRIER TOWARDS INTERIOR (R-VALUE)
07410.A0 STANDING SEAM METAL ROOF
07410.A1 RAIN GUTTER W/CONTINUOUS HEAT TAPE
07410.A2 DOWNSPOUT W/CONTINUOUS HEAT TAPE
07410.M2 ICE AND WATER SHIELD
07410.P2 RAKE TRIM
07729.A0 STANDING SEAM METAL ROOF 2 PIPE SNOWGUARD SYSTEM

08360.A0 HEAVY DUTY OVERHEAD SECTIONAL DOOR
08360.B0 3" HEAVY DUTY OVERHEAD SECTIONAL DOOR TRACK
08521.C0 VINYL WINDOW WITH SLIDING GLASS PANEL

09255.A1 GYPSUM BOARD (THICKNESS)
09255.H1 METAL STUD (SIZE)
09511.A0 LAY-IN ACOUSTICAL CEILING SYSTEM

10500.B0 METAL STORAGE CABINETS - W/HOLD DOWN ANCHORS
10800.B1 SEMI-RECESSED PAPER TOWEL DISPENSER & WASTE RECEPTACLE
10800.D0 MOP RACK

12511.A0 HORIZONTAL LOUVER BLINDS

14620.A0 TROLLEY HOIST (SIZE)

15410.E0 TRENCH DRAIN
15412.A0 EMERGENCY SHOWER & EYE WASH
15600.A0 NATURAL GAS RADIANT HEATING SYSTEM
15861.A1 MECHANICAL DUCTWORK - SEE MECHANICAL
15887.A1 LOUVER W/ BIRD SCREEN - SEE MECHANICAL

16128.A0 LOW VOLTAGE DE-ICING SNOW MELTING CABLE SYSTEM
16510.A0 INTERIOR LIGHTS
16510.B0 WALL MOUNTED INTERIOR LIGHTS
16510.C0 INTERIOR SOFFIT CAN LIGHTS - SEE ELECTRICAL

GENERAL NOTES

1. FIELD VERIFY ALL EXISTING CONDITIONS AND THEIR COMPATIBILITY WITH NEW CONSTRUCTION PRIOR TO THE COMMENCEMENT OF WORK. COORDINATE DISCREPANCIES WITH ARCHITECT.

2. DO NOT SCALE DRAWINGS.

3. SEE CIVIL, STRUCTURAL, MECHANICAL AND ELECTRICAL DRAWINGS FOR MORE INFORMATION.

4. PROVIDE 03053.A0 AT ALL CONCRETE CURBS, PIERS, SLABS, STEM WALL ETC. U.N.O.

5. PROVIDE 03054.A0 OVER ENTIRE FLOOR SLAB IN ROOMS 101, 102, 103, 106, AND STAIRS.

CLIENT

UDOT CONNECTING COMMUNITIES

STATION #2434
6072 E. EMIGRATION CANYON RD.
PARLEY'S CANYON, UTAH

DESIGNER

ARCHIPLEX GROUP
architecture · planning · design services
255 Crossroad Square
Salt Lake City, UT 84115
P:(801) 961-7070
F:(801) 961-7373

CONSULTANTS

REGISTRATION

STATE OF UTAH
RALPH M. STANISLAW
95-310818-0301
LICENSED ARCHITECT

ISSUE

MARK	DATE	DESCRIPTION
	01-09	Revised Contruction Doc.
	10-08	Construction Documents
	8-20-08	90% Review Submittal

ARCHIPLEX PROJECT NO:	0728.02
DFCM PROJECT NO:	08211900
DRAWN BY:	B. BEECHER
CHECKED BY:	K. PHILLIPS
SCALE:	1/8" = 1'-0"
DATE:	JANUARY, 2009

KEY PLAN

SHEET TITLE

BUILDING SECTIONS

AE301

© 2004 ARCHIPLEX GROUP

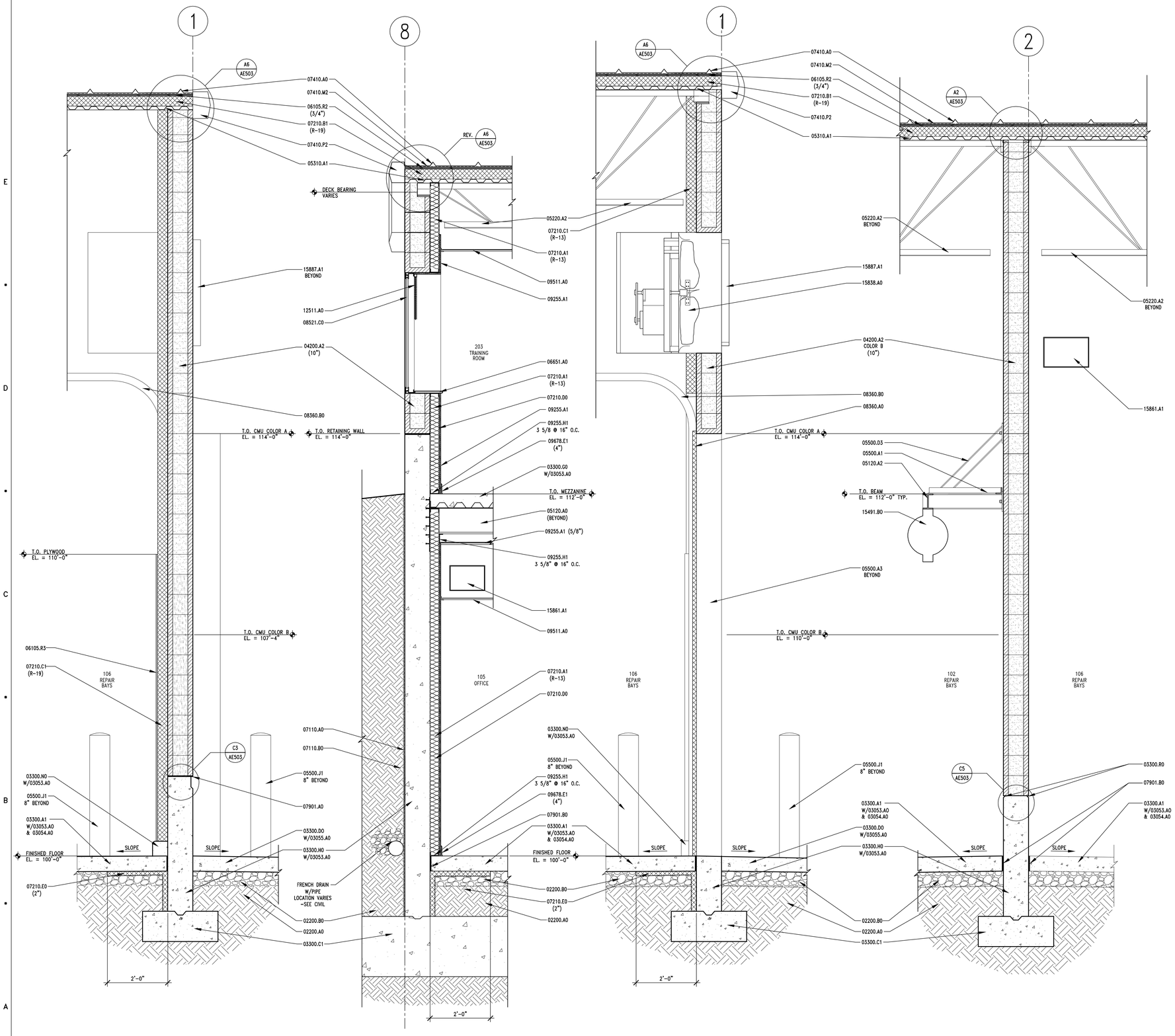

A1 | WALL SECTION

AE311 | REF. AE101 | SCALE: 3/4" = 1'-0"

12" 8" 4" 0 6" 1' 2' 3'

A2 | WALL SECTION

AE311 | REF. AE101 | SCALE: 3/4" = 1'-0"

12" 8" 4" 0 6" 1' 2' 3'

A3 | WALL SECTION

AE311 | REF. AE101 | SCALE: 3/4" = 1'-0"

12" 8" 4" 0 6" 1' 2' 3'

A4 | WALL SECTION

AE311 | REF. AE101 | SCALE: 3/4" = 1'-0"

12" 8" 4" 0 6" 1' 2' 3'

KEYNOTES

02200.A0	COMPACTED FILL
02200.B0	GRAVEL BASE
03053.A0	CONCRETE WATER PROOFING ADMIXTURE
03054.A0	OLIOPHOBIC TOPICAL SEALER
03055.A0	SALT AND WATER BARRIER
03300.A1	CONCRETE – SLAB ON GRADE – SEE STRUCTURAL
03300.C1	FOOTING – SEE STRUCTURAL
03300.D0	CONCRETE PAD
03300.G0	CONCRETE OVER METAL DECK – SEE STRUCTURAL
03300.H0	FOUNDATION WALL – SEE STRUCTURAL
03300.H1	CONCRETE PIER – SEE STRUCTURAL
03300.N0	CONCRETE CURB
03300.P6	CHAMFER JOINT
04200.A2	CMU (SIZE)
05120.A0	STEEL BEAM – SEE STRUCTURAL
05120.A2	STEEL BEAM – SEE STRUCTURAL – PRIMED AND PAINTED
05220.A2	STEEL JOISTS – SEE STRUCTURAL – PRIMED AND PAINTED
05310.A1	METAL DECK – SEE STRUCTURAL
05500.A1	ANGLE – SEE STRUCTURAL
05500.A3	STEEL ANGLE (SIZE) – GALVANIZED – PRIMED AND PAINTED
05500.D3	CHANNEL – SEE STRUCTURAL – PRIMED AND PAINTED
05500.J1	PIPE BOLLARD (DIAMETER) GALV. AND PAINTED
06105.I2	BLOCKING AS REQUIRED
06105.R2	SHEATHING – PLYWOOD (THICKNESS)
06105.R3	PLYWOOD PANEL (THICKNESS) – MECHANICALY FASTENED THROUGH INSULATION INTO CMU WALL
06651.A0	1/2" WHITE SOLID SURFACE WINDOW SILL
07210.A1	BATT INSULATION (R-VALUE)
07210.B1	RIGID INSULATION (R-VALUE)
07210.C1	RIGID INSULATION (CONTINUOUSLY ADHERED TO CMU) W/FOIL FACED VAPOR BARRIER TOWARDS INTERIOR (R-VALUE)
07210.D0	VAPOR BARRIER
07210.E0	FOUNDATION WALL INSULATION (THICKNESS)
07410.A0	STANDING SEAM METAL ROOF
07410.M2	ICE & WATER SHIELD
07410.P2	RAKE TRIM
07901.A0	CONT. SEALANT
07901.B0	ASPHALT SATURATED FIBERBOARD
08360.A0	HEAVY DUTY OVERHEAD SECTIONAL DOOR
08360.B0	3" HEAVY DUTY OVERHEAD SECTIONAL DOOR TRACK
08521.C0	VINYL WINDOW WITH SLIDING GLASS PANEL
09255.A1	GYPSUM BOARD (THICKNESS)
09255.H1	METAL STUD (SIZE, SPACING)
09511.A0	LAY-IN ACOUSTICAL CEILING SYSTEM
09678.E1	RUBBER BASE (SIZE)
12511.A0	HORIZONTAL LOUVER BLINDS
15491.B0	OVERHEAD LUBE REEL
15838.A0	EXHAUST FAN – SEE MECHANICAL
15861.A1	MECHANICAL DUCTWORK SEE MECHANICAL
15887.A1	LOUVER W/ BIRD SCREEN – SEE MECHANICAL

GENERAL NOTES

1. FIELD VERIFY ALL EXISTING CONDITIONS AND THEIR COMPATIBILITY WITH NEW CONSTRUCTION PRIOR TO THE COMMENCEMENT OF WORK. COORDINATE DISCREPANCIES WITH ARCHITECT.

2. DO NOT SCALE DRAWINGS.

3. SEE CIVIL, STRUCTURAL, MECHANICAL AND ELECTRICAL DRAWINGS FOR MORE INFORMATION.

4. TWO BOLLARDS REQUIRED PER SECTIONAL DOOR JAMB. ALIGN WITH DOOR JAMB. SEE DETAILS A3 & B3/AE503.

CLIENT

UDOT CONNECTING COMMUNITIES

STATION #2434
6072 E. EMIGRATION CANYON RD.
PARLEY'S CANYON, UTAH

DESIGNER

ARCHIPLEX GROUP
architecture · planning · design services
255 Crossroad Square
Salt Lake City, UT 84115
P:(801) 961-7070
F:(801) 961-7373

CONSULTANTS

REGISTRATION

STATE OF UTAH
RALPH M. STAMBS,AIA
96-23089-0301
LICENSED ARCHITECT

ISSUE

MARK	DATE	DESCRIPTION
	01-09	Revised Contruction Doc.
	10-08	Construction Documents
	8-20-08	90% Review Submittal

ARCHIPLEX PROJECT NO:	0728.02
DFCM PROJECT NO:	08211900
DRAWN BY:	B. BEECHER
CHECKED BY:	K. PHILLIPS
SCALE:	3/4" = 1'-0"
DATE:	JANUARY, 2009

KEY PLAN

SHEET TITLE

WALL SECTIONS

AE311

© 2004 ARCHIPLEX GROUP

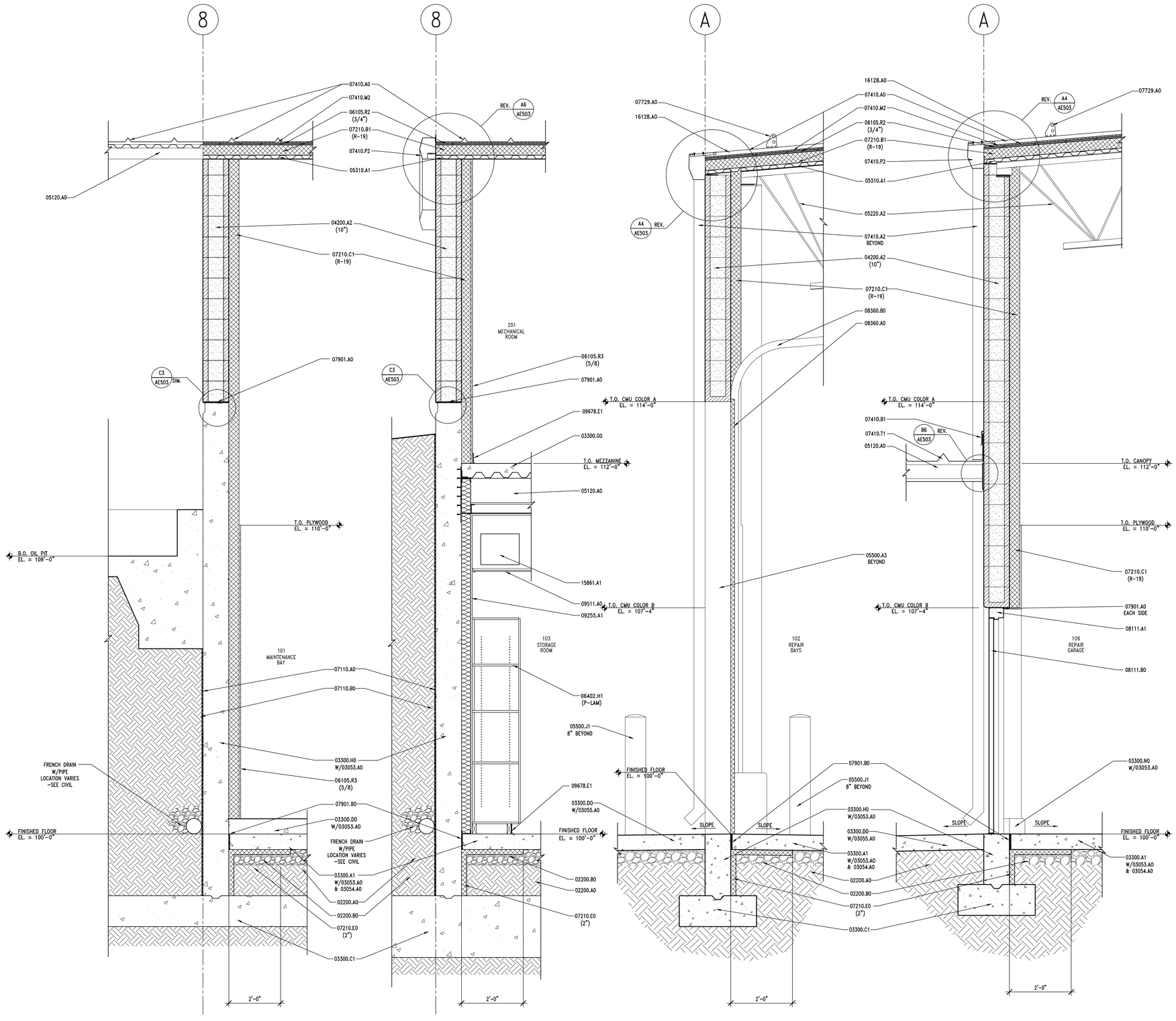

KEYNOTES

02200.A0	COMPACTED FILL
02200.B0	GRAVEL BASE
03053.A0	CONCRETE WATER PROOFING ADMIXTURE
03054.A0	OLIOPHOBIC TOPICAL SEALER
03055.A0	SALT AND WATER BARRIER
03300.A1	CONCRETE SLAB-ON-GRADE - SEE STRUCTURAL
03300.C1	FOOTING - SEE STRUCTURAL
03300.D0	CONCRETE PAD
03300.E0	CONCRETE RETAINING WALL - SEE STRUCTURAL
03300.G0	CONCRETE OVER METAL DECK - SEE STRUCTURAL
03300.H0	FOUNDATION WALL - SEE STRUCTURAL
03300.N0	CONCRETE CURB
04200.A2	CMU (SIZE)
05120.A0	STEEL BEAM - SEE STRUCTURAL
05220.A2	STEEL JOISTS - SEE STRUCTURAL - PRIMED AND PAINTED
05310.A1	METAL DECK - SEE STRUCTURAL
05500.A3	STEEL ANGLE (SIZE)
05500.J1	PIPE BOLLARD (DIAMETER) - GALVANIZED & PAINTED
06105.R2	SHEATHING - PLYWOOD (THICKNESS)
06105.R3	PLYWOOD PANEL (THICKNESS)
06402.H1	ADJUSTABALE SHELVES (FINISH)
07110.A0	SELF ADHESIVE MEMBRANE WATERPROOFING
07110.B0	PRE-FABRICATED DRAINAGE COMPOSITE MATERIAL
07210.B1	RIGID INSULATION (R-VALUE)
07210.C1	RIGID INSULATION (CONTINOUSLY ADHERED TO CMU) W/FOIL FACED VAPOR BARRIER TOWARDS INTERIOR (R-VALUE)
07210.E0	FOUNDATION WALL INSULATION (THICKNESS)
07410.A0	STANDING SEAM METAL ROOF
07410.A2	DOWNSPOUT W/CONTINUOUS HEAT TAPE
07410.B1	METAL REGLET
07410.M2	ICE & WATER SHIELD
07410.P2	RAKE TRIM
07410.T1	STANDING SEAM METAL ROOF CANOPY
07729.A0	STANDING SEAM METAL ROOF 2 PIPE SNOWGUARD SYSTEM
07901.A0	CONT. SEALANT
07901.B0	ASPHALT SATURATED FIBERBOARD
08111.A1	GROUT-FILLED PRESSED METAL FRAME
08111.B0	HOLLOW METAL DOOR
08360.A0	HEAVY DUTY OVERHEAD SECTIONAL DOOR
08360.B0	3" HEAVY DUTY OVERHEAD SECTIONAL DOOR TRACK
09255.A1	GYPSUM BOARD (THICKNESS)
09511.A0	LAY-IN ACOUSTICAL CEILING SYSTEM
09678.E1	RUBBER BASE (SIZE)
15861.A1	MECHANICAL DUCTWORK - SEE MECHANICAL
16128.A0	LOW VOLTAGE DE-ICING SNOW MELTING SYSTEM

GENERAL NOTES

1. FIELD VERIFY ALL EXISTING CONDITIONS AND THEIR COMPATIBILITY WITH NEW CONSTRUCTION PRIOR TO THE COMMENCEMENT OF WORK. COORDINATE DISCREPANCIES WITH ARCHITECT.

2. DO NOT SCALE DRAWINGS.

3. SEE CIVIL, STRUCTURAL, MECHANICAL AND ELECTRICAL DRAWINGS FOR MORE INFORMATION.

A1 | WALL SECTION — AE312 | REF. AE101 | SCALE: 3/4" = 1'-0"

A2 | WALL SECTION — AE312 | REF. AE101 | SCALE: 3/4" = 1'-0"

A3 | WALL SECTION — AE312 | REF. AE101 | SCALE: 3/4" = 1'-0"

A4 | WALL SECTION — AE312 | REF. AE101 | SCALE: 3/4" = 1'-0"

12" 8" 4" 0 6" 1' 2' 3'

CLIENT

UDOT CONNECTING COMMUNITIES

STATION #2434
6072 E. EMIGRATION CANYON RD.
PARLEY'S CANYON, UTAH

DESIGNER

ARCHIPLEX GROUP
architecture · planning · design services
255 Crossroad Square
Salt Lake City, UT 84115
P:(801) 961-7070
F:(801) 961-7373

CONSULTANTS

REGISTRATION

STATE OF UTAH
RALPH M. STANISLAW
95-310818-0301
LICENSED ARCHITECT

ISSUE

MARK	DATE	DESCRIPTION
	01-09	Revised Contruction Doc.
	10-08	Construction Documents
	8-20-08	90% Review Submittal

ARCHIPLEX PROJECT NO:	0728.02
DFCM PROJECT NO:	08211900
DRAWN BY:	A. PHILLIPS
CHECKED BY:	K. PHILLIPS
SCALE:	3/4" = 1'-0"
DATE:	JANUARY, 2009

KEY PLAN

SHEET TITLE

WALL SECTIONS

AE312

© 2004 ARCHIPLEX GROUP

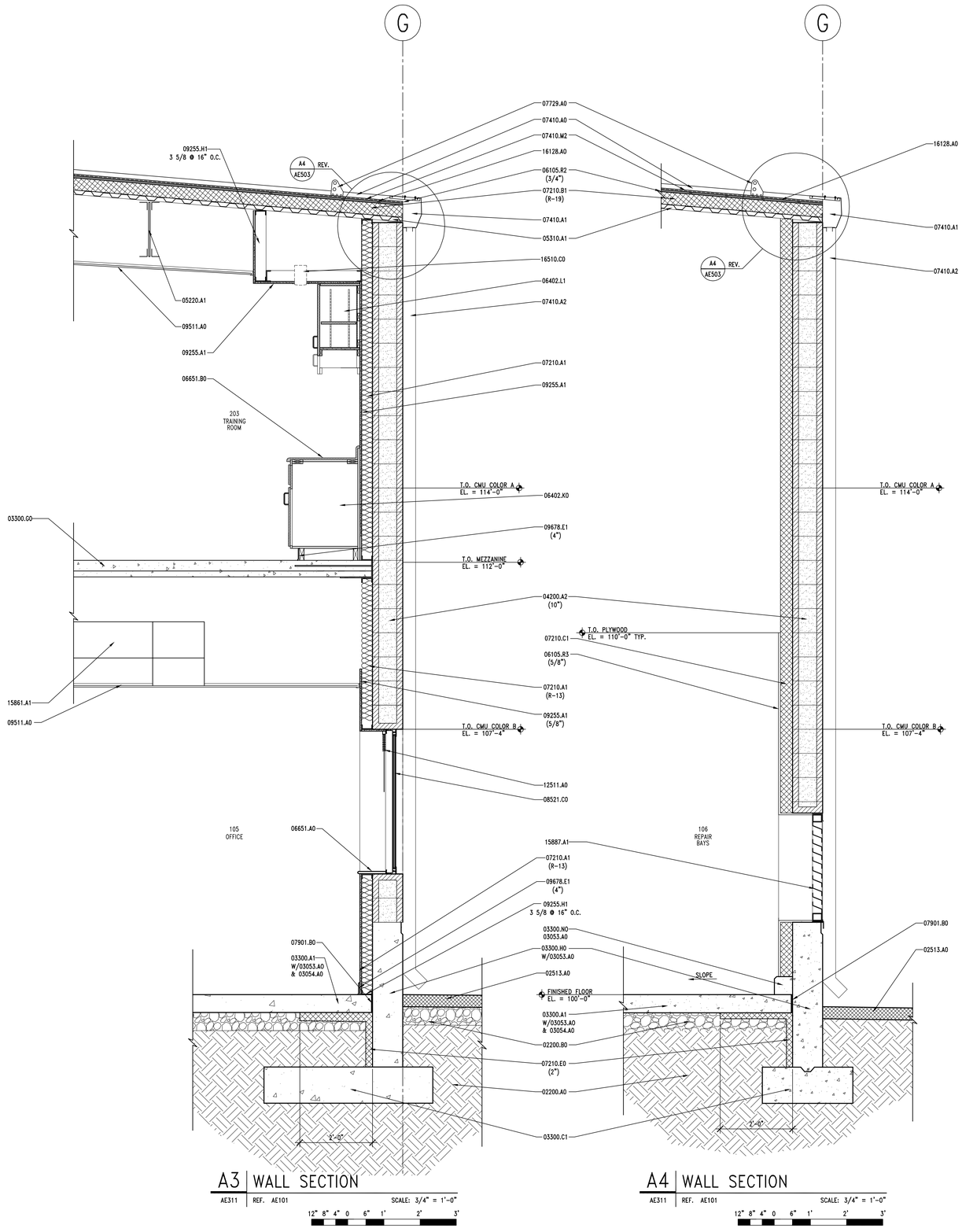

A3 | WALL SECTION

AE311 | REF. AE101 | SCALE: 3/4" = 1'-0"

12" 8" 4" 0 6" 1' 2' 3'

A4 | WALL SECTION

AE311 | REF. AE101 | SCALE: 3/4" = 1'-0"

12" 8" 4" 0 6" 1' 2' 3'

KEYNOTES

02200.A0	COMPACTED FILL
02200.B0	GRAVEL BASE
02513.A0	ASPHALT CONCRETE PAVING
03053.A0	CONCRETE WATER PROOFING ADMIXTURE
03054.A0	OLIOPHOBIC TOPICAL SEALER
03055.A0	SALT AND WATER BARRIER
03300.A1	CONCRETE – SLAB ON GRADE
03300.C1	FOOTING – SEE STRUCTURAL
03300.C0	CONCRETE OVER METAL DECK – SEE STRUCTURAL
03300.H0	FOUNDATION WALL – SEE STRUCTURAL
03300.N0	CONCRETE CURB
04200.A2	CMU (SIZE)
05220.A1	STEEL JOISTS – SEE STRUCTURAL
05310.A1	METAL DECK – SEE STRUCTURAL
06105.R2	SHEATHING – PLYWOOD (THICKNESS)
06105.R3	PLYWOOD PANEL (THICKNESS)
06402.L1	WALL UNIT (FINISH)
06402.K0	BASE UNIT (FINISH)
06651.A0	1/2" WHITE SOLID SURFACE WINDOW SILL
06651.B0	SOLID SURFACE COUNTER TOP
07210.A1	BATT INSULATION (R-VALUE)
07210.B1	INSULATION & VAPOR BARRIER (R-VALUE)
07210.C1	RIGID INSULATION (CONTINOUSLY ADHERED TO CMU) W/FOIL FACED VAPOR BARRIER TOWARDS INTERIOR (R-VALUE)
07210.E0	FOUNDATION WALL INSULATION (THICKNESS)
07410.A0	STANDING SEAM METAL ROOF
07410.A1	RAIN GUTTER W/CONTINUOUS HEAT TAPE
07410.A2	DOWNSPOUT W/CONTINUOUS HEAT TAPE
07410.M2	ICE & WATER SHIELD
07729.A0	STANDING SEAM METAL ROOF 2 PIPE SNOWGUARD SYSTEM
07901.B0	ASPHALT SATURATED FIBERBOARD
08521.C0	VINYL WINDOW WITH SLIDING GLASS PANEL
09255.A1	GYPSUM BOARD (THICKNESS)
09255.H1	METAL STUD (SIZE, SPACING)
09511.A0	LAY-IN ACOUSTICAL CEILING SYSTEM
09678.E1	RUBBER BASE (SIZE)
12511.A0	HORIZONTAL LOUVER BLINDS
15861.A1	MECHANICAL DUCTWORK SEE MECHANICAL
15887.A1	LOUVER W/ BIRD SCREEN – SEE MECHANICAL
16128.A0	LOW VOLTAGE DE-ICING SNOW MELTING SYSTEM
16510.C0	INTERIOR SOFFIT CAN LIGHTS – SEE ELECTRICAL

GENERAL NOTES

1. FIELD VERIFY ALL EXISTING CONDITIONS AND THEIR COMPATIBILITY WITH NEW CONSTRUCTION PRIOR TO THE COMMENCEMENT OF WORK. COORDINATE DISCREPANCIES WITH ARCHITECT.

2. DO NOT SCALE DRAWINGS.

3. SEE CIVIL, STRUCTURAL, MECHANICAL AND ELECTRICAL DRAWINGS FOR MORE INFORMATION.

CLIENT

UDOT CONNECTING COMMUNITIES

STATION #2434
6072 E. EMIGRATION CANYON RD.
PARLEY'S CANYON, UTAH

DESIGNER

ARCHIPLEX GROUP
architecture · planning · design services
255 Crossroad Square
Salt Lake City, UT 84115
P:(801) 961-7070
F:(801) 961-7373

CONSULTANTS

REGISTRATION

STATE OF UTAH
RALPH M. STANISLAW
95-312618-0301
LICENSED ARCHITECT

ISSUE

MARK	DATE	DESCRIPTION
	01-09	Revised Contruction Doc.
	10-08	Construction Documents
	8-20-08	90% Review Submittal

ARCHIPLEX PROJECT NO:	0728.02
DFCM PROJECT NO:	08211900
DRAWN BY:	A. PHILLIPS
CHECKED BY:	R. STANISLAW
SCALE:	1/8" = 1'-0"
DATE:	JANUARY, 2009

KEY PLAN

SHEET TITLE

WALL SECTIONS

AE313

©2004 ARCHIPLEX GROUP

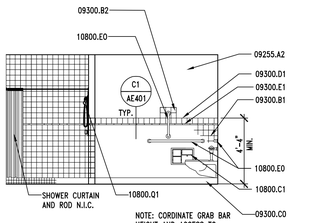

D1 | RESTROOM ELEVATION

AE401 | REF. AE401 | SCALE: 1/4" = 1'-0"

4' 3' 2' 1' 0' 2' 4' 8'

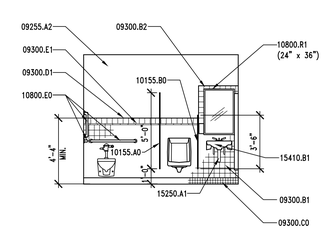

D2 | RESTROOM ELEVATION

AE401 | REF. AE401 | SCALE: 1/4" = 1'-0"

4' 3' 2' 1' 0' 2' 4' 8'

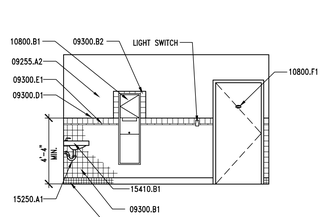

D3 | RESTROOM ELEVATION

AE401 | REF. AE401 | SCALE: 1/4" = 1'-0"

4' 3' 2' 1' 0' 2' 4' 8'

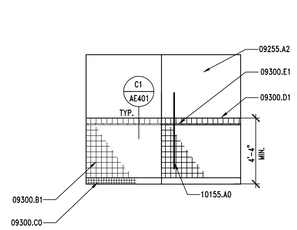

D4 | RESTROOM ELEVATION

AE401 | REF. AE401 | SCALE: 1/4" = 1'-0"

4' 3' 2' 1' 0' 2' 4' 8'

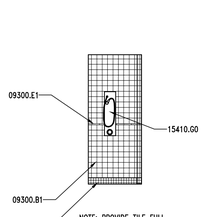

D5 | RESTROOM ELEVATION

AE401 | REF. AE401 | SCALE: 1/4" = 1'-0"

4' 3' 2' 1' 0' 2' 4' 8'

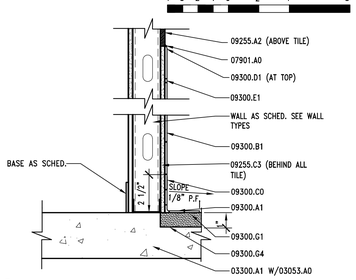

C1 | RECESSED SLAB DETAIL

AE401 | REF. AE401 | SCALE: 3" = 1'-0"

4" 3" 2" 1" 0 2" 4" 8"

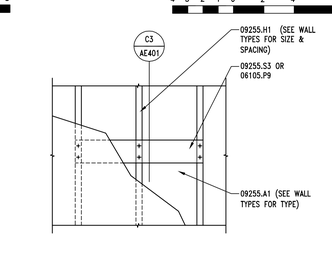

C2 | MOUNTING PLATE ELEV.

AE401 | REF. AE401 | SCALE: 3/4" = 1'-0"

12" 8" 4" 0 6" 1' 2' 3'

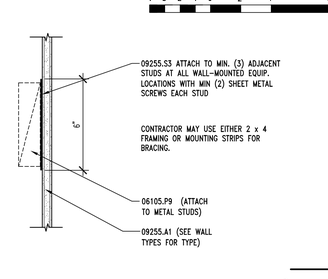

C3 | MOUNTING PLATE SECTION

AE401 | REF. AE401 | SCALE: 3" = 1'-0"

4" 3" 2" 1" 0 2" 4" 8"

C4 | MOUNTING HEIGHTS

AE401 | REF. AE401 | SCALE: 3/8" = 1'-0"

12"6" 0 1' 2' 4'

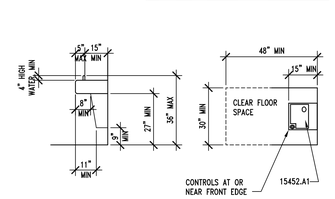

B1 | ACCESSIBLE DRINKING FOUNTAIN DETAIL

AE401 | REF. AE401 | SCALE: 3/8" = 1'-0"

12"6" 0 1' 2' 4'

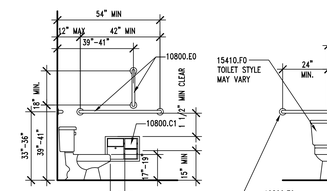

B2 | ACCESSIBLE TOILET DETAIL

AE401 | REF. AE401 | SCALE: 3/8"= 1'-0"

12"6" 0 1' 2' 4'

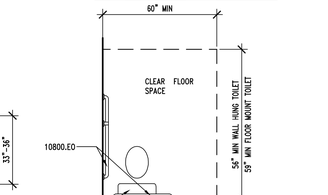

B3 | ACCESSIBLE TOILET SECTION

AE401 | REF. AE401 | SCALE: 3/8"= 1'-0"

12"6" 0 1' 2' 4'

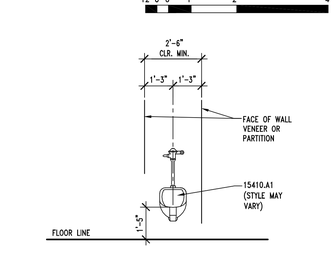

A1 | ACCESSIBLE URINAL DETAIL

AE401 | REF. AE401 | SCALE: 3/8" = 1'-0"

12"6" 0 1' 2' 4'

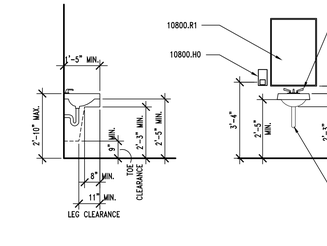

A2 | ACCESSIBLE SINK DETAIL

AE401 | REF. AE401 | SCALE: 3/8" = 1'-0"

12"6" 0 1' 2' 4'

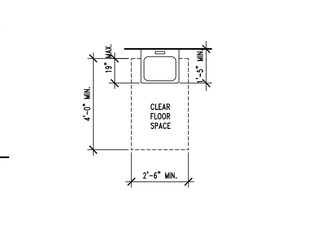

A3 | ACCESSIBLE SINK SECTION

AE401 | REF. AE401 | SCALE: 3/8" = 1'-0"

12"6" 0 1' 2' 4'

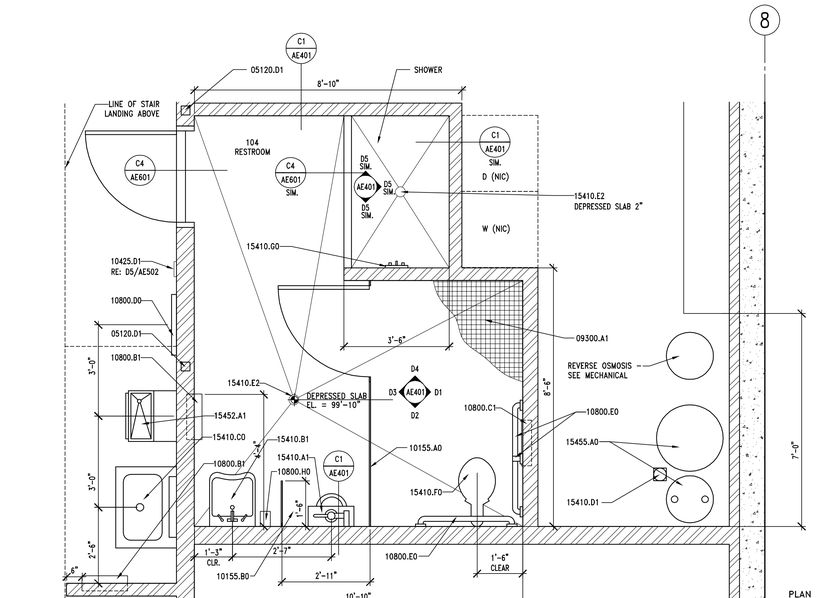

A4 | ENLARGED RESTROOM PLAN

AE401 | REF. AE101 | SCALE: 1/2" = 1'-0"

24"18" 12" 6" 0" 1' 2' 4'

KEYNOTES

03053.A0	CONCRETE WATER PROOFING ADMIXTURE
03300.A1	CONCRETE SLAB-ON-GRADE - SEE STRUCTURAL
05120.D1	TUBE STEEL COLUMN - SEE STRUCTURAL
06105.P9	2 x FRAMING, FIRE TREATED
07901.A0	CONTINUOUS SEALANT
09255.A1	GYPSUM BOARD (THICKNESS)
09255.A2	WATER RESISTANT GYPSUM BOARD (THICKNESS)
09255.C3	CEMENT BOARD (THICKNESS)
09255.H1	METAL STUDS (SIZE, SPACING)
09255.S3	18 GA. METAL MOUNTING STRIPS
09300.A1	FLOOR TILE - SEE FINISH SCHEDULE
09300.B1	WALL TILE - SEE FINISH SCHEDULE
09300.B2	PROVIDE TILE FRAME AROUND FIXTURE
09300.C0	TILE BASE - SEE FINISH SCHEDULE
09300.D1	BULLNOSE TILE - SEE FINISH SCHEDULE
09300.E1	1/2" x 6" TILE TRIM PIECE - SEE FINISH SCHEDULE
09300.G1	MORTAR BED
09300.G4	WATERPROOF MEMBRANE
10155.A0	TOILET STALL PARTITION
10155.B0	URINAL STALL PARTITION
10425.D1	ACCESSIBLE/UNISEX RESTROOM SIGNAGE
10800.B1	SEMI-RECESSED PAPER TOWEL DISPENSER & WASTE RECEPTACLE
10800.C1	RECESSED TOILET TISSUE DISPENSER/SAN. NAP. DISPOSAL
10800.D0	MOP RACK
10800.E0	GRAB BAR
10800.F1	DOUBLE PRONG ROBE HOOK
10800.H0	SOAP DISPENSER
10800.Q1	ADA COMLIANT SHOWER HEAD
10800.R1	FRAMED MIRROR (SIZE)
15250.A1	PIPE INSULATION AT ALL EXPOSED PIPE
15410.A1	URINAL, ACCESSIBLE
15410.B1	SINK AND FAUCET WITH ADA LEVER HANDLES
15410.C0	UTILITY SINK
15410.D1	FLOOR SINK
15410.E2	FLOOR DRAIN
15410.F0	TOILET
15410.G0	ADA ACCESSIBLE SHOWER HEAD - SEE MECHANICAL
15452.A1	DRINKING FOUNTAIN
15455.A0	WATER SOFTNER SYSTEM

GENERAL NOTES

1. FIELD VERIFY ALL EXISTING CONDITIONS AND THEIR COMPATIBILITY WITH NEW CONSTRUCTION PRIOR TO THE COMMENCEMENT OF WORK. COORDINATE DISCREPANCIES WITH ARCHITECT.

2. DO NOT SCALE DRAWINGS.

3. SEE CIVIL, STRUCTURAL, MECHANICAL AND ELECTRICAL DRAWINGS FOR MORE INFORMATION.

4. PROVIDE BACKING BEHIND ALL SURFACE MOUNTED EQUIPMENT AND/OR FIXTURES PER DETAIL C2/AE401

5. SEE C4/AE401 FOR TYPICAL FIXTURE MOUNTING HEIGHTS.

6. SEE DETAILS A1, A2, B1 & B2/AE401 FOR ADA TYPICAL DETAILS

CLIENT

UDOT CONNECTING COMMUNITIES

STATION #2434
6072 E. EMIGRATION CANYON RD.
PARLEY'S CANYON, UTAH

DESIGNER

ARCHIPLEX GROUP
architecture · planning · design services
255 Crossroad Square
Salt Lake City, UT 84115
P:(801) 961-7070
F:(801) 961-7373

CONSULTANTS

REGISTRATION

STATE OF UTAH
RALPH M. STANISLAW
05-210519-0301
LICENSED ARCHITECT

ISSUE

MARK	DATE	DESCRIPTION
	01-09	Revised Contruction Doc.
	10-08	Construction Documents
	8-20-08	90% Review Submittal

ARCHIPLEX PROJECT NO:	0728.02
DFCM PROJECT NO:	08211900
DRAWN BY:	A. PHILLIPS
CHECKED BY:	R. STANISLAW
SCALE:	AS SHOWN
DATE:	JANUARY, 2009

KEY PLAN

SHEET TITLE

ENLARGED RESTROOM FLOOR PLAN, INTERIOR ELEVATIONS AND DETAILS

AE401

© 2004 ARCHIPLEX GROUP

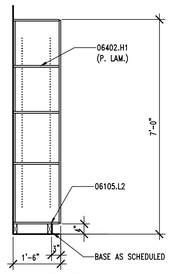

D1 | SHELVING SECTION

AE402 | REF. AE402 | SCALE: 1/2" = 1'-0"

24" 18" 12" 6" 0 1' 2' 4'

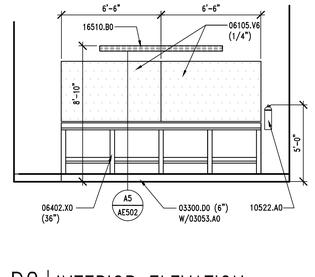

D2 | INTERIOR ELEVATION

AE402 | REF. AE101 | SCALE: 1/4" = 1' -0"

4' 3' 2' 1' 0' 2' 4' 8'

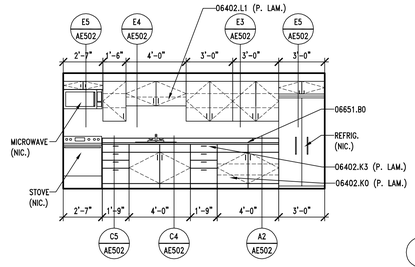

D3 | INTERIOR ELEVATION

AE402 | REF. AE101 | SCALE: 1/4" = 1' -0"

4' 3' 2' 1' 0' 2' 4' 8'

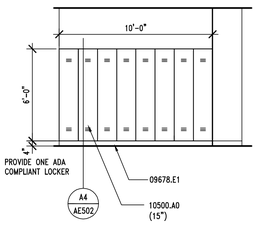

C1 | LOCKER ELEVATION

AE402 | REF. AE101 & AE401 | SCALE: 1/4" = 1'-0"

4' 3' 2' 1' 0' 2' 4' 8'

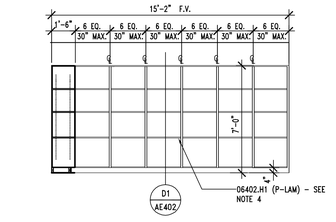

C2 | TYP. SHELVING ELEVATION

AE402 | REF. AE101 | SCALE: 1/4" = 1'-0"

4' 3' 2' 1' 0' 2' 4' 8'

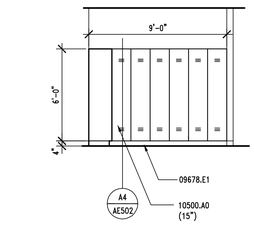

C3 | LOCKER ELEVATION

AE402 | REF. AE101 & AE401 | SCALE: 1/4" = 1'-0"

4' 3' 2' 1' 0' 2' 4' 8'

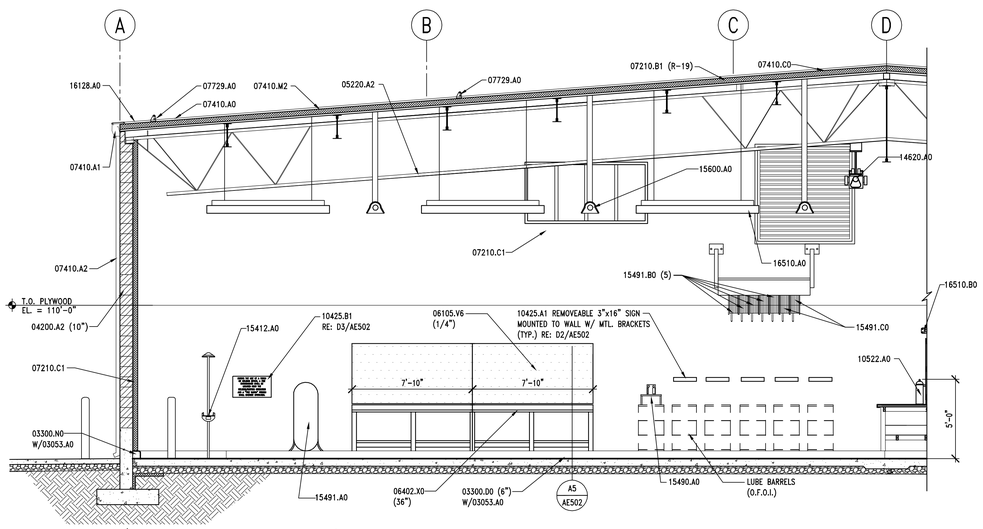

A1 | INTERIOR ELEVATION/SECTION

AE402 | REF. AE402 | SCALE: 1/4" = 1' -0"

4' 3' 2' 1' 0' 2' 4' 8'

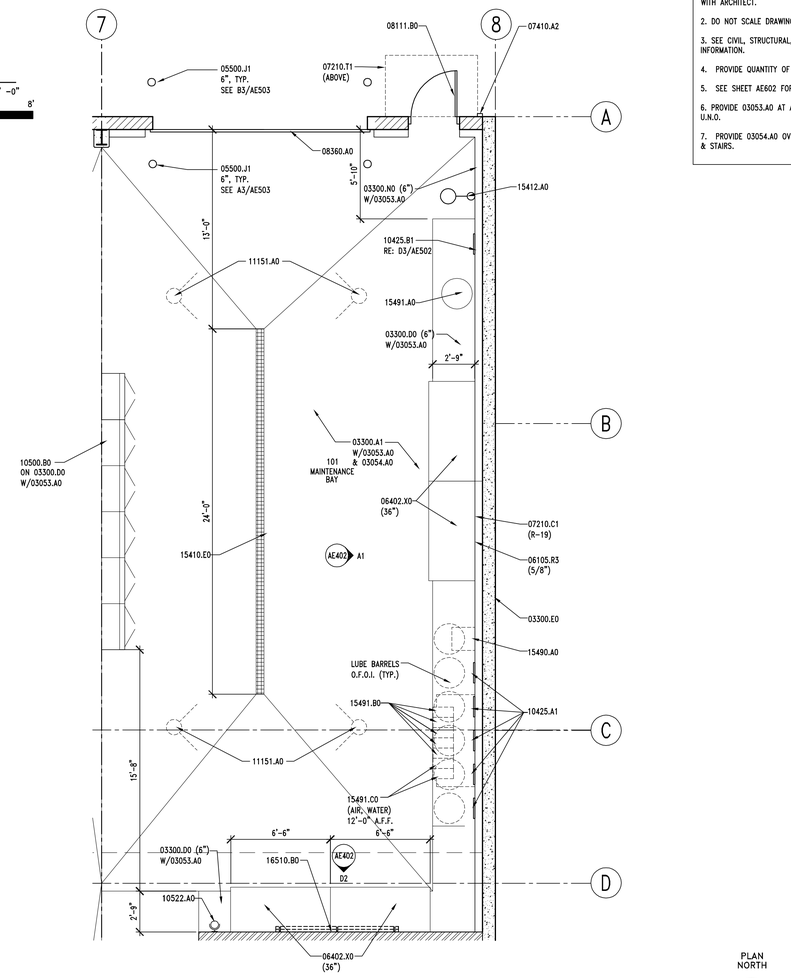

A4 | ENLARGED MAINTENANCE BAY

AE402 | REF. AE101 | SCALE: 1/4" = 1' -0"

4' 3' 2' 1' 0' 2' 4' 8'

PLAN NORTH

KEYNOTES

03053.A0	CONCRETE WATER PROOFING ADMIXTURE
03054.A0	OLIOPHOBIC TOPICAL SEALER
03300.A1	CONCRETE SLAB-ON-GRADE - SEE STRUCTURAL
03300.D0	CONCRETE PAD (SIZE)
03300.E0	CONCRETE RETAINING WALL - SEE STRUCTURAL
03300.N0	CONCRETE CURB (HEIGHT)
04200.A2	CMU (SIZE)
05500.J1	PIPE BOLLARD (DIAMETER) - GALV. & PAINTED
05220.A2	STEEL JOISTS - SEE STRUCTURAL - PRIMED AND PAINTED
06105.L2	BLOCKING AS REQUIRED
06105.R3	PLYWOOD PANEL (THICKNESS)
06105.V6	PEGBOARD (THICKNESS)
06402.H1	ADJUSTABLE SHELVES (FINISH)
06402.K0	BASE UNIT (FINISH)
06402.K3	BASE UNIT WITH DRAWERS (FINISH)
06402.L1	WALL UNIT (FINISH)
06402.X0	WORKBENCH (DEPTH)
06651.B0	SOLID SURFACE COUNTER TOP
07210.B1	INSULATION & VAPOR BARRIER (R-VALUE)
07210.C1	RIGID INSULATION (CONTINOUSLY ADHERED TO CMU) W/FOIL FACED VAPOR BARRIER TOWARDS INTERIOR (R-VALUE)
07210.E0	FOUNDATION WALL INSULATION
07410.A0	STANDING SEAM METAL ROOF
07410.A1	RAIN GUTTER W/CONTINUOUS HEAT TAPE
07410.A2	DOWNSPOUT W/CONTINUOUS HEAT TAPE
07410.C0	ROOFING FELT
07410.T1	STANDING SEAM METAL ROOF CANOPY
07410.M2	ICE & WATER SHIELD
07410.P2	RAKE TRIM
07729.A0	STANDING SEAM METAL ROOF 2 PIPE SNOWGUARD SYSTEM
08111.B0	HOLLOW METAL DOOR
08360.A0	HEAVY DUTY OVERHEAD SECTIONAL DOOR
09678.E1	RUBBER BASE (SIZE)
10425.A1	OIL SIGNAGE
10425.B1	WELDING SIGNAGE
10500.A0	METAL LOCKERS (WIDTH)
10500.B0	METAL STORAGE CABINETS W/HOLD DOWN ANCHORS
10522.A0	FIRE EXTINGUISHER
11151.A0	MOBILE LIFT - NIC - OWNER FURNISHED
14620.A0	TROLLEY HOIST (SIZE) - SEE STRUCTURAL
15410.E0	TRENCH DRAIN
15412.A0	EMERGENCY SHOWER & EYE WASH
15490.A0	WASTE OIL PUMP
15490.D0	600 GAL. WASTE OIL TANK - C.F.C.I
15491.A0	AIR COMPRESSOR
15491.B0	OVERHEAD LUBE REELS
15491.C0	OVERHEAD HOSE REELS
15600.A0	NATURAL GAS RADIANT HEATING SYSTEM
16128.A0	LOW VOLTAGE DE-ICING SNOW MELTING SYSTEM
16510.A0	INTERIOR LIGHTS
16510.B0	WALL MOUNTED INTERIOR LIGHTS

GENERAL NOTES

1. FIELD VERIFY ALL EXISTING CONDITIONS AND THEIR COMPATIBILITY WITH NEW CONSTRUCTION PRIOR TO THE COMMENCEMENT OF WORK. COORDINATE DISCREPANCIES WITH ARCHITECT.

2. DO NOT SCALE DRAWINGS.

3. SEE CIVIL, STRUCTURAL, MECHANICAL AND ELECTRICAL DRAWINGS FOR MORE INFORMATION.

4. PROVIDE QUANTITY OF ADJUSTABLE SHELVING AS SHOWN IN ELEVATION.

5. SEE SHEET AE602 FOR PLASTIC LAMINATE COLORS.

6. PROVIDE 03053.A0 AT ALL CONCRETE CURBS, PIERS, SLABS, STEM WALL ETC. U.N.O.

7. PROVIDE 03054.A0 OVER ENTIRE FLOOR SLAB AT ROOMS 101, 102, 103, 106, & STAIRS.

CLIENT

UDOT CONNECTING COMMUNITIES

STATION #2434
6072 E. EMIGRATION CANYON RD.
PARLEY'S CANYON, UTAH

DESIGNER

ARCHIPLEX GROUP
architecture - planning - design services
255 Crossroad Square
Salt Lake City, UT 84115
P:(801) 961-7070
F:(801) 961-7373

CONSULTANTS

REGISTRATION

STATE OF UTAH
RALPH M. STANISLAW
06-280688-0301
LICENSED ARCHITECT

ISSUE

MARK	DATE	DESCRIPTION
	01-09	Revised Contruction Doc.
	10-08	Construction Documents
	8-20-08	90% Review Submittal

ARCHIPLEX PROJECT NO:	0728.02
DFCM PROJECT NO:	08211900
DRAWN BY:	A. PHILLIPS
CHECKED BY:	R. STANISLAW
SCALE:	SCALE
DATE:	JANUARY, 2009

KEY PLAN

SHEET TITLE

ENLARGED MAINTENANCE BAY AND INTERIOR ELEVATIONS

AE402

© 2004 ARCHIPLEX GROUP

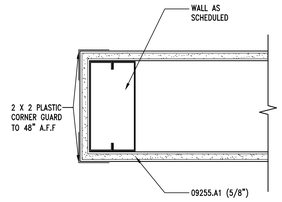

E2 | CORNER GUARD DTL.

AE403 | REF. AE403 | SCALE: 3" = 1'-0"

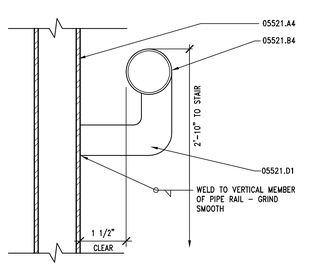

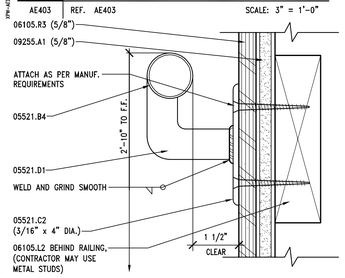

D1 | HANDRAIL ATTACHMENT DTL.

AE403 | REF. AE403 | SCALE: 6" = 1'-0"

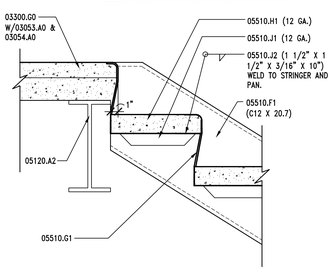

D2 | HANDRAIL ATTACHMENT DTL.

AE403 | REF. AE403 | SCALE: 6" = 1'-0"

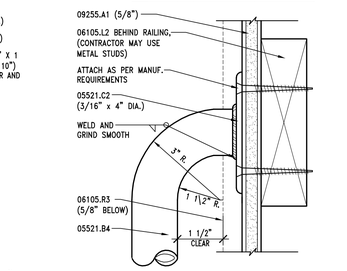

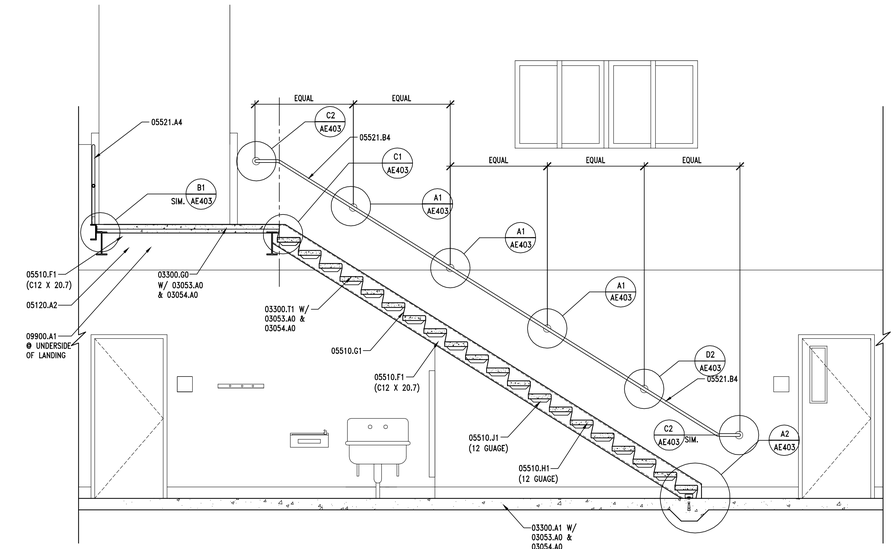

C3 | STAIR SECTION/HANDRAIL & ELEVATION

AE403 | REF. AE101 | SCALE: 3/8" = 1'-0"

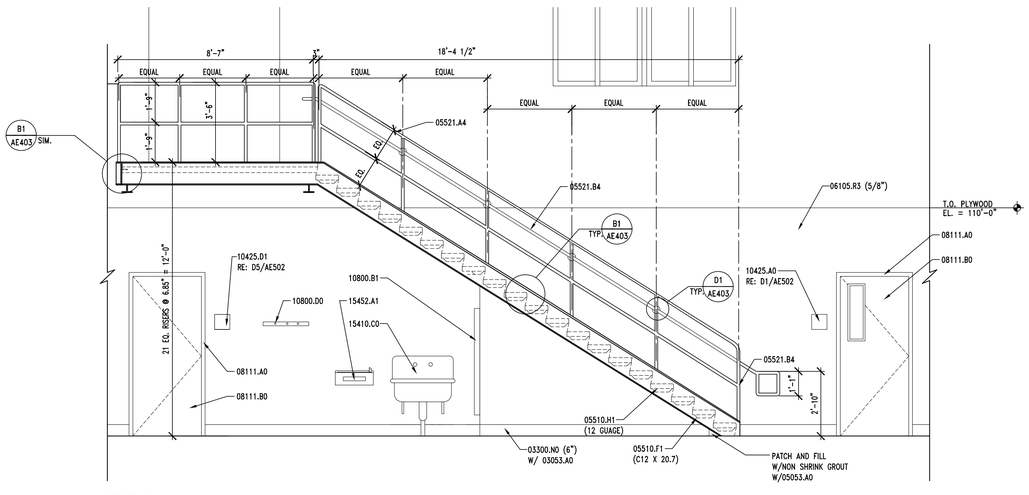

B3 | STAIR ELEVATION

AE403 | REF. AE101 | SCALE: 3/8" = 1'-0"

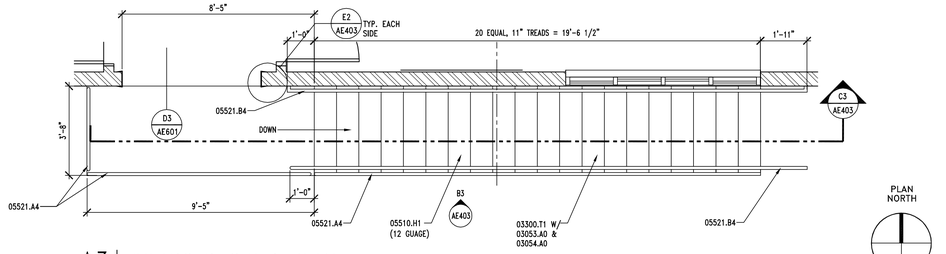

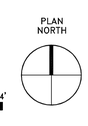

A3 | ENLARGED STAIR PLAN

AE403 | REF. AE101 | SCALE: 3/8" = 1'-0"

C1 | STAIR LANDING DETAIL

AE403 | REF. AE403 | SCALE: 1 1/2" = 1'-0"

C2 | HANDRAIL ATTACHMENT DTL.

AE403 | REF. AE403 | SCALE: 6" = 1'-0"

B1 | GUARDRAIL ATTACH. DETAIL

AE403 | REF. AE403 | SCALE: 1 1/2" = 1'-0"

B2 | STAIR NOSING DETAIL

AE403 | REF. AE403 | SCALE: NONE

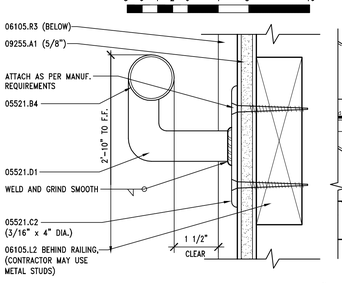

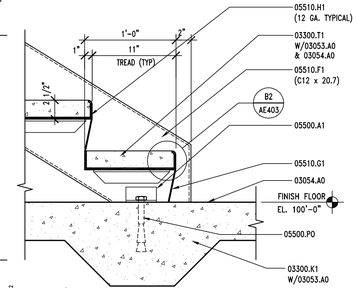

A1 | HANDRAIL ATTACHMENT DTL.

AE403 | REF. AE403 | SCALE: 6" = 1'-0"

A2 | STAIR BASE DETAIL

AE403 | REF. AE403 | SCALE: 1 1/2" = 1'-0"

KEYNOTES

03053.A0	CONCRETE WATER PROOFING ADMIXTURE
03054.A0	OLIOPHOBIC TOPICAL SEALER
03300.A1	CONCRETE SLAB-ON-GRADE - SEE STRUCTURAL
03300.G0	CONCRETE OVER METAL DECK - SEE STRUCTURAL
03300.K1	THICKENED SLAB - SEE STRUCTURAL
03300.N0	CONCRETE CURB
03300.T1	CONCRETE AT STAIR TREAD
05120.A2	STEEL BEAM - SEE STRUCTURAL - PRIMED AND PAINTED
05500.A1	ANGLE - SEE STRUCTURAL
05500.P0	ANCHOR BOLT(S)
05510.E1	NON SKID SURFACE @ NOSING
05510.F1	STEEL STRINGER - (SIZE) - PAINTED
05510.G1	3/16" STEEL CLOSURE PLATE - PAINTED
05510.H1	PRE-FORMED, CONC. FILLED METAL PAN STAIR TREAD - (SIZE) - PAINTED
05510.J1	METAL PAN STAIR SUPPORT - (SIZE) - PAINTED
05510.J2	PAN ANCHORAGE - (SIZE) - PAINTED
05521.A4	1 1/2" O.D. PIPE GUARDRAIL - PAINTED
05521.B4	1 1/2" O.D. PIPE HANDRAIL - PAINTED
05521.C2	ESCUTCHEON WITH EASED EDGES (SIZE)
05521.D1	PIPE RAIL SUPPORT - PAINTED
06105.L2	BLOCKING AS REQUIRED
06105.R3	PLYWOOD PANEL (THICKNESS)
08111.A0	PRESSED METAL FRAME
08111.B0	HOLLOW METAL DOOR
09900.A1	PAINT - SEE FINISH SCHEDULE
09255.A1	GYPSUM BOARD (THICKNESS)
10425.A0	ROOM SIGNAGE
10425.D1	ACCESSIBLE/UNISEX RESTROOM SIGNAGE
10800.B1	SEMI - RECESSED PAPER TOWEL DISPENSER & WASTE RECEPTACLE
10800.D0	MOP RACK
15452.A1	DRINKING FOUNTAIN
15410.C0	UTILITY SINK

GENERAL NOTES

1. FIELD VERIFY ALL EXISTING CONDITIONS AND THEIR COMPATIBILITY WITH NEW CONSTRUCTION PRIOR TO THE COMMENCEMENT OF WORK. COORDINATE DISCREPANCIES WITH ARCHITECT.
2. DO NOT SCALE DRAWINGS.
3. SEE STRUCTURAL DRAWINGS FOR MORE INFORMATION.

CLIENT

UDOT CONNECTING COMMUNITIES

STATION #2434
6072 E. EMIGRATION CANYON RD.
PARLEY'S CANYON, UTAH

DESIGNER

ARCHIPLEX GROUP
architecture · planning · design services
255 Crossroad Square
Salt Lake City, UT 84115
P:(801) 961-7070
F:(801) 961-7373

CONSULTANTS

REGISTRATION

STATE OF UTAH
RALPH M. STANISLAW
06-310619-0301
LICENSED ARCHITECT

ISSUE

MARK	DATE	DESCRIPTION
	01-09	Revised Contruction Doc.
	10-08	Construction Documents
	8-20-08	90% Review Submittal

ARCHIPLEX PROJECT NO:	0728.02
DFCM PROJECT NO:	08211900
DRAWN BY:	A. PHILLIPS
CHECKED BY:	R. STANISLAW
SCALE:	AS SHOWN
DATE:	JANUARY, 2009

KEY PLAN

SHEET TITLE

STAIR PLAN SECTION, ELEVATIONS AND DETAILS

AE403

© 2004 ARCHIPLEX GROUP

KEYNOTES

03053.A0	CONCRETE WATER PROOFING ADMIXTURE
03300.G0	CONCRETE OVER METAL DECK - SEE STRUCTURAL
03300.N0	CONCRETE CURB
05310.A1	METAL DECK - SEE STRUCTURAL
05400.A1	6" STRUCTURAL STEEL STUDS - SEE STRUCTURAL DRAWINGS FOR SPACING AND GAUGE
06105.R2	SHEATHING - PLYWOOD (THICKNESS) GRADE (SIZE)
06105.R3	PLYWOOD PANEL (THICKNESS)
07210.B1	RIGID INSULATION (R-VALUE)
07410.A0	STANDING SEAM METAL ROOF
07410.M2	ICE AND WATER SHIELD
07901.A0	CONT. SEALANT
09255.A1	GYPSUM BOARD (THICKNESS)
09255.A2	WATER RESISTANT GYPSUM BOARD (THICKNESS)
09255.B2	TYPE 'X' GYPSUM BOARD (THICKNESS)
09255.C3	CEMENT BOARD (THICKNESS)
09255.H1	METAL STUDS (SIZE, SPACING)

GENERAL NOTES

1. FIELD VERIFY ALL EXISTING CONDITIONS AND THEIR COMPATIBILITY WITH NEW CONSTRUCTION PRIOR TO THE COMMENCEMENT OF WORK. COORDINATE DISCREPANCIES WITH ARCHITECT.

2. DO NOT SCALE DRAWINGS.

3. SEE CIVIL, STRUCTURAL, MECHANICAL AND ELECTRICAL DRAWINGS FOR MORE INFORMATION.

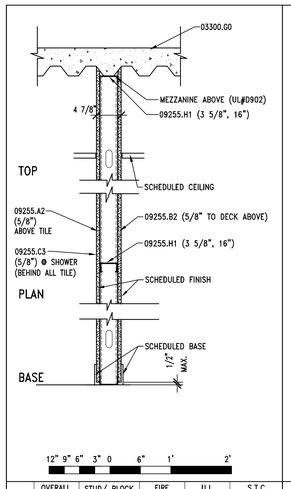

TYPE	OVERALL THICKNESS	STUD/ BLOCK SIZE	FIRE RATING	U.L. LISTING	S.T.C. RATING
J	AS NOTED	3 5/8"	1 HR.	UL419	---

COMMENT: ---

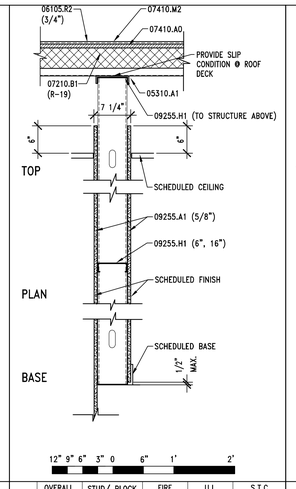

TYPE	OVERALL THICKNESS	STUD/ BLOCK SIZE	FIRE RATING	U.L. LISTING	S.T.C. RATING
H	AS NOTED	3 5/8"	N.R.	---	---

COMMENT: ---

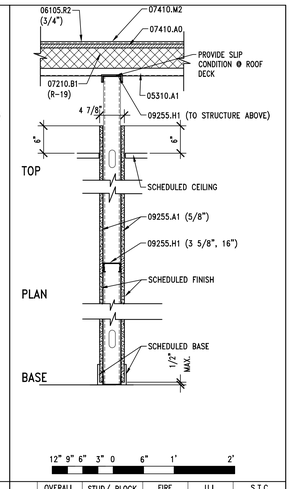

TYPE	OVERALL THICKNESS	STUD/ BLOCK SIZE	FIRE RATING	U.L. LISTING	S.T.C. RATING
G	AS NOTED	3 5/8"	N.R.	---	---

COMMENT: ---

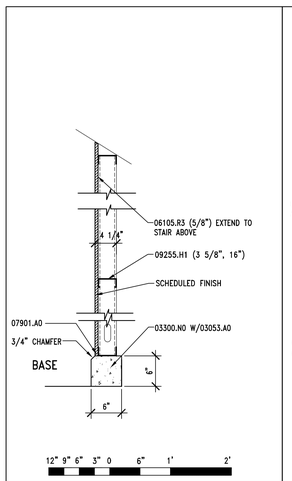

TYPE	OVERALL THICKNESS	STUD/ BLOCK SIZE	FIRE RATING	U.L. LISTING	S.T.C. RATING
F	AS NOTED	3 5/8"	N.R.	---	---

COMMENT: ---

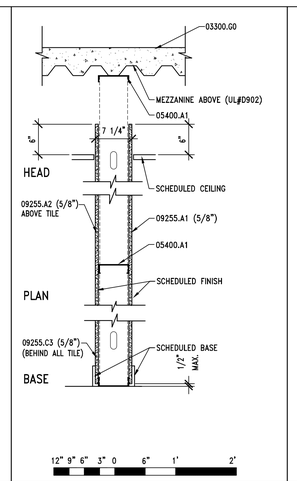

TYPE	OVERALL THICKNESS	STUD/ BLOCK SIZE	FIRE RATING	U.L. LISTING	S.T.C. RATING
E	AS NOTED	6"	N.R.	---	---

COMMENT: ---

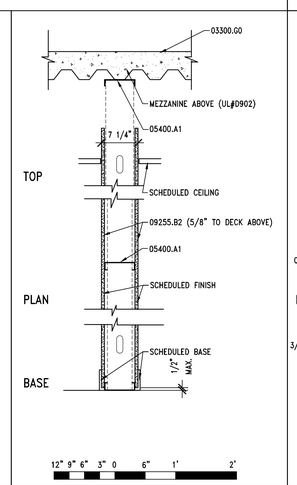

TYPE	OVERALL THICKNESS	STUD/ BLOCK SIZE	FIRE RATING	U.L. LISTING	S.T.C. RATING
D	AS NOTED	6"	1 HR.	UL419	---

COMMENT: ---

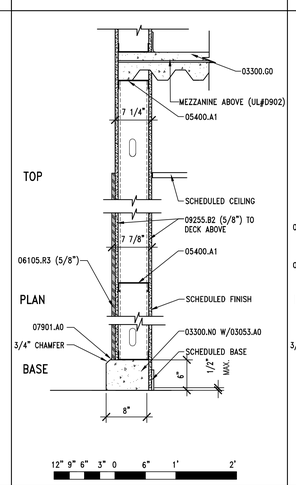

TYPE	OVERALL THICKNESS	STUD/ BLOCK SIZE	FIRE RATING	U.L. LISTING	S.T.C. RATING
C	AS NOTED	6"	1 HR.	UL419	---

COMMENT: ---

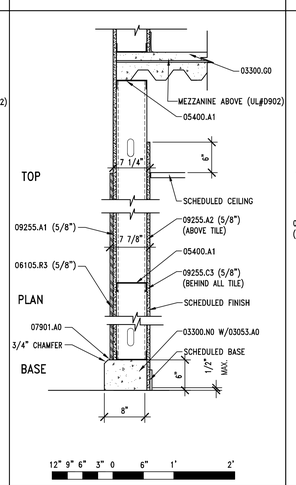

TYPE	OVERALL THICKNESS	STUD/ BLOCK SIZE	FIRE RATING	U.L. LISTING	S.T.C. RATING
B	AS NOTED	6"	N.R.	---	---

COMMENT: ---

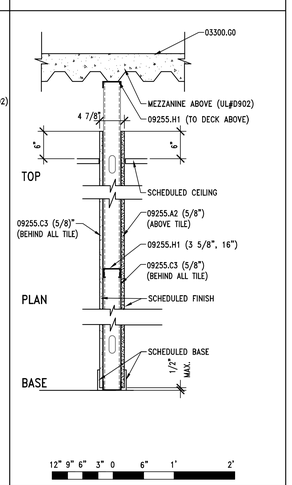

TYPE	OVERALL THICKNESS	STUD/ BLOCK SIZE	FIRE RATING	U.L. LISTING	S.T.C. RATING
A	AS NOTED	3 5/8"	N.R.	---	---

COMMENT: ---

A1 WALL TYPES

AE501 | REF. AE101 | SCALE: 1" = 1'-0"

CLIENT

UDOT CONNECTING COMMUNITIES

STATION #2434
6072 E. EMIGRATION CANYON RD.
PARLEY'S CANYON, UTAH

DESIGNER

ARCHIPLEX GROUP
architecture · planning · design services
255 Crossroad Square
Salt Lake City, UT 84115
P:(801) 961-7070
F:(801) 961-7373

CONSULTANTS

REGISTRATION

STATE OF UTAH
RALPH M. STANISLAW
06-310619-0301
LICENSED ARCHITECT

ISSUE

MARK	DATE	DESCRIPTION
	01-09	Revised Contruction Doc.
	10-08	Construction Documents
	8-20-08	90% Review Submittal

ARCHIPLEX PROJECT NO:	0728.02
DFCM PROJECT NO:	08211900
DRAWN BY:	A. PHILLIPS
CHECKED BY:	R. STANISLAW
SCALE:	AS SHOWN
DATE:	JANUARY, 2009

KEY PLAN

SHEET TITLE

WALL TYPES

AE501

© 2004 ARCHIPLEX GROUP

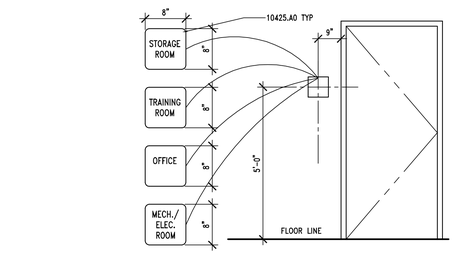

RE: SPECIFICATION - 10425 FOR MORE INFORMATION

D1 | SIGNAGE "E"

AE502 | REF. AE101 | SCALE: NONE

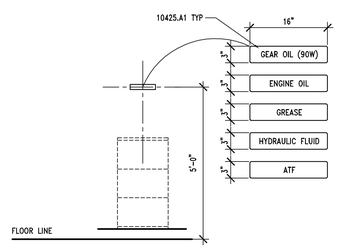

RE: SPECIFICATION - 10425 FOR MORE INFORMATION

D2 | SIGNAGE "A"

AE502 | REF. AE101 | SCALE: NONE

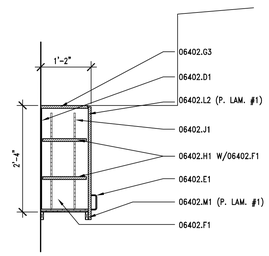

E3 | UPPER CABINET SECTION

AE502 | REF. AE402 | SCALE: 3/4" = 1'-0"

12" 8" 4" 0 6" 1' 2' 3'

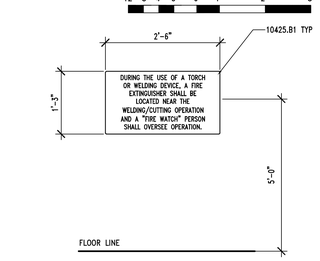

RE: SPECIFICATION - 10425 FOR MORE INFORMATION

D3 | SIGNAGE "B"

AE502 | REF. AE101 | SCALE: NONE

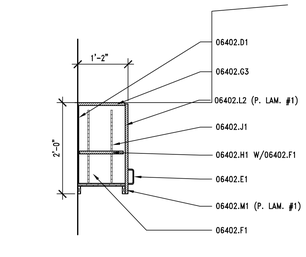

E4 | UPPER CABINET SECTION

AE502 | REF. AE402 | SCALE: 3/4" = 1'-0"

12" 8" 4" 0 6" 1' 2' 3'

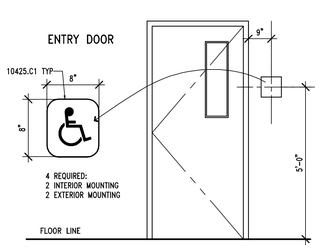

RE: SPECIFICATION - 10425 FOR MORE INFORMATION

D4 | SIGNAGE "C"

AE502 | REF. AE101 | SCALE: NONE

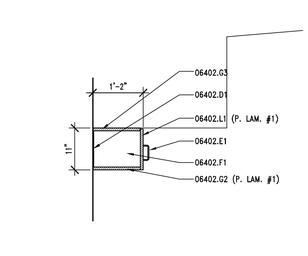

E5 | UPPER CABINET SECTION

AE502 | REF. AE402 | SCALE: 3/4" = 1'-0"

12" 8" 4" 0 6" 1' 2' 3'

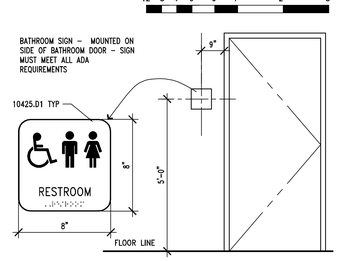

RE: SPECIFICATION - 10425 FOR MORE INFORMATION

D5 | SIGNAGE "D"

AE502 | REF. AE101 | SCALE: NONE

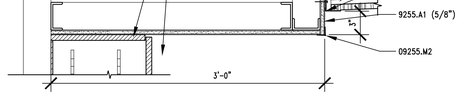

C1 | CEILING TRANSITION DETAIL

AE502 | REF. AE201 | SCALE: 1-1/2" = 1'-0"

C2 | CEILING DETAIL

AE502 | REF. AE121 | SCALE: 1/2" = 1'-0"

24" 18" 12" 6" 0 1' 2' 4'

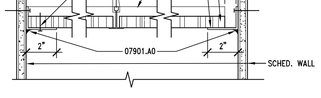

C3 | LAY-IN PANEL EDGE DTL.

AE502 | REF. AE121 | SCALE: 3" = 1'-0"

4" 3" 2" 1" 0 2" 4" 8"

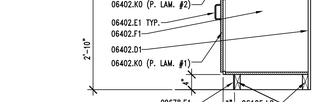

C4 | BASE CABINET SECTION

AE502 | REF. AE402 | SCALE: 3/4" = 1'-0"

12" 8" 4" 0 6" 1' 2' 3'

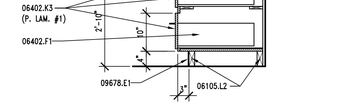

C5 | BASE CABINET SECTION

AE502 | REF. AE402 | SCALE: 3/4" = 1'-0"

12" 8" 4" 0 6" 1' 2' 3'

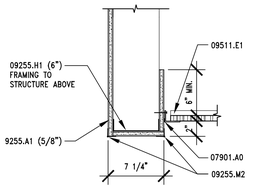

B1 | CEILING TRANSITION DETAIL

AE502 | REF. AE201 | SCALE: 1-1/2" = 1'-0"

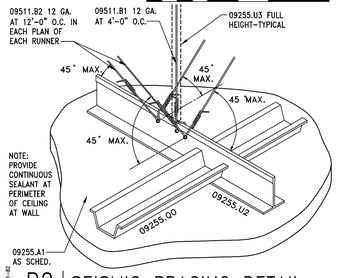

B2 | SEISMIC BRACING DETAIL

AE502 | REF. AE121 | SCALE: NONE

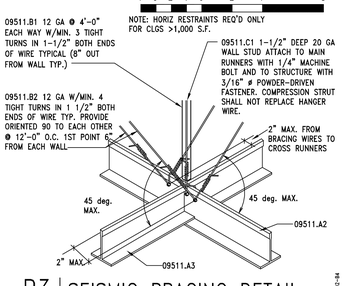

B3 | SEISMIC BRACING DETAIL

AE502 | REF. AE121, AE502 | SCALE: NO SCALE

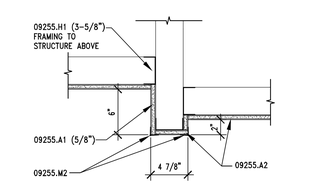

B4 | CEILING @ SHOWER DETAIL

AE502 | REF. SCALE: 1-1/2" = 1'-0"

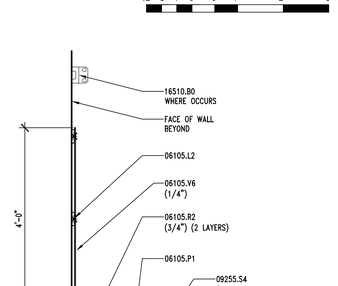

C5 | BASE CABINET SECTION

AE502 | REF. AE402 | SCALE: 3/4" = 1'-0"

12" 8" 4" 0 6" 1' 2' 3'

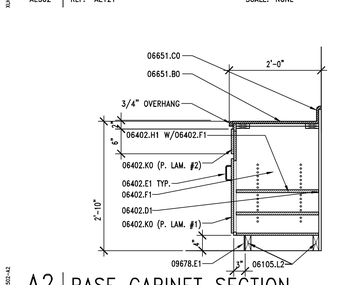

A2 | BASE CABINET SECTION

AE502 | REF. AE402 | SCALE: 3/4" = 1'-0"

12" 8" 4" 0 6" 1' 2' 3'

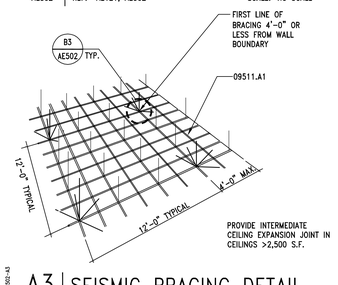

A3 | SEISMIC BRACING DETAIL

AE502 | REF. AE121 | SCALE: NO SCALE

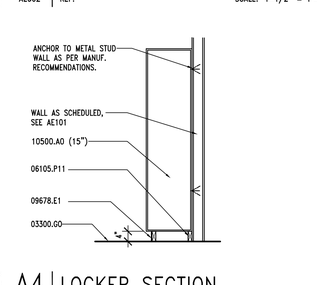

A4 | LOCKER SECTION

AE502 | REF. AE402 | SCALE: 1/2" = 1'-0"

24" 18" 12" 6" 0 1' 2' 4'

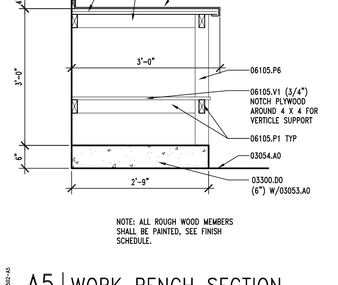

A5 | WORK BENCH SECTION

AE502 | REF. AE402 | SCALE: 3/4" = 1'-0"

12" 8" 4" 0 6" 1' 2' 3'

KEYNOTES

03053.A0	CONCRETE WATER PROOFING ADMIXTURE
03054.A0	OLIOPHOBIC TOPICAL SEALER
03300.D0	CONCRETE PAD (SIZE)
03300.G0	CONCRETE OVER METAL DECK - SEE STRUCTURAL
06105.L2	BLOCKING AS REQUIRED
06105.P1	2 x 4
06105.P6	4 x 4
06105.P11	2 x BLOCKING
06105.R2	SHEATHING - PLYWOOD (THICKNESS) GRADE (SIZE)
06105.V1	EXTERIOR GRADE PLYWOOD (THICKNESS)
06105.V6	PEGBOARD (THICKNESS)
06402.D1	3/4" PARTICAL BOARD W/ MELAMINE FINISH
06402.E1	WIRE PULL
06402.F1	PROVIDE WHITE MELAMINE FINISH @ ALL INTERIOR SURFACES
06402.G2	3/4" PARTICLE BOARD CABINET BASE W/PLAM (FINISH)
06402.G3	3/4" PARTICLE BOARD CABINET TOP
06402.H1	ADJUSTABLE SHELVES (FINISH)
06402.J1	RECESSED SHELF BRACKETS
06402.K0	BASE UNIT (FINISH)
06402.K3	BASE UNIT WITH DRAWERS (FINISH)
06402.L1	WALL UNIT (FINISH)
06402.L2	WALL UNIT W/ADJ. SHELF(VES) (FINISH)
06402.M1	3/4" PARTICLE BOARD SCREEN (FINISH)
06651.B0	SOLID SURFACE COUNTER TOP
06651.C0	SOLID SURFACE BACKSLAPSH
07901.A0	CONT. SEALANT
09255.A1	GYPSUM BOARD (THICKNESS)
09255.A2	WATER RESISTANT GYPSUM BOARD (THICKNESS)
09255.H1	METAL STUDS (SIZE, SPACING)
09255.M2	METAL CORNER BEAD (TYP.)
09255.Q0	7/8" METAL FURRING CHANNEL
09255.R2	CHANNEL (SIZE, SPACING)
09255.S1	8 GA. WIRE HANGERS
09255.S2	18 GA. WIRE TIES
09255.S4	14 GA. STAINLESS STEEL COUNTER TOP (FINISH)
09255.U2	CROSS CHANNEL
09255.U3	3/4" CONDUIT COMPRESSION BRACE
09511.A1	HEAVY DUTY "T" BAR GRID SYSTEM
09511.A2	CEILING SUSPENSION SYSTEM - MAIN RUNNER
09511.A3	CEILING SUSPENSION SYSTEM - CROSS RUNNER
09511.B1	VERTICAL WIRE HANGER (SIZE)
09511.B2	BRACING WIRE (SIZE)
09511.C1	COMPRESSION STRUTS
09511.D1	METAL ANGLE EDGE
09511.E1	LAY IN ACOUSTICAL CEILING PANEL
09678.E1	RUBBER BASE

GENERAL NOTES

1. FIELD VERIFY ALL EXISTING CONDITIONS AND THEIR COMPATIBILITY WITH NEW CONSTRUCTION PRIOR TO THE COMMENCEMENT OF WORK. COORDINATE DISCREPANCIES WITH ARCHITECT.

2. DO NOT SCALE DRAWINGS.

3. SEE SHEET AE602 FOR PLASTIC LAMINATE COLORS.

CLIENT

UDOT CONNECTING COMMUNITIES

STATION #2434
6072 E. EMIGRATION CANYON RD.
PARLEY'S CANYON, UTAH

DESIGNER

ARCHIPLEX GROUP
architecture · planning · design services
255 Crossroad Square
Salt Lake City, UT 84115
P:(801) 961-7070
F:(801) 961-7373

CONSULTANTS

REGISTRATION

STATE OF UTAH
RALPH M. STANISLAW
06-310618-0301
LICENSED ARCHITECT

ISSUE

MARK	DATE	DESCRIPTION
	01-09	Revised Contruction Doc.
	10-08	Construction Documents
	8-20-08	90% Review Submittal

ARCHIPLEX PROJECT NO:	0728.02
DFCM PROJECT NO:	08211900
DRAWN BY:	A. PHILLIPS
CHECKED BY:	R. STANISLAW
SCALE:	AS SHOWN
DATE:	JANUARY, 2009

KEY PLAN

SHEET TITLE

SIGNAGE AND MISC. DETAILS

AE502

© 2004 ARCHIPLEX GROUP

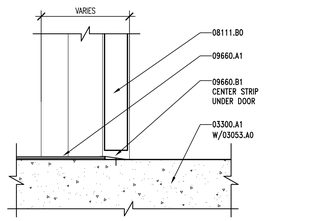

D3 | VCT-CONCRETE TRANSITION

AE503 | REF. AE401 | SCALE: 3" =1'-0"

4" 3" 2" 1" 0 2" 4" 8"

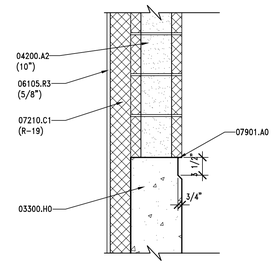

C3 | FOUNDATION WALL

AE503 | REF. AE201 | SCALE: 1" = 1'-0"

12" 9" 6" 3" 0 6" 1' 2'

B3 | EXT. PIPE BOLLARD DTL.

AE503 | REF. AE101 & AE301 | SCALE: 1/2" = 1'-0"

24" 18" 12" 6" 0" 1' 2' 4'

UL#C-AJ-7016 (3 HOUR)

A2 | FIRESAFING DETAIL

AE503 | REF. AE311 | SCALE: 1-1/2" = 1'-0"

NOTE: USE THIS DETAIL WHEN FOOTING IS IN CONFLICT WITH DEPTH OF CONCRETE PIPE BASE

A3 | INT. PIPE BOLLARD DTL.

AE503 | REF. AE101 & AE301 | SCALE: 1/2" = 1'-0"

24" 18" 12" 6" 0" 1' 2' 4'

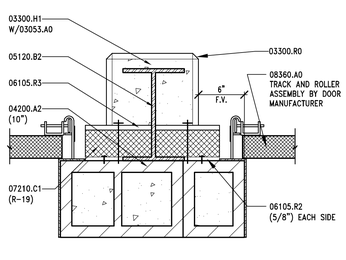

A4 | ROOF DETAIL

AE503 | REF. AE312 | SCALE: 1' = 1'-0"

12" 9" 6" 3" 0 6" 1' 2'

UL#C-AJ-7016 (3 HOUR)

B4 | FIRE STOPPING DETAIL

AE503 | REF. AE101 | SCALE: 3" = 1'-0"

B5 | LOUVER/FAN DETAIL

AE501 | REF. AE201 | SCALE: 1" = 1'-0"

12" 9" 6" 3" 0 6" 1' 2'

B6 | REGLET DETAIL

AE503 | REF. AE312 | SCALE: 1-1/2" = 1'-0"

8" 6" 4" 2" 0 4" 8" 1'-4"

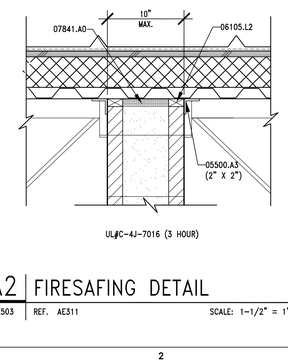

A5 | ROOF RIDGE DETAIL

AE503 | REF. AE141 | SCALE: 1-1/2" = 1'-0"

8" 6" 4" 2" 0 4" 8" 1'-4"

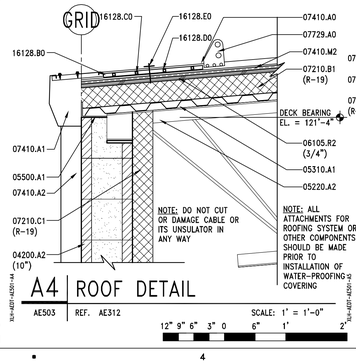

A6 | ROOF DETAIL

AE503 | REF. AE311, AE312 | SCALE: 1' = 1'-0"

12" 9" 6" 3" 0 6" 1' 2'

KEYNOTES

02200.B0	GRAVEL BASE
03053.A0	CONCRETE WATER PROOFING ADMIXTURE
03054.A0	OLIOPHOBIC TOPICAL SEALER
03300.A1	CONCRETE SLAB-ON-GRADE - SEE STRUCTURAL
03300.H0	FOUNDATION WALL - SEE STRUCTURAL
03300.H1	CONCRETE PIER - SEE STRUCTURAL
03300.K1	CONCRETE PIPE BASE
03300.L1	30# FELT
03300.R0	3/4" CHAMFER
04200.A0	CMU
04200.A2	CMU (SIZE)
04200.D1	CMU LINTEL - SEE STRUCTURAL
05120.A2	STEEL BEAM - SEE STRUCTURAL - PRIMED AND PAINTED
05120.B2	STEEL COLUMN - SEE STRUTURAL - PRIMED AND PAINTED
05220.A2	STEEL JOISTS - SEE STRUCTURAL - PRIMED AND PAINTED
05310.A1	METAL DECK - SEE STRUCTURAL
05500.A1	ANGLE - SEE STRUCTURAL
05500.A3	STEEL ANGLE (SIZE)
05500.E1	STEEL PLATE - SEE STRUCTUAL
05500.J1	PIPE BOLLARD (DIAMETER) - GALVANIZED & PAINTED
06105.L2	BLOCKING AS REQUIRED
06105.R2	SHEATHING - PLYWOOD (THICKNESS)
06105.R3	PLYWOOD PANEL (THICKNESS) - MECHANICALLY FASTENED THROUGH INSULATION INTO CMU WALL
07210.B1	RIGID INSULATION (R-VALUE)
07210.C1	RIGID INSULATION (CONTINUIOUSLY ADHEARED TO CMU) W/FOIL FACED VAPOR BARRIER TOWARDS INTERIOR (R-VALUE)
07410.A0	STANDING SEAM METAL ROOF
07410.A1	RAIN GUTTER W/CONTINUOUS HEAT TAPE
07410.A2	DOWN SPOUT W/CONTINUOUS HEAT TAPE
07410.B1	METAL REGLET
07410.C0	ROOFING FELT
07410.G0	FLASHING - FINISH TO MATCH LOUVER COLOR
07410.G1	FLASHING - FINISH TO MATCH ROOF COLOR
07410.M2	ICE AND WATER SHIELD
07410.P2	RAKE TRIM
07410.S1	STANDING SEAM METAL ROOF RIDGE
07410.T1	STANDING SEAM METAL CANOPY
07729.A0	STANDING SEAM METAL 2 PIPE SNOWGUARD SYSTEM
07841.A0	PENNETRATION FIRE STOPPING
07841.B0	PACKING MATERIAL
07901.A0	CONTINUOUS SEALANT
08111.A0	PRESSED METAL FRAME
08111.B0	HOLLOW METAL DOOR
08360.A0	HEAVY DUTY OVERHEAD SECTIONAL DOOR
08710.A0	THRESHOLD
08710.B0	DOOR SWEEP
09300.A1	FLOOR TILE - SEE FINISHED SCHEDULE
09300.G1	MORTAR BED
09300.G4	WATERPROOF MEMBRANE
09660.A1	VINYL COMPOSITION TILE
09660.B1	VINYL TRANSITION STRIP
15779.A0	LOW VOLTAGE DE-ICING SYSTEM
15861.A1	MECHANICAL DUCTWORK - SEE MECHINCAL
15887.A1	LOUVER WITH BIRD SCREEN - SEE MECHANICAL
16128.A0	LOW VOLTAGE DE-ICING SNOW MELTING SYSTEM
16128.B0	LOW VOLTAGE DE-ICING CABLING BOARD WITH PRE CUT GROOVES
16128.C0	LOW VOLTAGE DE-ICING CABLE
16128.D0	LOW VOLATAGE DE-ICING CABLE PROTECTOR
16128.E0	ATTACHMENT AS PER MANUFACTURER RECOMENDATION

GENERAL NOTES

1. FIELD VERIFY ALL EXISTING CONDITIONS AND THEIR COMPATIBILITY WITH NEW CONSTRUCTION PRIOR TO THE COMMENCEMENT OF WORK. COORDINATE DISCREPANCIES WITH ARCHITECT.

2. DO NOT SCALE DRAWINGS.

CLIENT

UDOT CONNECTING COMMUNITIES

STATION #2434
6072 E. EMIGRATION CANYON RD.
PARLEY'S CANYON, UTAH

DESIGNER

ARCHIPLEX GROUP
architecture · planning · design services
255 Crossroad Square
Salt Lake City, UT 84115
P:(801) 961-7070
F:(801) 961-7373

CONSULTANTS

REGISTRATION

STATE OF UTAH
RALPH M. STANISLAW
05-330B-0301
LICENSED ARCHITECT

ISSUE

MARK	DATE	DESCRIPTION
	01-09	Revised Contruction Doc.
	10-08	Construction Documents
	8-20-08	90% Review Submittal

ARCHIPLEX PROJECT NO:	0728.02
DFCM PROJECT NO:	08211900
DRAWN BY:	A. PHILLIPS
CHECKED BY:	R. STANISLAW
SCALE:	AS SHOWN
DATE:	JANUARY, 2009

KEY PLAN

SHEET TITLE

MISC. DETAILS

AE503

© 2004 ARCHIPLEX GROUP

E1 HOLLOW METAL JAMB DTL.

AE601 | REF. AE601 | SCALE: 3" = 1'-0"

E3 HOLLOW METAL JAMB DTL.

AE601 | REF. AE601 | SCALE: 3" = 1'-0"

E4 HOLLOW METAL HEAD DTL.

AE601 | REF. AE601 | SCALE: 3" = 1'-0"

E5 DOOR HEAD DETAIL

AE601 | REF. AE601 | SCALE: 3" = 1'-0"

D3 HOLLOW METAL HEAD DTL.

AE601 | REF. AE601 | SCALE: 3" = 1'-0"

D4 HOLLOW METAL JAMB DTL.

AE601 | REF. AE601 | SCALE: 3" = 1'-0"

D5 DOOR JAMB DETAIL

AE601 | REF. AE601 | SCALE: 3" = 1'-0"

TYPE A TYPE B TYPE C

DOOR FRAME TYPES

TYPE 1 TYPE 2 TYPE 3 TYPE 4

DOOR TYPES

C4 DOOR JAMB DETAIL

AE601 | REF. AE601 | SCALE: 3" = 1'-0"

C5 DOOR HEAD DETAIL

AE601 | REF. AE601 | SCALE: 3" = 1'-0"

C6 OVERHEAD DOOR HEAD DTL.

AE601 | REF. AE601 | SCALE: 1 1/2" = 1'-0"

B3 DOOR JAMB DETAIL

AE601 | REF. AE601 | SCALE: 3" = 1'-0"

B4 HOLLOW METAL HEAD DTL.

AE601 | REF. AE601 | SCALE: 3" = 1'-0"

B5 DOOR JAMB DETAIL

AE601 | REF. AE601 | SCALE: 3" = 1'-0"

B6 DOOR JAMB DETAIL

AE601 | REF. AE601 | SCALE: 3" = 1'-0"

A3 OVERHEAD DOOR JAMB DTL.

AE601 | REF. AE601 | SCALE: 1 1/2" = 1'-0"

A4 HOLLOW METAL JAMB DTL.

AE601 | REF. AE601 | SCALE: 3" = 1'-0"

A5 DOOR JAMB DETAIL

AE601 | REF. AE601 | SCALE: 3" = 1'-0"

A6 OVERHEAD DOOR JAMB DTL.

AE601 | REF. AE601 | SCALE: 1 1/2" = 1'-0"

DOOR SCHEDULE

DOOR #	ROOM #	DOORS TYPE	DOORS WIDTH	DOORS HEIGHT	DOORS THICK.	DOORS MATERIAL	DOORS FINISH	DOORS GLASS	FRAMES TYPE	FRAMES WIDTH	FRAMES MATERIAL	FRAMES FINISH	DETAILS HEAD	DETAILS JAMB	DETAILS THRESH.	DETAILS LABEL	HARDWARE	REMARKS
D101A	101	3	3'-0"	7'-0"	1 3/4"	HM	PT	T	B	6"	HM	PT	B4/AE601	A4/AE601	D4/AE503	–	1	INSULATED
D101B	101	4	14'-0"	14'-0"	–	ST	–	T	–	–	ST	PT	C6/AE601	A3 & A6/AE601	–	–	6	SECTIONAL INSULATED DOOR
D102A	102	3	3'-0"	7'-0"	1 3/4"	HM	PT	T	A	6"	HM	PT	B4/AE601	A4 & E1/AE601	D4/AE503	–	1	INSULATED
D102B	102	4	14'-0"	14'-0"	–	ST	–	T	–	–	ST	PT	C6/AE601	A3 & A6/AE601	–	–	6	SECTIONAL INSULATED DOOR
D102C	102	4	14'-0"	14'-0"	–	ST	–	T	–	–	ST	PT	C6/AE601	A3 & A6/AE601	–	–	6	SECTIONAL INSULATED DOOR
D102D	102	4	14'-0"	14'-0"	–	ST	–	T	–	–	ST	PT	C6/AE601	A3 & A6/AE601	–	–	6	SECTIONAL INSULATED DOOR
D102E	102	4	14'-0"	14'-0"	–	ST	–	T	–	–	ST	PT	C6/AE601	A3 & A6/AE601	–	–	6	SECTIONAL INSULATED DOOR
D102F	102	4	14'-0"	14'-0"	–	ST	–	T	–	–	ST	PT	C6/AE601	A3 & A6/AE601	–	–	6	SECTIONAL INSULATED DOOR
D102G	102	4	14'-0"	14'-0"	–	ST	–	T	–	–	ST	PT	C6/AE601	A3 & A6/AE601	–	–	6	SECTIONAL INSULATED DOOR
D102H	102	4	14'-0"	14'-0"	–	ST	–	T	–	–	ST	PT	C6/AE601	A3 & A6/AE601	–	–	6	SECTIONAL INSULATED DOOR
D102J	102	4	14'-0"	14'-0"	–	ST	–	T	–	–	ST	PT	C6/AE601	A3 & A6/AE601	–	–	6	SECTIONAL INSULATED DOOR
D102K	102	4	14'-0"	14'-0"	–	ST	–	T	–	–	ST	PT	C6/AE601	A3 & A6/AE601	–	–	6	SECTIONAL INSULATED DOOR
D102L	102	4	14'-0"	14'-0"	–	ST	–	T	–	–	ST	PT	C6/AE601	A3 & A6/AE601	–	–	6	SECTIONAL INSULATED DOOR
D103A	103	3	3'-0"	7'-0"	1 3/4"	HM	PT	T	A	9"	HM	PT	C5/AE601	A5 & B6/AE601	–	20 MIN	4	–
D104A	104	1	3'-0"	7'-0"	1 3/4"	HM	PT	–	A	9"	HM	PT	C5/AE601	A5 & B3/AE601	D5/AE503	–	3	–
D105A	105	3	3'-0"	7'-0"	1 3/4"	HM	PT	T	A	9"	HM	PT	C5/AE601	A5 & E1/AE601	D3/AE503	–	2	–
D106A	106	1	PR OF 4'-0"	8'-0"	1 3/4"	HM	PT	–	C	5 3/4"	HM	PT	E4/AE601	D4/AE601	–	3 HOUR	5	–
D106B	106	3	3'-0"	7'-0"	1 3/4"	HM	PT	T	B	6"	HM	PT	B4/AE601	A4/AE601	D4/AE503	–	1	INSULATED
D106C	106	4	14'-0"	14'-0"	–	ST	–	T	–	–	ST	PT	C6/AE601	A3 & A6/AE601	–	–	6	SECTIONAL INSULATED DOOR
D106D	106	4	14'-0"	14'-0"	–	ST	–	T	–	–	ST	PT	C6/AE601	A3 & A6/AE601	–	–	6	SECTIONAL INSULATED DOOR
D106E	106	4	14'-0"	14'-0"	–	ST	–	T	–	–	ST	PT	C6/AE601	A3 & A6/AE601	–	–	6	SECTIONAL INSULATED DOOR
D106F	106	4	14'-0"	14'-0"	–	ST	–	T	–	–	ST	PT	C6/AE601	A3 & A6/AE601	–	–	6	SECTIONAL INSULATED DOOR
D106G	106	4	14'-0"	14'-0"	–	ST	–	T	–	–	ST	PT	C6/AE601	A3 & A6/AE601	–	–	6	SECTIONAL INSULATED DOOR
D106H	106	3	3'-0"	7'-0"	1 3/4"	HM	PT	T	B	6"	HM	PT	B4/AE601	A4/AE601	D4/AE503	–	1	INSULATED
D201A	201	3	3'-0"	7'-0"	1 3/4"	HM	PT	T	A	5 3/4"	HM	PT	E5/AE601	B5 & D5/AE601	D3/AE503	–	4	–
D202A	202	3	3'-0"	7'-0"	1 3/4"	HM	PT	T	A	6"	HM	PT	E3/AE601	D3/AE601	D3/AE503	–	1	INSULATED
D203A	203	2	3'-0"	7'-0"	1 3/4"	HM	PT	T	A	5 3/4"	HM	PT	E5/AE601	B5 REV. & D5	–	–	2	–

HM = HOLLOW METAL P. FIN. = PRE-FINISHED T = TEMPERED ST = STEEL PT = PAINTED

KEYNOTES

03053.A0 CONCRETE WATER PROOFING ADMIXTURE
03300.H0 FOUNDATION WALL – SEE STRUCTURAL
03300.N0 CONCRETE CURB
03300.R0 CHAMFER

04200.A2 CMU (SIZE)
04200.B0 GROUT SOLID

05120.B2 STEEL COLUMN – SEE STRUCTURAL – PRIMED AND PAINTED
05400.A1 6" STRUCTURAL STEEL STUDS – SEE STRUCTURAL DRAWINGS FOR SPACING AND GAUGE
05400.A2 3 5/8" STRUCTURAL STEEL STUDS – SEE STRUCTURAL DRAWINGS FOR SPACING AND GRADE
05500.A2 STEEL ANGLE (SIZE) – GALVANIZED
05500.P1 ANCHOR BOLT (DIAMETER & SPACING)

06105.Q2 SHIM AS REQUIRED
06105.R3 PLYWOOD PANEL (THICKNESS) – MECHANICALLY FASTENED THROUGH INSULATION INTO CMU WALL
06105.R4 PLYWOOD PANEL (THICKNESS)
07210.A1 BATT INSULATION (R-VALUE)
07210.C1 RIGID INSULATION (CONTINUOUSLY ADHERED TO CMU) W/FOIL FACED VAPOR BARRIER TOWARDS INTERIOR (R-VALUE)
07901.A0 CONT. SEALANT

08111.A0 PRESSED METAL FRAME
08111.A1 GROUT FILLED PRESSED METAL FRAME
08111.B0 HOLLOW METAL DOOR
08111.C0 JAMB ANCHOR
08360.A0 HEAVY DUTY OVERHEAD SECTIONAL DOOR
08360.B0 3" HEAVY DUTY OVERHEAD SECTIONAL DOOR TRACK
08360.C0 WEATHERSTRIPPING

09255.A1 GYPSUM BOARD (THICKNESS)
09255.H1 METAL STUDS (SIZE, SPACING)
09300.B1 WALL TILE – SEE FINISH SCHED.
09255.M2 METAL CORNER BEAD (TYP.)

GENERAL NOTES

1. FIELD VERIFY ALL EXISTING CONDITIONS AND THEIR COMPATIBILITY WITH NEW CONSTRUCTION PRIOR TO THE COMMENCEMENT OF WORK. COORDINATE DISCREPANCIES WITH ARCHITECT.

2. DO NOT SCALE DRAWINGS.

3. SEE STRUCTURAL, MECHANICAL AND ELECTRICAL DRAWINGS FOR MORE INFORMATION.

4. SEE SHEET AE602 FOR GLAZING TYPES.

CLIENT

UDOT CONNECTING COMMUNITIES

STATION #2434
6072 E. EMIGRATION CANYON RD.
PARLEY'S CANYON, UTAH

DESIGNER

ARCHIPLEX GROUP
architecture · planning · design services
255 Crossroad Square
Salt Lake City, UT 84115
P:(801) 961-7070
F:(801) 961-7373

CONSULTANTS

REGISTRATION

STATE OF UTAH — RALPH M. STANISLAW — 95-310818-0301 — LICENSED ARCHITECT

ISSUE

MARK	DATE	DESCRIPTION
	01-09	Revised Contruction Doc.
	10-08	Construction Documents
	8-20-08	90% Review Submittal

ARCHIPLEX PROJECT NO:	0728.02
DFCM PROJECT NO:	08211900
DRAWN BY:	A. PHILLIPS
CHECKED BY:	R. STANISLAW
SCALE:	1/8"=1'-0"
DATE:	JANUARY, 2009

KEY PLAN

SHEET TITLE

DOOR SCHEDULE AND DETAILS

AE601

© 2004 ARCHIPLEX GROUP

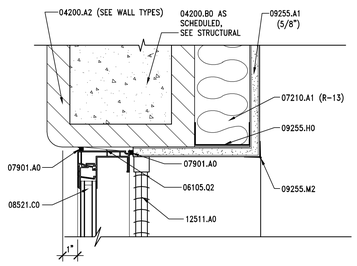

E1 | WINDOW HEAD DETAIL

AE602 | REF. AE602 | SCALE: 3" = 1'-0"

4" 3" 2" 1" 0 2" 4" 8"

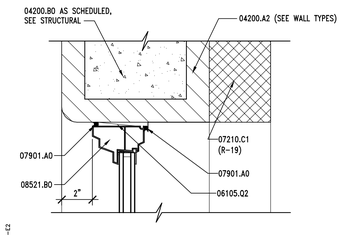

E2 | WINDOW HEAD DETAIL

AE602 | REF. AE602 | SCALE: 3" = 1'-0"

4" 3" 2" 1" 0 2" 4" 8"

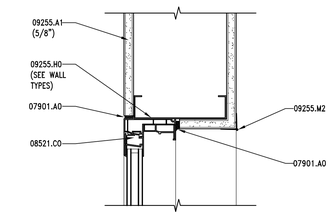

E3 | WINDOW HEAD DETAIL

AE602 | REF. AE602 | SCALE: 3" = 1'-0"

4" 3" 2" 1" 0 2" 4" 8"

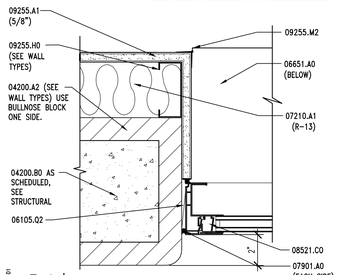

D1 | WINDOW JAMB DETAIL

AE602 | REF. AE602 | SCALE: 3" = 1'-0"

4" 3" 2" 1" 0 2" 4" 8"

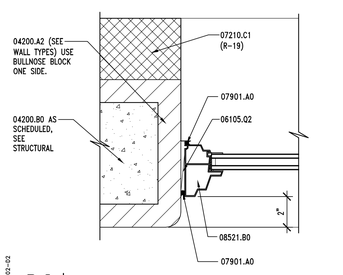

D2 | WINDOW JAMB DETAIL

AE602 | REF. AE602 | SCALE: 3" = 1'-0"

4" 3" 2" 1" 0 2" 4" 8"

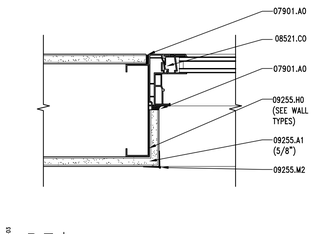

D3 | WINDOW JAMB DETAIL

AE602 | REF. AE602 | SCALE: 3" = 1'-0"

4" 3" 2" 1" 0 2" 4" 8"

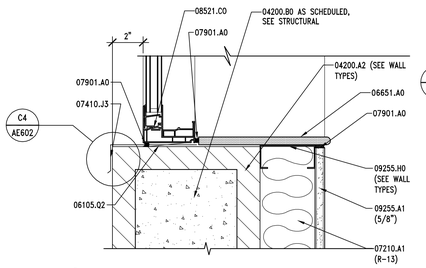

C1 | WINDOW SILL DETAIL

AE602 | REF. AE602 | SCALE: 3" = 1'-0"

4" 3" 2" 1" 0 2" 4" 8"

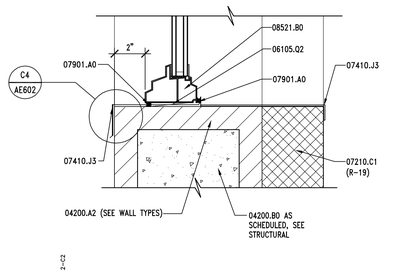

C2 | WINDOW SILL DETAIL

AE602 | REF. AE602 | SCALE: 3" = 1'-0"

4" 3" 2" 1" 0 2" 4" 8"

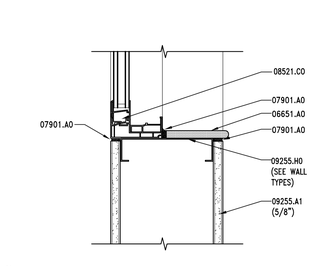

C3 | WINDOW SILL DETAIL

AE602 | REF. AE602 | SCALE: 3" = 1'-0"

4" 3" 2" 1" 0 2" 4" 8"

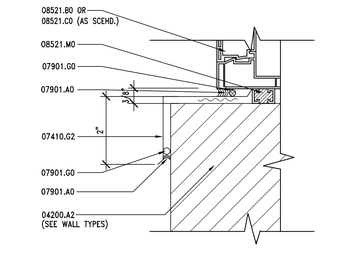

C4 | FLASHING DETAIL

AE602 | REF. AE602 | SCALE: 1-1/2" = 1'-0"

24" 18" 12" 6" 0 1' 2' 4'

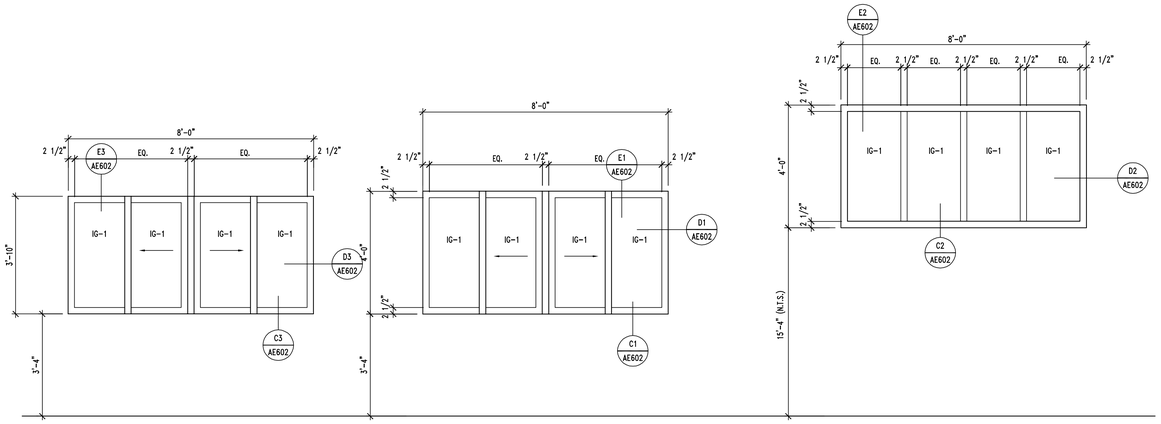

TYPE WA TYPE WB TYPE WC

A3 | WINDOW TYPES

AE602 | REF. AE101 | SCALE: 1/4" = 1'-0"

4' 3' 2' 1' 0' 2' 4' 8'

ROOM FINISH SCHEDULE

	ROOM NAME & NUMBER	FLOOR	BASE	WALLS				DOOR/FRAMES	P. LAM.	CEILING	S. SURF.	TOILET PART.	REMARKS
				WEST	EAST	NORTH	SOUTH						
101	MAINTENANCE BAY	F1	–	–	W1	W1 & W4	W1 & W2	D1 & D2	–	C3	–	–	PAINT ALL EXPOSED WOOD @ WORKBENCH NAVAJO WHITE OR EQUAL
102	REPAIR GARAGE	F1	–	W5	W1 & W2	W1 & W4	W1 & W4	D1 & D2	–	C3	–	–	PAINT STAIR & RAILING D1
103	STORAGE ROOM	F1	B1	W2	W2	W2	W2	D1	P1	C2	–	–	–
104	RESTROOM	F3	B2	W3 & W2	W3 & W2	W3 & W2	W3 & W2	D1	–	C1	–	T1	USE BULLNOSE TILE AT TOP OF WAINSCOT
105	OFFICE	F2	B1	W2	W2	W2	W2	D1	–	C2	–	–	–
106	REPAIR GARAGE	F1	–	W1	W5	W1	W1	D1 & D2	–	C3	–	–	–
201	MECHANICAL ROOM	F2	B1	W2	W2	W2	W2	D1	–	C3	–	–	–
202	CORRIDOR	F2	B1	W2	W2	W2	W2	D1 & D2	–	C2	–	–	–
203	TRAINING ROOM	F2	B1	W2	W2	W2	W2	D1	P1 & P2	C2	SS1	–	–

ROOM FINISH LEGEND

FLOOR

F1. CONCRETE FLOOR, WITH WATER PROOF ADD MIXTURE & OLIOPHOBIC TOPICAL SEALER.

F2. 12" x 12" VINYL COMPOSITION TILE – ARMSTRONG STANDARD EXCELON IMPERIAL TEXTURE #51858–SANDRIFT WHITE OR EQUAL

F3. 2" x 2" CERAMIC TILE – DALTILE, KEYSTONES, ELEMENTAL TAN SPECLE D175, SPECKLE W/MAPEI GROUT #05 – CHAMOIS OR EQUAL

BASE

B1. 4" RUBBER BASE – JOHNSONITE #49 – BEIGE OR EQUAL

B2. 2" x 2" COVED TILE BUILT UP BASE – DALTILE, #MB58 – KEYSTONES, ELEMENTAL TAN SPECKLE SPECKLE W/MAPEI GROUT #05 – CHAMOIS OR EQUAL

WALL

W1. PLYWOOD PANEL: C–C GRADE PLYWOOD – PAINTED BENJAMIN MOORE – NAVAJO WHITE OR EQUAL

W2. GYPSUM BOARD – PAINTED BENJAMIN MOORE – NAVAJO WHITE OR EQUAL

W3. 4 1/4" x 4 1/4" CERAMIC WALL TILE – DALTILE #7735 – ALMOND – MATTE FINISH W/1/2" x 6" FLAT TOP LINER – DALTILE ARTISAN BROWN #0144 – SEMI–GLOSS FINISH OR EQUAL W/MAPEI GROUT #39 – IVORY OR EQUAL.

W4. EXPOSED STRUCTURE – PAINTED BENJAMIN MOORE – NAVAJO WHITE OR EQUAL.

W5. PAINTED CMU – NAVAJO WHITE OR EQUAL.

DOOR & FRAMES

D1. PAINTED – ICI #427 – DEERFIELD OR EQUAL

D2. MATCH EXTERIOR COLOR SCHEDULE – SEE SHEET AE201

PLASTIC LAMINATE

P1. WILSONART #4781–60 SUNSTONE OR EQUAL

P2. WILSONART #4794–60 WINDSWEPT BRONZE OR EQUAL.

SOLID SURFACE

SS1. SOLID SURFACE COUNTER TOP – COLOR TO BE SELECTED BY ARCHITECT.

CEILING

C1. GYPSUM BOARD – PAINTED BENJAMIN MOORE – NAVAJO WHITE OR EQUAL

C2. ULTIMA TEGULAR WITH BEVELED EDGE FINE TEXTURE WITH HUMIGUARD PLUS COLOR: WHITE

C3. EXPOSED STRUCTURE – PAINTED BENJAMIN MOORE – NAVAJO WHITE OR EQUAL.

TOILET PARTITION

T1. SOLID PHENOLIC PARTITIONS WILSON ART #4794.60 WINDSWEPT BRONZE OR EQUAL

KEYNOTES

04200.A2 CMU (SIZE)
04200.B0 GROUT SOLID

06105.02 SHIM AS REQUIRED
06651.A0 1/2" WHITE SOLID SURFACE WINDOW SILL

07210.A1 BATT INSULATION (R–VALUE)
07210.C1 RIGID INSULATION (CONTINUOUSLY ADHERED TO CMU) W/FOIL FACED VAPOR BARRIER TOWARDS INTERIOR (R–VALUE)
07410.G2 FLASHING – FINISH TO MATCH WINDOWS
07410.J3 SILL FLASHING – FINISH TO MATCH WINDOWS
07901.A0 CONT. SEALANT
07901.G0 BACKER ROD

08521.B0 FIXED VINYL WINDOW
08521.C0 VINYL WINDOW W/SLIDING GLASS PANEL
08521.M0 SILL STARTER, SET IN SEALANT

09255.A1 GYPSUM BOARD (THICKNESS)
09255.H0 METAL STUD
09255.M2 METAL CORNER BEAD (TYP)

12511.A0 HORIZONTAL LOUVER BLINDS

GENERAL NOTES

1. FIELD VERIFY ALL EXISTING CONDITIONS AND THEIR COMPATIBILITY WITH NEW CONSTRUCTION PRIOR TO THE COMMENCEMENT OF WORK. COORDINATE DISCREPANCIES WITH ARCHITECT.

2. DO NOT SCALE DRAWINGS

3. ALL FLASHING TO BE PAINTED OR PRE–FINISHED TO MATCH WINDOW FRAMES

4. SEE SPECIFICATIONS FOR ALL GLAZING TYPES.

5. ALL INTERIOR WALL AND CEILING FINISHES SHALL BE CLASS C: FLAME SPREAD 76–200; SMOKE–DEVELOPED 0–450. EXCEPTION: MATERIALS, OTHER THAN TEXTILES, TESTED IN ACCORDANCE WITH SECTION 803.2.

6. AS PER SPECIFICATION SECTION 09900.1.2.B CONTRACTOR TO FIELD PAINT ALL EXPOSED BARE AND COVERED PIPES AND DUCTS (INCLUDING COLOR CODING), HANGERS, EXPOSED STEEL AND IRON WORK, AND PRIMED METAL SURFACES OR MECHANICAL AND ELECTRICAL EQUIPMENT.

CLIENT

UDOT CONNECTING COMMUNITIES

STATION #2434
6072 E. EMIGRATION CANYON RD.
PARLEY'S CANYON, UTAH

DESIGNER

ARCHIPLEX GROUP
architecture · planning · design services
255 Crossroad Square
Salt Lake City, UT 84115
P:(801) 961–7070
F:(801) 961–7373

CONSULTANTS

REGISTRATION

STATE OF UTAH
RALPH M. STANISLAW
06-312618-0301
LICENSED ARCHITECT

ISSUE

MARK	DATE	DESCRIPTION
	01–09	Revised Contruction Doc.
	10–08	Construction Documents
	8–20–08	90% Review Submittal

ARCHIPLEX PROJECT NO:	0728.02
DFCM PROJECT NO:	08211900
DRAWN BY:	A. PHILLIPS
CHECKED BY:	R. STANISLAW
SCALE:	AS SHOWN
DATE:	JANUARY, 2009

KEY PLAN

SHEET TITLE

WINDOW FRAME TYPES, GLAZING & FINISH SCHEDULE AND DETAILS

AE602

© 2004 ARCHIPLEX GROUP

KEYNOTES

02513.A0	ASPHALT CONCRETE PAVING
03053.A0	CONCRETE WATER PROOFING ADMIXTURE
03300.D0	CONCRETE PAD
03300.H1	CONCRETE PIER – SEE STRUCTURAL
05120.B1	STEEL COLUMN – SEE STRUCTURAL – GALVANIZED
05510.F1	STEEL STRINGER – (SIZE) – GALVANIZED
05521.A3	1 1/2" O.D. PIPE GUARDRAIL – GALVANIZED
05521.B3	1 1/2" O.D. PIPE HANDRAIL – GALVANIZED
05530.C1	METAL GRATE PANEL – GALV.
05530.C2	METAL GRATE TREAD – GALV.

GENERAL NOTES

1. FIELD VERIFY ALL EXISTING CONDITIONS AND THEIR COMPATIBILITY WITH NEW CONSTRUCTION PRIOR TO THE COMMENCEMENT OF WORK. COORDINATE DISCREPANCIES WITH ARCHITECT.

2. DO NOT SCALE DRAWINGS.

3. SEE CIVIL, STRUCTURAL, PLUMBING & ELECTRICAL DRAWINGS FOR MORE INFORMATION.

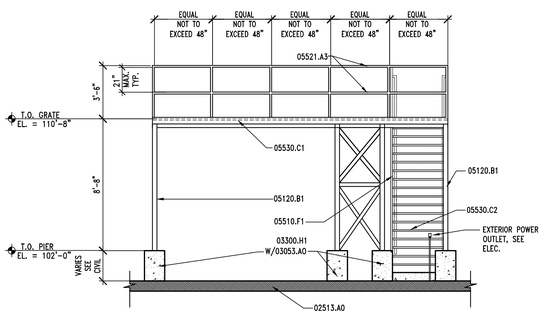

B2 | WASH RACK ELEVATION 4' 3' 2' 1' 0' 2' 4' 8'
AE701 | REF. AE701 | SCALE: 1/4" = 1'-0"

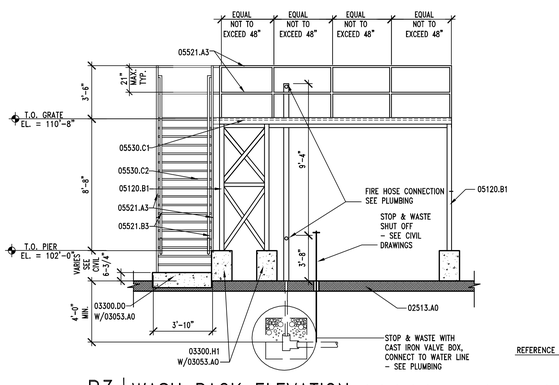

B3 | WASH RACK ELEVATION 4' 3' 2' 1' 0' 2' 4' 8'
AE701 | REF. AE701 | SCALE: 1/4" = 1'-0"

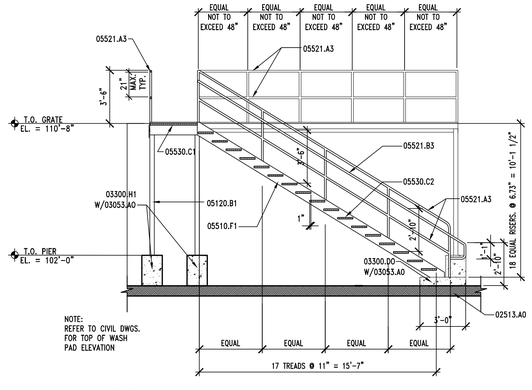

A2 | WASH RACK SECTION 4' 3' 2' 1' 0' 2' 4' 8'
AE701 | REF. AE701 | SCALE: 1/4" = 1'-0"

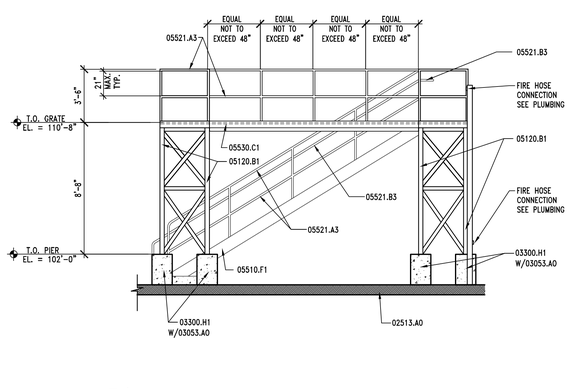

A3 | WASH RACK ELEVATION 4' 3' 2' 1' 0' 2' 4' 8'
AE701 | REF. AE701 | SCALE: 1/4" = 1'-0"

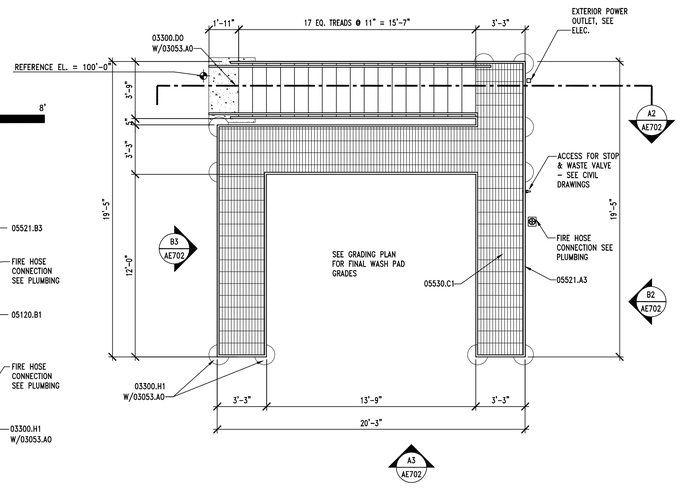

A5 | WASH RACK PLAN 4' 3' 2' 1' 0' 2' 4' 8'
AE701 | REF. AE701 | SCALE: 1/4" = 1'-0"

PLAN NORTH

CLIENT

UDOT CONNECTING COMMUNITIES

STATION #2434
6072 E. EMIGRATION CANYON RD.
PARLEY'S CANYON, UTAH

DESIGNER

ARCHIPLEX GROUP
architecture · planning · design services
255 Crossrood Square
Salt Lake City, UT 84115
P:(801) 961-7070
F:(801) 961-7373

CONSULTANTS

REGISTRATION

STATE OF UTAH
RALPH M. STANISLAW
95-210818-0301
LICENSED ARCHITECT

ISSUE

MARK	DATE	DESCRIPTION
	01-09	Revised Contruction Doc.
	10-08	Construction Documents
	8-20-08	90% Review Submittal

ARCHIPLEX PROJECT NO:	0728.02
DFCM PROJECT NO:	08211900
DRAWN BY:	B. BEECHER
CHECKED BY:	R. STANISLAW
SCALE:	1/4" – 1'-0"
DATE:	JANUARY, 2009

KEY PLAN

SHEET TITLE

WASH RACK PLAN, SECTION & ELEVS.

AE701

© 2004 ARCHIPLEX GROUP

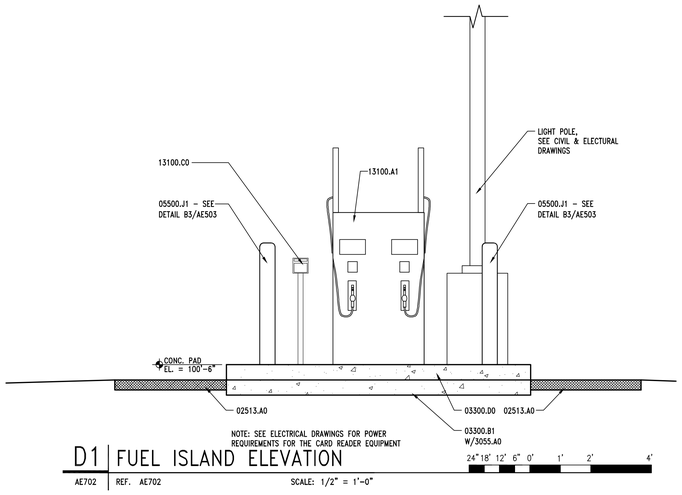

NOTE: SEE ELECTRICAL DRAWINGS FOR POWER REQUIREMENTS FOR THE CARD READER EQUIPMENT

D1 | FUEL ISLAND ELEVATION

AE702 | REF. AE702 | SCALE: 1/2" = 1'-0"

24" 18" 12" 6" 0" 1' 2' 4'

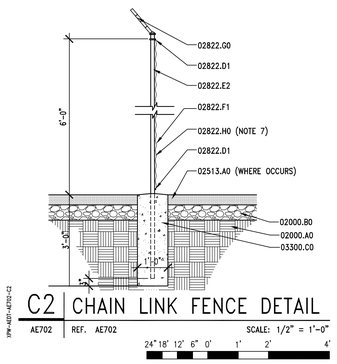

C2 | CHAIN LINK FENCE DETAIL

AE702 | REF. AE702 | SCALE: 1/2" = 1'-0"

24" 18" 12" 6" 0" 1' 2' 4'

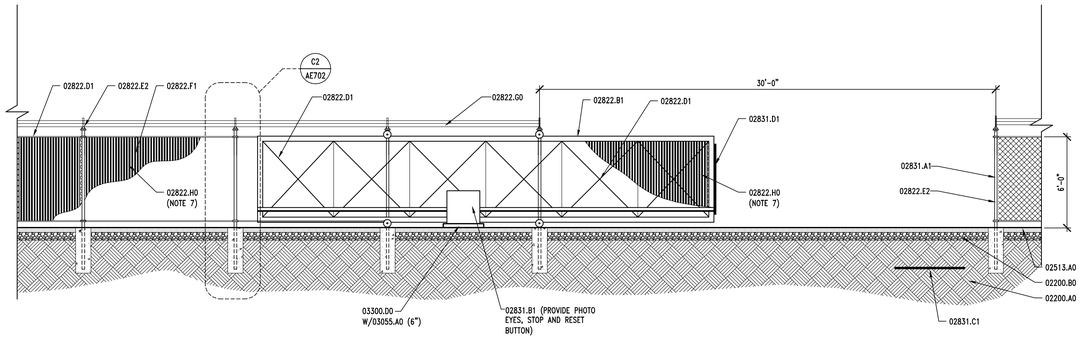

C3 | MOTORIZED GATE ELEVATION

AE702 | REF. AE702 | SCALE: 1/4" = 1'-0"

4' 3' 2' 1' 0' 2' 4' 8'

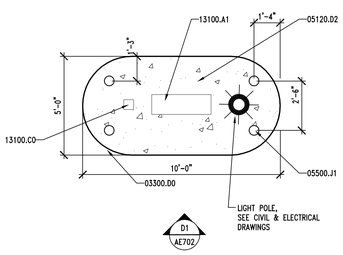

A1 | FUEL ISLAND PLAN

AE702 | REF. | SCALE: 3/4" = 1'-0"

12" 8" 4" 0 6" 1' 2' 3'

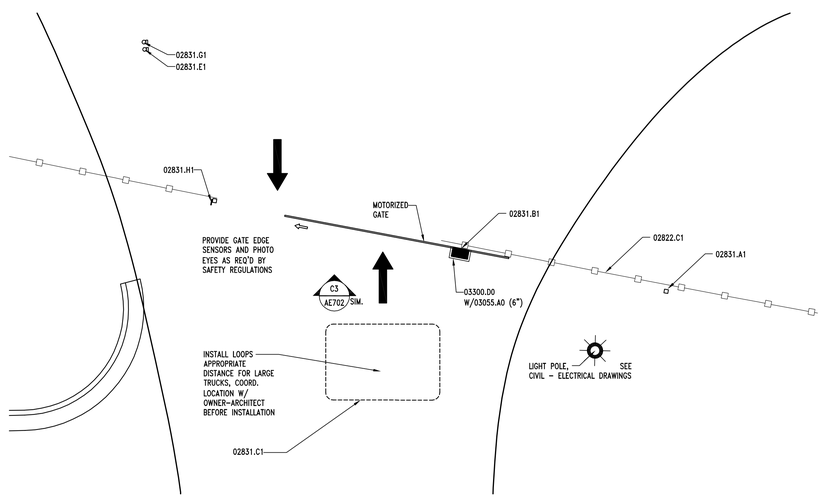

A2 | GATE PLAN

AE702 | REF. | SCALE: 1/8" = 1'-0"

8' 6' 4' 2' 0' 4' 8' 16'

NORTH

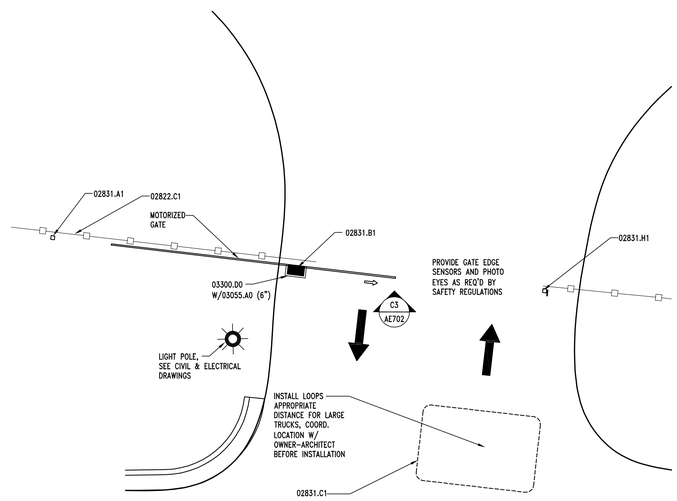

A5 | GATE PLAN

AE702 | REF. | SCALE: 1/8" = 1'-0"

8' 6' 4' 2' 0' 4' 8' 16'

NORTH

KEYNOTES

02200.A0	COMPACTED FILL
02200.B0	GRAVEL BASE
02513.A0	ASPHALT CONCRETE PAVING
02822.B1	2" # GATE FRAME
02822.C1	NEW 6' HIGH CHAIN LINK FENCE - SEE CIVIL
02822.D1	TENSION TIE WIRED
02822.G0	3 LINE BARBED WIRE
02822.H0	VERTICAL VINYL FENCE SLATS - COLOR BY ARCHITECT
02822.E2	LINE POSTS @ 8'-0" O.C.
02822.F1	2" DIAMOND MESH STEEL FABRIC
02831.A1	PHYSICAL TRAVEL STOP
02831.B1	HYDRAULIC SLIDE GATE OPERATOR W/AUDIO ALARM
02831.C1	UNDERGROUND OBSTRUCTION LOOP
02831.D1	PROVIDE GATE SENSORS
02831.E1	KEY PAD ACCESS ON PEDESTAL
02831.G1	FIRE ACCESS KNOX BOX ON PEDESTAL
02831.H1	GATE RECEIVER POCKET
03053.A0	CONCRETE WATER PROOFING ADMIXTURE
03055.A0	SALT AND WATER BARRIER
03300.C0	FOOTING
03300.B1	CONCRETE SLAB - SEE STRUCTURAL
03300.D0	CONCRETE PAD
05500.J1	PIPE BOLLARD (DIAMETER) - GALVANIZED & PAINTED
13100.A1	UNLEADED/DIESEL FUEL DISPENSER
13100.C0	FUEL SERVICE CARD READER - COORDINATE WITH FLEET SERVICES

GENERAL NOTES

1. FIELD VERIFY ALL EXISTING CONDITIONS AND THEIR COMPATIBILITY WITH NEW CONSTRUCTION PRIOR TO THE COMMENCEMENT OF WORK. COORDINATE DISCREPANCIES WITH ARCHITECT.

2. DO NOT SCALE DRAWINGS.

3. SEE ELECTRICAL DRAWINGS FOR ALL POWER & CONTROL INFORMATION.

4. CONTRACTOR TO PROVIDE ALL REQUIRED CODE & SAFETY DEVICES AS REQIRED BY GATE MANUFACTURER.

5. INSTALL LOOPS APPROPRIATE DISTANCE BELOW PAVEMENT FOR LARGE TRUCKS. COORDINATE LOCATION W/OWNER & ARCHITECT BEFORE INSTALLATION

6. SEE CIVIL DRAWINGS FOR EXTENT OF NEW FENCING

7. VINYL SLATS OCCUR @ WEST AND SOUTH SIDES OF PROPERTY LINE ADJACENT TO ROADWAY.

CLIENT

UDOT CONNECTING COMMUNITIES

STATION #2434
6072 E. EMIGRATION CANYON RD.
PARLEY'S CANYON, UTAH

DESIGNER

ARCHIPLEX GROUP
architecture · planning · design services
255 Crossroad Square
Salt Lake City, UT 84115
P:(801) 961-7070
F:(801) 961-7373

CONSULTANTS

REGISTRATION

STATE OF UTAH
RALPH M. STANISLAW
95-010619-0301
LICENSED ARCHITECT

ISSUE

MARK	DATE	DESCRIPTION
	01-09	Revised Contruction Doc.
	10-08	Construction Documents
	8-20-08	90% Review Submittal

ARCHIPLEX PROJECT NO:	0728.02
DFCM PROJECT NO:	08211900
DRAWN BY:	A. PHILLIPS
CHECKED BY:	R. STANISLAW
SCALE:	AS SHOWN
DATE:	JANUARY, 2009

KEY PLAN

SHEET TITLE

SITE STRUCTURES MOTORIZED GATE PLAN & ELEVATIONS

AE702

© 2004 ARCHIPLEX GROUP

KEYNOTES

02200.A0	COMPACT FILL – SEE CIVIL
02200.B0	GRAVEL BASE
02513.A0	ASPHALT CONCRETE PAVING
03053.A0	CONCRETE WATER PROOFING ADMIXTURE
03300.C1	FOOTING – SEE STRUCTURAL
03300.H1	CONCRETE PIER – SEE STRUCTURAL
03300.N1	REINFORCED CONCRETE PIERS – SEE STRUCTURAL
03300.P8	CHAMFER EDGE
05120.A1	STEEL BEAM GALVANIZED – SEE STRUCTURAL
05120.B1	STEEL COLUMN GALVANIZED – SEE STRUCTURAL
05500.Z0	CHAIN – GALVANIZED

GENERAL NOTES

1. FIELD VERIFY ALL EXISTING CONDITIONS AND THEIR COMPATIBILITY WITH NEW CONSTRUCTION PRIOR TO THE COMMENCEMENT OF WORK. COORDINATE DISCREPANCIES WITH ARCHITECT.
2. DO NOT SCALE DRAWINGS.
3. SEE STRUCTURAL FOR ADDITIONAL DIMENSIONS.
4. SEE CIVIL DRAWINGS FOR EXACT GRADES.

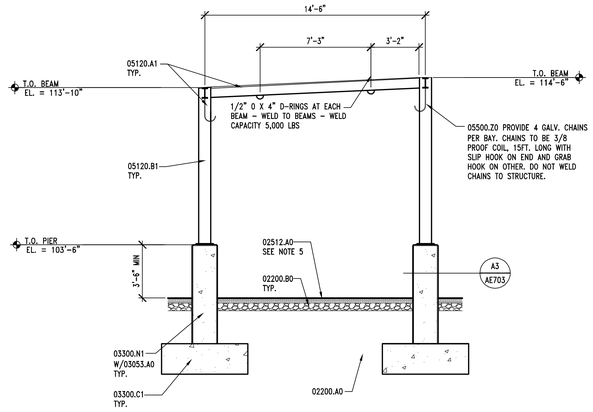

C4 SANDER RACKS SECTION 4' 3' 2' 1' 0' 2' 4' 8'
AE703 REF. AE703 SCALE: 1/4" = 1'-0"

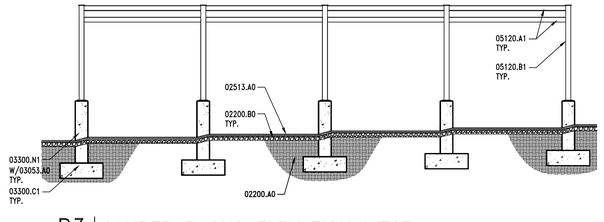

B3 SANDER RACKS ELEVATION WEST 8' 6' 4' 2' 0' 4' 8' 16'
AE703 REF. AE703 SCALE: 1/8" = 1'-0"

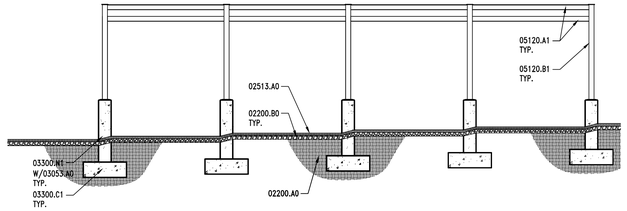

B4 SANDER RACKS ELEVATION EAST 8' 6' 4' 2' 0' 4' 8' 16'
AE703 REF. AE703 SCALE: 1/8" = 1'-0"

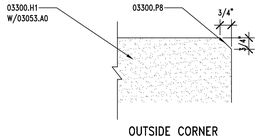

OUTSIDE CORNER

A3 CHAMFER DETAILS 4" 3" 2" 1" 0 2" 4" 8"
AE704 REF. AE704 & AE705 SCALE: 3" = 1'-0"

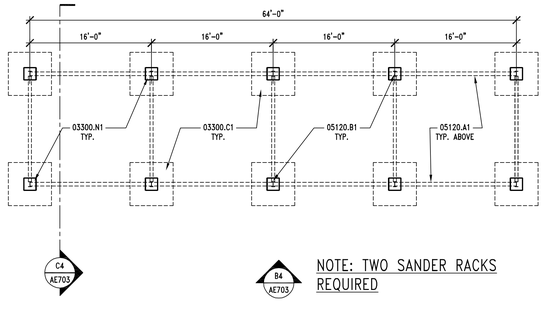

NOTE: TWO SANDER RACKS REQUIRED

A4 SANDER RACKS – PLAN 8' 6' 4' 2' 0' 4' 8' 16'
AE703 REF. AE703 SCALE: 1/8" = 1'-0"

CLIENT

UDOT CONNECTING COMMUNITIES

STATION #2434
6072 E. EMIGRATION CANYON RD.
PARLEY'S CANYON, UTAH

DESIGNER

ARCHIPLEX GROUP
architecture · planning · design services
255 Crossroad Square
Salt Lake City, UT 84115
P:(801) 961-7070
F:(801) 961-7373

CONSULTANTS

1-ZERO VOID PAVING?

REGISTRATION

STATE OF UTAH
RALPH M. STANISLAW
95-310818-0301
LICENSED ARCHITECT

ISSUE

MARK	DATE	DESCRIPTION
	01-09	Revised Contruction Doc.
	10-08	Construction Documents
	8-20-08	90% Review Submittal

ARCHIPLEX PROJECT NO:	0728.02
DFCM PROJECT NO:	08211900
DRAWN BY:	A. PHILLIPS
CHECKED BY:	R. STANISLAW
SCALE:	AS SHOWN
DATE:	JANUARY, 2009

KEY PLAN

SHEET TITLE

SITE STRUCTURES SANDER RACK PLAN, SECTION &ELEVATION

AE703

© 2004 ARCHIPLEX GROUP

GENERAL STRUCTURAL NOTES

GENERAL

1. The structural notes are intended to complement the project specifications. Specific notes and details in the drawings shall govern over the structural notes and typical details.
2. Typical details and sections shall apply where specific details are not shown.
3. The contractor shall verify all site conditions and dimensions. If actual conditions differ from those shown in the contract drawings, the contractor shall immediately notify the architect/engineer before proceeding with the fabrication or construction of any effected elements.
4. Omissions or conflicts between the contract drawings and/or specifications shall be brought to the attention of the architect/engineer before proceeding with any work involved. In case of conflict, follow the most stringent requirement as directed by the architect/engineer at no additional cost to the owner.
5. The contractor shall submit a written request to the architect/engineer before proceeding with any changes, substitutions or modifications. Any work done by the contractor before receiving written approval will be at the contractor's risk.
6. The contractor shall coordinate with all trades any items that are to be integrated into the structural system such as openings, penetrations, mechanical and electrical equipment, etc. Sizes and locations of mechanical and other equipment that differs from those shown on the contract drawings shall be reported to the architect/engineer.
7. The contractor shall provide adequate shoring and bracing as required for his method of erection. Shoring and bracing shall remain in place until final connections for the permanent members are completed. The building shall not be considered stable until all connections are completed. Walls shall not be considered self-supporting and shall be braced until the floor/roof system is completed.
8. Site observations by BHB Consulting Engineers, P.C.'s field representative shall not be construed as approval of construction procedures nor special inspection.
9. Detailing and shop drawing production for structural elements will require information (including dimensions) contained in the architectural, structural and/or other consultants' drawings. The structural drawings shall be used in conjunction with the architectural and other consultant's drawings. Some dimensions and elements such as elevations, depressions, slopes, mechanical housekeeping pads, etc. are not shown in the structural drawings. All dimensions shown on structural drawings shall be verified by contractor with architectural, mechanical and electrical drawings.
10. Review of shop drawing submittals by BHB Consulting Engineers, P.C. is for general compliance only and is not intended for approval. The shop drawing review shall not relieve the contractor from the responsibility of completing the project according to the contract documents.
11. Shop drawings made from reproductions of the contract drawings will be rejected unless the contractor signs a release agreement prior to the shop drawings being reviewed.
12. Only an authorized representative of BHB Consulting Engineers, P.C. may make changes to these contract drawings. BHB Consulting Engineers, P.C. shall not be held responsible or liable for any claims arising directly or indirectly from changes made without written authorization by an authorized representative of BHB Consulting Engineers, P.C.

BASIS OF DESIGN

1. Governing Building Code — International Building Code 2006

2. Roof Snow Load
   a. Ground Snow Load — P_g = 86 psf
   b. Snow Importance Factor — I_s = 1.0
   c. Snow Exposure Coefficient — C_e = 1.0
   d. Thermal Exposure Coefficient — C_t = 1.0
   e. Roof Snow Load — $P_f = 0.7 * C_e * C_t * I_s * P_g$ = 60 psf plus Snow Drift

3. Floor Live Loads
   a. Mezzanine — 125 psf

4. Seismic Loads
   a. Short Period Mapped Spectral Acceleration — S_S = 1.00
   b. Soil Site Class — D
   c. Short Period Site Coefficient — F_a = 1.10
   d. 5% Damped Design Spectral Response Acceleration — $S_{DS} = 2/3 * F_a * S_S$ = .73
   e. Seismic Importance Factor — I_e = 1.00
   f. Response Modification Coefficient — R = 5.0
   g. Basic Seismic-Force-Resisting System — Special Reinforced Masonry Shear Walls
   h. Seismic Response Coefficient — $C_s = S_{DS} * I_e / R$
   i. W — Dead Loads of Structure
   j. Building Seismic Design Category — D
   k. System Overstrength Factor — 2.5
   l. Deflection Amplification Factor — 3.5
   m. Base Shear — $V = C_S * W$ = 0.146 W (Strength Design)

5. Wind Loads
   a. Wind Velocity (3 Second Gust) — 90 mph
   b. Exposure Type — C
   c. Wind Importance Factor — 1.00

FOUNDATION

1. Soils Report by PEPG Engineering, L.L.C, Dated August, 2008.
2. Soil Bearing Pressure: 2050 psf, on structural Fill.
3. Frost Protection: 34 inches minimum.
4. Lateral Soil Pressure Fluid Equivalent Density.
   a. Active ....35 pcf (retaining walls)
   b. At Rest ....55 pcf (rigid foundation walls)
   c. Passive....................245 pcf
5. Angle of internal friction, native soil...32 degrees

EARTHWORK

1. All footings shall bear on compacted structural fill as per soils report.
2. Consult the soils report for further earthwork requirements.

CONCRETE

1. Materials, unless noted otherwise:
   a. Normal weight aggregates — ASTM C 33
   b. Reinforcing Steel — ASTM 615 Grade 60 (Fy = 60 ksi). Use Grade 40 (Fy = 40 ksi) for field bent dowels with spacings indicated reduced by 1/3.
   c. Deformed Bar Anchors (DBA) — ASTM A496
   d. Headed Stud Anchors (HSA) — ASTM A108
   e. Anchor Rods — ASTM F1554, Grade 36, with ASTM A563 heavy hex nuts and hardened washers Grade A
   f. Admixtures:
      i. Air-entraining admixtures comply with ASTM C 260 (when used).
      ii Calcium chloride shall not be added to the concrete mix.
   g. Type I/II cement complying with ASTM C-150 shall be used for all concrete.
   h. The water/cement ratios shall meet the requirements of ACI 318.
   i. Provide air entraining as recommended by ACI 318.
   j. No aluminum conduit or product containing aluminum or any other material injurious to concrete shall be embedded in concrete.
2. Compressive strengths of concrete at 28 days shall be as follows:
   a. Footings and Foundation Wall ....3,000 psi
   b. Interior Slabs on Grade....................4,000 psi
   c. Normal Weight concrete over Steel Deck ....3,500 psi
   d. All Site Concrete ....4,000 psi
3. 3-1/2" thick (6-1/2" overall) normal weight concrete slab shall be poured over the steel deck. Reinforce slab with 6" x 6" – W2.1/W2.1 welded wire fabric minimum, unless noted otherwise. Welded Wire Fabric shall be placed 1" to 1-1/2" below the top of the slab.
   a. At contractor's option, the welded wire fabric may be substituted with either of the following:
      i. 100% virgin polypropylene synthetic fiber containing no reprocessed olefin materials and specifically manufactured to an optimum gradation for use as concrete secondary reinforcement. Application shall be 1.5 lbs minimum per cubic yard.
      ii. Alkali Resistant (AR) glass fibers with a minimum of 16% Zirconia. Application shall be 1 lb minimum per cubic yard of concrete. The fiber manufacturer must document evidence of compliance with building codes in accordance with ICC-ES AC32 and ASTM C1116, Type II, 4.1.2.
4. Only one grade or type of concrete shall be poured on the site at any given time.
5. The contractor shall be responsible for the design, detailing, care, placement and removal of all formwork and shores.
   a. Supporting forms and shoring shall not be removed until structural members have acquired sufficient strength to safely support their own weight and any construction load to which they may be subjected. In no case, however, shall forms and shoring be removed in less than 24 hours after concrete placement.
6. Reinforcement shall have the following concrete cover:
   Cast-in-place Concrete:....................Clear Cover
   a. Cast against and permanently exposed to earth....................3"
   b. Formed concrete exposed to earth or weather:
      #6 thru #18 bars ....2"
      #5 and smaller bars ....1-1/2"
   c. Concrete not exposed to weather or in contact with ground:
      Slabs, Walls, Joists; #11 bars and smaller....................3/4"
      Beams, Columns: Primary Reinf., Ties, Stirrups, Spirals ....1-1/2"
7. Construction Joints and Control Joints:
   a. Provide a formed and beveled 2 x 4 x continuous keyway in all horizontal and vertical construction joints including between top of footing and foundation walls, unless noted otherwise. In addition, all joints shall be intentionally roughened to a full amplitude of approximately 1/4 inch.
   b. Control joints shall be installed in slabs on grade so the length to width ratio of the slab is no more than 1.25:1. Control joints shall be completed within 12 hours of concrete placement. Control joints may be installed by:
      i. Saw cut a depth of 1/4 the thickness of the slab
      ii. Tooled joints a depth of 1/4 the thickness of the slab
   c. Install construction or control joints in slabs on grade at a spacing not to exceed 30 times the slab thickness in any direction, unless noted otherwise. Construction joints shall not exceed a distance of 125'-0" o.c. in any direction.
8. Construction
   a. Use chairs or other support devices recommended by the CRSI to support and tie reinforcement bars prior to placing concrete. Reinforcing steel for slabs on grade shall be adequately supported on precast concrete units. Lifting the reinforcing off the grade during placement of concrete is not permitted.
   b. Concrete to be mechanically consolidated during placement per ACI standards.
   c. Contractor shall coordinate placement of all openings, curbs, dowels, sleeves, conduits, bolts, inserts and other embedded items prior to concrete placement.
   d. All embeds and dowels shall be securely tied to formwork or to adjacent reinforcing prior to the placement of concrete.
   e. No pipes, ducts, sleeves, etc shall be placed in structural concrete unless specifically detailed or approved by the structural engineer. Penetrations through walls when approved shall be built into the wall prior to concrete placement. Penetrations will not be allowed in footings or grade beams unless detailed. Piping shall be routed around these elements and footings stepped to avoid piping.
   f. Reinforcing Bars shall not be welded. Do not substitute reinforcing bars for DBAs or HSAs.
9. Detailing:
   a. Lap splice lengths shall be detailed to comply with the "Concrete Reinforcing Bar Lap Splice Schedule" on sheet SB601 Splices may be made with mechanical splices capable of 125% tension capacity of the bar being spliced. Mechanical splices shall be the positive connecting type coupler and shall meet all Uniform Building Code requirements. Use "Cadweld", "Lenton" Standard Couplers, "Bar-Lock" or equal with internal protector. If mechanical splices are used, splices or couplers on adjacent bars shall be staggered a minimum of 24" apart along the longitudinal axis of the reinforcing bars.
   b. At joints provide reinforcing dowels to match the member reinforcing, unless noted otherwise.
   c. At all discontinuous control or construction slab on grade joints, provide 2 - #4 x 48 inches.
   d. Provide corner bars at intersecting wall corners using the same bar size and spacing as the horizontal wall reinforcing.
   e. All vertical reinforcing shall be doweled to footings, or to the structure below with the same size and spacing as the vertical reinforcing for the element above. Dowels extending into footings shall terminate with a 90 degree standard hook and shall extend to within 4" of the bottom of the footing. Footing dowels (#8 bars and smaller) with hooks need not extend more than 20" into footings.
   f. Horizontal wall reinforcing shall terminate at ends of walls and openings into the far end of the jamb column with a 90-degree standard hook plus a 6 bar diameter extension. Horizontal wall reinforcing shall be continuous through construction and control joints.
   g. See detail C3/SB501for reinforcing around miscellaneous openings (8" to 36" wide). For openings wider than 36", contact the engineer. All recesses that interrupt reinforcing shall be reinforced the same as an opening.

EPOXY

1. Epoxy shall be "HIT RE 500-SD by Hilti Corporation, ITW Redhead Epcon G5 or SET-XP by Simpson Strong Tie.
2. All drilled holes for bars or anchors rods 1" in diameter and smaller shall be 1/8 inch larger in diameter than the bar of anchor rod being installed. All drilled holes for bars or anchors rods greater than 1" in diameter shall be 1/4 inch larger in diameter than the bar of anchor rod being installed.
3. After drilling the proper size hole, clean the walls and bottom of the drilled hole of all dust and debris using a nylon brush in conjunction with oil free compressed air. The hole shall be free of dust, debris and standing water.
4. Follow all of the manufacturer's recommendations for epoxy installation.

MINI-PIERS

1. Mini-piers shall be designed and installed to resist the design loads shown in these drawings.
2. All work shall be performed in accordance with all applicable safety codes in effect at the time of installation.
3. The mini-pier sections and extensions shall be solid steel, rounded corner square shaft configuration with one or more bearing plates welded to the shaft.
4. All mini-piers shall be corrosion protected by B-1 hot dip galvanization meeting ASTM A153.
5. The appropriate steel underpinning bracket cap shall be used.
6. All welding shall meet requirements of AWS", Structural Welding Code", D1.1, latest edition. All welders shall be AWS certified.
7. Shop drawings indicating shaft sizes, underpinning brackets, etcetera shall be submittal along with manufacturer's catalog cuts and data sheets shall be submitted for engineer's review.
8. The installer shall keep a written record for each mini-pier installed. This record shall include the following:
   a. Project name and location
   b. Name of authorized and certified dealer and installer
   c. Name of installer's foreman or representative witnessing the installation.
   d. Date of installation
   e. Location of mini-pier
   f. Overall depth of installation from Multi-purpose Room finished floor.
9. Special inspection shall be provided to meet section 1704.9 of the International Building Code.

MASONRY

1. Materials, unless noted otherwise:
   a. Concrete Masonry Units (CMU): Lightweight Grade N, Type 1 (minimum unit strength of 2800 psi). f'_m = 2000 psi
   b. Mortar: Use Type "S" 1800 psi minimum compressive
   c. Grout shall attain a minimum compressive strength of 2800 psi at 28 days.
   d. Reinforcing Steel — ASTM 615 Grade 60 (Fy = 60 ksi)
   e. Deformed Bar Anchors (DBA) — ASTM A496
   f. Headed Stud Anchors (HSA) — ASTM A108
   g. Anchor Rods — ASTM F1554, Grade 36,with ASTM A563 heavy hex nuts hardened washers
2. Reinforcement shall have the following cover:
   a. Reinforcement shall have a minimum coverage of one bar diameter over all the bars, but not less than 3/4". When masonry is exposed to soil, minimum coverage shall be 1.5".
3. Construction Requirements:
   a. All units shall be laid with full mortar beds on the face shells. All head joints shall be filled solidly with mortar for a distance in from the face of the units not less than the thickness of the longitudinal face shells. Cells which are to be grouted shall have full head joints.
   b. Masonry walls, beams and columns shall be constructed with running bond, unless noted otherwise.
   c. All cells containing reinforcement, embeds, anchor bolts, etc. shall be filled solid with grout. Grout shall be placed by mechanical vibration during placing and revibrated after excess moisture has been absorbed but before workability is lost. Rodding of grout is not allowed.
   d. Where walls are not grouted solid, each grout pour shall terminate flush with the top of the uppermost unit except at cells with vertical reinforcing where the grout shall be 1-1/2 inches below top of unit to provide construction key.
   e. Grout pours shall be limited to 4'-0" unless written approval is obtained from the engineer of record.
   f. All walls below grade shall be grouted solid.
   g. Vertical cells to be filled with grout shall have vertical alignment sufficient to maintain a clear, unobstructed vertical cell measuring not less than 2 inches by 3 inches. All steel reinforcement shall be secured against displacement prior to grouting by wire positioners or other suitable devices at intervals not exceeding 200 bar diameters or 10 feet maximum, or at bar splice locations. Vertical reinforcing shall be located at the center of the wall unless noted otherwise
   h. Reinforcing Bars shall not be welded. Do not substitute reinforcing bars for DBAs or HSAs.
   i. Control Joints: Spacing shall not exceed 40'-0". See architectural drawings for locations.
   j. Grout all beam and joist pockets solid after installation of beams and joists.
   k. Embed channels and plates shall be placed so as to create a flush surface with the face of the wall.
   l. Anchor bolts and headed stud anchors shall be set in a grouted cell. Anchor bolts and headed stud anchors shall have 1" grout surrounding the shank at its penetration. Grout shall be flush with the face or top of the masonry.
4. Detailing Requirement
   a. Lap all masonry reinforcing per "Masonry Reinforcing Lap Schedule" on sheet SF601. All vertical reinforcing shall be doweled to the foundation wall, footing (structure below) and to the structure below with the same size dowel, spacing (and in the same core) as the vertical wall reinforcing above.
   b. Corner Bars: Horizontal reinforcement shall be continuous at all corners and at intersecting walls. Provide corner bars with the required lap splice length.
   c. Wall Openings: For unscheduled openings wider than 24 inches, provide reinforcing on all sides per detail C2/SB501. Also, for all scheduled openings, provide horizontal bar at bottom of opening per detail C2/SB501. Vertical bars shall extend from floor level below to the floor, or roof level above. Horizontal bars for all openings shall extend a minimum of 48 bar diameters beyond the corners of the opening. Where a 48 bar diameter extension is not possible, extend bars as far beyond the opening as possible and terminate the bar(s) with a 90 degree standard ACI hook.
   d. Horizontal wall reinforcing shall be continuous through joining concrete walls, masonry walls, columns, and pilasters. Provide a key between the wall and the column or pilaster. Horizontal wall reinforcing shall be placed inside the column vertical reinforcing.
   e. Horizontal wall reinforcing shall terminate with a hook at edge of openings and at each side of control joints except at floor and roof levels, lintels, beams and at top of parapets. See details B2/SB501.
   f. All masonry column ties shall terminate with 135 degree hooks plus a 6 bar diameter extension (4" minimum)

STRUCTURAL STEEL

1. Material:
   a. Wide Flanges Section — ASTM A992 (50 ksi)
   b. Other shapes & Plates — ASTM A36 (36 ksi)
   c. Square or Rectangular HSS — ASTM A500 (46 ksi) Grade B
   d. Deformed Bar Anchors (DBA) — ASTM A496
   e. Headed Stud Anchors (HSA) — ASTM A108
   f. Anchor Rods — ASTM F1554, Grade 36, with ASTM A563 heavy hex nuts and hardened washers Grade A
   g. Bolted Connections: — ASTM A325
2. Fabrication and construction shall comply with the latest edition of the following Codes and Standards:
   a. American Institute of Steel Construction (AISC), "Specification for the Design, Fabrication and Erection of Structural Steel for Buildings," with "Commentary".
   b. AISC "Code of Standard Practice" excluding the following: Section 3.4, Section 4.4, Section 4.4.1,
   c. AISC "Specification for Structural Joints Using ASTM A325 or A490 Bolts"
   d. American Welding Society (AWS), Structural Welding Code (specific items do not apply when they conflict with the AISC requirements).
   e. AISC "Seismic Provision for Structural Steel Buildings"
3. Welding
   a. All welding and cutting shall be performed by AWS certified welders.
   b. Use E-70 XX or as noted otherwise. E60 XX may be used for welding steel roof decks.
   c. All intersecting steel shapes which are not bolted shall be connected by a fillet weld all around, unless noted otherwise. Where fillet weld sizes are not shown they shall be 1/16" less than the thinnest of the connected parts for thicknesses 1/4" and larger. Fillet welds on plates less than 1/4" shall be of the same size as the thinnest of the connected part.
   d. Reinforcing Bars: Do not weld rebar. Do not substitute reinforcing bars for deformed bar anchors (DBAs), machine bolts, or headed stud anchors (HSAs).
   e. Do not weld anchor bolts, including "tack" welds.
   f. Headed Stud Anchors (HSAs) welding and deformed bar anchor welding shall conform to the manufacturer's specifications.
4. Bolted Connections:
   a. Use ASTM A325N bolts for steel to steel connections, as noted herein or as noted on the drawings. A325N bolts shall be used in connections for simple span framing and beam (or girder) to bearing plate connections. Tighten bolts to a snug tight condition. See sheet SF601.
   b. Use hardened washers beneath the turned element of all bolts or nuts. Use hardened beveled washers, to compensate for the lack of parallelism, where the outer face of the bolted parts has a slope greater than one in twenty with respect to the plane normal to the bolt axis. At oversized holes hardened washers or plates shall conform with ASTM F-436 and shall completely cover the slot after installation.
   c. Where a steel to steel beam connection is not shown, provide a standard AISC framed connection for one half the total uniform load capacity of the beam for the span and steel specified.
   d. Bolts, nuts and washers shall not be reused.
5. Provide full-depth web-stiffener plates at each side of all beams at all bearing points. Stiffener plates shall be the thickness called out below unless noted otherwise and shall be welded both sides with fillet welds all around:

FLANGE WIDTH	STIFFENER THICKNESS	WELD SIZE
Less than 8 1/4"	1/4"	3/16"
8 1/4" to 12 1/4"	3/8"	1/4"
12 1/4" to 16 ½"	1/2"	5/16"
16 ½" to 20 ¾"	5/8"	3/8"

OPEN WEB STEEL JOISTS AND GIRDERS

1. All open web steel joist and girders shall be fabricated and erected in accordance with the latest edition of Steel Joist Institute (SJI), "Standard Specifications and Code of Standard Practice".
2. At the completion of fabrication, the steel joist manufacturer shall submit to the building official a certificate of compliance in accordance with IBC Section 1704.2.2 stating if the work was performed in accordance with approved construction documents and with SJI standard specifications.
3. Joists or girders with slopes greater than 1/2 inch per foot shall be designed to meet or exceed the load capacities, listed in the SJI load tables, of the joist or girder sizes indicated on the framing plan, as if the joists or girders were installed level.
4. Provide special bearing ends to accommodate slopes from sloped joists, sloped girders or sloped bearing conditions.
5. Modifications to any joist or girder, including holes through the top and bottom chords, without the written consent and direction from the manufacturer is not allowed.
6. Open web joist deflection shall be limited to L/240 for total loads and L/360 for live load, unless noted otherwise.
7. Joist bridging shown on plans is for schematic purposes only; actual size, quantity and location of bridging shall be determined by the joist supplier per SJI. Coordinate bridging locations to avoid interference with mechanical, electrical and fire protection equipment and skylights.

METAL DECKING

1. Steel deck shall comply with the latest requirements of the Steel Deck Institute.
2. All deck shall be 3-span continuous minimum. In areas where 3-span conditions are not possible, the contractor shall provide heavier gage deck as required to provide the equivalent loading of the deck under a three span condition.
3. Steel roof deck shall not be used to support loads from plumbing, HVAC ducts, light fixtures, architectural elements or equipment of any kind, unless specifically noted. Light weight suspended acoustical ceilings with a total weight of 50 lbs per attachment may be hung from roof deck. The hangers shall be staggered to distribute the loads over multiple deck flutes.
4. All deck supporting members shall be dry before welding.
5. Clinch seams before welding interlocking seams.

Steel Floor Deck

a. Steel floor deck at mezzanine shall be 3" deep X 20 gage minimum phosphatized/painted composite type "W" deck with interlocking side seams with the following properties:

	22 Gage	20 Gage	18 Gage	16 Gage
Minimum S ($in^3/_{ft}$) =	0.418	0.534	0.767	0.960
Minimum I ($in^4/_{ft}$) =	0.718	0.896	1.203	1.590

Deck shall be galvanized (G60) when used below mechanical equipment rooms.

b. Steel deck with 3 1/2" thick (6 1/2" overall) normal weight concrete slab shall have a minimum diaphragm shear capacity of 1600 lbs/ft. for a 10'-0" deck span.
c. Weld deck to supporting framing members with 3/4" diameter puddle welds at the following spacing (Closer spacings may be used to develop minimum shear requirements.):
   i. 12" o.c. to supports perpendicular to deck corrugations (4 welds per 36" wide sheet).
   ii 12" o.c. to all supports parallel to deck corrugations.
d. Hilti power driven fasteners are acceptable as an alternative to welds provided the connection meets the diaphragm shear capacity given above. Call Hilti at 800-879-8000 extension 6337 for connection information comparison. If Hilti power driven fasteners are used, the contractor shall submit Hilti's calculations to the Architect/Engineer for review. Also if Hilti power driven fasteners are used, a Hilti representative shall be present before the decking is installed to make sure the installer is properly trained in using the equipment. The Hilti representative shall also make a site visit the day after deck has been started to be installed to verify the power driven fasteners are being installed correctly.
e. Attach interlocking seams with 3/16" Ø button punch at 18" o.c. or with 1 1/2" long top seam welds at 36" o.c. or with Verco PunchLok System at 36" o.c., with ASC DeltaGrip System at 36"o.c. or with Wheeling Seismic Shearloc at 36" o.c. Closer spacing may be used to develop minimum shear requirements. A standard button punch can <u>not</u> be used in place of Verco PunchLok, ASC DeltaGrip or Wheeling Seismic Shearloc.
f. Provide a 2-inch minimum bearing at supports.

Steel Roof Deck

a. Steel roof deck shall be 1.1/2" deep X 20 gage minimum painted, type "B" wide rib deck with interlocking side seams with the following properties:

	22 Gage	20 Gage	18 Gage	16 Gage
Minimum S ($in^3/_{ft}$) =	0.187	0.234	0.322	0.411
Minimum I ($in^4/_{ft}$) =	0.175	0.213	0.296	0.377

b. Minimum allowable deck diaphragm shear values shall be 1,050 lb/ft. for a 7'-0" deck span.
c. Weld steel roof deck to supporting framing members with 3/4" diameter puddle welds at the following spacings (Closer spacing may be used to develop minimum shear requirements.):
   i. 6" o.c. to all supports perpendicular to deck corrugations (7 welds per 36" sheet).
   ii. 6" o.c. to all supports parallel to deck corrugations.
d. Hilti power driven fasteners are acceptable as an alternative to welds provided the connection meets the diaphragm shear capacity given above. Call Hilti at 800-879-8000 extension 6337 for connection information comparison. If Hilti power driven fasteners are used, the contractor shall submit Hilti's calculations to the Architect/Engineer for review. Also if Hilti power driven fasteners are used, a Hilti representative shall be present before the decking is installed to make sure the installer is properly trained in using the equipment. The Hilti representative shall also make a site visit the day after deck has been started to be installed to verify the power driven fasteners are being installed correctly.
e. Attach interlocking seams with 1 1/2" long top seam welds at 12" o.c. maximum or with Verco PunchLok System at 8" o.c. maximum, with ASC Delta Grip System at 15" o.c. maximum or with Wheeling Gator-Seismic Shearloc at 4" o.c maximum. Closer spacing may be used to develop minimum shear requirements. A standard button punch can <u>not</u> be used in place of Verco PunchLok, DeltaGrip or Gator-Seismic Shearloc.
f. Provide a 2-inch minimum bearing and a 4-inch lap at the splice points.

COLD-FORMED STEEL

1. All cold-formed steel shall meet the requirements of "Specifications for the Design of Cold-Formed Steel Structural Members" by American Iron and Steel Institute (AISI).
2. Light Gauge Steel Framing:
   a. Galvanized steel shall meet the minimum requirements of ASTM A653 (Fy = 50 ksi) for 97 mil (12 gauge), 68 mil (14 gauge) and 54 mil (16 gauge). For 43 mil (18 gauge) and lighter galvanized steel shall meet and ASTM A653 (Fy = 33 ksi). Galvanized coatings must meet the ASTM A924.
   b. Follow all manufacturers' recommendations for the use of these products.
   c. Unless noted otherwise, all welded connections shall be done according to AWS standards.
   d. All interior non-bearing steel-stud walls that extend above the ceiling but do not attach to the structure above shall be brace with diagonal metal-stud braces (45 degrees). The kl/r ratio of the brace shall not exceed 200 and shall not be spaced further apart than 10'-0" o.c. Connect diagonal braces to the top of the steel stud walls and to the top flange of the steel beams with two #10 tek screws minimum. Where a concrete deck occurs above, use two powder-driven fasteners per diagonal brace. Other approved methods may be used.

SPECIAL INSPECTION AND QUALITY ASSURANCE

Special inspection and quality assurance, as required by section 1704 thru 1709 of the IBC, shall be provided by an independent agency employed by the owner unless waived by the building official. The contractor shall coordinate and cooperate with the required inspections. All testing and inspection reports shall be sent within 24 hours of the test to the architect, engineer, building official and contractor for review. Special inspection during fabrication is not required if the fabricator is registered and approved to perform such work with out special inspection. Items requiring special inspection and quality assurance are:

1. Soils (IBC 1704.7)
   a. Prior to placement of the prepared fill, the special inspector shall determine that the site has been prepared in accordance with the soils report.
   b. During placement and compaction of the fill material, the special inspector shall determine that the material being used and the maximum lift thickness comply with the soils report.
   c. The special inspector shall determine that the in-place dry density of the compacted fill material complies with the soils report.
      i. Continuous Footing Backfill: At each compacted backfill layer, at least one test for each 40 linear feet or less of wall length, but no fewer than 2 tests.
      ii. Spot Footing Backfill: Minimum of one compaction test for each lift for each spot footing.
   d. See specifications for further requirements.
2. Concrete placement (IBC Section 1704.4)
   a. Continuous special inspection shall be provided
   b. Cylinders, slump, temperature and air-entrainment shall be done for every 50 cubic yards or each day's production if the day's production is less than 50 cubic yards.
   c. Protection of concrete during cold and hot weather
   d. See specifications for further concrete testing requirements.
3. Bolts installed in concrete (IBC Section 1704.4)
   a. All bolts shall be special inspected prior to and during concrete placement.
4. Embeds and Inserts installed in concrete (IBC Section 1704.4)
   a. All embeds and inserts shall be special inspected prior to and during concrete placement.
5. Concrete reinforcing steel placement (IBC Section 1704.4)
   a. All Reinforcing shall be special inspected prior to concrete placement.
6. Structural welding, including steel deck (IBC 1707.2 and 1704.3)
   a. Periodic special inspection of metal floor prior to concrete placement and roof decks.
   b. Periodic special inspection of single pass fillet welds less than or equal to 5/16"
   c. Continuous special inspection of single pass fillet welds greater than 5/16" and multi-pass fillet welds.
   d. Continuous special inspection of complete and partial penetration welds.
7. Metal deck using mechanical attachments (IBC 1704.13)
   a. Periodic special inspection of metal floor prior to concrete placement and roof decks. Special inspection shall be done to verify size and spacing of shot pins / screws for deck attachment to the supporting structural. Also special inspection shall be done to verify spacing and size of seam attachments.
8. High Strength bolted connections (IBC Section 1704.3.3)
   a. Periodic special inspection of bearing type connections.
   b. Continuous special inspection of slip critical connections. Special inspector shall be present to observe the pre-installation testing and calibration procedures.
9. Structural masonry shall have Level 1(Non-Essential Facilities) special inspection per IBC section 1704.5.2
   a. Periodic special inspection shall be performed for
      i Proportions of site-prepared mortar, construction of mortar joints,
      ii Location of reinforcement and connectors,
      iii. Size and location of structural elements
      iv. Type, size and location and placement of anchors
      v. Size, grade and type and placement of reinforcement
      vi. Verify grout space is clean prior to grouting
      vii Protection of masonry during cold and hot weather
   b. Continuous special inspection shall be provided for grout placement and preparation of any required grout specimens, mortar specimens and prisms.
   c. Quality Assurance shall be according to Level 2 quality assurance (Table 1.14.1.2 of ACI 530/ASCE 5/TMS 402).
      i. Prior to construction, a letter of strength certification from the suppliers of the masonry units and grout shall be submitted.
      ii. During construction, the grout and mortar shall be tested for every 5,000 square feet of masonry constructed.
      iii. The contractor has the option of using the "Masonry Prism Test Method" per IBC Section 2105.2.2.2 in lieu of the "Unit Strength Method."
10. Mini-piers construction (Such as Screw Piers) (IBC Section 1704.8 & 9)
    a. Continuous special inspection shall be performed.
11. Epoxy Anchors (IBC Section 1704.13)
    a. Special inspection shall verify all drilled holes' size and depth prior to installation of epoxy and anchor rod.
12. Cold-formed steel framing (IBC 1707.4)
    a. Periodic special inspection is required for screw attachment, bolting, anchoring and other fastening of components within the seismic-force resisting system, including struts, braces and hold downs.

SITE OBSERVATIONS BY STRUCTURAL ENGINEER

Site observations, as required by IBC section 1709, shall be done by the Engineer of Record or an approved subordinate at the stages of construction listed below. The contractor shall notify the engineer when he has reached the construction stage listed below and before the work to be observed is covered up, walled in or becomes otherwise hidden from view or in-accessible to any necessary corrections. At the conclusion of the project, the structural observer shall submit to the building official a written statement that the site visits have been made and identify any reported deficiencies that to the best of the structural observer's knowledge have not been resolved (See 1709.1).

1. No structural observations are required by code.

DEFERRED SUBMITTALS

For the purpose of this section, deferred submittals are defined as per section 106.3.4.2 of the IBC. Submittal documents for deferred submittal items shall be submitted to the engineer, architect and building official for their review for general conformance with the design of the building. Deferred structural submittals for this project are:
1. Open Web Steel Joists and Girders
2. Mini Piers

LEGEND OF MARKS AND ABREVIATIONS

AB	ANCHOR BOLT(S)
ABV	ABOVE
ALT	ALTERNATE
APPROX	APPROXIMATE
ARCH	ARCHITECT(URAL)
BLDG	BUILDING
BLW	BELOW
BM	BEAM
BOT	BOTTOM
BRG	BEARING
BTWN	BETWEEN
CC.	CENTER-TO CENTER
C.J.	CONST/CONTROL JOINT
CMU	CONCRETE MASONRY UNIT
COL	COLUMN
CONC	CONCRETE
CONST	CONSTRUCTION
CTR	CENTER
CW-x	CONCRETE WALL
DB	DECK BEARING
DBA	DEFORMED BAR ANCHOR
DBE	DECK BEARING ELEVATION
DBL	DOUBLE
DET	DETAIL
DIA	DIAMETER
DIM	DIMENSION
DN	DOWN
DWG	DRAWING
DWL	DOWEL
EA	EACH
E.F.	EACH FACE
E.J.	EXPANSION JOINT
ELEC	ELECTRICAL
ELEV	ELEVATION
EQUIP	EQUIPMENT
EQ	EQUAL
E.W.	EACH WAY
EXST	EXISTING
EXP	EXPANSION
EXT	EXTERIOR
FC-x	CONTINUOUS FOOTING MARK
F.D.	FLOOR DRAIN
FDN	FOUNDATION
F.F.	FINISHED FLOOR
FR-x	RECTANGULAR FOOTING MARK
FS-x	SQUARE FOOTING MARK
FT	FOOT
FTG	FOOTING
FTS-x	THICKEN SLAB MARK
GA	GAUGE
GALV	GALVANIZED
GSN	GENERAL STRUCTURAL NOTES
HB	HORIZONTAL BRIDGING
HORIZ	HORIZONTAL
HSA	HEADED STUD ANCHOR
HT	HEIGHT
ICBO	INTERNATIONAL CONFERENCE OF BUILDING OFFICIALS
IBC	INTERNATIONAL BUILDING CODE
I.F.	INSIDE FACE
IN.	INCH
INT	INTERIOR
JT	JOINT
JST	JOIST
k	KIP(S) = 1000 POUNDS

KLF	KIPS PER LINEAL FOOT
KSF	KIPS PER SQUARE FOOT
LBS	POUNDS
LF	LINEAL FOOT
LLH	LONG LEG HORIZONTAL
LLV	LONG LEG VERTICAL
LSV	LONG SIDE VERTICAL
MAS	MASONRY
MAX	MAXIMUM
MCJ	MASONRY CONTROL JOINT
MC-x	MASONRY COLUMN MARK
MECH	MECHANICAL
MFR	MANUFACTURER
MIN	MINIMUM
MISC	MISCELLANEOUS
ML-x	MASONRY LINTEL
MW-x	MASONRY WALL
NIC	NOT IN CONTRACT
NTS	NOT TO SCALE
O.C.	ON CENTER
O.F.	OUTSIDE FACE
OPNG	OPENING
OPP	OPPOSITE
PCF	POUNDS PER CUBIC FOOT
PL	PLATE
PLF	POUNDS PER LINEAL FOOT
PSF	POUNDS PER SQUARE FOOT
PSI	POUNDS PER SQUARE INCH
PT	POINT
REINF	REINFORCING
REQD	REQUIRED
R.D.	ROOF DRAIN
RTU	ROOF TOP UNITS
SBP-x	STEEL BASE PLATE MARK
SC-x	STEEL COLUMN MARK
SCP-x	STEEL CAP PLATE MARK
SHT	SHEET
SI	SPECIAL INSPECTION
SIM	SIMILAR
SMU	SUSPENDED MECHANICAL UNITS
SOG	SLAB-ON-GRADE
SQ	SQUARE
STAG	STAGGERED
STD	STANDARD
STL	STEEL
STR	STRUCTURAL
STS	SELF TAPPING SCREWS
T&B	TOP AND BOTTOM
TEMP	TEMPERATURE
THDS	THREADS
T.O.	TOP OF
TOC	TOP OF CONCRETE
TOD	TOP OF DECK
TOF	TOP OF FOOTING
TOS	TOP OF STEEL
TOW	TOP OF WALL
TYP	TYPICAL
UNO	UNLESS NOTED OTHERWISE
VERT	VERTICAL
W/	WITH
WT	WALL THICKNESS
WWF	WELDED WIRE FABRIC
WWM	WELDED WIRE MESH

CLIENT

UDOT CONNECTING COMMUNITIES

STATION #2434
6072 E. EMIGRATION CANYON RD.
PARLEY'S CANYON, UTAH

DESIGNER

ARCHIPLEX GROUP
architecture · planning · design services
255 Crossroad Square
Salt Lake City, UT 84115
P:(801) 961-7070
F:(801) 961-7373

CONSULTANTS

"Engineering Results"
BHB Consulting Engineers
A Professional Corporation
2766 South Main Street
Salt Lake City, Utah 84115
Phone: 801.355.5656
Fax: 801.355.5950
Email: bhb@bhbengineers.com

REGISTRATION

LICENSED PROFESSIONAL ENGINEER
No. 323922
GERALD R. McKENZIE
STATE OF UTAH

ISSUE

MARK	DATE	DESCRIPTION
	10-08	CONSTRUCTION DOCUMENTS
	8-20-08	90% REVIEW SUBMITTAL

PROJECT NO:	08284
DFCM PROJECT NO:	08211900
DRAWN BY:	CB
CHECKED BY:	RS
SCALE:	
DATE:	JANUARY 19, 2009

KEY PLAN

SHEET TITLE

GENERAL STRUCTURE NOTES

SJ001

© 2008 ARCHIPLEX GROUP

FOOTING AND FOUNDATION PLAN

SCALE: 1/8"=1'-0"

MEZZANINE FRAMING PLAN

SCALE: 1/8"=1'-0"

MASONRY_S-NOTE-FTGS

MARKS AND SYMBOLS LEGEND

SECTION MARK / SHEET NUMBER	
FOOTING DESIGNATION / TOP OF FOOTING ELEVATION	
S——S	INDICATES FOOTING STEP, SEE DETAIL D1/SB501
	INDICATES CONCRETE WALL.
	INDICATES MASONRY WALL.
	INDICATES METAL STUD WALL WHICH EXTENDS ABOVE MEZZANINE.
	DEPRESS FOUNDATION WALL AND POUR SLAB OVER. SEE DETAIL C1/SB502 AND B1/SB502
	INDICATES DEPRESSED SLAB, SEE ARCHITECTURAL PLANS.
CRW-x	INDICATES CONCRETE RETAINING WALL TYPE, SEE SCHEDULE ON SHEET SB601.
CW-x	INDICATES CONCRETE FOUNDATION WALL TYPE, SEE SCHEDULE ON SHEET SB601.
CW-x/MW-x	INDICATES MASONRY WALL (AND TYPE) OVER CONCRETE WALL (AND TYPE), SEE SCHEDULES ON SHEET SB601, SF601.
W_x_	INDICATES STEEL BEAM, SEE GENERAL STRUCTURAL NOTES ON SHEET SF001.
FCxx	INDICATES CONTINUOUS FOOTING. SEE SCHEDULE ON SHEET SB601.
FSxx	INDICATES SPOT FOOTING. SEE SCHEDULE ON SHEET SB601.
FTSxx	INDICATES THICKENED SLAB FOOTING. SEE SCHEDULE ON SHEET SB601.
C.J.	INDICATES CONTROL/CONSTRUCTION JOINT. SEE DETAILS D4/SB501 AND D5/SB501.
CP-x	INDICATES CONCRETE PIER. SEE SCHEDULE ON SHEET SB601.
SC-x	INDICATES STEEL COLUMN. SEE SCHEDULE ON SHEET SF601.
MC-x	INDICATES MASONRY COLUMN TYPE. SEE SCHEDULE ON SHEET SF601.
MCJ	INDICATES MASONRY CONTROL JOINT, SEE DETAIL B1/SB501.

FOOTING AND FOUNDATION PLAN NOTES

1. COORDINATE LOCATION OF DEPRESSED SLABS, SLOPED SLABS, AND FLOOR DRAINS WITH ARCHITECTURAL AND MECHANICAL DRAWINGS.
2. SEE ARCHITECTURAL AND CIVIL DRAWINGS FOR EXTERIOR CONCRETE WORK AT DOORS, SIDEWALKS, ETC.
3. SEE ARCHITECTURAL DRAWINGS FOR CONTROL JOINT LOCATIONS.
4. SEE "EARTHWORK" NOTES ON SHEET SJ001 AND DETAIL B3/SB501 FOR MINIMUM FILL REQUIRED BENEATH FOOTINGS.
5. ALL SPOT FOOTINGS SHALL BE CENTERED UNDER COLUMNS (UNO).
6. SEE DETAILS D1/SB502 AND D2/SB502 FOR CONDITION WHERE BURIED PIPES RUN PARALLEL AND PERPENDICULAR TO FOOTINGS.
7. SEE DETAIL D4/SB501 FOR TYPICAL CONTROL/CONSTRUCTION JOINTS IN CONCRETE SLAB ON GRADE.
8. SEE DETAIL C1/SB501 FOR SLAB REINFORCING WHERE CONTROL JOINTS ARE DISCONTINUOUS.
9. SEE DETAIL C2/SB501 FOR ADDITIONAL REINFORCING AT MISCELLANEOUS OPENINGS IN MASONRY WALLS.
10. SEE DETAIL C3/SB501 FOR ADDITIONAL REINFORCING AT MISCELLANEOUS OPENINGS IN CONCRETE WALLS.
11. SEE DETAIL C5/SB501 FOR CONDITION AT RECESSES IN MASONRY WALLS.
12. SEE DETAIL B1/SB501 FOR TYPICAL CONTROL JOINTS IN MASONRY WALLS.
13. SEE DETAIL B2/SB501 FOR TERMINATION OF HORIZONTAL REINFORCING IN MASONRY WALLS.
14. SEE DETAIL D2/SB503 AND D3/SB503 FOR ANCHORAGE OF HOUSEKEEPING PADS.
15. VERIFY ALL FLOOR OPENINGS FOR MECHANICAL SHAFTS, STAIRS, ETC. WITH ARCHITECTURAL AND MECHANICAL DRAWINGS.
16. SEE DETAILS D1/SF501 FOR FRAMING AROUND MISCELLANEOUS FLOOR OPENINGS.
17. LOCATE MISCELLANEOUS MECHANICAL OPENINGS BETWEEN JOISTS, NOT UNDERNEATH THEM.
18. COORDINATE SIZE AND LOCATION OF ALL MECHANICAL OPENINGS WITH ARCHITECTURAL AND MECHANICAL DRAWINGS.
19. SEE ARCHITECTURAL DRAWINGS FOR DIMENSIONS TO STEEL COLUMNS.

CLIENT

UDOT CONNECTING COMMUNITIES

STATION #2434
6072 E. EMIGRATION CANYON RD.
PARLEY'S CANYON, UTAH

DESIGNER

ARCHIPLEX GROUP
architecture · planning · design services
255 Crossroad Square
Salt Lake City, UT 84115
P:(801) 961-7070
F:(801) 961-7373

CONSULTANTS

"Engineering Results"
BHB Consulting Engineers
A Professional Corporation
2766 South Main Street
Salt Lake City, Utah 84115
Phone: 801.355.5656
Fax: 801.355.5950
Email: bhb@bhbengineers.com

REGISTRATION

LICENSED PROFESSIONAL ENGINEER No. 323922 GERALD R. McKENZIE STATE OF UTAH

ISSUE

MARK	DATE	DESCRIPTION
	10-08	CONSTRUCTION DOCUMENTS
	8-20-08	90% REVIEW SUBMITTAL

PROJECT NO:	08284
DFCM PROJECT NO:	08211900
DRAWN BY:	CB
CHECKED BY:	RS
SCALE:	
DATE:	JANUARY 19, 2009

KEY PLAN

SHEET TITLE

FOOTING AND FOUNDATION PLAN

SB101

© 2008 ARCHIPLEX GROUP

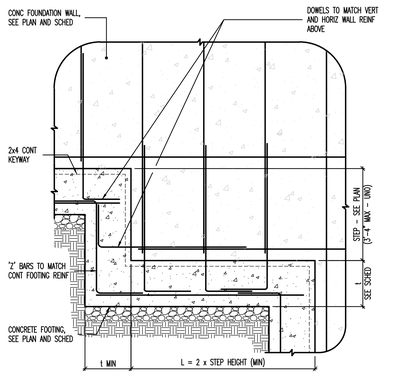

D1 TYPICAL FOOTING STEP DETAIL
NO SCALE

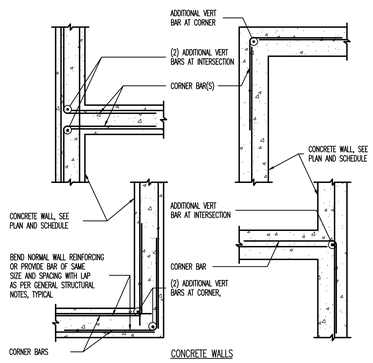

D2 TYPICAL CORNER WALL REINFORCING [PLAN VIEW]
NO SCALE

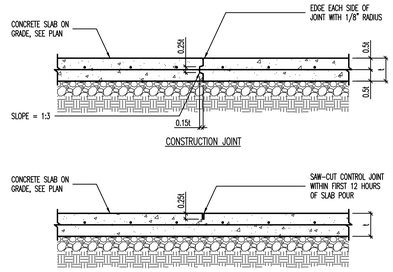

D4 TYPICAL SLAB ON GRADE JOINT DETAILS
NO SCALE

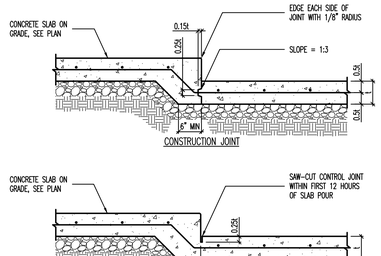

D5 JOINT DETAILS AT SLAB DEPRESSIONS
NO SCALE

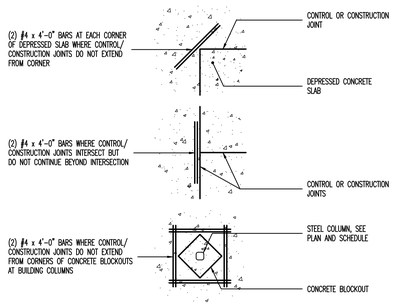

C1 LOCATIONS REQUIRING ADDITIONAL SLAB REINFORCING [PLAN VIEW]
NO SCALE

VERTICAL REINFORCING ADJACENT TO UNSCHEDULED OPENING OR RECESS
WHERE OPENING WIDTH IS LESS THAN OR EQUAL TO 3'-0":
USE (2) #5 BARS.
WHERE OPENING WIDTH IS GREATER THAN 3'-0" BUT LESS THAN OR EQUAL TO 6'-0":
USE MC-16R
WHERE OPENING WIDTH IS GREATER THAN 6'-0" CONSULT STRUCTURAL ENGINEER.

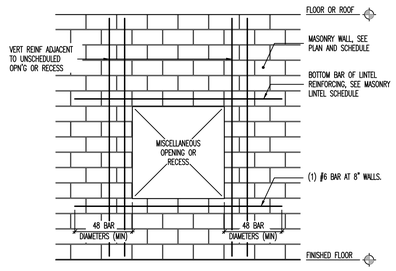

C2 REINFORCING AT UNSCHEDULED MISCELLANEOUS OPENINGS OR RECESSES IN MASONRY WALLS
NO SCALE

TRIM BARS:
6"-8" WALLS - (2) #5 BARS (EXTEND 4'-0" MIN BEYOND EDGE OF OPENING)
10"-12" WALLS - (2) #6 BARS (EXTEND 4'-0" MIN BEYOND EDGE OF OPENING)

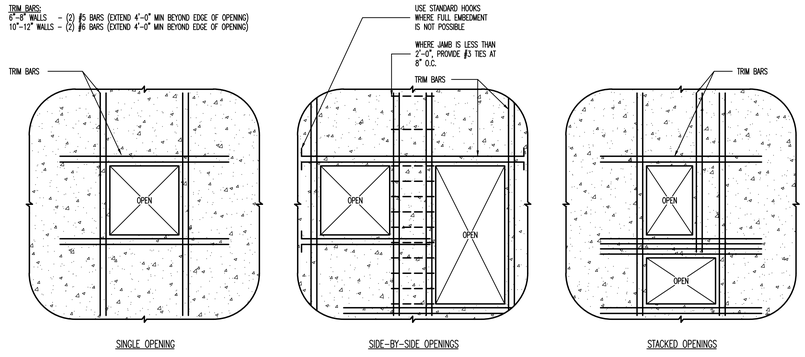

C3 TYPICAL REINFORCING FOR MISCELLANEOUS OPENINGS LESS THAN 3'-0" IN CONCRETE WALLS
WHERE MISCELLANEOUS OPENING WIDTH IS GREATER THAN 3'-0" WIDE, CONTACT STRUCTURAL ENGINEER.
NO SCALE

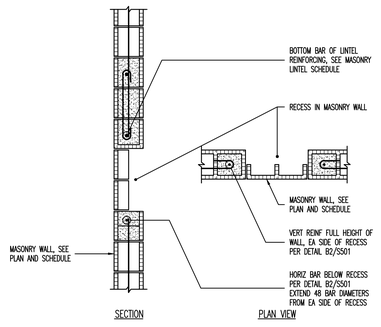

C5 TYPICAL REINFORCING AT RECESS IN MASONRY WALLS
NO SCALE

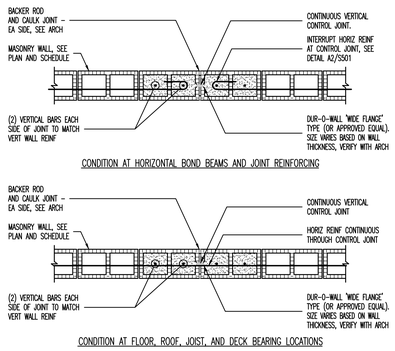

B1 MASONRY CONTROL JOINT DETAIL AT MASONRY WALLS
NO SCALE

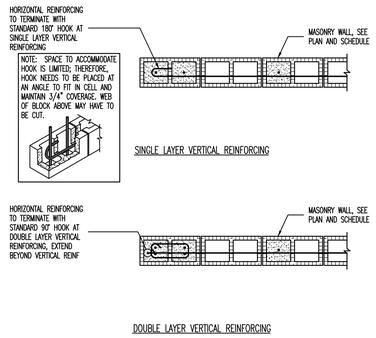

B2 TERMINATION OF HORIZONTAL REINFORCING IN MASONRY WALL [PLAN VIEW]
NO SCALE

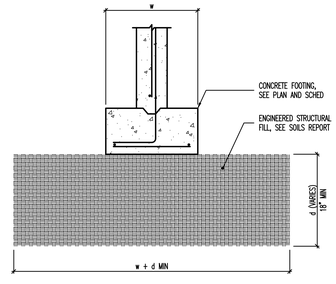

B3 ENGINEERED STRUCTURAL FILL DETAIL
NO SCALE

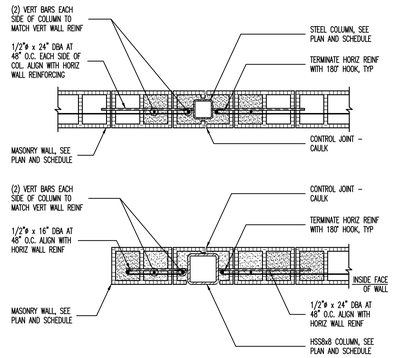

B4 TYPICAL STEEL COLUMN BURIED IN MASONRY WALLS [PLAN VIEW]
NO SCALE

CLIENT

UDOT CONNECTING COMMUNITIES
STATION #2434
6072 E. EMIGRATION CANYON RD.
PARLEY'S CANYON, UTAH

DESIGNER

ARCHIPLEX GROUP
architecture · planning · design services
255 Crossroad Square
Salt Lake City, UT 84115
P:(801) 961-7070
F:(801) 961-7373

CONSULTANTS

BHB Consulting Engineers
"Engineering Results"
A Professional Corporation
1746 South Main Street
Salt Lake City, Utah 84115
Phone: 801.355.5656
Fax: 801.355.5950
Email: bhb@bhbengineers.com

REGISTRATION

LICENSED PROFESSIONAL ENGINEER
No. 323922
GERALD R. McKENZIE
STATE OF UTAH

ISSUE

MARK	DATE	DESCRIPTION
	10-08	CONSTRUCTION DOCUMENTS
	8-20-08	90% REVIEW SUBMITTAL

PROJECT NO:	08284
DFCM PROJECT NO:	08211900
DRAWN BY:	CB
CHECKED BY:	RS
SCALE:	
DATE:	JANUARY 19, 2009

KEY PLAN

SHEET TITLE

FOOTING AND FOUNDATION DETAILS

SB501

© 2008 ARCHIPLEX GROUP

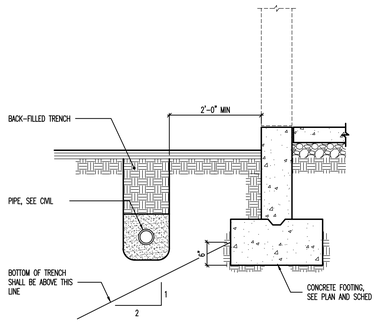

D1 CONDITION AT PIPE PARALLEL TO CONCRETE FOOTING

NO SCALE

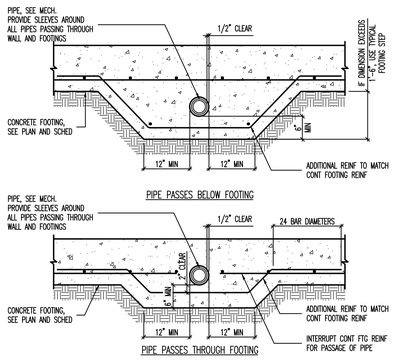

D2 CONDITIONS AT PIPE PERPENDICULAR TO FOOTING

NO SCALE

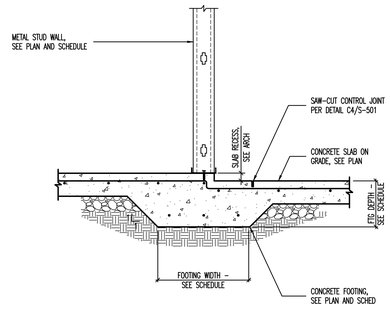

D3 RECESSED SLAB AT THICKENED SLAB FOOTING

NO SCALE

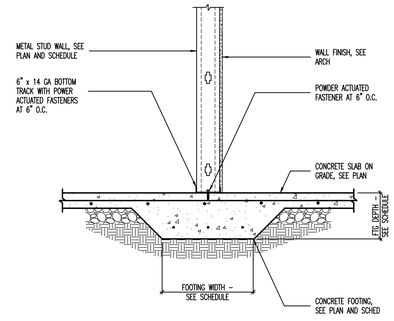

D4 THICKENED SLAB FOOTING AT INTERIOR STUD WALL

NO SCALE

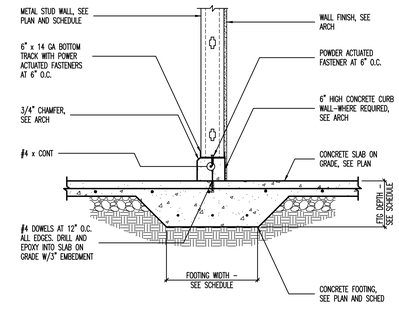

D5 THICKENED SLAB FOOTING AT INTERIOR STUD WALL

NO SCALE

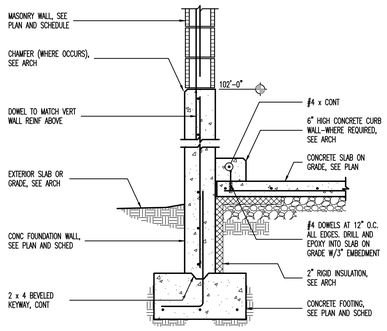

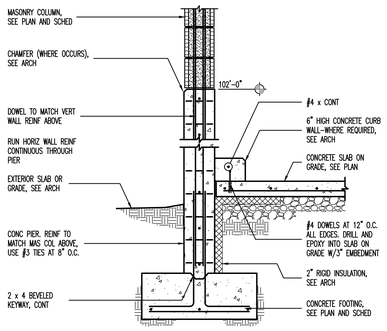

C1 FOUNDATION WALL DETAIL AT EXTERIOR 10" MASONRY WALL

NO SCALE

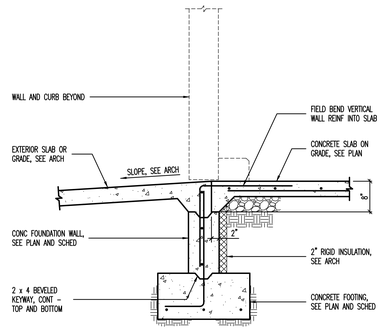

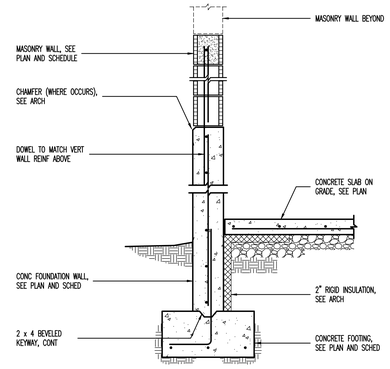

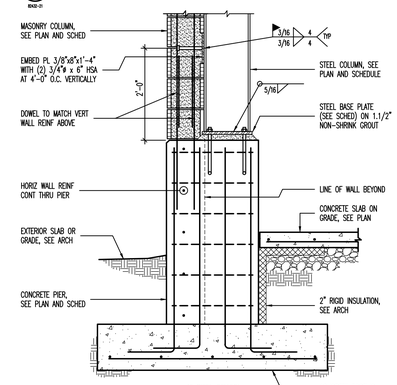

B5 STEEL COLUMN BEARING DETAIL AT 10" MASONRY WALLS

NO SCALE

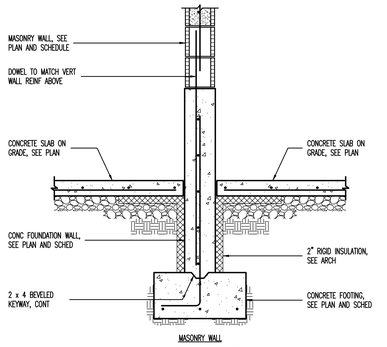

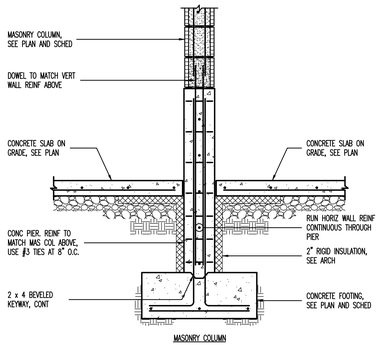

B1 FOUNDATION WALL DETAIL AT 10" INTERIOR MASONRY WALL

NO SCALE

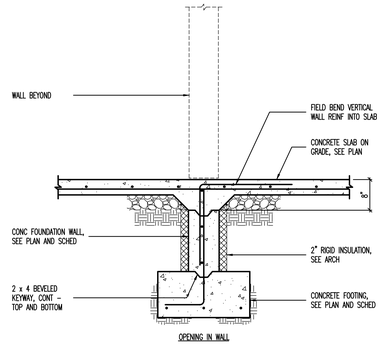

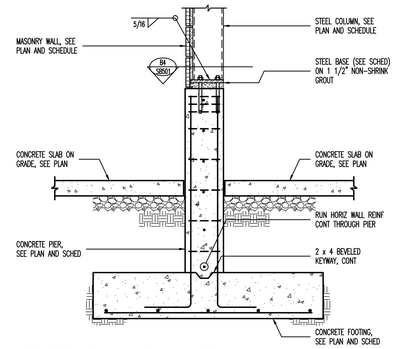

B4 STEEL COLUMN BEARING DETAIL AT MASONRY WALL

NO SCALE

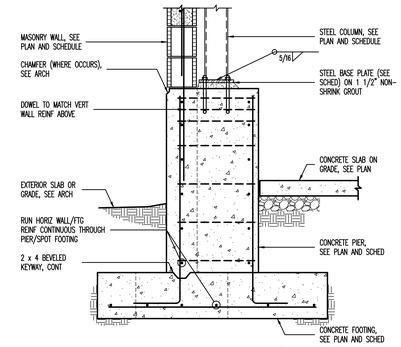

B5 STEEL COLUMN BEARING DETAIL AT 10" MASONRY WALLS

NO SCALE

CLIENT

UDOT CONNECTING COMMUNITIES

STATION #2434
6072 E. EMIGRATION CANYON RD.
PARLEY'S CANYON, UTAH

DESIGNER

ARCHIPLEX GROUP
architecture · planning · design services
255 Crossroad Square
Salt Lake City, UT 84115
P:(801) 961-7070
F:(801) 961-7373

CONSULTANTS

"Engineering Results"
BHB Consulting Engineers
A Professional Corporation
5766 South Main Street
Salt Lake City, Utah 84115
Phone: 801.355.5656
Fax: 801.355.5950
Email: bhb@bhbengineers.com

REGISTRATION

LICENSED PROFESSIONAL ENGINEER — No. 323922 — GERALD R. McKENZIE — STATE OF UTAH

ISSUE

MARK	DATE	DESCRIPTION
	10-08	CONSTRUCTION DOCUMENTS
	8-20-08	90% REVIEW SUBMITTAL

PROJECT NO:	08284
DFCM PROJECT NO:	08211900
DRAWN BY:	CB
CHECKED BY:	RS
SCALE:	
DATE:	JANUARY 19, 2009

KEY PLAN

SHEET TITLE

FOOTING AND FOUNDATION DETAILS

SB502

© 2008 ARCHIPLEX GROUP

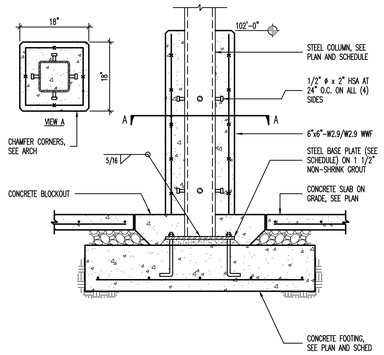

D1 WIDE FLANGE INTERIOR STEEL COLUMN TO FOOTING DETAIL — NO SCALE

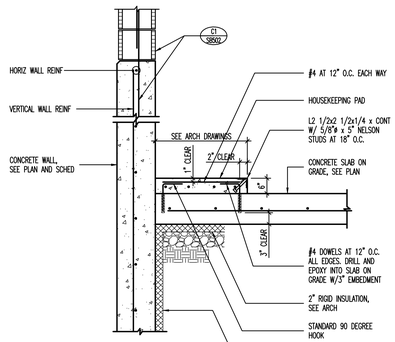

D2 TYPICAL HOUSEKEEPING PAD — NO SCALE

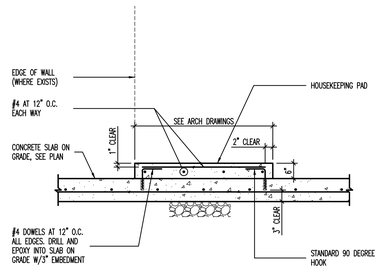

D3 TYPICAL HOUSEKEEPING PAD — NO SCALE

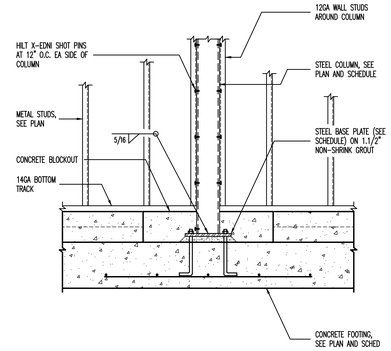

D4 TYPICAL STEEL STUD WALL FRAMED AT INTERIOR STEEL COLUMN TO FOOTING DETAIL — NO SCALE

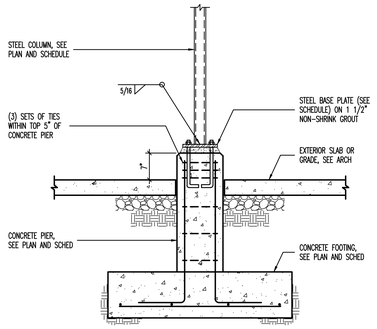

C1 EXTERIOR STEEL COLUMN BEARING ON CONCRETE PIER — NO SCALE

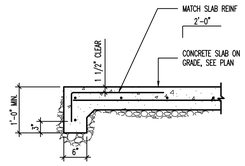

C2 SLAB TURNDOWN DETAIL — NO SCALE

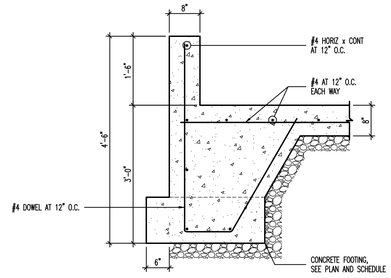

C3 WASTE OIL SLAB DETAIL — NO SCALE

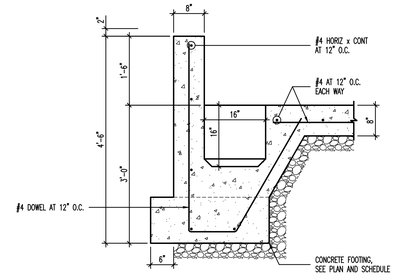

C4 WASTE OIL SLAB DETAIL — NO SCALE

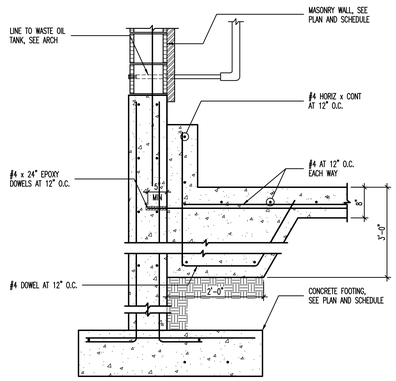

C5 WASTE OIL SLAB DETAIL — NO SCALE

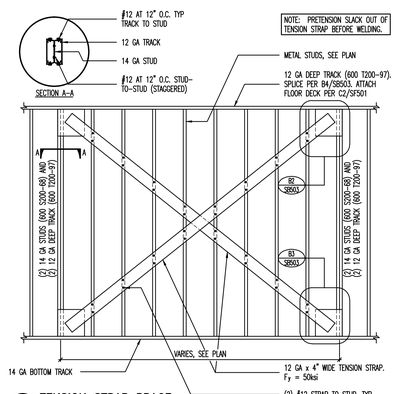

B1 TENSION STRAP BRACE — NO SCALE

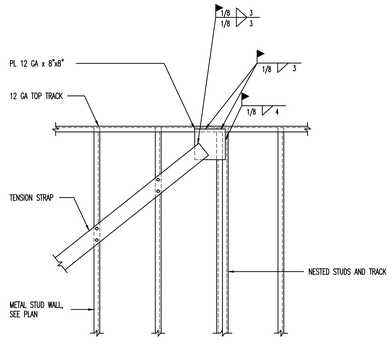

B2 TENSION STRAP BRACE — NO SCALE

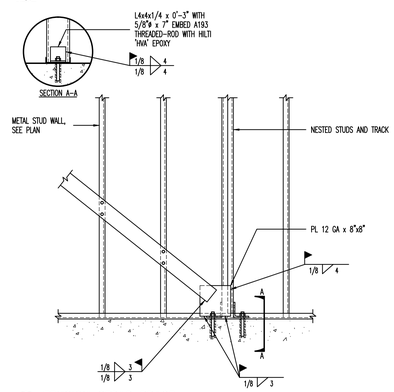

B3 TENSION STRAP BRACE — NO SCALE

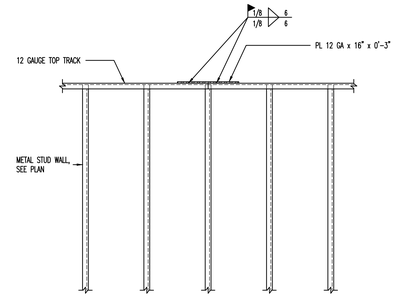

B4 TOP TRACK SPLICE DETAIL — NO SCALE

CLIENT

UDOT CONNECTING COMMUNITIES

STATION #2434
6072 E. EMIGRATION CANYON RD.
PARLEY'S CANYON, UTAH

DESIGNER

ARCHIPLEX GROUP
architecture · planning · design services
255 Crossroad Square
Salt Lake City, UT 84115
P:(801) 961-7070
F:(801) 961-7373

CONSULTANTS

"Engineering Results"
BHB Consulting Engineers
A Professional Corporation
5766 South Main Street
Salt Lake City, Utah 84115
Phone: 801.355.5656
Fax: 801.355.5950
Email: bhb@bhbengineers.com

REGISTRATION

LICENSED PROFESSIONAL ENGINEER
No. 323922
GERALD R. McKENZIE
STATE OF UTAH

ISSUE

MARK	DATE	DESCRIPTION
	10-08	CONSTRUCTION DOCUMENTS
	8-20-08	90% REVIEW SUBMITTAL

PROJECT NO:	08284
DFCM PROJECT NO:	08211900
DRAWN BY:	CB
CHECKED BY:	RS
SCALE:	
DATE:	JANUARY 19, 2009

KEY PLAN

SHEET TITLE

FOOTING AND FOUNDATION DETAILS

SB503

© 2008 ARCHIPLEX GROUP

CONCRETE FOOTING SCHEDULE

MARK	WIDTH	LENGTH	DEPTH	REINFORCING CROSSWISE				REINFORCING LENGTHWISE				COMMENTS
				No.	SIZE	LENGTH	SPACING	No.	SIZE	LENGTH	SPACING	
FTS1.5	1'-6"	CONT	12"	–	–	–	–	2	#4	CONT	EQ	THICKENED SLAB
FTS2.0	2'-0"	CONT	12"	–	–	–	–	3	#4	CONT	EQ	THICKENED SLAB
FC1.5	1'-6"	CONT	12"	–	–	–	–	2	#5	CONT	EQ	
FC2.0	2'-0"	CONT	12"	–	–	–	–	3	#4	CONT	EQ	
FC2.5	2'-6"	CONT	12"	–	#5	2'-0"	14"	3	#5	CONT	EQ	
FC2.5A	2'-6"	CONT	12"	–	#6	2'-0"	10"	5	#6	CONT	EQ	
FC3.0	3'-0"	CONT	12"	–	#5	2'-6"	14"	3	#5	CONT	EQ	
FC4.0A	4'-0"	CONT	18"	–	#6	3'-6"	10"	5	#6	CONT	EQ	TOP
					#6	3'-6"	10"	6	#6	CONT	EQ	BOTTOM
FS3.0	3'-0"	3'-0"	12"	3	#5	2'-6"	EQ	3	#5	2'-6"	EQ	
FS3.5	3'-6"	3'-6"	12"	3	#5	3'-0"	EQ	3	#5	3'-0"	EQ	
FS4.0	4'-0"	4'-0"	12"	4	#5	3'-6"	EQ	4	#5	3'-6"	EQ	
FS4.5	4'-6"	4'-6"	12"	4	#5	4'-0"	EQ	4	#5	4'-0"	EQ	
FS5.0	5'-0"	5'-0"	12"	5	#5	4'-6"	EQ	5	#5	4'-6"	EQ	
FS5.5	5'-6"	5'-6"	13"	5	#5	5'-0"	EQ	5	#5	5'-0"	EQ	
FS6.0	6'-0"	6'-0"	14"	6	#5	5'-6"	EQ	6	#5	5'-6"	EQ	
FS6.5	6'-6"	6'-6"	15"	8	#5	6'-0"	EQ	8	#5	6'-0"	EQ	
FS7.0	7'-0"	7'-0"	16"	6	#6	6'-6"	EQ	6	#6	6'-6"	EQ	
FS7.5	7'-6"	7'-6"	17"	7	#6	7'-0"	EQ	7	#6	7'-0"	EQ	
FS8.0	8'-0"	8'-0"	18"	8	#6	7'-6"	EQ	8	#6	7'-6"	EQ	
FS8.5	8'-6"	8'-6"	19"	9	#6	8'-0"	EQ	9	#6	8'-0"	EQ	
FS9.0	9'-0"	9'-0"	20"	10	#6	8'-6"	EQ	10	#6	8'-6"	EQ	
FS9.5	9'-6"	9'-6"	21"	11	#6	9'-0"	EQ	11	#6	9'-0"	EQ	
FS10.0	10'-0"	10'-0"	22"	9	#7	9'-6"	EQ	9	#7	9'-6"	EQ	
FS10.5	10'-6"	10'-6"	23"	10	#7	10'-0"	EQ	10	#7	10'-0"	EQ	
FS11.0	11'-0"	11'-0"	24"	11	#7	10'-6"	EQ	11	#7	10'-6"	EQ	

CONCRETE FOOTING NOTES:
1. PLACE ALL FOOTING REINFORCING IN THE BOTTOM OF THE FOOTING WITH 3" CLEAR CONCRETE COVER (UNO).
2. TOP REINFORCING, WHERE OCCURS, SHALL BE PLACED IN THE TOP OF THE FOOTING WITH 2" MINIMUM CONCRETE COVER.
3. IF FOOTINGS ARE EARTH-FORMED, FOOTINGS SHALL BE 6" LONGER AND WIDER THAN SCHEDULED.
4. SEE GENERAL STRUCTURAL NOTES FOR ADDITIONAL REQUIREMENTS.
5. SOME SCHEDULED FOOTINGS MAY NOT BE USED, SEE FOOTING AND FOUNDATION PLAN FOR FOOTING MARKS.

D1 CONCRETE FOOTING SCHEDULE

SHEET_CONC_FTG-CONN-SCHED

NO SCALE

CONCRETE WALL SCHEDULE

MARK	THICKNESS	REINFORCING			WALL TYPE	COMMENTS
		VERTICAL	HORIZONTAL	TOP AND BOTTOM		
CW-10A	10"	#4 AT 16" O.C.	#5 AT 15" O.C.	(1) #5	A	.

CONCRETE FOUNDATION WALL NOTES:
1. SEE GENERAL STRUCTURAL NOTES FOR ADDITIONAL REQUIREMENTS.
2. CONCRETE FOUNDATION WALLS NOT DESIGNATED ON PLANS SHALL BE REINFORCED AS FOLLOWS:

THICKNESS	VERTICAL REINFORCING	HORIZONTAL REINFORCING
6"	#4 BARS AT 18" O.C.	#4 BARS AT 16" O.C.
8"	#4 BARS AT 18" O.C.	#4 BARS AT 12" O.C.
10"	#4 BARS AT 16" O.C.	#5 BARS AT 15" O.C.
12"	#4 BARS AT 18" O.C. E.F.	#4 BARS AT 16" O.C. E.F.

ABBREVIATIONS:
E.F. EACH FACE
I.F. INSIDE FACE
O.F. OUTSIDE FACE

WALL REINFORCING PLACEMENT TYPES:

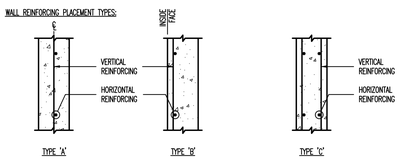

C1 CONCRETE WALL SCHEDULE

SHEET_CONC_WALL-01

NO SCALE

CONCRETE PIER SCHEDULE

MARK	PIER SIZE	REINFORCING		TYPE	COMMENTS
		VERTICAL	TIES		
CP-16A	16"xWT	(4) #4	#3 AT 8" O.C.	F	.
CP-16B	16"ø	(6) #5	#3 AT 8" O.C.	D	
CP-18A	18" x WT	(8) #5	(3) #3 AT 8" O.C.	E	
CP-20A	20"x20"	(8) #8	(3) #3 AT 8" O.C.	C	
CP-20B	12"x20"	(6) #5	(2) #3 AT 8" O.C.	A	
CP-20C	14"x20"	(8) #5	(2) #3 AT 8" O.C.	B	

CONCRETE PIER NOTES:
1. INSTALL (3) SETS OF TIES AT 3" O.C. AT TOP OF ALL PIERS (UNO).
2. RUN HORIZONTAL CONCRETE WALL REINFORCING CONTINUOUS THROUGH PIER WHEN PIER IS POURED MONOLITHICALLY WITH CONCRETE WALL.
3. SEE GENERAL STRUCTURAL NOTES FOR ADDITIONAL REQUIREMENTS.

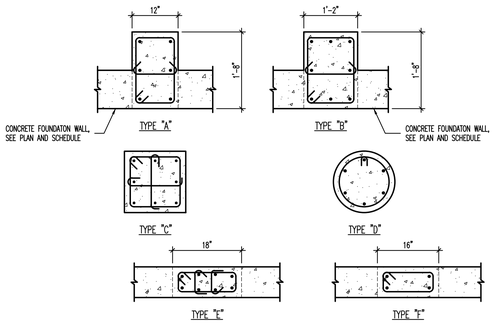

A1 CONCRETE PIER SCHEDULE

SHEET_CONC_PIER-01

NO SCALE

CONCRETE REINFORCING BAR LAP SPLICE SCHEDULE

BAR SIZE	f'c = 3000psi				f'c = 4000psi				f'c = 5000psi				f'c = 6000psi			
	REGULAR		TOP		REGULAR		TOP		REGULAR		TOP		REGULAR		TOP	
	CLASS		CLASS		CLASS		CLASS		CLASS		CLASS		CLASS		CLASS	
	A	B	A	B	A	B	A	B	A	B	A	B	A	B	A	B
#3	13"	17"	17"	21"	12"	16"	16"	21"	12"	16"	16"	21"	12"	16"	16"	21"
#4	17"	22"	22"	28"	15"	19"	19"	25"	13"	17"	17"	22"	12"	16"	16"	21"
#5	21"	27"	27"	35"	18"	24"	24"	31"	16"	21"	21"	27"	15"	19"	19"	25"
#6	27"	36"	36"	46"	24"	31"	31"	40"	21"	28"	28"	36"	20"	25"	25"	33"
#7	37"	48"	48"	63"	32"	42"	42"	54"	29"	38"	38"	49"	27"	34"	34"	44"
#8	49"	64"	64"	82"	42"	55"	55"	71"	38"	49"	49"	64"	35"	45"	45"	58"
#9	62"	80"	80"	104"	54"	70"	70"	90"	48"	62"	62"	81"	44"	57"	57"	74"
#10	78"	102"	102"	132"	68"	88"	88"	115"	61"	79"	79"	102"	56"	72"	72"	94"
#11	96"	125"	125"	162"	83"	108"	108"	141"	76"	97"	97"	126"	68"	88"	88"	115"

CONCRETE REINFORCING BAR LAP SPLICE NOTES:
1. THIS SCHEDULE SHALL BE USED FOR ALL BAR SPLICES IN CONCRETE WALLS, UNLESS NOTED OTHERWISE.
2. CLASS 'A' SPLICES MAY BE USED ONLY IN CASES WHERE 50% OR LESS OF THE BARS ARE SPLICED WITHIN THE LAP SPLICE LENGTH.
3. CLASS 'B' SPLICES SHALL BE USED FOR ALL SPLICES UNLESS THE REQUIREMENTS OF NOTE No. 2 ABOVE ARE MET.
4. TIES AND STIRRUPS SHALL NOT BE SPLICED.
5. SPLICES FOR BUNDLED BARS:
   a. FOR BUNDLED BARS OF THREE OR LESS, LAP SPLICE LENGTHS SHALL BE MULTIPLIED BY 1.2.
   b. FOR BUNDLED BARS OF FOUR OR MORE, LAP SPLICE LENGTHS SHALL BE MULTIPLIED BY 1.33.
   c. INDIVIDUAL BAR SPLICES WITHIN A BUNDLE SHALL NOT OVERLAP.
   d. ENTIRE BUNDLES SHALL NOT BE LAP SPLICED.
6. FOR ALL LIGHTWEIGHT CONCRETE, LAP LENGTHS SHALL BE MULTIPLIED BY 1.3.
7. FOR ALL EPOXY COATED BARS, LAP LENGTHS SHALL BE MULTIPLIED BY 1.3 FOR TOP BARS AND 1.5 FOR REGULAR BARS.
8. TOP BARS ARE CLASSIFIED AS HORIZONTAL BARS WHERE 12", OR MORE, OF FRESH CONCRETE IS CAST BELOW THE REINFORCING BAR.
9. SEE GENERAL STRUCTURAL NOTES FOR ADDITIONAL REQUIREMENTS.

D2 CONCRETE REINFORCING BAR LAP SPLICE SCHEDULE

SHEET_CONC_BAR-01

NO SCALE

CONCRETE RETAINING WALL SCHEDULE

MARK	HT	A	B	TW/'X'	TF	V		H		T		C		D		COMMENTS
						SIZE	SPACE	SIZE	SPACE	SIZE	SPACE	SIZE	SPACE	SIZE	SPACE	
CRW-A	12'-6"	1'-0"	3'-0"	10"/2.1/2"	14"	#5	10"	#4	16"	#5	12"	#5	14"	#4	14"	

CONCRETE RETAINING WALL NOTES:
1. 'V' BARS SHALL NOT BE SPLICED BELOW MID-HEIGHT OF WALL.
2. SEE GENERAL STRUCTURAL NOTES FOR ADDITIONAL REQUIREMENTS.

ABBREVIATIONS:
E.F. EACH FACE
I.F. INSIDE FACE
O.F. OUTSIDE FACE

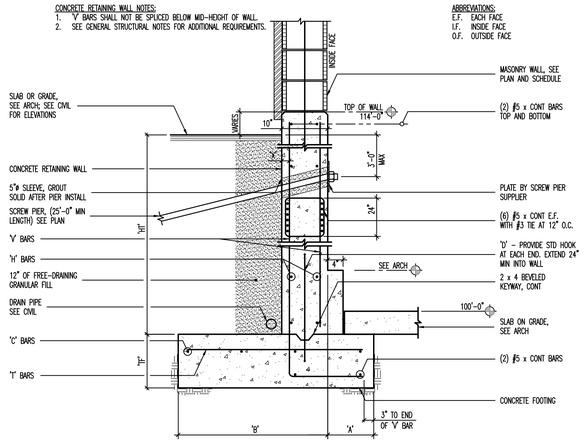

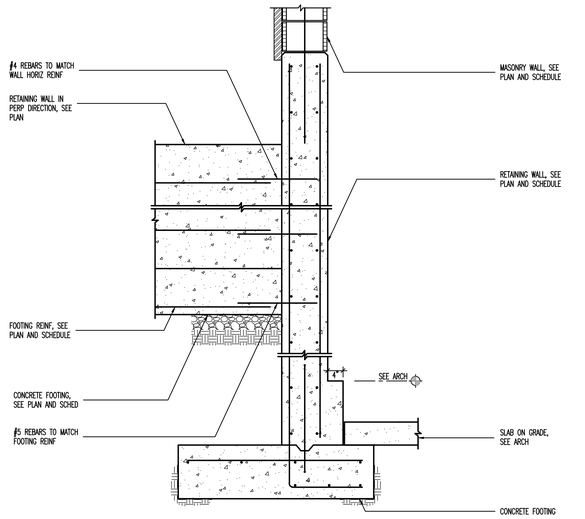

CONDITION AT PERPENDICULAR RETAINING WALL

A2 CONCRETE RETAINING WALL SCHEDULE-TYP AT BUILDING

SHEET_CONC_WALL-02

NO SCALE

CONCRETE RETAINING WALL SCHEDULE

MARK	HT	A	B	TW/'X'	TF	V		H		T		C		D		COMMENTS
						SIZE	SPACE	SIZE	SPACE	SIZE	SPACE	SIZE	SPACE	SIZE	SPACE	
CRW-8A	5'-0"	1'-0"	3'-6"	8"/2.1/2"	12"	#4	14"	#4	12"	#5	14"	#5	16"	#4	16"	VERT REINF IN EARTH SIDE
CRW-8B	6'-0"	1'-0"	3'-6"	8"/2.1/2"	12"	#4	11"	#4	12"	#5	14"	#5	16"	#4	16"	VERT REINF IN EARTH SIDE USE KEY AT FOOTING

CONCRETE RETAINING WALL NOTES:
1. 'V' BARS SHALL NOT BE SPLICED BELOW MID-HEIGHT OF WALL.
2. WHERE 'HT' IS GREATER THAN 9'-0", THEN ONE HALF OF THE 'V' BARS MAY BE DISCONTINUED AT MID-HEIGHT OF WALL.
3. SEE GENERAL STRUCTURAL NOTES FOR ADDITIONAL REQUIREMENTS.

ABBREVIATIONS:
E.F. EACH FACE
I.F. INSIDE FACE
O.F. OUTSIDE FACE

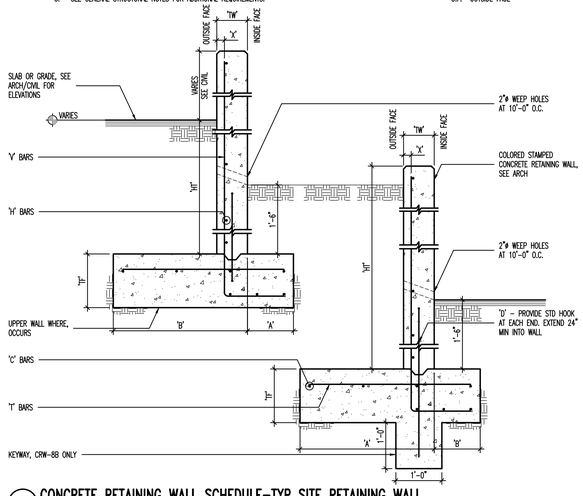

A4 CONCRETE RETAINING WALL SCHEDULE-TYP SITE RETAINING WALL

SHEET_CONC_WALL-02

NO SCALE

CLIENT

UDOT CONNECTING COMMUNITIES

STATION #2434
6072 E. EMIGRATION CANYON RD.
PARLEY'S CANYON, UTAH

DESIGNER

ARCHIPLEX GROUP
architecture · planning · design services
255 Crossroad Square
Salt Lake City, UT 84115
P:(801) 961-7070
F:(801) 961-7373

CONSULTANTS

"Engineering Results"
BHB Consulting Engineers
A Professional Corporation
5766 South Main Street
Salt Lake City, Utah 84115
Phone: 801.355.5656
Fax: 801.355.5950
Email: bhb@bhbengineers.com

REGISTRATION

LICENSED PROFESSIONAL ENGINEER
No. 323922
GERALD R. McKENZIE
STATE OF UTAH

ISSUE

MARK	DATE	DESCRIPTION
	10-08	CONSTRUCTION DOCUMENTS
	8-20-08	90% REVIEW SUBMITTAL

PROJECT NO:	08284
DFCM PROJECT NO:	08211900
DRAWN BY:	CB
CHECKED BY:	RS
SCALE:	
DATE:	JANUARY 19, 2009

KEY PLAN

SHEET TITLE

SCHEDULES

SB601

© 2008 ARCHIPLEX GROUP

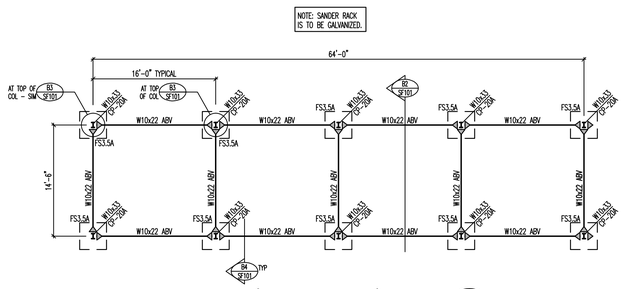

SANDER RACK PLAN (QUANTITY: 2)

SCALE: 1/8"=1'-0" 0 4' 8' 16' NORTH

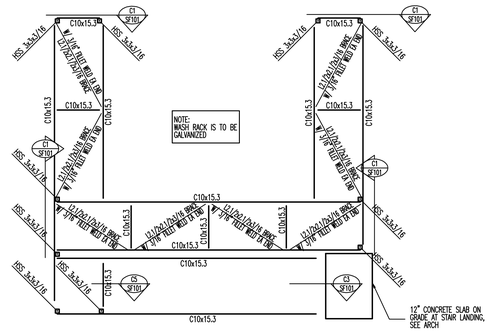

WASH RACK PLAN

SCALE: 1/4"=1'-0" 0 4' 8' 16' NORTH

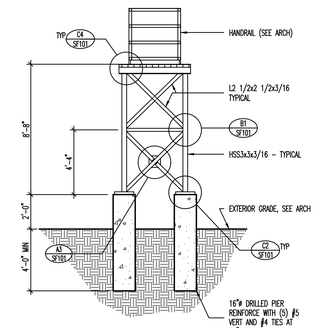

C1 WASH RACK ELEVATION

NO SCALE

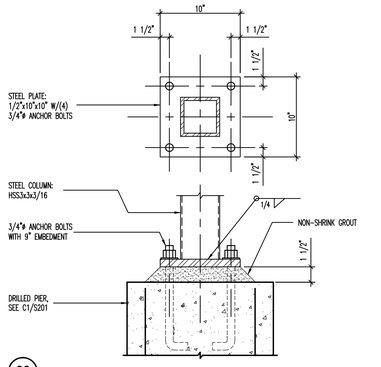

C2

NO SCALE

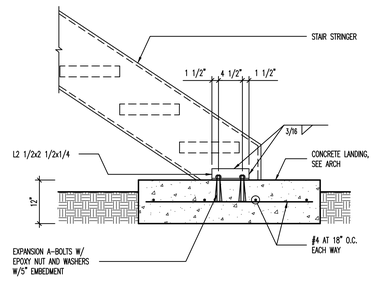

C3 STRINGER ANCHORAGE DETAIL – WASH RACK

NO SCALE

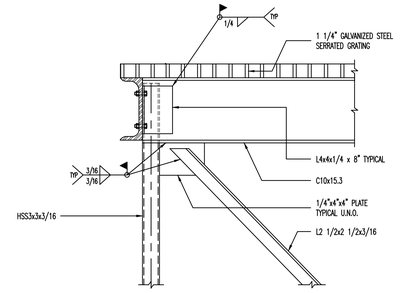

C4 TYPICAL BRACE DETAIL – WASH RACK

NO SCALE

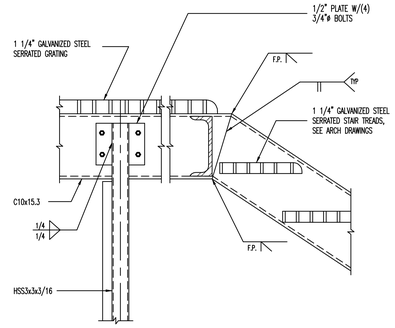

C5 STAIR SUPPORT DETAIL – WASH RACK

NO SCALE

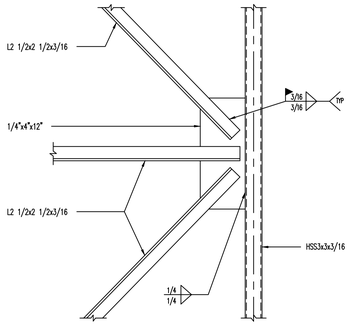

B1 BRACE DETAIL – WASH RACK

NO SCALE

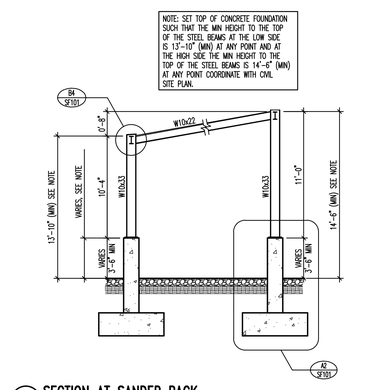

B2 SECTION AT SANDER RACK

NO SCALE

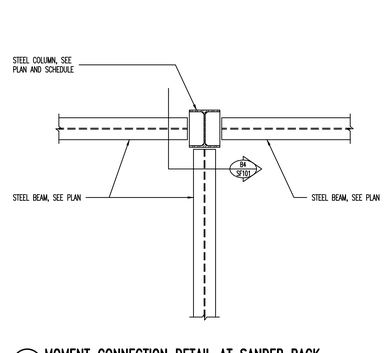

B3 MOMENT CONNECTION DETAIL AT SANDER RACK [PLAN VIEW]

NO SCALE

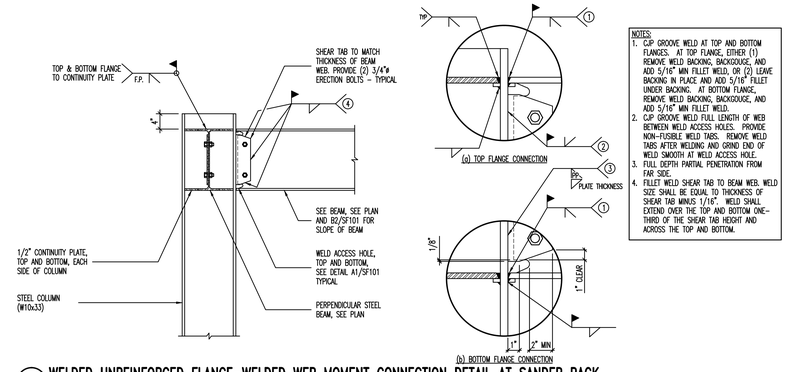

B4 WELDED UNREINFORCED FLANGE–WELDED WEB MOMENT CONNECTION DETAIL AT SANDER RACK

NO SCALE

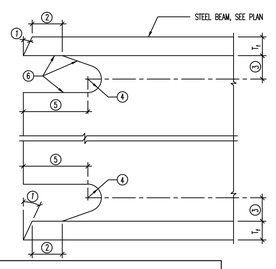

A1 RATHOLE DETAIL AT MOMENT CONNECTION AT SANDER RACK

NO SCALE

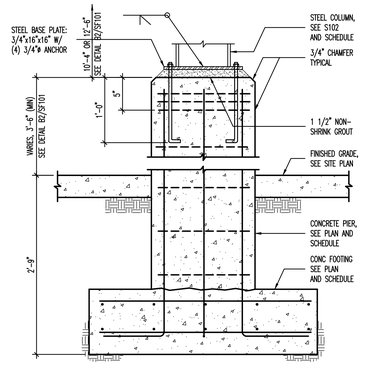

A2 SANDER RACK FOOTING DETAIL

NO SCALE

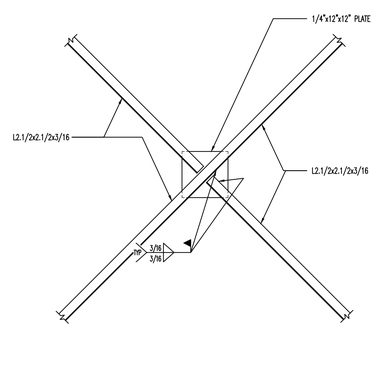

A3 BRACE DETAIL WASH RACK

NO SCALE

CLIENT

UDOT CONNECTING COMMUNITIES

STATION #2434
6072 E. EMIGRATION CANYON RD.
PARLEY'S CANYON, UTAH

DESIGNER

ARCHIPLEX GROUP
architecture · planning · design services
255 Crossroad Square
Salt Lake City, UT 84115
P:(801) 961-7070
F:(801) 961-7373

CONSULTANTS

"Engineering Results"
BHB Consulting Engineers
A Professional Corporation
1766 South Main Street
Salt Lake City, Utah 84115
Phone: 801.355.5656
Fax: 801.355.5950
Email: bhb@bhbengineers.com

REGISTRATION

LICENSED PROFESSIONAL ENGINEER
No. 323922
GERALD R. McKENZIE
STATE OF UTAH

ISSUE

MARK	DATE	DESCRIPTION
	10-08	CONSTRUCTION DOCUMENTS
	8-20-08	90% REVIEW SUBMITTAL

PROJECT NO:	08284
DFCM PROJECT NO:	08211900
DRAWN BY:	CB
CHECKED BY:	RS
SCALE:	
DATE:	JANUARY 19, 2009

KEY PLAN

SHEET TITLE

OUT BUILDING PLANS AND DETAILS

SF101

© 2008 ARCHIPLEX GROUP

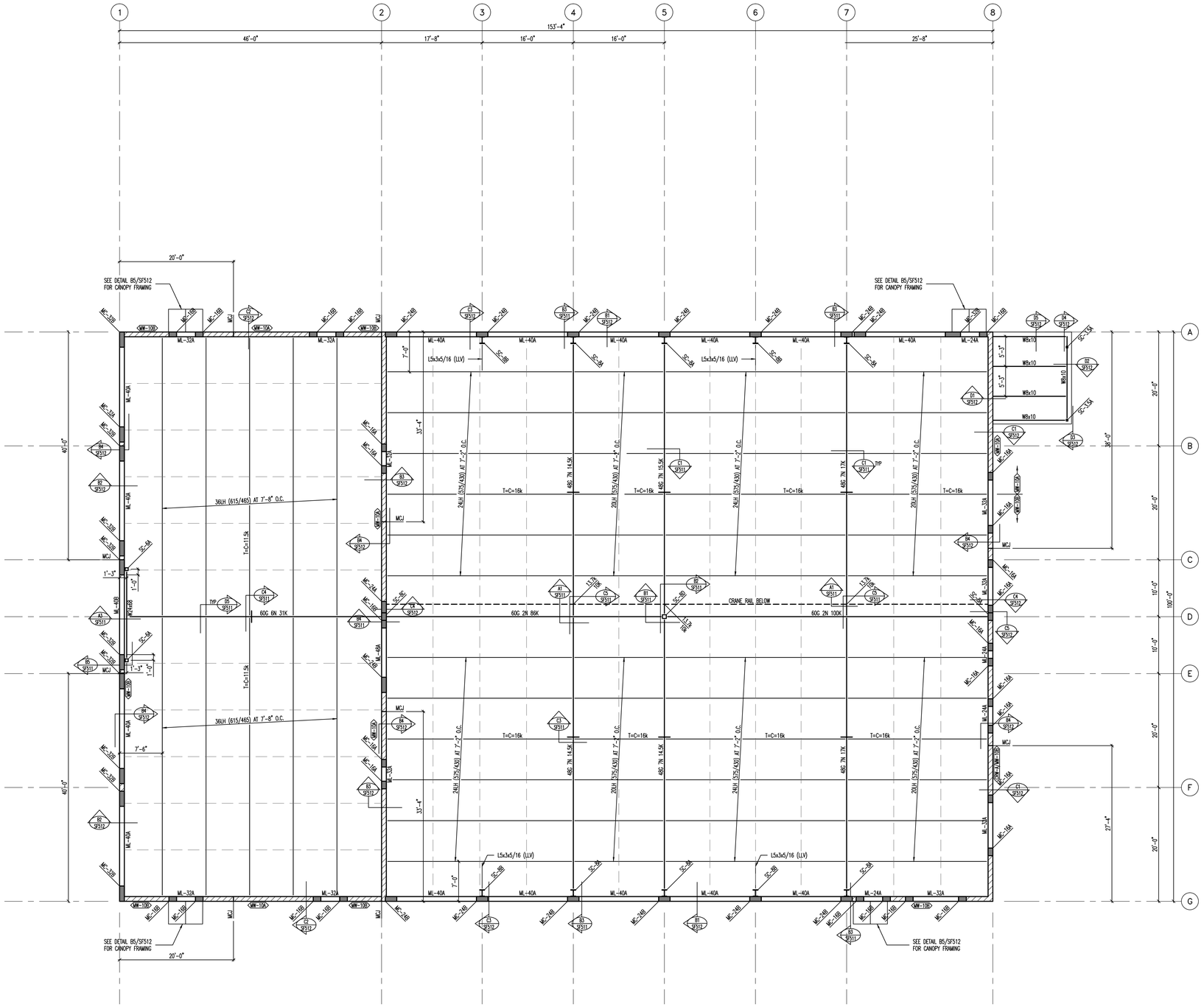

ROOF FRAMING PLAN

SCALE: 1/8"=1'-0"

MARKS AND SYMBOLS LEGEND

- SECTION MARK / SHEET NUMBER
- INDICATES MASONRY WALL
- INDICATES METAL ROOF DECK. SEE GENERAL STRUCTURAL ON SHEET S001.
- INDICATES JOIST TOP CHORD TIES. SEE DETAIL C3/SF511 AND C4/SF511.
- MW-x — INDICATES MASONRY WALL TYPE, SEE SCHEDULE ON SHEET SF601.
- * — INDICATES THAT THESE JOISTS SHALL BE DESIGNED FOR AN ADLOAD OF 1000# AT ANY POINT.
- T=C=x — INDICATES THAT, DUE TO SEISMIC FORCES, THE ROOF JOIST TOP CHORD SHALL BE DESIGNED FOR THE ADDITIONAL TENSION/COMPRESSION LOAD SHOWN. DUE TO SEISMIC, NO 1/3 INCREASE ALLOWED.
- _LH (**/**) — INDICATES LH-SERIES JOIST WITH ALLOWABLE TOTAL LOAD / ALLOWABLE LIVE (SNOW) LOAD.
- W_x_ — INDICATES STEEL BEAM, SEE GENERAL STRUCTURAL NOTES ON SHEET SF001.
- SC-x — INDICATES STEEL COLUMN. SEE SCHEDULE ON SHEET SF601.
- MC-x — INDICATES MASONRY COLUMN TYPE. SEE SCHEDULE ON SHEET SF601.
- ML-x — INDICATES MASONRY LINTEL TYPE. SEE SCHEDULE ON SHEET SF601.
- MCJ — INDICATES MASONRY CONTROL JOINT, SEE DETAIL B1/SB501.

ROOF FRAMING PLAN NOTES

1. VERIFY ALL ROOF OPENINGS FOR MECHANICAL SHAFTS, DRAINS, ETC. WITH ARCHITECTURAL AND MECHANICAL DRAWINGS.
2. JOIST SUPPLIER SHALL DESIGN ALL ROOF JOIST BEARING ENDS AT MASONRY WALLS TO TRANSFER 1500# (ALLOWABLE) AXIAL LOAD THROUGH JOIST BEARING SHOE.
3. ALL JOISTS SHALL HAVE 5" DEEP BEARING ENDS (UNO).
4. ALL ROOF OPENINGS GREATER THAN, OR EQUAL TO, 12" x 12" SHALL BE FRAMED AS INDICATED IN DETAIL D1/SF511. FOR OPENINGS WHICH CUT LESS THAN TWO DECK FLUTES, SEE DETAIL D2/SF511.
5. SEE DETAIL D3/SF511 WHEN CONCENTRATED LOADS ARE LOCATED MORE THAN 6" FROM JOIST OR JOIST GIRDER PANEL POINT.
6. SEE DETAIL D4/SF511 WHEN MECHANICAL UNITS ARE HUNG BELOW JOISTS.
7. LOCATE MISCELLANEOUS MECHANICAL OPENINGS BETWEEN JOISTS, NOT UNDERNEATH THEM.
8. OPEN WEB STEEL JOISTS AND JOIST GIRDERS SHALL BE DESIGNED BY THE MANUFACTURER TO SUPPORT THE MECHANICAL AND LATERAL LOADS SHOWN ON THE ROOF FRAMING PLANS IN ADDITION TO THE UNIFORM AND POINT LOADS SHOWN.
9. JOIST BRIDGING SHOWN ON PLANS IS FOR REPRESENTATION ONLY. ACTUAL SIZE, QUANTITY, AND LOCATION WILL BE DETERMINED BY THE JOIST SUPPLIER PER "SJI" REQUIREMENTS. ALL BRIDGING AND BRIDGING ANCHORS NEED TO BE IN PLACE BEFORE APPLYING ANY LOADS. WHERE SKYLIGHT OR MECHANICAL UNITS/DUCTS INTERRUPT HORIZONTAL BRIDGING, PROVIDE CROSS BRIDGING AT JOIST SPACES ON EACH SIDE OF THE OPENING. WHERE DIAGONAL BRIDGING CONFLICTS WITH MECHANICAL DUCTS, REMOVE DIAGONAL BRIDGING AND REPLACE WITH HORIZONTAL BRIDGING AFTER ROOF DECK IS IN PLACE.
10. JOIST DESIGNER SHALL DESIGN JOISTS AND SUPPLY ADDITIONAL BRIDGING AS REQUIRED FOR UPLIFT DUE TO WIND. ASSUME:
    DEAD LOAD = 12psf — WIND UPLIFT = 20psf (GROSS)
    NO 1/3 STRESS INCREASE ALLOWED.
11. SEE DETAIL C2/SB501 FOR ADDITIONAL REINFORCING AT MISCELLANEOUS OPENINGS IN MASONRY WALLS.
12. SEE DETAIL C5/SB501 FOR CONDITION AT RECESSES IN MASONRY WALLS.
13. SEE DETAIL B1/SB501 FOR TYPICAL CONTROL JOINTS IN MASONRY WALLS.
14. SEE DETAIL B2/SB501 FOR TERMINATION OF HORIZONTAL REINFORCING IN MASONRY WALLS.
15. SEE ARCHITECTURAL PLANS FOR DIMENSIONS TO ALL STEEL COLUMNS.

CLIENT

UDOT CONNECTING COMMUNITIES

STATION #2434
6072 E. EMIGRATION CANYON RD.
PARLEY'S CANYON, UTAH

DESIGNER

ARCHIPLEX GROUP
architecture · planning · design services
255 Crossroad Square
Salt Lake City, UT 84115
P:(801) 961-7070
F:(801) 961-7373

CONSULTANTS

"Engineering Results"
BHB Consulting Engineers
A Professional Corporation
1766 South Main Street
Salt Lake City, Utah 84115
Phone: 801.355.5656
Fax: 801.355.5950
Email: bhb@bhbengineers.com

REGISTRATION

LICENSED PROFESSIONAL ENGINEER — No. 323922 — GERALD R. McKENZIE — STATE OF UTAH

ISSUE

MARK	DATE	DESCRIPTION
	10-08	CONSTRUCTION DOCUMENTS
	8-20-08	90% REVIEW SUBMITTAL

PROJECT NO:	08284
DFCM PROJECT NO:	08211900
DRAWN BY:	CB
CHECKED BY:	RS
SCALE:	
DATE:	JANUARY 19, 2009

KEY PLAN

SHEET TITLE

ROOF FRAMING PLAN

SF111

© 2008 ARCHIPLEX GROUP

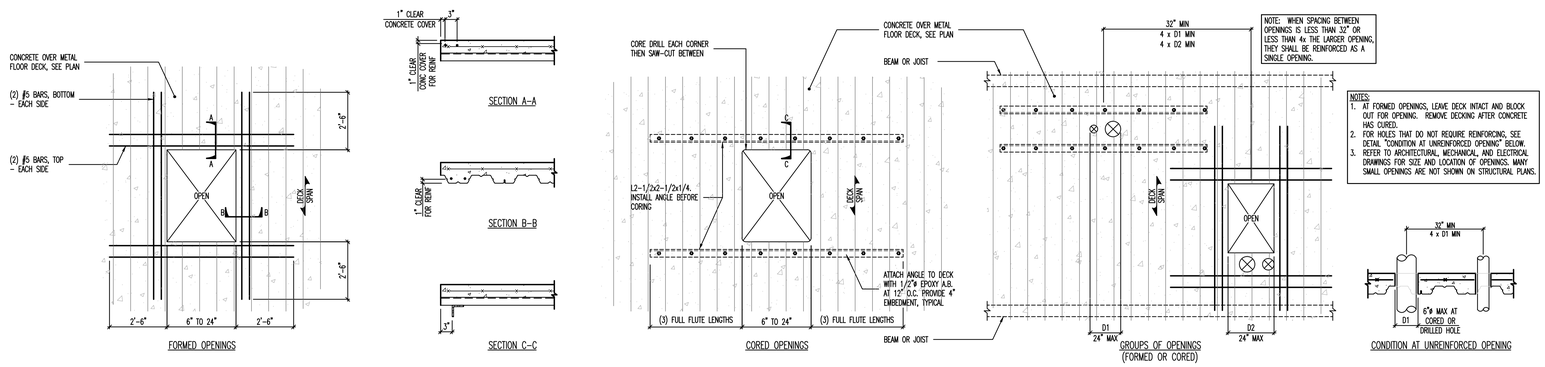

D1 MISCELLANEOUS SMALL OPENINGS IN FLOOR SLAB (UP TO 24")

NO SCALE

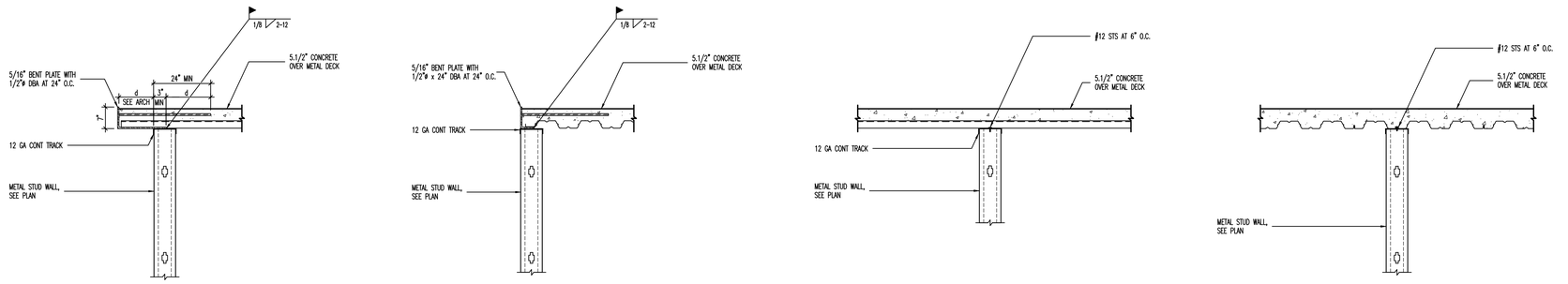

C1 STEEL DECK EDGE DETAIL PERPENDICULAR TO WALL

NO SCALE

C2 STEEL DECK EDGE DETAIL PERPENDICULAR TO WALL

NO SCALE

C3 STEEL DECK ON INTERIOR BEARING WALL

NO SCALE

C4 STEEL DECK ON INTERIOR WALL AT STAIR LANDING

NO SCALE

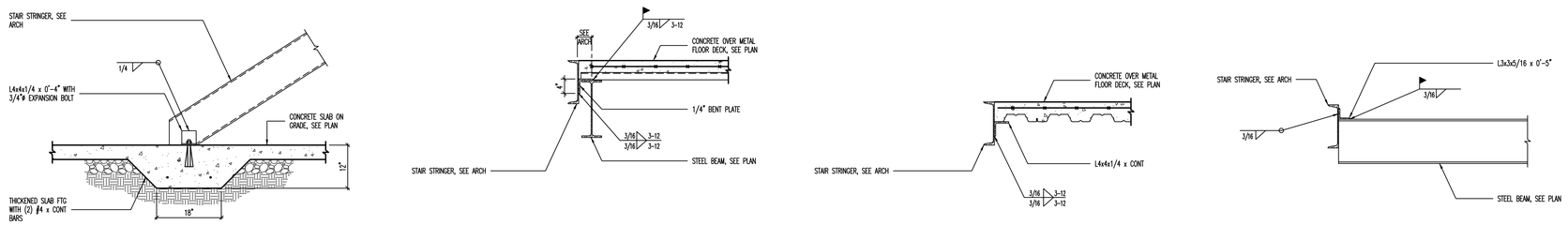

B1 TYPICAL STAIR STRINGER BEARING DETAIL

NO SCALE

B2 TYPICAL SLAB EDGE DETAIL AT STEEL BEAM

NO SCALE

B3 EDGE OF SLAB AT STAIR LANDING

NO SCALE

B4 STAIR LANDING DETAIL

NO SCALE

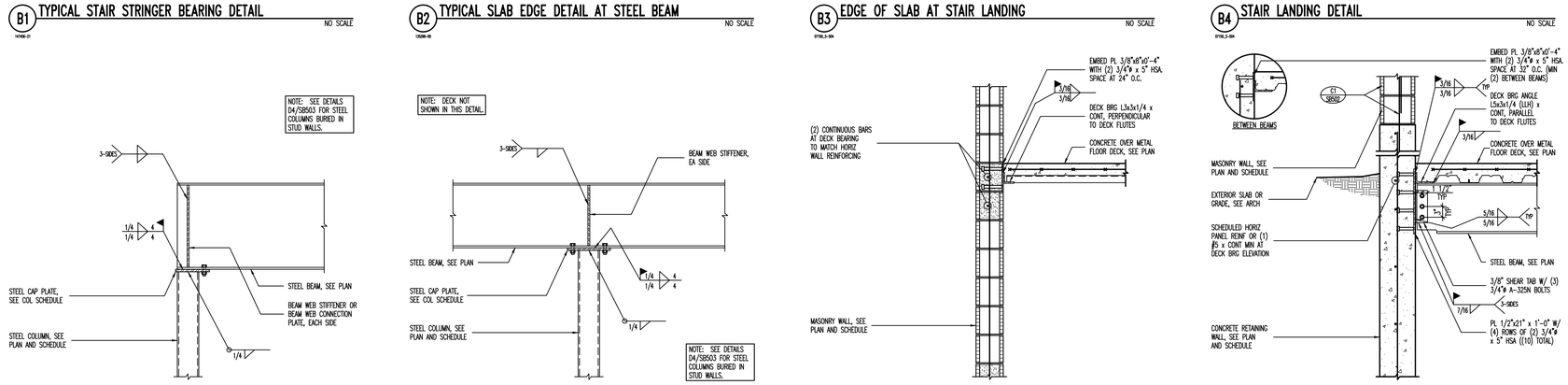

A1 TYPICAL STEEL BEAM BEARING AT STEEL COLUMN

NO SCALE

A2 STEEL BEAM BEARING ON INTERIOR STEEL COLUMN

NO SCALE

A3 TYPICAL DECK BEARING AT 8" OR 10" MASONRY WALL

NO SCALE

A4 TYPICAL BEAM/DECK BEARING AT CONCRETE WALL

NO SCALE

CLIENT

UDOT CONNECTING COMMUNITIES

STATION #2434
6072 E. EMIGRATION CANYON RD.
PARLEY'S CANYON, UTAH

DESIGNER

ARCHIPLEX GROUP
architecture · planning · design services
255 Crossroad Square
Salt Lake City, UT 84115
P:(801) 961-7070
F:(801) 961-7373

CONSULTANTS

"Engineering Results"
BHB Consulting Engineers
A Professional Corporation
3746 South Main Street
Salt Lake City, Utah 84115
Phone: 801.355.5656
Fax: 801.355.5950
Email: bhb@bhbengineers.com

REGISTRATION

LICENSED PROFESSIONAL ENGINEER — No. 323922 — GERALD R. McKENZIE — STATE OF UTAH

ISSUE

MARK	DATE	DESCRIPTION
	10-08	CONSTRUCTION DOCUMENTS
	8-20-08	90% REVIEW SUBMITTAL

PROJECT NO:	08284
DFCM PROJECT NO:	08211900
DRAWN BY:	CB
CHECKED BY:	RS
SCALE:	
DATE:	JANUARY 19, 2009

KEY PLAN

SHEET TITLE

MEZZANINE/STAIR DETAILS

SF501

© 2008 ARCHIPLEX GROUP

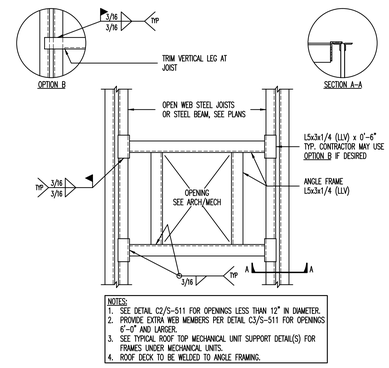

D1 TYPICAL ROOF OPENING DETAIL [PLAN VIEW]

NO SCALE

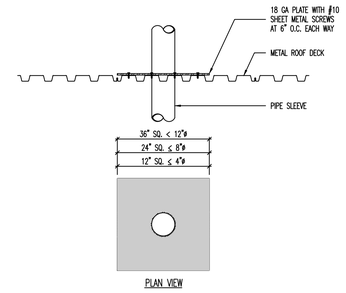

D2 TYPICAL PIPE SLEEVE THROUGH ROOF DECK

NO SCALE

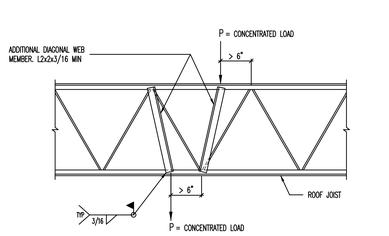

D3 TYPICAL JOIST REINFORCING DETAIL FOR LOADS GREATER THAN 250 POUNDS

NO SCALE

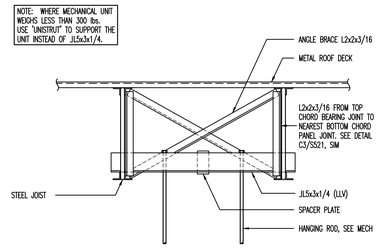

D4 TYPICAL HANGING MECHANICAL UNIT SUPPORT DETAIL

NO SCALE

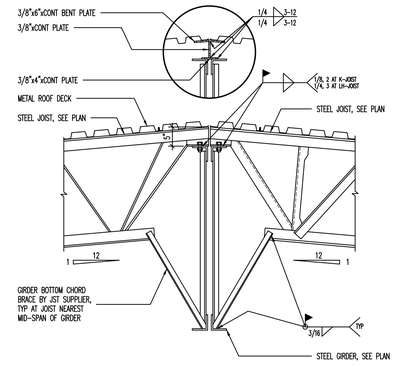

D5 'K' OR 'LH' JOIST BEARING AT STEEL GIRDER

NO SCALE

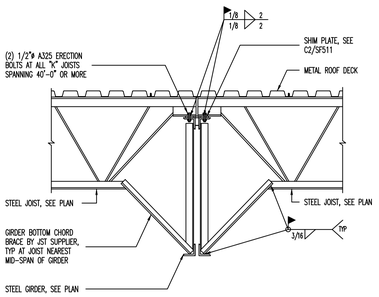

C1 TYPICAL JOIST (5" BEARING ENDS) BEARING AT STEEL GIRDER

NO SCALE

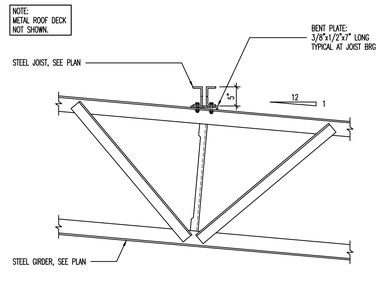

C2 JOIST BEARING ON GIRDER

NO SCALE

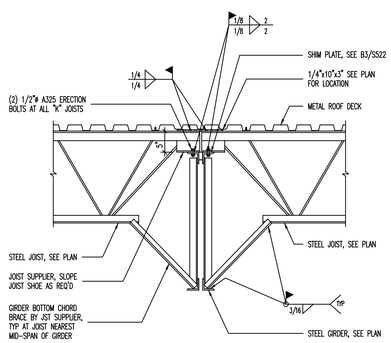

C3 TYPICAL JOIST BEARING AT STEEL GIRDER CHORD TIE DRAG STRUT DETAIL

NO SCALE

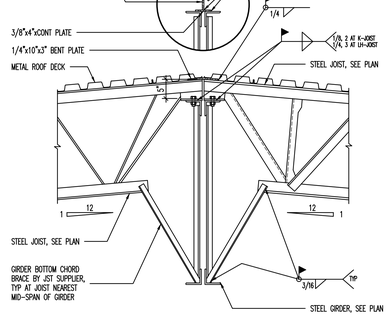

C4 JOIST BEARING AT STEEL GIRDER

NO SCALE

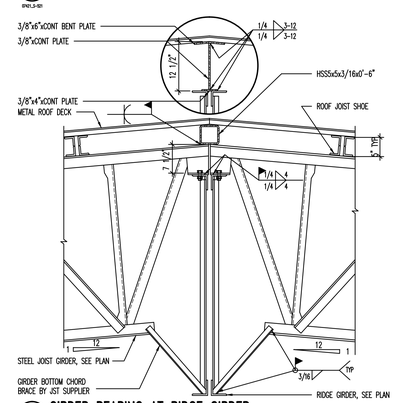

C5 GIRDER BEARING AT RIDGE GIRDER

NO SCALE

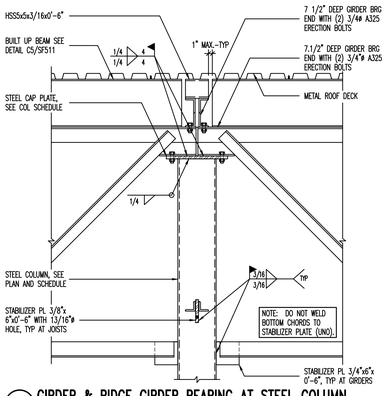

B1 GIRDER & RIDGE GIRDER BEARING AT STEEL COLUMN

NO SCALE

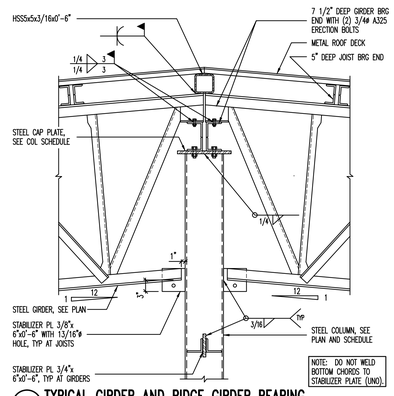

B2 TYPICAL GIRDER AND RIDGE GIRDER BEARING AT STEEL COLUMN

NO SCALE

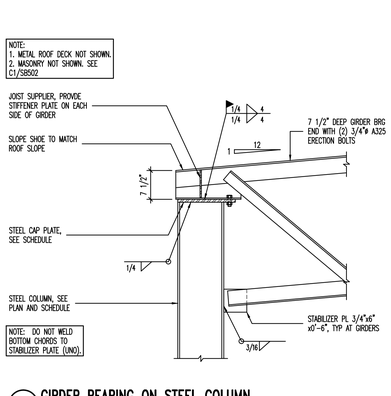

B3 GIRDER BEARING ON STEEL COLUMN

NO SCALE

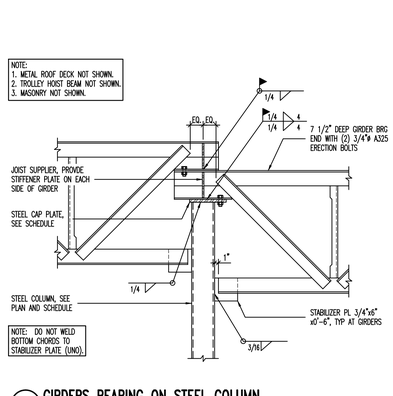

B4 GIRDERS BEARING ON STEEL COLUMN

NO SCALE

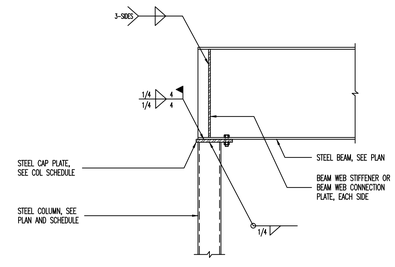

B5 TYPICAL STEEL BEAM BEARING AT STEEL COLUMN

NO SCALE

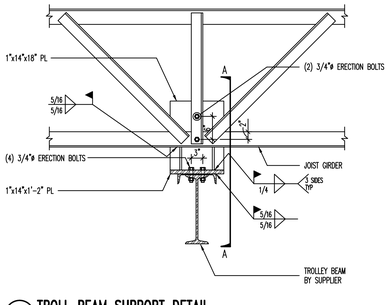

A1 TROLL BEAM SUPPORT DETAIL

NO SCALE

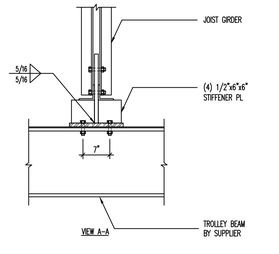

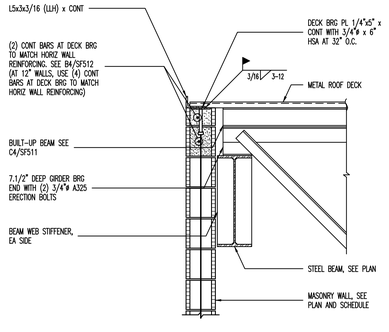

A3 STEEL COLUMN AND STEEL BEAM AT MASONRY WALL

NO SCALE

CLIENT

UDOT CONNECTING COMMUNITIES

STATION #2434
6072 E. EMIGRATION CANYON RD.
PARLEY'S CANYON, UTAH

DESIGNER

ARCHIPLEX GROUP
architecture · planning · design services
255 Crossroad Square
Salt Lake City, UT 84115
P:(801) 961-7070
F:(801) 961-7373

CONSULTANTS

BHB Consulting Engineers
"Engineering Results"
A Professional Corporation
1766 South Main Street
Salt Lake City, Utah 84115
Phone: 801.355.5656
Fax: 801.355.5950
Email: bhb@bhbengineers.com

REGISTRATION

LICENSED PROFESSIONAL ENGINEER
No. 323922
GERALD R. McKENZIE
STATE OF UTAH

ISSUE

MARK	DATE	DESCRIPTION
	10-08	CONSTRUCTION DOCUMENTS
	8-20-08	90% REVIEW SUBMITTAL

PROJECT NO:	08284
DFCM PROJECT NO:	08211900
DRAWN BY:	CB
CHECKED BY:	RS
SCALE:	
DATE:	JANUARY 19, 2009

KEY PLAN

SHEET TITLE

ROOF FRAMING DETAILS

SF511

© 2008 ARCHIPLEX GROUP

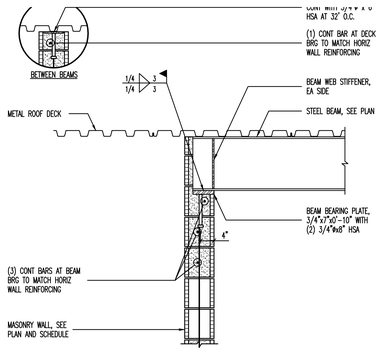

D1 CANOPY BEAM BEARING AT MASONRY WALL

NO SCALE

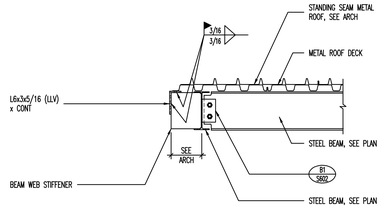

D2 STEEL BEAM CONNECTIONS AT OIL STORAGE CANOPY

NO SCALE

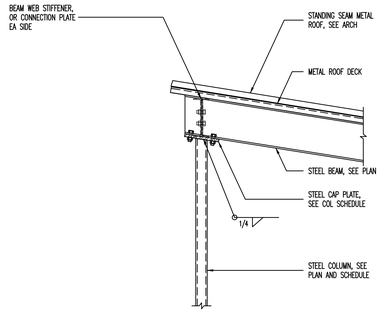

D3 OIL STORAGE CANOPY BEAM/COLUMN DETAIL

NO SCALE

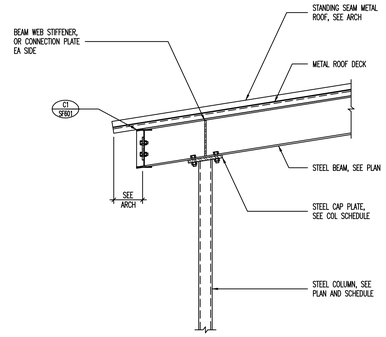

D4 OIL STORAGE CANOPY BEAM/COLUMN DETAIL

NO SCALE

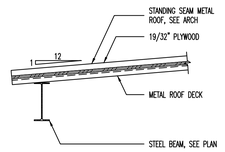

D5 EDGE OF DECK DETAIL AT OIL STORAGE CANOPY

NO SCALE

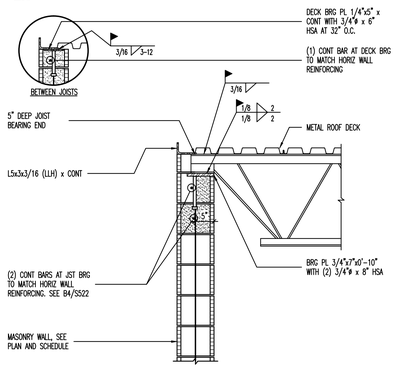

C1 TYPICAL JOIST (5" BEARING END)/DECK BEARING AT 10" MASONRY WALLS

NO SCALE

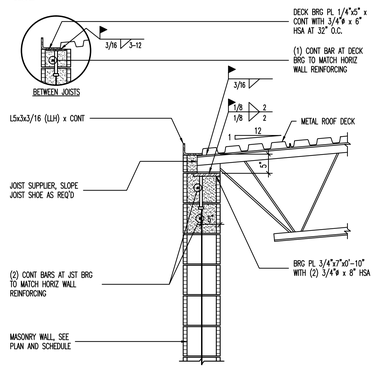

C2 TYPICAL JOIST/DECK BEARING AT MASONRY WALLS

NO SCALE

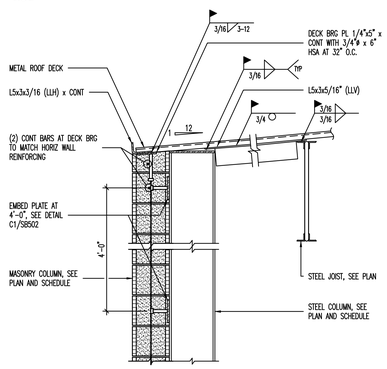

D3 OIL STORAGE CANOPY BEAM/COLUMN DETAIL

NO SCALE

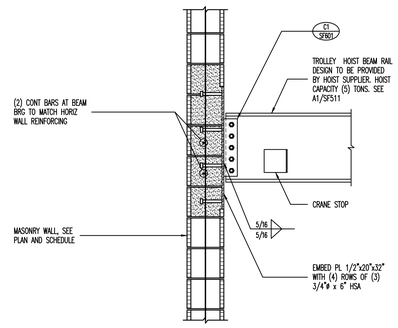

C4 CRANE RAIL BEARING

NO SCALE

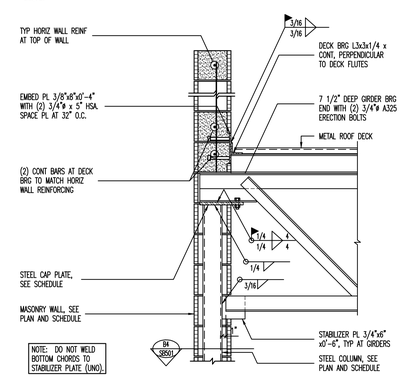

C5 TYPICAL GIRDER BEARING ON STEEL COLUMN AT 10" MASONRY WALL

NO SCALE

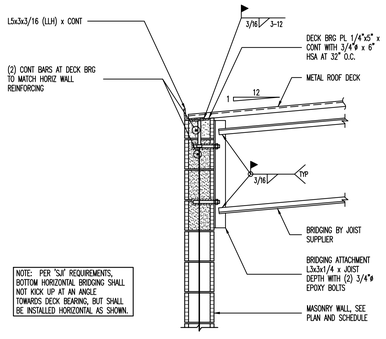

B1 TYPICAL DECK BEARING AT 10" MASONRY WALLS WITH BRIDGING ATTACHMENT

NO SCALE

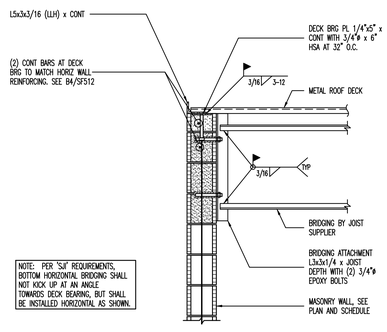

B2 TYPICAL DECK BEARING AT 10" MASONRY WALLS WITH BRIDGING ATTACHMENT

NO SCALE

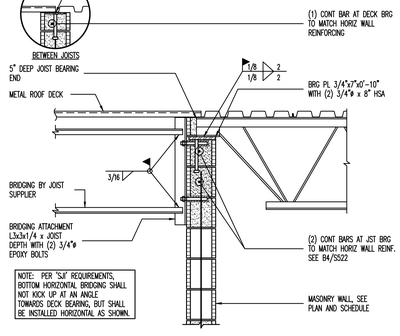

B3 TYPICAL 'K' JOIST (5" BRG END)/DECK BEARING AT 10" MASONRY WALLS WITH BRIDGING ATTACHMENT

NO SCALE

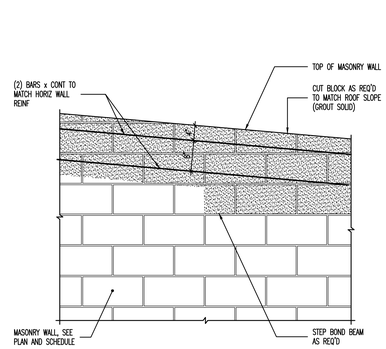

B4 SLOPING MASONRY BOND BEAM

NO SCALE

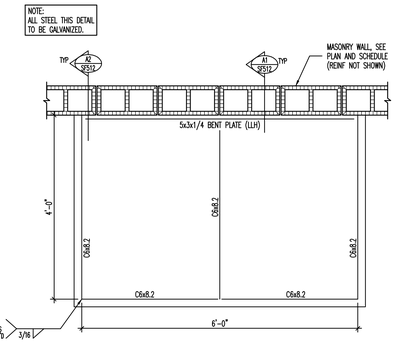

B5 ROOF FRAMING PLAN [PLAN VIEW]

NO SCALE

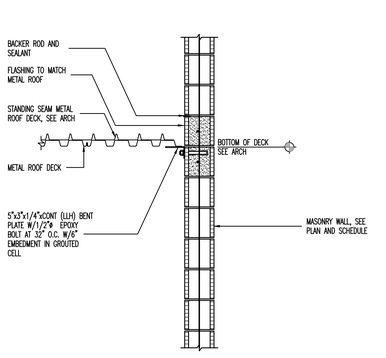

A1 LEDGER ANGLE BEARING AT MASONRY WALL

NO SCALE

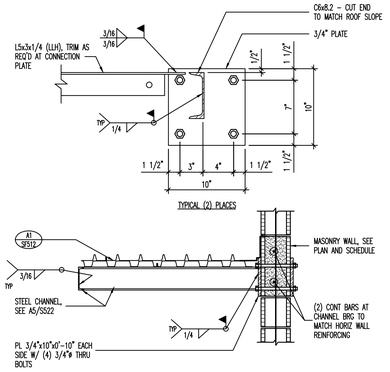

A2 STEEL CHANNEL CONNECTION DETAIL

NO SCALE

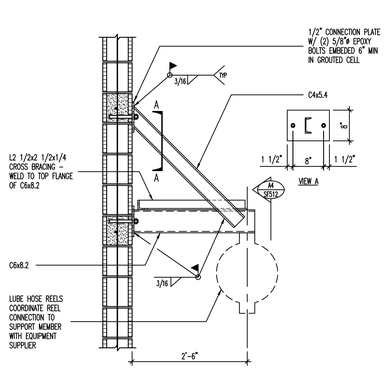

A3 HOSE REEL SUPPORT AT MASONRY WALL

NO SCALE

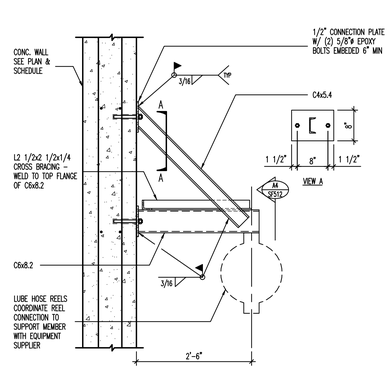

A4 HOSE REEL SUPPORT DETAIL

NO SCALE

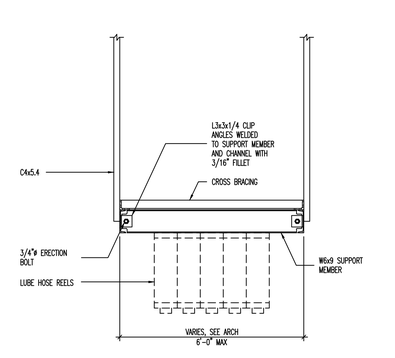

A5 ROOF FRAMING PLAN [PLAN VIEW]

NO SCALE

CLIENT

UDOT CONNECTING COMMUNITIES

STATION #2434
6072 E. EMIGRATION CANYON RD.
PARLEY'S CANYON, UTAH

DESIGNER

ARCHIPLEX GROUP
architecture · planning · design services
255 Crossroad Square
Salt Lake City, UT 84115
P:(801) 961-7070
F:(801) 961-7373

CONSULTANTS

"Engineering Results"
BHB Consulting Engineers
A Professional Corporation
5766 South Main Street
Salt Lake City, Utah 84121
Phone: 801.355.5656
Fax: 801.355.5950
Email: bhb@bhbengineers.com

REGISTRATION

LICENSED PROFESSIONAL ENGINEER — No. 323922 — GERALD R. McKENZIE — STATE OF UTAH

ISSUE

MARK	DATE	DESCRIPTION
	10-08	CONSTRUCTION DOCUMENTS
	8-20-08	90% REVIEW SUBMITTAL

PROJECT NO:	08284
DFCM PROJECT NO:	08211900
DRAWN BY:	CB
CHECKED BY:	RS
SCALE:	
DATE:	JANUARY 19, 2009

KEY PLAN

SHEET TITLE

ROOF FRAMING DETAILS

SF512

© 2008 ARCHIPLEX GROUP

A-325 BOLT SCHEDULE

MAXIMUM BEAM SIZE IN EACH BEAM DEPTH GROUP	A-325N BOLTS	
	No. PER BEAM	SIZE
W8	2	7/8"ø
W10	2	7/8"ø
W12	3	7/8"ø
W14	3	7/8"ø
W16	4	7/8"ø
W18	5	7/8"ø
W21	6	7/8"ø
W24	7	7/8"ø
W27	8	7/8"ø
W30	9	7/8"ø

① 3/8" SHEAR TAB FOR BEAMS UP TO W21
1/2" SHEAR TAB FOR W24 BEAMS AND LARGER
② 5/16" FILLET WELD EACH SIDE FOR 3/8" PLATE
3/8" FILLET WELD EACH SIDE FOR 1/2" PLATE
③ BOLT EDGE DISTANCE SHALL BE 1 1/2" MIN AT ALL EDGES. BOLT SPACING SHALL BE 3" MIN.
④ WHEN MORE THAN ONE ROW OF BOLTS IS NEEDED, THE FIRST ROW SHALL BE A COMPLETE ROW WITH THE REMAINDER OF THE BOLTS PLACED IN A SECOND ROW.
⑤ TS COLUMN SHALL HAVE A MINIMUM 1/4" THICKNESS FOR 3/8" SHEAR TABS AND A MINIMUM 3/8" THICKNESS FOR 1/2" SHEAR TABS. USE A SINGLE ANGLE CONNECTION WHERE STEEL TUBE WALL IS TOO THIN.

BEAM TO BEAM SHEAR TAB CONNECTION

BEAM TO TS COLUMN SHEAR TAB CONNECTION

BEAM TO PARALLEL BEAM SHEAR TAB CONNECTION

SINGLE ANGLE CONNECTION WHERE REQUIRED BY NOTE No. 5

SHEAR CONNECTOR PLATES AT SKEWED MEMBERS

C1 TYPICAL BOLTED SHEAR TAB CONNECTIONS WITH BOLT SCHEDULE [SINGLE SHEAR - STEEL TUBE OR BEAM COLUMNS]

SCHED_STL_BOLT-TS-01

NO SCALE

MASONRY LINTEL SCHEDULE

MARK	DEPTH	MAXIMUM SPAN	REINFORCING		COMMENTS
			HORIZONTAL	STIRRUPS	
ML-8A	8"	3'-4"	(1) #7 x CONT	NONE	.
ML-16A	16"	6'-0"	(1) #7 x CONT TOP AND BOTTOM	#4 AT 8" O.C.	
ML-24A	24"	8'-0"	(1) #7 x CONT TOP AND BOTTOM	#4 AT 8" O.C.	
ML-32A	32"	8'-0"	(1) #7 x CONT TOP AND BOTTOM	#4 AT 8" O.C.	
ML-40A	40"	14'-0"	(1) #7 x CONT TOP AND BOTTOM	#4 AT 8" O.C.	

MASONRY LINTEL NOTES:
1. LINTEL WIDTH AND MATERIAL TYPE SHALL BE THE SAME AS THE WALL IN WHICH THE LINTEL IS CONSTRUCTED.
2. GROUT MASONRY LINTELS MONOLITHICALLY WITH THE SUPPORT WALL OR COLUMN AT EACH END.
3. MASONRY LINTELS ML-1 THROUGH ML-4 SHALL BE USED OVER OPENINGS IN MASONRY WALLS WHEN A SPECIFIC MASONRY LINTEL IS NOT OTHERWISE SPECIFIED. WHEN A LINTEL IS SPECIFIED ON THE PLANS, THE MAXIMUM SPAN AS NOTED IN THIS SCHEDULE SHALL NOT APPLY. CONSULT THE STRUCTURAL ENGINEER FOR LINTELS NOT SPECIFIED ON THE PLANS WHICH HAVE A SPAN GREATER THAN 10'-0".
4. MASONRY LINTELS ML-1 THROUGH ML-4 SHALL NOT BE LOCATED DIRECTLY BELOW FLOOR OR ROOF BEAMS OR GIRDERS UNLESS NOTED OTHERWISE ON THE PLANS. JOISTS SHALL NOT BEAR ON ANY LINTEL LESS THAN 16" DEEP. CONSULT THE STRUCTURAL ENGINEER FOR LINTELS NOT SHOWN ON THE PLANS WHICH ARE LOCATED DIRECTLY BELOW FLOOR OR ROOF BEAMS OR GIRDERS.
5. EXTEND ALL HORIZONTAL REINFORCING 48 BAR DIAMETERS MINIMUM BEYOND THE EDGE OF ALL OPENINGS. IF HORIZONTAL REINFORCING CANNOT EXTEND 48 BAR DIAMETERS BEYOND EDGE OF OPENING, PROVIDE 90° STANDARD HOOK.
6. SPLICE TOP BARS AT MIDSPAN OF LINTEL ONLY AND BOTTOM BARS OVER SUPPORTS ONLY.
7. HORIZONTAL WALL REINFORCING SHALL CONTINUE THROUGH MASONRY LINTELS. WHERE BOTH HORIZONTAL WALL REINFORCING AND LINTEL REINFORCING OCCUR IN THE SAME COURSE, USE THE LARGER REINFORCING.
8. DOWEL VERTICAL REINFORCING OF WALL ABOVE LINTEL INTO THE FULL DEPTH OF LINTEL OR 48 BAR DIAMETERS, WHICHEVER IS LESS.
9. SEE GENERAL STRUCTURAL NOTES FOR ADDITIONAL REQUIREMENTS.

ML-8A ML-16A ML-24A ML-32A ML-40A

C2 MASONRY LINTEL SCHEDULE

SCHED_MAS_LNTL-01

NO SCALE

MASONRY COLUMN SCHEDULE

MARK	SIZE	REINFORCING		REINFORCING SCHEMATIC
		VERTICAL	TIES	
MC-16A	WT x 16"	(2) #5	--	
MC-24A	WT x 24"	(3) #5	--	
MC-24B	WT x 24"	(6) #5	#3 AT 8" O.C.	
MC-32A	WT x 32"	(4) #5	#3 AT 8" O.C.	
MC-32B	WT x 32"	(8) #5	#3 AT 8" O.C.	
MC-36B	WT x 16"	(4) #5	#3 AT 8" O.C.	

MASONRY COLUMN NOTES:
1. THE CENTERLINE OF THE VERTICAL BARS SHALL BE LOCATED 2 1/2" FROM THE FACE OF THE MASONRY. HORIZONTAL WALL REINFORCING SHALL BE LOCATED TO THE INSIDE OF THE VERTICAL BARS.
2. VERTICAL REINFORCING AND TIES SHALL EXTEND FULL HEIGHT OF WALL (UNO).
3. VERTICAL MASONRY COLUMN REINFORCING SHALL EXTEND INTO THE FOOTING AND TERMINATE WITH A STANDARD 90° HOOK. FOR CONCRETE FOUNDATION WALLS TALLER THAN 5'-0", VERTICAL COLUMN REINFORCING SHALL DOWEL 4'-0" MINIMUM INTO THE FOUNDATION WALL.
4. IN CONCRETE FOUNDATION WALLS, VERTICAL MASONRY COLUMN REINFORCING SHALL BE TIED WITH #3 TIES AT THE SAME SPACING AND CONFIGURATION AS THE MASONRY COLUMN ABOVE.
5. SEE GENERAL STRUCTURAL NOTES FOR ADDITIONAL REQUIREMENTS.

TYPICAL COLUMN CONFIGURATION SCHEMATIC

TYPICAL ISOLATED COLUMN CONFIGURATION SCHEMATIC

TYPICAL COLUMN CONFIGURATION SCHEMATIC

A2 MASONRY COLUMN SCHEDULE

SCHED_MAS_COL-01

NO SCALE

STEEL COLUMN SCHEDULE

MARK	SIZE	STEEL BASE PLATE	STEEL CAP PLATE	COMMENTS
SC-3A	HSS3x3x1/4	3/4" (SBP-1)	1/2" (SCP-1)	.
SC-3B	HSS3x3x1/4	3/4" (SBP-1)	1/2" (SCP-2)	
SC-3.5A	HSS3.1/2x3.1/2x3/16	3/4" (SBP-1)	1/2" (SCP-1)	
SC-5A	HSS5x5x1/4	1" (SBP-2)	3/4" (SCP-1)	
SC-6A	HSS6x6x1/4	3/4" (SBP-1)	3/4" (SCP-2)	
SC-8A	W8x31	3/4" (SBP-3)	1/2" (SCP-2)	
SC-8B	W8x18	3/4" (SBP-3)	1/2" (SCP-3)	
SC-8C	HSS8x8x5/16	1" (SBP-4)	3/4" (SCP-1)	
SC-8D	HSS8x8x3/8	1" (SBP-1)	3/4" (SCP-1)	

STEEL COLUMN NOTES:
1. UNLESS NOTED OTHERWISE, ALL COLUMNS SHALL BE INSTALLED WITH (4) 3/4"ø ANCHOR RODS WITH 3" MINIMUM HOOKS. PROJECT ANCHOR RODS 3" MINIMUM ABOVE THE TOP OF THE BASE PLATE. EMBEDMENT SHALL BE 9" MINIMUM. ALL RODS SHALL BE INSTALLED WITH HARDENED WASHERS BENEATH THE NUT. ANY BOLT HOLES LARGER THAN THE ROD DIAMETER PLUS 5/16" SHALL HAVE 5/16" PLATE WASHERS INSTALLED BENEATH THE HARDENED WASHERS.
2. ALL CAP PLATE BOLTS SHALL BE 3/4"ø A325N BOLTS, TYPICAL UNLESS NOTED OTHERWISE.
3. ANCHOR RODS SHALL NOT BE WELDED (INCLUDING TACK WELDS).
4. SEE GENERAL STRUCTURAL NOTES FOR ADDITIONAL REQUIREMENTS.
5. SEE DETAIL B4/SB501 FOR COLUMNS EMBEDDED IN MASONRY WALLS.

STEEL BASE PLATE TYPES:

BASE PLATE LEGEND
co = 1/2" MINIMUM
ed = 1.1/2" MINIMUM
bc = 3" MINIMUM

BASE PLATE SBP-1 BASE PLATE SBP-2 BASE PLATE SBP-3

BASE PLATE SBP-4

STEEL CAP PLATE TYPES:

CAP PLATE LEGEND
co = 1/2" MINIMUM
ed = 1.1/2" MINIMUM
bc = BEAM OR GIRDER GAGE
w = BEAM OR GIRDER GAGE + 3"
OR
BEAM OR GIRDER WIDTH + 1"
OR
COLUMN WIDTH + 1"
WHICHEVER IS GREATER

CAP PLATE SCP-1 CAP PLATE SCP-2 CAP PLATE SCP-3

A1 STEEL COLUMN SCHEDULE

SCHED_STL_COL-01

NO SCALE

MASONRY REINFORCING LAP SCHEDULE

BAR SIZE	(1) BAR PER CELL	(2) BARS PER CELL
#3	18"	18"
#4	24"	24"
#5	34"	34"
#6	37"	68"
#7	52"	92"
#8	79"	161"

2006 IBC

B4 MASONRY REINFORCING LAP SCHEDULE (2000psi)

SCHED_MAS_REINF-01

NO SCALE

MASONRY WALL SCHEDULE

MARK	THICKNESS	MATERIAL	SOLID GROUT	REINFORCING			COMMENTS
				VERTICAL	HORIZONTAL	JOINTS	
MW-10A	10"	CMU	YES	#5 AT 24" O.C.	#6 AT 48" O.C.	NONE	.
MW-10B	10"	CMU	YES	#5 AT 24" O.C.	#5 AT 24" O.C.	NONE	BWTN OPENINGS
				#5 AT 24" O.C.	#6 AT 48" O.C.	NONE	ABOVE OPENINGS

MASONRY WALL NOTES:
1. COORDINATE WALL FINISHES, MATERIALS, COURSING, ETC. WITH ARCHITECTURAL DRAWINGS.
2. DO NOT SOLID GROUT WALLS UNLESS REQUIRED BY SCHEDULE, NOTES, OR DETAILS.
3. SOLID GROUT ALL MASONRY COURSES BELOW GRADE.
4. VERTICAL REINFORCING SHALL BE CENTER IN WALL (UNO).
5. PROVIDE TWO VERTICAL BARS (MIN) AT ALL CORNERS AND END OF WALLS.
6. HORIZONTAL WALL REINFORCING SHALL BE PLACED BETWEEN VERTICAL MASONRY COLUMN REINFORCING BARS.
7. HORIZONTAL WALL REINFORCING SHALL CONTINUE THROUGH MASONRY LINTELS. WHERE BOTH HORIZONTAL WALL REINFORCING AND LINTEL REINFORCING OCCUR IN THE SAME COURSE, USE THE LARGER REINFORCING.
8. MASONRY WALL NOT DESIGNATED IN THE PLANS SHALL BE REINFORCED AS FOLLOWS:

THICKNESS	VERTICAL REINFORCING	HORIZONTAL REINFORCING
6"	#5 BARS AT 32" O.C.	#4 BARS AT 48" O.C.
8"	#5 BARS AT 32" O.C.	#5 BARS AT 48" O.C.
10"	#5 BARS AT 24" O.C.	#6 BARS AT 48" O.C.
12"	#5 BARS AT 24" O.C.	(2) #5 BARS AT 48" O.C.

9. SEE GENERAL STRUCTURAL NOTES FOR ADDITIONAL REQUIREMENTS.

A4 MASONRY WALL SCHEDULE

NO SCALE

CLIENT

UDOT CONNECTING COMMUNITIES

STATION #2434
6072 E. EMIGRATION CANYON RD.
PARLEY'S CANYON, UTAH

DESIGNER

ARCHIPLEX GROUP
architecture · planning · design services
255 Crossroad Square
Salt Lake City, UT 84115
P:(801) 961-7070
F:(801) 961-7373

CONSULTANTS

"Engineering Results"
BHB Consulting Engineers
A Professional Corporation
2766 South Main Street
Salt Lake City, Utah 84115
Phone: 801.355.5656
Fax: 801.355.5950
Email: bhb@bhbengineers.com

REGISTRATION

LICENSED PROFESSIONAL ENGINEER No. 323922 GERALD R. McKENZIE STATE OF UTAH

ISSUE

MARK	DATE	DESCRIPTION
	10-08	CONSTRUCTION DOCUMENTS
	8-20-08	90% REVIEW SUBMITTAL

PROJECT NO:	08284
DFCM PROJECT NO:	08211900
DRAWN BY:	CB
CHECKED BY:	RS
SCALE:	
DATE:	JANUARY 19, 2009

KEY PLAN

SHEET TITLE

SCHEDULES

SF601

© 2008 ARCHIPLEX GROUP

Copyright (C) 2007 by PVE, Inc. Salt Lake City, Utah. All rights reserved. Unauthorized copying and/or use is illegal and subject to prosecution.

MECHANICAL LEGEND
(NOT ALL USED)

- RETURN OR EXHAUST DUCT DOWN
- RETURN OR EXHAUST DUCT UP
- SUPPLY AIR DUCT DOWN
- SUPPLY AIR DUCT UP
- SPIN-IN FITTING W/MVD
- FLEXIBLE DUCT
- CEILING SLOT DIFFUSER
- CEILING DIFFUSER
- CEILING EXHAUST GRILLE
- CEILING GRILLE
- ACCESS PANEL
- MANUAL VOLUME DAMPER
- MOTORIZED DAMPER
- FIRE DAMPER
- COMBINATION FIRE/SMOKE DAMPER
- THERMOSTAT OR TEMP SENSOR
- POINT OF CONNECTION TO EXISTING
- DETAIL TAG — DETAIL NO. / DRAWING NO.
- KEYED NOTE — NOTE NO.
- SECTION CUT LINE — SECTION NO. / DRAWING NO.
- CONTROL TRANSFORMER — TRX

GENERAL NOTES:

1. PIPE ROUTING AS SHOWN ON DRAWINGS IS DIAGRAMMATIC AND IS NOT TO BE SCALED. WHERE ALTERNATE ROUTING, OFFSETS AND TRANSITIONS ARE REQUIRED FOR COORDINATION OF WORK, THIS CONTRACTOR SHALL MAKE CHANGES WITHOUT ADDITIONAL COSTS.
2. THIS CONTRACTOR SHALL CLOSELY COORDINATE NEW MECHANICAL WITH NEW AND EXISTING MECHANICAL, ELECTRICAL, ARCHITECTURAL AND BUILDING STRUCTURE.
3. THIS CONTRACTOR SHALL FIELD VERIFY ALL MECHANICAL ITEMS PRIOR TO STARTING NEW WORK. ADDITIONAL COST WILL NOT BE ALLOWED FOR CONTRACTOR'S FAILURE TO BECOME FAMILIAR WITH EXISTING SITE CONDITIONS.
4. ALL MECHANICAL SYSTEMS SHALL BE INSTALLED IN ACCORDANCE WITH THE CURRENT ADOPTED EDITION OF THE BUILDING CODES, FIRE CODES, MECHANICAL CODES AND PLUMBING CODES.
5. THIS CONTRACTOR SHALL PROVIDE SUBMITTALS ON ITEMS LISTED IN MECHANICAL EQUIPMENT LIST TO THE ENGINEER FOR REVIEW PRIOR TO THE ORDER, PURCHASE OR INSTALLATION.
6. ALL WATER FLOW RATES AND DIFFUSERS MUST BE BALANCED TO THE VALVES INDICATED ON THE FLOOR PLANS. PROVIDE BALANCE REPORT TO ENGINEER PRIOR TO PROJECT CLOSEOUT.
7. FIRE SPRINKLER CONTRACTOR SHALL ADD AND/OR RELOCATE SPRINKLER HEADS PER REFLECTED CEILING PLAN AND THE CURRENT ADOPTED EDITION OF NFPA AND BUILDING CODE.
8. ALL DOMESTIC COLD AND DOMESTIC HEATING WATER PIPING SHALL BE TYPE 'L' COPPER. ALL WASTE AND VENT PIPING SHALL BE CAST IRON. ALL ROOF AND OVERFLOW DRAINAGE PIPING TO BE CAST IRON.
9. VENT THE HIGH POINTS OF NEW MECHANICAL PIPING.
10. PROVIDE INSULATION FOR THE FOLLOWING:
    a. DOMESTIC HOT WATER AND HOT WATER RECIRCULATION PIPING: 1" THICK FOR ALL PIPE SIZES.
    b. DOMESTIC COLD WATER AND CONDENSATE PIPING PIPING: ½" THICK FOR PIPE SIZES ½" TO 6". (PROVIDE CONTINUOUS VAPOR BARRIER.)
    c. ROOF DRAIN, OVERFLOW DRAIN PIPING AND BOTTOM OF BOWL ½" THICK FOR PIPE SIZES ½" TO 10" (PROVIDE CONTINUOUS VAPOR BARRIER.)
11. INSULATE PIPING WITH FIBERGLASS PIPE COVERING WITH ALL SERVICE JACKET AND SELF-CAP SEAL. FITTINGS SHALL BE MITERED PIPING COVERING OF GLASS FIBER MOLDED FITTINGS FOR USE IN A RETURN AIR PLENUM. THERMAL CONDUCTIVITY SHALL BE A MAXIMUM OF .25/INCH THICKNESS AT 75'F.
12. ——— INDICATES EXISTING. ——— INDICATES NEW MATERIAL.
13. MECHANICAL CONTRACTOR IS TO COORDINATE WITH ELECTRICAL ON SIZE/QUANTITY OF MOTORIZED DAMPERS. I. E. FIRE/SMOKE DAMPERS, FIRE DAMPERS, MOTORIZED DAMPERS, ETC. . .
14. EACH TRADE IS RESPONSIBLE FOR THEIR OWN FIRE CAULKING.
15. DIVISION 15 MUST PROVIDE AND INSTALL ALL ACCESS DOORS FOR FCU's, VALVES, FLOW METERS, ETC. COORDINATE LOCATION WITH GENERAL CONTRACTOR.
16. HOUSEKEEPING PADS FOR ALL EQUIPMENT IS PROVIDED AND INSTALLED BY GENERAL CONTRACTOR. COORDINATE LOCATION WITH MECHANICAL CONTRACTOR.
17. ALL TAKE-OFF'S THROUGHOUT THE ENTIRE BUILDING SHALL BE HIGH EFFICIENCY TAKE-OFF'S (HET's). NO EXCEPTIONS TAKEN.
18. DIVISION 15 TO SUBMIT TO ENGINEER ALL AS-BUILDS OF BUILDINGS MECHANCIAL AND PLUMBING SYSTEMS PRIOR TO JOB COMPLETION AND FINAL PAYMENT.
19. ALL VFD'S ARE TO BE PROVIDED AND WIRED UP BY ELECTRICAL CONTRACTOR AND INSTALLED BY THE MECHANICAL CONTRACTOR.
20. ALL EXPOSED PIPING IS TO BE INSULATED AND WEATHERPROOFED.
21. ALL INVERT ELEVATIONS SHOWN ON PLANS ARE BASED OFF OF FINISHED FLOOR ELEVATION AT 100.0'. CONTRACTOR TO COORDINATE WITH ARCHITECTURAL AND CIVIL DRAWINGS FOR EXACT INVERT ELEVATIONS OF ALL LEVELS.
22. ALL FLOOR DRAINS / FLOOR SINKS THROUGH-OUT THE ENTIRE BUILDING ARE TO HAVE TRAP SEAL PRIMER VALVES PROVIDED / INSTALL BY PLUMBING CONTRACTOR.
23. ALL GAS METER REGUALTORS ARE TO BE VENTED TO THE OUTSIDE OF THE BUILDING BY THE MECHANICAL CONTRACTOR OR PROVIDE / INSTALL VENTLESS REGULATORS IF ALLOWED BY THE LOCAL JURISDICTION. NONE OF THE VENT PIPING OFF THE REGULATORS ARE SHOWN ON THE PLANS FOR CLARITY.

ELECTRIC WALL HEATER SCHEDULE

SYMBOL	LOCATION	OUTPUT BTU	NO. REQ'D	MOTOR AMPS	MOTOR VOLTS	MOTOR ø	MOTOR CYCLES	MAKE AND MODEL
EWH-1	SEE PLANS	5000	1	12.5	115	1	60	QMARK # CWH3150*

* PROVIDE WITH BUILT-IN THERMOSTAT

CONDENSING UNIT SCHEDULE

CODE	MFR. & MODEL NO.	SEN. MBH	AMB. TEMP.	SEER	SUCTION TEMP.	FLA	MCA	MOP	VOLTAGE/ PHASE	REMARKS
CU-1 CU-2	TRANE #2TTB2042A1000	31	95	13	45	18.8	23	40	208/1	1 2 3 5 6 7 8 9

1 PROVIDE WITH FUSED DISCONNECT 2 NOT USED 3 ANTI-SHORT CYCLE 4 R410A
5 PROGRAMMABLE THERMOSTAT 6 HIGH/LOW PRESSURE SWITCH 7 FACTORY INSTALLED ACCUMULATOR 8 NOMINAL 3.5 TON UNIT
9 CONDENSER, EVAPORATOR AND FURNACE BY SAME MANUFACTURER

GAS-FIRED RADIANT HEATERS

SYMBOL	LOCATION	INPUT BTU	WEIGHT	CONFIG	MOTOR AMPS	MOTOR VOLTS	MOTOR ø	MOTOR CYCLES	FLUE SIZE	MAKE AND MODEL NUMBER	COMMENTS
B-1	AS SHOWN	100,000	35	SEE PLANS	1.0 RUN	120	1	60	4"ø	ROBERTS GORDON CO-RAY-VAC #B-10	1 2 3 4 6 7

1 ROBERS GORDON #EP-200 VACUUM PUMP, 3/4HP, 120 VOLT 2 PROVIDE FRESH AIR INTAKE 3 PROGRAMMABLE THERMOSTAT
4 HEAT TREATED ALUMIZED STEEL TUBE AND POLISHED ALUMINUM REFLECTOR 5 PROPANE GAS 6 NATURAL GAS
7 PROVIDE SUFFICIENT LENGTH POWER CORD TO MAKE CONNECTION FROM BURNER TO ELECTRICAL OUTLET

INTAKE HOOD SCHEDULE H-

PLAN CODE	AREA SERVED	MANUFACTURER & MODEL NO	CFM	SP	HEIGHT (IN)	THROAT WIDTH (IN)	THROAT LENGTH (IN)	THROAT VELOCITY FPM	ACCESSORIES
IH-1	VEHICLE BAY 102	PENN BARRY #PH	14300	0.04	36	68.5	68.5	500	1 2 3 4 5

1 CURB 2 MOTORIZED DAMPER 3 INTERLOCK DAMPER MOTOR WITH EF-2 4 BIRD SCREEN 5 COLOR TO MATCH ROOF (PAINT IF NEEDED).

AIR DEVICE SCHEDULE
GRILLE NUMBER / GRILLE CFM

PLAN CODE	TYPE & DUTY	NECK SIZE	CEILING TYPE	N.C. LEVEL MAX	SP	MAX. CFM	DAMPER	COLOR	MANUFACTURER & MODEL NO.	REMARKS
S-1	4-WAY SUPPLY	6"ø	SEE PLANS	20	0.05	176	IN DUCT	WHITE	PRICE #SCDA	1 3 4
S-2	4-WAY SUPPLY	8"ø	SEE PLANS	20	0.05	280	IN DUCT	WHITE	PRICE #SCDA	2 3 4
S-3	4-WAY SUPPLY	10"ø	SEE PLANS	21	0.05	436	IN DUCT	WHITE	PRICE #SCDA	2 3 4
S-4	SUPPLY GRILLE	28" x 24"	SEE PLANS	40	0.146	4290	IN DUCT	WHITE	PRICE #510	5
R-1	RETURN	12" X 12"	SEE PLANS	15	0.06	630	OBD	WHITE	PRICE #80D	
R-2	RETURN	22" X 12"	SEE PLANS	22	0.085	1280	IM DUCT	WHITE	PRICE #80D	

1 12" X 12" FACE MODULE 2 24" X 24" FACE MODULE 3 3 CONCENTRIC CONES 4 SET FOR HORIZONTAL DISCHARGE 5 ZERO DEFLECTION

FURNACE SCHEDULE

SYMBOL	INPUT BTU	OUTPUT BTU (2)	CFM	EXT S.P.	FAN SPEED	FILTER NO.	FILTER SIZE	MOTOR HP	MOTOR ø	MOTOR CYCLES	MOTOR VOLT	MOTOR DRIVE	MANUFACTURER AND MODEL NO.	COMMENTS
F-1, 2	100,000	93,000	1400	0.5	1100 RPM	1	24"x25"x1"	3/4	1	60	115	DIRECT	TRANE #TUX100C960D	1 3 4 6 7 8

1 AFUE - 93 2 AT ELEVATION 3 R-22 4 PROVIDE W/TXC050C4HPD EVAPORATOR 5 PROPANE GAS KIT 6 CONCENTRIC VENT KIT
7 CONDENSER, EVAPORATOR AND FURNACE BY SAME MANUFACTURER 8 NATURAL GAS

LOUVER SCHEDULE L-

PLAN CODE	SYSTEM SERVED	MANUFACTURER & MODEL NO.	CFM	VELOCITY FPM	FREE AREA (SF)	DIMENSIONS (W x H) (IN)	COLOR	COMMENTS
L-1	O.A. FOR F-1, 2	RUSKIN # ELF 811S	400	600	0.67	18" x 18"	PRE-FINISHED WHITE	PROVIDE WITH BIRD SCREEN
L-2	COMBUSTION AIR	RUSKIN # ELF 811S	-	-	0.77	12" x 12"	PRE-FINISHED WHITE	PROVIDE WITH BIRD SCREEN
L-3	EF-2	RUSKIN # ELF 811S	14300	700	20.39	78" x 78"	PRE-FINISHED WHITE	PROVIDE WITH BIRD SCREEN
L-4	EF-4	RUSKIN # ELF 811S	6710	700	7.10	48" x 48"	PRE-FINISHED WHITE	PROVIDE WITH BIRD SCREEN
L-5	O.A. FOR EF-4	RUSKIN # ELF 811S	3355	500	6.20	48" x 42"	PRE-FINISHED WHITE	PROVIDE WITH BIRD SCREEN MOTORIZED DAMPER INTERLOCKED WITH EF-4

EXHAUST FAN SCHEDULE

SYMBOL	NO. REQ'D	LOCATION	CFM	TOTAL SP	LB'S	SONES	ROOF OR WALL OPENING	MOTOR HP	MOTOR ø	MOTOR CYCLES	MOTOR VOLTS	MOTOR RPM	COMMENTS
EF-1	AS SHOWN	RESTROOM	150	0.5	15	3.6	8"ø	50 WATTS	1	60	120	1200	COOK #GN- 160 4 6
EF-2	AS SHOWN	VEHICLE SVC BAY #102	14300	0.25"	882	22	61" SQ.	2.0	3	60	208	321	COOK #54XLP 1 2 3 7 8 9
EF-3	AS SHOWN	DRYER	200	0.5"	-	24	4"ø	1/10	1	60	120	1550	REVERSOMATIC + PWS #300 5
EF-4	AS SHOWN	VEHICLE SVC BAY #106	6710	0.25"	275	24	37" SQ.	3/4	1	60	120	875	COOK #30XMP 1 2 3 7 8 9

1 PROVIDE INSULATED HOUSING AROUND MOTOR 2 CONTROL WITH CARBON MONOXIDE DETECTOR THROUGH ON/AUTO SWITCH 3 INNER LOCK LOUVER MOTOR W/ FAN MOTOR
4 CEILING GRILLE 5 FACTORY INSTALLED PRESSURE SENSOR TO AUTOMATICALLY START BOOSTER FAN WHEN DRYER STARTS. 6 CONTROL WITH MOTION DETECTOR
7 OUTLET LOUVER. SCHEDULED ON M001 8 MOTORIZED DAMPER. INTERLOCK DAMPER WITH FAN MOTOR 9 SAFETY INLET SCREEN

CLIENT

UDOT CONNECTING COMMUNITIES

STATION #2434
I-80 E.B. EXIT 134
PARLEY'S CANYON

DESIGNER

ARCHIPLEX GROUP
architecture · planning · design services
255 Crossroad Square
Salt Lake City, UT 84115
P:(801) 961-7070
F:(801) 961-7373

CONSULTANTS

PVE Inc. Consulting Mechanical / Electrical Engineers
1040 North 2200 West, Suite 100
Salt Lake City, UT 84116
Phone: (801) 359-3158
Fax: (801) 521-4114

REGISTRATION

REGISTERED PROFESSIONAL ENGINEER — ALAN D. SPENCLOVE 166911 — STATE OF UTAH

ISSUE

MARK	DATE	DESCRIPTION
	1/2009	CONSTRUCTION DOCUMENTS
	8-20-08	90% REVIEW SUBMITTAL

PROJECT NO: 08105.00.01
DRAWN BY: MJG
CHECKED BY: ADS
SCALE:
DATE: JANUARY, 2009

KEY PLAN

SHEET TITLE

MECHANICAL SCHEDULES

M001

© 2004 ARCHIPLEX GROUP

By: jhyrd, Jan 15, 2009 - 11:14am, X:\Projects\2008\08105.00.01 - Parleys Island Sta\M001-08105.00.dwg

Copyright (C) 2007 by PVE, Inc. Salt Lake City, Utah. All rights reserved. Unauthorized copying and/or use is illegal and subject to prosecution.

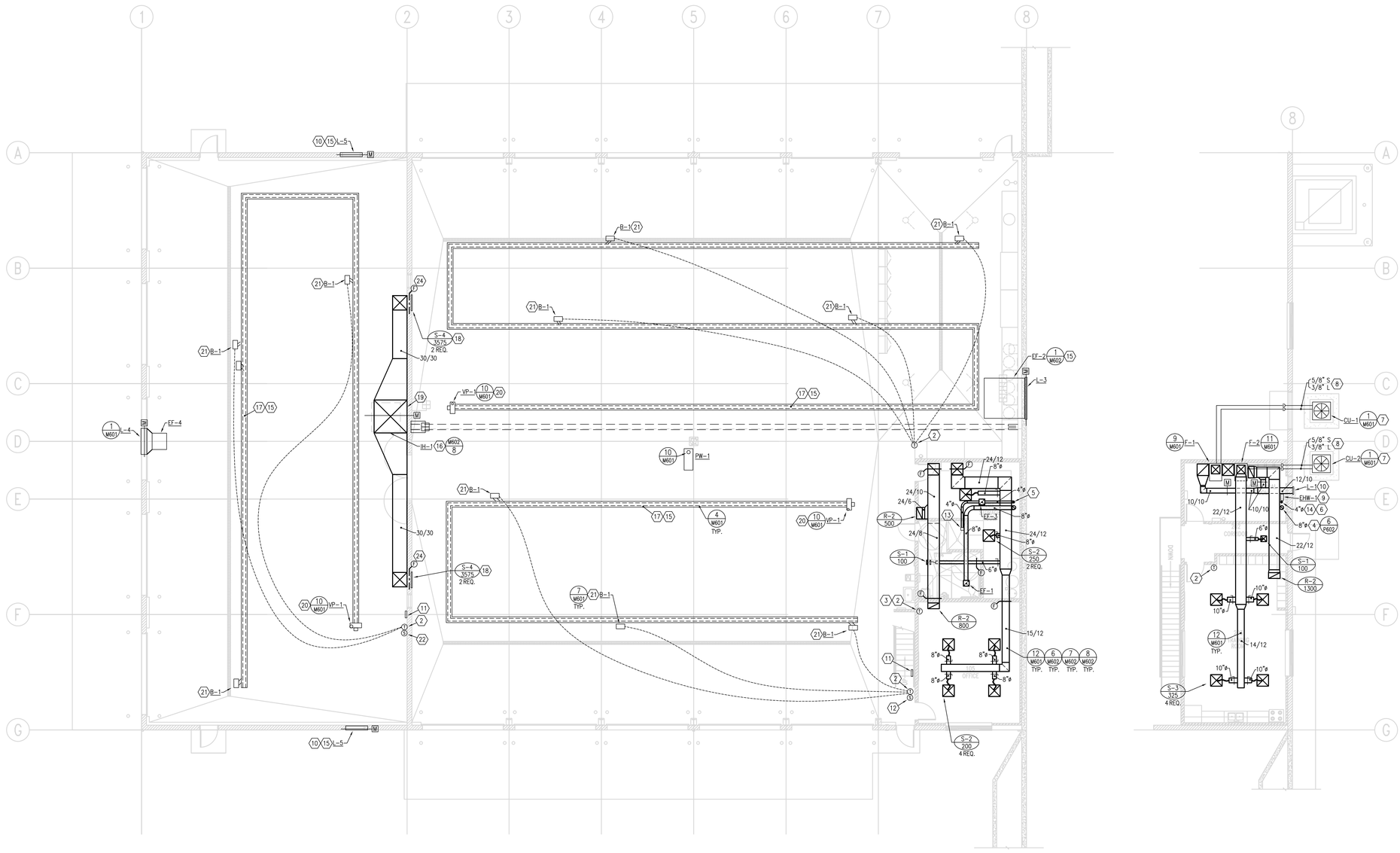

KEYED NOTES:

1. NOT USED.
2. MOUNT THERMOSTAT 5'-0" AFF.
3. THERMOSTAT TO CONTROL F-1.
4. EXTEND EXHAUST DUCT THRU ROOF.
5. 8"ø DUCT UP TO FLOOR ABOVE.
6. PROVIDE ALDES #22043 DRYER ROOF VENT CAP.
7. INSTALL CONDENSER ON 4" CONCRETE PAD. CONCRETE PAD TO BE 4" LARGER MINIMUM THAN CONDENSER.
8. PROVIDE REFRIGERANT LINE SETS AS REQUIRED BY MANUFACTURER. REFRIGERANT LINE SIZE SHOWN FOR BIDDING PURPOSES ONLY. CONTRACTOR TO PROVIDE REFRIGERANT LINES RECOMMENDED BY MANUFACTURER.
9. MOUNT EWH-1 24" AFF TO BOTTOM OF HEATER.
10. INSTALL LOUVERS PER DETAIL 4/M602. SEE ARCH DRAWINGS FOR LOCATION.
11. RADIANT HEAT SYSTEM CONTROL PANELS.
12. CARBON MONOXIDE DETECTOR. INTERLOCK THRU AUTO/ON SWITCH WITH EXHAUST FAN EF-2. LABEL SWITCH WITH LAMINATED PLASTIC LABEL.
13. PROVIDE REVERSOMATIC LINT TRAP #LT-180, MOUNT TRAP 6" ABOVE DRYER. PROVIDE ALDES #9906A DRYER WALL VENT BOX. MOUNT BOX AT THE BASE OF DRYER.
14. 4"ø GALVANIZED SHEET METAL UP THROUGH ROOF.
15. REF. ARCHITECT'S DRAWING FOR LOCATION.
16. IH-1 LOCATED ON ROOF.
17. MOUNT RADIANT HEATERS PARALLEL WITH ROLL-UP DOORS.
18. MOUNT SUPPLY GRILLE 24" AFF.
19. 68-1/2" X 68-1/2" DUCT UP TO IH-1 LOCATED ON ROOF.
20. 4" TYPE B VENT THRU ROOF. INSTALL PER MANUFACTURER'S INSTRUCTIONS.
21. 4" COMBUSTION AIR INTAKE THRU ROOF. SEE DETAIL 5/M602.
22. CARBON MONOXIDE DETECTOR. INTERLOCK WITH EF-4 THROUGH AUTO/ON SWITCH. LABEL SWITCH WITH LAMINATED PLASTIC LABEL.
23. MECHANICAL CONTRACTOR SHALL COORDINATE ANY/ALL CHANGES WITH ELECTRICAL CONTRACTOR.
24. 3-HR. FIRE DAMPERS.
25. 8"ø TYP. B FLUE. SUPPORT OFF COLUMN.

1 M201 **MECHANICAL FLOOR PLAN**

SCALE: 1/8" = 1' - 0" 6' 0 4' 8' 12' 16'

CLIENT

UDOT CONNECTING COMMUNITIES

STATION #2434
I-80 E.B. EXIT 134
PARLEY'S CANYON

DESIGNER

ARCHIPLEX GROUP
architecture · planning · design services
255 Crossroad Square
Salt Lake City, UT 84115
P:(801) 961-7070
F:(801) 961-7373

CONSULTANTS

PVE Inc. Consulting Mechanical Electrical Engineers
1040 North 2200 West, Suite 100
Salt Lake City, UT 84116
Phone: (801) 359-3158
Fax: (801) 521-4114

REGISTRATION

REGISTERED PROFESSIONAL ENGINEER ALAN D. SPENDLOVE 166911 STATE OF UTAH

ISSUE

MARK	DATE	DESCRIPTION
	1/2009	CONSTRUCTION DOCUMENTS
	8-20-08	90% REVIEW SUBMITTAL

PROJECT NO:	08105.00.01
DRAWN BY:	MJG
CHECKED BY:	ADS
SCALE:	
DATE:	JANUARY, 2009

KEY PLAN

SHEET TITLE

MECHANICAL FLOOR PLAN

M201

© 2004 ARCHIPLEX GROUP

By: jhorst, Jan 15, 2009 - 11:14am, X:\Projects\2008\08105.00.01 - Parley's Model Shp\M201-08105.00.dwg

Copyright (C) 2007 by PVE, Inc. Salt Lake City, Utah. All rights reserved. Unauthorized copying and/or use is illegal and subject to prosecution.

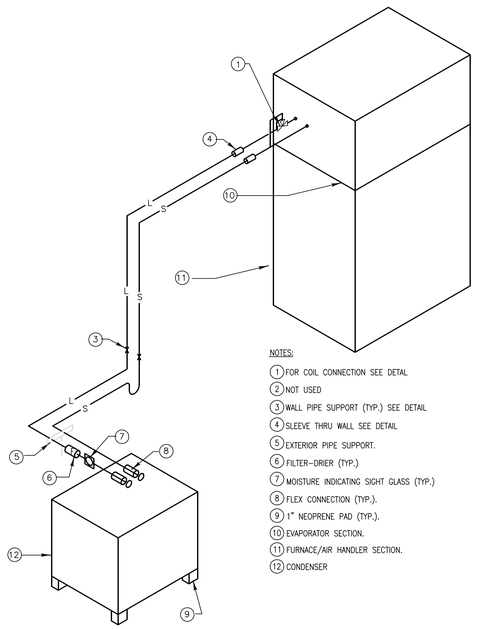

NOTES:

1. FOR COIL CONNECTION SEE DETAL
2. NOT USED
3. WALL PIPE SUPPORT (TYP.) SEE DETAIL
4. SLEEVE THRU WALL SEE DETAIL
5. EXTERIOR PIPE SUPPORT.
6. FILTER-DRIER (TYP.)
7. MOISTURE INDICATING SIGHT GLASS (TYP.)
8. FLEX CONNECTION (TYP.).
9. 1" NEOPRENE PAD (TYP.).
10. EVAPORATOR SECTION.
11. FURNACE/AIR HANDLER SECTION.
12. CONDENSER

1 / M601 — RERIGERANT PIPING SCHEMATIC DETAIL — NO SCALE

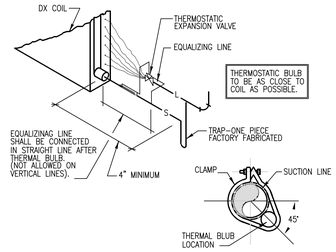

2 / M601 — REFRIGERANT COIL CONNECTION DETAIL — NO SCALE

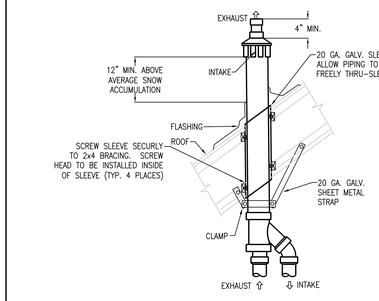

3 / M601 — CONCENTRIC ROOF TEMINATION DETAIL — NO SCALE

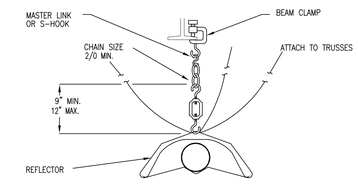

4 / M601 — RADIANT HEATING SEISMIC DETAIL — NO SCALE

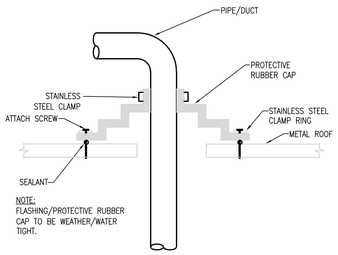

5 / M601 — METAL ROOF PENETRATION DETAIL — NO SCALE

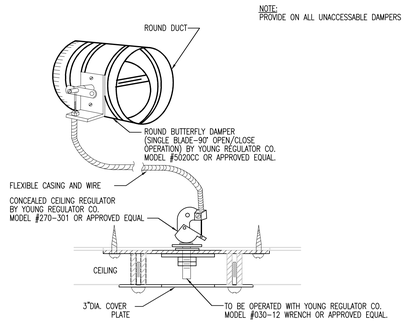

6 / M601 — DAMPER AND REGULATOR DETAIL — NO SCALE

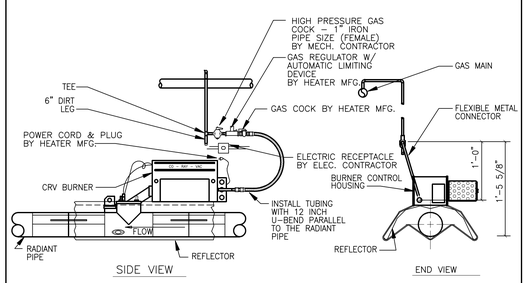

7 / M601 — GAS CONNECTION TO CRV BURNER DETAIL — NO SCALE

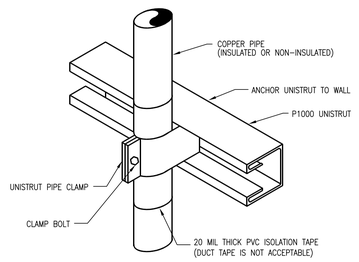

8 / M601 — PIPE SUPPORT DETAIL — NO SCALE

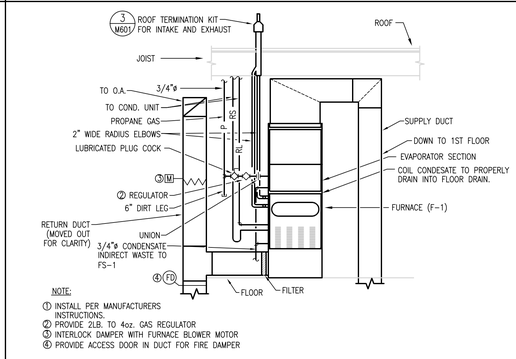

9 / M601 — 90% EFFICIENT FURNACE DETAIL — NO SCALE

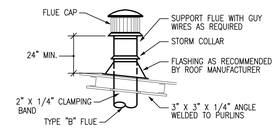

10 / M601 — FLUE CAP DETAIL — NO SCALE

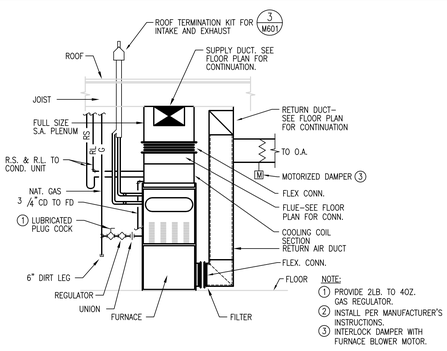

11 / M601 — 90% EFFICIENT FURNACE DETAIL — NO SCALE

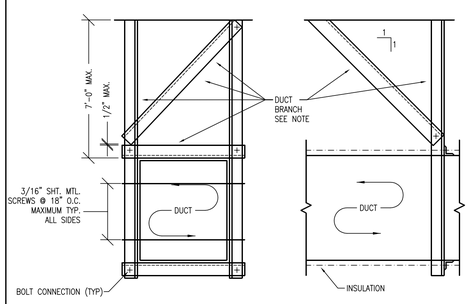

12 / M601 — SEISMIC RESTRAINT OF DUCTS DETAIL — NO SCALE

SCHEDULE "A" BRACING OF RECTANGULAR DUCTS

DUCT SIZE INCHES	VERTICAL ANGLES	DIAGONAL ANGLES	HORIZONTAL ANGLES	LONGITUDINAL ANGLES	BOLT SIZE **	WT. PER LINEAR FOOT
30" SQ.	2-1/2" X 2-1/2" X 16 GA.	2-1/2" X 2-1/2" X 16 GA.	2" X 2" X 16 GA.	3" X 3" X GA.	1/4"ø	13
42" SQ.	4" X 4" X 16 GA.	2-1/2" X 2-1/2" X 16 GA.	2-1/2" X 2-1/2" X 16 GA.	D.O.	3/8"ø	20
54" SQ.	4" X 4" X 16 GA.	2-1/2" X 2-1/2" X 16 GA.	2-1/2" X 2-1/2" X 16 GA.	D.O.	3/8"ø	27
60" SQ.	4" X 4" X 12 GA.	3" X 3" X 16 GA.	3" X 3" X 16 GA.	D.O.	3/8"ø	36
84" SQ.	4" X 4" X 1/4"	4" X 4" X 14 GA.	4" X 4" X 14 GA.	D.O.	3/8"ø	53
96" SQ.	5" X 3" X 1/4"	4" X 4" X 12 GA.	4" X 4" X 12 GA.	D.O.	1/2"ø	30

* MAXIMUM DIMENSION OF DUCT SHALL GOVERN WHAT BRACING REQUIRED. EX: A 42" X 32" DUCT SHALL BE BRACED AS A 42" SQ. DUCT.

** MINIMUM EDGE DISTANCE FOR BOLTS:
1/4"ø - 1" 5/8"ø - 1-1/8"
3/8"ø - 1" 3/4"ø - 1-1/4"
1/2"ø - 1" 7/8"ø - 1-1/2"

DUCT BRACING NOTES:

1. DESIGN RESTRAINTS PER SEISMIC ZONE 3.
2. REFERENCE SMACNA SEISMIC RESTRAINT MANUAL.
3. FOR DUCTWORK REQUIRING SEISMIC BRACING, INSTALL BRACES AS FOLLOWS:
   a. TRANSVERSE BRACE AT EACH DUCT CHANGE OF DIRECTION, END OF DUCT RUN, AND AT 30'-0" O.C. FOR STRAIGHT RUNS.
   b. LONGITUDINAL BRACE AT 60'-0" O.C.
   c. TRANSVERSE BRACING OF ONE DUCT SECTION MAY ACT AS A LONGITUDAL BRACE FOR A DUCT SECTION CONNECTED PERPENDICULAR TO IT, PROVIDING THE BRACE IS INSTALLED WITHIN FOUR FEET OF THE INTERSECTION AND IS SIZED FOR THE LARGEST DUCT.
   d. WALLS WHICH HAVE DUCTS PASSING THROUGH THEM MAY SUBSTITUTE FOR A TRANSVERSE BRACE.
   e. DO NOT USE JOIST BRIDGING FOR SUPPORT OF ANY LOAD.
   f. IF SUPPORTING LOADS ABOVE 50 LBS. BETWEEN JOIST PANEL POINTS REINFORCE BOTTOM CORD OF JOIST AS PER STRUCTURAL ENGINEERS REQUIREMENTS. REFER TO SUPPORT DETAILS ON STRUCTURAL DRAWINGS.

By: jbyrd, Jan 15, 2009 - 11:14am, X:\Projects\2005\05105.00.01 - Parleys Water Sta\M601-05105.00.dwg

CLIENT

UDOT CONNECTING COMMUNITIES

STATION #2434
I-80 E.B. EXIT 134
PARLEY'S CANYON

DESIGNER

ARCHIPLEX GROUP
architecture · planning · design services
255 Crossroad Square
Salt Lake City, UT 84115
P:(801) 961-7070
F:(801) 961-7373

CONSULTANTS

PVE Inc.
Consulting Mechanical | Electrical Engineers
1040 North 2200 West, Suite 100
Salt Lake City, UT 84116
Phone: (801) 359-3158
Fax: (801) 521-4114

REGISTRATION

REGISTERED PROFESSIONAL ENGINEER — ALAN D. SPENDLOVE 166911 — STATE OF UTAH

ISSUE

MARK	DATE	DESCRIPTION
	1/2009	CONSTRUCTION DOCUMENTS
	8-20-08	90% REVIEW SUBMITTAL

PROJECT NO:	08105.00.01
DRAWN BY:	MJG
CHECKED BY:	ADS
SCALE:	
DATE:	JANUARY, 2009

KEY PLAN

SHEET TITLE

MECHANICAL DETAILS

M601

© 2004 ARCHIPLEX GROUP

Copyright (C) 2007 by PVE, Inc. Salt Lake City, Utah. All rights reserved. Unauthorized copying and/or use is illegal and subject to prosecution.

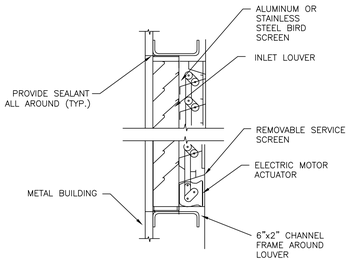

1 M602 — OUTLET / INLET LOUVER DETAIL
NO SCALE

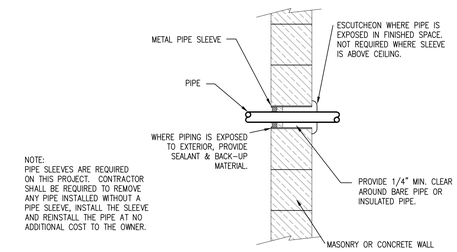

NOTE:
PIPE SLEEVES ARE REQUIRED ON THIS PROJECT. CONTRACTOR SHALL BE REQUIRED TO REMOVE ANY PIPE INSTALLED WITHOUT A PIPE SLEEVE, INSTALL THE SLEEVE AND REINSTALL THE PIPE AT NO ADDITIONAL COST TO THE OWNER.

2 M602 — PIPE THRU WALL ABOVE GRADE
NO SCALE

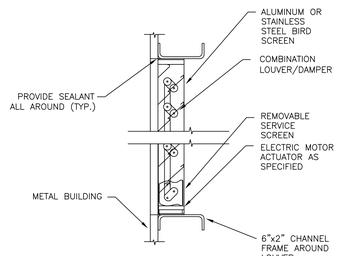

3 M602 — COMBINATION LOUVER/DAMPER DETAIL
NO SCALE

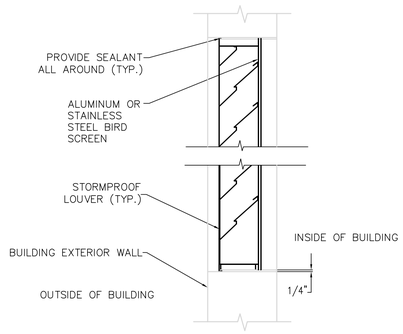

4 M602 — LOUVER DETAIL
NO SCALE

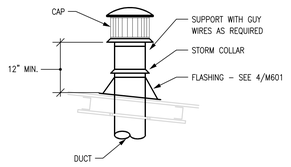

5 M602 — INTAKE VENT PIPE DETAIL
NO SCALE

DIMENSION OF LONGEST SIDE, INCHES	SHEET METAL GAGE (ALL FOUR SIDES)	MINIMUM REINFORCING ANGLE SIZE & MAXIMUM LONGITUDINAL SPACING BETWEEN JOINTS &/OR INTERMEDIATE REINFORCING	TRANSVERSE REINFORCING ① AT JOINTS: MIN. HL IN.	DRIVE SLIP S SLIP PLAIN S SLIP RECOM-MENDED GAGE	HEMMED S SLIP RECOM-MENDED GAGE	ALTERNT. BAR SLIP RECOM-MENDED GAGE	REINFOR. BAR SLIP RECOM-MENDED GAGE	BAR SLIP ANGLE SLIP RECOM-MENDED GAGE	REINFORCED ANGLE SIZE	STAND SEAM ANGLE REINFOR. STAND SEAM RECOM-MENDED ANGLE	REINFORCED ANGLE SIZE	POCKET LOCK ANGLE REINFORCED POCKET LOCK RECOM-MENDED GAGE	REINFORCED ANGLE SIZE
UP THRU 12	26	NONE REQ.	1	26	26	24	24	24	NOT REQ.	NOT REQ.	NOT REQ.	24	NOT REQ.
13 – 18	24	NONE REQ.	1	24	24	24	24	24	NOT REQ.	NOT REQ.	NOT REQ.	24	NOT REQ.
19 – 30	24	1X1X1/8 @ 10'-0"	1	–	24	24	24	24	NOT REQ.	NOT REQ.	NOT REQ.	24	NOT REQ.
31 – 42	22	1X1X1/8 @ 10'-0"	1	–	–	22	22	22	NOT REQ.	NOT REQ.	NOT REQ.	22	NOT REQ.
43 – 54	22	1.5X1.5X1/8@10'-0"	1 1/2	–	–	22	22	22	1.5X1.5X1/8	NOT REQ.	NOT REQ.	22	NOT REQ.
55 – 60	20	1.5X1.5X1/8@10'-0"	1 1/2	–	–	–	22	22	1.5X1.5X1/8	NOT REQ.	NOT REQ.	22	NOT REQ.
61 – 84	20	1.5X1.5X1/8@10'-0"	1 1/2	–	–	–	22	22	1.5X1.5X1/8	1.5X1.5X1/8	NOT REQ.	22	1.5X1.5X1/8

① TRANSVERSE REINFORCING SIZE IS DETERMINED BY DIMENSION OF SIDE TO WHICH ANGLE IS APPLIED

6 M602 — DUCT CONSTRUCTION DETAIL
NO SCALE

HANGER SIZES FOR RECTANGULAR DUCT

MAX. SIDE	HANGER	HORIZANTAL SUPPORT ANGLE	MAXIMUM SPACING
30"	.016" GAGE STRAP	NONE REQUIRED	10'-0"
36"	1/4" ROUND ROD	1 1/2" X 1 1/2" X 1/8"	8'-0"
48"	1/4" ROUND ROD	2" X 2" X 1/8"	8'-0"
60"	1/4" ROUND ROD	2" X 2" X 1/8"	8'-0"
84"	1/8" ROUND ROD	2" X 2" X 1/8"	8'-0"

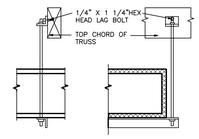

NO POP RIVETS ALLOWED

SELF TAPPING CADMIUM PLATED HEX HEAD SHEET METAL SCREW STRAPS TO BE TIGHT AGAINST DUCT.

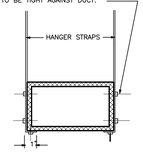

7 M602 — DUCT STRAP HANGER DETAIL
NO SCALE

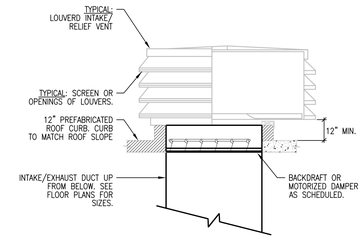

NOTE:
COLOR TO MATCH ROOF

8 M602 — LOUVER INTAKE/RELIEF VENT HOOD DETAIL
NO SCALE

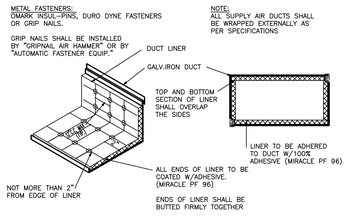

9 M602 — DUCT LINER DETAIL
NO SCALE

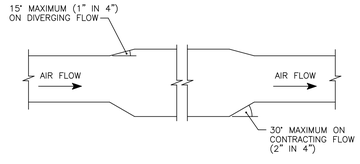

NOTE:
THE 15° MAXIMUM TRANSITION ANGLE NOTED ON THIS DETAIL IS MORE RESTRICTIVE THAN THE SMACNA ALLOWANCE OF 20°.

10 M602 — CONVERGING AND DIVERGING TRANSITIONS
NO SCALE

CLIENT

UDOT CONNECTING COMMUNITIES

STATION #2434
I-80 E.B. EXIT 134
PARLEY'S CANYON

DESIGNER

ARCHIPLEX GROUP
architecture · planning · design services
255 Crossroad Square
Salt Lake City, UT 84115
P:(801) 961-7070
F:(801) 961-7373

CONSULTANTS

PVE inc.
Consulting Mechanical | Electrical Engineers
1040 North 2200 West, Suite 100
Salt Lake City, UT 84116
Phone: (801) 359-3158
Fax: (801) 521-4114

REGISTRATION

REGISTERED PROFESSIONAL ENGINEER
ALAN D. SPENDLOVE
166911
STATE OF UTAH

ISSUE

MARK	DATE	DESCRIPTION
	1/2009	CONSTRUCTION DOCUMENTS
	8-20-08	90% REVIEW SUBMITTAL

PROJECT NO:	08105.00.01
DRAWN BY:	MJG
CHECKED BY:	ADS
SCALE:	
DATE:	JANUARY, 2009

KEY PLAN

SHEET TITLE

MECHANICAL DETAILS

M602

© 2004 ARCHIPLEX GROUP

By: jbyrd, Jan 15, 2009 - 11:14am, X:\Projects\2008\08105.00.01 - Parleys Maint Sta\M602-08105.00.dwg

Copyright (C) 2007 by PVE, Inc. Salt Lake City, Utah. All rights reserved. Unauthorized copying and/or use is illegal and subject to prosecution.

PIPING LEGEND
(NOT ALL USED)

GATE VALVE		CHILLED WATER SUPPLY	CHS
OS & Y PATTERN GATE VALVE		CHILLED WATER RETURN	CHR
BALL VALVE		CONDENSER WATER SUPPLY	CWS
BUTTERFLY VALVE		CONDENSER WATER RETURN	CWR
MOTORIZED BUTTERFLY VALVE		HEATING WATER SUPPLY	HWS
HEAT TRACING		HEATING WATER RETURN	HWR
DEIONIZED WATER	DI	WATER TREATMENT	WT
CHECK VALVE		FIRE DEPT. HORN & LIGHT	
SOLENOID VALVE		HOT GAS	HG
AUTOMATIC CONTROL VALVE (2-WAY)		FLEXIBLE PIPE CONNECTION	
AUTOMATIC CONTROL VALVE (3-WAY)		REDUCED PRESSURE BACKFLOW PREVENTER	RPBP
PRESSURE REDUCING VALVE		DIRECTION OF FLOW	
P & T RELIEF VALVE		ELBOW DOWN (DN)	
AIR VENT (AUTOMATIC)		ELBOW UP	
REFRIGERANT LIQUID	RL	PIPE CAP	
REFRIGERANT SUCTION	RS	TEE DOWN	
THERMAL EXPANSION VALVE		UNION	
STRAINER		DOMESTIC COLD WATER	
CIRCUIT SETTER		DOMESTIC HOT WATER	
FLOW METER		HOT WATER CIRC.	
PET COCK OR GAUGE COCK		TEMPERED WATER	T
PRESSURE GAUGE W/GAUGE COCK		SANITARY (PLBG) VENT	
THERMOMETER		SANITARY SEWER ABOVE GRADE	
TEMPERATURE & PRESSURE TEST PLUG		SANITARY SEWER BELOW GRADE	
IN-LINE PUMP		DRAIN	D
FLOW SWITCH		ROOF DRAIN PIPING	RD
AQUASTAT		OVERFLOW DRAIN PIPING	OD
HOSE BIBB OR SILLCOCK		STORM DRAIN PIPING ABOVE GRADE	SD
VACUUM	V	STORM DRAIN PIPING BELOW GRADE	SD
FLOOR DRAIN		FIRE SERVICE	F
FLOOR SINK		PROPANE	P
HOT GAS BYPASS	HGBP	COMPRESSED AIR	A
WALL CLEANOUT OR CLEANOUT		VENT THROUGH ROOF	
FLOOR OR GRADE CLEANOUT		STEAM	S
GRADE CLEANOUT W/ CONCRETE PAD		CONDENSATE	C
		REVERSE OSMOSIS	RO

GENERAL NOTES:

1. PIPE ROUTING AS SHOWN ON DRAWINGS IS DIAGRAMMATIC AND IS NOT TO BE SCALED. WHERE ALTERNATE ROUTING, OFFSETS AND TRANSITIONS ARE REQUIRED FOR COORDINATION OF WORK, THIS CONTRACTOR SHALL MAKE CHANGES WITHOUT ADDITIONAL COSTS.
2. THIS CONTRACTOR SHALL CLOSELY COORDINATE NEW MECHANICAL WITH NEW AND EXISTING MECHANICAL, ELECTRICAL, ARCHITECTURAL AND BUILDING STRUCTURE.
3. THIS CONTRACTOR SHALL FIELD VERIFY ALL MECHANICAL ITEMS PRIOR TO STARTING NEW WORK. ADDITIONAL COST WILL NOT BE ALLOWED FOR CONTRACTOR'S FAILURE TO BECOME FAMILIAR WITH EXISTING SITE CONDITIONS.
4. ALL MECHANICAL SYSTEMS SHALL BE INSTALLED IN ACCORDANCE WITH THE CURRENT ADOPTED EDITION OF THE BUILDING CODES, FIRE CODES, MECHANICAL CODES AND PLUMBING CODES.
5. THIS CONTRACTOR SHALL PROVIDE SUBMITTALS ON ITEMS LISTED IN MECHANICAL EQUIPMENT LIST TO THE ENGINEER FOR REVIEW PRIOR TO THE ORDER, PURCHASE OR INSTALLATION.
6. ALL WATER FLOW RATES AND DIFFUSERS MUST BE BALANCED TO THE VALVES INDICATED ON THE FLOOR PLANS. PROVIDE BALANCE REPORT TO ENGINEER PRIOR TO PROJECT CLOSEOUT.
7. FIRE SPRINKLER CONTRACTOR SHALL ADD AND/OR RELOCATE SPRINKLER HEADS PER REFLECTED CEILING PLAN AND THE CURRENT ADOPTED EDITION OF NFPA AND BUILDING CODE.
8. ALL DOMESTIC COLD AND DOMESTIC HEATING WATER PIPING SHALL BE TYPE 'L' COPPER. ALL WASTE AND VENT PIPING SHALL BE CAST IRON. ALL ROOF AND OVERFLOW DRAINAGE PIPING TO BE CAST IRON.
9. VENT THE HIGH POINTS OF NEW MECHANICAL PIPING.
10. PROVIDE INSULATION FOR THE FOLLOWING:
    a. DOMESTIC HOT WATER AND HOT WATER RECIRCULATION PIPING: 1" THICK FOR ALL PIPE SIZES.
    b. DOMESTIC COLD WATER AND CONDENSATE PIPING PIPING: ½" THICK FOR PIPE SIZES ½" TO 6". (PROVIDE CONTINUOUS VAPOR BARRIER.)
    c. ROOF DRAIN, OVERFLOW DRAIN PIPING AND BOTTOM OF BOWL ½" THICK FOR PIPE SIZES ½" TO 10" (PROVIDE CONTINUOUS VAPOR BARRIER.)
11. INSULATE PIPING WITH FIBERGLASS PIPE COVERING WITH ALL SERVICE JACKET AND SELF-CAP SEAL. FITTINGS SHALL BE MITERED PIPING COVERING OF GLASS FIBER MOLDED FITTINGS FOR USE IN A RETURN AIR PLENUM. THERMAL CONDUCTIVITY SHALL BE A MAXIMUM OF .25/INCH THICKNESS AT 75°F.
12. ——— INDICATES EXISTING. ——— INDICATES NEW MATERIAL.
13. MECHANICAL CONTRACTOR IS TO COORDINATE WITH ELECTRICAL ON SIZE/QUANTITY OF MOTORIZED DAMPERS. I. E. FIRE/SMOKE DAMPERS, FIRE DAMPERS, MOTORIZED DAMPERS, ETC. . .
14. EACH TRADE IS RESPONSIBLE FOR THEIR OWN FIRE CAULKING.
15. DIVISION 15 MUST PROVIDE AND INSTALL ALL ACCESS DOORS FOR FCU's, VALVES, FLOW METERS, ETC. COORDINATE LOCATION WITH GENERAL CONTRACTOR.
16. HOUSEKEEPING PADS FOR ALL EQUIPMENT IS PROVIDED AND INSTALLED BY GENERAL CONTRACTOR. COORDINATE LOCATION WITH MECHANICAL CONTRACTOR.
17. ALL TAKE-OFF'S THROUGHOUT THE ENTIRE BUILDING SHALL BE HIGH EFFICIENCY TAKE-OFF'S (HET's). NO EXCEPTIONS TAKEN.
18. DIVISION 15 TO SUBMIT TO ENGINEER ALL AS-BUILDS OF BUILDINGS MECHANCIAL AND PLUMBING SYSTEMS PRIOR TO JOB COMPLETION AND FINAL PAYMENT.
19. ALL VFD'S ARE TO BE PROVIDED AND WIRED UP BY ELECTRICAL CONTRACTOR AND INSTALLED BY THE MECHANICAL CONTRACTOR.
20. ALL EXPOSED PIPING IS TO BE INSULATED AND WEATHERPROOFED.
21. ALL INVERT ELEVATIONS SHOWN ON PLANS ARE BASED OFF OF FINISHED FLOOR ELEVATION AT 100.0'. CONTRACTOR TO COORDINATE WITH ARCHITECTURAL AND CIVIL DRAWINGS FOR EXACT INVERT ELEVATIONS OF ALL LEVELS.
22. ALL FLOOR DRAINS / FLOOR SINKS THROUGH-OUT THE ENTIRE BUILDING ARE TO HAVE TRAP SEAL PRIMER VALVES PROVIDED / INSTALL BY PLUMBING CONTRACTOR.
23. ALL GAS METER REGULATORS ARE TO BE VENTED TO THE OUTSIDE OF THE BUILDING BY THE MECHANICAL CONTRACTOR OR PROVIDE / INSTALL VENTLESS REGULATORS IF ALLOWED BY THE LOCAL JURISDICTION. NONE OF THE VENT PIPING OFF THE REGULATORS ARE SHOWN ON THE PLANS FOR CLARITY.

PLUMBING FIXTURE CONNECTION SCHEDULE

PLAN CODE	DESCRIPTION	CONNECTION SIZE C.W.	H.W.	WASTE	VENT	TRAP	COMMENTS
WC-1	WATER CLOSET	1/2"	–	4"	2"	INT.	FLOOR MOUNTED TANK TYPE, CRANE – HYMONT #31055, 18 INCH RIM HEIGHT, MAXIMUM WATER USAGE OF 1.6 GALLON'S PER FLUSH. TANK TO HAVE PRESSURE ASSISTED FLUSH. SEAT – PROVIDE SPLIT FRONT TYPE WITH CHECK HINGE, BEMIS #1955C PROVIDE CHROME PLATED SUPPLY AND STOP
L-1	LAVATORY	1/2"	1/2"	1-1/2"	1-1/2"	1-1/2"	WALL MOUNTED, CRANE #1412V, HANDICAP TYPE, VITREOUS CHINA, SELF SUPPORTING FIXTURE, SIZE 24"X21". FAUCET AND DRAIN – SYMMONS S-6080 WITH DRAIN GRID, BATTERY OPERATED WITH BATTERY INSIDE BODY OF FAUCET. PROVIDE CHROME PLATED SUPPLIES AND STOPS. DEARBORN, 17 GA TUBE "P" TRAP, CHROME PLATED. FITTINGS AND TRAP TO BE INSULATED TO MEET ADA REQUIREMENTS PROVIDE MCGUIRES PROWRAP. PROVIDE WITH CARRIER. INSTALL TMV-2.
S-1	UTILITY SINK	1/2"	1/2"	3"	1-1/2"	3"	ELKAY ESSW 2520-C, WALL MOUNTED 304 14 GAUGE STAINLESS STEEL SERVICE SINK WITH HOSE THREAD, VACUUM BREAKER, WALL BRACKET AND PAIL HOOK SPOUT AND LK173 CAST IRON P-TRAP. INSTALL TMV-2, PROVIDE ACCESS DOOR IF REQUIRED.
U-1	URINAL	3/4"	–	2"	1-1/2"	INT.	WALL MOUNTED URINAL CRANE #7197, 1.0 GPF. VITEROUS CHINA, MOUNT 17" A.F.F. TO MEET ADA REQUIREMENTS. PROVIDE WITH SLOAN #8186 G2 OPTIMA PLUS BATTERY OPERATED FLUSHMETER, FLUSHMETER TO HAVE MANUAL OVERRIDE (URINAL SHALL FIT SPACE AVAILABLE.) PROVIDE CARRIER.
HB-1	HOSE BIBB	3/4"	–	–	–	–	SINGLE SPOUT WITH HOSE CONNECTION. PROVIDE WITH VACUUM BREAKER AND METAL HANDLE. (PLASTIC HANDLES ARE NOT ACCEPTABLE). CHICAGO MODEL NO. 293 WITH E27 VACUUM BREAKER
WH-1	WALL HYDRANT	3/4"	–	–	–	–	WADE W8600,175, NON-FREEZE WALL HYDRANT WITH NICKEL BRONZE BOX, COMPLETE WITH CHROME PLATED LOCKING COVER AND BOX WITH INTEGRAL VACUUM BREAKER. WALL HYDRANT TO BE SIZED FOR WALL THICKNESS.
FD-1	FLOOR DRAIN	–	–	3"	1-1/2"	2"	FLOOR DRAIN J.R. SMITH #2005-A WITH NICKEL BRONZE STRAINER, TRAP PRIMER CONNECTION AND DEEP SEAL TRAP.
ES-1	EMERGENCY EYEWASH & SHOWER	1-1/4"	–	–	–	–	BRADLEY S19-310SBFW, FLOOR MOUNTED SAFETY STATION COMBINATION EYEWASH AND EMERGENCY SHOWER. ALUMINUM FLOOR FLANGE AND GALVANIZED INTERMEDIATE PIPE AND FITTINGS, TWO SOFT STREAM OUTLET HEADS, STAINLESS STEEL BOWL AND STAY OPEN TYPE VALVE ON EYEWASH, ORANGE CYCOLAC PLASTIC SHOWER HEAD WITH STAY OPEN VALVE (OPERATED BY PULL ROD AND HANDLE), 1-1/4" IPS FEMALE INLET AND OUTLET.
S-2	DOUBLE COMPARTMENT SINK	1/2"	1/2"	2"	1-1/2"	2"	JUST #DL-ADA-2233-A-GR, STAINLESS STEEL DOUBLE COMPARTMENT, SELF RIMMING, SIZE 22"X33" OD WITH TWO COMPARTMENTS THAT ARE 16"X14"X8" DEEP, MATERIAL – 18 GAUGE TYPE 304 STAINLESS STEEL, SEAMLESS DIE DRAWN. INTERIOR SURFACES POLISHED TO A NON-POROUS FINISH. UNDERSIDE TO BE FULLY COATED INSULATED FOR SOUND AND CONDENSATION REDUCTION. FAUCET AND DRAIN – GOOSENECK WITH SPRAY. JUST JWF-201 WITH TEAR DROP HANDLES AND JB-99 DRAIN OR APPROVED EQUAL. PROVIDE WITH CHROME PLATED SUPPLY AND STOPS. DEARBORN 17 GA TUBE "P" TRAP, CHROME PLATED. INSTALL TMV-2.
FS-1	FLOOR SINK	–	–	2"	1-1/2"	2"	FLOOR SINK J.R. SMITH #3020. COMPLETE WITH ACID RESISTANT COATED INTERIOR AND POLISHED ALUMINUM DOME BOTTOM STRAINER
DF-1	DRINKING FOUNTAIN	1/2"	–	2"	1-1/2"	2"	ADA COMPLIANT WATER COOLER, 8 GPH, FRONT ACCESS, EASY TOUCH CONTROLS ON FRONT, LEFT AND RIGHT SIDES, 115 VOLTS, REFRIGERANT HFC-134A, ELKAY #EZ8
TD-1	TRENCH DRAIN	–	–	3"	2"	3"	TRENCH DRAIN J.R. SMITH #9931, COMPLETE WITH HEAVY DUTY FRAME, LOAD CLASS C STAINLESS STEEL SLOTTED GRATE, FULLY SLOPED CHANNELS.
TMV-1	TEMPERATURE MIXING VALVE	1/2"	1/2"	–	–	–	EMERGENCY FIXTURE THERMOSTATIC MIXING VALVE. BRADLEY #S19-2100 COMPLETE WITH CHROME PLATED FINISH, STAINLESS STEEL SURFACE MOUNTED BOX, INTEGRAL STRAINER CHECK STOPS ON INLET BUILT IN COLD WATER BYPASS, HOT WATER SHUT OFF WHEN COLD SUPPLY IS LOST, OUTLET TEMPERATURE GAUGE. 25 GPM @ 15 PSI PRESSURE DROP. SET TEMPERATURE TO 85°.
TMV-2	TEMPERATURE MIXING VALVE	1/2"	1/2"	–	–	–	WATER TEMPERATURE LIMITING MIXING VALVE, SYMMONS #5-225-CK. SET VALVE TO SUPPLY 110°F. HOT WATER.
WB-1	WASHER BOX	1/2"	1/2"	2"	2"	2"	FIRE RATED WASHING MACHINE BOX, GUY GRAY #FR12GSHA, SINGLE LEVER WITH VALVE ARRESTORS AND DRAIN OUTLET.
SH-1	ADA COMPLIANT SHOWER	1/2"	1/2"	2"	2"	2"	ADA COMPLIANT SHOWER, SYMMONS #BP-56-B30-X-LR-V-141 COMPLETE WITH SELF-CLEANING FULL DRENCH SHOWER HEAD 2.5 GPM, PRESSURE BALANCING MIXING VALVE, STOPS, LOOP HANDLE, POLISH CHROME FINISH, DIVERTING VALVE, IN-LINE VACUUM BREAKER, HAND SHOWER WITH 5' FLEXIBLE METAL HOSE AND 30" SLIDER BAR.
IPS-1	ICE MAKER BOX	1/2"	1/2"	2"	2"	2"	ICE MAKER BOX. GUYGARY # M1B-1, 20 GAUGE POWDER CODED BOX WITH ¼ TURN BALL VALVE
HB-2	HW & CW HOSE BIBB	1/2"	1/2"	–	–	–	WALL MOUNTED SERVICE SINK FAUCET. CHICAGO #305-VBCP. COMPLETE WITH SHORT SPOUT, VACUUM BREAKER, 3/4" MALE GARDEN HOSE OUTLET.

WATER SOFTENER SCHEDULE WS-

PLAN CODE	CONTINUOUS FLOW RATE	CAPACITY (GRAINS)	CONTROL	DIMENSIONS	COMMENTS	MANUFACTURER & MODEL NO.
WS-1	39 GPM	100,000	AUTOMATIC, DIGITAL, ON DEMAND	13"x64" RESIN TANK 18"x34" SALT TANK	(1)	WATER GUARD HE #7000

(1) FIBERGLASS WOUND, POLYETHYLENE TANK.

PRESSURE WASHER PW

PLAN CODE	INPUT (BTUH)	FUEL	GPM	FUEL TYPE	DIMENSIONS WIDTH	LENGTH	HEIGHT	POWER VOLTS	AMPS	PHASE	HP	MANUFACTURER & MODEL NO.	COMMENTS
PW-1	350,000	NG	4.0	TYPE B	24"	53"	48"	208	27	3	8	LANDA #VHGH-30024	(1)(2)(3)(4)(5)(6)(7)(8)(9)(10)(11)

(1) INSTALL PER MANUFACTURER'S RECOMMENDATIONS (2) TIME DELAY SHUTDOWN (3) ELECTRONIC IGNITION (4) STAINLESS STEEL COIL WRAP (5) 4-PANEL STAINLESS SKIRT & COVER (6) HOSE REEL RECEPTACLE (7) CONTROL PANEL & GAUGES (8) 420 STAINLESS STEEL NOZZLE (9) BACKFLOW PREVENTION WATER SUPPLY SYSTEM (10) INSULATED TRIGGER SPRAY GUN (11) 150' OF 3/8" ID DOUBLE BRAIDED STEEL HOSE MEETING SAE100R2

INSTANTANEOUS GAS FIRED WATER HEATER SCHEDULE WH-

PLAN CODE	INPUT (BTUH)	EFFICIENCY %	FUEL	GPM	TEMP. RISE (°F)	FLUE DIA.	FLUE TYPE	DIMENSIONS WIDTH (in.)	LENGTH (in.)	HEIGHT (in.)	POWER VOLTS	AMPS	PHASE	MANUFACTURER & MODEL NO.	ACCESSORIES/COMMENTS
WH-1	199,000	98%	NG	5.2	75	3"	(3)	10	17	28	120	2.0	1	NAVIEN #CR-240A	(1)(2)(3)(4)

(1) OUTLET THERMOMETER (2) INSTALL PER MANUFACTURER RECOMMENDATIONS (3) CONCENTRIC VENT KIT (STAINLESS STEEL BY NAVIENS) (4) CONNECTION WIRE TO LINK WATER HEATERS TOGETHER (5) RUN CONDENSATE TO NEAREST FLOOR SINK.

AIR COMPRESSOR AC-

PLAN CODE	DUTY	ACFM @ 175 PSI	RECEIVER CAP. (GAL)	ELECTRICAL VOLT/PH	HP	MANUFACTURER & MODEL NO
AC-1	SHOP AIR	24	80V	208/3	7.5	SPEEDAIRE WW GRAINGER #5F565

* START/STOP, WITH PROVISION FOR NO LOAD START. INCLUDE MAGNETIC STARTER

CIRCULATION PUMP SCHEDULE CP-

PLAN CODE	DUTY	GPM	FEET OF HEAD	PUMP RPM	MOTOR H.P.	MOTOR VOLTAGE & PHASE	MANUFACTURER & MODEL NO.	COMMENTS
CP-1	DOMESTIC HOT WATER RECIRCULATION	1.5	6	3250	1/40	115	TACO #006PNP	SEE HOT WATER HEATER DETAIL FOR INSTALLATION REQ.

By: jbyrd, Jan 15, 2009 - 11:14am, X:\Projects\2005\08105.00.01 - Parleys Water Sta\P001-08105.00.dwg

CLIENT

UDOT CONNECTING COMMUNITIES

STATION #2434
I-80 E.B. EXIT 134
PARLEY'S CANYON

DESIGNER

ARCHIPLEX GROUP
architecture · planning · design services
255 Crossroad Square
Salt Lake City, UT 84115
P:(801) 961-7070
F:(801) 961-7373

CONSULTANTS

PVE Inc.
Consulting Mechanical | Electrical Engineers
1040 North 2200 West, Suite 100
Salt Lake City, UT 84116
Phone: (801) 359-3158
Fax: (801) 521-4114

REGISTRATION

REGISTERED PROFESSIONAL ENGINEER
ALAN D. SPENDLOVE
166911
STATE OF UTAH

ISSUE

MARK	DATE	DESCRIPTION
	1/2009	CONSTRUCTION DOCUMENTS
	8-20-08	90% REVIEW SUBMITTAL

PROJECT NO: 08105.00.01
DRAWN BY: MJG
CHECKED BY: ADS
SCALE:
DATE: JANUARY, 2009

KEY PLAN

SHEET TITLE

PLUMBING SCHEDULES

P001

© 2004 ARCHIPLEX GROUP

Copyright (C) 2007 by PVE, Inc. Salt Lake City, Utah. All rights reserved. Unauthorized copying and/or use is illegal and subject to prosecution.

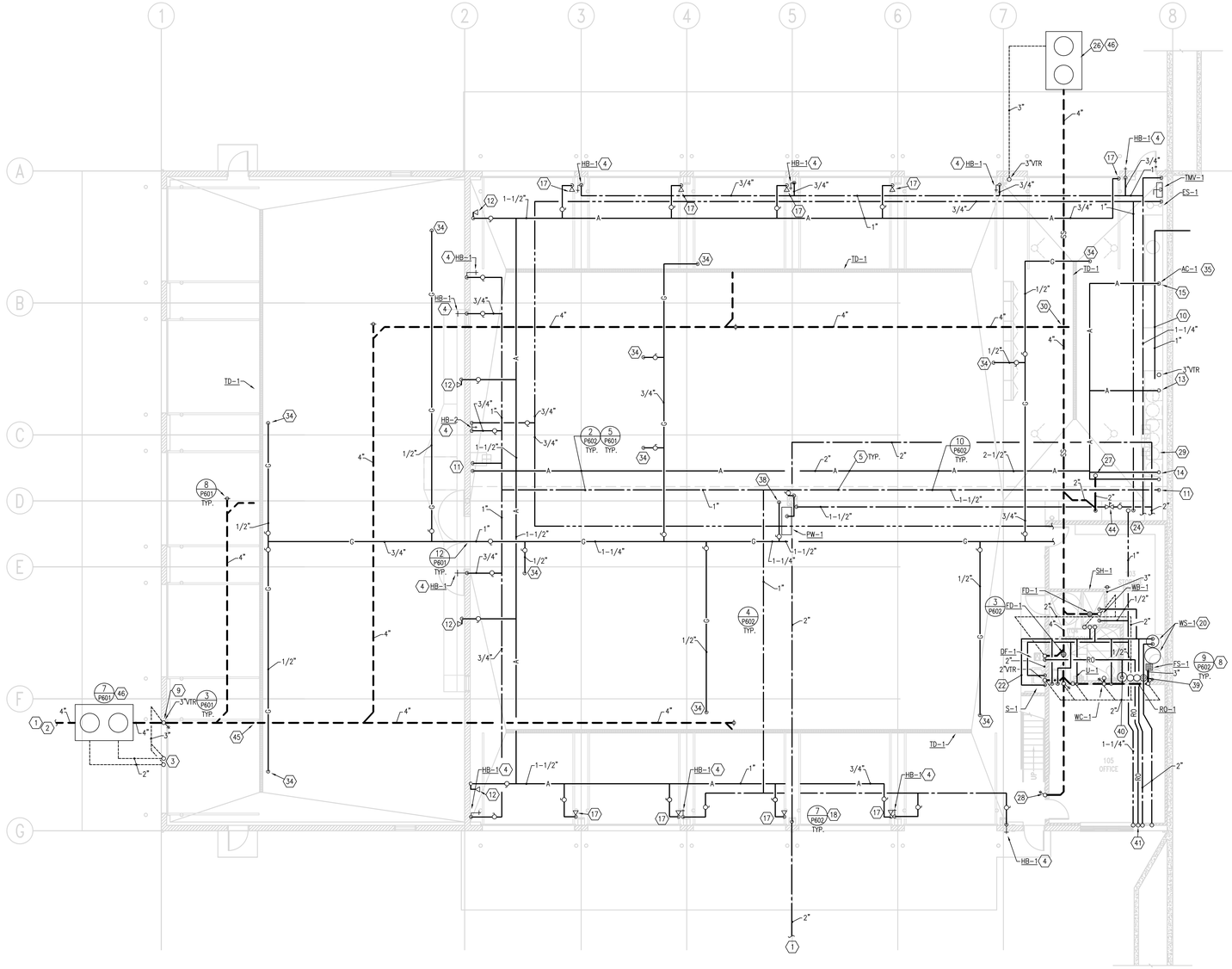

1 P201 **1st FLOOR PLUMBING PLAN**
SCALE: 1/8" = 1' – 0" 6' 0 4' 8' 12' 16'

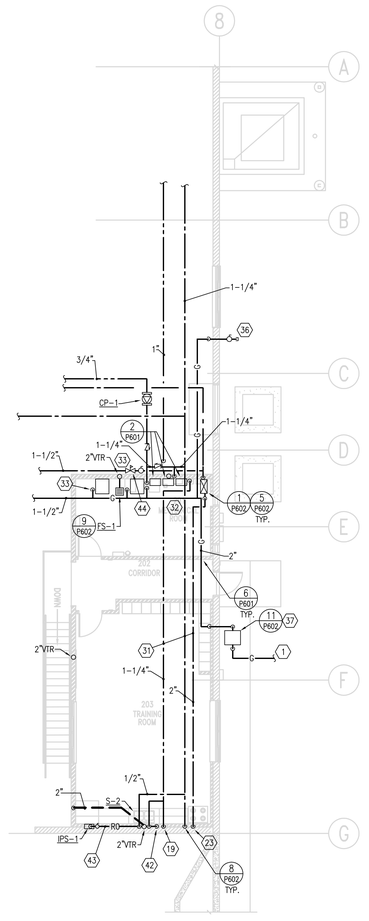

2 P201 **2nd FLOOR PLUMBING PLAN**
SCALE: 1/8" = 1' – 0" 6' 0 4' 8' 12' 16'

KEYED NOTES:

1. SEE SITE DRAWINGS FOR CONTINUATION.
2. SEE CIVIL DRAWINGS FOR INVERT ELEVATION. GENERAL CONTRACTOR IS TO COORDINATE WITH HIS SUBS TO VERIFY SITE SANITARY SEWER AND BUILDING SANITARY SEWER PIPE WILL PROPERLY CONNECT PRIOR TO INSTALLING ANY SANITARY PIPE IN THE SITE OR BUILDING. IF A PROBLEM EXISTS, THE CONTRACTOR IS TO INFORM THE ARCHITECT OF THE PROBLEM PRIOR TO INSTALLING ANY PIPE. IF PIPE IS INSTALLED AND A PROBLEM ARISES, THE CONTRACTOR, AT HIS EXPENSE, SHALL PERFORM ANY WORK REQUIRED SUCH THAT THE SANITARY PIPE CAN BE INSTALLED CORRECTLY TO CODE STANDARDS.
3. VENTS FROM SAND/OIL SEPARATOR MAY BE COMBINED AFTER THEY ARE 10" ABOVE FLOOD RIM OF SEPARATOR AND THEN CONNECTED TO REPAIR GARAGE BAY WASTE SYSTEM VENT PIPE.
4. PROVIDE PVC COVER OVER INSULATION TO 8'–0" AFF. MOUNT HB–1 3'–0" AFF.
5. ROUTE PIPING ABOVE STRUCTURE.
6. ALL WASTE PIPING 3" AND GREATER TO SLOPE ⅛" PER FOOT.
7. PIPE SLEEVES REQUIRED ON THIS PROJECT. IF CONTRACTOR FAILS TO INSTALL PIPE SLEEVES, THE CONTRACTOR SHALL REMOVE PIPE, INSTALL SLEEVE AND REINSTALL PIPE AT NO ADDITIONAL EXPENSE TO THE OWNER.
8. WATER SOFTENER DISCHARGE INTO FLOOR SINK.
9. SEE CIVIL DRAWINGS FOR EXACT LOCATION OF SAND/OIL SEPERATOR.
10. CONNECT OIL DRAIN LINE TO DRAIN PUMP. RUN DRAIN LINE OUT TO CATCH TANK. PROVIDE SHUT–OFF VALVE AND UNION. CATCH TANK FURNISHED BY OWNER, INSTALLED BY CONTRACTOR. DRAIN PUMP BY CONTRACTOR. VERIFY LOCATION.
11. CONNECT 1" COMPRESSED AIR LINE AND ¾" CW LINE TO OVERHEAD HOSE REEL. PROVIDE SHUT–OFF AND UNION. HOSE REEL BY CONTRACTOR.
12. ¾" COMPRESSED AIR DROP DOWN TO QUICK DISCONNECT. PROVIDE SHUT–OFF VALVE. VERIFY MOUNTING HEIGHT WITH OWNER. REFER TO DETAIL 5/P601.
13. DROP ¾" COMPRESSED AIR DOWN TO OIL DRAIN PUMP. PROVIDE SHUT–OFF VALVE.
14. DROP 1" COMPRESSED AIR LINE TO LUBE BARRELS. PROVIDE SHUT–OFF VALVE. LUBE BARRELS BY OWNER, INSTALLED BY CONTRACTOR.
15. AIR COMPRESSOR BY CONTRACTOR. CONNECT 2–1/2" COMPRESSED AIR LINE TO COMPRESSOR. PROVIDE SHUT–OFF VALVE AND UNION. MAKE CONNECTION TO COMPRESSOR WITH BRAIDED FLEXIBLE PIPE.
16. GAS LINE DOWN TO BURNER. PROVIDE SHUT–OFF VALVE, UNION AND APPLIANCE REGULATOR REFERENCE DETAIL 2/M603.
17. DROP 3/4" AIR LINE DOWN COLUMN FACE AND TERMINATE WITH QUICK COUPLER 3'–0" A.F.F.
18. PROVIDE SHUT OFF VALVE AT BASE OF WATER PIPE WHERE IT ENTERS THE BLDG.
19. 1" HW DOWN TO FIXTURE BELOW.
20. WATER SOFTENER AND BRINE TANK.
21. NOT USED.
22. PIPES SHOWN OUTSIDE OF WALL FOR CLARITY.
23. 2" CW DOWN TO WATER SOFTENER.
24. SEE 2/P201 FOR CONTINUATION.
25. LOCATE FLOOR SINK BETWEEN WATER HEATER AND FURNACE.
26. 7500 GALLON HOLDING TANK. TANK TO BE DESIGNED BY LICENSED ENGINEER IN THE STATE OF UTAH. SUBMIT DESIGN WITH SUBMITTALS. SEE CIVIL DRAWINGS FOR EXACT LOCATION.
27. 2" PIPE UP TO FLOOR SINK.
28. 2" PIPE UP TO KITCHEN SINK.
29. 7 EACH TOTAL HOSE REELS FOR OIL, GREASE AND LUBE.
30. COORDINATE INVERT ELEVATIONS SO PIPES DO NOT INTERFERE WITH EACH OTHER.
31. COORDINATE PIPE LOCATION WITH ELECTRICAL CONTRACTOR SO PIPES ARE NOT INSTALLED OVER ELECTRICAL PANELS.
32. 1" GAS LINE DOWN TO WATER HEATERS APPLIANCE REGULATOR. 1–1/4" PIPE TO FEED EACH WATER HEATER WITH 4 OZ. OF NATURAL GAS AFTER APPLIANCE REGULATOR.
33. 1/2" GAS LINE DOWN TO FURNACE.
34. 1/2" GAS LINE DOWN TO RADIANT HEATER BURNER.
35. REFERENCE ARCH DWGS FOR EXACT LOCATION OF THE AIR COMPRESSOR.
36. 1" GAS LINE DOWN TO 36" AFG FOR FUTURE GENERATOR. PROVIDE VALVE AND CAP. ESTIMATED GAS LOAD OF 554 CF/HR NATURAL GAS.
37. NATURAL GAS METER CAPABLE OF PROVIDING 3,290 CF/HR OF 2 PSI NATURAL GAS HAVING A HEAT CONTENT OF 803 BTU/FT³ AT A SPECIFIC GRAVITY OF 0.60.
38. 1" GAS LINE DOWN TO POWER WASHER. PROVIDE 2 PSI TO 4 OZ APPLIANCE REGULATOR.
39. CULLIGAN # AC–30, REVERSE OSMOSIS (R.O.) SYSTEM WITH 9 GALLON HOLDING TANK. RUN WASTE TO FS–1.
40. ALL PIPING AFTER R.O. SYSTEM TO BE SCH. 80 PVC PIPE.
41. R.O. WATER PIPE UP TO KITCHEN SINK ABOVE.
42. ¼" R.O. WATER UP TO CULLIGAN DESIGNER FAUCET. FAUCET TO MONITOR WATER QUALITY AND PROVIDE SIGNAL TO INDICATE WHEN TO CHANGE R.O. FILTERS.
43. ¼" R.O. WATER TO ICE MAKER VALVE.
44. WATTS #007M2QT BACKFLOW PREVENTOR.
45. RUN SS LINE UNDER TRENCH DRAIN.
46. SEE CIVIL DRAWINGS FOR EXACT LOCATION

CLIENT

UDOT CONNECTING COMMUNITIES

STATION #2434
I–80 E.B. EXIT 134
PARLEY'S CANYON

DESIGNER

ARCHIPLEX GROUP
architecture · planning · design services
255 Crossroad Square
Salt Lake City, UT 84115
P:(801) 961–7070
F:(801) 961–7373

CONSULTANTS

PVE Inc.
Consulting Mechanical | Electrical Engineers
1040 North 2200 West, Suite 100
Salt Lake City, UT 84116
Phone: (801) 359-3158
Fax: (801) 521-4114

REGISTRATION

REGISTERED PROFESSIONAL ENGINEER
ALAN D. SPENDLOVE
166911
STATE OF UTAH

ISSUE

MARK	DATE	DESCRIPTION
	1/2009	CONSTRUCTION DOCUMENTS
	8–20–08	90% REVIEW SUBMITTAL

PROJECT NO:	08105.00.01
DRAWN BY:	MJG
CHECKED BY:	ADS
SCALE:	
DATE:	JANUARY, 2009

KEY PLAN

SHEET TITLE

PLUMBING
FLOOR PLAN

P201

© 2004 ARCHIPLEX GROUP

By: aspendlove, Jan 16, 2009 – 9:40am, X:\Projects\2008\08105.00.01 – Parleys Weld Sta\P201–08105.00.dwg

Copyright (C) 2007 by PVE, Inc. Salt Lake City, Utah. All rights reserved. Unauthorized copying and/or use is illegal and subject to prosecution.

By: jbyrd, Jan 15, 2009 - 11:13am, X:\Projects\2008\08105.00.01 - Parleys Water Sta\P601-08105.00.dwg

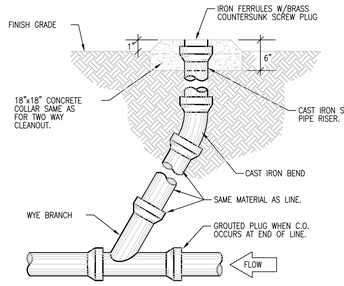

1 P601 EXTERIOR CLEANOUT DETAIL

NO SCALE

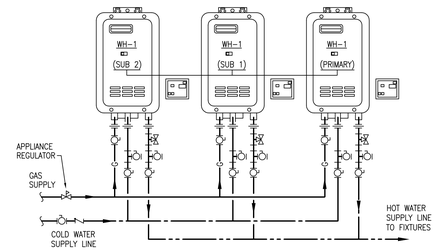

2 P601 INSTANTANEOUS HOT WATER HEATER

NO SCALE

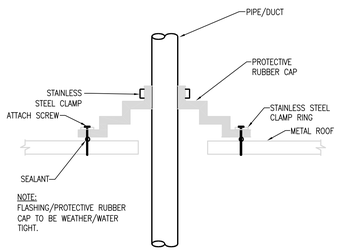

3 P601 METAL ROOF PENETRATION DETAIL

NO SCALE

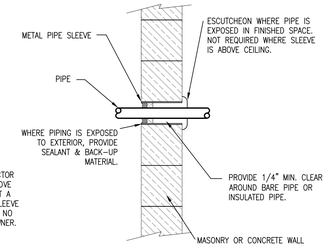

4 P601 PIPE THRU WALL ABOVE GRADE

NO SCALE

KEYED NOTES:

① C.I. PIPE SAME SIZE AS INLET PIPE.

② (2) 2" VENTS MAY BE CONNECTED TOGETHER +42" AFG WITH COMMON SEPERATE 2" VENT EXTEND TO 3" VTR AS REQUIRED BY BLDG DEPT.

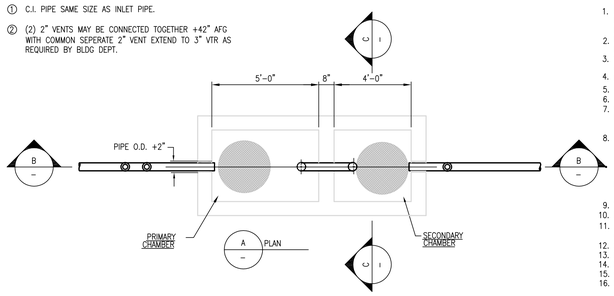

NOTES:

1. PIPING, CLEANOUT CONFIGURATION, SIZE AND TYPE OF PIPING MATERIAL AS PER CITY OR SANITARY DISTRICT. INSPECTION BY LOCAL WATER RECLAMATION DISTRICT PRIOR TO BACKFILLING IS REQUIRED.
2. INTERCEPTOR PIPING AND OTHER ASSOCIATED PIPING CHANGES THAT ARE NECESSARY TO INSTALL INTERCEPTOR MUST BE IN ACCORDANCE WITH LOCAL REGULATIONS.
3. INTERCEPTOR MUST BE PROPERLY VENTED IN ACCORDANCE WITH INTERNATIONAL PLUMBING CODE STANDARDS.
4. CONCRETE SHALL HAVE A MINIMUM 28 DAY COMPRESSIVE STRENGTH OF 4000 PSI.
5. REINFORCEMENT STEEL SHALL BE ASTEM A605 GRADE 60.
6. THE CONCRETE COVER OVER REINFORCEMENT STEEL SHALL BE A MINIMUM OF 1-½".
7. THE STRUCTURE SHALL BE DESIGNED BY A REGISTERED PROFESSIONAL ENGINEER LICENSED IN THE STATE OF UTAH. THE DESIGNED SHALL BE SUBMITTED FOR APPROVAL TO THE ARCHITECT PRIOR TO INSTALLATION.
8. THE STRUCTURE SHALL BE DESIGNED FOR THE FOLLOWING LOADING CRITERIA.
   A. WALL DESIGN FOR A SATURATED EQUIVALENT FLUID AT-REST SOIL PRESSURE OF 90 PCF PLUS TRUCK SURCHARGES.
   B. TRUCK LOADING USING AN AASHTO H-20 TRUCK LOAD.

MANWAY FRAME & COVER SHALL BE A TRAFFIC TYPE CASTING FOR H-20 TRUCK LOAD. THE INLET PIPE SHALL BE AT AN ELEVATION 1" HIGHER THAN THE OUTLET PIPE.

9. WHERE THE SEWER LINE ALREADY EXIST, THE SEWER INVER INTO AND OUT OF THE INTERCEPTOR SHALL BE 4'-0" ABOVE THE INTERCEPTOR FLOOR.
10. THE BAFFLE IN THE INTERCEPTOR SHALL BE WITHIN 3" OF THE CEILING OF THE INTERCEPTOR. COVERS SHALL BE CIRCULAR AND BE SOLID.
11. SANITARY WASTE FROM TOILETS MUST NOT BE PLUMBED THROUGH THE INTERCEPTOR.
12. INTERCEPTOR MUST BE LOCATED IN SUCH A MANNER THAT IT IS READILY ACCESSIBLE FOR CLEANING.
13. FIELD VERIFY INVERT ELEVATIONS OF INLET AND OUTLET PIPING PRIOR TO INSTALLING INTERCEPTOR.
14. CONTRACTOR SHALL OBTAIN OFFICIAL LOCAL JURISDICTION WATER RECLAMATION DISTRICT INTERCEPTOR DESIGN AND INSTALL PER THEIR REQUIREMENTS.

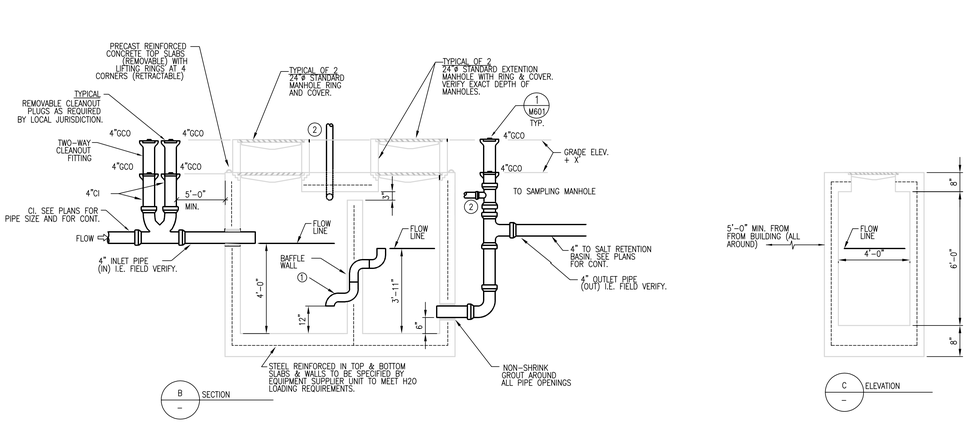

7 P601 1000 GALLON GREASE INTERCEPTOR DETAIL-2 COMPARTMENT

NO SCALE

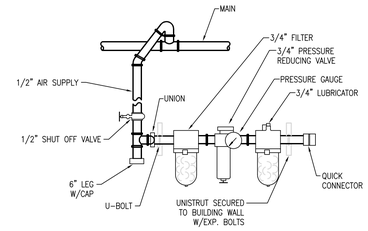

5 P601 COMPRESSED AIR OUTLET CONNECTION DETAIL

NO SCALE

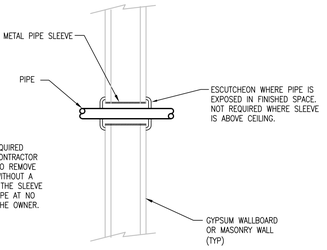

6 P601 PIPING THRU GYPSUM WALL

NO SCALE

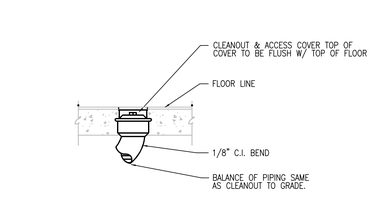

8 P601 FLOOR CLEANOUT

NO SCALE

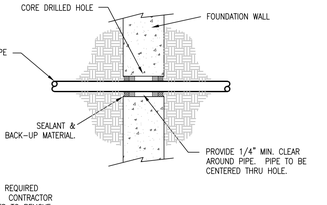

9 P601 PIPE THRU WALL - BELOW GRADE

NO SCALE

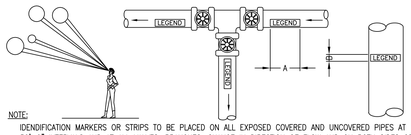

OUTSIDE DIAMETER OF PIPE OR COVERING		LENGTH OF COLOR FIELD A		SIZE OF LETTERS B	
INCHES	MM	INCHES	MM	INCHES	MM
3/4" TO 1-1/4"	19 TO 32	8"	200	1/2"	13
1-1/2" TO 2"	38 TO 51	8"	200	3/4"	19
2-1/2" TO 6"	64 TO 150	12"	300	1-1/4"	32
8" TO 10"	200 TO 250	24"	600	2-1/2"	64
OVER 10"	OVER 250	32"	800	3-1/2"	89

SERVICE	BACKGROUND OR COLOR BAND	IDENTIFICATION MARKER
DOMESTIC COLD WATER	GREEN	WHITE ON GREEN
DOMESTIC HOT WATER	YELLOW	BLACK ON YELLOW
DOMESTIC HOT WATER RETURN	YELLOW	BLACK ON YELLOW
FIRE PROTECTION (SPRINKLER)	RED	WHITE ON RED
NATURAL GAS	YELLOW	BLACK ON YELLOW
SANITARY DRAIN	GREEN	WHITE ON GREEN
STORM WATER	GREEN	WHITE ON GREEN

10 P601 PIPE IDENTIFICATION DETAIL

NO SCALE

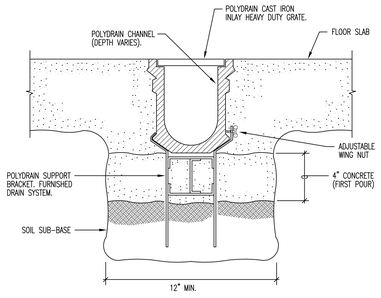

TRENCH DRAIN INSTALLATION

NOTE:
REFER TO ARCHITECTURAL DRAWINGS FOR WEATHERPROOF REQUIREMENTS.

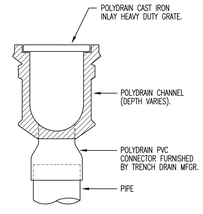

TRENCH DRAIN PIPING

11 P601 TYPICAL TRENCH DRAIN DETAIL

NO SCALE

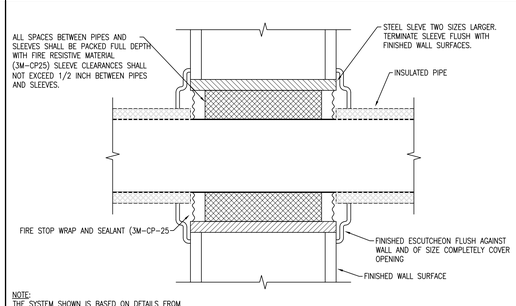

12 P601 FIRE RATED WALL PIPE PENETRATION DETAIL

NOT TO SCALE

CLIENT

UDOT CONNECTING COMMUNITIES

STATION #2434
I-80 E.B. EXIT 134
PARLEY'S CANYON

DESIGNER

ARCHIPLEX GROUP
architecture · planning · design services
255 Crossroad Square
Salt Lake City, UT 84115
P:(801) 961-7070
F:(801) 961-7373

CONSULTANTS

PVE Inc.
Consulting Mechanical | Electrical Engineers
1040 North 2200 West, Suite 100
Salt Lake City, UT 84116
Phone: (801) 359-3158
Fax: (801) 521-4114

REGISTRATION

REGISTERED PROFESSIONAL ENGINEER
ALAN D. SPENCLOVE
166911
STATE OF UTAH

ISSUE

MARK	DATE	DESCRIPTION
	1/2009	CONSTRUCTION DOCUMENTS
	8-20-08	90% REVIEW SUBMITTAL

PROJECT NO:	08105.00.01
DRAWN BY:	MJG
CHECKED BY:	ADS
SCALE:	
DATE:	JANUARY, 2009

KEY PLAN

SHEET TITLE

PLUMBING DETAILS

P601

© 2004 ARCHIPLEX GROUP

Copyright (C) 2007 by PVE, Inc. Salt Lake City, Utah. All rights reserved. Unauthorized copying and/or use is illegal and subject to prosecution.

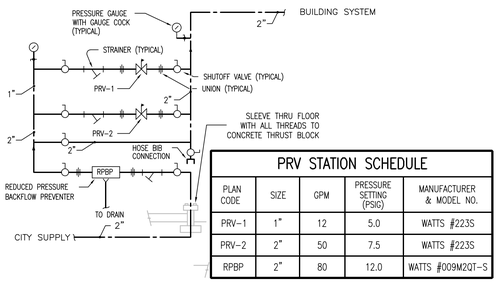

PRV STATION SCHEDULE

PLAN CODE	SIZE	GPM	PRESSURE SETTING (PSIG)	MANUFACTURER & MODEL NO.
PRV-1	1"	12	5.0	WATTS #223S
PRV-2	2"	50	7.5	WATTS #223S
RPBP	2"	80	12.0	WATTS #009M2QT-S

1 P602 PRV STATION DETAIL
NO SCALE

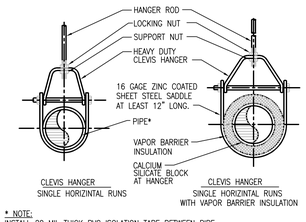

* NOTE:
INSTALL 20 MIL THICK PVC ISOLATION TAPE BETWEEN PIPE AND HANGER FOR DISSIMILAR MATERIAL. WRAP TAPE AROUND PIPE (DUCT TAPE OR ELECTRICIAN TAPE IS NOT ACCEPTABLE)

2 P602 PIPE HANGERS DETAIL
NO SCALE

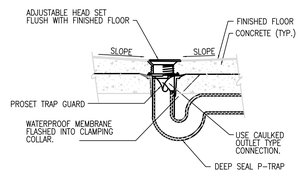

3 P602 FLOOR DRAIN W/TRAP GUARD DETAIL
NO SCALE

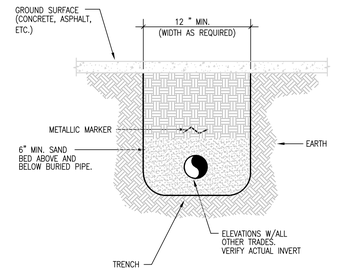

4 P602 BURIED PIPE DETAIL
NO SCALE

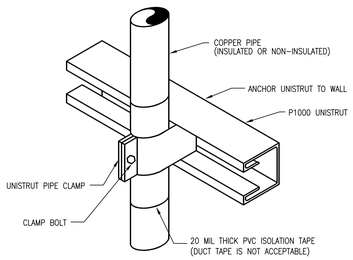

5 P602 PIPE SUPPORT DETAIL
NO SCALE

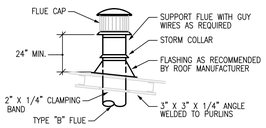

6 P602 FLUE CAP DETAIL
NO SCALE

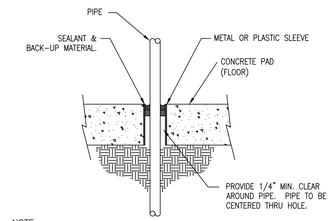

NOTE:
ALL PIPES TO BE SLEEVED. THIS INCLUDES WATER, SEWER ETC.

7 P602 PIPING THRU ON GRADE FLOOR
NO SCALE

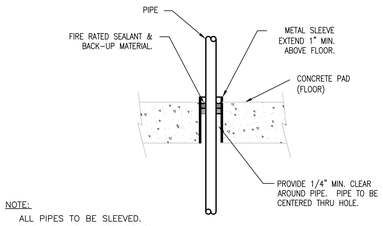

NOTE:
ALL PIPES TO BE SLEEVED. THIS INCLUDES WATER, SEWER ETC.

8 P602 PIPE THRU FLOOR ABOVE GRADE
NO SCALE

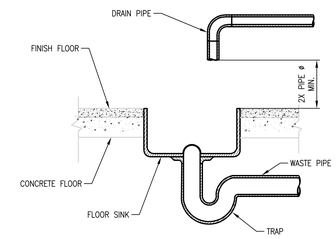

9 P602 INDIRECT WASTE DETAIL
NO SCALE

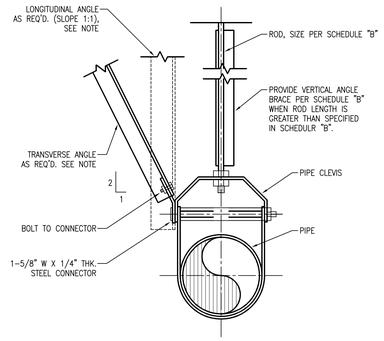

SCHEDULE "B" TRANSVERSE BRACING FOR PIPE

PIPE SIZE INCHES	BOLTS TO ANGLES	LONGITUDAL, TRANSVERSE & VERTICAL ANGLES	ROD DIAMETER INCHES	MAXIMUM ROD LENGTH	MAXIMUM INTERVAL OF BRACES IN FEET	
					40-S STEEL OR CAST IRON	COPPER TUBE
1	3/8"	1-1/2" X 1-1/2" X 3/16"	3/8"	19'	24.2	12.1
1-1/4	3/8"	1-1/2" X 1-1/2" X 3/16"	3/8"	19'	24.2	12.1
1-1/2	3/8"	1-1/2" X 1-1/2" X 3/16"	3/8"	19'	27.5	13.2
2	3/8"	1-1/2" X 1-1/2" X 3/16"	1/2"	25'	31.9	15.4
2-1/2	3/8"	2" X 2" X 5/16"	1/2"	25'	35.2	16.5
3	3/8"	2" X 2" X 5/16"	1/2"	25'	37.4	18.7
3-1/2	3/8"	2" X 2" X 5/16"	1/2"	25'	39.6	19.8
4	3/8"	2" X 2" X 5/16"	5/8"	31'	42.9	20.9
5	1/2"	2" X 2" X 5/16"	5/8"	31'	45.1	22.0
6	1/2"	2" X 2" X 5/16"	3/4"	37'	49.5	24.2
8	1/2"	2-1/2" X 2-1/2" X 1/4"	7/8"	43'	53.9	28.6
10	1/2"	3" X 3" 1/4"	7/8"	43'	59.4	30.8

PIPING BRACING NOTES:

1. DESIGN SUPPORT SYSTEM FOR SEISMIC ZONE 4.
2. REFERENCE SMACNA SEISMIC RESTRAINT MANUAL.
3. SEISMIC BRACING IS REQUIRED FOR ALL PIPING 2-1/2" AND LARGER.
4. DO NOT USE BRANCH SECTIONS TO BRACE PIPING MAINS.
5. PROVIDE FLEXIBLE COUPLINGS AT PENETRATIONS THROUGH BUILDING SEISMIC AND EXPANSION JOINTS AND WHERE PIPING IS RIGIDLY CONNECTED TO EQUIPMENT.
6. FOR EQUIPMENT REQUIRING SEISMIC BRACING, INSTALL BRACES AS FOLLOUS:
   a. DO NOT USE JOIST BRIDGING FOR SUPPORT OF ANY LOAD.
   b. IF SUPPORTING LOADS ABOVE 50 LBS. BETWEEN JOIST PANEL POINTS REINFORCE BOTTOM CORD OF JOIST AS PER STRUCTURAL ENGINEERS REQUIREMENTS. REFER TO SUPPORT DETAILS ON STRUCTURAL DRAWINGS.

10 P602 TRANSVERSE PIPING SWAY BRACING DETAIL
NOT TO SCALE

CONTRACTOR IS TO COORDINATE WITH OWNER AND OWNER'S INSURANCE COMPANY AND LOCAL GAS COMPANY ON INSTALLATION OF IAMPO APPROVED SEISMIC SHUT-OFF VALVE IF REQUIRED. NOTE: VALVE MAY NOT BE REQUIRED BY LOCAL GAS COMPANY.

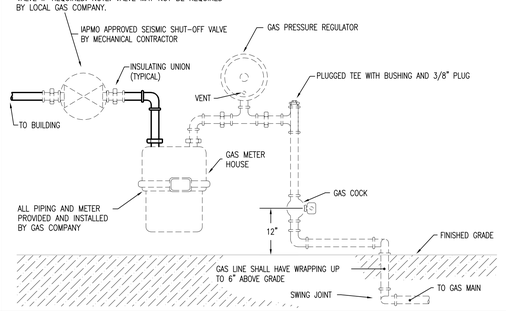

11 P602 GAS METER SERVICE CONNECTION DETAIL
NO SCALE

CLIENT
UDOT CONNECTING COMMUNITIES
STATION #2434
I-80 E.B. EXIT 134
PARLEY'S CANYON

DESIGNER
ARCHIPLEX GROUP
architecture · planning · design services
255 Crossroad Square
Salt Lake City, UT 84115
P:(801) 961-7070
F:(801) 961-7373

CONSULTANTS
PVE Inc. Consulting Mechanical Electrical Engineers
1040 North 2200 West, Suite 100
Salt Lake City, UT 84116
Phone: (801) 359-3158
Fax: (801) 521-4114

REGISTRATION
REGISTERED PROFESSIONAL ENGINEER ALAN D. SPENCLOVE 164981 STATE OF UTAH

ISSUE

MARK	DATE	DESCRIPTION
	1/2009	CONSTRUCTION DOCUMENTS
	8-20-08	90% REVIEW SUBMITTAL

PROJECT NO:	08105.00.01
DRAWN BY:	MJG
CHECKED BY:	ADS
SCALE:	
DATE:	JANUARY, 2009

KEY PLAN

SHEET TITLE
PLUMBING DETAILS

P602

© 2004 ARCHIPLEX GROUP

By: jhyrd, Jan 15, 2009 - 11:13am, X:\Projects\2008\08105.00.01 - Parleys Model Stds\P602-08105.00.dwg

Copyright (C) 2007 by PVE, Inc. Salt Lake City, Utah. All rights reserved. Unauthorized copying and/or use is illegal and subject to prosecution.

ELECTRICAL SYMBOLS

NOTE: SYMBOLS SHOWN IN THIS SCHEDULE ARE TYPICAL. NOT ALL ARE USED IN THIS PROJECT. DOTTED SYMBOLS INDICATE EXISTING FIXTURE, EQUIPMENT, ETC.

SYMBOL	DESCRIPTION	MOUNTING HEIGHT
ELECTRICAL WIRING		
	CROSS LINES INDICATE NUMBER OF CONDUCTORS GROUNDING CONDUCTORS NOT INCLUDED.	N/A
	BRANCH CIRCUIT CONCEALED IN CEILING OR WALL	N/A
	BRANCH CIRCUIT CONCEALED IN GROUND OR FLOOR	N/A
A—3	BRANCH CIRCUIT HOMERUNS TO PANEL w/PANEL & CIRCUIT NUMBER DESIGNATIONS.	N/A
	CONDUIT RISER UP	N/A
	CONDUIT RISER DOWN	N/A
	CONDUIT STUB (CAP CONDUIT)	AS NOTED
	CABLE TRAY	AS NOTED
	BUS DUCT	AS NOTED
ELECTRICAL POWER		
J	JUNCTION BOX	AS NOTED
	DUPLEX RECEPTACLE	+16"
	QUAD RECEPTACLE	+16"
	SPLIT WIRED DUPLEX RECEPTACLE	+16"
WP	DUPLEX RECEPTACLE WEATHERPROOF AND GFCI	+16"
	DUPLEX RECEPTACLE OUTLET WITH GROUND FAULT CIRCUIT INTERRUPTION PROTECTION	+16"
EWC	RECEPTACLE ELECTRIC WATER COOLER (EWC) WITH GROUND FAULT CIRCUIT INTERRUPTION PROTECTION	+16"
	EQUIPMENT RECEPTACLE	+16"
	SPECIAL PURPOSE RECEPTACLE	+16"
	DUPLEX RECEPTACLE FLOOR	FLOOR
	QUAD RECEPTACLE FLOOR	FLOOR
	POWER/TELEPHONE POLE	FLOOR
	MUTI-OUTLET WIREWAY	+46"
ELECTRICAL CONNECTIONS		
	NON-FUSED DISCONNECT SWITCH	TOP AT 6'-0"
	FUSED DISCONNECT SWITCH	TOP AT 6'-0"
	MOTOR STARTER/DISCONNECT SWITCH COMBINATION NON-FUSED	TOP AT 6'-0"
	MOTOR STARTER/DISCONNECT SWITCH COMBINATION FUSED	TOP AT 6'-0"
	MOTOR STARTER ONLY	TOP AT 6'-0"
VFD	VARIABLE FREQUENCY DRIVE	+78"
	MOTOR CONNECTION	AS NOTED
ELECTRICAL DISTRIBUTION		
T	TELEPHONE COMPANY PEDESTAL	AS NOTED
GS	POWER COMPANY GROUND SLEEVE	AS NOTED
	POWER COMPANY SITE TRANSFORMER	AS NOTED
	HIGH VOLTAGE (277/480 VOLT) PANELBOARD	TOP AT 6'-0"
	LOW VOLTAGE (120/208 VOLT) PANELBOARD	TOP AT 6'-0"
	DRY TYPE TRANSFORMER	AS NOTED
	DISTRIBUTION SWITCHBOARD	AS NOTED
	TELEPHONE AND/OR DATA TERMINAL BOARD	AS NOTED
ELECTRICAL DEVICES		
	PUSHBUTTON	+48"
	STOP/START STATION	+48"
EPO	"EMERGENCY POWER OFF" MUSHROOM TYPE BUTTON	+48"
	LINE VOLTAGE THERMOSTAT	+48"
	CLOCK	AS NOTED
N	NURSE CALL BED/BATH STATION	+48"
	NURSE CALL LIGHT	+84"
NURS	NURSE CALL STATION PANEL	TOP AT 6'-0"

SYMBOL	DESCRIPTION	MOUNTING HEIGHT
LIGHTING CONTROL		
S	SINGLE POLE SWITCH	+48"
S_3	3-WAY SWITCH	+48"
S_4	4-WAY SWITCH	+48"
S_P	SWITCH WITH PILOT LIGHT	+48"
S_D	DIMMER SWITCH	+48"
S_K	KEYED SWITCH	+48"
S_{TM}	TIMER SWITCH (SPRING WOUND)	+48"
S_T	MANUAL STARTER WITH THERMAL OVERLOAD	AS NOTED
S_L	LOW VOLTAGE SWITCH	+48"
S^C	CONTROLLING SWITCH (LETTER INDICATES CONTROL CIRCUIT)	+48"
	SINGLE POLE SWITCH/OCCUPANCY SENSOR COMBINATION. MANUAL ON/AUTO OFF (WALL MOUNTED) DUAL TECHNOLOGY	+48"
	OCCUPANCY SENSOR DUAL TECHNOLOGY	CEILING
TS	TIME SWITCH	+60"
LC	LIGHTING CONTACTOR	+60"
P	PHOTOCELL	AS NOTED
LIGHTING		
	FLUORESCENT FIXTURE (TYPICAL)	CEILING
EM	FLUORESCENT EMERGENCY FIXTURE (TYPICAL)	CEILING
	SURFACE MOUNTED FIXTURE	CEILING
	RECESSED FIXTURE	CEILING
	WALL MOUNTED FIXTURE	AS NOTED
	WALL MOUNTED EMERGENCY EGRESS FIXTURE	AS NOTED
	FLUORESCENT STRIP	CEILING
	TRACK LIGHTING	CEILING
	EMERGENCY LIGHTING UNIT	+84"
FXX	FIXTURE TYPE SYMBOL (ATTACHED TO FIXTURE SYMBOL)	N/A
	POST TOP AREA LIGHT POLE & FIXTURE	AS NOTED
	AREA LIGHT POLE AND FIXTURE (HEAD QTY AS SHOWN ON PLAN)	AS NOTED
	BOLLARD FIXTURE	GROUND
	FLOOD OR SPOT FIXTURE	AS NOTED
	WALL MOUNTED EXIT LIGHT (SINGLE FACE)	+84"
	WALL MOUNTED EXIT LIGHT (DOUBLE FACE)	+84"
	CEILING MOUNTED EXIT LIGHT (SINGLE FACE)	CEILING
	CEILING MOUNTED EXIT LIGHT (DOUBLE FACE)	CEILING
TELECOMMUNICATIONS		
	TELEPHONE OUTLET	+16"
	COMPUTER DATA OUTLET	+16"
	VOICE / DATA OUTLET	+16"
	TELEPHONE OUTLET FLOOR	FLOOR
	COMPUTER DATA OUTLET FLOOR	FLOOR
	NETWORK AND VOICE OUTLET FLOOR	FLOOR
REFERENCE SYMBOLS		
XXX	FEEDER TAG (ONE LINE DIAGRAM)	N/A
	REVISION TAG INDICATOR	N/A
	DETAIL INDICATOR, TOP DETAIL IDENTIFICATION BOTTOM INDICATES SHEET WHERE DETAIL IS LOCATED.	N/A
X-XX	MECHANICAL EQUIPMENT SYMBOL	N/A
	KEYED NOTE REFERENCE	N/A

SYMBOL	DESCRIPTION	MOUNTING HEIGHT
AUDIO / VIDEO		
TV	TELEVISION OUTLET	AS NOTED
V	VOLUME CONTROL	+48"
S	SPEAKER	CEILING
M	MICROPHONE JACK	+16"
A	AUXILIARY JACK	+16"
IC	INTERCOM STATION	+48"
	BELL	+84"
	CHIME	+84"
FIRE ALARM		
F	FIRE ALARM MANUAL PULL STATION	SEE DETAIL
	FIRE ALARM HORN/STROBE	SEE DETAIL
	FIRE ALARM HORN/STROBE WITH GUARD	SEE DETAIL
WP	FIRE ALARM HORN/STROBE WATERPROOF	SEE DETAIL
	FIRE ALARM STROBE	SEE DETAIL
	SMOKE DETECTOR	CEILING
B	SMOKE DETECTOR BATTERY-BACKED	CEILING
D	DUCT SMOKE DETECTOR	IN DUCT
E	SMOKE DETECTOR (ELEVATOR RECALL)	CEILING
	HEAT DETECTOR	CEILING
	GAS DETECTOR	+16"
	DOOR HOLDER	AS NOTED
	PRESSURE SWITCH	AS NOTED
	FIRE ALARM FLOW SWITCH	AS NOTED
	FIRE ALARM TAMPER SWITCH	AS NOTED
	FIRE ALARM FIREFIGHTER PHONE	+48"
CM	CONTROL MODULE	AS NOTED
MM	MONITOR MODULE	AS NOTED
FSD	FIRE/SMOKE DAMPER	AS NOTED
R	FIRE ALARM RELAY	AS NOTED
GAA	FIRE ALARM GENERATOR ANNUNCIATOR	TOP AT 6'-0"
FST	FIRE ALARM TRANSMISSION (MONITORING) DEVICE	AS NOTED
FACP	FIRE ALARM CONTROL PANEL	TOP AT 6'-0"
FAA	FIRE ALARM REMOTE ANNUNCIATOR PANEL	TOP AT 6'-0"
SECURITY		
D_1	SECURITY SYSTEM DOOR CONTACT	DOOR JAMB
D_2	SECURITY SYSTEM OVERHEAD DOOR CONTACT	AS NOTED
KP	SECURITY SYSTEM KEYPAD ARM/DISARM	+48"
	SECURITY SYSTEM DOOR ELECTRIC STRIKE	AS NOTED
	SECURITY SYSTEM MAGNETIC DOOR LOCK	AS NOTED
REX	REQUEST TO EXIT MOTION DETECTOR	AS NOTED
	SECURITY SYSTEM AREA MOTION SENSOR	AS NOTED
	SECURITY SYSTEM GLASS BREAK SENSOR	AS NOTED
CR	SECURITY SYSTEM CARD READER	+48"
AK	SECURITY SYSTEM DOOR ACCESS KEYPAD	+48"
	SECURITY SYSTEM CCTV CAMERA	AS NOTED
DVR	DIGITAL VIDEO RECORDER	AS NOTED
MON	SECURITY SYSTEM CCTV MONITOR	AS NOTED
SERT	SECURITY SYSTEM PANEL	TOP AT 6'-0"
PS	POWER SUPPLY LOW VOLTAGE	AS NOTED

ABBREVIATIONS

AFF	ABOVE FINISHED FLOOR	EWC	ELECTRIC WATER COOLER	(N)	NEW
AFP	ARC FAULT PROTECTOR	EWH	ELECTRIC WATER HEATER	NIC	NOT IN CONTRACT
AIC	AMP INTERRUPTING CURRENT (SYMMETRICAL)	(A)	FUTURE	NL	NIGHT LIGHT
AL	ALUMINUM	FA	FIRE ALARM	OFCI	OWNER FURNISHED CONTRACTOR INSTALLED
BG	BELOW GRADE	FLA	FULL LOAD AMPS	OFOI	OWNER FURNISHED OWNER INSTALLED
C	CONDUIT	GFI	GROUND FAULT INTERRUPTER	PNL	PANEL
CFCI	CONTRACTOR FURNISHED CONTRACTOR INSTALLED	GFP	GROUND FAULT PROTECTOR	(R)	RELOCATE
CKT	CIRCUIT	GRC	GALVANIZED RIGID CONDUIT	TVSS	TRANSIENT VOLTAGE SURGE SUPPRESSOR
CO	CONDUIT ONLY	GRND	GROUND	TYP	TYPICAL
CU	COPPER	IG	ISOLATED GROUND	UNO	UNLESS NOTED OTHERWISE
C/W	COMPLETE WITH	MCB	MAIN CIRCUIT BREAKER	WP	WEATHER PROOF
E	EMERGENCY	MCC	MOTOR CONTROL CENTER	(X)	DEMOLISH/DELETE
(E)	EXISTING	MH	MANHOLE	XMR	TRANSFORMER
EPO	EMERGENCY POWER OFF	MLO	MAIN LUGS ONLY		

* THIS IS A TYPICAL ABBREVIATION LIST. NOT ALL ABBREVIATIONS AE USED ON THIS PROJECT.

GENERAL NOTES:

1. DO NOT SCALE DRAWINGS VERIFY DIMENSIONS IN FIELD PRIOR TO MAKING ANY ROUGH-INS.
2. ELECTRICAL CONTRACTOR SHALL REVIEW ALL ARCHITECTS ELEVATIONS, SECTIONS AND FLOOR PLANS PRIOR TO ROUGH IN OF ELECTRICAL DEVICE JUNCTION BOXES.
3. FINAL CONNECTIONS TO EQUIPMENT SHALL BE MADE AS PER MANUFACTURERS WRITTEN INSTRUCTIONS AND APPROVED WIRING DIAGRAMS AND DETAILS. IT SHALL BE THE CONTRACTORS RESPONSIBILITY TO PROVIDE ALL MATERIALS AND EQUIPMENT COMPATIBLE WITH EQUIPMENT ACTUALLY SUPPLIED.
4. CONSULT ARCHITECTS REFLECTED CEILING PLANS FOR EXACT LOCATIONS OF LIGHTING FIXTURES, SPEAKERS, SMOKE DETECTORS ETC.
5. ELECTRICAL CONTRACTOR SHALL MEET WITH THE CEILING AND MECHANICAL CONTRACTORS TO COORDINATE LOCATIONS, CLEARANCES, CEILING TYPES AND ROUGH-IN REQUIREMENTS OF ALL LIGHTING FIXTURES PRIOR TO DUCT, PIPING AND CEILING INSTALLATIONS.
6. ALL EMPTY RACEWAY SYSTEMS SHALL HAVE A 200LB RATED PULL CORD INSTALLED AND SHALL BE IDENTIFIED AT EACH JUNCTION, PULL AND TERMINATION POINT USING PERMANENT MARKER IN THE BOX. ID SHALL INDICATE INTENDED USE OF CONDUIT, ORIGINATION AND TERMINATION POINTS OF EACH INDIVIDUAL CONDUIT.
7. ALL PENETRATIONS OF FIRE RATED FLOORS, CEILING AND WALLS SHALL BE SEALED WITH UL LISTED AND RATED FIRE STOP MATERIAL TO MAINTAIN FIRE RATING OF ASSEMBLY.
8. ELECTRICAL BOXES SHALL NOT BE LOCATED IN MASONRY OR CONCRETE COLUMNS, BOND BEAMS OR GROUTED CELLS OF MASONRY WALLS ADJACENT TO OPENINGS WITHOUT COORDINATION WITH THE MASONRY CONTRACTOR.
9. IT IS THE INTENT OF THESE DRAWINGS AND SPECIFICATIONS TO ESTABLISH A STANDARD OF QUALITY. MANUFACTURES CATALOG NUMBERS ARE LISTED AS A BASIS OF DESIGN. ELECTRICAL CONTRACTOR SHALL SUBMIT PRODUCT INFORMATION THAT DEVIATES FROM ORIGINAL DESIGN INTENT AND SPECIFICATION.
10. THE ELECTRICAL CONTRACTOR SHALL REVIEW AND COORDINATE WITH ARCHITECTURAL, CIIVL, STRUCTURAL, MECHANICAL, PLUMBING AND OTHER DRAWINGS PRIOR TO BID.
11. WORK SHALL BE PERFORMED IN A WORKMANLIKE MANNER, PER INDUSTRY STANDARD AND TO THE SATISFACTION OF THE ARCHITECT AND ENGINEER.
12. WORK, MATERIALS AND EQUIPMENT SHALL CONFORM TO THE LATEST EDITIONS OF LOCAL, STATE AND NATIONAL CODES, STANDARDS AND ORDINANCES.
13. CONTRACTOR SHALL SECURE AND PAY FOR ALL NECESSARY BUILDING PERMITS AND INSPECTION FEES.
14. ALL IMPACT FEES ASSOCIATED WITH CITY, UTILITY OR SERVICE COMPANIES FOR BUT NOT LIMITED TO POWER, TELEPHONE, FIBER OPTIC & INTERNET SHALL BE THE RESPONSIBILITY OF THE OWNER.
15. THE ELECTRICAL CONTRATOR SHALL BE RESPONSIBLE TO COORDINATE WITH THE GENERAL CONTRACTOR TO PROVIDE AND INSTALL TEMPORARY POWER FOR PROJECT CONSTRUCTION AS REQUIRED. ALL ENERGY COSTS ARE THE RESPONSIBILITY OF THE GENERAL CONTRACTOR.
16. THE CONTRACTOR SHALL GUARANTEE THE INSTALLATION AGAINST DEFECTS IN MATERIALS AND WORKMANSHIP, WHICH MAY OCCUR UNDER NORMAL USAGE FOR A PERIOD OF ONE YEAR AFTER SUBSTANTIAL COMPLETION. DEFECTS SHALL BE PROMPTLY CORRECTED.
17. PROVIDE RECORD DRAWINGS IN ACCORDANCE WITH THE PROJECT SPECIFICATIONS.
18. VERIFY EXACT LOCATION OF EQUIPMENT TO BE FURNISHED BY OTHERS PRIOR TO ROUGH-IN.
19. ELECTRICAL CONTRACTOR SHALL VERIFY ALL EQUIPMENT DIMENSIONS AND LOCATIONS BEFORE BEGINNG ROUGH-INS. CONSULT CONTRACT DOCUMENT DRAWINGS AND SHOP DRAWINGS TO VERIFY AND MAINTAIN REQUIRED CLEARANCES.
20. CONTRACTOR SHALL VERIFY ACTUAL ELECTRICAL LOADS FROM NAMEPLATE RATINGS OF EACH PIECE OF EQUIPMENT REQUIRING POWER. BRING ANY DISCREPANCIES TO THE ATTENTION OF THE PROJECT ENGINEER.
21. ELECTRICAL CONTRACTOR SHALL TEST AND VERIFY ALL SYSTEMS WITH PROJECT ENGINEER DURING FINAL INSPECTION FOR PROPER OPERATION. IF TESTS RESULT IN DEFECT OR IMPROPER OPERATION THE CONTRACTOR SHALL MAKE ANY CORRECTIONS NECESSARY AT NO ADDITIONAL COSTS TO THE OWNER.
22. WIRE FOR GENERAL USE SHALL BE COPPER 75° C RATED . WIRING FOR HID FIXTURES WITHIN 3' OF FLUORESCENT BALLAST SHALL BE COPPER, MINIMUM 90° C RATED. CONDUCTOR SIZES INDICATED ARE FOR INSTALLATION IN A MAXIMUM 30° C AMBIENT TEMPERATURE ENVIRONMENT. CONDUCTOR AMPACITY SHALL BE DERATED FOR HIGHER AMBIENT INSTALLATIONS.
23. SPLICES IN EXTERIOR PULLBOXES AND MANHOLES SHALL BE MADE WATERPROOF USING "SCOTCAST" SPLICE KIT OR APPROVED EQUAL. SEAL ENDS OF CONDUITS AND DUCTS ENTERING BOXES WITH "DUCTSEAL" OR EQUAL.
24. SUBMIT SHOP DRAWINGS IN ACCORDANCE WITH THE SPECIFICATIONS BOUND IN A THREE RING BINDER, INDEXED IN A NEAT AND ORDERLY MANNER WITH TYPE AND MODEL NUMBERS INDICATED. SUBMITTALS SHALL INCLUDE BUT NOT LIMITED TO: LIGHTING FIXTURES, LAMPS, WIRING DEVICES, OCCUPANCY SENSORS, CONTACTORS, TIME CLOCKS, PHOTOCELLS, RELAYS, SWITCHBOARDS, PANELBOARDS, MOTOR CONTROL CENTERS, SAFETY SWITCHES, MOTOR STARTERS, OVERCURRENT PROTECTION DEVICES, TRANSFORMERS, CONDUCTORS OVER 600 VOLTS AND ALL SPECIAL SYSTEMS SUCH AS FIRE ALARM, LIGHTING CONTROLS, SECURITY SYSTEMS, SOUND SYSTEMS ETC.
25. VERIFY EXACT LOCATIONS OF ALL NEW AND EXISTING UNDERGROUND SITE UTILITIES, PIPING AND RACEWAY SYSTEMS PRIOR TO TRENCHING. A UTILITY LOCATING COMPANY SUCH AS "BLUE STAKE" OR EQUAL SHALL BE USED TO VERIFY AND MARK UTILITIES BEFORE TRENCHING. PROVIDE NECESSARY TRENCHING, BACKFILL, EXCAVATION, SUPPORTS, SERVICE FEEDERS, (CONDUIT AND/OR WIRE), PULL BOXES, TRANSFORMER PADS, SAW CUTTING AND PATCHING, CONCRETE PAVING ETC. REQUIRED. BACKFILL TRENCHES TO 90% COMPACTION. PATCHING SHALL MATCH EXISTING SURROUNDNG SURFACES. CONTRACTOR SHALL OBTAIN AND VERIFY UTILITY COMPANY DRAWINGS AND REQUIREMENTS FOR ALL SITE UTILITIES. ELECTRICAL CONTRACTOR SHALL ALSO COORDINATE ELECTRICAL RELATED UTILITIES WITH THE CIVIL, MECHANICAL, AND SITE EXCAVATION CONTRACTORS.
26. PULLBOXES, CABINETS, ETC. MOUNTED ON THE EXTERIOR OF THE BUILDING SHALL BE WEATHERPROOF TYPE WITH HINGED GASKETED LOCKABLE COVERS SECURED WITH TAMPERPROOF SCREWS.
27. PROVIDE A ONE (1) HOUR FIRE RATING FOR ALL METAL FOUR (4) SQUARE BOXES.

CLIENT

LDOT CONNECTING COMMUNITIES

STATION #2434
I-80 E.B. EXIT 134
PARLEY'S CANYON

DESIGNER

ARCHIPLEX GROUP
architecture · planning · design services
255 Crossroad Square
Salt Lake City, UT 84115
P:(801) 961-7070
F:(801) 961-7373

CONSULTANTS

PVE Inc.
Consulting Mechanical Electrical Engineers
1040 North 2200 West, Suite 100
Salt Lake City, UT 84116
Phone: (801) 359-3158
Fax: (801) 521-4114

REGISTRATION

LICENSED PROFESSIONAL ENGINEER
No. 154867
DEAN P. LEVORSEN
STATE OF UTAH

ISSUE

MARK	DATE	DESCRIPTION
	1/2009	CONSTRUCTION DOCUMENTS
	8-20-08	90% REVIEW SUBMITTAL

PROJECT NO:	08105.00.01
DRAWN BY:	J. HUTCHINGS
CHECKED BY:	R.RIDDLE
SCALE:	
DATE:	JANUARY, 2009

KEY PLAN

SHEET TITLE

ELECTRICAL SYMBOLS AND NOTES

E101

© 2004 ARCHIPLEX GROUP

By: jhutchings, Jan 19, 2009 - 11:01am, X:\Projects\2008\08105.00.01 - Parleys Main Sta\E101 - 08105.01.dwg

Copyright (C) 2007 by PVE, Inc. Salt Lake City, Utah. All rights reserved. Unauthorized copying and/or use is illegal and subject to prosecution.

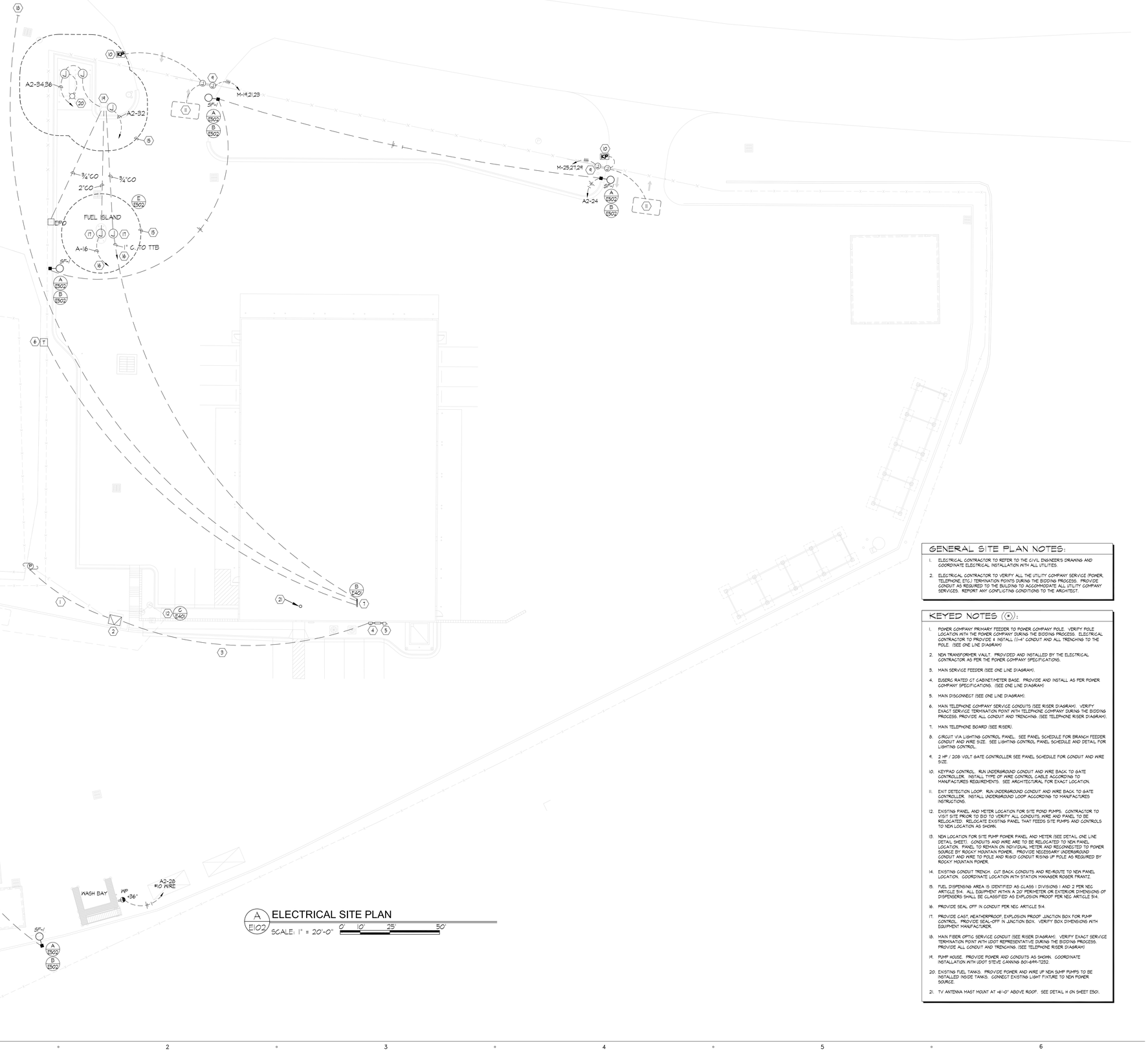

A E102 ELECTRICAL SITE PLAN

SCALE: 1" = 20'-0" 0' 10' 25' 50'

GENERAL SITE PLAN NOTES:

1. ELECTRICAL CONTRACTOR TO REFER TO THE CIVIL ENGINEER'S DRAWING AND COORDINATE ELECTRICAL INSTALLATION WITH ALL UTILITIES.
2. ELECTRICAL CONTRACTOR TO VERIFY ALL THE UTILITY COMPANY SERVICE (POWER, TELEPHONE ETC.) TERMINATION POINTS DURING THE BIDDING PROCESS. PROVIDE CONDUIT AS REQUIRED TO THE BUILDING TO ACCOMMODATE ALL UTILITY COMPANY SERVICES. REPORT ANY CONFLICTING CONDITIONS TO THE ARCHITECT.

KEYED NOTES (#):

1. POWER COMPANY PRIMARY FEEDER TO POWER COMPANY POLE. VERIFY POLE LOCATION WITH THE POWER COMPANY DURING THE BIDDING PROCESS. ELECTRICAL CONTRACTOR TO PROVIDE 4 INSTALL (1)-4" CONDUIT AND ALL TRENCHING TO THE POLE. (SEE ONE LINE DIAGRAM)
2. NEW TRANSFORMER VAULT. PROVIDED AND INSTALLED BY THE ELECTRICAL CONTRACTOR AS PER THE POWER COMPANY SPECIFICATIONS.
3. MAIN SERVICE FEEDER (SEE ONE LINE DIAGRAM).
4. EUSERC RATED CT CABINET/METER BASE. PROVIDE AND INSTALL AS PER POWER COMPANY SPECIFICATIONS. (SEE ONE LINE DIAGRAM)
5. MAIN DISCONNECT (SEE ONE LINE DIAGRAM).
6. MAIN TELEPHONE COMPANY SERVICE CONDUITS (SEE RISER DIAGRAM). VERIFY EXACT SERVICE TERMINATION POINT WITH TELEPHONE COMPANY DURING THE BIDDING PROCESS. PROVIDE ALL CONDUIT AND TRENCHING. (SEE TELEPHONE RISER DIAGRAM).
7. MAIN TELEPHONE BOARD (SEE RISER).
8. (#)RGUIT VIA LIGHTING CONTROL PANEL. SEE PANEL SCHEDULE FOR BRANCH FEEDER CONDUIT AND WIRE SIZE. SEE LIGHTING CONTROL PANEL SCHEDULE AND DETAIL FOR LIGHTING CONTROL.
9. 2 HP / 208 VOLT GATE CONTROLLER SEE PANEL SCHEDULE FOR CONDUIT AND WIRE SIZE.
10. KEYPAD CONTROL. RUN UNDERGROUND CONDUIT AND WIRE BACK TO GATE CONTROLLER. INSTALL TYPE OF WIRE CONTROL CABLE ACCORDING TO MANUFACTURES REQUIREMENTS. SEE ARCHITECTURAL FOR EXACT LOCATION.
11. EXIT DETECTION LOOP. RUN UNDERGROUND CONDUIT AND WIRE BACK TO GATE CONTROLLER. INSTALL UNDERGROUND LOOP ACCORDING TO MANUFACTURES INSTRUCTIONS.
12. EXISTING PANEL AND METER LOCATION FOR SITE POND PUMPS. CONTRACTOR TO VISIT SITE PRIOR TO BID TO VERIFY ALL CONDUITS, WIRE AND PANEL TO BE RELOCATED. RELOCATE EXISTING PANEL THAT FEEDS SITE PUMPS AND CONTROLS TO NEW LOCATION AS SHOWN.
13. NEW LOCATION FOR SITE PUMP POWER PANEL AND METER (SEE DETAIL ONE LINE DETAIL SHEET). CONDUITS AND WIRE ARE TO BE RELOCATED TO NEW PANEL LOCATION. PANEL TO REMAIN ON INDIVIDUAL METER AND RECONNECTED TO POWER SOURCE BY ROCKY MOUNTAIN POWER. PROVIDE NECESSARY UNDERGROUND CONDUIT AND WIRE TO POLE AND RIGID CONDUIT RISING UP POLE AS REQUIRED BY ROCKY MOUNTAIN POWER.
14. EXISTING CONDUIT TRENCH. CUT BACK CONDUITS AND RE-ROUTE TO NEW PANEL LOCATION. COORDINATE LOCATION WITH STATION MANAGER ROGER FRANTZ.
15. FUEL DISPENSING AREA IS IDENTIFIED AS CLASS I DIVISION 1 AND 2 PER NEC ARTICLE 514. ALL EQUIPMENT WITHIN A 20' PERIMETER OR EXTERIOR DIMENSIONS OF DISPENSERS SHALL BE CLASSIFIED AS EXPLOSION PROOF PER NEC ARTICLE 514.
16. PROVIDE SEAL OFF IN CONDUIT PER NEC ARTICLE 514.
17. PROVIDE CAST, WEATHERPROOF, EXPLOSION PROOF JUNCTION BOX FOR PUMP CONTROL. PROVIDE SEAL-OFF IN JUNCTION BOX. VERIFY BOX DIMENSIONS WITH EQUIPMENT MANUFACTURER.
18. MAIN FIBER OPTIC SERVICE CONDUIT (SEE RISER DIAGRAM). VERIFY EXACT SERVICE TERMINATION POINT WITH UDOT REPRESENTATIVE DURING THE BIDDING PROCESS. PROVIDE ALL CONDUIT AND TRENCHING. (SEE TELEPHONE RISER DIAGRAM)
19. PUMP HOUSE. PROVIDE POWER AND CONDUITS AS SHOWN. COORDINATE INSTALLATION WITH UDOT STEVE CANNING 801-694-1252.
20. EXISTING FUEL TANKS. PROVIDE POWER AND WIRE UP NEW SUMP PUMPS TO BE INSTALLED INSIDE TANKS. CONNECT EXISTING LIGHT FIXTURE TO NEW POWER SOURCE.
21. TV ANTENNA MAST MOUNT AT +8'-0" ABOVE ROOF. SEE DETAIL # ON SHEET E501.

By: jhutchings, Jan 19, 2009 - 11:06am, X:\Projects\2008\08105.00.01 - Parleys Maint Sta\E102 - 08105.01.dwg

CLIENT

UDOT CONNECTING COMMUNITIES

STATION #2434
I-80 E.B. EXIT 134
PARLEY'S CANYON

DESIGNER

ARCHIPLEX GROUP
architecture - planning - design services
255 Crossroad Square
Salt Lake City, UT 84115
P:(801) 961-7070
F:(801) 961-7373

CONSULTANTS

PVE Inc.
Consulting Mechanical Electrical Engineers
1040 North 2200 West, Suite 100
Salt Lake City, UT 84116
Phone: (801) 359-3158
Fax: (801) 521-4114

REGISTRATION

No. 154867 DEAN P. LEVORSEN STATE OF UTAH

ISSUE

MARK	DATE	DESCRIPTION
	1/2009	CONSTRUCTION DOCUMENTS
	8-20-08	90% REVIEW SUBMITTAL

PROJECT NO:	08105.00.01
DRAWN BY:	J. HUTCHINGS
CHECKED BY:	R.RIDDLE
SCALE:	
DATE:	JANUARY, 2009

KEY PLAN

SHEET TITLE

ELECTRICAL SITE PLAN

E102

© 2004 ARCHIPLEX GROUP

Copyright (C) 2007 by PVE, Inc. Salt Lake City, Utah. All rights reserved. Unauthorized copying and/or use is illegal and subject to prosecution.

GENERAL NOTES:

1. FINAL LOCATION OF LIGHT FIXTURES SHALL BE AS SHOWN ON REFLECTED CEILING PLAN. ARCHITECTURAL REFLECTED CEILING PLAN TO TAKE PRECEDENCE OVER THIS PLAN FOR FIXTURE LOCATIONS.
2. FINAL LOCATION OF LIGHT FIXTURES MOUNTED ON OUTSIDE OF BUILDING SHALL BE AS SHOWN AS DEMENSIONED ON ARCHITECTURAL ELEVATION PLAN. ARCHITECTURAL DRAWINGS TO TAKE PRECEDENCE OVER THIS PLAN FOR FIXTURE LOCATIONS.
3. PROVIDE TIME SWITCH AND LIGHTING CONTACTOR. TIME SWITCH SHALL BE 8 POLE TIME SWITCH. LIGHTING CONTACTORS SHALL BE 20A/2POLE MECHANICALLY HELD ELECTRONICALLY CONTROLLED TYPE. COORDINATE EXACT LOCATION WITH ARCHITECT PRIOR TO ROUGH-IN.

KEYED NOTES (#):

1. EMERGENCY LIGHT FIXTURE TO BE UNSWITCHED, PROVIDE CONTINUOUS CIRCUIT.
2. EMERGENCY LIGHT FIXTURE TO BE SWITCHED.
3. EXIT SIGN TO BE UNSWITCHED, PROVIDE CONTINUOUS CIRCUIT.
4. EMERGENCY EGRESS FIXTURE.
5. PROVIDE SUFFICIENT BOX DEPTH AND CORRECT PLASTER RING TO ACCOMMODATE ACTUAL RELAY UNIT AND OCCUPANCY SENSOR INSTALLED. ALSO PROVIDE PROPER SEPARATION OF 120 VOLT AND CLASS 2 WIRING AS NECESSARY IN ACCORDANCE WITH N.E.C. SET SENSITIVITY AND TIME DELAY OF SENSOR AT MAXIMUM.
6. LOWER CASE LETTERS ON OR NEAR FIXTURES INDICATE CONTROLLING SWITCHES. SWITCH LEG NOT SHOWN.
7. FLOOD LIGHTS SHALL BE SWITCHED FROM LOCATION IN MAIN OFFICE. PROVIDE SWITCH WITH PILOT INDICATOR. SEE SWITCH DESIGNATIONS ON LIGHTING FIXTURES.
8. FLOOD LIGHT SHALL BE ON PHOTOCELL CONTROL TO COVER STAIRS.
9. EXTERIOR POLE AND BUILDING SITE LIGHTING SHALL BE CONTROLLED OFF PHOTO CELL AND TIME CLOCK.
10. LIGHT FIXTURE OVER WORKBENCH. REFER TO DETAIL FOR PROPER MOUNTING OF FIXTURE.

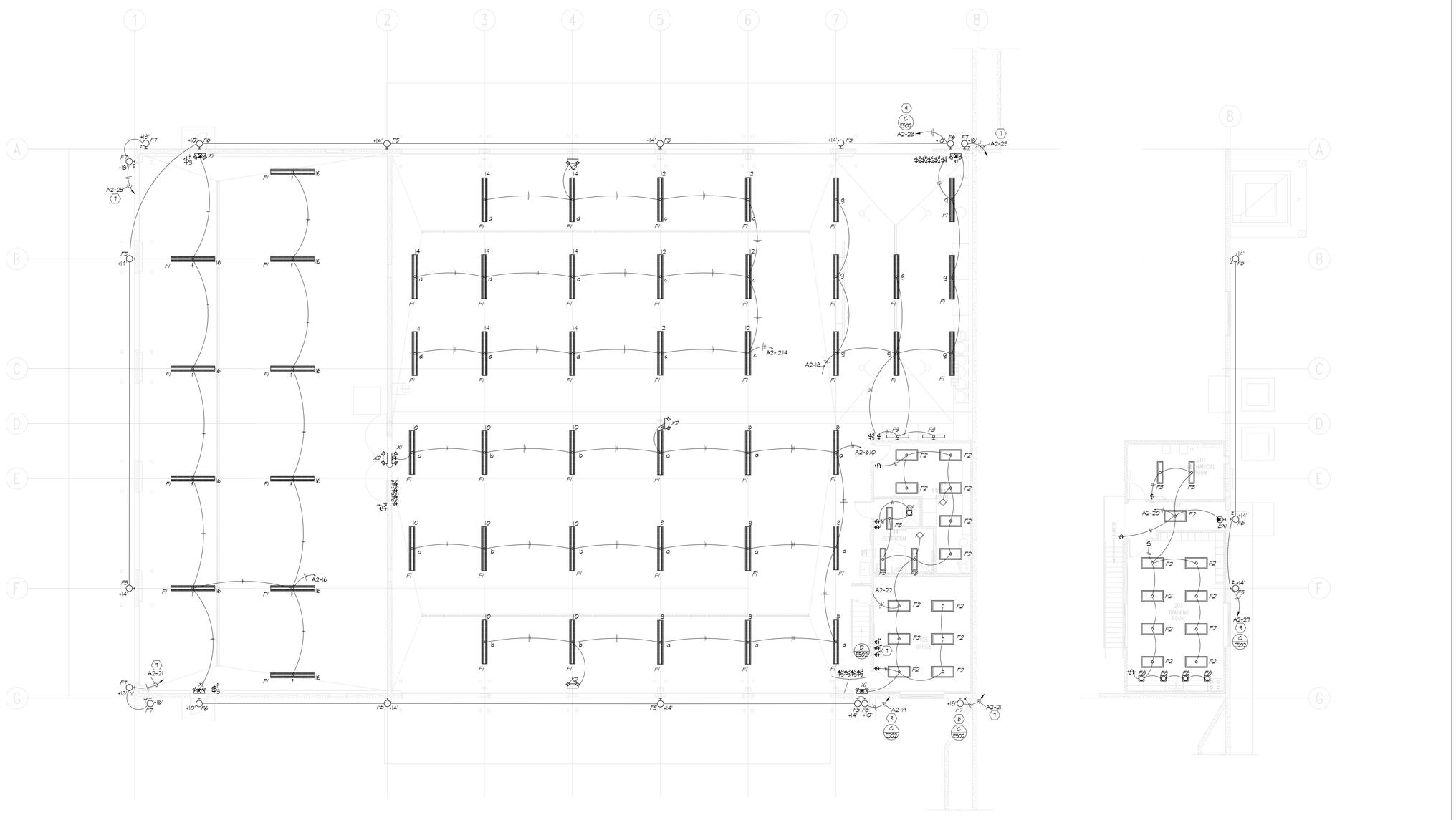

A E201 FLOOR PLAN - LIGHTING

By: jhutchings, Jan 16, 2009 - 11:08am, X:\Projects\2008\08105.00.01 - Parleys Maint Sta\L201 - 08105.01.dwg

CLIENT

UDOT CONNECTING COMMUNITIES

STATION #2434
I-80 E.B. EXIT 134
PARLEY'S CANYON

DESIGNER

ARCHIPLEX GROUP
architecture · planning · design services
255 Crossroad Square
Salt Lake City, UT 84115
P:(801) 961-7070
F:(801) 961-7373

CONSULTANTS

PVE Inc.
Consulting Mechanical Electrical Engineers
1040 North 2200 West, Suite 100
Salt Lake City, UT 84116
Phone: (801) 359-3158
Fax: (801) 521-4114

REGISTRATION

LICENSED PROFESSIONAL ENGINEER No. 154867 DEAN P. LEVORSEN STATE OF UTAH

ISSUE

MARK	DATE	DESCRIPTION
	1/2009	CONSTRUCTION DOCUMENTS
	8-20-08	90% REVIEW SUBMITTAL

PROJECT NO:	08105.00.01
DRAWN BY:	J. HUTCHINGS
CHECKED BY:	R.RIDDLE
SCALE:	
DATE:	JANUARY, 2009

KEY PLAN

SHEET TITLE

ELECTRICAL LIGHTING PLAN

E201

© 2004 ARCHIPLEX GROUP

Copyright (C) 2007 by PVE, Inc. Salt Lake City, Utah. All rights reserved. Unauthorized copying and/or use is illegal and subject to prosecution.

GENERAL NOTES:

1. THE ELECTRICAL CONTRACTOR SHALL REVIEW AND COORDINATE WITH STRUCTURAL, MECHANICAL, PLUMBING AND OTHER DRAWINGS PRIOR TO ROUGH-IN OF POWER.
2. VERIFY EXACT LOCATION OF EQUIPMENT TO BE FURNISHED BY OTHERS PRIOR TO ROUGH-IN.
3. ELECTRICAL CONTRACTOR SHALL VERIFY ALL EQUIPMENT DIMENSIONS AND LOCATIONS BEFORE BEGINNING ROUGH-INS. CONSULT CONTRACT DOCUMENT DRAWINGS AND SHOP DRAWINGS TO VERIFY AND MAINTAIN REQUIRED CLEARANCES.
4. CONTRACTOR SHALL VERIFY ACTUAL ELECTRICAL LOADS FROM NAMEPLATE RATINGS OF EACH PIECE OF EQUIPMENT REQUIRING POWER. BRING ANY DISCREPANCIES TO THE ATTENTION OF THE PROJECT ENGINEER.
5. FINAL CONNECTIONS TO EQUIPMENT SHALL BE MADE AS PER MANUFACTURERS WRITTEN INSTRUCTIONS AND APPROVED WIRING DIAGRAMS AND DETAILS. IT SHALL BE THE CONTRACTORS RESPONSIBILITY TO PROVIDE ALL MATERIALS AND EQUIPMENT COMPATIBLE WITH EQUIPMENT ACTUALLY SUPPLIED.
6. ANTENNA MAST SEE DETAIL H ON SHEET E501.

KEYED NOTES (#):

1. (1)- 1 ¼" EMT CONDUIT ONLY TO MAIN TELEPHONE BOARD FOR COAX FEED TO MONITORS. VERIFY LOCATION OF JUNCTION BOX AND POWER RECEPTACLES FOR MONITORS.
2. IRRIGATION CONTROLLER J-BOX. COORDINATE EXACT LOCATION WITH LANDSCAPE IRRIGATION INSTALLER PRIOR TO ROUGH IN.
3. GENERATOR CONNECTION DISCONNECT. (SEE ONE LINE DIAGRAM).
4. NON-FUSED 2 POLE 240 VOLT DOUBLE THROW SAFETY SWITCH.
5. PROVIDE DUPLEX RECEPTACLE ON STRUCTURE FOR RADIANT HEAT BURNER. PROVIDE PLUG, CORD AND MATERIALS NECESSARY TO MAKE FINAL CONNECTION. COORDINATE LOCATION AND INSTALLATION WITH MECHANICAL DRAWINGS AND CONTRACTOR.

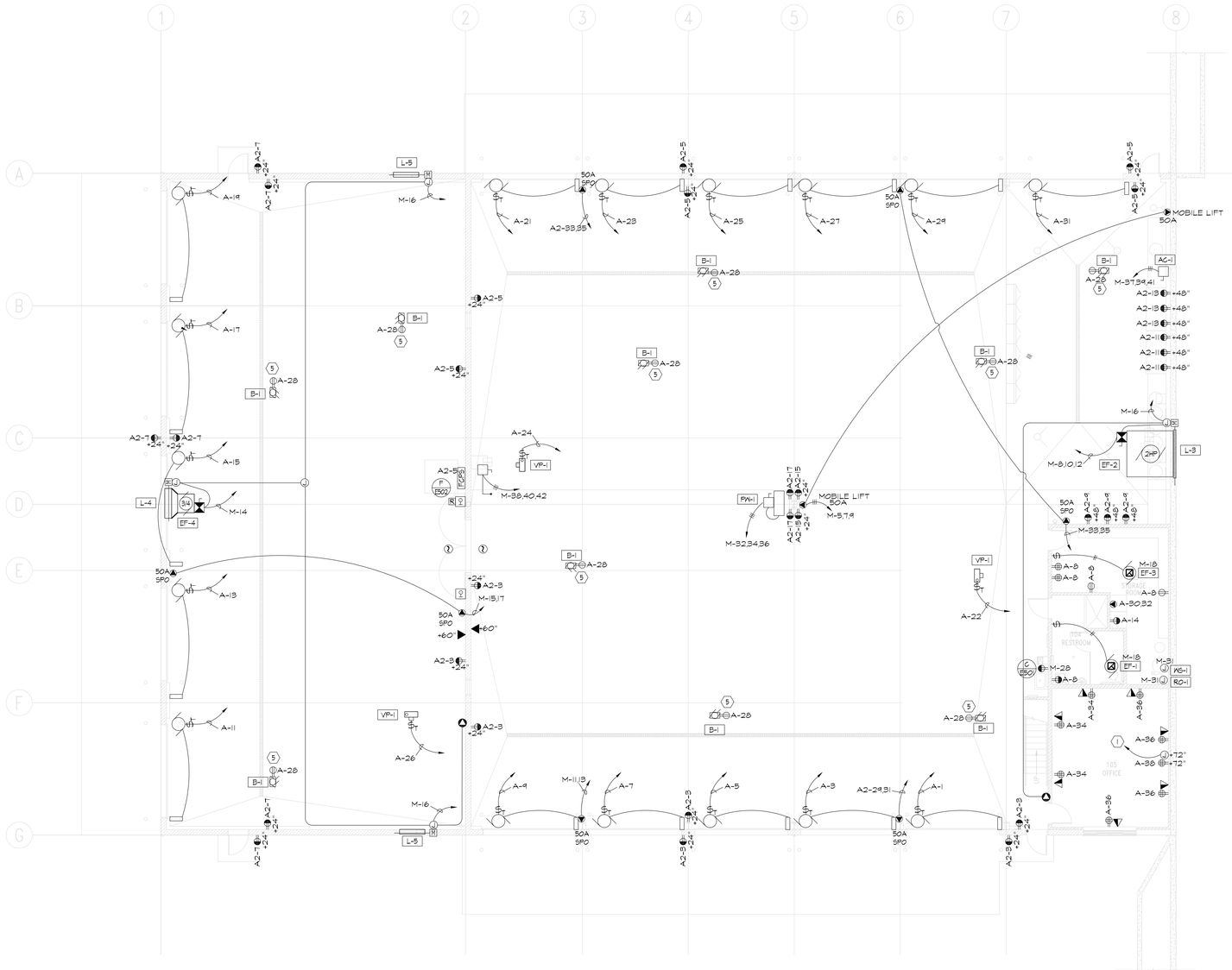

A E301 FLOOR PLAN - POWER

SCALE: 1/8" = 1'-0"

CLIENT

UDOT CONNECTING COMMUNITIES

STATION #2434
I-80 E.B. EXIT 134
PARLEY'S CANYON

DESIGNER

ARCHIPLEX GROUP
architecture · planning · design services
255 Crossroad Square
Salt Lake City, UT 84115
P:(801) 961-7070
F:(801) 961-7373

CONSULTANTS

PVE Inc.
Consulting Mechanical Electrical Engineers
1040 North 2200 West, Suite 100
Salt Lake City, UT 84116
Phone: (801) 359-3158
Fax: (801) 521-4114

REGISTRATION

LICENSED PROFESSIONAL ENGINEER No. 154867 DEAN P. LEVORSEN STATE OF UTAH

ISSUE

MARK	DATE	DESCRIPTION
	1/2009	CONSTRUCTION DOCUMENTS
	8-20-08	90% REVIEW SUBMITTAL

PROJECT NO:	08105.00.01
DRAWN BY:	J. HUTCHINGS
CHECKED BY:	R.RIDDLE
SCALE:	
DATE:	JANUARY, 2009

KEY PLAN

SHEET TITLE

ELECTRICAL POWER PLAN

E301

© 2004 ARCHIPLEX GROUP

By: jhutchings; Jan 19, 2009 - 11:09am, X:\Projects\2008\08105.00.01 - Parleys Model Stn\E301 - 08105.01.dwg

Copyright (C) 2007 by PVE, Inc. Salt Lake City, Utah. All rights reserved. Unauthorized copying and/or use is illegal and subject to prosecution.

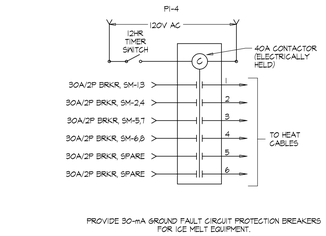

PROVIDE 30-mA GROUND FAULT CIRCUIT PROTECTION BREAKERS FOR ICE MELT EQUIPMENT.

A E6.1 SNOW MELT CONTROL DIAGRAM

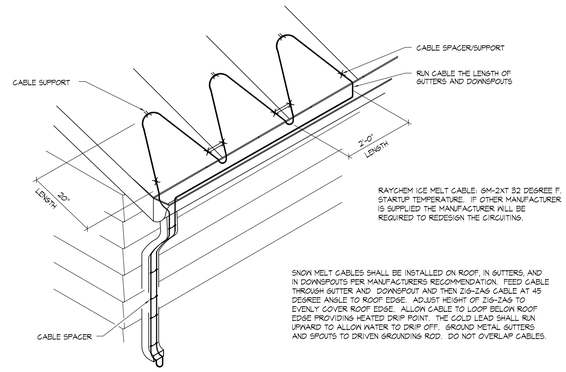

RAYCHEM ICE MELT CABLE: SM-2XT 32 DEGREE F. STARTUP TEMPERATURE. IF OTHER MANUFACTURER IS SUPPLIED THE MANUFACTURER WILL BE REQUIRED TO REDESIGN THE CIRCUITING.

SNOW MELT CABLES SHALL BE INSTALLED ON ROOF, IN GUTTERS, AND IN DOWNSPOUTS PER MANUFACTURERS RECOMMENDATION. FEED CABLE THROUGH GUTTER AND DOWNSPOUT AND THEN ZIG-ZAG CABLE AT 45 DEGREE ANGLE TO ROOF EDGE. ADJUST HEIGHT OF ZIG-ZAG TO EVENLY COVER ROOF EDGE. ALLOW CABLE TO LOOP BELOW ROOF EDGE PROVIDING HEATED DRIP POINT. THE COLD LEAD SHALL RUN UPWARD TO ALLOW WATER TO DRIP OFF. GROUND METAL GUTTERS AND SPOUTS TO DRIVEN GROUNDING ROD. DO NOT OVERLAP CABLES.

B E6.1 SNOW MELT CABLE DETAIL

PANEL SCHEDULE

PANEL: SM
VOLTAGE: 208 / 120 PHASE: 1
MOUNTING: SURFACE WIRE: 3
ENCLOSURE: NEMA 1
REMARKS:

BUS AMPS: 100
MAIN OVERCURRENT DEVICE: L@6
MAIN OVERCURRANT AMPS: N/A
MINIMUM EQUIPMENT RATING: 10,000 AMPS (RMS-SYM)

USE
E = Equipment Load M = Motor Load
L = Lighting Load K = Kitchen Equipment
R = Receptacle Load

BREAKER NO.	BREAKER AMPS	BREAKER POLE	CIRCUIT NAME	FEEDER C	FEEDER WIRE	FEEDER GRD	CKT. LOAD USE	CKT. LOAD WATTS	LOAD/PHASE(VA) #A	LOAD/PHASE(VA) #B	CKT. LOAD WATTS	CKT. LOAD USE	FEEDER GRD	FEEDER WIRE	FEEDER C	CIRCUIT NAME	BREAKER POLE	BREAKER AMPS	BREAKER NO.
1	50	2	SNOW MELT	3/4"	#10	#10	E	1,660	3,336		1,660	E	#10	#10	3/4"	SNOW MELT	2	50	2
3	--	--	----------	3/4"	#10	#10	E	1,660		3,336	1,660	E	#10	#10	3/4"	----------	--	--	4
5	50	2	SNOW MELT	3/4"	#10	#10	E	1,660	3,336		1,660	E	#10	#10	3/4"	SNOW MELT	2	50	6
7	--	--	----------	3/4"	#10	#10	E	1,660		3,336	1,660	E	#10	#10	3/4"	----------	--	--	8
9	50	2	SPARE													SPARE	2	50	10
11	--	--	---													---	--	--	12
13			SPACE													SPACE			14
15			SPACE													SPACE			16
17			SPACE													SPACE			18
19			SPACE													SPACE			20
21			SPACE													SPACE			22
23			SPACE													SPACE			24
25																			26
27																			28
29																			30

	#A	#B	DEMAND
LIGHTING LOAD (VA)	0	0	0
LIGHTING CONTINUOS LOAD (VA)			0
RECEPTACLE LOAD PER NEC 220.13(A)	0	0	0
EQUIPMENT LOAD (VA)	6,672	6,672	13,344
25% LARGEST MOTOR			0
KITCHEN EQUIPMENT LOAD (VA)	0	0	0
0 UNITS @ 100% (PER NEC TABLE 220.56)			
TOTAL LOAD (VA)	6,672	6,672	13,344
TOTAL LOAD (AMPS):	56	56	64

NOTES:
1. ALL INSULATION ON CONDUCTORS TO BE THHN UNLESS NOTED OTHERWISE. INSULATION ON ALL UNDERGROUND CONDUCTORS SHALL BE THWN.
2. RECEPTACLE LOAD CALCULATED AS PER SECTION 220 OF THE NATIONAL ELECTRICAL CODE.
3. PANEL COVER SHALL BE FIELD MARKED FOR FLASH PROTECTION WITH A PERMANENT LABEL AS REQUIRED BY THE NATIONAL ELECTRICAL CODE SECTION 110.16(B). LABEL SHALL READ AS FOLLOWS: "DANGER: POTENTIAL ARC FLASH HAZARD"

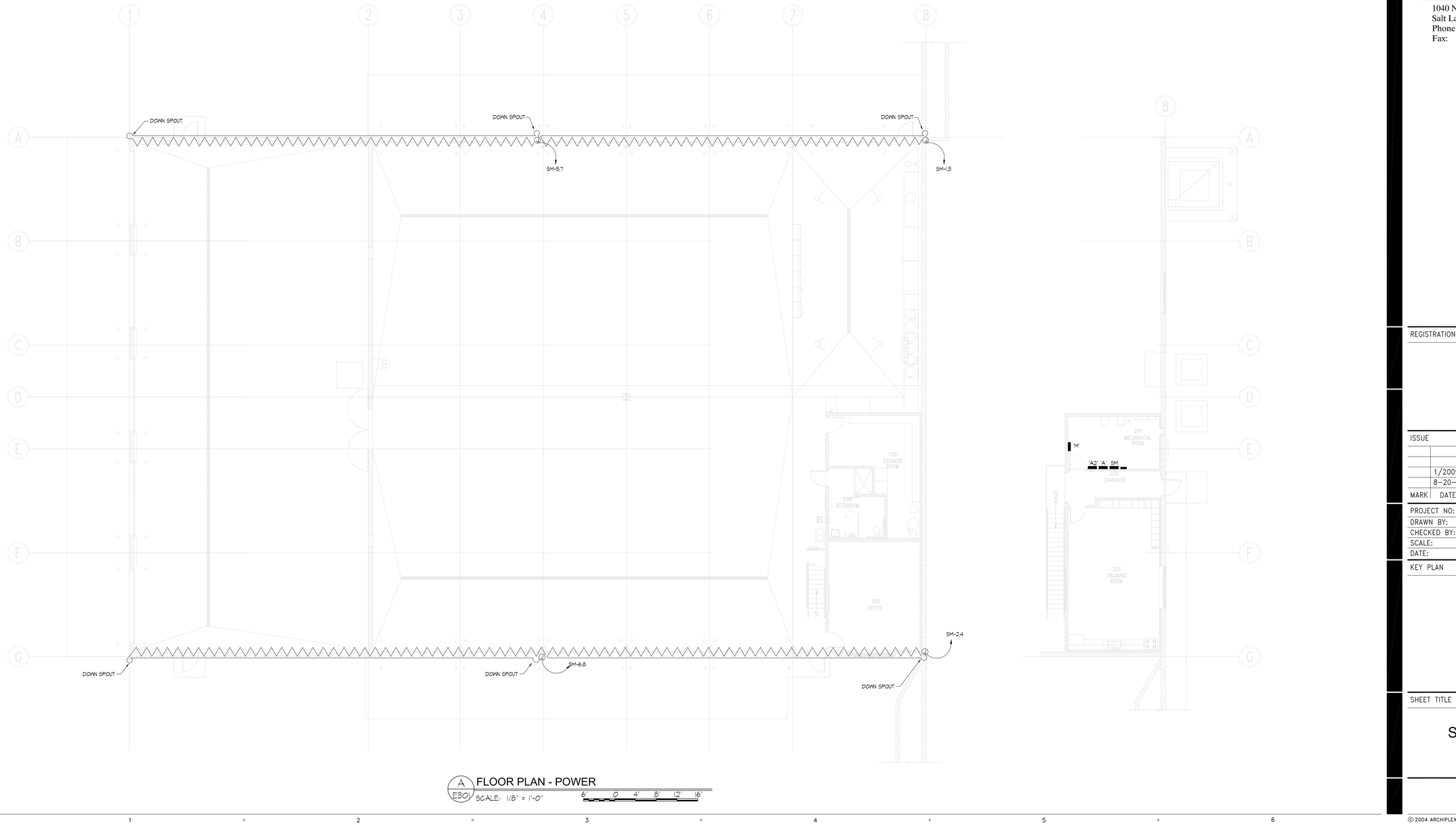

A E30 FLOOR PLAN - POWER
SCALE: 1/8" = 1'-0"
6' 0 4' 8' 12' 16'

By: jhutchings Jan 19, 2009 - 11:09am, X:\Projects\2008\08105.00.01 - Parleys Maint Sta\E302 - 08105.01.dwg

CLIENT

UDOT CONNECTING COMMUNITIES

STATION #2434
I-80 E.B. EXIT 134
PARLEY'S CANYON

DESIGNER

ARCHIPLEX GROUP
architecture · planning · design services
255 Crossroad Square
Salt Lake City, UT 84115
P:(801) 961-7070
F:(801) 961-7373

CONSULTANTS

PVE Inc.
Consulting Mechanical Electrical Engineers
1040 North 2200 West, Suite 100
Salt Lake City, UT 84116
Phone: (801) 359-3158
Fax: (801) 521-4114

REGISTRATION

REGISTERED PROFESSIONAL ENGINEER No. 154867 DEAN P. LEVORSEN STATE OF UTAH

ISSUE

MARK	DATE	DESCRIPTION
	1/2009	CONSTRUCTION DOCUMENTS
	8-20-08	90% REVIEW SUBMITTAL

PROJECT NO:	08105.00.01
DRAWN BY:	J. HUTCHINGS
CHECKED BY:	R.RIDDLE
SCALE:	
DATE:	JANUARY, 2009

KEY PLAN

SHEET TITLE

SNOW MELT

E302

© 2004 ARCHIPLEX GROUP

Copyright (C) 2007 by PVE, Inc. Salt Lake City, Utah. All rights reserved. Unauthorized copying and/or use is illegal and subject to prosecution.

PANEL SCHEDULE

PANEL: A
VOLTAGE: 208 / 120 PHASE: 1
MOUNTING: SURFACE WIRE: 3
ENCLOSURE: NEMA 1
REMARKS: SUB FEED LUGS

BUS AMPS: 400
MAIN OVERCURRENT DEVICE: LUGS
MAIN OVERCURRANT AMPS: N/A
MINIMUM EQUIPMENT RATING: 10,000 AMPS (RMS-SYM)

USE
E = Equipment Load M = Motor Load
L = Lighting Load K = Kitchen Equipment
R = Receptacle Load

BREAKER NO.	BREAKER AMPS	BREAKER POLE	CIRCUIT NAME	FEEDER C	FEEDER WIRE	FEEDER GRD	CKT. LOAD USE	CKT. LOAD WATTS	LOAD/PHASE(VA) φA	LOAD/PHASE(VA) φB	CKT. LOAD WATTS	CKT. LOAD USE	FEEDER GRD	FEEDER WIRE	FEEDER C	CIRCUIT NAME	BREAKER POLE	BREAKER AMPS	BREAKER NO.
1	20	1	DOOR OPENER	3/4"	#12	#12	M	1,176	1,176							SPARE	1	20	2
3	20	1	DOOR OPENER	3/4"	#12	#12	M	1,176		1,176						SPARE	1	20	4
5	20	1	DOOR OPENER	3/4"	#12	#12	M	1,176	1,536		360	R	#12	#12	3/4"	TELEPHONE BOARD	1	20	6
7	20	1	DOOR OPENER	3/4"	#12	#12	M	1,176		2,176	1,000	R	#12	#12	3/4"	RCPTS-RESTROOM	1	20	8
9	20	1	DOOR OPENER	3/4"	#12	#12	M	1,176	2,176		1,000	R	#12	#12	3/4"	RCPTS-MECH RM	1	20	10
11	20	1	DOOR OPENER	3/4"	#12	#12	M	1,176		1,176						SPARE	1	20	12
13	20	1	DOOR OPENER	3/4"	#12	#12	M	1,176	2,276		1,100	E	#12	#12	3/4"	WASHER	1	20	14
15	20	1	DOOR OPENER	3/4"	#12	#12	M	1,176		2,676	1,500	E	#12	#12	3/4"	FUEL ISLAND	1	20	16
17	20	1	DOOR OPENER	3/4"	#12	#12	M	1,176	2,832		1,656	E	#12	#12	3/4"	F-1	1	20	18
19	20	1	DOOR OPENER	3/4"	#12	#12	M	1,176		2,832	1,656	E	#12	#12	3/4"	F-2	1	20	20
21	20	1	DOOR OPENER	3/4"	#12	#12	M	1,176	2,832		1,656	E	#12	#12	3/4"	VP-1	1	20	22
23	20	1	DOOR OPENER	3/4"	#12	#12	M	1,176		2,832	1,656	E	#12	#12	3/4"	VP-1	1	20	24
25	20	1	DOOR OPENER	3/4"	#12	#12	M	1,176	2,832		1,656	E	#12	#12	3/4"	VP-1	1	20	26
27	20	1	DOOR OPENER	3/4"	#12	#12	M	1,176		2,376	1,200	E	#12	#12	3/4"	B-1(10)	1	20	28
29	20	1	DOOR OPENER	3/4"	#12	#12	M	1,176	3,676		2,500	E	#12	#10	3/4"	DRYER	2	30	30
31	20	1	DOOR OPENER	3/4"	#12	#12	M	1,176		3,676	2,500	E	#12	#10	3/4"	--	--	--	32
33	20	1	RCPTS-TRAINING RM	3/4"	#12	#12	R	900	1,980		1,080	R	#12	#12	3/4"	RCPTS-OFFICE	1	20	34
35	20	1	RCPTS-TRAINING RM MON	3/4"	#12	#12	R	720		2,160	1,440	R	#12	#12	3/4"	RCPTS-OFFICE	1	20	36
37	20	1	RCPTS-TRAINING KITCH	3/4"	#12	#12	R	540	900		360	R	#12	#12	3/4"	RCPTS-OFF-MONITOR	1	20	38
39	50	2	RANGE	3/4"	#8	#10	R	4,000		5,200	1,200	R	#12	#12	3/4"	TRAINING FRIDGE	1	20	40
41	--	--	----------	3/4"	#8	#10	R	4,000	5,000		1,000	R	#12	#12	3/4"	DISPOSAL	1	20	42

	φA	φB	DEMAND
LIGHTING LOAD (VA)	0	0	0
LIGHTING CONTINUOUS LOAD (VA)			0
RECEPTACLE LOAD PER NEC 220.18(VA)	9,240	8,360	13,800
EQUIPMENT LOAD (VA)	17,976	17,920	35,896
25% LARGEST MOTOR			294
KITCHEN EQUIPMENT LOAD (VA)	0	0	0
0 UNITS @ 100% (PER NEC TABLE 220.56)			
TOTAL LOAD (VA)	27,216	26,280	49,990
TOTAL LOAD (AMPS):	227	219	240

NOTES:
1. ALL INSULATION ON CONDUCTORS TO BE THHN UNLESS NOTED OTHERWISE. INSULATION ON ALL UNDERGROUND CONDUCTORS SHALL BE THWN.
2. RECEPTACLE LOAD CALCULATED AS PER SECTION 220 OF THE NATIONAL ELECTRICAL CODE.
3. PANEL COVER SHALL BE FIELD MARKED FOR FLASH PROTECTION WITH A PERMANENT LABEL AS REQUIRED BY THE NATIONAL ELECTRICAL CODE SECTION 110. LABEL SHALL READ AS FOLLOWS: "DANGER: POTENTIAL ARC FLASH HAZARD"

PANEL SCHEDULE

PANEL: A2
VOLTAGE: 208 / 120 PHASE: 1
MOUNTING: SURFACE WIRE: 3
ENCLOSURE: NEMA 1
REMARKS:

BUS AMPS: 400
MAIN OVERCURRENT DEVICE: LUGS
MAIN OVERCURRANT AMPS: N/A
MINIMUM EQUIPMENT RATING: 10,000 AMPS (RMS-SYM)

USE
E = Equipment Load M = Motor Load
L = Lighting Load K = Kitchen Equipment
R = Receptacle Load

BREAKER NO.	BREAKER AMPS	BREAKER POLE	CIRCUIT NAME	FEEDER C	FEEDER WIRE	FEEDER GRD	CKT. LOAD USE	CKT. LOAD WATTS	LOAD/PHASE(VA) φA	LOAD/PHASE(VA) φB	CKT. LOAD WATTS	CKT. LOAD USE	FEEDER GRD	FEEDER WIRE	FEEDER C	CIRCUIT NAME	BREAKER POLE	BREAKER AMPS	BREAKER NO.
1	20	1	IRRIGATION CONTROL	3/4"	#12	#12	R	180	180							SPARE	1	20	2
3	20	1	RCPTS-GARAGE	3/4"	#12	#12	R	900		900						SPARE	1	20	4
5	20	1	RCPTS-GARAGE	3/4"	#12	#12	R	900	1,260		360	R	#12	#12	3/4"	RCPTS-MECH EQUP	1	20	6
7	20	1	RCPTS-GARAGE	3/4"	#12	#12	R	1,080		2,268	1,188	L	#12	#12	3/4"	LTG-GARAGE	1	20	8
9	20	1	RCPTS-NORK BENCH	3/4"	#12	#12	R	540	1,332		792	L	#12	#12	3/4"	LTG-GARAGE	1	20	10
11	20	1	RCPTS-NORK BENCH	3/4"	#12	#12	R	540		1,596	1,056	L	#12	#12	3/4"	LTG-GARAGE	1	20	12
13	20	1	RCPTS-NORK BENCH	3/4"	#12	#12	R	540	1,596		1,056	L	#12	#12	3/4"	LTG-GARAGE	1	20	14
15	20	1	RCPTS-GARAGE	3/4"	#12	#12	R	360		1,680	1,320	L	#12	#12	3/4"	LTG-GARAGE	1	20	16
17	20	1	RCPTS-GARAGE	3/4"	#12	#12	R	360	1,916		1,556	L	#12	#12	3/4"	LTG-GARAGE	1	20	18
19	20	1	LTG-BUILDING	3/4"	#12	#12	L	1,500		2,700	1,200	L	#12	#12	3/4"	LTG-TRAINING	1	20	20
21	20	1	LTG-BUILDING	3/4"	#12	#12	L	1,000	2,100		1,100	L	#12	#12	3/4"	LTG-OFFICE	1	20	22
23	20	1	LTG-BUILDING	3/4"	#12	#12	L	1,000		2,300	1,300	L	#12	#12	3/4"	SITE LTG	1	20	24
25	20	1	LTG-BUILDING	3/4"	#12	#12	L	1,000	1,800		800	L	#12	#12	3/4"	SITE LTG	1	20	26
27	20	1	LTG-BUILDING	3/4"	#12	#12	L	1,000		1,500	500	R	#12	#12	1	WASH BAY RECPT.	1	20	28
29	50	2	50A 5P0	3/4"	#8	#10	E	4,100	4,100							SPARE	1	20	30
31	--	--	----------	3/4"	#8	--	E	4,100		5,300	1,200	E	#12	#12	1	PUMP HOUSE	1	20	32
33	50	2	50A 5P0	3/4"	#8	#10	E	4,100	5,300		1,200	E	#12	#12	1	FUEL TANKS	2	20	34
35	--	--	----------	3/4"	#8	--	E	4,100		5,300	1,200	E	--	#12	--	----------	1	20	36
37	20	1	SPARE													SPARE	1	20	38
39	20	1	SPARE							6,400	6,400	E	#2	#6		PANEL SM	2	100	40
41	20	1	SPARE						6,400		6,400	E	--	#6		----------	--	--	42

	φA	φB	DEMAND
LIGHTING LOAD (VA)	7,304	9,564	16,868
LIGHTING CONTINUOUS LOAD (VA)			4,217
RECEPTACLE LOAD PER NEC 220.18(VA)	2,880	3,380	6,260
EQUIPMENT LOAD (VA)	15,800	17,000	32,800
25% LARGEST MOTOR			0
KITCHEN EQUIPMENT LOAD (VA)	0	0	0
0 UNITS @ 100% (PER NEC TABLE 220.56)			
TOTAL LOAD (VA)	25,984	29,944	60,145
TOTAL LOAD (AMPS):	217	250	289

NOTES:
1. ALL INSULATION ON CONDUCTORS TO BE THHN UNLESS NOTED OTHERWISE. INSULATION ON ALL UNDERGROUND CONDUCTORS SHALL BE THWN.
2. RECEPTACLE LOAD CALCULATED AS PER SECTION 220 OF THE NATIONAL ELECTRICAL CODE.
3. PANEL COVER SHALL BE FIELD MARKED FOR FLASH PROTECTION WITH A PERMANENT LABEL AS REQUIRED BY THE NATIONAL ELECTRICAL CODE SECTION 110. LABEL SHALL READ AS FOLLOWS: "DANGER: POTENTIAL ARC FLASH HAZARD"

PANEL SCHEDULE

PANEL: M
VOLTAGE: 208Y/ 120 PHASE: 3
MOUNTING: SURFACE WIRE: 4
ENCLOSURE: NEMA 1
REMARKS:

BUS AMPS: 600
MAIN OVERCURRENT DEVICE: LUGS
MAIN OVERCURRANT AMPS: N/A
MINIMUM EQUIPMENT RATING: 10,000 AMPS (RMS-SYM)

USE
E = Equipment Load M = Motor Load
L = Lighting Load K = Kitchen Equipment
R = Receptacle Load

No.	BREAKER AMPS	BREAKER POLE	CIRCUIT NAME	FEEDER C	FEEDER WIRE	FEEDER GRD	CKT. LOAD USE	CKT. LOAD WATTS	LOAD/PHASE (VA) φA	LOAD/PHASE (VA) φB	LOAD/PHASE (VA) φC	CKT. LOAD WATTS	CKT. LOAD USE	FEEDER GRD	FEEDER WIRE	FEEDER C	CIRCUIT NAME	BREAKER POLE	BREAKER AMPS	No.
1	SPACE OCCUPIED BY BREAKER								48,400			48,400	E	#4/0			PANEL A & A2	2	400	2
3										49,549		49,549	E	#4/0				--	--	4
5	50	3	MOBILE LIFT	1"	#8	#10	R	4,100			4,100						SPARE	1	20	6
7	---	---	----------	---	#8	---	R	4,100	6,982			2,882	M	#10	#10	3/4"	EF-2	3	30	8
9	---	---	----------	---	#8	---	R	4,100		6,982		2,882	M	#10	#10	---	----------	---	---	10
11	50	2	50A 5P0	1"	#8	#10	R	4,100			6,982	2,882	M	#10	#10	---	----------	---	---	12
13	---	---	----------	---	#8	#10	R	4,100	5,756			1,656	M	#12	#12	3/4"	EF-4	1	20	14
15	50	2	50A 5P0	1"	#8	#10	R	4,100		4,700		600	M	#12	#12	3/4"	LOUVERS	1	20	16
17	--	--	----------	--	#8	#10	R	4,100			4,600	500	M	#12	#12	3/4"	EF-1 & EF-3	1	20	18
19	20	3	GATE CONTROLLER	1"	#12	#12	R	937	3,327			2,390	M	#10	#10	3/4"	CU-1	2	40	20
21	---	---	----------	---	#12	#12	R	937		3,327		2,390	M	--	#10	---	----------	--	--	22
23	---	---	----------	---	#12	#12	R	937			3,327	2,390	M	#10	#10	3/4"	CU-2	2	40	24
25	20	3	GATE CONTROLLER	1"	#12	#12	R	937	3,327			2,390	M	--	#10	---	----------	--	--	26
27	---	---	----------	---	#12	#12	R	937		1,117		180	R	#12	#12	3/4"	ENC	1	20	28
29	---	---	----------	---	#12	#12	E	937			2,437	1,500	E	#12	#12	3/4"	EXH-1	1	20	30
31	20	1	(3)AH-1, (1)KS-1 & (1)CP-1	3/4"	#12	#12	E	1,220	4,462			3,242	M	#10	#8	3/4"	PRESSURE WASHER	3	50	32
33	50	2	50A 5P0	1"	#8	#10	R	4,100		7,342		3,242	M	---	#8	---	----------	---	---	34
35	--	--	----------	--	#8	#10	R	4,100			7,342	3,242	M	---	#8	---	----------	---	---	36
37	50	3	AC-1	1"	#8	#10	M	3,038	6,905			3,867	M	#10	#6	1"	CRANE	3	60	38
39	---	---	----------	---	#8	---	M	3,038		6,905		3,867	M	---	#6	---	----------	---	---	40
41	---	---	----------	---	#8	---	M	3,038			6,905	3,867	M	---	#6	---	----------	---	---	42

	φA	φB	φC	DEMAND
LIGHTING LOAD (VA)	0	0	0	0
LIGHTING CONTINOUS LOAD PER NEC 210.20(A) (VA)				0
RECEPTACLE LOAD PER NEC 220.44 (VA)	10,074	14,354	17,337	25,883
EQUIPMENT LOAD (VA)	69,085	65,568	18,356	153,009
25% LARGEST MOTOR (VA)				967
KITCHEN EQUIPMENT LOAD (VA)	0	0	0	0
0 UNITS @ 100% (PER NEC TABLE 220.56)				
TOTAL LOAD (VA)	79,159	79,922	35,693	179,858
TOTAL LOAD (AMPS):	660	666	297	499

NOTES:
1. ALL INSULATION ON CONDUCTORS TO BE THHN UNLESS NOTED OTHERWISE. INSULATION ON ALL UNDERGROUND CONDUCTORS SHALL BE THWN.
2. RECEPTACLE LOAD CALCULATED AS PER SECTION 220 OF THE NATIONAL ELECTRICAL CODE.
3. PANEL COVER SHALL BE FIELD MARKED FOR FLASH PROTECTION WITH A PERMANENT LABEL AS REQUIRED BY THE NATIONAL ELECTRICAL CODE SECTION 110. LABEL SHALL READ AS FOLLOWS: "DANGER: POTENTIAL ARC FLASH HAZARD"

LIGHT FIXTURE SCHEDULE

FIXTURE NUMBER	FIXTURE MANUFACTURER	FIXTURE CATALOG #	DESCRIPTION	LAMPS TYPE	LAMPS QTY.	FIXTURE VOLTS	FIXTURE WATTS	FIXTURE MOUNTING	REMARKS
F1	METALUX DAYBRITE	8T1A-232-EB8I TIA232-I/4EB	96" INDUSTRIAL FLUORESCENT (TANDEM)	F32T8/SP35 ECO	4	120	132	SURFACE/CHAIN	PROVIDE WITH ELECTRONIC BALLAST
F2	METALUX DAYBRITE	2SG-332A125-EB8I 2DP6332-PS12-I/3EB	2X4 PRISMATIC LAYIN FIXTURE SPECIFICATION GRADE (3-LAMP)	F32T8/SP35 ECO	3	120	99	LAY-IN GRID	PROVIDE WITH ELECTRONIC BALLAST
F3	METALUX DAYBRITE	WS-332A-EB8I CAN332-I/3EB	1X4 SURFACE FLUORESCENT (3 LAMP)	F32T8/SP35 ECO	3	120	99	SURFACE CEILING	PROVIDE WITH ELECTRONIC BALLAST
F4	HALO OMEGA	H272ICAT-270PS OMH26PLTSRD-SWHR	FLUOR. DOWNLIGHT SHOWER W/AZAK TRIM 26 DTT LAMP	26TRT	2	120	54	RECESSED	PROVIDE WITH ELECTRONIC BALLAST
F5	DAYBRITE LUMARK	XLL250M-LP MHAL 250-MT-LL	250 WATT METAL HALIDE WALL PACK	250W MH	1	120	300	SURFACE WALL	
F6	DAYBRITE LUMARK	XLD100M-LP MHSP-100H-MT-LL	400 WATT METAL HALIDE FLOOD LIGHT	100W MH	1	120	118	SURFACE WALL	
F7	DAYBRITE LUMARK	FSM400MMT-WH MHNK-Y-76-400-I20-WH	400 WATT METAL HALIDE WALL PACK	400W MH	1	120	465	SURFACE WALL	
F8	PORTFOLIO OMEGA	C7032-E-T05I-LI 5632PLTU-T6C5	FLUOR. DOWNLIGHT W/AZAK TRIM 32 DTT LAMP	32 TRT	1	120	34	RECESSED	PROVIDE WITH ELECTRONIC BALLAST
EM	BODINE IOTA	B50 I-320	EMERGENCY BALLAST ((2)-4 FOOT T-8 LAMP)	----	----	120	----	----	EMERGENCY BALLAST (1)-4 FOOT T8 LAMP 1100 LUMENS MIN. VERIFY COMPATIBILITY BEFORE ORDERING
X1	SURE-LITES McPHILBEN	LPX-70-DSWHDH CCAXL-I-SN	2-HEAD EM WALL PACK (SURFACE) WITH EXIT LIGHT	INCLUDED	2	120	5.4	SURFACE WALL	
X2	SURE-LITES McPHILBEN	CC-6-WH CT6	2-HEAD EM WALL PACK (SURFACE)	INCLUDED	2	120	5.4	SURFACE WALL	

NOTE:
ELECTRICAL CONTRACTOR SHALL PROVIDE A QUICK DISCONNECT HARNESS' FOR EACH FLUORESCENT LIGHTING FIXTURE TO SERVE AS A MEANS OF DISCONNECT TO ALLOW THE FIXTURE BALLAST TO BE SERVICED IN PLACE, AS PER THE NATIONAL ELECTRICAL CODE 2008, ARTICLE 410.130 (G).

SITE LIGHTING FIXTURE SCHEDULE

FIXT #	FIXTURE MANUFACTURER	FIXTURE CATALOG #	FIXTURE VOLTS	FIXTURE #/POLE	FIXTURE WATTS	FIXTURE MOUNTING	LAMPS TYPE	LAMPS QTY/FIXT	POLE MANUFACTURER	POLE HEIGHT	POLE CATALOG #	REMARKS
SF-1	GARDCO EMCO MC6RAM	H14-S-400MH EGA1R1-SH-400MH MHTR-SP400-MT-GBA-MA10 I-CBA	120	1	465	POLE	400W MH	1	LITHONIA GARDCO MC6RAM	30'-0"	556 30 SC 556-30-S-I 556-SA30-SFXXX	

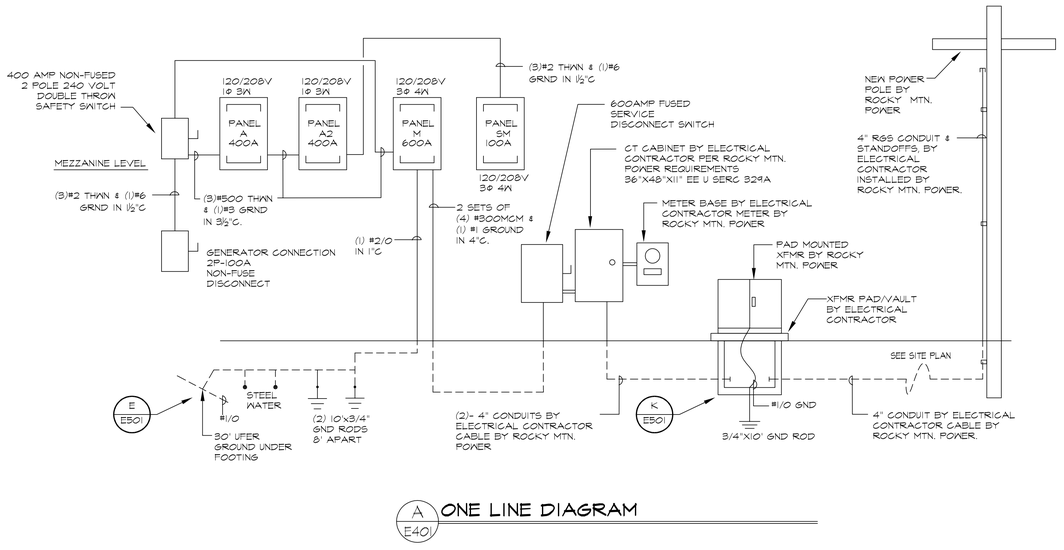

A E401 ONE LINE DIAGRAM

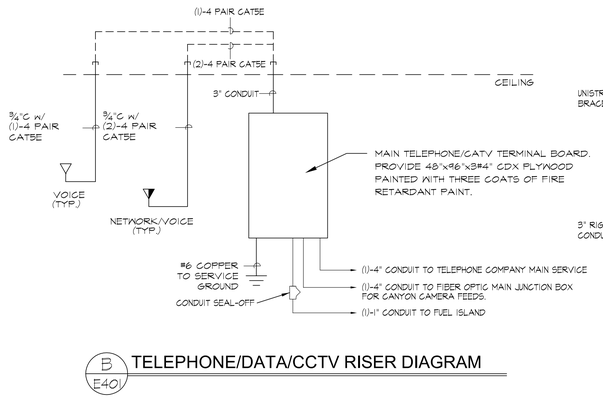

B E401 TELEPHONE/DATA/CCTV RISER DIAGRAM

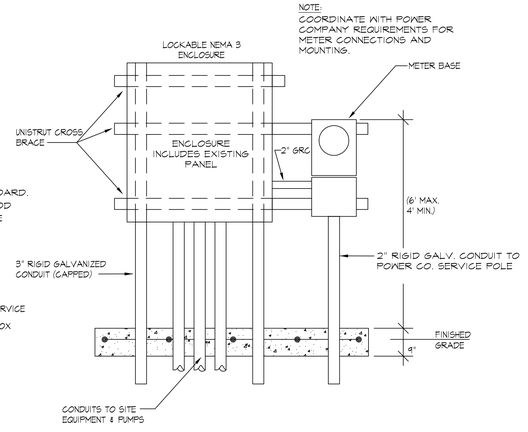

C E401 ELECTRICAL SITE PLAN

CLIENT
UDOT CONNECTING COMMUNITIES
STATION #2434
I-80 E.B. EXIT 134
PARLEY'S CANYON

DESIGNER
ARCHIPLEX GROUP
architecture · planning · design services
255 Crossroad Square
Salt Lake City, UT 84115
P:(801) 961-7070
F:(801) 961-7373

CONSULTANTS
PVE Inc. Consulting Mechanical Electrical Engineers
1040 North 2200 West, Suite 100
Salt Lake City, UT 84116
Phone: (801) 359-3158
Fax: (801) 521-4114

REGISTRATION
No. 154867 DEAN P. LEVORSEN STATE OF UTAH LICENSED PROFESSIONAL ENGINEER

ISSUE

MARK	DATE	DESCRIPTION
	1/2009	CONSTRUCTION DOCUMENTS
	8-20-08	90% REVIEW SUBMITTAL

PROJECT NO:	08105.00.01
DRAWN BY:	J. HUTCHINGS
CHECKED BY:	R.RIDDLE
SCALE:	
DATE:	JANUARY, 2009

KEY PLAN

SHEET TITLE
ELECTRICAL SCHEDULES & RISERS

E401

© 2004 ARCHIPLEX GROUP

By: jhutchings Jan 19, 2009 - 11:10am, X:\Projects\2008\08105.00.01 - Parleys Maint Sta\E401 - 08105.01.dwg

Copyright (C) 2007 by PVE, Inc. Salt Lake City, Utah. All rights reserved. Unauthorized copying and/or use is illegal and subject to prosecution.

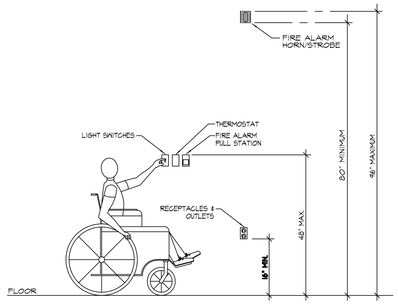

A E501 **MOUNTING HEIGHTS DETAIL**

NOTES:
1. TYPICAL FOR WOOD AND METAL STUD ROUGH IN.
2. PLASTER RINGS NOT SHOWN.
3. LOCATE ALL OUTLET BOXES IN ACCORDANCE WITH ARCHITECTURAL AND MECHANICAL DRAWINGS, AND WITH ALL APPLICABLE SHOP DRAWINGS.
4. IN ACCORDANCE WITH INTERNATIONAL BUILDING CODE OUTLETS ON OPPOSITE SIDES OF WALLS OR PARTITIONS IN THE SAME STUD SPACE MUST BE SEPARATED BY A MINIMUM OF 24" HORIZONTAL DISTANCE.

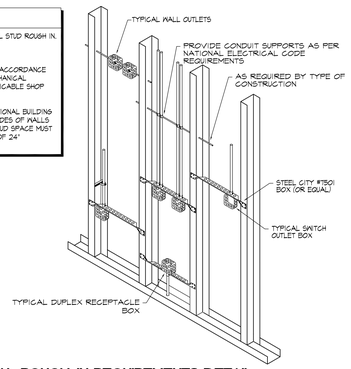

B E501 **TYPICAL ROUGH-IN REQUIREMENTS DETAIL**

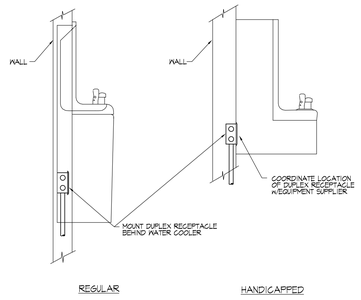

C E501 **ELECTRIC WATER COOLER DETAIL**

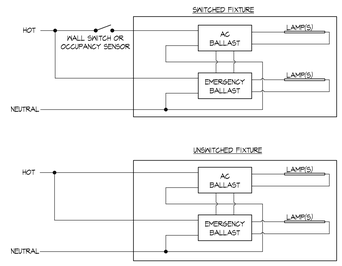

D E501 **EMERGENCY BALLAST OPERATION DETAIL**

NOTE:
WHEN AVAILABLE CONTRACTOR SHALL PROVIDE ALL GROUNDING MEANS INDICATED. CONTRACTOR SHALL REFER TO ELECTRICAL ONE LINE DIAGRAM FOR GROUNDING ELECTRODE CONDUCTOR SIZE. GROUNDING CONDUCTOR SIZE SHOWN ON THE ONE LINE DIAGRAM SHALL BE THE SAME FOR ALL METHODS OF GROUNDING SHOWN IN THIS DETAIL. CONTRACTOR SHALL REFER TO ELECTRICAL SPECIFICATIONS FOR SPECIFICS OF GROUNDING SYSTEM INSTALLATION AND MATERIALS

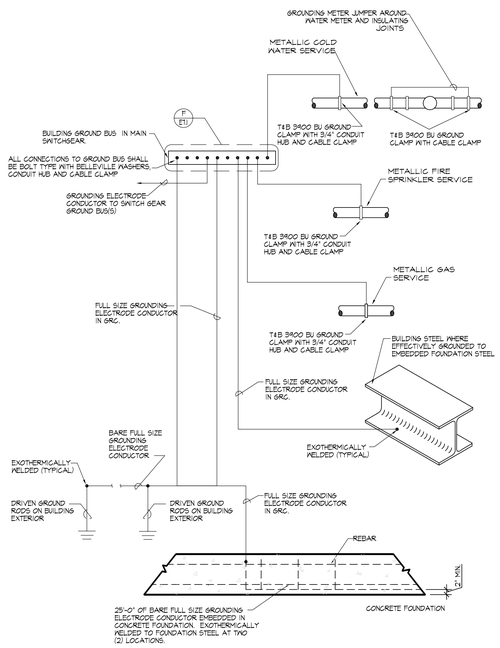

E E501 **SERVICE GROUNDING DETAIL**

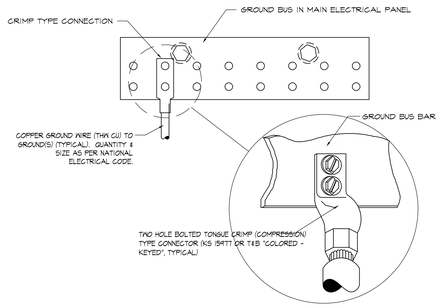

F E501 **SERVICE BUS GROUNDING DETAIL**

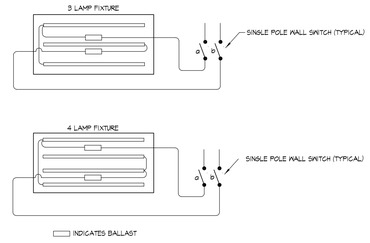

G E501 **DUAL LEVEL SWITCHING DETAIL**

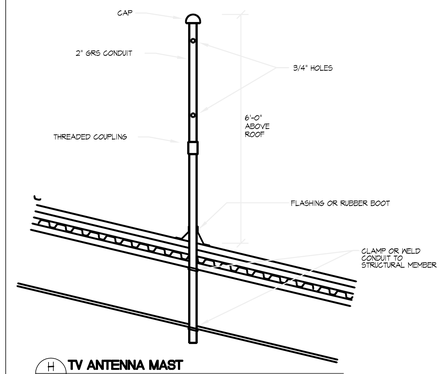

H E501 **TV ANTENNA MAST**

NOTE:
PAD AND VAULT SHALL COMPLY WITH UTAH POWER STANDARD DETAIL REQUIREMENTS. PRE-CAST PAD & VAULT MAY BE PURCHASED FROM "AMCOR" 801-544-1171, OGDEN, UTAH.

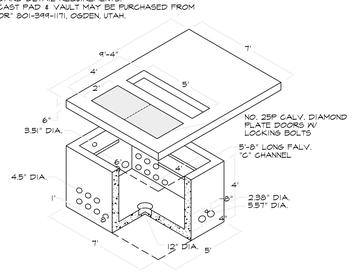

NOTE:
EXCAVATE THE ENTIRE AREA BENEATH THE EQUIPMENT BASE TO ALLOW THE DEPTH REQUIREMENTS ILLUSTRATED BELOW. ALL SOIL BENEATH THE EQUIPMENT BASE SHALL BE COMPACTED AND LEVEL PRIOR TO SETTING OR POURING THE BASE. TO PREVENT SETTLING, THE CUSTOMER SHALL PROVIDE 6 INCHES OF 3/4-INCH-MINUS GRAVEL BACK FILL OR COMPACT THE UNDISTURBED EARTH TO 90 PERCENT OF DRY DENSITY.

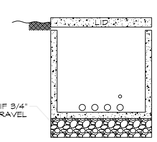

K E501 **TRANSFORMER PAD/VAULT DETAIL**

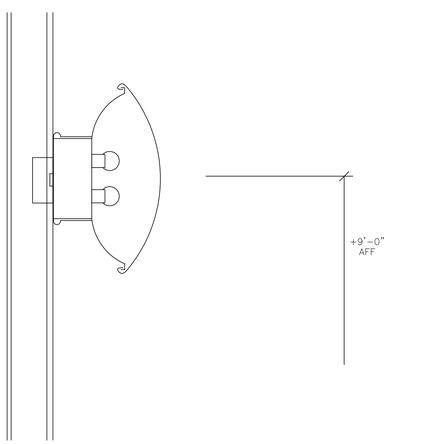

L E501 **LIGHTING FIXTURE DETAIL**

M E501 **NOT USED**

CLIENT
LTDOT CONNECTING COMMUNITIES
STATION #2434
I-80 E.B. EXIT 134
PARLEY'S CANYON

DESIGNER
ARCHIPLEX GROUP
architecture · planning · design services
255 Crossroad Square
Salt Lake City, UT 84115
P:(801) 961-7070
F:(801) 961-7373

CONSULTANTS
PVE Inc. Consulting Mechanical Electrical Engineers
1040 North 2200 West, Suite 100
Salt Lake City, UT 84116
Phone: (801) 359-3158
Fax: (801) 521-4114

REGISTRATION
No. 154867 DEAN P. LEVORSEN STATE OF UTAH

ISSUE

MARK	DATE	DESCRIPTION
	1/2009	CONSTRUCTION DOCUMENTS
	8-20-08	90% REVIEW SUBMITTAL

PROJECT NO:	08105.00.01
DRAWN BY:	J. HUTCHINGS
CHECKED BY:	R.RIDDLE
SCALE:	
DATE:	JANUARY, 2009

KEY PLAN

SHEET TITLE

ELECTRICAL DETAILS

E501

© 2004 ARCHIPLEX GROUP

By: jhutchings; Jan 19, 2009 - 11:04am, X:\Projects\2008\08105.00.01 - Parleys Main Stx\E501 - 08105.01.dwg

Copyright (C) 2007 by PVE, Inc. Salt Lake City, Utah. All rights reserved. Unauthorized copying and/or use is illegal and subject to prosecution.

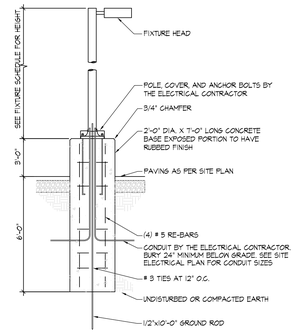

A E502 **POLE BASE DETAIL**

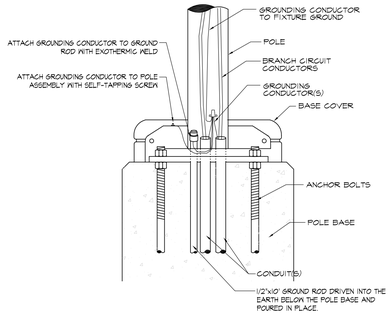

B E502 **ENLARGED POLE BASE DETAIL**

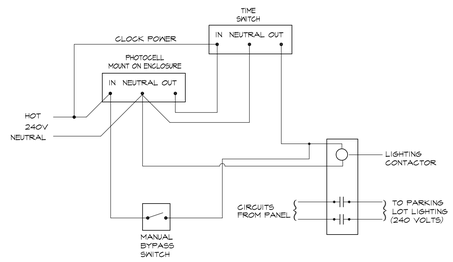

C E502 **PARKING LIGHTING CONTROL DETAIL**

D E502 **NOT USED**

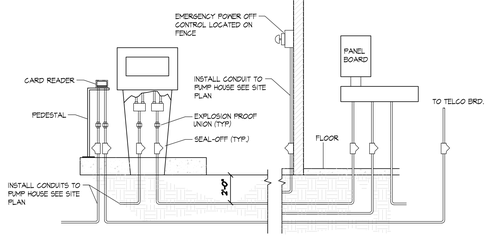

E E502 **FUEL DISPENSER DETAIL**

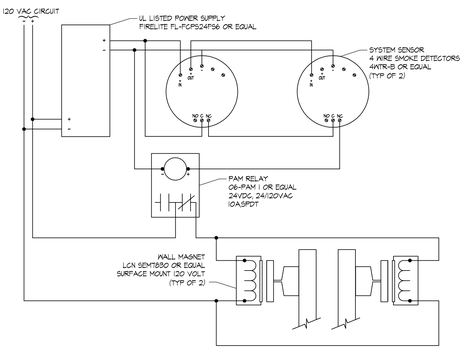

F E502 **SMOKE DOOR CLOSURE DETAIL**

CLIENT

LDOT CONNECTING COMMUNITIES

STATION #2434
I-80 E.B. EXIT 134
PARLEY'S CANYON

DESIGNER

ARCHIPLEX GROUP
architecture · planning · design services
255 Crossroad Square
Salt Lake City, UT 84115
P:(801) 961-7070
F:(801) 961-7373

CONSULTANTS

PVE Inc.
Consulting Mechanical Electrical Engineers
1040 North 2200 West, Suite 100
Salt Lake City, UT 84116
Phone: (801) 359-3158
Fax: (801) 521-4114

REGISTRATION

No. 154867 DEAN P. LEVORSEN STATE OF UTAH REGISTERED PROFESSIONAL ENGINEER

ISSUE

MARK	DATE	DESCRIPTION
	1/2009	CONSTRUCTION DOCUMENTS
	8-20-08	90% REVIEW SUBMITTAL

PROJECT NO:	08105.00.01
DRAWN BY:	J. HUTCHINGS
CHECKED BY:	R.RIDDLE
SCALE:	
DATE:	JANUARY, 2009

KEY PLAN

SHEET TITLE

ELECTRICAL DETAILS

E502

© 2004 ARCHIPLEX GROUP

By: jhutchings, Jan 19, 2009 - 11:04am, X:\Projects\2008\08105.00.01 - Parleys Maint Sta\E501 - 08105.01.dwg

Copyright (C) 2007 by PVE, Inc. Salt Lake City, Utah. All rights reserved. Unauthorized copying and/or use is illegal and subject to prosecution.

COMcheck Software Version 3.5.2
Envelope Compliance Certificate

2006 IECC

Report Date: 10/01/08
Data filename: Untitled.cck

Section 1: Project Information

Project Type: New Construction
Project Title : UDOT Parleys Maintenance Station #2434

Construction Site:	Owner/Agent:	Designer/Contractor:
I-80 E.B. Exit 134 Parleys Canyon Salt Lake city, UT	Utah Department of Transportation	Archiplex Group 255 Crossroad Square South Salt Lake City, UT 84115 (801) 961-7070

Section 2: General Information

Building Location (for weather data): Salt Lake City, Utah
Climate Zone: 5b
Heating Degree Days (base 65 degrees F): 5765
Cooling Degree Days (base 50 degrees F): 3276
Vertical Glazing / Wall Area Pct.: 4%

Activity Type(s)	Floor Area
Transportation	14815

Section 3: Requirements Checklist

Envelope PASSES: Design 44% better than code

Climate-Specific Requirements:

Component Name/Description	Gross Area or Perimeter	Cavity R-Value	Cont. R-Value	Proposed U-Factor	Budget U-Factor
Roof 1: Metal Building, Standing Seam	14815	16.0	0.0	0.065	0.065
Exterior Wall 1: Metal Building Wall	7125	15.0	0.0	0.070	0.057
Window 1: Metal Frame with Thermal Break:Double Pane with Low-E, Tinted, SHGC 0.40	280	—	—	0.293	0.550
Door 1: Insulated Metal, Non-Swinging	2079	—		0.220	1.450
Door 2: Insulated Metal, Swinging	101	—	—	0.150	0.700
Floor 1: Slab On Grade:Unheated	500	—	—	—	

(a) Budget U-factors are used for software baseline calculations ONLY, and are not code requirements.

Air Leakage, Component Certification, and Vapor Retarder Requirements:

- ☐ 1. All joints and penetrations are caulked, gasketed or covered with a moisture vapor-permeable wrapping material installed in accordance with the manufacturer's installation instructions.
- ☐ 2. Windows, doors, and skylights certified as meeting leakage requirements.
- ☐ 3. Component R-values & U-factors labeled as certified.
- ☐ 4. Insulation installed according to manufacturer's instructions, in substantial contact with the surface being insulated, and in a manner that achieves the rated R-value without compressing the insulation.
- ☐ 5. No roof insulation is installed on a suspended ceiling with removable ceiling panels.
- ☐ 6. Stair, elevator shaft vents, and other outdoor air intake and exhaust openings in the building envelope are equipped with motorized dampers.

Exceptions:
Electronic high-frequency ballasts. Luminaires on emergency circuits or with no available pair.

Section 4: Compliance Statement

Compliance Statement: The proposed lighting design represented in this document is consistent with the building plans, specifications and other calculations submitted with this permit application. The proposed lighting system has been designed to meet the 2006 IECC requirements in COMcheck Version 3.5.1 and to comply with the mandatory requirements in the Requirements Checklist.

Joe Hutchings Project Mngr [signature] 10/1/08
Name - Title Signature Date

COMcheck Software Version 3.5.1
Lighting Compliance Certificate

2006 IECC

Report Date: 10/06/08
Data filename: X:\Projects\2008\08105.00.01 - Parleys Maint Sta\Comcheck Energy Compliance Report.cck

Section 1: Project Information

Project Title: UDOT Parleys Maintenance Station #2434

Construction Site:	Owner/Agent:	Designer/Contractor:
I-80 E.B. Exit 134 Parleys Canyon Salt Lake city, UT	Utah Department of Transportation	Archiplex Group 255 Crossroad Square South Salt Lake City, UT 84115 (801) 961-7070

Section 2: General Information

Building Use Description by: Activity Type
Project Type: New Construction

Activity Type(s)	Floor Area
Transportation	14815

Section 3: Requirements Checklist

Interior Lighting:

- ☐ 1. Total proposed watts must be less than or equal to total allowed watts.

Allowed Watts	Proposed Watts	Complies
14815	8674	YES

Controls, Switching, and Wiring:

- ☐ 2. Independent controls for each space (switch/occupancy sensor).
  Exceptions:
  Areas designated as security or emergency areas that must be continuously illuminated.
  Lighting in stairways or corridors that are elements of the means of egress.
- ☐ 3. Master switch at entry to hotel/motel guest room.
- ☐ 4. Individual dwelling units separately metered.
- ☐ 5. Each space provided with a manual control to provide uniform light reduction by at least 50%.
  Exceptions:
  Only one luminaire in space;
  An occupant-sensing device controls the area.
  The area is a corridor, storeroom, restroom, public lobby or sleeping unit.
  Areas that use less than 0.6 Watts/sq.ft.
- ☐ 6. Automatic lighting shutoff control in buildings larger than 5,000 sq.ft.
  Exceptions:
  Sleeping units, patient care areas, and spaces where automatic shutoff would endanger safety or security.
- ☐ 7. Photocell/astronomical time switch on exterior lights.
  Exceptions:
  Lighting intended for 24 hour use.
- ☐ 8. Tandem wired one-lamp and three-lamp ballasted luminaires (no single-lamp ballasts).

COMcheck Software Version 3.5.1
Lighting Application Worksheet

2006 IECC

Report Date:
Data filename: X:\Projects\2008\08105.00.01 - Parleys Maint Sta\Comcheck Energy Compliance Report.cck

Section 1: Allowed Lighting Power Calculation

A Area Category	B Floor Area (ft2)	C Allowed Watts / ft2	D Allowed Watts (B x C)
Transportation	14815	1	14815
		Total Allowed Watts =	14815

Section 2: Proposed Lighting Power Calculation

A Fixture ID : Description / Lamp / Wattage Per Lamp / Ballast	B Lamps/ Fixture	C # of Fixtures	D Fixture Watt.	E (C X D)
Transportation (14815 sq.ft.)				
Linear Fluorescent 1: F1: Industrial Fluorescent / 96" T8 ES 60W / Electronic	2	49	132	6468
Linear Fluorescent 2: F2: Recessed Fluorescent / 48" T8 32W / Electronic	3	15	99	1485
Linear Fluorescent 3: F3: Surface Fluorescent / 48" T8 32W / Electronic	2	11	66	726
Compact Fluorescent 1: F4: Recessed Downlight / Triple 4-pin 26W / Electronic	2	1	55	55
Compact Fluorescent 2: F3: Recessed Downlight / Triple 4-pin 32W / Electronic	1	4	35	140
			Total Proposed Watts =	8874

Section 3: Compliance Calculation

If the Total Allowed Watts minus the Total Proposed Watts is greater than or equal to zero, the building complies.

Total Allowed Watts =	14815
Total Proposed Watts =	8874
Project Compliance =	5941

COMcheck Software Version 3.5.1
Exterior Lighting Compliance Certificate

2006 IECC

Report Date: 10/06/08
Data filename: X:\Projects\2008\08105.00.01 - Parleys Maint Sta\Comcheck Energy Compliance Report.cck

Section 1: Project Information

Project Title: UDOT Parleys Maintenance Station #2434

Construction Site	Owner/Agent:	Designer/Contractor:
I-80 E.B. Exit 134 Parleys Canyon Salt Lake city, UT	Utah Department of Transportation	Archiplex Group 255 Crossroad Square South Salt Lake City, UT 84115 (801) 961-7070

Section 2: Exterior Lighting Area/Surface Power Calculation

A Exterior Area/Surface	B Quantity	C Allowed Watts / Unit	D Tradable Wattage	E Allowed Watts (C x D)	F Proposed Watts
Parking area(s)	78600 ft2	0.15	Yes	11790	8660
		Total Tradable Watts* =		11790	8660
		Total Allowed Watts =		11790	
		Total Allowed Supplemental Watts** =		590	

* Wattage tradeoffs are only allowed between tradable areas/surfaces.
** A supplemental allowance equal to 5% of total allowed wattage may be applied toward compliance of both non-tradable and tradable areas/surfaces.

Section 3: Exterior Lighting Fixture Schedule

A Fixture ID : Description / Lamp / Wattage Per Lamp / Ballast	B Lamps/ Fixture	C # of Fixtures	D Fixture Watt.	E (C X D)
Parking area(s) (78600 ft2): Tradable Wattage				
HID 1: F5: Wall Metal Halide / Metal Halide 250W / Magnetic	1	12	285	3420
HID 2: F6: Wall Metal Halide / Metal Halide 150W / Magnetic	1	5	118	590
HID 3: F7: Wall Metal Halide / Metal Halide 400W / Magnetic	1	6	465	2790
HID 4: SF1: Pole Metal Halide / Metal Halide 400W / Magnetic	1	4	465	1860
			Total Tradable Proposed Watts =	8660

Section 4: Requirements Checklist

Lighting Wattage:

- ☐ 1. Within each non-tradable area/surface, total proposed watts must be less than or equal to total allowed watts. Across all tradable areas/surfaces, total proposed watts must be less than or equal to total allowed watts.
  Compliance: Passes.

Controls, Switching, and Wiring:

- ☐ 2. All exemption claims are associated with fixtures that have a control device independent of the control of the nonexempt lighting.
- ☐ 3. All nonexempt lighting fixtures shall be controlled by a photosensor or astronomical time switch that is capable of automatically turning off the fixture when sufficient daylight is available or the lighting is not required.

Exterior Lighting Efficacy:

CLIENT

UDOT CONNECTING COMMUNITIES
STATION #2434
I-80 E.B. EXIT 134
PARLEY'S CANYON

DESIGNER

ARCHIPLEX GROUP
architecture · planning · design services
255 Crossroad Square
Salt Lake City, UT 84115
P:(801) 961-7070
F:(801) 961-7373

CONSULTANTS

PVE Inc.
Consulting Mechanical Electrical Engineers
1040 North 2200 West, Suite 100
Salt Lake City, UT 84116
Phone: (801) 359-3158
Fax: (801) 521-4114

REGISTRATION

REGISTERED PROFESSIONAL ENGINEER
ALAN D. SPENDLOVE
166911
STATE OF UTAH

ISSUE

MARK	DATE	DESCRIPTION
	1/2009	CONSTRUCTION DOCUMENTS
	8-20-08	90% REVIEW SUBMITTAL

PROJECT NO:	08105.00.01
DRAWN BY:	MJG
CHECKED BY:	ADS
SCALE:	
DATE:	JANUARY, 2009

KEY PLAN

SHEET TITLE

COMPLIANCE CERTIFICATE

COMP101

© 2004 ARCHIPLEX GROUP

By: aspendlove; Jan 21, 2009 - 1:49pm, X:\Projects\2008\08105.00.01 - Parleys Maint Sta\COMM 0.1 - COMM 0.2.dwg

Copyright (C) 2007 by PVE, Inc. Salt Lake City, Utah. All rights reserved. Unauthorized copying and/or use is illegal and subject to prosecution.

4. All exterior building grounds luminaires that operate at greater than 100W have minimum efficacy of 60 lumen/watt.
Exceptions:
Controlled by motion sensor or exempt from consideration under the provisions of Section 505.5.2

Section 5: Compliance Statement

Compliance Statement: The proposed exterior lighting design represented in this document is consistent with the building plans, specifications and other calculations submitted with this permit application. The proposed lighting system has been designed to meet the 2006 IECC requirements in COMcheck Version 3.5.1 and to comply with the mandatory requirements in the Requirements Checklist.

Joe Hutchings Project Mngr — [signature] — 10/1/08
Name - Title — Signature — Date

COMcheck Software Version 3.5.2

Mechanical Compliance Certificate

2006 IECC

Report Date: 10/06/08
Data filename: X:\Projects\2008\08105.00.01 - Parleys Maint Sta\Comcheck Energy Compliance Report.cck

Section 1: Project Information

Project Type: **New Construction**
Project Title : UDOT Parleys Maintenance Station #2434

Construction Site:	Owner/Agent:	Designer/Contractor:
I-80 E.B. Exit 134 Parleys Canyon Salt Lake city, UT	Utah Department of Transportation	Archiplex Group 255 Crossroad Square South Salt Lake City, UT 84115 (801) 961-7070

Section 2: General Information

Building Location (for weather data):	Salt Lake City, Utah
Climate Zone:	5b
Heating Degree Days (base 65 degrees F):	5765
Cooling Degree Days (base 50 degrees F):	3276

Section 3: Mechanical Systems List

Quantity	System Type & Description
2	HVAC System 1: Heating: Duct Furnace, Gas / Cooling: Split System, Capacity <54 kBtu/h, Air-Cooled Condenser / Single Zone
3	HVAC System 2: Heating: Radiant Heater, Gas / Single Zone
3	Instantaneous Water Heater 1: Gas Instantaneous Water Heater, Capacity: 1 gallons, Input Rating: 199000 Btu/h w/ Circulation Pump

Section 4: Requirements Checklist

Requirements Specific To: HVAC System 1 :

- [ ] 1. Equipment minimum efficiency: Duct Furnace (Gas): 80% Ec
- [ ] 2. Equipment minimum efficiency: Split System : 10.0 SEER

Requirements Specific To: HVAC System 2 :

None

Requirements Specific To: Instantaneous Water Heater 1 :

- [ ] 1. Hot water system sized per manufacturer's sizing guide
- [ ] 2. Gas Instantaneous Water Heater efficiency >= 0.67 EF
- [ ] 3. All piping in circulating system insulated
- [ ] 4. Automatic time control of heat tapes and recirculating systems present
- [ ] 5. Controls will shut off operation of circulating pump between water heater/boiler and storage tanks within 5 minutes after end of heating cycle

Generic Requirements: Must be met by all systems to which the requirement is applicable:

- [ ] 1. Load calculations per 2001 ASHRAE Fundamentals
- [ ] 2. Plant equipment and system capacity no greater than needed to meet loads
  - Exception: Standby equipment automatically off when primary system is operating

  - Exception: Multiple units controlled to sequence operation as a function of load
- [ ] 3. Minimum one temperature control device per system
- [ ] 4. Minimum one humidity control device per installed humidification/dehumidification system
- [ ] 5. Thermostatic controls has 5 degrees F deadband
  - Exception: Thermostats requiring manual changeover between heating and cooling
- [ ] 6. Automatic Controls: Setback to 55 degrees F (heat) and 85 degrees F (cool); 7-day clock, 2-hour occupant override, 10-hour backup
  - Exception: Continuously operating zones
  - Exception: 2 kW demand or less, submit calculations
- [ ] 7. Outside-air source for ventilation; system capable of reducing OSA to required minimum
- [ ] 8. R-5 supply and return air duct insulation in unconditioned spaces R-5 supply and return air duct insulation outside the building R-8 insulation between ducts and the building exterior when ducts are part of a building assembly
  - Exception: Ducts located within equipment
  - Exception: Ducts with interior and exterior temperature difference not exceeding 15 degrees F.
  - Exception: Continuously welded and locking-type longitudinal joints and seams on ducts operating at static pressures less than 2 inches w.g. pressure classification
- [ ] 9. Mechanical fasteners and sealants used to connect ducts and air distribution equipment
- [ ] 10. Ducts sealed - longitudinal seams on rigid ducts; transverse seams on all ducts; UL 181A or 181B tapes and mastics
- [ ] 11. Hot water pipe insulation: 1 in. for pipes <=1.5 in. and 2 in. for pipes >1.5 in. Chilled water/refrigerant/brine pipe insulation: 1 in. for pipes <=1.5 in. and 1.5 in. for pipes >1.5 in. Steam pipe insulation: 1.5 in. for pipes <=1.5 in. and 3 in. for pipes >1.5 in.
  - Exception: Piping within HVAC equipment
  - Exception: Fluid temperatures between 55 and 105 degrees F
  - Exception: Fluid not heated or cooled
  - Exception: Runouts <4 ft in length
- [ ] 12. Operation and maintenance manual provided to building owner
- [ ] 13. Balancing devices provided in accordance with IMC 603.15
- [ ] 14. Piping, insulated to 1/2 in. if nominal diameter of pipe is <1.5 in.; Larger pipe insulated to 1 in. thickness
- [ ] 15. Lavatory faucet outlet temperatures in public restrooms limited to 110 degrees F (43 degrees C)
- [ ] 16. Motorized, automatic shutoff dampers required on exhaust and outdoor air supply openings
  - Exception: Gravity dampers acceptable in buildings <3 stories
  - Exception: Gravity dampers acceptable in systems with outside or exhaust air flow rates less than 300 cfm where dampers are interlocked with fan
- [ ] 17. Stair and elevator shaft vents are equipped with motorized dampers

Section 5: Compliance Statement

Compliance Statement: The proposed mechanical design represented in this document is consistent with the building plans, specifications and other calculations submitted with this permit application. The proposed mechanical systems have been designed to meet the 2006 IECC requirements in COMcheck Version 3.5.2 and to comply with the mandatory requirements in the Requirements Checklist.

Alan Spendlove P.E. — [signature] — 10-1-08
Name - Title — Signature — Date

COMcheck Software Version 3.5.2

Mechanical Requirements Description

2006 IECC

Report Date:
Data filename: X:\Projects\2008\08105.00.01 - Parleys Maint Sta\Comcheck Energy Compliance Report.cck

The following list provides more detailed descriptions of the requirements in Section 4 of the Mechanical Compliance Certificate.

Requirements Specific To: HVAC System 1 :

1. The specified heating and/or cooling equipment is covered by the ASHRAE 90.1 Code and must meet the following minimum efficiency: Duct Furnace (Gas): 80% Ec
2. The specified heating and/or cooling equipment is covered by ASHRAE 90.1 Code and must meet the following minimum efficiency: Split System: 10.0 SEER

Requirements Specific To: HVAC System 2 :

None

Requirements Specific To: Instantaneous Water Heater 1 :

1. Service water heating system design loads for the purpose of sizing systems and equipment must be determined in accordance with manufacturers' published sizing guidelines.
2. Service water heating equipment used solely for heating potable water, pool heaters, and hot water storage tanks must meet the following minimum efficiency: Gas Instantaneous Water Heater efficiency >= 0.67 EF
3. Insulation must be provided for recirculating system piping, including the supply and return piping of a circulating tank type water heater.
4. Systems designed to maintain usage temperatures in hot water pipes, such as recirculating hot water systems or heat trace, must be equipped with automatic time switches or other controls that can be set to switch off the temperature maintenance system during extended periods when hot water is not required.
5. When used to maintain storage tank water temperature, recirculating pumps must be equipped with controls limiting operation to the start of the heating cycle to a maximum of 5 minutes after the end of the heating cycle.

Generic Requirements: Must be met by all systems to which the requirement is applicable:

1. Design heating and cooling loads for the building must be determined using procedures in the ASHRAE Handbook of Fundamentals or an approved equivalent calculation procedure.
2. All equipment and systems must be sized to be no greater than needed to meet calculated loads. A single piece of equipment providing both heating and cooling must satisfy this provision for one function with the capacity for the other function as small as possible, within available equipment options.
   - Exception: The equipment and/or system capacity may be greater than calculated loads for standby purposes. Standby equipment must be automatically controlled to be off when the primary equipment and/or system is operating.

     Exception: Multiple units of the same equipment type whose combined capacities exceed the calculated load are allowed if they are provided with controls to sequence operation of the units as the load increases or decreases.
3. Each heating or cooling system serving a single zone must have its own temperature control device.
4. Each humidification system must have its own humidity control device.
5. Thermostats controlling both heating and cooling must be capable of maintaining a 5 degrees F deadband (a range of temperature where no heating or cooling is provided).

   Exception: Deadband capability is not required if the thermostat does not have automatic changeover capability between heating and cooling.
6. The system or zone control must be a programmable thermostat or other automatic control meeting the following criteria:a) capable of setting back temperature to 55 degrees F during heating and setting up to 85 degrees F during cooling;b) capable of automatically setting back or shutting down systems during unoccupied hours using 7 different day schedules;c) have an accessible 2-hour occupant override;d) have a battery back-up capable of maintaining programmed settings for at least 10 hours without power.
   - Exception: A setback or shutoff control is not required on thermostats that control systems serving areas that operate continuously.
   - Exception: A setback or shutoff control is not required on systems with total energy demand of 2 kW (6,826 Btu/h) or less.
7. The system must supply outside ventilation air as required by Chapter 4 of the International Mechanical Code. If the ventilation system is designed to supply outdoor-air quantities exceeding minimum required levels, the system must be capable of reducing outdoor air flow to the minimum required levels.

8. Air ducts must be insulated to the following levels:a) Supply and return air ducts for conditioned air located in unconditioned spaces (spaces neither heated nor cooled) must be insulated with a minimum of R-5. Unconditioned spaces include attics, crawl spaces, unheated basements, and unheated garages.b) Supply and return air ducts and plenums must be insulated to a minimum of R-8 when located outside the building.c) When ducts are located within exterior components (e.g., floors or roofs), minimum R-8 insulation is required only between the duct and the building exterior.
   - Exception: Duct insulation is not required on ducts located within equipment.
   - Exception: Duct insulation is not required when the design temperature difference between the interior and exterior of the duct or plenum does not exceed 15 degrees F.
   - Exception: Continuously welded and locking-type longitudinal joints and seams on ducts operating at static pressures less than 2 inches w.g. pressure classification
9. Mechanical fasteners and seals, mastics, or gaskets must be used when connecting ducts to fans and other air distribution equipment, including multiple-zone terminal units.
10. All joints, longitudinal and transverse seams, and connections in ductwork must be securely sealed using weldments; mechanical fasteners with seals, gaskets, or mastics; mesh and mastic sealing systems; or tapes. Tapes and mastics must be listed and labeled in accordance with UL 181A and shall be marked '181A-P' for pressure sensitive tape,'181A-M' for mastic or '181A-H' for heat-sensitive tape. Tapes and mastics used to seal flexible air ducts and flexible air connectors shall comply with UL 181B and shall be marked '181B-FX' for pressure sensitive tape or '181B-M' for mastic. Unlisted duct tape is not permitted as a sealant on any metal ducts.
11. All pipes serving space conditioning systems must be insulated as follows: Hot water piping for heating systems: 1 in. for pipes <=1 1/2-in. nominal diameter 2 in. for pipes > 1 1/2-in. nominal diameter. Chilled water, refrigerant, and brine piping systems: 1 in. insulation for pipes <= 1 1/2-in. nominal diameter 1 1/2 in. insulation for pipes >1 1/2 in. nominal diameter. Steam piping: 1 1/2 in. insulation for pipes <= 1 1/2-in. nominal diameter 3 in. insulation for pipes >1 1/2 in. nominal diameter.
   - Exception: Pipe insulation is not required for factory-installed piping within HVAC equipment.
   - Exception: Pipe insulation is not required for piping that conveys fluids having a design operating temperature range between 55 degrees F and 105 degrees F.
   - Exception: Pipe insulation is not required for piping that conveys fluids that have not been heated or cooled through the use of fossil fuels or electric power.
   - Exception: Pipe insulation is not required for runout piping not exceeding 4 ft in length and 1 in. in diameter between the control valve and HVAC coil.
12. Operation and maintenance documentation must be provided to the owner that includes at least the following information:a) equipment capacity (input and output) and required maintenance actions;b) equipment operation and maintenance manuals;c) HVAC system control maintenance and calibration information, including wiring diagrams, schematics, and control sequence descriptions; desired or field-determined set points must be permanently recorded on control drawings, at control devices, or, for digital control systems, in programming comments;d) complete narrative of how each system is intended to operate.
13. Each supply air outlet or diffuser and each zone terminal device (such as VAV or mixing box) must have its own balancing device. Acceptable balancing devices include adjustable dampers located within the ductwork, terminal devices, and supply air diffusers.
14. Service hot water piping, where required, must be insulated to 1/2 in. if pipe less than 1.5 in. nominal diameter. Larger pipe must be insulated to 1 in.. Pipe insulation will have a conductivity of less than 0.28 Btu in/(h ft2 degrees F)
15. Temperature controlling means must be provided to limit the maximum temperature of water delivered from lavatory faucets in public facility restrooms to 110 degrees F.
16. Outdoor air supply and exhaust systems must have motorized dampers that automatically shut when the systems or spaces served are not in use. Dampers must be capable of automatically shutting off during preoccupancy building warm-up, cool-down, and setback, except when ventilation reduces energy costs (e.g., night purge) or when ventilation must be supplied to meet code requirements. Both outdoor air supply and exhaust air dampers must have a maximum leakage rate of 3 cfm/ft2 at 1.0 in w.g. when tested in accordance with AMCA Standard 500.

    Exception: Gravity (non-motorized) dampers are acceptable in buildings less than three stories in height.

    Exception: Systems with a design outside air intake or exhaust capacity of 300 cfm (140 L/s) or less that are equipped with motor operated dampers that open and close when the unit is energized and de-energized, respectively.
17. Stair and elevator shaft vents must be equipped with motorized dampers capable of being automatically closed during normal building operation and interlocked to open as required by fire and smoke detection systems. All gravity outdoor air supply and exhaust hoods, vents, and ventilators must be equipped with motorized dampers that will automatically shut when the spaces served are not in use. Exceptions: - Gravity (non motorized) dampers are acceptable in buildings less than three stories in height above grade. - Ventilation systems serving unconditioned spaces.

By: aspendlove; Jan 21, 2009 – 2:00pm, X:\Projects\2008\08105.00.01 – Parleys Maint Sta\COMM 0.1 – COMM 0.2.dwg

CLIENT

UDOT CONNECTING COMMUNITIES
STATION #2434
I-80 E.B. EXIT 134
PARLEY'S CANYON

DESIGNER

ARCHIPLEX GROUP
architecture • planning • design services
255 Crossroad Square
Salt Lake City, UT 84115
P:(801) 961-7070
F:(801) 961-7373

CONSULTANTS

PVE Inc.
Consulting Mechanical Electrical Engineers
1040 North 2200 West, Suite 100
Salt Lake City, UT 84116
Phone: (801) 359-3158
Fax: (801) 521-4114

REGISTRATION

REGISTERED PROFESSIONAL ENGINEER
ALAN D. SPENDLOVE
166911
STATE OF UTAH

ISSUE

MARK	DATE	DESCRIPTION
	1/2009	CONSTRUCTION DOCUMENTS
	8-20-08	90% REVIEW SUBMITTAL

PROJECT NO:	08105.00.01
DRAWN BY:	MJG
CHECKED BY:	ADS
SCALE:	
DATE:	JANUARY, 2009

KEY PLAN

SHEET TITLE

COMPLIANCE CERTIFICATE

COMP201

© 2004 ARCHIPLEX GROUP