State of Utah

JON M. HUNTSMAN, JR.
Governor

GARY R. HERBERT
Lieutenant Governor

Department of Administrative Services
KIMBERLY K. HOOD
Executive Director

Division of Facilities Construction and Management
DAVID G. BUXTON
Director

ADDENDUM #1

Date: February 17, 2009

To: Contractors

From: Michael Ambre, Project Manager, DFCM

Reference: Parleys Maintenance Station #234 Improvements
Utah Department of Transportation - Utah
DFCM Project No. 08211900

Subject: **Addendum No. 1**

Pages	Addendum	1 page
	Revised Schedule	1 page
	Archiplex Group Addendum #1	76 pages
	Total	78 pages

Note: This Addendum shall be included as part of the Contract Documents. Items in this Addendum apply to all drawings and specification sections whether referenced or not involving the portion of the work added, deleted, modified, or otherwise addressed in the Addendum. Acknowledge receipt of this Addendum in the space provided on the Bid Form. Failure to do so may subject the Bidder to Disqualification.

While we contend that SB220 should only be potentially applicable to a contract issued after the effective date of said bill, this is to clarify that for purposes of this contract, regardless of the execution or effective dates of this contract, the status of Utah Law and remedies available to the State of Utah and DFCM, as it relates to any matter referred to or affected by said SB220, shall be the Utah law in effect at the time of the issuance of this Addendum.

1.1 **SCHEDULE CHANGES – There are changes to the project schedule.**
Last Day to Submit Questions – Monday, March 2, 2009 at 4:00 PM
Final Addendum – Wednesday, March 4, 2009 at 2:00 PM
Bid and Bid Bonds Due – Wednesday, March 11, 2009 at 2:00 PM
Subcontractors List Due – Thursday, March 12, 2009 by 2:00 PM

1.2 **GENERAL –** See attached addendum #1 from Archiplex Group.
Supplemental General Conditions can be found on our website at:
DFCM.UTAH.gov
Standard Documents – Reference Documents I - #6 – Supplemental General Conditions.

Utah!
Where ideas connect

	STATE OF UTAH - DEPARTMENT OF ADMINISTRATIVE SERVICES **Division of Facilities Construction and Management**	**DFCM**

REVISED - PROJECT SCHEDULE
PER ADDENDUM #1 – dated February 17, 2009

PROJECT NAME: **PARLEYS MAINTENANCE STATION #234 IMPROVEMENTS**
UTAH DEPARTMENT OF TRANSPORTATION - UTAH
DFCM PROJECT NO. : 08211900

Event	Day	Date	Time	Place
Document Available, including Plans and Specifications	Wednesday	February 4, 2009	4:00 PM	DFCM 4110 State Office Building SLC, UT and DFCM web site*
Mandatory Pre-Submittal Meeting	Tuesday	February 10, 2009	10:30 AM	UDOT – Station #234 (East Canyon Exit I–80)
Last Day to Submit Questions on Shortlisting (In Writing)	Thursday	February 12, 2009	4:00 PM	Michael Ambre- DFCM E-mail mambre@utah.gov
Addendum on Shortlisting	Tuesday	February 17, 2009	2:00 PM	DFCM web site*
List of References, Statement of Qualifications, Project Management Plan, and Termination/Debarment Certification Due	Thursday	February 19, 2009	12:00 NOON	DFCM 4110 State Office Building SLC, UT
Interviews by Selection Committee (if necessary)	Tuesday	February 24, 2009	To Be Announced	DFCM 4110 State Office Building
Short-List Announced	ASAP			
Notice: Only Short-Listed Firms Will Be Allowed To Bid On This Project				
Last Day to Submit Questions (In Writing)	**Monday**	**March 2, 2009**	**4:00 PM**	Michael Ambre - DFCM E-mail mambre@utah.gov Fax 538-3677
Final Addendum (exception for bid delays)	**Wednesday**	**March 4, 2009**	**2:00 PM**	DFCM web site*
Prime Contractors Turn in Bid and Bid Bond/Bid Opening in DFCM Conference Room	**Wednesday**	**March 11, 2009**	**2:00 PM**	DFCM 4110 State Office Building SLC, UT
Subcontractors List Due	**Thursday**	**March 12, 2009**	**2:00 PM**	DFCM 4110 State Office Building SLC, UT Fax (801)-538-3677
Project Completion Date	Friday	September 25, 2009	5:00 PM	

*** DFCM's web site address is http://dfcm.utah.gov**

DFCM FORM 1a 113006

Addendum #1

DATE: February 17, 2009

DFCM Project No.: 08211900
Archiplex Group Project No.: 0728.02

ADDENDUM NO. 1 to the Contract Documents for the Construction of UDOT Maintenance Station #2434, Parleys Canyon, Utah.

The contents of this addendum supercede the information contained in the original Contract Documents and are hereby incorporated therein. Unless otherwise so stated, any changes herein offset only the specific drawings, words, or paragraphs mentioned, and the balance of the drawings and specifications remain in full force.

A. DESCRIPTION OF ADDENDUM ITEMS:

1. General Information:

a. The Bidders are responsible for delivering a completed project to the State of Utah including all utility and service connections. The total cost of providing these connected items is the responsibility of the Bidder.

2. Civil Addendum Items:

Sheet C100:

a. Removed existing irrigation valve.
b. Modified Note #6.

Sheet C200:

a. Added Dumpster pad size.
b. Added Card reader pad size.
c. Removed existing irrigation valve.
d. Removed light pole from Sander Rack location.
e. Added TBC curve and line tables.
f. Revised Sidewalk @ gas meter.
g. Revised Holding tank & manhole note.
h. Modified Note #6

Sheet C300:

a. Modified retaining wall construction note #3.
b. Modified East Sidewalk layout.

Sheet C301:

a. Modified typical wall section.

b. Modified East Sidewalk layout.

Sheet C302:

a. Added proposed contour lines and legend.

Sheet C500:

a. Added concrete paving design for dumpster & card reader pad.
b. Reversed section A-A callout.
c. Revised Section A-A.
d. Added note to clarify location of retaining wall.

Sheet C501:

a. Added Holding Tank Detail.

Sheet L101:

a. Removed “quantities are estimates only” note.

3. Architectural Addendum Items:

Sheet G000:

a. Revised General Note #1.
b. Updated ADA Accessibility Guidelines as Per ANSI A117.1-2003
c. Revised Occupant Load

Sheet G001:

a. Deleted from index of drawings sheets COMP101 & COMP102.
b. Added Sheet AE100 to Index.
c. Added Sheet P301 to Index.

Sheet G002:

a. Added additional keynotes as indicated.

Sheet AE100:

a. Added Occupant floor plan as per Code Official request.

Sheet AE101:

a. Revised floor plan to show dual height drinking fountain with alcove.
b. Revised sidewalk at East side of building for Gas Meter clearances.

Sheet AE201:

a. Change retaining wall construction from Cultured Stone to colored concrete with form liner.
b. Added color selection for roof, rain gutters, downspouts and 2 colors of cmu.
c. Changed color “B” cmu to split face CMU.
d. Revised locations of CMU Color Change

Sheet AE301:

a. Changed Keynote 07210.B1 to 07210.C0.
b. Revised sections to reflect change in drinking fountain.

Sheet AE401:

a. Revised enlarged plan to reflect Bi-level drinking fountain.
b. Revised detail B2/AE401.

Sheet AE402:

a. Changed Keynote 07210.B1 to 07210.C0

Sheet AE403:

a. Revised B3 & C3 to reflect Bi-level drinking fountain revision.
b. Added detail reference to show handrail connection to vertical pipe.

Sheet AE501:

a. Added new wall type “K”.

Sheet AE502:

a. Revised detail C3 to show spreader bar as per code official request.

Sheet AE503:

a. Revised Details A4, A5, A6 & B6.
b. Revised Keynote Legend

Sheet AE602:

a. Revised window type “WB” to provide tempered glazing at office window.

4. Structural Addendum items:

Sheet SJ001:

a. Modified required compressive strength of concrete
b. Updated note 9a of the concrete section to reference the IBC
c. Clarified ground anchor requirements.
d. Clarified deferred submittal requirements.

Sheet SB101:

a. Decreased spacing of ground anchors and reduced required capacity.

Sheet SF101:

a. Modified drilled pier size in detail C1.

Sheet SF111:

a. Modified roof joist loads.
b. Modified masonry column and lintel grid 1.

Sheet SF601:

a. Added ML-48a to schedule.
b. Clarified call out of MC-16a.

5. Mechanical Addendum items:

Sheet M001:

a. Added General Note #24

6. Plumbing Addendum items:

Sheet P001:

a. Added bi-level drinking fountain to Plumbing Schedule.
b. Added General Note #24

Sheet P201:

a. Revised note 26 to coordinate new holding tank size with Civil Drawings.

Sheet P301:

a. Added sheet to show Gas Line Isometric as requested by Code Official.

7. Electrical Addendum items:

Specifications General Note:

a. No conduits shall be supported directly from the metal deck. All conduits shall be supported from the structural steel and be run parallel or perpendicular to the structure
b. Electrical conduits that occur close to the metal deck, shall maintain a minimum clearance of 1 ½" as required in NEC Article 300.4 (E).

Sheet E102:

a. The location of the fuel dispensing disconnect or Emergency Power Off device shall be located greater than 20'-0" but less than 100'-0" from the fuel dispenser as required per NEC Article 514.11 (C)
b. Relocate the Site Lighting Fixture SF-1 currently located south of the Fuel Island to the Fuel Island as shown on the Architectural and Civil drawings. Provide concrete base as detailed and provide necessary seal-offs in the conduits as required for a Class 1 Division 1 hazardous location.

B. <u>ATTACHMENTS</u>:

Specifications:

1. Table of Contents – Re-issue entire Section.
2. 02050 – Re-issue Page 1
3. 03053 – Re-issue Page 1
4. 03055 – Re-issue Page 1
5. 07410 – Re-issue entire Section
6. 07729 – Re-issue Page 1
7. 15491 – Re-issue entire Section
8. 15820 – Re-issue entire Section
9. ComCheck Reports

ARCHIPLEX GROUP

C. NEW DRAWING LIST:

1. AE100 Occupant Floor Plan
2. P301 Isometric Natural Gas Diagram

D. REISSUED DRAWING LIST:

1. G000 Cover Sheet
2. G001 General Notes, Abbreviations, Legends and Drawing Index
3. G002 Master Keynote List
4. C100 Demolition Plan
5. C200 Site & Utility Plan
6. C300 Grading & Drainage Plan
7. C301 Retaining Wall Plan & Profile
8. C302 Sander Rack Plan & Profile
9. C500 Typical Sections & Details
10. C501 Typical Sections & Details
11. L101 Landscape Notes & Schedule
12. AE100 Occupant Floor Plan
13. AE101 Level 1 & 2 Floor Plans
14. AE201 Exterior Elevations
15. AE301 Building Sections
16. AE401 Enlarged Restroom Floor Plan, Int. Elevations & Details
17. AE402 Enlarged Maintenance Bay and Interior Elevations.
18. AE403 Stair Plan, Sections, Elevations and Details
19. AE501 Wall Types
20. AE502 Signage and Misc. Details
21. AE503 Misc. Details
22. AE602 Window Frames, Types, Glazing, Finish Schedules & Details
23. SJ001 General Structural Notes
24. SB101 Footing and Foundation Plan
25. SF101 Out Building Plans and Details
26. SF111 Roof Framing Plan
27. SF601 Schedules
28. M001 Mechanical Schedules
29. P001 Plumbing Schedules
30. P201 Plumbing Floor Plan

TABLE OF CONTENTS

DOCUMENTS
COVER SHEET
PROFESSIONAL STAMPS
LIST OF WARRANTIES
TABLE OF CONTENTS

TECHNICAL SPECIFICATIONS

DIVISION 1 - GENERAL REQUIREMENTS

01010 SUMMARY OF WORK
01027 APPLICATIONS FOR PAYMENT
01035 MODIFICATION PROCEDURES
01040 PROJECT COORDINATION
01045 CUTTING AND PATCHING
01050 FIELD ENGINEERING
01095 REFERENCE STANDARDS AND DEFINITIONS
01096 MATERIAL KEYNOTE LEGEND
01200 PROJECT MEETINGS
01300 SUBMITTALS
01400 QUALITY CONTROL SERVICES
01500 TEMPORARY FACILITIES
01600 MATERIALS AND EQUIPMENT
01631 PRODUCT SUBSTITUTIONS
01700 PROJECT CLOSEOUT
01740 WARRANTIES AND BONDS

DIVISION 2 - SITEWORK

02050 DEMOLITION
02051 GENERAL SITE CONSTRUCTION REQUIREMENTS
02110 SITE CLEARING
02200 EARTHWORK
02513 ASPHALT CONCRETE PAVING
02514 PORTLAND CEMENT CONCRETE PAVING
02530 SANITARY SEWERAGE
02666 POTABLE WATER SYSTEMS
02720 STORM SEWERAGE SYSTEMS
02765 PAVEMENT MARKINGS
02822 CHAIN LINK FENCES AND GATES
02831 HORIZONTAL SLIDING GATE OPERATORS

DIVISION 3 - CONCRETE

03052 CONCRETE WATERPROOFING SYSTEM
03053 CONCRETE WATERPROOFING ADMIXTURE
03054 OLIOPHOBIC SEALER
03055 SALT GUARD
03300 CAST-IN-PLACE CONCRETE

DIVISION 4 – MASONRY

04200 UNIT MASONRY
04720 CULTURED STONE

DIVISION 5 - METALS

05120 STRUCTURAL STEEL
05220 STEEL JOISTS AND JOIST GIRDERS
05310 STEEL DECK
05400 COLD-FORMED METAL FRAMING
05500 METAL FABRICATIONS
05510 METAL STAIRS
05521 PIPE AND TUBE RAILINGS
05530 GRATINGS

DIVISION 6 - WOOD AND PLASTICS

06105 MISCELLANEOUS CARPENTRY
06402 INTERIOR ARCHITECTURAL WOODWORK
06651 SOLID SURFACE FABRICATIONS

DIVISION 7 - THERMAL AND MOISTURE PROTECTION

07110 SHEET MEMBRANE WATERPROOFING SYSTEM
07190 WATER REPELLENTS
07210 BUILDING INSULATION
07410 MANUFACTURED ROOF PANELS, GUTTTER & FLASHING
07729 ROOF SNOW GUARDS
07841 PENETRATION FIRESTOPPING
07901 JOINT SEALANTS

DIVISION 8 - DOORS AND WINDOWS

08111 STANDARD STEEL DOORS AND FRAMES
08360 SECTIONAL OVERHEAD DOORS
08521 HORIZONTAL SLIDING VINYL WINDOWS (PVC)
08710 DOOR HARDWARE
08800 GLAZING

DIVISION 9 - FINISHES

09255 GYPSUM BOARD ASSEMBLIES
09300 TILE
09511 ACOUSITCAL PANEL CEILINGS
09660 RESILIENT TILE FLOORING
09678 RESILIENT WALL BASE AND ACCESSORIES
09900 PAINTING

DIVISION 10 - SPECIALTIES

10100 VISUAL DISPLAY BOARDS
10155 TOILET PARTITIONS
10425 SIGNS
10500 METAL LOCKERS AND STORAGE CABINETS
10522 FIRE EXTINGUISHERS, CABINETS, AND ACCESSORIES
10800 TOILET AND BATH ACCESSORIES

DIVISION 11 - EQUIPMENT

11151 MOBILE LIFT

DIVISION 12 - FURNISHINGS

12511 HORIZONTAL LOUVER BLINDS

DIVISION 13 – SPECIAL CONSTRUCTION

13100 FUEL ISLAND REQUIREMENTS

DIVISION 14 - CONVEYING SYSTEMS

14620 TROLLEY HOISTS

DIVISION 15 - MECHANICAL

15000 GENERAL MECHANICAL
15050 BASIC MATERIALS & METHODS
15060 PIPE AND PIPE FITTINGS
15170 MOTORS
15180 PIPE AND EQUIPMENT IDENTIFICATION
15191 AIR SYSTEM TESTING AND BALANCING
15200 VIBRATION, NOISE CONTROL AND SEISMIC PROTECTION
15250 INSULATION
15251 HOT WATER AND COLD WATER PIPE INSULATION
15258 DUCT INSULATION
15400 PLUMBING SYSTEMS
15410 PLUMBING FIXTURES
15411 HOT AND COLD WATER SYSTEMS AND DRAIN PAN PIPING SYSTEMS
15412 EMERGENCY PLUMBING FIXTURES
15413 SOIL, WASTE AND VENT PIPING SYSTEM
15452 DRINKING WATER COOLING SYSTEM
15455 DOMESTIC WATER CONDITIONING EQUIPMENT
15486 FUEL FIRED WATER HEATERS
15490 WASTE OIL PIPING
15491 LUBRICATION EQUIPMENT
15576 FLUES
15577 FURNACE AIR PIPING
15600 RADIANT TUBE HEATERS
15611 GAS-FIRED FURNACES AND HEATERS
15670 CONDENSING UNITS
15820 DUCT ACCESSORIES
15838 POWER VENTILATORS

15855 DIFFUSERS, REGISTERS, AND GRILLES
15861 STEEL DUCTWORK
15862 ROUND DUCTWORK
15867 DUCTWORK TESTING
15887 LOUVERS AND VENTILATORS
15970 CONTROL SYSTEMS
15985 SEQUENCE OF OPERATION

DIVISION 16 - ELECTRICAL

16001 ELECTRICAL GENERAL PROVISIONS
16060 GROUNDING AND BONDING
16070 ELECTRICAL HANGERS AND SUPPORTS
16123 BUILDING WIRE AND CABLE
16128 LOW VOLTAGE DE-ICING / SNOW MELTING SYSTEM
16129 ELECTRICAL HEAT ROOF GUTTER MELT SYSTEM
16130 RACEWAY AND BOXES
16140 WIRING DEVICES GENERAL
16210 ELECTRICAL UTILITY SERVICES
16411 ENCLOSED SWITCHES
16421 ENCLOSED CONTROLLERS
16442 PANELBOARDS
16510 INTERIOR LUMINAIRES
16520 EXTERIOR LUMINAIRES
16740 TELEPHONE/DATA RACEWAY SYSTEMS

GEOTECHNICAL REPORT

COMCHECK REPORTS

SECTION 02050 – DEMOLITION

PART 1 - GENERAL

1.1 SUMMARY:

A. Section includes requirement for demolition work.
   1. Verify existing utilities to be removed as well as site features to be demolished with owner and engineer.

B. Demolition includes, but is not limited to, the removal of the following items within the demolition limit lines:
   1. Sidewalks
   2. Curb and Gutter
   3. Paving
   4. Concrete Slabs
   5. Sod, Lawn and all irrigated wet soils
   6. Underground Structures including Septic Tanks, vaults, Basements, footings, foundation walls, and above ground buildings.
   7. Fencing

C. Related Sections
   1. Refer to Section 02200 for earthwork requirements.

D. Drawings and general provisions of contract, including general and supplementary Conditions and site clearing specifications apply to work in this section.

1.2 SUBMITTALS:

A. Schedule: Submit proposed methods and operations of demolition to review prior to start of work. Include in schedule coordination for shut-off, capping, and continuation of utility services as required.

B. Explosives: The use of explosives is not permitted.

C. Traffic: Conduct demolition operations and removal of debris to ensure minimum interference with roads, streets, walks, and other adjacent occupied or used facilities.
   1. Do not close or obstruct streets, walks or other occupied or used facilities without permission from authorities having jurisdiction. Provide alternate routes around closed or obstructed traffic ways if required by governing regulation.

D. Protections: Ensure safe passage of persons around area of demolition. Conduct operations to prevent injury to adjacent buildings, structures, other facilities, and persons.
   1. Erect temporary covered passageways as required by authorities having jurisdiction.
   2. Provide interior and exterior shoring, bracing, or support to prevent movement, settlement or collapse of structures to be demolished and adjacent facilities to remain.

E. Damage: Promptly repair damage caused to adjacent facilities by demolition operations.
   1. Do not interrupt existing utilities serving occupied or used facilities, except when authorized in writing by authorities having jurisdiction. Provide temporary services during interruptions to existing utilities, as acceptable to governing authorities.

F. Hazardous Materials Removal:
   1. When hazardous materials are encountered, notify the Owner immediately. Comply

SECTION 03053 – CONCRETE WATERPROOFING ADMIXTURE

PART 1 - GENERAL

1.1 DESCRIPTION

A. SECTION INCLUDES:

1. This section specifies an integral concrete waterproofing system of the slab on grade, wall curbs, and stem walls of the facility. This system utilizes a concrete densifier and sealer in an admixture Floor Treatment: A combination of chemicals that produces complete hydration resulting in a denser cement paste that produces an impermeable concrete that is hard non-dusting and safe for portable water.

2. This section includes: Furnishing of all labor, materials, services and equipment necessary for the supply and installation of waterproofing placement as indicated on drawings and as specified. Related Work: Documents affecting work of this Section include, but are not necessarily limited to: General Conditions, Supplementary Conditions, and Sections in Division 1 of these specifications.

3. This section includes: provision of concrete curing, hardening, and sealing and cleaning of concrete surface.

B. RELATED SECTIONS:

1. Section 03300 – Cast In Place Concrete
2. Section 03054 – Oliphobic Sealer
2. Section 07901 - Caulking and Sealants

C. Contractor may use Specification section 03052 in place of this Specification. Either section has been provided for the Contractors choice/preference.

1.2 QUALITY ASSURANCE:

A. Use adequate numbers of skilled workmen who are thoroughly trained and experienced in the necessary crafts, and who are completely familiar with the specified requirements and the methods needed for proper performance of the work of this section.

B. No satisfactory chemical or cleaning procedure is available to remove petroleum stains from the concrete surface. Prevention is therefore essential.

1. All hydraulic powered equipment must be diapered to avoid staining of the concrete.

2. No trade will park vehicles on the inside slab. If necessary to complete their scope of work, drop cloths will be placed under vehicles at all times.

3. No pipe cutting machine will be used on the inside floor slab.

4. Steel will not be placed on interior slab to avoid rust staining.

1.3 SUBMITTALS

SECTION 03055 – SALT AND WATER BARRIER FOR EXTERIOR CONCRETE

PART 1 GENERAL

1.1 SECTION INCLUDES

A. Furnishing of all labor, materials, services and equipment necessary for the supply and application of Salt and Water barrier applied to exterior concrete slabs. Documents affecting work of this section include, but are not limited to General Conditions, Supplementary conditions and Sections of Divion 1 of these specifications.

1.2 QUALITY ASSURANCE

A. Use adequate numbers of skilled workmen who are thoroughly trained and experienced in the necessary crafts, and who are completely familiar with the specified requirements and the methods needed for proper performance of the work in this section.

1.3 SUBMITTALS

A. Comply with pertinent provisions of Section 01300.
B. Product data: Within 35 calendar days after the contractor has received the owner's notice to proceed, submit the following material:

1. Materials list of items proposed to be provided under this section.
2. Manufacturer's specifications, test data and other data required to prove compliance with the specified requirements.
3. Manufacturer's recommended installation procedures which, when approved by the Architect, will become the basis for accepting or rejecting actual installation procedures used on the work.

1.4 PRODUCT HANDLING:

A. Protect the materials of this Section before and after installation. Protect the work and materials of all other trades.
B. In the event of damage, immediately make replacements and repairs to the approval of the Architect and at no additional cost to the owners.
C. Store materials in clean, dry area in accordance with manufacturer's instructions. Keep containers sealed until ready for use. Keep from freezing.
D. Safety – Use approved safety glasses, rubber gloves, coveralls and work boots. Protect animals, vegetation and food items. Refer to the Material Safety Data Sheet (MSDS) for details.

PART 2 PRODUCTS

2.1 MANUFACTURER

A.

a. Basis of Design:. Consolideck SatlGuard manufactured by PROSOCO, Inc., 3741 Greenway Circle, Lawrence, KS 66046. Phone: (800) 255-4255; Fax: (785) 830-9797. E-Mail: Customercare@prosoco.com.

b. Or pre-approved equal.

B. Product Description: A general-purpose silane / siloxane water repellent and chloride screen for concrete and masonry which protects horizontal and vertical surfaces from moisture

SECTION 07410 - MANUFACTURED ROOF PANELS, GUTTER & FLASHING

PART 1 - GENERAL

1.1 RELATED DOCUMENTS

A. Drawings and general provisions of Contract, including General and Supplementary Conditions and Division 1 Specification Sections, apply to this Section.

1.2 SUMMARY

A. This Section includes manufactured roof panels and accessories of the following type:

1. Standing seam roof panels to be machine seamed.
2. Fascias, copings, flashing, gutters, downspouts and other miscellaneous roof accessories.

B. Related Sections: The following sections contain requirements that relate to this Section:

1. Division 5 Sections for Structural Steel and Cold-Formed Metal framing.
2. Division 6 Section “Miscellaneous Carpentry
2. Division 7 Section "Building Insulation" for roof and wall insulation.
3. Division 7 Section "Joint Sealants" for field-applied panel sealants.
4. Division 7 Section “Roof Snow Guards.
5. Division 16 Section “Snow Melting System.

1.3 SYSTEM PERFORMANCE REQUIREMENTS

A. Provide certified test results by a recognized testing laboratory or agency in accordance with specified test methods for each system.

B. Conform to SMACNA Architectural Sheet Metal Manual for sizing components for rainfall intensity determined by a storm occurrence of 1 in 5 years.

1.4 REFERENCE STANDARDS

A. AAMA 2604 - Voluntary Specification, Performance Requirements and Test Procedures for High Performance Organic Coatings on Aluminum Extrusions and Panels; 2005.

B. ASTM A 653/A 653M - Standard Specification for Steel Sheet, Zinc-Coated (Galvanized) or Zinc-Iron Alloy-Coated (Galvannealed) by the Hot-Dip Process; 2007.

C SMACNA (ASMM) - Architectural Sheet Metal Manual; Sheet Metal and Air Conditioning Contractors' National Association; 2003.

D. AAMA 2603 - Voluntary Specification, Performance Requirements and Test Procedures for Pigmented Organic Coatings on Aluminum Extrusions and Panels; 2002

1.5 SUBMITTALS

A. General: Submit the following in accordance with Conditions of Contract and Division 1 Specification Sections.

B. Product data including manufacturer's product specifications, standard details, certified product test results, installation instructions, and general recommendations, as applicable to

materials and finishes for each component and for total panel system.

C. Samples for initial selection purposes in form of manufacturer's color charts or chips showing full range of colors, textures, and patterns available for roof panels with factory-applied finishes.

D. Shop Drawings showing layouts of panels on roofs, wall, details of edge conditions, joints, corners, panel profiles, supports, anchorages, trim, flashings, closures, and special details. Distinguish between factory and field assembly work.

1.6 QUALITY ASSURANCE

A. Wind Uplift: Provide roof panel system including supports meeting requirements of Underwriters Laboratories, Inc. for Class 90 wind uplift resistance UL 580, Fourth Edition for the construction specified.

B. Field Measurements: Where possible, prior to fabrication of panels, take field measurements of structure or substrates to receive panel system. Allow for trimming panel units where final dimensions cannot be established prior to fabrication.

C. Perform work in accordance with SMACNA Architectural Sheet Metal Manual requirements and standard details, except as otherwise indicated.

1.7 WARRANTY

A. Finish Warranty: Furnish panel manufacturer's written warranty covering failure of the factory-applied exterior finish on metal roof panels within the warranty period. This warranty shall be in addition to and not a limitation of other rights the End User may have against the Contractor under the Contract Documents.
1. Warranty period for factory-applied exterior finishes on roof panels is 20 years after the date of Substantial Completion.
2. In addition to the Guarantee required by the General Conditions, the installer/supplier shall provide a 5 year material and labor guarantee against leaks or other failures in the preformed roofing panel system.

1.7 DELIVERY, STORAGE AND HANDLING

A. Stack material to prevent twisting, bending, or abrasion, and to provide ventilation. Slope to drain.

B. Prevent contact with materials that could cause discoloration, staining, or damage.

PART 2 - PRODUCTS

2.1 MANUFACTURERS

A. Available Manufacturers: Subject to compliance with requirements, manufacturers offering metal roof panel systems that may be incorporated in the work include:
1. Steel Roof Panels:
a. Galvalume (BEIC International)
b. BHP Steel Building Products USA Inc.
c. Metal Buildings Components Inc. (MBCI)
d. Or, Approved Equal

2. Gutters and Downspouts:

a. ATAS International, Inc; www.atas.com.
b. Cheney Flashing Company; www.cheneyflashing.com.
c. Perimeter Systems; www.perimeter-systems.com.
d. Substitutions: See Section 01631 - Product Substitutions.

2.2 MATERIALS

A. Roof Panel: Commercial Quality Galvanized Steel Sheet: Comply with ASTM A 526 with G90 coating complying with ASTM A 525.

B. Gutters & Downspouts: Pre-Finished Galvanized Steel Sheet: ASTM A 653/A 653M, with G90/Z275 zinc coating; minimum 0.02 inch (0.6 mm) thick base metal.
1. Finish: Shop pre-coated with modified silicone coating.
2. Color: As scheduled.

C. Flashing: Pre-Finished Galvanized Steel: ASTM A 653/A 653M, with G90/Z275 zinc coating; minimum 0.02 inch (0.6 mm) thick base metal, shop pre-coated with modified silicone coating.
1. Modified Silicone Polyester Coating: Pigmented Organic Coating System, AAMA 2603; baked enamel finish system; color as scheduled.

2.3 ROOF PANELS

A. Structural Standing-Seam Roof Panels: Manufacturer's standard panels complying with the following:

1. Ribbed Roof Panels: Fabricate from galvanized unpainted alloy coated steel sheets, factory formed to provide 24-inch coverage; with 3-inch high (including seam), raised trapezoidal major ribs at panel edges, and intermediate stiffening ribs symmetrically spaced between major ribs for full length of panel with concealed fasteners as manufactured by MBCI, Model Double-Lok or prior approved equal. Comply with the following:

a. Material: Zinc-Coated (Galvanized) Steel Sheet ASTM A 653/A 653M, G90 coating designation; structural quality.
b. Yield Strength: 50 ksi.
c. Metal Thickness: 0.0239 inch minimum (24 gauge)
d. Joint Type: Folded, mechanically seamed type.
e. Surface: Smooth, flat, mill finish.
f. Clip System: Floating to accommodate thermal movement (high clip system).

B. Roof Panel Accessories: Provide components required for a complete roof panel assembly including trim, copings, fasciae, mullions, sills, corner units, ridge closures, clips, seam covers, battens, flashings, gutters, sealants, gaskets, fillers, closure strips, and similar items. Color to be selected by Architect.

1. Closures: Provide closures at eave and ridge, fabricated of same metal and color as roof panels.
2. Clips: Minimum 0.0625-inch thick, stainless-steel panel clips designed to withstand negative-load requirements.
3. Cleats: Mechanically seamed cleats formed from minimum 0.0250-inch thick, stainless-steel or nylon-coated aluminum sheet.
4. Backing Plates: Provide metal backing plates at panel end splices, fabricated from material recommended by manufacturer.

C. Exterior Finish: Apply the following coil coating:

1. Silicone Polyester Two-Coat System: Manufacturer's standard two-coat, thermocured system consisting of specially formulated inhibitive primer and siliconized polyester color topcoat containing not less than 75 percent polyvinylidene fluoride resin by weight, with a total minimum dry film thickness of 1 mil and 30 percent reflective gloss when tested according to ASTM D 523.
   a. Durability: Provide coating field tested under normal range of weather conditions for a minimum of 20 years without significant peel, blister, flake, chip, crack, or check in finish; without chalking in excess of a chalk rating of 8 according to ASTM D 4214; and without fading in excess of five Hunter units.

2. Colors, Textures, and Glosses: As selected by Architect from manufacturer's full range for these characteristics.

D. Concealed Finish: Apply pretreatment and manufacturer's standard white or light-colored backer finish, consisting of prime coat and wash coat with a total minimum dry film thickness of 0.5 mil.

E. MISCELLANEOUS MATERIALS

1. Fasteners: Self-tapping screws, bolts, nuts, self-locking rivets, self-locking bolts, end-welded studs, and other suitable fasteners designed to withstand design loads.

   a. Use aluminum, corrosion-resistant steel, or stainless steel fasteners for exterior application and galvanized or cadmium-plated fasteners for interior applications.
   b. Provide exposed fasteners with heads matching color of roof or wall panel by means of plastic caps or factory-applied coating.
   c. Provide metal-backed neoprene washers under heads of exposed fasteners bearing on weather side of panels.
   d. Locate and space exposed fasteners in true vertical and horizontal alignment. Use proper tools to obtain controlled uniform compression for positive seal without rupture of neoprene washer.

2. Felts: Provide asphalt-saturated organic felts conforming to the requirements of ASTM D 226, Type II (No. 30).

3. Waterproof Membrane: 40 mil, self-adhering membrane of rubberized asphalt integrally bonded to embossed slip-resistant polyethylene sheeting.
   a. Products: Subject to compliance with requirements, products that may be incorporated in the work include but are not limited to "Ice & Water Shield," as manufactured by W.R. Grace & Co.

4. Accessories: Except as indicated as work of another specification section, provide components required for a complete roof or wall panel system, including trim, copings, fascias, corner units, ridge closures, clips, seam covers, battens, flashings, sealants, gaskets, fillers, closure strips, and similar items. Match materials and finishes of panels.

   a. Closure Strips: Closed-cell, self-extinguishing, expanded cellular rubber or cross-linked polyolefin foam flexible closure strips. Cut or premold to match configuration of roof and wall panels. Provide closure strips where indicated or necessary to ensure weathertight construction.
   b. Sealing Tape: Pressure-sensitive 100 percent solids polyisobutylene compound sealing tape with release paper backing. Provide permanently elastic, nonsag,

nontoxic, nonstaining tape.

c. Joint Sealant: One-part elastomeric polyurethane, polysulfide, or silicone rubber sealant as recommended by the building manufacturer.

F. PANEL FABRICATION

1. General: Fabricate and finish panels and accessories at the factory to greatest extent possible, by manufacturer's standard procedures and processes, as required to fulfill indicated performance requirements demonstrated by laboratory testing. Comply with indicated profiles and dimensional requirements and with structural requirements.
2. Apply bituminous coating or other permanent separation materials on concealed panel surfaces where panels would otherwise be in direct contact with substrate materials that are non-compatible or could result in corrosion or deterioration of either material or finishes.
3. Fabricate panel joints with captive gaskets or separator strips, which provide a tight seal and prevent metal-to-metal contact in a manner that will minimize noise from movements within panel system.

2.4 GUTTERS & DOWNSPOUTS

A. COMPONENTS

1. Gutters: SMACNA rectangular style profile.
2. Downspouts: SMACNA Rectangular profile.
3. Anchors and Supports: Profiled to suit gutters and downspouts.
   a. Anchoring Devices: In accordance with SMACNA requirements.
   b. Gutter Supports: Straps.
   c. Downspout Supports: Brackets.
4. Fasteners: Galvanized steel, with soft neoprene washers.

B. FABRICATION

1. Form gutters and downspouts of profiles and size indicated.
2. Fabricate with required connection pieces.
3. Form sections square, true, and accurate in size, in maximum possible lengths, free of distortion or defects detrimental to appearance or performance. Allow for expansion at joints.
4. Hem exposed edges of metal.
5. Fabricate gutter and downspout accessories; seal watertight.

C. FACTORY FINISHING

1. Fluoropolymer Coating: High Performance Organic Finish, AAMA 2604; multiple coat, thermally cured fluoropolymer finish system; color as scheduled.

2.5 FLASHING

A. ACCESSORIES:

1. Fasteners: Galvanized steel, with soft neoprene washers.
2. Primer: Zinc chromate type.
3. Protective Backing Paint: Zinc molybdate alkyd.
4. Sealant: Type “ES2” specified in Section 07900.
5. Plastic Cement: ASTM D 4586, Type I.

B. FABRICATION

1. Form sections true to shape, accurate in size, square, and free from distortion or defects.
2. Form pieces in longest possible lengths.
3. Hem exposed edges on underside 1/2 inch (13 mm); miter and seam corners.
4. Form material with flat lock seams, except where otherwise indicated. At moving joints, use sealed lapped, bayonet-type or interlocking hooked seams.
5. Fabricate corners from one piece with minimum 18 inch (450 mm) long legs; seam for rigidity, seal with sealant.
6. Fabricate vertical faces with bottom edge formed outward 1/4 inch (6 mm) and hemmed to form drip.

PART 3 - EXECUTION

3.1 ROOF PANEL

A. General: Comply with manufacturers' instructions and recommendations for installation, as applicable to project conditions and supporting substrates. Anchor panels and other components of the work securely in place, with provisions for thermal and structural movement.

1. Field cutting of exterior panels by torch is not permitted.
2. Install panels with concealed fasteners.
3. Install roof panels over minimum 1:12 pitch solid substrate with one ply of felt installed from lower edge up with at least 3-inch side laps and 4-inch end laps.
   a. Install waterproof membrane under felt from lower edge up at least 6 feet prior to installing roof panels. Lap ends 6-inches minimum and sides 3-1/2-inches minimum.

B. Accessories: Install components required for a complete roof system, including trim, copings, fascias, gravel stops, mullions, sills, corner unite, ridge closures, clips, seam covers, battens, flashings, gutters, louvers, sealants, gaskets, fillers, closure strips, and similar items.

C. Joint Sealers: Install gaskets, joint fillers, and sealants where indicated and where required for weatherproof performance of panel systems. Provide types of gaskets, sealants, and fillers indicated or, if not otherwise indicated, types recommended by panel manufacturer.

1. Provide weatherseal under ridge cap. Flash and seal roof panels at eave and rake with rubber, neoprene, or other closures to exclude weather.
2. Refer to other sections of these specifications for product and installation requirements applicable to indicated joint sealers.

D. Standing Seam Roof Panel System: Fasten roof panels to supports with concealed clip in accordance with the manufacturer's instructions.

1. Install clips at each support with self-drilling/self-tapping fasteners.
2. At end laps of panels, install tape caulk between panels.
3. Seaming: Complete seaming of panel joints by operation of portable power-driven equipment of type recommended by panel manufacturer to provide a weathertight joint.

E. ROOF PANEL CLEANING AND PROTECTION

1. Damaged Units: Replace panels and other components of the work that have been damaged or have deteriorated beyond successful repair by means of finish touch-up or similar minor repair procedures.
2. Cleaning: Remove temporary protective coverings and strippable films (if any) as soon as each panel is installed. Upon completion of panel installation, clean finished surfaces as recommended by panel manufacturer, and maintain in a clean condition during construction.

3.2 GUTTERS AND DOWNSPOUTS

A. EXAMINATION: Verify existing conditions before starting work.

B. PREPARATION - Paint concealed metal surfaces and surfaces in contact with dissimilar metals with protective backing paint to a minimum dry film thickness of 15 mil (0.4 mm).

C. INSTALLATION:
1. Install gutters, downspouts, and accessories in accordance with manufacturer's instructions.
2. Sheet Metal: Join lengths with formed seams sealed watertight. Flash and seal gutters to downspouts and accessories.
3. Slope gutters 1/16 inch per foot (6.35 mm/m).

3.3 FLASHING

A. EXAMINATION:

1. Verify roof openings, curbs, pipes, sleeves, ducts, and vents through roof are solidly set, reglets in place, and nailing strips located.
2. Verify roofing termination and base flashings are in place, sealed, and secure.

B. PREPARATION:

1. Install starter and edge strips, and cleats before starting installation.
2. Back paint concealed metal surfaces with protective backing paint to a minimum dry film thickness of 15 mil (0.4 mm).

C. INSTALLATION:

1. Secure flashings in place using concealed fasteners. Use exposed fasteners only where permitted.
2. Apply plastic cement compound between metal flashings and felt flashings.
3. Fit flashings tight in place. Make corners square, surfaces true and straight in planes, and lines accurate to profiles.

END OF SECTION 07410

SECTION 07729 – ROOF SNOW GUARDS

PART 1 GENERAL

1.1 SECTION INCLUDES

A. Snow rail for standing seam metal roofs.

1. Snow Guard system consists of snow guard block and flag assembly set screws.
2. Aluminum Tubing
3. Couplings.
4. End Plugs.
5. Ice Flags.
6. End Collars

1.2 RELATED SECTIONS

A. Section 07410 - Manufactured Roof Panels, Gutters and Flashing

1.3 SUBMITTALS

A. Submit under provisions of Section 01300.

B. Product Data: Manufacturer's data sheets on each product to be used, including:

1. Preparation instructions and recommendations.
2. Storage and handling requirements and recommendations.
3. Installation methods.

C. Shop Drawings: Snow guard placement layout for pitch and run of roof as required to retain snow in place.

D. Color Selection Samples: For each application specified, provide two complete sets of color chips to match roof color..

1.4 DELIVERY, STORAGE, AND HANDLING

A. Store products in manufacturer's unopened packaging until ready for installation.

B. Store and dispose of solvent-based materials, and materials used with solvent-based materials, in accordance with requirements of local authorities having jurisdiction.

1.5 PROJECT CONDITIONS

A. Maintain environmental conditions (temperature, humidity, and ventilation) within limits recommended by manufacturer for optimum results. Do not install products under environmental conditions outside manufacturer's absolute limits.

PART 2 PRODUCTS

2.1 MANUFACTURERS

A. Basis for Design: Alpine Snow Guards, A Division of Vermont Slate and Copper Services, Inc., which is located at: 289 Harrell St., Morrisville, VT; Toll Free Tel: 888-766-4273; Fax:

SECTION 15491 - LUBRICATION EQUIPMENT

PART 1 - GENERAL

1.1 RELATED DOCUMENTS

A. Drawings and general provisions of Contract, including General and Supplementary Conditions and Division 1 Specification Sections, apply to this Section.

B. Division 5 Metals.

1.2 DESCRIPTION

A. This section includes the following:

1. Waste oil system including waste oil transfer pump, waste oil cart, complete piping and accessories.
2. Hose reels and pump.
3. Air compressor.
4. Shop equipment as shown on drawings.

B. Provide complete and functional installation in compliance with requirements of the state and local Fire Marshal offices, and all applicable codes and ordinances.

1. Design piping to meet operational pressures for each type of system.

1.3 SUBMITTALS

A. General: Submit the following in accordance with Conditions of Contract and Division 1 Specification Sections.

1. Diagram for bolt hole pattern for reel mounting.
2. Shop drawings indicating piping location and type of pipe used between barrels and reels.
3. Product data on reels, reel accessories, pumps, compressor, piping and necessary products for fully operational system.

PART 2 - PRODUCTS

2.1 MANUFACTURERS

A. Available Suppliers: Provide equipment, piping and accessories from a service station equipment supplier.

2.2 QUALITY ASSURANCE

A. Pre-approvals or equals 6 days prior to bid opening.

2.3 HOSE REELS

A. Provide hose reels and pumps.

B. Waste oil tank furnished by Owner, installed by Contractor.

1. Grease Service:

   a. 1 each - Air operated pump for 400 lb. drum, 50:1 ratio, with drum cover, follower plate, connecting hoses and air regulator with gauge. (Lincoln 926 or equal).
   b. 1 each - Reel package including reel, 50 ft. or 1/4 in. hose, ball stop, swivel, control valve and connecting hose. (Lincoln 85051 or equal).

2. Oil Service:

   a. Waste Oil Transfer Pump:
      1) 1 each - Air operated diaphragm pump, 1" x 1" with wall bracket (Roper Model 100B10AAL) or equal.
      2) 1 each – 3/8" x 3'-0" connect hose & 1 each – 3/4" x 5'-0" connect hose or equal.
      3) 1 each - Airline Trio – Air Regulator w/ Gauge, Filter & Lubricator (Watts Model C10-02FRLBJCB-1/4") or equal.
      4) 1 each – 3/8"x 3'-0" Min. Air Hose as needed.
      5) For above listed items: Or Balcrank Waste Oil Kit, #4140-015.
      6) For connection to waste oil tank provide & install 1 each Dry break coupler & Nipple. (¾" Balcrank 4140-003 & 4140-004) with 15'-0" ¾" x ¾" flexible oil hose and pipe nipple threaded connection at wall penetration (Balcrank #8261) or equal.
      7) 1 each - mobile oil reservoir- 24 gallon 19.25" bowl, dry-break hydraulic evacuation nipple, 45" to 72" height adjustment large diameter rubber wheels (Balcrank Spillguard premium duty drain #4110-012) or equal.

   b. 4 each - Air operated pump for 55 gal. drums, 4:1 ratio, with bung adaptor, connection hoses and air regulators with gauge. (Lincoln 424 or equal).

   c. Engine Oil :

      1) 1 each - Reel package including reel, 50 ft. of 1/2 in. hose, ball stop, metered control and connecting hose. (Lincoln 85057 or equal).

   d. Gear oil:

      1) 1 each - Reel package including reel, 50 ft. of 1/2 in. hose, ball stop, metered control and connecting hose. (Lincoln 85055 or equal.

   e. Hydraulic:

      1) 1 each - Reel package including reel, 50 ft. of 1/2 in. hose, ball stop, metered control and connecting hose. (Lincoln 85057 or equal).

   f. Automatic Transmission Fluid

      1) 1 each - Reel package including reel, 50 ft. of 1/2 in. hose, ball stop, metered control and connecting hose.

3. Air Service:

   a. 2 each - Air hose reel package including reel, 50 ft. of 3/8 inch hose, ball stop, air coupler and air chuck. (Lincoln 85063 or equal).

4. Water Service:

   a. 2 each - Water hose reel package including reel, 50 ft. of 3/8 inch hose, ball stop, water bib and connecting hose. (Lincoln 85065 or equal).

C. Manufacturer:

1. Graco hose reels (350 Series Heavy-Duty), pumps and accesssories are equal to Lincoln.

2. Balcrank hose reels (Premium Duty Series), pumps and accesssories are equal to Lincoln.

D. Piping.

1. Lube Oil: Hydraulic Carbon Steel Tubing, ASTM A179, 5/8", .049 wall for 0ils and 5/8", .083 wall for grease.

   a. Fittings: SWAGELOK Tub Fittings (10,000 lb. compression).

2. Air and Water: Copper tube, ASTM B88, type L, drawn.

   a. Fittings: Brass compression type, ANSI B16.26.

E. Provide reel support framing as required for attachment to lube reel wall support.

2.4 AIR COMPRESSOR

A. Air compressor to meet or exceed the following requirements:

1. Mounting: Verticle tank.
2. Type: Two-stage, reciprocating, air cooled with cast iron cylinder.
3. Receiver: 80 gallon capacity, minimum.
4. Capacity: 24.0 cfm free air, minimum.
5. Pressure: 140 to 175 psi.
6. Motor: 7.5 HP, 208 volt, three phase.
7. Control: Start/stop, with provision for no load start. Include magnetic starter.

B. Provide one complete set of replacement filters, and two complete sets of parts lists and shop (repair) manuals.

C. Submit warranty and Owner's manual at completion of project.

2.5 MISCELLANEOUS SHOP EQUIPMENT

A. Provide shop equipment, as specified and shown on the plans, complete with accessories.
B. Provide certified drawings for rough-in of all anchors and concrete forming.

PART 3 - EXECUTION

3.1 INSTALLATION

A. Comply with manufacturer's installation instructions. Install equipment and systems to facilitate safe, trouble-free operation and maintenance.

B. Coordinate grades with the architectural plans.

C. Conform to requirements of the governing Fire Marshal.

D. Refer to Division 2 Section "Earthwork" for specifications on excavation and backfill.

3.2 COORDINATION

A. Coordinate all equipment with ductwork, plumbing fixtures, air lines, piping, etc.

B. All mounting and finish requirements.

B. Provide equipment as scheduled and shown on the plans.

END OF SECTION 11146

SECTION 15820 - DUCT ACCESSORIES

PART 1 - GENERAL

1.1 RELATED DOCUMENTS

A. Drawings and general provisions of the Contract, including General and Supplementary Conditions and Division 1 Specification Sections, apply to this Section.

1.2 SUMMARY

A. Section Includes:

1. Backdraft and pressure relief dampers.
2. Manual volume dampers.
3. Fire dampers.
4. Turning vanes.
5. Remote damper operators.
6. Duct-mounted access doors.
7. Flexible connectors.
8. Flexible ducts.
9. Duct accessory hardware.

B. Related Sections:

1. Division 13 Section "Fire Alarm" for duct-mounted fire and smoke detectors.
2. Division 15 Section "Intake and Relief Ventilators" for roof-mounted ventilator caps.

1.3 SUBMITTALS

A. Product Data: For each type of product indicated.

1. For duct silencers, include pressure drop and dynamic insertion loss data. Include breakout noise calculations for high transmission loss casings.

B. Shop Drawings: For duct accessories. Include plans, elevations, sections, details and attachments to other work.

1. Detail duct accessories fabrication and installation in ducts and other construction. Include dimensions, weights, loads, and required clearances; and method of field assembly into duct systems and other construction. Include the following:

a. Special fittings.
b. Manual volume damper installations.
c. Fire-damper, smoke-damper, combination fire- and smoke-damper, ceiling, and corridor damper installations, including sleeves; and duct-mounted access doors and remote damper operators.
d. Wiring Diagrams: For power, signal, and control wiring.

C. Operation and Maintenance Data: For air duct accessories to include in operation and maintenance manuals.

1.4 QUALITY ASSURANCE

A. Comply with NFPA 90A, "Installation of Air Conditioning and Ventilating Systems," and with NFPA 90B, "Installation of Warm Air Heating and Air Conditioning Systems."

B. Comply with AMCA 500-D testing for damper rating.

PART 2 - PRODUCTS

2.1 MATERIALS

A. Comply with SMACNA's "HVAC Duct Construction Standards - Metal and Flexible" for acceptable materials, material thicknesses, and duct construction methods unless otherwise indicated. Sheet metal materials shall be free of pitting, seam marks, roller marks, stains, discolorations, and other imperfections.

B. Galvanized Sheet Steel: Comply with ASTM A 653/A 653M.

1. Galvanized Coating Designation: G90 .
2. Exposed-Surface Finish: Mill phosphatized.

C. Stainless-Steel Sheets: Comply with ASTM A 480/A 480M, Type 304, and having a No. 2 finish for concealed ducts and finish for exposed ducts.

D. Reinforcement Shapes and Plates: Galvanized-steel reinforcement where installed on galvanized sheet metal ducts; compatible materials for aluminum and stainless-steel ducts.

E. Tie Rods: Galvanized steel, 1/4-inch minimum diameter for lengths 36 inches or less; 3/8-inch minimum diameter for lengths longer than 36 inches .

2.2 BACKDRAFT AND PRESSURE RELIEF DAMPERS

A. Manufacturers: Subject to compliance with requirements, provide products by one of the following:

1. Air Balance Inc.; a division of Mestek, Inc.
2. American Warming and Ventilating; a division of Mestek, Inc.
3. Cesco Products; a division of Mestek, Inc.
4. Duro Dyne Inc.
5. Nailor Industries Inc.
6. Pottorff; a division of PCI Industries, Inc.
7. Ruskin Company.
8. Vent Products Company, Inc.

B. Description: Gravity balanced.

C. Maximum Air Velocity: 2000 fpm.

D. Maximum System Pressure: 2-inch wg.

E. Frame: 0.052-inch- thick, galvanized sheet steel, with welded corners and mounting flange.

F. Blades: Multiple single-piece blades, center-pivoted, maximum 6-inch width, 0.050-inch- thick aluminum sheet noncombustible, tear-resistant, neoprene-coated fiberglass with sealed edges.

G. Blade Action: Parallel.

H. Blade Seals: Neoprene, mechanically locked.

I. Blade Axles:

1. Material: Galvanized steel.
2. Diameter: [0.20 inch] <Insert value>.

J. Tie Bars and Brackets: Galvanized steel.

K. Return Spring: Adjustable tension.

L. Bearings: Steel ball or synthetic pivot bushings.

M. Accessories:

1. Counterweights and spring-assist kits for vertical airflow installations.
2. Electric actuators.
3. Screen Mounting: Rear mounted.
4. Screen Material: Galvanized steel.
5. Screen Type: Bird.

2.3 MANUAL VOLUME DAMPERS

A. Standard, Steel, Manual Volume Dampers:

1. Manufacturers: Subject to compliance with requirements, provide products by one of the following:

a. Air Balance Inc.; a division of Mestek, Inc.
b. American Warming and Ventilating; a division of Mestek, Inc.
c. Flexmaster U.S.A., Inc.
d. McGill AirFlow LLC.
e. METALAIRE, Inc.
f. Nailor Industries Inc.
g. Pottorff; a division of PCI Industries, Inc.
h. Ruskin Company.
i. Vent Products Company, Inc.
j. Prior approved equal

2. Standard leakage rating, with linkage outside airstream.
3. Suitable for horizontal or vertical applications.
4. Frames:

a. Hat-shaped, galvanized-steel channels, 0.064-inch minimum thickness.
b. Mitered and welded corners.

c. Flanges for attaching to walls and flangeless frames for installing in ducts.

5. Blades:

a. Multiple or single blade.
b. Opposed-blade design.
c. Stiffen damper blades for stability.
d. Galvanized-steel, 0.064 inch thick.

6. Blade Axles: Galvanized steel.
7. Bearings:

a. Oil-impregnated bronze.
b. Dampers in ducts with pressure classes of 3-inch wg or less shall have axles full length of damper blades and bearings at both ends of operating shaft.

8. Tie Bars and Brackets: Galvanized steel.

B. Jackshaft:

1. Size: 1-inch diameter.
2. Material: Galvanized-steel pipe rotating within pipe-bearing assembly mounted on supports at each mullion and at each end of multiple-damper assemblies.
3. Length and Number of Mountings: As required to connect linkage of each damper in multiple-damper assembly.

C. Damper Hardware:

1. Zinc-plated, die-cast core with dial and handle made of 3/32-inch- thick zinc-plated steel, and a 3/4-inch hexagon locking nut.
2. Include center hole to suit damper operating-rod size.
3. Include elevated platform for insulated duct mounting.

2.4 FIRE DAMPERS

A. Manufacturers: Subject to compliance with requirements, provide products by one of the following:

1. Air Balance Inc.; a division of Mestek, Inc.
2. Arrow United Industries; a division of Mestek, Inc.
3. Cesco Products; a division of Mestek, Inc.
4. McGill AirFlow LLC.
5. METALAIRE, Inc.
6. Nailor Industries Inc.
7. Pottorff; a division of PCI Industries, Inc.
8. Prefco; Perfect Air Control, Inc.
9. Ruskin Company.
10. Vent Products Company, Inc.
11. Ward Industries, Inc.; a division of Hart & Cooley, Inc.
12. Prior approved equal

B. Type: Dynamic; rated and labeled according to UL 555 by an NRTL.

C. Fire Rating: 3 hours.

D. Frame: Curtain type with blades inside airstream; fabricated with roll-formed, 0.034-inch- thick galvanized steel; with mitered and interlocking corners.

E. Mounting Sleeve: Factory- or field-installed, galvanized sheet steel.

1. Minimum Thickness: 0.052 or 0.138 inch thick, as indicated, and of length to suit application.
2. Exception: Omit sleeve where damper-frame width permits direct attachment of perimeter mounting angles on each side of wall or floor; thickness of damper frame must comply with sleeve requirements.

F. Mounting Orientation: Vertical or horizontal as indicated.

G. Blades: Roll-formed, interlocking, 0.034-inch- thick, galvanized sheet steel. In place of interlocking blades, use full-length, 0.034-inch- thick, galvanized-steel blade connectors.

H. Horizontal Dampers: Include blade lock and stainless-steel closure spring.

I. Heat-Responsive Device: Replaceable, 165 deg F rated, fusible links.

2.5 TURNING VANES

A. Manufacturers: Subject to compliance with requirements, provide products by one of the following:

1. Ductmate Industries, Inc.
2. Duro Dyne Inc.
3. METALAIRE, Inc.
4. SEMCO Incorporated.
5. Ward Industries, Inc.; a division of Hart & Cooley, Inc.
6. Prior approved equal

B. Manufactured Turning Vanes for Metal Ducts: Curved blades of galvanized sheet steel; support with bars perpendicular to blades set; set into vane runners suitable for duct mounting.

1. Acoustic Turning Vanes: Fabricate airfoil-shaped aluminum extrusions with perforated faces and fibrous-glass fill.

C. General Requirements: Comply with SMACNA's "HVAC Duct Construction Standards - Metal and Flexible"; Figures 2-3, "Vanes and Vane Runners," and 2-4, "Vane Support in Elbows."

D. Vane Construction: Single wall for ducts up to 48 inches wide and double wall for larger dimensions.

2.6 REMOTE DAMPER OPERATORS

A. Manufacturers: Subject to compliance with requirements, provide products by one of the following:

1. Pottorff; a division of PCI Industries, Inc.
2. Ventfabrics, Inc.
3. Young Regulator Company.
4. Prior approved equal.

B. Description: Cable system designed for remote manual damper adjustment.

C. Tubing: Brass.

D. Cable: Stainless steel.

E. Wall-Box Mounting: Recessed, 2 inches deep.

F. Wall-Box Cover-Plate Material: Stainless steel.

2.7 DUCT-MOUNTED ACCESS DOORS

A. Manufacturers: Subject to compliance with requirements, provide products by one of the following:

1. American Warming and Ventilating; a division of Mestek, Inc.
2. Cesco Products; a division of Mestek, Inc.
3. Ductmate Industries, Inc.
4. Flexmaster U.S.A., Inc.
5. McGill AirFlow LLC.
6. Nailor Industries Inc.
7. Pottorff; a division of PCI Industries, Inc.
8. Ventfabrics, Inc.
9. Ward Industries, Inc.; a division of Hart & Cooley, Inc.
10. Prior approved equal

B. Duct-Mounted Access Doors: Fabricate access panels according to SMACNA's "HVAC Duct Construction Standards - Metal and Flexible"; Figures 2-10, "Duct Access Doors and Panels," and 2-11, "Access Panels - Round Duct."

1. Door:

   a. Double wall, rectangular.
   b. Galvanized sheet metal with insulation fill and thickness as indicated for duct pressure class.
   c. Vision panel.
   d. Hinges and Latches: 1-by-1-inch butt or piano hinge and cam latches.
   e. Fabricate doors airtight and suitable for duct pressure class.

2. Frame: Galvanized sheet steel, with bend-over tabs and foam gaskets.
3. Number of Hinges and Locks:

   a. Access Doors Less Than 12 Inches Square: No hinges and two sash locks.
   b. Access Doors up to 18 Inches Square: Two hinges and two sash locks.
   c. Access Doors up to 24 by 48 Inches : Three hinges and two compression latches with outside handles.
   d. Access Doors Larger Than 24 by 48 Inches : Four hinges and two compression latches with outside and inside handles.

2.8 DUCT ACCESS PANEL ASSEMBLIES

A. Manufacturers: Subject to compliance with requirements, provide products by one of the following:

1. Ductmate Industries, Inc.
2. Flame Gard, Inc.
3. 3M.
4. Prior approved equal

B. Labeled according to UL 1978 by an NRTL.

C. Panel and Frame: Minimum thickness 0.0428-inch stainless steel.

D. Fasteners: Stainless steel. Panel fasteners shall not penetrate duct wall.

E. Gasket: Comply with NFPA 96; grease-tight, high-temperature ceramic fiber, rated for minimum 2000 deg F .

F. Minimum Pressure Rating: 10-inch wg , positive or negative.

2.9 FLEXIBLE CONNECTORS

A. Manufacturers: Subject to compliance with requirements, provide products by one of the following:

1. Ductmate Industries, Inc.
2. Duro Dyne Inc.
3. Ventfabrics, Inc.
4. Ward Industries, Inc.; a division of Hart & Cooley, Inc.
5. Prior approved equal

B. Materials: Flame-retardant or noncombustible fabrics.

C. Coatings and Adhesives: Comply with UL 181, Class 1.

D. Indoor System, Flexible Connector Fabric: Glass fabric double coated with neoprene.

1. Minimum Weight: 26 oz./sq. yd. .
2. Tensile Strength: 480 lbf/inch in the warp and 360 lbf/inch in the filling.
3. Service Temperature: Minus 40 to plus 200 deg F .

E. Thrust Limits: Combination coil spring and elastomeric insert with spring and insert in compression, and with a load stop. Include rod and angle-iron brackets for attaching to fan discharge and duct.

1. Frame: Steel, fabricated for connection to threaded rods and to allow for a maximum of 30 degrees of angular rod misalignment without binding or reducing isolation efficiency.
2. Outdoor Spring Diameter: Not less than 80 percent of the compressed height of the spring at rated load.
3. Minimum Additional Travel: 50 percent of the required deflection at rated load.
4. Lateral Stiffness: More than 80 percent of rated vertical stiffness.
5. Overload Capacity: Support 200 percent of rated load, fully compressed, without deformation or failure.
6. Elastomeric Element: Molded, oil-resistant rubber or neoprene.
7. Coil Spring: Factory set and field adjustable for a maximum of 1/4-inch movement at start and stop.

2.10 FLEXIBLE DUCTS

A. Manufacturers: Subject to compliance with requirements, provide products by one of the following:

1. Flexmaster U.S.A., Inc.
2. McGill AirFlow LLC.
3. Ward Industries, Inc.; a division of Hart & Cooley, Inc.
4. Prior approved equal

B. Insulated, Flexible Duct: UL 181, Class 1, multiple layers of aluminum laminate supported by helically wound, spring-steel wire; fibrous-glass insulation; polyethylene or aluminized vapor-barrier film.

1. Pressure Rating: 10-inch wg positive and 1.0-inch wg negative.
2. Maximum Air Velocity: 4000 fpm .
3. Temperature Range: Minus 20 to plus 210 deg F .
4. Insulation R-value: Comply with ASHRAE/IESNA 90.1-2004.

C. Insulated, Flexible Duct: UL 181, Class 1, aluminum laminate and polyester film with latex adhesive supported by helically wound, spring-steel wire; fibrous-glass insulation; polyethylene or aluminized vapor-barrier film.

1. Pressure Rating: 10-inch wg positive and 1.0-inch wg negative.
2. Maximum Air Velocity: 4000 fpm .
3. Temperature Range: Minus 20 to plus 210 deg F .
4. Insulation R-value: Comply with ASHRAE/IESNA 90.1-2004.

D. Flexible Duct Connectors:

1. Clamps: Stainless-steel band with cadmium-plated hex screw to tighten band with a worm-gear action in sizes 3 through 18 inches , to suit duct size.

2.11 DUCT ACCESSORY HARDWARE

A. Instrument Test Holes: Cast iron or cast aluminum to suit duct material, including screw cap and gasket. Size to allow insertion of pitot tube and other testing instruments and of length to suit duct-insulation thickness.

PART 3 - EXECUTION

3.1 INSTALLATION

A. Install duct accessories according to applicable details in SMACNA's "HVAC Duct Construction Standards - Metal and Flexible" for metal ducts and in NAIMA AH116, "Fibrous Glass Duct Construction Standards," for fibrous-glass ducts.

B. Install duct accessories of materials suited to duct materials; use galvanized-steel accessories in galvanized-steel and fibrous-glass ducts, stainless-steel accessories in stainless-steel ducts, and aluminum accessories in aluminum ducts.

C. Install backdraft or control dampers at inlet of exhaust fans or exhaust ducts as close as possible to exhaust fan unless otherwise indicated.

D. Install volume dampers at points on supply, return, and exhaust systems where branches extend from larger ducts. Where dampers are installed in ducts having duct liner, install dampers with hat channels of same depth as liner, and terminate liner with nosing at hat channel.

1. Install steel volume dampers in steel ducts.

E. Set dampers to fully open position before testing, adjusting, and balancing.

F. Install test holes at fan inlets and outlets and elsewhere as indicated.

G. Install firedampers according to UL listing. Maintain manufacturers UL installation listing.

H. Install duct access doors on sides of ducts to allow for inspecting, adjusting, and maintaining accessories and equipment at the following locations:

1. On both sides of duct coils.
2. Upstream from duct filters.
3. At outdoor-air intakes and mixed-air plenums.
4. At drain pans and seals.
5. Downstream from manual volume dampers, control dampers, backdraft dampers, and equipment.
6. Adjacent to and close enough to fire or smoke dampers, to reset or reinstall fusible links. Access doors for access to fire or smoke dampers having fusible links shall be pressure relief access doors and shall be outward operation for access doors installed upstream from dampers and inward operation for access doors installed downstream from dampers.
7. At each change in direction and at maximum 50-foot spacing.
8. Upstream from turning vanes.
9. Upstream or downstream from duct silencers.
10. Control devices requiring inspection.
11. Elsewhere as indicated.

I. Install access doors with swing against duct static pressure.

J. Label access doors according to Division 15 Section "Identification for HVAC Piping and Equipment" to indicate the purpose of access door.

K. Install flexible connectors to connect ducts to equipment.

L. For fans developing static pressures of 5-inch wg and more, cover flexible connectors with loaded vinyl sheet held in place with metal straps.

M. Connect terminal units to supply ducts with maximum 12-inch lengths of flexible duct. Do not use flexible ducts to change directions.

N. Connect diffusers or light troffer boots to ducts with maximum 60-inch lengths of flexible duct clamped or strapped in place.

O. Connect flexible ducts to metal ducts with draw bands.

P. Install duct test holes where required for testing and balancing purposes.

Q. Install thrust limits at centerline of thrust, symmetrical on both sides of equipment. Attach thrust limits at centerline of thrust and adjust to a maximum of 1/4-inch movement during start and stop of fans.

3.2 FIELD QUALITY CONTROL

A. Tests and Inspections:

1. Operate dampers to verify full range of movement.
2. Inspect locations of access doors and verify that purpose of access door can be performed.
3. Operate fire, smoke, and combination fire and smoke dampers to verify full range of movement and verify that proper heat-response device is installed.
4. Inspect turning vanes for proper and secure installation.
5. Operate remote damper operators to verify full range of movement of operator and damper.

END OF SECTION 15820

COM*check* Software Version 3.5.2
Envelope Compliance Certificate

2006 IECC

Report Date: 02/11/09

Data filename: X:\Projects\2008\08105.00.01 - Parleys Maint Sta\Comcheck Energy Compliance Report.cck

Section 1: Project Information

Project Type: **New Construction**
Project Title : UDOT Parleys Maintenance Station #2434

Construction Site:
I-80 E.B. Exit 134
Parleys Canyon
Salt Lake city, UT

Owner/Agent:
Utah Department of Transportation

Designer/Contractor:
Archiplex Group
255 Crossroad Square
South Salt Lake City, UT 84115
(801) 961-7070

Section 2: General Information

Building Location (for weather data):	**Salt Lake City, Utah**
Climate Zone:	**5b**
Heating Degree Days (base 65 degrees F):	**5765**
Cooling Degree Days (base 50 degrees F):	**3276**
Vertical Glazing / Wall Area Pct.:	**4%**

Activity Type(s)	Floor Area
Transportation	14815

Section 3: Requirements Checklist

Envelope PASSES: Design 49% better than code.

Climate-Specific Requirements:

Component Name/Description	Gross Area or Perimeter	Cavity R-Value	Cont. R-Value	Proposed U-Factor	Budget U-Factor
Roof 1: Metal Building, Standing Seam	14815	19.0	0.0	0.065	0.065
Exterior Wall 1: Metal Building Wall	7125	19.0	0.0	0.070	0.057
Window 1: Metal Frame with Thermal Break:Double Pane with Low-E, Tinted, SHGC 0.48	280	---	---	0.233	0.550
Door 1: Insulated Metal, Non-Swinging	2079	---	---	0.067	1.450
Door 2: Insulated Metal, Swinging	101	---	---	0.130	0.700
Floor 1: Slab-On-Grade:Unheated	509	---	---	---	---

(a) Budget U-factors are used for software baseline calculations ONLY, and are not code requirements.

Air Leakage, Component Certification, and Vapor Retarder Requirements:

- ☐ 1. All joints and penetrations are caulked, gasketed or covered with a moisture vapor-permeable wrapping material installed in accordance with the manufacturer's installation instructions.
- ☐ 2. Windows, doors, and skylights certified as meeting leakage requirements.
- ☐ 3. Component R-values & U-factors labeled as certified.
- ☐ 4. Insulation installed according to manufacturer's instructions, in substantial contact with the surface being insulated, and in a manner that achieves the rated R-value without compressing the insulation.
- ☐ 5. No roof insulation is installed on a suspended ceiling with removable ceiling panels.
- ☐ 6. Stair, elevator shaft vents, and other outdoor air intake and exhaust openings in the building envelope are equipped with motorized dampers.

- ☐ 7. Cargo doors and loading dock doors are weather sealed.
- ☐ 8. Recessed lighting fixtures are: (i) Type IC rated and sealed or gasketed; or (ii) installed inside an appropriate air-tight assembly with a 0.5 inch clearance from combustible materials and with 3 inches clearance from insulation material.
- ☐ 9. Building entrance doors have a vestibule and equipped with closing devices.
  Exceptions:

  Building entrances with revolving doors.

  Doors that open directly from a space less than 3000 sq. ft. in area.
- ☐ 10. Vapor retarder installed.

Section 4: Compliance Statement

Compliance Statement: The proposed envelope design represented in this document is consistent with the building plans, specifications and other calculations submitted with this permit application. The proposed envelope system has been designed to meet the 2006 IECC requirements in COM*check* Version 3.5.2 and to comply with the mandatory requirements in the Requirements Checklist.

Ralph Stanislaw - Principal	Ralph Stanislaw	2/11/09
Name - Title	Signature	Date

COM*check* Software Version 3.5.2

Mechanical Compliance Certificate

2006 IECC

Report Date: 02/11/09

Data filename: X:\Projects\2008\08105.00.01 - Parleys Maint Sta\Comcheck Energy Compliance Report.cck

Section 1: Project Information

Project Type: **New Construction**

Project Title : UDOT Parleys Maintenance Station #2434

Construction Site:
I-80 E.B. Exit 134
Parleys Canyon
Salt Lake city, UT

Owner/Agent:
Utah Department of Transportation

Designer/Contractor:
Archiplex Group
255 Crossroad Square
South Salt Lake City, UT 84115
(801) 961-7070

Section 2: General Information

Building Location (for weather data):	**Salt Lake City, Utah**
Climate Zone:	**5b**
Heating Degree Days (base 65 degrees F):	**5765**
Cooling Degree Days (base 50 degrees F):	**3276**

Section 3: Mechanical Systems List

Quantity	System Type & Description
2	HVAC System 1: Heating: Duct Furnace, Gas / Cooling: Split System, Capacity <54 kBtu/h, Air-Cooled Condenser / Single Zone
3	HVAC System 2: Heating: Radiant Heater, Gas / Single Zone
3	Instantaneous Water Heater 1: Gas Instantaneous Water Heater, Capacity: 1 gallons, Input Rating: 199000 Btu/h w/ Circulation Pump

Section 4: Requirements Checklist

Requirements Specific To: HVAC System 1 :

- ☐ 1. Equipment minimum efficiency: Duct Furnace (Gas): 80% Ec
- ☐ 2. Equipment minimum efficiency: Split System: 10.0 SEER

Requirements Specific To: HVAC System 2 :

None

Requirements Specific To: Instantaneous Water Heater 1 :

- ☐ 1. Hot water system sized per manufacturer's sizing guide
- ☐ 2. Gas Instantaneous Water Heater efficiency >= 0.67 EF
- ☐ 3. All piping in circulating system insulated
- ☐ 4. Automatic time control of heat tapes and recirculating systems present
- ☐ 5. Controls will shut off operation of circulating pump between water heater/boiler and storage tanks within 5 minutes after end of heating cycle

Generic Requirements: Must be met by all systems to which the requirement is applicable:

- ☐ 1. Load calculations per 2001 ASHRAE Fundamentals
- ☐ 2. Plant equipment and system capacity no greater than needed to meet loads
  - Exception: Standby equipment automatically off when primary system is operating

- Exception: Multiple units controlled to sequence operation as a function of load

☐ 3. Minimum one temperature control device per system

☐ 4. Minimum one humidity control device per installed humidification/dehumidification system

☐ 5. Thermostatic controls has 5 degrees F deadband

- Exception: Thermostats requiring manual changeover between heating and cooling

☐ 6. Automatic Controls: Setback to 55 degrees F (heat) and 85 degrees F (cool); 7-day clock, 2-hour occupant override, 10-hour backup

- Exception: Continuously operating zones
- Exception: 2 kW demand or less, submit calculations

☐ 7. Outside-air source for ventilation; system capable of reducing OSA to required minimum

☐ 8. R-5 supply and return air duct insulation in unconditioned spaces R-8 supply and return air duct insulation outside the building R-8 insulation between ducts and the building exterior when ducts are part of a building assembly

- Exception: Ducts located within equipment
- Exception: Ducts with interior and exterior temperature difference not exceeding 15 degrees F.
- Exception: Continuously welded and locking-type longitudinal joints and seams on ducts operating at static pressures less than 2 inches w.g. pressure classification

☐ 9. Mechanical fasteners and sealants used to connect ducts and air distribution equipment

☐ 10. Ducts sealed - longitudinal seams on rigid ducts; transverse seams on all ducts; UL 181A or 181B tapes and mastics

☐ 11. Hot water pipe insulation: 1 in. for pipes <=1.5 in. and 2 in. for pipes >1.5 in. Chilled water/refrigerant/brine pipe insulation: 1 in. for pipes <=1.5 in. and 1.5 in. for pipes >1.5 in. Steam pipe insulation: 1.5 in. for pipes <=1.5 in. and 3 in. for pipes >1.5 in.

- Exception: Piping within HVAC equipment
- Exception: Fluid temperatures between 55 and 105 degrees F
- Exception: Fluid not heated or cooled
- Exception: Runouts <4 ft in length

☐ 12. Operation and maintenance manual provided to building owner

☐ 13. Balancing devices provided in accordance with IMC 603.15

☐ 14. Piping, insulated to 1/2 in. if nominal diameter of pipe is <1.5 in.; Larger pipe insulated to 1 in. thickness

☐ 15. Lavatory faucet outlet temperatures in public restrooms limited to 110 degrees F (43 degrees C)

☐ 16. Motorized, automatic shutoff dampers required on exhaust and outdoor air supply openings

- Exception: Gravity dampers acceptable in buildings <3 stories
- Exception: Gravity dampers acceptable in systems with outside or exhaust air flow rates less than 300 cfm where dampers are interlocked with fan

☐ 17. Stair and elevator shaft vents are equipped with motorized dampers

Section 5: Compliance Statement

Compliance Statement: The proposed mechanical design represented in this document is consistent with the building plans, specifications and other calculations submitted with this permit application. The proposed mechanical systems have been designed to meet the 2006 IECC requirements in COM*check* Version 3.5.2 and to comply with the mandatory requirements in the Requirements Checklist.

ALAN SPENDLOVE P.E.		10/1/08
Name - Title	Signature	Date

COM*check* Software Version 3.5.2

Mechanical Requirements Description

2006 IECC

Report Date:

Data filename: X:\Projects\2008\08105.00.01 - Parleys Maint Sta\Comcheck Energy Compliance Report.cck

The following list provides more detailed descriptions of the requirements in Section 4 of the Mechanical Compliance Certificate.

Requirements Specific To: HVAC System 1 :

1. The specified heating and/or cooling equipment is covered by the ASHRAE 90.1 Code and must meet the following minimum efficiency: Duct Furnace (Gas): 80% Ec
2. The specified heating and/or cooling equipment is covered by ASHRAE 90.1 Code and must meet the following minimum efficiency: Split System: 10.0 SEER

Requirements Specific To: HVAC System 2 :

None

Requirements Specific To: Instantaneous Water Heater 1 :

1. Service water heating system design loads for the purpose of sizing systems and equipment must be determined in accordance with manufacturers' published sizing guidelines.
2. Service water heating equipment used solely for heating potable water, pool heaters, and hot water storage tanks must meet the following miniumum efficiency: Gas Instantaneous Water Heater efficiency >= 0.67 EF
3. Insulation must be provided for recirculating system piping, including the supply and return piping of a circulating tank type water heater.
4. Systems designed to maintain usage temperatures in hot water pipes, such as recirculating hot water systems or heat trace, must be equipped with automatic time switches or other controls that can be set to switch off the temperature maintenance system during extended periods when hot water is not required.
5. When used to maintain storage tank water temperature, recirculating pumps must be equipped with controls limiting operation to the start of the heating cycle to a maximum of 5 minutes after the end of the heating cycle.

Generic Requirements: Must be met by all systems to which the requirement is applicable:

1. Design heating and cooling loads for the building must be determined using procedures in the ASHRAE Handbook of Fundamentals or an approved equivalent calculation procedure.
2. All equipment and systems must be sized to be no greater than needed to meet calculated loads. A single piece of equipment providing both heating and cooling must satisfy this provision for one function with the capacity for the other function as small as possible, within available equipment options.
   - Exception: The equipment and/or system capacity may be greater than calculated loads for standby purposes. Standby equipment must be automatically controlled to be off when the primary equipment and/or system is operating.
   - Exception: Multiple units of the same equipment type whose combined capacities exceed the calculated load are allowed if they are provided with controls to sequence operation of the units as the load increases or decreases.
3. Each heating or cooling system serving a single zone must have its own temperature control device.
4. Each humidification system must have its own humidity control device.
5. Thermostats controlling both heating and cooling must be capable of maintaining a 5 degrees F deadband (a range of temperature where no heating or cooling is provided).
   - Exception: Deadband capability is not required if the thermostat does not have automatic changeover capability between heating and cooling.
6. The system or zone control must be a programmable thermostat or other automatic control meeting the following criteria:a) capable of setting back temperature to 55 degrees F during heating and setting up to 85 degrees F during coolingb) capable of automatically setting back or shutting down systems during unoccupied hours using 7 different day schedulesc) have an accessible 2-hour occupant overrided) have a battery back-up capable of maintaining programmed settings for at least 10 hours without power.
   - Exception: A setback or shutoff control is not required on thermostats that control systems serving areas that operate continuously.
   - Exception: A setback or shutoff control is not required on systems with total energy demand of 2 kW (6,826 Btu/h) or less.
7. The system must supply outside ventilation air as required by Chapter 4 of the International Mechanical Code. If the ventilation system is designed to supply outdoor-air quantities exceeding minimum required levels, the system must be capable of reducing outdoor-air flow to the minimum required levels.

8. Air ducts must be insulated to the following levels:a) Supply and return air ducts for conditioned air located in unconditioned spaces (spaces neither heated nor cooled) must be insulated with a minimum of R-5. Unconditioned spaces include attics, crawl spaces, unheated basements, and unheated garages.b) Supply and return air ducts and plenums must be insulated to a minimum of R-8 when located outside the building.c) When ducts are located within exterior components (e.g., floors or roofs), minimum R-8 insulation is required only between the duct and the building exterior.
   - Exception: Duct insulation is not required on ducts located within equipment.
   - Exception: Duct insulation is not required when the design temperature difference between the interior and exterior of the duct or plenum does not exceed 15 degrees F.
   - Exception: Continuously welded and locking-type longitudinal joints and seams on ducts operating at static pressures less than 2 inches w.g. pressure classification.
9. Mechanical fasteners and seals, mastics, or gaskets must be used when connecting ducts to fans and other air distribution equipment, including multiple-zone terminal units.
10. All joints, longitudinal and transverse seams, and connections in ductwork must be securely sealed using weldments; mechanical fasteners with seals, gaskets, or mastics; mesh and mastic sealing systems; or tapes. Tapes and mastics must be listed and labeled in accordance with UL 181A and shall be marked '181A-P' for pressure sensitive tape,'181A-M' for mastic or '181A-H' for heat-sensitive tape. Tapes and mastics used to seal flexible air ductsand flexible air connectors shall comply with UL 181B and shall be marked '181B-FX' for pressure-sensitive tape or'181B-M' for mastic. Unlisted duct tape is not permitted as a sealant on any metal ducts.
11. All pipes serving space-conditioning systems must be insulated as follows: Hot water piping for heating systems: 1 in. for pipes <=1 1/2-in. nominal diameter 2 in. for pipes >1 1/2-in. nominal diameter. Chilled water, refrigerant, and brine piping systems: 1 in. insulation for pipes <=1 1/2-in. nominal diameter 1 1/2 in. insulation for pipes >1 1/2-in. nominal diameter. Steam piping: 1 1/2 in. insulation for pipes <=1 1/2-in. nominal diameter 3 in. insulation for pipes >1 1/2-in. nominal diameter.
   - Exception: Pipe insulation is not required for factory-installed piping within HVAC equipment.
   - Exception: Pipe insulation is not required for piping that conveys fluids having a design operating temperature range between 55 degrees F and 105 degrees F.
   - Exception: Pipe insulation is not required for piping that conveys fluids that have not been heated or cooled through the use of fossil fuels or electric power.
   - Exception: Pipe insulation is not required for runout piping not exceeding 4 ft in length and 1 in. in diameter between the control valve and HVAC coil.
12. Operation and maintenance documentation must be provided to the owner that includes at least the following information:a) equipment capacity (input and output) and required maintenance actionsb) equipment operation and maintenance manualsc) HVAC system control maintenance and calibration information, including wiring diagrams, schematics, and control sequence descriptions; desired or field-determined set points must be permanently recorded on control drawings, at control devices, or, for digital control systems, in programming commentsd) complete narrative of how each system is intended to operate.
13. Each supply air outlet or diffuser and each zone terminal device (such as VAV or mixing box) must have its own balancing device. Acceptable balancing devices include adjustable dampers located within the ductwork, terminal devices, and supply air diffusers.
14. Service hot water piping, where required, must be insulated to 1/2 in. if pipe less than 1.5 in. nominal diameter. Larger pipe must be insulated to 1 in.. Pipe insulation will have a conductivity of less than 0.28 Btu.in/(h-ft2-degrees F).
15. Temperature controlling means must be provided to limit the maximum temperature of water delivered from lavatory faucets in public facility restrooms to 110 degrees F.
16. Outdoor air supply and exhaust systems must have motorized dampers that automatically shut when the systems or spaces served are not in use. Dampers must be capable of automatically shutting off during preoccupancy building warm-up, cool-down, and setback, except when ventilation reduces energy costs (e.g., night purge) or when ventilation must be supplied to meet code requirements. Both outdoor air supply and exhaust air dampers must have a maximum leakage rate of 3 cfm/ft2 at 1.0 in w.g. when tested in accordance with AMCA Standard 500.
   - Exception: Gravity (non-motorized) dampers are acceptable in buildings less than three stories in height.
   - Exception: Systems with a design outside air intake or exhaust capacity of 300 cfm (140 L/s) or less that are equipped with motor operated dampers that open and close when the unit is energized and de-energized, respectively.
17. Stair and elevator shaft vents must be equipped with motorized dampers capable of being automatically closed during normal building operation and interlocked to open as required by fire and smoke detection systems. All gravity outdoor air supply and exhaust hoods, vents, and ventilators must be equipped with motorized dampers that will automatically shut when the spaces served are not in use. Exceptions: - Gravity (non-motorized) dampers are acceptable in buildings less than three stories in height above grade. - Ventilation systems serving unconditioned spaces.

COM*check* Software Version 3.5.2

Interior Lighting Compliance Certificate

2006 IECC

Report Date: 02/11/09

Data filename: X:\Projects\2008\08105.00.01 - Parleys Maint Sta\Comcheck Energy Compliance Report.cck

Section 1: Project Information

Project Type: **New Construction**

Project Title : UDOT Parleys Maintenance Station #2434

Construction Site:
I-80 E.B. Exit 134
Parleys Canyon
Salt Lake city, UT

Owner/Agent:
Utah Department of Transportation

Designer/Contractor:
Archiplex Group
255 Crossroad Square
South Salt Lake City, UT 84115
(801) 961-7070

Section 2: General Information

Building Use Description by: **Activity Type**

Activity Type(s)	Floor Area
Transportation	14815

Section 3: Requirements Checklist

Interior Lighting:

☐ 1. Total proposed watts must be less than or equal to total allowed watts.

Allowed Watts	Proposed Watts	Complies
14815	8874	YES

Controls, Switching, and Wiring:

☐ 2. Independent controls for each space (switch/occupancy sensor).
Exceptions:

Areas designated as security or emergency areas that must be continuously illuminated.

Lighting in stairways or corridors that are elements of the means of egress.

☐ 3. Master switch at entry to hotel/motel guest room.

☐ 4. Individual dwelling units separately metered.

☐ 5. Each space provided with a manual control to provide uniform light reduction by at least 50%.
Exceptions:

Only one luminaire in space;

An occupant-sensing device controls the area;

The area is a corridor, storeroom, restroom, public lobby or sleeping unit.

Areas that use less than 0.6 Watts/sq.ft.

☐ 6. Automatic lighting shutoff control in buildings larger than 5,000 sq.ft.
Exceptions:

Sleeping units, patient care areas; and spaces where automatic shutoff would endanger safety or security.

☐ 7. Photocell/astronomical time switch on exterior lights.
Exceptions:

Lighting intended for 24 hour use.

☐ 8. Tandem wired one-lamp and three-lamp ballasted luminaires (No single-lamp ballasts).

Exceptions:

Electronic high-frequency ballasts; Luminaires on emergency circuits or with no available pair.

Section 4: Compliance Statement

Compliance Statement: The proposed lighting design represented in this document is consistent with the building plans, specifications and other calculations submitted with this permit application. The proposed lighting system has been designed to meet the 2006 IECC requirements in COM*check* Version 3.5.2 and to comply with the mandatory requirements in the Requirements Checklist.

Roger Robbins Proj Mgr — Signature — 2-12-09

Name - Title — Signature — Date

COM*check* Software Version 3.5.2

Interior Lighting Application Worksheet

2006 IECC

Report Date:

Data filename: X:\Projects\2008\08105.00.01 - Parleys Maint Sta\Comcheck Energy Compliance Report.cck

Section 1: Allowed Lighting Power Calculation

A Area Category	B Floor Area (ft2)	C Allowed Watts / ft2	D Allowed Watts (B x C)
Transportation	14815	1	14815
		Total Allowed Watts =	14815

Section 2: Proposed Lighting Power Calculation

A Fixture ID : Description / Lamp / Wattage Per Lamp / Ballast	B Lamps/ Fixture	C # of Fixtures	D Fixture Watt.	E (C X D)
Transportation (14815 sq.ft.)				
Linear Fluorescent 1: F1: Industrial Fluorescent / 96" T8 ES 60W / Electronic	2	49	132	6468
Linear Fluorescent 2: F2: Recessed Fluorescent / 48" T8 32W / Electronic	3	15	99	1485
Linear Fluorescent 3: F3: Surface Fluorescent / 48" T8 32W / Electronic	2	11	66	726
Compact Fluorescent 1: F4: Recessed Downlight / Triple 4-pin 26W / Electronic	2	1	55	55
Compact Fluorescent 2: F8: Recessed Downlignt / Triple 4-pin 32W / Electronic	1	4	35	140
			Total Proposed Watts =	8874

Section 3: Compliance Calculation

If the Total Allowed Watts minus the Total Proposed Watts is greater than or equal to zero, the building complies.

Total Allowed Watts =	14815
Total Proposed Watts =	8874
Project Compliance =	5941

Interior Lighting PASSES: Design 40% better than code.

COM*check* Software Version 3.5.2

Exterior Lighting Compliance Certificate

2006 IECC

Report Date: 02/11/09

Data filename: X:\Projects\2008\08105.00.01 - Parleys Maint Sta\Comcheck Energy Compliance Report.cck

Section 1: Project Information

Project Type: **New Construction**

Project Title : UDOT Parleys Maintenance Station #2434

Construction Site:
I-80 E.B. Exit 134
Parleys Canyon
Salt Lake city, UT

Owner/Agent:
Utah Department of Transportation

Designer/Contractor:
Archiplex Group
255 Crossroad Square
South Salt Lake City, UT 84115
(801) 961-7070

Section 2: Exterior Lighting Area/Surface Power Calculation

A Exterior Area/Surface	B Quantity	C Allowed Watts / Unit	D Tradable Wattage	E Allowed Watts (C x D)	F Proposed Watts
Parking area(s)	78600 ft2	0.15	Yes	11790	8660
			Total Tradable Watts* =	11790	8660
			Total Allowed Watts =	11790	
			Total Allowed Supplemental Watts** =	590	

* Wattage tradeoffs are only allowed between tradable areas/surfaces.

** A supplemental allowance equal to 5% of total allowed wattage may be applied toward compliance of both non-tradable and tradable areas/surfaces.

Section 3: Exterior Lighting Fixture Schedule

A Fixture ID : Description / Lamp / Wattage Per Lamp / Ballast	B Lamps/ Fixture	C # of Fixtures	D Fixture Watt.	E (C X D)
Parking area(s) (78600 ft2): Tradable Wattage				
HID 1: F5: Wall Metal Halide / Metal Halide 250W / Magnetic	1	12	285	3420
HID 2: F6: Wall Metal Halide / Metal Halide 100W / Magnetic	1	5	118	590
HID 3: F7: Wall Metal Halide / Metal Halide 400W / Magnetic	1	6	465	2790
HID 4: SF1: Pole Metal Halide / Metal Halide 400W / Magnetic	1	4	465	1860
			Total Tradable Proposed Watts =	8660

Section 4: Requirements Checklist

Lighting Wattage:

☐ 1. Within each non-tradable area/surface, total proposed watts must be less than or equal to total allowed watts. Across all tradable areas/surfaces, total proposed watts must be less than or equal to total allowed watts.

Compliance: Passes.

Controls, Switching, and Wiring:

☐ 2. All exemption claims are associated with fixtures that have a control device independent of the control of the nonexempt lighting.

☐ 3. All nonexempt lighting fixtures shall be controlled by a photosensor or astronomical time switch that is capable of automatically turning off the fixture when sifficient daylight is available or the lighting is not required.

Exterior Lighting Efficacy:

☐ 4. All exterior building grounds luminaires that operate at greater than 100W have minimum efficacy of 60 lumen/watt..
Exceptions:

Controlled by motion sensor or exempt from consideration under the provisions of Section 505.6.2.

Exterior Lighting PASSES: Design 27% better than code.

Section 5: Compliance Statement

Compliance Statement: The proposed exterior lighting design represented in this document is consistent with the building plans, specifications and other calculations submitted with this permit application. The proposed lighting system has been designed to meet the 2006 IECC requirements in COM*check* Version 3.5.2 and to comply with the mandatory requirements in the Requirements Checklist.

Name - Title	Signature	Date
ROGER RIDDLE PROJ MGR		2-12-09

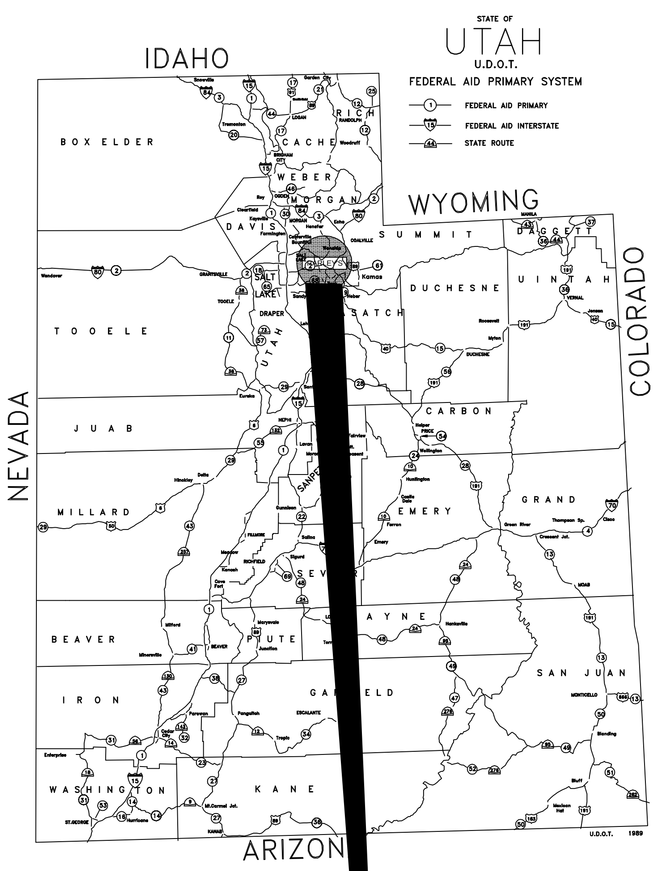

UDOT MAINTENANCE STATION #2434

6072 E. EMIGRATION CANYON ROAD
I-80 EXIT 134
PARLEYS CANYON, UTAH

DFCM PROJECT #08211900

CONSTRUCTION DOCUMENTS

JANUARY, 2009

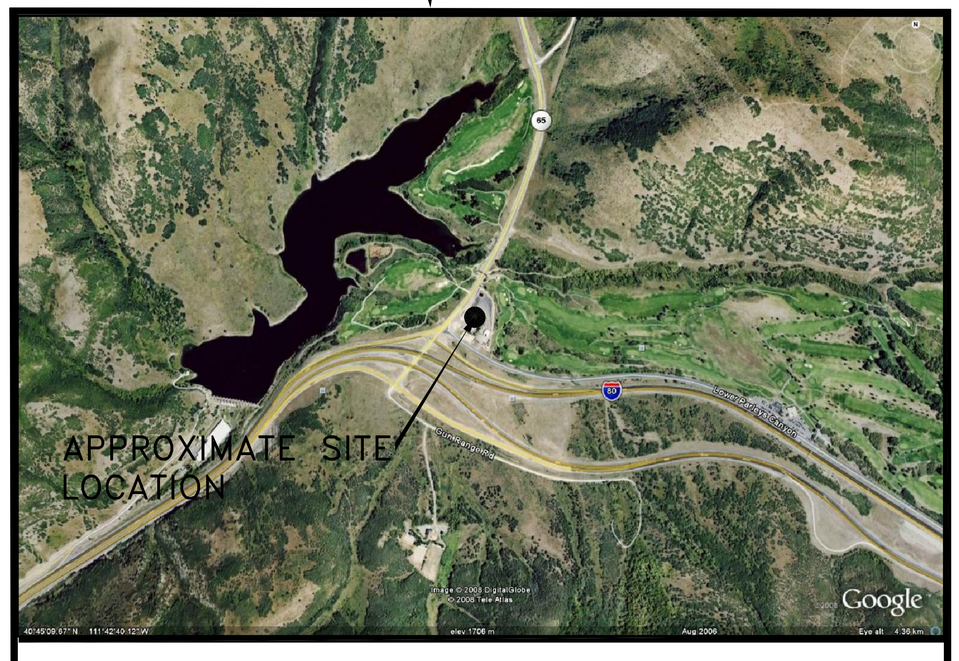

6072 E. EMIGRATION CANYON ROAD
PARLEY'S CANYON, UTAH

N

PREPARED BY

ARCHIPLEX GROUP
architecture · planning · design services
255 Crossroad Square
Salt Lake City, UT 84115
P:(801) 961-7070
F:(801) 961-7373
Ralph Stanislaw

CONSULTANTS

STRUCTURAL
BHB Consulting Engineers
244 West 300 North
Suite 202
Salt Lake City, Utah 84103
Telephone: (801) 355-5656
Fax: (801) 355-5950
Gerald McKenzie
geraldb@bhbengineers.com

CIVIL
PEPG Engineering
8805 S. Sandy Parkway
Sandy, Utah 84070
Telephone: (801) 562-2521
Fax: (801) 562-2551
Darrin Smith
Darrin@pepg.net

ELECTRICAL
PVE Inc.
1040 North 2200 West
Salt Lake City, UT 84116
Telephone: (801) 359-3158
Fax: (801) 521-4114
Roger Riddle
rkriddle@pve-ut.com

MECHANICAL
PVE Inc.
1040 North 2200West
Salt Lake City, UT 84116
Telephone: (801) 359-3158
Fax: (801) 521-4114
Alan Spendlove
adspendlove@pve-ut.com

CODE ANALYSIS

APPLICABLE CODES

	Year		Year
International Building Code	2006	National Electrical Code	2005
International Mechanical Code	2006	Uniform Code for Building Conservation	N.A.
International Plumbing Code	2006	ADA Accessibility Guildelines-ANSI A117.1	2003
International Fire Code	2006		
International Energy Conservation Code	2006		

A. Occupancy and Group: S1 (REPAIR GARAGE) B (OFFICES ACCESSORY) (VEHICLE STORAGE)

Change in Use: Yes ____ No X Mixed Occupancy: Yes X No ____

Special Use and Occupancy (e.g. High Rise, Covered Mall): N.A.

B. Seismic Design Category: D Design Wind Speed: 90 mph

C. Type of Construction (circle one):

I/A I/B II/A II/B III/A III/B IV/HT V/A (V/B)

D. Fire Resistance Rating Requirements for the Exterior Walls based on the fire separation distance (in hours):

North: 0 South: 0 East: 0 West: 0

E. Mixed Occupancies: YES Nonseparated Uses: YES

F: Sprinklers: Group S-1 + B Fire Area = 10,733 Group S-2 Fire Area = 4,600

3 HOUR FIRE BARRIER PROVIDED PER TABLE 706.3.9

Required: NO Provided: NO Type of Sprinkler System: N.A.

(TOTAL FIRE AREA EXCEEDS 12,000 S.F.)

G: Number of Stories: 1 Building Height: 26'-0"

H: Actual Area per Floor (square feet): 15,333 SF

I: Tabular Area: 9000 SF

J: Area Modifications:

a) $A_a = A_t + \left[\frac{A_t\ I_f}{100}\right] + \left[\frac{A_t\ I_s}{100}\right]$ $\quad I_f = 100\left[\frac{F}{P} - 0.25\right]\frac{W}{30}$

$$15333\ SF = 9000 + \left[\frac{9000\ (75)}{100}\right] + \left[\frac{9000\ (0)}{100}\right]$$

b) Sum of the Ratio Calculations for Mixed Occupancies:

$$\frac{\text{Actual Area}}{\text{Allowable Area}} \leq 1 \quad \frac{15{,}200\ SF}{15750\ SF} = .965$$

c) Total Allowable Area for:
1) One Story: 15750 SF
2) Two Story: $A_a(2)$ N.A.
3) Three Story: $A_a(3)$ N.A.

d) Unlimited Area Building: Yes ____ No X Code Section: ____

K. Fire Resistance Rating Requirements for Building Elements (hours).

Element	Hours	Assembly Listing	Element	Hours	Assembly Listing
Exterior Bearing Walls	0	N.A.	Floors - Ceiling Floors	0	N.A.
Interior Bearing Walls	0	N.A.	Roofs - Ceiling Roofs	0	N.A.
Exterior Non-Bearing Walls	0	N.A.	Exterior Doors and Windows	0	N.A.
Structural Frame	0	N.A.	Shaft Enclosures	0	N.A.
Partitions - Permanent	0	N.A.	Fire Walls	0	N.A.
Fire Barriers	3	N.A.	Fire Partitions	0	N.A.
Incidental Storage	1	UL419	Smoke Partitions	0	N.A.

L. Design Occupant Load: 39* (Per IBC TABLE 1004.1.2 Using 500 S.F. per Occupant for garages, 100 S.F. for office areas) S1= 29 B= 8

Exit Width Required: 7.2" Exit Width Provided: 36"

M. Minimum Number of Required Plumbing Facilities: *UNISEX (IBS SECTION 2902.2 EXPECTION 2)

Actual Occupant Load: 14 BASED ON ACTUAL UDOT STAFFING

a) Water Closets - Required 1 unisex Provided (m) _____ (f) _____
b) Lavatories - Required 1* Provided 1*
c) Bath Tubs or Showers: 1 (EMERGENCY EYEWASH)
d) Drinking Fountains: 1 Service Sinks: 1

MAXIMUM EMPLOYEES PERMITTED = 15

GENERAL NOTE:

1. CONSTRUCTION OF NEW STATE BUILDINGS AND REMODELING OF EXISTING BUILDINGS SHALL COMPLY WITH ALL THE REQUIREMENTS OF THE DFCM STANDARDS, INCLUDING ENHANCED ACCESSIBILITY. TO THE BEST OF OUR KNOWLEDGE, DRAWINGS & SPECIFICATIONS INCORPORATED HEREIN CONFORM WITH DFCM STANDARDS FOUND AT THE FOLLOWING WEB SITE: www.dfcm.utah.gov.

2. EVERY STRUCTURE, AND PORTION THEREOF, INCLUDING NONSTRUCTURAL COMPONENTS THAT ARE PERMANENTLY ATTACHED TO STRUCTURES AND THEIR SUPPORTS AND ATTACHMENTS, SHALL BE DESIGNED AND CONSTRUCTED TO RESIST TO EFFECTS OF EARTHQUAKE MOTIONS IN ACCORDANCE WITH ASCE 7-05. REFERENCE IBC SECTION 1613.1

3.

CLIENT

UDOT CONNECTING COMMUNITIES

STATION #2434
6072 E. EMIGRATION CANYON RD.
PARLEY'S CANYON, UTAH

DESIGNER

ARCHIPLEX GROUP
architecture · planning · design services
255 Crossroad Square
Salt Lake City, UT 84115
P:(801) 961-7070
F:(801) 961-7373

CONSULTANTS

REGISTRATION

STATE OF UTAH
RALPH M. STANISLAW
05-0305B-0301
LICENSED ARCHITECT

ISSUE

MARK	DATE	DESCRIPTION
1	2-17-09	Addendum #1
	01-09	Revised Contruction Doc.
	10-08	Construction Documents
	8-20-08	90% Review Submittal

ARCHIPLEX PROJECT NO:	0728.02
DFCM PROJECT NO:	08211900
DRAWN BY:	A. PHILLIPS
CHECKED BY:	R. STANISLAW
SCALE:	NONE
DATE:	JANUARY, 2009

KEY PLAN

SHEET TITLE

COVER SHEET

G000

© 2004 ARCHIPLEX GROUP

GENERAL NOTES

1. CONTRACTOR IS RESPONSIBLE FOR VERIFYING ALL DIMENSIONS AND CONDITIONS AT THE SITE BEFORE SUBMITTING A BID OR PROCEEDING WITH ANY PORTION OF THE WORK.
2. WHENEVER QUESTIONS ARISE OR CONDITIONS ARE ENCOUNTERED WHICH ARE NOT COVERED BY OR ARE IN CONFLICT WITH THE CONTRACT DOCUMENTS, CONSULT WITH THE ARCHITECT PRIOR TO TAKING ANY FURTHER ACTION.
3. ALL DIMENSIONS ARE TO FACE OF MASONRY OR FACE OF STUD, U.N.O.
4. DO NOT SCALE DRAWINGS FOR DIMENSIONS.
5. DIMENSIONS NOTED AS N.T.S. ARE TO BE FIELD VERIFIED.
6. ALL WOOD IN CONTACT WITH OR WITHIN 8" OF SOILS IS TO BE FIELD TREATED FOR MOISTURE, RODENT AND INSECT PROTECTION.
7. THE CONTRACTOR SHALL COORDINATE THE SEQUENCING OF WORK WITH THE OWNER AND ARCHITECT TO MEET THE OWNERS SCHEDULE.
8. CONTRACTOR SHALL LEAVE WORK AREAS BROOM CLEAN AND FREE OF TOOLS, EQUIPMENT, ETC., AT THE END OF EACH SHIFT. ALL CONSTRUCTION ACTIVITY SHALL BE CONTAINED WITHIN CONSTRUCTION BARRICADES OR FENCES. CONTRACTOR SHALL PROTECT OWNERS EXISTING CONSTRUCTION AND EQUIPMENT ADJACENT TO NEW CONSTRUCTION. CONTRACTOR SHALL CLEAN ALL SURFACES TO "LIKE NEW" CONDITION AT THE COMPLETION OF
9. PROVIDE WATER SUPPLY ROUGH-IN AND ELECTRICAL SUPPLY TO IRRIGATION CONTROLS. PROVIDE PVC SLEEVE UNDER PAVEMENTS AND WALKS

GRAPHIC SYMBOLS

ASPHALT	GRAVEL
EARTH	CONCRETE
SAND	CAST STONE
CONC. W/ FINISH	MARBLE
TILE W/ BED	GRANITE
BRICK	STONE
CMU	PLYWOOD
LIMESTONE	WOOD FINISH
WOOD (BLOCKING)	ALUMINUM
WOOD FRAMING	BATT INSULATION
STEEL	ACOUSTICAL TILE
RIGID INSULATION	BACKER ROD AND FILLER
PLASTER	GYPSUM BOARD
COMP. FILLER	FENCE
METAL LATH	

ARCHITECTURAL LEGEND

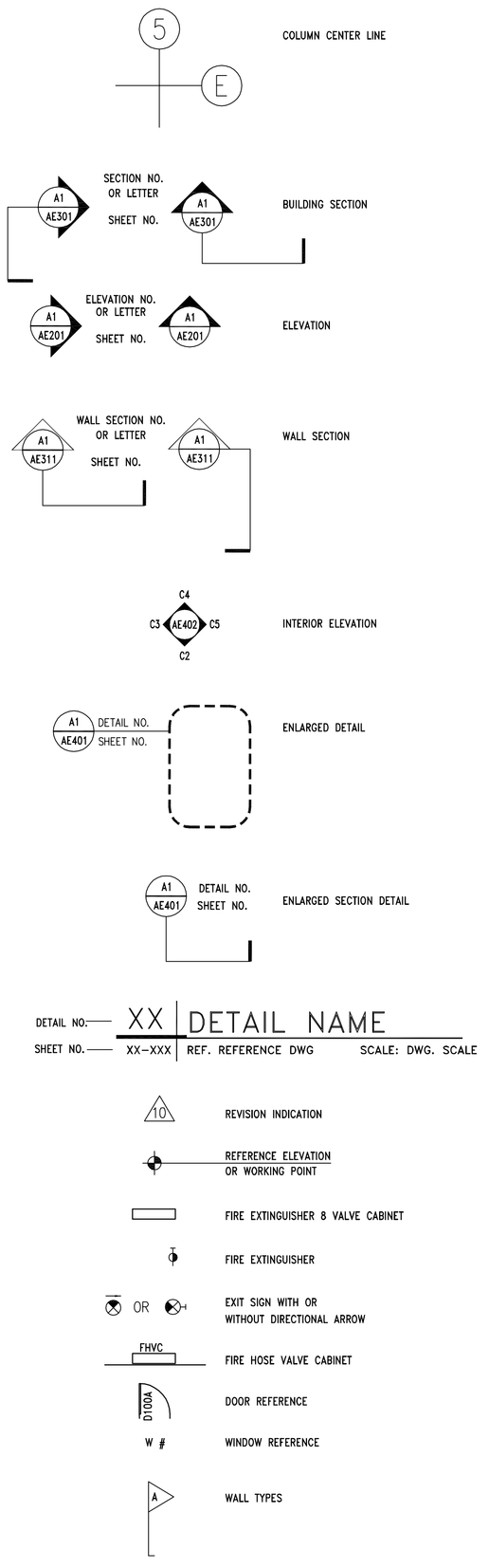

ABBREVIATIONS

ALT.	ALTERNATE
ALUM.	ALUMINUM
A.B.	ANCHOR BOLT
&	AND
ARCH.	ARCHITECTURAL
@	AT OR AT THE
BM.	BEAM
BLK.	BLOCK
BLKG.	BLOCKING
BD.	BOARD
BOT.	BOTTOM
BLDG.	BUILDING
CLKG.	CAULKING
C.I.	CAST IRON
CLG.	CEILING
CEM.	CEMENT
CTR.	CENTER
	CENTER LINE
CER.	CERAMIC
C.T.	CERAMIC TILE
CFCI	CONTRACTOR FURNISH, CONTRACTOR INSTALL
CFOI	CONTRACTOR FURNISH, OWNER INSTALLED
CLR.	CLEAR (...ANCE)
CLO.	CLOSET
COL.	COLUMN
CONC.	CONCRETE
CMU	CONCRETE MASONRY UNIT
CONN.	CONNECTION
CONSTR.	CONSTRUCTION
CONT.	CONTINUE/CONTINUOUS
CONTR.	CONTRACTOR
C.J.	CONTROL JOINT
CORR.	CORRIDOR
CNTR.	COUNTER
CTSK.	COUNTERSUNK
DET.	DETAIL
DIA.	DIAMETER
DIM.	DIMENSION
DN.	DOWN
D.S.	DOWNSPOUT
DWG.	DRAWING
D.F.	DRINKING FOUNTAIN
EA.	EACH
ELEC.	ELECTRIC (AL)
ELEV./EL.	ELEVATION
EQ.	EQUAL
EQUIP.	EQUIPMENT
EXP.	EXPANSION
EXT.	EXTERIOR
EW	EACH WAY
FIN.	FINISH
F.A.	FIRE ALARM
F.E.	FIRE EXTINGUISHER
F.E.C.	F.E. CABINET
FLR./FL.	FLOOR
F.D.	FLOOR DRAIN
FTG.	FOOTING
FDN.	FOUNDATION
GALV.	GALVANIZED
G.I.	GALVANIZED IRON
GA.	GAUGE
GL.	GLASS
GR.	GRADE
GND.	GROUND
GYP.	GYPSUM
GYP. BD.	GYPSUM BOARD
HDWR.	HARDWARE
HDWD.	HARDWOOD
HT.	HEIGHT
H.P.	HIGH POINT
HORIZ.	HORIZONTAL
H.B.	HOSE BIBB
HM	HOLLOW METAL
HR.	HOURS (FIRE RATING)
IN.	INCH
I.D.	INSIDE DIAMETER
INUSL.	INSULATION
INT.	INTERIOR
JAN.	JANITOR
JT.	JOINT
J-BOX	JUNCTION BOX
KIT.	KITCHEN
LAM.	LAMINATE
LAV.	LAVATORY
LT.	LIGHT
L.P.	LOW POINT
MAINT.	MAINTENANCE
MFR.	MANUFACTURER
M.O.	MASONRY OPENING
MAX.	MAXIMUM
MECH.	MECHANICAL
MEMB.	MEMBRANE
MEN	MEN'S TOILET
MTL./MET.	METAL
MIN.	MINIMUM
MIR.	MIRROR
MISC.	MISCELLANEOUS
MTD.	MOUNTED
MUL.	MULLION
NOM.	NOMINAL
N.	NORTH
N.I.C.	NOT IN CONTRACT
N.T.S.	NOT TO SCALE
NO. OR #	NUMBER
OFOI	OWNER FURNISH, OWNER INSTALL
OFCI	OWNER FURNISH, CONTRACTOR INSTALL
OFF.	OFFICE
O.C.	ON CENTER
OPNG.	OPENING
OPP.	OPPOSITE
OPP. H.	OPPOSITE HAND
O.D.	OUTSIDE DIAMETER
PTD.	PAINTED
PR.	PAIR
PART.	PARTITION
PED.	PEDESTRIAN
PLAS.	PLASTER
P. LAM.	PLASTIC LAMINATE
PL	PLATE
PM	PRESSED METAL
PLYWD.	PLYWOOD
PT.	POINT
Q.T.	QUARRY TILE
RAD.	RADIUS
R.W.L.	RAIN WATER LEADER
RE:	REFER TO
REFL.	REFLECTED
REINF.	REINFORCING
REQ.	REQUIRED
REV.	REVISED
R.	RISER
R.D.	ROOF DRAIN
RM.	ROOM
R.O.	ROUGH OPENING
SCHED.	SCHEDULE
SEAL.	SEALANT
SECT.	SECTION
S.SK.	SERVICE SINK
SHT.	SHEET
SIM.	SIMILAR
SL./SLP.	SLOPE
S.C.	SOLID CORE
SPEC.	SPECIFICATIONS
SQ.	SQUARE
STD.	STANDARD
STL.	STEEL
STOR.	STORAGE
STRUCT.	STRUCTURAL/STRUCTURE
SYM.	SYMMETRICAL
S.STL	STAINLESS STEEL
TEL.	TELEPHONE
TEMP.	TEMPORARY/TEMPERED
THK.	THICK (NESS)
T & G	TONGUE AND GROOVE
T/CONC.	TOP OF CONCRETE
T/CURB	TOP OF CURB
T.O.P.	TOP OF PLATE
T/WALL	TOP OF WALL
T.	TREAD
TYP.	TYPICAL
UNF.	UNFINISHED
U.N.O.	UNLESS NOTED OTHERWISE
VAR.	VARY OR VARIES
VERT.	VERTICAL
V.T.R.	VENT THROUGH ROOF
W/	WITH
WD.	WOOD
WP.	WATERPROOF
WSCT.	WAINSCOT
W/O	WITHOUT
W.P.	WORKING POINT
W.R.	WATER RESISTANT

INDEX OF DRAWINGS

G000	COVER SHEET
G001	GENERAL NOTES, ABBREVIATIONS, SYMBOLS, LEGEND & SHEET INDEX
G002	MASTER KEYNOTE LIST

CIVIL

C100	DEMOLITION PLAN
C200	SITE AND UTILITY PLAN
C300	GRADING AND DRAINAGE PLAN
C301	RETAINING WALL PLAN AND PROFILE
C302	SANDER RACK PLAN AND PROFILE
C400	EROSION CONTROL PLAN
C401	EROSION CONTROL TYPICAL SECTIONS AND DETAILS
C500	TYPICAL SECTIONS AND DEATLS
C501	TYPICAL SECIONS AND DETAILS

LANDSCAPING

L100	LANDSCAPE PLAN
L101	LANDSCAPE NOTES AND SCHEDULE
L102	LANDSCAPE DETAILS

ARCHITECTURAL

AE100	OCCUPANT LOAD FLOOR PLAN
AE101	FIRST FLOOR AND MEZZANINE PLAN
AE121	REFLECTED CEILING PLANS
AE141	ROOF PLAN
AE201	EXTERIOR ELEVATIONS
AE301	BUILDING SECTIONS
AE311	WALL SECTIONS
AE312	WALL SECTIONS
AE313	WALL SECTIONS
AE401	ENLARGED RESTROOM FLOOR PLAN, INT. ELEVTATIONS AND DETAILS
AE402	ENLARGED MAINTENANCE BAY AND INTERIOR ELEVATIONS
AE403	STAIR PLAN, SECTION ELEVATION & DETAILS
AE501	WALL TYPES
AE502	SIGNAGE AND MISC. DETAILS
AE503	MISC. DETAILS
AE601	DOOR SCHEDULE AND DETAILS
AE602	WINDOW FRAME TYPES, GLAZING & FINISH SCHEDULES AND DETAILS
AE701	WASH RACK PLAN, SECTION & ELEVATIONS
AE702	SITE STRUCTURES, MOTORIZED GATE PLAN & ELEVATION
AE703	SITE STRUCTURES, SANDER RACK PLAN, SECTION & ELEVATION

STRUCTURAL

SJ001	GENERAL STRUCTURE NOTES
SB101	FOOTING AND FOUNDATION PLAN
SB501	FOOTING AND FOUNDATION DETAILS
SB502	FOOTING AND FOUNDATION DETAILS
SB503	FOOTING AND FOUNDATION DETAILS
SB601	SCHEDULES
SF101	OUT BUILDING PLANS AND DETAILS
SF111	ROOF FRAMING PLAN
SF501	MEZZANINE/STAIR DETAILS
SF511	ROOF FRAMING DETAILS
SF112	ROOF FRAMING DETAILS
SF601	SCHEDULES

MECHANICAL

M001	MECHANICAL SCHEDULES
M201	MECHANICAL FLOOR PLAN
M601	MECHANICAL DETAILS
M602	MECHANICAL DETAILS
P001	PLUMBING SCHEDULES
P201	PLUMBING FLOOR PLAN
P301	ISOMETRIC NATURAL GAS DIAGRAM
P601	PLUMBING DETAILS
P602	PLUMBING DETAILS

ELECTRICAL

E101	ELECTRICAL SYMBOLS AND NOTES
E102	ELECTRICAL SITE PLAN
E201	ELECTRICAL LIGHTING PLAN
E301	ELECTRICAL POWER PLAN
E302	SNOW MELT
E401	ELECTRICAL SCHEDULES & RISERS
E501	ELECTRICAL DETAILS
E502	ELECTRICAL DETAILS

1 ~~COM. CHECKS~~

~~COMP101 COMPLIANCE CERTIFICATE~~
~~COMP201 COMPLIANCE CERTIFICATE~~

CLIENT

UDOT CONNECTING COMMUNITIES

STATION #2434
6072 E. EMIGRATION CANYON RD.
PARLEY'S CANYON, UTAH

DESIGNER

ARCHIPLEX GROUP
architecture · planning · design services
255 Crossroad Square
Salt Lake City, UT 84115
P:(801) 961-7070
F:(801) 961-7373

CONSULTANTS

REGISTRATION

STATE OF UTAH
RALPH M. STANISLAW
06-310688-0001
LICENSED ARCHITECT

ISSUE

MARK	DATE	DESCRIPTION
1	2-17-09	Addendum #1
	01-09	Revised Contruction Doc.
	10-08	Construction Documents
	8-20-08	90% Review Submittal

ARCHIPLEX PROJECT NO:	0728.02
DFCM PROJECT NO:	08211900
DRAWN BY:	A. PHILLIPS
CHECKED BY:	R. STANISLAW
SCALE:	NONE
DATE:	JANUARY, 2009

KEY PLAN

SHEET TITLE

GENERAL NOTES, ABBREVIATIONS, LEGENDS AND DRAWING INDEX

G001

© 2004 ARCHIPLEX GROUP

MASTER KEYNOTE LIST – (APPLIES TO ARCHITECTURAL DRAWINGS ONLY)

DIVISION 1 GENERAL REQUIREMENTS

DIVISION 2 SITEWORK

02200 EARTHWORK

02200.A0 COMPACTED FILL
02200.B0 GRAVEL BASE
02200.C0 SAND

02512 ZERO VOIDS ASPHALT PAVING

02512.A0 ZERO VOIDS ASPHALT PAVING (THICKNESS)

02513 ASPHALT CONCRETE PAVING

02513.A0 ASPHALT CONCRETE PAVING

02822 CHAIN LINK FENCES & GATES

02822.A1 CANTILEVERED GATE
02822.B1 2" ø GATE FRAME
02822.C1 NEW 6' HIGH CHAIN LINK FENCE – SEE CIVIL
02822.D1 TENSION TIE WIRE
02822.E1 LINE POSTS @ 10'-0" O.C.
02822.F1 2" DIAMOND MESH STEEL FABRIC
02822.G0 3 LINE BARBED WIRE
02822.H0 VERTICAL VINYL FENCE SLATS – COLOR BY ARCHITECT

02831 HORIZONTAL SLIDING GATE OPERATORS

02831.A1 PHYSICAL TRAVEL STOP
02831.B1 HYDRAULIC SLIDE GATE OPERATOR W/AUDIO ALARM
02831.C1 UNDERGROUND OBSTRUCTION LOOP
02831.D1 GATE SENSORS
02831.E1 KEY PAD ACCESS ON PEDESTAL
02831.F1 CARD READER ON PEDESTAL
02831.G1 FIRE ACCESS & KNOX BOX ON PEDESTAL
02831.H1 GATE RECEIVER POCKET

DIVISION 3 CONCRETE

03053 CONCRETE WATER PROOFING ADMIXTURE

03053.A0 CONCRETE WATER PROOFING ADMIXTURE

03054 OLIOPHOBIC TOPICAL CONCRETE SEALER

03054.A0 OLIOPHOBIC TOPICAL SEALER

03055 SALT AND WATER BARRIER FOR EXTERIOR CONCRETE

03055.A0 SALT AND WATER BARRIER

03300 CAST-IN-PLACE CONCRETE

03300.A0 CONCRETE – SLAB ON GRADE
03300.A1 CONCRETE SLAB-ON-GRADE – SEE STRUCTURAL
03300.A2 CONCRETE SLAB-ON-GRADE (THICKNESS)
03300.B1 CONCRETE SLAB – RE:STRUCTURAL
03300.B2 CONCRETE SLAB (THICKNESS)
03300.C0 FOOTING
03300.C1 FOOTING – SEE STRUCTURAL
03300.D0 CONCRETE PAD
03300.E0 CONCRETE RETAINING WALL WITH CULTURED STONE FACING – COORD. WITH CIVIL & STRUCTURAL
03300.F0 CAST-IN-PLACE REINFORCED CONCRETE
03300.G0 CONCRETE OVER METAL DECK – SEE STRUCTURAL
03300.H0 FOUNDATION WALL – SEE STRUCTURAL
03300.H1 CONCRETE PIER – SEE STRUCTURAL
03300.J0 REINFORCING
03300.J1 REINFORCING – SEE STRUCTURAL
03300.J2 #4 BARS CONTINUOUS (QUANTITY)
03300.J3 #5 BARS CONTINUOUS (QUANTITY)
03300.K1 CONCRETE PIPE BASE
03300.L1 30# FELT
03300.M1 MOISTURE BARRIER
03300.N0 CONCRETE CURB
03300.P3 CONTROL JOINT – SEE STRUCTURAL
03300.P4 CONSTRUCTION JOINT
03300.P5 ISOLATION JOINT
03300.P6 CHAMFER JOINT
03300.P7 SAWCUT CONSTRUCTION JOINT, TYP.
03300.P8 CHAMFER EDGE
03300.Q1 CONCRETE BOLLARD PAINTED (SEE STRUTURAL)
03300.R0
03300.T1 CONCRETE @ STAIR TREAD
03300.S0 PREFORMED CONCRETE CAP

DIVISION 4 MASONRY

04200 UNIT MASONRY

04200.A0 CMU
04200.A2 CMU (SIZE)
04200.A3 SPLIT FACE (SIZE)
04200.B0 GROUT SOLID
04200.C0 BOND BEAM (SHAPE)
04200.C1 BOND BEAM – SEE STRUCTURAL
04200.D1 CMU LINTEL – SEE STRUCTURAL
04200.G1 REINFORCING – SEE STRUCTURAL
04200.K2 ANCHOR BOLTS (DIAMETER, SPACING)
04200.M0 WEEP HOLES
04200.N0 METAL FLASHING
04200.Q0 INSULATED BLOCK
04200.R0 MASONRY CONTROL JOINT

DIVISION 5 METALS

05120 STRUCTURAL STEEL

05120.A0 STEEL BEAM – SEE STRUCTURAL
05120.A1 STEEL BEAM – SEE STRUCTURAL – GALVANIZED
05120.A2 STEEL BEAM – SEE STRUCTURAL – PRIMED AND PAINTED
05120.B1 STEEL COLUMN – SEE STRUCTURAL – GALVANIZED
05120.B2 STEEL COLUMN – SEE STRUCTURAL – PRIMED AND PAINTED
05120.C1 TUBE STEEL BEAM – SEE STRUCTURAL – GALVANIZED
05120.D1 TUBE STEEL COLUMN – SEE STRUCTURAL
05120.D2 TUBE STEEL COLUMN – SEE STRUCTURAL – PRIMED AND PAINTED

05220 STEEL JOISTS AND JOIST GIRDERS

05220.A1 STEEL JOISTS – SEE STRUCTURAL
05220.A2 STEEL JOISTS – SEE STRUCTURAL – PRIMED AND PAINTED
05220.B2 STEEL GIRDERS – SEE STRUCTURAL – PRIMED AND PAINTED

05310 STEEL DECK

05310.A1 METAL DECK – SEE STRUCTURAL

05400 COLD-FORMED METAL FRAMING

05400.A1 6" STRUCTURAL STEEL STUDS – SEE STRUCTURAL DRAWINGS FOR SPACING AND GAUGE
05400.A2 3 5/8" STRUCTURAL STEEL STUDS – SEE STRUCTURAL DRAWINGS FOR SPACING AND GAUGE
05400.X1 STEEL STUD
05400.X2 STEEL TRACK
05400.X3 STEEL JOIST – SEE STRUCTURAL

05500 METAL FABRICATIONS

05500.A1 ANGLE – SEE STRUCTURAL
05500.A2 STEEL ANGLE (SIZE) – GALVANIZED
05500.A3 STEEL ANGLE (SIZE)
05500.B0 CLIP ANGLE
05500.B2 CLIP ANGLE (SIZE)
05500.C1 SHEET METAL ANGLE – 22 GA. – GALVANIZED (SIZE)
05500.D0 CHANNEL (SIZE)
05500.D1 CHANNEL – SEE STRUCTURAL
05500.D2 HAT CHANNEL (SIZE)
05500.D3 CHANNEL – PRIMED AND PAINTED – SEE STRUCTURAL
05500.E0 PLATE (SIZE)
05500.E1 PLATE – SEE STRUCTURAL
05500.E2 PLATE (SIZE) – GALVANIZED
05500.E3 BENT PLATE – SEE STRUCTURAL
05500.F1 THRU BOLT (DIAMETER)
05500.G1 BENT BAR TAB (THICKNESS)
05500.G2 BARTAB (THICKNESS)
05500.H1 LAG BOLTS (DIAMETER)
05500.J1 PIPE BOLLARD (DIAMETER) – GALV. & PAINTED
05500.M1 CHECKERED PLATE (SIZE) GALVANIZED
05500.P0 ANCHOR BOLT(S)
05500.V0 FLOOR PLATE
05500.X1 STEEL STUD (SEE STRUCTURAL)
05500.X2 STEEL RUNNER (SEE STRUCTURAL)
05500.Y0 AIR DUCT SCREEN
05500.Y1 AIR DUCT SCREEN – PAINTED
05500.Z0 CHAIN – GALVANIZED

05510 METAL STAIRS

05510.A1 LADDER RUNGS
05510.B0 LADDER RAILS
05510.C0 LADDER MOUNTING BRACKET
05510.D1 RUBBER SHOE AT BOTTOM OF EACH RAIL
05510.E1 NON SKID SURFACE @ NOSING
05510.F0 STEEL STRINGER – (SIZE)
05510.F1 STEEL STRINGER – (SIZE) – PAINTED
05510.G1 3/16" STEEL CLOSURE PLATE – PAINTED
05510.H0 CONC. FILLED METAL PAN STAIR – PAINTED
05510.H1 PRE-FORMED, CONC. FILLED METAL PAN STAIR TREAD – (SIZE) – PAINTED
05510.J1 METAL PAN STAIR SUPPORT – (SIZE) – PAINTED
05510.J2 PAN ANCHORAGE – (SIZE) – PAINTED
05510.K1 STEEL CHANNEL DECK SUPPORT – PAINTED

05521 PIPE & TUBE RAILINGS

05521.A1 1 1/2" O.D. STEEL GUARDRAIL
05521.A2 PIPE GUARDRAIL (DIAMETER) – GALVANIZED
05521.A3 1 1/2" O.D. PIPE GUARDRAIL – GALVANIZED
05521.A4 1 1/2" O.D. PIPE GUARDRAIL – PAINTED
05521.B1 1 1/2" O.D. HANDRAIL
05521.B2 PIPE HANDRAIL (DIAMETER) – GALVANIZED
05521.B3 1 1/2" O.D. PIPE HANDRAIL – GALVANIZED
05521.B4 1 1/2" O.D. PIPE GUARDRAIL – PAINTED
05521.C2 ESCUTCHEON WITH EASED EDGES (SIZE)
05521.D1 PIPE RAIL SUPPORT – PAINTED
05521.E1 1" I.D. PIPE RAILING ANCHOR – GALVANIZED
05521.F1 1/2" DIA. THRU BOLT

05530 GRATINGS

05530.A0 TRENCH FRAME – GALVANIZED
05530.A1 STEEL GRATE 22-W-4 (SIZE) GALVANIZED
05530.B0 ALUMINUM BAR PANELS
05530.C1 METAL GRATE PANEL – GALV.
05530.C2 METAL GRATE TREAD – GALV.

DIVISION 6 WOOD AND PLASTICS

06105 MISCELLANEOUS CARPENTRY

06105.L2 BLOCKING AS REQUIRED
06105.P1 2X4
06105.P2 2X6
06105.P6 4X4
06105.P9 2 x FRAMING, FIRE TREATED
06105.P10 PRESSURE TREATED WOOD TIMBER (SIZE)
06105.P11 2 x BLOCKING
06105.Q2 SHIM AS REQUIRED
06105.R2 SHEATHING – PLYWOOD (THICKNESS) GRADE (SIZE)
06105.R3 PLYWOOD PANEL (THICKNESS) – MECHANICALY FASTENED THROUGH INSULATION INTO CMU WALL
06105.R4 PLYWOOD PANEL (THICKNESS)
06105.V1 EXTERIOR GRADE PLYWOOD (THICKNESS)
06105.V6 PEGBOARD (THICKNESS)
06105.Z0 ANCHOR AS REQUIRED

06402 INTERIOR ARCHITECTURAL WOODWORK

06402.A0 SILL
06402.B1 PLASTIC LAMINATE BACKSPLASH (HEIGHT)
06402.C1 PAINT GRADE WOOD CAP (THICK)
06402.D1 3/4" PARTICLE BOARD W/MELANINE FINISH
06402.E1 WIRE PULL
06402.F1 PROVIDE WHITE MELAMINE FINISH @ ALL INTERIOR SURFACES
06402.G1 3/4" PARTICLE BOARD CABINET TOP W/PLAM (FINISH)
06402.G2 3/4" PARTICLE BOARD CABINET BASE W/PLAM (FINISH)
06402.G3 3/4" PARTICLE BOARD CABINET TOP
06402.H0 SHELF(VES)
06402.H1 ADJUSTABALE SHELVES (FINISH)
06402.H2 SHELVING (DEPTH)
06402.J1 RECESSED SHELF BRACKETS
06402.K0 BASE UNIT (FINISH)
06402.K2 BASE UNIT W/ADJ. SHELF(VES) (FINISH)
06402.K3 BASE UNIT W/DRAWERS (FINISH)
06402.K4 BASE UNIT W/DRAWER & ADJ. SHELF(VES) (FINISH)
06402.L1 WALL UNIT (FINISH)
06402.L2 WALL UNIT W/ADJ. SHELF(VES) (FINISH)
06402.P0 COUNTERTOP
06402.M1 3/4" PARTICLE BOARD SCREEN (FINISH)
06402.P2 COUNTERTOP – P. LAM. ON 3/4" PLYWOOD
06402.X0 WORKBENCH (DEPTH)

06651 SOLID SURFACE FABRICATIONS

06651.A0 1/2" WHITE SOLID SURFACE WINDOW SILL
06651.B0 SOLID SURFACE COUNTER TOP
06651.C0 SOLID SURFACE BACKSPLASH

DIVISION 7 THERMAL AND MOISTURE PROTECTION

07110 SHEET MEMBRANE WATER PROOFING SYSTEM

07110.A0 SELF ADHESIVE MEMBRANE WATERPROOFING
07110.B0 PRE-FABRICATED DRAINAGE COMPOSITE MATERIAL

07190 WATER REPELLANTS

07190.A0 CLEAR WATER RESISTANT COATING

07210 BUILDING INSULATION

07210.A1 BATT INSULATION (R-VALUE)
07210.B0 RIGID INSULATION
07210.B1 RIGID INSULATION (R-VALUE)
07210.C0 RIGID INSULATION FOIL FACED W/VAPOR BARRIER
07210.C1 RIGID INSULATION (CONTINUOUSLY ADHERED TO CMU) W/FOIL FACED VAPOR BARRIER TOWARDS INTERIOR (R-VALUE)
07210.D0 VAPOR BARRIER
07210.E0 FOUNDATION WALL INSULATION (THICKNESS)

07410 MANUFACTURED ROOF PANELS, GUTTER & FLASHING

07410.A0 STANDING SEAM METAL ROOF
07410.A1 RAIN GUTTER W/CONTINUOUS HEAT TAPE
07410.A2 DOWNSPOUT W/CONTINUOUS HEAT TAPE
07410.A2 GUTTER STRAPS 1
07410.B0 FASTENER
07410.B1 METAL REGLET
07410.C0 ROOFING FELT
07410.E0 BREAK METAL
07410.G0 FLASHING, FINISH TO MATCH LOUVER COLOR
07410.G1 FLASHING, FINISH TO MATCH ROOF COLOR
07410.G2 FLASHING, FINISH TO MATCH WINDOW
07410.H0 METAL SIDING
07410.H1 METAL WALL PANEL
07410.H2 ALUMINUM CLAD WALL PANEL
07410.J2 JAMB TRIM
07410.J3 SILL FLASHING
07410.K0 SEALANT
07410.L0 METAL FACIA
07410.M1 METAL SOFFIT
07410.M2 ICE & WATER SHEILD
07410.P1 PANEL TRIM
07410.P2 RAKE TRIM
07410.P3 CORNER TRIM
07410.Q1 CLIP
07410.R1 METAL EAVE CLOSURE
07410.S1 STANDING SEAM METAL ROOF RIDGE
07410.T1 STANDING SEAM METAL ROOF CANOPY

07729 ROOF SNOW GUARDS

07729.A0 STANDING SEAM METAL ROOF 2 PIPE SNOWGUARD SYSTEM

07841 PENETRATION FIRESTOPPING

07841.A0 PENETRATION FIRE STOPPING
07841.B0 PACKING MATERIAL

07901 JOINT SEALANTS

07901.A0 CONT. SEALANT
07901.B0 ASPHALT SATURATED FIBERBOARD
07901.C0 CONT. CAULK
07901.D0 JOINT FILLER
07901.G0 BACKER ROD
07901.H1 CONCRETE JOINT WATER PROOF SEALANT
07901.H2 JOINT SEALANT

DIVISION 8 DOORS AND WINDOWS

08111 STANDARD STEEL DOORS AND FRAMES

08111.A0 PRESSED METAL FRAME
08111.A1 GROUT-FILLED PRESSED METAL FRAME
08111.B0 HOLLOW METAL DOOR
08111.C0 JAMB ANCHOR

08360 SECTIONAL OVERHEAD DOORS

08360.A0 HEAVY DUTY OVERHEAD SECTIONAL DOOR
08360.B0 3" HEAVY DUTY OVERHEAD SECTIONAL DOOR TRACK
08360.C0 WEATHERSTRIPPING
08360.D0 DOOR GUIDE

08521 HORIZONTAL VINYL (PVC) WINDOWS

08521.B0 FIXED VINYL WINDOW
08521.C0 VINYL WINDOW W/SLIDING GLASS PANEL

08710 DOOR HARDWARE

08710.A0 THRESHOLD
08710.B0 DOOR SWEEP
08710.C0 WEATHERSTRIPPING

08800 GLAZING

08800.C0 WIRE GLASS
08800.G1 CLEAR INSULATING GLASS (SIZE)
08800.G3 OPAQUE INSULATING GLASS

DIVISION 9 FINISHES

09255 GYPSUM BOARD ASSEMBLIES

09255.A1 GYPSUM BOARD (THICKNESS)
09255.A2 WATER RESISTANT GYPSUM BOARD (THICKNESS)
09255.B2 TYPE 'X' GYPSUM BOARD (THICKNESS)
09255.C3 CEMENT BOARD (THICKNESS)
09255.H0 METAL STUD
09255.H1 METAL STUDS (SIZE, SPACING)
09255.J0 METAL RUNNER
09255.K0 DOUBLE STUDS
09255.K1 DOUBLE STUDS (GAGE)
09255.L1 7/8" X 1-3/8" METAL ANGLE
09255.L2 2-1/2" X 2-1/2" METAL ANGLE
09255.M2 METAL CORNER BEAD (TYP)
09255.P0 Z-FURRING CHANNEL
09255.Q0 7/8" METAL FURRING CHANNEL
09255.R2 CHANNEL (SIZE, SPACING)
09255.S1 8 GA. WIRE HANGERS (SPACING)
09255.S2 18 GA. WIRE TIES
09255.S3 18 GA. METAL MOUNTING STRIPS
09255.S4 14 GA. STAINLESS STEEL COUNTER TOP (FINISH)
09255.U1 SUSPENDED CEILING SYSTEM
09255.U2 CROSS CHANNEL
09255.U3 3/4" CONDUIT COMPRESSION BRACE
09255.V0 EDGE TRIM (TYP)
09255.V2 LC-BEAD (PREFERRED USG 200-A TRIM)
09255.V4 VINYL TRIM

09300 TILE

09300.A1 FLOOR TILE – SEE FINISH SCHED.
09300.B1 WALL TILE – SEE FINISH SCHED.
09300.B2 PROVIDE TILE FRAME AROUND FIXTURE
09300.C0 TILE BASE
09300.D1 BULLNOSE TRIM UNIT
09300.E1 1/2" x 6" TILE TRIM PIECE – SEE FINISH SCHED.
09300.G1 MORTAR BED
09300.G4 WATERPROOF MEMBRANE

09511 ACOUSTICAL PANEL CEILINGS

09511.A0 LAY-IN ACOUSTICAL CEILING SYSTEM
09511.A1 HEAVY DUTY "T" BAR GRID SYSTEM
09511.A2 CEILING SUSPENSION SYSTEM – MAIN RUNNER
09511.A3 CEILING SUSPENSION SYSTEM – CROSS RUNNER
09511.B1 VERTICAL WIRE HANGER (SIZE)
09511.B2 BRACING WIRE (SIZE)
09511.C1 COMPRESSION STRUTS
09511.D1 METAL ANGLE EDGE
09511.E1 LAY IN ACOUSTICAL CEILING PANEL
09511.F1 SPREADER BAR REQUIRED TO KEEP PERIMETER COMPONENTS FROM SPREADING APART 1

09660 RESILIENT TILE FLOORING

09660.A1 VINYL COMPOSITION TILE
09660.B1 VINYL TRANSITION STRIP

09678 RESILIENT WALL BASE AND ACCESSORIES

09678.E1 RUBBER BASE (SIZE)

09900 PAINTING

09900.A1 PAINT – SEE FINISH SCHED.
09900.B1 GALVANIZED METAL PRIMER

DIVISION 10 SPECIALTIES

10100 VISUAL DISPLAY BOARDS

10100.C0 MARKER BOARD

10155 TOILET COMPARTMENTS

10155.A0 TOILET STALL PARTITION
10155.B0 URINAL STALL PARTITION

10425 SIGNS

10425.A0 ROOM SIGNAGE
10425.A1 OIL SIGNAGE
10425.B1 WELDING SIGNAGE
10425.C1 ACCESSIBLE SIGNAGE
10425.D1 ACCESSIBLE/UNISEX RESTROOM SIGNAGE

10500 METAL LOCKERS AND STORAGE CABINETS

10500.A0 METAL LOCKERS (WIDTH)
10500.B0 METAL STORAGE CABINETS W/HOLD DOWN ANCHORS

10522 FIRE EXTINGUISHERS AND ACCESSORIES

10522.A0 FIRE EXTINGUISHER

10800 TOILET AND BATH ACCESSORIES

10800.B0 PAPER TOWEL DISPENSER & WASTE RECEPTACLE
10800.B1 SEMI-RECESSED PAPER TOWEL DISPENSER & WASTE RECEPTACLE
10800.C0 TOILET TISSUE DISPENSER
10800.C1 RECESSED TOILET TISSUE DISPENSER/SAN. NAP. DISPOSAL
10800.D0 MOP RACK
10800.D1 MOP SINK
10800.D2 MOP SINK FAUCET
10800.E0 GRAB BAR
10800.E1 GRAB BAR (SHOWER)
10800.F0 ROBE HOOK
10800.F1 DOUBLE PRONG ROBE HOOK
10800.H0 SOAP DISPENSER
10800.H1 SOAP DISH
10800.P1 SHOWER CURTAIN ROD
10800.P2 SHOWER CURTAIN
10800.Q1 ADA COMPLIANT SHOWER HEAD
10800.R1 FRAMED MIRROR (SIZE)
10800.T1 FOLDING SHOWER SEAT
10800.T0 METAL SHELF (SIZE)

DIVISION 11 EQUIPMENT

11151 MOBILE LIFT

11151.A0 MOBILE LIFT – NOT IN CONTRACT – OWNER FINISHED

DIVISION 12 FURNISHINGS

12511 HORIZONTAL LOUVER BLINDS

12511.A0 HORIZONTAL LOUVER BLINDS

DIVISION 13 SPECIAL CONSTRUCTION

13100 FUEL ISLAND REQUIREMENTS

13100.A0 FUEL DISPENSER
13100.A1 UNLEADED/DIESEL FUEL DISPENSER
13100.B0 FIRE PROTECTED FUEL STORAGE TANK – UL2085
13100.B1 SINGLE SPLIT TANK 2000 GAL. UNLEADED FUEL & 6000 GAL. DEISEL FUEL FIRE PROTECTED FUEL STORAGE TANK – UL-2085.
13100.C0 FUEL SERVICE CARD READER – COORDINATE WITH FLEET SERVICES

DIVISION 14 CONVEYING SYSTEMS

14620 TROLLEY HOIST

14620.A0 TROLLEY HOIST (SIZE)

DIVISION 15 EQUIPMENT

15000 MECHANICAL

15000.A0 GAS METER – SEE PLUMBING DRAWINGS
15050.A1 MECH. PENETRATIONS
15250.A1 PIPE INSULATION AT ALL EXPOSED PIPE
15410.A0 URINAL
15410.A1 URINAL, ACCESSIBLE
15410.B0 SINK FAUCET
15410.B1 SINK FAUCET W/ADA LEVER HANDLES
15410.C0 UTILITY SINK
15410.D1 FLOOR SINK
15410.E0 TRENCH DRAIN SLOPE TO DRAIN
15410.E1 DRAIN W/ SEDIMENT BUCKET
15410.E2 FLOOR DRAIN
15410.F0 TOILET
15410.G0 ADA ACCESSIBLE SHOWER HEAD – SEE MECHANICAL
15412.A0 EMERGENCY SHOWER & EYE WASH
15452.A1 DRINKING FOUNTAIN
15455.A0 WATER SOFTNER SYSTEM
15486.A1 FUEL FIRED WATER HEATER
15490.A0 WASTE OIL PUMP
15490.B0 WASTE OIL CARTS
15490.C0 WASTE OIL PIT
15490.D0 600 GAL WASTE OIL TANK – C.F.C.I.
15491.A0 AIR COMPRESSOR
15491.B0 OVERHEAD LUBE REEL
15491.C0 OVERHEAD HOSE REEL
15600.A0 NATURAL GAS RADIANT HEATING SYSTEM – SEE MECHANICAL
15611.A1 NATURAL GAS FIRED FURNACE – SEE MECHANICAL
15670.A1 CONDENSER UNIT – SEE MECHANICAL
15820.A0 BACKDRAFT DAMPER – SEE MECHANICAL
15838.A0 EXHAUST FAN – SEE MECHANICAL
15838.A1 EXHAUST FAN VENT – SEE MECHANICAL
15861.A1 MECHANICAL DUCTWORK SEE MECHANICAL
15887.A1 LOUVER W/ BIRD SCREEN – SEE MECHANICAL
15887.B1 INTAKE GRAVITY HOOD – SEE MECHANICAL

DIVISION 16 ELECTRICAL

16000 ELECTRICAL

16128.A0 LOW VOLTAGE DE-ICING SNOW MELTING CABLE SYSTEM
16128.B0 LOW VOLTAGE DE-ICING CABLING BOARD W/PRE CUT GROOVES
16128.C0 LOW VOLTAGE DE-ICING CABLE
16128.D0 LOW VOLTAGE DE-ICING CABLE PROTECTOR
16128.E0 ATTACHMENT AS PER MANUFACTURER RECOMENDATIONS
16210.A1 ELECTRICAL METER – SEE ELECTRICAL DRAWINGS
16411.A1 EMERGENCY DISCONNECT – SEE ELECTRICAL
16442.A0 ELECTRICAL PANEL
16510.A0 INTERIOR LIGHTS
16510.B0 WALL MOUNTED INTERIOR LIGHTS
16510.C0 INTERIOR SOFFIT CAN LIGHTS – SEE ELECTRICAL
16520.B1 EXTERIOR WALL MOUNTED LIGHTS
16520.B2 EXTERIOR WALL MOUNTED FLOOD LIGHTS
16520.B3 EXTERIOR FLOOD LIGHTS – MOUNT TO STEEL COLUMN

CLIENT

UDOT CONNECTING COMMUNITIES

STATION #2434
6072 E. EMIGRATION CANYON RD.
PARLEY'S CANYON, UTAH

DESIGNER

ARCHIPLEX GROUP
architecture · planning · design services
255 Crossroad Square
Salt Lake City, UT 84115
P:(801) 961-7070
F:(801) 961-7373

CONSULTANTS

REGISTRATION

STATE OF UTAH
RALPH M. STANISLAW
06-310618-2001
LICENSED ARCHITECT

ISSUE

MARK	DATE	DESCRIPTION
1	2-17-09	Addendum #1
	01-09	Revised Contruction Doc.
	10-08	Construction Documents
	8-20-08	90% Review Submittal

ARCHIPLEX PROJECT NO:	0728.02
DFCM PROJECT NO:	08211900
DRAWN BY:	A. PHILLIPS
CHECKED BY:	R. STANISLAW
SCALE:	NONE
DATE:	JANUARY, 2009

KEY PLAN

SHEET TITLE

MASTER KEYNOTE LIST

G002

© 2004 ARCHIPLEX GROUP

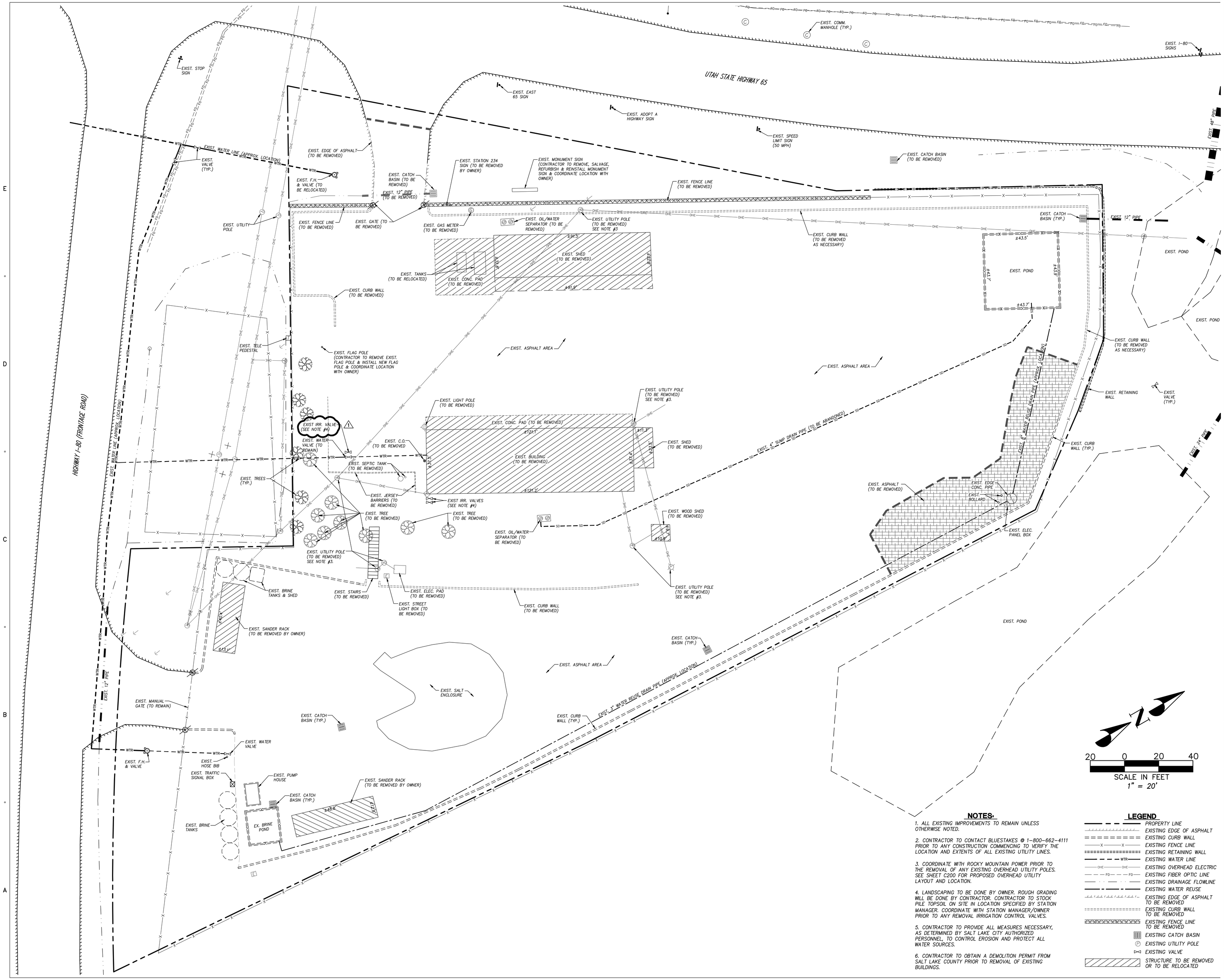

NOTES:

1. ALL EXISTING IMPROVEMENTS TO REMAIN UNLESS OTHERWISE NOTED.

2. CONTRACTOR TO CONTACT BLUESTAKES @ 1-800-662-4111 PRIOR TO ANY CONSTRUCTION COMMENCING TO VERIFY THE LOCATION AND EXTENTS OF ALL EXISTING UTILITY LINES.

3. COORDINATE WITH ROCKY MOUNTAIN POWER PRIOR TO THE REMOVAL OF ANY EXISTING OVERHEAD UTILITY POLES. SEE SHEET C200 FOR PROPOSED OVERHEAD UTILITY LAYOUT AND LOCATION.

4. LANDSCAPING TO BE DONE BY OWNER. ROUGH GRADING WILL BE DONE BY CONTRACTOR. CONTRACTOR TO STOCK PILE TOPSOIL ON SITE IN LOCATION SPECIFIED BY STATION MANAGER. COORDINATE WITH STATION MANAGER/OWNER PRIOR TO ANY REMOVAL IRRIGATION CONTROL VALVES.

5. CONTRACTOR TO PROVIDE ALL MEASURES NECESSARY, AS DETERMINED BY SALT LAKE CITY AUTHORIZED PERSONNEL, TO CONTROL EROSION AND PROTECT ALL WATER SOURCES.

6. CONTRACTOR TO OBTAIN A DEMOLITION PERMIT FROM SALT LAKE COUNTY PRIOR TO REMOVAL OF EXISTING BUILDINGS.

LEGEND

- PROPERTY LINE
- EXISTING EDGE OF ASPHALT
- EXISTING CURB WALL
- EXISTING FENCE LINE
- EXISTING RETAINING WALL
- EXISTING WATER LINE
- EXISTING OVERHEAD ELECTRIC
- EXISTING FIBER OPTIC LINE
- EXISTING DRAINAGE FLOWLINE
- EXISTING WATER REUSE
- EXISTING EDGE OF ASPHALT TO BE REMOVED
- EXISTING CURB WALL TO BE REMOVED
- EXISTING FENCE LINE TO BE REMOVED
- EXISTING CATCH BASIN
- EXISTING UTILITY POLE
- EXISTING VALVE
- STRUCTURE TO BE REMOVED OR TO BE RELOCATED

CLIENT

UDOT CONNECTING COMMUNITIES

STATION #2434
6072 E. EMIGRATION CANYON RD.
PARLEY'S CANYON, UTAH

DESIGNER

ARCHIPLEX GROUP
architecture · planning · design services
255 Crossroad Square
Salt Lake City, UT 84115
P:(801) 961-7070
F:(801) 961-7373

CONSULTANTS

PEPG ENGINEERING, L.L.C.
8805 S. SANDY PARKWAY • SANDY, UT 84070
PHONE: (801) 562-2521 • FAX: (801) 562-2551

REGISTRATION

REGISTERED PROFESSIONAL ENGINEER
No. 277201
DARRIN R. SMITH
2-16-2009
STATE OF UTAH

ISSUE

MARK	DATE	DESCRIPTION
1	2-16-09	ADDENDUM #1
	01-09	Revised Construction Doc.
	10-08	Construction Documents
	8-20-08	90% Review Submittal

ARCHIPLEX PROJECT NO:	0728.02
DFCM PROJECT NO:	08211900
PEPG PROJECT NO:	6600.0816
DRAWN BY:	BCB
CHECKED BY:	DRS
SCALE:	1"=20'
DATE:	FEBRUARY, 2009

KEY PLAN

SHEET TITLE

DEMOLITION PLAN

C100

© 2004 ARCHIPLEX GROUP

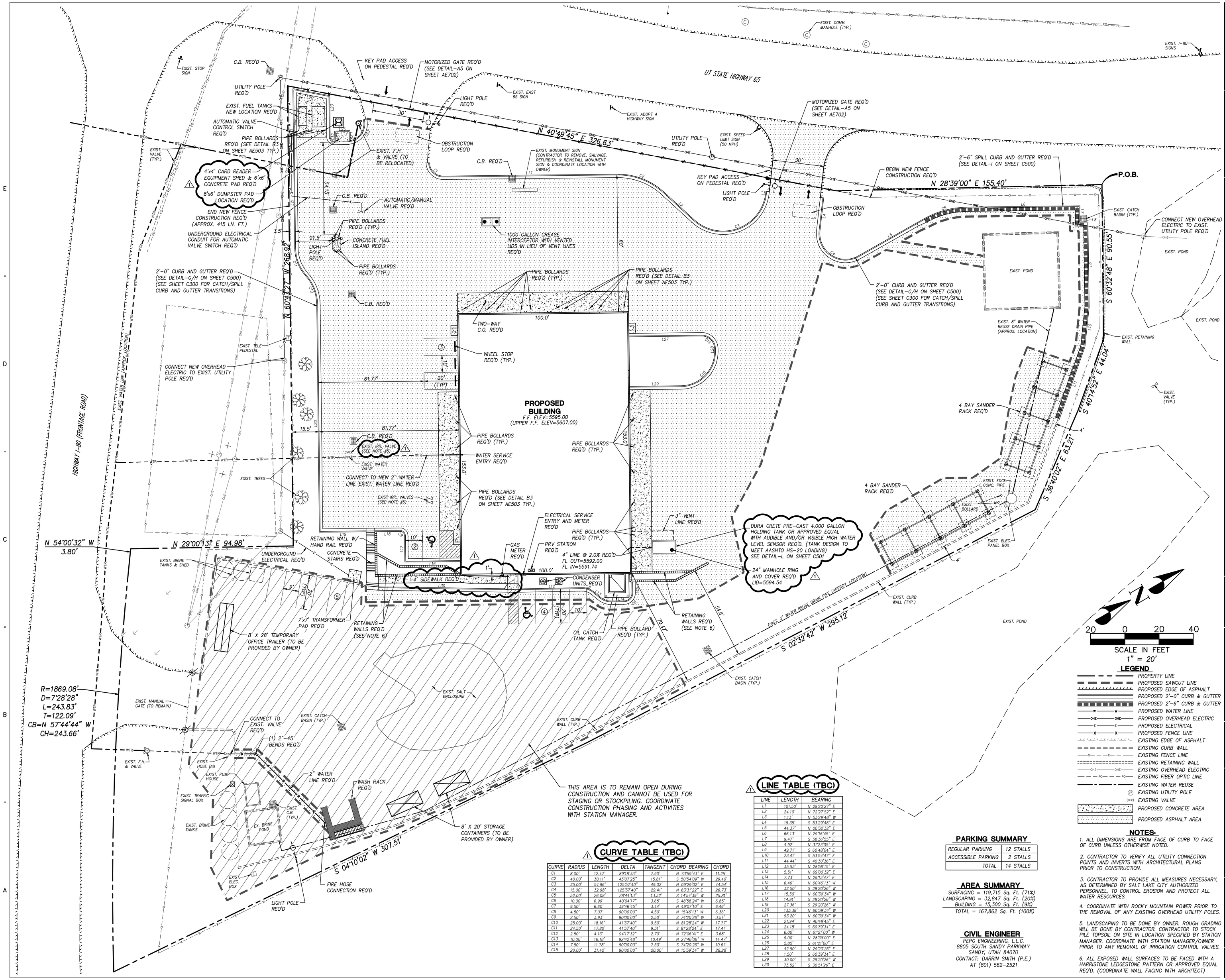

LINE TABLE (TBC)

LINE	LENGTH	BEARING
L1	101.50'	N 29°20'27" E
L2	24.10'	N 72°27'52" E
L3	1.13'	N 53°29'48" W
L4	19.35'	S 53°29'48" E
L5	44.37'	N 00°13'32" E
L6	66.13'	N 29°16'45" E
L7	9.47'	S 58°36'55" E
L8	4.92'	N 31°23'05" E
L9	49.71'	S 60°48'04" E
L10	23.41'	S 53°54'47" E
L11	44.44'	S 40°30'36" E
L12	35.53'	N 28°56'15" E
L13	5.51'	N 69°00'32" E
L14	7.73'	N 29°13'47" E
L15	6.46'	N 60°46'13" W
L16	32.50'	S 29°20'26" W
L17	15.50'	N 60°39'34" W
L18	14.91'	S 29°20'26" W
L19	27.36'	S 29°20'26" W
L20	133.38'	N 60°39'34" W
L21	93.20'	N 60°39'34" W
L22	21.94'	N 40°49'45" E
L23	24.18'	S 60°39'34" E
L24	6.00'	N 61°21'00" W
L25	9.00'	N 28°39'00" E
L26	5.85'	S 61°21'00" E
L27	42.50'	N 29°20'26" E
L28	1.50'	S 60°39'34" E
L29	30.00'	S 29°20'26" W
L30	73.52'	S 30°51'26" E

CURVE TABLE (TBC)

CURVE	RADIUS	LENGTH	DELTA	TANGENT	CHORD BEARING	CHORD
C1	8.00'	12.47'	89°18'33"	7.90'	N 73°59'43" E	11.25'
C2	40.00'	30.11'	43°07'25"	15.81'	S 50°54'09" W	29.40'
C3	25.00'	54.96'	125°57'40"	49.02'	N 09°29'02" E	44.54'
C4	15.00'	32.98'	125°57'40"	29.41'	N 63°31'22" E	26.73'
C5	52.00'	26.08'	28°44'13"	13.32'	S 14°54'39" W	25.81'
C6	10.00'	6.99'	40°04'17"	3.65'	S 48°58'24" W	6.85'
C7	9.50'	6.60'	39°46'45"	3.44'	N 49°07'10" E	6.46'
C8	4.50'	7.07'	90°00'00"	4.50'	N 15°46'13" W	6.36'
C9	2.50'	3.93'	90°00'00"	2.50'	S 74°20'26" W	3.54'
C10	25.00'	18.16'	41°37'40"	9.50'	N 81°28'24" W	17.77'
C11	24.50'	17.80'	41°37'40"	9.31'	S 81°28'24" E	17.41'
C12	2.50'	4.13'	94°77'32"	2.70'	N 72°06'41" E	3.68'
C13	10.00'	16.18'	92°42'48"	10.49'	N 27°48'06" W	14.47'
C14	7.50'	11.78'	90°00'00"	7.50'	S 74°20'26" W	10.61'
C15	20.00'	31.42'	90°00'00"	20.00'	N 15°39'34" W	28.28'

PARKING SUMMARY

REGULAR PARKING	12 STALLS
ACCESSIBLE PARKING	2 STALLS
TOTAL	14 STALLS

AREA SUMMARY

SURFACING = 119,715 Sq. Ft. (71%)
LANDSCAPING = 32,847 Sq. Ft. (20%)
BUILDING = 15,300 Sq. Ft. (9%)
TOTAL = 167,862 Sq. Ft. (100%)

CIVIL ENGINEER

PEPG ENGINEERING, L.L.C.
8805 SOUTH SANDY PARKWAY
SANDY, UTAH 84070
CONTACT: DARRIN SMITH (P.E.)
AT (801) 562-2521

LEGEND

- PROPERTY LINE
- PROPOSED SAWCUT LINE
- PROPOSED EDGE OF ASPHALT
- PROPOSED 2'-0" CURB & GUTTER
- PROPOSED 2'-6" CURB & GUTTER
- PROPOSED WATER LINE
- PROPOSED OVERHEAD ELECTRIC
- PROPOSED ELECTRICAL
- PROPOSED FENCE LINE
- EXISTING EDGE OF ASPHALT
- EXISTING CURB WALL
- EXISTING FENCE LINE
- EXISTING RETAINING WALL
- EXISTING OVERHEAD ELECTRIC
- EXISTING FIBER OPTIC LINE
- EXISTING WATER REUSE
- EXISTING UTILITY POLE
- EXISTING VALVE
- PROPOSED CONCRETE AREA
- PROPOSED ASPHALT AREA

NOTES:

1. ALL DIMENSIONS ARE FROM FACE OF CURB TO FACE OF CURB UNLESS OTHERWISE NOTED.
2. CONTRACTOR TO VERIFY ALL UTILITY CONNECTION POINTS AND INVERTS WITH ARCHITECTURAL PLANS PRIOR TO CONSTRUCTION.
3. CONTRACTOR TO PROVIDE ALL MEASURES NECESSARY, AS DETERMINED BY SALT LAKE CITY AUTHORIZED PERSONNEL, TO CONTROL EROSION AND PROTECT ALL WATER RESOURCES.
4. COORDINATE WITH ROCKY MOUNTAIN POWER PRIOR TO THE REMOVAL OF ANY EXISTING OVERHEAD UTILITY POLES.
5. LANDSCAPING TO BE DONE BY OWNER. ROUGH GRADING WILL BE DONE BY CONTRACTOR. CONTRACTOR TO STOCK PILE TOPSOIL ON SITE IN LOCATION SPECIFIED BY STATION MANAGER. COORDINATE WITH STATION MANAGER/OWNER PRIOR TO ANY REMOVAL OF IRRIGATION CONTROL VALVES.
6. ALL EXPOSED WALL SURFACES TO BE FACED WITH A HARRISTONE LEDGESTONE PATTERN OR APPROVED EQUAL REQ'D. (COORDINATE WALL FACING WITH ARCHITECT)

CLIENT

UDOT CONNECTING COMMUNITIES

STATION #2434
6072 E. EMIGRATION CANYON RD.
PARLEY'S CANYON, UTAH

DESIGNER

ARCHIPLEX GROUP
architecture · planning · design services
255 Crossroad Square
Salt Lake City, UT 84115
P:(801) 961-7070
F:(801) 961-7373

CONSULTANTS

PEPG ENGINEERING, L.L.C.
8805 S. SANDY PARKWAY • SANDY, UT 84070
PHONE: (801) 562-2521 • FAX: (801) 562-2551

REGISTRATION

REGISTERED PROFESSIONAL ENGINEER No. 272207 DARRIN R. SMITH 2-16-2009 STATE OF UTAH

ISSUE

MARK	DATE	DESCRIPTION
1	2-16-09	ADDENDUM #1
	01-09	Revised Construction Doc.
	10-08	Construction Documents
	8-20-08	90% Review Submittal

ARCHIPLEX PROJECT NO:	0728.02
DFCM PROJECT NO:	08211900
PEPG PROJECT NO:	6600.0816
DRAWN BY:	BCB
CHECKED BY:	DRS
SCALE:	1"=20'
DATE:	FEBRUARY, 2009

KEY PLAN

SHEET TITLE

SITE & UTILITY PLAN

C200

© 2004 ARCHIPLEX GROUP

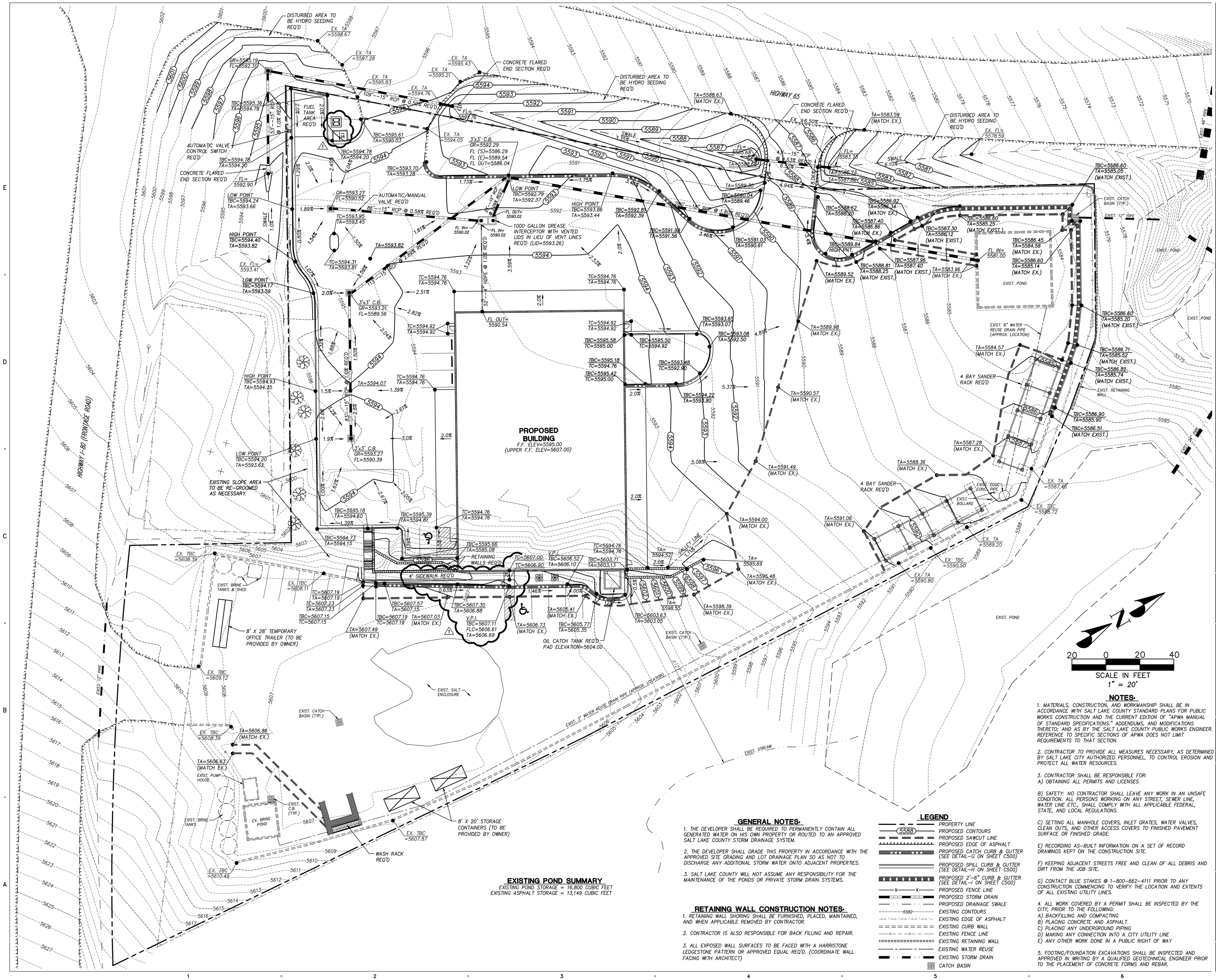

GENERAL NOTES:

1. THE DEVELOPER SHALL BE REQUIRED TO PERMANENTLY CONTAIN ALL GENERATED WATER ON HIS OWN PROPERTY OR ROUTED TO AN APPROVED SALT LAKE COUNTY STORM DRAINAGE SYSTEM.

2. THE DEVELOPER SHALL GRADE THIS PROPERTY IN ACCORDANCE WITH THE APPROVED SITE GRADING AND LOT DRAINAGE PLAN SO AS NOT TO DISCHARGE ANY ADDITIONAL STORM WATER ONTO ADJACENT PROPERTIES.

3. SALT LAKE COUNTY WILL NOT ASSUME ANY RESPONSIBILITY FOR THE MAINTENANCE OF THE PONDS OR PRIVATE STORM DRAIN SYSTEMS.

RETAINING WALL CONSTRUCTION NOTES:

1. RETAINING WALL SHORING SHALL BE FURNISHED, PLACED, MAINTAINED, AND WHEN APPLICABLE REMOVED BY CONTRACTOR.

2. CONTRACTOR IS ALSO RESPONSIBLE FOR BACK FILLING AND REPAIR.

3. ALL EXPOSED WALL SURFACES TO BE FACED WITH A HARRISTONE LEDGESTONE PATTERN OR APPROVED EQUAL REQ'D. (COORDINATE WALL FACING WITH ARCHITECT)

EXISTING POND SUMMARY

EXISTING POND STORAGE = 16,800 CUBIC FEET
EXISTING ASPHALT STORAGE = 13,149 CUBIC FEET

LEGEND

- PROPERTY LINE
- (5588) PROPOSED CONTOURS
- PROPOSED SAWCUT LINE
- PROPOSED EDGE OF ASPHALT
- PROPOSED CATCH CURB & GUTTER (SEE DETAIL-G ON SHEET C500)
- PROPOSED SPILL CURB & GUTTER (SEE DETAIL-H ON SHEET C500)
- PROPOSED 2'-6" CURB & GUTTER (SEE DETAIL-I ON SHEET C500)
- PROPOSED FENCE LINE
- PROPOSED STORM DRAIN
- PROPOSED DRAINAGE SWALE
- 5582 EXISTING CONTOURS
- EXISTING EDGE OF ASPHALT
- EXISTING CURB WALL
- EXISTING FENCE LINE
- EXISTING RETAINING WALL
- EXISTING WATER REUSE
- EXISTING STORM DRAIN
- CATCH BASIN

NOTES:

1. MATERIALS, CONSTRUCTION, AND WORKMANSHIP SHALL BE IN ACCORDANCE WITH SALT LAKE COUNTY STANDARD PLANS FOR PUBLIC WORKS CONSTRUCTION AND THE CURRENT EDITION OF "APWA MANUAL OF STANDARD SPECIFICATIONS," ADDENDUMS, AND MODIFICATIONS THERETO; AND AS BY THE SALT LAKE COUNTY PUBLIC WORKS ENGINEER. REFERENCE TO SPECIFIC SECTIONS OF APWA DOES NOT LIMIT REQUIREMENTS TO THAT SECTION.

2. CONTRACTOR TO PROVIDE ALL MEASURES NECESSARY, AS DETERMINED BY SALT LAKE CITY AUTHORIZED PERSONNEL, TO CONTROL EROSION AND PROTECT ALL WATER RESOURCES.

3. CONTRACTOR SHALL BE RESPONSIBLE FOR:
A) OBTAINING ALL PERMITS AND LICENSES.

B) SAFETY: NO CONTRACTOR SHALL LEAVE ANY WORK IN AN UNSAFE CONDITION. ALL PERSONS WORKING ON ANY STREET, SEWER LINE, WATER LINE ETC., SHALL COMPLY WITH ALL APPLICABLE FEDERAL, STATE, AND LOCAL REGULATIONS.

C) SETTING ALL MANHOLE COVERS, INLET GRATES, WATER VALVES, CLEAN OUTS, AND OTHER ACCESS COVERS TO FINISHED PAVEMENT SURFACE OR FINISHED GRADE.

E) RECORDING AS-BUILT INFORMATION ON A SET OF RECORD DRAWINGS KEPT ON THE CONSTRUCTION SITE.

F) KEEPING ADJACENT STREETS FREE AND CLEAN OF ALL DEBRIS AND DIRT FROM THE JOB SITE.

G) CONTACT BLUE STAKES @ 1-800-662-4111 PRIOR TO ANY CONSTRUCTION COMMENCING TO VERIFY THE LOCATION AND EXTENTS OF ALL EXISTING UTILITY LINES.

4. ALL WORK COVERED BY A PERMIT SHALL BE INSPECTED BY THE CITY, PRIOR TO THE FOLLOWING:
A) BACKFILLING AND COMPACTING
B) PLACING CONCRETE AND ASPHALT
C) PLACING ANY UNDERGROUND PIPING
D) MAKING ANY CONNECTION INTO A CITY UTILITY LINE
E) ANY OTHER WORK DONE IN A PUBLIC RIGHT OF WAY

5. FOOTING/FOUNDATION EXCAVATIONS SHALL BE INSPECTED AND APPROVED IN WRITING BY A QUALIFIED GEOTECHNICAL ENGINEER PRIOR TO THE PLACEMENT OF CONCRETE FORMS AND REBAR.

CLIENT

UDOT CONNECTING COMMUNITIES

STATION #2434
6072 E. EMIGRATION CANYON RD.
PARLEY'S CANYON, UTAH

DESIGNER

ARCHIPLEX GROUP
architecture · planning · design services
255 Crossroad Square
Salt Lake City, UT 84115
P:(801) 961-7070
F:(801) 961-7373

CONSULTANTS

PEPG ENGINEERING, L.L.C.
8825 S. SANDY PARKWAY • SANDY, UT 84070
PHONE: (801) 562-2521 • FAX: (801) 562-2551

REGISTRATION

PROFESSIONAL ENGINEER
No. 177207
DARRIN R. SMITH
2-16-2009
STATE OF UTAH

ISSUE

MARK	DATE	DESCRIPTION
1	2-16-09	ADDENDUM #1
	01-09	Revised Construction Doc.
	10-08	Construction Documents
	8-20-08	90% Review Submittal

ARCHIPLEX PROJECT NO:	0728.02
DFCM PROJECT NO:	08211900
PEPG PROJECT NO:	6600.0816
DRAWN BY:	BCB
CHECKED BY:	DRS
SCALE:	1"=20'
DATE:	FEBRUARY, 2009

KEY PLAN

SHEET TITLE

GRADING & DRAINAGE PLAN

C300

© 2004 ARCHIPLEX GROUP

SCALE IN FEET
HORIZONTAL: 1" = 10'
VERTICAL: 1" = 10'

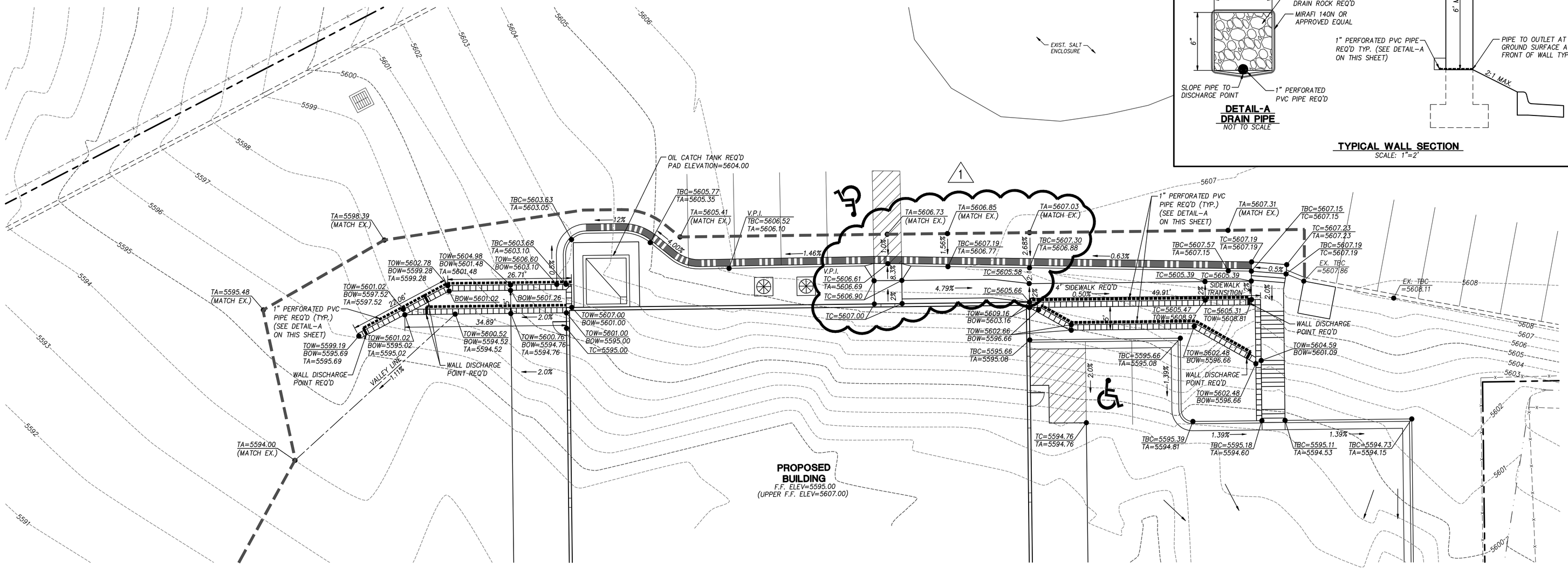

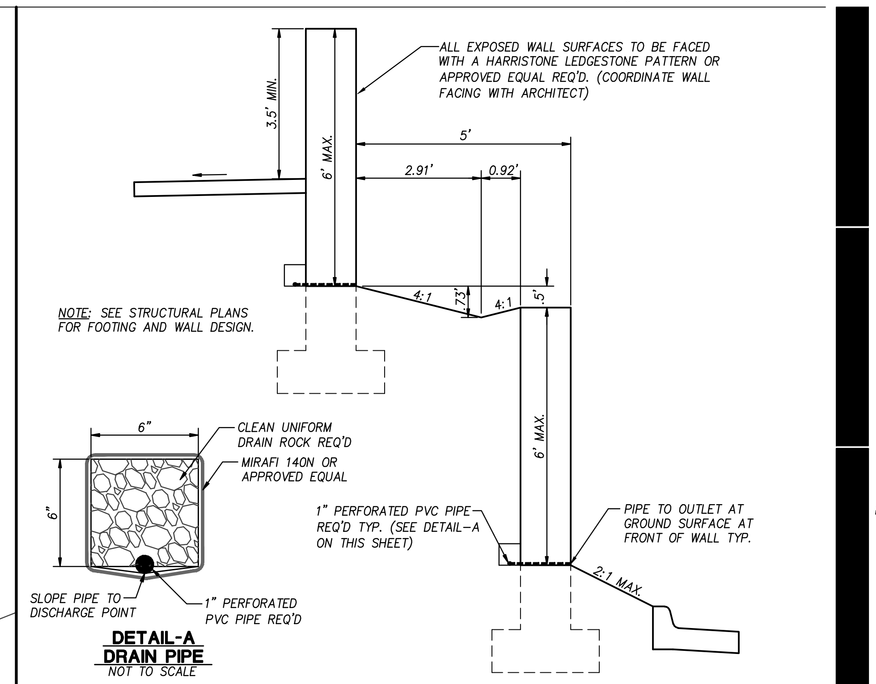

DETAIL-A
DRAIN PIPE
NOT TO SCALE

TYPICAL WALL SECTION
SCALE: 1"=2'

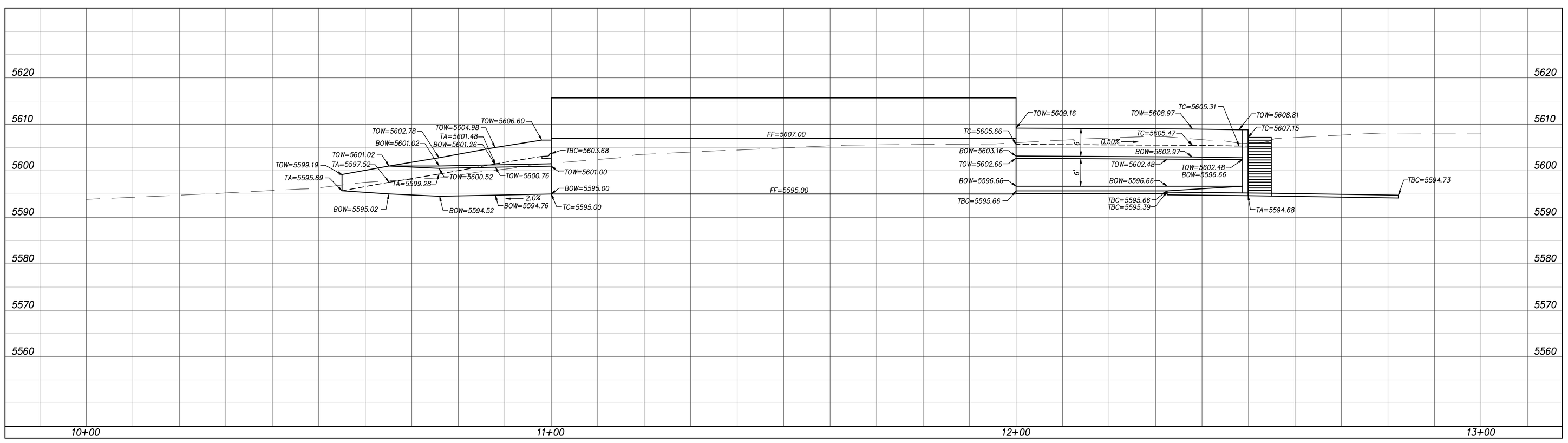

CLIENT

UDOT CONNECTING COMMUNITIES

STATION #2434
6072 E. EMIGRATION CANYON RD.
PARLEY'S CANYON, UTAH

DESIGNER

ARCHIPLEX GROUP
architecture · planning · design services
255 Crossroad Square
Salt Lake City, UT 84115
P:(801) 961-7070
F:(801) 961-7373

CONSULTANTS

PEPG ENGINEERING, L.L.C.
8825 S. SANDY PARKWAY • SANDY, UT 84070
PHONE: (801) 562-2521 • FAX: (801) 562-2551

REGISTRATION

REGISTERED PROFESSIONAL ENGINEER
No. 172207
DARREN R. SMITH
2-16-2009
STATE OF UTAH

ISSUE

MARK	DATE	DESCRIPTION
1	2-16-09	ADDENDUM #1
	01-09	Revised Construction Doc.
	10-08	Construction Documents
	8-20-08	90% Review Submittal

ARCHIPLEX PROJECT NO:	0728.02
DFCM PROJECT NO:	08211900
PEPG PROJECT NO:	6600.0816
DRAWN BY:	BCB
CHECKED BY:	DRS
SCALE:	1"=10'
DATE:	FEBRUARY, 2009

KEY PLAN

SHEET TITLE

RETAINING WALL PLAN & PROFILE

C301

© 2004 ARCHIPLEX GROUP

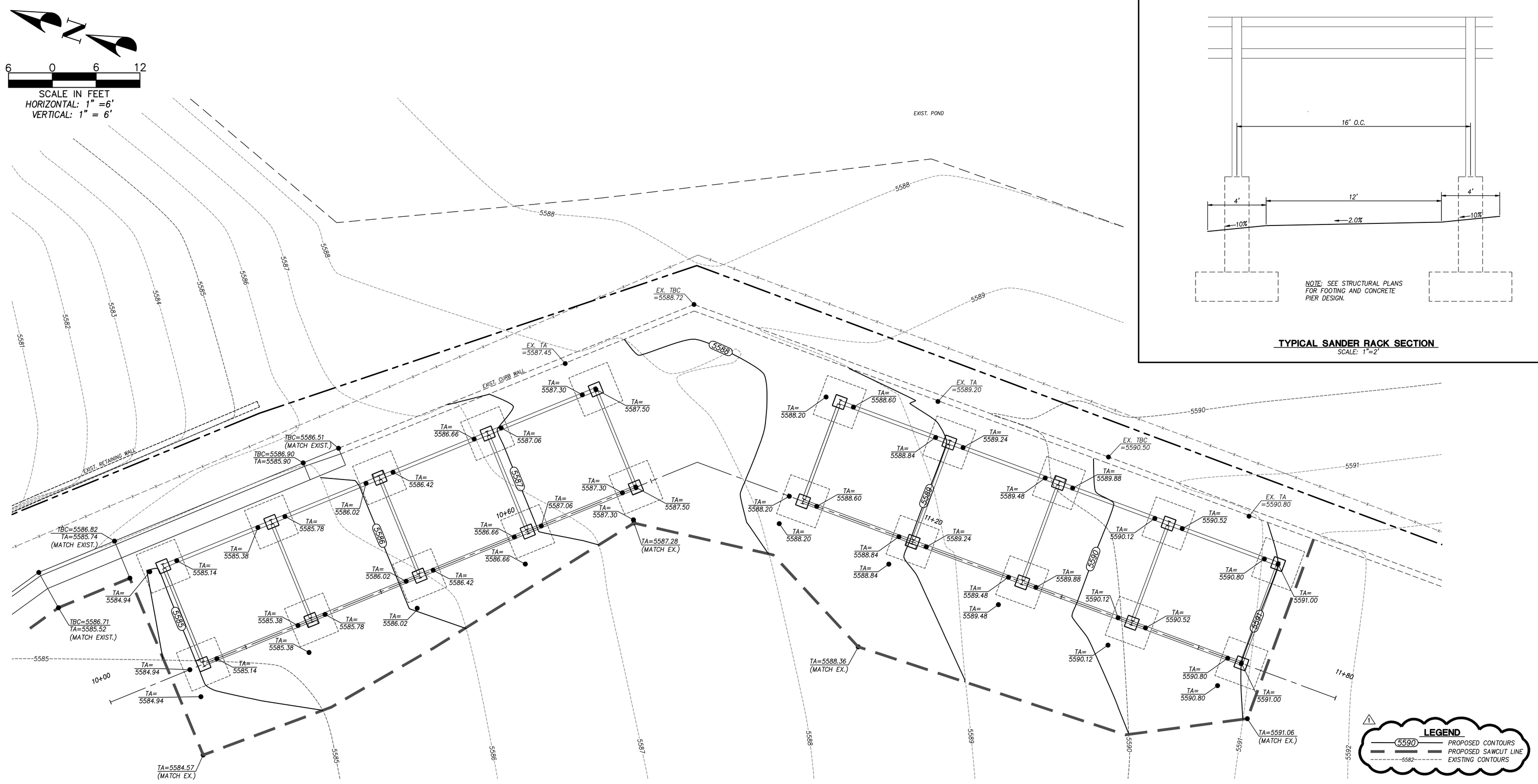

TYPICAL SANDER RACK SECTION
SCALE: 1"=2'

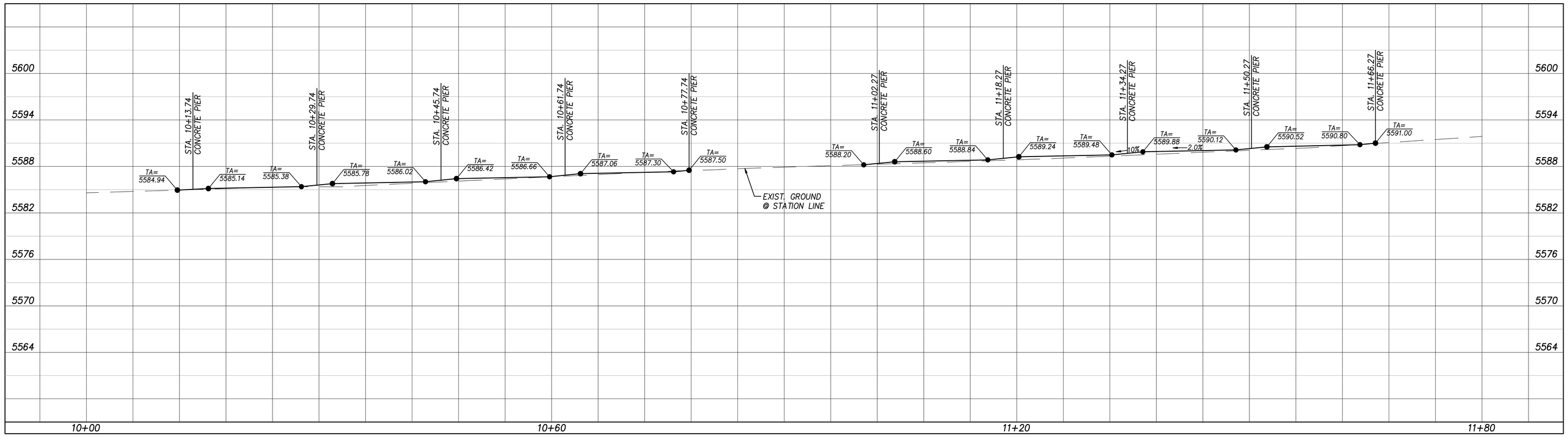

CLIENT

UDOT CONNECTING COMMUNITIES

STATION #2434
6072 E. EMIGRATION CANYON RD.
PARLEY'S CANYON, UTAH

DESIGNER

ARCHIPLEX GROUP
architecture · planning · design services
255 Crossroad Square
Salt Lake City, UT 84115
P:(801) 961-7070
F:(801) 961-7373

CONSULTANTS

PEPG ENGINEERING, L.L.C.
9825 S. SANDY PARKWAY • SANDY, UT 84070
PHONE: (801) 562-2521 • FAX: (801) 562-2551

REGISTRATION

REGISTERED PROFESSIONAL ENGINEER
No. 172007
DARRIN R. SMITH
2-16-2009
STATE OF UTAH

ISSUE

MARK	DATE	DESCRIPTION
1	2-16-09	ADDENDUM #1
	01-09	Revised Construction Doc.
	10-08	Construction Documents
	8-20-08	90% Review Submittal

ARCHIPLEX PROJECT NO:	0728.02
DFCM PROJECT NO:	08211900
PEPG PROJECT NO:	6600.0816
DRAWN BY:	BCB
CHECKED BY:	DRS
SCALE:	1"=6'
DATE:	FEBRUARY, 2009

KEY PLAN

SHEET TITLE

SANDER RACK PLAN & PROFILE

C302

© 2004 ARCHIPLEX GROUP

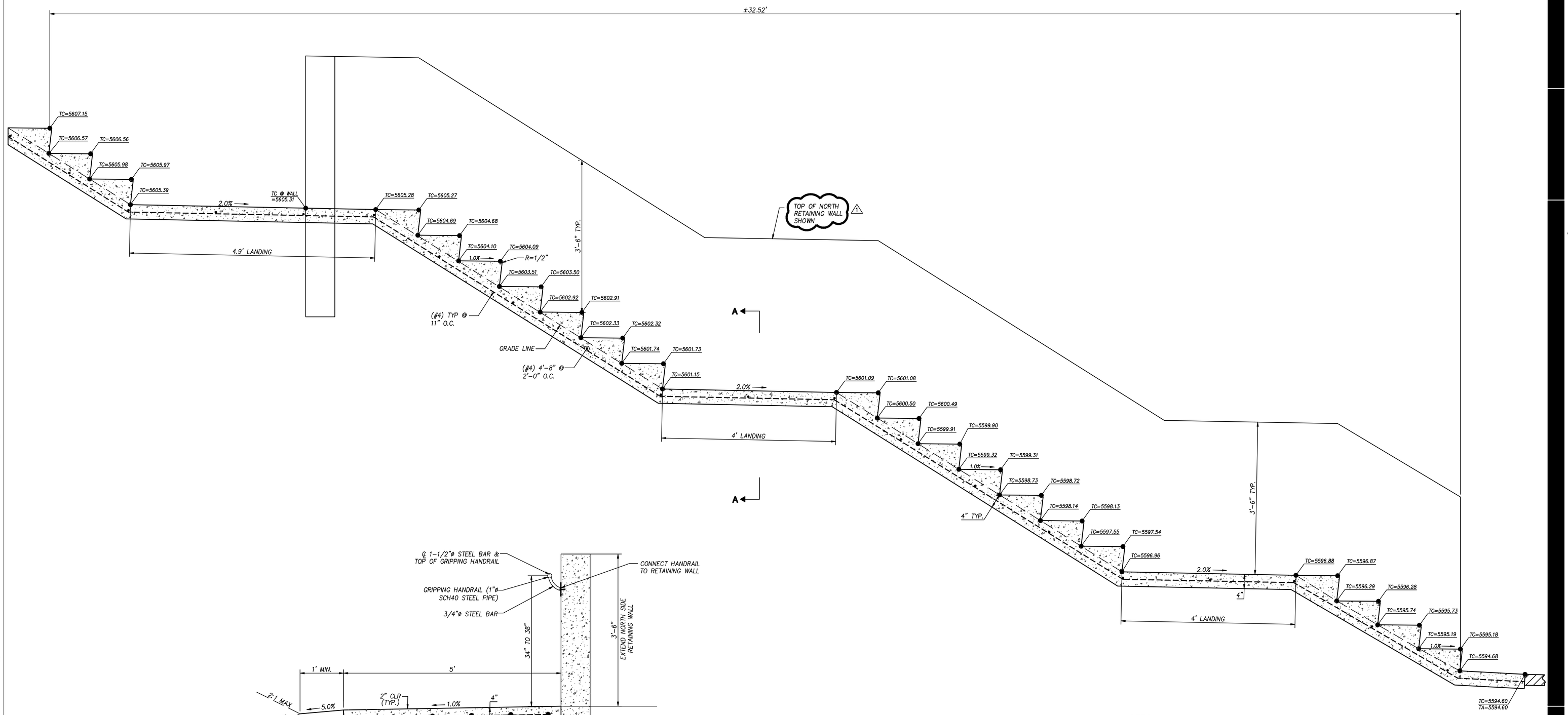

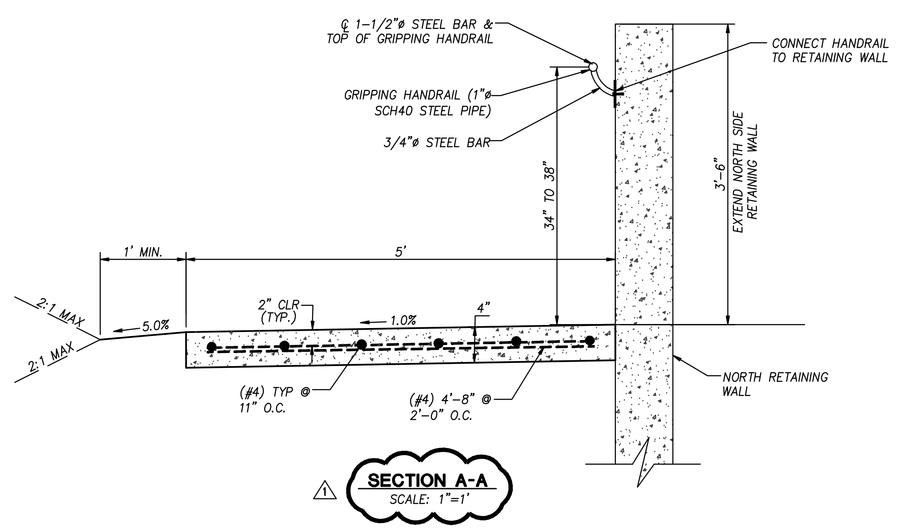

SECTION A-A
SCALE: 1"=1'

NOTES:

1. FLIGHTS OF STAIRS SHOULD BE SHORT (MAX 20 STEPS PER FLIGHT BEFORE A LANDING IS REQUIRED).
2. AVOID FEWER THAN 2 STEPS PER FLIGHT.
3. STEPS IN FLIGHT MUST HAVE UNIFORM TREAD RUNS AND UNIFORM RISER HEIGHTS WITH TOLERANCE OF ±3/8".
4. TREADS SHALL BE 12" MAX. RISERS SHALL BE 7" MAX.
5. LANDINGS BETWEEN FLIGHTS OF STEPS MUST HAVE SAME WIDTH AS STEPS AND A MIN LENGTH OF 4'-0".
6. HANDRAIL SHALL BE CONTINUOUS ACROSS LANDINGS BETWEEN FLIGHTS OF STEPS.
7. HANDRAIL SHALL BE GALVANIZED AFTER FABRICATION.
8. PIPE MATERIAL SHALL BE ASTM A53.
9. REINFORCING STEEL SHALL BE ASTM A615 GR 60.
10. PIPE DIAMETERS SHOWN ARE "NOMINAL" DIAMETERS AS GIVEN IN AMERICAN INSTITUTE OF STEEL CONSTRUCTION MANUAL.
11. CONCRETE: MINIMUM 3,000 psi COMPRESSIVE STRENGTH AT 28 DAYS.

CONCRETE STAIRS AND HANDRAIL DETAIL

SCALE: 1"=1'

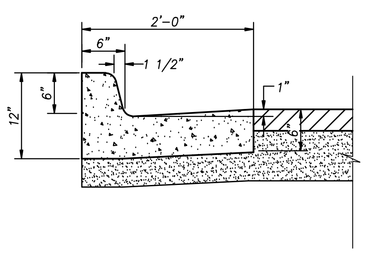

DETAIL-G
2'-0" CATCH CURB AND GUTTER
SCALE: 1"=1'

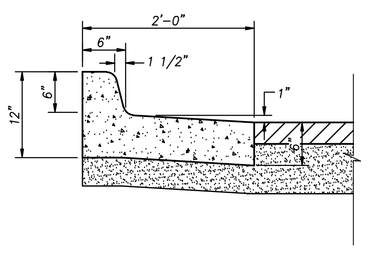

DETAIL-H
2'-0" SPILL CURB AND GUTTER
SCALE: 1"=1'

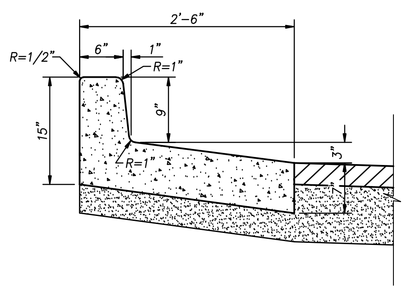

DETAIL-I
2'-6" SPILL CURB AND GUTTER
SCALE: 1"=1'

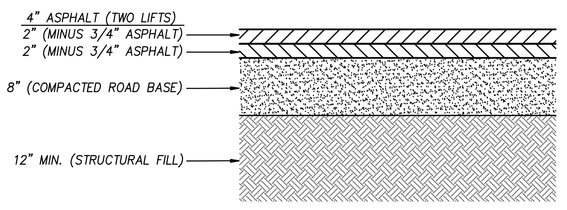

NOTES:

1. ASPHALT PAVEMENT DESIGN IS BASED ON THE SOILS REPORT PREPARED BY PEPG ENGINEERING, LLC ON AUGUST 21, 2008 – PROJECT NO. 6600.0816.

2. THE 4" ASPHALT LAYER SHOULD CONSIST OF (2)–2" LAYERS OF MINUS 3/4" HOT MIX ASPHALT, COMPACTED TO 95% OF MAXIMUM DENSITY (BASED ON 50 BLOW MARSHALL NUMBER).

DETAIL-J
ASPHALT PAVING SECTION
SCALE: 1"=1'

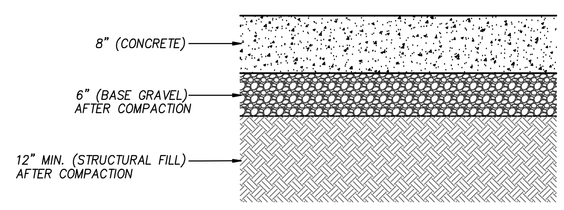

NOTES:

1. CONCRETE PAVEMENT DESIGN IS BASED ON THE SOILS REPORT PREPARED BY PEPG ENGINEERING, LLC ON AUGUST 21, 2008 – PROJECT NO. 6600.0816.

2. THE CONCRETE USED IN AREAS WHERE TRUCKS WILL BE PARKED, OR WILL MOVE OVER THE SURFACE, WILL BE A MINIMUM 5,000 psi COMPRESSIVE STRENGTH CONCRETE (28 DAY BREAK) PLACED 8" THICK WITH EPOXY COATED #4 REINFORCING BARS PLACED 12" ON CENTER BOTH WAYS.

DETAIL-K
TRUCK BEARING CONCRETE PAVING SECTION
SCALE: 1"=1'

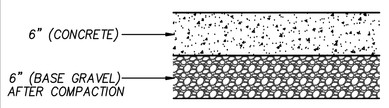

DETAIL-L
DUMPSTER AND CARD READER PAD CONCRETE PAVING SECTION
SCALE: 1"=1'

CLIENT

UDOT CONNECTING COMMUNITIES

STATION #2434
6072 E. EMIGRATION CANYON RD.
PARLEY'S CANYON, UTAH

DESIGNER

ARCHIPLEX GROUP
architecture · planning · design services
255 Crossroad Square
Salt Lake City, UT 84115
P:(801) 961-7070
F:(801) 961-7373

CONSULTANTS

PEPG ENGINEERING, L.L.C.
8825 S. SANDY PARKWAY • SANDY, UT 84070
PHONE: (801) 562-2521 • FAX: (801) 562-2551

REGISTRATION

REGISTERED PROFESSIONAL ENGINEER No. 177207 DARRIN R. SMITH 2-16-2009 STATE OF UTAH

ISSUE

MARK	DATE	DESCRIPTION
1	2-16-09	ADDENDUM #1
	01-09	Revised Construction Doc.
	10-08	Construction Documents
	8-20-08	90% Review Submittal

ARCHIPLEX PROJECT NO:	0728.02
DFCM PROJECT NO:	08211900
PEPG PROJECT NO:	6600.0816
DRAWN BY:	BCB
CHECKED BY:	DRS
SCALE:	AS NOTED
DATE:	FEBRUARY, 2009

KEY PLAN

SHEET TITLE

TYPICAL SECTIONS & DETAILS

C500

© 2004 ARCHIPLEX GROUP

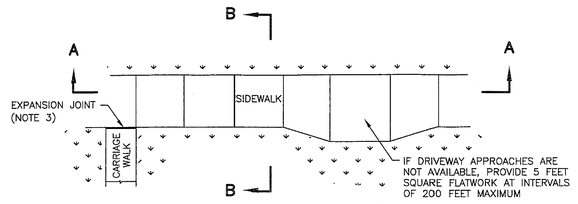

PLAN

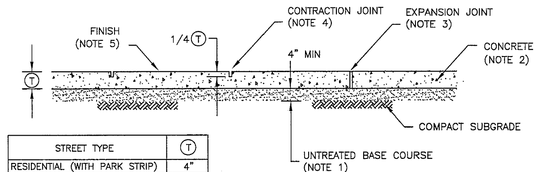

STREET TYPE	T
RESIDENTIAL (WITH PARK STRIP)	4"
RESIDENTIAL (NO PARK STRIP)	6"
OTHER	
REPLACEMENTS	MATCH EXISTING, 4" MIN.

SEE DRIVEWAY APPROACH PLANS FOR SIDEWALK THICKNESS AT DRIVEWAYS

SECTION A–A

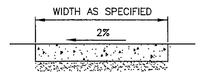

SECTION B–B

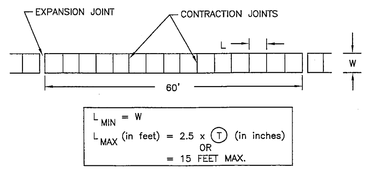

SIDEWALK JOINT DETAIL

(A) CONCRETE SIDEWALK
SEE APWA STANDARD PLAN NO. 231 FOR NOTES
(NOT TO SCALE)

LANDING AT SIDEWALK LEVEL

NARRATIVE:
- SITE CONDITIONS WILL VARY. CONFIGURATION OF RAMP AND LANDING MAY BE CHANGED, BUT THEY MUST MEET DIMENSIONS AND SLOPES SHOWN HERE.
- GRADE BREAKS AT ENDS OF RAMPS MUST BE PERPENDICULAR TO THE DIRECTION OF PEDESTRIAN TRAVEL.
- USE OF FLARES, CURB WALLS, ETC., ARE AT ENGINEER'S DISCRETION.
- LENGTH OF ANY RAMP NOT REQUIRED TO EXCEED 15 FEET.

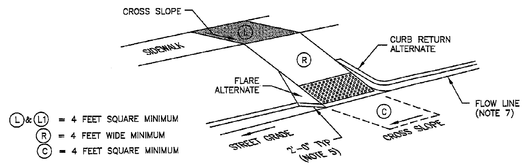

EXAMPLE 1

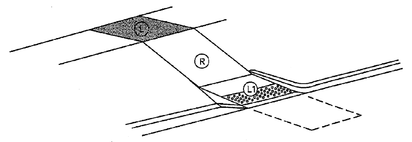

EXAMPLE 2

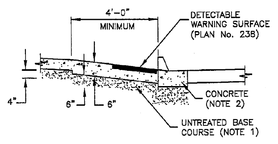

MATERIALS

		RUNNING SLOPE	CROSS SLOPE
LANDING	L	STREET GRADE	1:48 (2%)
RAMP	R	1:12 (8.33%)	STREET GRADE
CLEAR SPACE	C	1:20 (5%)	STREET GRADE

CROSS SLOPE IS PERPENDICULAR TO DIRECTION OF PEDESTRIAN TRAVEL. RUNNING SLOPE IS IN THE DIRECTION OF PEDESTRIAN TRAVEL.

MAXIMUM SLOPES

(B) TANGENT CURB CUT ASSEMBLY
SEE APWA STANDARD PLAN NO. 236 FOR NOTES
(NOT TO SCALE)

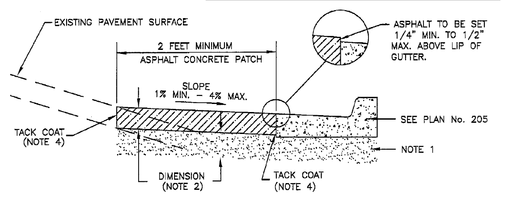

CASE 1 – POSITIVE STREET SLOPE TIE–IN

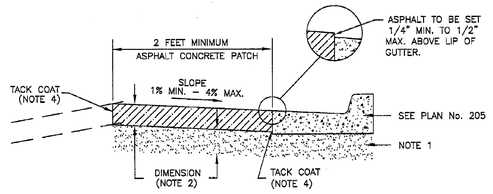

CASE 2 – NEGATIVE STREET SLOPE TIE–IN

(C) ASPHALT CONCRETE PAVEMENT TIE-IN
SEE APWA STANDARD PLAN NO. 251 FOR NOTES
(NOT TO SCALE)

SHALLOW EXCAVATION
(LESS THAN 48 INCHES FROM PAVEMENT SURFACE TO BOTTOM OF EXCAVATION)

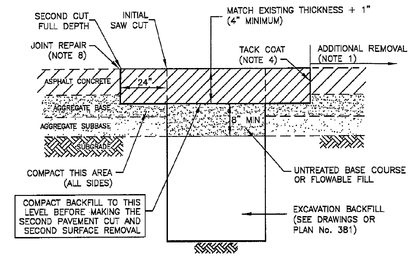

EXAMPLE 1
(ASPHALT RESTORATION)

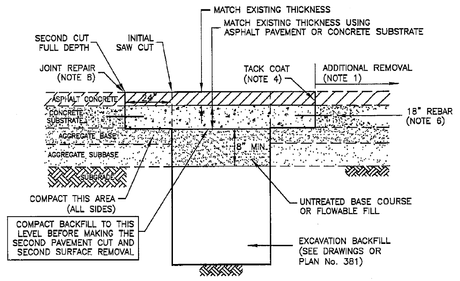

EXAMPLE 2
(COMPOSITE RESTORATION)

(D) ASPHALT CONCRETE "T" PATCH
SEE APWA STANDARD PLAN NO. 255 FOR NOTES
(NOT TO SCALE)

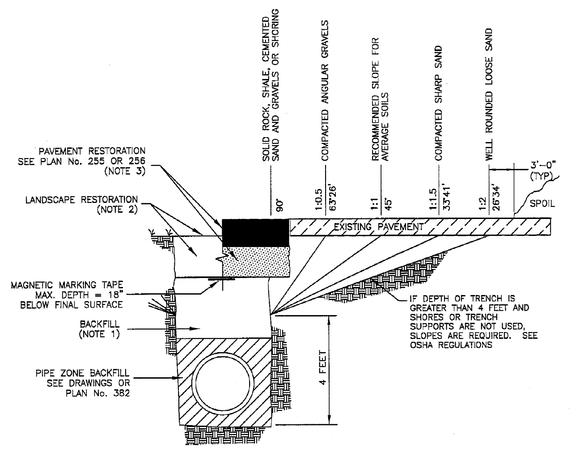

SECTION

(E) TRENCH BACKFILL
SEE APWA STANDARD PLAN NO. 381 FOR NOTES
(NOT TO SCALE)

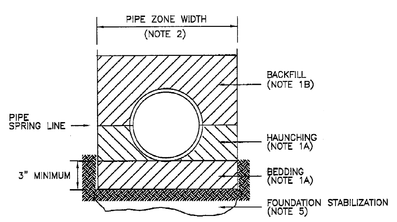

INSTALLATION

CONCRETE PIPE: FOLLOW ASTM C 1479
"STANDARD PRACTICE FOR INSTALLATION OF PRECAST CONCRETE SEWER, STORM DRAIN, AND CULVERT PIPE USING STANDARD INSTALLATIONS."

PVC AND HDPE PIPE: FOLLOW ASTM D 2321
"STANDARD PRACTICE FOR UNDERGROUND INSTALLATION OF THERMOPLASTIC PIPE FOR SEWERS AND OTHER GRAVITY–FLOW APPLICATIONS".

CORRUGATED METAL PIPE: FOLLOW ASTM A 798
"STANDARD PRACTICE FOR INSTALLING FACTORY–MADE CORRUGATED STEEL PIPE FOR SEWERS AND OTHER APPLICATIONS.

VITRIFIED CLAY PIPE: FOLLOW ASTM C 12.
"STANDARD RECOMMENDED PRACTICE FOR INSTALLING VITRIFIED CLAY PIPE LINES.

(F) PIPE ZONE BACKFILL
SEE APWA STANDARD PLAN NO. 382 FOR NOTES
(NOT TO SCALE)

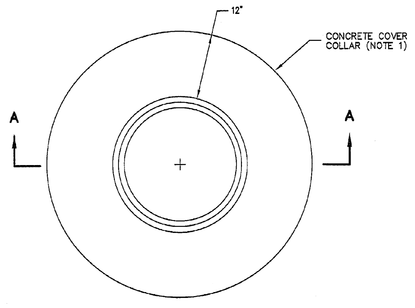

PLAN

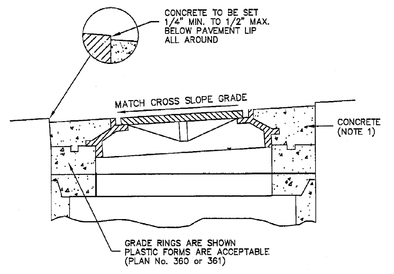

SECTION A–A

(G) CONCRETE COVER COLLAR FOR MANHOLE
SEE APWA STANDARD PLAN NO. 413 FOR NOTES
(NOT TO SCALE)

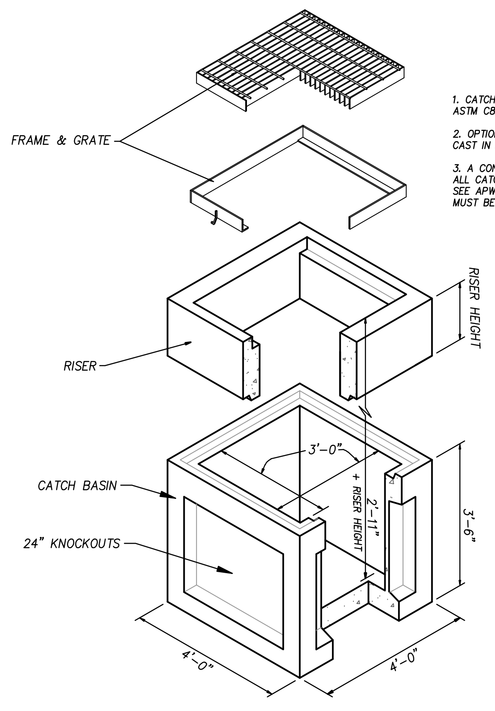

*USE STANDARD PRECAST CATCH BASINS.

NOTES:
1. CATCH BASINS MUST BE DESIGNED TO MEET ASTM C858 WITH AASHTO HS–20 LOADING.
2. OPTIONAL GRATING OR COVER MATERIAL MAY BE CAST IN AS REQUIRED.
3. A CONCRETE COVER COLLAR IS REQUIRED FOR ALL CATCH BASINS. FOR COVER COLLAR DETAIL, SEE APWA PLAN NO. 362. EDGES OF ASPHALT MUST BE SAWCUT TO A CLEAN EDGE.

(H) 3'x3' CATCH BASIN
(NOT TO SCALE)

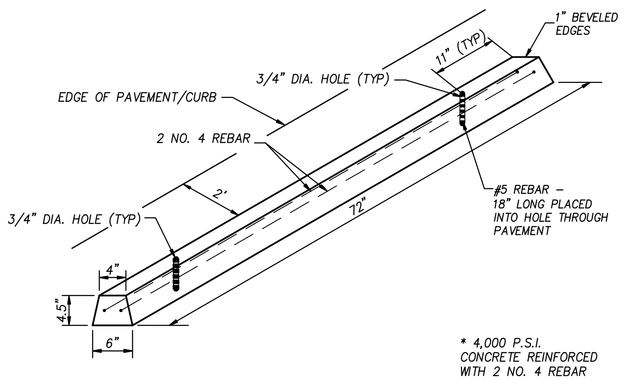

* 4,000 P.S.I. CONCRETE REINFORCED WITH 2 NO. 4 REBAR

(J) CONCRETE WHEEL STOP
(NOT TO SCALE)

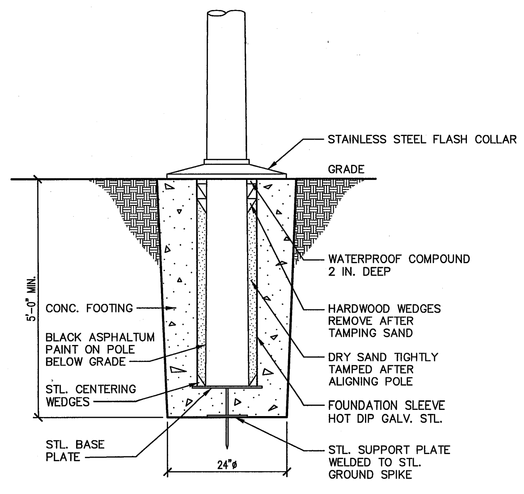

(K) TYPICAL FLAGPOLE BASE
(NOT TO SCALE)

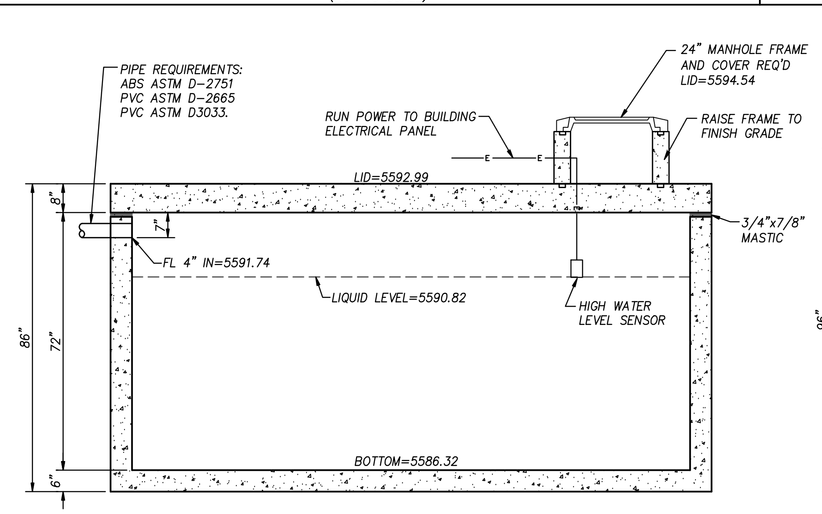

SECTION VIEW

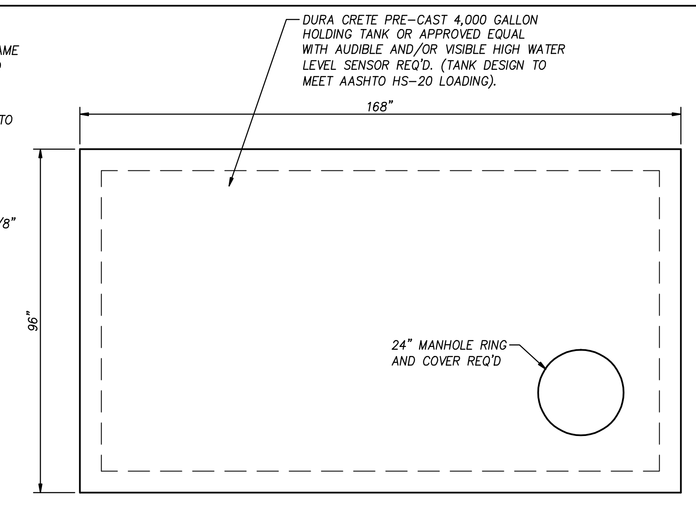

TOP VIEW

NOTES:
1. SEE HOLDING TANK MANUFACTURER FOR REBAR REQUIREMENTS.
2. NO GROUND WATER WAS ENCOUNTERED AT ELEVATION 5584.00.
3. HOLDING TANK SHALL BE CONSTRUCTED OF SOUND, DURABLE WATER TIGHT MATERIALS THAT ARE NOT SUBJECT TO EXCESSIVE CORROSION, FROST DAMAGE, OR DECAY.
4. HOLDING TANK SHALL BE DESIGNED TO BE WATER TIGHT.
5. CONTRACTOR SHALL INSPECT HOLDING TANK FOR CRACKS PRIOR TO INSTALLATION.
6. LOCAL HEALTH DISTRICT MAY, AT THEIR OPTION, REQUIRE FILLING TANK WITH WATER TO CHECK FOR LEAKS PRIOR TO BACKFILL.
7. HOLDING TANK MANUFACTURER SHALL CERTIFY IN WRITING THAT HOLDING TANK COMPLIES WITH R317–4.
8. CIVIL CONTRACTOR IS TO COORDINATE WITH HIS SUBS TO VERIFY SITE SANITARY SEWER AND BUILDING SANITARY SEWER PIPE WILL PROPERLY CONNECT PRIOR TO INSTALLING ANY SANITARY PIPE IN THE SITE OR BUILDING. IF PROBLEM EXISTS, THE CONTRACTOR SHALL INFORM THE ARCHITECT OF THE PROBLEM PRIOR TO INSTALLING ANY PIPE OR APPURTENANCES. IF PIPE OR APPURTENANCES ARE INSTALLED AND A PROBLEM ARISES, THE CONTRACTOR, AT HIS OWN EXPENSE, SHALL PERFORM ANY WORK REQUIRED SUCH THAT THE SANITARY PIPE AND APPURTENANCES CAN BE INSTALLED CORRECTLY TO CODE STANDARDS.

(L) 4,000 GALLON HOLDING TANK
(NOT TO SCALE)

CLIENT

UDOT CONNECTING COMMUNITIES

STATION #2434
6072 E. EMIGRATION CANYON RD.
PARLEY'S CANYON, UTAH

DESIGNER

ARCHIPLEX GROUP
architecture · planning · design services
255 Crossroad Square
Salt Lake City, UT 84115
P:(801) 961–7070
F:(801) 961–7373

CONSULTANTS

PEPG ENGINEERING, L.L.C.
8825 S. SANDY PARKWAY • SANDY, UT 84070
PHONE: (801) 562–2521 • FAX: (801) 562–2551

REGISTRATION

REGISTERED PROFESSIONAL ENGINEER No. 172201 DARRIN R. SMITH 2-16-2009 STATE OF UTAH

ISSUE

MARK	DATE	DESCRIPTION
1	2–16–09	ADDENDUM #1
	01–09	Revised Contruction Doc.
	10–08	Construction Documents
	8–20–08	90% Review Submittal

ARCHIPLEX PROJECT NO:	0728.02
DFCM PROJECT NO:	08211900
PEPG PROJECT NO:	6600.0816
DRAWN BY:	BCB
CHECKED BY:	DRS
SCALE:	AS NOTED
DATE:	FEBRUARY, 2009

KEY PLAN

SHEET TITLE

TYPICAL SECTIONS & DETAILS

C501

© 2004 ARCHIPLEX GROUP

GENERAL NOTES:

1. CONTRACTOR IS RESPONSIBLE TO VERIFY ALL PLANT & MATERIAL QUANTITIES. THE SCHEDULE IS INTENDED AS A REFERENCE ONLY. SEE ENLARGED PLANTING PLANS FOR SHRUB AND PLANT LOCATIONS.

2. OWNER AND/OR LANDSCAPE ARCHITECT IS TO APPROVE ALL LANDSCAPE MATERIALS PRIOR TO INSTALLATION WITH PRIOR NOTICE OF 48 HOURS. OWNER AND OR LANDSCAPE ARCHITECT RESERVES THE RIGHT TO REJECT LANDSCAPE MATERIALS INCLUDING PLANTS THROUGHOUT THE CONSTRUCTION PERIOD.

3. PROVIDE MATCHING SIZES AND FORMS OF LIKE SHRUB SPECIES AS SHOWN ON DRAWINGS.

4. APPLY 6" OF TOPSOIL IN ALL PLANTING AREAS. A SOIL TEST SHALL BE DONE TO VERIFY QUALITY. CONTRACTOR TO AMEND TOP SOIL AS NECESSARY FROM SOIL REPORT TO COMPLY WITH ACCEPTABLE SOIL STANDARDS AND SPECIFICATIONS. SEE SPECIFICATIONS FOR DEPTH OF TOP SOIL.

5. THE LANDSCAPE & IRRIGATION CONTRACTOR IS RESPONSIBLE FOR ENSURING THAT THEY OBTAIN ANY & ALL DRAWINGS, SPECIFICATIONS, CHANGE ORDERS & AS-BUILDS APPLICABLE TO CONTRACTORS SCOPE OF WORK PRIOR TO & DURING CONSTRUCTION ON SITE. CONFLICTING OR VAGUE INFORMATION SHALL BE NOTED AND SUBMITTED TO OWNER AND LANDSCAPE ARCHITECT FOR CLARIFICATION.

6. CONTRACTOR IS RESPONSIBLE TO REPLACE ALL DAMAGED NEW & EXISTING LANDSCAPE, INCLUDING BUT NOT LIMITED TO ALL PLANTS, TOPSOIL, WEED BARRIER, CURBING, WALKS, ETC.

7. CONTRACTOR SHALL TIE ALL PROPOSED LANDSCAPE MATERIALS WITH EXISTING INCLUDING BUT NOT LIMITED TO ALL PLANTS, TOPSOIL, WEED BARRIER, CURBING, WALKS, ETC.

8. APPLY AT LEAST 4" OF MULCH UNDER ALL TREES AND SHRUBS.

9. APPLY A PRE-EMERGENT AROUND ALL NEW TREES AND SHRUBS.

10. OWNER TO PROVIDE SUPPLEMENTAL MANUAL WATERING ON ALL NEW PLANTS DURING THE ESTABLISHMENT PERIOD UP TO 4 MONTHS.

11. CONTRACTOR SHALL CAREFULLY STUDY AND INSPECT CIVIL AND ARCHITECTURAL PLANS AS-BUILTS DRAWING AND VISUALLY INSPECT. MAKE ON-SITE ADJUSTMENTS TO LANDSCAPE BASED OF FINAL DIMENSIONS AND LAYOUTS OF SITE AND BUILDINGS. PROVIDE A UNIT PRICE CREDIT FOR ANY PLANTS, AREA, OR PORTIONS OF THE LANDSCAPE OMMITED.

12. ANY PORTIONS OF THE LANDSCAPE NOT SHOWN OR CLEARLY IDENTIFIED BY THE LANDSCAPE CONSTRUCTION DOCUMENTS SHALL BE IDENTIFIED, AND A REQUEST FOR INFORMATION AND OR CHANGE ORDER SHALL BE SUBMITTED TO OWNERS REPRESENTATIVE TO ADDRESS.

GENERAL CONSTRUCTION NOTES:

1. CONTRACTOR SHALL SECURE ALL NECESSARY PERMITS BEFORE CONSTRUCTION.

2. CONTRACTOR SHALL ADHERE TO ALL LOCAL, STATE, AND/OR FEDERAL LAWS PERTAINING TO THE PROJECT'S WORK.

3. IT IS THE RESPONSIBILITY OF THE CONTRACTOR TO COORDINATE ALL CONSTRUCTION ELEMENTS WITH OTHER TRADES PRIOR TO INSTALLATION AND BECOME FAMILIAR WITH THE LOCATION OF UNDERGROUND SERVICES AND IMPROVEMENTS.

4. THE CONTRACTOR SHALL EXAMINE THE SITE AND FULLY DETERMINE THE CONDITIONS UNDER THIS CONTRACT. NO ALLOWANCE WILL BE MADE FOR FAILURE OF BIDDERS TO ASCERTAIN ALL ASPECTS OF THE PROJECT.

5. PRIOR TO DIGGING, EXCAVATION, OR UNDERGROUND WORK, CONTRACTOR SHALL LOCATE AND PROTECT EXISTING UTILITIES AND SUBSURFACE SYSTEMS. CONTRACTOR SHALL ASSUME RESPONSIBILITY FOR REPAIR AND EXPENSES INCURRED TO UTILITIES THAT BECOME DAMAGED AS A RESULT OF HIS WORK.

6. CONTRACTOR SHALL INSPECT WITH OWNER'S REPRESENTATIVE ALL PAVEMENT, SIDEWALK AND CURB DEFECTS PRIOR TO BEGINNING WORK. ALL HARDSCAPE SHALL BE RE-INSPECTED DURING FINAL INSPECTION. ANY DAMAGED AREAS SHALL BE REPAIRED AT CONTRACTOR'S EXPENSE.

7. IT SHALL BE THE CONTRACTOR'S RESPONSIBILITY TO DETERMINE THE QUANTITIES AND MATERIALS REQUIRED TO COMPLETE THE WORK IN ACCORDANCE WITH THE PLANS. CONTRACTOR SHALL PROVIDE OWNER/LANDSCAPE ARCHITECT ACTUAL AMOUNTS REQUIRED FOR FINISHED INSTALLATION.

8. CONTRACTOR SHALL BE RESPONSIBLE FOR MAINTAINING GRADES AS ESTABLISHED BY THE PROJECT ENGINEER. RUNOFF AND DRAINAGE FLOWS SHALL NOT BE ALTERED OR IMPEDED.

9. THE CONTRACTOR SHALL FURNISH ALL LABOR, TOOLS, EQUIPMENT, MATERIALS, EMPLOYEE AND SUBCONTRACTOR SUPERVISION FOR IT'S PORTION OF THE PROJECT TO IMPLEMENT PLANS AND SPECIFICATIONS.

10. THE CONTRACTOR ASSUMES ALL RISKS IN THE PERFORMANCE OF THE WORK AND RESPONSIBILITY FOR LOSS AND EXPENSE RESULTING FROM ON-SITE INJURY.

11. THE CONTRACTOR IS RESPONSIBLE FOR SUPERVISION, SAFETY, ADMINISTRATION, SCHEDULING, COORDINATION AND MANAGEMENT OF SUBCONTRACTORS.

12. THE CONTRACTOR SHALL PROTECT ALL PERSONS NEAR OR ON THE PREMISES FROM UNREASONABLE RISK OF INJURY. PROVIDE WARNING SIGNS, LIGHTS, BARRICADES, RAILINGS, FLAGMEN OR OTHER NECESSARY SAFEGUARD.

13. OWNER / LANDSCAPE ARCHITECT INSPECTIONS SHALL NOT BE DEEMED SUPERVISION OF CONTROL OF CONSTRUCTION BY CONTRACTOR OR SUBCONTRACTORS.

14. ALL CONTRACTS SHALL BE WRITTEN DIRECTLY BETWEEN CONTRACTOR AND OWNER. SPECIFIC TERMS OF WORK SHALL BE NEGOTIATED DIRECTLY BETWEEN PARTIES.

15. OWNER / LANDSCAPE ARCHITECT SHALL REVIEW SHOP DRAWINGS, PRODUCT DATA AND SAMPLES SUBMITTED BY THE CONTRACTOR FOR THE SOLE PURPOSE OF COMPLIANCE WITH THE DESIGN CONCEPT AND WITH INFORMATION GIVEN IN THE CONTRACT DOCUMENTS. OWNER AND LANDSCAPE ARCHITECT ASSUMES NO LIABILITY FOR CHANGES THAT HAVE NOT BEEN REVIEWED AND AUTHORIZED IN WRITING.

16. WHERE TWO OR MORE REQUIREMENTS CREATE OVERLAPPING CONDITIONS, CONFLICTING MINIMUMS OR LEVELS OF QUALITY, ALL OR THE MORE STRINGENT REQUIREMENTS OR THE HIGHER QUALITY LEVEL IS INTENDED, AND SHALL BE ENFORCED. CONFLICTING REQUIREMENTS SHALL BE REFERRED TO THE LANDSCAPE ARCHITECT OR OWNER'S REPRESENTATIVE WHOSE INTERPRETATION WILL BE FINAL.

17. WALKS AND PLANTERS SHOWN ON LANDSCAPE PLANS ARE FOR LAYOUT REFERENCE ONLY. REFER TO CIVIL PLANS FOR HORIZONTAL AND VERTICAL CONTROL

18. IT IS THE RESPONSIBILITY OF THE CONTRACTOR TO ENSURE THAT THE MOST CURRENT PLANS & SPECIFICATIONS ARE USED & CONVEYED TO ALL SUB- CONTRACTORS AS APPLICABLE.

1 PLANT SCHEDULE

SYMBOL n.t.s.	BOTANICAL NAME / COMMON NAME	QTY.	SIZE	NOTES/REQUIREMENTS
	Landscape Contractor shall be required to obtain the exact plant material shown by Botanical Name and reference, any substitutions or variations shall be approved by Landscape Architect prior to installation.	Landscape contractor shall verify on plans all plant quanties.	Report to Owner and or Landscape Architect any problems obtaining specified plant size.	All plants to be planted as shown on plan. Any discrepencies between actual conditions & plans shall be reported to Owner &/or Landscape Architect.
	TREES			
	PINUS EDULIS/ PINYON PINE	15	6'	All trees must be uniformly sized see notes/specifications
	QUERCUS GAMBELII/ GAMBEL OAK	14	2" cal.	All trees must be uniformly sized see notes/specifications
	EXISTING TREES/ TO REMAIN	6		
	EXISTING TREES/ TO BE REMOVED	9		
	SHRUBS			
	ARTEMISIA TRIDENTATA/ BIG SAGEBRUSH	22	5 gal.	uniformally sized see notes/specifications
	PURSHIA MEXICANA/ CLIFFROSE	34	5 gal.	uniformally sized see notes/specifications
	RHUS TRILOBATA/ OAKLEAF SUMAC	33	5 gal.	uniformally sized see notes/specifications
	PERENNIALS			
	PENSTEMON EATONII/ FIRECRACKER PENSTEMON	13	1 gal.	uniformally sized see notes/specifications
	PENSTEMON PALMERII/ PALMER PENSTEMON	25	1 gal.	uniformally sized see notes/specifications
	PENSTEMON SPECIOSUS/ SHOWY PENSTEMON	31	1 gal.	uniformally sized see notes/specifications
	TURF			
	NEW SEED MIX - AS FOLLOWS: ROADCREST @ 10 LB. PER ACRE SMOOTH BROME @ 7 LB. PER ACRE WESTERN WHEATGRASS @ 5 LB. PER ACRE	± 0.39 acres 16,906 sq. ft.		To be planted in disturbed areas to match existing seed mix areas.
	EXISTING SEED MIX - AS FOLLOWS: ROADCREST @ 10 LB. PER ACRE SMOOTH BROME @ 7 LB. PER ACRE WESTERN WHEATGRASS @ 5 LB. PER ACRE			To remain and blend in with proposed seed mix areas.

CLIENT

UDOT CONNECTING COMMUNITIES

STATION #2434
6072 E. EMIGRATION CANYON RD.
PARLEY'S CANYON, UTAH

DESIGNER

ARCHIPLEX GROUP
architecture · planning · design services
255 Crossroad Square
Salt Lake City, UT 84115
P:(801) 961-7070
F:(801) 961-7373

CONSULTANTS

PEPG ENGINEERING, L.L.C.
10805 S. SANDY PARKWAY • SANDY, UT 84070
PHONE: (801) 562-2521 • FAX: (801) 562-2551

REGISTRATION

LICENSED LANDSCAPE ARCHITECT JEFFREY LARTON STOKES No. 5176425 STATE OF UTAH

ISSUE

MARK	DATE	DESCRIPTION
1	2-16-09	ADDENDUM #1
	01-09	Revised Construction Doc.
	10-08	Construction Documents
	8-20-08	90% Review Submittal

ARCHIPLEX PROJECT NO:	0728.02
DFCM PROJECT NO:	08211900
PEPG PROJECT NO:	6600.0816
DRAWN BY:	EAB
CHECKED BY:	DRS
SCALE:	1"=20'
DATE:	FEBRUARY, 2009

KEY PLAN

SHEET TITLE

LANDSCAPE NOTES & SCHEDULE

L101

© 2004 ARCHIPLEX GROUP

LEGEND

- 3 HOUR FIRE BARRIER
- 1 HOUR RATED STORAGE ROOM

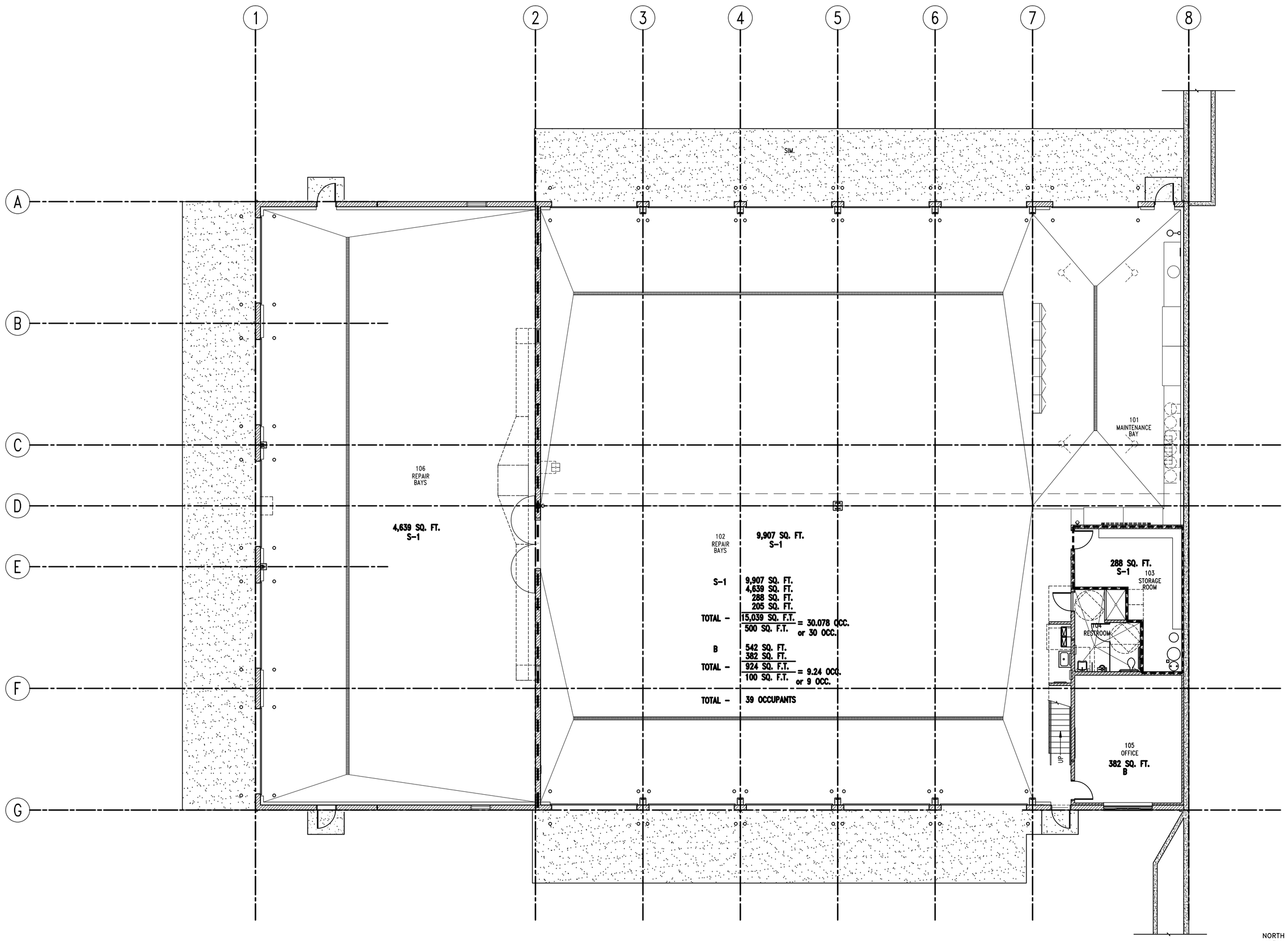

A1 | OCCUPANT FLOOR PLAN – LEVEL 1

AE100 | REF.

SCALE: 1/8" = 1'-0"

8' 6' 4' 2' 0' 4' 8' 16'

NORTH

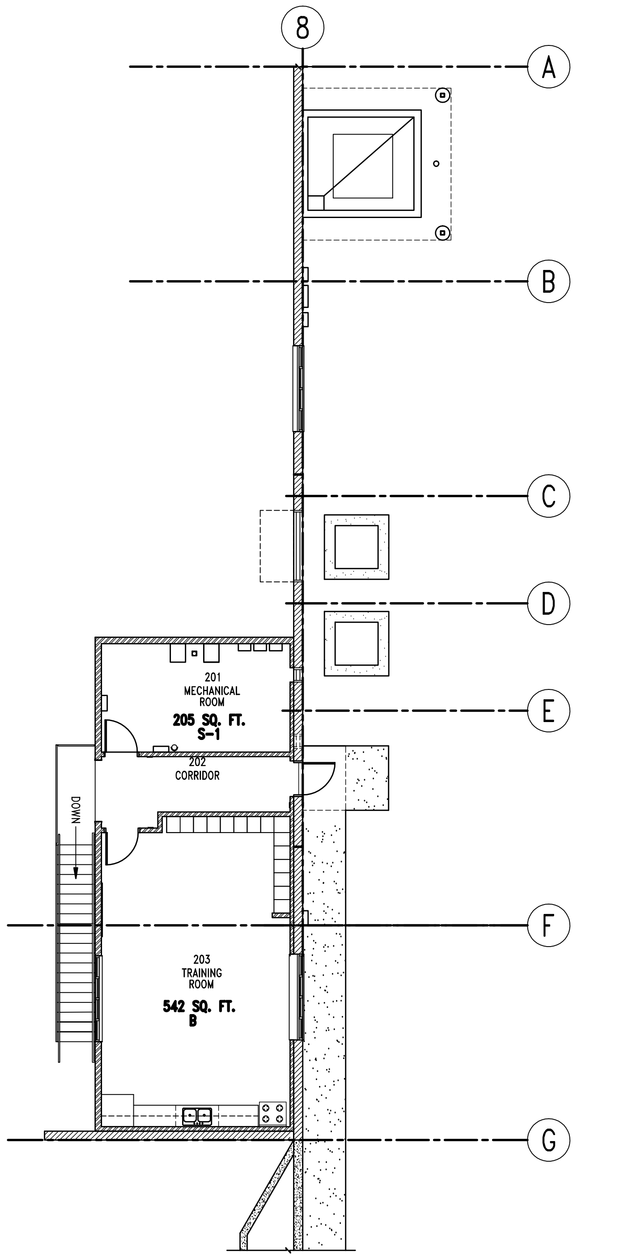

A5 | OCCUPANT FLOOR PLAN – LEVEL 2

AE100 | REF.

SCALE: 1/8" = 1'-0"

8' 6' 4' 2' 0' 4' 8' 16'

PLAN NORTH

CLIENT

UDOT CONNECTING COMMUNITIES

STATION #2434
6072 E. EMIGRATION CANYON RD.
PARLEY'S CANYON, UTAH

DESIGNER

ARCHIPLEX GROUP

architecture · planning · design services

255 Crossroad Square
Salt Lake City, UT 84115
P:(801) 961-7070
F:(801) 961-7373

CONSULTANTS

REGISTRATION

STATE OF UTAH
RALPH M. STANISLAW
06-312619-0301
LICENSED ARCHITECT

ISSUE

MARK	DATE	DESCRIPTION
	2-17-09	Addendum #1
	01-09	Revised Contruction Doc.
	10-08	Construction Documents
	8-20-08	90% Review Submittal

ARCHIPLEX PROJECT NO:	0728.02
DFCM PROJECT NO:	08211900
DRAWN BY:	A. PHILLIPS
CHECKED BY:	R. STANISLAW
SCALE:	1/8" = 1'-0"
DATE:	JANUARY, 2009

KEY PLAN

SHEET TITLE

OCCUPANT FIRST FLOOR & MEZZANINE PLAN

AE100

© 2004 ARCHIPLEX GROUP

GENERAL NOTES

1. FIELD VERIFY ALL EXISTING CONDITIONS AND THEIR COMPATIBILITY WITH NEW CONSTRUCTION PRIOR TO THE COMMENCEMENT OF WORK. COORDINATE DISCREPANCIES WITH ARCHITECT.

2. DO NOT SCALE DRAWINGS.

3. SEE CIVIL, STRUCTURAL, MECHANICAL AND ELECTRICAL DRAWINGS FOR MORE INFORMATION.

4. PROVIDE BACKING BEHIND ALL SURFACE MOUNTED EQUIPMENT AND/OR FIXTURES PER DETAIL C2/AE401

5. SEE SHEET A1/AE501 FOR INTERIOR PARTITION WALL TYPES.

6. TWO BOLLARDS REQUIRED PER SECTIONAL DOOR JAMB. ALIGN WITH DOOR JAMB, SEE DETAILS A3 & B3/AE503.

7. SEE SHEET AE602 FOR WINDOW FRAME TYPES & DETAILS.

8. SEE STRUCTURAL DRAWINGS FOR CONSTRUCTION/CONTROL JOINT LOCATIONS IN CONCRETE SLAB.

9. ALL DIMENSIONS ARE TO FACE OF WALL, UNLESS NOTED OTHERWISE.

10. PROVIDE 03053.A0 AT ALL CONCRETE CURBS, PIERS, SLABS, STEM WALL ETC. U.N.O.

11. PROVIDE 03054.A0 OVER ENTIRE FLOOR SLAB AT ROOMS 101, 102, 103, 106, & STAIRS.

KEYNOTES

03053.A0	CONCRETE WATER PROOFING ADMIXTURE
03054.A0	OLIOPHOBIC TOPICAL SEALER
03055.A0	SALT AND WATER BARRIER
03300.A1	CONCRETE SLAB-ON-GRADE - SEE STRUCTURAL
03300.D0	CONCRETE PAD
03300.G0	CONCRETE OVER METAL DECK - SEE STRUCTURAL
03300.H0	FOUNDATION WALL SEE STRUTURAL
03300.H1	CONCRETE PIER - SEE STRUCTURAL
03300.N0	CONCRETE CURB
04200.A2	CMU (SIZE)
04200.R0	MASONRY CONTROL JOINT
05120.B2	STEEL COLUMN - SEE STRUTURAL - GALVANIZED
05120.D1	TUBE STEEL COLUMN - SEE STRUCTURAL
05120.D2	TUBE STEEL COLUMN - SEE STRUTURAL - PRIMED AND PAINTED
05500.J1	PIPE BOLLARD (DIAMETER) GALVANIZED & PAINTED
05510.H0	CONCRETE FILLED METAL PAN STAIR - PAINTED
06402.H1	ADJUSTABLE SHELVES (FINISH)
06402.X0	WORKBENCH (DEPTH)
06651.B0	SOLID SURFACE COUNTER TOP
07410.A2	DOWNSPOUT W/CONTINUOUS HEAT TAPE
07410.T1	STANDING SEAM METAL ROOF CANOPY
08360.A0	HEAVY DUTY OVERHEAD SECTIONAL DOOR
10100.C0	MARKER BOARD (L X H)
10425.A0	ROOM SIGNAGE
10425.A1	OIL SIGNAGE
10425.B1	WELDING SIGNAGE
10425.C1	ACCESSIBLE SIGNAGE
10425.D1	ACCESSIBLE/UNISEX RESTROOM SIGNAGE
10500.A0	METAL LOCKERS (WIDTH)
10500.B0	METAL STORAGE CABINETS - W/HOLD DOWN ANCHORS
10522.A0	FIRE EXTINGUISHER
11151.A0	MOBILE LIFT - NIC - OWNER FURNISHED
12511.A0	HORIZONTAL LOUVER BLINDS
14620.A0	TROLLEY HOIST (SIZE) SEE STRUCTURAL
15000.A0	GAS METER - SEE PLUMBING DRAWINGS
15410.C0	UTILITY SINK
15410.D1	FLOOR SINK
15410.E0	TRENCH DRAIN - SLOPE TO DRAIN
15412.A0	EMERGENCY SHOWER & EYE WASH
15452.A1	DRINKING FOUNTAIN
15486.A1	FUEL FIRED WATER HEATER
15490.C0	WASTE OIL PIT
15490.D0	600 GAL/ WASTE OIL TANK - O.F.C.I.
15491.A0	AIR COMPRESSOR
15491.C0	OVERHEAD HOSE REELS
15611.A1	NATURAL GAS FIRED FURNACE - SEE MECHANICAL
15670.A1	CONDENSER UNIT - SEE MECHANICAL
15820.A0	BACKDRAFT DAMPER - SEE MECHANICAL
15838.A0	EXHAUST FAN - SEE MECHANICAL
15861.A1	MECHANICAL DUCTWORK - SEE MECHANICAL
15887.A1	LOUVER WITH BIRD SCREEN - SEE MECHANICAL
15887.B1	INTAKE GRAVITY HOOD - SEE MECHANICAL
16210.A1	ELETRICAL METER - SEE ELECTRICAL DRAWINGS
16411.A1	EMERGENCY DISCONNECT - SEE ELECTRICAL
16442.A0	ELECTRICAL PANEL - SEE ELECTRICAL DRAWINGS

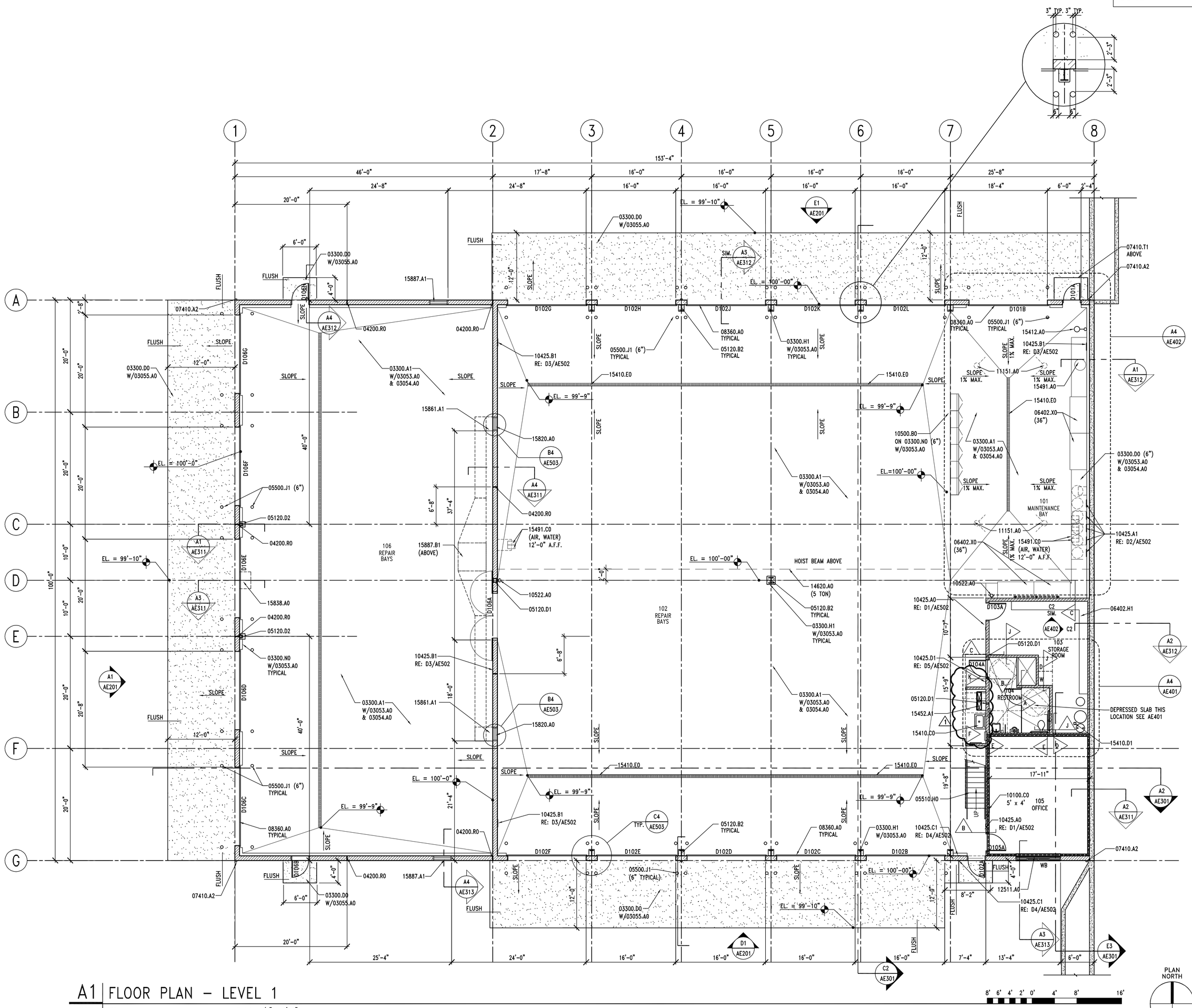

A1 | FLOOR PLAN - LEVEL 1

AE101 | REF. | SCALE: 1/8" = 1'-0"

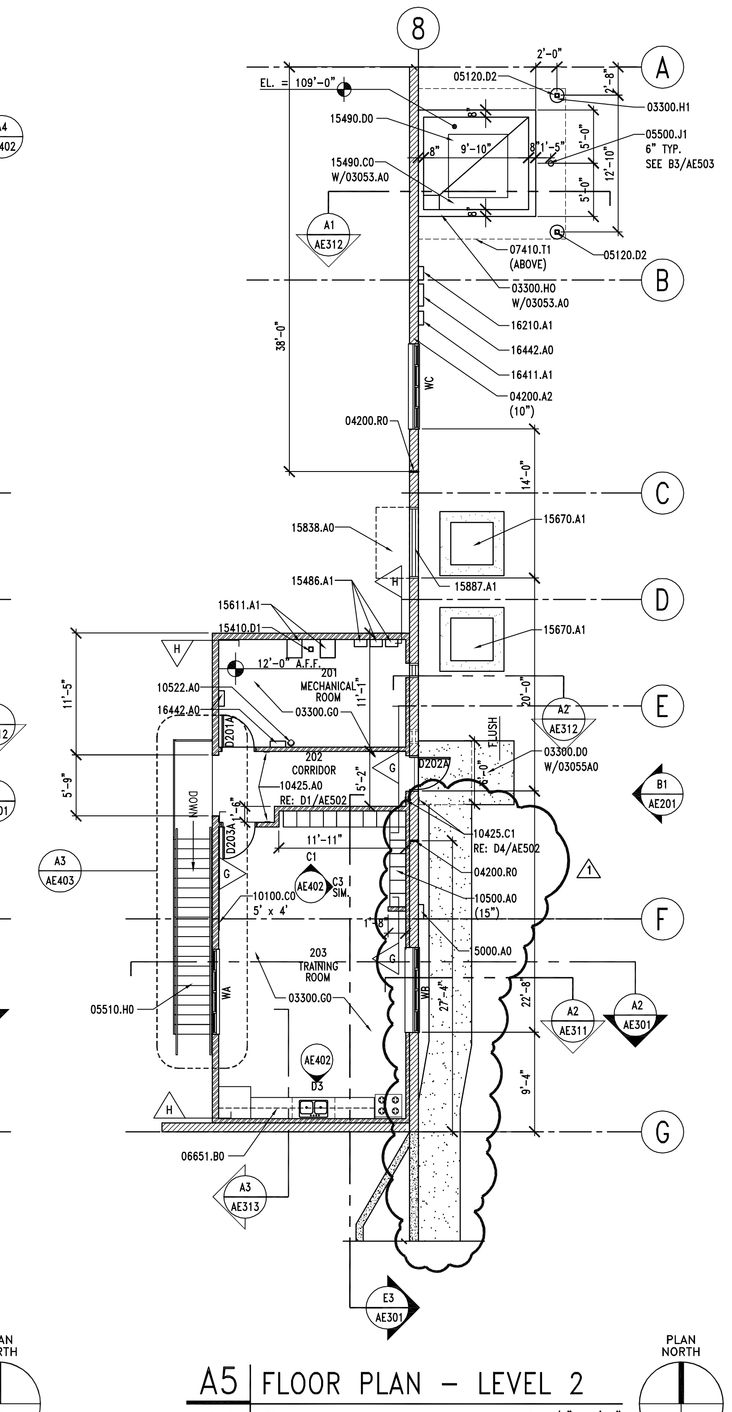

A5 | FLOOR PLAN - LEVEL 2

AE101 | REF. | SCALE: 1/8" = 1'-0"

CLIENT

UDOT CONNECTING COMMUNITIES

STATION #2434
6072 E. EMIGRATION CANYON RD.
PARLEY'S CANYON, UTAH

DESIGNER

ARCHIPLEX GROUP
architecture · planning · design services
255 Crossroad Square
Salt Lake City, UT 84115
P:(801) 961-7070
F:(801) 961-7373

CONSULTANTS

REGISTRATION

STATE OF UTAH
RALPH M. STANISLAW
06-310619-0301
LICENSED ARCHITECT

ISSUE		
1	2-17-09	Addendum #1
	01-09	Revised Contruction Doc.
	10-08	Construction Documents
	8-20-08	90% Review Submittal
MARK	DATE	DESCRIPTION

ARCHIPLEX PROJECT NO:	0728.02
DFCM PROJECT NO:	08211900
DRAWN BY:	A. PHILLIPS
CHECKED BY:	R. STANISLAW
SCALE:	1/8" = 1'-0"
DATE:	JANUARY, 2009

KEY PLAN

SHEET TITLE

LEVEL 1 & 2 FLOOR PLAN

AE101

© 2004 ARCHIPLEX GROUP

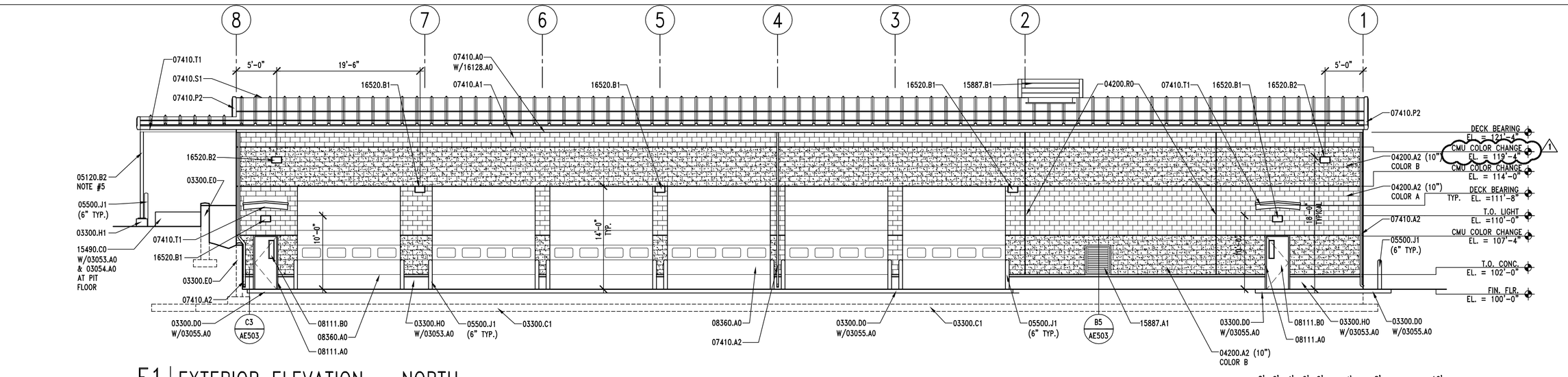

E1 EXTERIOR ELEVATION – NORTH

AE201 REF. AE101 SCALE: 1/8" = 1'-0"

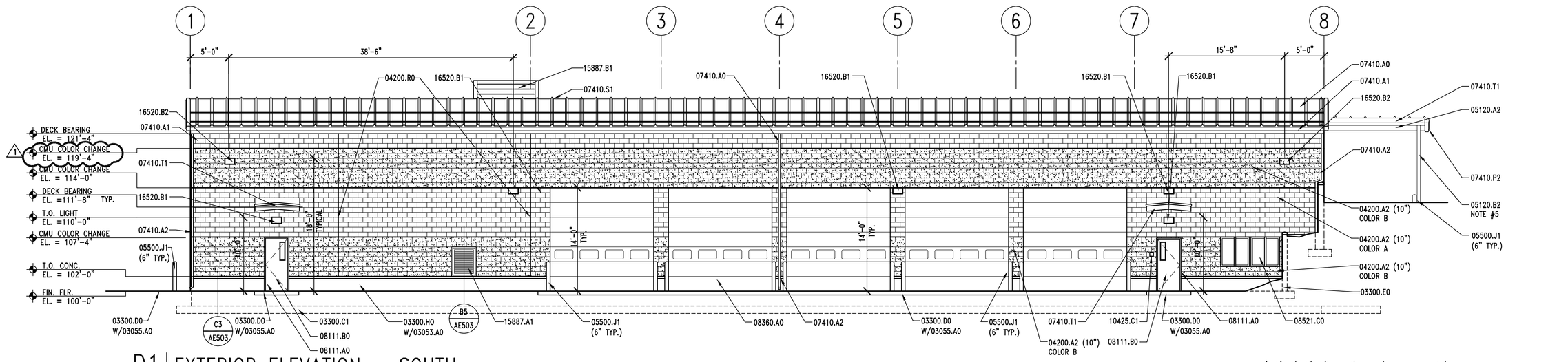

D1 EXTERIOR ELEVATION – SOUTH

AE201 REF. AE101 SCALE: 1/8" = 1'-0"

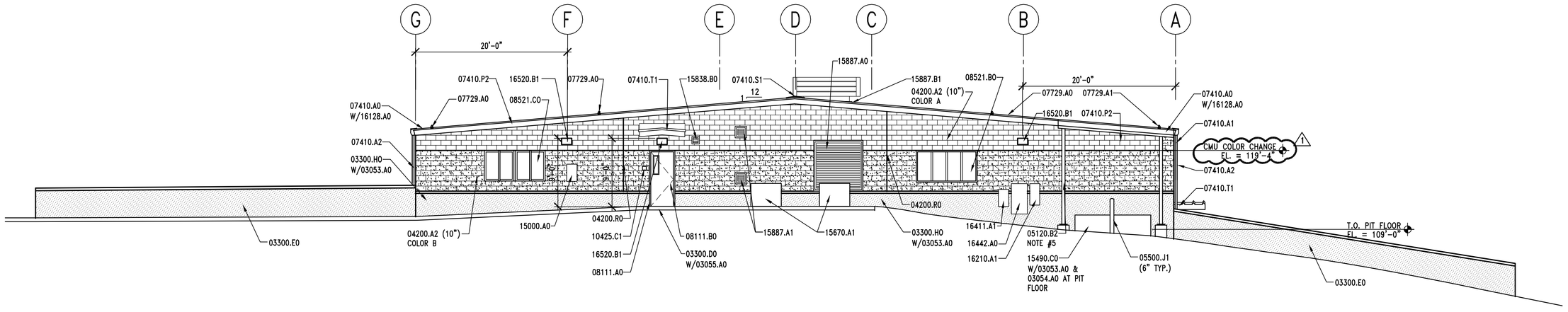

B1 EXTERIOR ELEVATION – EAST

AE201 REF. AE101 07729.A0 SCALE: 1/8" = 1'-0"

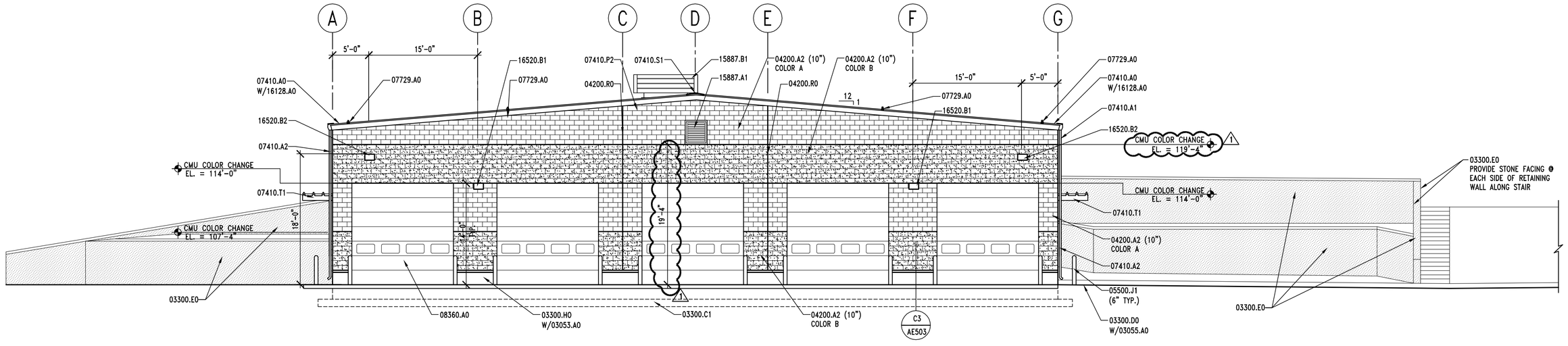

A1 EXTERIOR ELEVATION – WEST

AE201 REF. AE101 SCALE: 1/8" = 1'-0"

EXTERIOR ELEVATION KEYNOTES

03053.A0 CONCRETE WATER PROOFING ADMIXTURE
03054.A0 OLEOPHOBIC TOPICAL SEALER
03055.A0 SALT AND WATER BARRIER
03300.C1 FOOTING – SEE STRUCTURAL
03300.D0 CONCRETE PAD
03300.E0 CONCRETE RETAINING WALL WITH RANDOM ASHLAR PATTERN FORMLINER – COORD. WITH CIVIL & STRUCTURAL – SEE SHEET AE202 FOR ADDITIONAL DETAILS
03300.H0 FOUNDATION WALL – SEE STRUCTURAL
03300.H1 CONCRETE PIER – SEE STRUCTURAL

04200.A2 CMU (SIZE)
04200.R0 MASONRY CONTROL JOINT

05120.A2 STEEL BEAM – SEE STRUCTURAL – PRIMED AND PAINTED
05120.B2 STEEL COLUMN – SEE STRUCTURAL – PRIMED & PAINTED
05500.J1 PIPE BOLLARD (DIAMETER) GALVANIZED AND PAINTED

07190.A0 CLEAR WATER RESISTANT COATING
07410.A0 STANDING SEAM METAL ROOF
07410.A1 RAIN GUTTER W/CONTINUOUS HEAT TAPE
07410.A2 DOWNSPOUT W/CONTINUOUS HEAT TAPE
07410.P2 RAKE TRIM
07410.S1 STANDING SEAM METAL ROOF RIDGE
07410.T1 STANDING SEAM METAL CANOPY
07729.A0 STANDING SEAM METAL ROOF 2 PIPE SNOW GUARD SYSTEM

08111.A0 PRESSED METAL FRAME
08111.B0 HOLLOW METAL DOOR
08360.A0 HEAVY DUTY OVERHEAD SECTIONAL DOOR
08521.B0 FIXED VINYL WINDOW
08521.C0 VINYL WINDOW W/SLIDING GLASS PANEL

10425.C1 ACCESSIBLE SIGNAGE

15000.A0 GAS METER – SEE PLUMBING DRAWINGS
15490.C0 WASTE OIL PIT
15670.A1 CONDENSER UNIT – SEE MECHANICAL
15838.A0 EXHAUST FAN – SEE MECHANICAL
15838.B0 VENT
15838.A1 EXHAUST FAN VENT – SEE MECHANICAL
15887.A1 LOUVER WITH BIRD SCREEN – SEE MECHANICAL
15887.B1 INTAKE GRAVITY HOOD – SEE MECHANICAL

16128.A0 LOW VOLTAGE DE-ICING SNOW MELTING SYSTEM
16210.A1 ELECTRICAL METER – SEE ELECTRICAL
16411.A1 EMERGENCY DISCONNECT – SEE ELECTRICAL
16442.A0 ELECTRICAL PANEL
16520.B1 EXTERIOR WALL MOUNTED LIGHTS
16520.B2 EXTERIOR WALL MOUNTED FLOOD LIGHTS

GENERAL NOTES

1. FIELD VERIFY ALL EXISTING CONDITIONS AND THEIR COMPATIBILITY WITH NEW CONSTRUCTION PRIOR TO THE COMMENCEMENT OF WORK. COORDINATE DISCREPANCIES WITH ARCHITECT.

2. DO NOT SCALE DRAWINGS.

3. SEE SHEET AE602 FOR WINDOW TYPES AND DETAILS.

4. SEE STRUCTURAL, MECHANICAL AND ELECTRICAL DRAWINGS FOR MORE INFORMATION.

5. PAINT ALL EXPOSED, EXTERIOR STEEL AT OIL PIT CANOPY – COLOR TO MATCH TRIM.

6. SEE AE101 FOR CONTROL JOINT DIMENSIONS

~~7. CULTURED STONE FACING AT ALL CONCRETE RETAINING WALLS – RANDOM ASHLAR PATTERN TO MATCH HARRISTONE LEDGESTONE PATTERN – HAZLEWOOD COLOR~~

EXTERIOR COLOR SCHEDULE

(03300.E0) COLORED CONCRETE RETAINING WALL – COLOR "ADOBE 61078" BY DAVIS COLORS OR EQUAL.

(04200.A2) SMOOTH CMU: COLOR A – BUEHNER BLOCK "OAK" OR EQUAL
(04200.A2) SPLIT FACE CMU: COLOR B – BUEHNER BLOCK "WHEAT" OR EQUAL.

(05500.J1) BOLLARDS: OSHA SAFETY YELLOW

(07410.A0) METAL ROOF: COLOR TO MATCH KWAL "CL 2124D" SUFFIELD OR EQUAL.
(07410.A1 & 07410.P2) GUTTERS & RAKE TRIM: COLOR TO MATCH KWAL "CL 2124D" SUFFIELD OF EQUAL.
(07410.A2) DOWNSPOUTS: COLOR TO MATCH KWAL "CL 2124D" SUFFIELD OF EQUAL.

(08111.B0) DOORS & FRAMES: KYNAR 500 WHITE
(08521.B0) WINDOW FRAMES: KYNAR 500 WHITE
(15490.C0) WASTE OIL PIT: OSHA SAFETY RED
(15838.A0) EXHAUST FAN: PRE-FINISHED KYNAR 500 WHITE
(15838.A1) EXHAUST FAN VENT: PRE-FINISHED KYNAR 500 WHITE
(15887.A1) LOUVERS: PRE-FINISHED KYNAR 500 WHITE
(16520.B1 & 16520.B2) EXTERIOR LIGHT FIXTURES: WHITE

RANDOM ASHLAR PATTERN

CLIENT

UDOT CONNECTING COMMUNITIES

STATION #2434
6072 E. EMIGRATION CANYON RD.
PARLEY'S CANYON, UTAH

DESIGNER

ARCHIPLEX GROUP
architecture · planning · design services
255 Crossroad Square
Salt Lake City, UT 84115
P:(801) 961-7070
F:(801) 961-7373

CONSULTANTS

REGISTRATION

STATE OF UTAH
RALPH M. STANISLAW
06-310688-0001
LICENSED ARCHITECT

ISSUE

MARK	DATE	DESCRIPTION
1	2-17-09	Addendum #1
	01-09	Revised Contruction Doc.
	10-08	Construction Documents
	8-20-08	90% Review Submittal

ARCHIPLEX PROJECT NO:	0728.02
DFCM PROJECT NO:	08211900
DRAWN BY:	A. PHILLIPS
CHECKED BY:	R. STANISLAW
SCALE:	1/8" = 1'-0"
DATE:	JANUARY, 2009

KEY PLAN

SHEET TITLE

EXTERIOR ELEVATIONS

AE201

© 2004 ARCHIPLEX GROUP

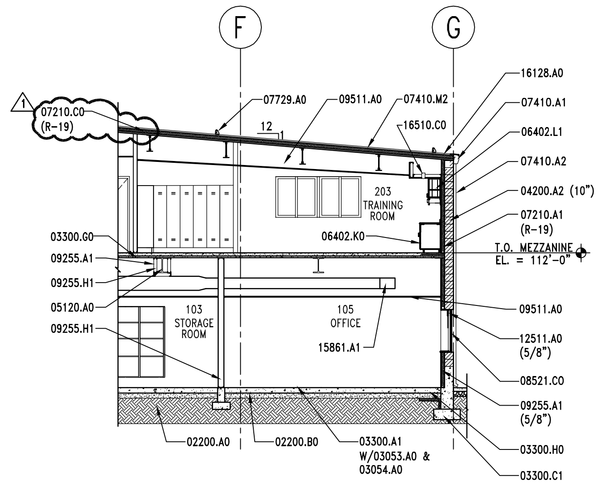

E3 BUILDING SECTION

AE301 | REF. AE101 | SCALE: 1/8" = 1'-0"

8' 6' 4' 2' 0' 4' 8' 16'

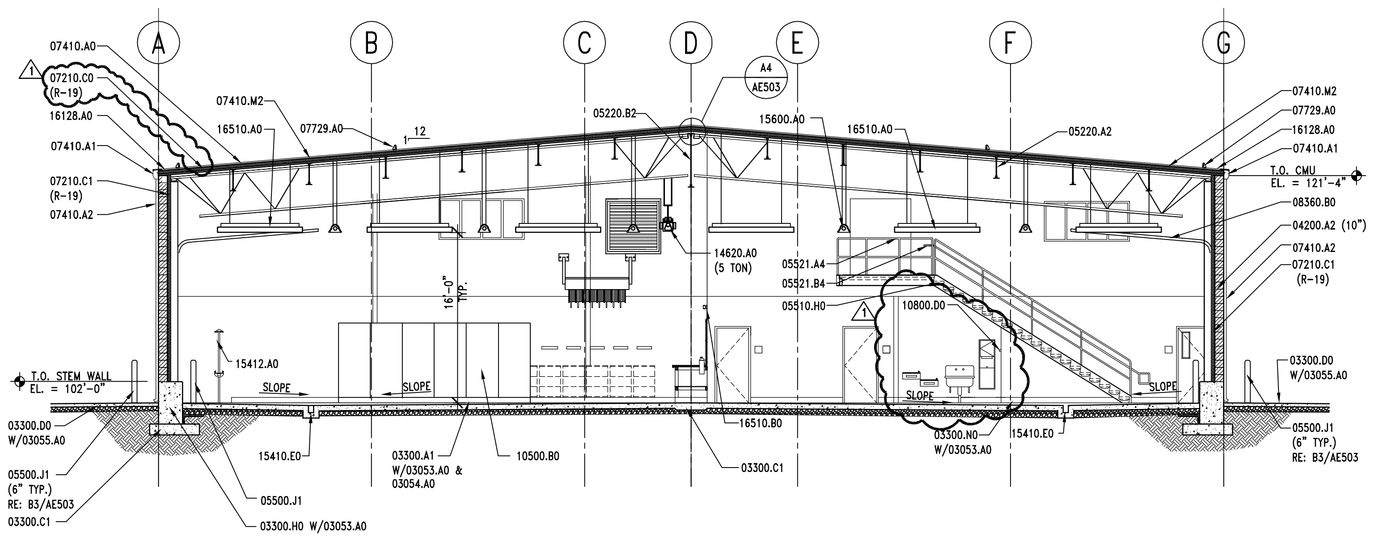

C2 BUILDING SECTION

AE301 | REF. AE101 | SCALE: 1/8" = 1'-0"

8' 6' 4' 2' 0' 4' 8' 16'

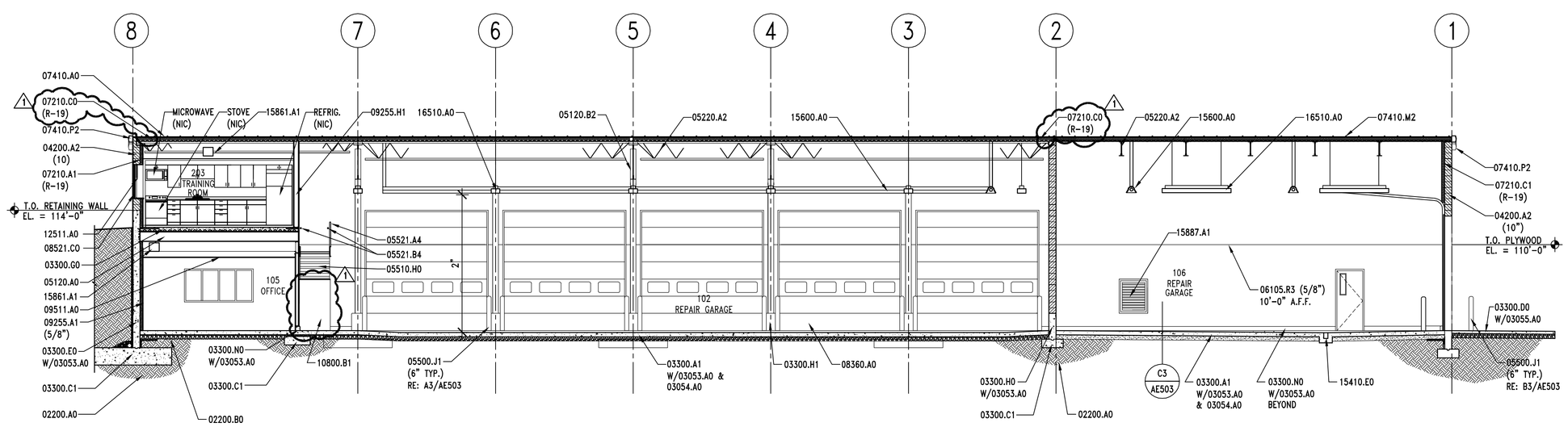

A2 BUILDING SECTION

AE301 | REF. AE101 | SCALE: 1/8" = 1'-0"

8' 6' 4' 2' 0' 4' 8' 16'

BUILDING SECTION KEYNOTES

02200.A0 COMPACTED FILL
02200.B0 GRAVEL BASE

03053.A0 CONCRETE WATER PROOFING ADMIXTURE
03054.A0 OLIOPHOBIC TOPICAL SEALER
03055.A0 SALT AND WATER BARRIER
03300.A1 CONCRETE SLAB-ON-GRADE - SEE STRUCTURAL
03300.C1 FOOTING - SEE STRUCTURAL
03300.D0 CONCRETE PAD
03300.E0 CONCRETE RETAINING WALL - SEE STRUCTURAL
03300.G0 CONCRETE OVER METAL DECK - SEE STRUCTURAL
03300.H0 FOUNDATION WALL - SEE STRUCTURAL
03300.H1 CONCRETE PIER - SEE STRUCTURAL
03300.N0 CONCRETE CURB

04200.A2 (SIZE)

05120.A0 STEEL BEAM - SEE STRUCTURAL
05120.B2 STEEL COLUMN - SEE STRUCTURAL - PRIMED AND PAINTED
05220.A2 STEEL JOISTS - SEE STRUCTURAL - PRIMED AND PAINTED
05500.J1 PIPE BOLLARD (DIAMETER) GALV. AND PAINTED
05510.H0 CONC. FILLED METAL PAN STAIR - PAINTED
05521.A4 1 1/2" O.D. PIPE GUARDRAIL - PAINTED
05521.B4 1 1/2" O.D. HANDRAIL - PAINTED

06105.R3 PLYWOOD PANEL (THICKNESS)
06402.K0 BASE UNIT (FINISH)
06402.L1 WALL UNIT (FINISH)

07210.A1 BATT INSULATION (R-VALUE)
1 07210.C0 RIGID INSULATION FOIL FACED W/VAPOR BARRIER
07210.C1 RIGID INSULATION (CONTINUOUSLY ADHERED TO CMU) W/FOIL FACED VAPOR BARRIER TOWARDS INTERIOR (R-VALUE)
07410.A0 STANDING SEAM METAL ROOF
07410.A1 RAIN GUTTER W/CONTINUOUS HEAT TAPE
07410.A2 DOWNSPOUT W/CONTINUOUS HEAT TAPE
07410.M2 ICE AND WATER SHIELD
07410.P2 RAKE TRIM
07729.A0 STANDING SEAM METAL ROOF 2 PIPE SNOWGUARD SYSTEM

08360.A0 HEAVY DUTY OVERHEAD SECTIONAL DOOR
08360.B0 3" HEAVY DUTY OVERHEAD SECTIONAL DOOR TRACK
08521.C0 VINYL WINDOW WITH SLIDING GLASS PANEL

09255.A1 GYPSUM BOARD (THICKNESS)
09255.H1 METAL STUD (SIZE)
09511.A0 LAY-IN ACOUSTICAL CEILING SYSTEM

10500.B0 METAL STORAGE CABINETS - W/HOLD DOWN ANCHORS
10800.B1 SEMI-RECESSED PAPER TOWEL DISPENSER & WASTE RECEPTACLE
10800.D0 MOP RACK

12511.A0 HORIZONTAL LOUVER BLINDS

14620.A0 TROLLEY HOIST (SIZE)

15410.E0 TRENCH DRAIN
15412.A0 EMERGENCY SHOWER & EYE WASH
15600.A0 NATURAL GAS RADIANT HEATING SYSTEM
15861.A1 MECHANICAL DUCTWORK - SEE MECHANICAL
15887.A1 LOUVER W/ BIRD SCREEN - SEE MECHANICAL

16128.A0 LOW VOLTAGE DE-ICING SNOW MELTING CABLE SYSTEM
16510.A0 INTERIOR LIGHTS
16510.B0 WALL MOUNTED INTERIOR LIGHTS
16510.C0 INTERIOR SOFFIT CAN LIGHTS - SEE ELECTRICAL

GENERAL NOTES

1. FIELD VERIFY ALL EXISTING CONDITIONS AND THEIR COMPATIBILITY WITH NEW CONSTRUCTION PRIOR TO THE COMMENCEMENT OF WORK. COORDINATE DISCREPANCIES WITH ARCHITECT.

2. DO NOT SCALE DRAWINGS.

3. SEE CIVIL, STRUCTURAL, MECHANICAL AND ELECTRICAL DRAWINGS FOR MORE INFORMATION.

4. PROVIDE 03053.A0 AT ALL CONCRETE CURBS, PIERS, SLABS, STEM WALL ETC. U.N.O.

5. PROVIDE 03054.A0 OVER ENTIRE FLOOR SLAB IN ROOMS 101, 102, 103, 106, AND STAIRS.

CLIENT

UDOT CONNECTING COMMUNITIES

STATION #2434
6072 E. EMIGRATION CANYON RD.
PARLEY'S CANYON, UTAH

DESIGNER

ARCHIPLEX GROUP
architecture · planning · design services
255 Crossroad Square
Salt Lake City, UT 84115
P:(801) 961-7070
F:(801) 961-7373

CONSULTANTS

REGISTRATION

STATE OF UTAH
RALPH M. STANISLAW
96-310818-0301
LICENSED ARCHITECT

ISSUE

MARK	DATE	DESCRIPTION
1	2-17-09	Addendum #1
	01-09	Revised Contruction Doc.
	10-08	Construction Documents
	8-20-08	90% Review Submittal

ARCHIPLEX PROJECT NO:	0728.02
DFCM PROJECT NO:	08211900
DRAWN BY:	B. BEECHER
CHECKED BY:	K. PHILLIPS
SCALE:	1/8" = 1'-0"
DATE:	JANUARY, 2009

KEY PLAN

SHEET TITLE

BUILDING SECTIONS

AE301

© 2004 ARCHIPLEX GROUP

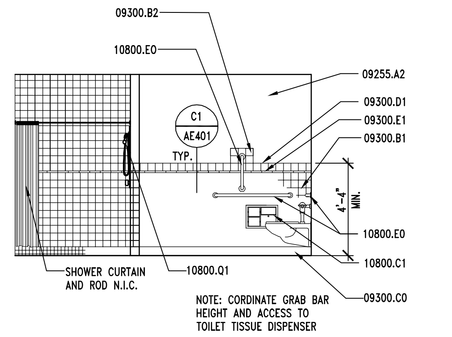

D1 RESTROOM ELEVATION

AE401 REF. AE401 SCALE: 1/4" = 1'-0"

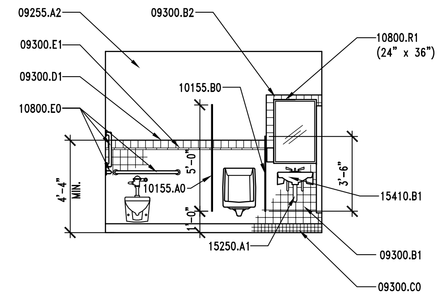

D2 RESTROOM ELEVATION

AE401 REF. AE401 SCALE: 1/4" = 1'-0"

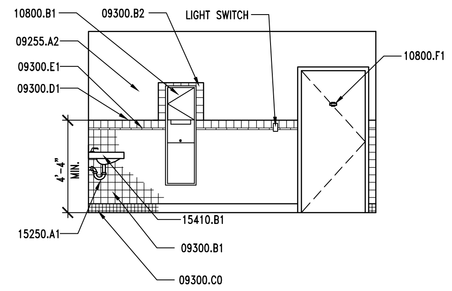

D3 RESTROOM ELEVATION

AE401 REF. AE401 SCALE: 1/4" = 1'-0"

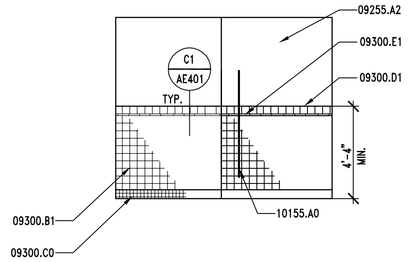

D4 RESTROOM ELEVATION

AE401 REF. AE401 SCALE: 1/4" = 1'-0"

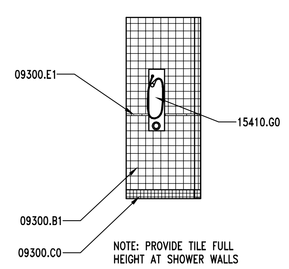

D5 RESTROOM ELEVATION

AE401 REF. AE401 SCALE: 1/4" = 1'-0"

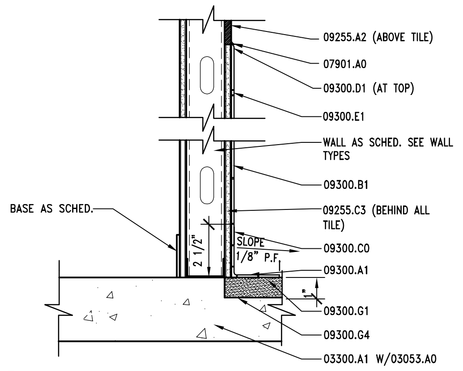

C1 RECESSED SLAB DETAIL

AE401 REF. AE401 SCALE: 3" = 1'-0"

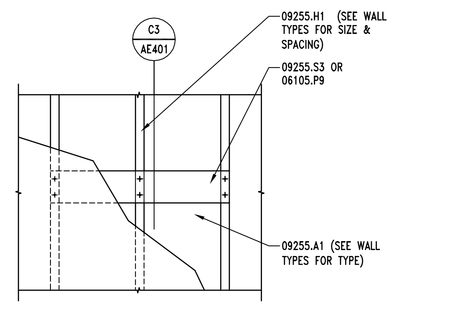

C2 MOUNTING PLATE ELEV.

AE401 REF. AE401 SCALE: 3/4" = 1'-0"

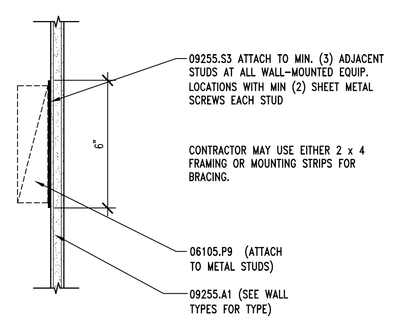

C3 MOUNTING PLATE SECTION

AE401 REF. AE401 SCALE: 3" = 1'-0"

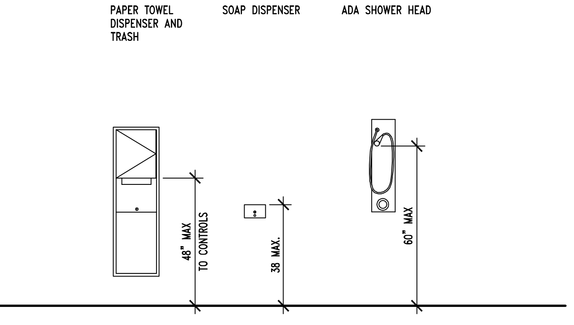

C4 MOUNTING HEIGHTS

AE401 REF. AE401 SCALE: 3/8" = 1'-0"

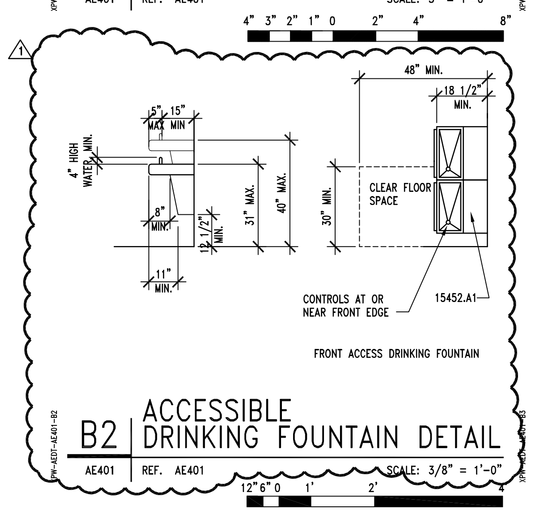

B2 ACCESSIBLE DRINKING FOUNTAIN DETAIL

AE401 REF. AE401 SCALE: 3/8" = 1'-0"

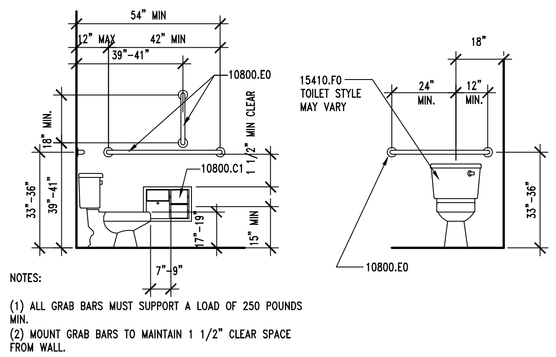

NOTES:
(1) ALL GRAB BARS MUST SUPPORT A LOAD OF 250 POUNDS MIN.
(2) MOUNT GRAB BARS TO MAINTAIN 1 1/2" CLEAR SPACE FROM WALL.

B3 ACCESSIBLE TOILET DETAIL

AE404 REF. AE401 SCALE: 3/8"= 1'-0"

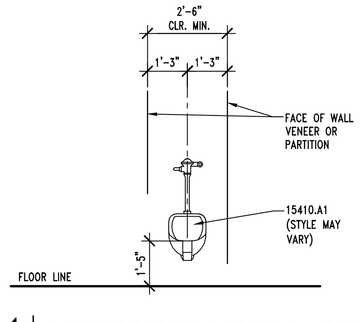

A1 ACCESSIBLE URINAL DETAIL

AE401 REF. AE401 SCALE: 3/8" = 1'-0"

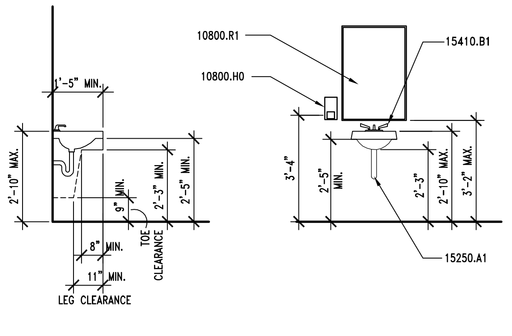

A2 ACCESSIBLE SINK DETAIL

AE401 REF. AE401 SCALE: 3/8" = 1'-0"

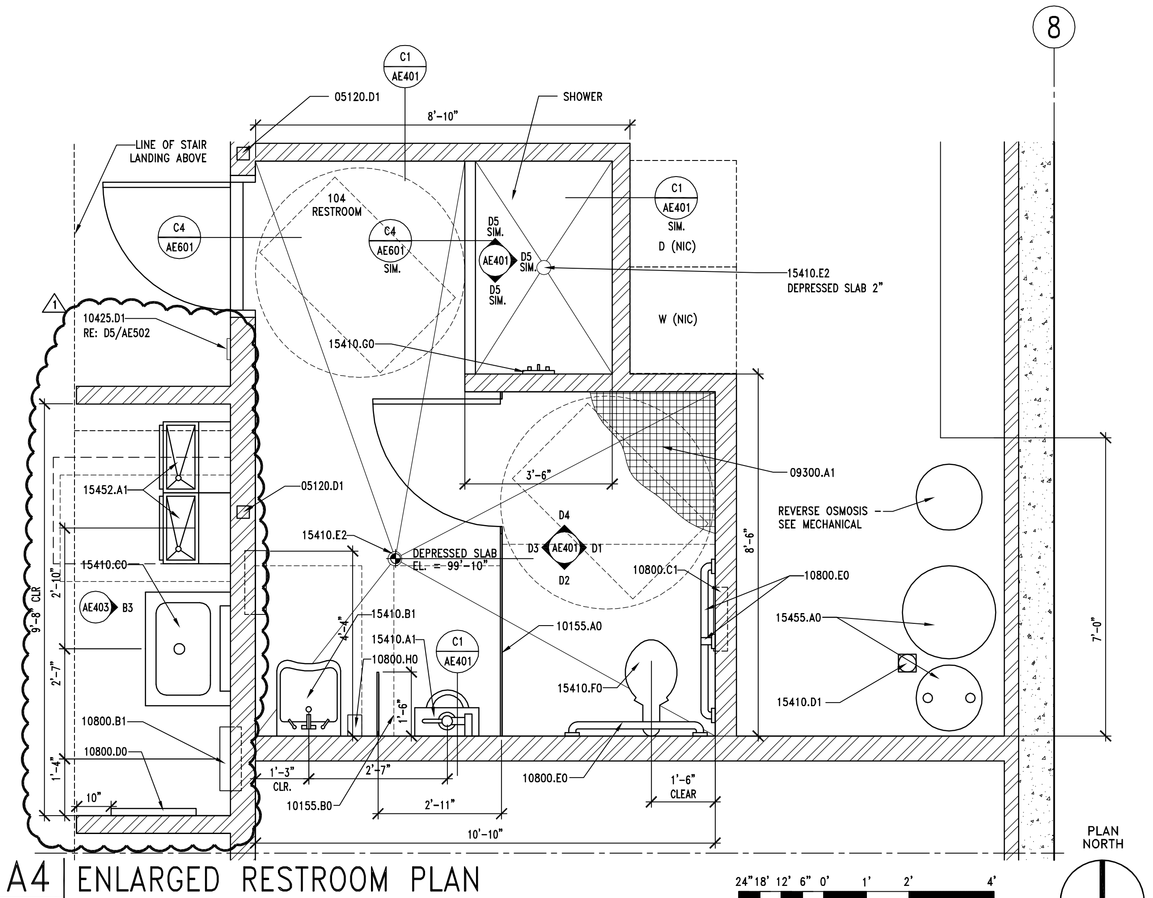

A4 ENLARGED RESTROOM PLAN

AE401 REF. AE101 SCALE: 1/2" = 1'-0'

KEYNOTES

03053.A0	CONCRETE WATER PROOFING ADMIXTURE
03300.A1	CONCRETE SLAB-ON-GRADE - SEE STRUCTURAL
05120.D1	TUBE STEEL COLUMN - SEE STRUCTURAL
06105.P9	2 x FRAMING, FIRE TREATED
07901.A0	CONTINUOUS SEALANT
09255.A1	GYPSUM BOARD (THICKNESS)
09255.A2	WATER RESISTANT GYPSUM BOARD (THICKNESS)
09255.C3	CEMENT BOARD (THICKNESS)
09255.H1	METAL STUDS (SIZE, SPACING)
09255.S3	18 GA. METAL MOUNTING STRIPS
09300.A1	FLOOR TILE - SEE FINISH SCHEDULE
09300.B1	WALL TILE - SEE FINISH SCHEDULE
09300.B2	PROVIDE TILE FRAME AROUND FIXTURE
09300.C0	TILE BASE - SEE FINISH SCHEDULE
09300.D1	BULLNOSE TILE - SEE FINISH SCHEDULE
09300.E1	1/2" x 6" TILE TRIM PIECE - SEE FINISH SCHEDULE
09300.G1	MORTAR BED
09300.G4	WATERPROOF MEMBRANE
10155.A0	TOILET STALL PARTITION
10155.B0	URINAL STALL PARTITION
10425.D1	ACCESSIBLE/UNISEX RESTROOM SIGNAGE
10800.B1	SEMI-RECESSED PAPER TOWEL DISPENSER & WASTE RECEPTACLE
10800.C1	RECESSED TOILET TISSUE DISPENSER/SAN. NAP. DISPOSAL
10800.D0	MOP RACK
10800.E0	GRAB BAR
10800.F1	DOUBLE PRONG ROBE HOOK
10800.H0	SOAP DISPENSER
10800.I1	ADA COMLIANT SHOWER HEAD
10800.R1	FRAMED MIRROR (SIZE)
15250.A1	PIPE INSULATION AT ALL EXPOSED PIPE
15410.A1	URINAL, ACCESSIBLE
15410.B1	SINK AND FAUCET WITH ADA LEVER HANDLES
15410.C0	UTILITY SINK
15410.D1	FLOOR SINK
15410.E2	FLOOR DRAIN
15410.F0	TOILET
15410.G0	ADA ACCESSIBLE SHOWER HEAD - SEE MECHANICAL
15452.A1	DRINKING FOUNTAIN
15455.A0	WATER SOFTNER SYSTEM

GENERAL NOTES

1. FIELD VERIFY ALL EXISTING CONDITIONS AND THEIR COMPATIBILITY WITH NEW CONSTRUCTION PRIOR TO THE COMMENCEMENT OF WORK. COORDINATE DISCREPANCIES WITH ARCHITECT.
2. DO NOT SCALE DRAWINGS.
3. SEE CIVIL, STRUCTURAL, MECHANICAL AND ELECTRICAL DRAWINGS FOR MORE INFORMATION.
4. PROVIDE BACKING BEHIND ALL SURFACE MOUNTED EQUIPMENT AND/OR FIXTURES PER DETAIL C2/AE401
5. SEE C4/AE401 FOR TYPICAL FIXTURE MOUNTING HEIGHTS.
6. SEE DETAILS A1, A2, B1 & B2/AE401 FOR ADA TYPICAL DETAILS

CLIENT

UDOT CONNECTING COMMUNITIES

STATION #2434
6072 E. EMIGRATION CANYON RD.
PARLEY'S CANYON, UTAH

DESIGNER

ARCHIPLEX GROUP
architecture · planning · design services
255 Crossroad Square
Salt Lake City, UT 84115
P:(801) 961-7070
F:(801) 961-7373

CONSULTANTS

REGISTRATION

STATE OF UTAH
RALPH M. STANISLAW
95-310818-0001
LICENSED ARCHITECT

ISSUE

MARK	DATE	DESCRIPTION
1	2-17-09	Addendum #1
	01-09	Revised Contruction Doc.
	10-08	Construction Documents
	8-20-08	90% Review Submittal

ARCHIPLEX PROJECT NO:	0728.02
DFCM PROJECT NO:	08211900
DRAWN BY:	A. PHILLIPS
CHECKED BY:	R. STANISLAW
SCALE:	AS SHOWN
DATE:	JANUARY, 2009

KEY PLAN

SHEET TITLE

ENLARGED RESTROOM FLOOR PLAN, INTERIOR ELEVATIONS AND DETAILS

AE401

© 2004 ARCHIPLEX GROUP

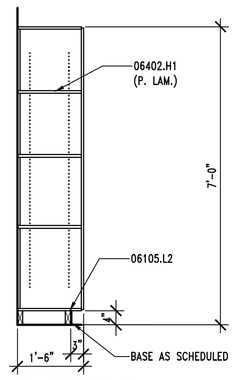

D1 | SHELVING SECTION
AE402 | REF. AE402 | SCALE: 1/2" = 1'-0"

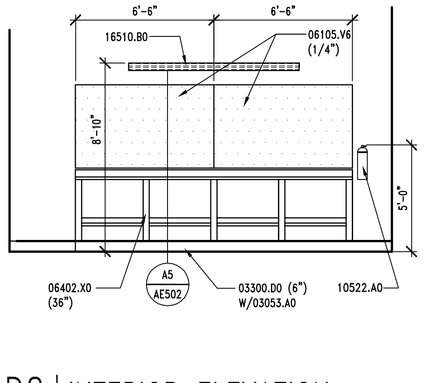

D2 | INTERIOR ELEVATION
AE402 | REF. AE101 | SCALE: 1/4" = 1' -0"

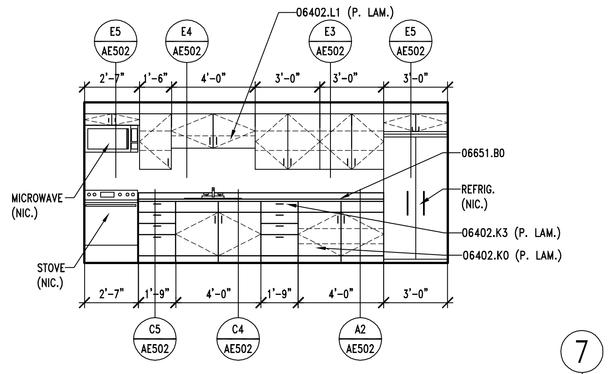

D3 | INTERIOR ELEVATION
AE402 | REF. AE101 | SCALE: 1/4" = 1' -0"

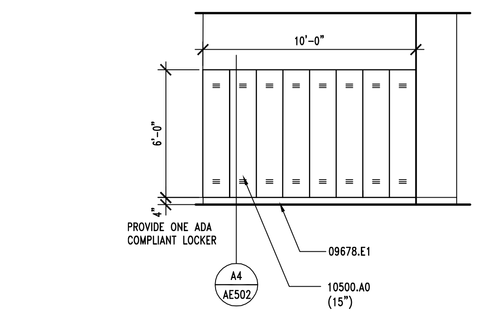

C1 | LOCKER ELEVATION
AE402 | REF. AE101 & AE401 | SCALE: 1/4" = 1'-0"

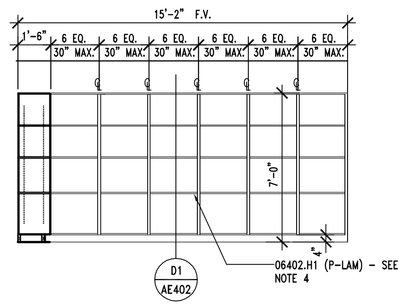

C2 | TYP. SHELVING ELEVATION
AE402 | REF. AE101 | SCALE: 1/4" = 1'-0"

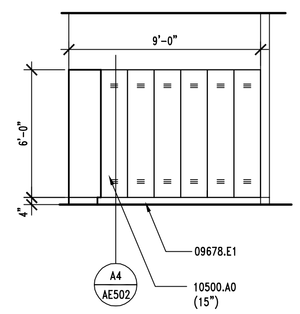

C3 | LOCKER ELEVATION
AE402 | REF. AE101 & AE401 | SCALE: 1/4" = 1'-0"

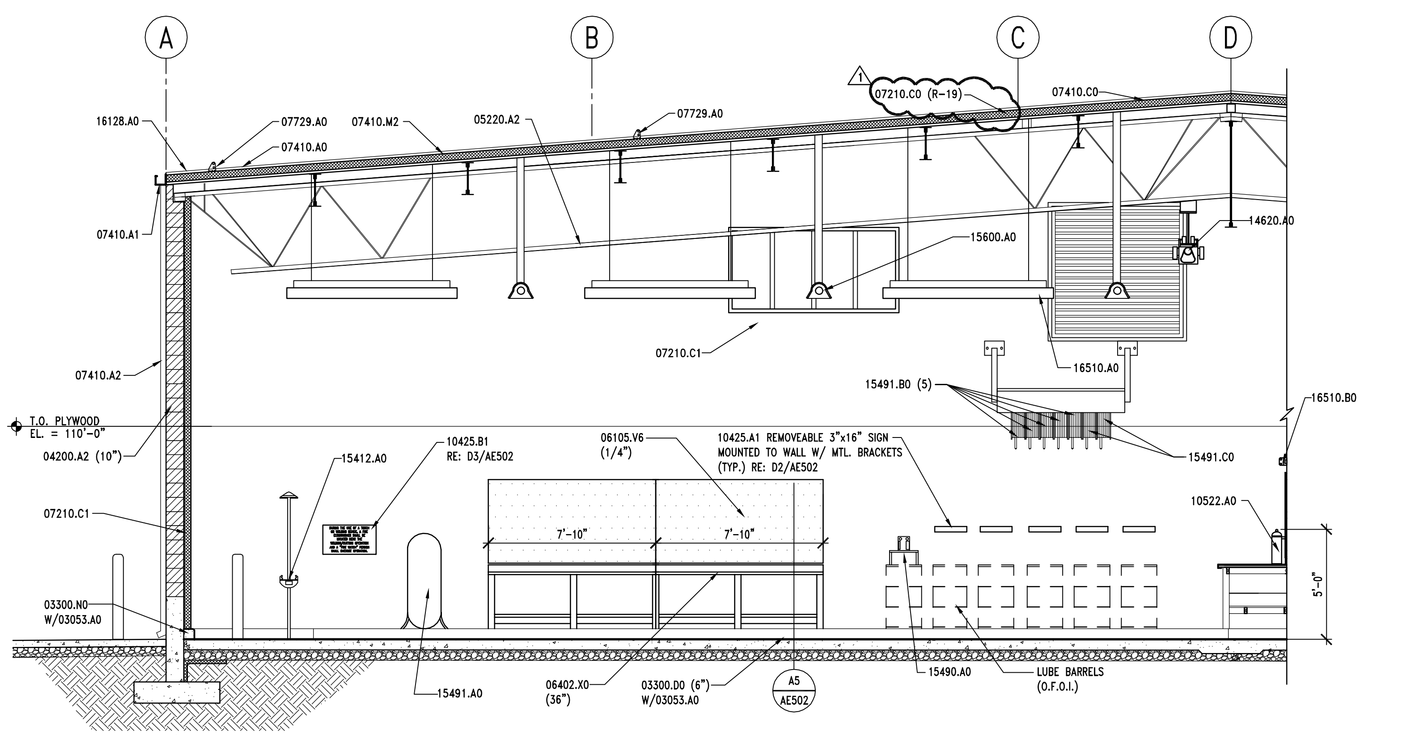

A1 | INTERIOR ELEVATION/SECTION
AE402 | REF. AE402 | SCALE: 1/4" = 1' -0"

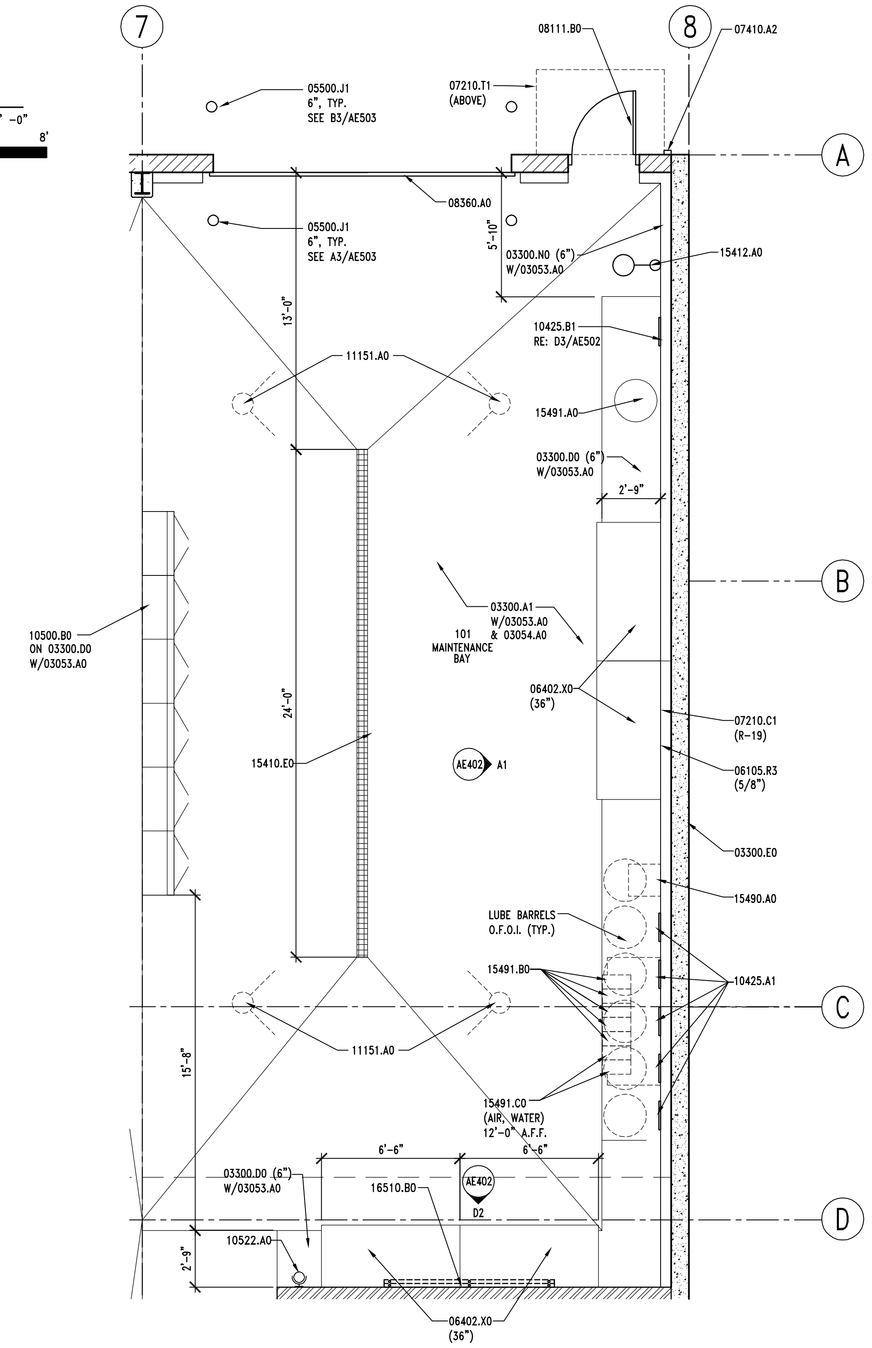

A4 | ENLARGED MAINTENANCE BAY
AE402 | REF. AE101 | SCALE: 1/4" = 1' -0"

PLAN NORTH

KEYNOTES

03053.A0 CONCRETE WATER PROOFING ADMIXTURE
03054.A0 OLIOPHOBIC TOPICAL SEALER
03300.A1 CONCRETE SLAB-ON-GRADE - SEE STRUCTURAL
03300.D0 CONCRETE PAD (SIZE)
03300.E0 CONCRETE RETAINING WALL - SEE STRUCTURAL
03300.N0 CONCRETE CURB (HEIGHT)

04200.A2 CMU (SIZE)

05500.J1 PIPE BOLLARD (DIAMETER) - GALV. & PAINTED
05220.A2 STEEL JOISTS - SEE STRUCTURAL - PRIMED AND PAINTED

06105.L2 BLOCKING AS REQUIRED
06105.R3 PLYWOOD PANEL (THICKNESS)
06105.V6 PEGBOARD (THICKNESS)
06402.H1 ADJUSTABLE SHELVES (FINISH)
06402.K0 BASE UNIT (FINISH)
06402.K3 BASE UNIT WITH DRAWERS (FINISH)
06402.L1 WALL UNIT (FINISH)
06402.X0 WORKBENCH (DEPTH)
06651.B0 SOLID SURFACE COUNTER TOP
1 ~~07210.B1 RIGID INSULATION (R-VALUE)~~
07210.C0 RIGID INSULATION FOIL FACED W/VAPOR BARRIER

07210.C1 RIGID INSULATION (CONTINOUSLY ADHERED TO CMU) W/FOIL FACED VAPOR BARRIER TOWARDS INTERIOR (R-VALUE)
07210.E0 FOUNDATION WALL INSULATION
07410.A0 STANDING SEAM METAL ROOF
07410.A1 RAIN GUTTER W/CONTINUOUS HEAT TAPE
07410.A2 DOWNSPOUT W/CONTINUOUS HEAT TAPE
07410.C0 ROOFING FELT
07410.T1 STANDING SEAM METAL ROOF CANOPY
07410.M2 ICE & WATER SHIELD
07410.P2 RAKE TRIM
07729.A0 STANDIING SEAM METAL ROOF 2 PIPE SNOWGUARD SYSTEM

08111.B0 HOLLOW METAL DOOR
08360.A0 HEAVY DUTY OVERHEAD SECTIONAL DOOR

09678.E1 RUBBER BASE (SIZE)

10425.A1 OIL SIGNAGE
10425.B1 WELDING SIGNAGE
10500.A0 METAL LOCKERS (WIDTH)
10500.B0 METAL STORAGE CABINETS W/HOLD DOWN ANCHORS
10522.A0 FIRE EXTINGUISHER

11151.A0 MOBILE LIFT - NIC - OWNER FURNISHED

14620.A0 TROLLEY HOIST (SIZE) - SEE STRUCTURAL

15410.E0 TRENCH DRAIN
15412.A0 EMERGENCY SHOWER & EYE WASH
15490.A0 WASTE OIL PUMP
15490.D0 600 GAL. WASTE OIL TANK - C.F.C.I
15491.A0 AIR COMPRESSOR
15491.B0 OVERHEAD LUBE REELS
15491.C0 OVERHEAD HOSE REELS
15600.A0 NATURAL GAS RADIANT HEATING SYSTEM

16128.A0 LOW VOLTAGE DE-ICING SNOW MELTING SYSTEM
16510.A0 INTERIOR LIGHTS
16510.B0 WALL MOUNTED INTERIOR LIGHTS

GENERAL NOTES

1. FIELD VERIFY ALL EXISTING CONDITIONS AND THEIR COMPATIBILITY WITH NEW CONSTRUCTION PRIOR TO THE COMMENCEMENT OF WORK. COORDINATE DISCREPANCIES WITH ARCHITECT.

2. DO NOT SCALE DRAWINGS.

3. SEE CIVIL, STRUCTURAL, MECHANICAL AND ELECTRICAL DRAWINGS FOR MORE INFORMATION.

4. PROVIDE QUANTITY OF ADJUSTABLE SHELVING AS SHOWN IN ELEVATION.

5. SEE SHEET AE602 FOR PLASTIC LAMINATE COLORS.

6. PROVIDE 03053.A0 AT ALL CONCRETE CURBS, PIERS, SLABS, STEM WALL ETC. U.N.O.

7. PROVIDE 03054.A0 OVER ENTIRE FLOOR SLAB AT ROOMS 101, 102, 103, 106, & STAIRS.

CLIENT

UDOT CONNECTING COMMUNITIES

STATION #2434
6072 E. EMIGRATION CANYON RD.
PARLEY'S CANYON, UTAH

DESIGNER

ARCHIPLEX GROUP
architecture · planning · design services
255 Crossroad Square
Salt Lake City, UT 84115
P:(801) 961-7070
F:(801) 961-7373

CONSULTANTS

REGISTRATION

STATE OF UTAH
RALPH M. STANISLAW
05-310615-0301
LICENSED ARCHITECT

ISSUE

MARK	DATE	DESCRIPTION
	2-17-09	Addendum #1
	01-09	Revised Contruction Doc.
	10-08	Construction Documents
	8-20-08	90% Review Submittal

ARCHIPLEX PROJECT NO:	0728.02
DFCM PROJECT NO:	08211900
DRAWN BY:	A. PHILLIPS
CHECKED BY:	R. STANISLAW
SCALE:	SCALE
DATE:	JANUARY, 2009

KEY PLAN

SHEET TITLE

ENLARGED MAINTENANCE BAY AND INTERIOR ELEVATIONS

AE402

© 2004 ARCHIPLEX GROUP

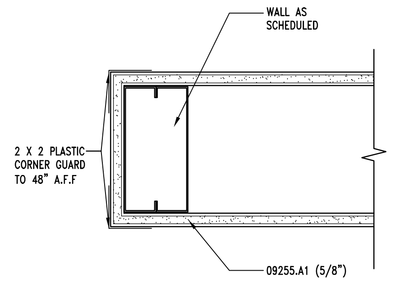

E2 | CORNER GUARD DTL.

AE403 REF. AE403 SCALE: 3" = 1'-0"

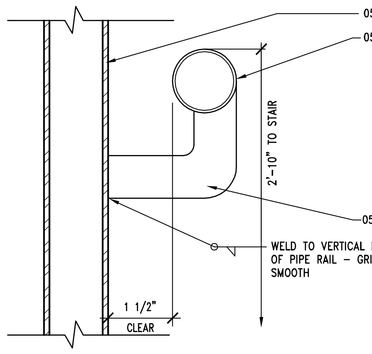

D1 | HANDRAIL ATTACHMENT DTL.

AE403 REF. AE403 SCALE: 6" = 1'-0"

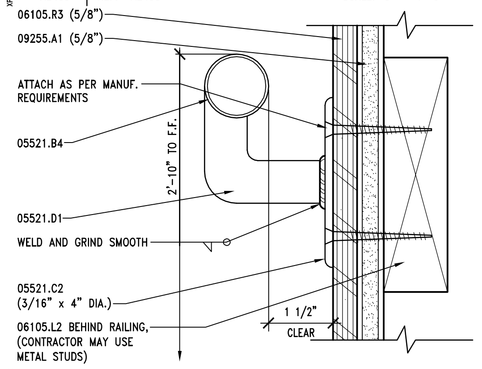

D2 | HANDRAIL ATTACHMENT DTL.

AE403 REF. AE403 SCALE: 6" = 1'-0"

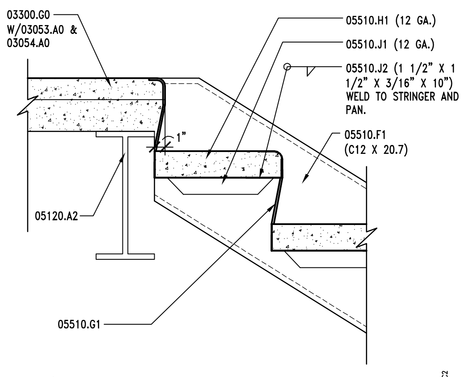

C1 | STAIR LANDING DETAIL

AE403 REF. AE403 SCALE: 1 1/2" = 1'-0"

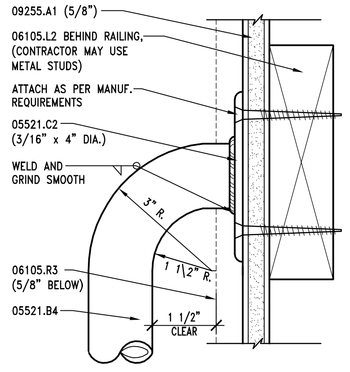

C2 | HANDRAIL ATTACHMENT DTL.

AE403 REF. AE403 SCALE: 6" = 1'-0"

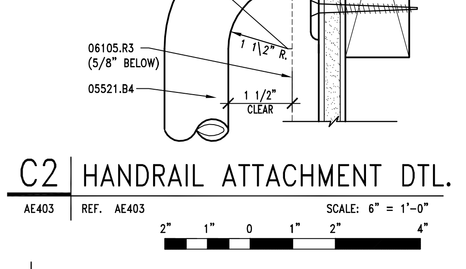

C3 | STAIR SECTION/HANDRAIL & ELEVATION

AE403 REF. AE101 SCALE: 3/8" = 1'-0"

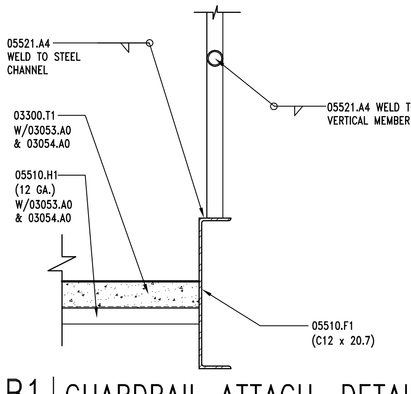

B1 | GUARDRAIL ATTACH. DETAIL

AE403 REF. AE403 SCALE: 1 1/2" = 1'-0"

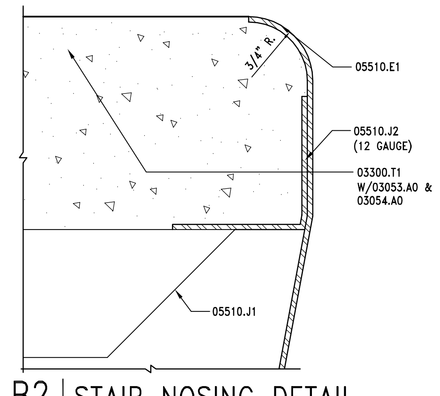

B2 | STAIR NOSING DETAIL

AE403 REF. AE403 SCALE: NONE

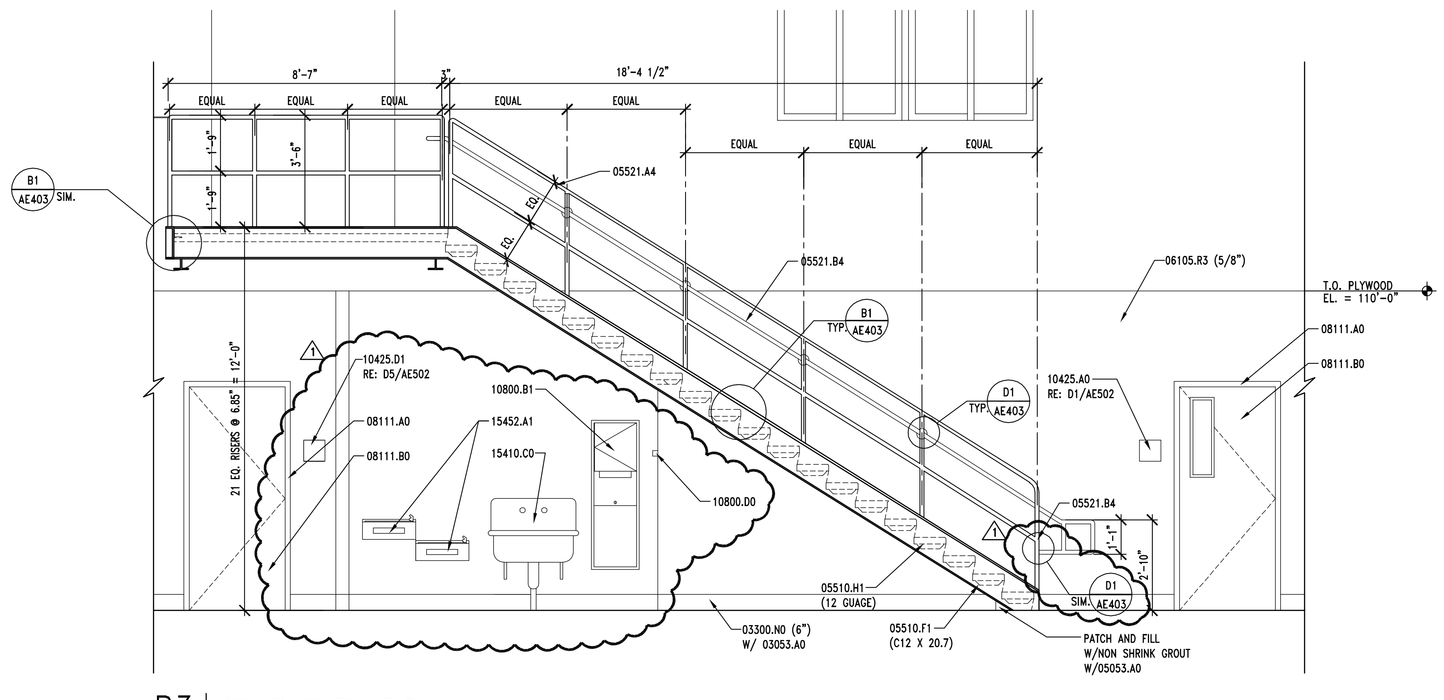

B3 | STAIR ELEVATION

AE403 REF. AE101 SCALE: 3/8" = 1'-0"

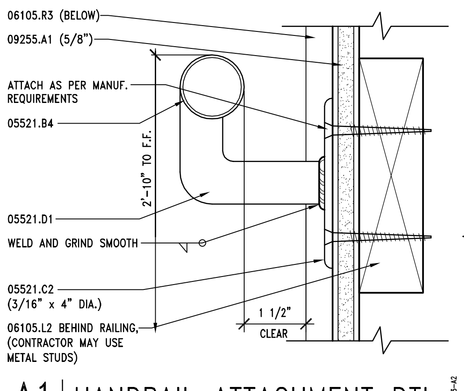

A1 | HANDRAIL ATTACHMENT DTL.

AE403 REF. AE403 SCALE: 6" = 1'-0"

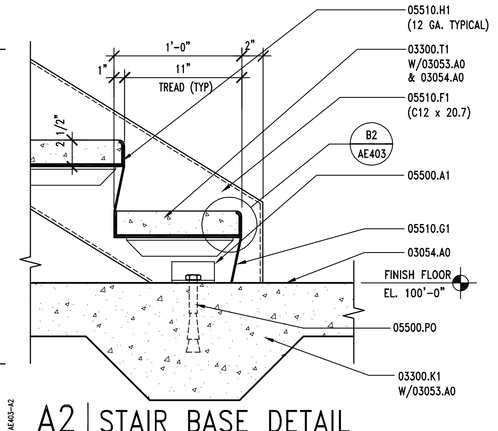

A2 | STAIR BASE DETAIL

AE403 REF. AE403 SCALE: 1 1/2" = 1'-0"

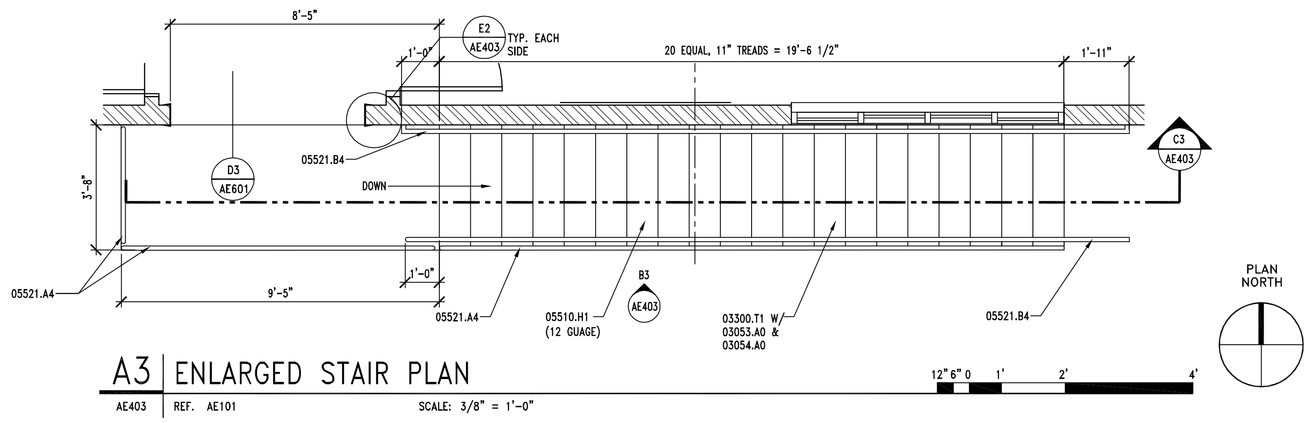

A3 | ENLARGED STAIR PLAN

AE403 REF. AE101 SCALE: 3/8" = 1'-0"

KEYNOTES

03053.A0	CONCRETE WATER PROOFING ADMIXTURE
03054.A0	OLIOPHOBIC TOPICAL SEALER
03300.A1	CONCRETE SLAB-ON-GRADE - SEE STRUCTURAL
03300.G0	CONCRETE OVER METAL DECK - SEE STRUCTURAL
03300.K1	THICKENED SLAB - SEE STRUCTURAL
03300.N0	CONCRETE CURB
03300.T1	CONCRETE AT STAIR TREAD
05120.A2	STEEL BEAM - SEE STRUCTURAL - PRIMED AND PAINTED
05500.A1	ANGLE - SEE STRUCTURAL
05500.P0	ANCHOR BOLT(S)
05510.E1	NON SKID SURFACE @ NOSING
05510.F1	STEEL STRINGER - (SIZE) - PAINTED
05510.G1	3/16" STEEL CLOSURE PLATE - PAINTED
05510.H1	PRE-FORMED, CONC. FILLED METAL PAN STAIR TREAD - (SIZE) - PAINTED
05510.J1	METAL PAN STAIR SUPPORT - (SIZE) - PAINTED
05510.J2	PAN ANCHORAGE - (SIZE) - PAINTED
05521.A4	1 1/2" O.D. PIPE GUARDRAIL - PAINTED
05521.B4	1 1/2" O.D. PIPE HANDRAIL - PAINTED
05521.C2	ESCUTCHEON WITH EASED EDGES (SIZE)
05521.D1	PIPE RAIL SUPPORT - PAINTED
06105.L2	BLOCKING AS REQUIRED
06105.R3	PLYWOOD PANEL (THICKNESS)
08111.A0	PRESSED METAL FRAME
08111.B0	HOLLOW METAL DOOR
09900.A1	PAINT - SEE FINISH SCHEDULE
09255.A1	GYPSUM BOARD (THICKNESS)
10425.A0	ROOM SIGNAGE
10425.D1	ACCESSIBLE/UNISEX RESTROOM SIGNAGE
10800.B1	SEMI - RECESSED PAPER TOWEL DISPENSER & WASTE RECEPTACLE
10800.D0	MOP RACK
15452.A1	DRINKING FOUNTAIN
15410.C0	UTILITY SINK

GENERAL NOTES

1. FIELD VERIFY ALL EXISTING CONDITIONS AND THEIR COMPATIBILITY WITH NEW CONSTRUCTION PRIOR TO THE COMMENCEMENT OF WORK. COORDINATE DISCREPANCIES WITH ARCHITECT.
2. DO NOT SCALE DRAWINGS.
3. SEE STRUCTURAL DRAWINGS FOR MORE INFORMATION.

CLIENT

UDOT CONNECTING COMMUNITIES

STATION #2434
6072 E. EMIGRATION CANYON RD.
PARLEY'S CANYON, UTAH

DESIGNER

ARCHIPLEX GROUP
architecture · planning · design services
255 Crossroad Square
Salt Lake City, UT 84115
P:(801) 961-7070
F:(801) 961-7373

CONSULTANTS

REGISTRATION

STATE OF UTAH — RALPH M. STANISLAW — 06-310619-2001 — LICENSED ARCHITECT

ISSUE

MARK	DATE	DESCRIPTION
1	2-17-09	Addendum #1
	01-09	Revised Contruction Doc.
	10-08	Construction Documents
	8-20-08	90% Review Submittal

ARCHIPLEX PROJECT NO:	0728.02
DFCM PROJECT NO:	08211900
DRAWN BY:	A. PHILLIPS
CHECKED BY:	R. STANISLAW
SCALE:	AS SHOWN
DATE:	JANUARY, 2009

KEY PLAN

SHEET TITLE

STAIR PLAN SECTION, ELEVATIONS AND DETAILS

AE403

© 2004 ARCHIPLEX GROUP

KEYNOTES

03053.A0	CONCRETE WATER PROOFING ADMIXTURE
03300.G0	CONCRETE OVER METAL DECK – SEE STRUCTURAL
03300.N0	CONCRETE CURB
05310.A1	METAL DECK – SEE STRUCTURAL
05400.A1	6" STRUCTURAL STEEL STUDS – SEE STRUCTURAL DRAWINGS FOR SPACING AND GAUGE
06105.R2	SHEATHING – PLYWOOD (THICKNESS) GRADE (SIZE)
06105.R3	PLYWOOD PANEL (THICKNESS)
07210.B1	RIGID INSULATION (R-VALUE)
07410.A0	STANDING SEAM METAL ROOF
07410.M2	ICE AND WATER SHIELD
07901.A0	CONT. SEALANT
09255.A1	GYPSUM BOARD (THICKNESS)
09255.A2	WATER RESISTANT GYPSUM BOARD (THICKNESS)
09255.B2	TYPE 'X' GYPSUM BOARD (THICKNESS)
09255.C3	CEMENT BOARD (THICKNESS)
09255.H1	METAL STUDS (SIZE, SPACING)

GENERAL NOTES

1. FIELD VERIFY ALL EXISTING CONDITIONS AND THEIR COMPATIBILITY WITH NEW CONSTRUCTION PRIOR TO THE COMMENCEMENT OF WORK. COORDINATE DISCREPANCIES WITH ARCHITECT.

2. DO NOT SCALE DRAWINGS.

3. SEE CIVIL, STRUCTURAL, MECHANICAL AND ELECTRICAL DRAWINGS FOR MORE INFORMATION.

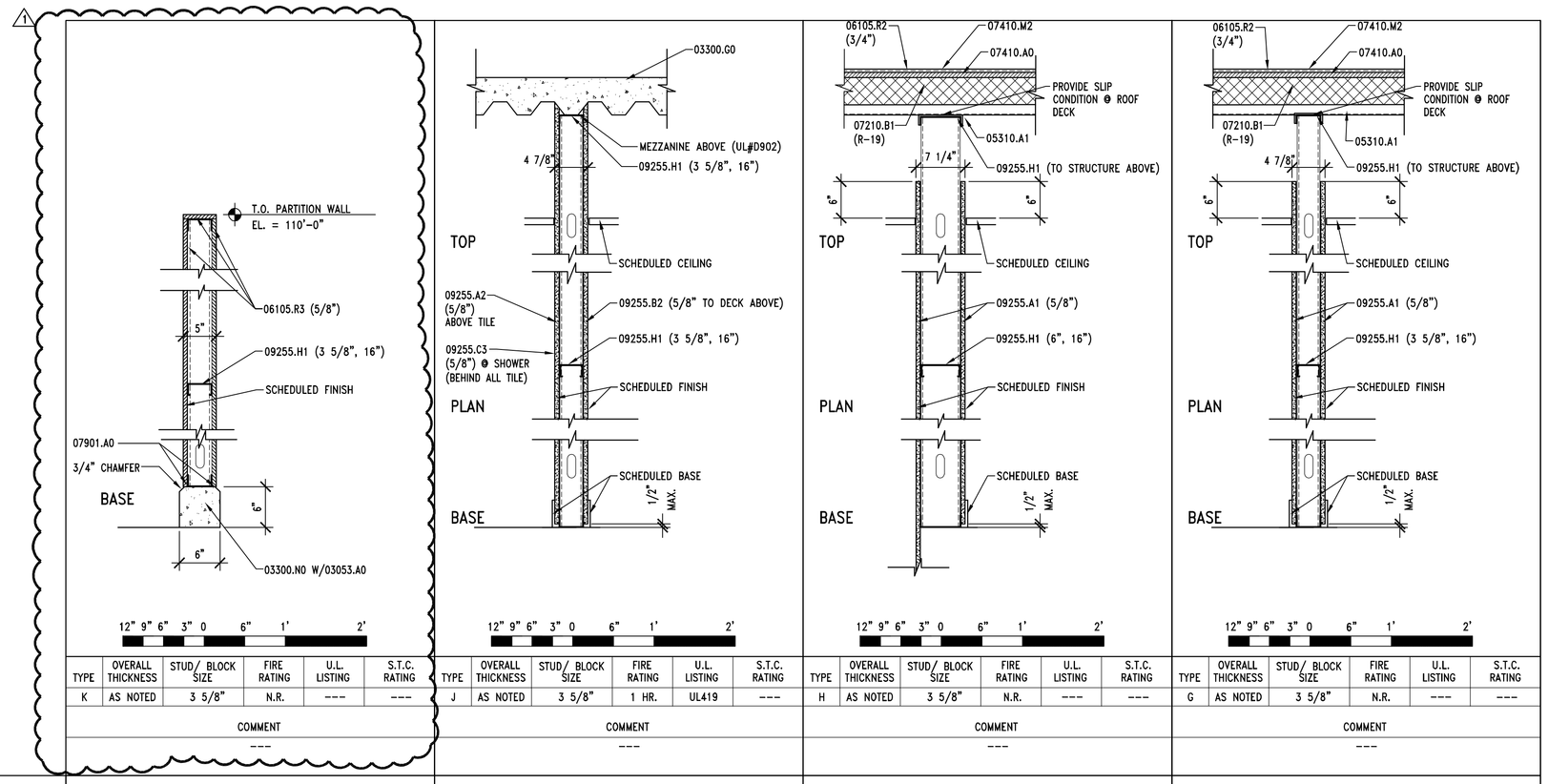

TYPE	OVERALL THICKNESS	STUD/ BLOCK SIZE	FIRE RATING	U.L. LISTING	S.T.C. RATING	COMMENT
K	AS NOTED	3 5/8"	N.R.	---	---	---
J	AS NOTED	3 5/8"	1 HR.	UL419	---	---
H	AS NOTED	3 5/8"	N.R.	---	---	---
G	AS NOTED	3 5/8"	N.R.	---	---	---

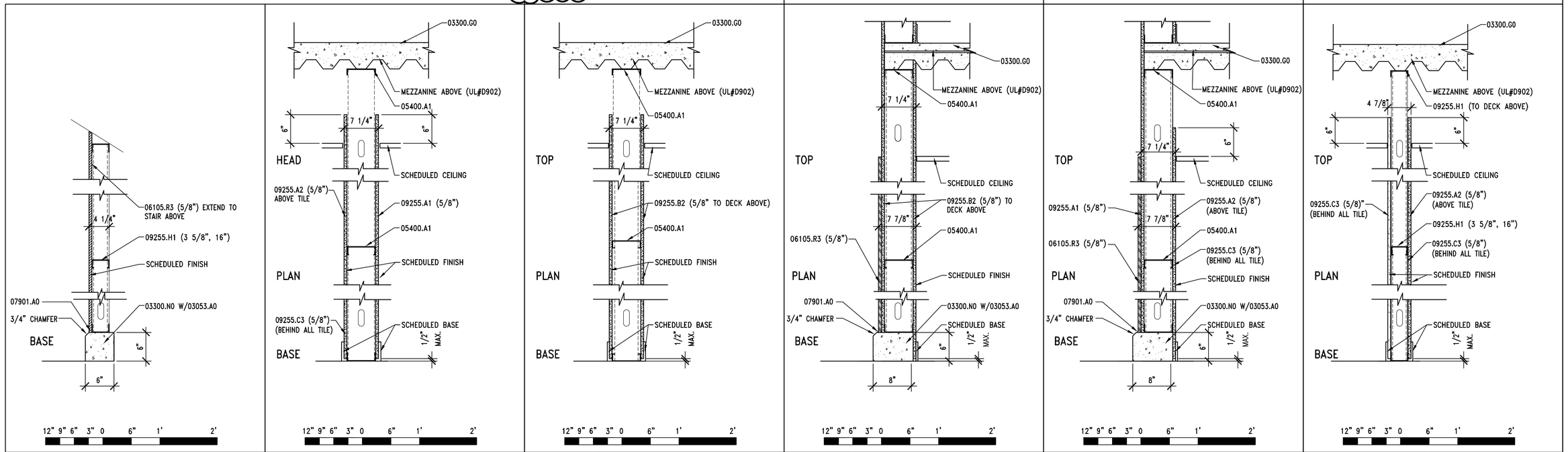

TYPE	OVERALL THICKNESS	STUD/ BLOCK SIZE	FIRE RATING	U.L. LISTING	S.T.C. RATING	COMMENT
F	AS NOTED	3 5/8"	N.R.	---	---	---
E	AS NOTED	6"	N.R.	---	---	---
D	AS NOTED	6"	1 HR.	UL419	---	---
C	AS NOTED	6"	1 HR.	UL419	---	---
B	AS NOTED	6"	N.R.	---	---	---
A	AS NOTED	3 5/8"	N.R.	---	---	---

A1 WALL TYPES

AE501 REF. AE101 SCALE: 1" = 1'-0"

CLIENT

UDOT CONNECTING COMMUNITIES

STATION #2434
6072 E. EMIGRATION CANYON RD.
PARLEY'S CANYON, UTAH

DESIGNER

ARCHIPLEX GROUP
architecture · planning · design services
255 Crossroad Square
Salt Lake City, UT 84115
P:(801) 961-7070
F:(801) 961-7373

CONSULTANTS

REGISTRATION

STATE OF UTAH
RALPH M. STANISLAW
06-310699-0301
LICENSED ARCHITECT

ISSUE

MARK	DATE	DESCRIPTION
1	2-17-09	Addendum #1
	01-09	Revised Contruction Doc.
	10-08	Construction Documents
	8-20-08	90% Review Submittal

ARCHIPLEX PROJECT NO:	0728.02
DFCM PROJECT NO:	08211900
DRAWN BY:	A. PHILLIPS
CHECKED BY:	R. STANISLAW
SCALE:	AS SHOWN
DATE:	JANUARY, 2009

KEY PLAN

SHEET TITLE

WALL TYPES

AE501

© 2004 ARCHIPLEX GROUP

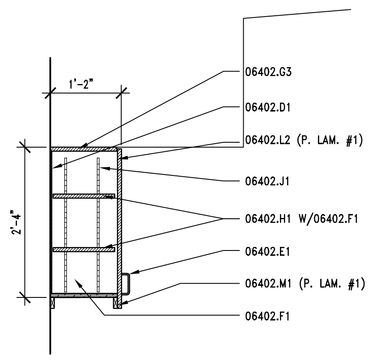

E3 | UPPER CABINET SECTION

AE502 | REF. AE402 | SCALE: 3/4" = 1'-0"

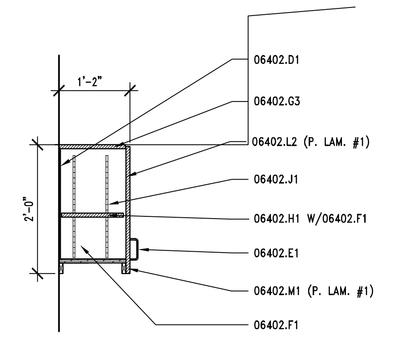

E4 | UPPER CABINET SECTION

AE502 | REF. AE402 | SCALE: 3/4" = 1'-0"

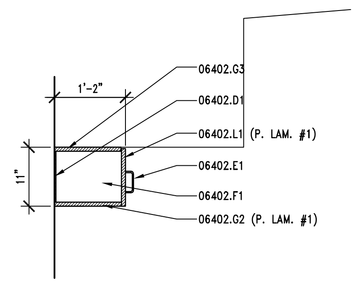

E5 | UPPER CABINET SECTION

AE502 | REF. AE402 | SCALE: 3/4" = 1'-0"

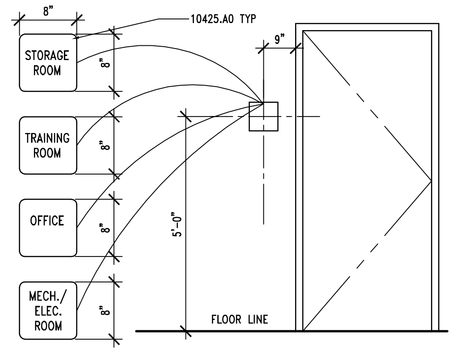

RE: SPECIFICATION – 10425 FOR MORE INFORMATION

D1 | SIGNAGE "E"

AE502 | REF. AE101 | SCALE: NONE

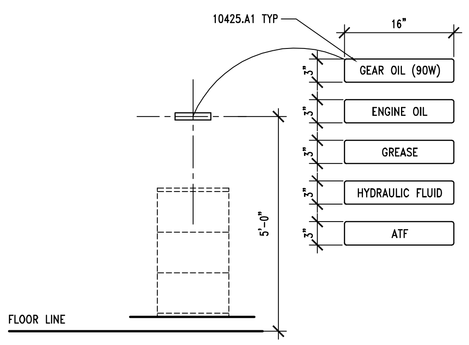

RE: SPECIFICATION – 10425 FOR MORE INFORMATION

D2 | SIGNAGE "A"

AE502 | REF. AE101 | SCALE: NONE

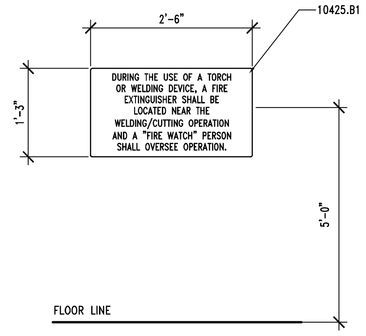

RE: SPECIFICATION – 10425 FOR MORE INFORMATION

D3 | SIGNAGE "B"

AE502 | REF. AE101 | SCALE: NONE

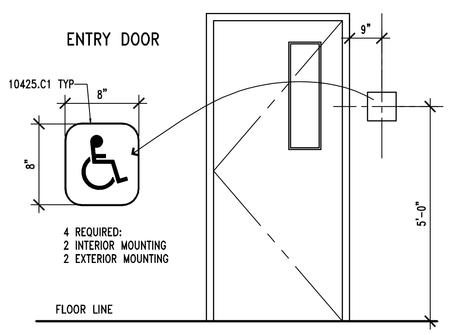

RE: SPECIFICATION – 10425 FOR MORE INFORMATION

D4 | SIGNAGE "C"

AE502 | REF. AE101 | SCALE: NONE

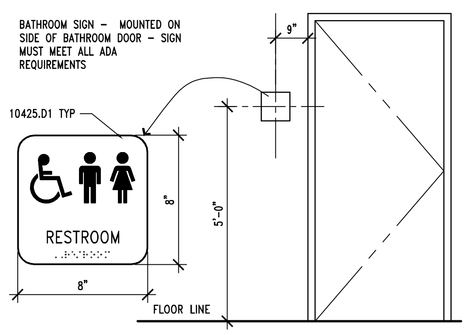

RE: SPECIFICATION – 10425 FOR MORE INFORMATION

D5 | SIGNAGE "D"

AE502 | REF. AE101 | SCALE: NONE

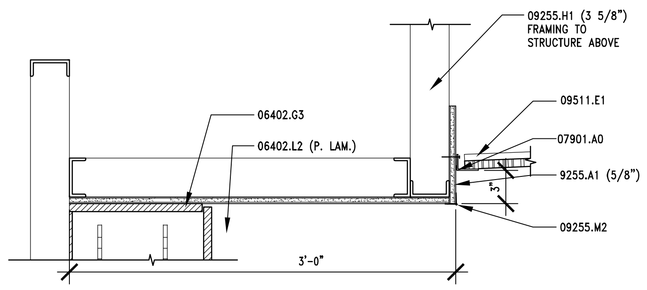

C1 | CEILING TRANSITION DETAIL

AE502 | REF. AE201 | SCALE: 1-1/2" = 1'-0"

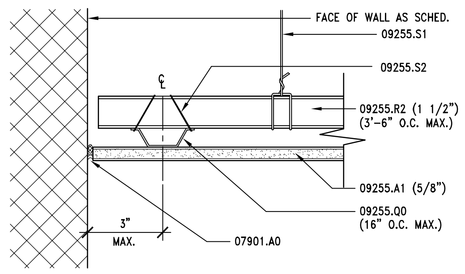

C2 | CEILING DETAIL

AE502 | REF. AE121 | SCALE: 1/2" = 1'-0"

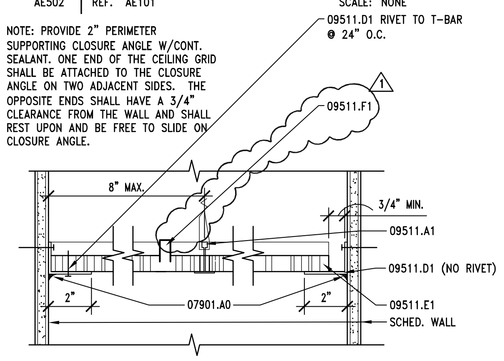

C3 | LAY-IN PANEL EDGE DTL.

AE502 | REF. AE121 | SCALE: 3" = 1'-0"

NOTE: HORIZ RESTRAINTS REQ'D ONLY FOR CLGS >1,000 S.F.

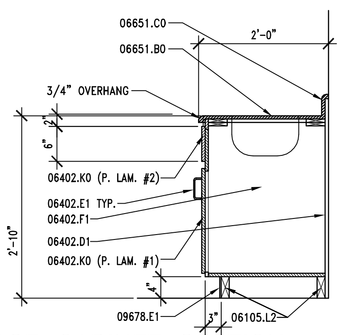

C4 | BASE CABINET SECTION

AE502 | REF. AE402 | SCALE: 3/4" = 1'-0"

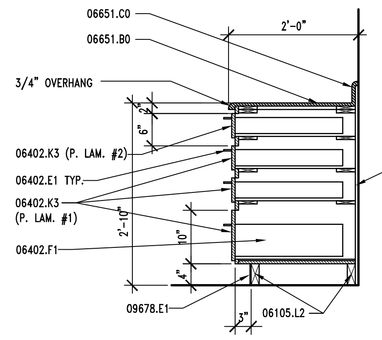

C5 | BASE CABINET SECTION

AE502 | REF. AE402 | SCALE: 3/4" = 1'-0"

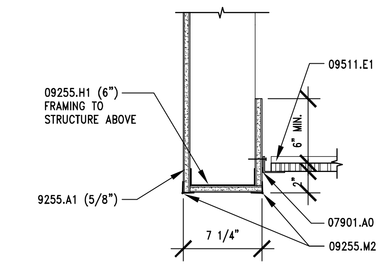

B1 | CEILING TRANSITION DETAIL

AE502 | REF. AE201 | SCALE: 1-1/2" = 1'-0"

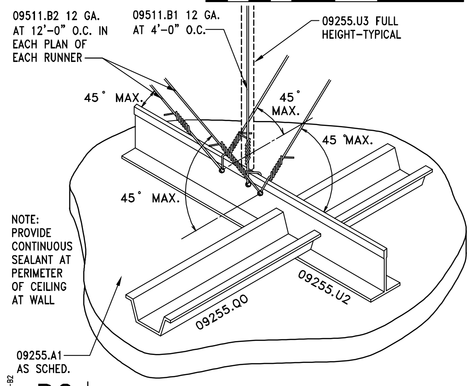

B2 | SEISMIC BRACING DETAIL

AE502 | REF. AE121 | SCALE: NONE

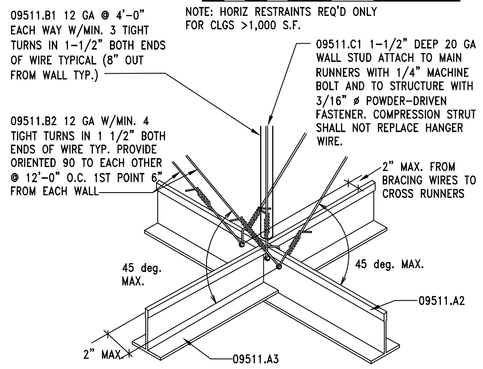

B3 | SEISMIC BRACING DETAIL

AE502 | REF. AE121, AE502 | SCALE: NO SCALE

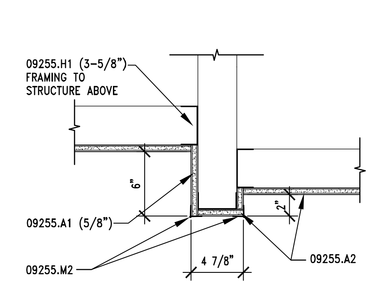

B4 | CEILING @ SHOWER DETAIL

AE502 | REF. | SCALE: 1-1/2" = 1'-0"

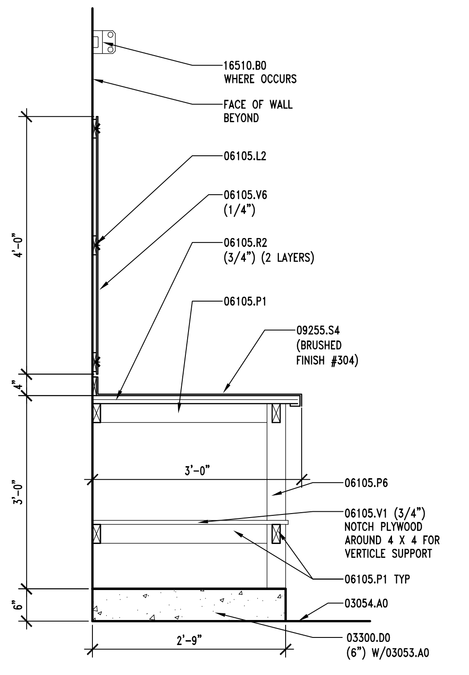

A5 | WORK BENCH SECTION

AE502 | REF. AE402 | SCALE: 3/4" = 1'-0"

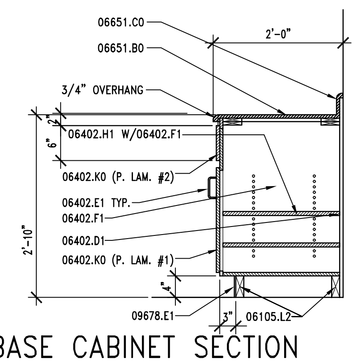

A2 | BASE CABINET SECTION

AE502 | REF. AE402 | SCALE: 3/4" = 1'-0"

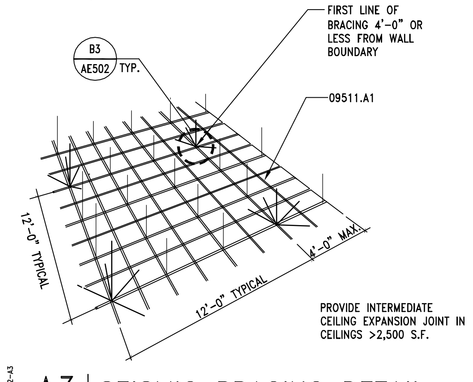

A3 | SEISMIC BRACING DETAIL

AE502 | REF. AE121 | SCALE: NO SCALE

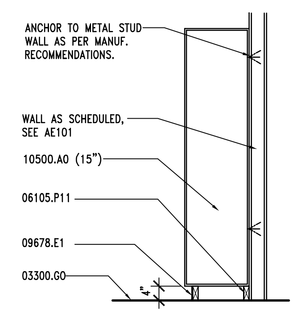

A4 | LOCKER SECTION

AE502 | REF. AE402 | SCALE: 1/2" = 1'-0"

KEYNOTES

03053.A0	CONCRETE WATER PROOFING ADMIXTURE
03054.A0	OLIOPHOBIC TOPICAL SEALER
03300.D0	CONCRETE PAD (SIZE)
03300.G0	CONCRETE OVER METAL DECK – SEE STRUCTURAL
06105.L2	BLOCKING AS REQUIRED
06105.P1	2 x 4
06105.P6	4 x 4
06105.P11	2 x BLOCKING
06105.R2	SHEATHING – PLYWOOD (THICKNESS) GRADE (SIZE)
06105.V1	EXTERIOR GRADE PLYWOOD (THICKNESS)
06105.V6	PEGBOARD (THICKNESS)
06402.D1	3/4" PARTICAL BOARD W/ MELAMINE FINISH
06402.E1	WIRE PULL
06402.F1	PROVIDE WHITE MELAMINE FINISH @ ALL INTERIOR SURFACES
06402.G2	3/4" PARTICLE BOARD CABINET BASE W/PLAM (FINISH)
06402.G3	3/4" PARTICLE BOARD CABINET TOP
06402.H1	ADJUSTABLE SHELVES (FINISH)
06402.J1	RECESSED SHELF BRACKETS
06402.K0	BASE UNIT (FINISH)
06402.K3	BASE UNIT WITH DRAWERS (FINISH)
06402.L1	WALL UNIT (FINISH)
06402.L2	WALL UNIT W/ADJ. SHELF(VES) (FINISH)
06402.M1	3/4" PARTICLE BOARD SCREEN (FINISH)
06651.B0	SOLID SURFACE COUNTER TOP
06651.C0	SOLID SURFACE BACKSLAPSH
07901.A0	CONT. SEALANT
09255.A1	GYPSUM BOARD (THICKNESS)
09255.A2	WATER RESISTANT GYPSUM BOARD (THICKNESS)
09255.H1	METAL STUDS (SIZE, SPACING)
09255.M2	METAL CORNER BEAD (TYP.)
09255.Q0	7/8" METAL FURRING CHANNEL
09255.R2	CHANNEL (SIZE, SPACING)
09255.S1	8 GA. WIRE HANGERS
09255.S2	18 GA. WIRE TIES
09255.S4	14 GA. STAINLESS STEEL COUNTER TOP (FINISH)
09255.U2	CROSS CHANNEL
09255.U3	3/4" CONDUIT COMPRESSION BRACE
09511.A1	HEAVY DUTY "T" BAR GRID SYSTEM
09511.A2	CEILING SUSPENSION SYSTEM – MAIN RUNNER
09511.A3	CEILING SUSPENSION SYSTEM – CROSS RUNNER
09511.B1	VERTICAL WIRE HANGER (SIZE)
09511.B2	BRACING WIRE (SIZE)
09511.C1	COMPRESSION STRUTS
09511.D1	METAL ANGLE EDGE
09511.E1	LAY IN ACOUSTICAL CEILING PANEL
1 09511.F1	SPREADER BAR REQUIRED TO KEEP PERIMETER COMPONENTS FROM SPREADING APART
09678.E1	RUBBER BASE
10425.A0	ROOM SIGNAGE
10425.A1	OIL SIGNAGE
10425.B1	WELDING SIGNAGE
10425.C1	ACCESSIBLE SIGNAGE
10425.D1	ACCESSIBLE/UNISEX RESTROOM SIGNAGE
10500.A0	METAL LOCKERS (WIDTH)
16510.B0	INTERIOR WALL MOUNTED LIGHT

GENERAL NOTES

1. FIELD VERIFY ALL EXISTING CONDITIONS AND THEIR COMPATIBILITY WITH NEW CONSTRUCTION PRIOR TO THE COMMENCEMENT OF WORK. COORDINATE DISCREPANCIES WITH ARCHITECT.

2. DO NOT SCALE DRAWINGS.

3. SEE SHEET AE602 FOR PLASTIC LAMINATE COLORS.

CLIENT

UTDOT CONNECTING COMMUNITIES

STATION #2434
6072 E. EMIGRATION CANYON RD.
PARLEY'S CANYON, UTAH

DESIGNER

ARCHIPLEX GROUP
architecture · planning · design services
255 Crossroad Square
Salt Lake City, UT 84115
P:(801) 961-7070
F:(801) 961-7373

CONSULTANTS

REGISTRATION

STATE OF UTAH
RALPH M. STANISLAW
06-310619-2001
LICENSED ARCHITECT

ISSUE

MARK	DATE	DESCRIPTION
1	2-17-09	Addendum #1
	01-09	Revised Contruction Doc.
	10-08	Construction Documents
	8-20-08	90% Review Submittal

ARCHIPLEX PROJECT NO:	0728.02
DFCM PROJECT NO:	08211900
DRAWN BY:	A. PHILLIPS
CHECKED BY:	R. STANISLAW
SCALE:	AS SHOWN
DATE:	JANUARY, 2009

KEY PLAN

SHEET TITLE

SIGNAGE AND MISC. DETAILS

AE502

© 2004 ARCHIPLEX GROUP

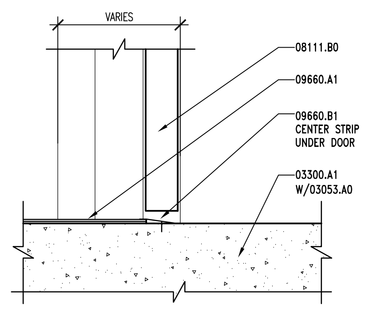

D3 | VCT-CONCRETE TRANSITION
AE503 | REF. AE401 | SCALE: 3" =1'-0"

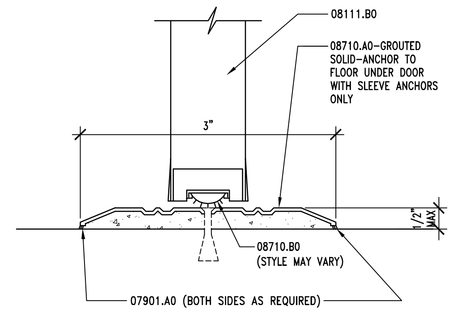

D4 | THRESHOLD DETAIL
AE503 | REF. AE503 | SCALE: NONE

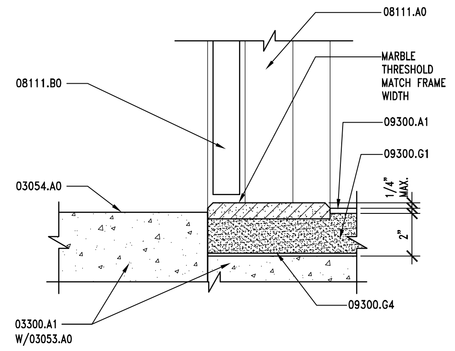

D5 | MARBLE THRESHOLD DETAIL
AE503 | REF. AE401 | SCALE: 3" = 1'-0"

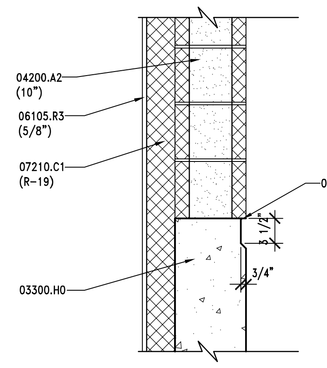

C3 | FOUNDATION WALL
AE503 | REF. AE201 | SCALE: 1" = 1'-0"

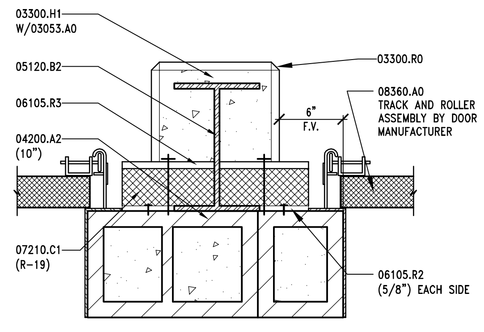

C4 | INSULATION @ COL. DETAIL
AE503 | REF. AE601 | SCALE: 1 1/2" = 1'-0"

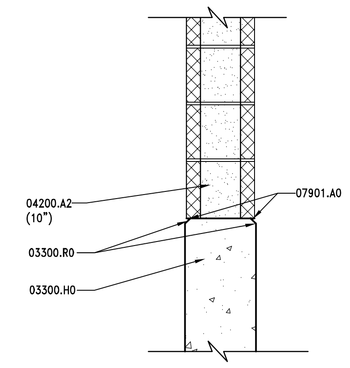

C5 | FOUNDATION WALL
AE503 | REF. AE201 | SCALE: 1" = 1'-0"

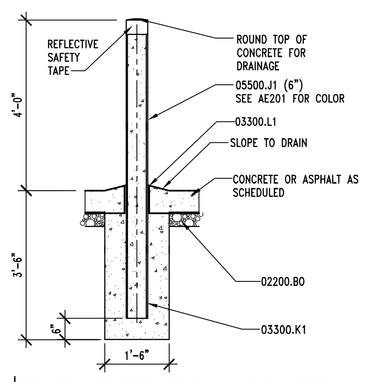

B3 | EXT. PIPE BOLLARD DTL.
AE503 | REF. AE101 & AE301 | SCALE: 1/2" = 1'-0"

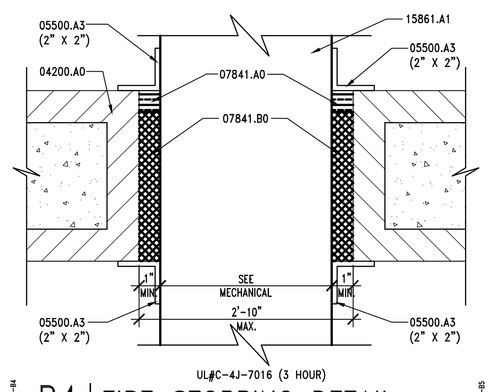

B4 | FIRE STOPPING DETAIL
AE503 | REF. AE101 | SCALE: 3" = 1'-0"

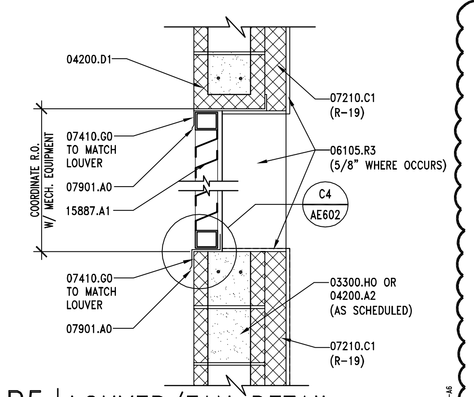

B5 | LOUVER/FAN DETAIL
AE501 | REF. AE201 | SCALE: 1" = 1'-0"

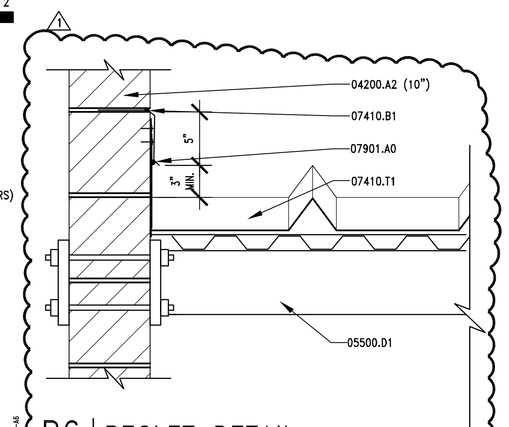

B6 | REGLET DETAIL
AE503 | REF. AE312 | SCALE: 1-1/2" = 1'-0"

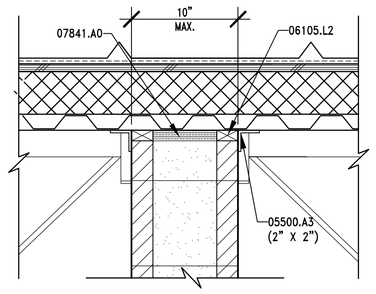

UL#C-4J-7016 (3 HOUR)

A2 | FIRESAFING DETAIL
AE503 | REF. AE311 | SCALE: 1-1/2" = 1'-0"

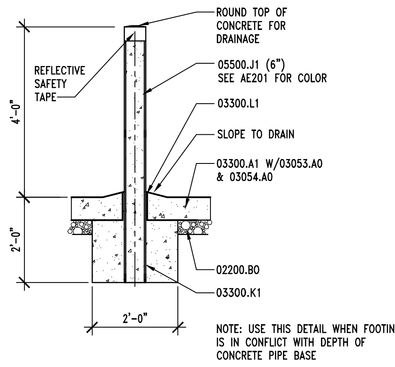

NOTE: USE THIS DETAIL WHEN FOOTING IS IN CONFLICT WITH DEPTH OF CONCRETE PIPE BASE

A3 | INT. PIPE BOLLARD DTL.
AE503 | REF. AE101 & AE301 | SCALE: 1/2" = 1'-0"

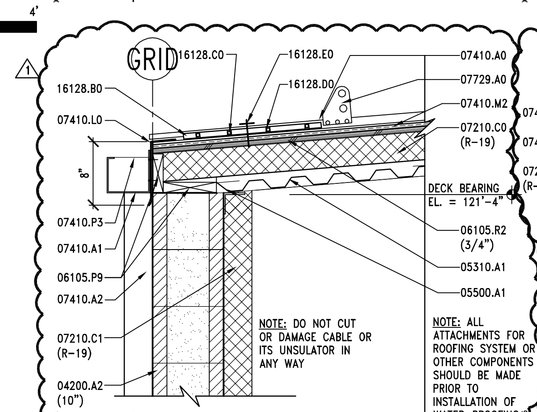

A4 | ROOF DETAIL
AE503 | REF. AE312 | SCALE: 1" = 1'-0"

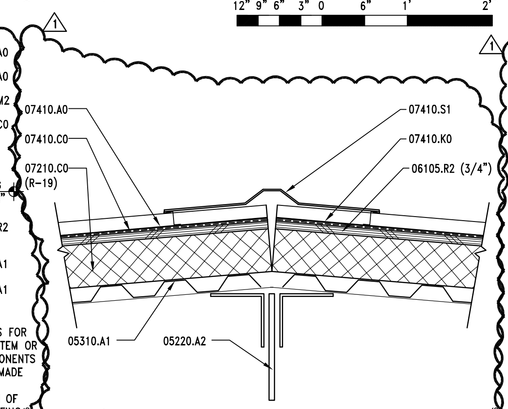

A5 | ROOF RIDGE DETAIL
AE503 | REF. AE141 | SCALE: 1-1/2" = 1'-0"

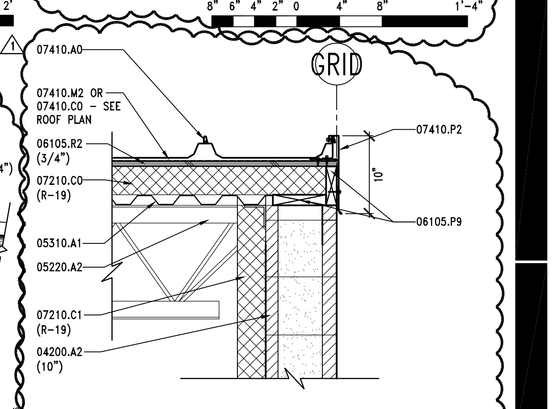

A6 | ROOF DETAIL
AE503 | REF. AE311, AE312 | SCALE: 1' = 1'-0"

KEYNOTES

02200.B0 GRAVEL BASE

03053.A0 CONCRETE WATER PROOFING ADMIXTURE
03054.A0 OLIOPHOBIC TOPICAL SEALER
03300.A1 CONCRETE SLAB-ON-GRADE - SEE STRUCTURAL
03300.H0 FOUNDATION WALL - SEE STRUCTURAL
03300.H1 CONCRETE PIER - SEE STRUCTURAL
03300.K1 CONCRETE PIPE BASE
03300.L1 30# FELT
03300.R0 3/4" CHAMFER

04200.A0 CMU
04200.A2 CMU (SIZE)
04200.D1 CMU LINTEL - SEE STRUCTURAL

05120.A2 STEEL BEAM - SEE STRUCTURAL - PRIMED AND PAINTED
05120.B2 STEEL COLUMN - SEE STRUTURAL - PRIMED AND PAINTED
05220.A2 STEEL JOISTS - SEE STRUCTURAL - PRIMED AND PAINTED
05310.A1 METAL DECK - SEE STRUCTURAL
05500.A1 ANGLE - SEE STRUCTURAL
05500.A3 STEEL ANGLE (SIZE)
1 05500.D1 CHANNEL - SEE STRUCTURAL
05500.E1 STEEL PLATE - SEE STRUCTUAL
05500.J1 PIPE BOLLARD (DIAMETER) - GALVANIZED & PAINTED

06105.L2 BLOCKING AS REQUIRED
1 06105.P9 2 X FRAMING, FIRE TREATED
06105.R2 SHEATHING - PLYWOOD (THICKNESS)
06105.R3 PLYWOOD PANEL (THICKNESS) - MECHANICALLY FASTENED THROUGH INSULATION INTO CMU WALL

~~07210.D1 RIGID INSULATION (R-VALUE)~~
1 07210.C0 RIGID INSULATION FOIL FACED W/VAPOR BARRIER
07210.C1 RIGID INSULATION (CONTINUOUSLY ADHEARED TO CMU) W/FOIL FACED VAPOR BARRIER TOWARDS INTERIOR (R-VALUE)
07410.A0 STANDING SEAM METAL ROOF
07410.A1 RAIN GUTTER W/CONTINUOUS HEAT TAPE
07410.A2 DOWN SPOUT W/CONTINUOUS HEAT TAPE
1 07410.B1 METAL REGLET (MATCH ROOF FLASHING COLOR)
07410.C0 ROOFING FELT
07410.G0 FLASHING - FINISH TO MATCH LOUVER COLOR
07410.G1 FLASHING - FINISH TO MATCH ROOF COLOR
1 07410.K0 SEALANT
07410.L0 METAL FACIA
07410.M2 ICE AND WATER SHIELD
07410.P2 RAKE TRIM
07410.P2 GUTTER STRAP
07410.S1 STANDING SEAM METAL ROOF RIDGE
07410.T1 STANDING SEAM METAL CANOPY
07729.A0 STANDING SEAM METAL 2 PIPE SNOWGUARD SYSTEM
07841.A0 PENNETRATION FIRE STOPPING
07841.B0 PACKING MATERIAL
07901.A0 CONTINUOUS SEALANT

08111.A0 PRESSED METAL FRAME
08111.B0 HOLLOW METAL DOOR
08360.A0 HEAVY DUTY OVERHEAD SECTIONAL DOOR
08710.A0 THRESHOLD
08710.B0 DOOR SWEEP

09300.A1 FLOOR TILE - SEE FINISHED SCHEDULE
09300.G1 MORTAR BED
09300.G4 WATERPROOF MEMBRANE
09660.A1 VINYL COMPOSITION TILE
09660.B1 VINYL TRANSITION STRIP

15779.A0 LOW VOLTAGE DE-ICING SYSTEM
15861.A1 MECHANICAL DUCTWORK - SEE MECHINCAL
15887.A1 LOUVER WITH BIRD SCREEN - SEE MECHANICAL

16128.A0 LOW VOLTAGE DE-ICING SNOW MELTING SYSTEM
16128.B0 LOW VOLTAGE DE-ICING CABLING BOARD WITH PRE CUT GROOVES
16128.C0 LOW VOLTAGE DE-ICING CABLE
16128.D0 LOW VOLATAGE DE-ICING CABLE PROTECTOR
16128.E0 ATTACHMENT AS PER MANUFACTURER RECOMENDATION

GENERAL NOTES

1. FIELD VERIFY ALL EXISTING CONDITIONS AND THEIR COMPATIBILITY WITH NEW CONSTRUCTION PRIOR TO THE COMMENCEMENT OF WORK. COORDINATE DISCREPANCIES WITH ARCHITECT.

2. DO NOT SCALE DRAWINGS.

CLIENT

UDOT CONNECTING COMMUNITIES

STATION #2434
6072 E. EMIGRATION CANYON RD.
PARLEY'S CANYON, UTAH

DESIGNER

ARCHIPLEX GROUP
architecture · planning · design services
255 Crossroad Square
Salt Lake City, UT 84115
P:(801) 961-7070
F:(801) 961-7373

CONSULTANTS

REGISTRATION

STATE OF UTAH
RALPH M. STANISLAW
95-310818-0301
LICENSED ARCHITECT

ISSUE

MARK	DATE	DESCRIPTION
1	2-17-09	Addendum #1
	01-09	Revised Contruction Doc.
	10-08	Construction Documents
	8-20-08	90% Review Submittal

ARCHIPLEX PROJECT NO:	0728.02
DFCM PROJECT NO:	08211900
DRAWN BY:	A. PHILLIPS
CHECKED BY:	R. STANISLAW
SCALE:	AS SHOWN
DATE:	JANUARY, 2009

KEY PLAN

SHEET TITLE

MISC. DETAILS

AE503

© 2004 ARCHIPLEX GROUP

ROOM FINISH SCHEDULE

	ROOM NAME & NUMBER	FLOOR	BASE	WALLS				DOOR/FRAMES	P. LAM.	CEILING	S. SURF.	TOILET PART.	REMARKS
				WEST	EAST	NORTH	SOUTH						
101	MAINTENANCE BAY	F1	–	–	W1	W1 & W4	W1 & W2	D1 & D2	–	C3	–	–	PAINT ALL EXPOSED WOOD @ WORKBENCH NAVAJO WHITE OR EQUAL
102	REPAIR GARAGE	F1	–	W5	W1 & W2	W1 & W4	W1 & W4	D1 & D2	–	C3	–	–	PAINT STAIR & RAILING D1
103	STORAGE ROOM	F1	B1	W2	W2	W2	W2	D1	P1	C2	–	–	–
104	RESTROOM	F3	B2	W3 & W2	W3 & W2	W3 & W2	W3 & W2	D1	–	C1	–	T1	USE BULLNOSE TILE AT TOP OF WAINSCOT
105	OFFICE	F2	B1	W2	W2	W2	W2	D1	–	C2	–	–	–
106	REPAIR GARAGE	F1	–	W1	W5	W1	W1	D1 & D2	–	C3	–	–	–
201	MECHANICAL ROOM	F2	B1	W2	W2	W2	W2	D1	–	C3	–	–	–
202	CORRIDOR	F2	B1	W2	W2	W2	W2	D1 & D2	–	C2	–	–	–
203	TRAINING ROOM	F2	B1	W2	W2	W2	W2	D1	P1 & P2	C2	SS1	–	–

ROOM FINISH LEGEND

FLOOR	BASE	WALL	DOOR & FRAMES	PLASTIC LAMINATE	CEILING	TOILET PARTITION
F1. CONCRETE FLOOR, WITH WATER PROOF ADD MIXTURE & OLIOPHOBIC TOPICAL SEALER. F2. 12" x 12" VINYL COMPOSITION TILE – ARMSTRONG STANDARD EXCELON IMPERIAL TEXTURE #51858–SANDRIFT WHITE OR EQUAL F3. 2" x 2" CERAMIC TILE – DALTILE, KEYSTONES, ELEMENTAL TAN SPECLE D175, SPECKLE W/MAPEI GROUT #05 – CHAMOIS OR EQUAL	B1. 4" RUBBER BASE – JOHNSONITE #49 – BEIGE OR EQUAL B2. 2" x 2" COVED TILE BUILT UP BASE – DALTILE, #MB58 – KEYSTONES, ELEMENTAL TAN SPECKLE SPECKLE W/MAPEI GROUT #05 – CHAMOIS OR EQUAL	W1. PLYWOOD PANEL: C–C GRADE PLYWOOD – PAINTED BENJAMIN MOORE – NAVAJO WHITE OR EQUAL W2. GYPSUM BOARD – PAINTED BENJAMIN MOORE – NAVAJO WHITE OR EQUAL W3. 4 1/4" x 4 1/4" CERAMIC WALL TILE – DALTILE #X735 – ALMOND – MATTE FINISH W/1/2" x 6" FLAT TOP LINER – DALTILE ARTISAN BROWN #0144 – SEMI–GLOSS FINISH OR EQUAL W/MAPEI GROUT #39 – IVORY OR EQUAL. W4. EXPOSED STRUCTURE – PAINTED BENJAMIN MOORE – NAVAJO WHITE OR EQUAL. W5. PAINTED CMU – NAVAJO WHITE OR EQUAL.	D1. PAINTED – ICI #427 – DEERFIELD OR EQUAL D2. MATCH EXTERIOR COLOR SCHEDULE – SEE SHEET AE201	P1. WILSONART #4781–60 SUNSTONE OR EQUAL P2. WILSONART #4794–60 WINDSWEPT BRONZE OR EQUAL **SOLID SURFACE** SS1. SOLID SURFACE COUNTER TOP – COLOR TO BE SELECTED BY ARCHITECT.	C1. GYPSUM BOARD – PAINTED BENJAMIN MOORE – NAVAJO WHITE OR EQUAL C2. ARMSTRONG ULTIMA TEGULAR WITH BEVELED EDGE FINE TEXTURE WITH HUMIGUARD PLUS COLOR: WHITE OR EQUAL C3. EXPOSED STRUCTURE – PAINTED BENJAMIN MOORE – NAVAJO WHITE OR EQUAL.	T1. SOLID PHENOLIC PARTITIONS WILSON ART #4794.60 WINDSWEPT BRONZE OR EQUAL

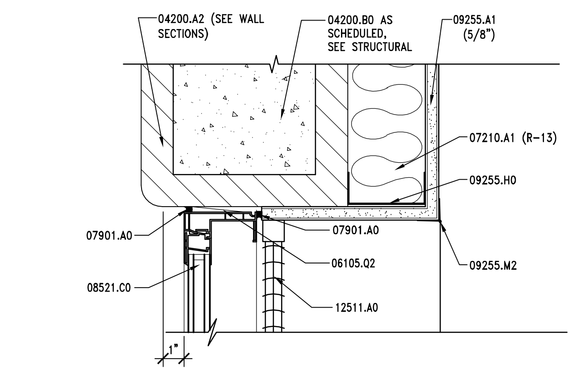

XU1–AE01–AE602–E1

E1 | WINDOW HEAD DETAIL

AE602 | REF. AE602 | SCALE: 3" = 1'–0"

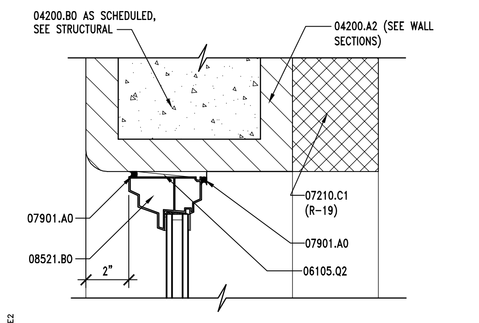

XU1–AE01–AE602–E2

E2 | WINDOW HEAD DETAIL

AE602 | REF. AE602 | SCALE: 3" = 1'–0"

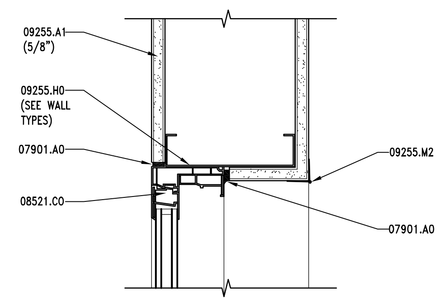

XP0–AE01–AE602–E3

E3 | WINDOW HEAD DETAIL

AE602 | REF. AE602 | SCALE: 3" = 1'–0"

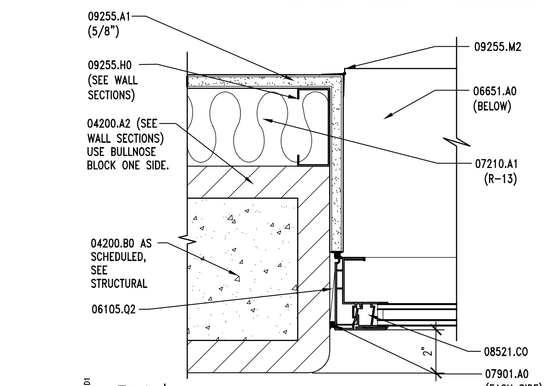

XU1–AE01–AE602–D1

D1 | WINDOW JAMB DETAIL

AE602 | REF. AE602 | SCALE: 3" = 1'–0"

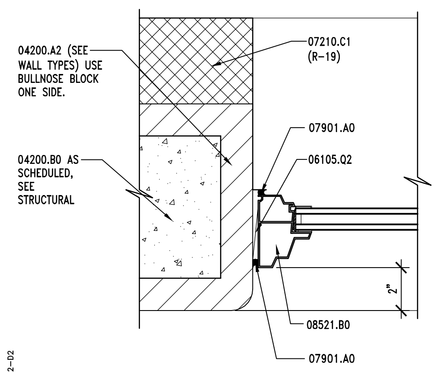

XU1–AE01–AE602–D2

D2 | WINDOW JAMB DETAIL

AE602 | REF. AE602 | SCALE: 3" = 1'–0"

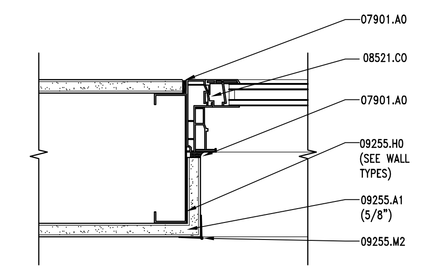

XP0–AE01–AE602–D3

D3 | WINDOW JAMB DETAIL

AE602 | REF. AE602 | SCALE: 3" = 1'–0"

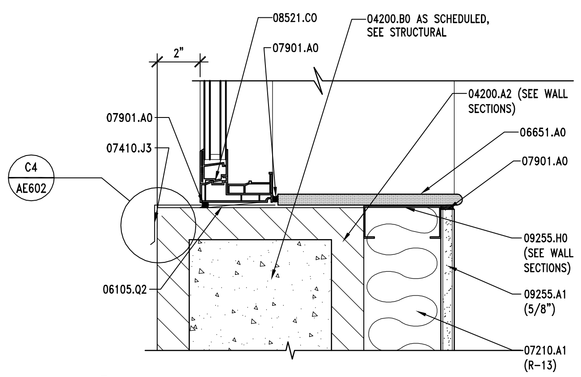

XU1–AE01–AE602–C1

C1 | WINDOW SILL DETAIL

AE602 | REF. AE602 | SCALE: 3" = 1'–0"

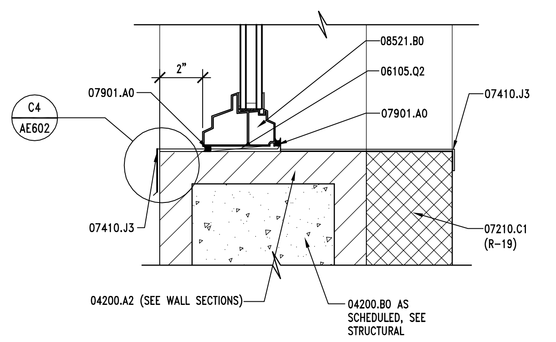

XU1–AE01–AE602–C2

C2 | WINDOW SILL DETAIL

AE602 | REF. AE602 | SCALE: 3" = 1'–0"

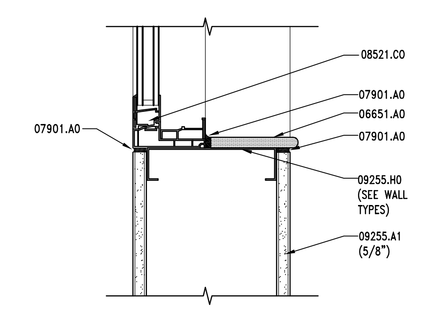

XP0–AE01–AE602–C3

C3 | WINDOW SILL DETAIL

AE602 | REF. AE602 | SCALE: 3" = 1'–0"

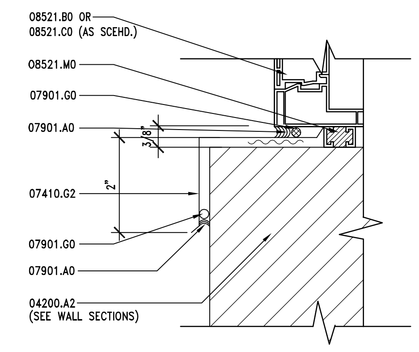

XP0–AE01–AE602–C4

C4 | FLASHING DETAIL

AE602 | REF. AE602 | SCALE: 1–1/2" = 1'–0"

KEYNOTES

04200.A2 CMU (SIZE)
04200.B0 GROUT SOLID

06105.02 SHIM AS REQUIRED
06651.A0 1/2" WHITE SOLID SURFACE WINDOW SILL

07210.A1 BATT INSULATION (R–VALUE)
07210.C1 RIGID INSULATION (CONTINUOUSLY ADHERED TO CMU) W/FOIL FACED VAPOR BARRIER TOWARDS INTERIOR (R–VALUE)
07410.G2 FLASHING – FINISH TO MATCH WINDOWS
07410.J3 SILL FLASHING – FINISH TO MATCH WINDOWS
07901.A0 CONT. SEALANT
07901.G0 BACKER ROD

08521.B0 FIXED VINYL WINDOW
08521.C0 VINYL WINDOW W/SLIDING GLASS PANEL
08521.M0 SILL STARTER, SET IN SEALANT

09255.A1 GYPSUM BOARD (THICKNESS)
09255.H0 METAL STUD
09255.M2 METAL CORNER BEAD (TYP)

12511.A0 HORIZONTAL LOUVER BLINDS

GENERAL NOTES

1. FIELD VERIFY ALL EXISTING CONDITIONS AND THEIR COMPATIBILITY WITH NEW CONSTRUCTION PRIOR TO THE COMMENCEMENT OF WORK. COORDINATE DISCREPANCIES WITH ARCHITECT.

2. DO NOT SCALE DRAWINGS

3. ALL FLASHING TO BE PAINTED OR PRE–FINISHED TO MATCH WINDOW FRAMES

4. SEE SPECIFICATIONS FOR ALL GLAZING TYPES.

5. ALL INTERIOR WALL AND CEILING FINISHES SHALL BE CLASS C: FLAME SPREAD 76–200; SMOKE–DEVELOPED 0–450. EXCEPTION: MATERIALS, OTHER THAN TEXTILES, TESTED IN ACCORDANCE WITH SECTION 803.2.

6. AS PER SPECIFICATION SECTION 09900.1.2.B CONTRACTOR TO FIELD PAINT ALL EXPOSED BARE AND COVERED PIPES AND DUCTS (INCLUDING COLOR CODING), HANGERS, EXPOSED STEEL AND IRON WORK, AND PRIMED METAL SURFACES OR MECHANICAL AND ELECTRICAL EQUIPMENT.

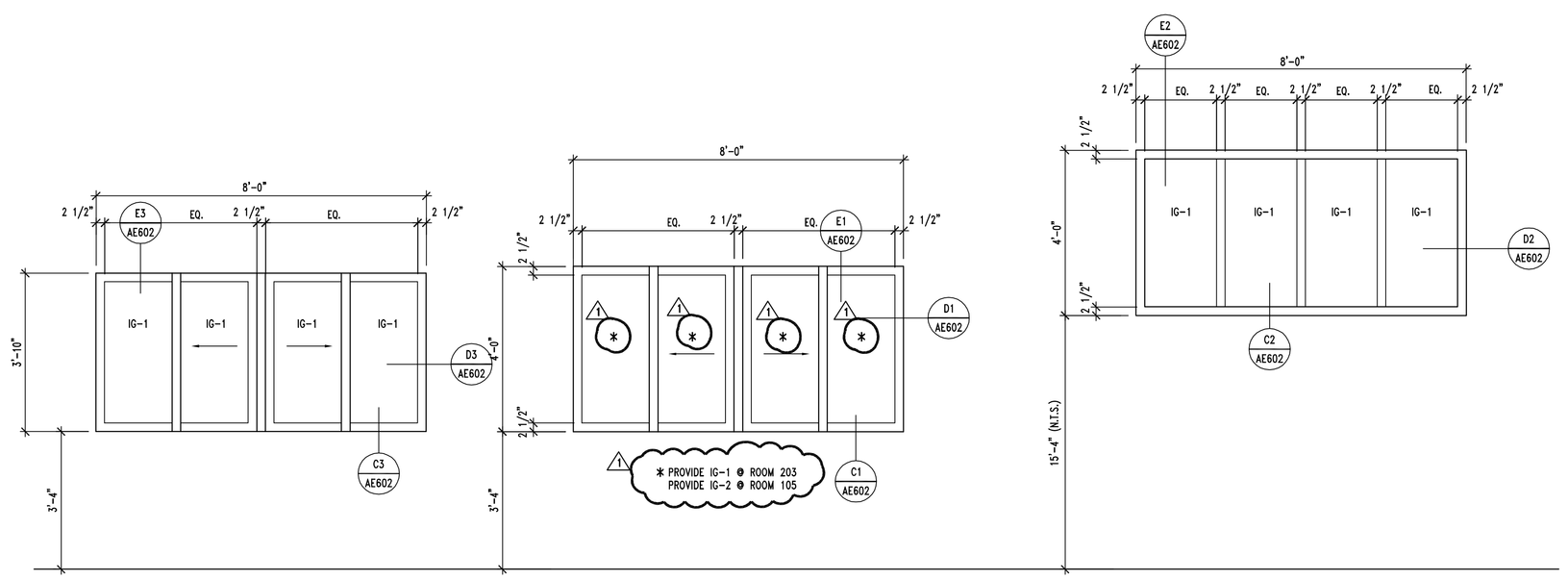

TYPE WA

TYPE WB

TYPE WC

A3 | WINDOW TYPES

AE602 | REF. AE101 | SCALE: 1/4" = 1'–0"

CLIENT

UDOT CONNECTING COMMUNITIES

STATION #2434
6072 E. EMIGRATION CANYON RD.
PARLEY'S CANYON, UTAH

DESIGNER

ARCHIPLEX GROUP
architecture · planning · design services
255 Crossroad Square
Salt Lake City, UT 84115
P:(801) 961–7070
F:(801) 961–7373

CONSULTANTS

REGISTRATION

STATE OF UTAH
RALPH M. STANISLAW
06-310818-0001
LICENSED ARCHITECT

ISSUE

MARK	DATE	DESCRIPTION
1	2–17–09	Addendum #1
	01–09	Revised Contruction Doc.
	10–08	Construction Documents
	8–20–08	90% Review Submittal

ARCHIPLEX PROJECT NO:	0728.02
DFCM PROJECT NO:	08211900
DRAWN BY:	A. PHILLIPS
CHECKED BY:	R. STANISLAW
SCALE:	AS SHOWN
DATE:	JANUARY, 2009

KEY PLAN

SHEET TITLE

WINDOW FRAME TYPES, GLAZING & FINISH SCHEDULE AND DETAILS

AE602

© 2004 ARCHIPLEX GROUP

GENERAL STRUCTURAL NOTES

GENERAL

1. The structural notes are intended to complement the project specifications. Specific notes and details in the drawings shall govern over the structural notes and typical details.
2. Typical details and sections shall apply where specific details are not shown.
3. The contractor shall verify all site conditions and dimensions. If actual conditions differ from those shown in the contract drawings, the contractor shall immediately notify the architect/engineer before proceeding with the fabrication or construction of any effected elements.
4. Omissions or conflicts between the contract drawings and/or specifications shall be brought to the attention of the architect/engineer before proceeding with any work involved. In case of conflict, follow the most stringent requirement as directed by the architect/engineer at no additional cost to the owner.
5. The contractor shall submit a written request to the architect/engineer before proceeding with any changes, substitutions or modifications. Any work done by the contractor before receiving written approval will be at the contractor's risk.
6. The contractor shall coordinate with all trades any items that are to be integrated into the structural system such as openings, penetrations, mechanical and electrical equipment, etc. Sizes and locations of mechanical and other equipment that differs from those shown on the contract drawings shall be reported to the architect/engineer.
7. The contractor shall provide adequate shoring and bracing as required for his method of erection. Shoring and bracing shall remain in place until final connections for the permanent members are completed. The building shall not be considered stable until all connections are completed. Walls shall not be considered self-supporting and shall be braced until the floor/roof system is completed.
8. Site observations by BHB Consulting Engineers, P.C.'s field representative shall not be construed as approval of construction procedures nor special inspection.
9. Detailing and shop drawing production for structural elements will require information (including dimensions) contained in the architectural, structural and/or other consultants' drawings. The structural drawings shall be used in conjunction with the architectural and other consultant's drawings. Some dimensions and elements such as elevations, depressions, slopes, mechanical housekeeping pads, etc. are not shown in the structural drawings. All dimensions shown on structural drawings shall be verified by contractor with architectural, mechanical and electrical drawings.
10. Review of shop drawing submittals by BHB Consulting Engineers, P.C. is for general compliance only and is not intended for approval. The shop drawing review shall not relieve the contractor from the responsibility of completing the project according to the contract documents.
11. Shop drawings made from reproductions of the contract drawings will be rejected unless the contractor signs a release agreement prior to the shop drawings being reviewed.
12. Only an authorized representative of BHB Consulting Engineers, P.C. may make changes to these contract drawings. BHB Consulting Engineers, P.C. shall not be held responsible or liable for any claims arising directly or indirectly from changes made without written authorization by an authorized representative of BHB Consulting Engineers, P.C.

BASIS OF DESIGN

1. Governing Building Code — International Building Code 2006
2. Roof Snow Load
   a. Ground Snow Load — P_g = 86 psf
   b. Snow Importance Factor — I_s = 1.0
   c. Snow Exposure Coefficient — C_e = 1.0
   d. Thermal Exposure Coefficient — C_t = 1.0
   e. Roof Snow Load — $P_f = 0.7 \cdot C_e \cdot C_t \cdot I_s \cdot P_g$ = 60 psf plus Snow Drift
3. Floor Live Loads
   a. Mezzanine — 125 psf
4. Seismic Loads
   a. Short Period Mapped Spectral Acceleration — S_S = 1.00
   b. Soil Site Class — D
   c. Short Period Site Coefficient — F_a = 1.10
   d. 5% Damped Design Spectral Response Acceleration — $S_{DS} = 2/3 \cdot F_a \cdot S_S$ = .73
   e. Seismic Importance Factor — I_e = 1.00
   f. Response Modification Coefficient — R = 5.0
   g. Basic Seismic-Force-Resisting System — Special Reinforced Masonry Shear Walls
   h. Seismic Response Coefficient — $C_s = S_{DS} \cdot I_e / R$
   i. W — Dead Loads of Structure
   j. Building Seismic Design Category — D
   k. System Overstrength Factor — 2.5
   l. Deflection Amplification Factor — 3.5
   m. Base Shear — $V = C_S \cdot W = 0.146\ W$ (Strength Design)
5. Wind Loads
   a. Wind Velocity (3 Second Gust) — 90 mph
   b. Exposure Type — C
   c. Wind Importance Factor — 1.00

FOUNDATION

1. Soils Report by PEPG Engineering, L.L.C, Dated August, 2008.
2. Soil Bearing Pressure:2050 psf, on structural Fill.
3. Frost Protection: 34 inches minimum.
4. Lateral Soil Pressure Fluid Equivalent Density.
   a. Active .... 35 pcf (retaining walls)
   b. At Rest .... 55 pcf (rigid foundation walls)
   c. Passive.................................. 245 pcf
5. Angle of internal friction, native soil... 32 degrees

EARTHWORK

1. All footings shall bear on compacted structural fill as per soils report.
2. Consult the soils report for further earthwork requirements.

CONCRETE

1. Materials, unless noted otherwise:
   a. Normal weight aggregates — ASTM C 33
   b. Reinforcing Steel — ASTM 615 Grade 60 (Fy = 60 ksi). Use Grade 40 (Fy = 40 ksi) for field bent dowels with spacings indicated reduced by 1/3.
   c. Deformed Bar Anchors (DBA) — ASTM A496
   d. Headed Stud Anchors (HSA) — ASTM A108
   e. Anchor Rods — ASTM F1554, Grade 36, with ASTM A563 heavy hex nuts and hardened washers Grade A
   f. Admixtures:
      i. Air-entraining admixtures comply with ASTM C 260 (when used).
      ii Calcium chloride shall not be added to the concrete mix.
   g. Type I/II cement complying with ASTM C-150 shall be used for all concrete.
   h. The water/cement ratios shall meet the requirements of ACI 318.
   i. Provide air entraining as recommended by ACI 318.
   j. No aluminum conduit or product containing aluminum or any other material injurious to concrete shall be embedded in concrete.
2. Compressive strengths of concrete at 28 days shall be as follows:
   a. Footings and Foundation Wall .... 3,000 psi
   b. Interior Slabs on Grade.................................. 5,000 psi
   c. Normal Weight concrete over Steel Deck .... 3,500 psi
   d. All Site Concrete .... 5,000 psi
3. 3-1/2" thick (6-1/2" overall) normal weight concrete slab shall be poured over the steel deck. Reinforce slab with 6" x 6" – W2.1/W2.1 welded wire fabric minimum, unless noted otherwise. Welded Wire Fabric shall be placed 1" to 1-1/2" below the top of the slab.
   a. At contractor's option, the welded wire fabric may be substituted with either of the following:
      i. 100% virgin polypropylene synthetic fiber containing no reprocessed olefin materials and specifically manufactured to an optimum gradation for use as concrete secondary reinforcement. Application shall be 1.5 lbs minimum per cubic yard.
      ii. Alkali Resistant (AR) glass fibers with a minimum of 16% Zirconia. Application shall be 1 lb minimum per cubic yard of concrete. The fiber manufacturer must document evidence of compliance with building codes in accordance with ICC-ES AC32 and ASTM C1116, Type II, 4.1.2.
4. Only one grade or type of concrete shall be poured on the site at any given time.
5. The contractor shall be responsible for the design, detailing, care, placement and removal of all formwork and shores.
   a. Supporting forms and shoring shall not be removed until structural members have acquired sufficient strength to safely support their own weight and any construction load to which they may be subjected. In no case, however, shall forms and shoring be removed in less than 24 hours after concrete placement.
6. Reinforcement shall have the following concrete cover:
   Cast-in-place Concrete:.. Clear Cover
   a. Cast against and permanently exposed to earth........................3"
   b. Formed concrete exposed to earth or weather:
      #6 thru #18 bars ....2"
      #5 and smaller bars..1-1/2"
   c. Concrete not exposed to weather or in contact with ground:
      Slabs, Walls, Joists; #11 bars and smaller.............................3/4"
      Beams, Columns: Primary Reinf., Ties, Stirrups, Spirals.........1-1/2"
7. Construction Joints and Control Joints:
   a. Provide a formed and beveled 2 x 4 x continuous keyway in all horizontal and vertical construction joints including between top of footing and foundation walls, unless noted otherwise. In addition, all joints shall be intentionally roughened to a full amplitude of approximately 1/4 inch.
   b. Control joints shall be installed in slabs on grade so the length to width ratio of the slab is no more than 1.25:1. Control joints shall be completed within 12 hours of concrete placement. Control joints may be installed by:
      i. Saw cut a depth of 1/4 the thickness of the slab
      ii. Tooled joints a depth of 1/4 the thickness of the slab
   c. Install construction or control joints in slabs on grade at a spacing not to exceed 30 times the slab thickness in any direction, unless noted otherwise. Construction joints shall not exceed a distance of 125'-0" o.c. in any direction.
8. Construction
   a. Use chairs or other support devices recommended by the CRSI to support and tie reinforcement bars prior to placing concrete. Reinforcing steel for slabs on grade shall be adequately supported on precast concrete units. Lifting the reinforcing off the grade during placement of concrete is not permitted.
   b. Concrete to be mechanically consolidated during placement per ACI standards.
   c. Contractor shall coordinate placement of all openings, curbs, dowels, sleeves, conduits, bolts, inserts and other embedded items prior to concrete placement.
   d. All embeds and dowels shall be securely tied to formwork or to adjacent reinforcing prior to the placement of concrete.
   e. No pipes, ducts, sleeves, etc shall be placed in structural concrete unless specifically detailed or approved by the structural engineer. Penetrations through walls when approved shall be built into the wall prior to concrete placement. Penetrations will not be allowed in footings or grade beams unless detailed. Piping shall be routed around these elements and footings stepped to avoid piping.
   f. Reinforcing Bars shall not be welded. Do not substitute reinforcing bars for DBAs or HSAs.
9. Detailing:
   a. Lap splice lengths shall be detailed to comply with the "Concrete Reinforcing Bar Lap Splice Schedule" on sheet SB601 Splices may be made with mechanical splices capable of 125% tension capacity of the bar being spliced. Mechanical splices shall be the positive connecting type coupler and shall meet all International Building Code requirements. Use "Cadweld", "Lenton" Standard Couplers, "Bar-Lock" or equal with internal protector. If mechanical splices are used, splices or couplers on adjacent bars shall be staggered a minimum of 24" apart along the longitudinal axis of the reinforcing bars.
   b. At joints provide reinforcing dowels to match the member reinforcing, unless noted otherwise.
   c. At all discontinuous control or construction slab on grade joints, provide 2 - #4 x 48 inches.
   d. Provide corner bars at intersecting wall corners using the same bar size and spacing as the horizontal wall reinforcing.
   e. All vertical reinforcing shall be doweled to footings, or to the structure below with the same size and spacing as the vertical reinforcing for the element above. Dowels extending into footings shall terminate with a 90 degree standard hook and shall extend to within 4" of the bottom of the footing. Footing dowels (#8 bars and smaller) with hooks need not extend more than 20" into footings.
   f. Horizontal wall reinforcing shall terminate at ends of walls and openings into the far end of the jamb column with a 90-degree standard hook plus a 6 bar diameter extension. Horizontal wall reinforcing shall be continuous through construction and control joints.
   g. See detail C3/SB501for reinforcing around miscellaneous openings (8" to 36" wide). For openings wider than 36", contact the engineer. All recesses that interrupt reinforcing shall be reinforced the same as an opening.

EPOXY

1. Epoxy shall be "HIT RE 500-SD by Hilti Corporation, ITW Redhead Epcon G5 or SET-XP by Simpson Strong Tie.
2. All drilled holes for bars or anchors rods 1" in diameter and smaller shall be 1/8 inch larger in diameter than the bar of anchor rod being installed. All drilled holes for bars or anchors rods greater than 1" in diameter shall be 1/4 inch larger in diameter than the bar of anchor rod being installed.
3. After drilling the proper size hole, clean the walls and bottom of the drilled hole of all dust and debris using a nylon brush in conjunction with oil free compressed air. The hole shall be free of dust, debris and standing water.
4. Follow all of the manufacturer's recommendations for epoxy installation.

GROUND ANCHORS

1. Ground Anchors shall be designed and installed to resist the design loads shown in these drawings.
2. All work shall be performed in accordance with all applicable safety codes in effect at the time of installation.
3. The mini-pier sections and extensions shall be solid steel, rounded corner square shaft configuration with one or more bearing plates welded to the shaft.
4. All Ground Anchors shall be corrosion protected by B-1 hot dip galvanization meeting ASTM A153.
5. The appropriate steel bracket capable of resisting forces indicated on the drawings cap shall be used.
6. All welding shall meet requirements of AWS", Structural Welding Code", D1.1, latest edition. All welders shall be AWS certified.
7. Shop drawings indicating shaft sizes, underpinning brackets, etcetera shall be submittal along with manufacturer's catalog cuts and data sheets shall be submitted for engineer's review.
8. The installer shall keep a written record for each mini-pier installed. This record shall include the following:
   a. Project name and location
   b. Name of authorized and certified dealer and installer
   c. Name of installer's foreman or representative witnessing the installation.
   d. Date of installation
   e. Location of mini-pier
   f. Overall depth of installation from Multi-purpose Room finished floor.
9. Special inspection shall be provided to meet section 1704.9 of the International Building Code.

MASONRY

1. Materials, unless noted otherwise:
   a. Concrete Masonry Units (CMU): Lightweight Grade N, Type 1 (minimum unit strength of 2800 psi). f'm = 2000 psi
   b. Mortar: Use Type "S" 1800 psi minimum compressive
   c. Grout shall attain a minimum compressive strength of 2800 psi at 28 days.
   d. Reinforcing Steel — ASTM 615 Grade 60 (Fy = 60 ksi)
   e. Deformed Bar Anchors (DBA) — ASTM A496
   f. Headed Stud Anchors (HSA) — ASTM A108
   g. Anchor Rods — ASTM F1554, Grade 36,with ASTM A563 heavy hex nuts hardened washers
2. Reinforcement shall have the following cover:
   a. Reinforcement shall have a minimum coverage of one bar diameter over all the bars, but not less than 3/4". When masonry is exposed to soil, minimum coverage shall be 1.5".
3. Construction Requirements:
   a. All units shall be laid with full mortar beds on the face shells. All head joints shall be filled solidly with mortar for a distance in from the face of the units not less than the thickness of the longitudinal face shells. Cells which are to be grouted shall have full head joints.
   b. Masonry walls, beams and columns shall be constructed with running bond, unless noted otherwise.
   c. All cells containing reinforcement, embeds, anchor bolts, etc. shall be filled solid with grout. Grout shall be placed by mechanical vibration during placing and revibrated after excess moisture has been absorbed but before workability is lost. Rodding of grout is not allowed.
   d. Where walls are not grouted solid, each grout pour shall terminate flush with the top of the uppermost unit except at cells with vertical reinforcing where the grout shall be 1-1/2 inches below top of unit to provide construction key.
   e. Grout pours shall be limited to 4'-0" unless written approval is obtained from the engineer of record.
   f. All walls below grade shall be grouted solid.
   g. Vertical cells to be filled with grout shall have vertical alignment sufficient to maintain a clear, unobstructed vertical cell measuring not less than 2 inches by 3 inches. All steel reinforcement shall be secured against displacement prior to grouting by wire positioners or other suitable devices at intervals not exceeding 200 bar diameters or 10 feet maximum, or at bar splice locations. Vertical reinforcing shall be located at the center of the wall unless noted otherwise
   h. Reinforcing Bars shall not be welded. Do not substitute reinforcing bars for DBAs or HSAs.
   i. Control Joints: Spacing shall not exceed 40'-0". See architectural drawings for locations.
   j. Grout all beam and joist pockets solid after installation of beams and joists.
   k. Embed channels and plates shall be placed so as to create a flush surface with the face of the wall.
   l. Anchor bolts and headed stud anchors shall be set in a grouted cell. Anchor bolts and headed stud anchors shall have 1" grout surrounding the shank at its penetration. Grout shall be flush with the face or top of the masonry.
4. Detailing Requirement
   a. Lap all masonry reinforcing per "Masonry Reinforcing Lap Schedule" on sheet SF601. All vertical reinforcing shall be doweled to the foundation wall, footing (structure below) and to the structure below with the same size dowel, spacing (and in the same core) as the vertical wall reinforcing above.
   b. Corner Bars: Horizontal reinforcement shall be continuous at all corners and at intersecting walls. Provide corner bars with the required lap splice length.
   c. Wall Openings: For unscheduled openings wider than 24 inches, provide reinforcing on all sides per detail C2/SB501. Also, for all scheduled openings, provide horizontal bar at bottom of opening per detail C2/SB501. Vertical bars shall extend from floor level below to the floor, or roof level above. Horizontal bars for all openings shall extend a minimum of 48 bar diameters beyond the corners of the opening. Where a 48 bar diameter extension is not possible, extend bars as far beyond the opening as possible and terminate the bar(s) with a 90 degree standard ACI hook.
   d. Horizontal wall reinforcing shall be continuous through joining concrete walls, masonry walls, columns, and pilasters. Provide a key between the wall and the column or pilaster. Horizontal wall reinforcing shall be placed inside the column vertical reinforcing.
   e. Horizontal wall reinforcing shall terminate with a hook at edge of openings and at each side of control joints except at floor and roof levels, lintels, beams and at top of parapets. See details B2/SB501.
   f. All masonry column ties shall terminate with 135 degree hooks plus a 6 bar diameter extension (4" minimum)

STRUCTURAL STEEL

1. Material:
   a. Wide Flanges Section — ASTM A992 (50 ksi)
   b. Other shapes & Plates — ASTM A36 (36 ksi)
   c. Square or Rectangular HSS — ASTM A500 (46 ksi) Grade B
   d. Deformed Bar Anchors (DBA) — ASTM A496
   e. Headed Stud Anchors (HSA) — ASTM A108
   f. Anchor Rods — ASTM F1554, Grade 36, with ASTM A563 heavy hex nuts and hardened washers Grade A
   g. Bolted Connections: — ASTM A325
2. Fabrication and construction shall comply with the latest edition of the following Codes and Standards:
   a. American Institute of Steel Construction (AISC), "Specification for the Design, Fabrication and Erection of Structural Steel for Buildings," with "Commentary".
   b. AISC "Code of Standard Practice" excluding the following: Section 3.4, Section 4.4, Section 4.4.1,
   c. AISC "Specification for Structural Joints Using ASTM A325 or A490 Bolts"
   d. American Welding Society (AWS), Structural Welding Code (specific items do not apply when they conflict with the AISC requirements).
   e. AISC "Seismic Provision for Structural Steel Buildings"
3. Welding
   a. All welding and cutting shall be performed by AWS certified welders.
   b. Use E-70 XX or as noted otherwise. E60 XX may be used for welding steel roof decks.
   c. All intersecting steel shapes which are not bolted shall be connected by a fillet weld all around, unless noted otherwise. Where fillet weld sizes are not shown they shall be 1/16" less than the thinnest of the connected parts for thicknesses 1/4" and larger. Fillet welds on plates less than 1/4" shall be of the same size as the thinnest of the connected part.
   d. Reinforcing Bars: Do not weld rebar. Do not substitute reinforcing bars for deformed bar anchors (DBAs), machine bolts, or headed stud anchors (HSAs).
   e. Do not weld anchor bolts, including "tack" welds.
   f. Headed Stud Anchors (HSAs) welding and deformed bar anchor welding shall conform to the manufacturer's specifications.
4. Bolted Connections:
   a. Use ASTM A325N bolts for steel to steel connections, as noted herein or as noted on the drawings. A325N bolts shall be used in connections for simple span framing and beam (or girder) to bearing plate connections. Tighten bolts to a snug tight condition. See sheet SF601.
   b. Use hardened washers beneath the turned element of all bolts or nuts. Use hardened beveled washers, to compensate for the lack of parallelism, where the outer face of the bolted parts has a slope greater than one in twenty with respect to the plane normal to the bolt axis. At oversized holes hardened washers or plates shall conform with ASTM F-436 and shall completely cover the slot after installation.
   c. Where a steel to steel beam connection is not shown, provide a standard AISC framed connection for one half the total uniform load capacity of the beam for the span and steel specified.
   d. Bolts, nuts and washers shall not be reused.
5. Provide full-depth web-stiffener plates at each side of all beams at all bearing points. Stiffener plates shall be the thickness called out below unless noted otherwise and shall be welded both sides with fillet welds all around:

FLANGE WIDTH	STIFFENER THICKNESS	WELD SIZE
Less than 8 1/4"	1/4"	3/16"
8 1/4" to 12 1/4"	3/8"	1/4"
12 1/4" to 16 ½"	1/2"	5/16"
16 ½" to 20 ¾"	5/8"	3/8"

OPEN WEB STEEL JOISTS AND GIRDERS

1. All open web steel joist and girders shall be fabricated and erected in accordance with the latest edition of Steel Joist Institute (SJI), "Standard Specifications and Code of Standard Practice".
2. At the completion of fabrication, the steel joist manufacturer shall submit to the building official a certificate of compliance in accordance with IBC Section 1704.2.2 stating if the work was performed in accordance with approved construction documents and with SJI standard specifications.
3. Joists or girders with slopes greater than 1/2 inch per foot shall be designed to meet or exceed the load capacities, listed in the SJI load tables, of the joist or girder sizes indicated on the framing plan, as if the joists or girders were installed level.
4. Provide special bearing ends to accommodate slopes from sloped joists, sloped girders or sloped bearing conditions.
5. Modifications to any joist or girder, including holes through the top and bottom chords, without the written consent and direction from the manufacturer is not allowed.
6. Open web joist deflection shall be limited to L/240 for total loads and L/360 for live load, unless noted otherwise.
7. Joist bridging shown on plans is for schematic purposes only; actual size, quantity and location of bridging shall be determined by the joist supplier per SJI. Coordinate bridging locations to avoid interference with mechanical, electrical and fire protection equipment and skylights.

METAL DECKING

1. Steel deck shall comply with the latest requirements of the Steel Deck Institute.
2. All deck shall be 3-span continuous minimum. In areas where 3-span conditions are not possible, the contractor shall provide heavier gage deck as required to provide the equivalent loading of the deck under a three span condition.
3. Steel roof deck shall not be used to support loads from plumbing, HVAC ducts, light fixtures, architectural elements or equipment of any kind, unless specifically noted. Light weight suspended acoustical ceilings with a total weight of 50 lbs per attachment may be hung from roof deck. The hangers shall be staggered to distribute the loads over multiple deck flutes.
4. All deck supporting members shall be dry before welding.
5. Clinch seams before welding interlocking seams.

Steel Floor Deck

a. Steel floor deck at mezzanine shall be 3" deep X 20 gage minimum phosphatized/painted composite type "W" deck with interlocking side seams with the following properties:

	22 Gage	20 Gage	18 Gage	16 Gage
Minimum S (in^3/ft) =	0.418	0.534	0.767	0.960
Minimum I (in^4/ft) =	0.718	0.896	1.203	1.590

Deck shall be galvanized (G60) when used below mechanical equipment rooms.

b. Steel deck with 3 1/2" thick (6 1/2" overall) normal weight concrete slab shall have a minimum diaphragm shear capacity of 1600 lbs/ft. for a 10'-0" deck span.
c. Weld deck to supporting framing members with 3/4" diameter puddle welds at the following spacing (Closer spacings may be used to develop minimum shear requirements.):
   i. 12" o.c. to supports perpendicular to deck corrugations (4 welds per 36" wide sheet).
   ii 12" o.c. to all supports parallel to deck corrugations.
d. Hilti power driven fasteners are acceptable as an alternative to welds provided the connection meets the diaphragm shear capacity given above. Call Hilti at 800-879-8000 extension 6337 for connection information comparison. If Hilti power driven fasteners are used, the contractor shall submit Hilti's calculations to the Architect/Engineer for review. Also if Hilti power driven fasteners are used, a Hilti representative shall be present before the decking is installed to make sure the installer is properly trained in using the equipment. The Hilti representative shall also make a site visit the day after deck has been started to be installed to verify the power driven fasteners are being installed correctly.
e. Attach interlocking seams with 3/16" Ø button punch at 18" o.c. or with 1 1/2" long top seam welds at 36" o.c. or with Verco PunchLok System at 36" o.c., with ASC DeltaGrip System at 36"o.c. or with Wheeling Seismic Shearloc at 36" o.c. Closer spacing may be used to develop minimum shear requirements. A standard button punch can **not** be used in place of Verco PunchLok, ASC DeltaGrip or Wheeling Seismic Shearloc.
f. Provide a 2-inch minimum bearing at supports.

Steel Roof Deck

a. Steel roof deck shall be 1.1/2" deep X 20 gage minimum painted, type "B" wide rib deck with interlocking side seams with the following properties:

	22 Gage	20 Gage	18 Gage	16 Gage
Minimum S (in^3/ft) =	0.187	0.234	0.322	0.411
Minimum I (in^4/ft) =	0.175	0.213	0.296	0.377

b. Minimum allowable deck diaphragm shear values shall be 1,050 lb/ft. for a 7'-0" deck span.
c. Weld steel roof deck to supporting framing members with 3/4" diameter puddle welds at the following spacings (Closer spacing may be used to develop minimum shear requirements.):
   i. 6" o.c. to all supports perpendicular to deck corrugations (7 welds per 36" sheet).
   ii. 6" o.c. to all supports parallel to deck corrugations.
d. Hilti power driven fasteners are acceptable as an alternative to welds provided the connection meets the diaphragm shear capacity given above. Call Hilti at 800-879-8000 extension 6337 for connection information comparison. If Hilti power driven fasteners are used, the contractor shall submit Hilti's calculations to the Architect/Engineer for review. Also if Hilti power driven fasteners are used, a Hilti representative shall be present before the decking is installed to make sure the installer is properly trained in using the equipment. The Hilti representative shall also make a site visit the day after deck has been started to be installed to verify the power driven fasteners are being installed correctly.
e. Attach interlocking seams with 1 1/2" long top seam welds at 12" o.c. maximum or with Verco PunchLok System at 8" o.c. maximum, with ASC Delta Grip System at 15" o.c. maximum or with Wheeling Gator-Seismic Shearloc at 4" o.c maximum. Closer spacing may be used to develop minimum shear requirements. A standard button punch can **not** be used in place of Verco PunchLok, DeltaGrip or Gator-Seismic Shearloc.
f. Provide a 2-inch minimum bearing and a 4-inch lap at the splice points.

COLD-FORMED STEEL

1. All cold-formed steel shall meet the requirements of "Specifications for the Design of Cold-Formed Steel Structural Members" by American Iron and Steel Institute (AISI).
2. Light Gauge Steel Framing:
   a. Galvanized steel shall meet the minimum requirements of ASTM A653 (Fy = 50 ksi) for 97 mil (12 gauge), 68 mil (14 gauge) and 54 mil (16 gauge). For 43 mil (18 gauge) and lighter galvanized steel shall meet and ASTM A653 (Fy = 33 ksi). Galvanized coatings must meet the ASTM A924.
   b. Follow all manufacturers' recommendations for the use of these products.
   c. Unless noted otherwise, all welded connections shall be done according to AWS standards.
   d. All interior non-bearing steel-stud walls that extend above the ceiling but do not attach to the structure above shall be brace with diagonal metal-stud braces (45 degrees). The kl/r ratio of the brace shall not exceed 200 and shall not be spaced further apart than 10'-0" o.c. Connect diagonal braces to the top of the steel stud walls and to the top flange of the steel beams with two #10 tek screws minimum. Where a concrete deck occurs above, use two powder-driven fasteners per diagonal brace. Other approved methods may be used.

SPECIAL INSPECTION AND QUALITY ASSURANCE

Special inspection and quality assurance, as required by section 1704 thru 1709 of the IBC, shall be provided by an independent agency employed by the owner unless waived by the building official. The contractor shall coordinate and cooperate with the required inspections. All testing and inspection reports shall be sent within 24 hours of the test to the architect, engineer, building official and contractor for review. Special inspection during fabrication is not required if the fabricator is registered and approved to perform such work with out special inspection. Items requiring special inspection and quality assurance are:

1. Soils (IBC 1704.7)
   a. Prior to placement of the prepared fill, the special inspector shall determine that the site has been prepared in accordance with the soils report.
   b. During placement and compaction of the fill material, the special inspector shall determine that the material being used and the maximum lift thickness comply with the soils report.
   c. The special inspector shall determine that the in-place dry density of the compacted fill material complies with the soils report.
      i. Continuous Footing Backfill: At each compacted backfill layer, at least one test for each 40 linear feet or less of wall length, but no fewer than 2 tests.
      ii. Spot Footing Backfill: Minimum of one compaction test for each lift for each spot footing.
   d. See specifications for further requirements.
2. Concrete placement (IBC Section 1704.4)
   a. Continuous special inspection shall be provided
   b. Cylinders, slump, temperature and air-entrainment shall be done for every 50 cubic yards or each day's production if the day's production is less than 50 cubic yards.
   c. Protection of concrete during cold and hot weather
   d. See specifications for further concrete testing requirements.
3. Bolts installed in concrete (IBC Section 1704.4)
   a. All bolts shall be special inspected prior to and during concrete placement.
4. Embeds and Inserts installed in concrete (IBC Section 1704.4)
   a. All embeds and inserts shall be special inspected prior to and during concrete placement.
5. Concrete reinforcing steel placement (IBC Section 1704.4)
   a. All Reinforcing shall be special inspected prior to concrete placement.
6. Structural welding, including steel deck (IBC 1707.2 and 1704.3)
   a. Periodic special inspection of metal floor prior to concrete placement and roof decks.
   b. Periodic special inspection of single pass fillet welds less than or equal to 5/16"
   c. Continuous special inspection of single pass fillet welds greater than 5/16" and multi-pass fillet welds.
   d. Continuous special inspection of complete and partial penetration welds.
7. Metal deck using mechanical attachments (IBC 1704.13)
   a. Periodic special inspection of metal floor prior to concrete placement and roof decks. Special inspection shall be done to verify size and spacing of shot pins / screws for deck attachment to the supporting structural. Also special inspection shall be done to verify spacing and size of seam attachments.
8. High Strength bolted connections (IBC Section 1704.3.3)
   a. Periodic special inspection of bearing type connections.
   b. Continuous special inspection of slip critical connections. Special inspector shall be present to observe the pre-installation testing and calibration procedures.
9. Structural masonry shall have Level 1(Non-Essential Facilities) special inspection per IBC section 1704.5.2
   a. Periodic special inspection shall be performed for
      i Proportions of site-prepared mortar, construction of mortar joints,
      ii Location of reinforcement and connectors,
      iii. Size and location of structural elements
      iv. Type, size and location and placement of anchors
      v. Size, grade and type and placement of reinforcement
      vi. Verify grout space is clean prior to grouting
      vii Protection of masonry during cold and hot weather
   b. Continuous special inspection shall be provided for grout placement and preparation of any required grout specimens, mortar specimens and prisms.
   c. Quality Assurance shall be according to Level 2 quality assurance (Table 1.14.1.2 of ACI 530/ASCE 5/TMS 402).
      i. Prior to construction, a letter of strength certification from the suppliers of the masonry units and grout shall be submitted.
      ii. During construction, the grout and mortar shall be tested for every 5,000 square feet of masonry constructed.
      iii. The contractor has the option of using the "Masonry Prism Test Method" per IBC Section 2105.2.2.2 in lieu of the "Unit Strength Method."
10. Ground Anchors construction (IBC Section 1704.8 & 9)
    a. Continuous special inspection shall be performed.
11. Epoxy Anchors (IBC Section 1704.13)
    a. Special inspection shall verify all drilled holes' size and depth prior to installation of epoxy and anchor rod.
12. Cold-formed steel framing (IBC 1707.4)
    a. Periodic special inspection is required for screw attachment, bolting, anchoring and other fastening of components within the seismic-force resisting system, including struts, braces and hold downs.

SITE OBSERVATIONS BY STRUCTURAL ENGINEER

Site observations, as required by IBC section 1709, shall be done by the Engineer of Record or an approved subordinate at the stages of construction listed below. The contractor shall notify the engineer when he has reached the construction stage listed below and before the work to be observed is covered up, walled in or becomes otherwise hidden from view or in-accessible to any necessary corrections. At the conclusion of the project, the structural observer shall submit to the building official a written statement that the site visits have been made and identify any reported deficiencies that to the best of the structural observer's knowledge have not been resolved (See 1709.1).

1. No structural observations are required by code.

DEFERRED SUBMITTALS

For the purpose of this section, deferred submittals are defined as per section 106.3.4.2 of the IBC. Submittal documents for deferred submittal items shall be submitted to the engineer, architect and building official for their review for general conformance with the design of the building. Deferred submittal items shall not be installed until approved by the building official. Deferred structural submittals for this project are:

1. Open Web Steel Joists and Girders
2. Ground Anchors

LEGEND OF MARKS AND ABREVIATIONS

AB	ANCHOR BOLT(S)
ABV	ABOVE
ALT	ALTERNATE
APPROX	APPROXIMATE
ARCH	ARCHITECT(URAL)
BLDG	BUILDING
BLW	BELOW
BM	BEAM
BOT	BOTTOM
BRG	BEARING
BTWN	BETWEEN
CC.	CENTER-TO CENTER
C.J.	CONST/CONTROL JOINT
CMU	CONCRETE MASONRY UNIT
COL	COLUMN
CONC	CONCRETE
CONST	CONSTRUCTION
CTR	CENTER
CW-x	CONCRETE WALL
DB	DECK BEARING
DBA	DEFORMED BAR ANCHOR
DBE	DECK BEARING ELEVATION
DBL	DOUBLE
DET	DETAIL
DIA	DIAMETER
DIM	DIMENSION
DN	DOWN
DWG	DRAWING
DWL	DOWEL
EA	EACH
E.F.	EACH FACE
E.J.	EXPANSION JOINT
ELEC	ELECTRICAL
ELEV	ELEVATION
EQUIP	EQUIPMENT
EQ	EQUAL
E.W.	EACH WAY
EXST	EXISTING
EXP	EXPANSION
EXT	EXTERIOR
FC-x	CONTINUOUS FOOTING MARK
F.D.	FLOOR DRAIN
FDN	FOUNDATION
F.F.	FINISHED FLOOR
FR-x	RECTANGULAR FOOTING MARK
FS-x	SQUARE FOOTING MARK
FT	FOOT
FTG	FOOTING
FTS-x	THICKEN SLAB MARK
GA	GAUGE
GALV	GALVANIZED
GSN	GENERAL STRUCTURAL NOTES
HB	HORIZONTAL BRIDGING
HORIZ	HORIZONTAL
HSA	HEADED STUD ANCHOR
HT	HEIGHT
ICBO	INTERNATIONAL CONFERENCE OF BUILDING OFFICIALS
IBC	INTERNATIONAL BUILDING CODE
I.F.	INSIDE FACE
IN.	INCH
INT	INTERIOR
JT	JOINT
JST	JOIST
k	KIP(S) = 1000 POUNDS

KLF	KIPS PER LINEAL FOOT
KSF	KIPS PER SQUARE FOOT
LBS	POUNDS
LF	LINEAL FOOT
LLH	LONG LEG HORIZONTAL
LLV	LONG LEG VERTICAL
LSV	LONG SIDE VERTICAL
MAS	MASONRY
MAX	MAXIMUM
MCJ	MASONRY CONTROL JOINT
MC-x	MASONRY COLUMN MARK
MECH	MECHANICAL
MFR	MANUFACTURER
MIN	MINIMUM
MISC	MISCELLANEOUS
ML-x	MASONRY LINTEL
MW-x	MASONRY WALL
NIC	NOT IN CONTRACT
NTS	NOT TO SCALE
O.C.	ON CENTER
O.F.	OUTSIDE FACE
OPNG	OPENING
OPP	OPPOSITE
PCF	POUNDS PER CUBIC FOOT
PL	PLATE
PLF	POUNDS PER LINEAL FOOT
PSF	POUNDS PER SQUARE FOOT
PSI	POUNDS PER SQUARE INCH
PT	POINT
REINF	REINFORCING
REQD	REQUIRED
R.D.	ROOF DRAIN
RTU	ROOF TOP UNITS
SBP-x	STEEL BASE PLATE MARK
SC-x	STEEL COLUMN MARK
SCP-x	STEEL CAP PLATE MARK
SHT	SHEET
SI	SPECIAL INSPECTION
SIM	SIMILAR
SMU	SUSPENDED MECHANICAL UNITS
SOG	SLAB-ON-GRADE
SQ	SQUARE
STAG	STAGGERED
STD	STANDARD
STL	STEEL
STR	STRUCTURAL
STS	SELF TAPPING SCREWS
T&B	TOP AND BOTTOM
TEMP	TEMPERATURE
THDS	THREADS
T.O.	TOP OF
TOC	TOP OF CONCRETE
TOD	TOP OF DECK
TOF	TOP OF FOOTING
TOS	TOP OF STEEL
TOW	TOP OF WALL
TYP	TYPICAL
UNO	UNLESS NOTED OTHERWISE
VERT	VERTICAL
W/	WITH
WT	WALL THICKNESS
WWF	WELDED WIRE FABRIC
WWM	WELDED WIRE MESH

CLIENT

UDOT CONNECTING COMMUNITIES

STATION #2434
6072 E. EMIGRATION CANYON RD.
PARLEY'S CANYON, UTAH

DESIGNER

ARCHIPLEX GROUP
architecture · planning · design services
255 Crossroad Square
Salt Lake City, UT 84115
P:(801) 961-7070
F:(801) 961-7373

CONSULTANTS

"Engineering Results"
BHB Consulting Engineers
A Professional Corporation
2766 South Main Street
Salt Lake City, Utah 84115
Phone: 801.355.5656
Fax: 801.355.5950
Email: bhb@bhbengineers.com

REGISTRATION

LICENSED PROFESSIONAL ENGINEER
No. 323922
GERALD R. McKENZIE
STATE OF UTAH

ISSUE

MARK	DATE	DESCRIPTION
⚠1	2-09	ADDENDUM 1
	10-08	CONSTRUCTION DOCUMENTS
	8-20-08	90% REVIEW SUBMITTAL

PROJECT NO:	08284
DFCM PROJECT NO:	08211900
DRAWN BY:	CB
CHECKED BY:	RS
SCALE:	
DATE:	FEBRUARY 17, 2009

KEY PLAN

SHEET TITLE

GENERAL STRUCTURE NOTES

SJ001

© 2008 ARCHIPLEX GROUP

O:\2008\08284\Struct\08284_SJ001.dwg, 2/13/2009 5:01:23 PM, Larrissa

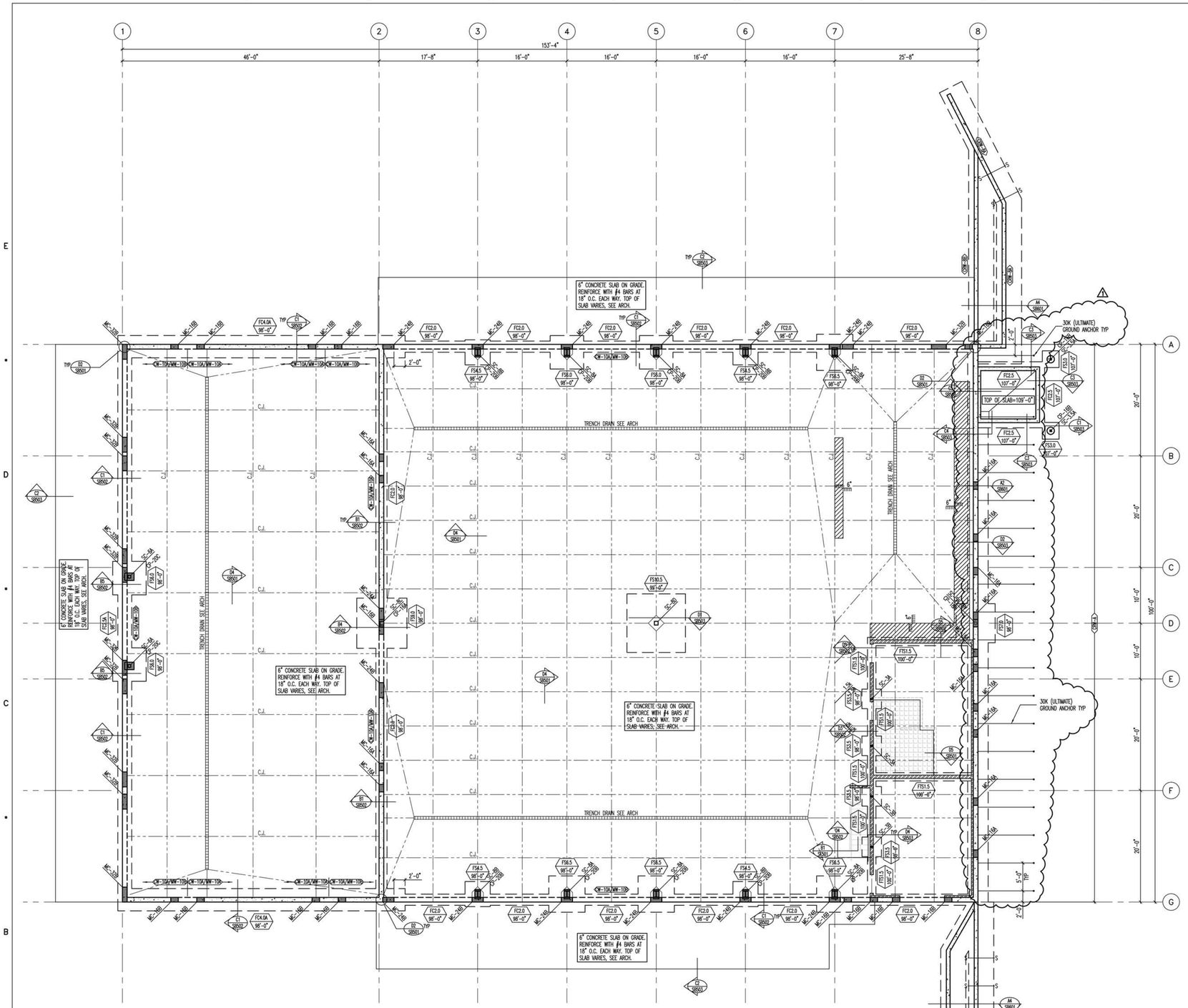

FOOTING AND FOUNDATION PLAN

SCALE: 1/8"=1'-0"

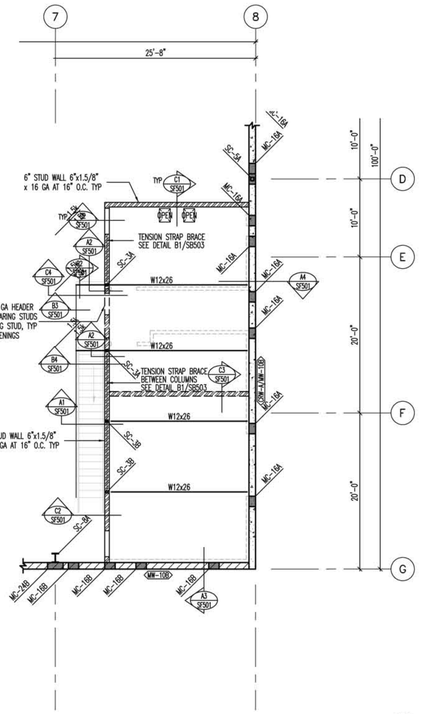

MEZZANINE FRAMING PLAN

SCALE: 1/8"=1'-0"

MARKS AND SYMBOLS LEGEND

- SECTION MARK / SHEET NUMBER
- FOOTING DESIGNATION / TOP OF FOOTING ELEVATION
- S——S INDICATES FOOTING STEP, SEE DETAIL D1/S8501
- INDICATES CONCRETE WALL.
- INDICATES MASONRY WALL.
- INDICATES METAL STUD WALL WHICH EXTENDS ABOVE MEZZANINE.
- DEPRESS FOUNDATION WALL AND POUR SLAB OVER. SEE DETAIL C1/S8502 AND B1/S8502
- INDICATES DEPRESSED SLAB, SEE ARCHITECTURAL PLANS.
- CRW-x INDICATES CONCRETE RETAINING WALL TYPE, SEE SCHEDULE ON SHEET S8601.
- CW-x INDICATES CONCRETE FOUNDATION WALL TYPE, SEE SCHEDULE ON SHEET S8601.
- CW-x/MW-x INDICATES MASONRY WALL (AND TYPE) OVER CONCRETE WALL (AND TYPE), SEE SCHEDULES ON SHEET S8601, SF601.
- 1 INDICATES LOCATION OF GROUND ANCHOR CAPABLE OF RESISTING 30k ULTIMATE IN TENSION
- W_x INDICATES STEEL BEAM, SEE GENERAL STRUCTURAL NOTES ON SHEET SF001.
- FCxx INDICATES CONTINUOUS FOOTING. SEE SCHEDULE ON SHEET S8601.
- FSxx INDICATES SPOT FOOTING. SEE SCHEDULE ON SHEET S8601.
- FTSxx INDICATES THICKENED SLAB FOOTING. SEE SCHEDULE ON SHEET S8601.
- C.J. INDICATES CONTROL/CONSTRUCTION JOINT. SEE DETAILS D4/S8501 AND D5/S8501.
- CP-x INDICATES CONCRETE PIER. SEE SCHEDULE ON SHEET S8601.
- SC-x INDICATES STEEL COLUMN. SEE SCHEDULE ON SHEET SF601.
- MC-x INDICATES MASONRY COLUMN TYPE. SEE SCHEDULE ON SHEET SF601.
- MCJ INDICATES MASONRY CONTROL JOINT, SEE DETAIL B1/S8501.

FOOTING AND FOUNDATION PLAN NOTES

1. COORDINATE LOCATION OF DEPRESSED SLABS, SLOPED SLABS, AND FLOOR DRAINS WITH ARCHITECTURAL AND MECHANICAL DRAWINGS.
2. SEE ARCHITECTURAL AND CIVIL DRAWINGS FOR EXTERIOR CONCRETE WORK AT DOORS, SIDEWALKS, ETC.
3. SEE ARCHITECTURAL DRAWINGS FOR CONTROL JOINT LOCATIONS.
4. SEE "EARTHWORK" NOTES ON SHEET SJ001 AND DETAIL B3/S8501 FOR MINIMUM FILL REQUIRED BENEATH FOOTINGS.
5. ALL SPOT FOOTINGS SHALL BE CENTERED UNDER COLUMNS (UNO).
6. SEE DETAILS D1/S8502 AND D2/S8502 FOR CONDITION WHERE BURIED PIPES RUN PARALLEL AND PERPENDICULAR TO FOOTINGS.
7. SEE DETAIL D4/S8501 FOR TYPICAL CONTROL/CONSTRUCTION JOINTS IN CONCRETE SLAB ON GRADE.
8. SEE DETAIL C1/S8501 FOR SLAB REINFORCING WHERE CONTROL JOINTS ARE DISCONTINUOUS.
9. SEE DETAIL C2/S8501 FOR ADDITIONAL REINFORCING AT MISCELLANEOUS OPENINGS IN MASONRY WALLS.
10. SEE DETAIL C3/S8501 FOR ADDITIONAL REINFORCING AT MISCELLANEOUS OPENINGS IN CONCRETE WALLS.
11. SEE DETAIL C5/S8501 FOR CONDITION AT RECESSES IN MASONRY WALLS.
12. SEE DETAIL B1/S8501 FOR TYPICAL CONTROL JOINTS IN MASONRY WALLS.
13. SEE DETAIL B2/S8501 FOR TERMINATION OF HORIZONTAL REINFORCING IN MASONRY WALLS.
14. SEE DETAIL D2/S8503 AND D3/S8503 FOR ANCHORAGE OF HOUSEKEEPING PADS.
15. VERIFY ALL FLOOR OPENINGS FOR MECHANICAL SHAFTS, STAIRS, ETC. WITH ARCHITECTURAL AND MECHANICAL DRAWINGS.
16. SEE DETAILS D1/SF501 FOR FRAMING AROUND MISCELLANEOUS FLOOR OPENINGS.
17. LOCATE MISCELLANEOUS MECHANICAL OPENINGS BETWEEN JOISTS, NOT UNDERNEATH THEM.
18. COORDINATE SIZE AND LOCATION OF ALL MECHANICAL OPENINGS WITH ARCHITECTURAL AND MECHANICAL DRAWINGS.
19. SEE ARCHITECTURAL DRAWINGS FOR DIMENSIONS TO STEEL COLUMNS.

CLIENT

UDOT CONNECTING COMMUNITIES

STATION #2434
6072 E. EMIGRATION CANYON RD.
PARLEY'S CANYON, UTAH

DESIGNER

ARCHIPLEX GROUP
architecture · planning · design services
255 Crossroad Square
Salt Lake City, UT 84115
P:(801) 961-7070
F:(801) 961-7373

CONSULTANTS

"Engineering Results"
BHB Consulting Engineers
A Professional Corporation
2766 South Main Street
Salt Lake City, Utah 84115
Phone: 801.355.5656
Fax: 801.355.5950
Email: bhb@bhbengineers.com

REGISTRATION

LICENSED PROFESSIONAL ENGINEER No. 323922 GERALD R. McKENZIE STATE OF UTAH

ISSUE

MARK	DATE	DESCRIPTION
1	2-09	ADDENDUM 1
	10-08	CONSTRUCTION DOCUMENTS
	8-20-08	90% REVIEW SUBMITTAL

PROJECT NO:	08284
DFCM PROJECT NO:	08211900
DRAWN BY:	CB
CHECKED BY:	RS
SCALE:	
DATE:	FEBRUARY 17, 2009

KEY PLAN

SHEET TITLE

FOOTING AND FOUNDATION PLAN

SB101

© 2008 ARCHIPLEX GROUP

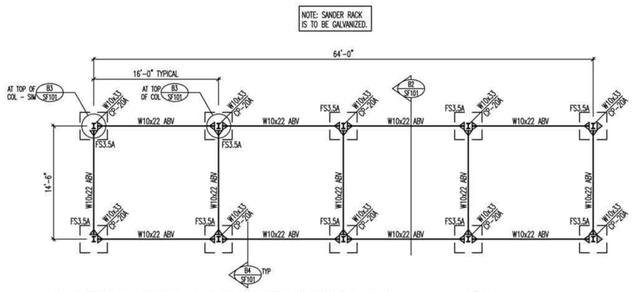

SANDER RACK PLAN (QUANTITY: 2)

SCALE: 1/8"=1'-0"

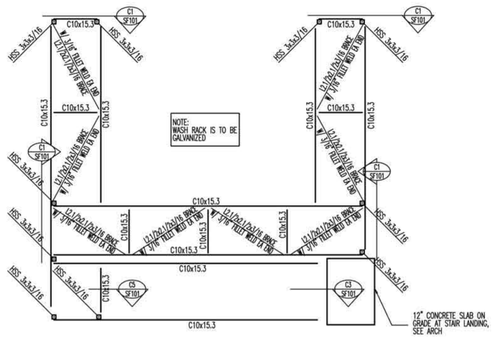

WASH RACK PLAN

SCALE: 1/4"=1'-0"

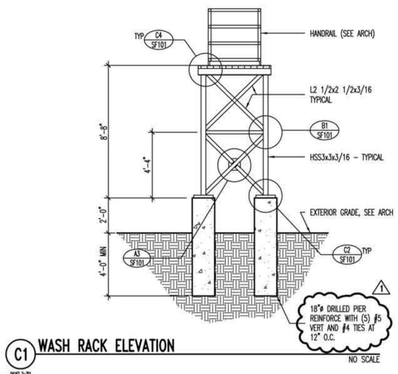

C1 WASH RACK ELEVATION

NO SCALE

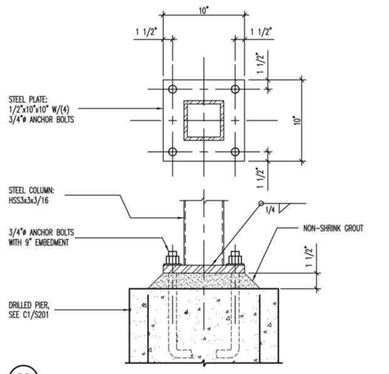

C2

NO SCALE

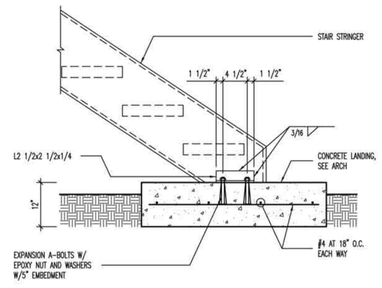

C3 STRINGER ANCHORAGE DETAIL - WASH RACK

NO SCALE

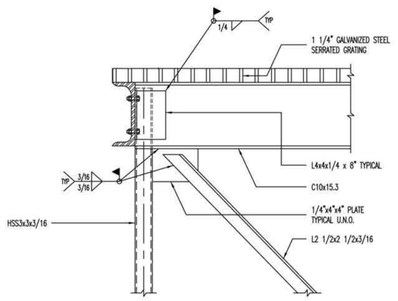

C4 TYPICAL BRACE DETAIL - WASH RACK

NO SCALE

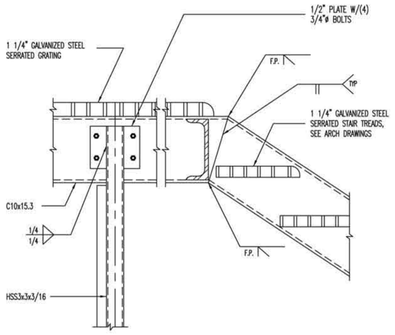

C5 STAIR SUPPORT DETAIL - WASH RACK

NO SCALE

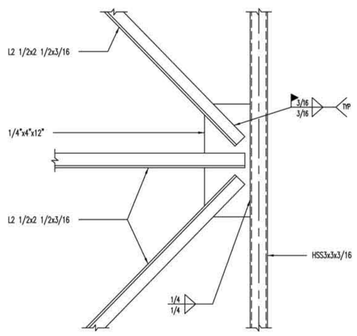

B1 BRACE DETAIL - WASH RACK

NO SCALE

NOTE: SET TOP OF CONCRETE FOUNDATION SUCH THAT THE MIN HEIGHT TO THE TOP OF THE STEEL BEAMS AT THE LOW SIDE IS 13'-10" (MIN) AT ANY POINT AND AT THE HIGH SIDE THE MIN HEIGHT TO THE TOP OF THE STEEL BEAMS IS 14'-6" (MIN) AT ANY POINT COORDINATE WITH CIVIL SITE PLAN.

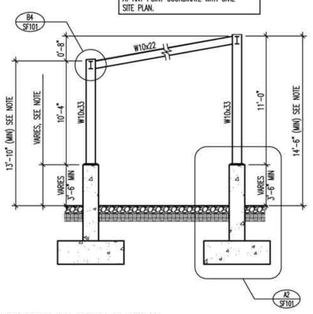

B2 SECTION AT SANDER RACK

NO SCALE

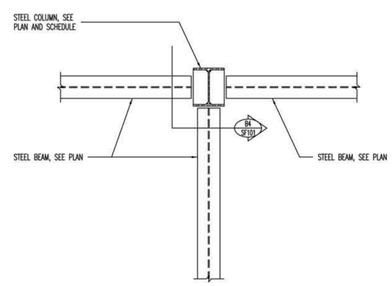

B3 MOMENT CONNECTION DETAIL AT SANDER RACK [PLAN VIEW]

NO SCALE

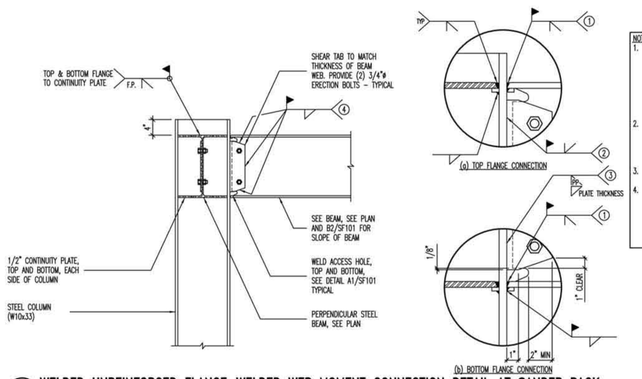

NOTES:
1. CJP GROOVE WELD AT TOP AND BOTTOM FLANGES: AT TOP FLANGE, EITHER (1) REMOVE WELD BACKING, BACKGOUGE, AND ADD 5/16" MIN FILLET WELD, OR (2) LEAVE BACKING IN PLACE AND ADD 5/16" FILLET UNDER BACKING. AT BOTTOM FLANGE, REMOVE WELD BACKING, BACKGOUGE, AND ADD 5/16" MIN FILLET WELD.
2. CJP GROOVE WELD FULL LENGTH OF WEB BETWEEN WELD ACCESS HOLES. PROVIDE NON-FUSIBLE WELD TABS. REMOVE WELD TABS AFTER WELDING AND GRIND END OF WELD SMOOTH AT WELD ACCESS HOLE.
3. FULL DEPTH PARTIAL PENETRATION FROM FAR SIDE.
4. FILLET WELD SHEAR TAB TO BEAM WEB. WELD SIZE SHALL BE EQUAL TO THICKNESS OF SHEAR TAB MINUS 1/16". WELD SHALL EXTEND OVER THE TOP AND BOTTOM ONE-THIRD OF THE SHEAR TAB HEIGHT AND ACROSS THE TOP AND BOTTOM.

B4 WELDED UNREINFORCED FLANGE-WELDED WEB MOMENT CONNECTION DETAIL AT SANDER RACK

NO SCALE

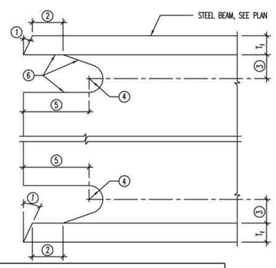

NOTES:
1. BEVEL AS REQUIRED BY AWS D1.1 FOR SELECTED GROOVE WELD PROCEDURE.
   A. TOLERANCES SHALL NOT ACCUMULATE TO THE EXTENT THAT THE ANGLE OF THE ACCESS HOLE CUT TO THE FLANGE SURFACE EXCEEDS 25°.
2. LARGER OF T_1 OR 1/2".
3. 3/4 T_1 TO T_1, 3/4" MIN.
4. 3/8" MINIMUM RADIUS.
5. 3 T_1.
6. SEE *FEMA-353, Recommended Specifications and Quality Assurance Guidelines for Steel Moment-Frame Construction for Seismic Applications*, FOR FABRICATION DETAILS INCLUDING CUTTING METHODS AND SMOOTHNESS REQUIREMENTS.

A1 RATHOLE DETAIL AT MOMENT CONNECTION AT SANDER RACK

NO SCALE

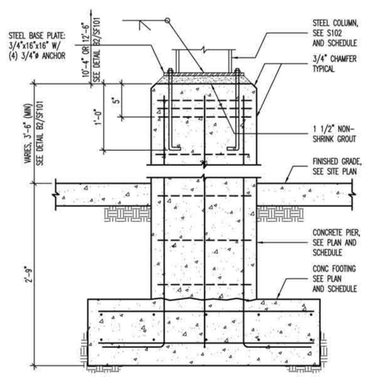

A2 SANDER RACK FOOTING DETAIL

NO SCALE

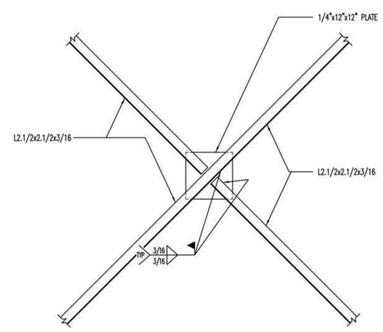

A3 BRACE DETAIL WASH RACK

NO SCALE

CLIENT

UDOT CONNECTING COMMUNITIES

STATION #2434
6072 E. EMIGRATION CANYON RD.
PARLEY'S CANYON, UTAH

DESIGNER

ARCHIPLEX GROUP
architecture · planning · design services
255 Crossroad Square
Salt Lake City, UT 84115
P:(801) 961-7070
F:(801) 961-7373

CONSULTANTS

"Engineering Results"
BHB Consulting Engineers
A Professional Corporation
2766 South Main Street
Salt Lake City, Utah 84115
Phone: 801.355.5656
Fax: 801.355.3950
Email: bhb@bhbengineers.com

REGISTRATION

LICENSED PROFESSIONAL ENGINEER No. 323922 GERALD R. McKENZIE STATE OF UTAH

ISSUE

MARK	DATE	DESCRIPTION
1	2-09	ADDENDUM 1
	10-08	CONSTRUCTION DOCUMENTS
	8-20-08	90% REVIEW SUBMITTAL

PROJECT NO:	08284
DFCM PROJECT NO:	08211900
DRAWN BY:	CB
CHECKED BY:	RS
SCALE:	
DATE:	FEBRUARY 17, 2009

KEY PLAN

SHEET TITLE

OUT BUILDING PLANS AND DETAILS

SF101

© 2008 ARCHIPLEX GROUP

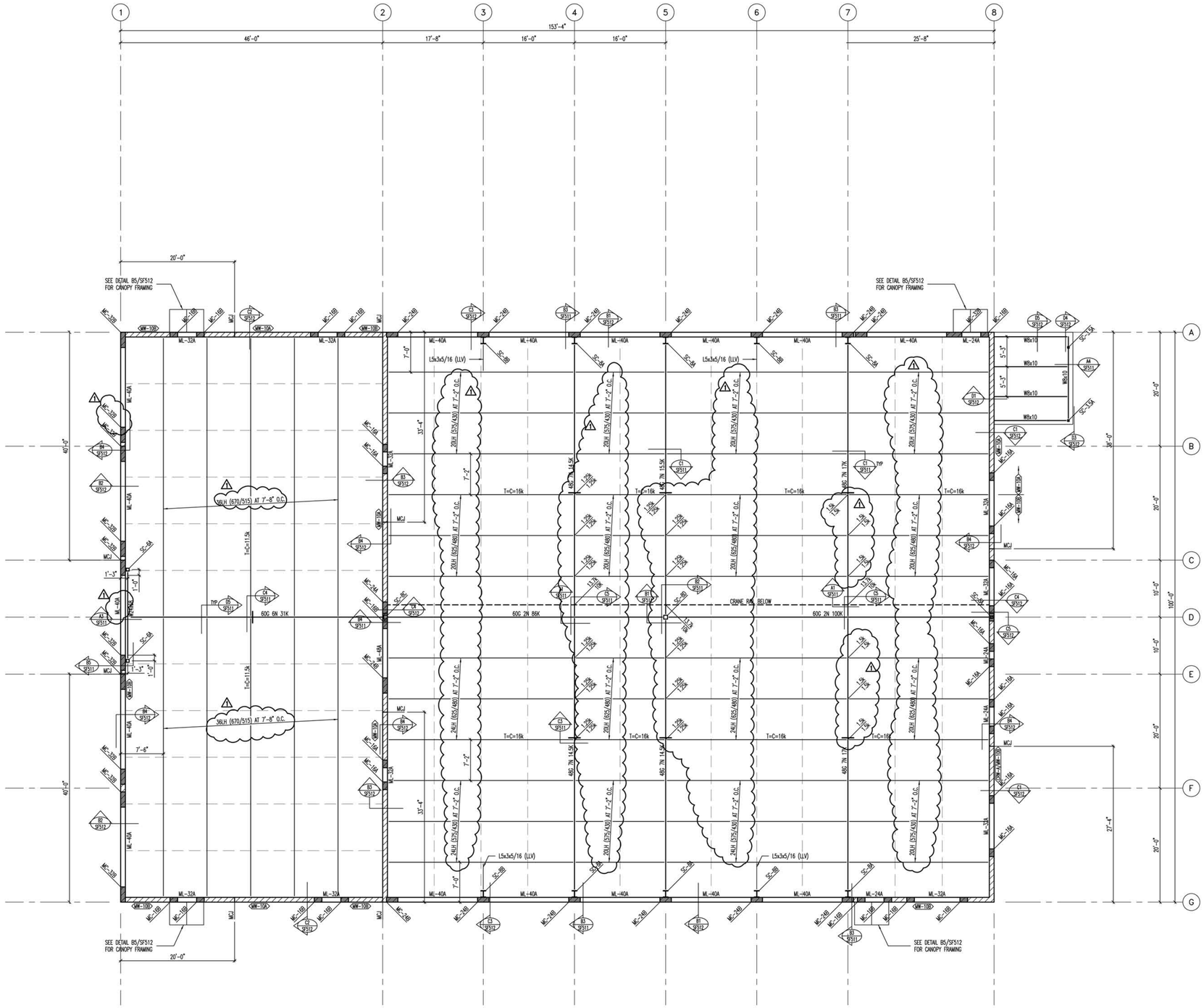

ROOF FRAMING PLAN

SCALE: 1/8"=1'-0"

MARKS AND SYMBOLS LEGEND

MASONRY_S-NOTE-ROOF

- SECTION MARK / SHEET NUMBER
- INDICATES MASONRY WALL
- INDICATES METAL ROOF DECK. SEE GENERAL STRUCTURAL ON SHEET SJ001.
- INDICATES JOIST TOP CHORD TIES. SEE DETAIL C3/SF511 AND C4/SF511.
- MW-x — INDICATES MASONRY WALL TYPE. SEE SCHEDULE ON SHEET SF601.
- * — INDICATES THAT THESE JOISTS SHALL BE DESIGNED FOR AN ADLOAD OF 1000# AT ANY POINT.
- T=C=x — INDICATES THAT, DUE TO SEISMIC FORCES, THE ROOF JOIST TOP CHORD SHALL BE DESIGNED FOR THE ADDITIONAL TENSION/COMPRESSION LOAD SHOWN, DUE TO SEISMIC. NO 1/3 INCREASE ALLOWED.
- _LH (**/**) — INDICATES LH-SERIES JOIST WITH ALLOWABLE TOTAL LOAD / ALLOWABLE LIVE (SNOW) LOAD.
- W_x_ — INDICATES STEEL BEAM, SEE GENERAL STRUCTURAL NOTES ON SHEET SF001.
- SC-x — INDICATES STEEL COLUMN. SEE SCHEDULE ON SHEET SF601.
- MC-x — INDICATES MASONRY COLUMN TYPE. SEE SCHEDULE ON SHEET SF601.
- ML-x — INDICATES MASONRY LINTEL TYPE. SEE SCHEDULE ON SHEET SF601.
- MCJ — INDICATES MASONRY CONTROL JOINT, SEE DETAIL B1/SB501.

ROOF FRAMING PLAN NOTES

1. VERIFY ALL ROOF OPENINGS FOR MECHANICAL SHAFTS, DRAINS, ETC. WITH ARCHITECTURAL AND MECHANICAL DRAWINGS.
2. JOIST SUPPLIER SHALL DESIGN ALL ROOF JOIST BEARING ENDS AT MASONRY WALLS TO TRANSFER 150# (ALLOWABLE) AXIAL LOAD THROUGH JOIST BEARING SHOE.
3. ALL JOISTS SHALL HAVE 5" DEEP BEARING ENDS (UNO).
4. ALL ROOF OPENINGS GREATER THAN, OR EQUAL TO, 12" x 12" SHALL BE FRAMED AS INDICATED IN DETAIL D1/SF511. FOR OPENINGS WHICH CUT LESS THAN TWO DECK FLUTES, SEE DETAIL D2/SF511.
5. SEE DETAIL D3/SF511 WHEN CONCENTRATED LOADS ARE LOCATED MORE THAN 6" FROM JOIST OR JOIST GIRDER PANEL POINT.
6. SEE DETAIL D4/SF511 WHEN MECHANICAL UNITS ARE HUNG BELOW JOISTS.
7. LOCATE MISCELLANEOUS MECHANICAL OPENINGS BETWEEN JOISTS, NOT UNDERNEATH THEM.
8. OPEN WEB STEEL JOISTS AND JOIST GIRDERS SHALL BE DESIGNED BY THE MANUFACTURER TO SUPPORT THE MECHANICAL AND LATERAL LOADS SHOWN ON THE ROOF FRAMING PLANS IN ADDITION TO THE UNIFORM AND POINT LOADS SHOWN.
9. JOIST BRIDGING SHOWN ON PLANS IS FOR REPRESENTATION ONLY; ACTUAL SIZE, QUANTITY, AND LOCATION WILL BE DETERMINED BY THE JOIST SUPPLIER PER SJI REQUIREMENTS. ALL BRIDGING AND BRIDGING ANCHORS NEED TO BE IN PLACE BEFORE APPLYING ANY LOADS. WHERE SKYLIGHT OR MECHANICAL UNITS/DUCTS INTERRUPT HORIZONTAL BRIDGING, PROVIDE CROSS BRIDGING AT JOIST SPACES ON EACH SIDE OF THE OPENING. WHERE DIAGONAL BRIDGING CONFLICTS WITH MECHANICAL DUCTS, REMOVE DIAGONAL BRIDGING AND REPLACE WITH HORIZONTAL BRIDGING AFTER ROOF DECK IS IN PLACE.
10. JOIST DESIGNER SHALL DESIGN JOISTS AND SUPPLY ADDITIONAL BRIDGING AS REQUIRED FOR UPLIFT DUE TO WIND. ASSUME:
    DEAD LOAD = 12psf WIND UPLIFT = 20psf (GROSS)
    NO 1/3 STRESS INCREASE ALLOWED.
11. SEE DETAIL C2/SB501 FOR ADDITIONAL REINFORCING AT MISCELLANEOUS OPENINGS IN MASONRY WALLS.
12. SEE DETAIL C5/SB501 FOR CONDITION AT RECESSES IN MASONRY WALLS.
13. SEE DETAIL B1/SB501 FOR TYPICAL CONTROL JOINTS IN MASONRY WALLS.
14. SEE DETAIL B2/SB501 FOR TERMINATION OF HORIZONTAL REINFORCING IN MASONRY WALLS.
15. SEE ARCHITECTURAL PLANS FOR DIMENSIONS TO ALL STEEL COLUMNS.

CLIENT

UDOT CONNECTING COMMUNITIES

STATION #2434
6072 E. EMIGRATION CANYON RD.
PARLEY'S CANYON, UTAH

DESIGNER

ARCHIPLEX GROUP
architecture · planning · design services
255 Crossroad Square
Salt Lake City, UT 84115
P:(801) 961-7070
F:(801) 961-7373

CONSULTANTS

"Engineering Results"
BHB Consulting Engineers
A Professional Corporation
2766 South Main Street
Salt Lake City, Utah 84115
Phone: 801.355.5656
Fax: 801.355.3950
Email: bhb@bhbengineers.com

REGISTRATION

LICENSED PROFESSIONAL ENGINEER No. 323922 GERALD R. McKENZIE STATE OF UTAH

ISSUE

MARK	DATE	DESCRIPTION
1	2-09	ADDENDUM 1
	10-08	CONSTRUCTION DOCUMENTS
	8-20-08	90% REVIEW SUBMITTAL

PROJECT NO:	08284
DFCM PROJECT NO:	08211900
DRAWN BY:	CB
CHECKED BY:	RS
SCALE:	
DATE:	FEBRUARY 17, 2009

KEY PLAN

SHEET TITLE

ROOF FRAMING PLAN

SF111

© 2008 ARCHIPLEX GROUP

A-325 BOLT SCHEDULE

MAXIMUM BEAM SIZE IN EACH BEAM DEPTH GROUP	A-325N BOLTS No. PER BEAM	A-325N BOLTS SIZE
W8	2	7/8"ø
W10	2	7/8"ø
W12	3	7/8"ø
W14	3	7/8"ø
W16	4	7/8"ø
W18	5	7/8"ø
W21	6	7/8"ø
W24	7	7/8"ø
W27	8	7/8"ø
W30	9	7/8"ø

① 3/8" SHEAR TAB FOR BEAMS UP TO W21
1/2" SHEAR TAB FOR W24 BEAMS AND LARGER
② 5/16" FILLET WELD EACH SIDE FOR 3/8" PLATE
3/8" FILLET WELD EACH SIDE FOR 1/2" PLATE
③ BOLT EDGE DISTANCE SHALL BE 1 1/2" MIN AT ALL EDGES. BOLT SPACING SHALL BE 3" MIN.
④ WHEN MORE THAN ONE ROW OF BOLTS IS NEEDED, THE FIRST ROW SHALL BE A COMPLETE ROW WITH THE REMAINDER OF THE BOLTS PLACED IN A SECOND ROW.
⑤ TS COLUMN SHALL HAVE A MINIMUM 1/4" THICKNESS FOR 3/8" SHEAR TABS AND A MINIMUM 3/8" THICKNESS FOR 1/2" SHEAR TABS. USE A SINGLE ANGLE CONNECTION WHERE STEEL TUBE WALL IS TOO THIN.

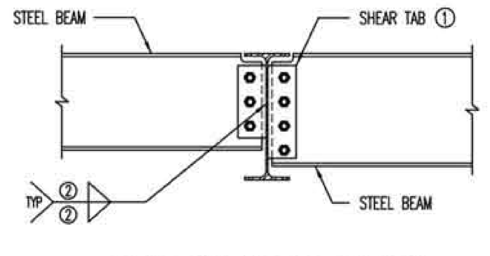

BEAM TO BEAM SHEAR TAB CONNECTION

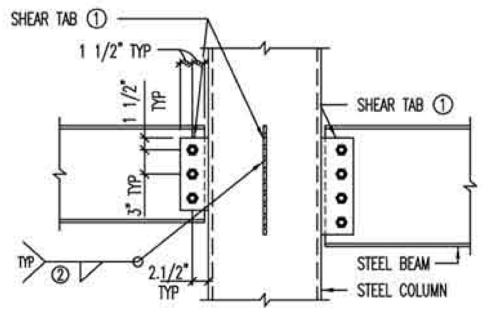

BEAM TO TS COLUMN SHEAR TAB CONNECTION

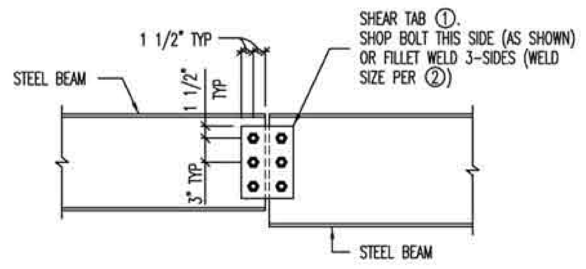

BEAM TO PARALLEL BEAM SHEAR TAB CONNECTION

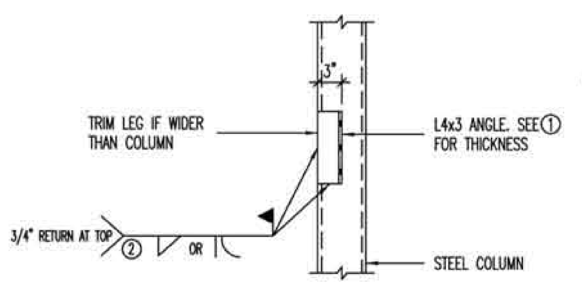

SINGLE ANGLE CONNECTION WHERE REQUIRED BY NOTE No. 5

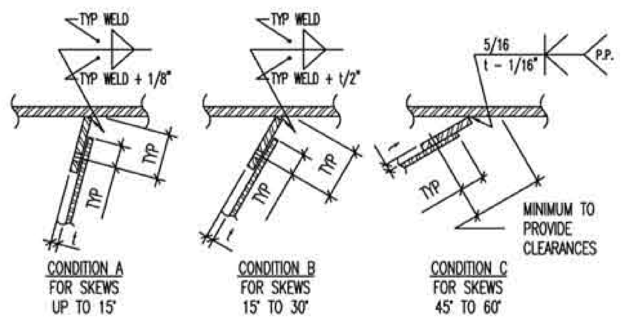

SHEAR CONNECTOR PLATES AT SKEWED MEMBERS

(C1) TYPICAL BOLTED SHEAR TAB CONNECTIONS WITH BOLT SCHEDULE [SINGLE SHEAR - STEEL TUBE OR BEAM COLUMNS]

SCHED_STL_BOLT-TS-01

NO SCALE

MASONRY LINTEL SCHEDULE

MARK	DEPTH	MAXIMUM SPAN	REINFORCING HORIZONTAL	REINFORCING STIRRUPS	COMMENTS
ML-8A	8"	3'-4"	(1) #7 x CONT	NONE	.
ML-16A	16"	6'-0"	(1) #7 x CONT TOP AND BOTTOM	#4 AT 8" O.C.	
ML-24A	24"	8'-0"	(1) #7 x CONT TOP AND BOTTOM	#4 AT 8" O.C.	
ML-32A	32"	8'-0"	(1) #7 x CONT TOP AND BOTTOM	#4 AT 8" O.C.	
ML-40A	40"	14'-0"	(1) #7 x CONT TOP AND BOTTOM	#4 AT 8" O.C.	
ML-48A	48"	-	(1) #7 x CONT TOP AND BOTTOM	#4 AT 8" O.C.	

MASONRY LINTEL NOTES:
1. LINTEL WIDTH AND MATERIAL TYPE SHALL BE THE SAME AS THE WALL IN WHICH THE LINTEL IS CONSTRUCTED.
2. GROUT MASONRY LINTELS MONOLITHICALLY WITH THE SUPPORT WALL OR COLUMN AT EACH END.
3. MASONRY LINTELS ML-1 THROUGH ML-4 SHALL BE USED OVER OPENINGS IN MASONRY WALLS WHEN A SPECIFIC MASONRY LINTEL IS NOT OTHERWISE SPECIFIED. WHEN A LINTEL IS SPECIFIED ON THE PLANS, THE MAXIMUM SPAN AS NOTED IN THIS SCHEDULE SHALL NOT APPLY. CONSULT THE STRUCTURAL ENGINEER FOR LINTELS NOT SPECIFIED ON THE PLANS WHICH HAVE A SPAN GREATER THAN 10'-0".
4. MASONRY LINTELS ML-1 THROUGH ML-4 SHALL NOT BE LOCATED DIRECTLY BELOW FLOOR OR ROOF BEAMS OR GIRDERS UNLESS NOTED OTHERWISE ON THE PLANS. JOISTS SHALL NOT BEAR ON ANY LINTEL LESS THAN 16" DEEP. CONSULT THE STRUCTURAL ENGINEER FOR LINTELS NOT SHOWN ON THE PLANS WHICH ARE LOCATED DIRECTLY BELOW FLOOR OR ROOF BEAMS OR GIRDERS.
5. EXTEND ALL HORIZONTAL REINFORCING 48 BAR DIAMETERS MINIMUM BEYOND THE EDGE OF ALL OPENINGS. IF HORIZONTAL REINFORCING CANNOT EXTEND 48 BAR DIAMETERS BEYOND EDGE OF OPENING, PROVIDE 90° STANDARD HOOK.
6. SPLICE TOP BARS AT MIDSPAN OF LINTEL ONLY AND BOTTOM BARS OVER SUPPORTS ONLY.
7. HORIZONTAL WALL REINFORCING SHALL CONTINUE THROUGH MASONRY LINTELS. WHERE BOTH HORIZONTAL WALL REINFORCING AND LINTEL REINFORCING OCCUR IN THE SAME COURSE, USE THE LARGER REINFORCING.
8. DOWEL VERTICAL REINFORCING OF WALL ABOVE LINTEL INTO THE FULL DEPTH OF LINTEL OR 48 BAR DIAMETERS, WHICHEVER IS LESS.
9. SEE GENERAL STRUCTURAL NOTES FOR ADDITIONAL REQUIREMENTS.

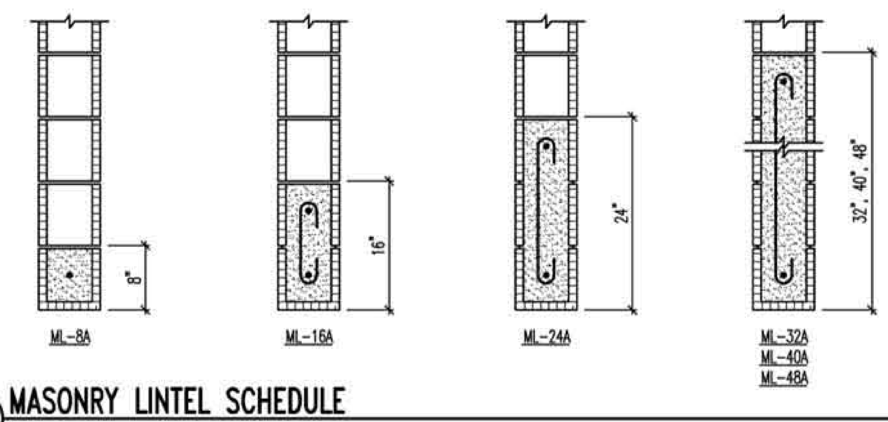

(C2) MASONRY LINTEL SCHEDULE

SCHED_MAS_LNTL-01

NO SCALE

STEEL COLUMN SCHEDULE

MARK	SIZE	STEEL BASE PLATE	STEEL CAP PLATE	COMMENTS
SC-3A	HSS3x3x1/4	3/4" (SBP-1)	1/2" (SCP-1)	.
SC-3B	HSS3x3x1/4	3/4" (SBP-1)	1/2" (SCP-2)	
SC-3.5A	HSS3.1/2x3.1/2x3/16	3/4" (SBP-1)	1/2" (SCP-1)	
SC-5A	HSS5x5x1/4	1" (SBP-2)	3/4" (SCP-1)	
SC-6A	HSS6x6x1/4	3/4" (SBP-1)	3/4" (SCP-2)	
SC-8A	W8x31	3/4" (SBP-3)	1/2" (SCP-2)	
SC-8B	W8x18	3/4" (SBP-3)	1/2" (SCP-3)	
SC-8C	HSS8x8x5/16	1" (SBP-4)	3/4" (SCP-1)	
SC-8D	HSS8x8x3/8	1" (SBP-1)	3/4" (SCP-1)	

STEEL COLUMN NOTES:
1. UNLESS NOTED OTHERWISE, ALL COLUMNS SHALL BE INSTALLED WITH (4) 3/4"ø ANCHOR RODS WITH 3" MINIMUM HOOKS. PROJECT ANCHOR RODS 3" MINIMUM ABOVE THE TOP OF THE BASE PLATE. EMBEDMENT SHALL BE 9" MINIMUM. ALL RODS SHALL BE INSTALLED WITH HARDENED WASHERS BENEATH THE NUT. ANY BOLT HOLES LARGER THAN THE ROD DIAMETER PLUS 5/16" SHALL HAVE 5/16" PLATE WASHERS INSTALLED BENEATH THE HARDENED WASHERS.
2. ALL CAP PLATE BOLTS SHALL BE 3/4"ø A325N BOLTS, TYPICAL UNLESS NOTED OTHERWISE.
3. ANCHOR RODS SHALL NOT BE WELDED (INCLUDING TACK WELDS).
4. SEE GENERAL STRUCTURAL NOTES FOR ADDITIONAL REQUIREMENTS.
5. SEE DETAIL B4/SB501 FOR COLUMNS EMBEDDED IN MASONRY WALLS.

STEEL BASE PLATE TYPES:

BASE PLATE LEGEND
co = 1/2" MINIMUM
ed = 1.1/2" MINIMUM
bc = 3" MINIMUM

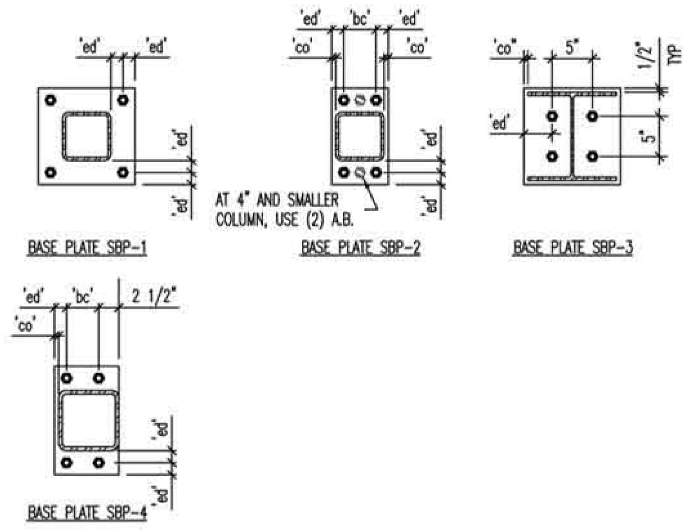

STEEL CAP PLATE TYPES:

CAP PLATE LEGEND
co = 1/2" MINIMUM
ed = 1.1/2" MINIMUM
bc = BEAM OR GIRDER GAGE
w = BEAM OR GIRDER GAGE + 3"
OR
BEAM OR GIRDER WIDTH + 1"
OR
COLUMN WIDTH + 1"
WHICHEVER IS GREATER

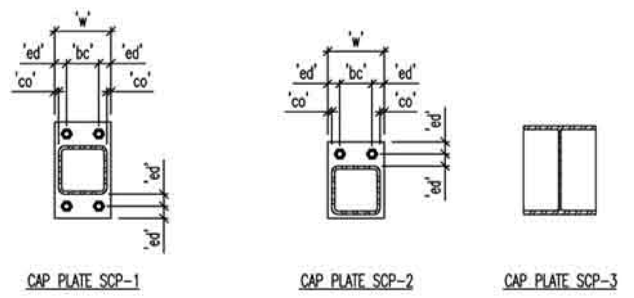

(A1) STEEL COLUMN SCHEDULE

SCHED_STL_COL-01

NO SCALE

MASONRY COLUMN SCHEDULE

MARK	SIZE	REINFORCING VERTICAL	REINFORCING TIES	REINFORCING SCHEMATIC
MC-16A	WT x 16"	(2) #5	--	
MC-16B	WT x 16"	(4) #5	#3 AT 8" O.C.	
MC-24A	WT x 24"	(3) #5	--	
MC-24B	WT x 24"	(6) #5	#3 AT 8" O.C.	
MC-32A	WT x 32"	(4) #5	#3 AT 8" O.C.	
MC-32B	WT x 32"	(8) #5	#3 AT 8" O.C.	

MASONRY COLUMN NOTES:
1. THE CENTERLINE OF THE VERTICAL BARS SHALL BE LOCATED 2 1/2" FROM THE FACE OF THE MASONRY. HORIZONTAL WALL REINFORCING SHALL BE LOCATED TO THE INSIDE OF THE VERTICAL BARS.
2. VERTICAL REINFORCING AND TIES SHALL EXTEND FULL HEIGHT OF WALL (UNO).
3. VERTICAL MASONRY COLUMN REINFORCING SHALL EXTEND INTO THE FOOTING AND TERMINATE WITH A STANDARD 90° HOOK. FOR CONCRETE FOUNDATION WALLS TALLER THAN 5'-0", VERTICAL COLUMN REINFORCING SHALL DOWEL 4'-0" MINIMUM INTO THE FOUNDATION WALL.
4. IN CONCRETE FOUNDATION WALLS, VERTICAL MASONRY COLUMN REINFORCING SHALL BE TIED WITH #3 TIES AT THE SAME SPACING AND CONFIGURATION AS THE MASONRY COLUMN ABOVE.
5. SEE GENERAL STRUCTURAL NOTES FOR ADDITIONAL REQUIREMENTS.

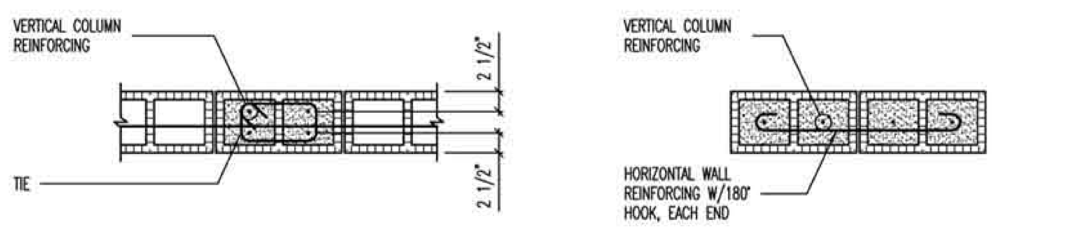

TYPICAL COLUMN CONFIGURATION SCHEMATIC

TYPICAL ISOLATED COLUMN CONFIGURATION SCHEMATIC

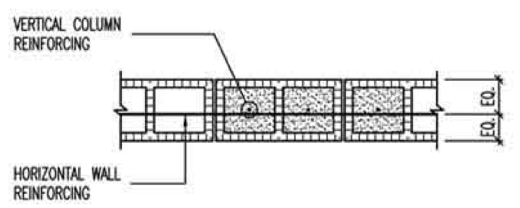

TYPICAL COLUMN CONFIGURATION SCHEMATIC

(A2) MASONRY COLUMN SCHEDULE

SCHED_MAS_COL-01

NO SCALE

MASONRY REINFORCING LAP SCHEDULE

BAR SIZE	(1) BAR PER CELL	(2) BARS PER CELL
#3	18"	18"
#4	24"	24"
#5	34"	34"
#6	37"	68"
#7	52"	92"
#8	79"	161"

2006 IBC

(B4) MASONRY REINFORCING LAP SCHEDULE (2000psi)

SCHED_MAS_REINF-01

NO SCALE

MASONRY WALL SCHEDULE

MARK	THICKNESS	MATERIAL	SOLID GROUT	REINFORCING VERTICAL	REINFORCING HORIZONTAL	REINFORCING JOINTS	COMMENTS
MW-10A	10"	CMU	YES	#5 AT 24" O.C.	#6 AT 48" O.C.	NONE	.
MW-10B	10"	CMU	YES	#5 AT 24" O.C.	#5 AT 24" O.C.	NONE	BWTN OPENINGS
				#5 AT 24" O.C.	#6 AT 48" O.C.	NONE	ABOVE OPENINGS

MASONRY WALL NOTES:
1. COORDINATE WALL FINISHES, MATERIALS, COURSING, ETC. WITH ARCHITECTURAL DRAWINGS.
2. DO NOT SOLID GROUT WALLS UNLESS REQUIRED BY SCHEDULE, NOTES, OR DETAILS.
3. SOLID GROUT ALL MASONRY COURSES BELOW GRADE.
4. VERTICAL REINFORCING SHALL BE CENTER IN WALL (UNO).
5. PROVIDE TWO VERTICAL BARS (MIN) AT ALL CORNERS AND END OF WALLS.
6. HORIZONTAL WALL REINFORCING SHALL BE PLACED BETWEEN VERTICAL MASONRY COLUMN REINFORCING BARS.
7. HORIZONTAL WALL REINFORCING SHALL CONTINUE THROUGH MASONRY LINTELS. WHERE BOTH HORIZONTAL WALL REINFORCING AND LINTEL REINFORCING OCCUR IN THE SAME COURSE, USE THE LARGER REINFORCING.
8. MASONRY WALL NOT DESIGNATED IN THE PLANS SHALL BE REINFORCED AS FOLLOWS:

THICKNESS	VERTICAL REINFORCING	HORIZONTAL REINFORCING
6"	#5 BARS AT 32" O.C.	#4 BARS AT 48" O.C.
8"	#5 BARS AT 32" O.C.	#5 BARS AT 48" O.C.
10"	#5 BARS AT 24" O.C.	#6 BARS AT 48" O.C.
12"	#5 BARS AT 24" O.C.	(2) #5 BARS AT 48" O.C.

9. SEE GENERAL STRUCTURAL NOTES FOR ADDITIONAL REQUIREMENTS.

(A4) MASONRY WALL SCHEDULE

NO SCALE

CLIENT

UDOT CONNECTING COMMUNITIES

STATION #2434
6072 E. EMIGRATION CANYON RD.
PARLEY'S CANYON, UTAH

DESIGNER

ARCHIPLEX GROUP
architecture · planning · design services
255 Crossroad Square
Salt Lake City, UT 84115
P:(801) 961-7070
F:(801) 961-7373

CONSULTANTS

"Engineering Results"
BHB Consulting Engineers
A Professional Corporation
2766 South Main Street
Salt Lake City, Utah 84115
Phone: 801.355.5656
Fax: 801.355.5950
Email: bhb@bhbengineers.com

REGISTRATION

ISSUE

MARK	DATE	DESCRIPTION
⚠1	2-09	ADDENDUM 1
	10-08	CONSTRUCTION DOCUMENTS
	8-20-08	90% REVIEW SUBMITTAL

PROJECT NO:	08284
DFCM PROJECT NO:	08211900
DRAWN BY:	CB
CHECKED BY:	RS
SCALE:	
DATE:	FEBRUARY 17, 2009

KEY PLAN

SHEET TITLE

SCHEDULES

SF601

© 2008 ARCHIPLEX GROUP

O:\2008\08284\Struct\08284_SF601.dwg, 2/13/2009 5:01:32 PM, Larissa

Copyright (C) 2007 by PVE, Inc. Salt Lake City, Utah. All rights reserved. Unauthorized copying and/or use is illegal and subject to prosecution.

By: aspendlove; Feb 12, 2009 – 2:38pm, X:\Projects\2008\08105.00.01 – Parleys Maint Sta\M001-08105.00.dwg

MECHANICAL LEGEND
(NOT ALL USED)

- RETURN OR EXHAUST DUCT DOWN
- RETURN OR EXHAUST DUCT UP
- SUPPLY AIR DUCT DOWN
- SUPPLY AIR DUCT UP
- SPIN-IN FITTING W/MVD
- FLEXIBLE DUCT
- CEILING SLOT DIFFUSER
- CEILING DIFFUSER
- CEILING EXHAUST GRILLE
- CEILING GRILLE
- ACCESS PANEL
- MANUAL VOLUME DAMPER
- MOTORIZED DAMPER
- FIRE DAMPER
- COMBINATION FIRE/SMOKE DAMPER
- THERMOSTAT OR TEMP SENSOR
- POINT OF CONNECTION TO EXISTING
- DETAIL TAG (DETAIL NO. / DRAWING NO.)
- KEYED NOTE (NOTE NO.)
- SECTION CUT LINE (SECTION NO. / DRAWING NO.)
- CONTROL TRANSFORMER (TRX)

GENERAL NOTES:

1. PIPE ROUTING AS SHOWN ON DRAWINGS IS DIAGRAMMATIC AND IS NOT TO BE SCALED. WHERE ALTERNATE ROUTING, OFFSETS AND TRANSITIONS ARE REQUIRED FOR COORDINATION OF WORK, THIS CONTRACTOR SHALL MAKE CHANGES WITHOUT ADDITIONAL COSTS.
2. THIS CONTRACTOR SHALL CLOSELY COORDINATE NEW MECHANICAL WITH NEW AND EXISTING MECHANICAL, ELECTRICAL, ARCHITECTURAL AND BUILDING STRUCTURE.
3. THIS CONTRACTOR SHALL FIELD VERIFY ALL MECHANICAL ITEMS PRIOR TO STARTING NEW WORK. ADDITIONAL COST WILL NOT BE ALLOWED FOR CONTRACTOR'S FAILURE TO BECOME FAMILIAR WITH EXISTING SITE CONDITIONS.
4. ALL MECHANICAL SYSTEMS SHALL BE INSTALLED IN ACCORDANCE WITH THE CURRENT ADOPTED EDITION OF THE BUILDING CODES, FIRE CODES, MECHANICAL CODES AND PLUMBING CODES.
5. THIS CONTRACTOR SHALL PROVIDE SUBMITALS ON ITEMS LISTED IN MECHANICAL EQUIPMENT LIST TO THE ENGINEER FOR REVIEW PRIOR TO THE ORDER, PURCHASE OR INSTALLATION.
6. ALL WATER FLOW RATES AND DIFFUSERS MUST BE BALANCED TO THE VALVES INDICATED ON THE FLOOR PLANS. PROVIDE BALANCE REPORT TO ENGINEER PRIOR TO PROJECT CLOSEOUT.
7. FIRE SPRINKLER CONTRACTOR SHALL ADD AND/OR RELOCATE SPRINKLER HEADS PER REFLECTED CEILING PLAN AND THE CURRENT ADOPTED EDITION OF NFPA AND BUILDING CODE.
8. ALL DOMESTIC COLD AND DOMESTIC HEATING WATER PIPING SHALL BE TYPE 'L' COPPER. ALL WASTE AND VENT PIPING SHALL BE CAST IRON. ALL ROOF AND OVERFLOW DRAINAGE PIPING TO BE CAST IRON.
9. VENT THE HIGH POINTS OF NEW MECHANICAL PIPING.
10. PROVIDE INSULATION FOR THE FOLLOWING:
    a. DOMESTIC HOT WATER AND HOT WATER RECIRCULATION PIPING: 1" THICK FOR ALL PIPE SIZES.
    b. DOMESTIC COLD WATER AND CONDENSATE PIPING PIPING: ½" THICK FOR PIPE SIZES ½" TO 6". (PROVIDE CONTINUOUS VAPOR BARRIER.)
    c. ROOF DRAIN, OVERFLOW DRAIN PIPING AND BOTTOM OF BOWL ½" THICK FOR PIPE SIZES ½" TO 10" (PROVIDE CONTINUOUS VAPOR BARRIER.)
11. INSULATE PIPING WITH FIBERGLASS PIPE COVERING WITH ALL SERVICE JACKET AND SELF-CAP SEAL. FITTINGS SHALL BE MITERED PIPING COVERING OF GLASS FIBER MOLDED FITTINGS FOR USE IN A RETURN AIR PLENUM. THERMAL CONDUCTIVITY SHALL BE A MAXIMUM OF .25/INCH THICKNESS AT 75°F.
12. ——— INDICATES EXISTING. ——— INDICATES NEW MATERIAL.
13. MECHANICAL CONTRACTOR IS TO COORDINATE WITH ELECTRICAL ON SIZE/QUANTITY OF MOTORIZED DAMPERS. I. E. FIRE/SMOKE DAMPERS, FIRE DAMPERS, MOTORIZED DAMPERS, ETC. . .
14. EACH TRADE IS RESPONSIBLE FOR THEIR OWN FIRE CAULKING.
15. DIVISION 15 MUST PROVIDE AND INSTALL ALL ACCESS DOORS FOR FCU's, VALVES, FLOW METERS, ETC. COORDINATE LOCATION WITH GENERAL CONTRACTOR.
16. HOUSEKEEPING PADS FOR ALL EQUIPMENT IS PROVIDED AND INSTALLED BY GENERAL CONTRACTOR. COORDINATE LOCATION WITH MECHANICAL CONTRACTOR.
17. ALL TAKE-OFF'S THROUGHOUT THE ENTIRE BUILDING SHALL BE HIGH EFFICIENCY TAKE-OFF'S (HET's). NO EXCEPTIONS TAKEN.
18. DIVISION 15 TO SUBMIT TO ENGINEER ALL AS-BULDS OF BUILDINGS MECHANICAL AND PLUMBING SYSTEMS PRIOR TO JOB COMPLETION AND FINAL PAYMENT.
19. ALL VFD'S ARE TO BE PROVIDED AND WIRED UP BY ELECTRICAL CONTRACTOR AND INSTALLED BY THE MECHANICAL CONTRACTOR.
20. ALL EXPOSED PIPING IS TO BE INSULATED AND WEATHERPROOFED.
21. ALL INVERT ELEVATIONS SHOWN ON PLANS ARE BASED OFF OF FINISHED FLOOR ELEVATION AT 100.0'. CONTRACTOR TO COORDINATE WITH ARCHITECTURAL AND CIVIL DRAWINGS FOR EXACT INVERT ELEVATIONS OF ALL LEVELS.
22. ALL FLOOR DRAINS / FLOOR SINKS THROUGH-OUT THE ENTIRE BUILDING ARE TO HAVE TRAP SEAL PRIMER VALVES PROVIDED / INSTALL BY PLUMBING CONTRACTOR.
23. ALL GAS METER REGUALTORS ARE TO BE VENTED TO THE OUTSIDE OF THE BUILDING BY THE MECHANICAL CONTRACTOR OR PROVIDE / INSTALL VENTLESS REGULATORS IF ALLOWED BY THE LOCAL JURISDICTION. NONE OF THE VENT PIPING OFF THE REGULATORS ARE SHOWN ON THE PLANS FOR CLARITY.
24. DO NOT SUPPORT MECHANICAL EQUIPMENT AND/OR PLUMBING FROM ROOF DECK. SUPPORT FROM BUILDING STRUCTURE OR FLOOR IS ACCEPTABLE. (1)

ELECTRIC WALL HEATER SCHEDULE

SYMBOL	LOCATION	OUTPUT BTU	NO. REQ'D	MOTOR AMPS	MOTOR VOLTS	MOTOR ø	MOTOR CYCLES	MAKE AND MODEL
EWH-1	SEE PLANS	5000	1	12.5	115	1	60	QMARK # CWH3150*

* PROVIDE WITH BUILT-IN THERMOSTAT

CONDENSING UNIT SCHEDULE

CODE	MFR. & MODEL NO.	SEN. MBH	AMB. TEMP.	SEER	SUCTION TEMP.	FLA	MCA	MOP	VOLTAGE/ PHASE	REMARKS
CU-1 CU-2	TRANE #2TTB2042A100	31	95	13	45	18.8	23	40	208/1	(1)(2)(3)(5)(6)(7)(8)(9)

(1) PROVIDE WITH FUSED DISCONNECT (2) NOT USED (3) ANTI-SHORT CYCLE (4) R410A (5) PROGRAMMABLE THERMOSTAT (6) HIGH/LOW PRESSURE SWITCH (7) FACTORY INSTALLED ACCUMULATOR (8) NOMINAL 3.5 TON UNIT (9) CONDENSER, EVAPORATOR AND FURNACE BY SAME MANUFACTURER

GAS-FIRED RADIANT HEATERS

SYMBOL	LOCATION	INPUT BTU	WEIGHT	CONFIG	MOTOR AMPS	MOTOR VOLTS	MOTOR ø	MOTOR CYCLES	FLUE SIZE	MAKE AND MODEL NUMBER	COMMENTS
B-1	AS SHOWN	100,000	35	SEE PLANS	1.0 RUN	120	1	60	4"ø	ROBERTS GORDON CO-RAY-VAC #B-10	(1)(2)(3)(4)(6)(7)

(1) ROBERS GORDON #EP-200 VACUUM PUMP, 3/4HP, 120 VOLT (2) PROVIDE FRESH AIR INTAKE (3) PROGRAMMABLE THERMOSTAT (4) HEAT TREATED ALUMIZED STEEL TUBE AND POLISHED ALUMINUM REFLECTOR (5) PROPANE GAS (6) NATURAL GAS (7) PROVIDE SUFFICIENT LENGTH POWER CORD TO MAKE CONNECTION FROM BURNER TO ELECTRICAL OUTLET

INTAKE HOOD SCHEDULE [H-]

PLAN CODE	AREA SERVED	MANUFACTURER & MODEL NO	CFM	SP	HEIGHT (IN)	THROAT WIDTH (IN)	THROAT LENGTH (IN)	THROAT VELOCITY FPM	ACCESSORIES
IH-1	VEHICLE BAY 102	PENN BARRY #PH	14300	0.04	36	68.5	68.5	500	(1)(2)(3)(4)(5)

(1) CURB (2) MOTORIZED DAMPER (3) INTERLOCK DAMPER MOTOR WITH EF-2 (4) BIRD SCREEN (5) COLOR TO MATCH ROOF (PAINT IF NEEDED).

AIR DEVICE SCHEDULE

GRILLE NUMBER / GRILLE CFM

PLAN CODE	TYPE & DUTY	NECK SIZE	CEILING TYPE	N.C. LEVEL MAX	SP	MAX. CFM	DAMPER	COLOR	MANUFACTURER & MODEL NO.	REMARKS
S-1	4-WAY SUPPLY	6"ø	SEE PLANS	20	0.05	176	IN DUCT	WHITE	PRICE #SCDA	(1)(3)(4)
S-2	4-WAY SUPPLY	8"ø	SEE PLANS	20	0.05	280	IN DUCT	WHITE	PRICE #SCDA	(2)(3)(4)
S-3	4-WAY SUPPLY	10"ø	SEE PLANS	21	0.05	436	IN DUCT	WHITE	PRICE #SCDA	(2)(3)(4)
S-4	SUPPLY GRILLE	28" x 24"	SEE PLANS	40	0.146	4290	IN DUCT	WHITE	PRICE #510	(5)
R-1	RETURN	12" X 12"	SEE PLANS	15	0.06	630	OBD	WHITE	PRICE #80D	
R-2	RETURN	22" X 12"	SEE PLANS	22	0.085	1280	IM DUCT	WHITE	PRICE #80D	

(1) 12" X 12" FACE MODULE (2) 24" X 24" FACE MODULE (3) 3 CONCENTRIC CONES (4) SET FOR HORIZONTAL DISCHARGE (5) ZERO DEFLECTION

FURNACE SCHEDULE

SYMBOL	INPUT BTU	OUTPUT BTU (2)	CFM	EXT S.P.	FAN SPEED	FILTER NO.	FILTER SIZE	MOTOR HP	MOTOR ø	MOTOR CYCLES	MOTOR VOLT	MOTOR DRIVE	MANUFACTURER AND MODEL NO.	COMMENTS
F-1, 2	100,000	93,000	1400	0.5	1100 RPM	1	24"x25"x1"	3/4	1	60	115	DIRECT	TRANE #TUX100C960D	(1)(3)(4)(6)(7)(8)

(1) AFUE – 93 (2) AT ELEVATION (3) R-22 (4) PROVIDE W/TXC050C4HPD EVAPORATOR (5) PROPANE GAS KIT (6) CONCENTRIC VENT KIT (7) CONDENSER, EVAPORATOR AND FURNACE BY SAME MANUFACTURER (8) NATURAL GAS

LOUVER SCHEDULE [L-]

PLAN CODE	SYSTEM SERVED	MANUFACTURER & MODEL NO.	CFM	VELOCITY FPM	FREE AREA (SF)	DIMENSIONS (W x H) (IN)	COLOR	COMMENTS
L-1	O.A. FOR F-1, 2	RUSKIN # ELF 811S	400	600	0.67	18" x 18"	PRE-FINISHED WHITE	PROVIDE WITH BIRD SCREEN
L-2	COMBUSTION AIR	RUSKIN # ELF 811S	–	–	0.77	12" x 12"	PRE-FINISHED WHITE	PROVIDE WITH BIRD SCREEN
L-3	EF-2	RUSKIN # ELF 811S	14300	700	20.39	78" x 78"	PRE-FINISHED WHITE	PROVIDE WITH BIRD SCREEN
L-4	EF-4	RUSKIN # ELF 811S	6710	700	7.10	48" x 48"	PRE-FINISHED WHITE	PROVIDE WITH BIRD SCREEN
L-5	O.A. FOR EF-4	RUSKIN # ELF 811S	3355	500	6.20	48" x 42"	PRE-FINISHED WHITE	PROVIDE WITH BIRD SCREEN MOTORIZED DAMPER INTERLOCKED WITH EF-4

EXHAUST FAN SCHEDULE

SYMBOL	NO. REQ'D	LOCATION	CFM	TOTAL SP	LB'S	SONES	ROOF OR WALL OPENING	MOTOR HP	MOTOR ø	MOTOR CYCLES	MOTOR VOLTS	MOTOR RPM	COMMENTS
EF-1	AS SHOWN	RESTROOM	150	0.5	15	3.6	8"ø	50 WATTS	1	60	120	1200	COOK #GN- 160 (4)(6)
EF-2	AS SHOWN	VEHICLE SVC BAY #102	14300	0.25"	882	22	61" SQ.	2.0	3	60	208	321	COOK #54XLP (1)(2)(3)(7)(8)(9)
EF-3	AS SHOWN	DRYER	200	0.5"	–	24	4"ø	1/10	1	60	120	1550	REVERSOMATIC * PWS #300 (5)
EF-4	AS SHOWN	VEHICLE SVC BAY #106	6710	0.25"	275	24	37" SQ.	3/4	1	60	120	875	COOK #30XMP (1)(2)(3)(7)(8)(9)

(1) PROVIDE INSULATED HOUSING AROUND MOTOR (2) CONTROL WITH CARBON MONOXIDE DETECTOR THROUGH ON/AUTO SWITCH (3) INNER LOCK LOUVER MOTOR W/ FAN MOTOR (4) CEILING GRILLE (5) FACTORY INSTALLED PRESSURE SENSOR TO AUTOMATICALLY START BOOSTER FAN WHEN DRYER STARTS. (6) CONTROL WITH MOTION DETECTOR (7) OUTLET LOUVER. SCHEDULED ON M001 (8) MOTORIZED DAMPER. INTERLOCK DAMPER WITH FAN MOTOR (9) SAFETY INLET SCREEN

CLIENT

UDOT CONNECTING COMMUNITIES

STATION #2434
I-80 E.B. EXIT 134
PARLEY'S CANYON

DESIGNER

ARCHIPLEX GROUP
architecture · planning · design services
255 Crossroad Square
Salt Lake City, UT 84115
P:(801) 961-7070
F:(801) 961-7373

CONSULTANTS

PVE Inc.
Consulting Mechanical / Electrical Engineers
1040 North 2200 West, Suite 100
Salt Lake City, UT 84116
Phone: (801) 359-3158
Fax: (801) 521-4114

REGISTRATION

REGISTERED PROFESSIONAL ENGINEER
ALAN D. SPENDLOVE
166911
STATE OF UTAH

ISSUE

MARK	DATE	DESCRIPTION
1	2-17-09	ADDENDUM 1
	1/2009	CONSTRUCTION DOCUMENTS
	8-20-08	90% REVIEW SUBMITTAL

PROJECT NO:	08105.00.01
DRAWN BY:	MJG
CHECKED BY:	ADS
SCALE:	
DATE:	JANUARY, 2009

KEY PLAN

SHEET TITLE

MECHANICAL SCHEDULES

M001

© 2004 ARCHIPLEX GROUP

Copyright (C) 2007 by PVE, Inc. Salt Lake City, Utah. All rights reserved. Unauthorized copying and/or use is illegal and subject to prosecution.

PIPING LEGEND
(NOT ALL USED)

GATE VALVE		CHILLED WATER SUPPLY	CHS
OS & Y PATTERN GATE VALVE		CHILLED WATER RETURN	CHR
BALL VALVE		CONDENSER WATER SUPPLY	CWS
BUTTERFLY VALVE		CONDENSER WATER RETURN	CWR
MOTORIZED BUTTERFLY VALVE		HEATING WATER SUPPLY	HWS
HEAT TRACING		HEATING WATER RETURN	HWR
DEIONIZED WATER	DI	WATER TREATMENT	WT
CHECK VALVE		FIRE DEPT. HORN & LIGHT	
SOLENOID VALVE		HOT GAS	HG
AUTOMATIC CONTROL VALVE (2-WAY)		FLEXIBLE PIPE CONNECTION	
AUTOMATIC CONTROL VALVE (3-WAY)		REDUCED PRESSURE BACKFLOW PREVENTER	RPBP
PRESSURE REDUCING VALVE		DIRECTION OF FLOW	
P & T RELIEF VALVE		ELBOW DOWN (DN)	
AIR VENT (AUTOMATIC)		ELBOW UP	
REFRIGERANT LIQUID	RL	PIPE CAP	
REFRIGERANT SUCTION	RS	TEE DOWN	
THERMAL EXPANSION VALVE		UNION	
STRAINER		DOMESTIC COLD WATER	
CIRCUIT SETTER		DOMESTIC HOT WATER	
FLOW METER		HOT WATER CIRC.	
PET COCK OR GAUGE COCK		TEMPERED WATER	T
PRESSURE GAUGE W/GAUGE COCK		SANITARY (PLBG) VENT	
		SANITARY SEWER ABOVE GRADE	
THERMOMETER		SANITARY SEWER BELOW GRADE	
TEMPERATURE & PRESSURE TEST PLUG		DRAIN	D
IN-LINE PUMP		ROOF DRAIN PIPING	RD
FLOW SWITCH	F	OVERFLOW DRAIN PIPING	OD
AQUASTAT	A	STORM DRAIN PIPING ABOVE GRADE	SD
HOSE BIBB OR SILLCOCK		STORM DRAIN PIPING BELOW GRADE	SD
VACUUM	V	FIRE SERVICE	F
FLOOR DRAIN		PROPANE	P
FLOOR SINK		COMPRESSED AIR	A
HOT GAS BYPASS	HGBP	VENT THROUGH ROOF	
WALL CLEANOUT OR CLEANOUT		STEAM	S
FLOOR OR GRADE CLEANOUT		CONDENSATE	C
GRADE CLEANOUT W/ CONCRETE PAD		REVERSE OSMOSIS	RO

WATER SOFTENER SCHEDULE WS-

PLAN CODE	CONTINUOUS FLOW RATE	CAPACITY (GRAINS)	CONTROL	DIMENSIONS	COMMENTS	MANUFACTURER & MODEL NO.
WS-1	39 GPM	100,000	AUTOMATIC, DIGITAL, ON DEMAND	13"x64" RESIN TANK 18"x34" SALT TANK	1	WATER GUARD HE #7000

1 FIBERGLASS WOUND, POLYETHYLENE TANK.

PRESSURE WASHER PW

PLAN CODE	INPUT (BTUH)	FUEL	GPM	FUEL TYPE	DIMENSIONS			POWER				MANUFACTURER & MODEL NO.	COMMENTS
					WIDTH	LENGTH	HEIGHT	VOLTS	AMPS	PHASE	HP		
PW-1	350,000	NG	4.0	TYPE B	24"	53"	48"	208	27	3	8	LANDA #VHGH-30024	1 2 3 4 5 6 7 8 9 10 11

1 INSTALL PER MANUFACTURER'S RECOMMENDATIONS 2 TIME DELAY SHUTDOWN 3 ELECTRONIC IGNITION 4 STAINLESS STEEL COIL WRAP 5 4-PANEL STAINLESS SKIRT & COVER 6 HOSE REEL RECEPTACLE 7 CONTROL PANEL & GAUGES 8 420 STAINLESS STEEL NOZZLE 9 BACKFLOW PREVENTION WATER SUPPLY SYSTEM 10 INSULATED TRIGGER SPRAY GUN 11 150' OF 3/8" ID DOUBLE BRAIDED STEEL HOSE MEETING SAE100R2

GENERAL NOTES:

1. PIPE ROUTING AS SHOWN ON DRAWINGS IS DIAGRAMMATIC AND IS NOT TO BE SCALED. WHERE ALTERNATE ROUTING, OFFSETS AND TRANSITIONS ARE REQUIRED FOR COORDINATION OF WORK, THIS CONTRACTOR SHALL MAKE CHANGES WITHOUT ADDITIONAL COSTS.
2. THIS CONTRACTOR SHALL CLOSELY COORDINATE NEW MECHANICAL WITH NEW AND EXISTING MECHANICAL, ELECTRICAL, ARCHITECTURAL AND BUILDING STRUCTURE.
3. THIS CONTRACTOR SHALL FIELD VERIFY ALL MECHANICAL ITEMS PRIOR TO STARTING NEW WORK. ADDITIONAL COST WILL NOT BE ALLOWED FOR CONTRACTOR'S FAILURE TO BECOME FAMILIAR WITH EXISTING SITE CONDITIONS.
4. ALL MECHANICAL SYSTEMS SHALL BE INSTALLED IN ACCORDANCE WITH THE CURRENT ADOPTED EDITION OF THE BUILDING CODES, FIRE CODES, MECHANICAL CODES AND PLUMBING CODES.
5. THIS CONTRACTOR SHALL PROVIDE SUBMITTALS ON ITEMS LISTED IN MECHANICAL EQUIPMENT LIST TO THE ENGINEER FOR REVIEW PRIOR TO THE ORDER, PURCHASE OR INSTALLATION.
6. ALL WATER FLOW RATES AND DIFFUSERS MUST BE BALANCED TO THE VALVES INDICATED ON THE FLOOR PLANS. PROVIDE BALANCE REPORT TO ENGINEER PRIOR TO PROJECT CLOSEOUT.
7. FIRE SPRINKLER CONTRACTOR SHALL ADD AND/OR RELOCATE SPRINKLER HEADS PER REFLECTED CEILING PLAN AND THE CURRENT ADOPTED EDITION OF NFPA AND BUILDING CODE.
8. ALL DOMESTIC COLD AND DOMESTIC HEATING WATER PIPING SHALL BE TYPE 'L' COPPER. ALL WASTE AND VENT PIPING SHALL BE CAST IRON. ALL ROOF AND OVERFLOW DRAINAGE PIPING TO BE CAST IRON.
9. VENT THE HIGH POINTS OF NEW MECHANICAL PIPING.
10. PROVIDE INSULATION FOR THE FOLLOWING:
    a. DOMESTIC HOT WATER AND HOT WATER RECIRCULATION PIPING: 1" THICK FOR ALL PIPE SIZES.
    b. DOMESTIC COLD WATER AND CONDENSATE PIPING PIPING: ½" THICK FOR PIPE SIZES ½" TO 6". (PROVIDE CONTINUOUS VAPOR BARRIER.)
    c. ROOF DRAIN, OVERFLOW DRAIN PIPING AND BOTTOM OF BOWL ½" THICK FOR PIPE SIZES ½" TO 10" (PROVIDE CONTINUOUS VAPOR BARRIER.)
11. INSULATE PIPING WITH FIBERGLASS PIPE COVERING WITH ALL SERVICE JACKET AND SELF-CAP SEAL. FITTINGS SHALL BE MITERED PIPING COVERING OF GLASS FIBER MOLDED FITTINGS FOR USE IN A RETURN AIR PLENUM. THERMAL CONDUCTIVITY SHALL BE A MAXIMUM OF .25/INCH THICKNESS AT 75°F.
12. ——— INDICATES EXISTING. ——— INDICATES NEW MATERIAL.
13. MECHANICAL CONTRACTOR IS TO COORDINATE WITH ELECTRICAL ON SIZE/QUANTITY OF MOTORIZED DAMPERS. I. E. FIRE/SMOKE DAMPERS, FIRE DAMPERS, MOTORIZED DAMPERS, ETC. . .
14. EACH TRADE IS RESPONSIBLE FOR THEIR OWN FIRE CAULKING.
15. DIVISION 15 MUST PROVIDE AND INSTALL ALL ACCESS DOORS FOR FCU's, VALVES, FLOW METERS, ETC. COORDINATE LOCATION WITH GENERAL CONTRACTOR.
16. HOUSEKEEPING PADS FOR ALL EQUIPMENT IS PROVIDED AND INSTALLED BY GENERAL CONTRACTOR. COORDINATE LOCATION WITH MECHANICAL CONTRACTOR.
17. ALL TAKE-OFF'S THROUGHOUT THE ENTIRE BUILDING SHALL BE HIGH EFFICIENCY TAKE-OFF'S (HET's). NO EXCEPTIONS TAKEN.
18. DIVISION 15 TO SUBMIT TO ENGINEER ALL AS-BUILDS OF BUILDINGS MECHANCIAL AND PLUMBING SYSTEMS PRIOR TO JOB COMPLETION AND FINAL PAYMENT.
19. ALL VFD'S ARE TO BE PROVIDED AND WIRED UP BY ELECTRICAL CONTRACTOR AND INSTALLED BY THE MECHANICAL CONTRACTOR.
20. ALL EXPOSED PIPING IS TO BE INSULATED AND WEATHERPROOFED.
21. ALL INVERT ELEVATIONS SHOWN ON PLANS ARE BASED OFF OF FINISHED FLOOR ELEVATION AT 100.0'. CONTRACTOR TO COORDINATE WITH ARCHITECTURAL AND CIVIL DRAWINGS FOR EXACT INVERT ELEVATIONS OF ALL LEVELS.
22. ALL FLOOR DRAINS / FLOOR SINKS THROUGH-OUT THE ENTIRE BUILDING ARE TO HAVE TRAP SEAL PRIMER VALVES PROVIDED / INSTALL BY PLUMBING CONTRACTOR.
23. ALL GAS METER REGULATORS ARE TO BE VENTED TO THE OUTSIDE OF THE BUILDING BY THE MECHANICAL CONTRACTOR OR PROVIDE / INSTALL VENTLESS REGULATORS IF ALLOWED BY THE LOCAL JURISDICTION. NONE OF THE VENT PIPING OFF THE REGULATORS ARE SHOWN ON THE PLANS FOR CLARITY.
24. DO NOT SUPPORT MECHANICAL EQUIPMENT OR/AND PLUMBING FROM ROOF DECK. SUPPORT FROM BUILDING STRUCTURE OR FLOOR IS ACCEPTABLE.

1

PLUMBING FIXTURE CONNECTION SCHEDULE

PLAN CODE	DESCRIPTION	CONNECTION SIZE					COMMENTS
		C.W.	H.W.	WASTE	VENT	TRAP	
WC-1	WATER CLOSET	1/2"	–	4"	2"	INT.	FLOOR MOUNTED TANK TYPE, CRANE – HYMONT #31055, 18 INCH RIM HEIGHT, MAXIMUM WATER USAGE OF 1.6 GALLON'S PER FLUSH. TANK TO HAVE PRESSURE ASSISTED FLUSH. SEAT – PROVIDE SPLIT FRONT TYPE WITH CHECK HINGE, BEMIS #1955C PROVIDE CHROME PLATED SUPPLY AND STOP
L-1	LAVATORY	1/2"	1/2"	1-1/2"	1-1/2"	1-1/2"	WALL MOUNTED, CRANE #1412V, HANDICAP TYPE, VITREOUS CHINA, SELF SUPPORTING FIXTURE, SIZE 24"X21". FAUCET AND DRAIN – SYMMONS S-6080 WITH DRAIN GRID, BATTERY OPERATED WITH BATTERY INSIDE BODY OF FAUCET. PROVIDE CHROME PLATED SUPPLIES AND STOPS. DEARBORN, 17 GA TUBE "P" TRAP, CHROME PLATED. FITTINGS AND TRAP TO BE INSULATED TO MEET ADA REQUIREMENTS PROVIDE MCGUIRES PROWRAP. PROVIDE WITH CARRIER. INSTALL TMV-2.
S-1	UTILITY SINK	1/2"	1/2"	3"	1-1/2"	3"	ELKAY ESSW 2520-C, WALL MOUNTED 304 14 GAUGE STAINLESS STEEL SERVICE SINK WITH HOSE THREAD, VACUUM BREAKER, WALL BRACKET AND PAIL HOOK SPOUT AND LK173 CAST IRON P-TRAP. INSTALL TMV-2, PROVIDE ACCESS DOOR IF REQUIRED.
U-1	URINAL	3/4"	–	2"	1-1/2"	INT.	WALL MOUNTED URINAL CRANE #7197, 1.0 GPF. VITEROUS CHINA, MOUNT 17" A.F.F. TO MEET ADA REQUIREMENTS. PROVIDE WITH SLOAN #8186 G2 OPTIMA PLUS BATTERY OPERATED FLUSHMETER, FLUSHMETER TO HAVE MANUAL OVERRIDE (URINAL SHALL FIT SPACE AVAILABLE.) PROVIDE CARRIER.
HB-1	HOSE BIBB	3/4"	–	–	–	–	SINGLE SPOUT WITH HOSE CONNECTION. PROVIDE WITH VACUUM BREAKER AND METAL HANDLE. (PLASTIC HANDLES ARE NOT ACCEPTABLE). CHICAGO MODEL NO. 293 WITH E27 VACUUM BREAKER
WH-1	WALL HYDRANT	3/4"	–	–	–	–	WADE W8600,175, NON-FREEZE WALL HYDRANT WITH NICKEL BRONZE BOX, COMPLETE WITH CHROME PLATED LOCKING COVER AND BOX WITH INTEGRAL VACUUM BREAKER. WALL HYDRANT TO BE SIZED FOR WALL THICKNESS.
FD-1	FLOOR DRAIN	–	–	3"	1-1/2"	2"	FLOOR DRAIN J.R. SMITH #2005-A. WITH NICKEL BRONZE STRAINER, TRAP PRIMER CONNECTION AND DEEP SEAL TRAP.
ES-1	EMERGENCY EYEWASH & SHOWER	1-1/4"	–	–	–	–	BRADLEY S19-310SBFW, FLOOR MOUNTED SAFETY STATION COMBINATION EYEWASH AND EMERGENCY SHOWER. ALUMINUM FLOOR FLANGE AND GALVANIZED INTERMEDIATE PIPE AND FITTINGS, TWO SOFT STREAM OUTLET HEADS, STAINLESS STEEL BOWL AND STAY OPEN TYPE VALVE ON EYEWASH, ORANGE CYCOLAC PLASTIC SHOWER HEAD WITH STAY OPEN VALVE (OPERATED BY PULL ROD AND HANDLE), 1-1/4" IPS FEMALE INLET AND OUTLET.
S-2	DOUBLE COMPARTMENT SINK	1/2"	1/2"	2"	1-1/2"	2"	JUST #DL-ADA-2233-A-GR, STAINLESS STEEL DOUBLE COMPARTMENT, SELF RIMMING, SIZE 22"X33" OD WITH TWO COMPARTMENTS THAT ARE 16"x14"x8" DEEP, MATERIAL – 18 GAUGE TYPE 304 STAINLESS STEEL, SEAMLESS DIE DRAWN. INTERIOR SURFACES POLISHED TO A NON-POROUS FINISH. UNDERSIDE TO BE FULLY COATED INSULATED FOR SOUND AND CONDENSATION REDUCTION. FAUCET AND DRAIN – GOOSENECK WITH SPRAY. JUST JWF-201 WITH TEAR DROP HANDLES AND JB-99 DRAIN OR APPROVED EQUAL. PROVIDE WITH CHROME PLATED SUPPLY AND STOPS. DEARBORN 17 GA TUBE "P" TRAP, CHROME PLATED. INSTALL TMV-2.
FS-1	FLOOR SINK	–	–	2"	1-1/2"	2"	FLOOR SINK J.R. SMITH #3020. COMPLETE WITH ACID RESISTANT COATED INTERIOR AND POLISHED ALUMINUM DOME BOTTOM STRAINER
TD-1	TRENCH DRAIN	–	–	3"	2"	3"	TRENCH DRAIN J.R. SMITH #9931, COMPLETE WITH HEAVY DUTY FRAME, LOAD CLASS C STAINLESS STEEL SLOTTED GRATE, FULLY SLOPED CHANNELS.
TMV-1	TEMPERATURE MIXING VALVE	1/2"	1/2"	–	–	–	EMERGENCY FIXTURE THERMOSTATIC MIXING VALVE. BRADLEY #S19-2100 COMPLETE WITH CHROME PLATED FINISH, STAINLESS STEEL SURFACE MOUNTED BOX, INTEGRAL STRAINER CHECK STOPS ON INLET BUILT IN COLD WATER BYPASS, HOT WATER SHUT OFF WHEN COLD SUPPLY IS LOST, OUTLET TEMPERATURE GAUGE. 25 GPM @ 15 PSI PRESSURE DROP. SET TEMPERATURE TO 85°.
TMV-2	TEMPERATURE MIXING VALVE	1/2"	1/2"	–	–	–	WATER TEMPERATURE LIMITING MIXING VALVE, SYMMONS #S-225-CK. SET VALVE TO SUPPLY 110°F. HOT WATER.
WB-1	WASHER BOX	1/2"	1/2"	2"	2"	2"	FIRE RATED WASHING MACHINE BOX, GUY GRAY #FR12GSHA, SINGLE LEVER WITH VALVE ARRESTORS AND DRAIN OUTLET.
SH-1	ADA COMPLIANT SHOWER	1/2"	1/2"	2"	2"	2"	ADA COMPLIANT SHOWER, SYMMONS #BP-S6-B30-X-LR-V-141 COMPLETE WITH SELF-CLEANING FULL DRENCH SHOWER HEAD 2.5 GPM, PRESSURE BALANCING MIXING VALVE, STOPS, LOOP HANDLE, POLISH CHROME FINISH, DIVERTING VALVE, IN-LINE VACUUM BREAKER, HAND SHOWER WITH 5' FLEXIBLE METAL HOSE AND 30" SLIDER BAR.
IPS-1	ICE MAKER BOX	1/2"	1/2"	2"	2"	2"	ICE MAKER BOX. GUYGARY # M1B-1, 20 GAUGE POWDER CODED BOX WITH ¼ TURN BALL VALVE
HB-2	HW & CW HOSE BIBB	1/2"	1/2"	–	–	–	WALL MOUNTED SERVICE SINK FAUCET. CHICAGO #305-VBCP. COMPLETE WITH SHORT SPOUT, VACUUM BREAKER, 3/4" MALE GARDEN HOSE OUTLET.
DF-1	DRINKING FOUNTAIN	1/2"	–	2"	1-1/2"	1-1/2"	BI-LEVEL, ADA COMPLIANT WATER COOLER DRINKING FOUNTAIN, ACORN #A112108F, 8 GPH, 304 STAINLESS STEEL TOP, GRANITE POWDER COATED GALVANIZED CABINET. POLISHED CHROME PLATED BRASS BUBBLER, CONCEALED SUPPORT CARRIER, GLASS FILLER WITH LEVEL HANDLE, 100 MESH INLET STRAINER, 120 VOLT, 400 WATTS.

1

INSTANTANEOUS GAS FIRED WATER HEATER SCHEDULE WH-

PLAN CODE	INPUT (BTUH)	EFFICIENCY %	FUEL	GPM	TEMP. RISE (°F)	FLUE DIA.	FLUE TYPE	DIMENSIONS			POWER			MANUFACTURER & MODEL NO.	ACCESSORIES/COMMENTS
								WIDTH (in.)	LENGTH (in.)	HEIGHT (in.)	VOLTS	AMPS	PHASE		
WH-1	199,000	98%	NG	5.2	75	3"	3	10	17	28	120	2.0	1	NAVIEN #CR-240A	1 2 3 4

1 OUTLET THERMOMETER 2 INSTALL PER MANUFACTURER RECOMMENDATIONS 3 CONCENTRIC VENT KIT (STAINLESS STEEL BY NAVIENS) 4 CONNECTION WIRE TO LINK WATER HEATERS TOGETHER 5 RUN CONDENSATE TO NEAREST FLOOR SINK.

AIR COMPRESSOR AC-

PLAN CODE	DUTY	ACFM @ 175 PSI	RECEIVER CAP. (GAL)	ELECTRICAL		MANUFACTURER & MODEL NO
				VOLT/PH	HP	
AC-1	SHOP AIR	24	80V	208/3	7.5	SPEEDAIRE WW GRAINGER #5F565

* START/STOP, WITH PROVISION FOR NO LOAD START. INCLUDE MAGNETIC STARTER

CIRCULATION PUMP SCHEDULE CP-

PLAN CODE	DUTY	GPM	FEET OF HEAD	PUMP RPM	MOTOR		MANUFACTURER & MODEL NO.	COMMENTS
					H.P.	VOLTAGE & PHASE		
CP-1	DOMESTIC HOT WATER RECIRCULATION	1.5	6	3250	1/40	115	TACO #006PNP	SEE HOT WATER HEATER DETAIL FOR INSTALLATION REQ.

CLIENT

UDOT CONNECTING COMMUNITIES

STATION #2434
I-80 E.B. EXIT 134
PARLEY'S CANYON

DESIGNER

ARCHIPLEX GROUP
architecture · planning · design services
255 Crossroad Square
Salt Lake City, UT 84115
P:(801) 961-7070
F:(801) 961-7373

CONSULTANTS

PVE Inc.
Consulting Mechanical Electrical Engineers
1040 North 2200 West, Suite 100
Salt Lake City, UT 84116
Phone: (801) 359-3158
Fax: (801) 521-4114

REGISTRATION

REGISTERED PROFESSIONAL ENGINEER
ALAN D. SPENDLOVE
166911
STATE OF UTAH

ISSUE

MARK	DATE	DESCRIPTION
1	2-17-09	ADDENDUM 1
	1/2009	CONSTRUCTION DOCUMENTS
	8-20-08	90% REVIEW SUBMITTAL

PROJECT NO:	08105.00.01
DRAWN BY:	MJG
CHECKED BY:	ADS
SCALE:	
DATE:	JANUARY, 2009

KEY PLAN

SHEET TITLE

PLUMBING SCHEDULES

P001

© 2004 ARCHIPLEX GROUP

By: cspendlove; Feb 12, 2009 - 2:33pm, X:\Projects\2005\08105.00.01 - Parleys Maint Sta\P001-08105.00.dwg

Copyright (C) 2007 by PVE, Inc. Salt Lake City, Utah. All rights reserved. Unauthorized copying and/or use is illegal and subject to prosecution.

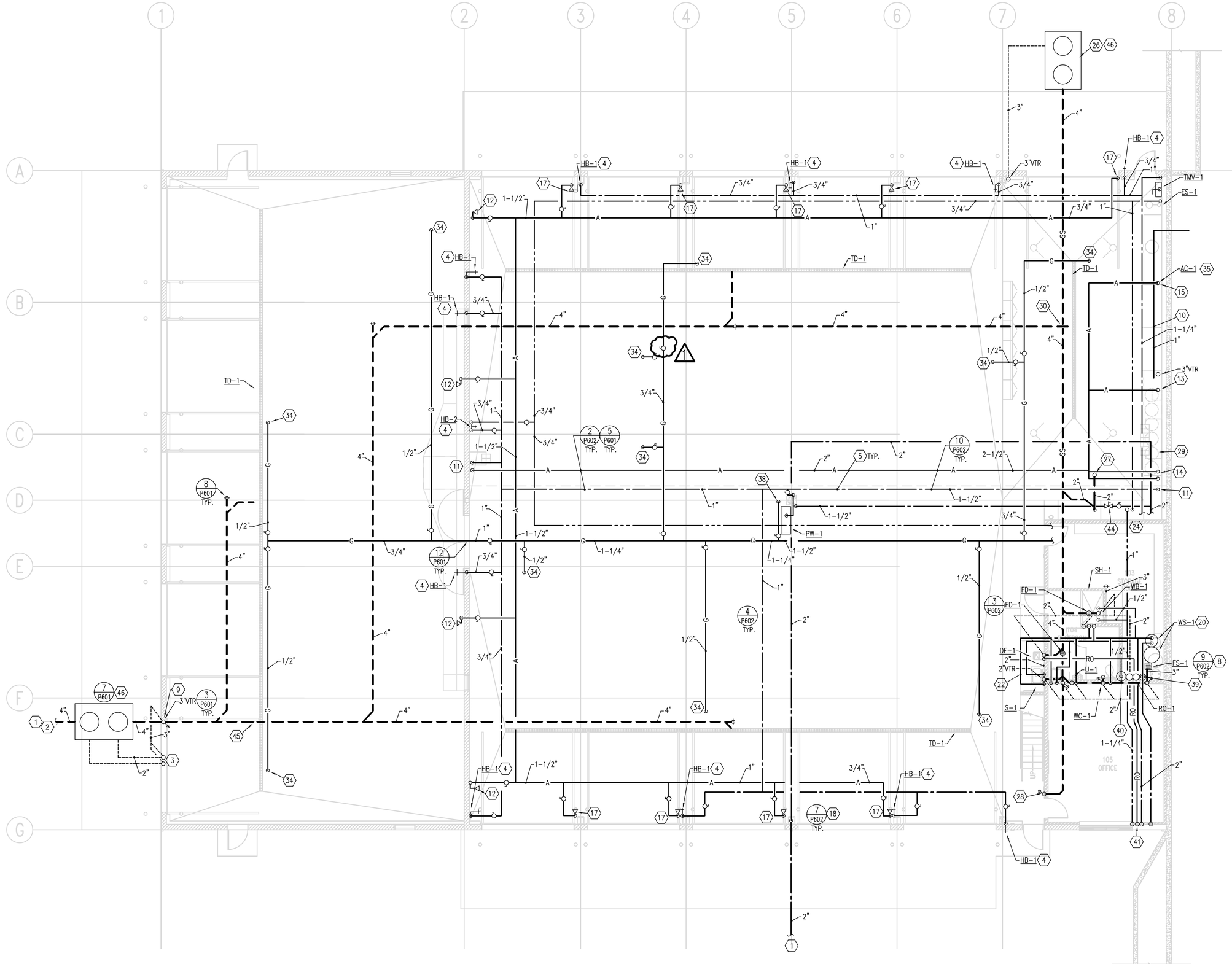

1 P201 **1st FLOOR PLUMBING PLAN**
SCALE: 1/8" = 1' – 0"

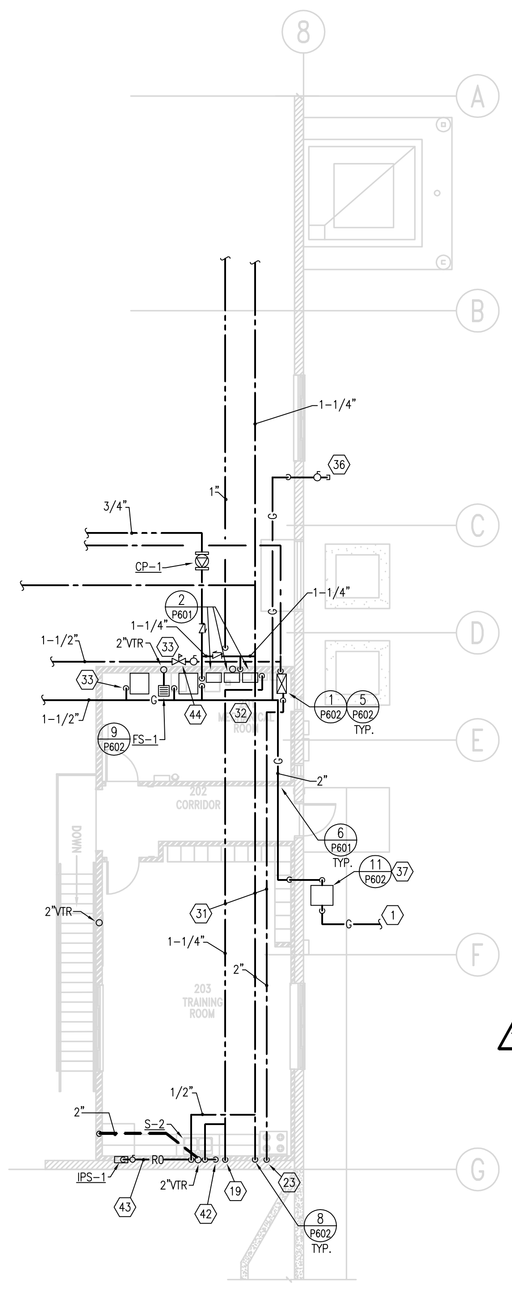

2 P201 **2nd FLOOR PLUMBING PLAN**
SCALE: 1/8" = 1' – 0"

KEYED NOTES:

1. SEE SITE DRAWINGS FOR CONTINUATION.
2. SEE CIVIL DRAWINGS FOR INVERT ELEVATION. GENERAL CONTRACTOR IS TO COORDINATE WITH HIS SUBS TO VERIFY SITE SANITARY SEWER AND BUILDING SANITARY SEWER PIPE WILL PROPERLY CONNECT PRIOR TO INSTALLING ANY SANITARY PIPE IN THE SITE OR BUILDING. IF A PROBLEM EXISTS, THE CONTRACTOR IS TO INFORM THE ARCHITECT OF THE PROBLEM PRIOR TO INSTALLING ANY PIPE. IF PIPE IS INSTALLED AND A PROBLEM ARISES, THE CONTRACTOR, AT HIS EXPENSE, SHALL PERFORM ANY WORK REQUIRED SUCH THAT THE SANITARY PIPE CAN BE INSTALLED CORRECTLY TO CODE STANDARDS.
3. VENTS FROM SAND/OIL SEPARATOR MAY BE COMBINED AFTER THEY ARE 10" ABOVE FLOOD RIM OF SEPARATOR AND THEN CONNECTED TO REPAIR GARAGE BAY WASTE SYSTEM VENT PIPE.
4. PROVIDE PVC COVER OVER INSULATION TO 8'–0" AFF. MOUNT HB–1 3'–0" AFF.
5. ROUTE PIPING ABOVE STRUCTURE.
6. ALL WASTE PIPING 3" AND GREATER TO SLOPE ⅛" PER FOOT.
7. PIPE SLEEVES REQUIRED ON THIS PROJECT. IF CONTRACTOR FAILS TO INSTALL PIPE SLEEVES, THE CONTRACTOR SHALL REMOVE PIPE, INSTALL SLEEVE AND REINSTALL PIPE AT NO ADDITIONAL EXPENSE TO THE OWNER.
8. WATER SOFTENER DISCHARGE INTO FLOOR SINK.
9. SEE CIVIL DRAWINGS FOR EXACT LOCATION OF SAND/OIL SEPERATOR.
10. CONNECT OIL DRAIN LINE TO DRAIN PUMP. RUN DRAIN LINE OUT TO CATCH TANK. PROVIDE SHUT–OFF VALVE AND UNION. CATCH TANK FURNISHED BY OWNER, INSTALLED BY CONTRACTOR. DRAIN PUMP BY CONTRACTOR. VERIFY LOCATION.
11. CONNECT 1" COMPRESSED AIR LINE AND ¾" CW LINE TO OVERHEAD HOSE REEL. PROVIDE SHUT–OFF AND UNION. HOSE REEL BY CONTRACTOR.
12. ¾" COMPRESSED AIR DROP DOWN TO QUICK DISCONNECT. PROVIDE SHUT–OFF VALVE. VERIFY MOUNTING HEIGHT WITH OWNER. REFER TO DETAIL 5/P601.
13. DROP ¾" COMPRESSED AIR DOWN TO OIL DRAIN PUMP. PROVIDE SHUT–OFF VALVE.
14. DROP 1" COMPRESSED AIR LINE TO LUBE BARRELS. PROVIDE SHUT–OFF VALVE. LUBE BARRELS BY OWNER, INSTALLED BY CONTRACTOR.
15. AIR COMPRESSOR BY CONTRACTOR. CONNECT 2–1/2" COMPRESSED AIR LINE TO COMPRESSOR. PROVIDE SHUT–OFF VALVE AND UNION. MAKE CONNECTION TO COMPRESSOR WITH BRAIDED FLEXIBLE PIPE.
16. GAS LINE DOWN TO BURNER. PROVIDE SHUT–OFF VALVE, UNION AND APPLIANCE REGULATOR REFERENCE DETAIL 2/M603.
17. DROP 3/4" AIR LINE DOWN COLUMN FACE AND TERMINATE WITH QUICK COUPLER 3'–0" A.F.F.
18. PROVIDE SHUT OFF VALVE AT BASE OF WATER PIPE WHERE IT ENTERS THE BLDG.
19. 1" HW DOWN TO FIXTURE BELOW.
20. WATER SOFTENER AND BRINE TANK.
21. NOT USED.
22. PIPES SHOWN OUTSIDE OF WALL FOR CLARITY.
23. 2" CW DOWN TO WATER SOFTENER.
24. SEE 2/P201 FOR CONTINUATION.
25. LOCATE FLOOR SINK BETWEEN WATER HEATER AND FURNACE.
26. 4000 GALLON HOLDING TANK. TANK TO BE DESIGNED BY LICENSED ENGINEER IN THE STATE OF UTAH. SUBMIT DESIGN WITH SUBMITTALS. SEE CIVIL DRAWINGS FOR EXACT LOCATION.
27. 2" PIPE UP TO FLOOR SINK.
28. 2" PIPE UP TO KITCHEN SINK.
29. 7 EACH TOTAL HOSE REELS FOR OIL, GREASE AND LUBE.
30. COORDINATE INVERT ELEVATIONS SO PIPES DO NOT INTERFERE WITH EACH OTHER.
31. COORDINATE PIPE LOCATION WITH ELECTRICAL CONTRACTOR SO PIPES ARE NOT INSTALLED OVER ELECTRICAL PANELS.
32. 1" GAS LINE DOWN TO WATER HEATERS APPLIANCE REGULATOR. 1–1/4" PIPE TO FEED EACH WATER HEATER WITH 4 OZ. OF NATURAL GAS AFTER APPLIANCE REGULATOR.
33. 1/2" GAS LINE DOWN TO FURNACE.
34. 1/2" GAS LINE DOWN TO RADIANT HEATER BURNER.
35. REFERENCE ARCH DWGS FOR EXACT LOCATION OF THE AIR COMPRESSOR.
36. 1" GAS LINE DOWN TO 36" AFG FOR FUTURE GENERATOR. PROVIDE VALVE AND CAP. ESTIMATED GAS LOAD OF 554 CF/HR NATURAL GAS.
37. NATURAL GAS METER CAPABLE OF PROVIDING 3,290 CF/HR OF 2 PSI NATURAL GAS HAVING A HEAT CONTENT OF 803 BTU/FT³ AT A SPECIFIC GRAVITY OF 0.60.
38. 1" GAS LINE DOWN TO POWER WASHER. PROVIDE 2 PSI TO 4 OZ APPLIANCE REGULATOR.
39. CULLIGAN # AC–30, REVERSE OSMOSIS (R.O.) SYSTEM WITH 9 GALLON HOLDING TANK. RUN WASTE TO FS–1.
40. ALL PIPING AFTER R.O. SYSTEM TO BE SCH. 80 PVC PIPE.
41. R.O. WATER PIPE UP TO KITCHEN SINK ABOVE.
42. ¼" R.O. WATER UP TO CULLIGAN DESIGNER FAUCET. FAUCET TO MONITOR WATER QUALITY AND PROVIDE SIGNAL TO INDICATE WHEN TO CHANGE R.O. FILTERS.
43. ¼" R.O. WATER TO ICE MAKER VALVE.
44. WATTS #007M2QT BACKFLOW PREVENTOR.
45. RUN SS LINE UNDER TRENCH DRAIN.
46. SEE CIVIL DRAWINGS FOR EXACT LOCATION

CLIENT

UDOT CONNECTING COMMUNITIES

STATION #2434
I–80 E.B. EXIT 134
PARLEY'S CANYON

DESIGNER

ARCHIPLEX GROUP
architecture · planning · design services
255 Crossroad Square
Salt Lake City, UT 84115
P:(801) 961–7070
F:(801) 961–7373

CONSULTANTS

PVE Inc.
Consulting Mechanical | Electrical Engineers
1040 North 2200 West, Suite 100
Salt Lake City, UT 84116
Phone: (801) 359-3158
Fax: (801) 521-4114

REGISTRATION

REGISTERED PROFESSIONAL ENGINEER
ALAN D. SPENDLOVE
166911
STATE OF UTAH

ISSUE

MARK	DATE	DESCRIPTION
1	2–17–09	ADDENDUM 1
	1/2009	CONSTRUCTION DOCUMENTS
	8–20–08	90% REVIEW SUBMITTAL

PROJECT NO:	08105.00.01
DRAWN BY:	MJG
CHECKED BY:	ADS
SCALE:	
DATE:	JANUARY, 2009

KEY PLAN

SHEET TITLE

PLUMBING FLOOR PLAN

P201

© 2004 ARCHIPLEX GROUP

By: aspendlove, Feb 12, 2009 – 11:25am, X:\Projects\2008\08105.00.01 – Parleys Maint Sta\P201–08105.00.dwg

Copyright (C) 2007 by PVE, Inc. Salt Lake City, Utah. All rights reserved. Unauthorized copying and/or use is illegal and subject to prosecution.

KEYED NOTES:

1. REFERENCE KEY NOTE 32 ON SHEET P201 AND DETAIL 2/P601 FOR CONTINUATION OF WATER HEATER SPECIFICATIONS.

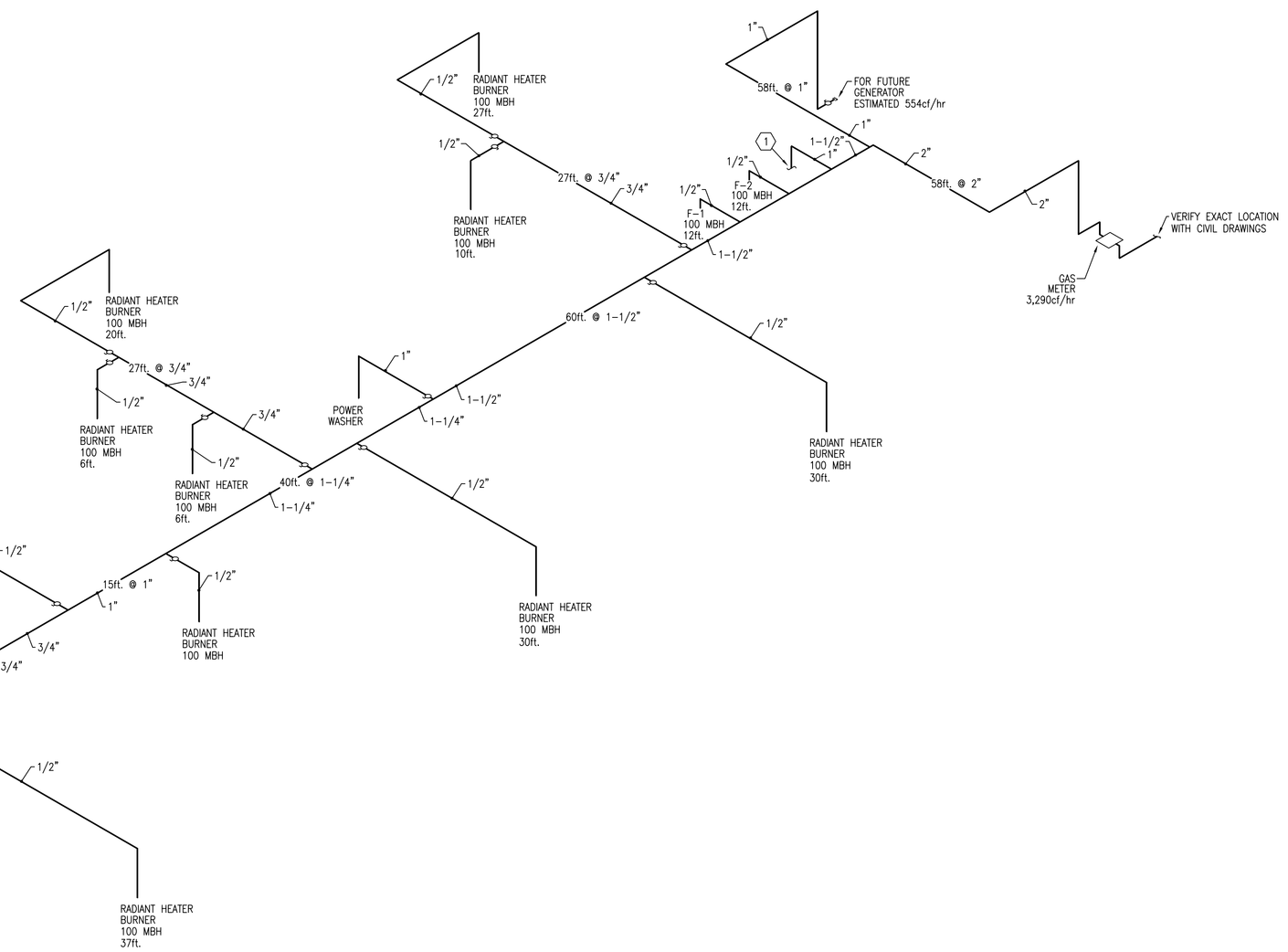

1 ADDED DRAWING

1 M301 **ISOMETRIC NATURAL GAS DIAGRAM**

SCALE: NOT TO SCALE

By: aspendlove; Feb 12, 2009 - 11:25am, X:\Projects\2008\08105.00.01 - Parleys Mobil Sta\P301-08105.00.dwg

CLIENT

UDOT CONNECTING COMMUNITIES

STATION #2434
I-80 E.B. EXIT 134
PARLEY'S CANYON

DESIGNER

ARCHIPLEX GROUP
architecture · planning · design services
255 Crossroad Square
Salt Lake City, UT 84115
P:(801) 961-7070
F:(801) 961-7373

CONSULTANTS

PVE Inc.
Consulting Mechanical Electrical Engineers
1040 North 2200 West, Suite 100
Salt Lake City, UT 84116
Phone: (801) 359-3158
Fax: (801) 521-4114

REGISTRATION

REGISTERED PROFESSIONAL ENGINEER
ALAN D. SPENDLOVE
166951
STATE OF UTAH

ISSUE

MARK	DATE	DESCRIPTION
1	2-17-09	ADDENDUM 1
	1/2009	CONSTRUCTION DOCUMENTS
	8-20-08	90% REVIEW SUBMITTAL

PROJECT NO:	08105.00.01
DRAWN BY:	MJG
CHECKED BY:	ADS
SCALE:	
DATE:	JANUARY, 2009

KEY PLAN

SHEET TITLE

ISOMETRIC NATURAL GAS DIAGRAM

P301

© 2004 ARCHIPLEX GROUP