State of Utah

JON M. HUNTSMAN, JR.
Governor

GARY R. HERBERT
Lieutenant Governor

Department of Administrative Services
KIMBERLY K. HOOD
Executive Director

Division of Facilities Construction and Management
DAVID G. BUXTON
Director

ADDENDUM #2

Date: March 4, 2009

To: Contractors

From: Michael Ambre, Project Manager, DFCM

Reference: Parleys Maintenance Station #234 Improvements
Utah Department of Transportation - Utah
DFCM Project No. 08211900

Subject: **Addendum No. 2**

Pages	Addendum	1 page
	Archiplex Group Addendum #1	77 pages
	Total	78 pages

Note: This Addendum shall be included as part of the Contract Documents. Items in this Addendum apply to all drawings and specification sections whether referenced or not involving the portion of the work added, deleted, modified, or otherwise addressed in the Addendum. Acknowledge receipt of this Addendum in the space provided on the Bid Form. Failure to do so may subject the Bidder to Disqualification.

While we contend that SB220 should only be potentially applicable to a contract issued after the effective date of said bill, this is to clarify that for purposes of this contract, regardless of the execution or effective dates of this contract, the status of Utah Law and remedies available to the State of Utah and DFCM, as it relates to any matter referred to or affected by said SB220, shall be the Utah law in effect at the time of the issuance of this Addendum.

2.1 **SCHEDULE CHANGES – There are no changes to the project schedule.**

2.2 **GENERAL** – Please see attached addendum #2 - Archiplex Group, questions and answers, specifications and drawings.

Utah!
Where ideas connect

Addendum #2

DATE: March 4, 2009

DFCM Project No.: 08211900
Archiplex Group Project No.: 0728.02

ADDENDUM NO. 2 to the Contract Documents for the Construction of UDOT Maintenance Station #2434, Parleys Canyon, Utah.

The contents of this addendum supersede the information contained in the original Contract Documents and are hereby incorporated therein. Unless otherwise so stated, any changes herein offset only the specific drawings, words, or paragraphs mentioned, and the balance of the drawings and specifications remain in full force.

A. QUESTIONS RECEIVED:

1. Q. Where are the Fuel tanks located that are to be moved?
A. The metal tanks are shown on Demolition Plan C100, just north of the new location. The tanks are required to be refurbished by the GC.

2. Q. Do the fuel tanks have fuel in them.
A. Yes.

3. Q. Do the Fuel tanks have any equipment installed on them?
A. The tanks are double-walled metal tanks and besides venting appear to have very little on them; confirm with a site visit if this is a concern. Immediately adjacent are the existing fuel dispensers

4. Q. Can we go look at the Fuel tanks?
A. The tanks are just inside the fence of the maintenance station at the southwest corner of the project site. For access to the station contact Roger Frantz 801-582-2115.

5. Q. The exact type of fuel dispenser required, Drawing AE702 detail D1 shows a twin hose dispenser, remotely mounted, is this what is required?
A. A dual hose single dispenser remotely located is required.

6. Q. Is the fuel dispenser to be a suction type or with a remote submersible pump?
A. A remote submersible pump is required for each fuel.

7. Q. Sheet C200 refers to sheet C501 detail L. There is no detail L?
A. Note & Detail was added in addendum #1.

8. Q. Sheet AE702, items 13100.CO-Fuel Service Card reader: Is this provided by Fleet Services?

A. Yes, the card reader and its pedestal is provided by Fleet Services. All the necessary conduit and wire to the reader is by the GC. The same applies to the equipment in the tuff shed next to the tanks, the equipment is by Fleet Services, the shed, the wire, power and conduit for a complete installation is by the GC.

9. Q. The specs mention dimensional letters and numbers but I have not been able to find any more information regarding these. Are there metal letters needed?

A. No metal letters required at this project.

10. Q. SB101 calls for the slab to be 6", with #4 rebar 18" o.c., but the geotech report suggests that the slab be 8", with **epoxy coated** rebar 12" o.c. The sawcut spec also differs, with the drawing showing 8' o.c., and the geotech report calling out 6' centers.

A1. The addendum #2 drawings have been updated to show the slab thickness to be 8" with the #4 rebar at 12" o.c.

A2. Epoxy coated rebar is not required; we have integral waterproofing and oliophobic sealer.

A3. The 8' o.c. slab joint spacing is already more restrictive than typical ACI recommendations. Reducing the spacing further isn't warranted in our opinion.

11. Q. Section 02513- Asphalt concrete paving specifications part 2.1, B calls for 3/4" base course aggregate. It is our understanding that all pits have gone to the 1 1/2" gradation to comply with UDOT/APWA specifications. The 3/4" is no longer available. Is the 1 1/2" gradation acceptable on this project?

A. The 1-1/2" gradation is acceptable on this project.

12. Q. Asphalt- page C-500/ detail J, shows 4" depth of asphalt and specs show 3 1/2" depth of asphalt, which one am I to bid?

A. The 4" asphalt is the correct thickness for bidding.

B. <u>PRODUCT APPROVALS:</u>

Listed products and manufacturers are approved for bidding. This approval does not relieve the supplier, bidder or manufacturer from satisfying the intent of the contract documents including the addenda in every aspect. Failure to conform to the design quality may result in later disapproval. If any product is disapproved after bidding, the product supplier shall supply specified equipment at no extra cost to the owner. Items listed are approved in general and specific details of performance, ratings, model number, etc. are required as part of the shop drawing process and shall be as submitted.

1. **Spec. Section 02470**: Ground Anchors:

a. CTS Ground Anchor will be acceptable subject to a full submittal in compliance with the requirements of the specification that we provided for Addendum 2.

2. **Spec. Section 03300**: Cast in place Concrete:

a. Intralok - bonding agent

b. Acry-lok – Acrylic Polymer.

c. Hydraset-Free – Non Chloride Concrete set accelerator

3. **Spec. Section 07110**: Sheet Membrane Waterproofing :
a. MEL-ROL Waterproofing system.
b. Protecto Wrap Waterproof system.

4. **Spec. Section 07410**: Manufactured Roof Panels:
a. MCBI

5. **Spec. Section 10155**: Toilet Partitions:
a. Columbia Partitions

6. **Spec. Section 10500**: Metal Lockers:
a. Columbia Lockers

7. **Spec. Section 10800**: Toilet & Bath Accessories:
a. Columbia Accessories

8. **Spec. Section 15611**: Natural Gas Fired Furnaces:
a. Airease

9. **Spec. Section 15820**: Duct Accessories:
a. Air Specialties
b. Hercules
c. Heart and Cooley

10. **Spec. Section 15838**: Power Ventilators:
a. Air Master
b. Aldes

11. **Spec. Section 15855**: Diffusers, Registers & Grilles:
a. Air Specialties

12. **Spec. Section 15887**: Louvers & Ventilators:
a. Metalaire
b. Air Rite
c. Carnes
d. Air Specialties

13. **Lighting Fixtures:**

F1	Columbia,	Lithonia,	Williams
F2	Columbia,	Lithonia,	Williams
F3	Columbia,	Lithonia,	Williams
F4	Prescolite,	Lithonia,	Williams
F5	Hubbell,	Lithonia,	
F6	Hubbell,	Lithonia,	
F7	Hubbell,	Lithonia,	
F8	Prescolite	Lithonia	

EM	Hubbell,	Lithonia,	Exitronics
X1	Dual Lite,	Lithonia,	
X2	Dual Lite,	Lithonia,	Exitronics
SF1	Spaulding	Lithonia,	LSI

C. DESCRIPTION OF ADDENDUM ITEMS:

1. General Information:

a. The following is a list of items that the owner will salvage from the existing maintenance building prior to demolition:

1. Doors and openers.
2. Air compressor and all associated plumbing, hoses, fittings, reels, etc.
3. Everything in the office, furniture, ac units, TVs and mounts etc.
4. Oil barrels, pumps, hose reels etc.
5. All door locks and deadbolts.
6. All cabinets, in kitchen, bathroom & laundry.
7. All shelves, work bench top etc.
8. Everything in the mechanical room including, Peak Alarm system, electrical panel, all internet fiber, wash tub, water heater, drinking water system etc.
9. All appliances.
10. All power strips.
11. Owner is keeping some of the fluorescent lights for storage containers.
12. All tools, tool boxes etc.
13. White boards, chalk boards etc.

2. Civil Addendum Items:

Sheet C100:

a. Modified Note #6.
b. Revised note concerning Existing Monument.

Sheet C200:

a. Modified Note #6.
b. Relocated new Transformer Pad as shown.
c. Show relocated monument & fence.
d. Added holding tank note as per review comments.

Sheet C300:

a. Modified retaining wall construction note #3.
b. Revised grading at hill to south of new concrete stairs as shown.
c. Show relocated monument & fence.

Sheet C301:

a. Modified typical wall section.
b. Add French Drain behind building foundation wall.
c. Relocated new Transformer Pad as shown.

d. Revised grading at hill to south of new concrete stairs as shown.

Sheet C400:

a. Relocated new Transformer Pad as shown.
b. Revised grading at hill to south of new concrete stairs as shown.
c. Show relocated monument & fence.

Sheet C500:

a. Added note to section A-A to clarify type of retaining wall.
b. Added handrail at top of exterior stair.
c. Revised guardrail condition to match Arch. Sheet AE202.

Sheet C501:

a. Added additional information to Detail “L”.

Sheet L101:

a. Revised new seed mix to meet Salt Lake City Requirements.

3. Architectural Addendum Items:

Sheet G000:

a. Added General Note #3.
b. Updated Applicable Codes.

Sheet G002:

a. Added additional keynotes as indicated.

Sheet AE101:

a. Revised dimensions to re-locate mech. dampers.
b. Added Office dimension.

Sheet AE201:

a. Show revised retaining wall layout in Elevations A1 & B1.
b. Show handrail at top of exterior stairs.

Sheet AE311:

a. Changed Keynote 07210.B1 to 07210.C0.
b. Revised roof edge conditions to match details revised in Addendum #1.
c. Revised french drain in A2 section to coord. with Civil Drawings.
d. Revised slab condition in A3 section to coord. with Structural Drawings.
e. Added deck bearing datum to sections.
f. Show location of textured foundation wall on Section A2.

Sheet AE312:

a. Changed Keynote 07210.B1 to 07210.C0.
b. Revised Keynote Legend as indicated.
c. Revised roof edge conditions to match details revised in Addendum #1.
d. Revised oil pit canopy in A1 section to coord. with Structural drawings.
e. Revised french drain in A2 section to coord. with Civil Drawings.

f. Added additional keynotes to A2 section to clarify wall construction.
g. Revised slab condition in A3 & A4 section to coord. with Structural Drawings.
h. Revised canopy attachment in A4 section to coord. with Structural Drawings.
i. Added deck bearing datum to sections.
j. Show location of textured foundation wall on Section A2.

Sheet AE313:

a. Changed Keynote 07210.B1 to 07210.C0.
b. Revised roof edge conditions to match details revised in Addendum #1.
c. Added additional keynotes to A3 section to clarify wall construction.
d. Added top of stem wall datum.
e. Added deck bearing datum to sections.

Sheet AE401:

a. Revised Keynote Legend as indicated.
b. Added Interior Elevation E5.
c. Revised Interior Elevations D1 & D5.
d. Revised Mounting Heights Detail as shown.
e. Added grab bars & folding shower seat to shower plan.
f. Relocated ADA shower head from south wall to east wall of shower.

Sheet AE402:

a. Added additional information clarifying ADA compliant locker.
b. Revised Keynote Legend as indicated.

Sheet AE403:

a. Added Detail section callout to B3 section.
b. Added Detail E1/AE403.
c. Revised Stair Dimensions as shown.

Sheet AE502:

a. Revised Detail D4/AE502 to comply with code review comments.
b. Revised Height of work bench section.

Sheet AE503:

a. Revised Details A5 & B6.
b. Revised Keynote Legend as shown.

Sheet AE601:

a. Provide bullnose block 1 side at details A3 & C6.

Sheet AE602:

a. Delete detail C4.
b. Delete sill flashing from details C1 & C2.

Sheet AE701:

a. Added reference elevation to Wash Rack Plan.

Sheet AE703:

a. Added reference elevations to Sander Rack Elevations.
b. Revised Sander Rack Section to Coord with Structural drawings.

4. Structural Addendum items:

Sheet SB101:

a. Changed slab on grade to 8" slab reinforced with #4 bars at 12" o.c. to match soils report recommendations.

Sheet SB601:

a. Revised reinforcing in detail A2.
b. Revised retaining wall schedule A4 for architectural finish.

Sheet SF511:

a. Moved steel beam connection at oil storage canopy detail to A4/SF511
b. Renamed detail A1 to read Trolley beam support detail.

Sheet SF512:

a. Revised detail D1 to reflect offset in deck bearing at oil storage canopy.
b. Revised detail B5 to show canopy slope.

5. Mechanical Addendum items:

Sheet M201:

a. Revised Damper locations as per Architectural Plan.

6. Plumbing Addendum items:

Sheet P201:

a. Relocated ADA shower head from south wall to east wall of shower.

7. Electrical Addendum items:

Sheet E102:

a. See Revised Electrical Drawing indicating changes to the electrical service and relocation of existing power lines. Pay special attention to additional sheet notes requiring the electrical contractor to allow a $32,000.00 allowance for the relocation of the existing overhead electrical lines.

D. <u>ATTACHMENTS</u>:

Specifications:

1. Table of Contents – Re-issue entire Section.
2. 02470 – Added Ground Anchor Section.
3. 02513 – Re-issue entire Section.
4. 03121 – Added Section "Form Liners for Architectural Concrete".
5. 10800 – Re-issue entire Section.

6. Delete Section 04720 – Cultured Stone.

E. NEW DRAWING LIST:

1. AE202 Retaining Wall Elevations & Sections.

F. REISSUED DRAWING LIST:

1. G000 Cover Sheet
2. G002 Master Keynote List
3. C100 Demolition Plan
4. C200 Site & Utility Plan
5. C300 Grading & Drainage Plan
6. C301 Retaining Wall Plan & Profile
7. C400 Erosion Control Plan
8. C500 Typical Sections & Details
9. C501 Typical Sections & Details
10. L101 Landscape Notes & Schedules
11. AE101 Level 1 & 2 Floor Plans
12. AE201 Exterior Elevations
13. AE311 Wall Sections
14. AE312 Wall Sections
15. AE313 Wall Sections
16. AE401 Enlarged Restroom Floor Plan, Interior Elevations and Details
17. AE402 Enlarged Maintenance Bay and Interior Elevations
18. AE403 Stair Plan, Section, Elevations and Details
19. AE502 Signage and Miscellaneous Details
20. AE503 Miscellaneous Details
21. AE601 Door Schedule and Details
22. AE602 Window Frame Types, Glazing & Finish Schedules and Details
23. AE701 Wash Rack Plan, Section and Elevations
24. AE703 Sander Rack Plan, Section and Elevations
25. SB101 Footing and Foundation Plan
26. SB601 Schedules
27. SF511 Roof Framing Details
28. SF512 Roof Framing Details
29. M201 Mechanical Floor Plan
30. P201 Plumbing Floor Plan
31. E102 Electrical Site Plan

TABLE OF CONTENTS

DOCUMENTS
COVER SHEET
PROFESSIONAL STAMPS
LIST OF WARRANTIES
TABLE OF CONTENTS

TECHNICAL SPECIFICATIONS

DIVISION 1 - GENERAL REQUIREMENTS

01010 SUMMARY OF WORK
01027 APPLICATIONS FOR PAYMENT
01035 MODIFICATION PROCEDURES
01040 PROJECT COORDINATION
01045 CUTTING AND PATCHING
01050 FIELD ENGINEERING
01095 REFERENCE STANDARDS AND DEFINITIONS
01096 MATERIAL KEYNOTE LEGEND
01200 PROJECT MEETINGS
01300 SUBMITTALS
01400 QUALITY CONTROL SERVICES
01500 TEMPORARY FACILITIES
01600 MATERIALS AND EQUIPMENT
01631 PRODUCT SUBSTITUTIONS
01700 PROJECT CLOSEOUT
01740 WARRANTIES AND BONDS

DIVISION 2 - SITEWORK

02050 DEMOLITION
02051 GENERAL SITE CONSTRUCTION REQUIREMENTS
02110 SITE CLEARING
02200 EARTHWORK
02470 GROUND ANCHORS
02513 ASPHALT CONCRETE PAVING
02514 PORTLAND CEMENT CONCRETE PAVING
02530 SANITARY SEWERAGE
02666 POTABLE WATER SYSTEMS
02720 STORM SEWERAGE SYSTEMS
02765 PAVEMENT MARKINGS
02822 CHAIN LINK FENCES AND GATES
02831 HORIZONTAL SLIDING GATE OPERATORS

DIVISION 3 - CONCRETE

03052 CONCRETE WATERPROOFING SYSTEM
03053 CONCRETE WATERPROOFING ADMIXTURE
03054 OLIOPHOBIC SEALER
03121 FORM LINERS FOR ARCHITECTURAL CONCRETE
03055 SALT GUARD
03300 CAST-IN-PLACE CONCRETE

DIVISION 4 – MASONRY

04200 UNIT MASONRY
~~04720 CULTURED STONE~~

DIVISION 5 - METALS

05120 STRUCTURAL STEEL
05220 STEEL JOISTS AND JOIST GIRDERS
05310 STEEL DECK
05400 COLD-FORMED METAL FRAMING
05500 METAL FABRICATIONS
05510 METAL STAIRS
05521 PIPE AND TUBE RAILINGS
05530 GRATINGS

DIVISION 6 - WOOD AND PLASTICS

06105 MISCELLANEOUS CARPENTRY
06402 INTERIOR ARCHITECTURAL WOODWORK
06651 SOLID SURFACE FABRICATIONS

DIVISION 7 - THERMAL AND MOISTURE PROTECTION

07110 SHEET MEMBRANE WATERPROOFING SYSTEM
07190 WATER REPELLENTS
07210 BUILDING INSULATION
07410 MANUFACTURED ROOF PANELS, GUTTTER & FLASHING
07729 ROOF SNOW GUARDS
07841 PENETRATION FIRESTOPPING
07901 JOINT SEALANTS

DIVISION 8 - DOORS AND WINDOWS

08111 STANDARD STEEL DOORS AND FRAMES
08360 SECTIONAL OVERHEAD DOORS
08521 HORIZONTAL SLIDING VINYL WINDOWS (PVC)
08710 DOOR HARDWARE
08800 GLAZING

DIVISION 9 - FINISHES

09255 GYPSUM BOARD ASSEMBLIES
09300 TILE
09511 ACOUSITCAL PANEL CEILINGS
09660 RESILIENT TILE FLOORING
09678 RESILIENT WALL BASE AND ACCESSORIES
09900 PAINTING

DIVISION 10 - SPECIALTIES

10100 VISUAL DISPLAY BOARDS
10155 TOILET PARTITIONS
10425 SIGNS
10500 METAL LOCKERS AND STORAGE CABINETS
10522 FIRE EXTINGUISHERS, CABINETS, AND ACCESSORIES
10800 TOILET AND BATH ACCESSORIES

DIVISION 11 - EQUIPMENT

11151 MOBILE LIFT

DIVISION 12 - FURNISHINGS

12511 HORIZONTAL LOUVER BLINDS

DIVISION 13 – SPECIAL CONSTRUCTION

13100 FUEL ISLAND REQUIREMENTS

DIVISION 14 - CONVEYING SYSTEMS

14620 TROLLEY HOISTS

DIVISION 15 - MECHANICAL

15000 GENERAL MECHANICAL
15050 BASIC MATERIALS & METHODS
15060 PIPE AND PIPE FITTINGS
15170 MOTORS
15180 PIPE AND EQUIPMENT IDENTIFICATION
15191 AIR SYSTEM TESTING AND BALANCING
15200 VIBRATION, NOISE CONTROL AND SEISMIC PROTECTION
15250 INSULATION
15251 HOT WATER AND COLD WATER PIPE INSULATION
15258 DUCT INSULATION
15400 PLUMBING SYSTEMS
15410 PLUMBING FIXTURES
15411 HOT AND COLD WATER SYSTEMS AND DRAIN PAN PIPING SYSTEMS
15412 EMERGENCY PLUMBING FIXTURES
15413 SOIL, WASTE AND VENT PIPING SYSTEM
15452 DRINKING WATER COOLING SYSTEM
15455 DOMESTIC WATER CONDITIONING EQUIPMENT
15486 FUEL FIRED WATER HEATERS
15490 WASTE OIL PIPING
15491 LUBRICATION EQUIPMENT
15576 FLUES
15577 FURNACE AIR PIPING
15600 RADIANT TUBE HEATERS
15611 GAS-FIRED FURNACES AND HEATERS
15670 CONDENSING UNITS
15820 DUCT ACCESSORIES
15838 POWER VENTILATORS

15855 DIFFUSERS, REGISTERS, AND GRILLES
15861 STEEL DUCTWORK
15862 ROUND DUCTWORK
15867 DUCTWORK TESTING
15887 LOUVERS AND VENTILATORS
15970 CONTROL SYSTEMS
15985 SEQUENCE OF OPERATION

DIVISION 16 - ELECTRICAL

16001 ELECTRICAL GENERAL PROVISIONS
16060 GROUNDING AND BONDING
16070 ELECTRICAL HANGERS AND SUPPORTS
16123 BUILDING WIRE AND CABLE
16128 LOW VOLTAGE DE-ICING / SNOW MELTING SYSTEM
16129 ELECTRICAL HEAT ROOF GUTTER MELT SYSTEM
16130 RACEWAY AND BOXES
16140 WIRING DEVICES GENERAL
16210 ELECTRICAL UTILITY SERVICES
16411 ENCLOSED SWITCHES
16421 ENCLOSED CONTROLLERS
16442 PANELBOARDS
16510 INTERIOR LUMINAIRES
16520 EXTERIOR LUMINAIRES
16740 TELEPHONE/DATA RACEWAY SYSTEMS

GEOTECHNICAL REPORT

COMCHECK REPORTS

SECTION 02470 – GROUND ANCHORS

PART 1 - GENERAL

1.1 DESCRIPTION

A. SECTION INCLUDES:

1. The Contractor shall furnish all labor, materials, tools, supervision, transportation, installation equipment, and incidentals necessary to complete the work specified herein and shown on the Contract Drawings. The work shall include but not be limited to mobilization, surveying, drilling, inserting, grouting, stressing, load testing, and lock-off of ground anchors at the appropriate locations.

2. Unless otherwise directed, the Contractor shall select the ground anchor type, drilling method, grouting method, grouting pressures, and, subject to the minimum values in the contract documents, determine the bond length, free-stressing (unbonded) length, and anchor diameter. The Contractor shall be responsible for installing ground anchors that will develop the load-carrying capacity indicated on the Contract Drawings in accordance with the testing subsection of this Specification.

3. The anchor tendon shall be protected from corrosion as shown on the Contract Drawings and in accordance with the requirements of this Specification.

B. RELATED SECTIONS:

1. Section 03300 – Cast In Place Concrete
2. Section 03054 – Oliphobic Sealer
2. Section 07901 - Caulking and Sealants

1.2 DEFINITIONS

A. Admixture: Substance added to the grout to either control bleed and/or shrinkage, improve flowability, reduce water content, or retard setting time.
B. Alignment Load (AL): A nominal minimum load applied to an anchor during testing to keep the testing equipment correctly positioned.
C. Anchor: A system, used to transfer tensile loads to the ground (soil or rock), which includes the prestressing steel, anchorage, corrosion protection, sheathings, spacers, centralizers, and grout.
D. Anchor Head: The means by which the prestressing force is permanently transmitted from the prestressing steel to the bearing plate. The anchor head includes wedges and a wedge plate for strand tendons or an anchor nut for bar tendons.
E. Anchor Nut: The threaded device that transfers the prestressing force in a bar to a bearing plate.
F. Anchorage: The combined system of anchor head, bearing plate, trumpet, and corrosion protection that is capable of transmitting the prestressing force from the prestressing steel to the surface of the ground or the supported structure.
G. Anchorage Cover: A cover to protect the anchorage from corrosion and physical damage.
H. Anchor Grout: See Primary Grout.
I. Apparent Free Tendon Length: The length of tendon which is apparently not bonded to the surrounding grout or ground, as calculated from the elastic load extension data during testing.
J. Bearing Plate: A steel plate under the anchor head that distributes the prestressing force to the anchored structure.
K. Bond Length: The length of the tendon that is bonded to the primary grout and capable of transmitting the applied tensile load to the surrounding soil or rock.

L. Bondbreaker: A sleeve placed over the anchor tendon in the free stressing length to ensure unobstructed elongation of the tendon during stressing.
M. Centralizer: A device to support and position the tendon in the drill hole so that a minimum grout cover is provided.
N. Coarse-Grained Soils: Soils with more than 50 percent, by weight, of the material larger than the No. 200 sieve size.
O. Cohesive Soils: Soils that exhibit plasticity. Atterberg limits are commonly used to determine plasticity and better define a soil as cohesive or non-cohesive.
P. Consolidation Grout: Portland cement grout that is injected into the hole prior to inserting the tendon to either reduce the permeability of the rock surrounding the hole or improve the ground conditions.
Q. Construction Quality Assurance (CQA) Inspector: The person/firm responsible for construction quality assurance (CQA) testing, monitoring, and other duties related to assuring the quality of construction and adherence to the Contract Drawings and Specifications.
R. Contract Drawings: The approved plans, profiles, typical cross sections, working drawings, and supplemental drawings which show the location, dimensions, and details of the work to be done.
S. Contractor: The person/firm responsible for performing the anchor work.
T. Corrosion Inhibiting Compound: Material used to protect against corrosion and/or lubricate the prestressing steel.
U. Coupler: The means by which the prestressing force can be transmitted from one partial-length of a prestressing tendon to another (mainly for bars).
V. Creep Movement: The movement that occurs during the creep test of an anchor under a constant load.
W. Creep Test: A test to determine the movement of the ground anchor at a constant load.
X. Design Load (DL): Anticipated final maximum effective load in the anchor after allowance for timedependent losses or gains. The design load includes appropriate load factors to ensure that the overall structure has adequate capacity for its intended use.
Y. Detensionable Anchor Head: An anchor head that is restressable and, in addition, permits the tendon to be completely detensioned in a controlled way at any time during the life of the structure.
Z. Downward Sloped Anchor: Any prestressed anchor that is placed at a slope greater than 5 degrees below the horizontal.
AA. Elastic Movement: The recoverable movement measured during an anchor test.
BB. Encapsulation: A corrugated or deformed tube protecting the prestressing steel against corrosion in the tendon bond length.
CC. Engineer: The engineer shall be appointed by the Owner to undertake the duties and powers assigned to the Engineer by the Contract Documents. The engineer is responsible for approving all design and specification changes and making design clarifications that may be required during construction.
DD. FPU: Specified minimum tensile strength of the tendon as defined in the pertinent ASTM Specification.
EE. Fine-Grained Soils: Soils with at least 50 percent, by weight, of the material smaller than the No. 200 sieve size.
FF. Free Stressing (Unbonded) Length: The designed length of the tendon that is not bonded to the surrounding ground or grout during stressing.
GG. Fully Bonded Anchor: Anchor in which the free stressing length without bondbreaker is grouted after stressing and so bonded to the surrounding structure or ground.
HH. Horizontal Anchor: Any prestressed anchor that is placed at a slope within (±5 degrees) of the horizontal.
II. Lift-Off: The load (lift-off load) in the tendon which can be checked at any specified time with the use of a hydraulic jack, by lifting the anchor head off the bearing plate.
JJ. Lock-Off Load: The prestressing force in an anchor immediately after transferring the load from the jack to the stressing anchorage.
KK. Non-Cohesive Soils: Material that is generally nonplastic.

LL. Permanent Anchor: Any prestressed ground anchor that is intended to remain and function as part of a permanent structure. A permanent anchor has to fulfill its function for an extended period of time and thus requires special design, corrosion protection, and supervision during installation.

MM. Performance Test: Incremental cyclic test loading of a prestressed anchor in which the total movement of the anchor is recorded at each increment.

NN. Primary Grout: Portland cement grout that is injected into the anchor hole prior to or after the installation of the anchor tendon to provide for the force transfer to the surrounding ground along the bond length of the tendon. Primary grout is also known as anchor grout.

OO. Proof Test: Incremental loading of a prestressed anchor recording the total movement of the anchor at each increment.

PP. Pulling Head: Temporary anchoring device behind the hydraulic jack during stressing.

QQ. Relaxation: The decrease of stress or load with time while the tendon is held under constant strain.

RR. Residual Movement: The non-elastic (i.e., non-recoverable) movement of an anchor measured during load testing.

SS. Restressable Anchor Head: An anchor head that permits the anchor load, throughout the life of the structure, to be measured by lift-off checking and adjusted by shimming/unshimming or threadturning.

TT. Safety Factor: The ratio of the ultimate capacity to the working load used for the design of any component or interface.

UU. Sheath: A smooth or corrugated pipe or tube protecting the prestressing steel in the free stressing length against corrosion.

VV. Shop Drawings: All drawings, diagrams, illustrations, schedules, performance charts, brochures, and other data which are prepared for or by the Contractor or any subcontractor, manufacturer, supplier, or distributor and which illustrate the equipment, material, or any other matter relating to the work.

WW. Spacer: A device to separate elements of a multiple-element tendon to ensure full bond development of each prestressing steel element.

XX. Stressing Anchorage: See Anchorage.

YY. Subcontractor: The Subcontractor is a person/firm who has a direct or indirect contract relationship with the Contractor to perform any of the work.

ZZ. Supplier: Any person/firm who supplies materials or equipment for the work, including that fabricated to a special design, and may also be a Subcontractor.

AAA. Support of Excavation Anchor: A prestressed ground anchor which functions temporarily, generally 18 to 36 months in duration, and which is not considered by the owner to fulfill a critical function.

BBB. Temporary Critical Anchor: Any prestressed ground anchor for a temporary use that is judged by the owner to provide a critical function. Temporary critical anchors are commonly designed using the same criteria as permanent anchors. Temporary critical anchors installed in corrosive environments may require corrosion protection.

CCC. Tendon: The complete anchor assembly (excluding grout) consisting of prestressing steel, corrosion protection, sheathings, and coating when required, as well as spacers and centralizers.

DDD. Test Load (TL): The maximum load to which the anchor is subjected during testing.

EEE. Trumpet: Device to provide corrosion protection in the transition length from the anchorage to the free stressing length.

FFF. Unbonded Anchor: Anchor in which the free stressing length remains permanently unbonded.

GGG. Upward Sloped Anchor: Any prestressed anchor that is placed at a slope greater than 5 degrees above the horizontal.

HHH. Wedge: The device that transfers the prestressing force in the strand to the wedge plate.

III. Wedge Plate: The device that holds the wedges of multistrand tendons and transfers the anchor force to the bearing plate.

JJJ. Working Load: Equivalent term for Design Load.

1.3 REFERENCES

A. Contract Drawings

B. Ground Anchor Inspector's Manual, from "In-Situ Soil Improvement Techniques", American Association of State Highway and Transportation Officials - Associated Contractors of America - American Road and Transportation Builders Association (AASHTO-AGCARTBA), Task Force 27 Report, 1990.

C. Latest version of Federal Highway Administration publication FHWA-IF-99-015, "Geotechnical Engineering Circular No.4: Ground Anchors and Anchored Systems"

D. Latest version of American Society for Testing and Materials (ASTM) standards:
1. ASTM A 53 Standard Specification for Steel Pipe
2. ASTM A 500 Standard Specification for Cold-formed Welded and Seamless Carbon Steel Structural Tubing in Rounds and Shapes
3. ASTM A 536 Standard Specification for Ductile Iron Castings
4. ASTM A 775 Standard Specification for Epoxy-Coated Reinforcing Steel Bars
5. ASTM A 779 Standard Specification for Steel Strand, Seven Wire, Uncoated, Compacted, Stress-relieved for Prestressed Concrete
6. ASTM A 882 Standard Specification for Epoxy-Coated Seven-Wire Prestressing Steel Strand
7. ASTM A 981 Standard Test Method for Evaluating Bond Strength for 15.2 mm (0.6 in.) Diameter Prestressing Steel Strand, Grade 270, Uncoated, used in Prestressed Ground Anchors
8. ASTM C 109 Standard Test Method for Compressive Strength of Hydraulic Cement Mortars (Using 2 inch or 50 mm Cube Specimens)
9. ASTM C 143 Standard Test Method for Slump of Hydraulic Cement Concrete
10. ASTM D 1248 Standard Specification for Polyethylene Plastic Molding and Extrusion Materials
11. ASTM D 1784 Standard Specification for Rigid Poly Vinyl Chloride (PVC) Compounds and Chlorinated Poly Vinyl Chloride (CPVC) Compounds
12. ASTM D 1785 Standard Specification for Poly Vinyl Chloride (PVC) Plastic Pipe, Schedule 40, 80 and 120
13. ASTM D 2241 Standard Specification for Poly Vinyl Chloride (PVC) Pressure-Rated Pipe (SDR Series)
14. ASTM D 4101 Standard Specification for Propylene Plastic Injection and Extrusion Materials
15. ASTM G 57 Standard Method for Field Measurements of Soil Resistivity under the Wenner Four Electrode Method

E. Latest version of American Association of State Highway and Transportation Officials (AASHTO) standards:
1. AASHTO M 85 Portland Cement
2. AASHTO M 183 Structural Steel
3. AASHTO M 203 Uncoated Seven-wire Stress-relieved Steel Strand
4. AASHTO M 222 High-strength Low-alloy Structural Steel with 50,000 psi Minimum Yield Point to 4 Inches Thick
5. AASHTO M 252 Corrugated Polyethylene Drainage Tubing
6. AASHTO M 275 Uncoated High-strength Steel Bar
7. AASHTO M 284 Epoxy-coated Reinforcing Bars
8. AASHTO T 288 Determining Minimum Laboratory Soil Resistivity
9. AASHTO T 289 Determining pH of Soil for Use in Corrosion Testing
10. AASHTO T 290 Determining Water Soluble Sulfate Ion Content in Soil

F. American Water Works Association (AWWA) C 105, "Notes on Procedures for Soil

Survey Tests and Observations and Their Interpretation to Determine Whether Polyethylene Encasement Should Be Used," Appendix A

G. Latest version of Post Tensioning Institute (PTI) standards:
1. PTI, "Post Tensioning Manual"
2. PTI, "Specification for Unbonded Single Strand Tendons"
3. PTI, "Recommendations for Prestressed Rock and Soil Anchors"

1.4 QUALITY ASSURANCE:

A. The Contractor performing the work described in this Specification shall have installed permanent ground anchors for a minimum of three (3) years.

B. The Contractor shall assign an engineer to supervise the work with at least three (3) years of experience in the design and construction of permanent anchored structures. The Contractor may not use consultants or manufacturer's representatives in order to meet the requirements of this section. Drill operators and on-site supervisors shall have a minimum of one (1) year experience installing permanent ground anchors with the Contractor's organization.

C. The Construction Quality Assurance (CQA) Inspector will monitor all aspects of anchored wall construction. The CQA Inspector will perform material conformance testing as required. The Contractor shall be aware of the activities required by the CQA Inspector and shall account for these activities in the construction schedule. The Contractor shall correct all deficiencies and nonconformities identified by the CQA Inspector at no additional cost to the Owner.

1.5 EXISTING CONDITIONS

A. Prior to beginning work, the Owner shall provide utility location plans to the Contractor. The Contractor is responsible for contacting a utility location service to verify the location of underground utilities before starting the work.

B. The Contractor shall survey the condition of adjoining properties and make records and photographs of any evidence of settlement or cracking of any adjacent structures. The Contractor's report of this survey shall be delivered to the Owner before work begins.

1.6 SUBMITTALS

A. Comply with pertinent provisions of Section 01300.

B. The Contractor shall submit a list containing at least five (5) projects completed within the last five (5) years. For each project, the Contractor shall include with this submittal, at a minimum: (1) name of client contact, address, and telephone number; (2) location of project; (3) contract value; and (4) scheduled completion date and actual completion date for the project.

C. Resumes of the Contractor's staff shall be submitted to the Owner for review as part of the Contractor bid. Only those individuals designated as meeting the qualification requirements shall be used for the project. The Contractor cannot substitute for any of these individuals without written approval of the Owner or Owner's Engineer (Engineer). The Engineer shall approve or reject the Contractor's qualifications and staff within fifteen (15) working days after receipt of the submission. Work shall not be started on any anchored wall system nor materials ordered until the Contractor's qualifications have been approved by the Engineer. The Engineer may suspend the work if the Contractor

substitutes unqualified personnel for approved personnel during construction. If work is suspended due to the substitution of unqualified personnel, the Contractor shall be fully liable for additional costs resulting from the suspension of work and no adjustment in contract time resulting from the suspension of work will be allowed.

D. The Contractor shall prepare and submit to the Engineer for review and approval Working Drawings and a design submission describing the ground anchor system or systems intended for use. The Working Drawings and design submission shall be submitted thirty (30) working days prior to the commencement of the ground anchor work. The Working Drawings and design submission shall include the following:

1. A ground anchor schedule giving:
   a. Ground anchor number;
   b. Ground anchor design load;
   c. Type and size of tendon;
   d. Minimum total anchor length;
   e. Minimum bond length;
   f. Minimum tendon bond length; and
   g. Minimum unbonded length.

2. A drawing of the ground anchor tendon and the corrosion protection system including details for the following:
   a. Spacers and their location;
   b. Centralizers and their location;
   c. Unbonded length corrosion protection system;
   d. Bond length corrosion protection system;
   e. Anchorage and trumpet; and
   f. Anchorage corrosion protection system.

3. Certificates of Compliance for the following materials, if used. The certificate shall state that the material or assemblies to be provided will fully comply with the requirements of the contract.
   a. Prestressing steel, strand or bar;
   b. Portland cement;
   c. Prestressing hardware;
   d. Bearing plates; and
   e. Corrosion protection system.

E. The Engineer shall approve or reject the Contractor's Working Drawings and design submission within thirty (30) working days after receipt of the submission. Approval of the design submittal does not relieve the Contractor of his responsibility for the successful completion of the work.

F. The Contractor shall submit to the Engineer for review and approval or rejection mill test reports for the prestressing steel and the bearing plate steel. The Engineer may require the Contractor to provide samples of any ground anchor material intended for use on the project. The Engineer shall approve or reject the prestressing steel and bearing plate steel within five (5) working days after receipt of the test reports. The prestressing steel and bearing plates shall not be incorporated in the work without the Engineer's approval.

G. The Contractor shall submit to the Engineer for review and approval or rejection calibration data for each test jack, load cell, primary pressure gauge and reference pressure gauge to be used. The Engineer shall approve or reject the calibration data within five (5) working days after receipt of the data. Testing cannot commence until the Engineer has approved the jack, load cell, primary pressure gauge and reference pressure gauge calibrations.

H. The Contractor shall submit to the Engineer within twenty (20) calendar days after completion of the ground anchor work a report containing:
1. Prestressing steel manufacturer's mill test reports for the tendons incorporated in the installation;
2. Grouting records indicating the cement type, quantity injected and the grout pressures;
3. Ground anchor test results and graphs; and
4. As-built drawings showing the location and orientation of each ground anchor, anchor capacity, tendon type, total anchor length, bond length, unbonded length, and tendon bond length as installed and locations of all instruments installed by the Owner.

PART 2- MATERIALS

2.1 GENERAL

A. The Contractor shall not deliver materials to the site until the Engineer has approved the submittals outlined in Part 1.04 of this Specification.

B. The designated storage location or locations shall be protected by the Contractor from theft, vandalism, passage of vehicles, and other potential sources of damage to materials delivered to the site.

C. The Contractor shall protect the materials from the elements by appropriate means. Prestressing steel strands and bars shall be stored and handled in accordance with the manufacturer’s recommendations and in such a manner that no damage to the component parts occurs. All steel components shall be protected from the elements at all times. Cement and additives for grout shall be stored under cover and protected against moisture.

2.2 ADMIXTURES

A. Admixtures which control bleed, improve flowability, reduce water content, and retard set may be used in the grout subject to the approval of the Engineer. Admixtures, if used, shall be compatible with the prestressing steels and mixed in accordance with the manufacturer's recommendations. Expansive admixtures may only be added to the grout used for filling sealed encapsulations, trumpets, and anchorage covers. Accelerators shall not be permitted.

2.3 ANCHORAGE DEVICES

A. Stressing anchorages shall be a combination of either a steel bearing plate with wedge plate and wedges, or a steel bearing plate with a threaded anchor nut. The steel bearing and wedge plate may also be combined into a single element. Anchorage devices shall be capable of developing 95 percent of the specified minimum ultimate tensile strength (SMTS) of the prestressing steel tendon. The anchorage devices shall conform to the static strength requirements of Section 3.1.6 (1) and Section 3.1.8 (1) and (2) of the PTI "Guide Specification for Post-Tensioning Materials."

B. The bearing plate shall be fabricated from steel conforming to AASHTO M 183 or M 222 specifications, or equivalent, or may be a ductile iron casting conforming to ASTM A 536.

C. The trumpet shall be fabricated from a steel pipe or tube or from PVC pipe. Steel pipe or tube shall conform to the requirements of ASTM A 53 for pipe or ASTM A 500 for tubing. Steel trumpets shall have a minimum wall thickness of 1/8 inch for diameters up to 4 inch and ¼ inch for larger diameters. PVC pipe shall conform to ASTM A 1785, Schedule 40 minimum. PVC trumpets shall be positively sealed against the bearing plate and aligned

with the tendon to prevent cracking during stressing.

D. Anchorage covers shall be fabricated from steel or plastic with a minimum thickness of 3/32 inch. The joint between the cover and the bearing plate shall be watertight.

E. Wedges shall be designed to preclude premature failure of the prestressing steel due to notch or pinching effects under static and dynamic strength requirements of Section 3.1.6 (1) and Section 3.1.8 (1) and 3.1.8 (2) of the PTI "Post Tensioning Manual." Wedges shall not be reused.

F. Wedges for epoxy coated strand shall be designed to be capable of biting through the epoxy coating and into the strand. Removal of the epoxy coating from the strand to allow the use of standard wedges shall not be permitted. Anchor nuts and other threadable hardware for epoxy coated bars shall be designed to thread over the epoxy coated bar and still comply with the requirements for carrying capacity.

2.4 BONDBREAKER

A. The bondbreaker shall be fabricated from a smooth plastic tube or pipe having the following properties: (1) resistant to chemical attack from aggressive environments, grout, or corrosion inhibiting compound; (2) resistant to aging by ultra-violet light; (3) fabricated from material nondetrimental to the tendon; (4) capable of withstanding abrasion, impact, and bending during handling and installation; (5) enable the tendon to elongate during testing and stressing; and (6) allow the tendon to remain unbonded after lock-off.

2.5 CEMENT GROUT

A. Type I, II, III, or V Portland cement conforming to AASHTO M 85 shall be used for grout. The grout shall be a pumpable neat mixture of cement and water and shall be stable (bleed less than 2 percent), fluid, and provide a minimum 28-day compressive strength of at least 3000 psi measured in accordance with ASTM C 109 at time of stressing.

2.6 CENTRALIZERS

A. Centralizers shall be fabricated from plastic, steel or material which is nondetrimental to the prestressing steel. Wood shall not be used. The centralizer shall be able to support the tendon in the drill hole and position the tendon so a minimum of ½ inch of grout cover is provided and shall permit grout to freely flow around the tendon and up the drill hole.

B. Centralizers are not required on pressure injected anchors installed in coarse grained soils when the grouting pressure exceeds 145 psi, nor on hollow stem-augered anchors when they are grouted through the auger with grout having a slump of 9 inch or less.

2.7 CORROSION INHIBITING COMPOUND

A. The corrosion inhibiting compound placed in either the free length or the trumpet area shall be an organic compound (i.e., grease or wax) with appropriate polar moisture displacing, corrosion inhibiting additives and self-healing properties. The compound shall permanently stay viscous and be chemically stable and nonreactive with the prestressing steel, the sheathing material, and the anchor grout.

2.8 GROUT TUBES

A. Grout tubes shall have an adequate inside diameter to enable the grout to be pumped to the bottom of the drill hole. Grout tubes shall be strong enough to withstand a minimum grouting pressure of 145 psi. Postgrout tubes shall be strong enough to withstand postgrouting pressures.

2.9 HEAT SHRINKABLE SLEEVES

A. Heat shrinkable sleeves shall be fabricated from a radiation crosslinked polyolefin tube internally coated with an adhesive sealant. Prior to shrinking, the tube shall have a nominal wall thickness of 0.024 inch. The adhesive sealant inside the heat shrinkable tube shall have a nominal thickness of 0.02 inch.

2.10 PRESTRESSING STEEL

A. Ground anchor tendons shall be fabricated from single or multiple elements of one of the following prestressing steels:
1. Steel bars conforming to AASHTO M 275
2. Seven-wire, low-relaxation strands conforming to AASHTO M 203
3. "Compact" seven-wire, low-relaxation strands conforming to ASTM A 779
4. Epoxy coated strand conforming to ASTM A 882.
5. Epoxy coated reinforcing steel bars conforming to ASTM A 775.

B. Centralizers shall be provided at maximum intervals of 10 feet with the deepest centralizer located 12 inches from the end of the anchor and the upper centralizer for the bond zone located no more than 5 feet from the top of the tendon bond length. Spacers shall be used to separate the steel strands of strand tendons. Spacers shall be provided at maximum intervals of 10 feet and may be combined with centralizers.

2.11 PRESTRESSING STEEL COUPLERS

A. Prestressing steel bar couplers shall be capable of developing 100 percent of the minimum specified ultimate tensile strength of the prestressing steel bar. Steel strands used for a soil or rock anchor shall be continuous with no splices, unless approved by the Engineer.

2.12 SHEATH

A. A sheath shall be used as part of the corrosion protection system for the unbonded length portion of the tendon. The sheath shall be fabricated from one of the following:
1. A polyethylene tube pulled or pushed over the prestressing steel. The polyethylene shall be Type II, III or IV as defined by ASTM D 1248 (or approved equal). The tubing shall have a minimum wall thickness of 1/16 inch.
2. A hot-melt extruded polypropylene tube. The polypropylene shall be cell classification B55542-11 as defined by ASTM D 4101 (or approved equal). The tubing shall have a minimum wall thickness of 1/16 inch.
3. A hot-melt extruded polyethylene tube. The polyethylene shall be high density Type III as defined by ASTM D1248 (or approved equal). The tubing shall have a minimum wall thickness of 1/16 inch.
4. Steel tubing conforming to ASTM A 500. The tubing shall have a minimum wall thickness of ¼ inch.
5. Steel pipe conforming to ASTM A 53. The pipe shall have a minimum wall thickness of ¼ inch.
6. Plastic pipe or tube of PVC conforming to ASTM D 1784 Class 13464-B. The pipe or tube shall be Schedule 40 at a minimum.
7. A corrugated tube conforming to the requirement of the tendon bond length encapsulation (Part 2.14).

2.13 SPACERS

A. Spacers shall be used to separate elements of a multi-element tendon and shall permit grout to freely flow around the tendon and up the drill hole. Spacers shall be fabricated from plastic, steel or material which is nondetrimental to the prestressing steel. Wood

shall not be used. A combination centralizer-spacer may be used.

2.14 TENDON BOND LENGTH ENCAPSULATIONS

A. When the Contract Drawings require the tendon bond length to be encapsulated to provide additional corrosion protection, the encapsulation shall be fabricated from one of the following:
1. High density corrugated polyethylene tubing conforming to the requirements of AASHTO M 252 and having a minimum wall thickness of 1/16 inch except pregrouted tendons which may have a minimum wall thickness of 0.04 inch.
2. Deformed steel tubing or pipes conforming to ASTM A 52 or A 500 with a minimum wall thickness of ¼ inch.
3. Corrugated, polyvinyl chloride tubes manufactured from rigid PVC compounds conforming to ASTM D 1784, Class 13464-B.
4. Fusion-bonded epoxy conforming to the requirements of AASHTO M 284.

2.15 WATER

A. Water for mixing grout shall be potable, clean, and free of injurious quantities of substances known to be harmful to Portland cement or prestressing steel.

PART 3 DESIGN CRITERIA

A. Unless otherwise directed, the Contractor shall select the type of tendon to be used. The tendon shall be sized so the design load does not exceed 60 percent of the specified minimum tensile strength (SMTS) of the prestressing steel. The lock-off load for the tendon shall be chosen based on anticipated time or activity dependent load changes, but shall not exceed 70 percent of the SMTS of the prestressing steel. The prestressing steel shall be sized so the maximum test load does not exceed 80 percent of the SMTS of the prestressing steel.

B. The Contractor shall be responsible for determining the bond length necessary to develop the design load indicated on the Contract Drawings or the approved Working Drawings in accordance with Part 6 of this Specification. The minimum bond length shall be 15 feet for strand tendons in rock and 10 feet for bar tendons in rock. The minimum bond length shall be 15 feet for strand and bar tendons in soil. The minimum tendon bond length shall be 10 feet.

C. The free stressing length (unbonded length) for rock and soil anchors shall not be less than 10 feet for bar tendons and 15 feet for strand tendons. The free stressing length (unbonded length) shall extend at least 5 feet or 20 percent of the height of the wall, whichever is greater, behind the critical failure surface. The critical failure surface shall be evaluated using slope stability or similar procedures.

PART 4 CORROSION PROTECTION

4.1 PROTECTION REQUIREMENTS

A. The corrosion protection systems shall be designed and constructed to provide reliable ground anchors for temporary and permanent structures. Contractor shall select a Class I or a Class II as required to achieve a 100 year protective life.

4.12 ANCHORAGE PROTECTION

A. All stressing anchorages permanently exposed to the atmosphere shall be grout-filled cover, except, for restressable anchorages, a corrosion inhibiting compound must be

used. Stressing anchorages encased in concrete at least 2 inch thick do not require a cover.

B. The trumpet shall be sealed to the bearing plate and shall overlap the unbonded length corrosion protection by at least 4 inch. The trumpet shall be long enough to accommodate movements of the structure and the tendon during testing and stressing. On strand tendons, the trumpet shall be long enough to enable the tendon to make a transition from the diameter of the tendon along the unbonded length to the diameter of the tendon at the wedge plate without damaging the encapsulation.

C. The trumpet shall be completely filled with grout, except restressable anchorages must use corrosion inhibiting compounds. Compounds may be placed any time during construction. Compound-filled trumpets shall have a permanent seal between the trumpet and the unbonded length corrosion protection. Grout must be placed after the ground anchor has been tested and stressed to the lock-off load. Trumpets filled with grout shall have either a temporary seal between the trumpet and the unbonded length corrosion protection or the trumpet shall fit tightly over the unbonded length corrosion protection for a minimum of 4 inch.

4.3 UNBONDED LENGTH PROTECTION

A. Corrosion protection of the unbonded length shall be provided by a combination of sheaths, sheath filled with a corrosion inhibiting compound or grout, or a heat shrinkable tube internally coated with a mastic compound, depending on the tendon class. The corrosion inhibiting compound shall completely coat the tendon elements, fill the void between them and the sheath, and fill the interstices between the wires of 7-wire strands. Provisions shall be made to retain the compound within the sheath.

B. The corrosion protective sheath surrounding the unbonded length of the tendon shall be long enough to extend into the trumpet, but shall not come into contact with the stressing anchorage during testing. Any excessive protection length shall be trimmed off.

C. For pregrouted encapsulations and all Class I tendons, a separate bondbreaker or common sheath shall be provided for supplemental corrosion protection or to prevent the tendon from bonding to the grout surrounding the unbonded length.

4.4 UNBONDED LENGTH/BOND LENGTH TRANSITION

A. The transition between the corrosion protection for the bonded and unbonded lengths shall be designed and fabricated to ensure continuous protection from corrosive attack.

4.5 TENDON BOND LENGTH PROTECTION FOR GROUT PROTECTED TENDONS (Class II)

A. Cement grout can be used to protect the tendon bond length in non-aggressive ground when the installation methods ensure that the grout will remain fully around the tendon. The grout shall overlap the sheathing of the unbonded length by at least 1 inch.

B. Centralizers or grouting techniques shall ensure a minimum of ½ inch of grout cover over the tendon bond length.

4.16 TENDON BOND LENGTH PROTECTION FOR ENCAPSULATED TENDONS (Class I)

A. A grout-filled, corrugated plastic encapsulation or a grout-filled, deformed steel tube shall

be used. The prestressing steel can be grouted inside the encapsulation prior to inserting the tendon into the drill hole or after the tendon has been placed.

B. Centralizers or grouting techniques shall ensure a minimum of ½ inch of grout cover over the encapsulation.

4.7 EPOXY (Class I)

A. Fusion-bonded epoxy may be used to provide a layer of protection for the steel tendon in addition to the cement grout.

4.8 COUPLER PROTECTION

A. On encapsulated bar tendons (Class I), the coupler and any adjacent exposed bar sections shall be covered with a corrosion-proof compound or wax-impregnated cloth tape. The coupler area shall be covered by a smooth plastic tube complying with the requirements set forth in Part 2.12 of this Specification, overlapping the adjacent sheathed tendon by at least 1 inch. The two joints shall be sealed each by a coated heat shrink sleeve of at least 6 inch length, or approved equal. The corrosion-proof compound shall completely fill the space inside the cover tube.

B. Corrosion protection details for strand couplers, if specifically permitted by the contract documents, shall be submitted for approval of the Engineer.

PART 5 CONSTRUCTION

5.1 TENDON STORAGE AND HANDLING

A. Tendons shall be handled and stored in such a manner as to avoid damage or corrosion. Damage to the prestressing steel, the corrosion protection, and/or the epoxy coating as a result of abrasions, cuts, nicks, welds and weld splatter will be cause for rejection by the Engineer. The prestressing steel shall be protected if welding is to be performed in the vicinity. Grounding of welding leads to the prestressing steel is forbidden. Prestressing steel shall be protected from dirt, rust, or deleterious substances. A light coating of rust on the steel is acceptable. If heavy corrosion or pitting is noted, the Engineer shall reject the affected tendons.

B. The Contractor shall use care in handling and storing the tendons at the site. Prior to inserting a tendon in the drill hole, the Contractor and the CQA Inspector shall examine the tendon for damage to the encapsulation and the sheathing. If, in the opinion of the CQA Inspector, the encapsulation is damaged, the Contractor shall repair the encapsulation in accordance with the tendon supplier's recommendations. If, in the opinion of the CQA Inspector, the smooth sheathing has been damaged, the Contractor shall repair it with ultra high molecular weight polyethylene tape. The tape should be spiral wound around the tendon to completely seal the damaged area. The pitch of the spiral shall ensure a double thickness at all points.

C. Banding for fabricated tendons shall be padded to avoid damage to the tendon corrosion protection. Upon delivery, the fabricated anchors or the prestressing steel for fabrication of the tendons on site and all hardware shall be stored and handled in such a manner to avoid mechanical damage, corrosion, and contamination with dirt or deleterious substances.

D. Lifting of the pre-grouted tendons shall not cause excessive bending, which can debond the prestressing steel from the surrounding grout.

E. Prestressing steel shall not be exposed to excessive heat (i.e., more than 450°F).

5.2 ANCHOR FABRICATION

A. Anchors shall be either shop or field fabricated from materials conforming to Part 2 of the Specification and as shown in the approved Working Drawings and schedules.

B. Prestressing steel shall be cut with an abrasive saw or, with the approval of the prestressing steel supplier, an oxyacetylene torch.

C. All of the tendon bond length, especially for strand, must be free of dirt, manufacturers' lubricants, corrosion-inhibitive coatings, or other deleterious substances that may significantly affect the grout-to-tendon bond or the service life of the tendon.

D. Pregrouting of encapsulated tendons shall be done on an inclined, rigid frame or bed by injecting the grout from the low end of the tendon.

5.3 DRILLING

A. Drilling methods shall be left to the discretion of the Contractor, whenever possible. The Contractor shall be responsible for using a drilling method to establish a stable hole of adequate dimensions, within the tolerances specified. Drilling methods may involve, amongst others, rotary, percussion, rotary/percussive or auger drilling; or percussive or vibratory driven casing.

B. Holes for anchors shall be drilled at the locations and to the length, inclination and diameter shown on the Contract Drawings or the approved Working Drawings. The drill bit or casing crown shall not be more than 1/8 inch smaller than the specified hole diameter. At the ground surface the drill hole shall be located within 12 inches of the location shown on the Contract Drawings or the approved Working Drawings. The drill hole shall be located so the longitudinal axis of the drill hole and the longitudinal axis of the tendon are parallel. In particular, the ground anchor hole shall not be drilled in a location that requires the tendon to be bent in order to enable the bearing plate to be connected to the supported structure. At the point of entry the ground anchor shall be installed within plus/minus three (3) degrees of the inclination from horizontal shown on the Contract Drawings or the approved Working Drawings. At the point of entry the horizontal angle made by the ground anchor and the structure shall be within plus/minus three (3) degrees of a line drawn perpendicular to the plane of the structure unless otherwise shown on the Contract Drawings or approved Working Drawings. The ground anchors shall not extend beyond the right-of-way or easement limits shown on the Contract Drawings.

5.4 TENDON INSERTION

A. Tendons shall be placed in accordance with the Contract Drawings and details and the recommendations of the tendon manufacturer or specialist anchor contractor. The tendon shall be inserted into the drill hole to the desired depth without difficulty. When the tendon cannot be completely inserted, the Contractor shall remove the tendon from the drill hole and clean or redrill the hole to permit insertion. Partially inserted tendons shall not be driven or forced into the hole.

B. Each anchor tendon shall be inspected by field personnel during installation into the drill hole or casing. Damage to the corrosion protection system shall be repaired, or the tendon replaced if not repairable. Loose spacers or centralizers shall be reconnected to prevent shifting during insertion. Damaged fusion-bonded epoxy coatings shall be repaired in accordance with the manufacturer's recommendations. If the patch is not

allowed to cure prior to inserting the tendon in the drill hole, the patched area shall be protected by tape or other suitable means.

C. The rate of placement of the tendon into the hole shall be controlled such that the sheathing, coating, and grout tubes are not damaged during installation of the tendon. Anchor tendons shall not be subjected to sharp bends. The bottom end of the tendon may be fitted with a cap or bullnose to aid its insertion into the hole, casing, or sheathing.

5.5 GROUTING

A. The Contractor shall use a neat cement grout or a sand-cement grout. The cement shall not contain lumps or other indications of hydration. Admixtures, if used, shall be mixed in accordance with the manufacturer's recommendations.

B. The grouting equipment shall produce a grout free of lumps and undispersed cement. A positive displacement grout pump shall be used. The pump shall be equipped with a pressure gauge to monitor grout pressures. The pressure gauge shall be capable of measuring pressures of at least 145 psi or twice the actual grout pressures used by the Contractor, whichever is greater. The grouting equipment shall be sized to enable the grout to be pumped in one continuous operation. The mixer should be capable of continuously agitating the grout.

C. The grout shall be injected from the lowest point of the drill hole. The grout may be pumped through grout tubes, casing, hollow-stem-augers, or drill rods. The grout can be placed before or after insertion of the tendon. The quantity of the grout and the grout pressures shall be recorded. The grout pressures and grout takes shall be controlled to prevent excessive heave or fracturing.

D. After the tendon is installed, the drill hole may be filled in one continuous grouting operation except that pressure grouting shall not be used in the free length zone. The grout at the top of the drill hole shall not contact the back of the structure or the bottom of the trumpet.

E. If the ground anchor is installed in a fine-grained soil using drill holes larger than 6 inches in diameter, then the grout above the top of the bond length shall be placed after the ground anchor has been tested and stressed. The Engineer will allow the Contractor to grout the entire drill hole at the same time if the Contractor can demonstrate that his particular ground anchor system does not derive a significant portion of its load-carrying capacity from the soil above the bond length portion of the ground anchor.

F. If grout protected tendons are used for ground anchors anchored in rock, then pressure grouting techniques shall be utilized. Pressure grouting requires that the drill hole be sealed and that the grout be injected until a minimum 50 psi grout pressure (measured at the top of the drill hole) can be maintained on the grout for at least five (5) minutes.

G. The grout tube may remain in the hole on completion of grouting if the tube is filled with grout.

H. After grouting, the tendon shall not be loaded for a minimum of three (3) days.

5.6 ANCHORAGE INSTALLATION

A. The anchor bearing plate and the anchor head or nut shall be installed perpendicular to the tendon, within plus/minus three (3) degrees and centered on the bearing plate, without bending or kinking of the prestressing steel elements. Wedge holes and wedges

shall be free of rust, grout, and dirt.

B. The stressing tail shall be cleaned and protected from damage until final testing and lock-off. After the anchor has been accepted by the Engineer, the stress tail shall be cut to its final length according to the tendon manufacturer's recommendations.

C. The corrosion protection surrounding the unbonded length of the tendon shall extend up beyond the bottom seal of the trumpet or 4 inches into the trumpet if no trumpet seal is provided. If the protection does not extend beyond the seal or sufficiently far enough into the trumpet, the Contractor shall extend the corrosion protection or lengthen the trumpet.

D. The corrosion protection surrounding the unbonded length of the tendon shall not contact the bearing plate or the anchor head during testing and stressing. If the protection is too long, the Contractor shall trim the corrosion protection to prevent contact.

PART 6 STRESSING, LOAD TESTING, AND ACCEPTANCE

6.1 GENERAL

A. Each ground anchor shall be tested. No load greater than ten (10) percent of the design load can be applied to the ground anchor prior to testing. The maximum test load shall be no less than 1.33 times the design load and shall not exceed 80 percent of the specified minimum ultimate tensile strength (SMTS) of the prestressing steel of the tendon. The test load shall be simultaneously applied to the entire tendon. Stressing of single elements of multi-element tendons shall not be permitted.

6.2 STRESSING EQUIPMENT

A. The testing equipment shall consist of:
1. A dial gauge or vernier scale capable of measuring to the nearest 0.001 inch shall be used to measure the ground anchor movement. The movement-measuring device shall have a minimum travel equal to the theoretical elastic elongation of the total anchor length at the maximum test load and it shall have adequate travel so the ground anchor movement can be measured without resetting the device at an interim point.
2. A hydraulic jack and pump shall be used to apply the test load. The jack and a calibrated primary pressure gauge shall be used to measure the applied load. The jack and primary pressure gauge shall be calibrated by an independent firm as a unit. The calibration shall have been performed within forty-five (45) working days of the date when the calibration submittals are provided to the Engineer. Testing cannot commence until the Engineer has approved the calibration. The primary pressure gauge shall be graduated in 100 psi increments or less. The ram travel shall be at least 6 inches and preferably not be less than the theoretical elongation of the tendon at the maximum test load. If elongations greater than 6 inches are required, restroking can be allowed.
3. A calibrated reference pressure gauge shall also be kept at the site to periodically check the production (i.e., primary pressure) gauge. The reference gauge shall be calibrated with the test jack and primary pressure gauge. The reference pressure gauge shall be stored indoors and not subjected to rough treatment.
4. The Contractor shall provide an electrical resistance load cell and readout to be used when performing an extended creep test.
5. The stressing equipment shall be placed over the ground anchor tendon in such a manner that the jack, bearing plates, load cells and stressing anchorage are axially aligned with the tendon and the tendon is centered within the equipment.

B. The stressing equipment, the sequence of stressing and the procedure to be used for each stressing operation shall be determined at the planning stage of the project. The equipment shall be used strictly in accordance with the manufacturer's operating instructions.

C. Stressing equipment shall preferably be capable of stressing the whole tendon in one stroke to the specified Test Load and the equipment shall be capable of stressing the tendon to the maximum specified Test Load within 75 percent of the rated capacity. The pump shall be capable of applying each load increment in less than 60 seconds.

D. The equipment shall permit the tendon to be stressed in increments so that the load in the tendon can be raised or lowered in accordance with the test specifications, and allow the anchor to be lift-off tested to confirm the lock-off load.

E. Stressing equipment shall be recently calibrated within an accuracy of plus or minus two (2) percent prior to use. The calibration certificate and graph shall be available on site at all times. The calibration shall be traceable to the National Institute of Standards and Technology (NIST).

6.3 LOAD TESTING SETUP

A. Dial gauges shall bear on the pulling head of the jack and their stems shall be coaxial with the tendon direction. The gauges shall be supported on an independent, fixed frame, such as a tripod, which will not move as a result of stressing or other construction activities during the operation.

B. Prior to setting the dial gauges, the Alignment Load (AL) shall be accurately placed on the tendon. The magnitude of AL depends on the type and length of the tendon.

C. Regripping of strands, which would cause overlapping wedge bites, or wedge bites on the tendon below the anchor head, shall be avoided.

D. Stressing and testing of multiple element tendons with single element jacks is not permitted.

E. Stressing shall not begin before the grout has reached adequate strength.

6.4 PERFORMANCE TESTS

A. Five (5) percent of the ground anchors or a minimum of three (3) ground anchors, whichever is greater, shall be performance tested in accordance with the procedures described below. The Engineer shall select the ground anchors to be performance tested. The remaining ground anchors shall be tested in accordance with the proof test procedures (see Part 6.05).

B. The performance test shall be made by incrementally loading and unloading the ground anchor in accordance with the schedule provided. The load shall be raised from one increment to another immediately after recording the ground anchor movement. The ground anchor movement shall be measured and recorded to the nearest 0.001 inch with respect to an independent fixed reference point at the alignment load and at each increment of load. The load shall be monitored with the primary pressure gauge. The reference pressure gauge shall be placed in series with the primary pressure gauge during each performance test. If the load determined by the reference pressure gauge and the load determined by the primary pressure gauge differ by more than ten (10)

percent, the jack, primary pressure gauge and reference pressure gauge shall be recalibrated at no expense to the Owner. At load increments other than the maximum test load, the load shall be held just long enough to obtain the movement reading.

C. The maximum test load in a performance test shall be held for ten (10) minutes. A load cell shall be used to monitor small changes in load during constant load-hold periods.

STEPS FOR THE PERFORMANCE TEST

Step	Loading	Applied Load	Record and Plot Total Movement (δ_{ti})	Record and Residual Movement (δ_{ri})	Calculate Elastic Movement (δ_{ci})
1	Apply Alignment Load (AL)				
2	Cycle 1	0.25DL	δ_{t1}		
		AL		δ_{r1}	δ_{t1}- δ_{r1}=δ_{e1}
3	Cylcle 2	0.25DL	δ_2		
		0.50DL	δ_{t2}		
		AL		δ_{r2}	δ_{t2}- δ_{r2}=δ_{e2}
4	Cycle 3	0.25DL	δ_3		
		0.50DL	δ_3		
		0.75DL	δ_{t3}		
		AL		δ_{r3}	δ_{t3}- δ_{r3}=δ_{e3}
5	Cycle 4	0.25DL	δ_4		
		0.50DL	δ_4		
		0.75DL	δ_4		
		1.00DL	δ_{t4}		
		AL		δ_{r4}	δ_{t4}- δ_{r4}=δ_{e4}
6	Cycle 5	0.25DL	δ_5		
		0.50DL	δ_5		
		0.75DL	δ_5		
		1.00DL	δ_5		
		1.20DL	δ_{t5}		
		AL		δ_{r5}	δ_{t5}- δ_{r5}=δ_{e5}
7	Cycle 6	0.25DL	δ_6		
		0.50DL	δ_6		
		0.75DL	δ_6		
		1.00DL	δ_6		
		1.20DL	δ_6		
		1.33 DL	δ_{t6}, zero reading for creep test		
8	Hold load for 10 minutes while recording movement at specified times. If the total movement measured during the load hold exceeds the specified maximum value then the load hold should be extended to a total of 60 minutes.				
9	Cycle 6 cont'd.	AL			
Notes: AL = Alignment Load, DL = Design Load, δ_i = total movement at a load other than maximum for cycle, i = number indentifying a specific load cycle.					

D. The jack shall be adjusted as necessary in order to maintain a constant load. The load-hold period shall start as soon as the maximum test load is applied and the ground anchor movement, with respect to a fixed reference, shall be measured and recorded at 1 minute, 2, 3, 4, 5, 6 and 10 minutes. If the ground anchor movement between one (1) minute and ten (10) minutes exceeds 0.04 inch, the maximum test load shall be held for

an additional 50 minutes. If the load hold is extended, the ground anchor movement shall be recorded at 15 minutes, 20, 30, 40, 50 and 60 minutes.

6.5 PROOF TESTS

A. The proof test shall be performed by incrementally loading the ground anchor in accordance with the following schedule. The load shall be raised from one increment to another immediately after recording the ground anchor movement. The ground anchor movement shall be measured and recorded to the nearest 0.001 inch with respect to an independent fixed reference point at the alignment load and at each increment of load. The load shall be monitored with the primary pressure gauge. At load increments other than the maximum test load, the load shall be held just long enough to obtain the movement reading.

PROOF TEST SCHEDULE

Step	Load
1	AL
2	0.25DL
3	0.50DL
4	0.75DL
5	1.00DL
6	1.20DL
7	1.33DL
8	Reduce to lock-off load
9	AL (optional)
10	Adjust to lock-off load

B. The maximum test load in a proof test shall be held for ten (10) minutes. The jack shall be adjusted as necessary in order to maintain a constant load. The load-hold period shall start as soon as the maximum test load is applied and the ground anchor movement with respect to a fixed reference shall be measured and recorded at 1 minute, 2, 3, 4, 5, 6 and 10 minutes. If the ground anchor movement between one (1) minute and ten (10) minutes exceeds 0.04 inch, the maximum test load shall be held for an additional 50 minutes. If the load hold is extended, the ground anchor movements shall be recorded at 15 minutes, 20, 30, 40, 50 and 60 minutes.

6.6 EXTENDED CREEP TESTS

A. The Owner shall determine if extended creep testing is required and select those ground anchors that are to be creep tested. If creep tests are required, at least two (2) ground anchors shall be creep tested. The stressing equipment shall be capable of measuring and maintaining the hydraulic pressure within 50 psi.

B. The extended creep test shall be made by incrementally loading and unloading the ground anchor in accordance with the performance test schedule provided in Section 6.04. At the end of each loading cycle, the load shall be held constant for the observation period indicated in the creep test schedule below. The times for reading and recording the ground anchor movement during each observation period shall be 1 minute, 2, 3, 4, 5, 6, 10, 15, 20, 25, 30, 45, 60, 75, 90, 100, 120, 150, 180, 210, 240, 270 and 300 minutes as appropriate for the load increment. Each load-hold period shall start as soon as the test load is applied. In a creep test, the primary pressure gauge and reference pressure gauge will be used to measure the applied load and the load cell will be used to monitor small changes in load during constant load-hold periods. The jack shall be

adjusted as necessary in order to maintain a constant load.

C. The Contractor shall plot the ground anchor movement and the residual movement measured in an extended creep test. The Contractor shall also plot the creep movement for each load hold as a function of the logarithm of time.

EXTENDED CREEP TEST SCHEDULE

Load	Observation period (min.)
AL	
0.25DL	10
0.50DL	30
0.75DL	30
1.00DL	45
1.20DL	60
1.33DL	300

6.7 GROUND ANCHOR ACCEPTANCE CRITERIA

A. A performance-tested or proof-tested ground anchor with a 10 minute load hold shall be acceptable if the: (1) ground anchor resists the maximum test load with less than 1 mm of movement between 1 minute and 10 minutes; and (2) total elastic movement at the maximum test load exceeds 80 percent of the theoretical elastic elongation of the unbonded length.

B. A performance-tested or proof-tested ground anchor with a 60 minute load hold shall be acceptable if the: (1) ground anchor resists the maximum test load with a creep rate that does not exceed 0.08 inch in the last log cycle of time; and (2) total elastic movement at the maximum test load exceeds 80 percent of the theoretical elastic elongation of the unbonded length.

C. A ground anchor subjected to extended creep testing is acceptable if the: (1) ground anchor resists the maximum test load with a creep rate that does not exceed 0.08 inch in the last log cycle of time; and (2) total elastic movement at the maximum test load exceeds 80 percent of the theoretical elastic elongation of the unbonded length.

D. The initial lift-off reading shall be within plus or minus five (5) percent of the designed lock-off Load. If this criterion is not met, then the tendon load shall be adjusted accordingly and the initial lift-off reading repeated.

6.8 PROCEDURES FOR ANCHORS FAILING ACCEPTANCE CRITERIA

A. Anchors that do not satisfy the minimum apparent free length criteria shall be either rejected and replaced at no additional cost to the Owner or locked off at not more than 50 percent of the maximum acceptable load attained. In this event, no further acceptance criteria are applied.

B. Regroutable anchors which satisfy the minimum apparent free length criteria but which fail the extended creep test at the test load may be postgrouted and subjected to an enhanced creep criterion. This enhanced criterion requires a creep movement of not more than 0.04 inch between 1 and 60 minutes at test load. Anchors which satisfy the enhanced creep criterion shall be locked off at the design lock-off load. Anchors which cannot be postgrouted or regroutable anchors that do not satisfy the enhanced creep

criterion shall be either rejected or locked off at 50% of the maximum acceptable test load attained. In this event, no further acceptance criteria are applied. The maximum acceptable test load with respect to creep shall correspond to that where acceptable creep movements are measured over the final log cycle of time.

C. In the event that an anchor fails, the Contractor shall modify the design and/or construction procedures. These modifications may include, but are not limited to, installing additional anchors, modifying the installation methods, reducing the anchor design load by increasing the number of anchors, increasing the anchor length, or changing the anchor type. Any modification of design or construction procedures shall be at no change in the contract price. A description of any proposed modifications must be submitted to the Engineer in writing. Proposed modifications shall not be implemented until the Contractor receives written approval from the Engineer.

6.9 ANCHOR LOCK-OFF

A. After testing has been completed, the load in the tendon shall be such that after seating losses (i.e., wedge seating), the specified lock-off load has been applied to the anchor tendon.

B. The magnitude of the lock-off load shall be specified by the Engineer, and shall not exceed 70% Fpu.

C. The wedges shall be seated at a minimum load of 50% Fpu. If the lock-off load is less than 50% Fpu, shims shall be used under the wedge plate and the wedges seated at 50% Fpu. The shims shall then be removed to reduce the load in the tendon to the desired lock-off load. Bar tendons may be locked off at any load less than 70% Fpu.

6.10 ANCHOR LIFT-OFF TEST

A. After transferring the load to the anchorage, and prior to removing the jack, a lift-off test shall be conducted to confirm the magnitude of the load in the anchor tendon. This load is determined by reapplying load to the tendon to lift off the wedge plate (or anchor nut) without unseating the wedges (or turning the anchor nut). This moment represents zero time for any long time monitoring.

PART 7 MEASUREMENT AND PAYMENT

A. The quantity of ground anchors to be paid for will be the number of ground anchors installed and accepted. No change in the number of ground anchors to be paid for will be made because of the use by the Contractor of an alternative number of ground anchors. The quantity of performance and extended creep tests to be paid for will be the number of tests performed.

B. The quantity as determined above will be paid for at the contract price per unit of measurement for the particular pay item listed below and shown in the bid schedule, which price and payment will be full compensation for the cost of furnishing all labor, equipment and material required to complete the work described in this section.

C. Payment will be made under:

Pay Item	Pay Unit
Ground Anchors Furnished and Installed:	Lump Sum
Performance Test:	Lump Sum
Extended Creep Test:	Each

END OF SECTION

SECTION 02513 – ASPHALT CONCRETE PAVING

PART 1 - GENERAL

1.1 SUMMARY:

A. Section includes asphalt concrete paving work.

B. Related Sections: Prepared aggregate subbase is specified in earthwork section.

1.2 SUBMITTALS:

A. Material Certificates: Provide copies of materials certificates signed by material producer and Contractor, certifying that each material item complies with, or exceeds, specified requirements.

1.3 QUALITY ASSURANCE:

A. Codes and Standards: Comply with State highway or transportation department standard specifications, latest edition, and with local governing regulations if more stringent than herein specified.

1.4 SITE CONDITIONS:

A. Weather Limitations: Apply prime and tack coats when ambient temperature is above 50 deg.F (10 deg.C), and when temperature has not been below 35 deg.F (1 deg.C) for 12 hours immediately prior to application. Do not apply when base is wet or contains an excess of moisture.

1. Construct asphalt concrete surface course when atmospheric temperature is above 50 deg.F (4 deg.C), and when base is dry. Base course may be placed when air temperature is above 30 deg. F (-1 deg.C) and rising.

B. Grade Control: Establish and maintain required lines and elevations.

PART 2 - PRODUCTS

2.1 MATERIALS:

A. Use locally available materials and gradations, which exhibit a satisfactory record of previous installations.

B. Base Course Aggregate: Sound, non-expansive angular crushed stone, crushed gravel, or crushed slag, sand, stone or slag screenings, 3/4" Gradation minimum, 1-1/2" Gradation maximum (see chart below). Recycled asphalt can also be used for road base if crushed to meet the gradation table in 2.1.C.

1. Uncrushed gravel may be used in base course mixture if required to suit local material availability.

C. Gradation Table – The following table from the 2007 APWA presents the gradation options. The gradation shall be labeled to meet precisely one of the specifications.

US Sieve Size	Grading Band Limits			Target Tolerance Percent
	Grade 1-1/2	Grade 1	Grade 3/4	
1-1/2"	100	-	-	-
1"	90 - 100	100	-	-
3/4"	70 - 85	-	100*	+/- 9
1/2"	65 - 80	79 - 91	-	+/- 9
3/8"	55 - 75	-	78 - 92	+/- 9
No. 4	40 - 65	49 - 61	55 - 67	+/- 7
No. 16	25 - 40	27 - 35	28 - 38	+/- 5
No. 200	7 - 11	7 - 11	7 - 11	+/- 3

*Tolerance not applicable on ¾" sieve for ¾" gradation.

D. Base Course Thickness: to be not less than 6-inches and as shown on detail sheet.

E. Surface Course Aggregate: Crushed stone, crushed gravel, crushed slag, and sharp-edged natural sand.

F. Sand prepared from stone, blast-furnace slag, or gravel, or combinations thereof may be used if required to suit local material availability.

G. Mineral Filler: Rock or slag dust, hydraulic cement, or other inert material complying with AASHTO M 17 (ASTM D 242).

H. Asphalt Cement: AASHTO M 226 (ASTM D 3381) for viscosity-graded material and AASHTO M 20 (ASTM D 946) for penetration-graded material.

I. Prime Coat: Cut-back asphalt type; AASHTO M 82 (ASTM D 2027) MC-30, MC-70 or MC-250.

J. Tack Coat: Emulsified asphalt, AASHTO M 140 (ASTM D 997) or M 208 (D 2397); SS-1 SS-1h, CSS-1 or CSS-1h, diluted with one part water to one part emulsified asphalt.

2.2 ASPHALT-AGGREGATE MIXTURE:

A. Provide plant-mix, hot-laid asphalt-aggregate mixture complying with ASTM D 3515 and as recommended by local paving authorities to suit project conditions.

B. Provide minimum compacted asphalt thickness of 4-inches and as shown on detail sheet. Place asphalt in two lifts with a minimum thickness of not less than 1.5”. Do not exceed a compacted thickness of 3-inches per lift.

C. The percentage of bituminous material by weight added to aggregate will be between 4% and 7% of the weight of the bituminous mixture. Aggregate gradation shall be as follows:

Sieve Size	Ideal Gradation (Percent Passing)	Tolerance
3/4"	100	
1/2"	91	+/- 5
3/8”	83	+/- 8
No. 4	54	+/- 8
No. 16	28	+/- 6
No. 50	17	+/- 6
No. 200	5	+/- 2

PART 3 - EXECUTION

3.1 SURFACE PREPARATION:

A. Remove loose material from compacted base coarse surface immediately before applying herbicide treatment or prime coat.
   1. Proof roll prepared base coarse surface to check for unstable areas and areas requiring additional compaction.

   2. Notify Engineer of unsatisfactory conditions. Do not begin paving work until deficient base coarse areas have been corrected and are ready to receive paving.

B. Herbicide Treatment: Not used.

C. Prime Coat: Not used.

D. Tack Coat: Apply to contact surfaces of previously constructed asphalt or Portland Cement Concrete and surfaces abutting or projecting into asphalt concrete pavement. Distribute at rate of 0.05 to 0.15 gal. per sq. yd. of surface.

1. Allow drying until at proper condition to receive paving.

2. Exercise care in applying bituminous materials to avoid smearing on adjoining concrete surfaces. Remove or clean damaged surfaces at discretion of architect.

3.2 PLACING MIX:

A. General: Place asphalt concrete mixture on prepared surface, spread and strike-off. Spread mixture at minimum temperature of 225 deg.F (107 deg.C). Place inaccessible and small areas by hand. Place each course to required grade, cross-section, and compacted thickness.

B. Paver Placing: Place in strips not less than 10' wide, unless otherwise acceptable to Engineer. After first strip has been placed and rolled, place succeeding strips and extend rolling to overlap previous strips. Complete base course for a section before placing surface course.

C. Joints: Make joints between old and new pavements or between successive days' work, to ensure continuous bond between adjoining work. Construct joints to have same texture, density and smoothness as other sections of asphalt concrete course. Clean contact surfaces and apply tack coat.

D. Asphalt adjacent to concrete curb and gutter, concrete waterways, catch basins or other drainage structures shall be compacted to an elevation of 1/4 inch above adjacent drainage structure (edge of concrete) except open face curb and gutter. Place asphalt even with the lip on open face curb and gutter.

3.3 COMPACTION:

A. Percentage of Maximum Density Requirements: Compact asphalt to not less than 95% of maximum laboratory density determined in accordance with ASTM D-2726-83 or ASTM D-1188-83.

3.4 ROLLING:

A. General: Begin rolling when mixture will bear roller weight without excessive displacement.
   1. Compact mixture with hot hand tampers or vibrating plate compactors in areas inaccessible to rollers.

B. Breakdown Rolling: Accomplish breakdown or initial rolling immediately following rolling of joints and outside edge. Check surface after breakdown rolling, and repair displaced areas by loosening and filling, if required, with hot material.

C. Second Rolling: Follow breakdown rolling as soon as possible, while mixture is hot. Continue second rolling until mixture has been thoroughly compacted.

D. Finish Rolling: Perform finish rolling while mixture is still warm enough for removal of roller marks. Continue rolling until roller marks are eliminated and course has attained maximum density.

E. Patching: Remove and replace paving areas mixed with foreign materials and defective areas. Cut-out such areas and fill with fresh, hot asphalt concrete. Compact by rolling to maximum surface density and smoothness.

F. Protection: After final rolling, do not permit vehicular traffic on pavement until it has cooled and hardened, or 24 hours, whichever is longer.

G. Erect barricades to protect paving from traffic until mixture has cooled enough not to become marked.

3.5 FIELD QUALITY CONTROL:

A. Test in-place asphalt concrete courses for compliance with requirements for thickness and surface smoothness. Repair or remove and replace unacceptable paving as directed by Engineer.

B. Thickness: In-place compacted thickness will not be acceptable if exceeding following allowable variation from required thickness:
   1. Base Course: 1/2-inch, plus or minus.

   2. Surface Course: 1/4-inch, plus or minus.

C. Base Course Testing: Owner shall employ testing laboratory to perform at least one density test on aggregate base course for each 200 c.y. (1200 s.y. at 6-inch) of material placed.

D. Asphalt Testing: Owner shall employ testing laboratory to perform at least

one (1) coring sample of asphalt taken for every 100 C.Y. (1200 S.Y. at 3-inches) of asphalt installed to verify asphalt density, temperature and thicknesses are in conformance with specifications. The testing agency shall locate coring sites for owner. The asphalt contractor is responsible for repair of core holes. Owner shall employ testing laboratory to provide laboratory testing for materials check on bituminous materials, including but not limited to: gradation, extraction, compaction, marshall density, stability, flow and % AC.

E. Surface Smoothness: Test finished surface of each asphalt concrete courses for smoothness, using 10-foot straightedge applied parallel with, and at right angles to centerline of paved area. Surfaces will not be acceptable if exceeding the following tolerances for smoothness.
   1. Base Course Surface: 1/4-inch.
   2. Wearing Course Surface: 3/16-inch.
   3. Check surface areas at intervals as directed by Engineer.

END OF SECTION 02513

SECTION 03121 – FORM LINERS FOR ARCHITECTURAL CONCRETE

PART 1 GENERAL

1.1 SECTION INCLUDES

A. ABS plastic form liners for texturing architectural concrete.

B. Form liner accessories of fasteners, sealants, rustication and backup strips, form release agents and sealers as scheduled or required.

1.2 RELATED SECTIONS

A. Section 03300 Cast-In-Place Concrete.

1.3 REFERENCES

A. American Concrete Institute (ACI):
1. ACI 117 – Standard Tolerance for Concrete Construction and Materials.
2. ACI 301 – CH.13, Specifications for Structural Concrete.
3. ACI 303R-91 – Guide to Cast-in-Place Architectural Concrete
4. ACI 309 72 [78] – CH 7, Recommended Practice for consolidation of Concrete.
5. ACI 347 78 – CH 5.2, Recommended Practice for Concrete Formwork.

1.4 SUBMITTALS

A. Comply with pertinent provisions of Section 01300.

B. Product Data: Installation instructions and product data verifying compliance with specifications.

C. Shop Drawings: Form liner layout and termination details. Indicate backup, rustication, reveal, chamfer strip locations. Include jointing, form tie location and pattern of placements.

D. Samples: 24 inch by 24 inch of each pattern scheduled or required.

E. Certification: Manufacturer product compliance with regulations controlling VOC's.

1.5 QUALITY ASSURANCE

A. Manufacturer Qualifications: A minimum 3 years manufacturing experience with form liners similar to those required for this Project.

B. Installer Qualifications: A minimum of 3 years experience with form liners similar to those required for this Project.

C. Architect/Engineer's review of aesthetic criteria. Contractor responsible for design of formwork and back-up of form liner for structural stability and sufficiency.

D. Mock-up: Provide a mock-up for evaluation of surface preparation techniques application workmanship.
1. Provide full scale mock-up using contract materials, methods and workmanship. Incorporate formwork accessories and minimum one vertical and one horizontal form liner joint. Include concrete mix, forming system, form release agents, placement rate,

form pressures joint sealing, vibrating and stripping practices. Demonstrate patching and repair procedures for spawled concrete, and voids caused by honeycombing or bug holes.

2. Approved mock-up shall be the standard by which Work will be evaluated.

1.6 DELIVERY, STORAGE AND HANDLING

A. Cover form liners to protect from oil, dirt and UV exposure.

B. Do not use damaged products. Do not install products not bearing product trade name and manufacturer's name.

C. Store and dispose of solvent-based materials, and material used with solvent-based materials, in accordance with requirements of local authorities having jurisdiction.

1.7 PROJECT CONDITIONS

A. Maintain environmental conditions (temperature, humidity, and ventilation) within limits recommended by manufacturer for optimum results. Do not install products under environmental conditions outside manufacturer's absolute limits.

PART 2 PRODUCTS

2.1 MANUFACTURER

A. Symons, www.symons.com

B. Fitzgerald Formliners, www.formliners.com

C. Substitutions: See Section 01060 – Product requirements

2.2 MATERIALS

A. Plastic Form Liner:
1. Pattern and Texture:
a. Symons: Old Ashlar Stone #30427 ABS Plastic
b. Fitzgerald Formliners: #16986 Georgetown Ashlar Vac-U-Form ABS

2.3 ACCESSORIES

A. Form Release Agents:
1. Environmental Release EF, Symons.

PART 3 – EXECUTION

3.1 FORM LINER PREPARATION

A. Verify lines and levels of formwork and form liner patterns are within allowable tolerances.

B. On multiple use liners, clean liner before each use. Do no use damaged liners when continued use or repair would diminish the aesthetics of the Work.

C. Apply release agent according to manufacturer's directions. Schedule concrete pour immediately after application of release agent to avoid precipitation, dust and debris. Protect reinforcing steel from exposure to release agents.

3.2 FORM LINER INSTALLATION

A. Store and use form liner panels at temperatures between 40 degrees F and 140 degrees F.

B. Prevent cement past from bleeding form liner joints, form liner accessories' joints, and tie holes.

C. Anchor liner to form on centers not to exceed 18 inches (457 mm). Decrease centers as necessary to accommodate form stripping pressures without damaging liner intended for multiple use.

3.3 CONCRETE PLACEMENT

A. Thoroughly vibrate concrete to achieve consolidated, and minimize voids. Internally vibrate to previous lift to avoid lift lines. Avoid vibrator contact with the form liner.

3.4 FORM LINER ACCESSORY INSTALLATION

A. Place rustication lines located as indicated within acceptable industry tolerances.

B. Form corners indicated to be chamfered with PVC chamfer. Chamfered corners shall be smooth, solid, unbroken continuous lines.

3.5 FORM LINER MAINTENANCE

A. Proper cleaning and storage of form liner is required to obtain acceptable results. Prevent matrix build-up on the liner surface. Scrub the liner surface with a stiff bristle scrub brush dipped repeatedly in one of the approved release agents. All excess release agent shall be blown or wiped off before the form and liner is pout back into service.

B. Storage of form liner shall be out of direct sunlight and in temperatures below 140 degrees F (60 degress C). Store flat (not rolled) to avoid elastomeric sheet "set".

END O SECTION 03121

SECTION 10800 - TOILET AND BATH ACCESSORIES

PART 1 - GENERAL

1.1 RELATED DOCUMENTS

A. Drawings and general provisions of the Contract, including General and Supplementary Conditions and Division 1 Specification Sections, apply to this Section.

1.2 SUMMARY

A. This Section includes toilet and bath accessory items as indicated on drawings.

1.3 SUBMITTALS

A. General: Submit the following according to Conditions of Contract and Division 1 Specifications Sections.

B. Product data for each toilet accessory item specified, including construction details relative to materials, dimensions, gages, profiles, mounting method, specified options, and finishes.

C. Setting drawings where cutouts are required in other work, including templates, substrate preparation instructions, and directions for preparing cutouts and installing anchorage devices.

D. Maintenance instructions including replaceable parts and service recommendations.

1.4 QUALITY ASSURANCE

A. Inserts and Anchorages: Furnish accessory manufacturers' standard inserts and anchoring devices that must be set in concrete or built into masonry. Coordinate delivery with other work to avoid delay.

B. Single-Source Responsibility: Provide products of same manufacturer for each type of accessory unit and for units exposed to view in same areas, unless otherwise acceptable to Architect.

1.5 PROJECT CONDITIONS

A. Coordination: Coordinate accessory locations, installation, and sequencing with other work to avoid interference with and ensure proper installation, operation, adjustment, cleaning, and servicing of toilet accessory items.

1.6 WARRANTY

A. Warranty: Submit a written warranty executed by mirror manufacturer, agreeing to replace any mirrors that develop visible silver spoilage defects within warranty period.

B. Warranty Period: 15 years from date of Substantial Completion.

C. The warranty shall not deprive the Owner of other rights the Owner may have under other provisions of the Contract Documents and will be in addition to and run concurrent with other warranties made by the Contractor under requirements of the Contract Documents.

PART 2 - PRODUCTS

2.1 ACCEPTABLE MANUFACTURERS

A. Available Manufacturers: Subject to compliance with requirements, manufacturers offering toilet accessories that may be incorporated in the Work include, but are not limited to, the following:
1. Bobrick Washroom Equipment, Inc.
2. Bradley Corporation.
3. American Specialties Inc.
4. Gamco

2.2 MATERIALS, GENERAL

A. Stainless Steel: AISI Type 302/304, with polished No. 4 finish, 0.034-inch (22-gage) minimum thickness.

B. Mirror Glass: Nominal 6.0-mm (0.23-inch) thick, conforming to ASTM C 1036, Type I, Class 1, Quality q2, and with silvering, electro-plated copper coating, and protective organic coating.

C. Galvanized Steel Mounting Devices: ASTM A 153, hot-dip galvanized after fabrication.

D. Fasteners: Screws, bolts, and other devices of same material as accessory unit, or of galvanized steel where concealed.

2.3 COMBINATION TOWEL DISPENSER/WASTE RECEPTACLE UNITS

A. Recessed Unit: Stainless steel combination unit fabricated for nominal 4-inch wall depth with continuous, seamless wall flange. Towel compartment in upper portion of unit designed to dispense not less than 400 C-fold or 700 multifold paper towels. Waste receptacle in lower portion of unit provided with reusable, heavy-duty vinyl liner, minimum 4-gallon capacity. Provide flush doors with piano hinges and tumbler locks on upper and lower compartments.

2.4 COMBINATION TOILET TISSUE DISPENSER/SANITARY NAPKIN DISPOSAL UNITS

A. Recessed Unit: Fabricate of stainless steel with satin finish for recessed mounting in nominal 4-inch wall depth. Provide complete with drywall mounting clamp. Clearance between grab bar and unit required.
1. Size: Unit to accommodate two separate core-type tissue rolls up to 5 inches in diameter.

2.5 GRAB BARS

A. Stainless Steel Type: Provide grab bars with wall thickness not less than 0.05 inch (18 gage) and as follows:

1. Mounting: Concealed, manufacturer's standard flanges and anchorages.
2. Clearance: 1-1/2-inch clearance between wall surface and inside face of bar.
3. Gripping Surfaces: Manufacturer's standard nonslip texture.
4. Heavy-Duty Size: Outside diameter of 1-1/2 inches.

2.6 SOAP DISPENSERS

A. Liquid Soap Dispenser, Horizontal-Tank Type: Fabricate for surface mounting, sized for 40-fluid-ounce minimum capacity. Provide stainless steel piston, springs, and internal parts

designed to dispense soap in measured quantity by pump action. Provide cover of type 304 stainless steel in No. 4 finish, with unbreakable window-type refill indicator.

1. Equip unit with push-type valve for dispensing soap in liquid form.

2.7 MISCELLANEOUS ACCESSORIES

A. Mop and Broom Holder: 0.05-inch (18-gage), Type 304, stainless steel hat channel with spring-loaded, rubber, cam-type mop/broom holders. Provide unit 24 inches long and complete with three holders.

B. Double-Prong Robe Hook: Heavy-duty satin finished stainless steel double-prong robe hook; rectangular wall bracket with backplate for concealed mounting.

2.8 MIRROR UNITS

A. Standard Stainless Steel Framed Mirror Units: Fabricate frame with channel shapes not less than 0.04 inch (20 gage), with square corners carefully mitered to hairline joints and mechanically interlocked. Provide in Type 304 satin finish.

2.9 FOLDING SHOWER SEAT

A. Reversible Folding Shower Seat: Fabricate frame with (16 gage), stainless steel. Provide in Type 430 bright polished finish. Seat shall be one-piece, ½" thick, solid phenolic. Secure seat to frame with stainless steel carriage bolts.

2.10 FABRICATION

A. General: Only a maximum 1-1/2-inch-diameter, unobtrusive stamped manufacturer logo, as approved by Architect, is permitted on exposed face of toilet or bath accessory units. On either interior surface not exposed to view or back surface, provide additional identification by either a printed, waterproof label or a stamped nameplate, indicating manufacturer's name and product model number.

B. Surface-Mounted Toilet Accessories, General: Except where otherwise indicated, fabricate units with tight seams and joints, exposed edges rolled. Hang doors or access panels with continuous stainless steel piano hinge. Provide concealed anchorage wherever possible.

C. Recessed Toilet Accessories, General: Except where otherwise indicated, fabricate units of all-welded construction, without mitered corners. Hang doors or access panels with full-length, stainless steel piano hinge. Provide anchorage that is fully concealed when unit is closed.

D. Framed Mirror Units, General: Fabricate frames for glass mirror units to accommodate wood, felt, plastic, or other glass edge protection material. Provide mirror backing and support system that will permit rigid, tamperproof glass installation and prevent moisture accumulation, as follows:

1. Provide galvanized-steel backing sheet, not less than 0.034 inch (22 gage) and full mirror size, with nonabsorptive filler material. Corrugated cardboard is not an acceptable filler material.

E. Mirror Unit Hangers: Provide system for mounting mirror units that will permit rigid, tamperproof, and theftproof installation, as follows:

1. One-piece, galvanized-steel, wall-hanger device with spring-action locking mechanism to hold mirror unit in position with no exposed screws or bolts.

F. Keys: Provide universal keys for access to toilet accessory units requiring internal access for servicing, re-supply, etc. Provide minimum of six keys to Owner's representative.

PART 3 - EXECUTION

3.1 INSTALLATION

A. Install toilet accessory units according to manufacturers' instructions, using fasteners appropriate to substrate as recommended by unit manufacturer. Install units plumb and level, firmly anchored in locations and at heights indicated.

B. Secure mirrors to walls in concealed, tamperproof manner with special hangers, toggle bolts, or screws. Set units plumb, level, and square at locations indicated, according to manufacturer's instructions for type of substrate involved.

C. Install grab bars to withstand a downward load of at least 250 lbf, complying with ASTM F 446.

3.2 ADJUSTING AND CLEANING

A. Adjust toilet accessories for proper operation and verify that mechanisms function smoothly. Replace damaged or defective items.
B. Clean and polish all exposed surfaces strictly according to manufacturer's recommendations after removing temporary labels and protective coatings.

3.3 SCHEDULE OF ACCESSORIES

A. Manufacturer: The following catalog numbers refer to products of Bobrick Washroom Equipment, Inc. and these scheduled products serve as the standard of quality required for the project. Provide these or comparable products from specified manufacturers if they meet or exceed this standard of quality.
1. Semi-Recessed Paper Towel Dispenser and Waste Receptacle: #B-3944.
2. Paper Towel Dispenser: #B-262.
3. Toilet Tissue Dispenser & Sanitary Napkin Disposal: #B-3094.
4. Grab Bars: #B-6806.99, #B-68616
5. Soap Dispenser: #B-2112.
6. Mop & Broom Holder: #B-223 x 24".
7. Robe Hook: #B-682.
8. Mirror: #B-166 2436

END OF SECTION 10800

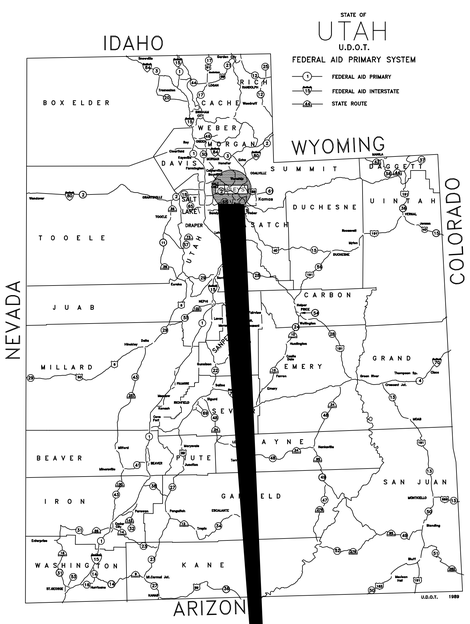

UDOT MAINTENANCE STATION #2434

6072 E. EMIGRATION CANYON ROAD
I–80 EXIT 134
PARLEYS CANYON, UTAH

DFCM PROJECT #08211900

CONSTRUCTION DOCUMENTS

JANUARY, 2009

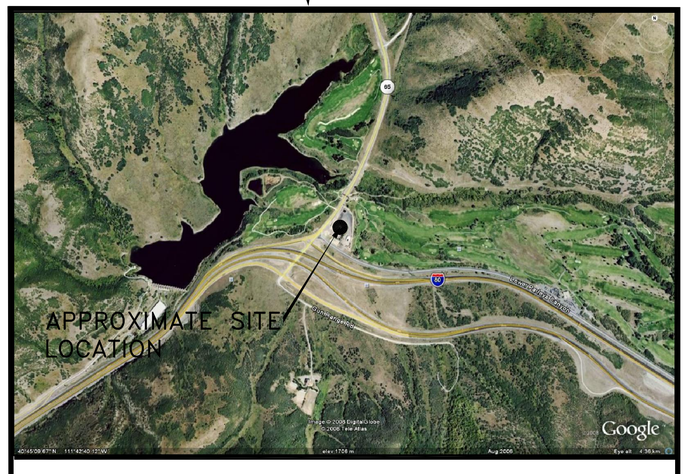

6072 E. EMIGRATION CANYON ROAD
PARLEY'S CANYON, UTAH

N

PREPARED BY

ARCHIPLEX GROUP
architecture · planning · design services
255 Crossroad Square
Salt Lake City, UT 84115
P:(801) 961–7070
F:(801) 961–7373
Ralph Stanislaw

CONSULTANTS

STRUCTURAL
BHB Consulting Engineers
244 West 300 North
Suite 202
Salt Lake City, Utah 84103
Telephone: (801) 355–5656
Fax: (801) 355–5950
Gerald McKenzie
geraldb@bhbengineers.com

CIVIL
PEPG Engineering
8805 S. Sandy Parkway
Sandy, Utah 84070
Telephone: (801) 562–2521
Fax: (801) 562–2551
Darrin Smith
Darrin@pepg.net

ELECTRICAL
PVE Inc.
1040 North 2200 West
Salt Lake City, UT 84116
Telephone: (801) 359–3158
Fax: (801) 521–4114
Roger Riddle
rkriddle@pve–ut.com

MECHANICAL
PVE Inc.
1040 North 2200West
Salt Lake City, UT 84116
Telephone: (801) 359–3158
Fax: (801) 521–4114
Alan Spendlove
adspendlove@pve–ut.com

CODE ANALYSIS

APPLICABLE CODES

	Year		Year
International Building Code	2006	National Electrical Code	2005
International Mechanical Code	2006	Uniform Code for Building Conservation	N.A.
International Plumbing Code	2006	ADA Accessibility Guildelines-ANSI A117.1	2003
International Fire Code	2006	International Residential Code	2006
International Energy Conservation Code	2006		
International Fuel Gas Code	2006		

A. Occupancy and Group: S1 (REPAIR GARAGE) B (OFFICES ACCESSORY) S2 (VEHICLE STORAGE)

Change in Use: Yes ____ No X Mixed Occupancy: Yes X No ____

Special Use and Occupancy (e.g. High Rise, Covered Mall): N.A.

B. Seismic Design Category: D Design Wind Speed: 90 mph

C. Type of Construction (circle one):

I/A I/B II/A II/B III/A III/B IV/HT V/A V/B

D. Fire Resistance Rating Requirements for the Exterior Walls based on the fire separation distance (in hours):

North: 0 South: 0 East: 0 West: 0

E. Mixed Occupancies: YES Nonseparated Uses: YES

F: Sprinklers: Group S-1 + B Fire Area = 10,733 Group S-2 Fire Area = 4,600

3 HOUR FIRE BARRIER PROVIDED PER TABLE 706.3.9

Required: NO Provided: NO Type of Sprinkler System: N.A.

(TOTAL FIRE AREA EXCEEDS 12,000 S.F.)

G: Number of Stories: 1 Building Height: 26'-0"

H: Actual Area per Floor (square feet): 15,333 SF

I: Tabular Area: 9000 SF

J: Area Modifications:

a) $A_a = A_t + \left[\frac{A_t\ I_f}{100}\right] + \left[\frac{A_t\ I_s}{100}\right]$ $\quad I_f = 100\left[\frac{F}{P} - 0.25\right]\frac{W}{30}$

$$15333\ SF = 9000 + \left[\frac{9000\ (75)}{100}\right] + \left[\frac{9000\ (0)}{100}\right]$$

b) Sum of the Ratio Calculations for Mixed Occupancies:

$$\frac{\text{Actual Area}}{\text{Allowable Area}} \leq 1 \quad \frac{15{,}200\ SF}{15750\ SF} = .965$$

c) Total Allowable Area for:

1) One Story: 15750 SF
2) Two Story: $A_a(2)$ N.A.
3) Three Story: $A_a(3)$ N.A.

d) Unlimited Area Building: Yes ____ No X Code Section: ____

K. Fire Resistance Rating Requirements for Building Elements (hours).

Element	Hours	Assembly Listing	Element	Hours	Assembly Listing
Exterior Bearing Walls	0	N.A.	Floors - Ceiling Floors	0	N.A.
Interior Bearing Walls	0	N.A.	Roofs - Ceiling Roofs	0	N.A.
Exterior Non-Bearing Walls	0	N.A.	Exterior Doors and Windows	0	N.A.
Structural Frame	0	N.A.	Shaft Enclosures	0	N.A.
Partitions - Permanent	0	N.A.	Fire Walls	0	N.A.
Fire Barriers	3	N.A.	Fire Partitions	0	N.A.
Incidental Storage	1	UL419	Smoke Partitions	0	N.A.

L. Design Occupant Load: 39* (Per IBC TABLE 1004.1.2 Using 500 S.F. per Occupant for garages, 100 S.F. for office areas) S1= 29 B= 8

Exit Width Required: 7.2" Exit Width Provided: 36"

M. Minimum Number of Required Plumbing Facilities: *UNISEX (IBS SECTION 2902.2 EXPECTION 2)

Actual Occupant Load: 14 BASED ON ACTUAL UDOT STAFFING

a) Water Closets - Required 1 unisex Provided (m) ____ (f) ____
b) Lavatories - Required 1* Provided 1*
c) Bath Tubs or Showers: 1 (EMERGENCY EYEWASH)
d) Drinking Fountains: 1 Service Sinks: 1

MAXIMUM EMPLOYEES PERMITTED = 15

GENERAL NOTE:

1. CONSTRUCTION OF NEW STATE BUILDINGS AND REMODELING OF EXISTING BUILDINGS SHALL COMPLY WITH ALL THE REQUIREMENTS OF THE DFCM STANDARDS, INCLUDING ENHANCED ACCESSIBILITY. TO THE BEST OF OUR KNOWLEDGE, DRAWINGS & SPECIFICATIONS INCORPORATED HEREIN CONFORM WITH DFCM STANDARDS FOUND AT THE FOLLOWING WEB SITE: www.dfcm.utah.gov.

2. EVERY STRUCTURE, AND PORTION THEREOF, INCLUDING NONSTRUCTURAL COMPONENTS THAT ARE PERMANENTLY ATTACHED TO STRUCTURES AND THEIR SUPPORTS AND ATTACHMENTS, SHALL BE DESIGNED AND CONSTRUCTED TO RESIST TO EFFECTS OF EARTHQUAKE MOTIONS IN ACCORDANCE WITH ASCE 7-05. REFERENCE IBC SECTION 1613.1

3. FOR THE PURPOSE OF THIS SECTION, DEFERRED SUBMITTALS ARE DEFINED AS PER SECTION 106.3.4.2 OF THE IBC. SUBMITTAL DOCUMENTS FOR DEFERRED SUBMITTAL ITEMS SHALL BE SUBMITTED TO THE ENGINEER, ARCHITECT AND BUILDING OFFICIAL FOR THEIR REVIEW FOR GENERAL CONFORMANCE WITH THE DESIGN OF THE BUILDING. DEFERRED SUBMITTAL ITEMS SHALL NOT BE INSTALLED UNTIL APPROVED BY THE BUILDING OFFICIAL. DEFERRED STRUCTURAL SUBMITTALS FOR THIS PROJECT ARE:
1. OPEN WEB STEEL JOISTS AND GIRDERS
2. GROUND ANCHORS

CLIENT

UDOT CONNECTING COMMUNITIES
STATION #2434
6072 E. EMIGRATION CANYON RD.
PARLEY'S CANYON, UTAH

DESIGNER

ARCHIPLEX GROUP
architecture · planning · design services
255 Crossroad Square
Salt Lake City, UT 84115
P:(801) 961–7070
F:(801) 961–7373

CONSULTANTS

REGISTRATION

STATE OF UTAH
RALPH M. STANISLAW
95–310818–0301
3–4–09
LICENSED ARCHITECT

ISSUE

MARK	DATE	DESCRIPTION
2	3–4–09	Addendum #2
1	2–17–09	Addendum #1
	01–09	Revised Contruction Doc.
	10–08	Construction Documents
	8–20–08	90% Review Submittal

ARCHIPLEX PROJECT NO:	0728.02
DFCM PROJECT NO:	08211900
DRAWN BY:	A. PHILLIPS
CHECKED BY:	R. STANISLAW
SCALE:	NONE
DATE:	JANUARY, 2009

KEY PLAN

SHEET TITLE

COVER SHEET

G000

© 2004 ARCHIPLEX GROUP

MASTER KEYNOTE LIST – (APPLIES TO ARCHITECTURAL DRAWINGS ONLY)

DIVISION 1 GENERAL REQUIREMENTS

DIVISION 2 SITEWORK

02200 EARTHWORK

02200.A0 COMPACTED FILL
02200.B0 GRAVEL BASE
02200.C0 SAND

02512 ZERO VOIDS ASPHALT PAVING

02512.A0 ZERO VOIDS ASPHALT PAVING (THICKNESS)

02513 ASPHALT CONCRETE PAVING

02513.A0 ASPHALT CONCRETE PAVING

02822 CHAIN LINK FENCES & GATES

02822.A1 CANTILEVERED GATE
02822.B1 2" # GATE FRAME
02822.C1 NEW 6' HIGH CHAIN LINK FENCE – SEE CIVIL
02822.D1 TENSION TIE WIRE
02822.E1 LINE POSTS @ 10'-0" O.C.
02822.F1 2" DIAMOND MESH STEEL FABRIC
02822.G0 3 LINE BARBED WIRE
02822.H0 VERTICAL VINYL FENCE SLATS – COLOR BY ARCHITECT

02831 HORIZONTAL SLIDING GATE OPERATORS

02831.A1 PHYSICAL TRAVEL STOP
02831.B1 HYDRAULIC SLIDE GATE OPERATOR W/AUDIO ALARM
02831.C1 UNDERGROUND OBSTRUCTION LOOP
02831.D1 GATE SENSORS
02831.E1 KEY PAD ACCESS ON PEDESTAL
02831.F1 CARD READER ON PEDESTAL
02831.G1 FIRE ACCESS & KNOX BOX ON PEDESTAL
02831.H1 GATE RECEIVER POCKET

DIVISION 3 CONCRETE

03053 CONCRETE WATER PROOFING ADMIXTURE

03053.A0 CONCRETE WATER PROOFING ADMIXTURE

03054 OLIOPHOBIC TOPICAL CONCRETE SEALER

03054.A0 OLIOPHOBIC TOPICAL SEALER

03055 SALT AND WATER BARRIER FOR EXTERIOR CONCRETE

03055.A0 SALT AND WATER BARRIER

03121 FORM LINERS FOR ARCHITECTURAL CONCRETE

2

03121.A0 FORM LINER
03121.A1 4' X 10' FORM LINER – ASHLAR PATTERN 3/4 MAX DEPTH

03300 CAST-IN-PLACE CONCRETE

03300.A0 CONCRETE – SLAB ON GRADE
03300.A1 CONCRETE SLAB-ON-GRADE – SEE STRUCTURAL
03300.A2 CONCRETE SLAB-ON-GRADE (THICKNESS)
03300.B1 CONCRETE SLAB – RE:STRUCTURAL
03300.B2 CONCRETE SLAB (THICKNESS)
03300.C0 FOOTING
03300.C1 FOOTING – SEE STRUCTURAL
03300.D0 CONCRETE PAD
~~03300.E0 CONCRETE RETAINING WALL WITH CULTURED STONE FACING – COORD. WITH CIVIL & STRUCTURAL~~ 2
03300.E1 COLORED CONCRETE RETAINING WALL
03300.F0 CAST-IN-PLACE REINFORCED CONCRETE
03300.G0 CONCRETE OVER METAL DECK – SEE STRUCTURAL
03300.H0 FOUNDATION WALL – SEE STRUCTURAL
03300.H1 CONCRETE PIER – SEE STRUCTURAL
03300.J0 REINFORCING
03300.J1 REINFORCING – SEE STRUCTURAL
03300.J2 #4 BARS CONTINUOUS (QUANTITY)
03300.J3 #5 BARS CONTINUOUS (QUANTITY)
03300.K1 CONCRETE PIPE BASE
03300.L1 30# FELT
03300.M1 MOISTURE BARRIER
03300.N0 CONCRETE CURB
03300.P3 CONTROL JOINT – SEE STRUCTURAL
03300.P4 CONSTRUCTION JOINT
03300.P5 ISOLATION JOINT
03300.P6 CHAMFER JOINT
03300.P7 SAWCUT CONSTRUCTION JOINT, TYP.
03300.P8 CHAMFER EDGE
2 03300.P9 3/4" X 3/4" CHAMFER STRIP
03300.Q1 CONCRETE BOLLARD PAINTED (SEE STRUCTURAL)
03300.R0 3/4" CHAMFER
03300.T1 CONCRETE @ STAIR TREAD
03300.S0 PREFORMED CONCRETE CAP

DIVISION 4 MASONRY

04200 UNIT MASONRY

04200.A0 CMU
04200.A2 CMU (SIZE)
04200.A3 SPLIT FACE (SIZE)
04200.B0 GROUT SOLID
04200.C0 BOND BEAM (SHAPE)
04200.C1 BOND BEAM – SEE STRUCTURAL
04200.D1 CMU LINTEL – SEE STRUCTURAL
04200.G1 REINFORCING – SEE STRUCTURAL
04200.K2 ANCHOR BOLTS (DIAMETER, SPACING)
04200.M0 WEEP HOLES
04200.N0 METAL FLASHING
04200.Q0 INSULATED BLOCK
04200.R0 MASONRY CONTROL JOINT

DIVISION 5 METALS

05120 STRUCTURAL STEEL

05120.A0 STEEL BEAM – SEE STRUCTURAL
05120.A1 STEEL BEAM – SEE STRUCTURAL – GALVANIZED
05120.A2 STEEL BEAM – SEE STRUCTURAL – PRIMED AND PAINTED
05120.B1 STEEL COLUMN – SEE STRUCTURAL – GALVANIZED
05120.B2 STEEL COLUMN – SEE STRUCTURAL – PRIMED AND PAINTED
05120.C1 TUBE STEEL BEAM – SEE STRUCTURAL – GALVANIZED
05120.D1 TUBE STEEL COLUMN – SEE STRUCTURAL
05120.D2 TUBE STEEL COLUMN – SEE STRUCTURAL – PRIMED AND PAINTED

05220 STEEL JOISTS AND JOIST GIRDERS

05220.A1 STEEL JOISTS – SEE STRUCTURAL
05220.A2 STEEL JOISTS – SEE STRUCTURAL – PRIMED AND PAINTED
05220.B2 STEEL GIRDERS – SEE STRUCTURAL – PRIMED AND PAINTED

05310 STEEL DECK

05310.A1 METAL DECK – SEE STRUCTURAL

05400 COLD-FORMED METAL FRAMING

05400.A1 6" STRUCTURAL STEEL STUDS – SEE STRUCTURAL DRAWINGS FOR SPACING AND GAUGE
05400.A2 3 5/8" STRUCTURAL STEEL STUDS – SEE STRUCTURAL DRAWINGS FOR SPACING AND GAUGE
05400.X1 STEEL STUD
05400.X2 STEEL TRACK
05400.X3 STEEL JOIST – SEE STRUCTURAL

05500 METAL FABRICATIONS

05500.A1 ANGLE – SEE STRUCTURAL
05500.A2 STEEL ANGLE (SIZE) – GALVANIZED
05500.A3 STEEL ANGLE (SIZE)
05500.B0 CLIP ANGLE
05500.B2 CLIP ANGLE (SIZE)
05500.C1 SHEET METAL ANGLE – 22 GA. – GALVANIZED (SIZE)
05500.D0 CHANNEL (SIZE)
05500.D1 CHANNEL – SEE STRUCTURAL
05500.D2 HAT CHANNEL (SIZE)
05500.D3 CHANNEL – PRIMED AND PAINTED – SEE STRUCTURAL
05500.E0 PLATE (SIZE)
05500.E1 PLATE – SEE STRUCTURAL
05500.E2 PLATE (SIZE) – GALVANIZED
05500.E3 BENT PLATE – SEE STRUCTURAL
05500.F1 THRU BOLT (DIAMETER)
05500.G1 BENT BAR TAB (THICKNESS)
05500.G2 BARTAB (THICKNESS)
05500.H1 LAG BOLTS (DIAMETER)
05500.J1 PIPE BOLLARD (DIAMETER) – GALV. & PAINTED
05500.M1 CHECKERED PLATE (SIZE) GALVANIZED
05500.P0 ANCHOR BOLT(S)
05500.V0 FLOOR PLATE
05500.X1 STEEL STUD (SEE STRUCTURAL)
05500.X2 STEEL RUNNER (SEE STRUCTURAL)
05500.Y0 AIR DUCT SCREEN
05500.Y1 AIR DUCT SCREEN – PAINTED
05500.Z0 CHAIN – GALVANIZED

05510 METAL STAIRS

05510.A1 LADDER RUNGS
05510.B0 LADDER RAILS
05510.C0 LADDER MOUNTING BRACKET
05510.D1 RUBBER SHOE AT BOTTOM OF EACH RAIL
05510.E1 NON SKID SURFACE @ NOSING
05510.F0 STEEL STRINGER – (SIZE)
05510.F1 STEEL STRINGER – (SIZE) – PAINTED
05510.G1 3/16" STEEL CLOSURE PLATE – PAINTED
05510.H0 CONC. FILLED METAL PAN STAIR – PAINTED
05510.H1 PRE-FORMED, CONC. FILLED METAL PAN STAIR TREAD – (SIZE) – PAINTED
05510.J1 METAL PAN STAIR SUPPORT – (SIZE) – PAINTED
05510.J2 PAN ANCHORAGE – (SIZE) – PAINTED
05510.K1 STEEL CHANNEL DECK SUPPORT – PAINTED

05521 PIPE & TUBE RAILINGS

05521.A1 1 1/2" O.D. STEEL GUARDRAIL
05521.A2 PIPE GUARDRAIL (DIAMETER) – GALVANIZED
05521.A3 1 1/2" O.D. PIPE GUARDRAIL – GALVANIZED
05521.A4 1 1/2" O.D. PIPE GUARDRAIL – PAINTED
05521.B1 1 1/2" O.D. HANDRAIL
05521.B2 PIPE HANDRAIL (DIAMETER) – GALVANIZED
05521.B3 1 1/2" O.D. PIPE HANDRAIL – GALVANIZED
05521.B4 1 1/2" O.D. PIPE GUARDRAIL – PAINTED
05521.C2 ESCUTCHEON WITH EASED EDGES (SIZE)
05521.D1 PIPE RAIL SUPPORT – PAINTED
05521.E1 1" I.D. PIPE RAILING ANCHOR – GALVANIZED
05521.F1 1/2" DIA. THRU BOLT

05530 GRATINGS

05530.A0 TRENCH FRAME – GALVANIZED
05530.A1 STEEL GRATE 22-W-4 (SIZE) GALVANIZED
05530.B0 ALUMINUM BAR PANELS
05530.C1 METAL GRATE PANEL – GALV.
05530.C2 METAL GRATE TREAD – GALV.

DIVISION 6 WOOD AND PLASTICS

06105 MISCELLANEOUS CARPENTRY

06105.L2 BLOCKING AS REQUIRED
06105.P1 2X4
06105.P2 2X6
06105.P6 4X4
06105.P9 2 x FRAMING, FIRE TREATED
06105.P10 PRESSURE TREATED WOOD TIMBER (SIZE)
06105.P11 2 x BLOCKING
06105.Q2 SHIM AS REQUIRED
06105.R2 SHEATHING – PLYWOOD (THICKNESS) GRADE (SIZE)
06105.R3 PLYWOOD PANEL (THICKNESS) – MECHANICALY FASTENED THROUGH INSULATION INTO CMU WALL
06105.R4 PLYWOOD PANEL (THICKNESS)
06105.V1 EXTERIOR GRADE PLYWOOD (THICKNESS)
06105.V6 PEGBOARD (THICKNESS)
06105.Z0 ANCHOR AS REQUIRED

06402 INTERIOR ARCHITECTURAL WOODWORK

06402.A0 SILL
06402.B1 PLASTIC LAMINATE BACKSPLASH (HEIGHT)
06402.C1 PAINT GRADE WOOD CAP (THICK)
06402.D1 3/4" PARTICLE BOARD W/MELANINE FINISH
06402.E1 WIRE PULL
06402.F1 PROVIDE WHITE MELAMINE FINISH @ ALL INTERIOR SURFACES
06402.G1 3/4" PARTICLE BOARD CABINET TOP W/PLAM (FINISH)
06402.G2 3/4" PARTICLE BOARD CABINET BASE W/PLAM (FINISH)
06402.G3 3/4" PARTICLE BOARD CABINET TOP
06402.H0 SHELF(VES)
06402.H1 ADJUSTABALE SHELVES (FINISH)
06402.H2 SHELVING (DEPTH)
06402.J1 RECESSED SHELF BRACKETS
06402.K0 BASE UNIT (FINISH)
06402.K2 BASE UNIT W/ADJ. SHELF(VES) (FINISH)
06402.K3 BASE UNIT W/DRAWERS (FINISH)
06402.K4 BASE UNIT W/DRAWER & ADJ. SHELF(VES) (FINISH)
06402.L1 WALL UNIT (FINISH)
06402.L2 WALL UNIT W/ADJ. SHELF(VES) (FINISH)
06402.P0 COUNTERTOP
06402.M1 3/4" PARTICLE BOARD SCREEN (FINISH)
06402.P2 COUNTERTOP – P. LAM. ON 3/4" PLYWOOD
06402.X0 WORKBENCH (DEPTH)

06651 SOLID SURFACE FABRICATIONS

06651.A0 1/2" WHITE SOLID SURFACE WINDOW SILL
06651.B0 SOLID SURFACE COUNTER TOP
06651.C0 SOLID SURFACE BACKSPLASH

DIVISION 7 THERMAL AND MOISTURE PROTECTION

07110 SHEET MEMBRANE WATER PROOFING SYSTEM

07110.A0 SELF ADHESIVE MEMBRANE WATERPROOFING
07110.B0 PRE-FABRICATED DRAINAGE COMPOSITE MATERIAL

07190 WATER REPELLANTS

07190.A0 CLEAR WATER RESISTANT COATING

07210 BUILDING INSULATION

07210.A1 BATT INSULATION (R-VALUE)
07210.B0 RIGID INSULATION
07210.B1 RIGID INSULATION (R-VALUE)
07210.C0 RIGID INSULATION FOIL FACED W/VAPOR BARRIER
07210.C1 RIGID INSULATION (CONTINUOUSLY ADHERED TO CMU) W/FOIL FACED VAPOR BARRIER TOWARDS INTERIOR (R-VALUE)
07210.D0 VAPOR BARRIER
07210.E0 FOUNDATION WALL INSULATION (THICKNESS)

07410 MANUFACTURED ROOF PANELS, GUTTER & FLASHING

07410.A0 STANDING SEAM METAL ROOF
07410.A1 RAIN GUTTER W/CONTINUOUS HEAT TAPE
07410.A2 DOWNSPOUT W/CONTINUOUS HEAT TAPE
2 ~~07410.A2 GUTTER STRAPS~~
07410.B0 FASTENER
07410.B1 METAL REGLET
07410.C0 ROOFING FELT
07410.E0 BREAK METAL
07410.G0 FLASHING, FINISH TO MATCH LOUVER COLOR
07410.G1 FLASHING, FINISH TO MATCH ROOF COLOR
07410.G2 FLASHING, FINISH TO MATCH WINDOW
07410.H0 METAL SIDING
07410.H1 METAL WALL PANEL
07410.H2 ALUMINUM CLAD WALL PANEL
07410.J2 JAMB TRIM
07410.J3 SILL FLASHING
07410.K0 SEALANT
07410.L0 METAL FACIA
07410.M1 METAL SOFFIT
07410.M2 ICE & WATER SHEILD
07410.P1 PANEL TRIM
07410.P2 RAKE TRIM
2 07410.P3 GUTTER STRAPS
07410.Q1 CLIP
07410.R1 METAL EAVE CLOSURE
07410.S1 STANDING SEAM METAL ROOF RIDGE
07410.T1 STANDING SEAM METAL ROOF CANOPY

07729 ROOF SNOW GUARDS

07729.A0 STANDING SEAM METAL ROOF 2 PIPE SNOWGUARD SYSTEM

07841 PENETRATION FIRESTOPPING

07841.A0 PENETRATION FIRE STOPPING
07841.B0 PACKING MATERIAL

07901 JOINT SEALANTS

07901.A0 CONT. SEALANT
07901.B0 ASPHALT SATURATED FIBERBOARD
07901.C0 CONT. CAULK
07901.D0 JOINT FILLER
07901.G0 BACKER ROD
07901.H1 CONCRETE JOINT WATER PROOF SEALANT
07901.H2 JOINT SEALANT

DIVISION 8 DOORS AND WINDOWS

08111 STANDARD STEEL DOORS AND FRAMES

08111.A0 PRESSED METAL FRAME
08111.A1 GROUT-FILLED PRESSED METAL FRAME
08111.B0 HOLLOW METAL DOOR
08111.C0 JAMB ANCHOR

08360 SECTIONAL OVERHEAD DOORS

08360.A0 HEAVY DUTY OVERHEAD SECTIONAL DOOR
08360.B0 3" HEAVY DUTY OVERHEAD SECTIONAL DOOR TRACK
08360.C0 WEATHERSTRIPPING
08360.D0 DOOR GUIDE

08521 HORIZONTAL VINYL (PVC) WINDOWS

08521.B0 FIXED VINYL WINDOW
08521.C0 VINYL WINDOW W/SLIDING GLASS PANEL

08710 DOOR HARDWARE

08710.A0 THRESHOLD
08710.B0 DOOR SWEEP
08710.C0 WEATHERSTRIPPING

08800 GLAZING

08800.C0 WIRE GLASS
08800.G1 CLEAR INSULATING GLASS (SIZE)
08800.G3 OPAQUE INSULATING GLASS

DIVISION 9 FINISHES

09255 GYPSUM BOARD ASSEMBLIES

09255.A1 GYPSUM BOARD (THICKNESS)
09255.A2 WATER RESISTANT GYPSUM BOARD (THICKNESS)
09255.B2 TYPE 'X' GYPSUM BOARD (THICKNESS)
09255.C3 CEMENT BOARD (THICKNESS)
09255.H0 METAL STUD
09255.H1 METAL STUDS (SIZE, SPACING)
09255.J0 METAL RUNNER
09255.K0 DOUBLE STUDS
09255.K1 DOUBLE STUDS (GAGE)
09255.L1 7/8" X 1-3/8" METAL ANGLE
09255.L2 2-1/2" X 2-1/2" METAL ANGLE
09255.M2 METAL CORNER BEAD (TYP)
09255.P0 Z-FURRING CHANNEL
09255.Q0 7/8" METAL FURRING CHANNEL
09255.R2 CHANNEL (SIZE, SPACING)
09255.S1 8 GA. WIRE HANGERS (SPACING)
09255.S2 18 GA. WIRE TIES
09255.S3 18 GA. METAL MOUNTING STRIPS
09255.S4 14 GA. STAINLESS STEEL COUNTER TOP (FINISH)
09255.U1 SUSPENDED CEILING SYSTEM
09255.U2 CROSS CHANNEL
09255.U3 3/4" CONDUIT COMPRESSION BRACE
09255.V0 EDGE TRIM (TYP)
09255.V2 LC-BEAD (PREFERRED USG 200-A TRIM)
09255.V4 VINYL TRIM

09300 TILE

09300.A1 FLOOR TILE – SEE FINISH SCHED.
09300.B1 WALL TILE – SEE FINISH SCHED.
09300.B2 PROVIDE TILE FRAME AROUND FIXTURE
09300.C0 TILE BASE
09300.D1 BULLNOSE TRIM UNIT
09300.E1 1/2" x 6" TILE TRIM PIECE – SEE FINISH SCHED.
09300.G1 MORTAR BED
09300.G4 WATERPROOF MEMBRANE

09511 ACOUSTICAL PANEL CEILINGS

09511.A0 LAY-IN ACOUSTICAL CEILING SYSTEM
09511.A1 HEAVY DUTY "T" BAR GRID SYSTEM
09511.A2 CEILING SUSPENSION SYSTEM – MAIN RUNNER
09511.A3 CEILING SUSPENSION SYSTEM – CROSS RUNNER
09511.B1 VERTICAL WIRE HANGER (SIZE)
09511.B2 BRACING WIRE (SIZE)
09511.C1 COMPRESSION STRUTS
09511.D1 METAL ANGLE EDGE
09511.E1 LAY IN ACOUSTICAL CEILING PANEL
1 09511.F1 SPREADER BAR REQUIRED TO KEEP PERIMETER COMPONENTS FROM SPREADING APART

09660 RESILIENT TILE FLOORING

09660.A1 VINYL COMPOSITION TILE
09660.B1 VINYL TRANSITION STRIP

09678 RESILIENT WALL BASE AND ACCESSORIES

09678.E1 RUBBER BASE (SIZE)

09900 PAINTING

09900.A1 PAINT – SEE FINISH SCHED.
09900.B1 GALVANIZED METAL PRIMER

DIVISION 10 SPECIALTIES

10100 VISUAL DISPLAY BOARDS

10100.C0 MARKER BOARD

10155 TOILET COMPARTMENTS

10155.A0 TOILET STALL PARTITION
10155.B0 URINAL STALL PARTITION

10425 SIGNS

10425.A0 ROOM SIGNAGE
10425.A1 OIL SIGNAGE
10425.B1 WELDING SIGNAGE
10425.C1 ACCESSIBLE SIGNAGE
10425.D1 ACCESSIBLE/UNISEX RESTROOM SIGNAGE

10500 METAL LOCKERS AND STORAGE CABINETS

10500.A0 METAL LOCKERS (WIDTH)
2 10500.A1 ADA COMPLIANT LOCKER
10500.A2 ADA COMPLIANT SHELF
10500.B0 METAL STORAGE CABINETS W/HOLD DOWN ANCHORS

10522 FIRE EXTINGUISHERS AND ACCESSORIES

10522.A0 FIRE EXTINGUISHER

10800 TOILET AND BATH ACCESSORIES

10800.B0 PAPER TOWEL DISPENSER & WASTE RECEPTACLE
10800.B1 SEMI-RECESSED PAPER TOWEL DISPENSER & WASTE RECEPTACLE
10800.C0 TOILET TISSUE DISPENSER
10800.C1 RECESSED TOILET TISSUE DISPENSER/SAN. NAP. DISPOSAL
10800.D0 MOP RACK
10800.D1 MOP SINK
10800.D2 MOP SINK FAUCET
10800.E0 GRAB BAR
10800.E1 GRAB BAR (SHOWER)
10800.F0 ROBE HOOK
10800.F1 DOUBLE PRONG ROBE HOOK
10800.H0 SOAP DISPENSER
10800.H1 SOAP DISH
10800.P1 SHOWER CURTAIN ROD
10800.P2 SHOWER CURTAIN
10800.Q1 ADA COMPLIANT SHOWER HEAD
10800.R1 FRAMED MIRROR (SIZE)
10800.T1 FOLDING SHOWER SEAT
10800.T0 METAL SHELF (SIZE)

DIVISION 11 EQUIPMENT

11151 MOBILE LIFT

11151.A0 MOBILE LIFT – NOT IN CONTRACT – OWNER FINISHED

DIVISION 12 FURNISHINGS

12511 HORIZONTAL LOUVER BLINDS

12511.A0 HORIZONTAL LOUVER BLINDS

DIVISION 13 SPECIAL CONSTRUCTION

13100 FUEL ISLAND REQUIREMENTS

13100.A0 FUEL DISPENSER
13100.A1 UNLEADED/DIESEL FUEL DISPENSER
13100.B0 FIRE PROTECTED FUEL STORAGE TANK – UL2085
13100.B1 SINGLE SPLIT TANK 2000 GAL. UNLEADED FUEL & 6000 GAL. DEISEL FUEL FIRE PROTECTED FUEL STORAGE TANK – UL-2085.
13100.C0 FUEL SERVICE CARD READER – COORDINATE WITH FLEET SERVICES

DIVISION 14 CONVEYING SYSTEMS

14620 TROLLEY HOIST

14620.A0 TROLLEY HOIST (SIZE)

DIVISION 15 EQUIPMENT

15000 MECHANICAL

15000.A0 GAS METER – SEE PLUMBING DRAWINGS
15050.A1 MECH. PENETRATIONS
15250.A1 PIPE INSULATION AT ALL EXPOSED PIPE
15410.A0 URINAL
15410.A1 URINAL, ACCESSIBLE
15410.B0 SINK FAUCET
15410.B1 SINK FAUCET W/ADA LEVER HANDLES
15410.C0 UTILITY SINK
15410.D1 FLOOR SINK
15410.E0 TRENCH DRAIN SLOPE TO DRAIN
15410.E1 DRAIN W/ SEDIMENT BUCKET
15410.E2 FLOOR DRAIN
15410.F0 TOILET
15410.G0 ADA ACCESSIBLE SHOWER HEAD – SEE MECHANICAL
15412.A0 EMERGENCY SHOWER & EYE WASH
15452.A1 DRINKING FOUNTAIN
15455.A0 WATER SOFTNER SYSTEM
15486.A1 FUEL FIRED WATER HEATER
15490.A0 WASTE OIL PUMP
15490.B0 WASTE OIL CARTS
15490.C0 WASTE OIL PIT
15490.D0 600 GAL WASTE OIL TANK – C.F.C.I.
15491.A0 AIR COMPRESSOR
15491.B0 OVERHEAD LUBE REEL
15491.C0 OVERHEAD HOSE REEL
15600.A0 NATURAL GAS RADIANT HEATING SYSTEM – SEE MECHANICAL
15611.A1 NATURAL GAS FIRED FURNACE – SEE MECHANICAL
15670.A1 CONDENSER UNIT – SEE MECHANICAL
15820.A0 BACKDRAFT DAMPER – SEE MECHANICAL
15838.A0 EXHAUST FAN – SEE MECHANICAL
15838.A1 EXHAUST FAN VENT – SEE MECHANICAL
15861.A1 MECHANICAL DUCTWORK SEE MECHANICAL
15887.A1 LOUVER W/ BIRD SCREEN – SEE MECHANICAL
15887.B1 INTAKE GRAVITY HOOD – SEE MECHANICAL

DIVISION 16 ELECTRICAL

16000 ELECTRICAL

16128.A0 LOW VOLTAGE DE-ICING SNOW MELTING CABLE SYSTEM
16128.B0 LOW VOLTAGE DE-ICING CABLING BOARD W/PRE CUT GROOVES
16128.C0 LOW VOLTAGE DE-ICING CABLE
16128.D0 LOW VOLTAGE DE-ICING CABLE PROTECTOR
16128.E0 ATTACHMENT AS PER MANUFACTURER RECOMENDATIONS
16210.A1 ELECTRICAL METER – SEE ELECTRICAL DRAWINGS
16411.A1 EMERGENCY DISCONNECT – SEE ELECTRICAL
16442.A0 ELECTRICAL PANEL
16510.A0 INTERIOR LIGHTS
16510.B0 WALL MOUNTED INTERIOR LIGHTS
16510.C0 INTERIOR SOFFIT CAN LIGHTS – SEE ELECTRICAL
16520.B1 EXTERIOR WALL MOUNTED LIGHTS
16520.B2 EXTERIOR WALL MOUNTED FLOOD LIGHTS
16520.B3 EXTERIOR FLOOD LIGHTS – MOUNT TO STEEL COLUMN

CLIENT

UDOT CONNECTING COMMUNITIES

STATION #2434
6072 E. EMIGRATION CANYON RD.
PARLEY'S CANYON, UTAH

DESIGNER

ARCHIPLEX GROUP
architecture · planning · design services
255 Crossroad Square
Salt Lake City, UT 84115
P:(801) 961-7070
F:(801) 961-7373

CONSULTANTS

REGISTRATION

STATE OF UTAH
RALPH M. STANISLAW
05-0369-001
3-4-09
LICENSED ARCHITECT

ISSUE

MARK	DATE	DESCRIPTION
2	3-4-09	Addendum #2
1	2-17-09	Addendum #1
	01-09	Revised Contruction Doc.
	10-08	Construction Documents
	8-20-08	90% Review Submittal

ARCHIPLEX PROJECT NO:	0728.02
DFCM PROJECT NO:	08211900
DRAWN BY:	A. PHILLIPS
CHECKED BY:	R. STANISLAW
SCALE:	NONE
DATE:	JANUARY, 2009

KEY PLAN

SHEET TITLE

MASTER KEYNOTE LIST

G002

© 2004 ARCHIPLEX GROUP

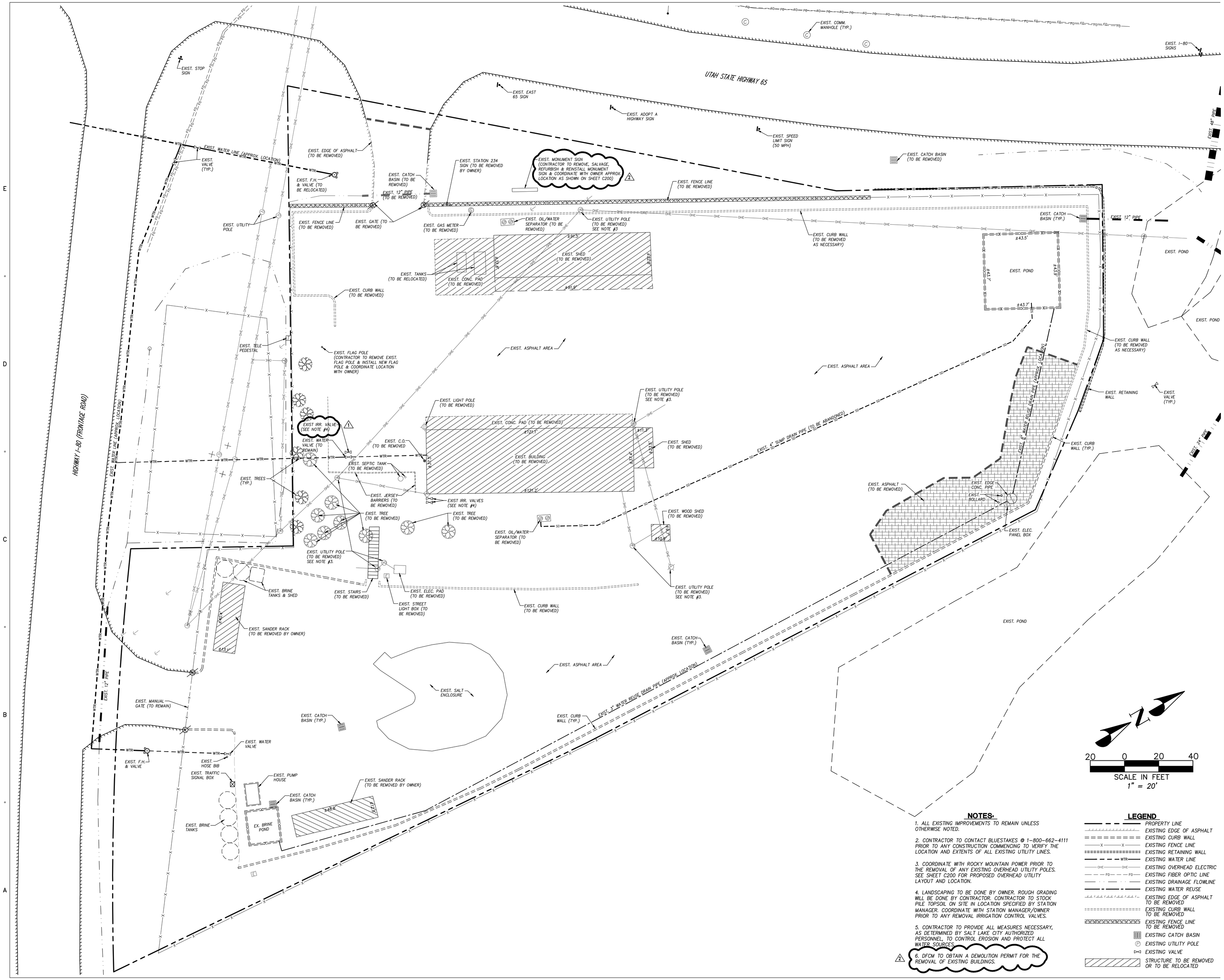

NOTES:

1. ALL EXISTING IMPROVEMENTS TO REMAIN UNLESS OTHERWISE NOTED.
2. CONTRACTOR TO CONTACT BLUESTAKES @ 1-800-662-4111 PRIOR TO ANY CONSTRUCTION COMMENCING TO VERIFY THE LOCATION AND EXTENTS OF ALL EXISTING UTILITY LINES.
3. COORDINATE WITH ROCKY MOUNTAIN POWER PRIOR TO THE REMOVAL OF ANY EXISTING OVERHEAD UTILITY POLES. SEE SHEET C200 FOR PROPOSED OVERHEAD UTILITY LAYOUT AND LOCATION.
4. LANDSCAPING TO BE DONE BY OWNER. ROUGH GRADING WILL BE DONE BY CONTRACTOR. CONTRACTOR TO STOCK PILE TOPSOIL ON SITE IN LOCATION SPECIFIED BY STATION MANAGER. COORDINATE WITH STATION MANAGER/OWNER PRIOR TO ANY REMOVAL IRRIGATION CONTROL VALVES.
5. CONTRACTOR TO PROVIDE ALL MEASURES NECESSARY, AS DETERMINED BY SALT LAKE CITY AUTHORIZED PERSONNEL, TO CONTROL EROSION AND PROTECT ALL WATER SOURCES.
6. DFCM TO OBTAIN A DEMOLITION PERMIT FOR THE REMOVAL OF EXISTING BUILDINGS.

LEGEND

- PROPERTY LINE
- EXISTING EDGE OF ASPHALT
- EXISTING CURB WALL
- EXISTING FENCE LINE
- EXISTING RETAINING WALL
- EXISTING WATER LINE
- EXISTING OVERHEAD ELECTRIC
- EXISTING FIBER OPTIC LINE
- EXISTING DRAINAGE FLOWLINE
- EXISTING WATER REUSE
- EXISTING EDGE OF ASPHALT TO BE REMOVED
- EXISTING CURB WALL TO BE REMOVED
- EXISTING FENCE LINE TO BE REMOVED
- EXISTING CATCH BASIN
- EXISTING UTILITY POLE
- EXISTING VALVE
- STRUCTURE TO BE REMOVED OR TO BE RELOCATED

CLIENT

UDOT CONNECTING COMMUNITIES

STATION #2434
6072 E. EMIGRATION CANYON RD.
PARLEY'S CANYON, UTAH

DESIGNER

ARCHIPLEX GROUP
architecture · planning · design services
255 Crossroad Square
Salt Lake City, UT 84115
P:(801) 961-7070
F:(801) 961-7373

CONSULTANTS

PEPG ENGINEERING, L.L.C.
8805 S. SANDY PARKWAY • SANDY, UT 84070
PHONE: (801) 562-2521 • FAX: (801) 562-2551

REGISTRATION

REGISTERED PROFESSIONAL ENGINEER
No. 277201
DARRIN R. SMITH
3-3-2009
STATE OF UTAH

ISSUE

MARK	DATE	DESCRIPTION
2	3-4-09	ADDENDUM #2
1	2-16-09	ADDENDUM #1
	01-09	Revised Construction Doc.
	10-08	Construction Documents
	8-20-08	90% Review Submittal

ARCHIPLEX PROJECT NO:	0728.02
DFCM PROJECT NO:	08211900
PEPG PROJECT NO:	6600.0816
DRAWN BY:	BCB
CHECKED BY:	DRS
SCALE:	1"=20'
DATE:	MARCH, 2009

KEY PLAN

SHEET TITLE

DEMOLITION PLAN

C100

© 2004 ARCHIPLEX GROUP

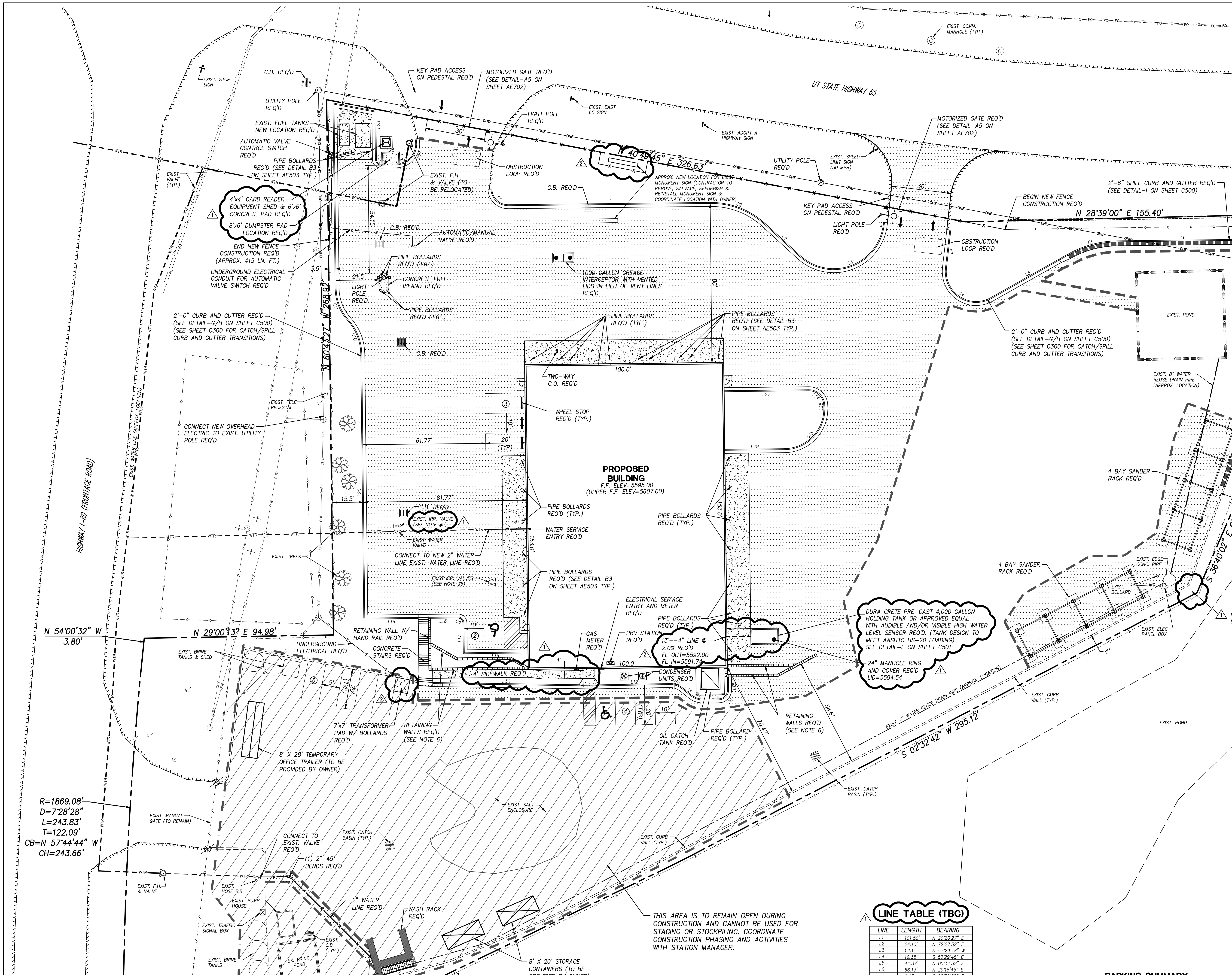

CURVE TABLE (TBC)

CURVE	RADIUS	LENGTH	DELTA	TANGENT	CHORD BEARING	CHORD
C1	8.00'	12.47'	89°18'33"	7.90'	N 73°59'43" E	11.25'
C2	40.00'	30.11'	43°07'25"	15.81'	S 50°54'09" W	29.40'
C3	25.00'	54.96'	125°57'40"	49.02'	N 09°29'02" E	44.54'
C4	15.00'	32.98'	125°57'40"	29.41'	N 63°31'22" E	26.73'
C5	52.00'	26.08'	28°44'13"	13.32'	S 14°54'39" W	25.81'
C6	10.00'	6.99'	40°04'17"	3.65'	S 48°58'24" W	6.85'
C7	9.50'	6.60'	39°46'45"	3.44'	N 49°07'10" E	6.46'
C8	4.50'	7.07'	90°00'00"	4.50'	N 15°46'13" W	6.36'
C9	2.50'	3.93'	90°00'00"	2.50'	S 74°20'26" W	3.54'
C10	25.00'	18.16'	41°37'40"	9.50'	N 81°28'24" W	17.77'
C11	24.50'	17.80'	41°37'40"	9.31'	S 81°28'24" E	17.41'
C12	2.50'	4.13'	94°17'32"	2.70'	N 72°06'41" E	3.68'
C13	10.00'	16.18'	92°42'48"	10.49'	S 27°48'06" W	14.47'
C14	7.50'	11.78'	90°00'00"	7.50'	S 74°20'26" W	10.61'
C15	20.00'	31.42'	90°00'00"	20.00'	N 15°39'34" W	28.28'

LINE TABLE (TBC)

LINE	LENGTH	BEARING
L1	101.50'	N 29°20'27" E
L2	24.10'	N 72°27'52" E
L3	1.13'	N 53°29'48" W
L4	19.35'	S 53°29'48" E
L5	44.37'	N 00°32'32" E
L6	66.13'	N 29°16'45" E
L7	9.47'	S 58°36'55" E
L8	4.92'	N 31°23'05" E
L9	49.71'	S 60°48'04" E
L10	23.41'	S 53°54'47" E
L11	44.44'	S 40°30'36" E
L12	35.53'	N 28°56'15" E
L13	5.51'	N 69°00'32" E
L14	7.73'	N 29°13'47" E
L15	6.46'	N 60°46'13" W
L16	32.50'	S 29°20'26" W
L17	15.50'	N 60°39'34" W
L18	14.91'	S 29°20'26" W
L19	27.36'	S 29°20'26" W
L20	133.38'	N 60°39'34" W
L21	93.20'	N 60°39'34" W
L22	21.94'	N 40°49'45" E
L23	24.18'	S 60°39'34" E
L24	6.00'	N 61°21'00" W
L25	9.00'	N 28°39'00" E
L26	5.85'	S 61°21'00" E
L27	42.50'	N 29°20'26" E
L28	1.50'	S 60°39'34" E
L29	30.00'	S 29°20'26" W
L30	73.52'	S 30°51'26" E

LEGEND

- PROPERTY LINE
- PROPOSED SAWCUT LINE
- PROPOSED EDGE OF ASPHALT
- PROPOSED 2'-0" CURB & GUTTER
- PROPOSED 2'-6" CURB & GUTTER
- PROPOSED WATER LINE
- PROPOSED OVERHEAD ELECTRIC
- PROPOSED ELECTRICAL
- PROPOSED FENCE LINE
- EXISTING EDGE OF ASPHALT
- EXISTING CURB WALL
- EXISTING FENCE LINE
- EXISTING RETAINING WALL
- EXISTING OVERHEAD ELECTRIC
- EXISTING FIBER OPTIC LINE
- EXISTING WATER REUSE
- EXISTING UTILITY POLE
- EXISTING VALVE
- PROPOSED CONCRETE AREA
- PROPOSED ASPHALT AREA

PARKING SUMMARY

REGULAR PARKING	12 STALLS
ACCESSIBLE PARKING	2 STALLS
TOTAL	14 STALLS

AREA SUMMARY

SURFACING = 119,715 Sq. Ft. (71%)
LANDSCAPING = 32,847 Sq. Ft. (20%)
BUILDING = 15,300 Sq. Ft. (9%)
TOTAL = 167,862 Sq. Ft. (100%)

CIVIL ENGINEER

PEPG ENGINEERING, L.L.C.
8805 SOUTH SANDY PARKWAY
SANDY, UTAH 84070
CONTACT: DARRIN SMITH (P.E.)
AT (801) 562-2521

NOTES:

1. ALL DIMENSIONS ARE FROM FACE OF CURB TO FACE OF CURB UNLESS OTHERWISE NOTED.
2. CONTRACTOR TO VERIFY ALL UTILITY CONNECTION POINTS AND INVERTS WITH ARCHITECTURAL PLANS PRIOR TO CONSTRUCTION.
3. CONTRACTOR TO PROVIDE ALL MEASURES NECESSARY, AS DETERMINED BY SALT LAKE CITY AUTHORIZED PERSONNEL, TO CONTROL EROSION AND PROTECT ALL WATER RESOURCES.
4. COORDINATE WITH ROCKY MOUNTAIN POWER PRIOR TO THE REMOVAL OF ANY EXISTING OVERHEAD UTILITY POLES.
5. LANDSCAPING TO BE DONE BY OWNER. ROUGH GRADING WILL BE DONE BY CONTRACTOR. CONTRACTOR TO STOCK PILE TOPSOIL ON SITE IN LOCATION SPECIFIED BY STATION MANAGER. COORDINATE WITH STATION MANAGER/OWNER PRIOR TO ANY REMOVAL OF IRRIGATION CONTROL VALVES.
6. ALL EXPOSED WALL SURFACES TO BE COLORED CONCRETE FACED WITH A FORMLINER WITH A RANDOM ASHLAR PATTERN (COORDINATE WALL FACING WITH ARCHITECT)

CLIENT

UDOT CONNECTING COMMUNITIES
STATION #2434
6072 E. EMIGRATION CANYON RD.
PARLEY'S CANYON, UTAH

DESIGNER

ARCHIPLEX GROUP
architecture · planning · design services
255 Crossroad Square
Salt Lake City, UT 84115
P:(801) 961-7070
F:(801) 961-7373

CONSULTANTS

PEPG ENGINEERING, L.L.C.
8805 S. SANDY PARKWAY • SANDY, UT 84070
PHONE: (801) 562-2521 • FAX: (801) 562-2551

REGISTRATION

REGISTERED PROFESSIONAL ENGINEER No. 272207 DARRIN R. SMITH 3-3-2009 STATE OF UTAH

ISSUE

MARK	DATE	DESCRIPTION
2	3-4-09	ADDENDUM #2
1	2-16-09	ADDENDUM #1
	01-09	Revised Construction Doc.
	10-08	Construction Documents
	8-20-08	90% Review Submittal

ARCHIPLEX PROJECT NO:	0728.02
DFCM PROJECT NO:	08211900
PEPG PROJECT NO:	6600.0816
DRAWN BY:	BCB
CHECKED BY:	DRS
SCALE:	1"=20'
DATE:	MARCH, 2009

KEY PLAN

SHEET TITLE

SITE & UTILITY PLAN

C200

© 2004 ARCHIPLEX GROUP

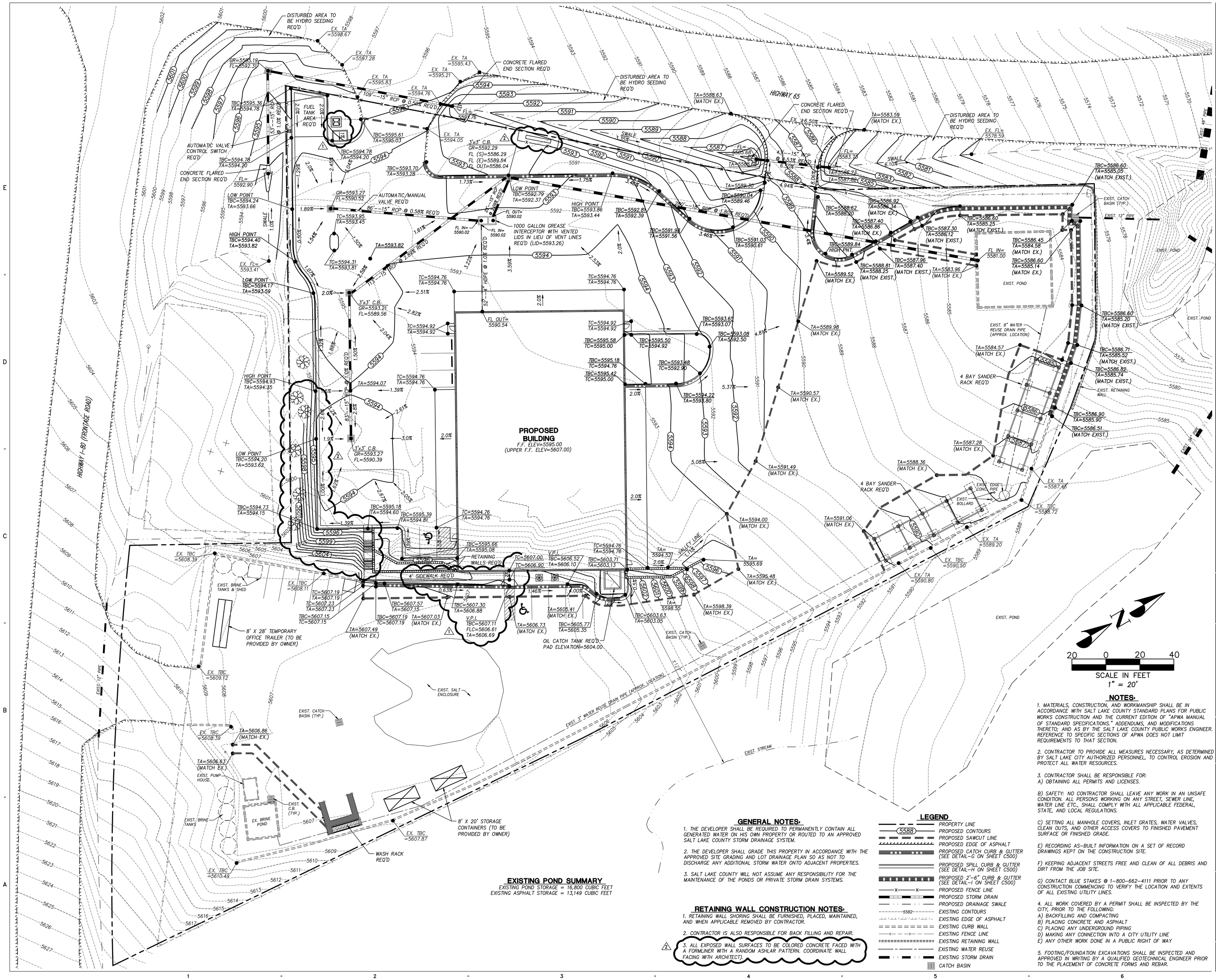

EXISTING POND SUMMARY

EXISTING POND STORAGE = 16,800 CUBIC FEET
EXISTING ASPHALT STORAGE = 13,149 CUBIC FEET

GENERAL NOTES:

1. THE DEVELOPER SHALL BE REQUIRED TO PERMANENTLY CONTAIN ALL GENERATED WATER ON HIS OWN PROPERTY OR ROUTED TO AN APPROVED SALT LAKE COUNTY STORM DRAINAGE SYSTEM.

2. THE DEVELOPER SHALL GRADE THIS PROPERTY IN ACCORDANCE WITH THE APPROVED SITE GRADING AND LOT DRAINAGE PLAN SO AS NOT TO DISCHARGE ANY ADDITIONAL STORM WATER ONTO ADJACENT PROPERTIES.

3. SALT LAKE COUNTY WILL NOT ASSUME ANY RESPONSIBILITY FOR THE MAINTENANCE OF THE PONDS OR PRIVATE STORM DRAIN SYSTEMS.

RETAINING WALL CONSTRUCTION NOTES:

1. RETAINING WALL SHORING SHALL BE FURNISHED, PLACED, MAINTAINED, AND WHEN APPLICABLE REMOVED BY CONTRACTOR.

2. CONTRACTOR IS ALSO RESPONSIBLE FOR BACK FILLING AND REPAIR.

2 3. ALL EXPOSED WALL SURFACES TO BE COLORED CONCRETE FACED WITH A FORMLINER WITH A RANDOM ASHLAR PATTERN. COORDINATE WALL FACING WITH ARCHITECT.

LEGEND

- PROPERTY LINE
- (5588) PROPOSED CONTOURS
- PROPOSED SAWCUT LINE
- PROPOSED EDGE OF ASPHALT
- PROPOSED CATCH CURB & GUTTER (SEE DETAIL-G ON SHEET C500)
- PROPOSED SPILL CURB & GUTTER (SEE DETAIL-H ON SHEET C500)
- PROPOSED 2'-6" CURB & GUTTER (SEE DETAIL-I ON SHEET C500)
- PROPOSED FENCE LINE
- PROPOSED STORM DRAIN
- PROPOSED DRAINAGE SWALE
- 5582 EXISTING CONTOURS
- EXISTING EDGE OF ASPHALT
- EXISTING CURB WALL
- EXISTING FENCE LINE
- EXISTING RETAINING WALL
- EXISTING WATER REUSE
- EXISTING STORM DRAIN
- CATCH BASIN

NOTES:

1. MATERIALS, CONSTRUCTION, AND WORKMANSHIP SHALL BE IN ACCORDANCE WITH SALT LAKE COUNTY STANDARD PLANS FOR PUBLIC WORKS CONSTRUCTION AND THE CURRENT EDITION OF "APWA MANUAL OF STANDARD SPECIFICATIONS," ADDENDUMS, AND MODIFICATIONS THERETO; AND AS BY THE SALT LAKE COUNTY PUBLIC WORKS ENGINEER. REFERENCE TO SPECIFIC SECTIONS OF APWA DOES NOT LIMIT REQUIREMENTS TO THAT SECTION.

2. CONTRACTOR TO PROVIDE ALL MEASURES NECESSARY, AS DETERMINED BY SALT LAKE CITY AUTHORIZED PERSONNEL, TO CONTROL EROSION AND PROTECT ALL WATER RESOURCES.

3. CONTRACTOR SHALL BE RESPONSIBLE FOR:
A) OBTAINING ALL PERMITS AND LICENSES.

B) SAFETY: NO CONTRACTOR SHALL LEAVE ANY WORK IN AN UNSAFE CONDITION. ALL PERSONS WORKING ON ANY STREET, SEWER LINE, WATER LINE ETC., SHALL COMPLY WITH ALL APPLICABLE FEDERAL, STATE, AND LOCAL REGULATIONS.

C) SETTING ALL MANHOLE COVERS, INLET GRATES, WATER VALVES, CLEAN OUTS, AND OTHER ACCESS COVERS TO FINISHED PAVEMENT SURFACE OR FINISHED GRADE.

E) RECORDING AS-BUILT INFORMATION ON A SET OF RECORD DRAWINGS KEPT ON THE CONSTRUCTION SITE.

F) KEEPING ADJACENT STREETS FREE AND CLEAN OF ALL DEBRIS AND DIRT FROM THE JOB SITE.

G) CONTACT BLUE STAKES @ 1-800-662-4111 PRIOR TO ANY CONSTRUCTION COMMENCING TO VERIFY THE LOCATION AND EXTENTS OF ALL EXISTING UTILITY LINES.

4. ALL WORK COVERED BY A PERMIT SHALL BE INSPECTED BY THE CITY, PRIOR TO THE FOLLOWING:
A) BACKFILLING AND COMPACTING
B) PLACING CONCRETE AND ASPHALT
C) PLACING ANY UNDERGROUND PIPING
D) MAKING ANY CONNECTION INTO A CITY UTILITY LINE
E) ANY OTHER WORK DONE IN A PUBLIC RIGHT OF WAY

5. FOOTING/FOUNDATION EXCAVATIONS SHALL BE INSPECTED AND APPROVED IN WRITING BY A QUALIFIED GEOTECHNICAL ENGINEER PRIOR TO THE PLACEMENT OF CONCRETE FORMS AND REBAR.

CLIENT

UDOT CONNECTING COMMUNITIES

STATION #2434
6072 E. EMIGRATION CANYON RD.
PARLEY'S CANYON, UTAH

DESIGNER

ARCHIPLEX GROUP
architecture · planning · design services
255 Crossroad Square
Salt Lake City, UT 84115
P:(801) 961-7070
F:(801) 961-7373

CONSULTANTS

PEPG ENGINEERING, L.L.C.
8825 S. SANDY PARKWAY • SANDY, UT 84070
PHONE: (801) 562-2521 • FAX: (801) 562-2551

REGISTRATION

PROFESSIONAL ENGINEER — No. 271207 — DARRIN R. SMITH — 3-3-2009 — STATE OF UTAH

ISSUE

MARK	DATE	DESCRIPTION
2	3-4-09	ADDENDUM #2
1	2-16-09	ADDENDUM #1
	01-09	Revised Construction Doc.
	10-08	Construction Documents
	8-20-08	90% Review Submittal

ARCHIPLEX PROJECT NO:	0728.02
DFCM PROJECT NO:	08211900
PEPG PROJECT NO:	6600.0816
DRAWN BY:	BCB
CHECKED BY:	DRS
SCALE:	1"=20'
DATE:	MARCH, 2009

KEY PLAN

SHEET TITLE

GRADING & DRAINAGE PLAN

C300

© 2004 ARCHIPLEX GROUP

SCALE IN FEET
HORIZONTAL: 1" = 10'
VERTICAL: 1" = 10'

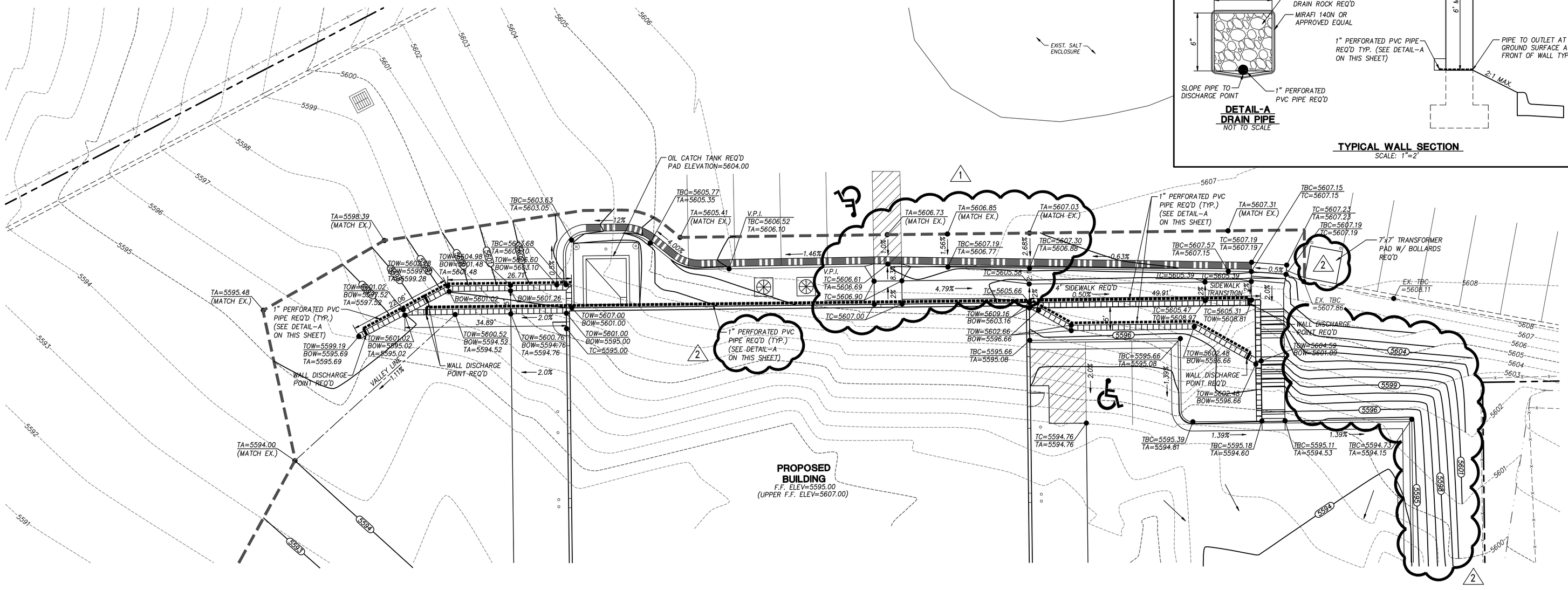

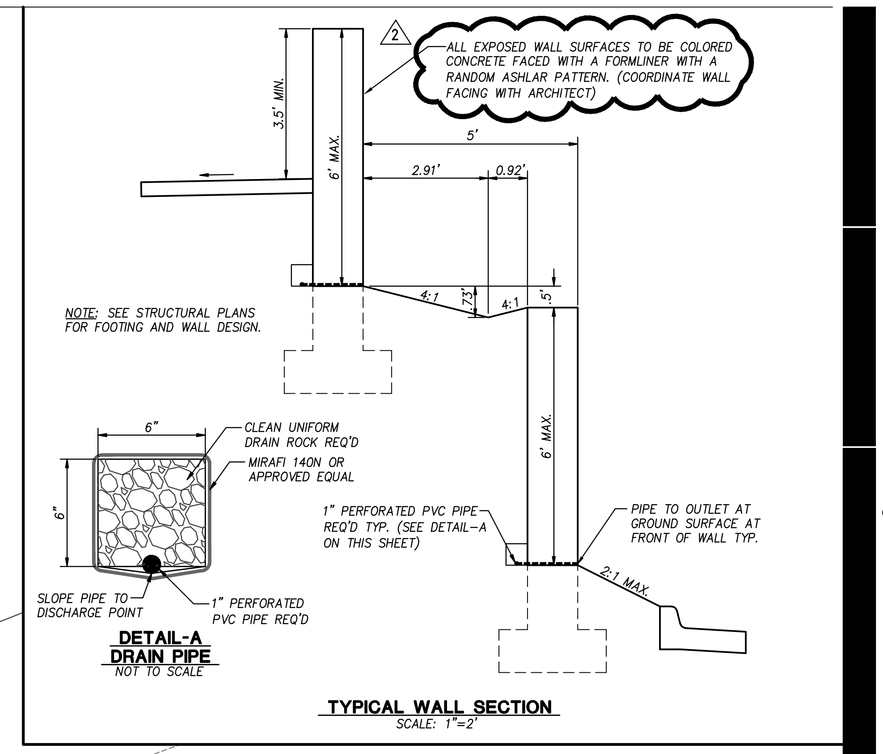

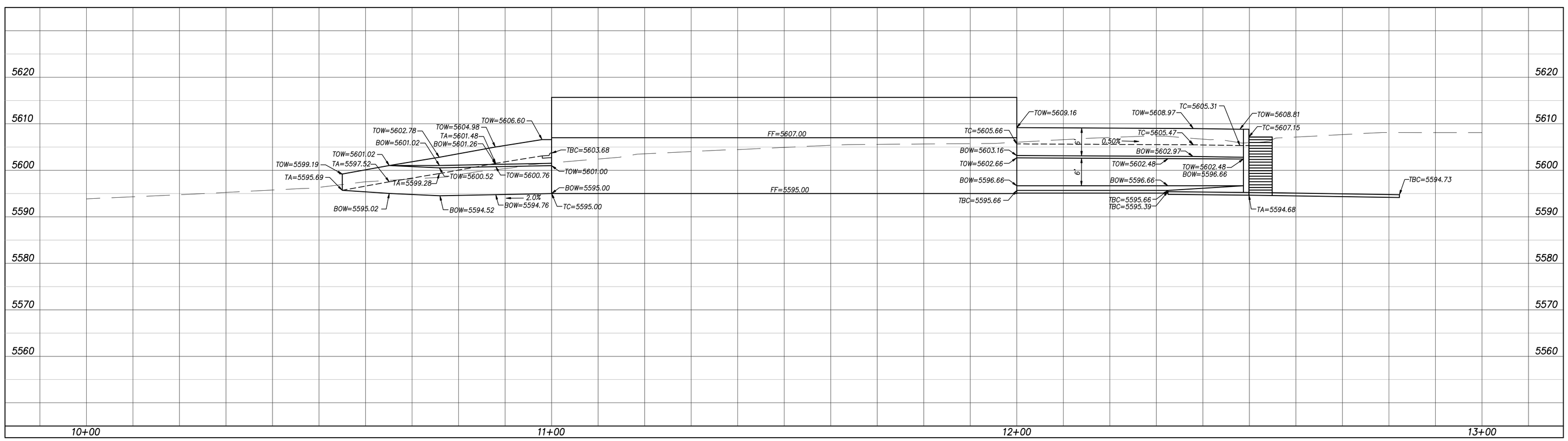

CLIENT

UDOT CONNECTING COMMUNITIES

STATION #2434
6072 E. EMIGRATION CANYON RD.
PARLEY'S CANYON, UTAH

DESIGNER

ARCHIPLEX GROUP
architecture · planning · design services
255 Crossroad Square
Salt Lake City, UT 84115
P:(801) 961-7070
F:(801) 961-7373

CONSULTANTS

PEPG ENGINEERING, L.L.C.
8825 S. SANDY PARKWAY • SANDY, UT 84070
PHONE: (801) 562-2521 • FAX: (801) 562-2551

REGISTRATION

REGISTERED PROFESSIONAL ENGINEER
NO. 272007
DARRIN R. SMITH
3-3-2009
STATE OF UTAH

ISSUE

MARK	DATE	DESCRIPTION
2	3-4-09	ADDENDUM #2
1	2-16-09	ADDENDUM #1
	01-09	Revised Construction Doc.
	10-08	Construction Documents
	8-20-08	90% Review Submittal

ARCHIPLEX PROJECT NO:	0728.02
DFCM PROJECT NO:	08211900
PEPG PROJECT NO:	6600.0816
DRAWN BY:	BCB
CHECKED BY:	DRS
SCALE:	1"=10'
DATE:	MARCH, 2009

KEY PLAN

SHEET TITLE

RETAINING WALL PLAN & PROFILE

C301

© 2004 ARCHIPLEX GROUP

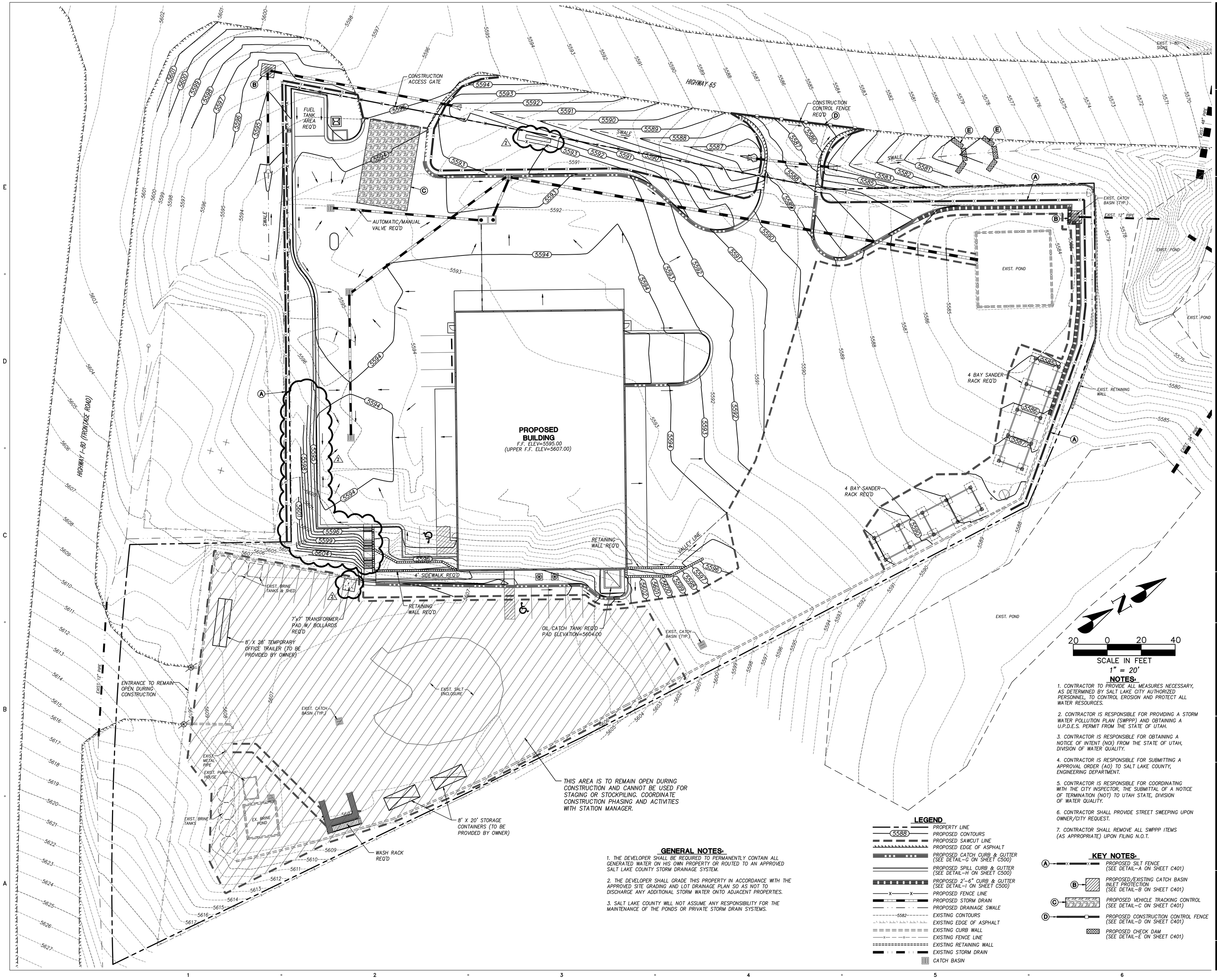

GENERAL NOTES:

1. THE DEVELOPER SHALL BE REQUIRED TO PERMANENTLY CONTAIN ALL GENERATED WATER ON HIS OWN PROPERTY OR ROUTED TO AN APPROVED SALT LAKE COUNTY STORM DRAINAGE SYSTEM.

2. THE DEVELOPER SHALL GRADE THIS PROPERTY IN ACCORDANCE WITH THE APPROVED SITE GRADING AND LOT DRAINAGE PLAN SO AS NOT TO DISCHARGE ANY ADDITIONAL STORM WATER ONTO ADJACENT PROPERTIES.

3. SALT LAKE COUNTY WILL NOT ASSUME ANY RESPONSIBILITY FOR THE MAINTENANCE OF THE PONDS OR PRIVATE STORM DRAIN SYSTEMS.

LEGEND

- PROPERTY LINE
- (5588) PROPOSED CONTOURS
- PROPOSED SAWCUT LINE
- PROPOSED EDGE OF ASPHALT
- PROPOSED CATCH CURB & GUTTER (SEE DETAIL-G ON SHEET C500)
- PROPOSED SPILL CURB & GUTTER (SEE DETAIL-H ON SHEET C500)
- PROPOSED 2'-6" CURB & GUTTER (SEE DETAIL-I ON SHEET C500)
- PROPOSED FENCE LINE
- PROPOSED STORM DRAIN
- PROPOSED DRAINAGE SWALE
- 5582 EXISTING CONTOURS
- EXISTING EDGE OF ASPHALT
- EXISTING CURB WALL
- EXISTING FENCE LINE
- EXISTING RETAINING WALL
- EXISTING STORM DRAIN
- CATCH BASIN

NOTES:

1. CONTRACTOR TO PROVIDE ALL MEASURES NECESSARY, AS DETERMINED BY SALT LAKE CITY AUTHORIZED PERSONNEL, TO CONTROL EROSION AND PROTECT ALL WATER RESOURCES.

2. CONTRACTOR IS RESPONSIBLE FOR PROVIDING A STORM WATER POLLUTION PLAN (SWPPP) AND OBTAINING A U.P.D.E.S. PERMIT FROM THE STATE OF UTAH.

3. CONTRACTOR IS RESPONSIBLE FOR OBTAINING A NOTICE OF INTENT (NOI) FROM THE STATE OF UTAH, DIVISION OF WATER QUALITY.

4. CONTRACTOR IS RESPONSIBLE FOR SUBMITTING A APPROVAL ORDER (AO) TO SALT LAKE COUNTY, ENGINEERING DEPARTMENT.

5. CONTRACTOR IS RESPONSIBLE FOR COORDINATING WITH THE CITY INSPECTOR, THE SUBMITTAL OF A NOTICE OF TERMINATION (NOT) TO UTAH STATE, DIVISION OF WATER QUALITY.

6. CONTRACTOR SHALL PROVIDE STREET SWEEPING UPON OWNER/CITY REQUEST.

7. CONTRACTOR SHALL REMOVE ALL SWPPP ITEMS (AS APPROPRIATE) UPON FILING N.O.T.

KEY NOTES:

- (A) PROPOSED SILT FENCE (SEE DETAIL-A ON SHEET C401)
- (B) PROPOSED/EXISTING CATCH BASIN INLET PROTECTION (SEE DETAIL-B ON SHEET C401)
- (C) PROPOSED VEHICLE TRACKING CONTROL (SEE DETAIL-C ON SHEET C401)
- (D) PROPOSED CONSTRUCTION CONTROL FENCE (SEE DETAIL-D ON SHEET C401)
- PROPOSED CHECK DAM (SEE DETAIL-E ON SHEET C401)

CLIENT

UDOT CONNECTING COMMUNITIES

STATION #2434
6072 E. EMIGRATION CANYON RD.
PARLEY'S CANYON, UTAH

DESIGNER

ARCHIPLEX GROUP
architecture · planning · design services
255 Crossroad Square
Salt Lake City, UT 84115
P:(801) 961-7070
F:(801) 961-7373

CONSULTANTS

PEPG ENGINEERING, L.L.C.
8825 S. SANDY PARKWAY • SANDY, UT 84070
PHONE: (801) 562-2521 • FAX: (801) 562-2551

REGISTRATION

REGISTERED PROFESSIONAL ENGINEER
No. 177207
DARRIN R. SMITH
3-3-2009
STATE OF UTAH

ISSUE

MARK	DATE	DESCRIPTION
2	3-4-09	ADDENDUM #2
	01-09	Revised Construction Doc.
	10-08	Construction Documents
	8-20-08	90% Review Submittal

ARCHIPLEX PROJECT NO:	0728.02
DFCM PROJECT NO:	08211900
PEPG PROJECT NO:	6600.0816
DRAWN BY:	BCB
CHECKED BY:	DRS
SCALE:	1"=20'
DATE:	MARCH, 2009

KEY PLAN

SHEET TITLE

EROSION CONTROL PLAN

C400

© 2004 ARCHIPLEX GROUP

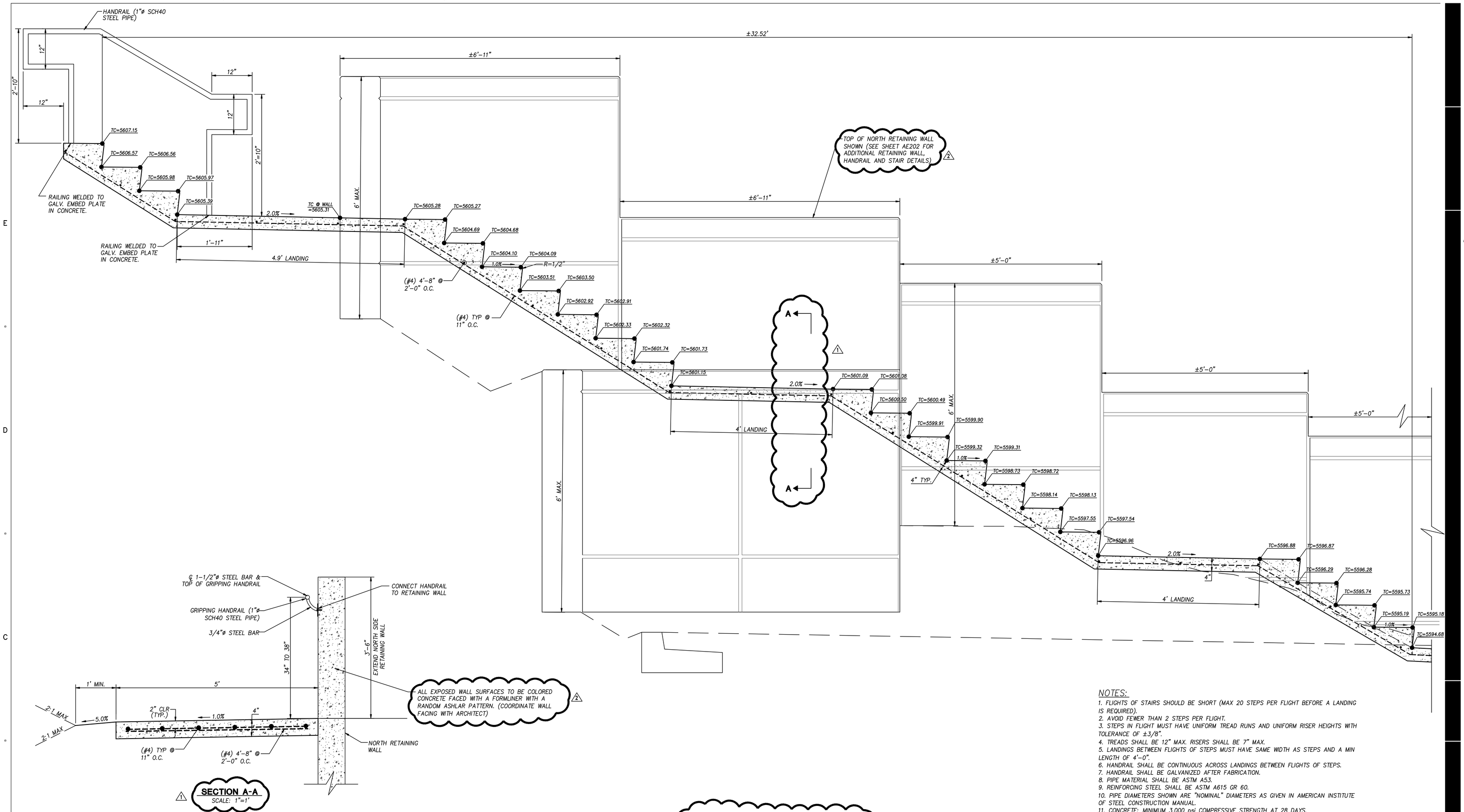

SECTION A-A
SCALE: 1"=1'

CONCRETE STAIRS AND HANDRAIL DETAIL
SCALE: 1"=1'

NOTES:

1. FLIGHTS OF STAIRS SHOULD BE SHORT (MAX 20 STEPS PER FLIGHT BEFORE A LANDING IS REQUIRED).
2. AVOID FEWER THAN 2 STEPS PER FLIGHT.
3. STEPS IN FLIGHT MUST HAVE UNIFORM TREAD RUNS AND UNIFORM RISER HEIGHTS WITH TOLERANCE OF ±3/8".
4. TREADS SHALL BE 12" MAX. RISERS SHALL BE 7" MAX.
5. LANDINGS BETWEEN FLIGHTS OF STEPS MUST HAVE SAME WIDTH AS STEPS AND A MIN LENGTH OF 4'-0".
6. HANDRAIL SHALL BE CONTINUOUS ACROSS LANDINGS BETWEEN FLIGHTS OF STEPS.
7. HANDRAIL SHALL BE GALVANIZED AFTER FABRICATION.
8. PIPE MATERIAL SHALL BE ASTM A53.
9. REINFORCING STEEL SHALL BE ASTM A615 GR 60.
10. PIPE DIAMETERS SHOWN ARE "NOMINAL" DIAMETERS AS GIVEN IN AMERICAN INSTITUTE OF STEEL CONSTRUCTION MANUAL.
11. CONCRETE: MINIMUM 3,000 psi COMPRESSIVE STRENGTH AT 28 DAYS.

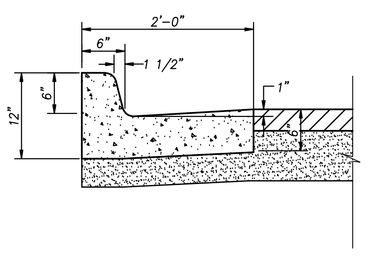

DETAIL-G
2'-0" CATCH CURB AND GUTTER
SCALE: 1"=1'

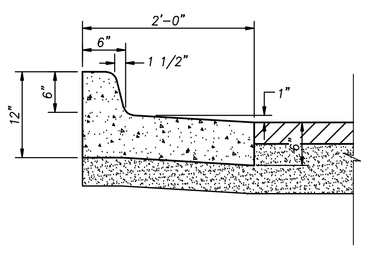

DETAIL-H
2'-0" SPILL CURB AND GUTTER
SCALE: 1"=1'

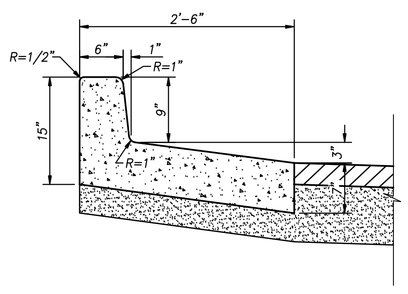

DETAIL-I
2'-6" SPILL CURB AND GUTTER
SCALE: 1"=1'

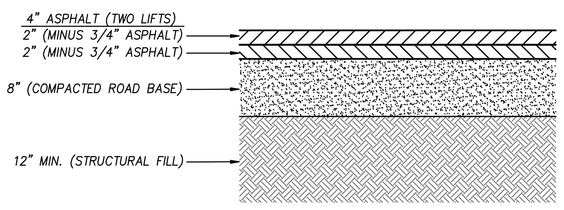

NOTES:

1. ASPHALT PAVEMENT DESIGN IS BASED ON THE SOILS REPORT PREPARED BY PEPG ENGINEERING, LLC ON AUGUST 21, 2008 – PROJECT NO. 6600.0816.

2. THE 4" ASPHALT LAYER SHOULD CONSIST OF (2)–2" LAYERS OF MINUS 3/4" HOT MIX ASPHALT, COMPACTED TO 95% OF MAXIMUM DENSITY (BASED ON 50 BLOW MARSHALL NUMBER).

DETAIL-J
ASPHALT PAVING SECTION
SCALE: 1"=1'

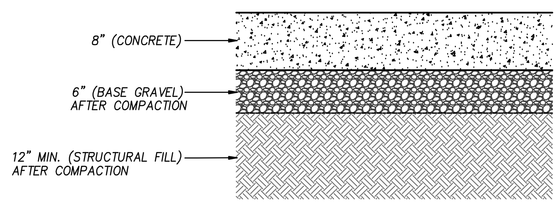

NOTES:

1. CONCRETE PAVEMENT DESIGN IS BASED ON THE SOILS REPORT PREPARED BY PEPG ENGINEERING, LLC ON AUGUST 21, 2008 – PROJECT NO. 6600.0816.

2. THE CONCRETE USED IN AREAS WHERE TRUCKS WILL BE PARKED, OR WILL MOVE OVER THE SURFACE, WILL BE A MINIMUM 5,000 psi COMPRESSIVE STRENGTH CONCRETE (28 DAY BREAK) PLACED 8" THICK WITH EPOXY COATED #4 REINFORCING BARS PLACED 12" ON CENTER BOTH WAYS.

DETAIL-K
TRUCK BEARING CONCRETE PAVING SECTION
SCALE: 1"=1'

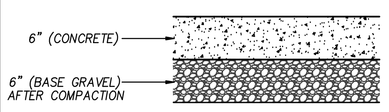

DETAIL-L
DUMPSTER AND CARD READER PAD CONCRETE PAVING SECTION
SCALE: 1"=1'

CLIENT

UDOT CONNECTING COMMUNITIES

STATION #2434
6072 E. EMIGRATION CANYON RD.
PARLEY'S CANYON, UTAH

DESIGNER

ARCHIPLEX GROUP
architecture · planning · design services
255 Crossroad Square
Salt Lake City, UT 84115
P:(801) 961-7070
F:(801) 961-7373

CONSULTANTS

PEPG ENGINEERING, L.L.C.
8825 S. SANDY PARKWAY • SANDY, UT 84070
PHONE: (801) 562-2521 • FAX: (801) 562-2551

REGISTRATION

REGISTERED PROFESSIONAL ENGINEER
No. 177207
DARRIN R. SMITH
3-3-2009
STATE OF UTAH

ISSUE

MARK	DATE	DESCRIPTION
2	3-4-09	ADDENDUM #2
1	2-16-09	ADDENDUM #1
	01-09	Revised Construction Doc.
	10-08	Construction Documents
	8-20-08	90% Review Submittal

ARCHIPLEX PROJECT NO:	0728.02
DFCM PROJECT NO:	08211900
PEPG PROJECT NO:	6600.0816
DRAWN BY:	BCB
CHECKED BY:	DRS
SCALE:	AS NOTED
DATE:	MARCH, 2009

KEY PLAN

SHEET TITLE

TYPICAL SECTIONS & DETAILS

C500

© 2004 ARCHIPLEX GROUP

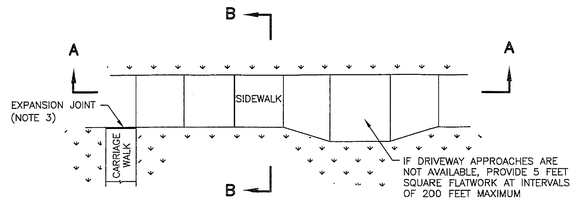

PLAN

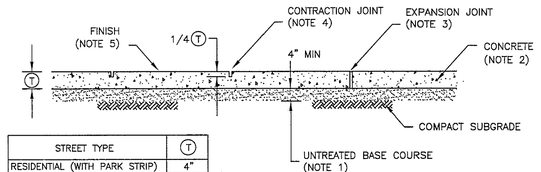

STREET TYPE	T
RESIDENTIAL (WITH PARK STRIP)	4"
RESIDENTIAL (NO PARK STRIP)	6"
OTHER	
REPLACEMENTS	MATCH EXISTING, 4" MIN.

SEE DRIVEWAY APPROACH PLANS FOR SIDEWALK THICKNESS AT DRIVEWAYS

SECTION A–A

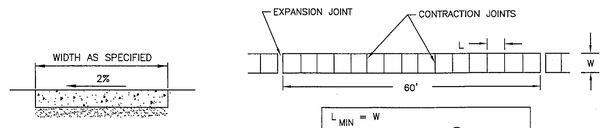

$L_{MIN} = W$

L_{MAX} (in feet) $= 2.5 \times$ T (in inches) OR $= 15$ FEET MAX.

SECTION B–B

SIDEWALK JOINT DETAIL

(A) CONCRETE SIDEWALK

SEE APWA STANDARD PLAN NO. 231 FOR NOTES
(NOT TO SCALE)

LANDING AT SIDEWALK LEVEL

NARRATIVE:
- SITE CONDITIONS WILL VARY. CONFIGURATION OF RAMP AND LANDING MAY BE CHANGED, BUT THEY MUST MEET DIMENSIONS AND SLOPES SHOWN HERE.
- GRADE BREAKS AT ENDS OF RAMPS MUST BE PERPENDICULAR TO THE DIRECTION OF PEDESTRIAN TRAVEL.
- USE OF FLARES, CURB WALLS, ETC., ARE AT ENGINEER'S DISCRETION.
- LENGTH OF ANY RAMP NOT REQUIRED TO EXCEED 15 FEET.

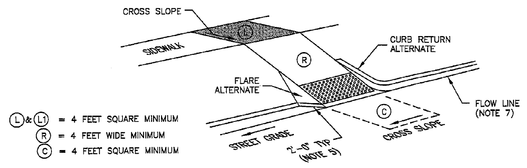

EXAMPLE 1

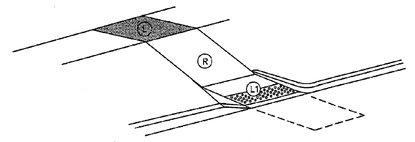

EXAMPLE 2

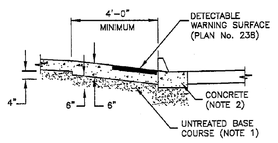

MATERIALS

		RUNNING SLOPE	CROSS SLOPE
LANDING	L	STREET GRADE	1:48 (2%)
	L1	1:48 (2%)	STREET GRADE
RAMP	R	1:12 (8.33%)	STREET GRADE
CLEAR SPACE	C	1:20 (5%)	STREET GRADE

CROSS SLOPE IS PERPENDICULAR TO DIRECTION OF PEDESTRIAN TRAVEL. RUNNING SLOPE IS IN THE DIRECTION OF PEDESTRIAN TRAVEL.

MAXIMUM SLOPES

(B) TANGENT CURB CUT ASSEMBLY

SEE APWA STANDARD PLAN NO. 236 FOR NOTES
(NOT TO SCALE)

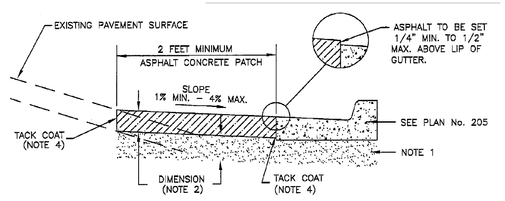

CASE 1 – POSITIVE STREET SLOPE TIE–IN

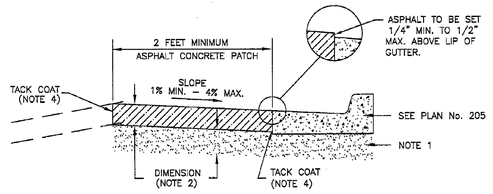

CASE 2 – NEGATIVE STREET SLOPE TIE–IN

(C) ASPHALT CONCRETE PAVEMENT TIE-IN

SEE APWA STANDARD PLAN NO. 251 FOR NOTES
(NOT TO SCALE)

SHALLOW EXCAVATION

(LESS THAN 48 INCHES FROM PAVEMENT SURFACE TO BOTTOM OF EXCAVATION)

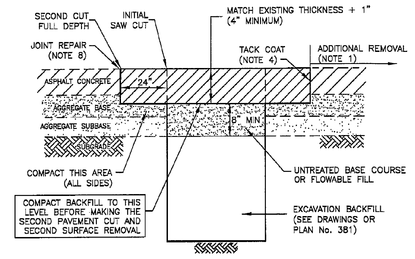

EXAMPLE 1
(ASPHALT RESTORATION)

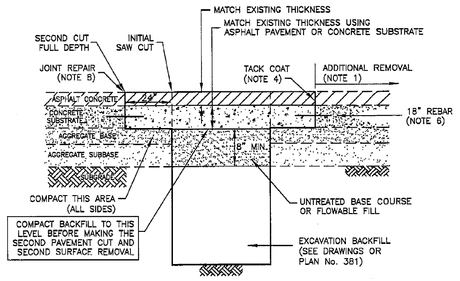

EXAMPLE 2
(COMPOSITE RESTORATION)

(D) ASPHALT CONCRETE "T" PATCH

SEE APWA STANDARD PLAN NO. 255 FOR NOTES
(NOT TO SCALE)

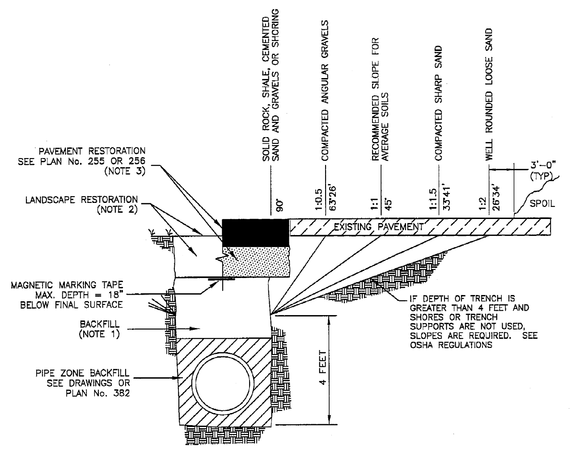

SECTION

(E) TRENCH BACKFILL

SEE APWA STANDARD PLAN NO. 381 FOR NOTES
(NOT TO SCALE)

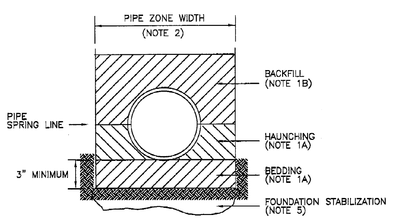

INSTALLATION

CONCRETE PIPE: FOLLOW ASTM C 1479
"STANDARD PRACTICE FOR INSTALLATION OF PRECAST CONCRETE SEWER, STORM DRAIN, AND CULVERT PIPE USING STANDARD INSTALLATIONS."

PVC AND HDPE PIPE: FOLLOW ASTM D 2321
"STANDARD PRACTICE FOR UNDERGROUND INSTALLATION OF THERMOPLASTIC PIPE FOR SEWERS AND OTHER GRAVITY–FLOW APPLICATIONS".

CORRUGATED METAL PIPE: FOLLOW ASTM A 798
"STANDARD PRACTICE FOR INSTALLING FACTORY–MADE CORRUGATED STEEL PIPE FOR SEWERS AND OTHER APPLICATIONS.

VITRIFIED CLAY PIPE: FOLLOW ASTM C 12.
"STANDARD RECOMMENDED PRACTICE FOR INSTALLING VITRIFIED CLAY PIPE LINES.

(F) PIPE ZONE BACKFILL

SEE APWA STANDARD PLAN NO. 382 FOR NOTES
(NOT TO SCALE)

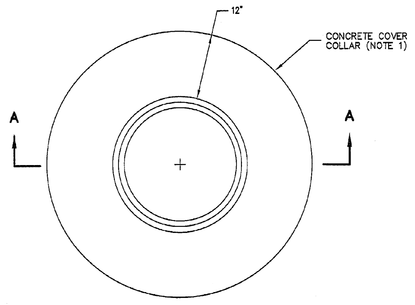

PLAN

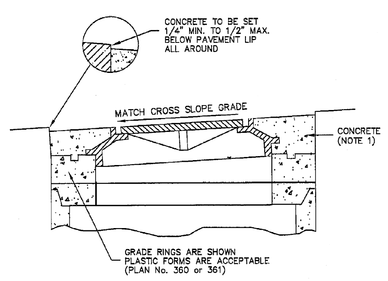

SECTION A–A

(G) CONCRETE COVER COLLAR FOR MANHOLE

SEE APWA STANDARD PLAN NO. 413 FOR NOTES
(NOT TO SCALE)

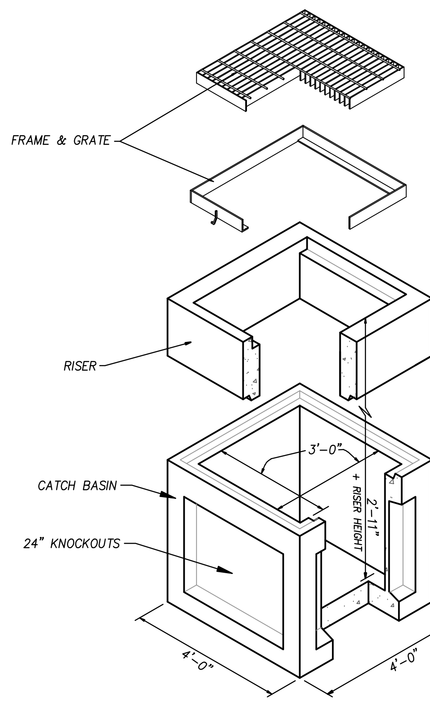

*USE STANDARD PRECAST CATCH BASINS.

NOTES:

1. CATCH BASINS MUST BE DESIGNED TO MEET ASTM C858 WITH AASHTO HS–20 LOADING.

2. OPTIONAL GRATING OR COVER MATERIAL MAY BE CAST IN AS REQUIRED.

3. A CONCRETE COVER COLLAR IS REQUIRED FOR ALL CATCH BASINS. FOR COVER COLLAR DETAIL, SEE APWA PLAN NO. 362. EDGES OF ASPHALT MUST BE SAWCUT TO A CLEAN EDGE.

(H) 3'x3' CATCH BASIN

(NOT TO SCALE)

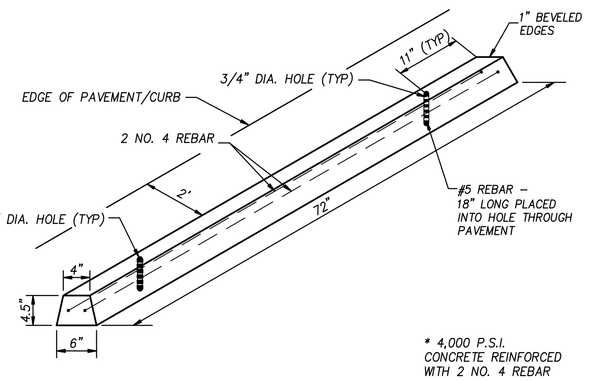

* 4,000 P.S.I. CONCRETE REINFORCED WITH 2 NO. 4 REBAR

(J) CONCRETE WHEEL STOP

(NOT TO SCALE)

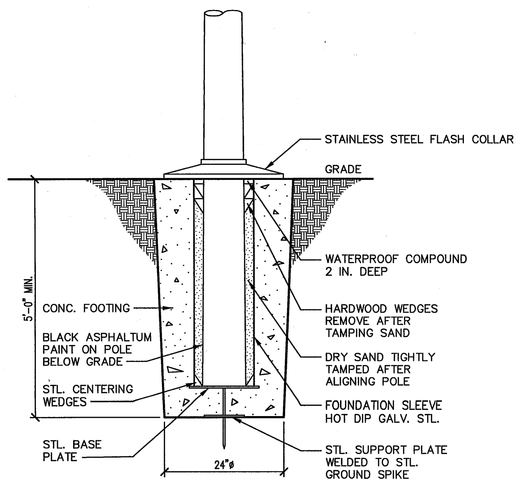

(K) TYPICAL FLAGPOLE BASE

(NOT TO SCALE)

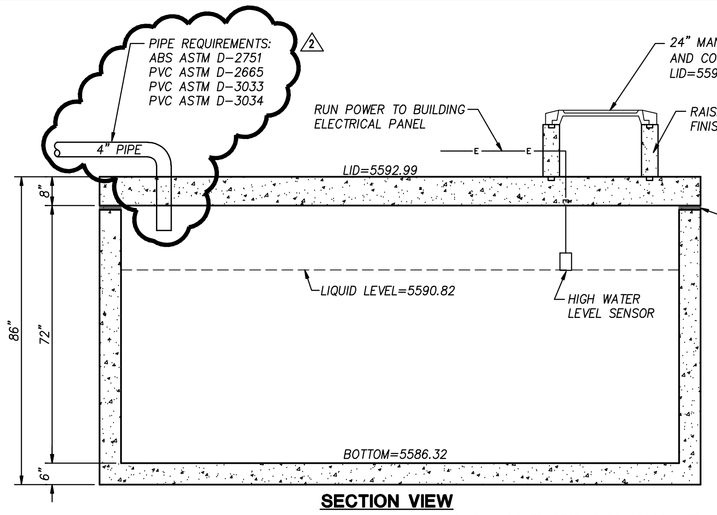

SECTION VIEW

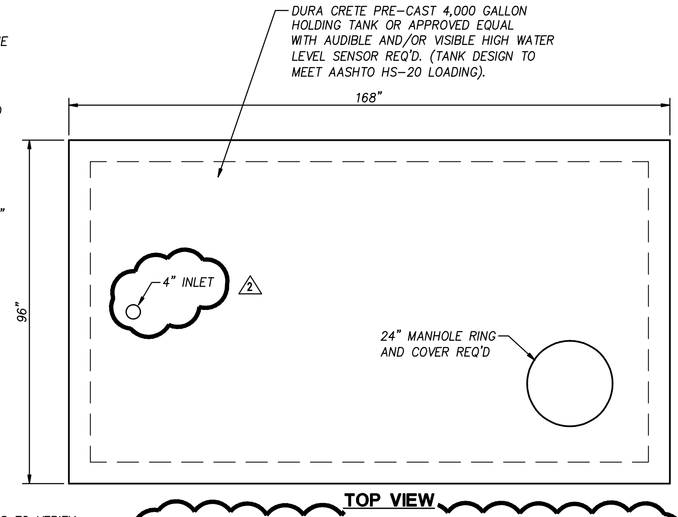

TOP VIEW

NOTES:

1. SEE HOLDING TANK MANUFACTURER FOR REBAR REQUIREMENTS.

2. NO GROUND WATER WAS ENCOUNTERED AT ELEVATION 5584.00.

3. HOLDING TANK SHALL BE CONSTRUCTED OF SOUND, DURABLE WATER TIGHT MATERIALS THAT ARE NOT SUBJECT TO EXCESSIVE CORROSION, FROST DAMAGE, OR DECAY.

4. HOLDING TANK SHALL BE DESIGNED TO BE WATER TIGHT.

5. CONTRACTOR SHALL INSPECT HOLDING TANK FOR CRACKS PRIOR TO INSTALLATION.

6. LOCAL HEALTH DISTRICT MAY, AT THEIR OPTION, REQUIRE FILLING TANK WITH WATER TO CHECK FOR LEAKS PRIOR TO BACKFILL.

7. HOLDING TANK MANUFACTURER SHALL CERTIFY IN WRITING THAT HOLDING TANK COMPLIES WITH R317–4.

8. CIVIL CONTRACTOR IS TO COORDINATE WITH HIS SUBS TO VERIFY SITE SANITARY SEWER AND BUILDING SANITARY SEWER PIPE WILL PROPERLY CONNECT PRIOR TO INSTALLING ANY SANITARY PIPE IN THE SITE OR BUILDING. IF PROBLEM EXISTS, THE CONTRACTOR SHALL INFORM THE ARCHITECT OF THE PROBLEM PRIOR TO INSTALLING ANY PIPE OR APPURTENANCES. IF PIPE OR APPURTENANCES ARE INSTALLED AND A PROBLEM ARISES, THE CONTRACTOR, AT HIS OWN EXPENSE, SHALL PERFORM ANY WORK REQUIRED SUCH THAT THE SANITARY PIPE AND APPURTENANCES CAN BE INSTALLED CORRECTLY TO CODE STANDARDS.

9. FOLLOWING INSTALLATION OF ON–SITE WASTEWATER HOLDING TANK, PLUMBING, AND APPURTENANCES, AND BEFORE IT IS BACKFILLED OR PUT INTO SERVICE, THE ENTIRE SYSTEM SHALL BE INSPECTED BY THE APPROPRIATE REGULATORY AUTHORITY TO DETERMINE COMPLIANCE WITH UTAH DWQ REGULARTORY RULES R317–4.

10. ON–SITE WASTEWATER HOLDING TANK SHALL BE TESTED FOR WATER TIGHTNESS. TESTING SHALL BE PERFORMED IN ACCORDANCE WITH THE REQUIREMENTS AND PROCEDURE OUTLINED IN THE AMERICAN SOCIETY OF TESTING MATERIALS (ASTM) C–1227, OR CONCRETE TANKS SHALL BE FILLED 24 HOURS BEFORE INSPECTION TO ALLOW STABILIZATION OF THE WATER LEVEL. DURING THE INSPECTION, THERE SHALL BE NO CHANGE IN THE WATER LEVEL FOR 30 MINUTES, NOR SHALL THERE BE MOVING WATER INTO OR OUT OF THE HOLDING TANK. THE REGULATORY AUTHORITY MAY ALLOW TWO PIECE TANKS, WITH THE JOINT BELOW THE WATER LEVEL, TO BE BACKFILLED UP TO THREE (3) INCHES BELOW THE WATER LEVEL. TESTING FOR WATERTIGHTNESS SHALL BE SUPERVISED BY THE REGULATORY AUTHORITY. TANKS EXHIBITING OBVIOUS DEFECTS OR LEAKS SHALL NOT BE APPROVED UNLESS SUCH DEFICIENCIES ARE REPAIRED TO THE SATISFACTION OF THE REGULATORY AUTHORITY.

11. HIGH WATER SENSOR AND ALARM SYSTEM SHALL BE ZOELLER MODEL 10–0126, NEMA 4X PANEL WITH 88DB AT 10 FEET AUDIBLE AND VISUAL BEACON ALARM OR APPROVED EQUAL.

(L) 4,000 GALLON HOLDING TANK

(NOT TO SCALE)

CLIENT

UDOT CONNECTING COMMUNITIES

STATION #2434
6072 E. EMIGRATION CANYON RD.
PARLEY'S CANYON, UTAH

DESIGNER

ARCHIPLEX GROUP
architecture · planning · design services
255 Crossroad Square
Salt Lake City, UT 84115
P:(801) 961–7070
F:(801) 961–7373

CONSULTANTS

PEPG ENGINEERING, L.L.C.
8825 S. SANDY PARKWAY • SANDY, UT 84070
PHONE: (801) 562–2521 • FAX: (801) 562–2551

REGISTRATION

REGISTERED PROFESSIONAL ENGINEER — No. 172201 — DARRIN R. SMITH — 3-3-2009 — STATE OF UTAH

ISSUE

MARK	DATE	DESCRIPTION
2	3–4–09	ADDENDUM #2
1	2–16–09	ADDENDUM #1
	01–09	Revised Contruction Doc.
	10–08	Construction Documents
	8–20–08	90% Review Submittal

ARCHIPLEX PROJECT NO:	0728.02
DFCM PROJECT NO:	08211900
PEPG PROJECT NO:	6600.0816
DRAWN BY:	BCB
CHECKED BY:	DRS
SCALE:	AS NOTED
DATE:	MARCH, 2009

KEY PLAN

SHEET TITLE

TYPICAL SECTIONS & DETAILS

C501

© 2004 ARCHIPLEX GROUP

GENERAL NOTES:

1. CONTRACTOR IS RESPONSIBLE TO VERIFY ALL PLANT & MATERIAL QUANTITIES. THE SCHEDULE IS INTENDED AS A REFERENCE ONLY. SEE ENLARGED PLANTING PLANS FOR SHRUB AND PLANT LOCATIONS.

2. OWNER AND/OR LANDSCAPE ARCHITECT IS TO APPROVE ALL LANDSCAPE MATERIALS PRIOR TO INSTALLATION WITH PRIOR NOTICE OF 48 HOURS. OWNER AND OR LANDSCAPE ARCHITECT RESERVES THE RIGHT TO REJECT LANDSCAPE MATERIALS INCLUDING PLANTS THROUGHOUT THE CONSTRUCTION PERIOD.

3. PROVIDE MATCHING SIZES AND FORMS OF LIKE SHRUB SPECIES AS SHOWN ON DRAWINGS.

4. APPLY 6" OF TOPSOIL IN ALL PLANTING AREAS. A SOIL TEST SHALL BE DONE TO VERIFY QUALITY. CONTRACTOR TO AMEND TOP SOIL AS NECESSARY FROM SOIL REPORT TO COMPLY WITH ACCEPTABLE SOIL STANDARDS AND SPECIFICATIONS. SEE SPECIFICATIONS FOR DEPTH OF TOP SOIL.

5. THE LANDSCAPE & IRRIGATION CONTRACTOR IS RESPONSIBLE FOR ENSURING THAT THEY OBTAIN ANY & ALL DRAWINGS, SPECIFICATIONS, CHANGE ORDERS & AS-BUILDS APPLICABLE TO CONTRACTORS SCOPE OF WORK PRIOR TO & DURING CONSTRUCTION ON SITE. CONFLICTING OR VAGUE INFORMATION SHALL BE NOTED AND SUBMITTED TO OWNER AND LANDSCAPE ARCHITECT FOR CLARIFICATION.

6. CONTRACTOR IS RESPONSIBLE TO REPLACE ALL DAMAGED NEW & EXISTING LANDSCAPE, INCLUDING BUT NOT LIMITED TO ALL PLANTS, TOPSOIL, WEED BARRIER, CURBING, WALKS, ETC.

7. CONTRACTOR SHALL TIE ALL PROPOSED LANDSCAPE MATERIALS WITH EXISTING INCLUDING BUT NOT LIMITED TO ALL PLANTS, TOPSOIL, WEED BARRIER, CURBING, WALKS, ETC.

8. APPLY AT LEAST 4" OF MULCH UNDER ALL TREES AND SHRUBS.

9. APPLY A PRE-EMERGENT AROUND ALL NEW TREES AND SHRUBS.

10. OWNER TO PROVIDE SUPPLEMENTAL MANUAL WATERING ON ALL NEW PLANTS DURING THE ESTABLISHMENT PERIOD UP TO 4 MONTHS.

11. CONTRACTOR SHALL CAREFULLY STUDY AND INSPECT CIVIL AND ARCHITECTURAL PLANS AS-BUILTS DRAWING AND VISUALLY INSPECT. MAKE ON-SITE ADJUSTMENTS TO LANDSCAPE BASED OF FINAL DIMENSIONS AND LAYOUTS OF SITE AND BUILDINGS. PROVIDE A UNIT PRICE CREDIT FOR ANY PLANTS, AREA, OR PORTIONS OF THE LANDSCAPE OMMITED.

12. ANY PORTIONS OF THE LANDSCAPE NOT SHOWN OR CLEARLY IDENTIFIED BY THE LANDSCAPE CONSTRUCTION DOCUMENTS SHALL BE IDENTIFIED, AND A REQUEST FOR INFORMATION AND OR CHANGE ORDER SHALL BE SUBMITTED TO OWNERS REPRESENTATIVE TO ADDRESS.

PLANT SCHEDULE

SYMBOL n.t.s.	BOTANICAL NAME COMMON NAME	QTY.	SIZE	NOTES/REQUIREMENTS
	Landscape Contractor shall be required to obtain the exact plant material shown by Botanical Name and reference, any substitutions or variations shall be approved by Landscape Architect prior to installation.	Landscape contractor shall verify on plans all plant quanties.	Report to Owner and or Landscape Architect any problems obtaining specified plant size.	All plants to be planted as shown on plan. Any discrepencies between actual conditions & plans shall be reported to Owner &/or Landscape Architect.
	TREES			
	PINUS EDULIS/ PINYON PINE	15	6'	All trees must be uniformly sized see notes/specifications
	QUERCUS GAMBELII/ GAMBEL OAK	14	2" cal.	All trees must be uniformly sized see notes/specifications
	EXISTING TREES/ TO REMAIN	6		
	EXISTING TREES/ TO BE REMOVED	9		
	SHRUBS			
	ARTEMISIA TRIDENTATA/ BIG SAGEBRUSH	22	5 gal.	uniformally sized see notes/specifications
	PURSHIA MEXICANA/ CLIFFROSE	34	5 gal.	uniformally sized see notes/specifications
	RHUS TRILOBATA/ OAKLEAF SUMAC	33	5 gal.	uniformally sized see notes/specifications
	PERENNIALS			
	PENSTEMON EATONII/ FIRECRACKER PENSTEMON	13	1 gal.	uniformally sized see notes/specifications
	PENSTEMON PALMERII/ PALMER PENSTEMON	25	1 gal.	uniformally sized see notes/specifications
	PENSTEMON SPECIOSUS/ SHOWY PENSTEMON	31	1 gal.	uniformally sized see notes/specifications
	TURF			
2	NEW SEED MIX - BLUEBUNCH WHEATGRASS @ 3 LB. PER ACRE WESTERN WHEATGRASS @ 5 LB. PER ACRE IDAHO FESCUE @ 2 LB. PER ACRE INDIAN RICEGRASS @ 3 LB. PER ACRE BOTTLEBRUSH SQUIRRELTAIL @ 4 LB. PER ACRE SANDBERG WHEATGRASS @ 5 LB. PER ACRE	± 0.39 acres 16,906 sq. ft.		To be planted in disturbed areas to match existing seed mix areas.
	EXISTING SEED MIX - AS FOLLOWS: ROADCREST @ 10 LB. PER ACRE SMOOTH BROME @ 7 LB. PER ACRE WESTERN WHEATGRASS @ 5 LB. PER ACRE			To remain and blend in with proposed seed mix areas.

GENERAL CONSTRUCTION NOTES:

1. CONTRACTOR SHALL SECURE ALL NECESSARY PERMITS BEFORE CONSTRUCTION.

2. CONTRACTOR SHALL ADHERE TO ALL LOCAL, STATE, AND/OR FEDERAL LAWS PERTAINING TO THE PROJECT'S WORK.

3. IT IS THE RESPONSIBILITY OF THE CONTRACTOR TO COORDINATE ALL CONSTRUCTION ELEMENTS WITH OTHER TRADES PRIOR TO INSTALLATION AND BECOME FAMILIAR WITH THE LOCATION OF UNDERGROUND SERVICES AND IMPROVEMENTS.

4. THE CONTRACTOR SHALL EXAMINE THE SITE AND FULLY DETERMINE THE CONDITIONS UNDER THIS CONTRACT. NO ALLOWANCE WILL BE MADE FOR FAILURE OF BIDDERS TO ASCERTAIN ALL ASPECTS OF THE PROJECT.

5. PRIOR TO DIGGING, EXCAVATION, OR UNDERGROUND WORK, CONTRACTOR SHALL LOCATE AND PROTECT EXISTING UTILITIES AND SUBSURFACE SYSTEMS. CONTRACTOR SHALL ASSUME RESPONSIBILITY FOR REPAIR AND EXPENSES INCURRED TO UTILITIES THAT BECOME DAMAGED AS A RESULT OF HIS WORK.

6. CONTRACTOR SHALL INSPECT WITH OWNER'S REPRESENTATIVE ALL PAVEMENT, SIDEWALK AND CURB DEFECTS PRIOR TO BEGINNING WORK. ALL HARDSCAPE SHALL BE RE-INSPECTED DURING FINAL INSPECTION. ANY DAMAGED AREAS SHALL BE REPAIRED AT CONTRACTOR'S EXPENSE.

7. IT SHALL BE THE CONTRACTOR'S RESPONSIBILITY TO DETERMINE THE QUANTITIES AND MATERIALS REQUIRED TO COMPLETE THE WORK IN ACCORDANCE WITH THE PLANS. CONTRACTOR SHALL PROVIDE OWNER/LANDSCAPE ARCHITECT ACTUAL AMOUNTS REQUIRED FOR FINISHED INSTALLATION.

8. CONTRACTOR SHALL BE RESPONSIBLE FOR MAINTAINING GRADES AS ESTABLISHED BY THE PROJECT ENGINEER. RUNOFF AND DRAINAGE FLOWS SHALL NOT BE ALTERED OR IMPEDED.

9. THE CONTRACTOR SHALL FURNISH ALL LABOR, TOOLS, EQUIPMENT, MATERIALS, EMPLOYEE AND SUBCONTRACTOR SUPERVISION FOR IT'S PORTION OF THE PROJECT TO IMPLEMENT PLANS AND SPECIFICATIONS.

10. THE CONTRACTOR ASSUMES ALL RISKS IN THE PERFORMANCE OF THE WORK AND RESPONSIBILITY FOR LOSS AND EXPENSE RESULTING FROM ON-SITE INJURY.

11. THE CONTRACTOR IS RESPONSIBLE FOR SUPERVISION, SAFETY, ADMINISTRATION, SCHEDULING, COORDINATION AND MANAGEMENT OF SUBCONTRACTORS.

12. THE CONTRACTOR SHALL PROTECT ALL PERSONS NEAR OR ON THE PREMISES FROM UNREASONABLE RISK OF INJURY. PROVIDE WARNING SIGNS, LIGHTS, BARRICADES, RAILINGS, FLAGMEN OR OTHER NECESSARY SAFEGUARD.

13. OWNER / LANDSCAPE ARCHITECT INSPECTIONS SHALL NOT BE DEEMED SUPERVISION OF CONTROL OF CONSTRUCTION BY CONTRACTOR OR SUBCONTRACTORS.

14. ALL CONTRACTS SHALL BE WRITTEN DIRECTLY BETWEEN CONTRACTOR AND OWNER. SPECIFIC TERMS OF WORK SHALL BE NEGOTIATED DIRECTLY BETWEEN PARTIES.

15. OWNER / LANDSCAPE ARCHITECT SHALL REVIEW SHOP DRAWINGS, PRODUCT DATA AND SAMPLES SUBMITTED BY THE CONTRACTOR FOR THE SOLE PURPOSE OF COMPLIANCE WITH THE DESIGN CONCEPT AND WITH INFORMATION GIVEN IN THE CONTRACT DOCUMENTS. OWNER AND LANDSCAPE ARCHITECT ASSUMES NO LIABILITY FOR CHANGES THAT HAVE NOT BEEN REVIEWED AND AUTHORIZED IN WRITING.

16. WHERE TWO OR MORE REQUIREMENTS CREATE OVERLAPPING CONDITIONS, CONFLICTING MINIMUMS OR LEVELS OF QUALITY, ALL OR THE MORE STRINGENT REQUIREMENTS OR THE HIGHER QUALITY LEVEL IS INTENDED, AND SHALL BE ENFORCED. CONFLICTING REQUIREMENTS SHALL BE REFERRED TO THE LANDSCAPE ARCHITECT OR OWNER'S REPRESENTATIVE WHOSE INTERPRETATION WILL BE FINAL.

17. WALKS AND PLANTERS SHOWN ON LANDSCAPE PLANS ARE FOR LAYOUT REFERENCE ONLY. REFER TO CIVIL PLANS FOR HORIZONTAL AND VERTICAL CONTROL

18. IT IS THE RESPONSIBILITY OF THE CONTRACTOR TO ENSURE THAT THE MOST CURRENT PLANS & SPECIFICATIONS ARE USED & CONVEYED TO ALL SUB- CONTRACTORS AS APPLICABLE.

CLIENT

UDOT CONNECTING COMMUNITIES

STATION #2434
6072 E. EMIGRATION CANYON RD.
PARLEY'S CANYON, UTAH

DESIGNER

ARCHIPLEX GROUP
architecture · planning · design services
255 Crossroad Square
Salt Lake City, UT 84115
P:(801) 961-7070
F:(801) 961-7373

CONSULTANTS

PEPG ENGINEERING, L.L.C.
9805 S. SANDY PARKWAY • SANDY, UT 84070
PHONE: (801) 562-2521 • FAX: (801) 562-2551

REGISTRATION

LICENSED LANDSCAPE ARCHITECT
JEFFREY CARTER STOKES
No. 5798225
STATE OF UTAH

ISSUE

MARK	DATE	DESCRIPTION
2	3-4-09	ADDENDUM #2
1	2-16-09	ADDENDUM #1
	01-09	Revised Construction Doc.
	10-08	Construction Documents
	8-20-08	90% Review Submittal

ARCHIPLEX PROJECT NO:	0728.02
DFCM PROJECT NO:	08211900
PEPG PROJECT NO:	6600.0816
DRAWN BY:	EAB
CHECKED BY:	DRS
SCALE:	1"=20'
DATE:	FEBRUARY, 2009

KEY PLAN

SHEET TITLE

LANDSCAPE NOTES & SCHEDULE

L101

© 2004 ARCHIPLEX GROUP

GENERAL NOTES

1. FIELD VERIFY ALL EXISTING CONDITIONS AND THEIR COMPATIBILITY WITH NEW CONSTRUCTION PRIOR TO THE COMMENCEMENT OF WORK. COORDINATE DISCREPANCIES WITH ARCHITECT.

2. DO NOT SCALE DRAWINGS.

3. SEE CIVIL, STRUCTURAL, MECHANICAL AND ELECTRICAL DRAWINGS FOR MORE INFORMATION.

4. PROVIDE BACKING BEHIND ALL SURFACE MOUNTED EQUIPMENT AND/OR FIXTURES PER DETAIL C2/AE401

5. SEE SHEET A1/AE501 FOR INTERIOR PARTITION WALL TYPES.

6. TWO BOLLARDS REQUIRED PER SECTIONAL DOOR JAMB. ALIGN WITH DOOR JAMB, SEE DETAILS A3 & B3/AE503.

7. SEE SHEET AE602 FOR WINDOW FRAME TYPES & DETAILS.

8. SEE STRUCTURAL DRAWINGS FOR CONSTRUCTION/CONTROL JOINT LOCATIONS IN CONCRETE SLAB.

9. ALL DIMENSIONS ARE TO FACE OF WALL, UNLESS NOTED OTHERWISE.

10. PROVIDE 03053.A0 AT ALL CONCRETE CURBS, PIERS, SLABS, STEM WALL ETC. U.N.O.

11. PROVIDE 03054.A0 OVER ENTIRE FLOOR SLAB AT ROOMS 101, 102, 103, 106, & STAIRS.

KEYNOTES

03053.A0	CONCRETE WATER PROOFING ADMIXTURE
03054.A0	OLIOPHOBIC TOPICAL SEALER
03055.A0	SALT AND WATER BARRIER
03300.A1	CONCRETE SLAB-ON-GRADE – SEE STRUCTURAL
03300.D0	CONCRETE PAD
03300.G0	CONCRETE OVER METAL DECK – SEE STRUCTURAL
03300.H0	FOUNDATION WALL SEE STRUTURAL
03300.H1	CONCRETE PIER – SEE STRUCTURAL
03300.N0	CONCRETE CURB
04200.A2	CMU (SIZE)
04200.R0	MASONRY CONTROL JOINT
05120.B2	STEEL COLUMN – SEE STRUTURAL – GALVANIZED
05120.D1	TUBE STEEL COLUMN – SEE STRUCTURAL
05120.D2	TUBE STEEL COLUMN – SEE STRUTURAL – PRIMED AND PAINTED
05500.J1	PIPE BOLLARD (DIAMETER) GALVANIZED & PAINTED
05510.H0	CONCRETE FILLED METAL PAN STAIR – PAINTED
06402.H1	ADJUSTABLE SHELVES (FINISH)
06402.X0	WORKBENCH (DEPTH)
06651.B0	SOLID SURFACE COUNTER TOP
07410.A2	DOWNSPOUT W/CONTINUOUS HEAT TAPE
07410.T1	STANDING SEAM METAL ROOF CANOPY
08360.A0	HEAVY DUTY OVERHEAD SECTIONAL DOOR
10100.C0	MARKER BOARD (L X H)
10425.A0	ROOM SIGNAGE
10425.A1	OIL SIGNAGE
10425.B1	WELDING SIGNAGE
10425.C1	ACCESSIBLE SIGNAGE
10425.D1	ACCESSIBLE/UNISEX RESTROOM SIGNAGE
10500.A0	METAL LOCKERS (WIDTH)
10500.B0	METAL STORAGE CABINETS – W/HOLD DOWN ANCHORS
10522.A0	FIRE EXTINGUISHER
11151.A0	MOBILE LIFT – NIC – OWNER FURNISHED
12511.A0	HORIZONTAL LOUVER BLINDS
14620.A0	TROLLEY HOIST (SIZE) SEE STRUCTURAL
15000.A0	GAS METER – SEE PLUMBING DRAWINGS
15410.C0	UTILITY SINK
15410.D1	FLOOR SINK
15410.E0	TRENCH DRAIN – SLOPE TO DRAIN
15412.A0	EMERGENCY SHOWER & EYE WASH
15452.A1	DRINKING FOUNTAIN
15486.A1	FUEL FIRED WATER HEATER
15490.C0	WASTE OIL PIT
15490.D0	600 GAL/ WASTE OIL TANK – O.F.C.I.
15491.A0	AIR COMPRESSOR
15491.C0	OVERHEAD HOSE REELS
15611.A1	NATURAL GAS FIRED FURNACE – SEE MECHANICAL
15670.A1	CONDENSER UNIT – SEE MECHANICAL
15820.A0	BACKDRAFT DAMPER – SEE MECHANICAL
15838.A0	EXHAUST FAN – SEE MECHANICAL
15861.A1	MECHANICAL DUCTWORK – SEE MECHANICAL
15887.A1	LOUVER WITH BIRD SCREEN – SEE MECHANICAL
15887.B1	INTAKE GRAVITY HOOD – SEE MECHANICAL
16210.A1	ELETRICAL METER – SEE ELECTRICAL DRAWINGS
16411.A1	EMERGENCY DISCONNECT – SEE ELECTRICAL
16442.A0	ELECTRICAL PANEL – SEE ELECTRICAL DRAWINGS

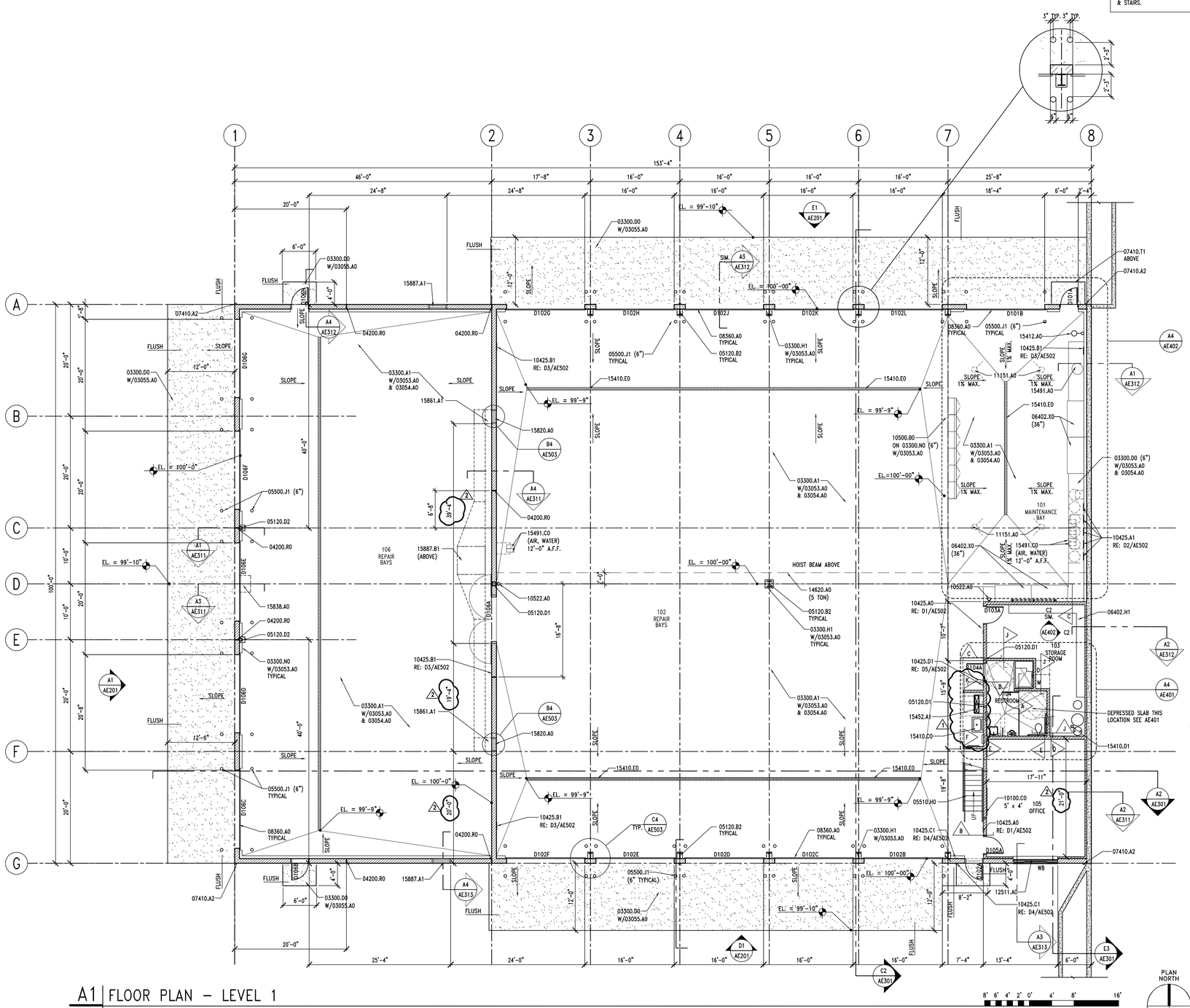

A1 FLOOR PLAN – LEVEL 1

AE101 REF. SCALE: 1/8" = 1'-0"

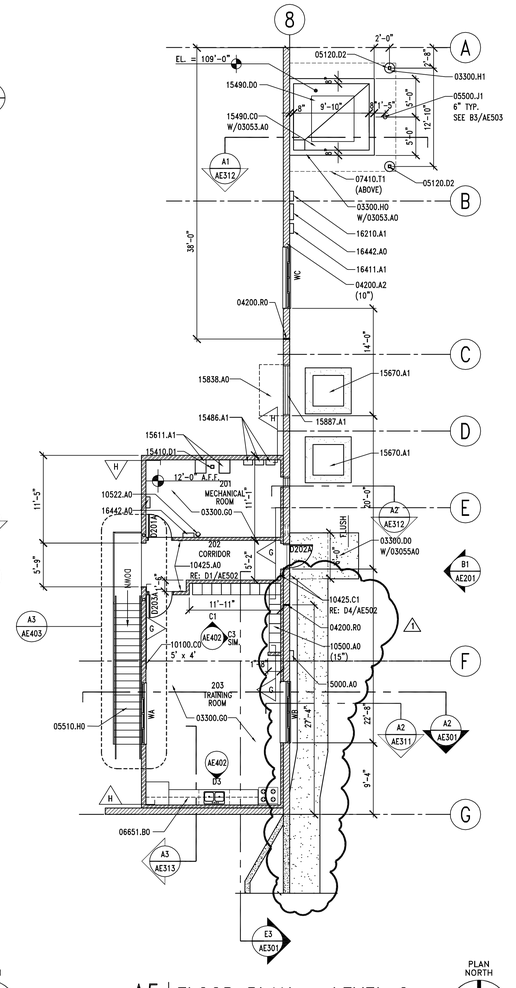

A5 FLOOR PLAN – LEVEL 2

AE101 REF. SCALE: 1/8" = 1'-0"

CLIENT

UDOT CONNECTING COMMUNITIES

STATION #2434
6072 E. EMIGRATION CANYON RD.
PARLEY'S CANYON, UTAH

DESIGNER

ARCHIPLEX GROUP
architecture · planning · design services
255 Crossroad Square
Salt Lake City, UT 84115
P:(801) 961-7070
F:(801) 961-7373

CONSULTANTS

REGISTRATION

STATE OF UTAH
RALPH M. STANISLAW
96-31088-0301
3-4-09
LICENSED ARCHITECT

ISSUE

MARK	DATE	DESCRIPTION
2	3-4-09	Addendum #2
1	2-17-09	Addendum #1
	01-09	Revised Contruction Doc.
	10-08	Construction Documents
	8-20-08	90% Review Submittal

ARCHIPLEX PROJECT NO:	0728.02
DFCM PROJECT NO:	08211900
DRAWN BY:	A. PHILLIPS
CHECKED BY:	R. STANISLAW
SCALE:	1/8" = 1'-0"
DATE:	JANUARY, 2009

KEY PLAN

SHEET TITLE

LEVEL 1 & 2 FLOOR PLAN

AE101

© 2004 ARCHIPLEX GROUP

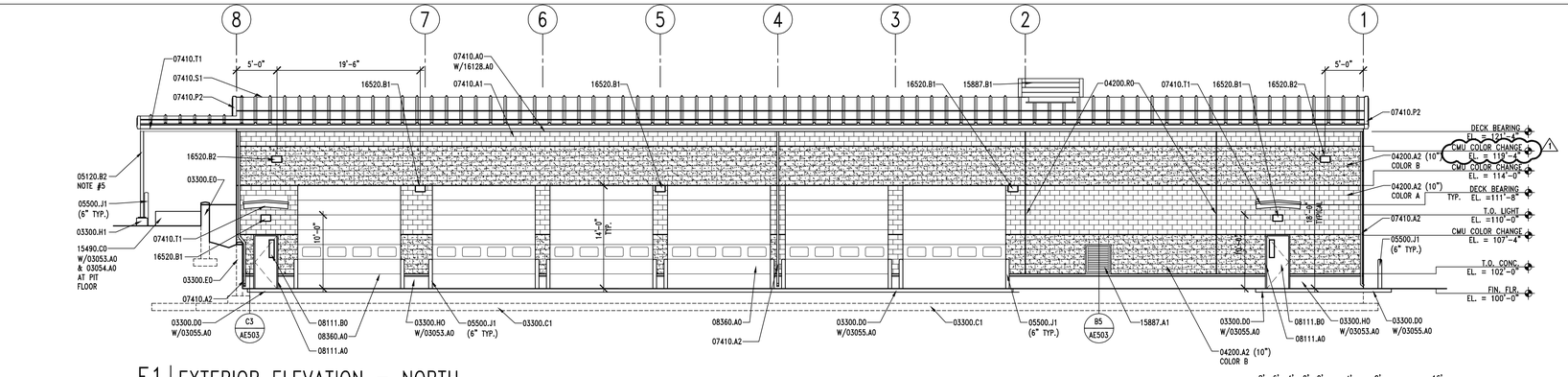

E1 | EXTERIOR ELEVATION – NORTH

AE201 | REF. AE101 | SCALE: 1/8" = 1'-0"

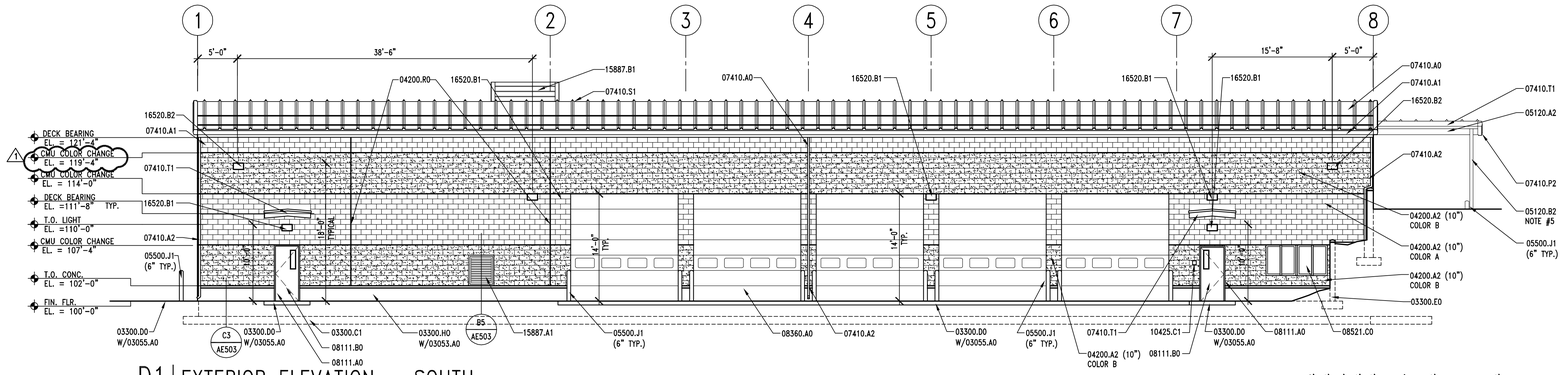

D1 | EXTERIOR ELEVATION – SOUTH

AE201 | REF. AE101 | SCALE: 1/8" = 1'-0"

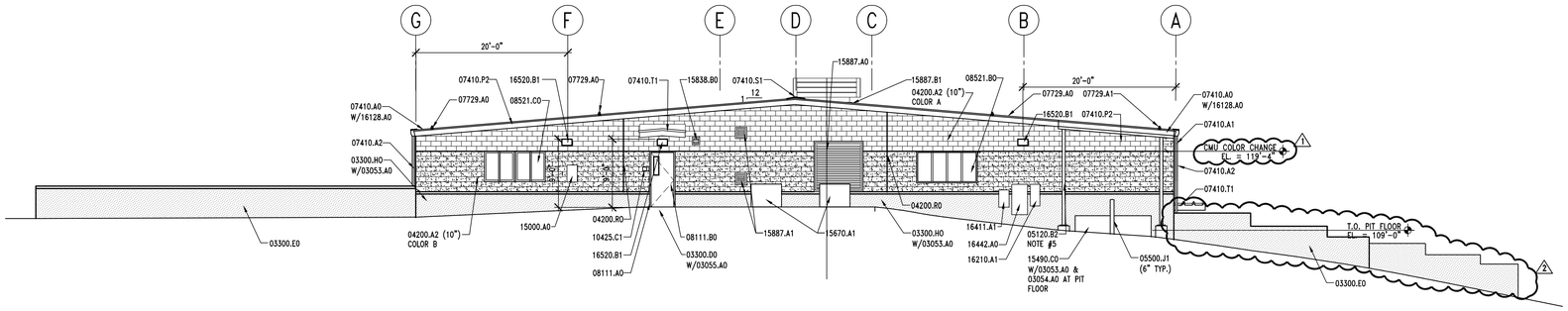

B1 | EXTERIOR ELEVATION – EAST

AE201 | REF. AE101 07729.A0 | SCALE: 1/8" = 1'-0"

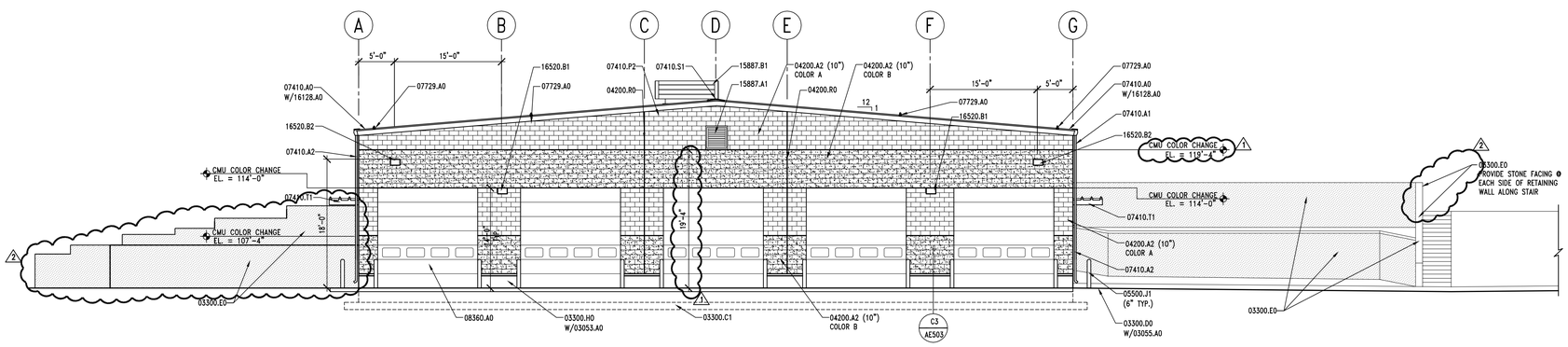

A1 | EXTERIOR ELEVATION – WEST

AE201 | REF. AE101 | SCALE: 1/8" = 1'-0"

EXTERIOR ELEVATION KEYNOTES

03053.A0 CONCRETE WATER PROOFING ADMIXTURE
03054.A0 OLIOPHOBIC TOPICAL SEALER
03055.A0 SALT AND WATER BARRIER
03300.C1 FOOTING – SEE STRUCTURAL
03300.D0 CONCRETE PAD
1 03300.E0 CONCRETE RETAINING WALL WITH RANDOM ASHLAR PATTERN FORMLINER – COORD. WITH CIVIL & STRUCTURAL – SEE SHEET AE202 FOR ADDITIONAL DETAILS
03300.H0 FOUNDATION WALL – SEE STRUCTURAL
03300.H1 CONCRETE PIER – SEE STRUCTURAL

04200.A2 CMU (SIZE)
04200.R0 MASONRY CONTROL JOINT

05120.A2 STEEL BEAM – SEE STRUCTURAL – PRIMED AND PAINTED
05120.B2 STEEL COLUMN – SEE STRUCTURAL – PRIMED & PAINTED
05500.J1 PIPE BOLLARD (DIAMETER) GALVANIZED AND PAINTED

07190.A0 CLEAR WATER RESISTANT COATING
07410.A0 STANDING SEAM METAL ROOF
07410.A1 RAIN GUTTER W/CONTINUOUS HEAT TAPE
07410.A2 DOWNSPOUT W/CONTINUOUS HEAT TAPE
07410.P2 RAKE TRIM
07410.S1 STANDING SEAM METAL ROOF RIDGE
07410.T1 STANDING SEAM METAL CANOPY
07729.A0 STANDING SEAM METAL ROOF 2 PIPE SNOW GUARD SYSTEM

08111.A0 PRESSED METAL FRAME
08111.B0 HOLLOW METAL DOOR
08360.A0 HEAVY DUTY OVERHEAD SECTIONAL DOOR
08521.B0 FIXED VINYL WINDOW
08521.C0 VINYL WINDOW W/SLIDING GLASS PANEL

10425.C1 ACCESSIBLE SIGNAGE

15000.A0 GAS METER – SEE PLUMBING DRAWINGS
15490.C0 WASTE OIL PIT
15670.A1 CONDENSER UNIT – SEE MECHANICAL
15838.A0 EXHAUST FAN – SEE MECHANICAL
15838.B0 VENT
15838.A1 EXHAUST FAN VENT – SEE MECHANICAL
15887.A1 LOUVER WITH BIRD SCREEN – SEE MECHANICAL
15887.B1 INTAKE GRAVITY HOOD – SEE MECHANICAL

16128.A0 LOW VOLTAGE DE-ICING SNOW MELTING SYSTEM
16210.A1 ELECTRICAL METER – SEE ELECTRICAL
16411.A1 EMERGENCY DISCONNECT – SEE ELECTRICAL
16442.A0 ELECTRICAL PANEL
16520.B1 EXTERIOR WALL MOUNTED LIGHTS
16520.B2 EXTERIOR WALL MOUNTED FLOOD LIGHTS

GENERAL NOTES

1. FIELD VERIFY ALL EXISTING CONDITIONS AND THEIR COMPATIBILITY WITH NEW CONSTRUCTION PRIOR TO THE COMMENCEMENT OF WORK. COORDINATE DISCREPANCIES WITH ARCHITECT.

2. DO NOT SCALE DRAWINGS.

3. SEE SHEET AE602 FOR WINDOW TYPES AND DETAILS.

4. SEE STRUCTURAL, MECHANICAL AND ELECTRICAL DRAWINGS FOR MORE INFORMATION.

5. PAINT ALL EXPOSED, EXTERIOR STEEL AT OIL PIT CANOPY – COLOR TO MATCH TRIM.

6. SEE AE101 FOR CONTROL JOINT DIMENSIONS

1 ~~7. CULTURED STONE FACING AT ALL CONCRETE RETAINING WALLS – RANDOM ASHLAR PATTERN TO MATCH HARRISTONE LEDGESTONE PATTERN – HAZLEWOOD COLOR~~

EXTERIOR COLOR SCHEDULE

2 (03300.E0) COLORED CONCRETE RETAINING WALL – INTEGRAL ADMIXTURE COLOR "ADOBE 61078" BY DAVIS COLORS OR EQUAL

1 (04200.A2) SMOOTH CMU: COLOR A – BUEHNER BLOCK "OAK" OR EQUAL
(04200.A2) SPLIT FACE CMU: COLOR B – BUEHNER BLOCK "WHEAT" OR EQUAL

(05500.J1) BOLLARDS: OSHA SAFETY YELLOW

1 (07410.A0) METAL ROOF: COLOR TO MATCH KWAL "CL 2124D" SUFFIELD OR EQUAL.
(07410.A1 & 07410.P2) GUTTERS & RAKE TRIM: COLOR TO MATCH KWAL "CL 2124D" SUFFIELD OR EQUAL.
(07410.A2) DOWNSPOUTS: COLOR TO MATCH KWAL "CL 2124D" SUFFIELD OR EQUAL

(08111.B0) DOORS & FRAMES: KYNAR 500 WHITE
(08521.B0) WINDOW FRAMES: KYNAR 500 WHITE
(15490.C0) WASTE OIL PIT: OSHA SAFETY RED
(15838.A0) EXHAUST FAN: PRE-FINISHED KYNAR 500 WHITE
(15838.A1) EXHAUST FAN VENT: PRE-FINISHED KYNAR 500 WHITE
(15887.A1) LOUVERS: PRE-FINISHED KYNAR 500 WHITE
(16520.B1 & 16520.B2) EXTERIOR LIGHT FIXTURES: WHITE

RANDOM ASHLAR PATTERN

CLIENT

UDOT CONNECTING COMMUNITIES

STATION #2434
6072 E. EMIGRATION CANYON RD.
PARLEY'S CANYON, UTAH

DESIGNER

ARCHIPLEX GROUP
architecture · planning · design services
255 Crossroad Square
Salt Lake City, UT 84115
P:(801) 961-7070
F:(801) 961-7373

CONSULTANTS

REGISTRATION

STATE OF UTAH
RALPH M. STANISLAW
05-0008-0001
3-4-09
LICENSED ARCHITECT

ISSUE

MARK	DATE	DESCRIPTION
2	3-4-09	Addendum #2
1	2-17-09	Addendum #1
	01-09	Revised Contruction Doc.
	10-08	Construction Documents
	8-20-08	90% Review Submittal

ARCHIPLEX PROJECT NO:	0728.02
DFCM PROJECT NO:	08211900
DRAWN BY:	A. PHILLIPS
CHECKED BY:	R. STANISLAW
SCALE:	1/8" = 1'-0"
DATE:	JANUARY, 2009

KEY PLAN

SHEET TITLE

EXTERIOR ELEVATIONS

AE201

© 2004 ARCHIPLEX GROUP

KEYNOTES

03121.A1 4" X 10" FORM LINER – ASHLAR PATTERN 3/4" MAX DEPTH
03300.C1 FOOTING – SEE STRUCTURAL
03300.E1 COLORED CONCRETE RETAINING WALL
03300.P8 CHAMFER EDGE (SIZE)
03300.P9 3/4" X 3/4" CHAMFER STRIP

05521.B3 1 1/2" O.D. PIPE HANDRAIL – GALVANIZED

GENERAL NOTES

1. FIELD VERIFY ALL EXISTING CONDITIONS AND THEIR COMPATIBILITY WITH NEW CONSTRUCTION PRIOR TO THE COMMENCEMENT OF WORK. COORDINATE DISCREPANCIES WITH ARCHITECT.

2. DO NOT SCALE DRAWINGS.

3. SEE SHEET AE201 FOR CONCRETE RETAINING WALL COLORS

4. SEE STRUCTURAL AND CIVIL DRAWINGS FOR MORE INFORMATION.

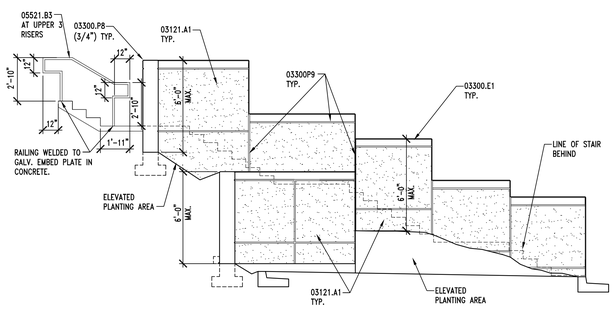

D1 RETAINING WALL ELEVATION

AE202 REF. AE101 SCALE: 1/8" = 1'-0"

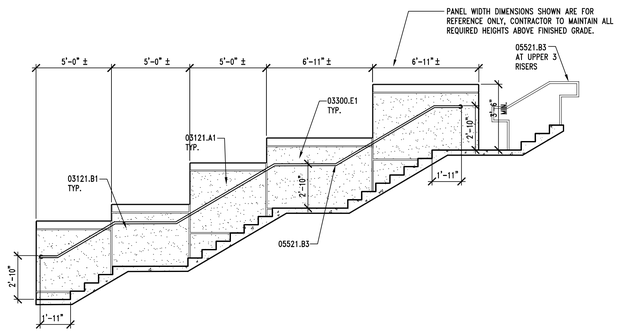

D3 GUARD RAIL ELEVATION

AE202 REF. AE101 SCALE: 1/8" = 1'-0"

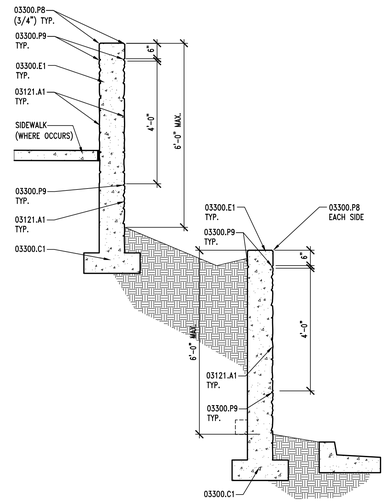

D4 RETAINING WALL SECTION

AE202 REF. AE101 SCALE: 1/2" = 1'-0"

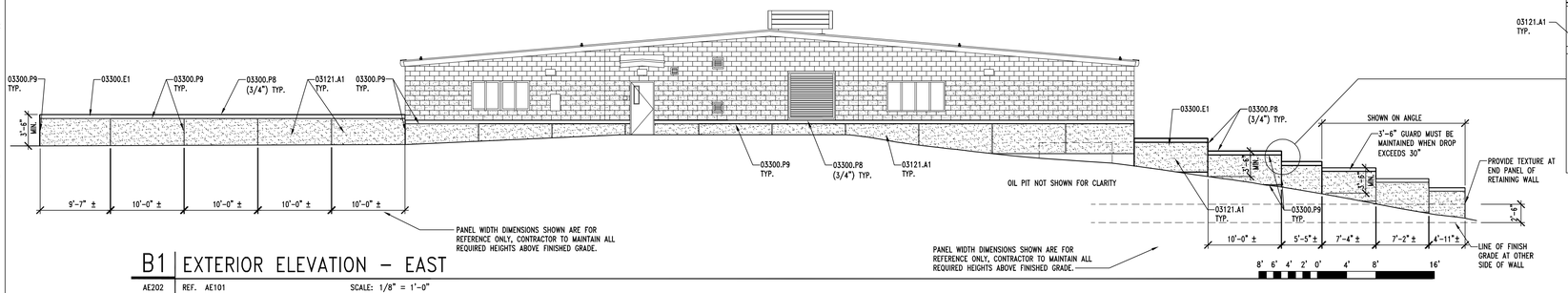

B1 EXTERIOR ELEVATION – EAST

AE202 REF. AE101 SCALE: 1/8" = 1'-0"

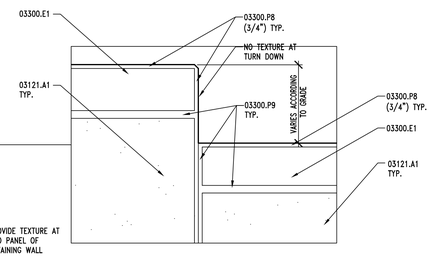

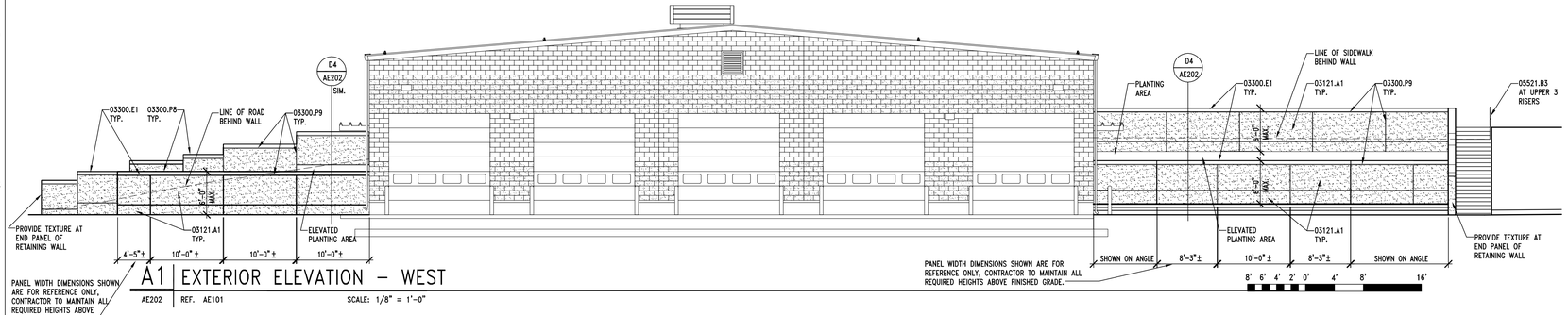

A1 EXTERIOR ELEVATION – WEST

AE202 REF. AE101 SCALE: 1/8" = 1'-0"

CLIENT

UDOT CONNECTING COMMUNITIES

STATION #2434
6072 E. EMIGRATION CANYON RD.
PARLEY'S CANYON, UTAH

DESIGNER

ARCHIPLEX GROUP
architecture · planning · design services
255 Crossroad Square
Salt Lake City, UT 84115
P:(801) 961-7070
F:(801) 961-7373

CONSULTANTS

REGISTRATION

STATE OF UTAH
RALPH M. STANISLAW
95-310288-0301
3-4-09
LICENSED ARCHITECT

ISSUE		
2	3-4-09	Addendum #2
1	2-17-09	Addendum #1
	01-09	Revised Contruction Doc.
	10-08	Construction Documents
	8-20-08	90% Review Submittal
MARK	DATE	DESCRIPTION

ARCHIPLEX PROJECT NO:	0728.02
DFCM PROJECT NO:	08211900
DRAWN BY:	A. PHILLIPS
CHECKED BY:	R. STANISLAW
SCALE:	1/8" = 1'-0"
DATE:	JANUARY, 2009

KEY PLAN

SHEET TITLE

2

RETAINING WALL ELEVATIONS, AND SECTIONS

AE202

© 2004 ARCHIPLEX GROUP

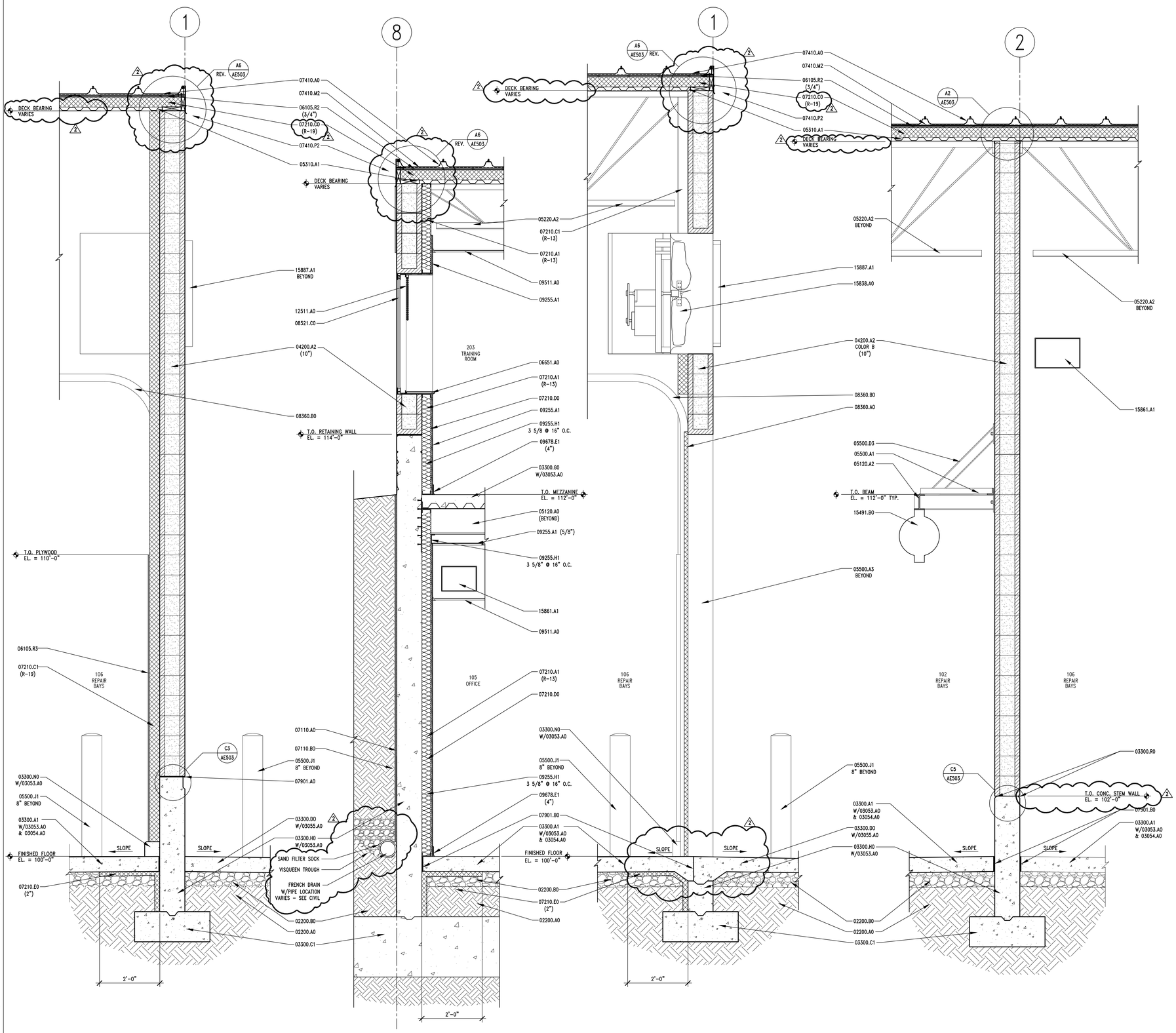

A1 | WALL SECTION
AE311 | REF. AE101 | SCALE: 3/4" = 1'-0"

A2 | WALL SECTION
AE311 | REF. AE101 | SCALE: 3/4" = 1'-0"

A3 | WALL SECTION
AE311 | REF. AE101 | SCALE: 3/4" = 1'-0"

A4 | WALL SECTION
AE311 | REF. AE101 | SCALE: 3/4" = 1'-0"

KEYNOTES

02200.A0	COMPACTED FILL
02200.B0	GRAVEL BASE
03053.A0	CONCRETE WATER PROOFING ADMIXTURE
03054.A0	OLIOPHOBIC TOPICAL SEALER
03055.A0	SALT AND WATER BARRIER
03300.A1	CONCRETE - SLAB ON GRADE - SEE STRUCTURAL
03300.C1	FOOTING - SEE STRUCTURAL
03300.D0	CONCRETE PAD
03300.G0	CONCRETE OVER METAL DECK - SEE STRUCTURAL
03300.H0	FOUNDATION WALL - SEE STRUCTURAL
03300.H1	CONCRETE PIER - SEE STRUCTURAL
03300.N0	CONCRETE CURB
03300.P6	CHAMFER JOINT
04200.A2	CMU (SIZE)
05120.A0	STEEL BEAM - SEE STRUCTURAL
05120.A2	STEEL BEAM - SEE STRUCTURAL - PRIMED AND PAINTED
05220.A2	STEEL JOISTS - SEE STRUCTURAL - PRIMED AND PAINTED
05310.A1	METAL DECK - SEE STRUCTURAL
05500.A1	ANGLE - SEE STRUCTURAL
05500.A3	STEEL ANGLE (SIZE) - GALVANIZED - PRIMED AND PAINTED
05500.D3	CHANNEL - SEE STRUCTURAL - PRIMED AND PAINTED
05500.J1	PIPE BOLLARD (DIAMETER) GALV. AND PAINTED
06105.I2	BLOCKING AS REQUIRED
06105.R2	SHEATHING - PLYWOOD (THICKNESS)
06105.R3	PLYWOOD PANEL (THICKNESS) - MECHANICALY FASTENED THROUGH INSULATION INTO CMU WALL
06651.A0	1/2" WHITE SOLID SURFACE WINDOW SILL
07210.A1	BATT INSULATION (R-VALUE)
2 ~~07210.B1~~	~~RIGID INSULATION (R-VALUE)~~
07210.C0	RIGID INSULATION FOIL FACED W/VAPOR BARRIER
07210.C1	RIGID INSULATION (CONTINUOUSLY ADHERED TO CMU) W/FOIL FACED VAPOR BARRIER TOWARDS INTERIOR (R-VALUE)
07210.D0	VAPOR BARRIER
07210.E0	FOUNDATION WALL INSULATION (THICKNESS)
07410.A0	STANDING SEAM METAL ROOF
07410.M2	ICE & WATER SHIELD
07410.P2	RAKE TRIM
07901.A0	CONT. SEALANT
07901.B0	ASPHALT SATURATED FIBERBOARD
08360.A0	HEAVY DUTY OVERHEAD SECTIONAL DOOR
08360.B0	3" HEAVY DUTY OVERHEAD SECTIONAL DOOR TRACK
08521.C0	VINYL WINDOW WITH SLIDING GLASS PANEL
09255.A1	GYPSUM BOARD (THICKNESS)
09255.H1	METAL STUD (SIZE, SPACING)
09511.A0	LAY-IN ACOUSTICAL CEILING SYSTEM
09678.E1	RUBBER BASE (SIZE)
12511.A0	HORIZONTAL LOUVER BLINDS
15491.B0	OVERHEAD LUBE REEL
15838.A0	EXHAUST FAN - SEE MECHANICAL
15861.A1	MECHANICAL DUCTWORK SEE MECHANICAL
15887.A1	LOUVER W/ BIRD SCREEN - SEE MECHANICAL

GENERAL NOTES

1. FIELD VERIFY ALL EXISTING CONDITIONS AND THEIR COMPATIBILITY WITH NEW CONSTRUCTION PRIOR TO THE COMMENCEMENT OF WORK. COORDINATE DISCREPANCIES WITH ARCHITECT.

2. DO NOT SCALE DRAWINGS.

3. SEE CIVIL, STRUCTURAL, MECHANICAL AND ELECTRICAL DRAWINGS FOR MORE INFORMATION.

4. TWO BOLLARDS REQUIRED PER SECTIONAL DOOR JAMB. ALIGN WITH DOOR JAMB. SEE DETAILS A3 & B3/AE503.

CLIENT

UDOT CONNECTING COMMUNITIES

STATION #2434
6072 E. EMIGRATION CANYON RD.
PARLEY'S CANYON, UTAH

DESIGNER

ARCHIPLEX GROUP
architecture · planning · design services
255 Crossroad Square
Salt Lake City, UT 84115
P:(801) 961-7070
F:(801) 961-7373

CONSULTANTS

REGISTRATION

STATE OF UTAH
RALPH M. STANISLAW
05-3028B-0201
3-4-09
LICENSED ARCHITECT

ISSUE

MARK	DATE	DESCRIPTION
2	3-4-09	Addendum #2
1	2-17-09	Addendum #1
	01-09	Revised Contruction Doc.
	10-08	Construction Documents
	8-20-08	90% Review Submittal

ARCHIPLEX PROJECT NO:	0728.02
DFCM PROJECT NO:	08211900
DRAWN BY:	B. BEECHER
CHECKED BY:	K. PHILLIPS
SCALE:	3/4" = 1'-0"
DATE:	JANUARY, 2009

KEY PLAN

SHEET TITLE

WALL SECTIONS

AE311

© 2004 ARCHIPLEX GROUP

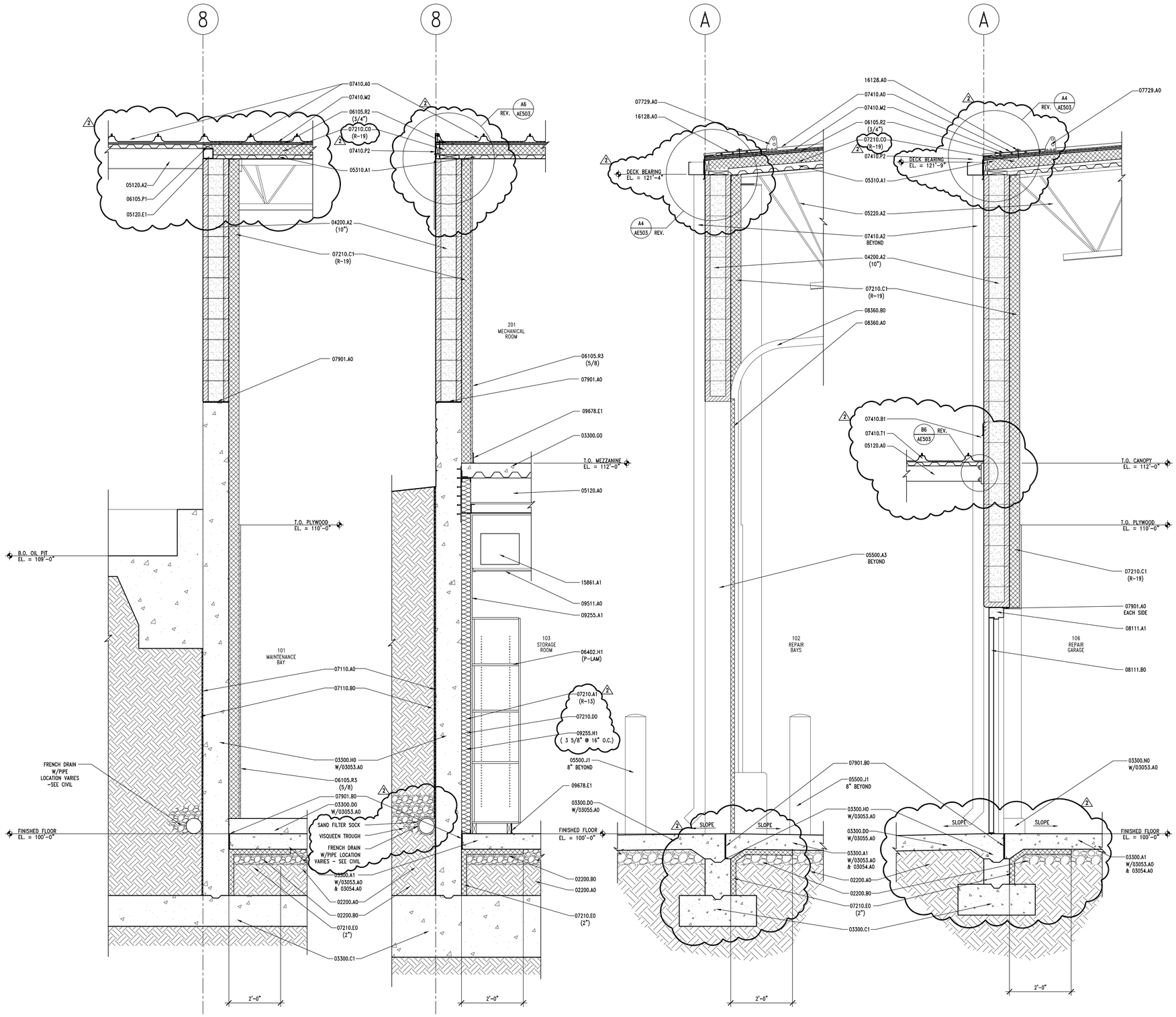

A1 | WALL SECTION

AE312 | REF. AE101 | SCALE: 3/4" = 1'-0"

A2 | WALL SECTION

AE312 | REF. AE101 | SCALE: 3/4" = 1'-0"

A3 | WALL SECTION

AE312 | REF. AE101 | SCALE: 3/4" = 1'-0"

A4 | WALL SECTION

AE312 | REF. AE101 | SCALE: 3/4" = 1'-0"

KEYNOTES

02200.A0 COMPACTED FILL
02200.B0 GRAVEL BASE

03053.A0 CONCRETE WATER PROOFING ADMIXTURE
03054.A0 GLIOPHOBIC TOPICAL SEALER
03055.A0 SALT AND WATER BARRIER
03300.A1 CONCRETE SLAB-ON-GRADE - SEE STRUCTURAL
03300.C1 FOOTING - SEE STRUCTURAL
03300.D0 CONCRETE PAD
03300.E0 CONCRETE RETAINING WALL - SEE STRUCTURAL
03300.G0 CONCRETE OVER METAL DECK - SEE STRUCTURAL
03300.H0 FOUNDATION WALL - SEE STRUCTURAL
03300.N0 CONCRETE CURB

04200.A2 CMU (SIZE)

05120.A0 STEEL BEAM - SEE STRUCTURAL

05120.A2 STEEL BEAM - SEE STRUCTURAL - PRIMED AND PAINTED
05120.E1 TUBE STEEL - PRIMED AND PAINTED
05220.A2 STEEL JOISTS - SEE STRUCTURAL - PRIMED AND PAINTED
05310.A1 METAL DECK - SEE STRUCTURAL
05500.A3 STEEL ANGLE (SIZE)
05500.J1 PIPE BOLLARD (DIAMETER) - GALVANIZED & PAINTED

06105.P1 2X4
06105.R2 SHEATHING - PLYWOOD (THICKNESS)
06105.R3 PLYWOOD PANEL (THICKNESS)
06402.H1 ADJUSTABALE SHELVES (FINISH)

07110.A0 SELF ADHESIVE MEMBRANE WATERPROOFING
07110.B0 PRE-FABRICATED DRAINAGE COMPOSITE MATERIAL

07210.A1 BATT INSULATION (R-VALUE)
~~07210.B1 RIGID INSULATION (R-VALUE)~~
07210.C0 RIGID INSULATION FOIL FACED W/VAPOR BARRIER
07210.C1 RIGID INSULATION (CONTINOUSLY ADHERED TO CMU) W/FOIL FACED VAPOR BARRIER TOWARDS INTERIOR (R-VALUE)
07210.D0 VAPOR BARRIER
07210.E0 FOUNDATION WALL INSULATION (THICKNESS)
07410.A0 STANDING SEAM METAL ROOF
07410.A2 DOWNSPOUT W/CONTINUOUS HEAT TAPE
07410.B1 METAL REGLET
07410.M2 ICE & WATER SHIELD
07410.P2 RAKE TRIM
07410.T1 STANDING SEAM METAL ROOF CANOPY
07729.A0 STANDING SEAM METAL ROOF 2 PIPE SNOWGUARD SYSTEM
07901.A0 CONT. SEALANT
07901.B0 ASPHALT SATURATED FIBERBOARD

08111.A1 GROUT-FILLED PRESSED METAL FRAME
08111.B0 HOLLOW METAL DOOR
08360.A0 HEAVY DUTY OVERHEAD SECTIONAL DOOR
08360.B0 3" HEAVY DUTY OVERHEAD SECTIONAL DOOR TRACK

09255.A1 GYPSUM BOARD (THICKNESS)
09255.H1 METAL STUDS (SIZE, SPACING)
09511.A0 LAY-IN ACOUSTICAL CEILING SYSTEM
09678.E1 RUBBER BASE (SIZE)

15861.A1 MECHANICAL DUCTWORK - SEE MECHANICAL

16128.A0 LOW VOLTAGE DE-ICING SNOW MELTING SYSTEM

GENERAL NOTES

1. FIELD VERIFY ALL EXISTING CONDITIONS AND THEIR COMPATIBILITY WITH NEW CONSTRUCTION PRIOR TO THE COMMENCEMENT OF WORK. COORDINATE DISCREPANCIES WITH ARCHITECT.

2. DO NOT SCALE DRAWINGS.

3. SEE CIVIL, STRUCTURAL, MECHANICAL AND ELECTRICAL DRAWINGS FOR MORE INFORMATION.

CLIENT

UDOT CONNECTING COMMUNITIES

STATION #2434
6072 E. EMIGRATION CANYON RD.
PARLEY'S CANYON, UTAH

DESIGNER

ARCHIPLEX GROUP
architecture · planning · design services
255 Crossroad Square
Salt Lake City, UT 84115
P:(801) 961-7070
F:(801) 961-7373

CONSULTANTS

REGISTRATION

STATE OF UTAH
RALPH M. STANISLAW
05-3108B-0301
3-4-09
LICENSED ARCHITECT

MARK	DATE	DESCRIPTION
2	3-4-09	Addendum #2
1	2-17-09	Addendum #1
	01-09	Revised Contruction Doc.
	10-08	Construction Documents
	8-20-08	90% Review Submittal

ISSUE

ARCHIPLEX PROJECT NO:	0728.02
DFCM PROJECT NO:	08211900
DRAWN BY:	A. PHILLIPS
CHECKED BY:	K. PHILLIPS
SCALE:	3/4" = 1'-0"
DATE:	JANUARY, 2009

KEY PLAN

SHEET TITLE

WALL SECTIONS

AE312

© 2004 ARCHIPLEX GROUP

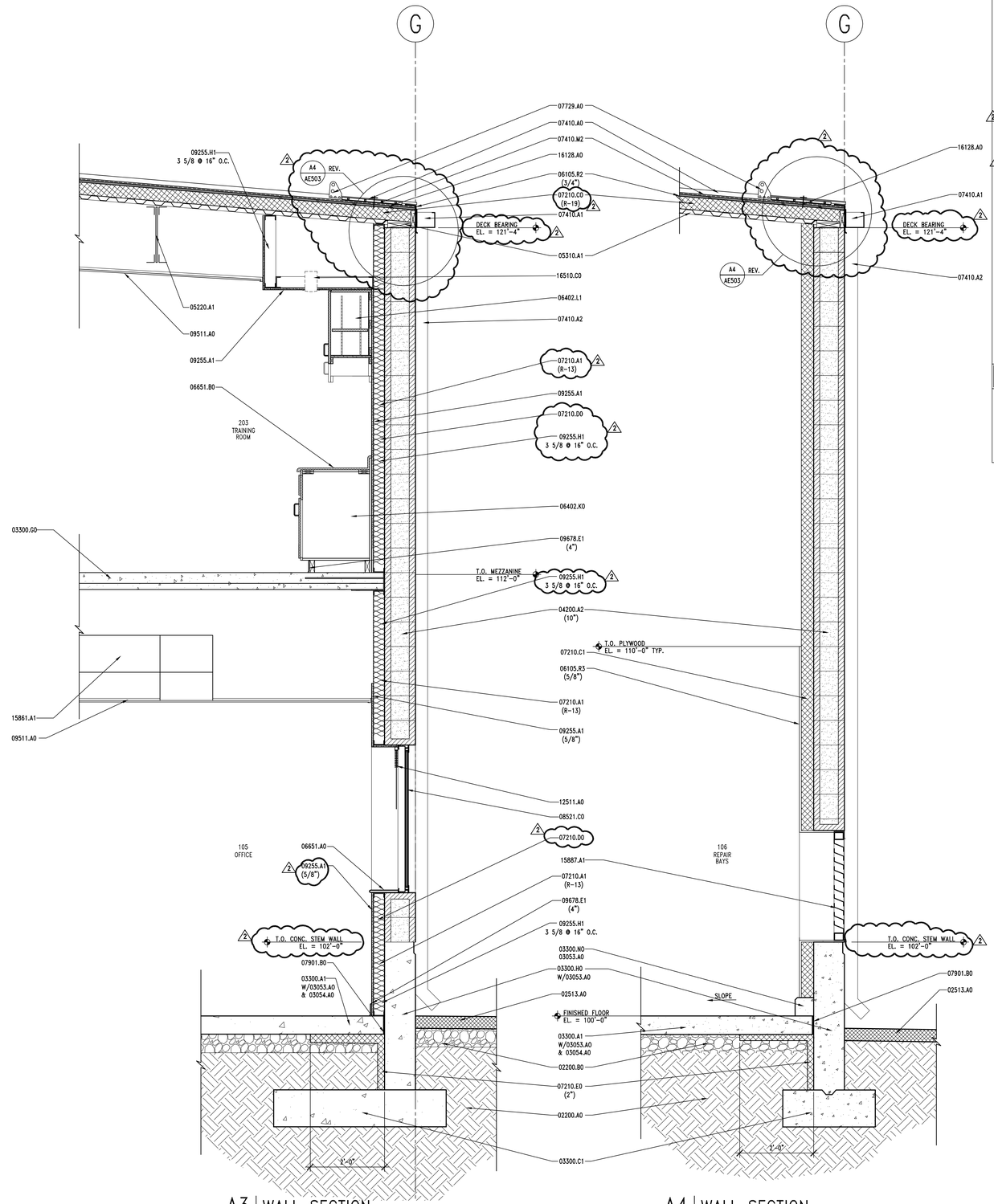

A3 WALL SECTION

AE311 | REF. AE101 | SCALE: 3/4" = 1'-0"

12" 8" 4" 0 6" 1' 2' 3'

A4 WALL SECTION

AE311 | REF. AE101 | SCALE: 3/4" = 1'-0"

12" 8" 4" 0 6" 1' 2' 3'

KEYNOTES

02200.A0	COMPACTED FILL
02200.B0	GRAVEL BASE
02513.A0	ASPHALT CONCRETE PAVING
03053.A0	CONCRETE WATER PROOFING ADMIXTURE
03054.A0	OLIOPHOBIC TOPICAL SEALER
03055.A0	SALT AND WATER BARRIER
03300.A1	CONCRETE – SLAB ON GRADE
03300.C1	FOOTING – SEE STRUCTURAL
03300.G0	CONCRETE OVER METAL DECK – SEE STRUCTURAL
03300.H0	FOUNDATION WALL – SEE STRUCTURAL
03300.N0	CONCRETE CURB
04200.A2	CMU (SIZE)
05220.A1	STEEL JOISTS – SEE STRUCTURAL
05310.A1	METAL DECK – SEE STRUCTURAL
06105.R2	SHEATHING – PLYWOOD (THICKNESS)
06105.R3	PLYWOOD PANEL (THICKNESS)
06402.L1	WALL UNIT (FINISH)
06402.K0	BASE UNIT (FINISH)
06651.A0	1/2" WHITE SOLID SURFACE WINDOW SILL
06651.B0	SOLID SURFACE COUNTER TOP
07210.A1	BATT INSULATION (R-VALUE)
~~07210.B1~~	~~RIGID INSULATION (R-VALUE)~~
07210.C0	RIGID INSULATION FOIL FACED W/VAPOR BARRIER
07210.C1	RIGID INSULATION (CONTINOUSLY ADHERED TO CMU) W/FOIL FACED VAPOR BARRIER TOWARDS INTERIOR (R-VALUE)
07210.D0	VAPOR BARRIER
07210.E0	FOUNDATION WALL INSULATION (THICKNESS)
07410.A0	STANDING SEAM METAL ROOF
07410.A1	RAIN GUTTER W/CONTINUOUS HEAT TAPE
07410.A2	DOWNSPOUT W/CONTINUOUS HEAT TAPE
07410.M2	ICE & WATER SHIELD
07729.A0	STANDING SEAM METAL ROOF 2 PIPE SNOWGUARD SYSTEM
07901.B0	ASPHALT SATURATED FIBERBOARD
08521.C0	VINYL WINDOW WITH SLIDING GLASS PANEL
09255.A1	GYPSUM BOARD (THICKNESS)
09255.H1	METAL STUD (SIZE, SPACING)
09511.A0	LAY-IN ACOUSTICAL CEILING SYSTEM
09678.E1	RUBBER BASE (SIZE)
12511.A0	HORIZONTAL LOUVER BLINDS
15861.A1	MECHANICAL DUCTWORK SEE MECHANICAL
15887.A1	LOUVER W/ BIRD SCREEN – SEE MECHANICAL
16128.A0	LOW VOLTAGE DE-ICING SNOW MELTING SYSTEM
16510.C0	INTERIOR SOFFIT CAN LIGHTS – SEE ELECTRICAL

GENERAL NOTES

1. FIELD VERIFY ALL EXISTING CONDITIONS AND THEIR COMPATIBILITY WITH NEW CONSTRUCTION PRIOR TO THE COMMENCEMENT OF WORK. COORDINATE DISCREPANCIES WITH ARCHITECT.

2. DO NOT SCALE DRAWINGS.

3. SEE CIVIL, STRUCTURAL, MECHANICAL AND ELECTRICAL DRAWINGS FOR MORE INFORMATION.

CLIENT

UDOT CONNECTING COMMUNITIES

STATION #2434
6072 E. EMIGRATION CANYON RD.
PARLEY'S CANYON, UTAH

DESIGNER

ARCHIPLEX GROUP
architecture · planning · design services
255 Crossroad Square
Salt Lake City, UT 84115
P:(801) 961-7070
F:(801) 961-7373

CONSULTANTS

REGISTRATION

STATE OF UTAH
RALPH M. STANISLAW
05-0508-0001
3-4-09
LICENSED ARCHITECT

ISSUE

MARK	DATE	DESCRIPTION
2	3-4-09	Addendum #2
1	2-17-09	Addendum #1
	01-09	Revised Contruction Doc.
	10-08	Construction Documents
	8-20-08	90% Review Submittal

ARCHIPLEX PROJECT NO:	0728.02
DFCM PROJECT NO:	08211900
DRAWN BY:	A. PHILLIPS
CHECKED BY:	R. STANISLAW
SCALE:	1/8" = 1'-0"
DATE:	JANUARY, 2009

KEY PLAN

SHEET TITLE

WALL SECTIONS

AE313

© 2004 ARCHIPLEX GROUP

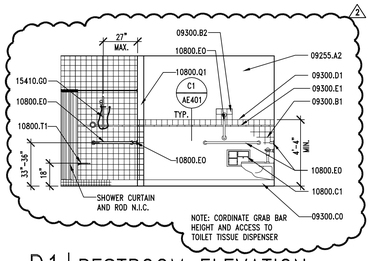

D1 RESTROOM ELEVATION

AE401 REF. AE401 SCALE: 1/4" = 1'-0"

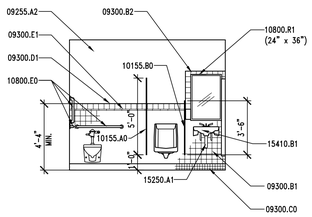

D2 RESTROOM ELEVATION

AE401 REF. AE401 SCALE: 1/4" = 1'-0"

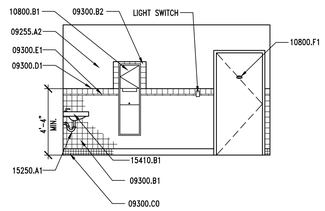

D3 RESTROOM ELEVATION

AE401 REF. AE401 SCALE: 1/4" = 1'-0"

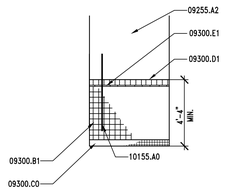

D4 RESTROOM ELEVATION

AE401 REF. AE401 SCALE: 1/4" = 1'-0"

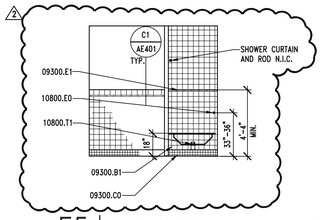

E5 RESTROOM ELEVATION

AE401 REF. AE401 SCALE: 1/4" = 1'-0"

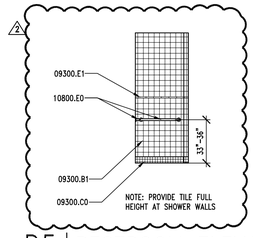

D5 RESTROOM ELEVATION

AE401 REF. AE401 SCALE: 1/4" = 1'-0"

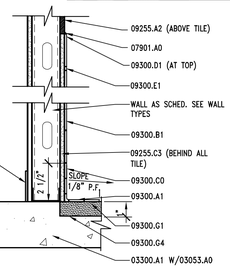

C1 RECESSED SLAB DETAIL

AE401 REF. AE401 SCALE: 3" = 1'-0"

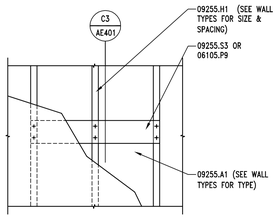

C2 MOUNTING PLATE ELEV.

AE401 REF. AE401 SCALE: 3/4" = 1'-0"

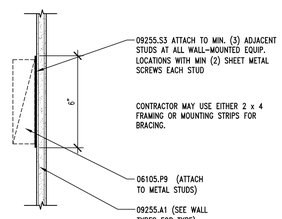

C3 MOUNTING PLATE SECTION

AE401 REF. AE401 SCALE: 3" = 1'-0"

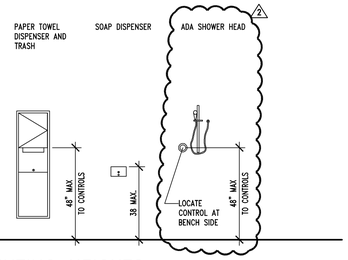

C4 MOUNTING HEIGHTS

AE401 REF. AE401 SCALE: 3/8" = 1'-0"

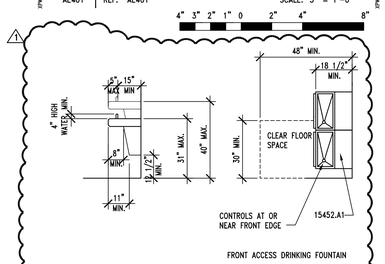

B2 ACCESSIBLE DRINKING FOUNTAIN DETAIL

AE401 REF. AE401 SCALE: 3/8" = 1'-0"

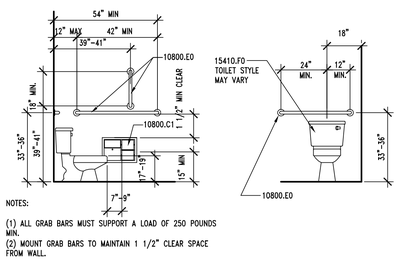

B3 ACCESSIBLE TOILET DETAIL

AE404 REF. AE401 SCALE: 3/8" = 1'-0"

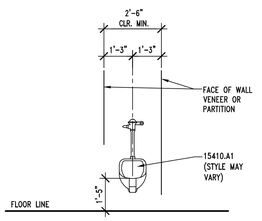

A1 ACCESSIBLE URINAL DETAIL

AE401 REF. AE401 SCALE: 3/8" = 1'-0"

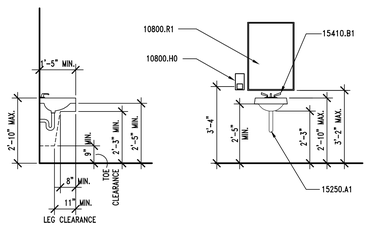

A2 ACCESSIBLE SINK DETAIL

AE401 REF. AE401 SCALE: 3/8" = 1'-0"

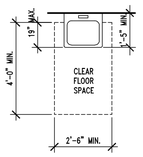

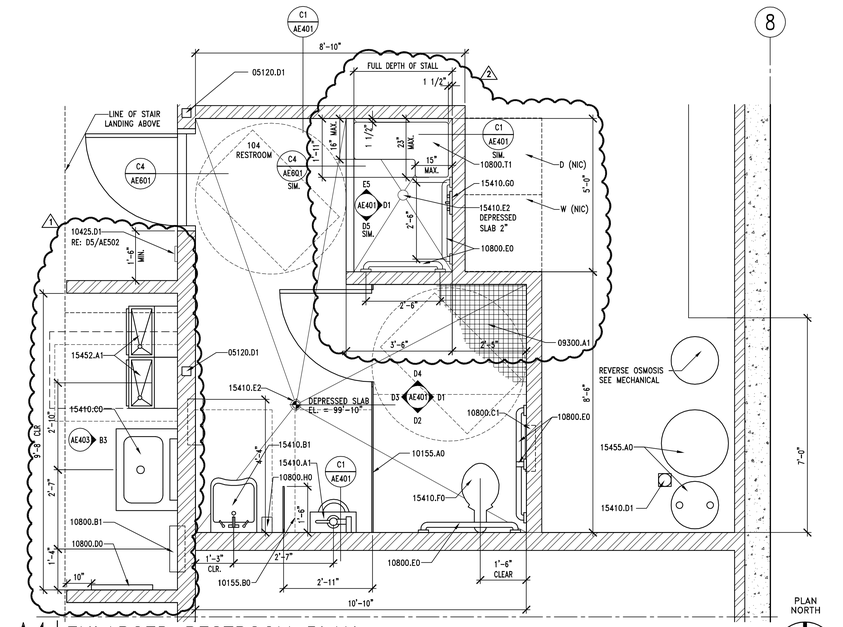

A4 ENLARGED RESTROOM PLAN

AE401 REF. AE101 SCALE: 1/2" = 1'-0'

KEYNOTES

03053.A0	CONCRETE WATER PROOFING ADMIXTURE
03300.A1	CONCRETE SLAB-ON-GRADE - SEE STRUCTURAL
05120.D1	TUBE STEEL COLUMN - SEE STRUCTURAL
06105.P9	2 x FRAMING, FIRE TREATED
07901.A0	CONTINUOUS SEALANT
09255.A1	GYPSUM BOARD (THICKNESS)
09255.A2	WATER RESISTANT GYPSUM BOARD (THICKNESS)
09255.C3	CEMENT BOARD (THICKNESS)
09255.H1	METAL STUDS (SIZE, SPACING)
09255.S3	18 GA. METAL MOUNTING STRIPS
09300.A1	FLOOR TILE - SEE FINISH SCHEDULE
09300.B1	WALL TILE - SEE FINISH SCHEDULE
09300.B2	PROVIDE TILE FRAME AROUND FIXTURE
09300.C0	TILE BASE - SEE FINISH SCHEDULE
09300.D1	BULLNOSE TILE - SEE FINISH SCHEDULE
09300.E1	1/2" x 6" TILE TRIM PIECE - SEE FINISH SCHEDULE
09300.G1	MORTAR BED
09300.G4	WATERPROOF MEMBRANE
10155.A0	TOILET STALL PARTITION
10155.B0	URINAL STALL PARTITION
10425.D1	ACCESSIBLE/UNISEX RESTROOM SIGNAGE
10800.B1	SEMI-RECESSED PAPER TOWEL DISPENSER & WASTE RECEPTACLE
10800.C1	RECESSED TOILET TISSUE DISPENSER/SAN. NAP. DISPOSAL
10800.D0	MOP RACK
10800.E0	GRAB BAR
10800.F1	DOUBLE PRONG ROBE HOOK
10800.H0	SOAP DISPENSER
10800.Q1	ADA COMPLIANT SHOWER HEAD
10800.R1	FRAMED MIRROR (SIZE)
10800.T1	FOLDING SHOWER SHEET 2
15250.A1	PIPE INSULATION AT ALL EXPOSED PIPE
15410.A1	URINAL ACCESSIBLE
15410.B1	SINK AND FAUCET WITH ADA LEVER HANDLES
15410.C0	UTILITY SINK
15410.D1	FLOOR SINK
15410.E2	FLOOR DRAIN
15410.F0	TOILET
15410.G0	ADA ACCESSIBLE SHOWER HEAD - SEE MECHANICAL
15452.A1	DRINKING FOUNTAIN
15455.A0	WATER SOFTNER SYSTEM

GENERAL NOTES

1. FIELD VERIFY ALL EXISTING CONDITIONS AND THEIR COMPATIBILITY WITH NEW CONSTRUCTION PRIOR TO THE COMMENCEMENT OF WORK. COORDINATE DISCREPANCIES WITH ARCHITECT.

2. DO NOT SCALE DRAWINGS.

3. SEE CIVIL, STRUCTURAL, MECHANICAL AND ELECTRICAL DRAWINGS FOR MORE INFORMATION.

4. PROVIDE BACKING BEHIND ALL SURFACE MOUNTED EQUIPMENT AND/OR FIXTURES PER DETAIL C2/AE401

5. SEE C4/AE401 FOR TYPICAL FIXTURE MOUNTING HEIGHTS.

6. SEE DETAILS A1, A2, B1 & B2/AE401 FOR ADA TYPICAL DETAILS

CLIENT

UDOT CONNECTING COMMUNITIES

STATION #2434
6072 E. EMIGRATION CANYON RD.
PARLEY'S CANYON, UTAH

DESIGNER

ARCHIPLEX GROUP
architecture · planning · design services
255 Crossroad Square
Salt Lake City, UT 84115
P:(801) 961-7070
F:(801) 961-7373

CONSULTANTS

REGISTRATION

STATE OF UTAH
RALPH M. STANISLAW
05-310518-2001
3-4-09
LICENSED ARCHITECT

ISSUE

MARK	DATE	DESCRIPTION
2	3-4-09	Addendum #2
1	2-17-09	Addendum #1
	01-09	Revised Contruction Doc.
	10-08	Construction Documents
	8-20-08	90% Review Submittal

ARCHIPLEX PROJECT NO:	0728.02
DFCM PROJECT NO:	08211900
DRAWN BY:	A. PHILLIPS
CHECKED BY:	R. STANISLAW
SCALE:	AS SHOWN
DATE:	JANUARY, 2009

KEY PLAN

SHEET TITLE

ENLARGED RESTROOM FLOOR PLAN, INTERIOR ELEVATIONS AND DETAILS

AE401

© 2004 ARCHIPLEX GROUP

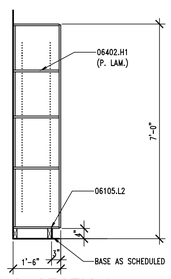

D1 | SHELVING SECTION

AE402 | REF. AE402 | SCALE: 1/2" = 1'-0"

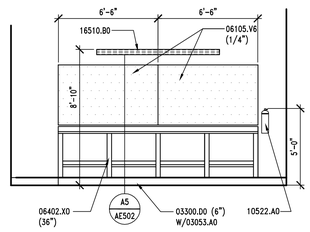

D2 | INTERIOR ELEVATION

AE402 | REF. AE101 | SCALE: 1/4" = 1' -0"

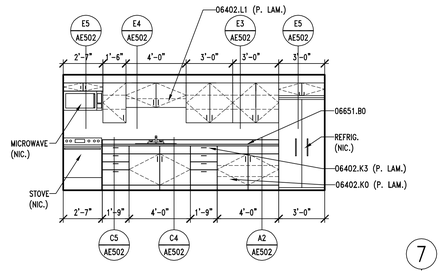

D3 | INTERIOR ELEVATION

AE402 | REF. AE101 | SCALE: 1/4" = 1' -0"

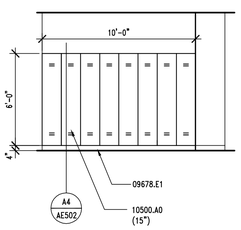

C1 | LOCKER ELEVATION

AE402 | REF. AE101 & AE401 | SCALE: 1/4" = 1'-0"

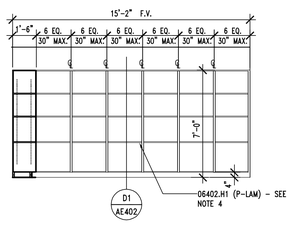

C2 | TYP. SHELVING ELEVATION

AE402 | REF. AE101 | SCALE: 1/4" = 1'-0"

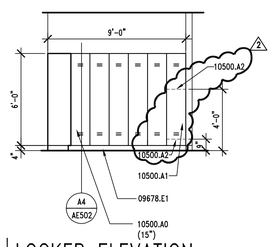

C3 | LOCKER ELEVATION

AE402 | REF. AE101 & AE401 | SCALE: 1/4" = 1'-0"

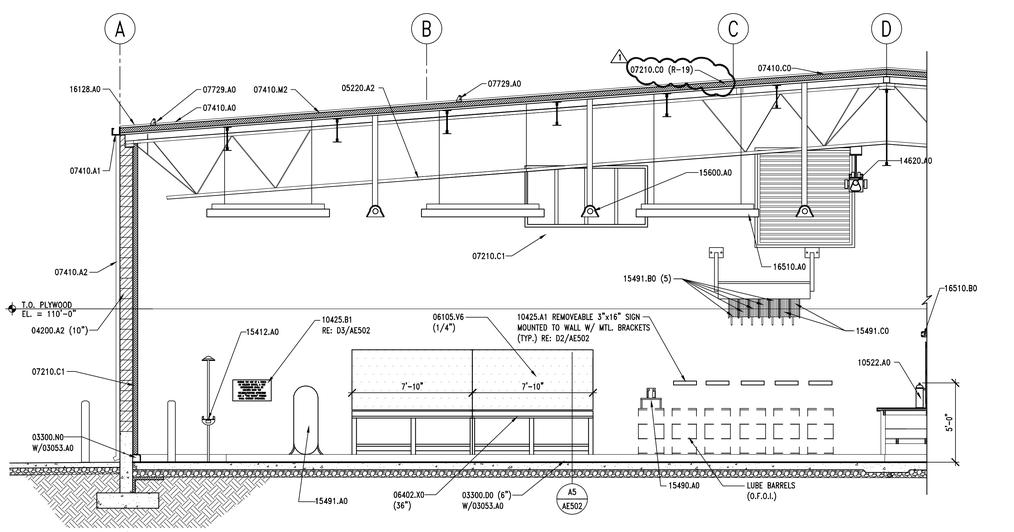

A1 | INTERIOR ELEVATION/SECTION

AE402 | REF. AE402 | SCALE: 1/4" = 1' -0"

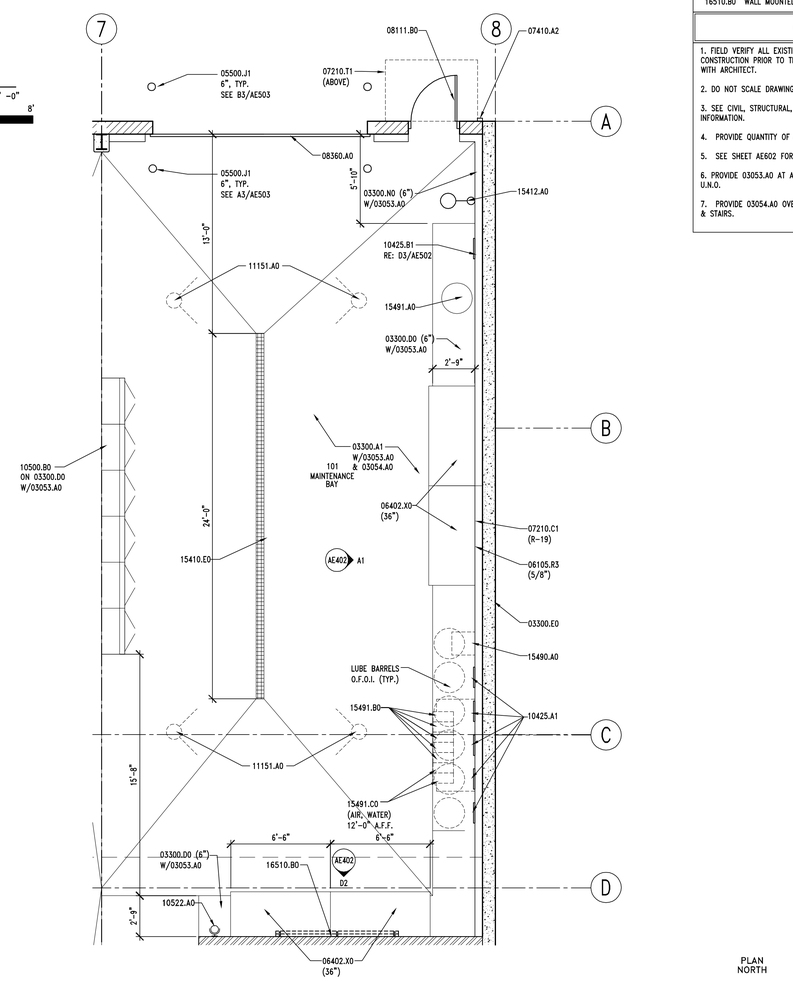

A4 | ENLARGED MAINTENANCE BAY

AE402 | REF. AE101 | SCALE: 1/4" = 1' -0"

PLAN NORTH

KEYNOTES

03053.A0	CONCRETE WATER PROOFING ADMIXTURE
03054.A0	OLIOPHOBIC TOPICAL SEALER
03300.A1	CONCRETE SLAB-ON-GRADE - SEE STRUCTURAL
03300.D0	CONCRETE PAD (SIZE)
03300.E0	CONCRETE RETAINING WALL - SEE STRUCTURAL
03300.N0	CONCRETE CURB (HEIGHT)
04200.A2	CMU (SIZE)
05500.J1	PIPE BOLLARD (DIAMETER) - GALV. & PAINTED
05220.A2	STEEL JOISTS - SEE STRUCTURAL - PRIMED AND PAINTED
06105.L2	BLOCKING AS REQUIRED
06105.R3	PLYWOOD PANEL (THICKNESS)
06105.V6	PEGBOARD (THICKNESS)
06402.H1	ADJUSTABLE SHELVES (FINISH)
06402.K0	BASE UNIT (FINISH)
06402.K3	BASE UNIT WITH DRAWERS (FINISH)
06402.L1	WALL UNIT (FINISH)
06402.X0	WORKBENCH (DEPTH)
06651.B0	SOLID SURFACE COUNTER TOP
~~07210.B1~~	~~RIGID INSULATION (R-VALUE)~~
07210.C0	RIGID INSULATION FOIL FACED W/VAPOR BARRIER
07210.C1	RIGID INSULATION (CONTINOUSLY ADHERED TO CMU) W/FOIL FACED VAPOR BARRIER TOWARDS INTERIOR (R-VALUE)
07210.E0	FOUNDATION WALL INSULATION
07410.A0	STANDING SEAM METAL ROOF
07410.A1	RAIN GUTTER W/CONTINUOUS HEAT TAPE
07410.A2	DOWNSPOUT W/CONTINUOUS HEAT TAPE
07410.C0	ROOFING FELT
07410.T1	STANDING SEAM METAL ROOF CANOPY
07410.M2	ICE & WATER SHIELD
07410.P2	RAKE TRIM
07729.A0	STANDIING SEAM METAL ROOF 2 PIPE SNOWGUARD SYSTEM
08111.B0	HOLLOW METAL DOOR
08360.A0	HEAVY DUTY OVERHEAD SECTIONAL DOOR
09678.E1	RUBBER BASE (SIZE)
10425.A1	OIL SIGNAGE
10425.B1	WELDING SIGNAGE
10500.A0	METAL LOCKERS (WIDTH)
10500.A1	ADA COMPLIANT LOCKER W/TWO SHELVES
10500.A2	ADA COMPLIANT SHELF
10500.B0	METAL STORAGE CABINETS W/HOLD DOWN ANCHORS
10522.A0	FIRE EXTINGUISHER
11151.A0	MOBILE LIFT - NIC - OWNER FURNISHED
14620.A0	TROLLEY HOIST (SIZE) - SEE STRUCTURAL
15410.E0	TRENCH DRAIN
15412.A0	EMERGENCY SHOWER & EYE WASH
15490.A0	WASTE OIL PUMP
15490.D0	600 GAL. WASTE OIL TANK - C.F.C.I
15491.A0	AIR COMPRESSOR
15491.B0	OVERHEAD LUBE REELS
15491.C0	OVERHEAD HOSE REELS
15600.A0	NATURAL GAS RADIANT HEATING SYSTEM
16128.A0	LOW VOLTAGE DE-ICING SNOW MELTING SYSTEM
16510.A0	INTERIOR LIGHTS
16510.B0	WALL MOUNTED INTERIOR LIGHTS

GENERAL NOTES

1. FIELD VERIFY ALL EXISTING CONDITIONS AND THEIR COMPATIBILITY WITH NEW CONSTRUCTION PRIOR TO THE COMMENCEMENT OF WORK. COORDINATE DISCREPANCIES WITH ARCHITECT.

2. DO NOT SCALE DRAWINGS.

3. SEE CIVIL, STRUCTURAL, MECHANICAL AND ELECTRICAL DRAWINGS FOR MORE INFORMATION.

4. PROVIDE QUANTITY OF ADJUSTABLE SHELVING AS SHOWN IN ELEVATION.

5. SEE SHEET AE602 FOR PLASTIC LAMINATE COLORS.

6. PROVIDE 03053.A0 AT ALL CONCRETE CURBS, PIERS, SLABS, STEM WALL ETC. U.N.O.

7. PROVIDE 03054.A0 OVER ENTIRE FLOOR SLAB AT ROOMS 101, 102, 103, 106, & STAIRS.

CLIENT

UDOT CONNECTING COMMUNITIES

STATION #2434
6072 E. EMIGRATION CANYON RD.
PARLEY'S CANYON, UTAH

DESIGNER

ARCHIPLEX GROUP
architecture - planning - design services
255 Crossroad Square
Salt Lake City, UT 84115
P:(801) 961-7070
F:(801) 961-7373

CONSULTANTS

REGISTRATION

STATE OF UTAH
RALPH M. STANISLAW
05-310059-0001
3-4-09
LICENSED ARCHITECT

ISSUE

MARK	DATE	DESCRIPTION
2	3-4-09	Addendum #2
1	2-17-09	Addendum #1
	01-09	Revised Contruction Doc.
	10-08	Construction Documents
	8-20-08	90% Review Submittal

ARCHIPLEX PROJECT NO:	0728.02
DFCM PROJECT NO:	08211900
DRAWN BY:	A. PHILLIPS
CHECKED BY:	R. STANISLAW
SCALE:	SCALE
DATE:	JANUARY, 2009

KEY PLAN

SHEET TITLE

ENLARGED MAINTENANCE BAY AND INTERIOR ELEVATIONS

AE402

© 2004 ARCHIPLEX GROUP

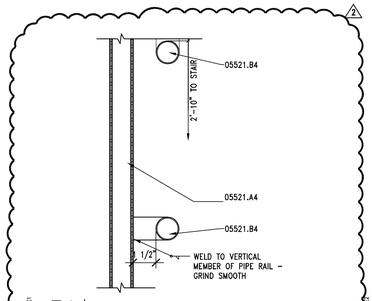

E1 HANDRAIL ATTACHMENT DTL.

AE403 REF. AE403 SCALE: 3" = 1'-0"

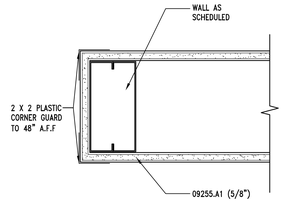

E2 CORNER GUARD DTL.

AE403 REF. AE403 SCALE: 3" = 1'-0"

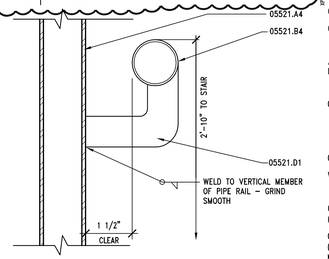

D1 HANDRAIL ATTACHMENT DTL.

AE403 REF. AE403 SCALE: 6" = 1'-0"

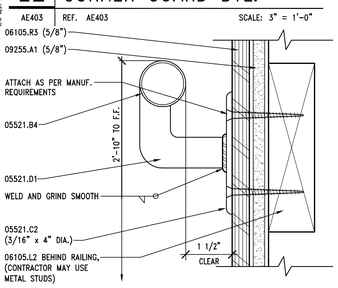

D2 HANDRAIL ATTACHMENT DTL.

AE403 REF. AE403 SCALE: 6" = 1'-0"

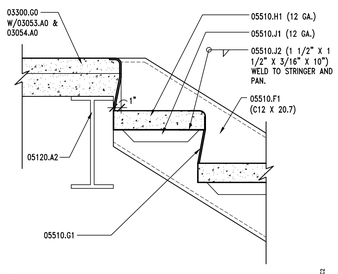

C1 STAIR LANDING DETAIL

AE403 REF. AE403 SCALE: 1 1/2" = 1'-0"

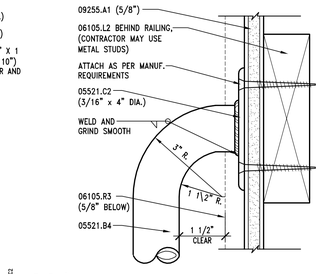

C2 HANDRAIL ATTACHMENT DTL.

AE403 REF. AE403 SCALE: 6" = 1'-0"

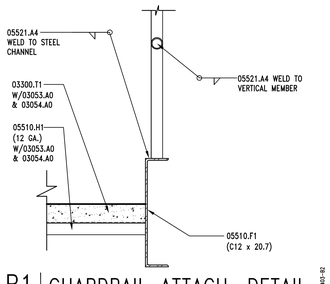

B1 GUARDRAIL ATTACH. DETAIL

AE403 REF. AE403 SCALE: 1 1/2" = 1'-0"

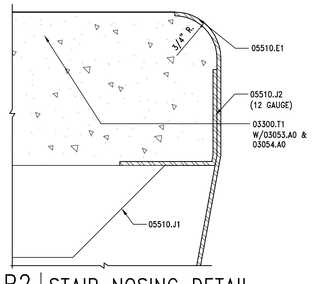

B2 STAIR NOSING DETAIL

AE403 REF. AE403 SCALE: NONE

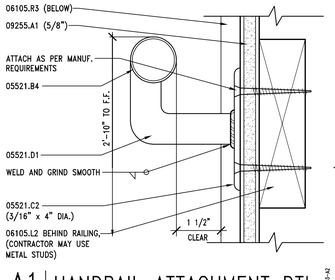

A1 HANDRAIL ATTACHMENT DTL.

AE403 REF. AE403 SCALE: 6" = 1'-0"

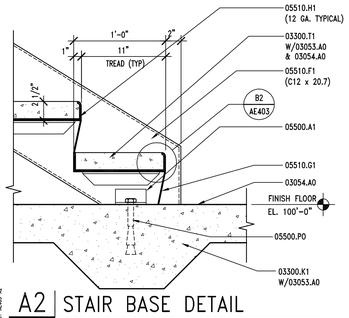

A2 STAIR BASE DETAIL

AE403 REF. AE403 SCALE: 1 1/2" = 1'-0"

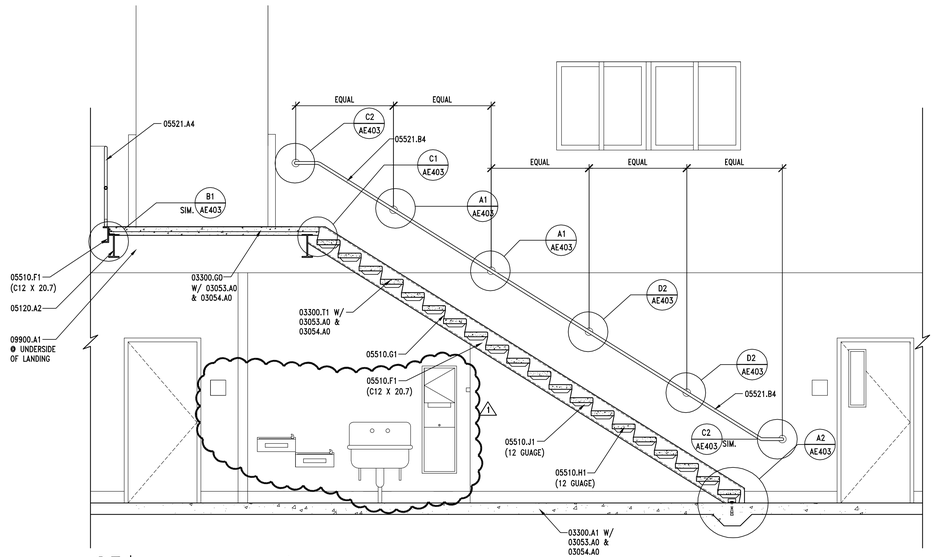

C3 STAIR SECTION/HANDRAIL & ELEVATION

AE403 REF. AE101 SCALE: 3/8" = 1'-0"

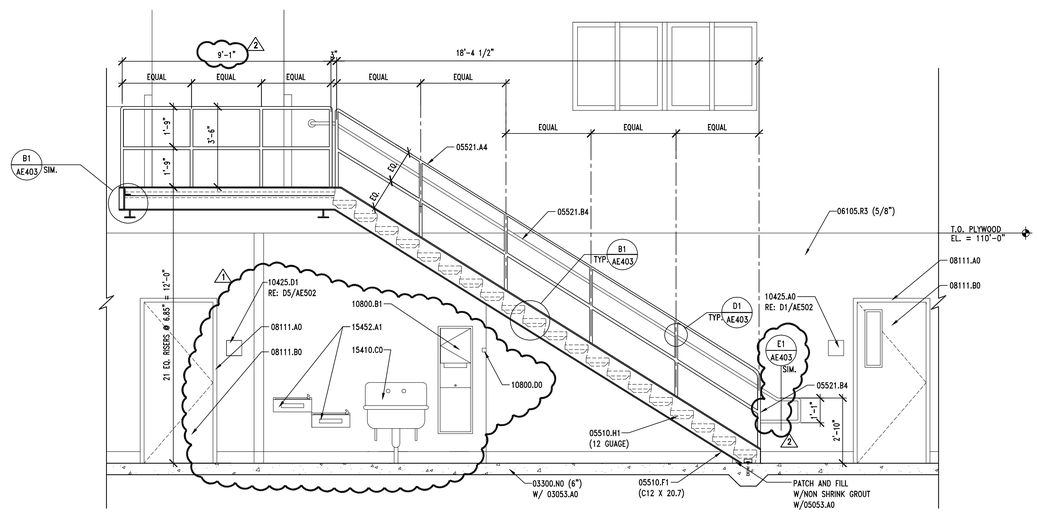

B3 STAIR ELEVATION

AE403 REF. AE101 SCALE: 3/8" = 1'-0"

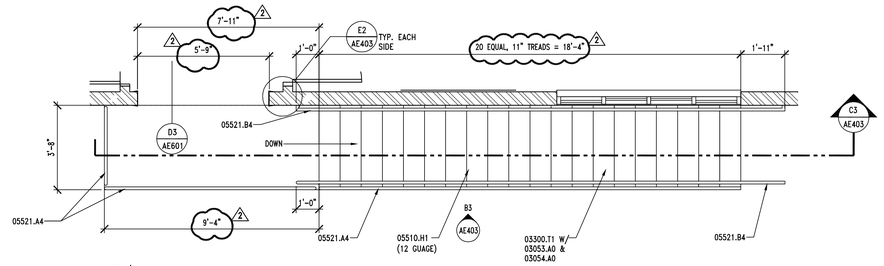

A3 ENLARGED STAIR PLAN

AE403 REF. AE101 SCALE: 3/8" = 1'-0"

PLAN NORTH

KEYNOTES

03053.A0	CONCRETE WATER PROOFING ADMIXTURE
03054.A0	OLIOPHOBIC TOPICAL SEALER
03300.A1	CONCRETE SLAB-ON-GRADE - SEE STRUCTURAL
03300.G0	CONCRETE OVER METAL DECK - SEE STRUCTURAL
03300.K1	THICKENED SLAB - SEE STRUCTURAL
03300.N0	CONCRETE CURB
03300.T1	CONCRETE AT STAIR TREAD
05120.A2	STEEL BEAM - SEE STRUCTURAL - PRIMED AND PAINTED
05500.A1	ANGLE - SEE STRUCTURAL
05500.P0	ANCHOR BOLT(S)
05510.E1	NON SKID SURFACE @ NOSING
05510.F1	STEEL STRINGER - (SIZE) - PAINTED
05510.G1	3/16" STEEL CLOSURE PLATE - PAINTED
05510.H1	PRE-FORMED, CONC. FILLED METAL PAN STAIR TREAD - (SIZE) - PAINTED
05510.J1	METAL PAN STAIR SUPPORT - (SIZE) - PAINTED
05510.J2	PAN ANCHORAGE - (SIZE) - PAINTED
05521.A4	1 1/2" O.D. PIPE GUARDRAIL - PAINTED
05521.B4	1 1/2" O.D. PIPE HANDRAIL - PAINTED
05521.C2	ESCUTCHEON WITH EASED EDGES (SIZE)
05521.D1	PIPE RAIL SUPPORT - PAINTED
06105.L2	BLOCKING AS REQUIRED
06105.R3	PLYWOOD PANEL (THICKNESS)
08111.A0	PRESSED METAL FRAME
08111.B0	HOLLOW METAL DOOR
09900.A1	PAINT - SEE FINISH SCHEDULE
09255.A1	GYPSUM BOARD (THICKNESS)
10425.A0	ROOM SIGNAGE
10425.D1	ACCESSIBLE/UNISEX RESTROOM SIGNAGE
10800.B1	SEMI - RECESSED PAPER TOWEL DISPENSER & WASTE RECEPTACLE
10800.D0	MOP RACK
15452.A1	DRINKING FOUNTAIN
15410.C0	UTILITY SINK

GENERAL NOTES

1. FIELD VERIFY ALL EXISTING CONDITIONS AND THEIR COMPATIBILITY WITH NEW CONSTRUCTION PRIOR TO THE COMMENCEMENT OF WORK. COORDINATE DISCREPANCIES WITH ARCHITECT.
2. DO NOT SCALE DRAWINGS.
3. SEE STRUCTURAL DRAWINGS FOR MORE INFORMATION.

CLIENT

UDOT CONNECTING COMMUNITIES

STATION #2434
6072 E. EMIGRATION CANYON RD.
PARLEY'S CANYON, UTAH

DESIGNER

ARCHIPLEX GROUP
architecture · planning · design services
255 Crossroad Square
Salt Lake City, UT 84115
P:(801) 961-7070
F:(801) 961-7373

CONSULTANTS

REGISTRATION

STATE OF UTAH — RALPH M. STANISLAW — 05-20089-0001 — 3-4-09 — LICENSED ARCHITECT

ISSUE

MARK	DATE	DESCRIPTION
2	3-4-09	Addendum #2
1	2-17-09	Addendum #1
	01-09	Revised Contruction Doc.
	10-08	Construction Documents
	8-20-08	90% Review Submittal

ARCHIPLEX PROJECT NO:	0728.02
DFCM PROJECT NO:	08211900
DRAWN BY:	A. PHILLIPS
CHECKED BY:	R. STANISLAW
SCALE:	AS SHOWN
DATE:	JANUARY, 2009

KEY PLAN

SHEET TITLE

STAIR PLAN SECTION, ELEVATIONS AND DETAILS

AE403

© 2004 ARCHIPLEX GROUP

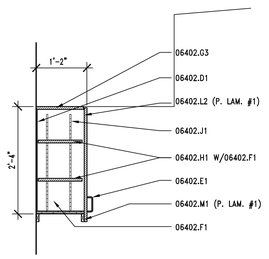

E3 | UPPER CABINET SECTION

AE502 | REF. AE402 | SCALE: 3/4" = 1'-0"

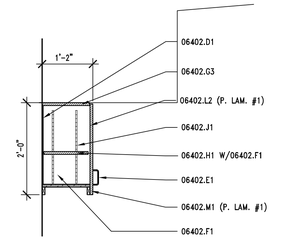

E4 | UPPER CABINET SECTION

AE502 | REF. AE402 | SCALE: 3/4" = 1'-0"

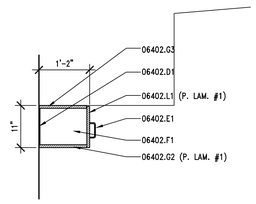

E5 | UPPER CABINET SECTION

AE502 | REF. AE402 | SCALE: 3/4" = 1'-0"

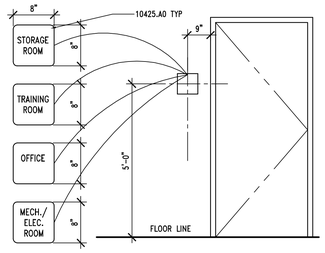

RE: SPECIFICATION – 10425 FOR MORE INFORMATION

D1 | SIGNAGE "E"

AE502 | REF. AE101 | SCALE: NONE

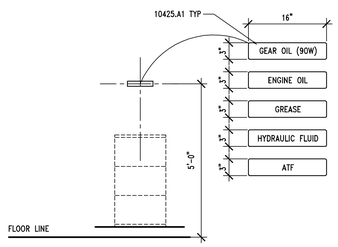

RE: SPECIFICATION – 10425 FOR MORE INFORMATION

D2 | SIGNAGE "A"

AE502 | REF. AE101 | SCALE: NONE

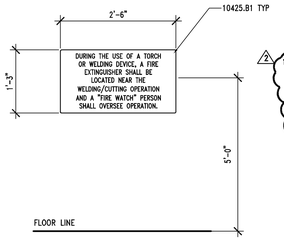

RE: SPECIFICATION – 10425 FOR MORE INFORMATION

D3 | SIGNAGE "B"

AE502 | REF. AE101 | SCALE: NONE

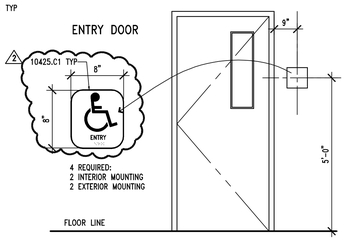

RE: SPECIFICATION – 10425 FOR MORE INFORMATION

D4 | SIGNAGE "C"

AE502 | REF. AE101 | SCALE: NONE

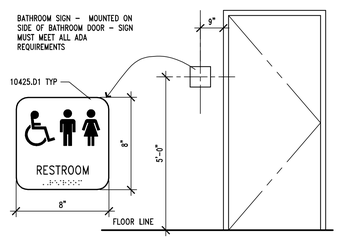

RE: SPECIFICATION – 10425 FOR MORE INFORMATION

D5 | SIGNAGE "D"

AE502 | REF. AE101 | SCALE: NONE

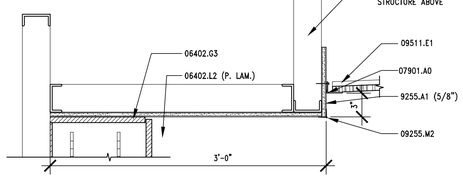

C1 | CEILING TRANSITION DETAIL

AE502 | REF. AE201 | SCALE: 1-1/2" = 1'-0"

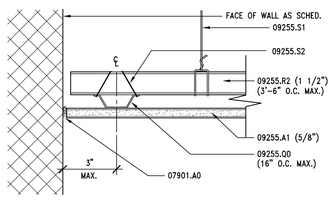

C2 | CEILING DETAIL

AE502 | REF. AE121 | SCALE: 1/2" = 1'-0"

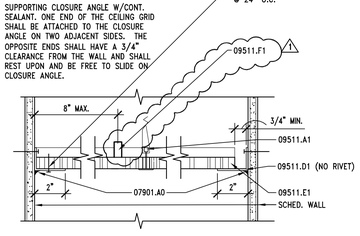

C3 | LAY-IN PANEL EDGE DTL.

AE502 | REF. AE121 | SCALE: 3" = 1'-0"

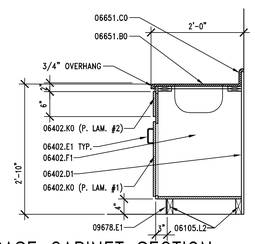

C4 | BASE CABINET SECTION

AE502 | REF. AE402 | SCALE: 3/4" = 1'-0"

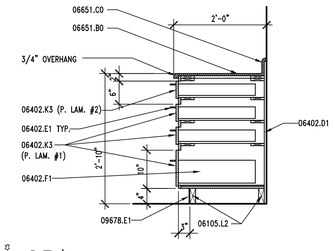

C5 | BASE CABINET SECTION

AE502 | REF. AE402 | SCALE: 3/4" = 1'-0"

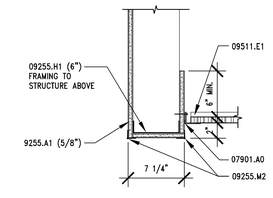

B1 | CEILING TRANSITION DETAIL

AE502 | REF. AE201 | SCALE: 1-1/2" = 1'-0"

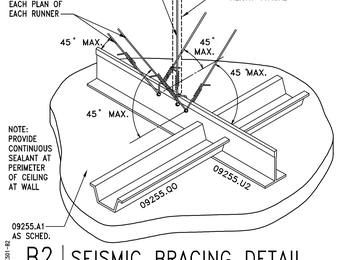

B2 | SEISMIC BRACING DETAIL

AE502 | REF. AE121 | SCALE: NONE

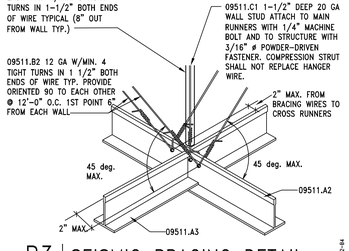

B3 | SEISMIC BRACING DETAIL

AE502 | REF. AE121, AE502 | SCALE: NO SCALE

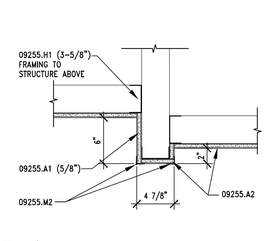

B4 | CEILING @ SHOWER DETAIL

AE502 | REF. | SCALE: 1-1/2" = 1'-0"

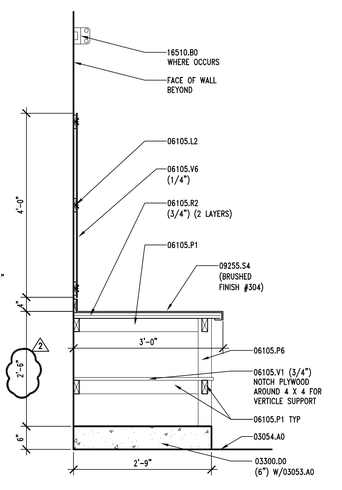

B5 | WORK BENCH SECTION

AE502 | REF. AE402 | SCALE: 3/4" = 1'-0"

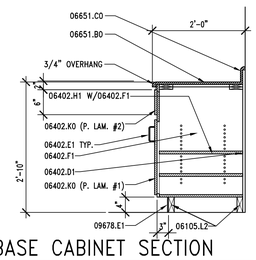

A2 | BASE CABINET SECTION

AE502 | REF. AE402 | SCALE: 3/4" = 1'-0"

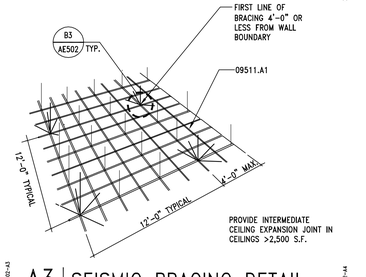

A3 | SEISMIC BRACING DETAIL

AE502 | REF. AE121 | SCALE: NO SCALE

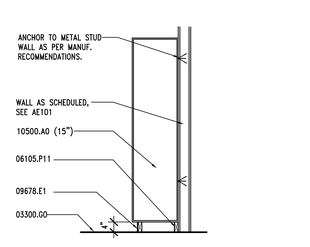

A4 | LOCKER SECTION

AE502 | REF. AE402 | SCALE: 1/2" = 1'-0"

KEYNOTES

03053.A0	CONCRETE WATER PROOFING ADMIXTURE
03054.A0	OLIOPHOBIC TOPICAL SEALER
03300.D0	CONCRETE PAD (SIZE)
03300.G0	CONCRETE OVER METAL DECK – SEE STRUCTURAL
06105.L2	BLOCKING AS REQUIRED
06105.P1	2 x 4
06105.P6	4 x 4
06105.P11	2 x BLOCKING
06105.R2	SHEATHING – PLYWOOD (THICKNESS) GRADE (SIZE)
06105.V1	EXTERIOR GRADE PLYWOOD (THICKNESS)
06105.V6	PEGBOARD (THICKNESS)
06402.D1	3/4" PARTICAL BOARD W/ MELAMINE FINISH
06402.E1	WIRE PULL
06402.F1	PROVIDE WHITE MELAMINE FINISH @ ALL INTERIOR SURFACES
06402.G2	3/4" PARTICLE BOARD CABINET BASE W/PLAM (FINISH)
06402.G3	3/4" PARTICLE BOARD CABINET TOP
06402.H1	ADJUSTABLE SHELVES (FINISH)
06402.J1	RECESSED SHELF BRACKETS
06402.K0	BASE UNIT (FINISH)
06402.K3	BASE UNIT WITH DRAWERS (FINISH)
06402.L1	WALL UNIT (FINISH)
06402.L2	WALL UNIT W/ADJ. SHELF(VES) (FINISH)
06402.M1	3/4" PARTICLE BOARD SCREEN (FINISH)
06651.B0	SOLID SURFACE COUNTER TOP
06651.C0	SOLID SURFACE BACKSLAPSH
07901.A0	CONT. SEALANT
09255.A1	GYPSUM BOARD (THICKNESS)
09255.A2	WATER RESISTANT GYPSUM BOARD (THICKNESS)
09255.H1	METAL STUDS (SIZE, SPACING)
09255.M2	METAL CORNER BEAD (TYP.)
09255.Q0	7/8" METAL FURRING CHANNEL
09255.R2	CHANNEL (SIZE, SPACING)
09255.S1	8 GA. WIRE HANGERS
09255.S2	18 GA. WIRE TIES
09255.S4	14 GA. STAINLESS STEEL COUNTER TOP (FINISH)
09255.U2	CROSS CHANNEL
09255.U3	3/4" CONDUIT COMPRESSION BRACE
09511.A1	HEAVY DUTY "T" BAR GRID SYSTEM
09511.A2	CEILING SUSPENSION SYSTEM – MAIN RUNNER
09511.A3	CEILING SUSPENSION SYSTEM – CROSS RUNNER
09511.B1	VERTICAL WIRE HANGER (SIZE)
09511.B2	BRACING WIRE (SIZE)
09511.C1	COMPRESSION STRUTS
09511.D1	METAL ANGLE EDGE
09511.E1	LAY IN ACOUSTICAL CEILING PANEL
1 09511.F1	SPREADER BAR REQUIRED TO KEEP PERIMETER COMPONENTS FROM SPREADING APART
09678.E1	RUBBER BASE
10425.A0	ROOM SIGNAGE
10425.A1	OIL SIGNAGE
10425.B1	WELDING SIGNAGE
10425.C1	ACCESSIBLE SIGNAGE
10425.D1	ACCESSIBLE/UNISEX RESTROOM SIGNAGE
10500.A0	METAL LOCKERS (WIDTH)
16510.B0	INTERIOR WALL MOUNTED LIGHT

GENERAL NOTES

1. FIELD VERIFY ALL EXISTING CONDITIONS AND THEIR COMPATIBILITY WITH NEW CONSTRUCTION PRIOR TO THE COMMENCEMENT OF WORK. COORDINATE DISCREPANCIES WITH ARCHITECT.

2. DO NOT SCALE DRAWINGS.

3. SEE SHEET AE602 FOR PLASTIC LAMINATE COLORS.

CLIENT

UDOT CONNECTING COMMUNITIES

STATION #2434
6072 E. EMIGRATION CANYON RD.
PARLEY'S CANYON, UTAH

DESIGNER

ARCHIPLEX GROUP
architecture · planning · design services
255 Crossroad Square
Salt Lake City, UT 84115
P:(801) 961-7070
F:(801) 961-7373

CONSULTANTS

REGISTRATION

STATE OF UTAH
RALPH M. STANISLAW
06-350858-0301
3-4-09
LICENSED ARCHITECT

ISSUE

MARK	DATE	DESCRIPTION
2	3-4-09	Addendum #2
1	2-17-09	Addendum #1
	01-09	Revised Contruction Doc.
	10-08	Construction Documents
	8-20-08	90% Review Submittal

ARCHIPLEX PROJECT NO:	0728.02
DFCM PROJECT NO:	08211900
DRAWN BY:	A. PHILLIPS
CHECKED BY:	R. STANISLAW
SCALE:	AS SHOWN
DATE:	JANUARY, 2009

KEY PLAN

SHEET TITLE

SIGNAGE AND MISC. DETAILS

AE502

© 2004 ARCHIPLEX GROUP

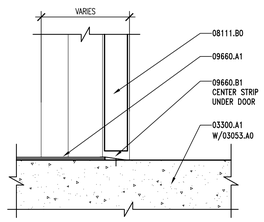

D3 | VCT-CONCRETE TRANSITION

AE503 | REF. AE401 | SCALE: 3" =1'-0"

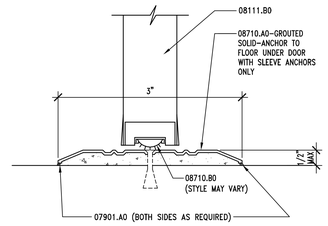

D4 | THRESHOLD DETAIL

AE503 | REF. AE503 | SCALE: NONE

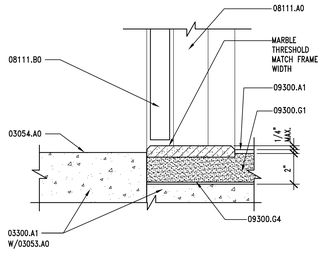

D5 | MARBLE THRESHOLD DETAIL

AE503 | REF. AE401 | SCALE: 3" = 1'-0"

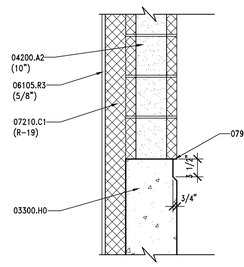

C3 | FOUNDATION WALL

AE503 | REF. AE201 | SCALE: 1" = 1'-0"

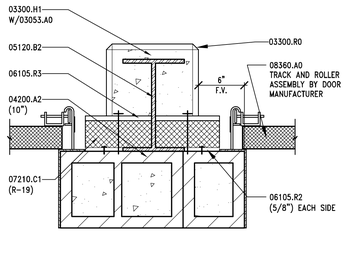

C4 | INSULATION @ COL. DETAIL

AE503 | REF. AE601 | SCALE: 1 1/2" = 1'-0"

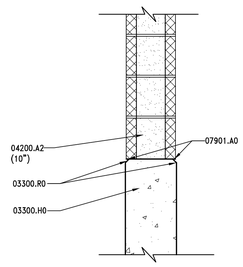

C5 | FOUNDATION WALL

AE503 | REF. AE201 | SCALE: 1" = 1'-0"

KEYNOTES

02200.B0 GRAVEL BASE

03053.A0 CONCRETE WATER PROOFING ADMIXTURE
03054.A0 OLIOPHOBIC TOPICAL SEALER
03300.A1 CONCRETE SLAB-ON-GRADE - SEE STRUCTURAL
03300.H0 FOUNDATION WALL - SEE STRUCTURAL
03300.H1 CONCRETE PIER - SEE STRUCTURAL
03300.K1 CONCRETE PIPE BASE
03300.L1 30# FELT
03300.R0 3/4" CHAMFER

04200.A0 CMU
04200.A2 CMU (SIZE)
04200.D1 CMU LINTEL - SEE STRUCTURAL

05120.A2 STEEL BEAM - SEE STRUCTURAL - PRIMED AND PAINTED
05120.B2 STEEL COLUMN - SEE STRUTURAL - PRIMED AND PAINTED
05220.A2 STEEL JOISTS - SEE STRUCTURAL - PRIMED AND PAINTED
05310.A1 METAL DECK - SEE STRUCTURAL
05500.A1 ANGLE - SEE STRUCTURAL
05500.A3 STEEL ANGLE (SIZE)
1 05500.D1 CHANNEL - SEE STRUCTURAL
05500.E1 STEEL PLATE - SEE STRUCTUAL
05500.J1 PIPE BOLLARD (DIAMETER) - GALVANIZED & PAINTED

06105.L2 BLOCKING AS REQUIRED
1 06105.P9 2 X FRAMING, FIRE TREATED
06105.R2 SHEATHING - PLYWOOD (THICKNESS)
06105.R3 PLYWOOD PANEL (THICKNESS) - MECHANICALLY FASTENED THROUGH INSULATION INTO CMU WALL

1 ~~07210.B1 RIGID INSULATION (R-VALUE)~~
07210.C0 RIGID INSULATION FOIL FACED W/VAPOR BARRIER
07210.C1 RIGID INSULATION (CONTINUOUSLY ADHEARED TO CMU) W/FOIL FACED VAPOR BARRIER TOWARDS INTERIOR (R-VALUE)
07410.A0 STANDING SEAM METAL ROOF
07410.A1 RAIN GUTTER W/CONTINUOUS HEAT TAPE
07410.A2 DOWN SPOUT W/CONTINUOUS HEAT TAPE
1 07410.B1 METAL REGLET (MATCH ROOF FLASHING COLOR)
07410.C0 ROOFING FELT
07410.G0 FLASHING - FINISH TO MATCH LOUVER COLOR
07410.G1 FLASHING - FINISH TO MATCH ROOF COLOR
07410.K0 SEALANT
1 07410.L0 METAL FACIA
07410.M2 ICE AND WATER SHIELD
07410.P2 RAKE TRIM
2 ~~07410.P2 GUTTER STRAP~~
07410.P3 GUTTER STRAP
07410.S1 STANDING SEAM METAL ROOF RIDGE
07410.T1 STANDING SEAM METAL CANOPY
07729.A0 STANDING SEAM METAL 2 PIPE SNOWGUARD SYSTEM
07841.A0 PENNETRATION FIRE STOPPING
07841.B0 PACKING MATERIAL
07901.A0 CONTINUOUS SEALANT

08111.A0 PRESSED METAL FRAME
08111.B0 HOLLOW METAL DOOR
08360.A0 HEAVY DUTY OVERHEAD SECTIONAL DOOR
08710.A0 THRESHOLD
08710.B0 DOOR SWEEP

09300.A1 FLOOR TILE - SEE FINISHED SCHEDULE
09300.G1 MORTAR BED
09300.G4 WATERPROOF MEMBRANE
09660.A1 VINYL COMPOSITION TILE
09660.B1 VINYL TRANSITION STRIP

15779.A0 LOW VOLTAGE DE-ICING SYSTEM
15861.A1 MECHANICAL DUCTWORK - SEE MECHINCAL
15887.A1 LOUVER WITH BIRD SCREEN - SEE MECHANICAL

16128.A0 LOW VOLTAGE DE-ICING SNOW MELTING SYSTEM
16128.B0 LOW VOLTAGE DE-ICING CABLING BOARD WITH PRE CUT GROOVES
16128.C0 LOW VOLTAGE DE-ICING CABLE
16128.D0 LOW VOLATAGE DE-ICING CABLE PROTECTOR
16128.E0 ATTACHMENT AS PER MANUFACTURER RECOMENDATION

GENERAL NOTES

1. FIELD VERIFY ALL EXISTING CONDITIONS AND THEIR COMPATIBILITY WITH NEW CONSTRUCTION PRIOR TO THE COMMENCEMENT OF WORK. COORDINATE DISCREPANCIES WITH ARCHITECT.

2. DO NOT SCALE DRAWINGS.

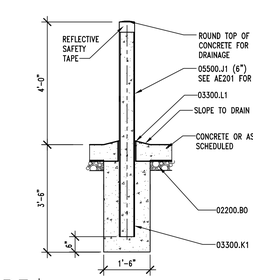

B3 | EXT. PIPE BOLLARD DTL.

AE503 | REF. AE101 & AE301 | SCALE: 1/2" = 1'-0"

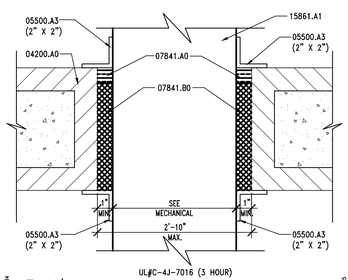

B4 | FIRE STOPPING DETAIL

AE503 | REF. AE101 | SCALE: 3" = 1'-0"

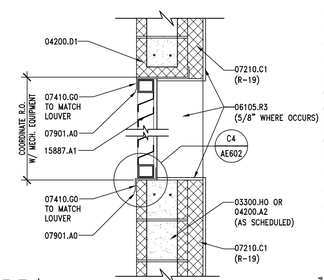

B5 | LOUVER/FAN DETAIL

AE501 | REF. AE201 | SCALE: 1" = 1'-0"

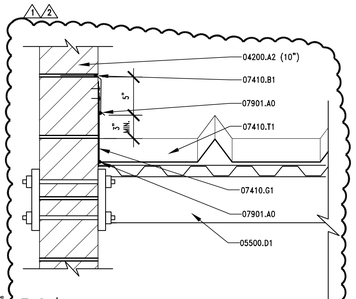

B6 | REGLET DETAIL

AE503 | REF. AE312 | SCALE: 1-1/2" = 1'-0"

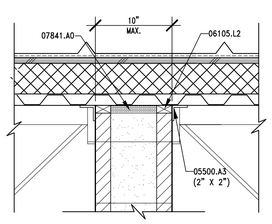

UL#C-4J-7016 (3 HOUR)

A2 | FIRESAFING DETAIL

AE503 | REF. AE311 | SCALE: 1-1/2" = 1'-0"

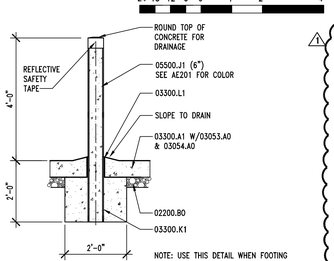

A3 | INT. PIPE BOLLARD DTL.

AE503 | REF. AE101 & AE301 | SCALE: 1/2" = 1'-0"

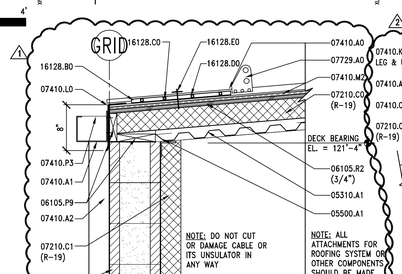

A4 | ROOF DETAIL

AE503 | REF. AE312 | SCALE: 1" = 1'-0"

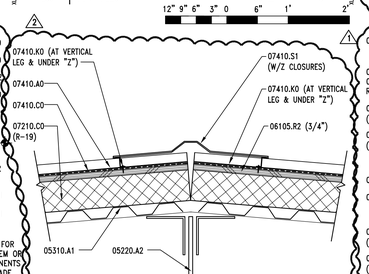

A5 | ROOF RIDGE DETAIL

AE503 | REF. AE141 | SCALE: 1-1/2" = 1'-0"

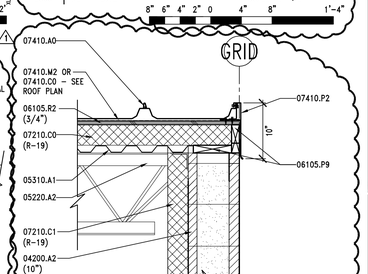

A6 | ROOF DETAIL

AE503 | REF. AE311, AE312 | SCALE: 1" = 1'-0"

CLIENT

UDOT CONNECTING COMMUNITIES

STATION #2434
6072 E. EMIGRATION CANYON RD.
PARLEY'S CANYON, UTAH

DESIGNER

ARCHIPLEX GROUP
architecture · planning · design services
255 Crossroad Square
Salt Lake City, UT 84115
P:(801) 961-7070
F:(801) 961-7373

CONSULTANTS

REGISTRATION

STATE OF UTAH
RALPH M. STANISLAW
05-0528-0201
3-4-09
LICENSED ARCHITECT

ISSUE

MARK	DATE	DESCRIPTION
2	3-4-09	Addendum #2
1	2-17-09	Addendum #1
	01-09	Revised Contruction Doc.
	10-08	Construction Documents
	8-20-08	90% Review Submittal

ARCHIPLEX PROJECT NO:	0728.02
DFCM PROJECT NO:	08211900
DRAWN BY:	A. PHILLIPS
CHECKED BY:	R. STANISLAW
SCALE:	AS SHOWN
DATE:	JANUARY, 2009

KEY PLAN

SHEET TITLE

MISC. DETAILS

AE503

© 2004 ARCHIPLEX GROUP

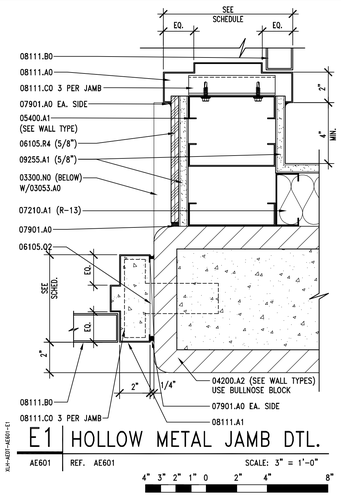

E1 | HOLLOW METAL JAMB DTL.

AE601 | REF. AE601 | SCALE: 3" = 1'-0"

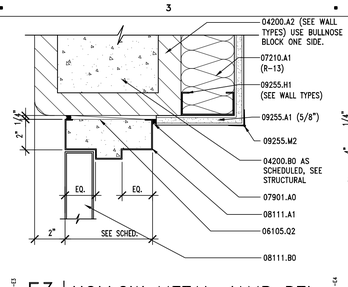

E3 | HOLLOW METAL JAMB DTL.

AE601 | REF. AE601 | SCALE: 3" = 1'-0"

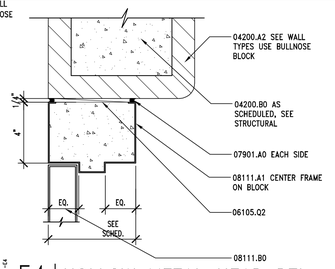

E4 | HOLLOW METAL HEAD DTL.

AE601 | REF. AE601 | SCALE: 3" = 1'-0"

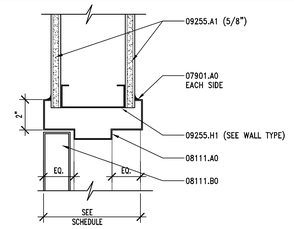

E5 | DOOR HEAD DETAIL

AE601 | REF. AE601 | SCALE: 3" = 1'-0"

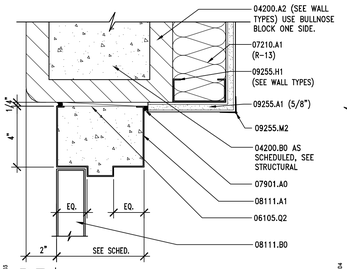

D3 | HOLLOW METAL HEAD DTL.

AE601 | REF. AE601 | SCALE: 3" = 1'-0"

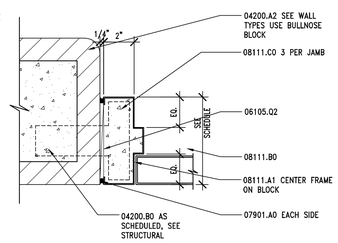

D4 | HOLLOW METAL JAMB DTL.

AE601 | REF. AE601 | SCALE: 3" = 1'-0"

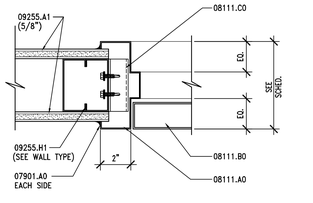

D5 | DOOR JAMB DETAIL

AE601 | REF. AE601 | SCALE: 3" = 1'-0"

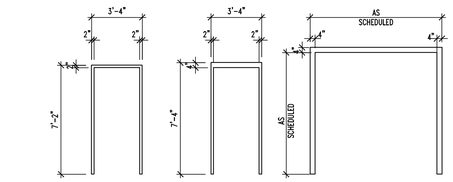

TYPE A TYPE B TYPE C

DOOR FRAME TYPES

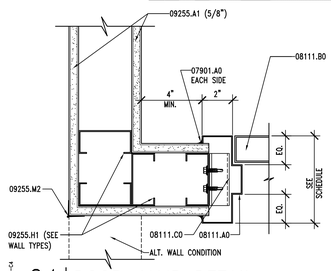

C4 | DOOR JAMB DETAIL

AE601 | REF. AE601 | SCALE: 3" = 1'-0"

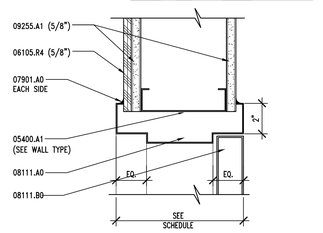

C5 | DOOR HEAD DETAIL

AE601 | REF. AE601 | SCALE: 3" = 1'-0"

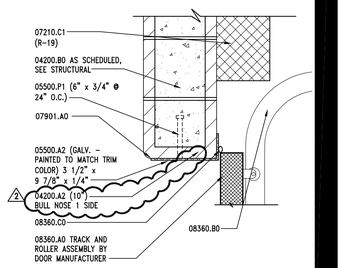

C6 | OVERHEAD DOOR HEAD DTL.

AE601 | REF. AE601 | SCALE: 1 1/2" = 1'-0"

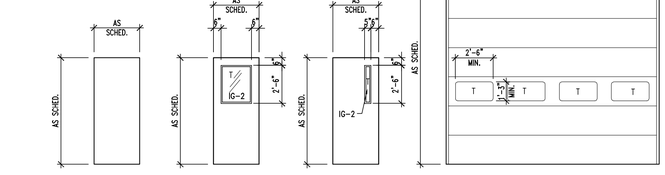

TYPE 1 TYPE 2 TYPE 3 TYPE 4

DOOR TYPES

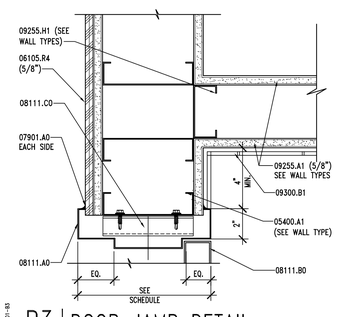

B3 | DOOR JAMB DETAIL

AE601 | REF. AE601 | SCALE: 3" = 1'-0"

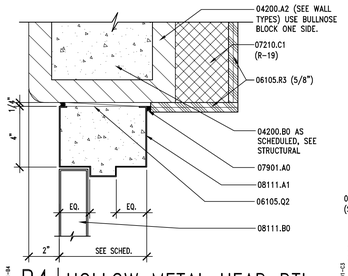

B4 | HOLLOW METAL HEAD DTL.

AE601 | REF. AE601 | SCALE: 3" = 1'-0"

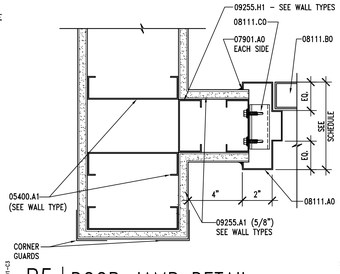

B5 | DOOR JAMB DETAIL

AE601 | REF. AE601 | SCALE: 3" = 1'-0"

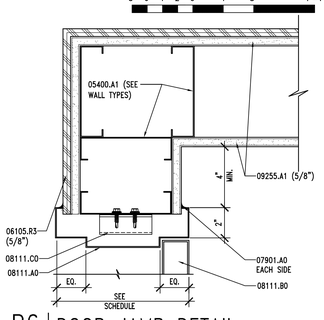

B6 | DOOR JAMB DETAIL

AE601 | REF. AE601 | SCALE: 3" = 1'-0"

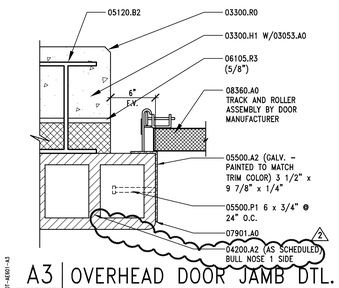

A3 | OVERHEAD DOOR JAMB DTL.

AE601 | REF. AE601 | SCALE: 1 1/2" = 1'-0"

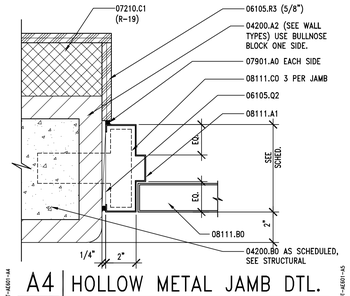

A4 | HOLLOW METAL JAMB DTL.

AE601 | REF. AE601 | SCALE: 3" = 1'-0"

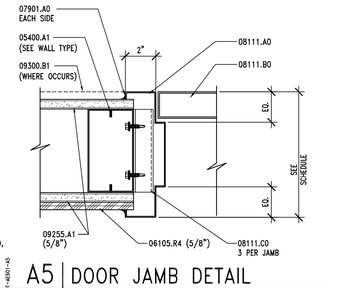

A5 | DOOR JAMB DETAIL

AE601 | REF. AE601 | SCALE: 3" = 1'-0"

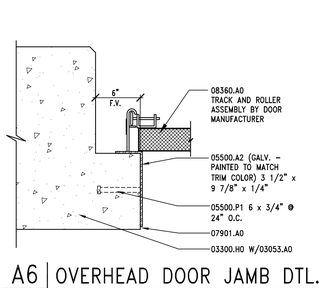

A6 | OVERHEAD DOOR JAMB DTL.

AE601 | REF. AE601 | SCALE: 1 1/2" = 1'-0"

DOOR SCHEDULE

DOOR #	ROOM #	DOORS TYPE	DOORS WIDTH	DOORS HEIGHT	DOORS THICK.	DOORS MATERIAL	DOORS FINISH	DOORS GLASS	FRAMES TYPE	FRAMES WIDTH	FRAMES MATERIAL	FRAMES FINISH	DETAILS HEAD	DETAILS JAMB	DETAILS THRESH.	DETAILS LABEL	HARDWARE	REMARKS
D101A	101	3	3'-0"	7'-0"	1 3/4"	HM	PT	T	B	6"	HM	PT	B4/AE601	A4/AE601	D4/AE503	–	1	INSULATED
D101B	101	4	14'-0"	14'-0"	–	ST	–	T	–	–	ST	PT	C6/AE601	A3 & A6/AE601	–	–	6	SECTIONAL INSULATED DOOR
D102A	102	3	3'-0"	7'-0"	1 3/4"	HM	PT	T	A	6"	HM	PT	B4/AE601	A4 & E1/AE601	D4/AE503	–	1	INSULATED
D102B	102	4	14'-0"	14'-0"	–	ST	–	T	–	–	ST	PT	C6/AE601	A3 & A6/AE601	–	–	6	SECTIONAL INSULATED DOOR
D102C	102	4	14'-0"	14'-0"	–	ST	–	T	–	–	ST	PT	C6/AE601	A3 & A6/AE601	–	–	6	SECTIONAL INSULATED DOOR
D102D	102	4	14'-0"	14'-0"	–	ST	–	T	–	–	ST	PT	C6/AE601	A3 & A6/AE601	–	–	6	SECTIONAL INSULATED DOOR
D102E	102	4	14'-0"	14'-0"	–	ST	–	T	–	–	ST	PT	C6/AE601	A3 & A6/AE601	–	–	6	SECTIONAL INSULATED DOOR
D102F	102	4	14'-0"	14'-0"	–	ST	–	T	–	–	ST	PT	C6/AE601	A3 & A6/AE601	–	–	6	SECTIONAL INSULATED DOOR
D102G	102	4	14'-0"	14'-0"	–	ST	–	T	–	–	ST	PT	C6/AE601	A3 & A6/AE601	–	–	6	SECTIONAL INSULATED DOOR
D102H	102	4	14'-0"	14'-0"	–	ST	–	T	–	–	ST	PT	C6/AE601	A3 & A6/AE601	–	–	6	SECTIONAL INSULATED DOOR
D102J	102	4	14'-0"	14'-0"	–	ST	–	T	–	–	ST	PT	C6/AE601	A3 & A6/AE601	–	–	6	SECTIONAL INSULATED DOOR
D102K	102	4	14'-0"	14'-0"	–	ST	–	T	–	–	ST	PT	C6/AE601	A3 & A6/AE601	–	–	6	SECTIONAL INSULATED DOOR
D102L	102	4	14'-0"	14'-0"	–	ST	–	T	–	–	ST	PT	C6/AE601	A3 & A6/AE601	–	–	6	SECTIONAL INSULATED DOOR
D103A	103	3	3'-0"	7'-0"	1 3/4"	HM	PT	T	A	9"	HM	PT	C5/AE601	A5 & B6/AE601	–	20 MIN	4	–
D104A	104	1	3'-0"	7'-0"	1 3/4"	HM	PT	–	A	9"	HM	PT	C5/AE601	A5 & B3/AE601	D5/AE503	–	3	–
D105A	105	3	3'-0"	7'-0"	1 3/4"	HM	PT	T	A	9"	HM	PT	C5/AE601	A5 & E1/AE601	D3/AE503	–	2	–
D106A	106	1	PR OF 4'-0"	8'-0"	1 3/4"	HM	PT	–	C	5 3/4"	HM	PT	E4/AE601	D4/AE601	–	3 HOUR	5	–
D106B	106	3	3'-0"	7'-0"	1 3/4"	HM	PT	T	B	6"	HM	PT	B4/AE601	A4/AE601	D4/AE503	–	1	INSULATED
D106C	106	4	14'-0"	14'-0"	–	ST	–	T	–	–	ST	PT	C6/AE601	A3 & A6/AE601	–	–	6	SECTIONAL INSULATED DOOR
D106D	106	4	14'-0"	14'-0"	–	ST	–	T	–	–	ST	PT	C6/AE601	A3 & A6/AE601	–	–	6	SECTIONAL INSULATED DOOR
D106E	106	4	14'-0"	14'-0"	–	ST	–	T	–	–	ST	PT	C6/AE601	A3 & A6/AE601	–	–	6	SECTIONAL INSULATED DOOR
D106F	106	4	14'-0"	14'-0"	–	ST	–	T	–	–	ST	PT	C6/AE601	A3 & A6/AE601	–	–	6	SECTIONAL INSULATED DOOR
D106G	106	4	14'-0"	14'-0"	–	ST	–	T	–	–	ST	PT	C6/AE601	A3 & A6/AE601	–	–	6	SECTIONAL INSULATED DOOR
D106H	106	3	3'-0"	7'-0"	1 3/4"	HM	PT	T	B	6"	HM	PT	B4/AE601	A4/AE601	D4/AE503	–	1	INSULATED
D201A	201	3	3'-0"	7'-0"	1 3/4"	HM	PT	T	A	5 3/4"	HM	PT	E5/AE601	B5 & D5/AE601	D3/AE503	–	4	–
D202A	202	3	3'-0"	7'-0"	1 3/4"	HM	PT	T	A	6"	HM	PT	E3/AE601	D3/AE601	D3/AE503	–	1	INSULATED
D203A	203	2	3'-0"	7'-0"	1 3/4"	HM	PT	T	A	5 3/4"	HM	PT	E5/AE601	B5 REV. & D5	–	–	2	–

HM = HOLLOW METAL P. FIN. = PRE-FINISHED T = TEMPERED ST = STEEL PT = PAINTED

KEYNOTES

03053.A0	CONCRETE WATER PROOFING ADMIXTURE
03300.H0	FOUNDATION WALL - SEE STRUCTURAL
03300.N0	CONCRETE CURB
03300.R0	CHAMFER
04200.A2	CMU (SIZE)
04200.B0	GROUT SOLID
05120.B2	STEEL COLUMN - SEE STRUCTURAL - PRIMED AND PAINTED
05400.A1	6" STRUCTURAL STEEL STUDS - SEE STRUCTURAL DRAWINGS FOR SPACING AND GAUGE
05400.A2	3 5/8" STRUCTURAL STEEL STUDS - SEE STRUCTURAL DRAWINGS FOR SPACING AND GRADE
05500.A2	STEEL ANGLE (SIZE) - GALVANIZED
05500.P1	ANCHOR BOLT (DIAMETER & SPACING)
06105.Q2	SHIM AS REQUIRED
06105.R3	PLYWOOD PANEL (THICKNESS) - MECHANICALLY FASTENED THROUGH INSULATION INTO CMU WALL
06105.R4	PLYWOOD PANEL (THICKNESS)
07210.A1	BATT INSULATION (R-VALUE)
07210.C1	RIGID INSULATION (CONTINUOUSLY ADHERED TO CMU) W/FOIL FACED VAPOR BARRIER TOWARDS INTERIOR (R-VALUE)
07901.A0	CONT. SEALANT
08111.A0	PRESSED METAL FRAME
08111.A1	GROUT FILLED PRESSED METAL FRAME
08111.B0	HOLLOW METAL DOOR
08111.C0	JAMB ANCHOR
08360.A0	HEAVY DUTY OVERHEAD SECTIONAL DOOR
08360.B0	3" HEAVY DUTY OVERHEAD SECTIONAL DOOR TRACK
08360.C0	WEATHERSTRIPPING
09255.A1	GYPSUM BOARD (THICKNESS)
09255.H1	METAL STUDS (SIZE, SPACING)
09300.B1	WALL TILE - SEE FINISH SCHED.
09255.M2	METAL CORNER BEAD (TYP.)

GENERAL NOTES

1. FIELD VERIFY ALL EXISTING CONDITIONS AND THEIR COMPATIBILITY WITH NEW CONSTRUCTION PRIOR TO THE COMMENCEMENT OF WORK. COORDINATE DISCREPANCIES WITH ARCHITECT.

2. DO NOT SCALE DRAWINGS.

3. SEE STRUCTURAL, MECHANICAL AND ELECTRICAL DRAWINGS FOR MORE INFORMATION.

4. SEE SHEET AE602 FOR GLAZING TYPES.

CLIENT

UDOT CONNECTING COMMUNITIES

STATION #2434
6072 E. EMIGRATION CANYON RD.
PARLEY'S CANYON, UTAH

DESIGNER

ARCHIPLEX GROUP
architecture · planning · design services
255 Crossroad Square
Salt Lake City, UT 84115
P:(801) 961-7070
F:(801) 961-7373

CONSULTANTS

REGISTRATION

STATE OF UTAH
RALPH M. STANISLAW
05-310519-0301
3-4-09
LICENSED ARCHITECT

ISSUE		
2	3-4-09	Addendum #2
	2-17-09	Addendum #1
	01-09	Revised Contruction Doc.
	10-08	Construction Documents
	8-20-08	90% Review Submittal
MARK	DATE	DESCRIPTION

ARCHIPLEX PROJECT NO:	0728.02
DFCM PROJECT NO:	08211900
DRAWN BY:	A. PHILLIPS
CHECKED BY:	R. STANISLAW
SCALE:	1/8"=1'-0"
DATE:	JANUARY, 2009

KEY PLAN

SHEET TITLE

DOOR SCHEDULE AND DETAILS

AE601

© 2004 ARCHIPLEX GROUP

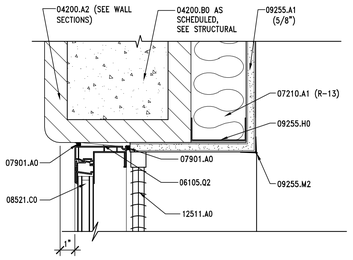

XJJ-AE07-AE602-E1

E1 | WINDOW HEAD DETAIL

AE602 | REF. AE602 | SCALE: 3" = 1'-0"

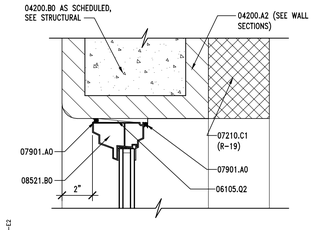

XJJ-AE07-AE602-E2

E2 | WINDOW HEAD DETAIL

AE602 | REF. AE602 | SCALE: 3" = 1'-0"

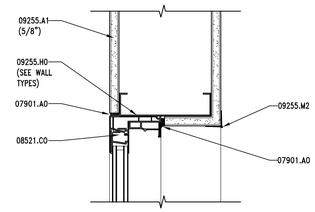

XFC-AE07-AE602-E3

E3 | WINDOW HEAD DETAIL

AE602 | REF. AE602 | SCALE: 3" = 1'-0"

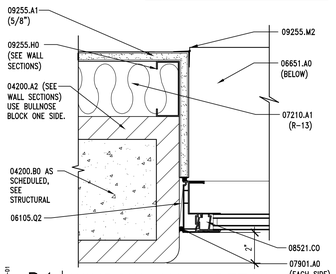

XJJ-AE07-AE602-D1

D1 | WINDOW JAMB DETAIL

AE602 | REF. AE602 | SCALE: 3" = 1'-0"

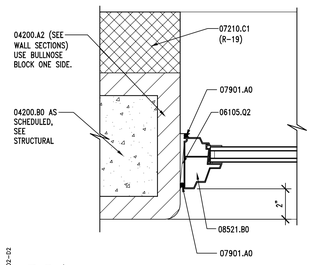

XJJ-AE07-AE602-D2

D2 | WINDOW JAMB DETAIL

AE602 | REF. AE602 | SCALE: 3" = 1'-0"

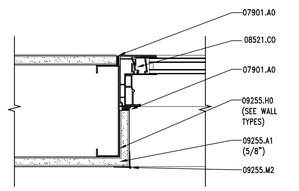

XFC-AE07-AE602-D3

D3 | WINDOW JAMB DETAIL

AE602 | REF. AE602 | SCALE: 3" = 1'-0"

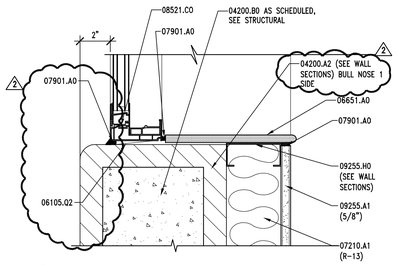

XJJ-AE07-AE602-C1

C1 | WINDOW SILL DETAIL

AE602 | REF. AE602 | SCALE: 3" = 1'-0"

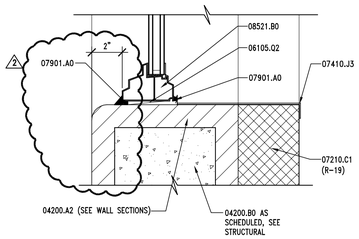

XJJ-AE07-AE602-C2

C2 | WINDOW SILL DETAIL

AE602 | REF. AE602 | SCALE: 3" = 1'-0"

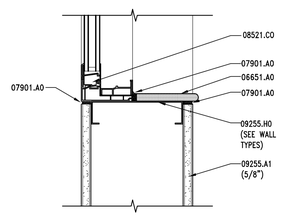

XFC-AE07-AE602-C3

C3 | WINDOW SILL DETAIL

AE602 | REF. AE602 | SCALE: 3" = 1'-0"

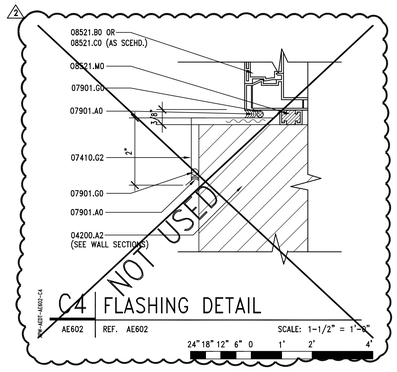

XFC-AE07-AE602-C4

C4 | FLASHING DETAIL

AE602 | REF. AE602 | SCALE: 1-1/2" = 1'-0"

ROOM FINISH SCHEDULE

	ROOM NAME & NUMBER	FLOOR	BASE	WALLS				DOOR/FRAMES	P. LAM.	CEILING	S. SURF.	TOILET PART.	REMARKS
				WEST	EAST	NORTH	SOUTH						
101	MAINTENANCE BAY	F1	–	–	W1	W1 & W4	W1 & W2	D1 & D2	–	C3	–	–	PAINT ALL EXPOSED WOOD @ WORKBENCH NAVAJO WHITE OR EQUAL
102	REPAIR GARAGE	F1	–	W5	W1 & W2	W1 & W4	W1 & W4	D1 & D2	–	C3	–	–	PAINT STAIR & RAILING D1
103	STORAGE ROOM	F1	B1	W2	W2	W2	W2	D1	P1	C2	–	–	–
104	RESTROOM	F3	B2	W3 & W2	W3 & W2	W3 & W2	W3 & W2	D1	–	C1	–	T1	USE BULLNOSE TILE AT TOP OF WAINSCOT
105	OFFICE	F2	B1	W2	W2	W2	W2	D1	–	C2	–	–	–
106	REPAIR GARAGE	F1	–	W1	W5	W1	W1	D1 & D2	–	C3	–	–	–
201	MECHANICAL ROOM	F2	B1	W2	W2	W2	W2	D1	–	C3	–	–	–
202	CORRIDOR	F2	B1	W2	W2	W2	W2	D1 & D2	–	C2	–	–	–
203	TRAINING ROOM	F2	B1	W2	W2	W2	W2	D1	P1 & P2	C2	SS1	–	–

ROOM FINISH LEGEND

FLOOR

F1. CONCRETE FLOOR, WITH WATER PROOF ADD MIXTURE & OLIOPHOBIC TOPICAL SEALER.

F2. 12" x 12" VINYL COMPOSITION TILE – ARMSTRONG STANDARD EXCELON IMPERIAL TEXTURE #51858–SANDRIFT WHITE OR EQUAL

F3. 2" x 2" CERAMIC TILE – DALTILE, KEYSTONES, ELEMENTAL TAN SPECLE D175, SPECKLE W/MAPEI GROUT #05 – CHAMOIS OR EQUAL

BASE

B1. 4" RUBBER BASE – JOHNSONITE #49 – BEIGE OR EQUAL

B2. 2" x 2" COVED TILE BUILT UP BASE – DALTILE, #M858 – KEYSTONES, ELEMENTAL TAN SPECKLE SPECKLE W/MAPEI GROUT #05 – CHAMOIS OR EQUAL

WALL

W1. PLYWOOD PANEL: C–C GRADE PLYWOOD – PAINTED BENJAMIN MOORE – NAVAJO WHITE OR EQUAL

W2. GYPSUM BOARD – PAINTED BENJAMIN MOORE – NAVAJO WHITE OR EQUAL

W3. 4 1/4" x 4 1/4" CERAMIC WALL TILE – DALTILE #X735 – ALMOND – MATTE FINISH W/1/2" x 6" FLAT TOP LINER – DALTILE ARTISAN BROWN #0144 – SEMI–GLOSS FINISH OR EQUAL W/MAPEI GROUT #39 – IVORY OR EQUAL.

W4. EXPOSED STRUCTURE – PAINTED BENJAMIN MOORE – NAVAJO WHITE OR EQUAL.

W5. PAINTED CMU – NAVAJO WHITE OR EQUAL.

DOOR & FRAMES

D1. PAINTED – ICI #427 – DEERFIELD OR EQUAL

D2. MATCH EXTERIOR COLOR SCHEDULE – SEE SHEET AE201

PLASTIC LAMINATE

P1. WILSONART #4781–60 SUNSTONE OR EQUAL

P2. WILSONART #4794–60 WINDSWEPT BRONZE OR EQUAL

SOLID SURFACE

SS1. SOLID SURFACE COUNTER TOP – COLOR TO BE SELECTED BY ARCHITECT.

CEILING

C1. GYPSUM BOARD – PAINTED BENJAMIN MOORE – NAVAJO WHITE OR EQUAL

C2. ARMSTRONG ULTIMA TEGULAR WITH BEVELED EDGE FINE TEXTURE WITH HUMIGUARD PLUS COLOR: WHITE OR EQUAL

C3. EXPOSED STRUCTURE – PAINTED BENJAMIN MOORE – NAVAJO WHITE OR EQUAL.

TOILET PARTITION

T1. SOLID PHENOLIC PARTITIONS WILSON ART #4794.60 WINDSWEPT BRONZE OR EQUAL

KEYNOTES

04200.A2 CMU (SIZE)
04200.B0 GROUT SOLID

06105.02 SHIM AS REQUIRED
06651.A0 1/2" WHITE SOLID SURFACE WINDOW SILL

07210.A1 BATT INSULATION (R–VALUE)
07210.C1 RIGID INSULATION (CONTINUOUSLY ADHERED TO CMU) W/FOIL FACED VAPOR BARRIER TOWARDS INTERIOR (R–VALUE)
07410.G2 FLASHING – FINISH TO MATCH WINDOWS
2 ~~07410.J3 SILL FLASHING – FINISH TO MATCH WINDOWS~~
07901.A0 CONT. SEALANT
07901.G0 BACKER ROD

08521.B0 FIXED VINYL WINDOW
08521.C0 VINYL WINDOW W/SLIDING GLASS PANEL
08521.M0 SILL STARTER, SET IN SEALANT

09255.A1 GYPSUM BOARD (THICKNESS)
09255.H0 METAL STUD
09255.M2 METAL CORNER BEAD (TYP)

12511.A0 HORIZONTAL LOUVER BLINDS

GENERAL NOTES

1. FIELD VERIFY ALL EXISTING CONDITIONS AND THEIR COMPATIBILITY WITH NEW CONSTRUCTION PRIOR TO THE COMMENCEMENT OF WORK. COORDINATE DISCREPANCIES WITH ARCHITECT.

2. DO NOT SCALE DRAWINGS

3. ALL FLASHING TO BE PAINTED OR PRE–FINISHED TO MATCH WINDOW FRAMES

4. SEE SPECIFICATIONS FOR ALL GLAZING TYPES.

5. ALL INTERIOR WALL AND CEILING FINISHES SHALL BE CLASS C: FLAME SPREAD 76–200; SMOKE–DEVELOPED 0–450. EXCEPTION: MATERIALS, OTHER THAN TEXTILES, TESTED IN ACCORDANCE WITH SECTION 803.2.

6. AS PER SPECIFICATION SECTION 09900.1.2.B CONTRACTOR TO FIELD PAINT ALL EXPOSED BARE AND COVERED PIPES AND DUCTS (INCLUDING COLOR CODING), HANGERS, EXPOSED STEEL AND IRON WORK, AND PRIMED METAL SURFACES OR MECHANICAL AND ELECTRICAL EQUIPMENT.

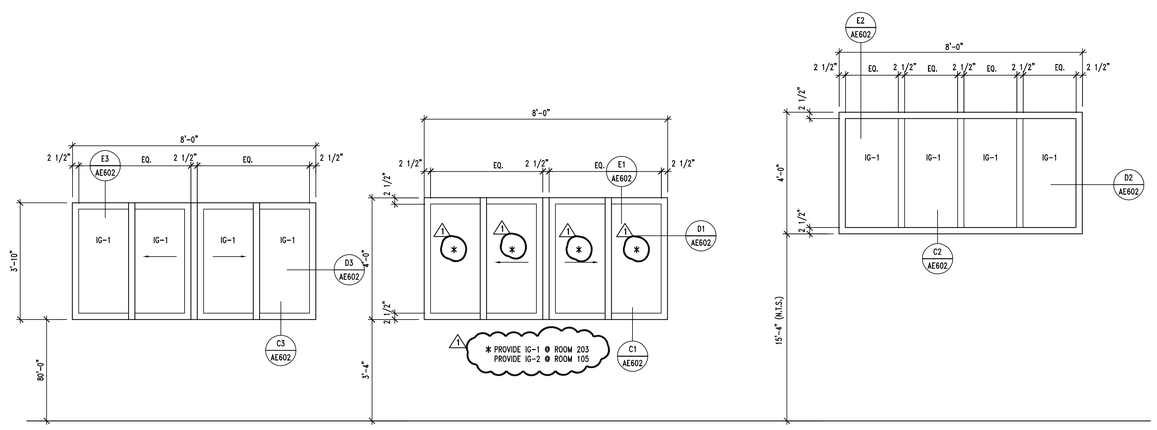

TYPE WA | TYPE WB | TYPE WC

A3 | WINDOW TYPES

AE602 | REF. AE101 | SCALE: 1/4" = 1'-0"

CLIENT

UDOT CONNECTING COMMUNITIES

STATION #2434
6072 E. EMIGRATION CANYON RD.
PARLEY'S CANYON, UTAH

DESIGNER

ARCHIPLEX GROUP
architecture · planning · design services
255 Crossroad Square
Salt Lake City, UT 84115
P:(801) 961–7070
F:(801) 961–7373

CONSULTANTS

REGISTRATION

STATE OF UTAH
RALPH M. STANISLAW
95-8108B-0301
3-4-09
LICENSED ARCHITECT

ISSUE

MARK	DATE	DESCRIPTION
2	3–4–09	Addendum #2
1	2–17–09	Addendum #1
	01–09	Revised Contruction Doc.
	10–08	Construction Documents
	8–20–08	90% Review Submittal

ARCHIPLEX PROJECT NO:	0728.02
DFCM PROJECT NO:	08211900
DRAWN BY:	A. PHILLIPS
CHECKED BY:	R. STANISLAW
SCALE:	AS SHOWN
DATE:	JANUARY, 2009

KEY PLAN

SHEET TITLE

WINDOW FRAME TYPES, GLAZING & FINISH SCHEDULE AND DETAILS

AE602

© 2004 ARCHIPLEX GROUP

KEYNOTES

02513.A0	ASPHALT CONCRETE PAVING
03053.A0	CONCRETE WATER PROOFING ADMIXTURE
03300.D0	CONCRETE PAD
03300.H1	CONCRETE PIER – SEE STRUCTURAL
05120.B1	STEEL COLUMN – SEE STRUCTURAL – GALVANIZED
055510.F1	STEEL STRINGER – (SIZE) – GALVANIZED
055521.A3	1 1/2" O.D. PIPE GUARDRAIL – GALVANIZED
055521.B3	1 1/2" O.D. PIPE HANDRAIL – GALVANIZED
05530.C1	METAL GRATE PANEL – GALV.
05530.C2	METAL GRATE TREAD – GALV.

GENERAL NOTES

1. FIELD VERIFY ALL EXISTING CONDITIONS AND THEIR COMPATIBILITY WITH NEW CONSTRUCTION PRIOR TO THE COMMENCEMENT OF WORK. COORDINATE DISCREPANCIES WITH ARCHITECT.

2. DO NOT SCALE DRAWINGS.

3. SEE CIVIL, STRUCTURAL, PLUMBING & ELECTRICAL DRAWINGS FOR MORE INFORMATION.

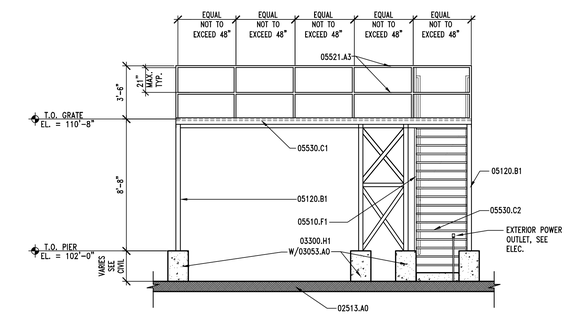

B2 | WASH RACK ELEVATION
AE701 | REF. AE701 | SCALE: 1/4" = 1'-0"

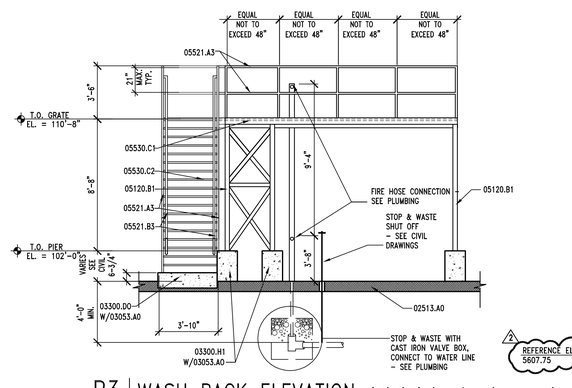

B3 | WASH RACK ELEVATION
AE701 | REF. AE701 | SCALE: 1/4" = 1'-0"

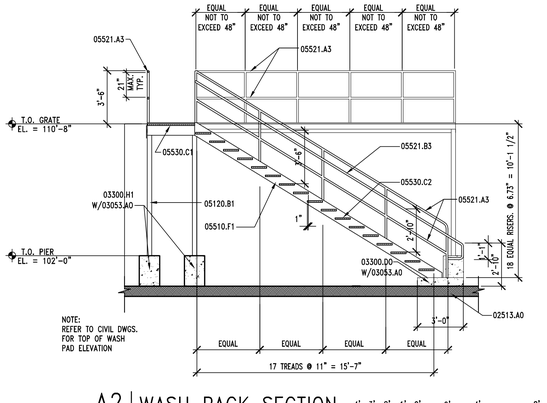

A2 | WASH RACK SECTION
AE701 | REF. AE701 | SCALE: 1/4" = 1'-0"

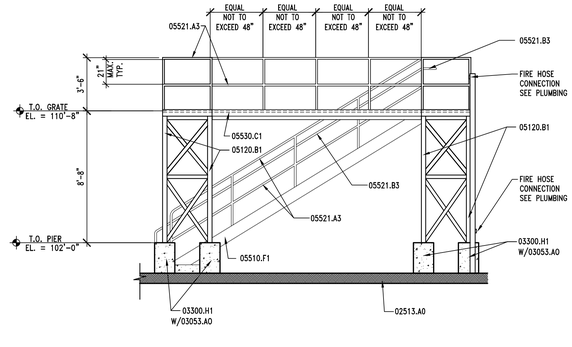

A3 | WASH RACK ELEVATION
AE701 | REF. AE701 | SCALE: 1/4" = 1'-0"

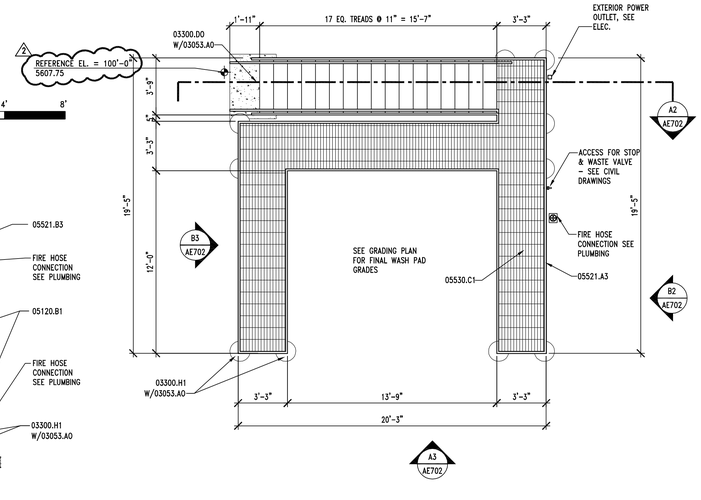

A5 | WASH RACK PLAN
AE701 | REF. AE701 | SCALE: 1/4" = 1'-0"

PLAN NORTH

CLIENT

UDOT CONNECTING COMMUNITIES

STATION #2434
6072 E. EMIGRATION CANYON RD.
PARLEY'S CANYON, UTAH

DESIGNER

ARCHIPLEX GROUP
architecture · planning · design services
255 Crossroad Square
Salt Lake City, UT 84115
P:(801) 961-7070
F:(801) 961-7373

CONSULTANTS

REGISTRATION

STATE OF UTAH
RALPH M. STANISLAW
05-3108EB-0301
3-4-09
LICENSED ARCHITECT

ISSUE

MARK	DATE	DESCRIPTION
2	3-4-09	Addendum #2
	2-17-09	Addendum #1
	01-09	Revised Contruction Doc.
	10-08	Construction Documents
	8-20-08	90% Review Submittal

ARCHIPLEX PROJECT NO:	0728.02
DFCM PROJECT NO:	08211900
DRAWN BY:	B. BEECHER
CHECKED BY:	R. STANISLAW
SCALE:	1/4" – 1'-0"
DATE:	JANUARY, 2009

KEY PLAN

SHEET TITLE

WASH RACK PLAN, SECTION & ELEVS.

AE701

© 2004 ARCHIPLEX GROUP

KEYNOTES

02200.A0	COMPACT FILL – SEE CIVIL
02200.B0	GRAVEL BASE
02513.A0	ASPHALT CONCRETE PAVING
03053.A0	CONCRETE WATER PROOFING ADMIXTURE
03300.C1	FOOTING – SEE STRUCTURAL
03300.H1	CONCRETE PIER – SEE STRUCTURAL
03300.N1	REINFORCED CONCRETE PIERS – SEE STRUCTURAL
03300.P8	CHAMFER EDGE
05120.A1	STEEL BEAM GALVANIZED – SEE STRUCTURAL
05120.B1	STEEL COLUMN GALVANIZED – SEE STRUCTURAL
05500.Z0	CHAIN – GALVANIZED

GENERAL NOTES

1. FIELD VERIFY ALL EXISTING CONDITIONS AND THEIR COMPATIBILITY WITH NEW CONSTRUCTION PRIOR TO THE COMMENCEMENT OF WORK. COORDINATE DISCREPANCIES WITH ARCHITECT.
2. DO NOT SCALE DRAWINGS.
3. SEE STRUCTURAL FOR ADDITIONAL DIMENSIONS.
4. SEE CIVIL DRAWINGS FOR EXACT GRADES.

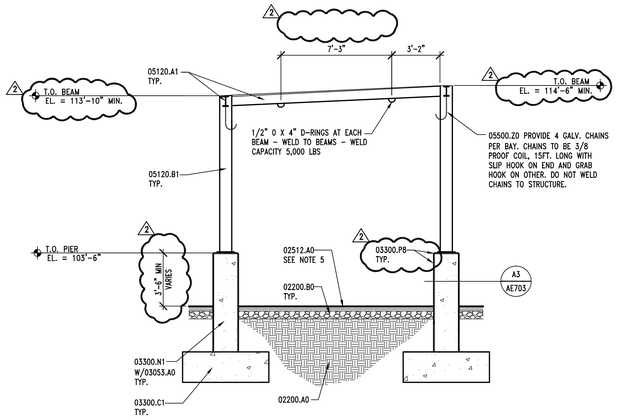

C4 | SANDER RACKS SECTION 4' 3' 2' 1' 0' 2' 4' 8'
AE703 | REF. AE703 | SCALE: 1/4" = 1'-0"

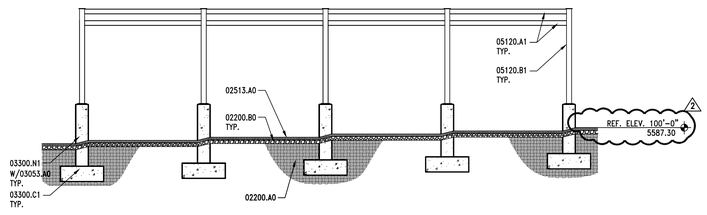

B3 | SANDER RACKS ELEVATION WEST 8' 6' 4' 2' 0' 4' 8' 16'
AE703 | REF. AE703 | SCALE: 1/8" = 1'-0"

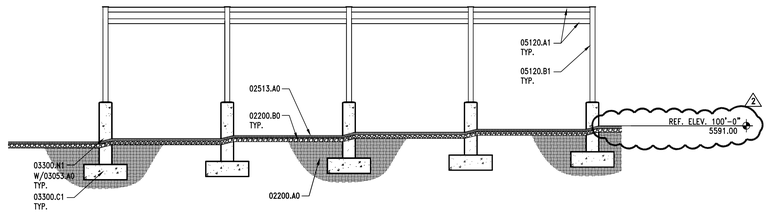

B4 | SANDER RACKS ELEVATION EAST 8' 6' 4' 2' 0' 4' 8' 16'
AE703 | REF. AE703 | SCALE: 1/8" = 1'-0"

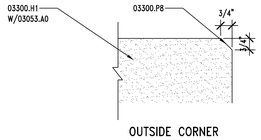

OUTSIDE CORNER

A3 | CHAMFER DETAILS 4" 3" 2" 1" 0 2" 4" 8"
AE704 | REF. AE704 & AE705 | SCALE: 3" = 1'-0"

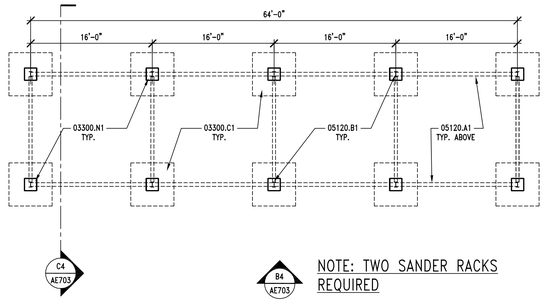

NOTE: TWO SANDER RACKS REQUIRED

A4 | SANDER RACKS – PLAN 8' 6' 4' 2' 0' 4' 8' 16'
AE703 | REF. AE703 | SCALE: 1/8" = 1'-0"

CLIENT

UDOT CONNECTING COMMUNITIES

STATION #2434
6072 E. EMIGRATION CANYON RD.
PARLEY'S CANYON, UTAH

DESIGNER

ARCHIPLEX GROUP
architecture · planning · design services
255 Crossroad Square
Salt Lake City, UT 84115
P:(801) 961-7070
F:(801) 961-7373

CONSULTANTS

REGISTRATION

STATE OF UTAH
RALPH M. STANISLAW
96-0306B-0001
3-4-09
LICENSED ARCHITECT

ISSUE

MARK	DATE	DESCRIPTION
2	3-4-09	Addendum #2
	2-17-09	Addendum #1
	01-09	Revised Contruction Doc.
	10-08	Construction Documents
	8-20-08	90% Review Submittal

ARCHIPLEX PROJECT NO:	0728.02
DFCM PROJECT NO:	08211900
DRAWN BY:	A. PHILLIPS
CHECKED BY:	R. STANISLAW
SCALE:	AS SHOWN
DATE:	JANUARY, 2009

KEY PLAN

SHEET TITLE

SITE STRUCTURES SANDER RACK PLAN, SECTION &ELEVATION

AE703

© 2004 ARCHIPLEX GROUP

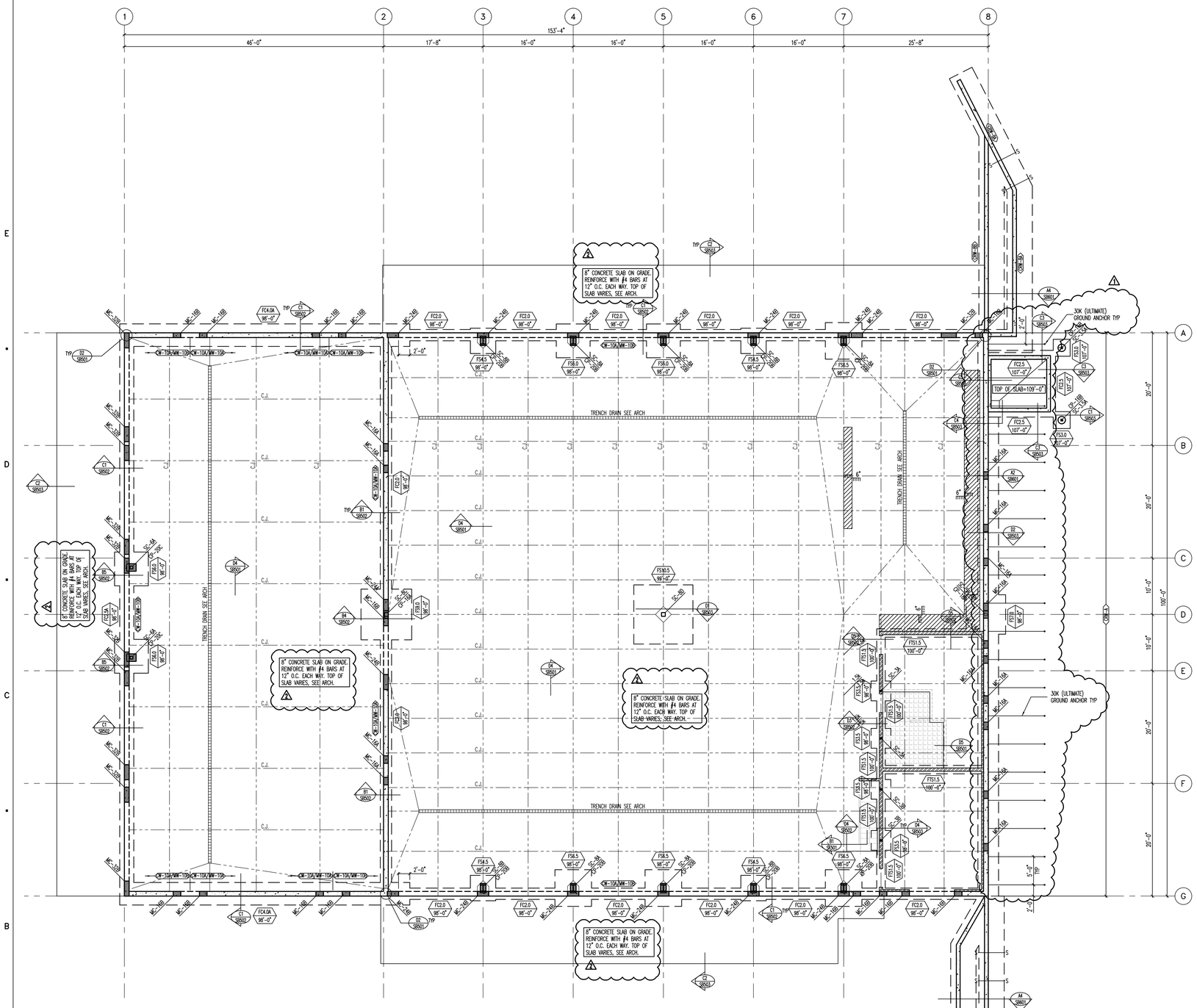

FOOTING AND FOUNDATION PLAN

SCALE: 1/8"=1'-0"

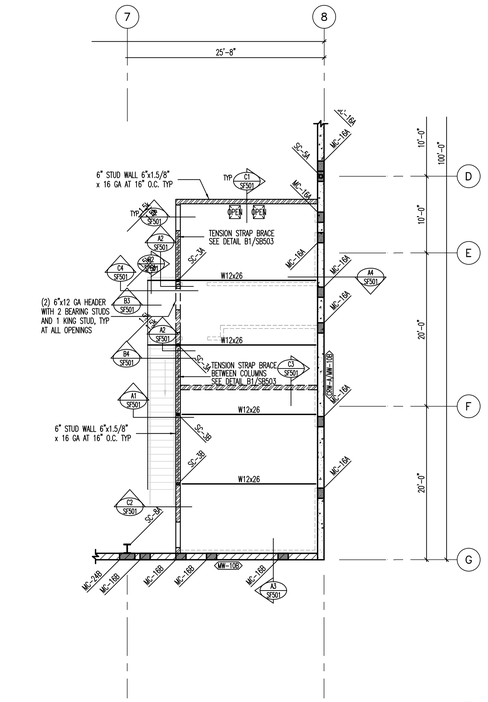

MEZZANINE FRAMING PLAN

SCALE: 1/8"=1'-0"

MASONRY S-NOTE-FT01

MARKS AND SYMBOLS LEGEND

- SECTION MARK / SHEET NUMBER
- FOOTING DESIGNATION / TOP OF FOOTING ELEVATION
- S——S INDICATES FOOTING STEP, SEE DETAIL D1/S8501
- INDICATES CONCRETE WALL.
- INDICATES MASONRY WALL.
- INDICATES METAL STUD WALL WHICH EXTENDS ABOVE MEZZANINE.
- DEPRESS FOUNDATION WALL AND POUR SLAB OVER. SEE DETAIL C1/S8502 AND B1/S8502
- INDICATES DEPRESSED SLAB, SEE ARCHITECTURAL PLANS.
- CRW-x INDICATES CONCRETE RETAINING WALL TYPE, SEE SCHEDULE ON SHEET SB601.
- CW-x INDICATES CONCRETE FOUNDATION WALL TYPE, SEE SCHEDULE ON SHEET SB601.
- CW-x/MW-x INDICATES MASONRY WALL (AND TYPE) OVER CONCRETE WALL (AND TYPE), SEE SCHEDULES ON SHEET SB601, SF601.
- 1 INDICATES LOCATION OF GROUND ANCHOR CAPABLE OF RESISTING 30k ULTIMATE IN TENSION
- 8" INDICATES FILL DEPTH, SEE GENERAL STRUCTURAL NOTES ON SHEET SF001.
- FCxx INDICATES CONTINUOUS FOOTING. SEE SCHEDULE ON SHEET SB601.
- FSxx INDICATES SPOT FOOTING. SEE SCHEDULE ON SHEET SB601.
- FTSxx INDICATES THICKENED SLAB FOOTING. SEE SCHEDULE ON SHEET SB601.
- C.J. INDICATES CONTROL/CONSTRUCTION JOINT. SEE DETAILS D4/S8501 AND D5/S8501.
- CP-x INDICATES CONCRETE PIER. SEE SCHEDULE ON SHEET SB601.
- SC-x INDICATES STEEL COLUMN. SEE SCHEDULE ON SHEET SF601.
- MC-x INDICATES MASONRY COLUMN TYPE. SEE SCHEDULE ON SHEET SF601.
- MCJ INDICATES MASONRY CONTROL JOINT, SEE DETAIL B1/S8501.

FOOTING AND FOUNDATION PLAN NOTES

1. COORDINATE LOCATION OF DEPRESSED SLABS, SLOPED SLABS, AND FLOOR DRAINS WITH ARCHITECTURAL AND MECHANICAL DRAWINGS.
2. SEE ARCHITECTURAL AND CIVIL DRAWINGS FOR EXTERIOR CONCRETE WORK AT DOORS, SIDEWALKS, ETC.
3. SEE ARCHITECTURAL DRAWINGS FOR CONTROL JOINT LOCATIONS.
4. SEE "EARTHWORK" NOTES ON SHEET SJ001 AND DETAIL B3/S8501 FOR MINIMUM FILL REQUIRED BENEATH FOOTINGS.
5. ALL SPOT FOOTINGS SHALL BE CENTERED UNDER COLUMNS (UNO).
6. SEE DETAILS D1/S8502 AND D2/S8502 FOR CONDITION WHERE BURIED PIPES RUN PARALLEL AND PERPENDICULAR TO FOOTINGS.
7. SEE DETAIL D4/S8501 FOR TYPICAL CONTROL/CONSTRUCTION JOINTS IN CONCRETE SLAB ON GRADE.
8. SEE DETAIL C1/S8501 FOR SLAB REINFORCING WHERE CONTROL JOINTS ARE DISCONTINUOUS.
9. SEE DETAIL C2/S8501 FOR ADDITIONAL REINFORCING AT MISCELLANEOUS OPENINGS IN MASONRY WALLS.
10. SEE DETAIL C3/S8501 FOR ADDITIONAL REINFORCING AT MISCELLANEOUS OPENINGS IN CONCRETE WALLS.
11. SEE DETAIL C5/S8501 FOR CONDITION AT RECESSES IN MASONRY WALLS.
12. SEE DETAIL B1/S8501 FOR TYPICAL CONTROL JOINTS IN MASONRY WALLS.
13. SEE DETAIL B2/S8501 FOR TERMINATION OF HORIZONTAL REINFORCING IN MASONRY WALLS.
14. SEE DETAIL D2/S8503 AND D3/S8503 FOR ANCHORAGE OF HOUSEKEEPING PADS.
15. VERIFY ALL FLOOR OPENINGS FOR MECHANICAL SHAFTS, STAIRS, ETC. WITH ARCHITECTURAL AND MECHANICAL DRAWINGS.
16. SEE DETAILS D1/SF501 FOR FRAMING AROUND MISCELLANEOUS FLOOR OPENINGS.
17. LOCATE MISCELLANEOUS MECHANICAL OPENINGS BETWEEN JOISTS, NOT UNDERNEATH THEM.
18. COORDINATE SIZE AND LOCATION OF ALL MECHANICAL OPENINGS WITH ARCHITECTURAL AND MECHANICAL DRAWINGS.
19. SEE ARCHITECTURAL DRAWINGS FOR DIMENSIONS TO STEEL COLUMNS.

CLIENT

UDOT CONNECTING COMMUNITIES

STATION #2434
6072 E. EMIGRATION CANYON RD.
PARLEY'S CANYON, UTAH

DESIGNER

ARCHIPLEX GROUP
architecture · planning · design services
255 Crossroad Square
Salt Lake City, UT 84115
P:(801) 961-7070
F:(801) 961-7373

CONSULTANTS

"Engineering Results"
BHB Consulting Engineers
A Professional Corporation
2766 South Main Street
Salt Lake City, Utah 84115
Phone: 801.355.5656
Fax: 801.355.5950
Email: bhb@bhbengineers.com

REGISTRATION

LICENSED PROFESSIONAL ENGINEER No. 323922 GERALD R. McKENZIE STATE OF UTAH

ISSUE

MARK	DATE	DESCRIPTION
3	3-04-09	ADDENDUM 2
2	2-09	ADDENDUM 1
	10-08	CONSTRUCTION DOCUMENTS
	8-20-08	90% REVIEW SUBMITTAL

PROJECT NO:	08284
DFCM PROJECT NO:	08211900
DRAWN BY:	CB
CHECKED BY:	RS
SCALE:	
DATE:	FEBRUARY 17, 2009

KEY PLAN

SHEET TITLE

FOOTING AND FOUNDATION PLAN

SB101

© 2008 ARCHIPLEX GROUP

CONCRETE FOOTING SCHEDULE

MARK	WIDTH	LENGTH	DEPTH	REINFORCING CROSSWISE No.	SIZE	LENGTH	SPACING	REINFORCING LENGTHWISE No.	SIZE	LENGTH	SPACING	COMMENTS
FTS1.5	1'-6"	CONT	12"	–	–	–	–	2	#4	CONT	EQ	THICKENED SLAB
FTS2.0	2'-0"	CONT	12"	–	–	–	–	3	#4	CONT	EQ	THICKENED SLAB
FC1.5	1'-6"	CONT	12"	–	–	–	–	2	#5	CONT	EQ	.
FC2.0	2'-0"	CONT	12"	–	–	–	–	3	#4	CONT	EQ	
FC2.5	2'-6"	CONT	12"	–	#5	2'-0"	14"	3	#5	CONT	EQ	
FC2.5A	2'-6"	CONT	12"	–	#6	2'-0"	10"	5	#6	CONT	EQ	
FC3.0	3'-0"	CONT	12"	–	#5	2'-6"	14"	3	#5	CONT	EQ	
FC4.0A	4'-0"	CONT	18"	–	#6	3'-6"	10"	5	#6	CONT	EQ	TOP
					#6	3'-6"	10"	6	#6	CONT	EQ	BOTTOM
FS3.0	3'-0"	3'-0"	12"	3	#5	2'-6"	EQ	3	#5	2'-6"	EQ	
FS3.5	3'-6"	3'-6"	12"	3	#5	3'-0"	EQ	3	#5	3'-0"	EQ	
FS4.0	4'-0"	4'-0"	12"	4	#5	3'-6"	EQ	4	#5	3'-6"	EQ	
FS4.5	4'-6"	4'-6"	12"	4	#5	4'-0"	EQ	4	#5	4'-0"	EQ	
FS5.0	5'-0"	5'-0"	12"	5	#5	4'-6"	EQ	5	#5	4'-6"	EQ	
FS5.5	5'-6"	5'-6"	13"	5	#5	5'-0"	EQ	5	#5	5'-0"	EQ	
FS6.0	6'-0"	6'-0"	14"	6	#5	5'-6"	EQ	6	#5	5'-6"	EQ	
FS6.5	6'-6"	6'-6"	15"	8	#5	6'-0"	EQ	8	#5	6'-0"	EQ	
FS7.0	7'-0"	7'-0"	16"	6	#6	6'-6"	EQ	6	#6	6'-6"	EQ	
FS7.5	7'-6"	7'-6"	17"	7	#6	7'-0"	EQ	7	#6	7'-0"	EQ	
FS8.0	8'-0"	8'-0"	18"	8	#6	7'-6"	EQ	8	#6	7'-6"	EQ	
FS8.5	8'-6"	8'-6"	19"	9	#6	8'-0"	EQ	9	#6	8'-0"	EQ	
FS9.0	9'-0"	9'-0"	20"	10	#6	8'-6"	EQ	10	#6	8'-6"	EQ	
FS9.5	9'-6"	9'-6"	21"	11	#6	9'-0"	EQ	11	#6	9'-0"	EQ	
FS10.0	10'-0"	10'-0"	22"	9	#7	9'-6"	EQ	9	#7	9'-6"	EQ	
FS10.5	10'-6"	10'-6"	23"	10	#7	10'-0"	EQ	10	#7	10'-0"	EQ	
FS11.0	11'-0"	11'-0"	24"	11	#7	10'-6"	EQ	11	#7	10'-6"	EQ	

CONCRETE FOOTING NOTES:
1. PLACE ALL FOOTING REINFORCING IN THE BOTTOM OF THE FOOTING WITH 3" CLEAR CONCRETE COVER (UNO).
2. TOP REINFORCING, WHERE OCCURS, SHALL BE PLACED IN THE TOP OF THE FOOTING WITH 2" MINIMUM CONCRETE COVER.
3. IF FOOTINGS ARE EARTH-FORMED, FOOTINGS SHALL BE 6" LONGER AND WIDER THAN SCHEDULED.
4. SEE GENERAL STRUCTURAL NOTES FOR ADDITIONAL REQUIREMENTS.
5. SOME SCHEDULED FOOTINGS MAY NOT BE USED, SEE FOOTING AND FOUNDATION PLAN FOR FOOTING MARKS.

D1 CONCRETE FOOTING SCHEDULE

NO SCALE

SCHED_CONC_FTG-C3000-S2500

CONCRETE REINFORCING BAR LAP SPLICE SCHEDULE

BAR SIZE	f'c = 3000psi REGULAR CLASS A	B	TOP CLASS A	B	f'c = 4000psi REGULAR CLASS A	B	TOP CLASS A	B	f'c = 5000psi REGULAR CLASS A	B	TOP CLASS A	B	f'c = 6000psi REGULAR CLASS A	B	TOP CLASS A	B
#3	13"	17"	17"	21"	12"	16"	16"	21"	12"	16"	16"	21"	12"	16"	16"	21"
#4	17"	22"	22"	28"	15"	19"	19"	25"	13"	17"	17"	22"	12"	16"	16"	21"
#5	21"	27"	27"	35"	18"	24"	24"	31"	16"	21"	21"	27"	15"	19"	19"	25"
#6	27"	36"	36"	46"	24"	31"	31"	40"	21"	28"	28"	36"	20"	25"	25"	33"
#7	37"	48"	48"	63"	32"	42"	42"	54"	29"	38"	38"	49"	27"	34"	34"	44"
#8	49"	64"	64"	82"	42"	55"	55"	71"	38"	49"	49"	64"	35"	45"	45"	58"
#9	62"	80"	80"	104"	54"	70"	70"	90"	48"	62"	62"	81"	44"	57"	57"	74"
#10	78"	102"	102"	132"	68"	88"	88"	115"	61"	79"	79"	102"	56"	72"	72"	94"
#11	96"	125"	125"	162"	83"	108"	108"	141"	76"	97"	97"	126"	68"	88"	88"	115"

CONCRETE REINFORCING BAR LAP SPLICE NOTES:
1. THIS SCHEDULE SHALL BE USED FOR ALL BAR SPLICES IN CONCRETE WALLS, UNLESS NOTED OTHERWISE.
2. CLASS 'A' SPLICES MAY BE USED ONLY IN CASES WHERE 50% OR LESS OF THE BARS ARE SPLICED WITHIN THE LAP SPLICE LENGTH.
3. CLASS 'B' SPLICES SHALL BE USED FOR ALL SPLICES UNLESS THE REQUIREMENTS OF NOTE No. 2 ABOVE ARE MET.
4. TIES AND STIRRUPS SHALL NOT BE SPLICED.
5. SPLICES FOR BUNDLED BARS:
   a. FOR BUNDLED BARS OF THREE OR LESS, LAP SPLICE LENGTHS SHALL BE MULTIPLIED BY 1.2.
   b. FOR BUNDLED BARS OF FOUR OR MORE, LAP SPLICE LENGTHS SHALL BE MULTIPLIED BY 1.33.
   c. INDIVIDUAL BAR SPLICES WITHIN A BUNDLE SHALL NOT OVERLAP.
   d. ENTIRE BUNDLES SHALL NOT BE LAP SPLICED.
6. FOR ALL LIGHTWEIGHT CONCRETE, LAP LENGTHS SHALL BE MULTIPLIED BY 1.3.
7. FOR ALL EPOXY COATED BARS, LAP LENGTHS SHALL BE MULTIPLIED BY 1.3 FOR TOP BARS AND 1.5 FOR REGULAR BARS.
8. TOP BARS ARE CLASSIFIED AS HORIZONTAL BARS WHERE 12", OR MORE, OF FRESH CONCRETE IS CAST BELOW THE REINFORCING BAR.
9. SEE GENERAL STRUCTURAL NOTES FOR ADDITIONAL REQUIREMENTS.

D2 CONCRETE REINFORCING BAR LAP SPLICE SCHEDULE

NO SCALE

SCHED_CONC_REINF-01

CONCRETE WALL SCHEDULE

MARK	THICKNESS	REINFORCING VERTICAL	HORIZONTAL	TOP AND BOTTOM	WALL TYPE	COMMENTS
CW-10A	10"	#4 AT 16" O.C.	#5 AT 15" O.C.	(1) #5	A	.

CONCRETE FOUNDATION WALL NOTES:
1. SEE GENERAL STRUCTURAL NOTES FOR ADDITIONAL REQUIREMENTS.
2. CONCRETE FOUNDATION WALLS NOT DESIGNATED ON PLANS SHALL BE REINFORCED AS FOLLOWS:

THICKNESS	VERTICAL REINFORCING	HORIZONTAL REINFORCING
6"	#4 BARS AT 18" O.C.	#4 BARS AT 16" O.C.
8"	#4 BARS AT 18" O.C.	#4 BARS AT 12" O.C.
10"	#4 BARS AT 16" O.C.	#5 BARS AT 15" O.C.
12"	#4 BARS AT 18" O.C. E.F.	#4 BARS AT 16" O.C. E.F.

ABBREVIATIONS:
E.F. EACH FACE
I.F. INSIDE FACE
O.F. OUTSIDE FACE

WALL REINFORCING PLACEMENT TYPES:

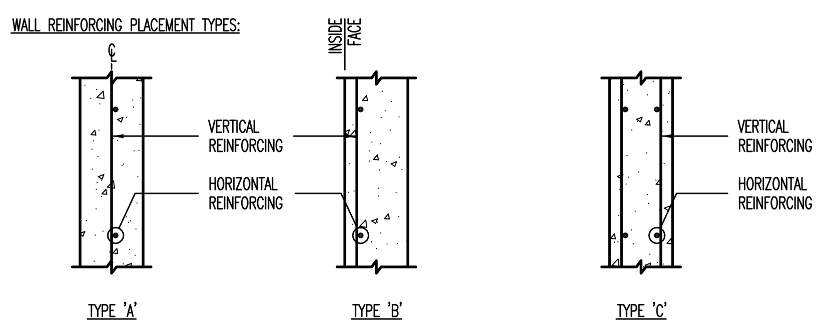

C1 CONCRETE WALL SCHEDULE

NO SCALE

SCHED_CONC_WALL-01

CONCRETE PIER SCHEDULE

MARK	PIER SIZE	REINFORCING VERTICAL	TIES	TYPE	COMMENTS
CP-16A	16"xWT	(4) #4	#3 AT 8" O.C.	F	.
CP-16B	16"ø	(6) #5	#3 AT 8" O.C.	D	
CP-18A	18" x WT	(8) #5	(3) #3 AT 8" O.C.	E	
CP-20A	20"x20"	(8) #8	(3) #3 AT 8" O.C.	C	
CP-20B	12"x20"	(6) #5	(2) #3 AT 8" O.C.	A	
CP-20C	14"x20"	(8) #5	(2) #3 AT 8" O.C.	B	

CONCRETE PIER NOTES:
1. INSTALL (3) SETS OF TIES AT 3" O.C. AT TOP OF ALL PIERS (UNO).
2. RUN HORIZONTAL CONCRETE WALL REINFORCING CONTINUOUS THROUGH PIER WHEN PIER IS POURED MONOLITHICALLY WITH CONCRETE WALL.
3. SEE GENERAL STRUCTURAL NOTES FOR ADDITIONAL REQUIREMENTS.

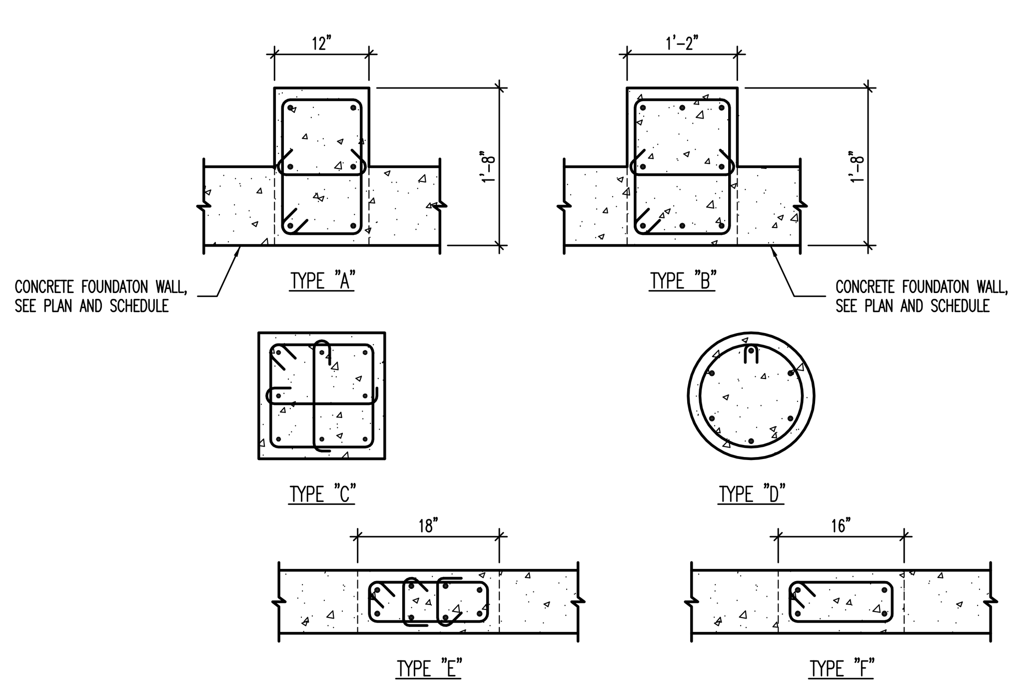

A1 CONCRETE PIER SCHEDULE

NO SCALE

SCHED_CONC_PIER-01

CONCRETE RETAINING WALL SCHEDULE

MARK	HT	A	B	TW/'X'	TF	V SIZE	V SPACE	H SIZE	H SPACE	T SIZE	T SPACE	C SIZE	C SPACE	D SIZE	D SPACE	COMMENTS
CRW-A	12'-6"	1'-0"	3'-0"	10"/2.1/2"	14"	#5	10"	#4	16"	#5	12"	#5	14"	#4	14"	

CONCRETE RETAINING WALL NOTES:
1. 'V' BARS SHALL NOT BE SPLICED BELOW MID-HEIGHT OF WALL.
2. SEE GENERAL STRUCTURAL NOTES FOR ADDITIONAL REQUIREMENTS.

ABBREVIATIONS:
E.F. EACH FACE
I.F. INSIDE FACE
O.F. OUTSIDE FACE

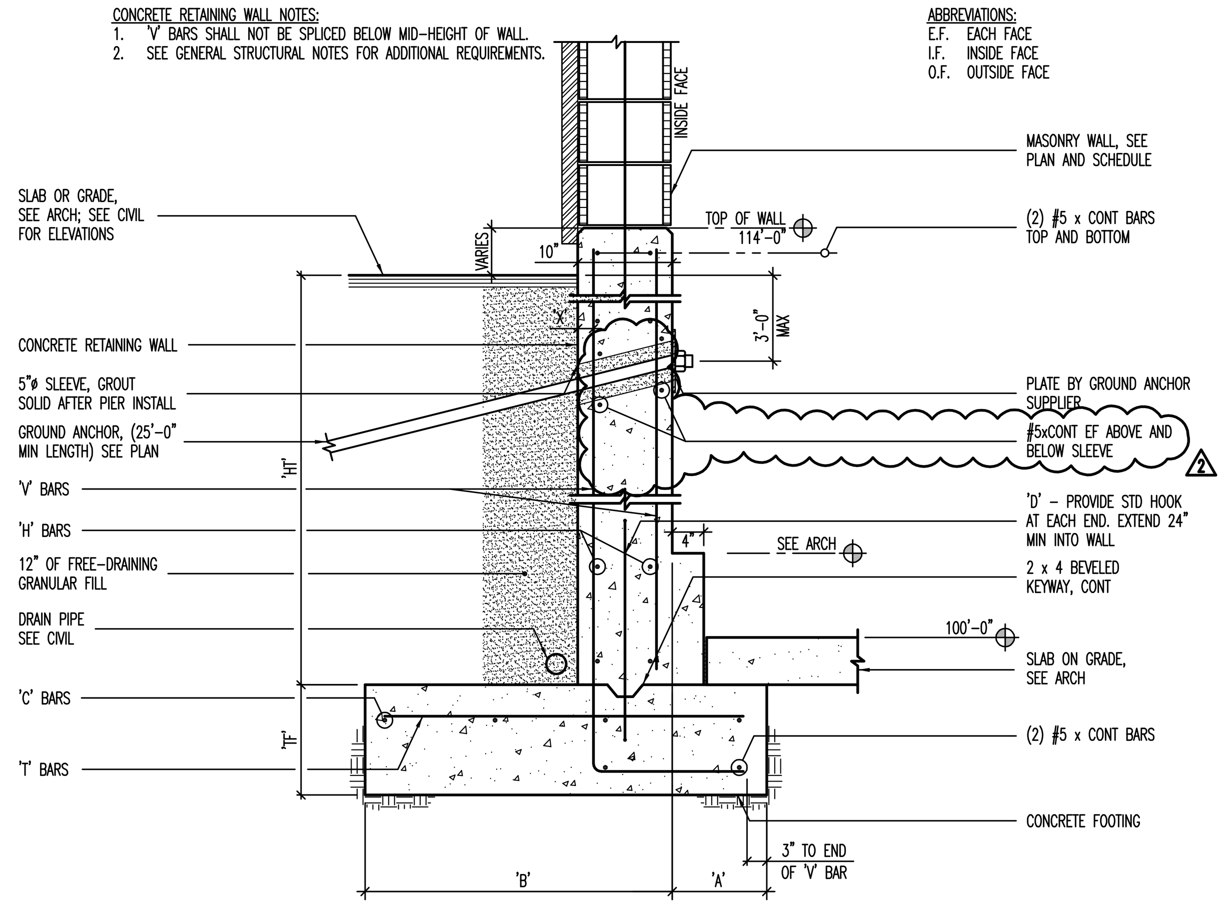

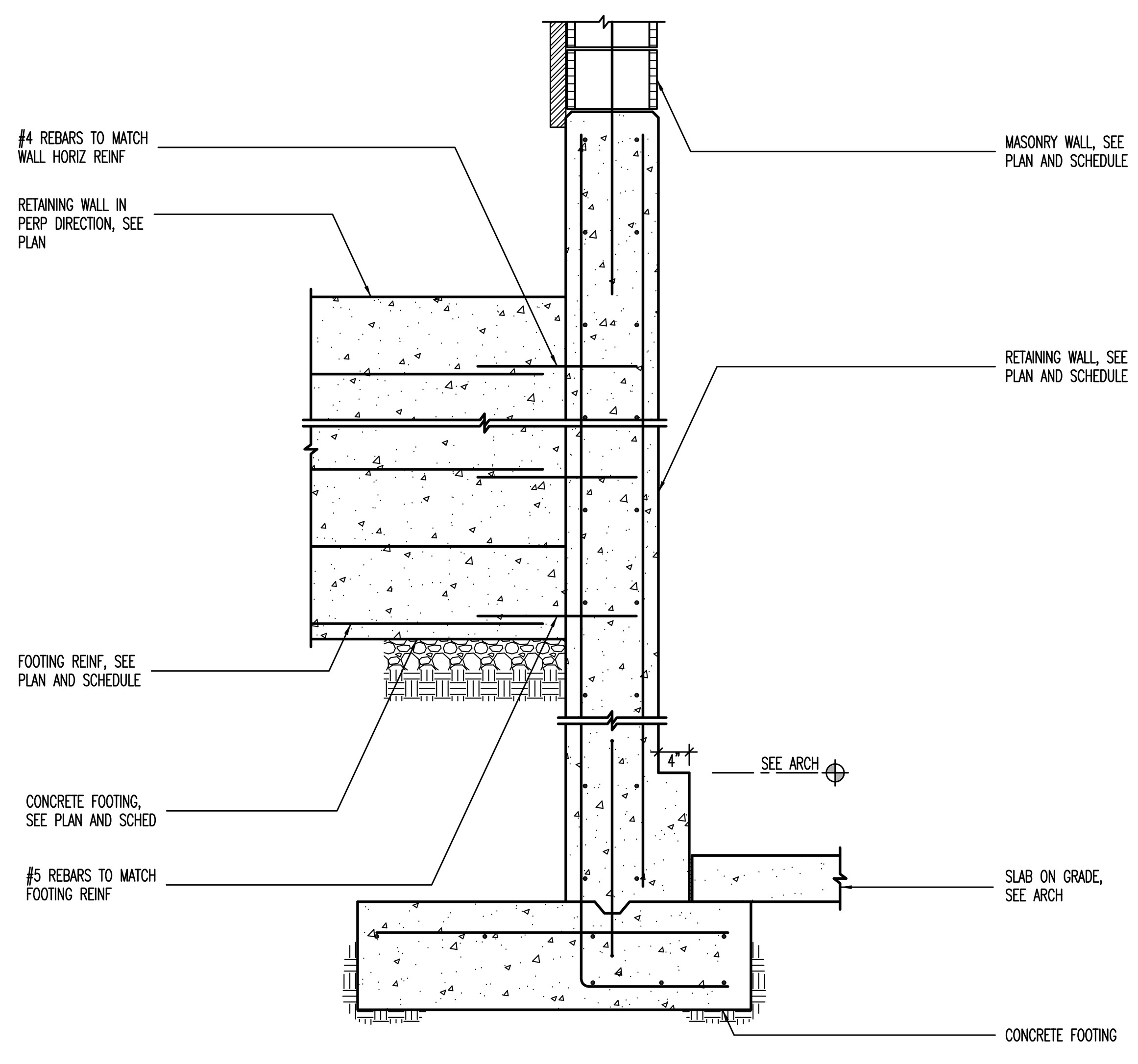

CONDITION AT PERPENDICULAR RETAINING WALL

A2 CONCRETE RETAINING WALL SCHEDULE-TYP AT BUILDING

NO SCALE

SCHED_CONC_WALL-02

CONCRETE RETAINING WALL SCHEDULE

MARK	HT	A	B	TW/'X'	TF	V SIZE	V SPACE	H SIZE	H SPACE	T SIZE	T SPACE	C SIZE	C SPACE	D SIZE	D SPACE	COMMENTS
CRW-8A	5'-0"	1'-0"	3'-6"	8"/3.1/4"	12"	#4	14"	#4	12"	#5	14"	#5	16"	#4	16"	VERT REINF IN EARTH SIDE
CRW-8B	6'-0"	1'-0"	3'-6"	8"/2.1/2"	12"	#5	14"	#4	12"	#5	14"	#5	16"	#4	16"	VERT REINF IN EARTH SIDE USE KEY AT FOOTING

2

CONCRETE RETAINING WALL NOTES:
1. 'V' BARS SHALL NOT BE SPLICED BELOW MID-HEIGHT OF WALL.
2. WHERE 'HT' IS GREATER THAN 9'-0", THEN ONE HALF OF THE 'V' BARS MAY BE DISCONTINUED AT MID-HEIGHT OF WALL.
3. SEE GENERAL STRUCTURAL NOTES FOR ADDITIONAL REQUIREMENTS.

ABBREVIATIONS:
E.F. EACH FACE
I.F. INSIDE FACE
O.F. OUTSIDE FACE

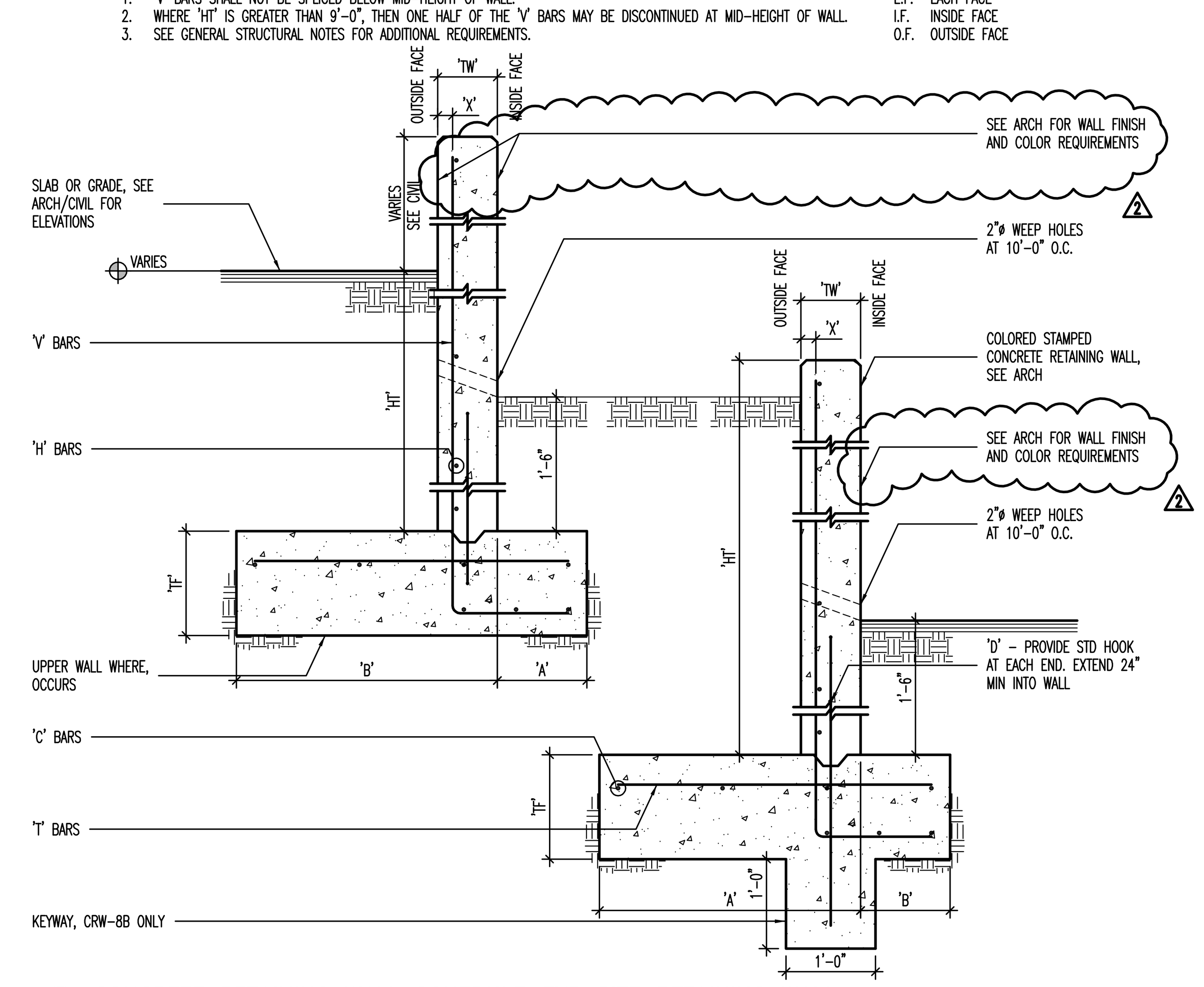

A4 CONCRETE RETAINING WALL SCHEDULE-TYP SITE RETAINING WALL

NO SCALE

SCHED_CONC_WALL-02

CLIENT

UDOT CONNECTING COMMUNITIES

STATION #2434
6072 E. EMIGRATION CANYON RD.
PARLEY'S CANYON, UTAH

DESIGNER

ARCHIPLEX GROUP

architecture • planning • design services

255 Crossroad Square
Salt Lake City, UT 84115
P:(801) 961-7070
F:(801) 961-7373

CONSULTANTS

"Engineering Results"
BHB Consulting Engineers
A Professional Corporation
2766 South Main Street
Salt Lake City, Utah 84115
Phone: 801.355.5656
Fax: 801.355.5950
Email: bhb@bhbengineers.com

REGISTRATION

LICENSED PROFESSIONAL ENGINEER No. 323922 GERALD R. McKENZIE STATE OF UTAH

ISSUE

MARK	DATE	DESCRIPTION
2	3-04-09	ADDENDUM 2
1	2-09	ADDENDUM 1
	10-08	CONSTRUCTION DOCUMENTS
	8-20-08	90% REVIEW SUBMITTAL

PROJECT NO:	08284
DFCM PROJECT NO:	08211900
DRAWN BY:	CB
CHECKED BY:	RS
SCALE:	
DATE:	FEBRUARY 17, 2009

KEY PLAN

SHEET TITLE

SCHEDULES

SB601

© 2008 ARCHIPLEX GROUP

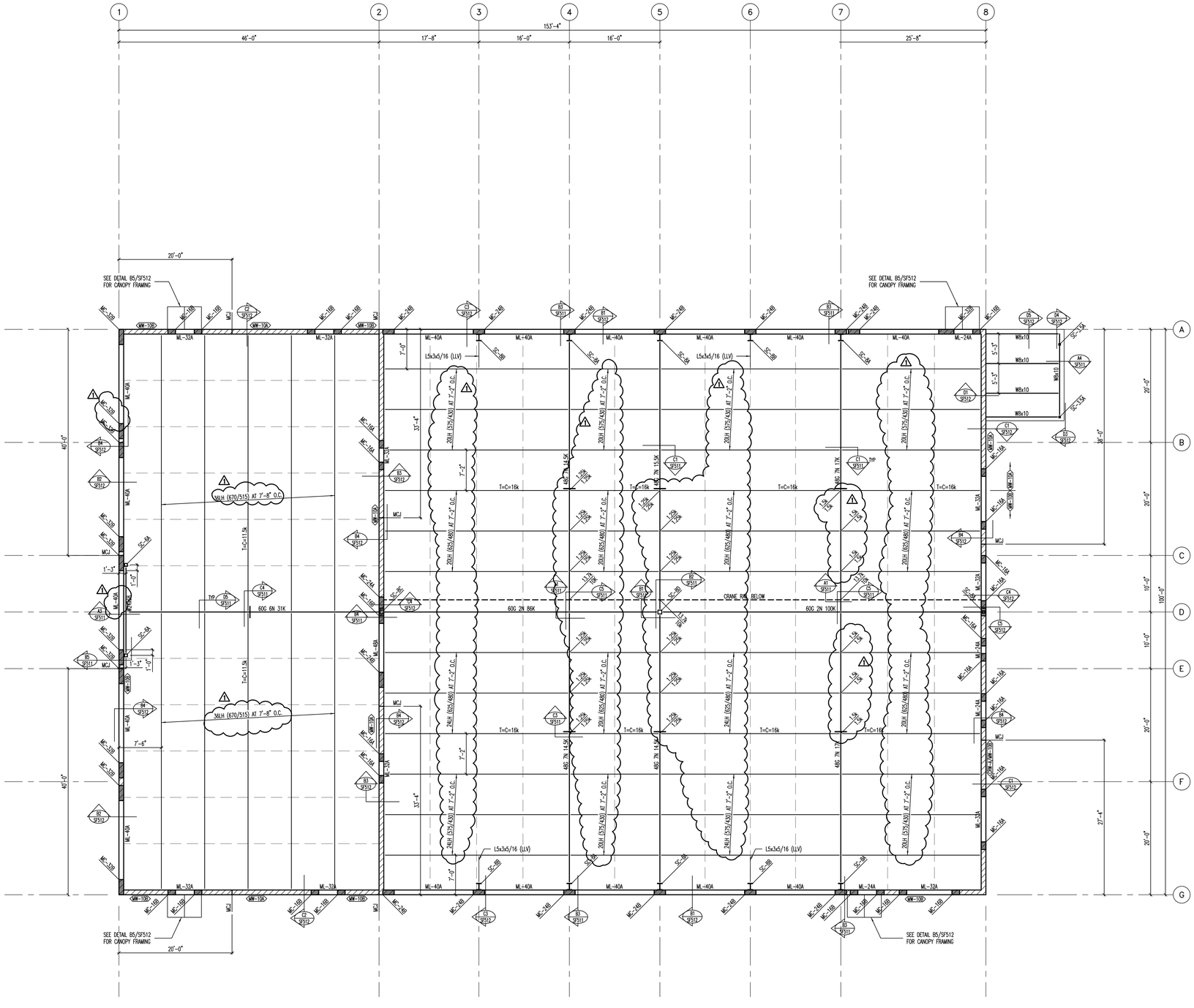

ROOF FRAMING PLAN

SCALE: 1/8"=1'-0"

MARKS AND SYMBOLS LEGEND

MASONRY_S-NOTE-ROOF

- SECTION MARK / SHEET NUMBER
- INDICATES MASONRY WALL
- INDICATES METAL ROOF DECK. SEE GENERAL STRUCTURAL ON SHEET S0001.
- INDICATES JOIST TOP CHORD TIES. SEE DETAIL C3/SF511 AND C4/SF511.
- MW-x — INDICATES MASONRY WALL TYPE, SEE SCHEDULE ON SHEET SF601.
- * — INDICATES THAT THESE JOISTS SHALL BE DESIGNED FOR AN ADLOAD OF 1000# AT ANY POINT.
- T=C=x — INDICATES THAT, DUE TO SEISMIC FORCES, THE ROOF JOIST TOP CHORD SHALL BE DESIGNED FOR THE ADDITIONAL TENSION/COMPRESSION LOAD SHOWN. DUE TO SEISMIC. NO 1/3 INCREASE ALLOWED.
- _LH (**/**) — INDICATES LH-SERIES JOIST WITH ALLOWABLE TOTAL LOAD / ALLOWABLE LIVE (SNOW) LOAD.
- W_x_ — INDICATES STEEL BEAM, SEE GENERAL STRUCTURAL NOTES ON SHEET SF001.
- SC-x — INDICATES STEEL COLUMN. SEE SCHEDULE ON SHEET SF601.
- MC-x — INDICATES MASONRY COLUMN TYPE. SEE SCHEDULE ON SHEET SF601.
- ML-x — INDICATES MASONRY LINTEL TYPE. SEE SCHEDULE ON SHEET SF601.
- MCJ — INDICATES MASONRY CONTROL JOINT, SEE DETAIL B1/SB501.

ROOF FRAMING PLAN NOTES

1. VERIFY ALL ROOF OPENINGS FOR MECHANICAL SHAFTS, DRAINS, ETC. WITH ARCHITECTURAL AND MECHANICAL DRAWINGS.
2. JOIST SUPPLIER SHALL DESIGN ALL ROOF JOIST BEARING ENDS AT MASONRY WALLS TO TRANSFER 1500# (ALLOWABLE) AXIAL LOAD THROUGH JOIST BEARING SHOE.
3. ALL JOISTS SHALL HAVE 5" DEEP BEARING ENDS (UNO).
4. ALL ROOF OPENINGS GREATER THAN, OR EQUAL TO, 12" x 12" SHALL BE FRAMED AS INDICATED IN DETAIL D1/SF511. FOR OPENINGS WHICH CUT LESS THAN TWO DECK FLUTES, SEE DETAIL D2/SF511.
5. SEE DETAIL D3/SF511 WHEN CONCENTRATED LOADS ARE LOCATED MORE THAN 6" FROM JOIST OR JOIST GIRDER PANEL POINT.
6. SEE DETAIL D4/SF511 WHEN MECHANICAL UNITS ARE HUNG BELOW JOISTS.
7. LOCATE MISCELLANEOUS MECHANICAL OPENINGS BETWEEN JOISTS, NOT UNDERNEATH THEM.
8. OPEN WEB STEEL JOISTS AND JOIST GIRDERS SHALL BE DESIGNED BY THE MANUFACTURER TO SUPPORT THE MECHANICAL AND LATERAL LOADS SHOWN ON THE ROOF FRAMING PLANS IN ADDITION TO THE UNIFORM AND POINT LOADS SHOWN.
9. JOIST BRIDGING SHOWN ON PLANS IS FOR REPRESENTATION ONLY; ACTUAL SIZE, QUANTITY, AND LOCATION WILL BE DETERMINED BY THE JOIST SUPPLIER PER "SJI" REQUIREMENTS. ALL BRIDGING AND BRIDGING ANCHORS NEED TO BE IN PLACE BEFORE APPLYING ANY LOADS. WHERE SKYLIGHT OR MECHANICAL UNITS/DUCTS INTERRUPT HORIZONTAL BRIDGING, PROVIDE CROSS BRIDGING AT JOIST SPACES ON EACH SIDE OF THE OPENING. WHERE DIAGONAL BRIDGING CONFLICTS WITH MECHANICAL DUCTS, REMOVE DIAGONAL BRIDGING AND REPLACE WITH HORIZONTAL BRIDGING AFTER ROOF DECK IS IN PLACE.
10. JOIST DESIGNER SHALL DESIGN JOISTS AND SUPPLY ADDITIONAL BRIDGING AS REQUIRED FOR UPLIFT DUE TO WIND. ASSUME:
    DEAD LOAD = 12psf WIND UPLIFT = 20psf (GROSS)
    NO 1/3 STRESS INCREASE ALLOWED.
11. SEE DETAIL C2/SB501 FOR ADDITIONAL REINFORCING AT MISCELLANEOUS OPENINGS IN MASONRY WALLS.
12. SEE DETAIL C5/SB501 FOR CONDITION AT RECESSES IN MASONRY WALLS.
13. SEE DETAIL B1/SB501 FOR TYPICAL CONTROL JOINTS IN MASONRY WALLS.
14. SEE DETAIL B2/SB501 FOR TERMINATION OF HORIZONTAL REINFORCING IN MASONRY WALLS.
15. SEE ARCHITECTURAL PLANS FOR DIMENSIONS TO ALL STEEL COLUMNS.

CLIENT

UDOT CONNECTING COMMUNITIES

STATION #2434
6072 E. EMIGRATION CANYON RD.
PARLEY'S CANYON, UTAH

DESIGNER

ARCHIPLEX GROUP
architecture · planning · design services
255 Crossroad Square
Salt Lake City, UT 84115
P:(801) 961-7070
F:(801) 961-7373

CONSULTANTS

"Engineering Results"
BHB Consulting Engineers
A Professional Corporation
2766 South Main Street
Salt Lake City, Utah 84115
Phone: 801.355.5656
Fax: 801.355.5950
Email: bhb@bhbengineers.com

REGISTRATION

LICENSED PROFESSIONAL ENGINEER No. 323922 GERALD R. McKENZIE STATE OF UTAH

ISSUE

MARK	DATE	DESCRIPTION
3	3-04-09	ADDENDUM 2
2	2-09	ADDENDUM 1
	10-08	CONSTRUCTION DOCUMENTS
	8-20-08	90% REVIEW SUBMITTAL

PROJECT NO:	08284
DFCM PROJECT NO:	08211900
DRAWN BY:	CB
CHECKED BY:	RS
SCALE:	
DATE:	FEBRUARY 17, 2009

KEY PLAN

SHEET TITLE

ROOF FRAMING PLAN

SF111

© 2008 ARCHIPLEX GROUP

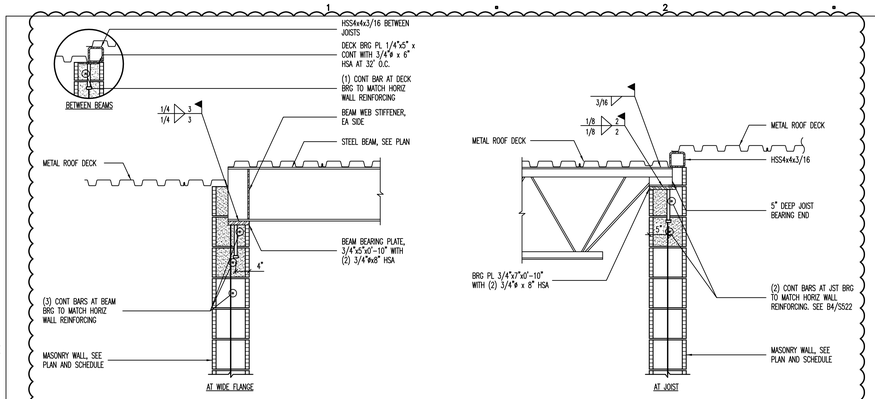

D1 CANOPY BEAM BEARING AT MASONRY WALL

NO SCALE

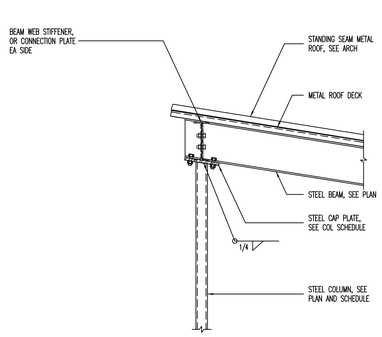

D3 OIL STORAGE CANOPY BEAM/COLUMN DETAIL

NO SCALE

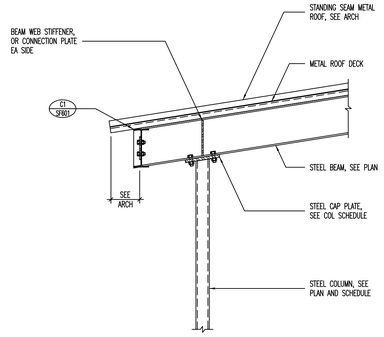

D4 OIL STORAGE CANOPY BEAM/COLUMN DETAIL

NO SCALE

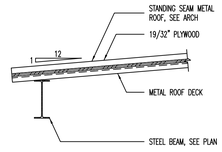

D5 EDGE OF DECK DETAIL AT OIL STORAGE CANOPY

NO SCALE

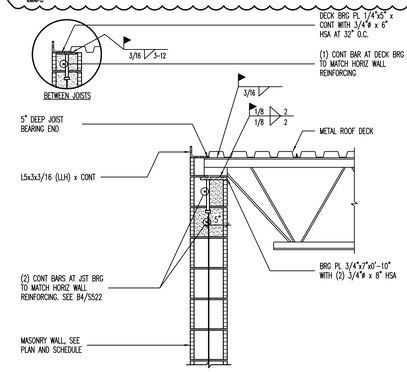

C1 TYPICAL JOIST (5" BEARING END)/DECK BEARING AT 10" MASONRY WALLS

NO SCALE

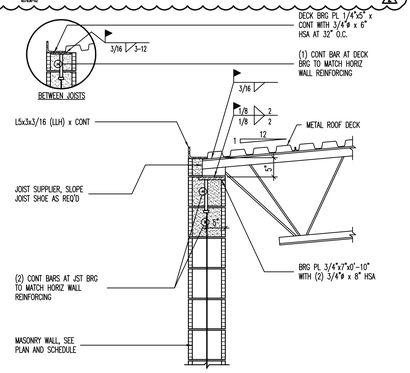

C2 TYPICAL JOIST/DECK BEARING AT MASONRY WALLS

NO SCALE

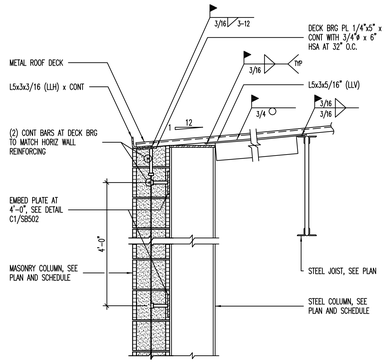

C3 STEEL COLUMN AT MASONRY WALLS

NO SCALE

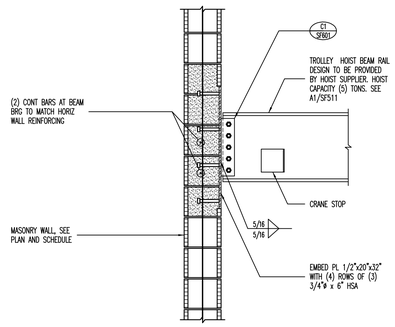

C4 CRANE RAIL BEARING

NO SCALE

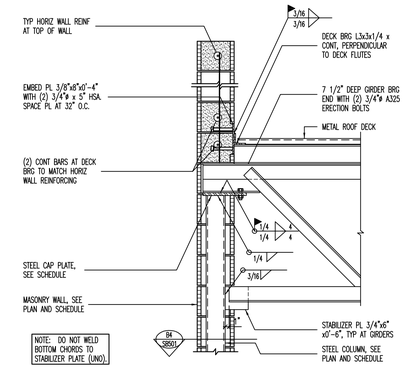

C5 TYPICAL GIRDER BEARING ON STEEL COLUMN AT 10" MASONRY WALL

NO SCALE

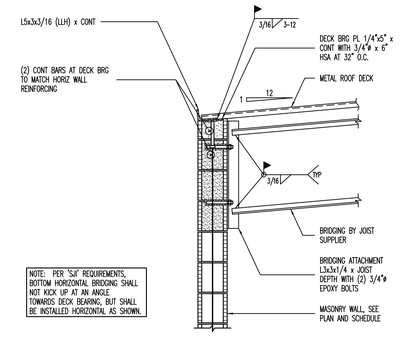

B1 TYPICAL DECK BEARING AT 10" MASONRY WALLS WITH BRIDGING ATTACHMENT

NO SCALE

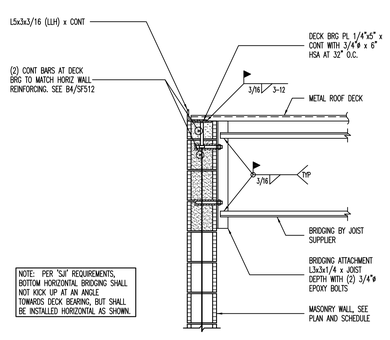

B2 TYPICAL DECK BEARING AT 10" MASONRY WALLS WITH BRIDGING ATTACHMENT

NO SCALE

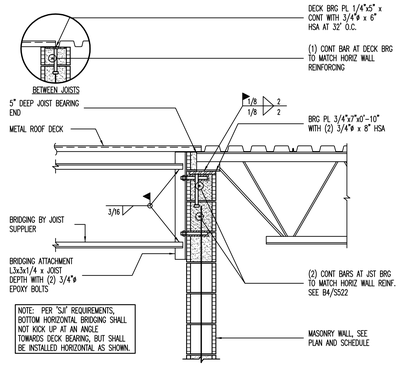

B3 TYPICAL 'K' JOIST (5" BRG END)/DECK BEARING AT 10" MASONRY WALLS WITH BRIDGING ATTACHMENT

NO SCALE

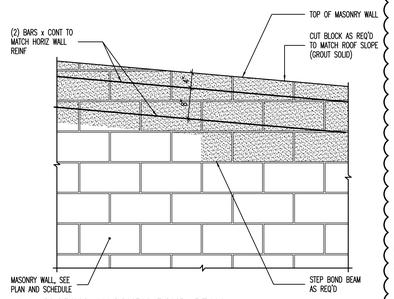

B4 SLOPING MASONRY BOND BEAM

NO SCALE

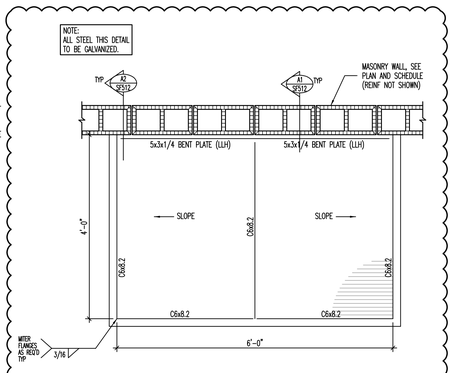

B5 ROOF FRAMING PLAN [PLAN VIEW]

NO SCALE

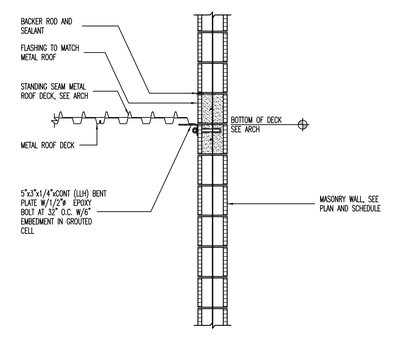

A1 LEDGER ANGLE BEARING AT MASONRY WALL

NO SCALE

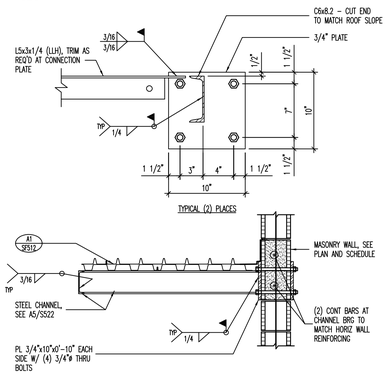

A2 STEEL CHANNEL CONNECTION DETAIL

NO SCALE

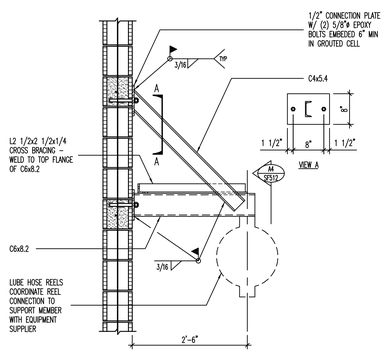

A3 HOSE REEL SUPPORT AT MASONRY WALL

NO SCALE

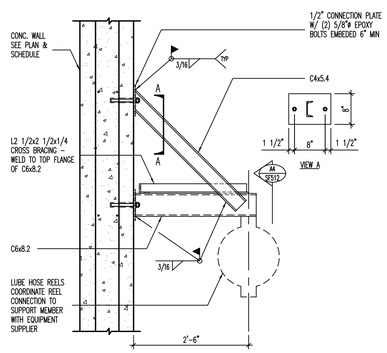

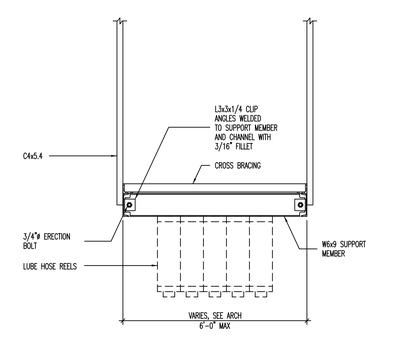

A4 HOSE REEL SUPPORT DETAIL

NO SCALE

CLIENT

UDOT CONNECTING COMMUNITIES

STATION #2434
6072 E. EMIGRATION CANYON RD.
PARLEY'S CANYON, UTAH

DESIGNER

ARCHIPLEX GROUP
architecture · planning · design services
255 Crossroad Square
Salt Lake City, UT 84115
P:(801) 961-7070
F:(801) 961-7373

CONSULTANTS

"Engineering Results"
BHB Consulting Engineers
A Professional Corporation
2766 South Main Street
Salt Lake City, Utah 84115
Phone: 801.355.5656
Fax: 801.355.5950
Email: bhb@bhbengineers.com

REGISTRATION

LICENSED PROFESSIONAL ENGINEER No. 323922 GERALD R. McKENZIE STATE OF UTAH

ISSUE

MARK	DATE	DESCRIPTION
2	3-04-09	ADDENDUM 2
1	2-09	ADDENDUM 1
	10-08	CONSTRUCTION DOCUMENTS
	8-20-08	90% REVIEW SUBMITTAL

PROJECT NO:	08284
DFCM PROJECT NO:	08211900
DRAWN BY:	CB
CHECKED BY:	RS
SCALE:	
DATE:	FEBRUARY 17, 2009

KEY PLAN

SHEET TITLE

ROOF FRAMING DETAILS

SF512

© 2008 ARCHIPLEX GROUP

Copyright (C) 2007 by PVE, Inc. Salt Lake City, Utah. All rights reserved. Unauthorized copying and/or use is illegal and subject to prosecution.

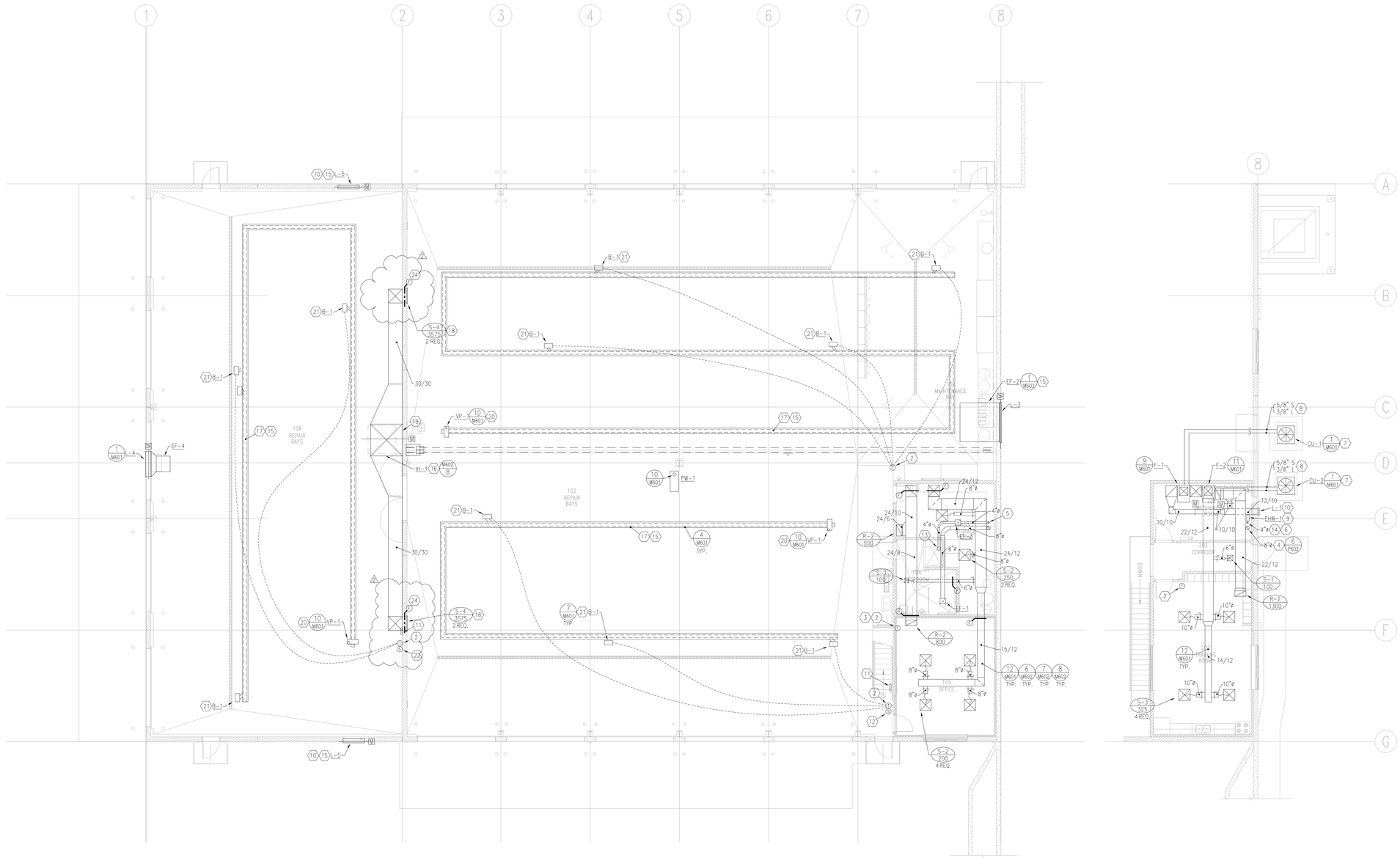

KEYED NOTES:

1. NOT USED.
2. MOUNT THERMOSTAT 5'-0" AFF.
3. THERMOSTAT TO CONTROL F-1.
4. EXTEND EXHAUST DUCT THRU ROOF.
5. 8"ø DUCT UP TO FLOOR ABOVE.
6. PROVIDE ALDES #22043 DRYER ROOF VENT CAP.
7. INSTALL CONDENSER ON 4" CONCRETE PAD. CONCRETE PAD TO BE 4" LARGER MINIMUM THAN CONDENSER.
8. PROVIDE REFRIGERANT LINE SETS AS REQUIRED BY MANUFACTURER. REFRIGERANT LINE SIZE SHOWN FOR BIDDING PURPOSES ONLY. CONTRACTOR TO PROVIDE REFRIGERANT LINES RECOMMENDED BY MANUFACTURER.
9. MOUNT EWH-1 24" AFF TO BOTTOM OF HEATER.
10. INSTALL LOUVERS PER DETAIL 4/M602. SEE ARCH DRAWINGS FOR LOCATION.
11. RADIANT HEAT SYSTEM CONTROL PANELS.
12. CARBON MONOXIDE DETECTOR. INTERLOCK THRU AUTO/ON SWITCH WITH EXHAUST FAN EF-2. LABEL SWITCH WITH LAMINATED PLASTIC LABEL.
13. PROVIDE REVERSOMATIC LINT TRAP #LT-180, MOUNT TRAP 6" ABOVE DRYER. PROVIDE ALDES #9906A DRYER WALL VENT BOX. MOUNT BOX AT THE BASE OF DRYER.
14. 4"ø GALVANIZED SHEET METAL UP THROUGH ROOF.
15. REF. ARCHITECT'S DRAWING FOR LOCATION.
16. IH-1 LOCATED ON ROOF.
17. MOUNT RADIANT HEATERS PARALLEL WITH ROLL-UP DOORS.
18. MOUNT SUPPLY GRILLE 24" AFF.
19. 68-1/2" X 68-1/2" DUCT UP TO IH-1 LOCATED ON ROOF.
20. 4" TYPE B VENT THRU ROOF. INSTALL PER MANUFACTURER'S INSTRUCTIONS.
21. 4" COMBUSTION AIR INTAKE THRU ROOF. SEE DETAIL 5/M602.
22. CARBON MONOXIDE DETECTOR. INTERLOCK WITH EF-4 THROUGH AUTO/ON SWITCH. LABEL SWITCH WITH LAMINATED PLASTIC LABEL.
23. MECHANICAL CONTRACTOR SHALL COORDINATE ANY/ALL CHANGES WITH ELECTRICAL CONTRACTOR.
24. 3-HR. FIRE DAMPERS.
25. 8"ø TYP. B FLUE. SUPPORT OFF COLUMN.

1 / M201 MECHANICAL FLOOR PLAN

SCALE: 1/8" = 1' - 0"

CLIENT

UDOT CONNECTING COMMUNITIES

STATION #2434
I-80 E.B. EXIT 134
PARLEY'S CANYON

DESIGNER

ARCHIPLEX GROUP
architecture · planning · design services
255 Crossroad Square
Salt Lake City, UT 84115
P:(801) 961-7070
F:(801) 961-7373

CONSULTANTS

PVE Inc.
Consulting Mechanical Electrical Engineers
1040 North 2200 West, Suite 100
Salt Lake City, UT 84116
Phone: (801) 359-3158
Fax: (801) 521-4114

REGISTRATION

REGISTERED PROFESSIONAL ENGINEER
ALAN D. SPENDLOVE
166911
STATE OF UTAH

ISSUE

MARK	DATE	DESCRIPTION
2	3-04-09	ADDENDUM 2
1	2-17-09	ADDENDUM 1
	1/2009	CONSTRUCTION DOCUMENTS
	8-20-08	90% REVIEW SUBMITTAL

PROJECT NO:	08105.00.01
DRAWN BY:	MJG
CHECKED BY:	ADS
SCALE:	
DATE:	JANUARY, 2009

KEY PLAN

SHEET TITLE

MECHANICAL FLOOR PLAN

M201

© 2004 ARCHIPLEX GROUP

By: User: Mar 02, 2009 - 1:34pm, Z:\archiplex Projects\DFCM\UDOT Parley's Station Improvements (07282)\Dwgs\M201-08105.00.dwg

Copyright (C) 2007 by PVE, Inc. Salt Lake City, Utah. All rights reserved. Unauthorized copying and/or use is illegal and subject to prosecution.

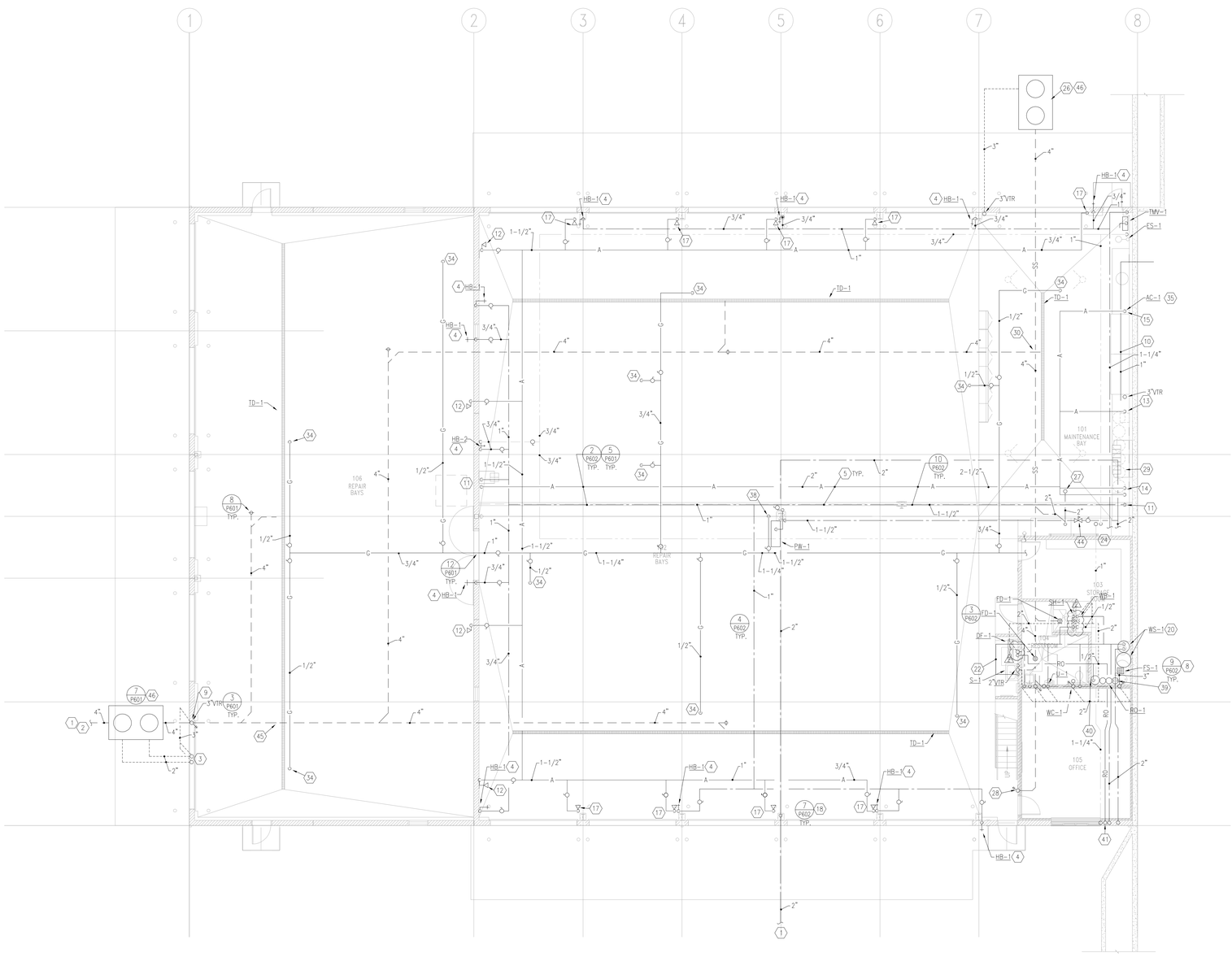

1 P201 **1st FLOOR PLUMBING PLAN**

SCALE: 1/8" = 1' - 0"

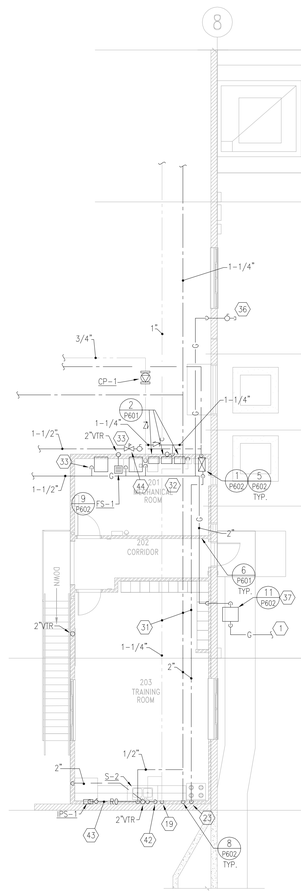

2 P201 **2nd FLOOR PLUMBING FLOOR PLAN**

SCALE: 1/8" = 1' - 0"

KEYED NOTES:

1. SEE SITE DRAWINGS FOR CONTINUATION.
2. SEE CIVIL DRAWINGS FOR INVERT ELEVATION. GENERAL CONTRACTOR IS TO COORDINATE WITH HIS SUBS TO VERIFY SITE SANITARY SEWER AND BUILDING SANITARY SEWER PIPE WILL PROPERLY CONNECT PRIOR TO INSTALLING ANY SANITARY PIPE IN THE SITE OR BUILDING. IF A PROBLEM EXISTS, THE CONTRACTOR IS TO INFORM THE ARCHITECT OF THE PROBLEM PRIOR TO INSTALLING ANY PIPE. IF PIPE IS INSTALLED AND A PROBLEM ARISES, THE CONTRACTOR, AT HIS EXPENSE, SHALL PERFORM ANY WORK REQUIRED SUCH THAT THE SANITARY PIPE CAN BE INSTALLED CORRECTLY TO CODE STANDARDS.
3. VENTS FROM SAND/OIL SEPARATOR MAY BE COMBINED AFTER THEY ARE 10" ABOVE FLOOD RIM OF SEPARATOR AND THEN CONNECTED TO REPAIR GARAGE BAY WASTE SYSTEM VENT PIPE.
4. PROVIDE PVC COVER OVER INSULATION TO 8'-0" AFF. MOUNT HB-1 3'-0" AFF.
5. ROUTE PIPING ABOVE STRUCTURE.
6. ALL WASTE PIPING 3" AND GREATER TO SLOPE ⅛" PER FOOT.
7. PIPE SLEEVES REQUIRED ON THIS PROJECT. IF CONTRACTOR FAILS TO INSTALL PIPE SLEEVES, THE CONTRACTOR SHALL REMOVE PIPE, INSTALL SLEEVE AND REINSTALL PIPE AT NO ADDITIONAL EXPENSE TO THE OWNER.
8. WATER SOFTENER DISCHARGE INTO FLOOR SINK.
9. SEE CIVIL DRAWINGS FOR EXACT LOCATION OF SAND/OIL SEPERATOR.
10. CONNECT OIL DRAIN LINE TO DRAIN PUMP. RUN DRAIN LINE OUT TO CATCH TANK. PROVIDE SHUT-OFF VALVE AND UNION. CATCH TANK FURNISHED BY OWNER, INSTALLED BY CONTRACTOR. DRAIN PUMP BY CONTRACTOR. VERIFY LOCATION.
11. CONNECT 1" COMPRESSED AIR LINE AND ¾" CW LINE TO OVERHEAD HOSE REEL. PROVIDE SHUT-OFF AND UNION. HOSE REEL BY CONTRACTOR.
12. ¾" COMPRESSED AIR DROP DOWN TO QUICK DISCONNECT. PROVIDE SHUT-OFF VALVE. VERIFY MOUNTING HEIGHT WITH OWNER. REFER TO DETAIL 5/P601.
13. DROP ¾" COMPRESSED AIR DOWN TO OIL DRAIN PUMP. PROVIDE SHUT-OFF VALVE.
14. DROP 1" COMPRESSED AIR LINE TO LUBE BARRELS. PROVIDE SHUT-OFF VALVE. LUBE BARRELS BY OWNER, INSTALLED BY CONTRACTOR.
15. AIR COMPRESSOR BY CONTRACTOR. CONNECT 2-1/2" COMPRESSED AIR LINE TO COMPRESSOR. PROVIDE SHUT-OFF VALVE AND UNION. MAKE CONNECTION TO COMPRESSOR WITH BRAIDED FLEXIBLE PIPE.
16. GAS LINE DOWN TO BURNER. PROVIDE SHUT-OFF VALVE, UNION AND APPLIANCE REGULATOR REFERENCE DETAIL 2/M603.
17. DROP 3/4" AIR LINE DOWN COLUMN FACE AND TERMINATE WITH QUICK COUPLER 3'-0" A.F.F.
18. PROVIDE SHUT OFF VALVE AT BASE OF WATER PIPE WHERE IT ENTERS THE BLDG.
19. 1" HW DOWN TO FIXTURE BELOW.
20. WATER SOFTENER AND BRINE TANK.
21. NOT USED.
22. PIPES SHOWN OUTSIDE OF WALL FOR CLARITY.
23. 2" CW DOWN TO WATER SOFTENER.
24. SEE 2/P201 FOR CONTINUATION.
25. LOCATE FLOOR SINK BETWEEN WATER HEATER AND FURNACE.
26. 4000 GALLON HOLDING TANK. TANK TO BE DESIGNED BY LICENSED ENGINEER IN THE STATE OF UTAH. SUBMIT DESIGN WITH SUBMITTALS. SEE CIVIL DRAWINGS FOR EXACT LOCATION.
27. 2" PIPE UP TO FLOOR SINK.
28. 2" PIPE UP TO KITCHEN SINK.
29. 7 EACH TOTAL HOSE REELS FOR OIL, GREASE AND LUBE.
30. COORDINATE INVERT ELEVATIONS SO PIPES DO NOT INTERFERE WITH EACH OTHER.
31. COORDINATE PIPE LOCATION WITH ELECTRICAL CONTRACTOR SO PIPES ARE NOT INSTALLED OVER ELECTRICAL PANELS.
32. 1" GAS LINE DOWN TO WATER HEATERS APPLIANCE REGULATOR. 1-1/4" PIPE TO FEED EACH WATER HEATER WITH 4 OZ. OF NATURAL GAS AFTER APPLIANCE REGULATOR.
33. 1/2" GAS LINE DOWN TO FURNACE.
34. 1/2" GAS LINE DOWN TO RADIANT HEATER BURNER.
35. REFERENCE ARCH DWGS FOR EXACT LOCATION OF THE AIR COMPRESSOR.
36. 1" GAS LINE DOWN TO 36" AFG FOR FUTURE GENERATOR. PROVIDE VALVE AND CAP. ESTIMATED GAS LOAD OF 554 CF/HR NATURAL GAS.
37. NATURAL GAS METER CAPABLE OF PROVIDING 3,290 CF/HR OF 2 PSI NATURAL GAS HAVING A HEAT CONTENT OF 803 BTU/FT³ AT A SPECIFIC GRAVITY OF 0.60.
38. 1" GAS LINE DOWN TO POWER WASHER. PROVIDE 2 PSI TO 4 OZ APPLIANCE REGULATOR.
39. CULLIGAN # AC-30, REVERSE OSMOSIS (R.O.) SYSTEM WITH 9 GALLON HOLDING TANK. RUN WASTE TO FS-1.
40. ALL PIPING AFTER R.O. SYSTEM TO BE SCH. 80 PVC PIPE.
41. R.O. WATER PIPE UP TO KITCHEN SINK ABOVE.
42. ¼" R.O. WATER UP TO CULLIGAN DESIGNER FAUCET. FAUCET TO MONITOR WATER QUALITY AND PROVIDE SIGNAL TO INDICATE WHEN TO CHANGE R.O. FILTERS.
43. ¼" R.O. WATER TO ICE MAKER VALVE.
44. WATTS #007M2QT BACKFLOW PREVENTOR.
45. RUN SS LINE UNDER TRENCH DRAIN.
46. SEE CIVIL DRAWINGS FOR EXACT LOCATION

CLIENT

UDOT CONNECTING COMMUNITIES

STATION #2434
I-80 E.B. EXIT 134
PARLEY'S CANYON

DESIGNER

ARCHIPLEX GROUP
architecture · planning · design services
255 Crossroad Square
Salt Lake City, UT 84115
P:(801) 961-7070
F:(801) 961-7373

CONSULTANTS

PVE Inc.
Consulting Mechanical Electrical Engineers
1040 North 2200 West, Suite 100
Salt Lake City, UT 84116
Phone: (801) 359-3158
Fax: (801) 521-4114

REGISTRATION

REGISTERED PROFESSIONAL ENGINEER
ALAN D. SPENDLOVE
166911
STATE OF UTAH

ISSUE

MARK	DATE	DESCRIPTION
2	3-04-09	ADDENDUM 2
1	2-17-09	ADDENDUM 1
	1/2009	CONSTRUCTION DOCUMENTS
	8-20-08	90% REVIEW SUBMITTAL

PROJECT NO:	08105.00.01
DRAWN BY:	MJG
CHECKED BY:	ADS
SCALE:	
DATE:	JANUARY, 2009

KEY PLAN

SHEET TITLE

PLUMBING FLOOR PLAN

P201

© 2004 ARCHIPLEX GROUP

By: User, Mar 02, 2009 - 1:38pm, Z:\Archiplex Projects\DFCWL\UDOT Parley's Station Improvements (07128.02)\Dwgs\P201-08105.00.dwg

Copyright (C) 2007 by PVE, Inc. Salt Lake City, Utah. All rights reserved. Unauthorized copying and/or use is illegal and subject to prosecution.

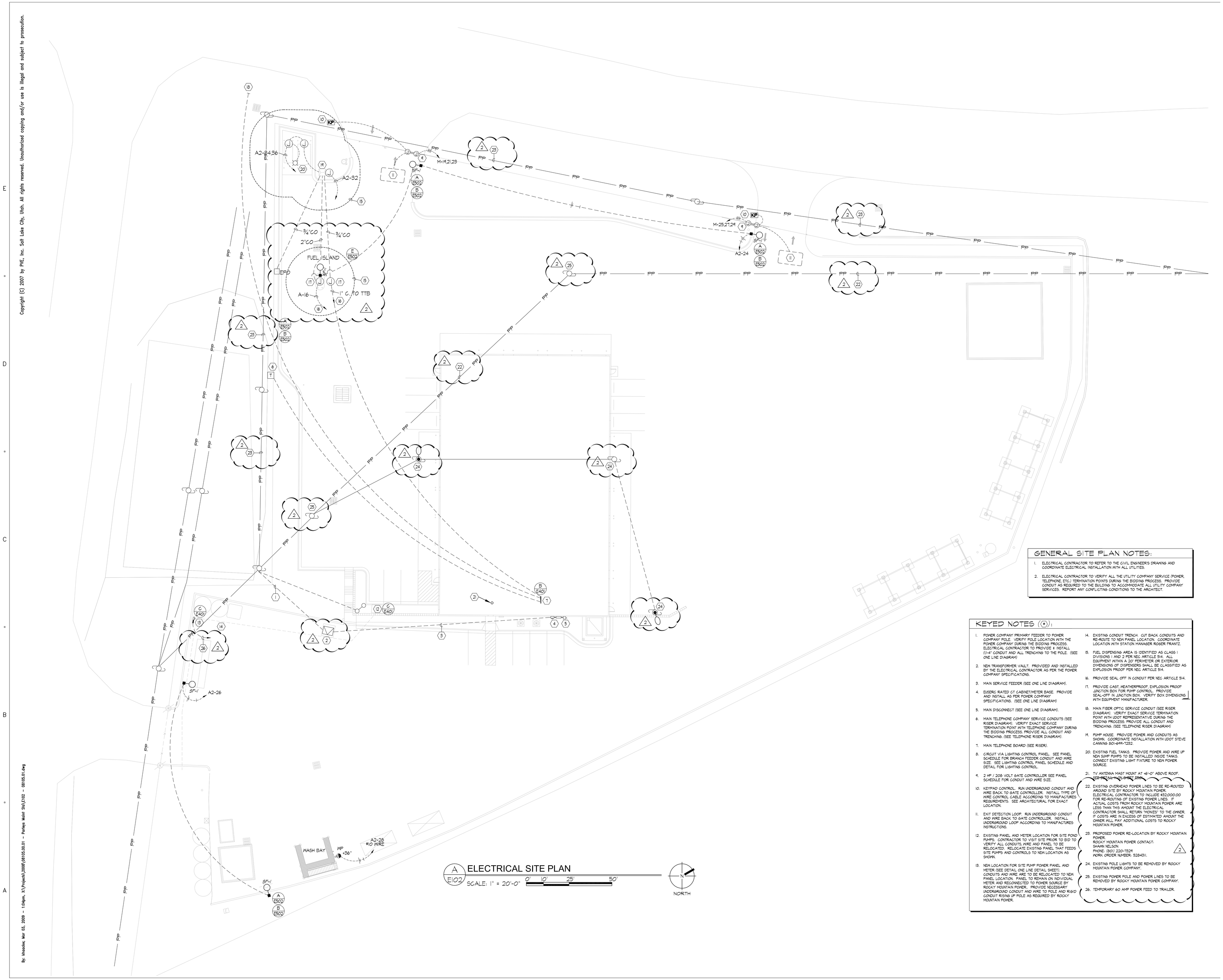

ELECTRICAL SITE PLAN

GENERAL SITE PLAN NOTES:

1. ELECTRICAL CONTRACTOR TO REFER TO THE CIVIL ENGINEER'S DRAWING AND COORDINATE ELECTRICAL INSTALLATION WITH ALL UTILITIES.
2. ELECTRICAL CONTRACTOR TO VERIFY ALL THE UTILITY COMPANY SERVICE (POWER, TELEPHONE, ETC.) TERMINATION POINTS DURING THE BIDDING PROCESS. PROVIDE CONDUIT AS REQUIRED TO THE BUILDING TO ACCOMMODATE ALL UTILITY COMPANY SERVICES. REPORT ANY CONFLICTING CONDITIONS TO THE ARCHITECT.

KEYED NOTES (#):

1. POWER COMPANY PRIMARY FEEDER TO POWER COMPANY POLE. VERIFY POLE LOCATION WITH THE POWER COMPANY DURING THE BIDDING PROCESS. ELECTRICAL CONTRACTOR TO PROVIDE & INSTALL (1)-4" CONDUIT AND ALL TRENCHING TO THE POLE. (SEE ONE LINE DIAGRAM)
2. NEW TRANSFORMER VAULT. PROVIDED AND INSTALLED BY THE ELECTRICAL CONTRACTOR AS PER THE POWER COMPANY SPECIFICATIONS.
3. MAIN SERVICE FEEDER (SEE ONE LINE DIAGRAM).
4. EUSERG RATED CT CABINET/METER BASE. PROVIDE AND INSTALL AS PER POWER COMPANY SPECIFICATIONS. (SEE ONE LINE DIAGRAM)
5. MAIN DISCONNECT (SEE ONE LINE DIAGRAM).
6. MAIN TELEPHONE COMPANY SERVICE CONDUITS (SEE RISER DIAGRAM). VERIFY EXACT SERVICE TERMINATION POINT WITH TELEPHONE COMPANY DURING THE BIDDING PROCESS. PROVIDE ALL CONDUIT AND TRENCHING. (SEE TELEPHONE RISER DIAGRAM).
7. MAIN TELEPHONE BOARD (SEE RISER).
8. CIRCUIT VIA LIGHTING CONTROL PANEL. SEE PANEL SCHEDULE FOR BRANCH FEEDER CONDUIT AND WIRE SIZE. SEE LIGHTING CONTROL PANEL SCHEDULE AND DETAIL FOR LIGHTING CONTROL.
9. 2 HP / 208 VOLT GATE CONTROLLER SEE PANEL SCHEDULE FOR CONDUIT AND WIRE SIZE.
10. KEYPAD CONTROL. RUN UNDERGROUND CONDUIT AND WIRE BACK TO GATE CONTROLLER. INSTALL TYPE OF WIRE CONTROL CABLE ACCORDING TO MANUFACTURES REQUIREMENTS. SEE ARCHITECTURAL FOR EXACT LOCATION.
11. EXIT DETECTION LOOP. RUN UNDERGROUND CONDUIT AND WIRE BACK TO GATE CONTROLLER. INSTALL UNDERGROUND LOOP ACCORDING TO MANUFACTURES INSTRUCTIONS.
12. EXISTING PANEL AND METER LOCATION FOR SITE POND PUMPS. CONTRACTOR TO VISIT SITE PRIOR TO BID TO VERIFY ALL CONDUITS, WIRE AND PANEL TO BE RELOCATED. RELOCATE EXISTING PANEL THAT FEEDS SITE PUMPS AND CONTROLS TO NEW LOCATION AS SHOWN.
13. NEW LOCATION FOR SITE PUMP POWER PANEL AND METER (SEE DETAIL ONE LINE DETAIL SHEET). CONDUITS AND WIRE ARE TO BE RELOCATED TO NEW PANEL LOCATION. PANEL TO REMAIN ON INDIVIDUAL METER AND REGONNECTED TO POWER SOURCE BY ROCKY MOUNTAIN POWER. PROVIDE NECESSARY UNDERGROUND CONDUIT AND WIRE TO POLE AND RIGID CONDUIT RISING UP POLE AS REQUIRED BY ROCKY MOUNTAIN POWER.
14. EXISTING CONDUIT TRENCH. CUT BACK CONDUITS AND RE-ROUTE TO NEW PANEL LOCATION. COORDINATE LOCATION WITH STATION MANAGER ROSER FRANTZ.
15. FUEL DISPENSING AREA IS IDENTIFIED AS CLASS I DIVISIONS I AND 2 PER NEC ARTICLE 514. ALL EQUIPMENT WITHIN A 20' PERIMETER OR EXTERIOR DIMENSIONS OF DISPENSERS SHALL BE CLASSIFIED AS EXPLOSION PROOF PER NEC ARTICLE 514.
16. PROVIDE SEAL OFF IN CONDUIT PER NEC ARTICLE 514.
17. PROVIDE CAST, WEATHERPROOF, EXPLOSION PROOF JUNCTION BOX FOR PUMP CONTROL. PROVIDE SEAL-OFF IN JUNCTION BOX. VERIFY BOX DIMENSIONS WITH EQUIPMENT MANUFACTURER.
18. MAIN FIBER OPTIC SERVICE CONDUIT (SEE RISER DIAGRAM). VERIFY EXACT SERVICE TERMINATION POINT WITH UDOT REPRESENTATIVE DURING THE BIDDING PROCESS. PROVIDE ALL CONDUIT AND TRENCHING. (SEE TELEPHONE RISER DIAGRAM)
19. PUMP HOUSE. PROVIDE POWER AND CONDUITS AS SHOWN. COORDINATE INSTALLATION WITH UDOT STEVE CANNING 801-694-7252.
20. EXISTING FUEL TANKS. PROVIDE POWER AND WIRE UP NEW SUMP PUMPS TO BE INSTALLED INSIDE TANKS. CONNECT EXISTING LIGHT FIXTURE TO NEW POWER SOURCE.
21. TV ANTENNA MAST MOUNT AT +6'-0" ABOVE ROOF. SEE DETAIL ON SHEET E501.
22. EXISTING OVERHEAD POWER LINES TO BE RE-ROUTED AROUND SITE BY ROCKY MOUNTAIN POWER. ELECTRICAL CONTRACTOR TO INCLUDE $32,000.00 FOR RE-ROUTING OF EXISTING POWER LINES. IF ACTUAL COSTS FROM ROCKY MOUNTAIN POWER ARE LESS THAN THIS AMOUNT THE ELECTRICAL CONTRACTOR SHALL RETURN "MONIES" TO THE OWNER. IF COSTS ARE IN EXCESS OF ESTIMATED AMOUNT THE OWNER WILL PAY ADDITIONAL COSTS TO ROCKY MOUNTAIN POWER.
23. PROPOSED POWER RE-LOCATION BY ROCKY MOUNTAIN POWER.
    ROCKY MOUNTAIN POWER CONTACT:
    SHAWN NELSON
    PHONE: (801) 220-7324
    WORK ORDER NUMBER: 5284311. 2
24. EXISTING POLE LIGHTS TO BE REMOVED BY ROCKY MOUNTAIN POWER COMPANY.
25. EXISTING POWER POLE AND POWER LINES TO BE REMOVED BY ROCKY MOUNTAIN POWER COMPANY.
26. TEMPORARY 60 AMP POWER FEED TO TRAILER.

By: kbossiko, Mar 03, 2009 - 1:04pm, X:\Projects\2008\08105.00.01 - Parleys Maint Sta\E102 - 08105.01.dwg

CLIENT

UDOT CONNECTING COMMUNITIES

DESIGNER

ARCHIPLEX GROUP
architecture · planning · design services
255 Crossroad Square
Salt Lake City, UT 84115
P:(801) 961-7070
F:(801) 961-7373

CONSULTANTS

PVE Inc.
Consulting Mechanical Electrical Engineers
1040 North 2200 West, Suite 100
Salt Lake City, UT 84116
Phone: (801) 359-3158
Fax: (801) 521-4114

REGISTRATION

REGISTERED PROFESSIONAL ENGINEER No. 154867 DEAN P. LEVORSEN STATE OF UTAH

ISSUE

MARK	DATE	DESCRIPTION
2	3-04-09	ADDENDUM 2
1	2-17-09	ADDENDUM 1
	1/2009	CONSTRUCTION DOCUMENTS
	8-20-08	90% REVIEW SUBMITTAL

PROJECT NO:	08105.00.01
DRAWN BY:	J. HUTCHINGS
CHECKED BY:	R.RIDDLE
SCALE:	
DATE:	JANUARY, 2009

KEY PLAN

SHEET TITLE

ELECTRICAL SITE PLAN

E102

© 2004 ARCHIPLEX GROUP