State of Utah–Department of Administrative Services

DIVISION OF FACILITIES CONSTRUCTION
AND MANAGEMENT

4110 State Office Building/Salt Lake City, Utah 84114/538-3018

NEW HEBER CITY LIQUOR STORE
DEPARTMENT OF ALCOHOLIC BEVERAGE CONTROL

262 EAST GATEWAY DRIVE
HEBER CITY, UTAH

DFCM PROJECT NO. 08224030

MAY 2009

CONSTRUCTION DRAWINGS

SYMBOLS AND MATERIAL LEGEND

PLAN AND SECTION INDICATIONS

EARTH
ASPHALT
BATT INSULATION
GRAVEL FILL
METAL STUD
RIGID INSULATION
CONCRETE SECTION
ALUMINUM
PLASTIC LAMINATE
C.M.U.
GYPSUM BOARD
CERAMIC TILE
BRICK
FINISH LUMBER
ACOUSTIC TILE
CONCRETE PLAN
WOOD FRAMING
CARPET & PAD
MARBLE
PLYWOOD
GLASS
PARTICLE BOARD
PLYWOOD LARGE SCALE
GLASS SMALL SCALE
FENCE
4812.0'
EXISTING CONTOUR
4812.0'
FINISH CONTOUR

SHEET TAGS

ROOM NAME 000
00 WINDOW NUMBER
00 DOOR NUMBER
00 WALL TYPE
00 KEYED NOTE
00 GLASS TYPE
ELEVATION MARKER
FINISH SPOT ELEV.

00 A-00 — DETAIL NUMBER / SHEET ON WHICH DETAIL APPEARS (DETAIL)
A, B, C, D — INTERIOR DIRECTION; 00 A-00 — ELEVATION NUMBER / SHEET ON WHICH ELEVATION APPEARS (INTERIOR ELEVATION)
00 A-00 — SECTION NUMBER / SHEET ON WHICH SECTION APPEARS (SECTION)
00 A-00 — ELEVATION NUMBER / SHEET ON WHICH ELEVATION APPEARS (EXTERIOR ELEVATION)

DFCM STANDARDS

DFCM STANDARDS: TO THE BEST OF OUR KNOWLEDGE, THE ARCHITECTURAL DOCUMENTS COMPLY WITH DFCM STANDARDS EXCEPT AS LISTED BELOW WHICH HAVE BEEN WAIVED:
1. AUTOMATIC DOOR OPENERS HAVE NOT BEEN PROVIDED AT THE REST ROOM DOORS.
2. A BUILDING PLAQUE HAS NOT BEEN PROVIDED.

ABBREVIATIONS

@	AT	JAN	JANITOR
ADJ.	ADJUSTABLE	JT.	JOINT
ADJ.	ADJACENT	LAM	LAMINATE
A.B.	ANCHOR BOLT	MAS.	MASONRY
A.F.F.	ABOVE FINISHED FLOOR	MAX.	MAXIMUM
ALT.	ALTERNATE	MECH.	MECHANICAL
ALUM./AL.	ALUMINUM	MFR.	MANUFACTURER
BRD./BD.	BOARD	MANUF.	MANUFACTURER
BLDG.	BUILDING	MIN.	MINIMUM
BLK.	BLOCK (BLOCKING)	M.O.	MASONRY OPENING
B.M.	BENCH MARK	MTL.	METAL
BOT./BTTM.	BOTTOM	N.I.C.	NOT IN CONTRACT
CAB.	CABINET	NO.	NUMBER
C.O.	CLEAN OUT	O.C.	ON CENTER
C.J.	CONTROL JOINT	O.D.	OUTSIDE DIAMETER
CL	CENTER LINE	O.H.	OVER HEAD
CLG.	CEILING	OPNG.	OPENING
C.M.U.	CONCRETE MASONRY UNIT	OPP.	OPPOSITE
COL.	COLUMN	OV.	OVER
CONC.	CONCRETE	P.LAM	PLASTIC LAMINATE
CONTD.	CONTINUED	P.L.	PROPERTY LINE
CONST.	CONSTRUCTION	PL.	PLATE
CONT.	CONTINUOUS	PLYWD.	PLYWOOD
CONTR.	CONTRACTOR	PLY.	PLYWOOD
COTG	CLEAN OUT TO GRADE	PNTD.	PAINTED
Ø/DIA.	DIAMETER	PTD.	PAINTED
DET.	DETAIL	PVMT.	PAVEMENT
D.F.	DRINKING FOUNTAIN	Q.T.	QUARRY TILE
DN.	DOWN	R./R	RADIUS
DWGS.	DRAWINGS	RCP	REINFORCED CONCRETE PIPE
DRAWGS	DRAWINGS	R.D.	ROOF DRAIN
EA.	EACH	REINF.	REINFORCEMENT
E.J.	EXPANSION JOINT	REQ.	REQUIRED
ELEV./EL.	ELEVATION	RM.	ROOM
ELEV.	ELEVATOR	R.O.	ROUGH OPENING
E.J.	EXPANSION JOINT	SECT.	SECTION
ENL.	ENLARGED	SEC.	SECTION
EQ.	EQUAL	SHT.	SHEET
EQUIP.	EQUIPMENT	SIM.	SIMILAR
EWC.	ELECTRIC WATER COOLER	SQ./SQ	SQUARE
EXIST.	EXISTING	SPEC.	SPECIFICATION
EXTG.	EXISTING	S.S.	STAINLESS STEEL
EXP.	EXPANSION	S.T.D.	STANDARD
EXT.	EXTERIOR	STL.	STEEL
F.D.	FLOOR DRAIN	STOR.	STORAGE
F.E.C.	FIRE EXTINGUISHER CABINET	STRUCT.	STRUCTURAL
F.E.	FIRE EXTINGUISHER	STRUC.	STRUCTURAL
FIN.	FINISH	SUSP.	SUSPENDED
F.F.	FINISH FLOOR	T.B.	TACK BOARD
F.H.	FIRE HYDRANT	T.O.	TOP OF
FL.	FLOOR	T.O.A.	TOP OF ASPHALT
FT.	FOOT	T.O.B.	TOP OF BEAM
F.V.	FIELD VERIFY	T.O.C.	TOP OF CONCRETE
GA.	GAUGE	T.O.C.	TOP OF CURB
GALV.	GALVANIZED	T.O.M.	TOP OF MASONRY
C.I./GALV.	GALVANIZED IRON	T.O.S.	TOP OF SLAB
G.B.	GYPSUM BOARD	T.O.W.	TOP OF WALL
GYP. BRD.	GYPSUM BOARD	TYP.	TYPICAL
H.B.	HOSE BIBB	U.N.O.	UNLESS NOTED OTHERWISE
H.C.	HANDICAPPED	V.C.T.	VINYL COMPOSITION TILE
HD.	HEAD	V.T.	VINYL TILE
H.M.	HOLLOW METAL	W/	WITH
HOL.MTL.	HOLLOW METAL	W.W.M.	WELDED WIRE MESH
HR.	HOUR	W.W.F.	WELDED WIRE FABRIC
HT.	HEIGHT	WD.	WOOD
I.D.	INSIDE DIAMETER	WIN.	WINDOW
IN.	INCH	VEST.	VESTIBULE
INCMG	INCOMING	VDT.	VIDEO DISPLAY TERMINAL
INFO.	INFORMATION		
INSUL.	INSULATION		
INT.	INTERIOR		
INV.	INVERT		

CODE CRITERIA

CODE ANALYSIS

APPLICABLE CODES

	Year		Year
International Building Code	2006	National Electrical Code	2008
International Mechanical Code	2006	Uniform Code for Building Conservation	2006
International Plumbing Code	2006	ADA Accessibility Guidelines	CURRENT
International Fire Code	2006		
International Energy Conservation Code	2006		

A. Occupancy and Group: M / S-1
Change in Use: Yes ___ No X Mixed Occupancy: Yes X No ___
Special Use and Occupancy (e.g. High Rise, Covered Mall): ___

B. Seismic Design Category: D Design Wind Speed: 90 mph

C. Type of Construction (circle one): I A, I B, II A, II B, III A, III B, IV HT, V A, V B

D. Fire Resistance Rating Requirements for the Exterior Walls based on the fire separation distance (in hours):
North: NA South: NA East: NA West: NA

E. Mixed Occupancies: ___ Nonseparated Uses: X

F: Sprinklers:
Required: ___ Provided: X Type of Sprinkler System: AUTOMATIC
INSTALLED PER/ NFPA 13: Standard for the Installation of Sprinkler Systems

G: Number of Stories: 1 Building Height: 1

H: Actual Area per Floor (square feet): 12,362 SF

I: Tabular Area: 9000 SQ FT

J: Area Modifications:

a) $A_a = A_t + \left[\frac{A_t I_f}{100}\right] + \left[\frac{A_t I_s}{100}\right]$ $\qquad I_f = 100\left[\frac{F}{P} - 0.25\right]\frac{W}{30}$

e) $40140 = 9000 + \left[\frac{9000 \times .46}{100}\right] + \left[\frac{9000 \times 3}{100}\right]$ $\qquad .46 = 100\left[\frac{365}{510} - 0.25\right]\frac{30}{30}$

b) Sum of the Ratio Calculations for Mixed Occupancies:
Actual Area / Allowable Area: 6225 (GROUP M) / 40140 ≤ 1; 6186 (GROUP S-1) / 40140 ≤ 1

c) Total Allowable Area for:
1) One Story: >40140
2) Two Story: $A_a(2)$ ___
3) Three Story: $A_a(3)$ ___

d) Unlimited Area Building: Yes ___ No ___ Code Section: ___

K. Fire Resistance Rating Requirements for Building Elements (hours).

Element	Hours	Assembly Listing	Element	Hours	Assembly Listing
Exterior Bearing Walls	0*		Floors - Ceiling Floors		
Interior Bearing Walls	0		Roofs - Ceiling Roofs	0	
Exterior Non-Bearing Walls	0		Exterior Doors and Windows	0	
Structural Frame	0		Shaft Enclosures	0	
Partitions - Permanent	0		Fire Walls	0	
Fire Barriers	0		Fire Partitions	0	
			Smoke Partitions		

* NORTH EXTERIOR BEARING WALL IS GREATER THAN 5' BUT LESS THAN 10' FROM THE PROPERTY LINE REQUIRING A 1HR RATING. THE WALL IS CONSTRUCTED OF 8X8X16 CMU EXCEEDING THE 1HR RATING PER 2003 IBC TABLE 720.1.3 FOR CONCRETE MASONRY UNITS

L. Design Occupant Load: 124
Exit Width Required: 2 DOORS @ 36 = 72 Exit Width Provided: 180

M. Minimum Number of Required Plumbing Facilities:
a) Water Closets - Required (m) 1 (f) 1 Provided (m) 1 (f) 1
b) Lavatories - Required (m) 1 (f) 1 Provided (m) 1 (f) 1
c) Bath Tuba or Showers: 0
d) Drinking Fountains: 2 Service Sinks: 1

FOOTNOTES:
1) In case of conflict with the U.S. Department of Justice Federal Registers Parts I through II - ADA Guidelines and specific reference to the International Building Code Accessibility Chapters, the more restrictive requirement shall govern.
2) Additional Code Information shall be provided at the discretion of the Building Official for Complex Buildings. Including, but not limited to:
a) High Rise Requirements.
b) Atriums.
c) Performance Based Criteria.
d) Means or Egress Analysis.
e) Fire Assembly Locator Sheet.
f) Exterior and Interior Accessibility Route.
g) Fire Stopping, Including Tested Design Number.

DEFERRED SUBMITTALS

1. CONCRETE MIX DESIGN — DUE WITHIN 30 DAYS OF CONTRACT AWARD
2. OPEN WEB STEEL JOIST, GIRDERS, AND DECK — DUE WITHIN 45 DAYS OF CONTRACT AWARD
3. AUTOMATIC FIRE SPRINKLING SYSTEM PER NFPA 13 — DUE WITHIN 45 DAYS OF CONTRACT AWARD
4. PRECAST CONCRETE — DUE WITHIN 45 DAYS OF CONTRACT AWARD
5. LANDSCAPE SPRINKLING — DUE WITHIN 60 DAYS OF CONTRACT AWARD
6. SYNTHETIC STUCCO — DUE WITHIN 60 DAYS OF CONTRACT AWARD
7. SYNTHETIC STONE — DUE WITHIN 60 DAYS OF CONTRACT AWARD

SCHEDULE OF DRAWINGS

COVER SHEETS
G001 COVER SHEET
G002 SCHEDULE OF DRAWINGS, MOUNTING STANDARDS, CODE REVIEW
G003 SPECIAL INSPECTION REQUIREMENTS

SURVEY
ALTA SURVEY

SITE DEVELOPMENT
AS101 SITE PLAN AND GRADING PLAN
AS102 SITE GRADING PLAN
AS103 SITE UTILITY PLAN
AS501 SITE DETAILS
LS101 LANDSCAPING PLAN
LS102 LANDSCAPE PLAN – ENLARGED LANDSCAPE AREAS

ARCHITECTURAL
A101 FLOOR PLAN
A102 REFLECTED CEILING PLAN
A103 ROOF PLAN, SECTIONS AND DETAILS
A104 INTERIOR ELEVATIONS AND MISCELLANEOUS INTERIOR DETAILS
A105 INTERIOR ELEVATIONS AND MISCELLANEOUS DETAILS
A106 ENLARGED FLOOR PLANS AND MISCELLANEOUS DETAILS
A201 EXTERIOR ELEVATIONS
A301 WALL SECTIONS
A302 WALL SECTIONS
A303 WALL SECTIONS
A304 WALL SECTIONS
A305 WALL SECTIONS
A306 WALL SECTIONS
A307 WALL SECTIONS
A308 WALL SECTIONS
A501 MISCELLANEOUS DETAILS
A601 DOOR, WINDOW AND FINISH SCHEDULES

STRUCTURAL
S001 STRUCTURAL NOTES
S101 FOOTING & FOUNDATION PLAN
S102 ROOF FRAMING PLAN
S201 STRUCTURAL DETAILS
S202 STRUCTURAL DETAILS

MECHANICAL
M0.1 MECHANICAL SCHEDULE & GENERAL NOTES
M1.1 ROOF PLAN
M2.1 HVAC FLOOR PLAN
M2.2 PLUMBING FLOOR PLAN
M6.1 MECHANICAL DETAILS
M6.2 MECHANICAL DETAILS
M6.3 MECHANICAL DETAILS
M6.4 MECHANICAL DETAILS

ELECTRICAL
E100 ELECTRICAL SYMBOLS, NOTES & LEGEND
E101 SITE PLAN – ELECTRICAL
E102 SITE PLAN – LIGHTING CALCULATIONS
E201 FLOOR PLAN – POWER & SYSTEMS
E202 ROOF PLAN – POWER
E301 FLOOR PLAN – LIGHTING
E401 ELECTRICAL RISER DIAGRAMS
E501 ELECTRICAL SCHEDULES
E601 ELECTRICAL DETAILS

TYPICAL HANDICAP TOILET ROOM MOUNTING STANDARDS

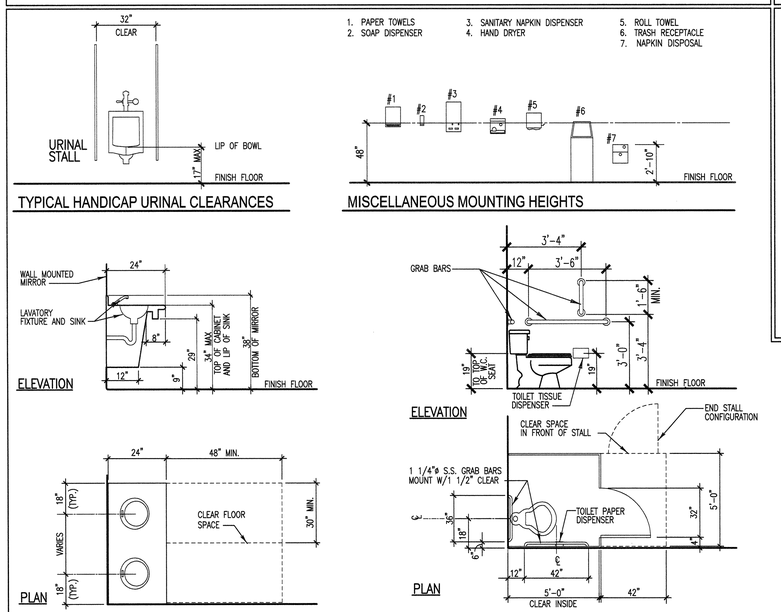

TYPICAL (NON-HANDICAPPED) TOILET ROOM MOUNTING STANDARDS

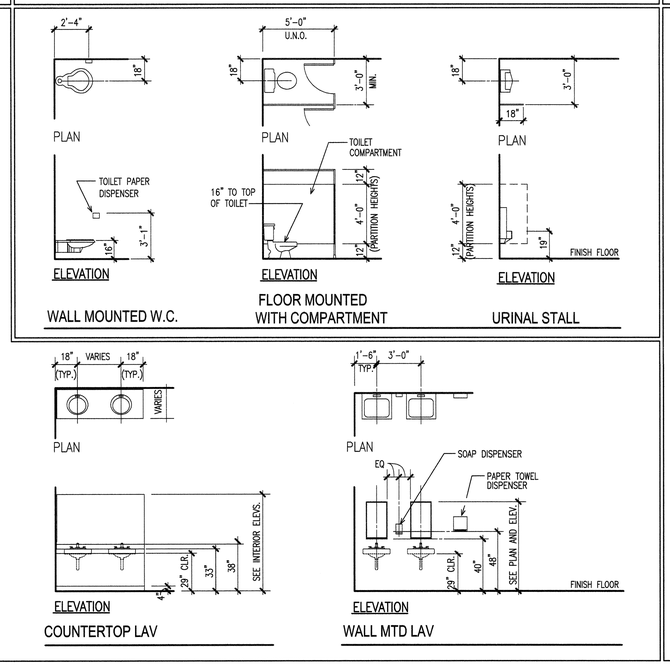

TYPICAL MISCELLANEOUS MOUNTING STANDARDS

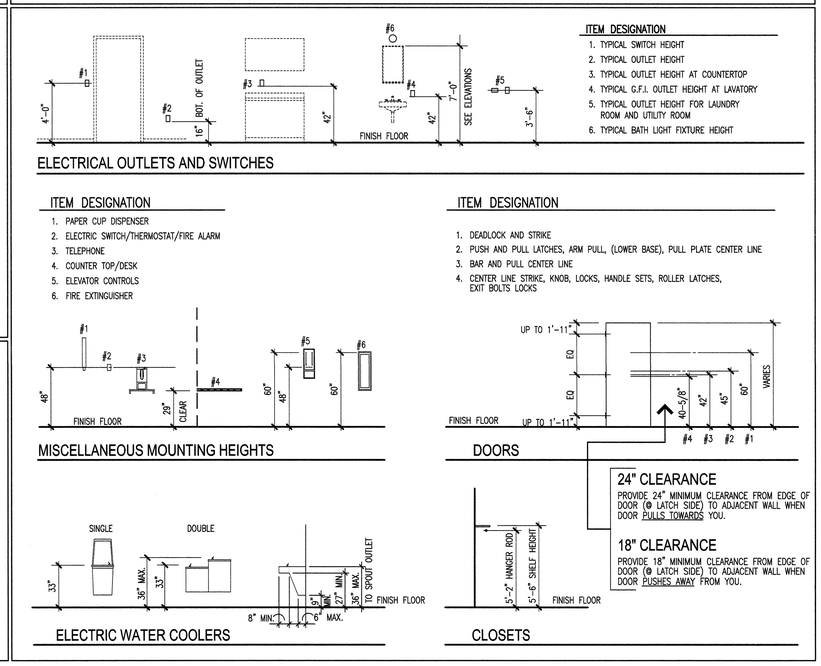

NEW HEBER CITY LIQUOR STORE
DEPARTMENT OF ALCOHOLIC BEVERAGE CONTROL
HEBER CITY, UTAH

SCHEDULE OF DRAWINGS, MOUNTING STANDARDS, CODE REVIEW

FRANK N MURDOCK JR ■ Architect & Associates
975 East 100 South Suite 100, Salt Lake City, Utah 84102 TEL: (801) 532-4441 FAX (801) 532-4220

STATE OF UTAH — FRANK N. MURDOCK JR. — 124498 — LICENSED ARCHITECT

REVISION # DATE:

DFCM PROJECT NO.: 08224030
CONSTR. DOC.
FILE NAME: ABCHB-G002
PLOT SCALE: 1:1
DRAWN BY: STAFF
CHECKED BY: FNM
DATE: MAY 2009

G 002

SPECIAL INSPECTION AND TESTING (IBC 1704)

Indicate required Special inspections for project by checking the appropriate boxes:

FABRICATORS (IBC1704.2)

☒ Approved Fabricator	Fabricator's Name: To be selected from DFCM Approved Fabricator List for 2009
☐ Unapproved Fabricator	Fabricator's Name:

In-plant inspections
☐ Steel Construction ☐ Welding ☐ Details

STEEL (IBC1704.3)

Item			Reference/Comments
High Strength Bolting(1704.3.3)	☐ Continuous	☒ Periodic	Verify prior to concealment by other systems/finishes
WELDING (1704.3.1)			
Details (1704.3.2)			
Complete & partial penetration groove welds	☒ Continuous	☐ Periodic	
Multipass fillet welds	☒ Continuous	☐ Periodic	
Single-pass fillet welds > 5/16"	☒ Continuous	☐ Periodic	
Single-pass fillet welds ≤ 5/16"	☐ Continuous	☒ Periodic	Verify prior to concealment by other systems/finishes
Floor & roof deck welds	☐ Continuous	☒ Periodic	Verify prior to concealment by other systems/finishes
REINFORCEMENT STEEL	☐ Continuous		
Verification of weldability	☐ Continuous	☐ Periodic	
Shear wall and shear reinforcement	☐ Continuous	☐ Periodic	
Other reinforcement	☐ Continuous	☐ Periodic	
Steel frame joint details	☐ Continuous	☐ Periodic	

CONCRETE CONSTRUCTION (IBC1704.4)

Item			Reference/Comments
Materials (1704.4.1)	☐ Continuous	☒ Periodic	Verify prior to each concrete pour
Steel placement	☐ Continuous	☒ Periodic	Verify prior to each concrete pour
Steel welding	☐ Continuous	☐ Periodic	
Bolts prior & during placement	☒ Continuous	☐ Periodic	
Use of required design mix	☐ Continuous	☒ Periodic	Verify prior to each concrete pour
Concrete sampling for strength test, slump, air content, and temperature of concrete	☒ Continuous	☐ Periodic	
Concrete & shotcrete placement	☒ Continuous	☐ Periodic	
Curing temperature and techniques	☐ Continuous	☒ Periodic	Verify prior to each concrete pour
Pre-stressed concrete	☐ Continuous	☐ Periodic	
Pre-cast concrete	☐ Continuous	☐ Periodic	
Posttentsioned concrete	☐ Continuous	☐ Periodic	
Form work	☐ Continuous	☒ Periodic	Verify prior to each concrete pour

WOOD CONSTRUCTION (IBC1704.6)

Item			Reference/Comments
Prefabricated elements & assembly	☐ Continuous	☐ Periodic	

SOILS CONSTRUCTION (IBC1704.7)

Item			Reference/Comments
Site preparation	☐ Continuous	☒ Periodic	Verify prior to covering
Structural fill material	☐ Continuous	☒ Periodic	Verify prior to covering
Structural fill lift thickness	☐ Continuous	☒ Periodic	Verify prior to covering
Structural fill soil densities	☒ Continuous	☐ Periodic	
Backfill soils materials	☒ Continuous	☐ Periodic	
Backfill soil densities	☒ Continuous	☐ Periodic	
Fill material under side walks and parking	☒ Continuous	☐ Periodic	
Fill soil densities under side walks and parking	☒ Continuous	☐ Periodic	

PILE FOUNDATIONS (IBC1704.8)

Item			Reference/Comments
Observe driving operation and reporting	☐ Continuous	☐ Periodic	
Verify placement & installation data	☐ Continuous	☐ Periodic	

PIER FOUNDATIONS (IBC1704.9)

Item			Reference/Comments
Observe drilling operation and reporting	☐ Continuous	☐ Periodic	
Verify placement & installation data	☐ Continuous	☐ Periodic	

SPRAYED FIRE-RESISTANT MATERIALS (IBC1704.10)

Item			Reference/Comments
Structural member surface conditions	☐ Continuous	☐ Periodic	
Material application	☐ Continuous	☐ Periodic	
Material thickness	☐ Continuous	☐ Periodic	
Material density	☐ Continuous	☐ Periodic	
Bonding strength	☐ Continuous	☐ Periodic	

MASTIC AND INTUMESCENT FIRE-RESISTANT COATINGS (IBC1704.11)

Item			Reference/Comments
Material and installation	☐ Continuous	☐ Periodic	

EXTERIOR INSULATION AND FINISH SYSTEMS (EIFS)(IBC1704.12)

Item			Reference/Comments
Material and installation	☐ Continuous	☒ Periodic	Verify prior to covering

MASONRY CONSTRUCTION (IBC1704.5)

Item			Reference/Comments
As masonry construction begins:			
Site prepared mortar	☐ Continuous	☒ Periodic	Verify prior to each grout pour
Construction of mortar joints	☐ *Continuous*	☒ *Periodic*	*Verify prior to each grout pour*
Location of reinforcement, connectors, pre-stressing tendons and anchorages	☐ Continuous	☐ Periodic	
Pre-stressing technique	☐ Continuous	☐ Periodic	
Grade and size of pre-stressing tendons and anchorages	☐ Continuous	☐ Periodic	
Inspection program verify:			
Size and location of structural elements	☐ Continuous	☒ Periodic	Verify prior to each grout pour
Type, size and location of anchors	☐ Continuous	☒ Periodic	Verify prior to each grout pour
Size, grade and type of reinforcement	☐ Continuous	☒ Periodic	Verify prior to each grout pour
Welding of reinforcement	☐ Continuous	☐ Periodic	
Cold and hot weather protection	☐ Continuous	☒ Periodic	Verify prior to each grout pour
Application and measurement of pre-stressing force	☐ Continuous	☐ Periodic	
Prior to grouting verify			
Clean grout space	☐ Continuous	☒ Periodic	Verify prior to each grout pour
Placement of reinforcement	☐ Continuous	☒ Periodic	Verify prior to each grout pour
Grout mix	☐ Continuous	☒ Periodic	Verify prior to each grout pour
Mortar joints	☐ Continuous	☒ Periodic	Verify prior to each grout pour
Grout placement	☒ Continuous	☐ Periodic	
Grout and mortar specimens and prisms	☒ Continuous	☐ Periodic	
Construction and submittal compliance verification	☐ Continuous	☒ Periodic	Verify prior to each grout pour
Empirical masonry – Cat. I-III (1708.1.1)	☐ Continuous	☐ Periodic	
Empirical masonry – Cat. IV (1708.1.1)	☐ Continuous	☐ Periodic	
Engineered masonry – Cat. I-III 1708.1.1	☐ Continuous	☐ Periodic	
Engineered masonry – Cat. IV (1708.1.1)	☐ Continuous	☐ Periodic	
Engineering & pre-stressing steel (1708.3)	☐ Continuous	☐ Periodic	
Structural steel (1708.4)	☐ Continuous	☐ Periodic	
Qualification of mechanical & electrical equipment (1708.5)	☐ Continuous	☐ Periodic	
Seismically isolated structures (1708.6)	☐ Continuous	☐ Periodic	
Testing for seismic resistance is	☐ Continuous	☐ Periodic	

ALTERNATIVE CONSTRUCTION METHODS OR MATERIALS (IBC1704.13)

Item			Reference/Comments
Material and installation	☐ Continuous	☐ Periodic	

EPOXY (IBC1704.13)

Item			Reference/Comments
Material and installation	☐ Continuous	☒ Periodic	Verify prior to covering

SMOKE CONTROL (IBC1704.14)

Item			Reference/Comments
Material	☐ Continuous	☐ Periodic	
Installation	☐ Continuous	☐ Periodic	

Special inspection for seismic resistance (IBC1707)

Item			Reference/Comments
Structural Steel (1707.2)	☐ Continuous	☐ Periodic	
Structural Wood (1707.3)	☐ Continuous	☐ Periodic	
Cold-formed steel framing (1707.4)	☐ Continuous	☐ Periodic	
Pier foundations (1707.5)	☐ Continuous	☐ Periodic	
Storage racks & access floors (1707.6)	☐ Continuous	☐ Periodic	
Architectural components (1707.7)	☐ Continuous	☐ Periodic	
Mechanical & electrical items (1707.8)	☐ Continuous	☐ Periodic	
Designated systems verification (1707.9)	☐ Continuous	☐ Periodic	
Seismic isolation systems (1707.10)	☐ Continuous	☐ Periodic	

Inspection of seismic resistance is not required per IBC 1705.3 ☐

OTHER

Item			Reference/Comments
	☐ Continuous	☐ Periodic	
	☐ Continuous	☐ Periodic	

Special Inspectors shall:

- Be approved by the Building Official prior to performing any duties;
- Provide proof of licensure as a Special Inspector by the State of Utah for each type of inspection;
- Inspection reports are to meet the requirements of IBC 1704.1.2 and DFCM standards;
- Inspection reports are to be submitted to the code consultant, architect, DFCM project manager, and the State of Utah Building Official within 48 hrs. of inspections;
- A final inspection report shall be submitted following completion of the project documenting the types of special inspections performed and a statement indicating that the structure is in compliance with the drawings, specifications and applicable codes. IBC 1704.1.2

NEW HEBER CITY LIQUOR STORE

DEPT. OF ALCHOLIC BEVERAGE CONTROL
HEBER CITY, UT

FRANKIN MURDOCK JR Architect & Associates
975 East 100 South Suite 100, Salt Lake City, Utah 84102 TEL: (801) 532-4441 FAX (801) 532-4220

SPECIAL INSPECTION REQUIREMENTS

STATE OF UTAH
FRANK R. MURDOCK JR.
124498
5-20-09
LICENSED ARCHITECT

REVISION # DATE:

DFCM PROJECT NO.:
08227030
CONSTRUCTION DOCS
FILE NAME: G003.dwg
PLOT SCALE: AS NOTED
DRAWN BY: JRS
CHECKED BY: SP
DATE: MAY 20, 2009

G003

X:\Projects Files\JOBS\08\08253.03 DABC - Heber City\Drawings\08253.dwg, G003, 5/20/2009 9:10:41 AM

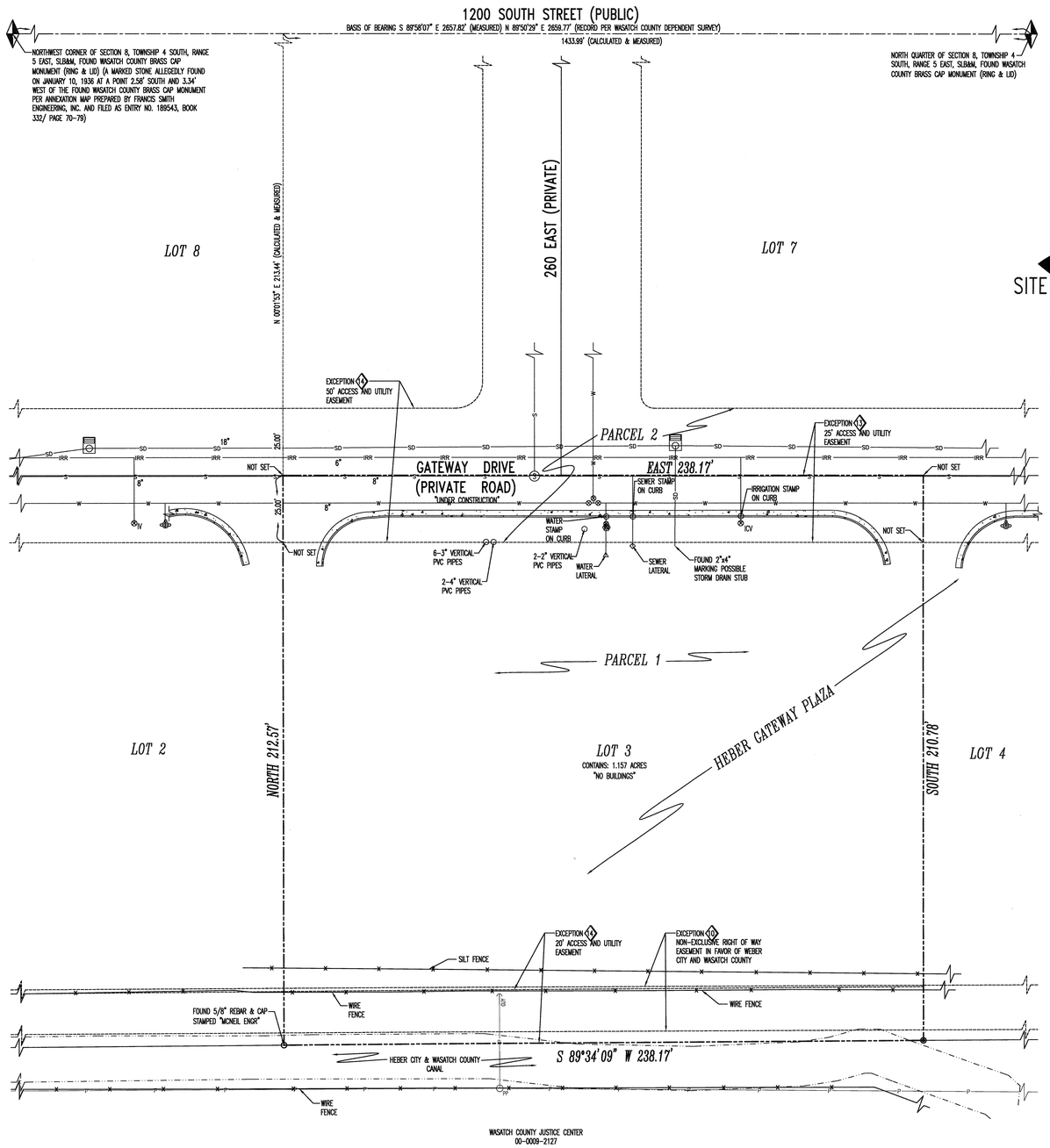

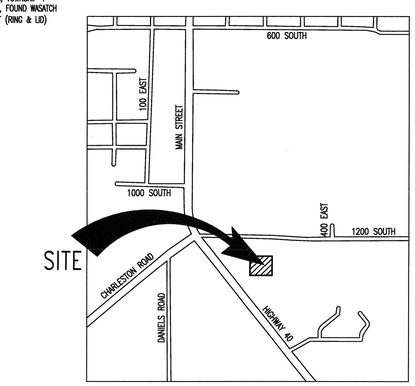

VICINITY MAP
SCALE: N.T.S.

NORTH

SCALE: 1" = 20'

0 10 20 30 40 60 80 100

LEGEND

LOT LINE	WATER VALVE
TOP OF BANK OF DITCH	FIRE HYDRANT
PROPERTY LINE	WATER METER
SECTION LINE	STORM DRAIN COMBO BOX
EASEMENT LINE	IRRIGATION VALVE
FENCE	SEWER MANHOLE
POWER LINE	IRRIGATION CONTROL VALVE
TELEPHONE LINE	
SEWER LINE	SET REBAR & CAP OR NAIL & WASHER STAMPED "MCNEIL ENGR"
STORM DRAIN LINE	
CONTOUR LINE	

DEED DESCRIPTION PER TITLE REPORT

(PARCEL 1)
LOT 3 HEBER GATEWAY PLAZA, ACCORDING TO THE OFFICIAL PLAT RECORDED DECEMBER 13, 2007, AS ENTRY NO. 329671 IN THE WASATCH COUNTY'S RECORDER'S OFFICE.

(PARCEL 2)
TOGETHER WITH THE NON-EXCLUSIVE RIGHT OF WAY OVER THE ACCESS EASEMENTS AS SHOWN ON THE RECORDED PLAT.

SURVEYOR'S CERTIFICATE

TO: HEBER CITY COMMERCIAL L.L.C.; 1200 SOUTH DEVELOPMENT, INC., A UTAH CORPORATION; STEWART TITLE GUARANTY COMPANY; COALITION TITLE AGENCY

THIS IS TO CERTIFY THAT THIS MAP OR PLAT AND THE SURVEY ON WHICH IT IS BASED WERE MADE IN ACCORDANCE WITH THE "MINIMUM STANDARD DETAIL REQUIREMENTS FOR ALTA/ACSM LAND TITLE SURVEYS," JOINTLY ESTABLISHED AND ADOPTED BY ALTA AND NSPS IN 2005. PURSUANT TO THE ACCURACY STANDARDS AS ADOPTED BY ALTA AND NSPS AND IN EFFECT ON THE DATE OF THIS CERTIFICATION, UNDERSIGNED FURTHER CERTIFIES THAT IN MY PROFESSIONAL OPINION, AS A LAND SURVEYOR REGISTERED IN THE STATE OF UTAH, THE RELATIVE POSITIONAL ACCURACY OF THIS SURVEY DOES NOT EXCEED THAT WHICH IS SPECIFIED THEREIN.

MICHAEL D. HOFFMAN
LICENSE NO. 316831

NARRATIVE

1. THE PURPOSE OF THIS SURVEY IS TO PROVIDE AN "ALTA/ACSM LAND TITLE SURVEY" ON THE SUBJECT PROPERTY PER CLIENTS REQUEST.

2. THIS SURVEY DOES NOT CONSTITUTE A TITLE SEARCH BY THE SURVEYOR. ALL INFORMATION REGARDING RECORD EASEMENTS, ADJOINERS AND OTHER DOCUMENTS THAT MIGHT AFFECT THE QUALITY OF TITLE TO TRACT SHOWN HEREON WAS GAINED FROM TITLE COMMITMENT NO: 18825 PREPARED BY COALITION TITLE AGENCY. EFFECTIVE DATE: JUNE 6, 2008, AT 8:00 AM. THE FOLLOWING COMMENTS CORRESPOND TO THE ITEMS NUMBERED IN THE ABOVE-REFERENCED COMMITMENT.

ALL PLOTTABLE SCHEDULE B-2 EXCEPTIONS;

10. A NON-EXCLUSIVE RIGHT OF WAY AND EASEMENT IN FAVOR OF HEBER CITY AND WASATCH COUNTY, FOR USE AS A ROADWAY AND ACCESS TO FOR THE REPAIR AND MAINTENANCE OF, THE DRAINAGE CHANNEL LYING ADJACENT THERETO IMMEDIATELY TO THE SOUTH OF THE EAST PARCEL, TOGETHER WITH THE RIGHT TO PLACE GATES ALONG SAID RIGHT OF WAY AT EITHER END THEREOF, SUBJECT TO THE CONDITIONS AND COVENANTS SET FORTH HEREIN, RECORDED SEPTEMBER 14, 1994, AS ENTRY NO. 175030, IN BOOK 284, AT PAGE 778, WASATCH COUNTY RECORDER'S OFFICE. (AS SHOWN HEREON)

12. A CROSS EASEMENT AGREEMENT, DATED JANUARY 2, 2008, BY 1200 SOUTH DEVELOPMENT, INC., A UTAH CORPATION, RECORDED JANUARY 8, 2008, AS ENTRY NO. 330543, IN BOOK 957, ON PAGE 2145, FOR THE PURPOSE OF A PERPETUAL EASEMENT AND RIGHT OF WAY FOR INGRESS AND EGRESS OF VEHICULAR AND/OR FOOT TRAFFIC OVER THE PROPERTY. (DOES NOT EFFECT SUBJECT PARCEL)

13. A TWENTY-FIVE (25) FOOT ACCESS AND UTILTY EASEMENT, RUNNING ALONG THE NORTHERLY SIDE OF THE SUBJECT PROPERTY AS SHOWN ON THE RECORDED PLAT OF HEBER GATEWAY PLAZA. (AS SHOWN HEREON)

14. CONDITIONS, RESTRICTIONS, EASEMENTS, AND NOTES AS SHOWN ON THE RECORDED PLAT OF HEBER GATEWAY PLAZA. (AS SHOWN HEREON)

3. McNEIL ENGINEERING, INC., MAKES NO REPRESENTATIONS AS TO THE EXISTENCE OF ANY OTHER RECORD DOCUMENTS THAT MAY AFFECT THIS PARCEL OTHER THAN THOSE SHOWN IN THE EXCEPTIONS OF SCHEDULE B-2 AS SHOWN HEREON.

4. THE BASIS OF BEARING FOR THIS SURVEY IS SOUTH 89°58'07" EAST ALONG THE SECTION LINE, BETWEEN FOUND WASATCH COUNTY BRASS CAP MONUMENTS MARKING THE NORTHWEST CORNER AND THE NORTH QUARTER CORNER, BEING PART OF THE NORTHWEST QUARTER OF SECTION 8, TOWNSHIP 4 SOUTH, RANGE 5 EAST, SALT LAKE BASE AND MERIDIAN AS SHOWN ON THIS SURVEY.

5. CORNER MONUMENTS NOT FOUND ON THE PROPERTY WERE MARKED WITH A 5/8 INCH BAR, TWO FEET IN LENGTH, AND RED PLASTIC CAP STAMPED "MCNEIL ENGR." UNLESS OTHERWISE NOTED AS SHOWN ON THE ACCOMPANYING PLAT.

6. THIS PARCEL IS LOCATED IN A SUBDIVISION THAT IS CURRENTLY UNDER CONSTRUCTION, DUE TO SAID CONSTRUCTION THERE MAY BE IMPROVEMENTS IN PLACE THAT ARE NOT SHOWN HEREON. UTILITIES IN THE ROAD WERE NOT VISIBLE AT THE TIME THE FIELD PORTION OF THE SURVEY WAS COMPLETED, ALL UTILITIES IN THE ROAD SHOWN HEREON ARE BASED UPON THE CONSTRUCTION DESIGN DRAWINGS. LOCATIONS OF UNDERGROUND UTILITIES/STRUCTURES MAY VARY FROM LOCATIONS SHOWN HEREON. ALTHOUGH ADDITIONAL BURIED UTILITIES/STRUCTURES MAY BE ENCOUNTERED, TO THE BEST OF OUR KNOWLEDGE THERE ARE NO EXISTING UTILITIES EXCEPT AS SHOWN ON THIS SURVEY. NO EXCAVATIONS WERE MADE DURING THE PROGRESS OF THIS SURVEY TO LOCATE BURIED UTILITIES/STRUCTURES. BEFORE EXCAVATIONS ARE BEGUN, NOTIFY BLUE STAKES. THERE MAY EXIST ADDITIONAL RECORD DOCUMENTS THAT WOULD AFFECT THIS PARCEL.

7. THIS PARCEL IS LOCATED IN FLOOD ZONE D, PER THE FEMA FLOOD INSURANCE RATE MAP NO. 490166 0001 B EFFECTIVE AS OF MARCH 18, 1987.

McNEIL GROUP
Designing for the Future Since 1983
6895 SOUTH 900 EAST MIDVALE, UTAH 84047
TEL. (801) 255-7700 FAX (801) 255-8071
E-MAIL info@mcneilengr.com WEB SITE AT www.mcneil-group.com

LOT 3 HEBER GATEWAY PLAZA
HEBER CITY COMMERCIAL L.L.C.

262 EAST GATEWAY DRIVE
HEBER CITY, UTAH
LOCATED IN THE NORTHWEST QUARTER OF SECTION 8, TOWNSHIP 4 SOUTH, RANGE 5 EAST, SALT LAKE BASE AND MERIDIAN

REVISIONS

REV.	DATE	DESCRIPTION
△		
△		
△		
△		
△		

PROJECT NO:	260797.7D
CAD DWG. FILE:	260797.7DALT
DRAWN BY:	KSL/KES
CALC BY:	MRP
FIELD CREW:	JSG/DMP
CHECKED BY:	MDH
DATE:	06-27-08

SHEET TITLE:
ALTA/ACSM LAND TITLE SURVEY

1 OF 1

S:\2008Files\260797\260797.7D\dwg\ACAD-260797.7alt.dwg May 22, 2009 - 1:35pm McNEIL ENGINEERING-ST. GEORGE, L.C.

SITE INFORMATION

PARKING:

PARKING STALLS	41 STALLS
ACCESSIBLE STALLS	2 STALLS
PARKING TOTALS	43 STALLS

SITE DRAWINGS

SEE SHEET AS101 FOR GENERAL SITE INFORMATION AND DIMENSIONS
SEE SHEET AS102 FOR SITE GRADING AND STORM SEWER INFORMATION
SEE SHEET AS103 FOR SITE UTILITY INFORMATION
SEE SHEET AS501 FOR SITE DETAIL INFORMATION

SITE PLAN LEGEND

- CATCH BASIN
- STORM DRAIN MAN HOLE
- POWER POLE
- WATER VALVE
- ELECTRIC BOX
- FIRE HYDRANT
- SANITARY SEWER MAN HOLE
- LIGHT POST
- STREET LIGHT BOX
- GAS METER
- TELEPHONE BOX
- PL — PROPERTY LINE
- L — LANDSCAPE AREA
- SW — SIDEWALK
- OVERHEAD TRANSMISSION LINE
- UNDERGROUND POWER
- SS — SANITARY SEWER
- W — WATER LINE
- T — TELEPHONE LINE
- G — GAS LINE
- C — CABLE T.V.
- PARKING STALLS
- x — FENCE
- 4434 — EXISTING GRADE CONTOUR
- 31 — NEW GRADE CONTOUR
- CENTER LINE OF ROAD
- X — X — NEW SECURITY FENCE
- A / B — SIGN TYPES – SEE 2/AS501
- NEW CONCRETE PAVING AND SIDEWALKS
- ROADWAY, SERVICE AND DOCK AREA (ASPHALT)
- 2 – 4" PVC PIPE SLEEVE

T.O.G	TOP OF GRATE
I.E.	INVERT ELEVATION
T.O.SW	TOP OS SIDEWALK
T.O.PV	TOP OF PAVEMENT
T.O.C.	TOP OF CONCRETE

ASPHALT ROADWAY AREAS
AREAS SHOWN HATCHED
3.5" THICK ASPHALT PAVING OVER 10" AGGREGATE BASE
REFER TO 10/AS501 AND SOILS REPORT
FOR INFORMATION REGARDING ASPHALT PAVING PROFILE

KEY NOTES

- A — MAINTAIN AND PROTECT EXISTING SITE ELEMENTS TO REMAIN INCLUDING EXISTING RETAINING WALLS, FENCES, STORM DRAIN BASIN AND CURBS AND GUTTERS.
- B — NEW CONCRETE CURB AND GUTTER. SEE DETAIL 6/AS501.
- C — NEW 4" THICK CONCRETE SIDEWALK. SEE DETAILS 11, 12 AND 13 ON SHEET AS501. ALIGN WITH EDGES, WIDTH AND ELEVATIONS OF EXISTING SIDEWALKS WHERE NEW AND EXISTING SIDEWALKS MEET.
  JOINTS AS NOTED BELOW TYPICAL UNLESS NOTED OTHERWISE:
  CONTROL JOINT IN CONCRETE SIDEWALK: @ 5'–0" O.C., SEE DETAIL 12/AS501.
  EXPANSION JOINT IN CONCRETE SIDEWALK: @ 20'–0" O.C., SEE DETAIL 13/AS501.
- D–R — NEW ROADWAY ASPHALT CONCRETE PAVING. SEE DETAIL 10/AS501 FOR PAVEMENT SECTION. SEE SOILS REPORT FOR DEPTH OF FILL AND COMPACTION REQUIREMENTS IN THIS AREA.
- D–P — NEW PARKING ASPHALT CONCRETE PAVING. SEE DETAIL 10/AS501 FOR PAVEMENT SECTION. SEE SOILS REPORT FOR DEPTH OF FILL AND COMPACTION REQUIREMENTS IN THIS AREA.
- E — NEW 8" THICK CONCRETE PAVING. SEE DETAIL 10/AS501 FOR PAVEMENT SECTION. REINFORCE W/#5 BARS @ 16" O.C. BOTH WAYS SEE SOILS REPORT FOR DEPTH OF FILL AND COMPACTION REQUIREMENTS IN THIS AREA.
- F — NEW CONCRETE TRANSFORMER AND TRANSFORMER VAULT.
- G — NEW PARKING STRIPING, SEE DETAIL 3/AS501.
- H — NEW TINTED CMU WALL.
- J — NEW CONCRETE WHEEL STOP.
- K — NEW LANDSCAPE AREA, SEE SHEET LS–101.
- L — PROPERTY LINE.
- M — NEW CATCH BASIN, REFER TO SITE DRAINAGE PLAN.
- N — EXISTING ASPHALT ROADWAY. MAINTAIN AND PROTECT. KEEP CLEAR OF MUD AND DEBRIS FROM WORK UNDER THIS CONTRACT.
- O — CONTRACT LIMIT LINE
- P — NEW SECONDARY WATER CONNECTION. INSTALL PER HEBER CITY CODES AND SECONDARY WATER UTILITY REQUIREMENTS AND DETAILS
- R — REPLACE ASPHALT DISTURED BY NEW WATER CONNECTION
- S — NEW 4" THICK X 2'–4" WIDE CONCRETE SLAB. SEE DETAILS 11/AS501.
- T — 4" MINUS WASHED COBBLE STONE OVER 6 OZ/SQ YD LANDSCAPE FABRIC. COBBLE DEPTH MINIMUM 4" THICK
- U — GAS METER
- V — REMOVE AN PROPERLY DISPOSE OF EXISTING FENCE
- W — REMOVE AND PROPERLY DISPOSE OF ANY ASPHALT CONCRETE PAVING. REQUIRED FOR THE INSTALLATION OF NEW CONSTRUCTION. SAW CUT ALL EDGES.
- X — SILT FENCE LOCATION – SEE GENERAL NOTES

REFERENCE NOTES

- 1 — MAINTAIN AND PROTECT EXISTING SITE ELEMENTS TO REMAIN INCLUDING EXISTING LANDSCAPING, SIDEWALKS, STORM DRAIN BASIN, ASPHALT AND CURBS AND GUTTERS. MAINTAIN AND PROTECT EXISTING LANDSCAPING TO REMAIN DURING CONSTRUCTION.
- 2 — MAINTAIN AND PROTECT EXISTING SITE ELEMENTS ON ADJACENT PROPERTIES. IMMEDIATELY REPAIR OR REPLACE ANY DAMAGE TO ADJACENT PROPERTY CAUSED BY WORK ASSOCIATED WITH THIS CONTRACT.
- 3 — REMOVE AND PROPERLY DISPOSE OF EXISTING LANDSCAPING INCLUDING ALL TREES AND SHRUBS ON SITE. SEE SOILS REPORT FOR THE DEPTH OF GRUBBING IN THIS AREA.
- 4 — SAW CUT, REMOVE AND PROPERLY DISPOSE OF EXISTING CONCRETE CURB AND PREPARE FOR NEW CONCRETE DRIVE APPROACH.
- 5 — REMOVE AND PROPERLY DISPOSE OF ANY ASPHALT CONCRETE PAVING REQUIRED FOR THE INSTALLATION OF NEW CONSTRUCTION. SAW CUT ALL EDGES.
- 6 — EXISTING LIGHT POLE, MAINTAIN AND PROTECT.

GENERAL NOTES

1. REFER TO SITE DEVELOPMENT, LANDSCAPE, MECHANICAL AND ELECTRICAL DRAWINGS FOR DIMENSIONS AND ADDITIONAL SITE INFORMATION.
2. CONTRACTOR TO VERIFY ALL EXISTING SITE CONDITIONS. NOTIFY ARCHITECT OF ANY DISCREPENCIES TO THE CONTRACT DOCUMENTS.
3. PROVIDE POSITIVE DRAINAGE AWAY FROM BUILDINGS AT ALL POINTS.
4. CONTRACTOR SHALL NOT PARK, STORE EQUIPMENT, OR USE THE EXISTING ROAD FOR ANY PURPOSE OTHER THAN ACCESS TO THE PROJECT SITE. CONTRACTOR SHALL NOT DISTURB OR USE ANY AREA OUTSIDE CONTRACT LIMIT LINE TO PARK OR STORE EQUIPMENT.
5. CONTRACTOR WILL MAINTAIN AND PROTECT ALL EXISTING UTILITIES DURING CONSTRUCTION.
6. ALL CUTTING, PATCHING, EXCAVATION AND BACKFILL DONE IN STREET SHALL BE DONE IN ACCORDANCE WITH UTAH DEPARTMENT OF TRANSPORTATION SPECIFICATIONS.
7. PROVIDE PIPE SLEEVES WHERE SPRINKLER LINES PASS UNDER ASPHALT PAVEMENT OR RETAINING WALLS.
8. PROTECT ANY EXISTING STORM DRAINS FROM MUD AND DEBRIS DURING CONSTRUCTION.
9. SAW CUT AND REMOVE DAMAGED ASPHALT AT EXISTING DRIVE APPROACH AND INSTALL NEW ASPHALT DRIVE PER SOILS REPORT.
10. PROVIDE AND INSTALL SILT FENCE AT INSIDE FACE OF NORTH CURB AND GUTTER AND AT THE EAST, WEST AND SOUTH CONTRACT LIMIT LINES. SILT FENCE IS TO EXTEND MINIMUM 6" BELOW GRADE AND MINIMUM 18" ABOVE GRADE. PROVIDE A POLLUTION PREVENTION PLAN FOR FOR OFF SITE WORK AND FOR WORK ON SITE IF REQUIRED BY GOVERNING JURISDICTION.

OVER EXCAVATION AND IMPORTED ENGINEERED FILL

NOTE: THE AREA UNDER THE BUILDING AND CONCRETE MANEUVERING PAD AT THE DOCK AREA IS TO BE EXCAVATED TO A DEPTH OF APPROXIMATELY 4' BELOW EXISTING GRADE. THE MOISTURE SENSITIVE EXPANSIVE CLAYS ARE TO BE REMOVED FROM THE SITE. REPLACE THE EXPANSIVE CLAYS WITH IMPORTED ENGINEERED FILL UNDER THE BUILDING FOOTPRINT, SIDEWALK AND THE CONCRETE MANEUVERING AREA AT THE LOADING DOCK. SEE SUBSURFACE INVESTIGATION FOR COMPACTION, OVER EXCAVATION, AND ENGINEERED FILL REQUIREMENTS. AT A MINIMUM, COMPLY WITH ALL REQUIREMENTS OF THE SUBSURFACE INVESTIGATION. ADDITIONAL REQUIREMENTS SUCH AS THE DEPTH OF THE CONCRETE SLAB REINFORCING, AND OVER EXCAVATION AT THE SIDEWALKS AND MANEUVERING SLAB ARE REQUIRED BY THESE DOCUMENTS.

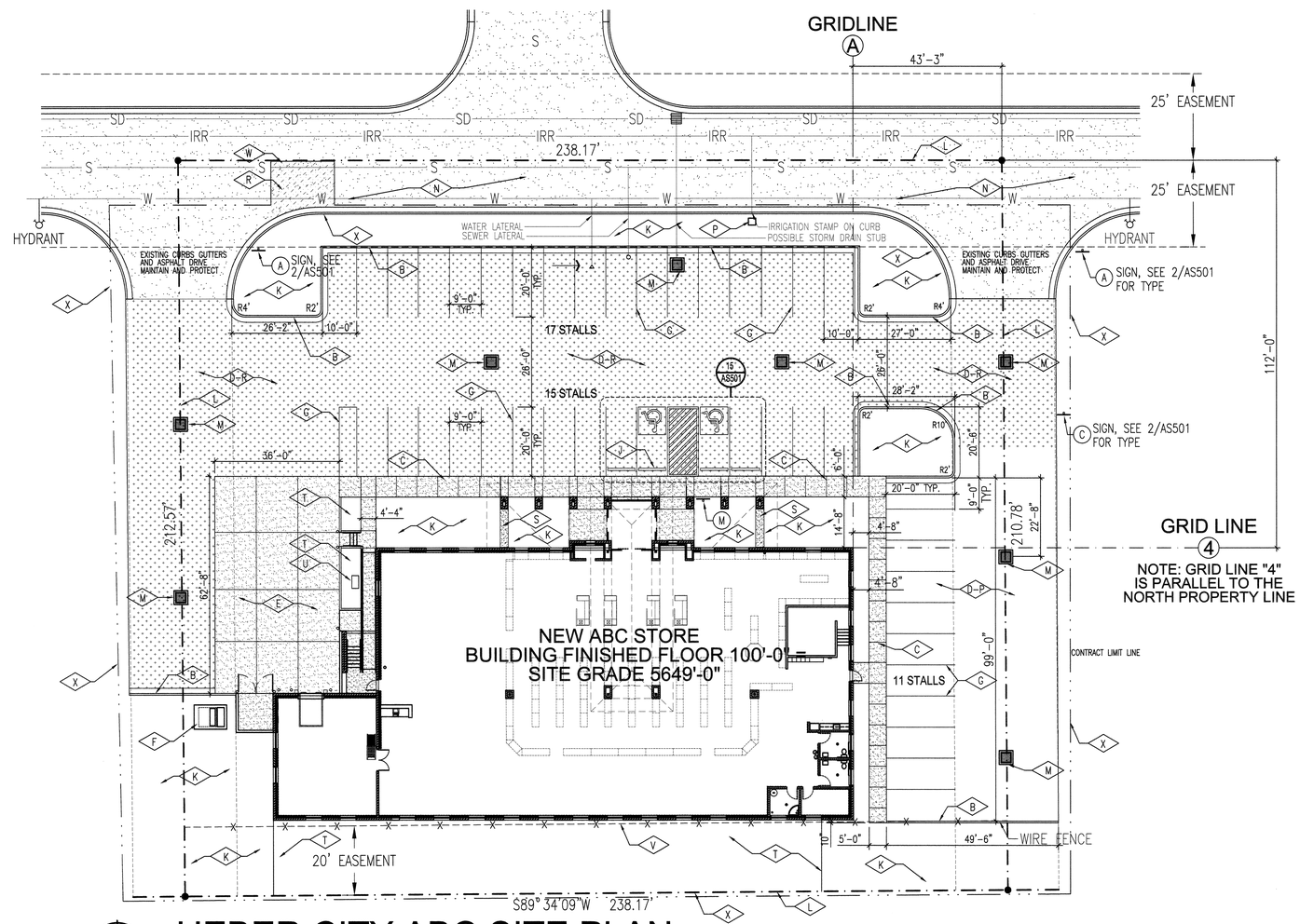

HEBER CITY ABC SITE PLAN

SCALE: 1" = 16' 0 8' 16' 32' 48' 64'

43 STALLS

NEW HEBER CITY LIQUOR STORE
DEPT OF ALCOHOLIC BEVERAGE CONTROL
HEBER CITY, UTAH

FRANK N MURDOCK JR ■ Architect & Associates
975 East 100 South Suite 100, Salt Lake City, Utah 84102 TEL: (801) 532-4441 FAX (801) 532-4220

SITE PLAN

STATE OF UTAH — FRANK N MURDOCK — 124498 — LICENSED ARCHITECT

REVISION #	DATE:

DFCM PROJECT NO.: 08224030
CONST. DOC.
FILE NAME: ABCHB–AS101
PLOT SCALE: 1:192
DRAWN BY: STAFF
CHECKED BY: FNM
DATE: MAY 2009

AS 101

SITE INFORMATION

PARKING:

PARKING STALLS	41 STALLS
ACCESSIBLE STALLS	2 STALLS
PARKING TOTALS	43 STALLS

SITE DRAWINGS

SEE SHEET AS101 FOR GENERAL SITE INFORMATION AND DIMENSIONS
SEE SHEET AS102 FOR SITE GRADING AND STORM SEWER INFORMATION
SEE SHEET AS103 FOR SITE UTILITY INFORMATION
SEE SHEET AS501 FOR SITE DETAIL INFORMATION

SITE PLAN LEGEND

- CATCH BASIN
- STORM DRAIN MAN HOLE
- POWER POLE
- WATER VALVE
- ELECTRIC BOX
- FIRE HYDRANT
- SANITARY SEWER MAN HOLE
- LIGHT POST
- STREET LIGHT BOX
- GAS METER
- TELEPHONE BOX
- PL — PROPERTY LINE
- L — LANDSCAPE AREA
- SW — SIDEWALK
- OVERHEAD TRANSMISSION LINE
- UNDERGROUND POWER
- SS — SANITARY SEWER
- W — WATER LINE
- T — TELEPHONE LINE
- G — GAS LINE
- C — CABLE T.V.
- PARKING STALLS
- x — FENCE
- 4434 — EXISTING GRADE CONTOUR
- 31 — NEW GRADE CONTOUR
- CENTER LINE OF ROAD
- NEW SECURITY FENCE
- A/B — SIGN TYPES – SEE 2/AS501
- NEW CONCRETE PAVING AND SIDEWALKS
- ROADWAY, SERVICE AND DOCK AREA (ASPHALT)
- 2 – 4" PVC PIPE SLEEVE

T.O.G	TOP OF GRATE
I.E.	INVERT ELEVATION
T.O.SW	TOP OF SIDEWALK
T.O.PV	TOP OF PAVEMENT
T.O.C.	TOP OF CONCRETE
T.B.C.	TOP BACK OF CURB

GENERAL NOTES

1. REFER TO SITE DEVELOPMENT, LANDSCAPE, MECHANICAL AND ELECTRICAL DRAWINGS FOR DIMENSIONS AND ADDITIONAL SITE INFORMATION.
2. CONTRACTOR TO VERIFY ALL EXISTING SITE CONDITIONS. NOTIFY ARCHITECT OF ANY DISCREPENCIES TO THE CONTRACT DOCUMENTS.
3. PROVIDE POSITIVE DRAINAGE AWAY FROM BUILDINGS AT ALL POINTS.
4. CONTRACTOR SHALL NOT PARK, STORE EQUIPMENT, OR USE THE EXISTING ROAD FOR ANY PURPOSE OTHER THAN ACCESS TO THE PROJECT SITE. CONTRACTOR SHALL NOT DISTURB OR USE ANY AREA OUTSIDE CONTRACT LIMIT LINE TO PARK OR STORE EQUIPMENT.
5. CONTRACTOR WILL MAINTAIN AND PROTECT ALL EXISTING UTILITIES DURING CONSTRUCTION.
6. ALL CUTTING, PATCHING, EXCAVATION AND BACKFILL DONE IN STREET SHALL BE DONE IN ACCORDANCE WITH UTAH DEPARTMENT OF TRANSPORTATION SPECIFICATIONS.
7. PROVIDE PIPE SLEEVES WHERE SPRINKLER LINES PASS UNDER ASPHALT PAVEMENT OR RETAINING WALLS.
8. PROTECT ANY EXISTING STORM DRAINS FROM MUD AND DEBRIS DURING CONSTRUCTION.

OVER EXCAVATION AND IMPORTED ENGINEERED FILL

NOTE: THE AREA UNDER THE BUILDING AND CONCRETE MANEUVERING PAD AT THE DOCK AREA IS TO BE EXCAVATED TO A DEPTH OF APPROXIMATELY 4' BELOW EXISTING GRADE. THE MOISTURE SENSITIVE EXPANSIVE CLAYS ARE TO BE REMOVED FROM THE SITE. REPLACE THE EXPANSIVE CLAYS WITH IMPORTED ENGINEERED FILL UNDER THE BUILDING FOOTPRINT, SIDEWALK AND THE CONCRETE MANEUVERING AREA AT THE LOADING DOCK. SEE SUBSURFACE INVESTIGATION FOR COMPACTION, OVER EXCAVATION, AND ENGINEERED FILL REQUIREMENTS. AT A MINIMUM, COMPLY WITH ALL REQUIREMENTS OF THE SUBSURFACE INVESTIGATION. ADDITIONAL REQUIREMENTS SUCH AS THE DEPTH OF THE CONCRETE SLAB REINFORCING, AND OVER EXCAVATION AT THE SIDEWALKS AND MANEUVERING SLAB ARE REQUIRED BY THESE DOCUMENTS.

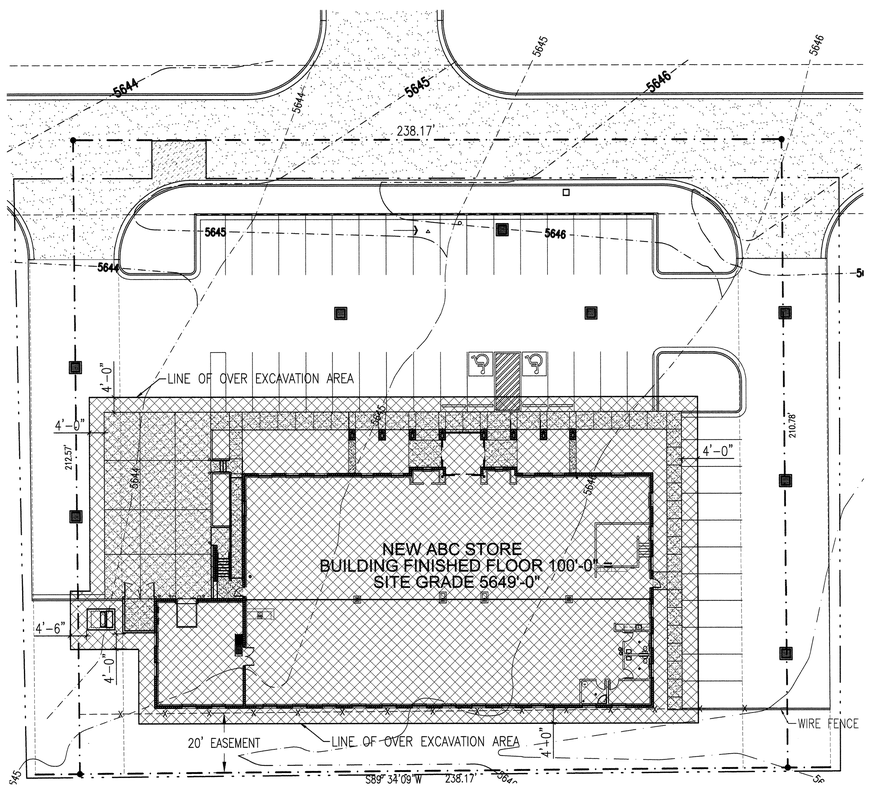

OVER EXCAVATION AREA SITE PLAN

SCALE: 1" = 20 (0 10' 20' 30' 40' 60')

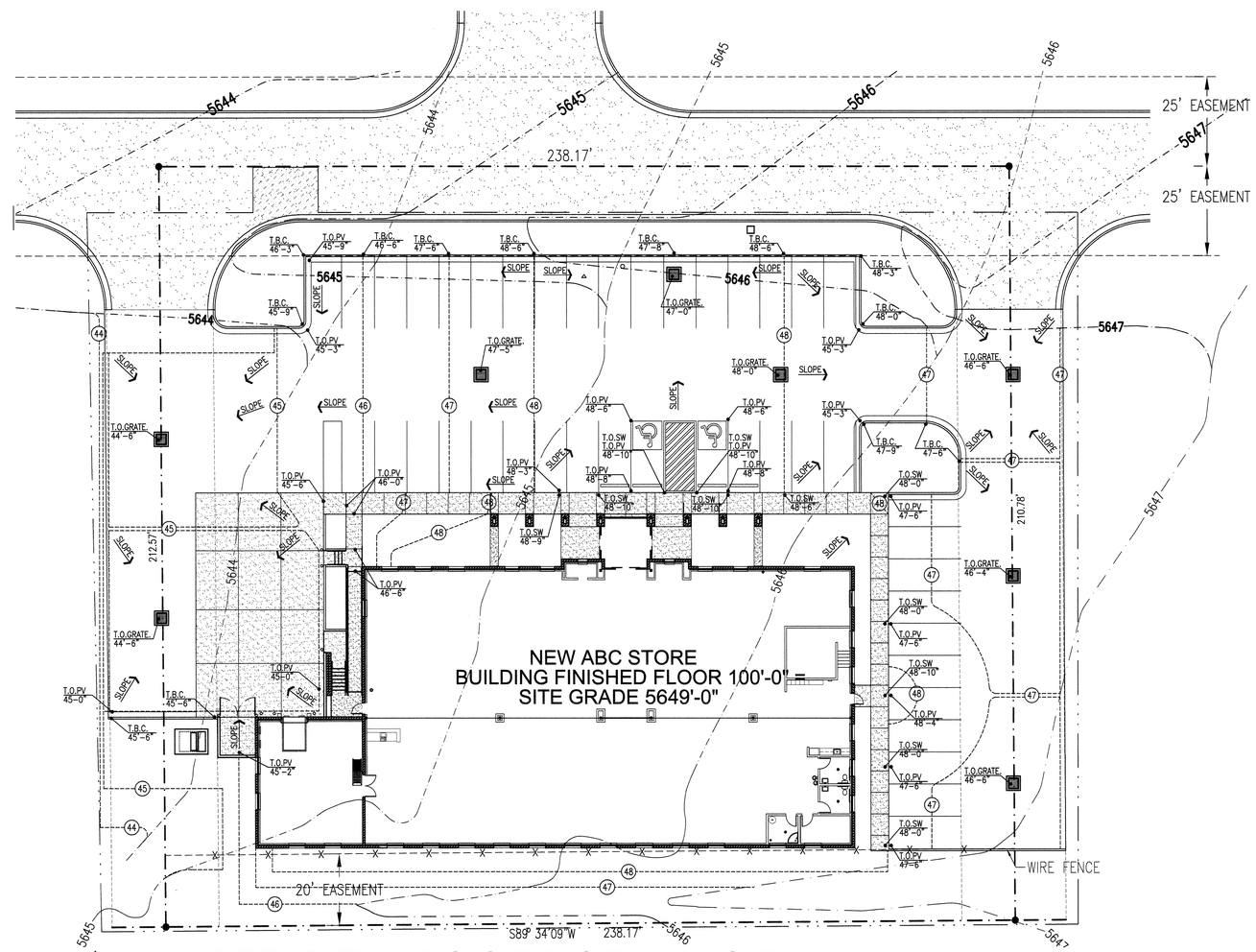

HEBER CITY ABC SITE GRADING PLAN

SCALE: 1" = 16' (0 8' 16' 32' 48' 64')

NEW HEBER CITY LIQUOR STORE

DEPT OF ALCOHOLIC BEVERAGE CONTROL
HEBER CITY, UTAH

FRANK N MURDOCK JR. ■ Architect & Associates
975 East 100 South Suite 100, Salt Lake City, Utah 84102 TEL: (801) 532-4441 FAX (801) 532-4220

SITE GRADING PLAN

STATE OF UTAH — FRANK N. MURDOCK — LICENSED ARCHITECT

REVISION # DATE:

DFCM PROJECT NO.: 08224030
CONST. DOC.
FILE NAME: ABCHB-AS102
PLOT SCALE: 1:192
DRAWN BY: STAFF
CHECKED BY: FNM
DATE: MAY 2009

AS 102

HEBER ABC SITE

SITE INFORMATION

PARKING:

PARKING STALLS	41 STALLS
ACCESSIBLE STALLS	2 STALLS
PARKING TOTALS	43 STALLS

SITE DRAWINGS

SEE SHEET AS101 FOR GENERAL SITE INFORMATION AND DIMENSIONS
SEE SHEET AS102 FOR SITE GRADING AND STORM SEWER INFORMATION
SEE SHEET AS103 FOR SITE UTILITY INFORMATION
SEE SHEET AS501 FOR SITE DETAIL INFORMATION

SITE PLAN LEGEND

- CATCH BASIN
- STORM DRAIN MAN HOLE
- POWER POLE
- WATER VALVE
- ELECTRIC BOX
- FIRE HYDRANT
- SANITARY SEWER MAN HOLE
- LIGHT POST
- STREET LIGHT BOX
- GAS METER
- TELEPHONE BOX
- PL — PROPERTY LINE
- L — LANDSCAPE AREA
- SW — SIDEWALK
- OVERHEAD TRANSMISSION LINE
- UNDERGROUND POWER
- SS — SANITARY SEWER
- W — WATER LINE
- T — TELEPHONE LINE
- G — GAS LINE
- C — CABLE T.V.
- PARKING STALLS
- x — FENCE
- 4434 — EXISTING GRADE CONTOUR
- 31 — NEW GRADE CONTOUR
- CENTER LINE OF ROAD
- NEW SECURITY FENCE
- A/B — SIGN TYPES – SEE 2/AS501
- NEW CONCRETE PAVING AND SIDEWALKS
- ROADWAY, SERVICE AND DOCK AREA (ASPHALT)
- 2 – 4" PVC PIPE SLEEVE

T.O.G	TOP OF GRATE
I.E.	INVERT ELEVATION
T.O.SW	TOP OS SIDEWALK
T.O.PV	TOP OF PAVEMENT
T.O.C.	TOP OF CONCRETE

GENERAL NOTES

1. REFER TO SITE DEVELOPEMENT, LANDSCAPE, MECHANICAL AND ELECTRICAL DRAWINGS FOR DIMENSIONS AND ADDITIONAL SITE INFORMATION.
2. CONTRACTOR TO VERIFY ALL EXISTING SITE CONDITIONS. NOTIFY ARCHITECT OF ANY DISCREPENCIES TO THE CONTRACT DOCUMENTS.
3. PROVIDE POSITIVE DRAINAGE AWAY FROM BUILDINGS AT ALL POINTS.
4. CONTRACTOR SHALL NOT PARK, STORE EQUIPMENT, OR USE THE EXISTING ROAD FOR ANY PURPOSE OTHER THAN ACCESS TO THE PROJECT SITE. CONTRACTOR SHALL NOT DISTURB OR USE ANY AREA OUTSIDE CONTRACT LIMIT LINE TO PARK OR STORE EQUIPMENT.
5. CONTRACTOR WILL MAINTAIN AND PROTECT ALL EXISTING UTILITIES DURING CONSTRUCTION.
6. ALL CUTTING, PATCHING, EXCAVATION AND BACKFILL DONE IN STREET SHALL BE DONE IN ACCORDANCE WITH UTAH DEPARTMENT OF TRANSPORTATION SPECIFICATIONS.
7. PROVIDE PIPE SLEEVES WHERE SPRINKLER LINES PASS UNDER ASPHALT PAVEMENT OR RETAINING WALLS.
8. PROTECT ANY EXISTING STORM DRAINS FROM MUD AND DEBRIS DURING CONSTRUCTION.

HEBER CITY ENGINEERING STANDARDS AND DETAILS

1. FOR HEBER CITY ENGINEERING STANDARDS AND DETAILS ON THE WEB SEE: http://www.ci.heber.ut.us/engr/engr_draw.htm

CULINARY WATER AND FIRE LINE SERVICE NOTES

1. ALL WATER SERVICE LINES AND CONNECTION CONSTRUCTION SHALL COMPLY WITH LOCAL WATER DISTRICT'S DESIGN STANDARDS AND CONSTRUCTION SPECIFICATIONS.
2. CONTRACTOR SHALL FIELD VERIFY LOCATIONS AND INVERT ELEVATIONS OF EXISTING MANHOLES AND OTHER UTILITIES BEFORE STAKING OR CONSTRUCTION OF ANY SEWER LINES.
3. A 2" CULLINARY WATER SERVICE WITH METER HAS BEEN ISTALLED FOR THE PROPERTY CONNECT TO SERVICE AS REQUIRED BY HEBER CITY STANDARDS.

STORM SEWER NOTES

1. ALL STORM SEWER SYTSTEM CONSTRUCTION SHALL COMPLY WITH LOCAL STORM WATER DISTRICT'S DESIGN STANDARDS AND CONSTRUCTION SPECIFICATIONS.
2. CONTRACTOR SHALL FIELD VERIFY LOCATIONS AND INVERT ELEVATIONS OF EXISTING MANHOLES AND OTHER UTILITIES BEFORE STAKING OR CONSTRUCTION OF ANY STORM SEWER LINES.

SANITARY SEWER NOTES

1. ALL SANITARY SEWER CONSTRUCTION SHALL COMPLY WITH LOCAL SEWER DISTRICT'S DESIGN STANDARDS AND CONSTRUCTION SPECIFICATIONS.
2. CONTRACTOR SHALL FIELD VERIFY LOCATIONS AND INVERT ELEVATIONS OF EXISTING MANHOLES AND OTHER UTILITIES BEFORE STAKING OR CONSTRUCTION OF ANY SEWER LINES.

UTILITY FEES

1. THE OWNER SHALL BE RESPONSIBLE FOR ALL UTILITY CONNECTION AND PERMIT FEES. CHARGES FOR IMPACT FEES BY UTILITIES OR MUNICIPALITIES ARE NOT TO BE CHARGED TO OR PAID BY THE CONTRACTOR OR THE STATE OF UTAH FOR STATE FACILITIES. PERMITTING BY LOCAL JURISDICTIONS IS ONLY REQUIRED FOR WORK PERFORMED OUTSIDE THE BOUNDARIES OF THE STATE PROPERTY.
2. THE CONTRACTOR SHALL BE RESPONSIBLE FOR ALL UTILITY CONNECTION AND PERMIT APPLICATIONS. THE CONTRACTOR SHALL PROVIDE TO THE OWNER COPIES OF THE INVOICES FOR UTILITY CONNECTIONS AND OFF SITE PERMITS.

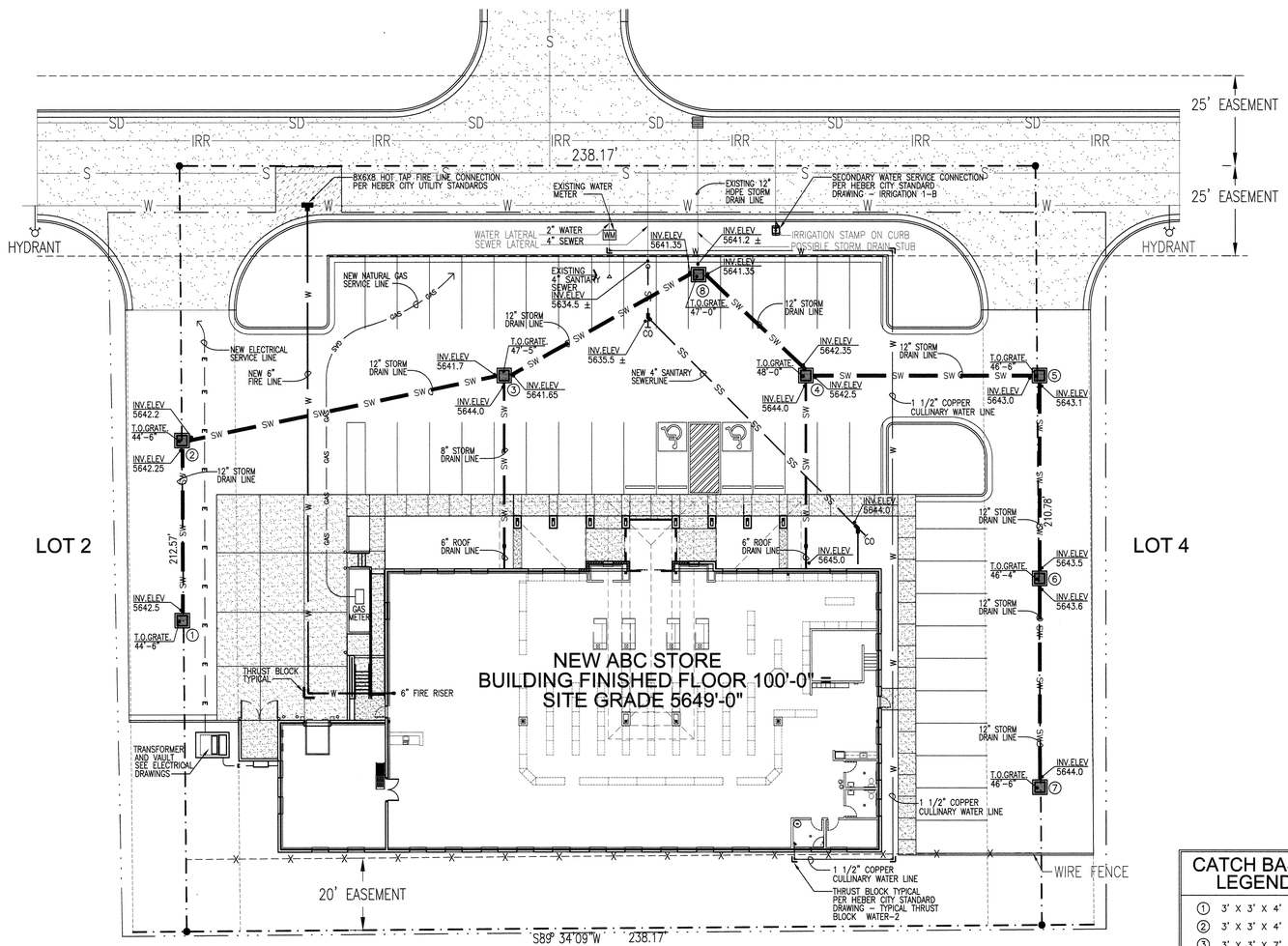

HEBER CITY ABC SITE PLAN

SCALE: 1" = 16' 0 8' 16' 32' 48' 64'

CATCH BASIN LEGEND

1	3' X 3' X 4' DEEP
2	3' X 3' X 4' DEEP
3	3' X 3' X 7' DEEP
4	3' X 3' X 6' DEEP
5	3' X 3' X 4' DEEP
6	3' X 3' X 4' DEEP
7	3' X 3' X 4' DEEP
8	4' X 4' X 7' DEEP

SITE UTILITY PLAN

NEW HEBER CITY LIQUOR STORE
DEPT OF ALCOHOLIC BEVERAGE CONTROL
HEBER CITY, UTAH

FRANK N MURDOCK JR ■ Architect & Associates
975 East 100 South Suite 100, Salt Lake City, Utah 84102 TEL: (801) 532-4441 FAX (801) 532-4220

STATE OF UTAH FRANK N. MURDOCK 124498 LICENSED ARCHITECT

REVISION # DATE:

DFCM PROJECT NO.: 08224030
CONST. DOC.
FILE NAME: ABCHB–AS103
PLOT SCALE: 1:192
DRAWN BY: STAFF
CHECKED BY: FNM
DATE: MAY 2009

AS 103

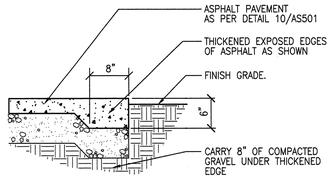

25/AS501 ASPHALT EDGE DETAIL
SCALE: NOT TO SCALE

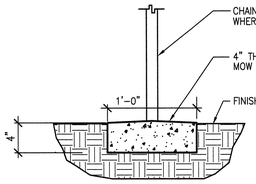

24/AS501 CONCRETE MOW STRIP DETAIL
SCALE: NOT TO SCALE

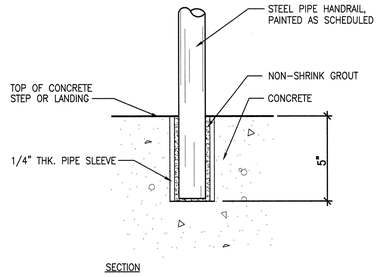

23/AS501 PIPE RAIL ANCHORING DETAIL
SCALE: NOT TO SCALE

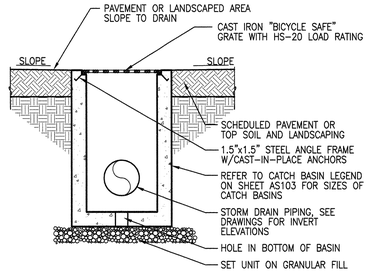

22/AS501 CATCH BASIN SECTION
SCALE: NOT TO SCALE

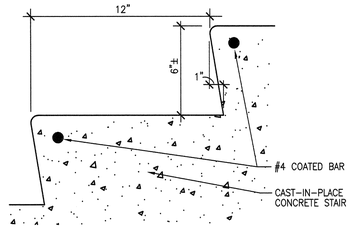

21/AS501 STAIR NOSING SECTION
SCALE: NOT TO SCALE

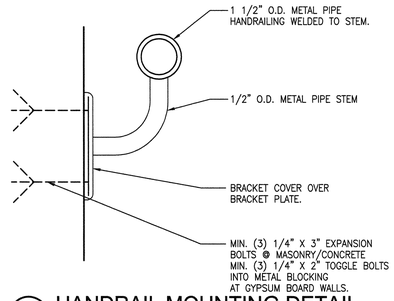

20/AS501 HANDRAIL MOUNTING DETAIL
SCALE: NOT TO SCALE

NOTE: THESE ARE NOT THE ACTUAL NUMBERS TO BE USED THE NUMBERS WILL MATCH THE STREET ADDRESS OF THE BUILDING :)

8" **1896**

PROVIDE AND INSTALL 4 EACH NUMBERS FONT – TIMES NEW ROMAN, HELVETICA OR ARIAL POLISHED BRASS, DARK BRONZE OR BRUSHED ALUMINUM NUMBERS, FONT AND LOCATION TO BE SELECTED BY ARCHITECT

16/AS501 EXTERIOR BUILDING NUMBERS
SCALE: NOT TO SCALE

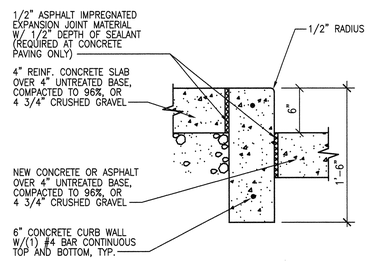

17/AS501 CONCRETE CURB DETAIL
SCALE: NOT TO SCALE

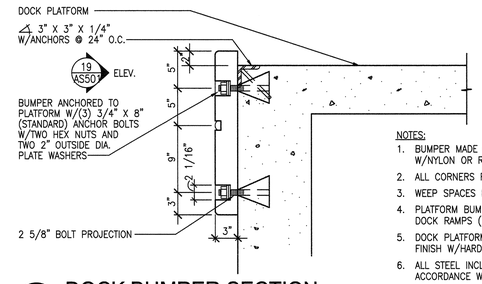

NOTES:
1. BUMPER MADE OF RUBBER REINFORCED W/NYLON OR RAYON OR A COMBINATION OF BOTH.
2. ALL CORNERS ROUNDED.
3. WEEP SPACES BETWEEN BUMPERS 3/4" MIN.–1 3/8" MAX.
4. PLATFORM BUMPERS WILL NOT BE POSITIONED WHERE DOCK RAMPS (FLIP-OVER, HINGED ETC.) ARE USED.
5. DOCK PLATFORM TO BE STEEL TROWEL AND BROOM FINISH W/HARDENING AND SEALING.
6. ALL STEEL INCL. BOLTS MUST BE GALVANIZED IN ACCORDANCE W/ASTM A-123.

18/AS501 DOCK BUMPER SECTION
SCALE: NOT TO SCALE

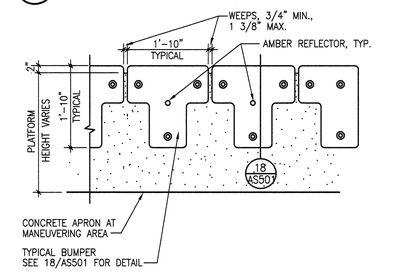

NOTES: ALL STEEL TO BE GALVANIZED IN ACCORDANCE W/ ASTM A-123.

19/AS501 DOCK BUMPER ELEVATION
SCALE: NOT TO SCALE

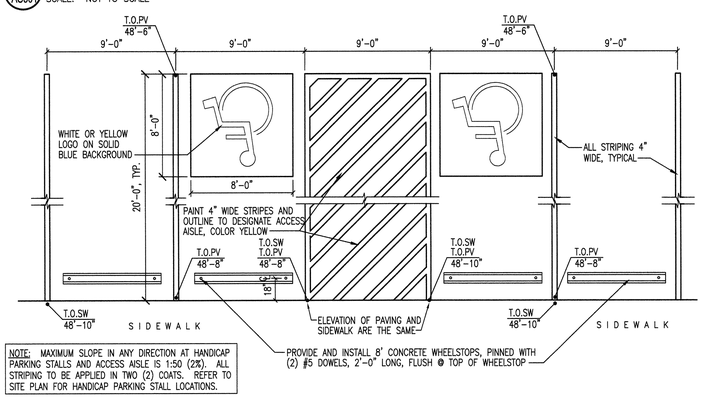

NOTE: MAXIMUM SLOPE IN ANY DIRECTION AT HANDICAP PARKING STALLS AND ACCESS AISLE IS 1:50 (2%). ALL STRIPING TO BE APPLIED IN TWO (2) COATS. REFER TO SITE PLAN FOR HANDICAP PARKING STALL LOCATIONS.

15/AS501 HANDICAP PARKING STALL AND ACCESS AISLE DETAIL
SCALE: NOT TO SCALE

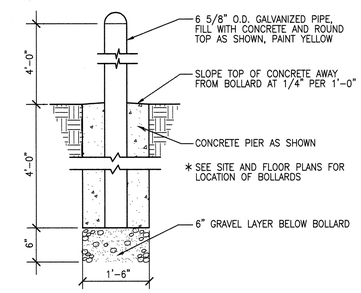

14/AS501 BOLLARD DETAIL
SCALE: NOT TO SCALE

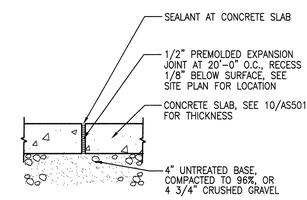

13/AS501 EXPANSION JOINT DETAIL (EJ)
SCALE: NOT TO SCALE

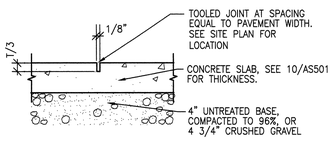

12/AS501 CONTROL JOINT DETAIL (CJ)
SCALE: NOT TO SCALE

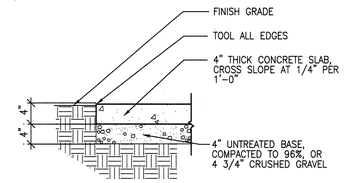

11/AS501 CONCRETE SIDEWALK DETAIL
SCALE: NOT TO SCALE

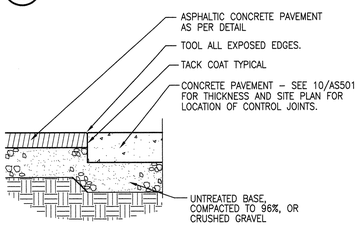

5/AS501 CONCRETE/ASPHALT EDGE
SCALE: NOT TO SCALE

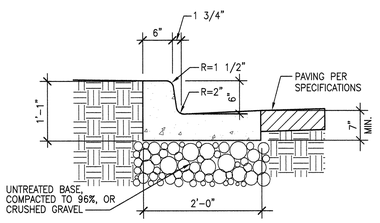

6/AS501 CURB AND GUTTER DETAIL
SCALE: NOT TO SCALE

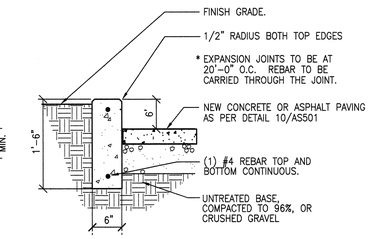

7/AS501 CONCRETE CURB DETAIL
SCALE: NOT TO SCALE

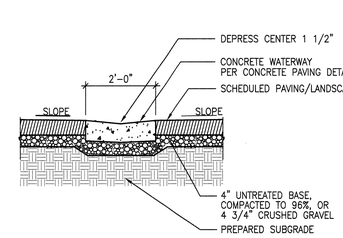

8/AS501 CONCRETE WATERWAY DETAIL
SCALE: NOT TO SCALE

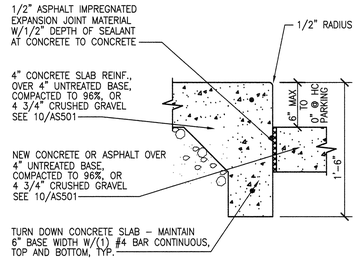

9/AS501 CURB TO SIDEWALK DETAIL
SCALE: NOT TO SCALE

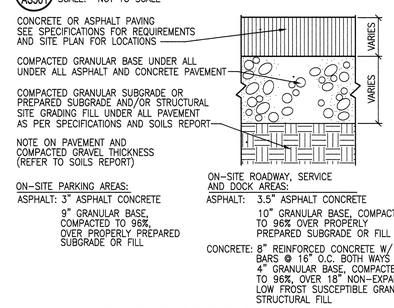

10/AS501 PAVEMENT SECTIONS
SCALE: NOT TO SCALE

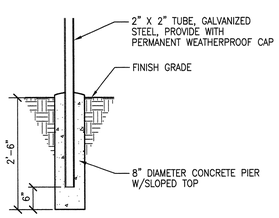

4/AS501 EXTERIOR SIGNAGE SUPPORT
SCALE: NOT TO SCALE

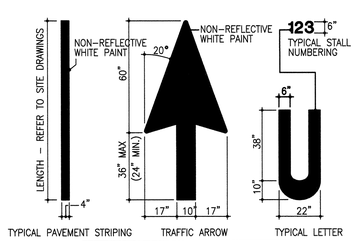

NOTE: ALL STRIPING, MARKINGS AND LOGOS TO BE APPLIED IN TWO (2) COATS PER SPECIFICATIONS.

3/AS501 PAVEMENT MARKINGS
SCALE: NOT TO SCALE

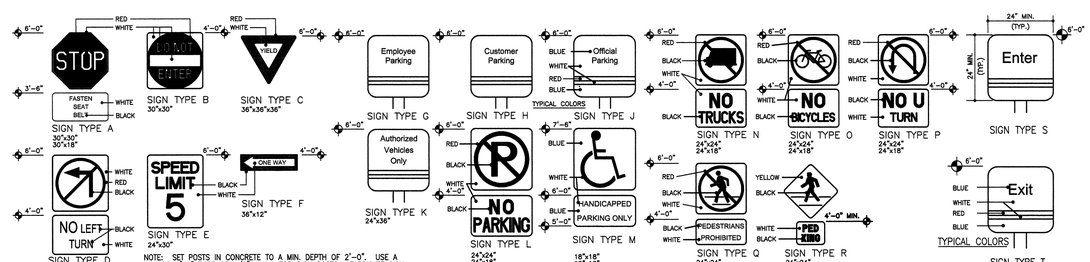

NOTE: SET POSTS IN CONCRETE TO A MIN. DEPTH OF 2'-0". USE A SQUARE 2"X2" TUBE OF 1/8" ALUM. FOR SIGN POSTS. FABRICATE SIGN PANELS OF 1/8" ALUMINUM. PAINT POSTS AS DIRECTED BY ARCHITECT AND PROVIDE WITH PERMANENT WEATHERPROOF ALUMINUM CAP. PROVIDE DOUBLE POSTS AT ALL BACK-TO-BACK SIGNS.

2/AS501 EXTERIOR TRAFFIC SIGNAGE
SCALE: NOT TO SCALE

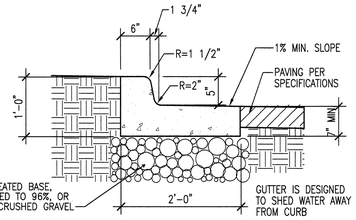

1/AS501 OUTFLOW CURB & GUTTER DETAIL
SCALE: NOT TO SCALE

NEW HEBER CITY LIQUOR STORE
DEPT OF ALCOHOLIC BEVERAGE CONTROL
HEBER CITY, UTAH

SITE DETAILS

FRANK N MURDOCK JR ■ Architect & Associates
975 East 100 South Suite 100, Salt Lake City, Utah 84102 TEL: (801) 532-4441 FAX (801) 532-4220

STATE OF UTAH FRANK N. MURDOCK 124498 LICENSED ARCHITECT

REVISION # DATE:

DFCM PROJECT NO.: 08224030
CONST DOC
FILE NAME: ABCHB-AS501
PLOT SCALE: 1:240
DRAWN BY: STAFF
CHECKED BY: FNM
DATE: MAY 2009

AS 501

SITE INFORMATION

PARKING:

PARKING STALLS	41 STALLS
ACCESSIBLE STALLS	2 STALLS
PARKING TOTALS	43 STALLS

SITE DRAWINGS

SEE SHEET AS101 FOR GENERAL SITE INFORMATION AND DIMENSIONS
SEE SHEET AS102 FOR SITE GRADING AND STORM SEWER INFORMATION
SEE SHEET AS103 FOR SITE UTILITY INFORMATION
SEE SHEET AS501 FOR SITE DETAIL INFORMATION

GENERAL NOTES

1. REFER TO SITE DEVELOPMENT, LANDSCAPE, MECHANICAL AND ELECTRICAL DRAWINGS FOR DIMENSIONS AND ADDITIONAL SITE INFORMATION.
2. CONTRACTOR TO VERIFY ALL EXISTING SITE CONDITIONS. NOTIFY ARCHITECT OF ANY DISCREPENCIES TO THE CONTRACT DOCUMENTS.
3. PROVIDE POSITIVE DRAINAGE AWAY FROM BUILDINGS AT ALL POINTS.
4. CONTRACTOR SHALL NOT PARK, STORE EQUIPMENT, OR USE THE EXISTING ROAD FOR ANY PURPOSE OTHER THAN ACCESS TO THE PROJECT SITE. CONTRACTOR SHALL NOT DISTURB OR USE ANY AREA OUTSIDE CONTRACT LIMIT LINE TO PARK OR STORE EQUIPMENT.
5. CONTRACTOR WILL MAINTAIN AND PROTECT ALL EXISTING UTILITIES DURING CONSTRUCTION.
6. ALL CUTTING, PATCHING, EXCAVATION AND BACKFILL DONE IN STREET SHALL BE DONE IN ACCORDANCE WITH UTAH DEPARTMENT OF TRANSPORTATION SPECIFICATIONS.
7. PROVIDE PIPE SLEEVES WHERE SPRINKLER LINES PASS UNDER ASPHALT PAVEMENT OR RETAINING WALLS.
8. PROTECT ANY EXISTING STORM DRAINS FROM MUD AND DEBRIS DURING CONSTRUCTION.

LANDSCAPING PLAN GENERAL NOTES

1. ALL AREAS NOTED AS "PLANTING" OR "LANDSCAPED AREA", SHALL BE PROVIDED WITH A "DRIP" TYPE AUTOMATIC LANDSCAPE IRRIGATION SYSTEM AT ALL TREES AND SHUBS AND MICROSPINKLER HEADS AT ALL GROUND COVER AREAS. SLEEVES SHALL BE PROVIDED UNDER PAVED AREAS TO FACILITATE THE IRRIGATION SYSTEM. SEE SPECIFICATIONS FOR REQUIREMENTS. (A)
2. LANDSCAPE CONTRACTOR IS RESPONSIBLE FOR SLEEVES UNDER PAVED AREAS. WORK SHALL BE COORDINATED WITH PAVING CONTRACTOR.
3. INSTALL A MINIMUM OF 4" OF IMPORTED TOP SOIL AT ALL LANDSCAPED AREAS.
4. MINIMUM EXCAVATION FOR TREES SHALL BE A DIAMETER OF 2'-0" GREATER THAN THE ROOT BALL, AND 6" DEEPER THAN THE ROOT BALL. BACKFILL HOLE WITH TOPSOIL. COVER AREA INSIDE EDGING WITH BARK CHIPS (3" DEEP).
5. COMPLETELY COVER AREA AROUND SHRUB, TREE, AND GROUNDCOVER PLANTINGS WITH A 4" THICK LAYER OF BARK CHIPS OVER 6 OZ/SQ YARD LANDSCAPE FABRIC.
6. DO NOT RUN PIPE SLEEVES FOR LANDSCAPE SYSTEM UNDER THE BUILDING.
7. STAKE AND GUY SUPPORT ALL TREES. PROVIDE TREE TRUNK PROTECTION PLASTIC SLEEVES AT ALL TREES NOT PLANTED WITH SHRUBS AROUND THEIR BASE.
8. PROVIDE 4X6XCONT PRECAST OR POURED IN PLACE CONCRETE EDGING AND BARK CHIPS AT ALL TREES IN PLANTING AREAS. PROVIDE 4' DIAMETER CONCRETE EDGING CIRCLE, AT TREES IN LAWN AREAS, WHERE NO EDGING IS OTHERWISE NOTED.
9. CONSTRUCT A 4" HIGH EARTHEN BERM AROUND ALL TREES AND SHRUBS. BERM TO BE SAME DIAMETER AS EXCAVATION FOR ROOT BALL PLANTING PIT.
10. MINIMUM EXCAVATION FOR SHRUBS SHALL BE A DIAMETER OF 12" GREATER THAN THE DIAMETER OF THE CONTAINER. EXCAVATION SHALL BE 18" DEEP MINIMUM. BACKFILL HOLE WITH TOP SOIL.
11. PROVIDE AND INSTALL COMPLETE AUTOMATIC LANDSCAPE SPRINKLING SYSTEM TO ALL LANDSCAPED AREAS. SEE SPECIFICATIONS FOR DETAILED SYSTEM REQUIREMENTS.
12. PROVIDE AND INSTALL A MINUMUM OF 3" OF BARK CHIPS IN ALL AREAS OF GROUND COVER AND PLANTING AREAS.
13. LANDSCAPING SHALL NOT BE CONSIDERED TO BE COMPLETE UNTIL AFTER 90 DAYS OF HEALTHY GROWTH. CONTRACTOR SHALL BE RESPONSIBLE TO REPLACE ALL UNHEALTHY OR DEAD LANDSCAPING. CONTRACTOR SHALL REMAIN RESPONSIBLE FOR ALL REPLACED LANDSCAPING WITH THE 90 DAY HEALTHY GROWTH REQUIREMENT BEING APPLICABLE TO ALL REPLACED LANDSCAPING.
14. ALL AREAS NOTED AS "SOD" (GRASS) AREA (C) SHALL BE PROVIDED WITH AN AUTOMATIC LANDSCAPE IRRIGATION SYSTEM. SLEEVES SHALL BE PROVIDED UNDER PAVED AREAS TO FACILITATE THE IRRIGATION SYSTEM. SEE SPECIFICATIONS FOR REQUIREMENTS.
15. NOTE: COORDINATE SCREENING OF THE INLINE FILTER TO ALLOW DRIP AND MICROSPRINKLER HEADS TO PROPERLY FUNCTION.

KEY NOTES

(A) LANDSCAPE AREA WITH RANDOM CLUMPS OF GROUND COVER "MIX"

(B) 4" MINUS WASHED COBBLE STONE OVER 6 OZ/SQ YD LANDSCAPE FABRIC. COBBLE DEPTH MINIMUM 4" THICK

(C) SOD

LANDSCAPING PLAN LEGEND

NOTE: MINIMUM SIZE FOR PLANTS

GROUND COVER – FLATS TO 5 GALLON
SHRUBS – 5 GALLON
DECIDUOUS TREES – 4" CALIPER
EVERGREENS – 10' TO 12'

NOTE:
"CALIPER" INDICATES THE DIAMETER OF THE TREE TRUNK TAKEN AT 6" ABOVE THE GROUND LEVEL.

TREES

AP — AUSTRIAN PINE
PINUS NIGRA
4" to 6" CALIPER (10' HIGH MINIMUM)
QUANTITY = 10

QA — "QUAKING ASPEN"
POPULUS TREMULOIDES
4" CALIPER
QUANTITY = 26

SHRUBS

OG — *MAHONIA AQUIFOLIUM*
OREGON GRAPE
QUANTITY = 100

MP — *PINUS MUGO PUMILIO*
DWARF MUGO PINE
QUANTITY = 48

GRASS

SOD = BLUEGRASS VARIETIES

GROUND COVER

GROUNDCOVERS

GREATER PERIWINKLE QUANTITY = 120
VINA MAJOR

ATLAS DAISY QUANTITY = 120
ANACYCLUS DEPRESSUS

SNOW IN SUMMER QUANTITY = 120
CERASTIUM TOMENTOSUM

BEARDED IRIS QUANTITY = 120
IRIDACEAE

MIX — PLANT IN RANDOM PATTERN 12" O.C. IN "MIX" AREAS

25%	GREATER PERIWINKLE	QUANTITY = 60 PLANTS
25%	ATLAS DAISY	QUANTITY = 60 PLANTS
25%	SNOW IN SUMMER	QUANTITY = 60 PLANTS
25%	BEARDED IRIS	QUANTITY = 60 PLANTS

(A) MIX — PLANT IN RANDOM CLUSTERS IN "LANDSCAPE" AREAS

25%	GREATER PERIWINKLE	QUANTITY = 60 PLANTS
25%	ATLAS DAISY	QUANTITY = 60 PLANTS
25%	SNOW IN SUMMER	QUANTITY = 60 PLANTS
25%	BEARDED IRIS	QUANTITY = 60 PLANTS

BOULDERS

BB

NOTE: IN ADDITION TO THE LANDSCAPING INDICATED, PROVIDE AND INSTALL

25 BOULDERS WITH MINIMUM DIMENSIONS OF 48" LONG BY 30" HIGH BY 36" WIDE.

20 BOULDERS WITH MINIMUM DIMENSIONS OF 72" LONG BY 36" HIGH BY 42" WIDE.

PLACE IN PLANTER AREAS AS DIRECTED BY ARCHITECT

BOULDERS ARE TO BE OF A TYPE NATIVE TO THE LOCAL AREA.

SECONDARY WATER FILTERS

PROVIDE AND INSTALL AN INLINE IRRIGATION WATER FILTER AT THE MAIN LINE CONNECTION.
FILTER TO BE:
ACTION MANUFACTURING INC. MODEL AFI 50-50
Action Machining Inc.
610 West 2200 North
West Bountiful, UT 84087
Phone: 801-292-9299
Sales: sales@actionfilters.com

PROVIDE AND INSTALL INLINE WATER FILTERS AT ALL THE DRIP HEAD AND MICROSPRINKLER HEAD WATER SUPPLY LINES.

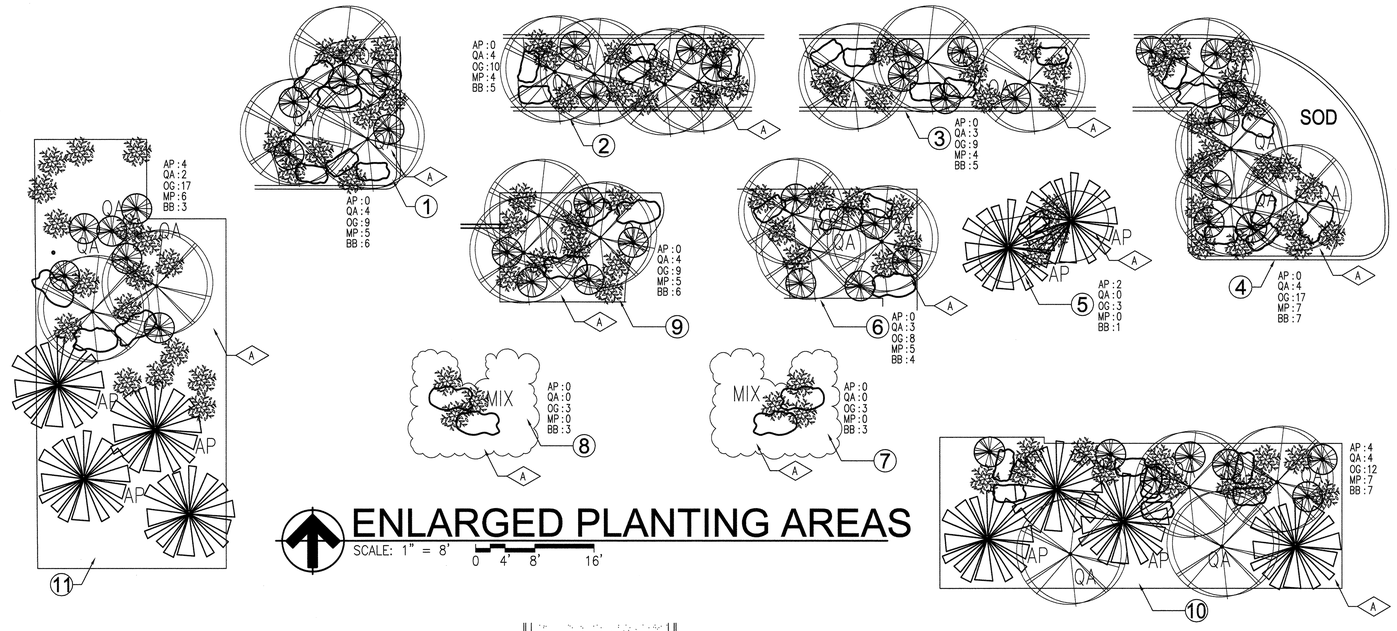

ENLARGED PLANTING AREAS

SCALE: 1" = 8' 0 4' 8' 16'

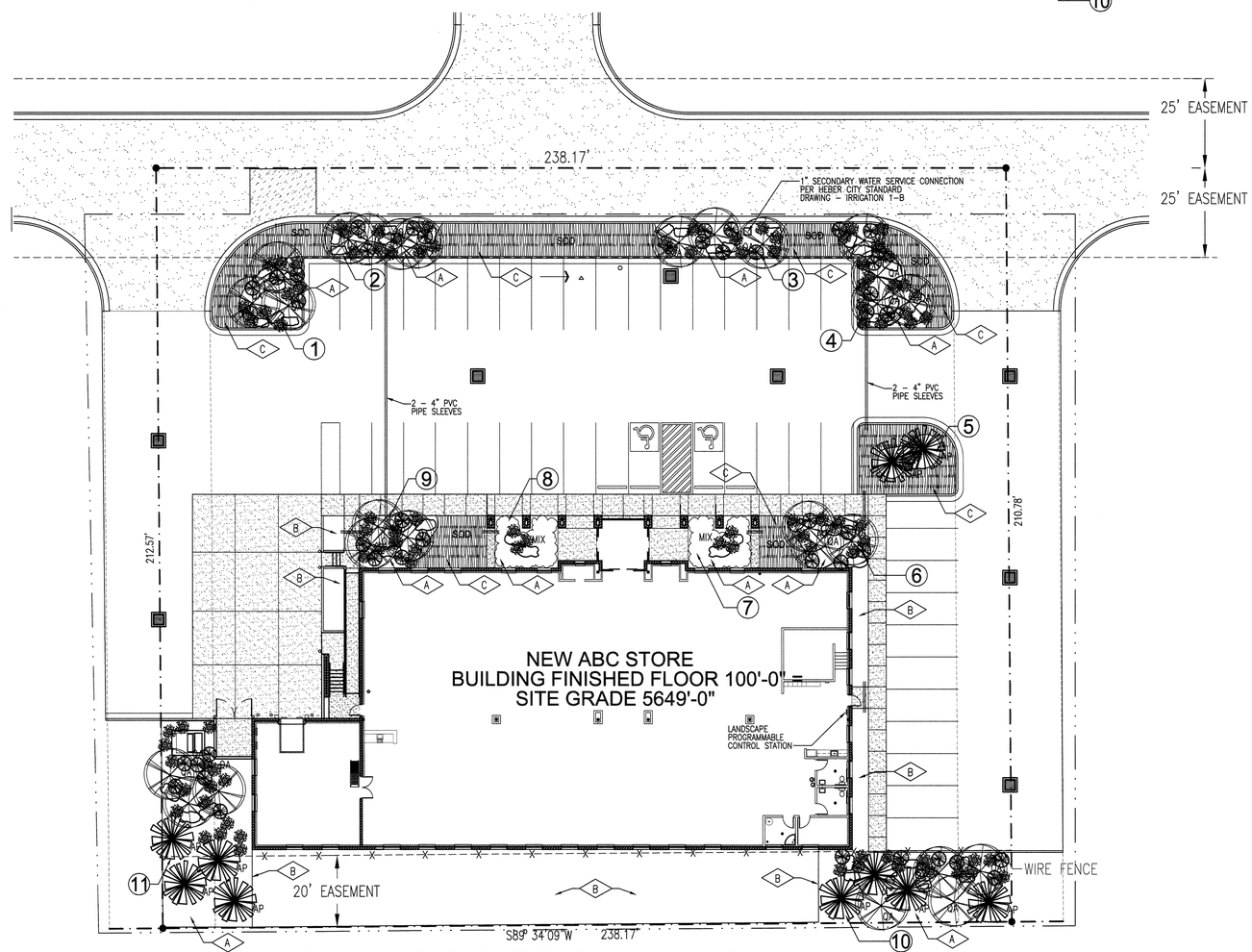

HEBER CITY ABC SITE GRADING PLAN

SCALE: 1" = 16' 0 8' 16' 32' 48' 64'

NEW HEBER CITY LIQUOR STORE

DEPT OF ALCOHOLIC BEVERAGE CONTROL
HEBER CITY, UTAH

SITE GRADING PLAN

FRANK N MURDOCK JR ■ Architect & Associates
975 East 100 South Suite 100, Salt Lake City, Utah 84102 TEL: (801) 532-4441 FAX (801) 532-4220

STATE OF UTAH FRANK N. MURDOCK 124498 LICENSED ARCHITECT 5/20/09

REVISION # DATE:

DFCM PROJECT NO.: 08224030
CONST. DOC.
FILE NAME: ABCHB-LS101
PLOT SCALE: 1:192
DRAWN BY: STAFF
CHECKED BY: FNM
DATE: MAY 2009

LS 101

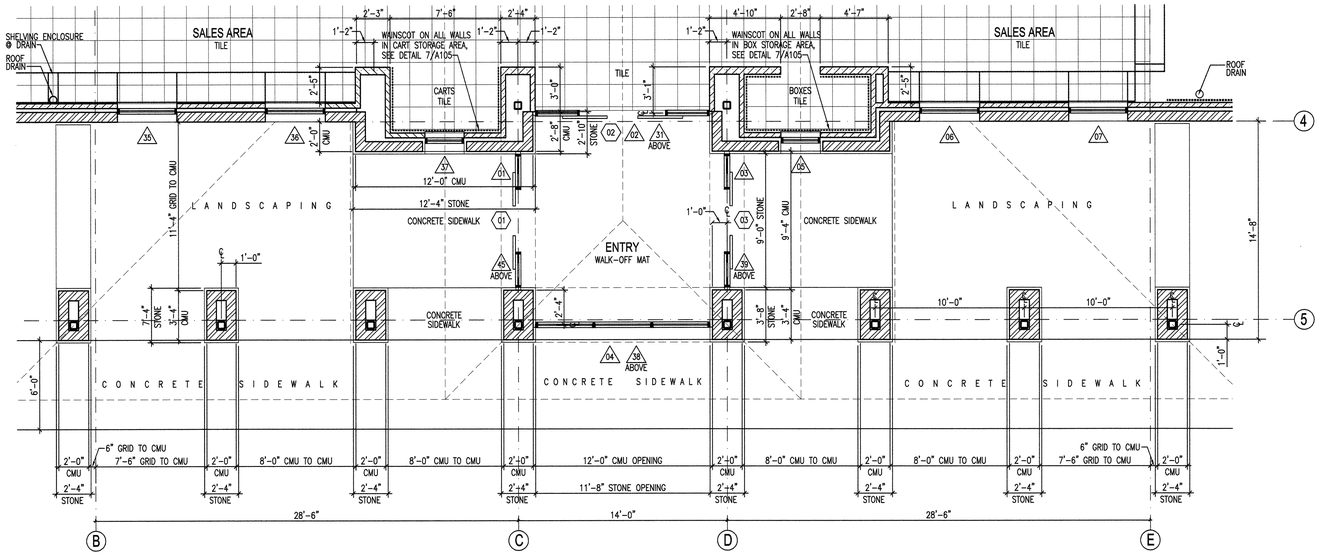

2/A101 ENLARGED FLOOR PLAN AT FRONT ENTRANCE

SCALE: 1/4" = 1'-0"

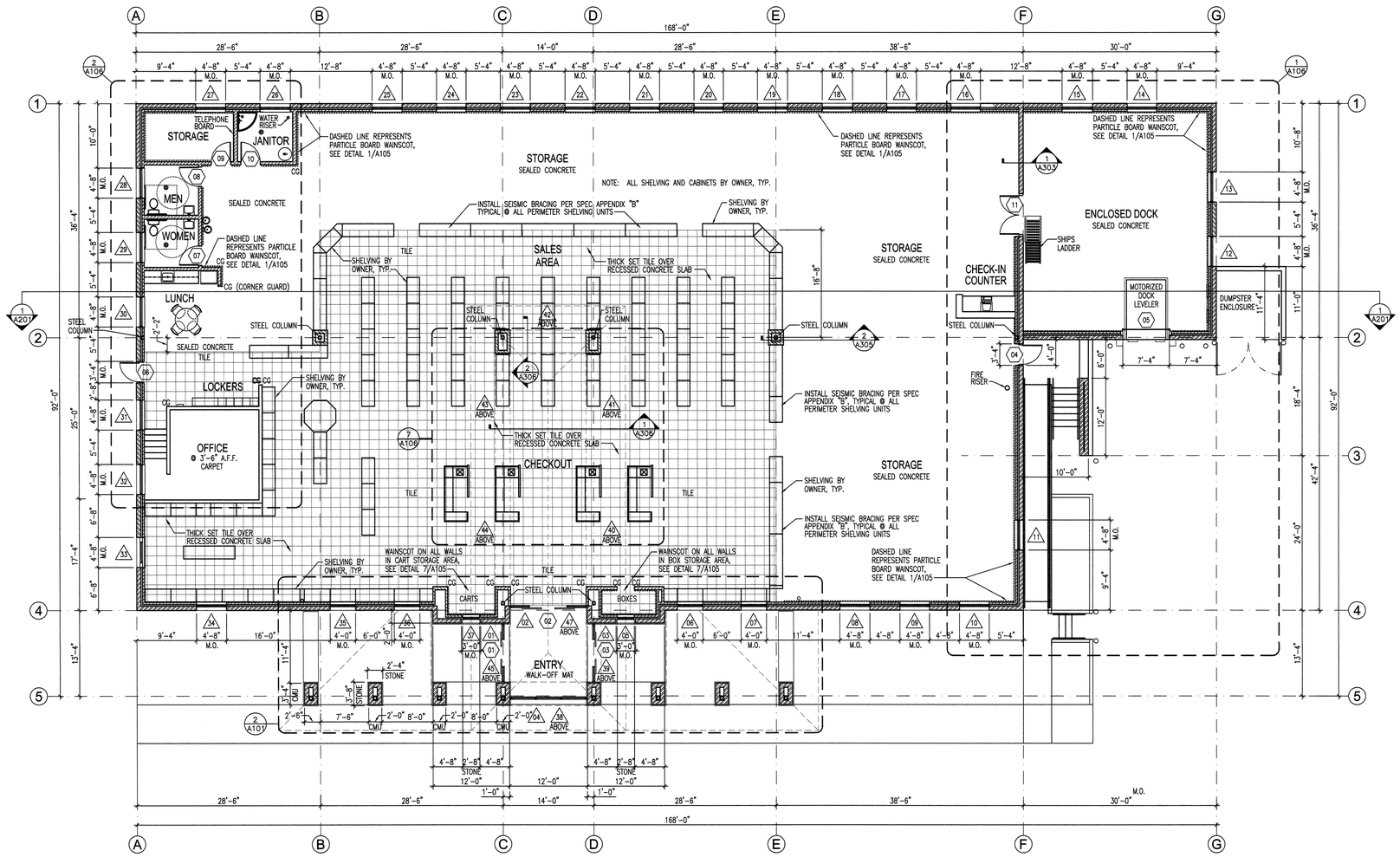

1/A101 FLOOR PLAN - HEBER CITY ABC

SCALE: 1/8" = 1'-0"

NOTES

1. PROVIDE SIGNAGE ABOVE ENTRY DOORS STATING "THESE DOORS TO REMAIN UNLOCKED DURING BUSINESS HOURS".
2. PROVIDE SIGNAGE DESIGNATING "PUBLIC RESTROOMS" AT LOCATION TO BE DETERMINED BY ARCHITECT.
3. CONTRACTOR SHALL PROVIDE AND INSTALL FOUR (4) FIRE EXTINGUISHERS (SEE SPECIFICATIONS FOR TYPE) IN LOCATIONS TO BE DETERMINED BY ARCHITECT.

WALL TYPE

1

BRACE TO ROOF DECK @ 4' O.C.

3 5/8" STUD INTERIOR PARTITION WALL:
PAINTED 5/8" GYPBOARD BOTH SIDES OF 3 5/8" METAL STUDS @ 16" ON CENTER, FROM FLOOR TO ROOF DECK OR TO 6" ABOVE CEILING WHERE CEILING OCCURS. PROVIDE DIAGONAL BRACING TO ROOF DECK @ 4' O.C. WHERE CEILING OCCURS. GYPBOARD @ WALL TO STOP @ GYPBOARD CEILING WHERE OCCURS. PROVIDE TILE WALLS AS SHOWN ON INTERIOR ELEVATIONS. INSTALL WATER-RESISTANT GYPBOARD @ ALL TOILET ROOMS. PROVIDE PROTECTIVE PARTICLE BOARD WAINSCOT AS SHOWN ON FLOOR PLANS, REFER TO DETAIL 1/A106.

WALL LEGEND

REINFORCED CMU

PAINTED GYPBOARD OVER METAL STUDS

NEW HEBER CITY LIQUOR STORE

DEPT. OF ALCOHOLIC BEVERAGE CONTROL
HEBER CITY, UTAH

FLOOR PLANS

FRANK N MURDOCK JR ■ Architect & Associates
975 East 100 South Suite 100, Salt Lake City, Utah 84102 TEL: (801) 532-4441 FAX (801) 532-4220

STATE OF UTAH
FRANK N. MURDOCK
LICENSED ARCHITECT

REVISION # DATE:

DFCM PROJECT NO.:
08224030
CONST. DOC.
FILE NAME: ABCHB-A101
PLOT SCALE: 1:96
DRAWN BY: STAFF
CHECKED BY: FNM
DATE: MAY 2009

A
101

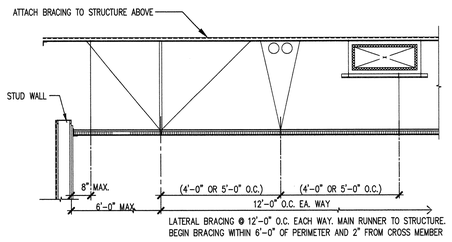

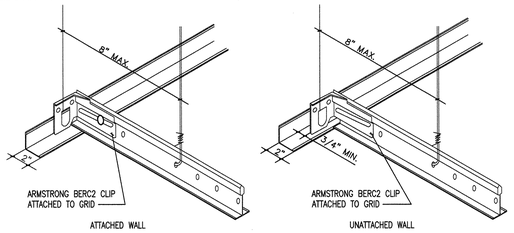

NOTE: CEILING TO BE INSTALLED PER SECTION 1621 OF THE 2006 IBC

5 A102.1 TYPICAL LAY-IN CEILING BRACING DETAILS

SCALE: NOT TO SCALE

REFLECTED CEILING PLAN LEGEND

4' WALL MOUNTED LIGHTING FIXTURE	8' SUSPENDED LIGHTING FIXTURE	2'X4' SUSPENDED ACOUSTICAL CEILING CEILING, PROVIDE SEISMIC BRACING, SEE 1/A102	E.S. — PAINTED EXPOSED STRUCTURE CONDUITS AND DUCTS HEIGHT MAY VARY
2' SURFACE MOUNTED LIGHTING FIXTURE	UNIT HEATER	METAL SOFFIT PANEL	MSP — METAL SOFFIT PANEL
SECURITY LIGHT	TRACK LIGHT	RETURN REGISTER	AC — 2'X4' SUSPENDED ACOUSTICAL CEILING
2' X 4' FLUORESCENT LIGHTING FIXTURE	8' SUSPENDED INDIRECT LIGHTING FIXTURE	SUPPLY DIFFUSER	GB — GYPSUM BOARD CEILING
RECESSED LIGHTING FIXTURE	WALL MOUNTED LIGHTING FIXTURE	EXHAUST FAN	SSXGB — SYNTHETIC STUCCO OVER EXTERIOR GYPSUM SOFFIT BOARD
4' SURFACE MOUNTED FLUORESCENT LIGHTING FIXTURE	EXTERIOR WALL MOUNTED LIGHTING FIXTURE	GYPSUM BOARD SOFFIT	0'-0" — CEILING OR SOFFIT HEIGHT (HEIGHT MEASURED FROM FINISHED FLOOR ELEV.: 0'-0")

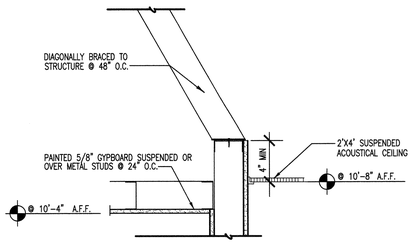

4 A102 INTERIOR WALL BRACING

SCALE: NOT TO SCALE

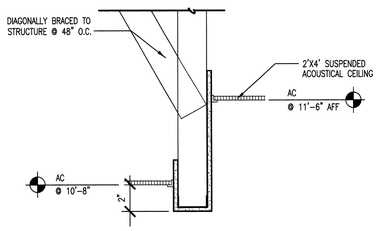

3 A102 CEILING DROP DETAIL

SCALE: NOT TO SCALE

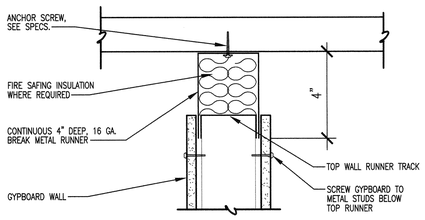

2 A102 SLIP JOINT DETAIL

SCALE: NOT TO SCALE

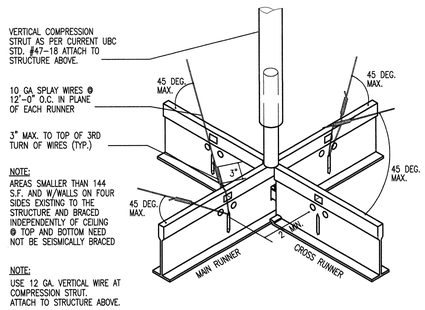

1 A102 SEISMIC BRACING DETAIL

SCALE: NOT TO SCALE

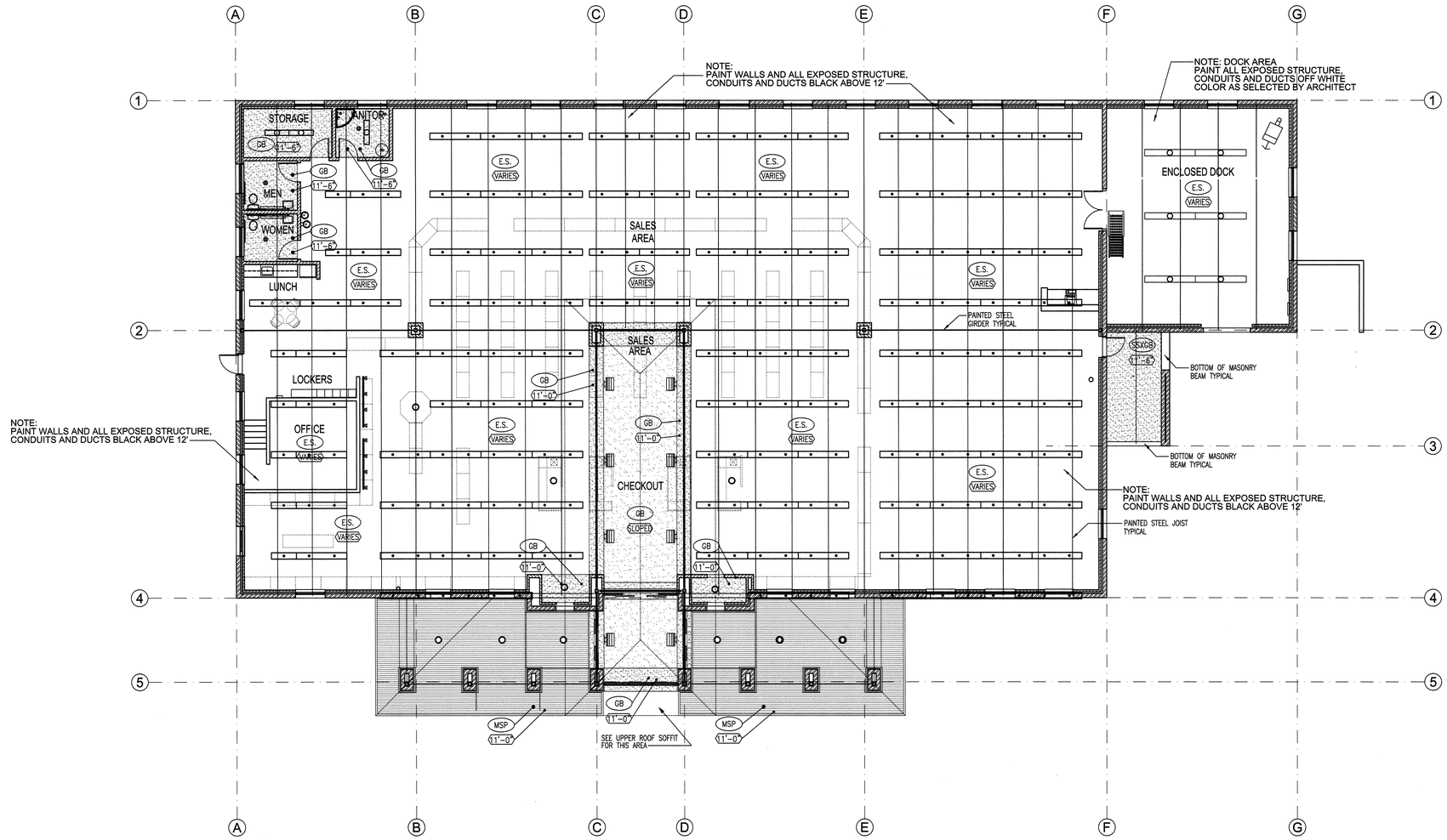

REFLECTED CEILING PLAN

SCALE: 1/8" = 1'-0"

0' 2' 4' 8' 16'

NEW HEBER CITY LIQUOR STORE

DEPT OF ALCOHOLIC BEVERAGE CONTROL
HEBER CITY, UTAH

REFLECTED CEILING PLAN

FRANK N MURDOCK JR ■ Architect & Associates
975 East 100 South Suite 100, Salt Lake City, Utah 84102 TEL: (801) 532-4441 FAX (801) 532-4220

STATE OF UTAH
FRANK N. MURDOCK
124498
5/06/09
LICENSED ARCHITECT

REVISION # DATE:

DFCM PROJECT NO.:
08224030
CONST. DOC.
FILE NAME: ABCHB-A102
PLOT SCALE: 1:96
DRAWN BY: STAFF
CHECKED BY: FNM
DATE: MAY 2009

A
102

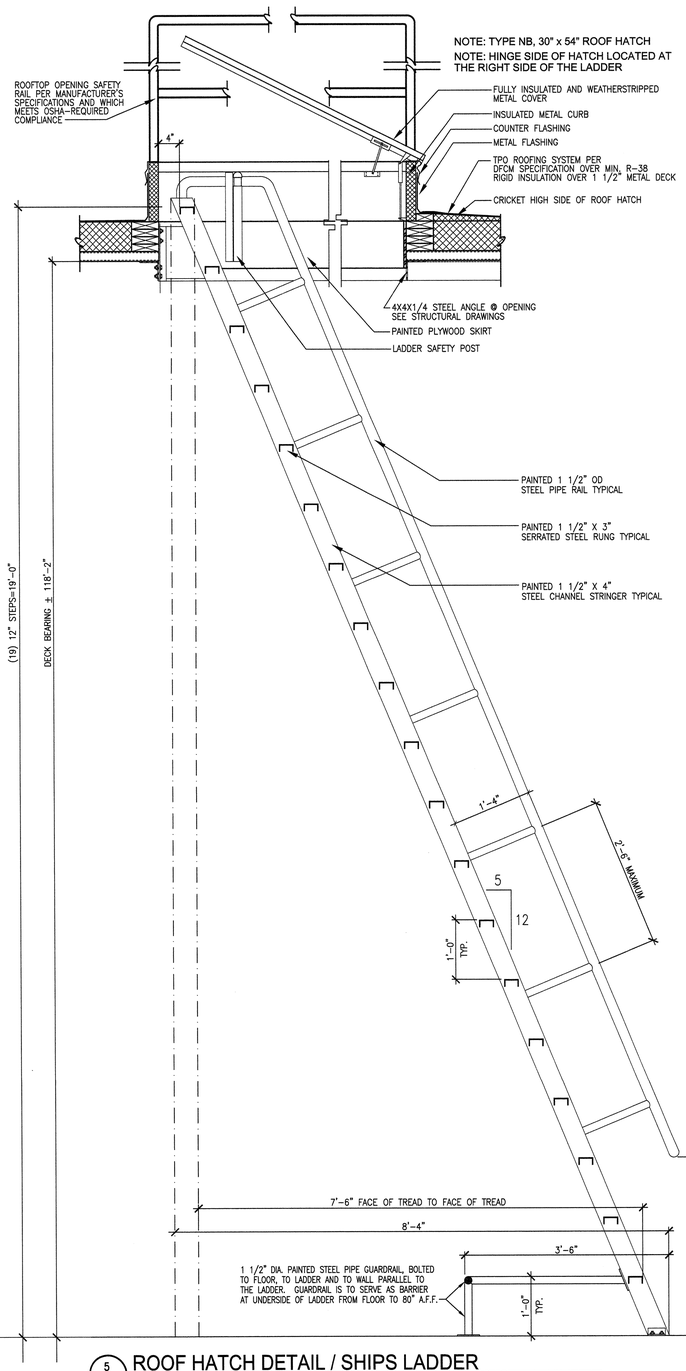

5 A103 ROOF HATCH DETAIL / SHIPS LADDER
SCALE: 1" = 1'-0"

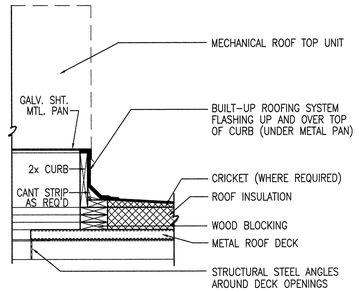

3 A103 ROOF CURB DETAIL
SCALE 1" = 1' - 0"

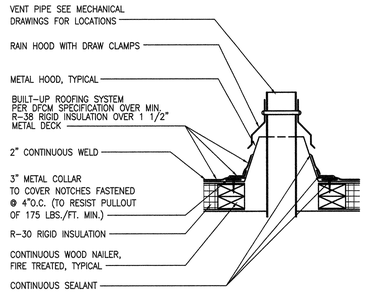

2 A103 VENT PIPE DETAIL
SCALE 3" = 1' - 0"

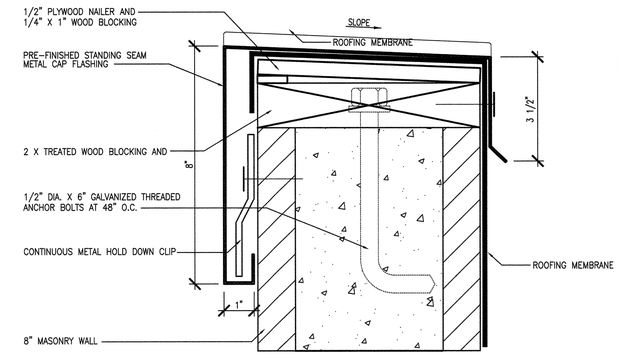

1 A103 CAP FLASHING DETAIL
SCALE 1/2" = 1' - 0"

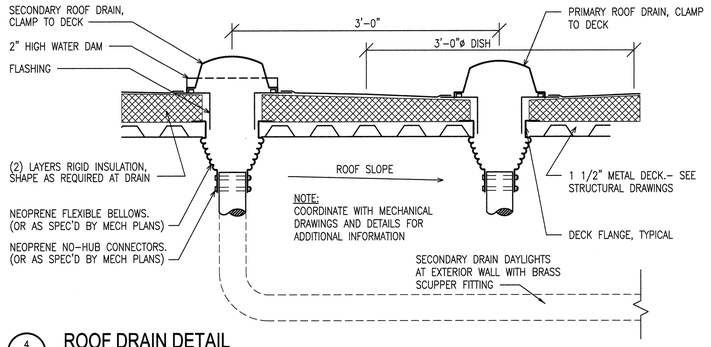

4 A103 ROOF DRAIN DETAIL
SCALE: NOT TO SCALE

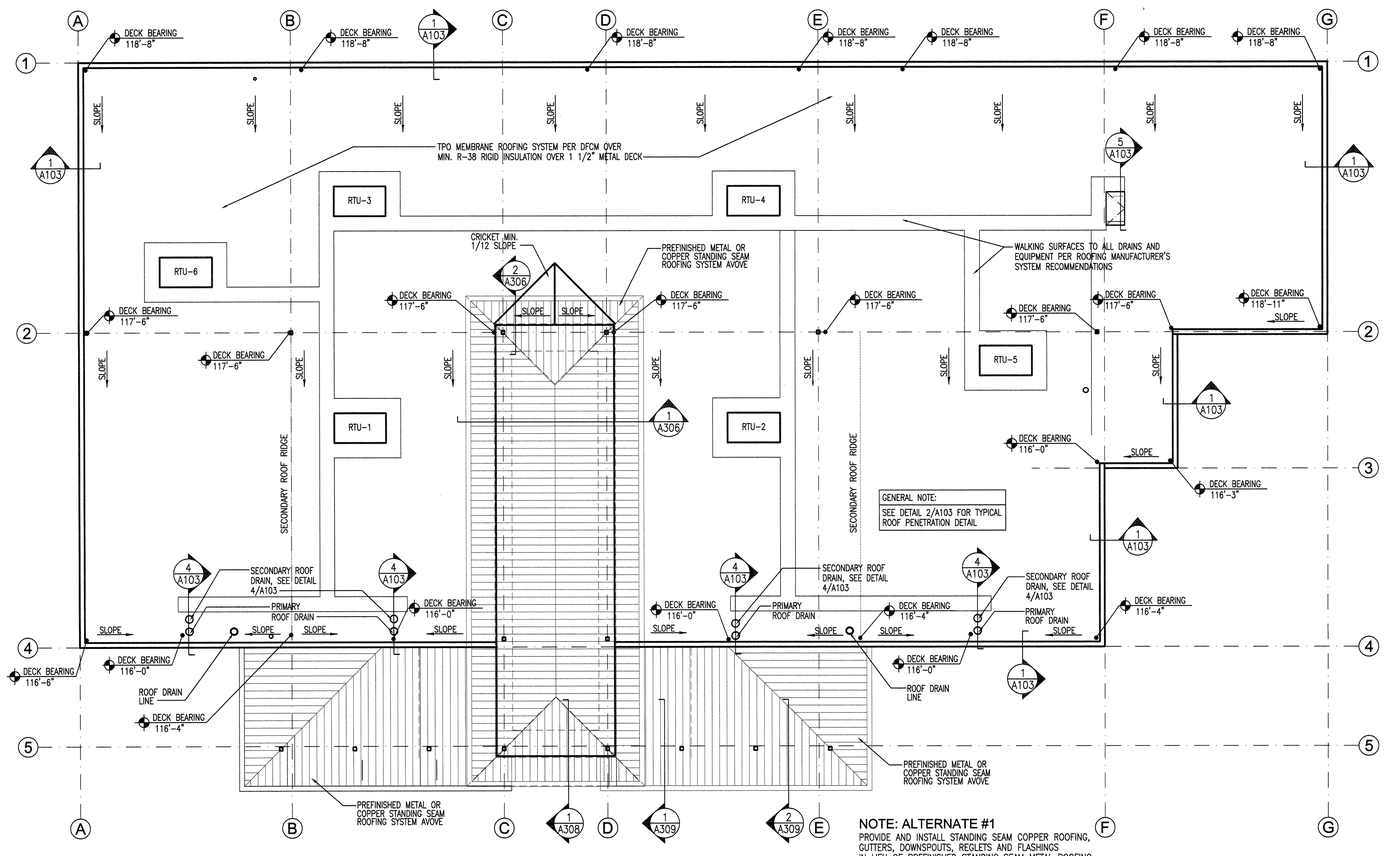

ROOF PLAN
SCALE: 1/8" = 1'-0"

NOTE: ALTERNATE #1
PROVIDE AND INSTALL STANDING SEAM COPPER ROOFING, GUTTERS, DOWNSPOUTS, REGLETS AND FLASHINGS IN LIEU OF PREFINISHED STANDING SEAM METAL ROOFING, GUTTERS, DOWNSPOUTS, REGLETS AND FLASHINGS IF COPPER ROOFING IS USED, ALL COPPER ELEMENTS ARE TO BE ISOLATED FROM CONTACT WITH DISSIMILAR METALS SUCH AS IRON OR ALUMINUM. TYPICAL

NEW HEBER CITY LIQUOR STORE

DEPT. OF ALCOHOLIC BEVERAGE CONTROL
HEBER CITY, UTAH

FRANK N MURDOCK JR ■ Architect & Associates
975 East 100 South Suite 100, Salt Lake City, Utah 84102 TEL: (801) 532-4441 FAX (801) 532-4220

STATE OF UTAH FRANK N. MURDOCK 124498 LICENSED ARCHITECT

REVISION # DATE:

DFCM PROJECT NO.: 08224030
CONST. DOC.
FILE NAME: ABCHB-A103
PLOT SCALE: 1:96
DRAWN BY: STAFF
CHECKED BY: FNM
DATE: MAY 2009

ROOF PLAN, SECTIONS AND DETAILS

A 103

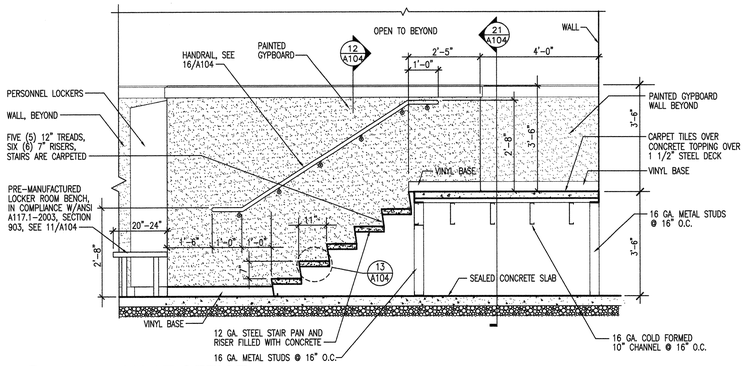

19 A104 SECTION AT OFFICE
SCALE: 1/2" = 1'-0"

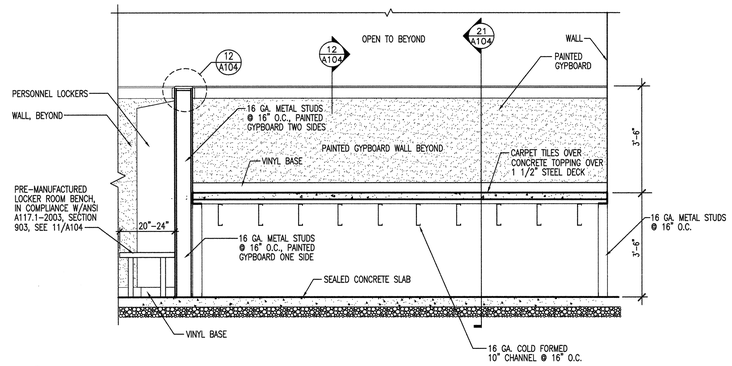

20 A104 SECTION AT OFFICE
SCALE: 1/2" = 1'-0"

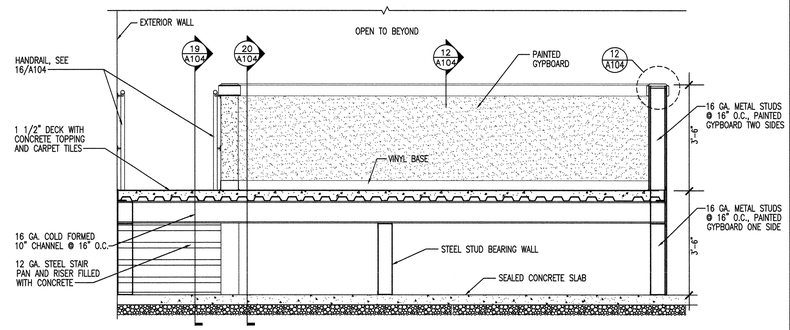

21 A104 SECTION AT OFFICE
SCALE: 1/2" = 1'-0"

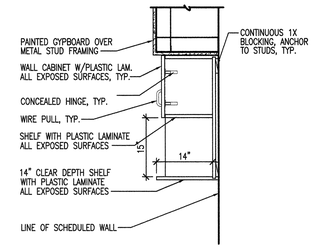

24 A104 UPPER CABINET SECTION
SCALE: NONE

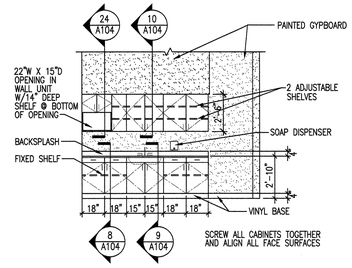

23 A104 ELEVATION AT LUNCH COUNTER
SCALE: 1/4" = 1'-0"

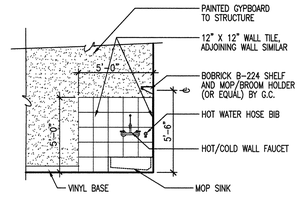

22 A104 ELEVATION AT JANITOR'S ROOM
SCALE: 1/4" = 1'-0"

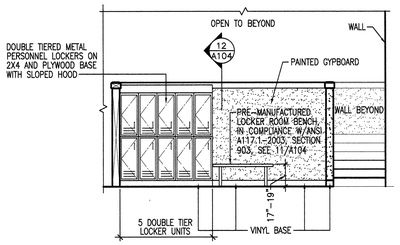

18 A101 NOT USED
SCALE: NOT TO SCALE

17 A101 ELEVATION AT LOCKERS/BENCH
SCALE: 1/4" = 1'-0"

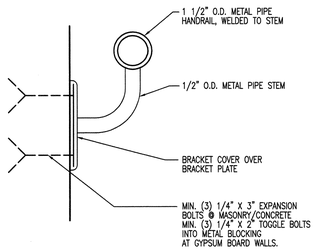

16 A104 HANDRAIL MOUNTING DETAIL
SCALE: NONE

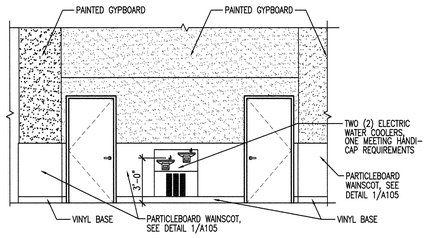

15 A104 ELEVATION AT WATER COOLERS
SCALE: 1/4" = 1'-0"

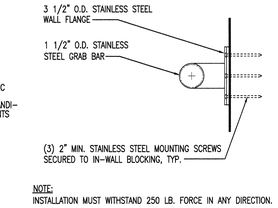

14 A104 GRAB BAR DETAIL
SCALE: NONE

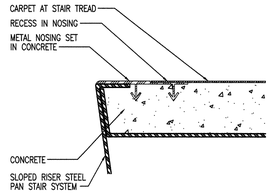

13 A104 OFFICE STAIR NOSING DETAIL
SCALE: NONE

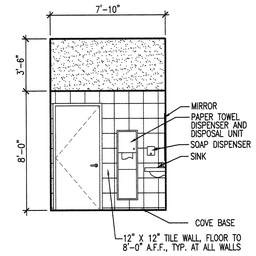

7 A104 ELEV. AT MEN'S RESTROOM
SCALE: 1/4" = 1'-0"

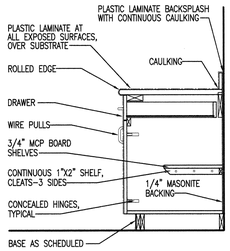

8 A104 BASE CABINET SECTION
SCALE: NONE

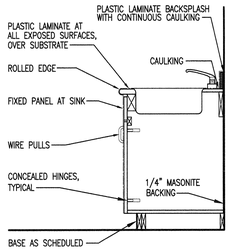

9 A104 SINK CABINET SECTION
SCALE: NONE

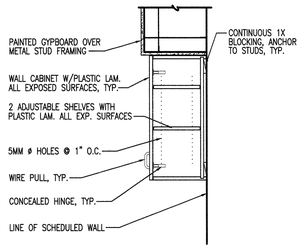

10 A104 UPPER CABINET SECTION
SCALE: NONE

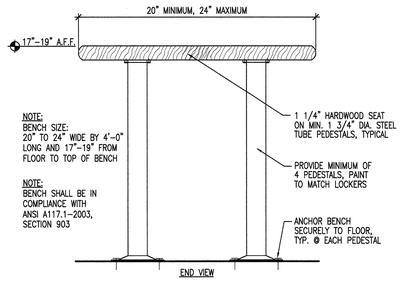

11 A104 LOCKER ROOM BENCH
SCALE: NONE

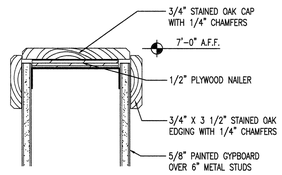

12 A104 WALL CAP SECTION
SCALE: NONE

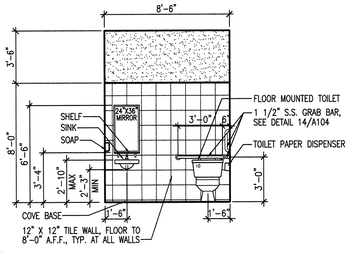

6 A104 ELEV. AT MEN'S RESTROOM
SCALE: 1/4" = 1'-0"

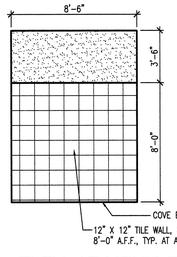

NOTE: OWNER TO PROVIDE AND INSTALL ALL SOAP DISPENSERS, SANITARY NAPKIN DISPOSAL UNIT, PAPER TOWEL DISPENSER AND WASTE UNITS AND TOILET PAPER DISPENSERS IN ALL RESTROOMS, LUNCH AREA AND JANITOR ROOM.

5 A104 ELEV. AT MEN'S RESTROOM
SCALE: 1/4" = 1'-0"

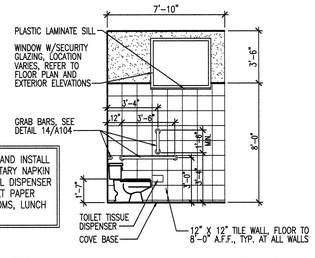

4 A104 ELEV. AT MEN'S RESTROOM
SCALE: 1/4" = 1'-0"

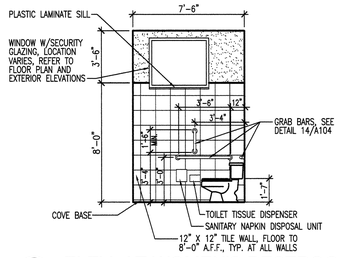

3 A104 ELEV. AT WOMEN'S RESTROOM
SCALE: 1/4" = 1'-0"

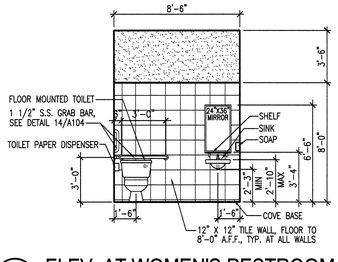

2 A104 ELEV. AT WOMEN'S RESTROOM
SCALE: 1/4" = 1'-0"

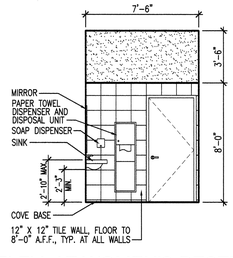

1 A104 ELEV. AT WOMEN'S RESTROOM
SCALE: 1/4" = 1'-0"

NEW HEBER CITY LIQUOR STORE

DEPARTMENT OF ALCOHOLIC BEVERAGE CONTROL
HEBER CITY, UTAH

FRANK N MURDOCK JR ■ Architect & Associates
975 East 100 South Suite 100, Salt Lake City, Utah 84102 TEL: (801) 532-4441 FAX (801) 532-4220

STATE OF UTAH
FRANK N. MURDOCK
124498
5/20/09
LICENSED ARCHITECT

REVISION # DATE:

DFCM PROJECT NO.:
08224030
CONSTR. DOC.
FILE NAME: ABCHB-A104
PLOT SCALE: 1:48
DRAWN BY: STAFF
CHECKED BY: FNM
DATE: MAY 2009

A
104

INTERIOR ELEVATIONS AND MISCELLANEOUS INTERIOR DETAILS

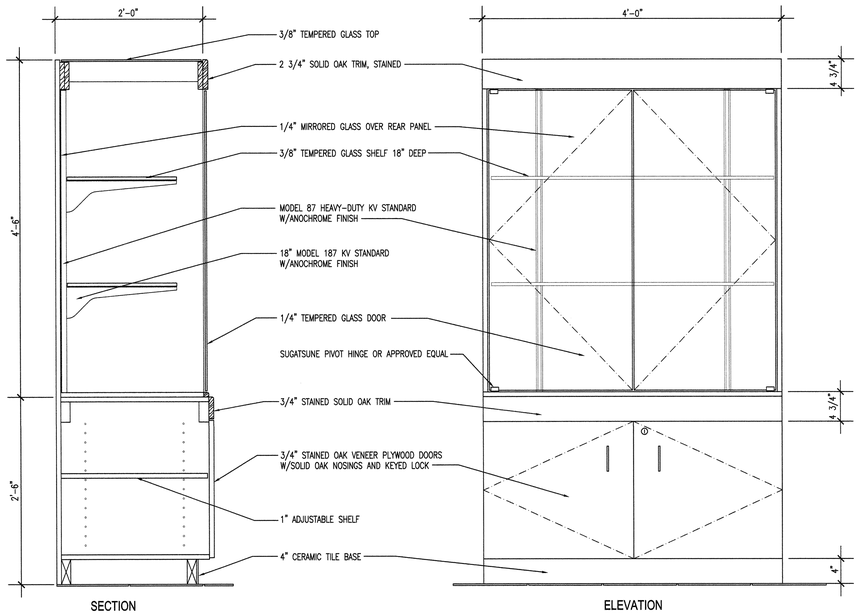

DISPLAY CASES PROVIDED AND INSTALLED BY OWNER. GENERAL CONTRACTOR SHALL PROVIDE AND INSTALL BASE UNIT WITH SEISMIC BRACING (SEE DETAIL 2/A105 AND APPENDIX B OF THE SPECIFICATIONS) PRIOR TO INSTALLATION OF DISPLAY CASES AND SHALL PROVIDE AND INSTALL TILE AND/OR VINYL BASE (REFER TO FLOOR FINISHES PLAN) ON ALL EXPOSED SIDES FOLLOWING INSTALLATION OF DISPLAY CASES. THE GENERAL CONTRACTOR SHALL VERIFY QUANTITIES AND BASE UNIT DIMENSIONS WITH THE OWNER REPRESENTATIVE.

4 A105 DISPLAY CASE ELEVATION AND SECTION
SCALE: NONE

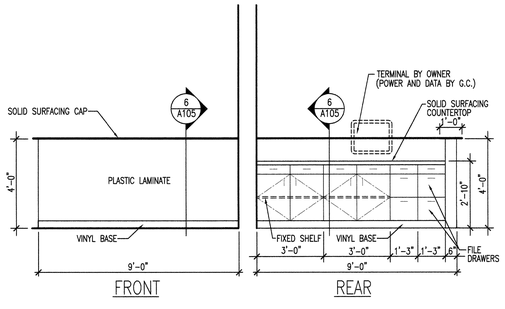

5 A105 ELEVATIONS AT RECEIVING COUNTER
SCALE: NONE

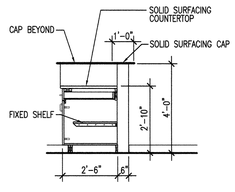

OWNER TO PROVIDE AND INSTALL CHECK-IN COUNTER. CONTRACTOR TO PROVIDE AND INSTALL ELECTRICAL, DATA AND VINYL BASE.

6 A105 SECTION AT RECEIVING COUNTER
SCALE: NONE

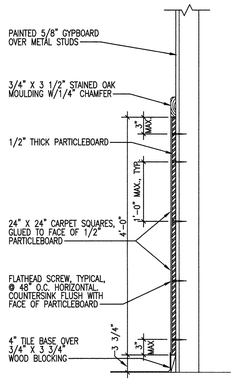

7 A105 WAINSCOT SECT. AT CART & BOX STORAGE
SCALE: NOT TO SCALE

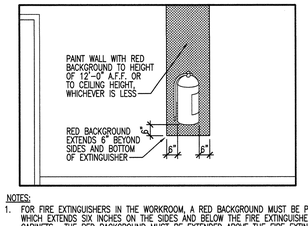

NOTES:
1. FOR FIRE EXTINGUISHERS IN THE WORKROOM, A RED BACKGROUND MUST BE PROVIDED WHICH EXTENDS SIX INCHES ON THE SIDES AND BELOW THE FIRE EXTINGUISHERS OR CABINETS. THE RED BACKGROUND MUST BE EXTENDED ABOVE THE FIRE EXTINGUISHER TO A HEIGHT OF 12 FEET ABOVE THE FINISHED FLOOR OR TO THE CEILING IF THE ROOM IS LESS THAN 12 FEET IN HEIGHT.
2. LOCATE SAFETY EQUIPMENT AT THE HEIGHT RECOMMENDED BY OSHA AND ON THE MOST ACCESSIBLE FACE.

3 A105 FIRE EXTINGUISHER ELEVATION
SCALE: NONE

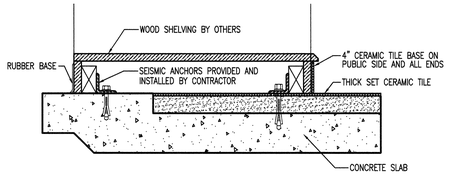

2 A105 SECTION @ WOOD SHELVING BASE
SCALE: NONE

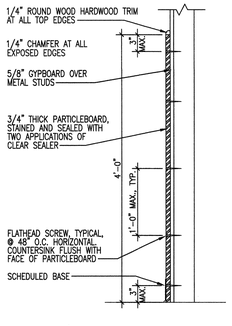

1 A105 SECTION AT PARTICLEBOARD WAINSCOT
SCALE: NOT TO SCALE

NEW HEBER CITY LIQUOR STORE

DEPARTMENT OF ALCOHOLIC BEVERAGE CONTROL
HEBER CITY, UTAH

FRANK N MURDOCK JR ■ Architect & Associates
975 East 100 South Suite 100, Salt Lake City, Utah 84102 TEL: (801) 532-4441 FAX (801) 532-4220

INTERIOR ELEVATIONS AND MISCELLANEOUS DETAILS

STATE OF UTAH
FRANK N. MURDOCK
12498
LICENSED ARCHITECT

REVISION # DATE:

DFCM PROJECT NO.:
08224030
CONSTR. DOC.
FILE NAME: ABCHB-A105
PLOT SCALE: 1:48
DRAWN BY: STAFF
CHECKED BY: FNM
DATE: MAY 2009

A
105

NOTES

1. PROVIDE SIGNAGE ABOVE ENTRY DOORS STATING "THESE DOORS TO REMAIN UNLOCKED DURING BUSINESS HOURS".
2. PROVIDE SIGNAGE DESIGNATING "PUBLIC RESTROOMS" AT LOCATION TO BE DETERMINED BY ARCHITECT.
3. CONTRACTOR SHALL PROVIDE AND INSTALL FOUR (4) FIRE EXTINGUISHERS (SEE SPECIFICATIONS FOR TYPE) IN LOCATIONS TO BE DETERMINED BY ARCHITECT.

WALL TYPE

1

BRACE TO ROOF DECK @ 4' O.C.

3 5/8" STUD INTERIOR PARTITION WALL:
PAINTED 5/8" GYPBOARD BOTH SIDES OF 3 5/8" METAL STUDS @ 16" ON CENTER, FROM FLOOR TO ROOF DECK OR TO 6" ABOVE CEILING WHERE CEILING OCCURS. PROVIDE DIAGONAL BRACING TO ROOF DECK @ 4' O.C. WHERE CEILING OCCURS. GYPBOARD @ WALL TO STOP @ GYPBOARD CEILING WHERE OCCURS. PROVIDE TILE WALLS AS SHOWN ON INTERIOR ELEVATIONS. INSTALL WATER-RESISTANT GYPBOARD @ ALL TOILET ROOMS. PROVIDE PROTECTIVE PARTICLE BOARD WAINSCOT AS SHOWN ON FLOOR PLANS, REFER TO DETAIL 1/A106.

WALL LEGEND

REINFORCED CMU

PAINTED GYPBOARD OVER METAL STUDS

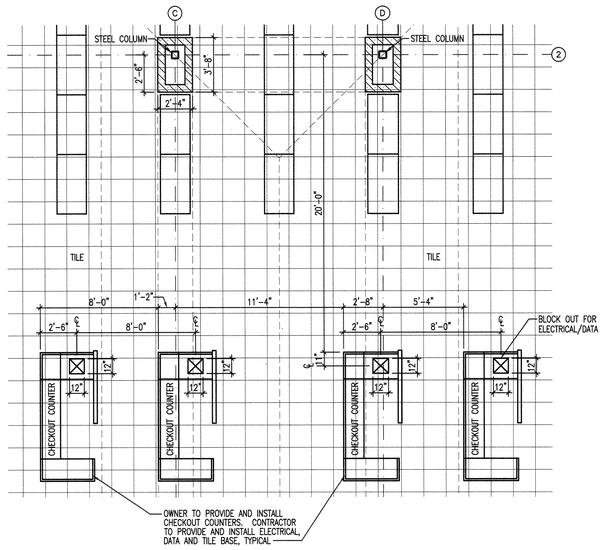

6 A106 ENLARGED FLOOR PLAN AT CHECKOUT
SCALE: 1/4" = 1'-0"

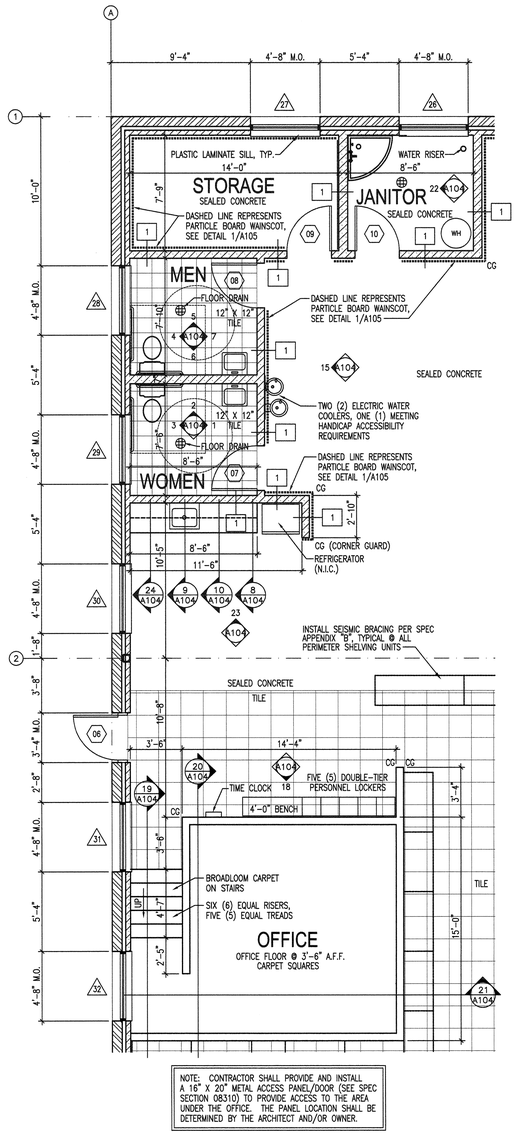

NOTE: CONTRACTOR SHALL PROVIDE AND INSTALL A 16" X 20" METAL ACCESS PANEL/DOOR (SEE SPEC SECTION 08310) TO PROVIDE ACCESS TO THE AREA UNDER THE OFFICE. THE PANEL LOCATION SHALL BE DETERMINED BY THE ARCHITECT AND/OR OWNER.

2 A106 ENLARGED FLOOR PLAN
SCALE: 1/4" = 1'-0"

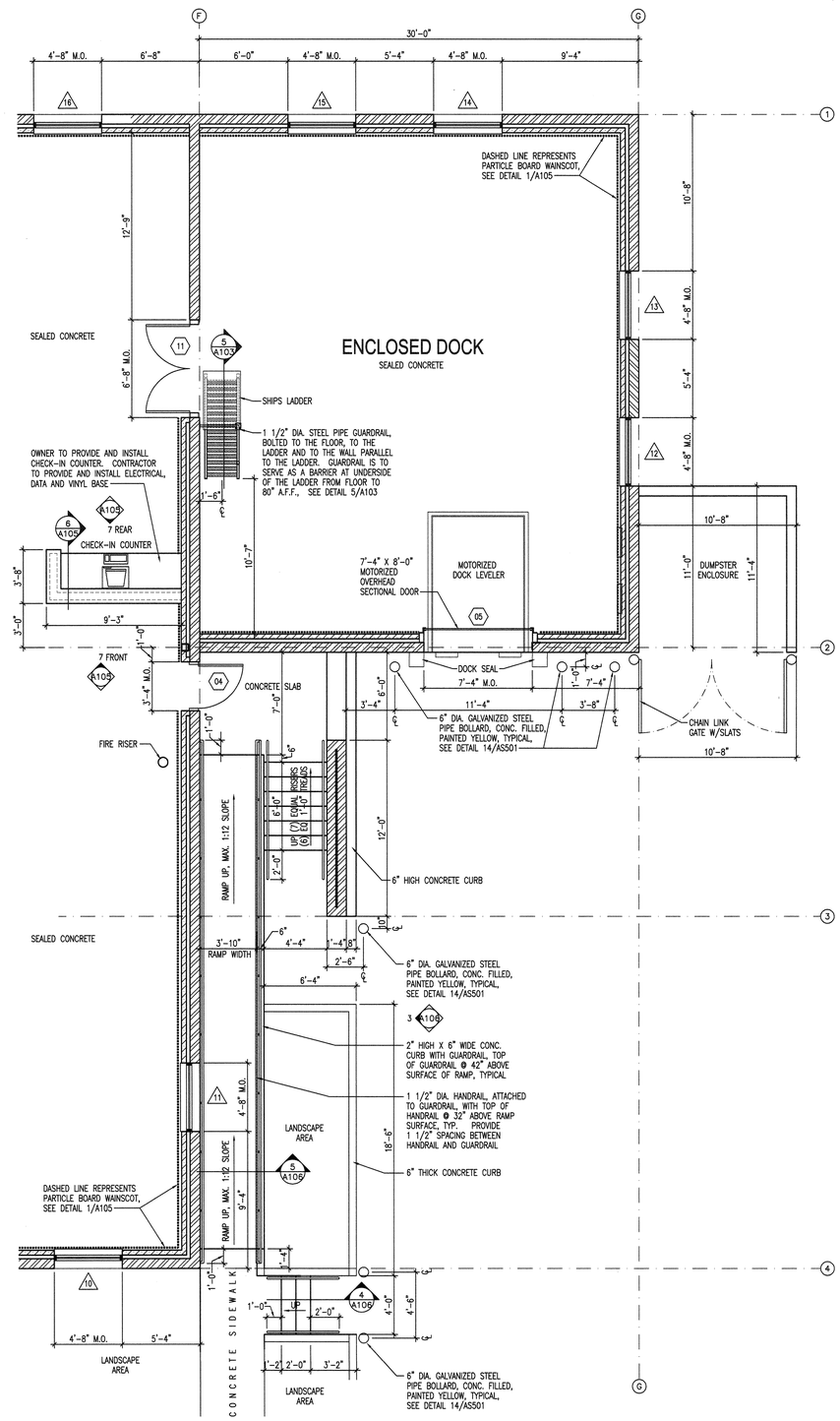

1 A106 ENLARGED FLOOR PLAN AT DOCK
SCALE: 1/4" = 1'-0"

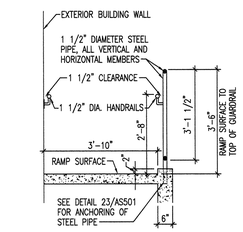

5 A106 SECTION @ RAMP
SCALE: 1/2" = 1'-0"

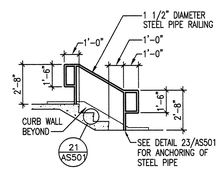

4 A106 SECTION @ STAIRS
SCALE: 1/4" = 1'-0"

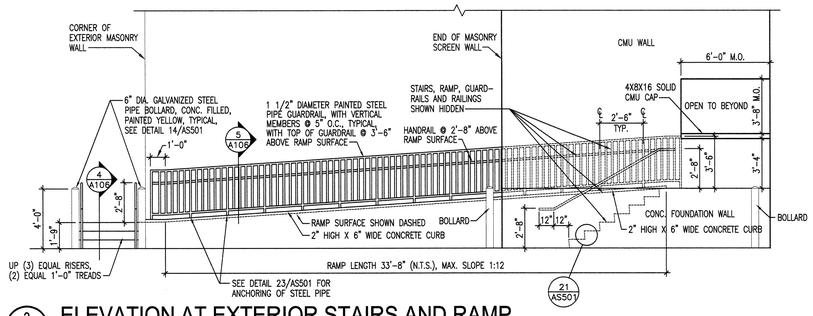

3 A106 ELEVATION AT EXTERIOR STAIRS AND RAMP
SCALE: 1/4" = 1'-0"

NEW HEBER CITY LIQUOR STORE

DEPT OF ALCOHOLIC BEVERAGE CONTROL
HEBER CITY, UTAH

FRANK N MURDOCK JR ■ Architect & Associates
975 East 100 South Suite 100, Salt Lake City, Utah 84102 TEL: (801) 532-4441 FAX (801) 532-4220

ENLARGED FLOOR PLANS

STATE OF UTAH FRANK N. MURDOCK 124498 LICENSED ARCHITECT 5/20/09

REVISION # DATE:

DFCM PROJECT NO.: 08224030
CONST. DOC.
FILE NAME: ABCHB-A106
PLOT SCALE: 1:96
DRAWN BY: STAFF
CHECKED BY: FNM
DATE: MAY 2009

A 106

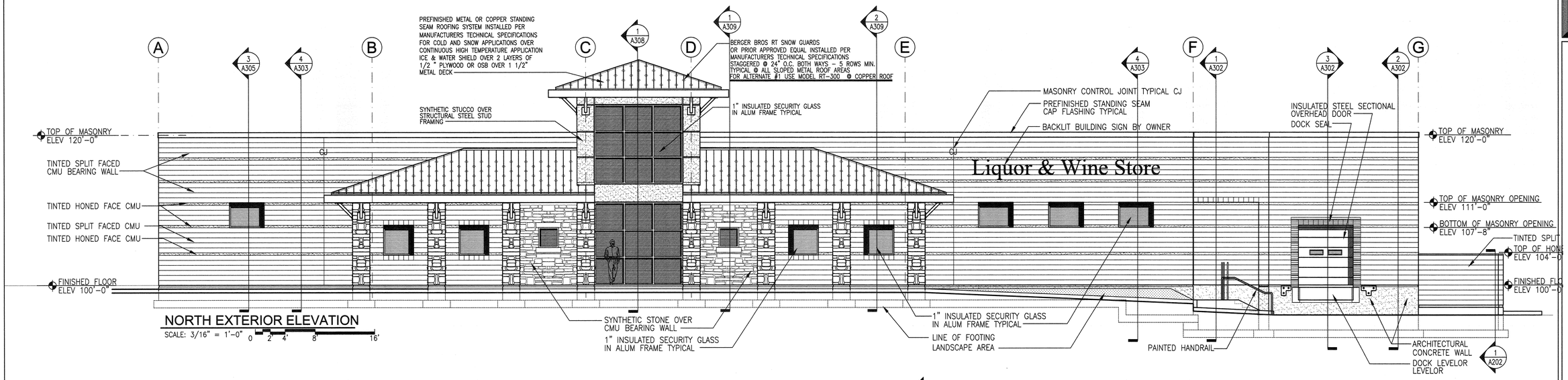

NORTH EXTERIOR ELEVATION

SCALE: 3/16" = 1'-0" 0 2' 4' 8' 16'

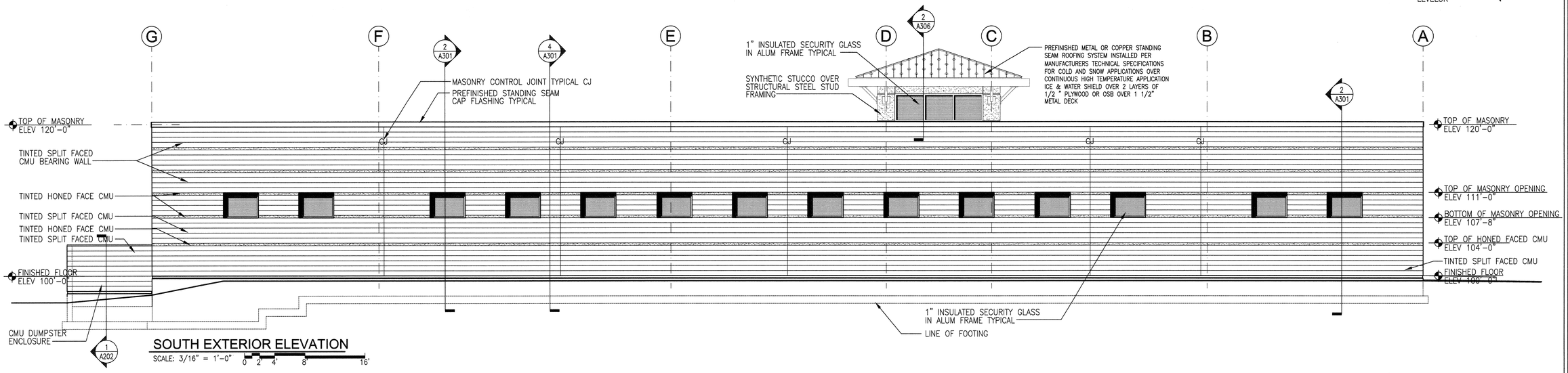

SOUTH EXTERIOR ELEVATION

SCALE: 3/16" = 1'-0" 0 2' 4' 8' 16'

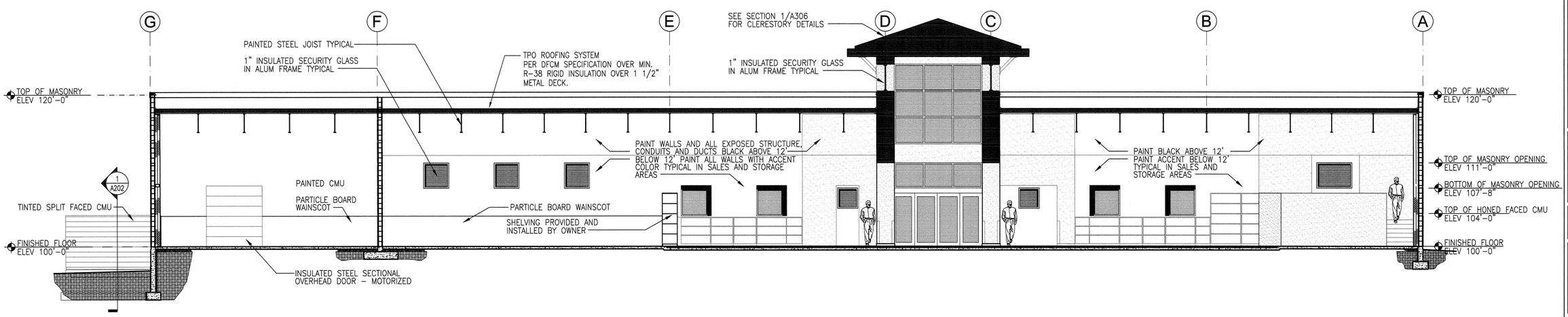

EAST WEST BUILDING SECTION

SCALE: 3/16" = 1'-0" 0 2' 4' 8' 16'

NEW HEBER CITY LIQUOR STORE

DEPT OF ALCOHOLIC BEVERAGE CONTROL
HEBER CITY, UTAH

EXTERIOR ELEVATIONS

FRANK N MURDOCK JR ■ Architect & Associates
975 East 100 South Suite 100, Salt Lake City, Utah 84102 TEL: (801) 532-4441 FAX (801) 532-4220

STATE OF UTAH
FRANK N. MURDOCK
334498-5
LICENSED ARCHITECT

REVISION # DATE:

DFCM PROJECT NO.:
08224030
CONSTR. DOC.
FILE NAME: ABCHB-A201
PLOT SCALE: 3/16"
DRAWN BY: STAFF
CHECKED BY: FNM
DATE: MAY 2009

A
201

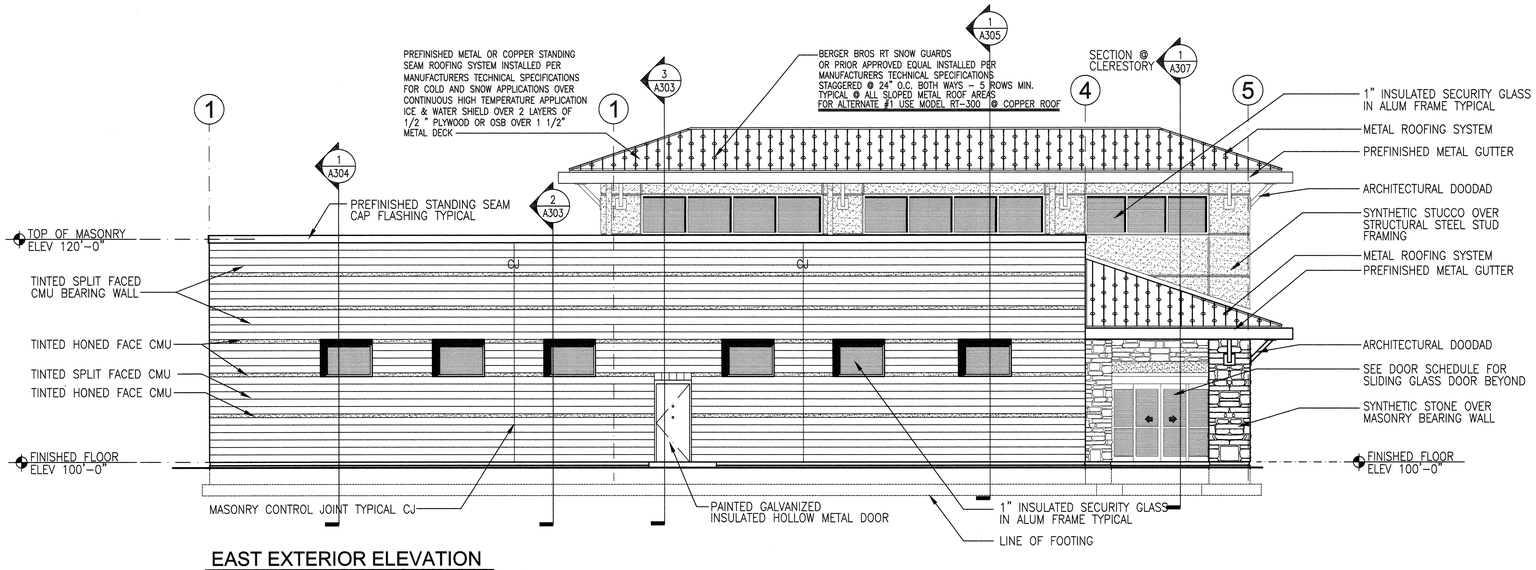

EAST EXTERIOR ELEVATION

SCALE: 3/16" = 1'-0"

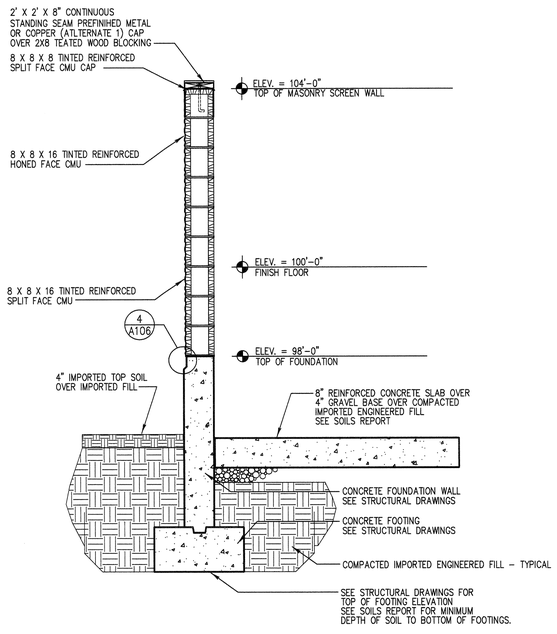

WALL SECTION @ DUMPSTER ENCLOSURE

SCALE: 3/4" = 1'-0"

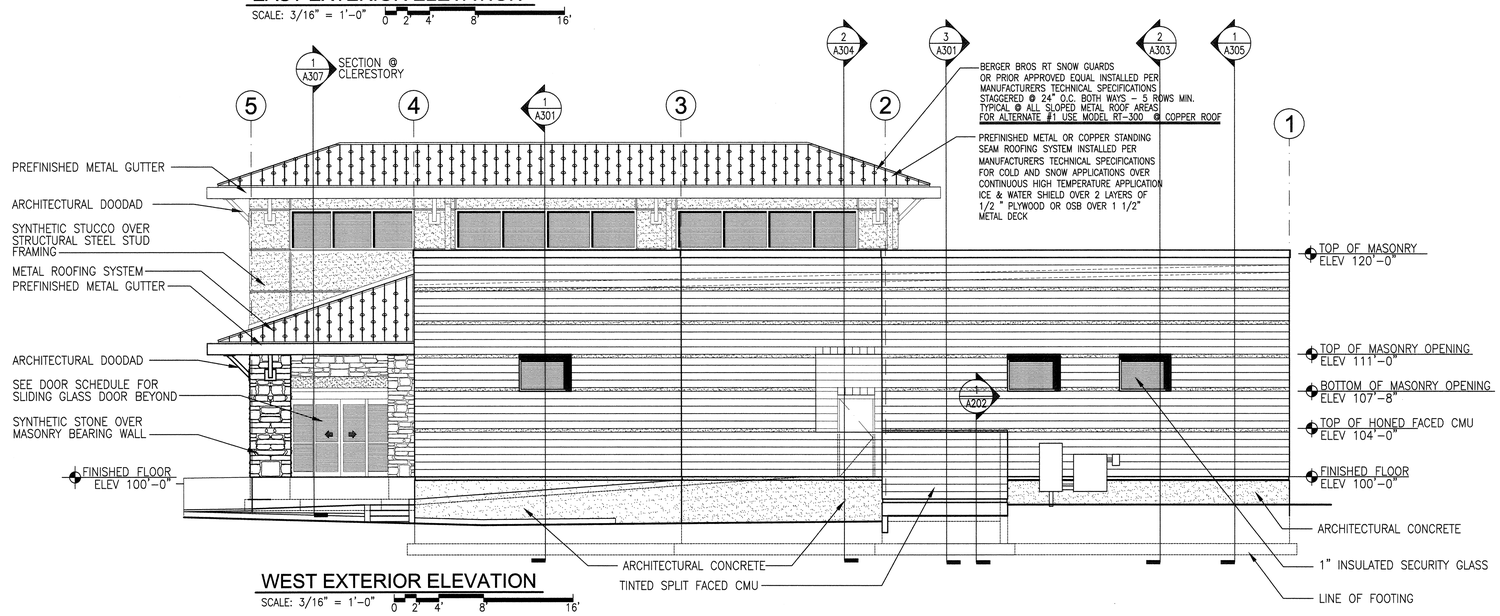

WEST EXTERIOR ELEVATION

SCALE: 3/16" = 1'-0"

NEW HEBER CITY LIQUOR STORE

DEPT OF ALCOHOLIC BEVERAGE CONTROL
HEBER CITY, UTAH

FRANK N MURDOCK JR ■ Architect & Associates
975 East 100 South Suite 100, Salt Lake City, Utah 84102 TEL: (801) 532-4441 FAX (801) 532-4220

EXTERIOR ELEVATIONS

STATE OF UTAH
FRANK N. MURDOCK
124498
LICENSED ARCHITECT

REVISION # DATE:

DFCM PROJECT NO.:
08224030
CONSTR. DOC.
FILE NAME: ABCHB-A202
PLOT SCALE: 3/16"
DRAWN BY: STAFF
CHECKED BY: FNM
DATE: MAY 2009

A
202

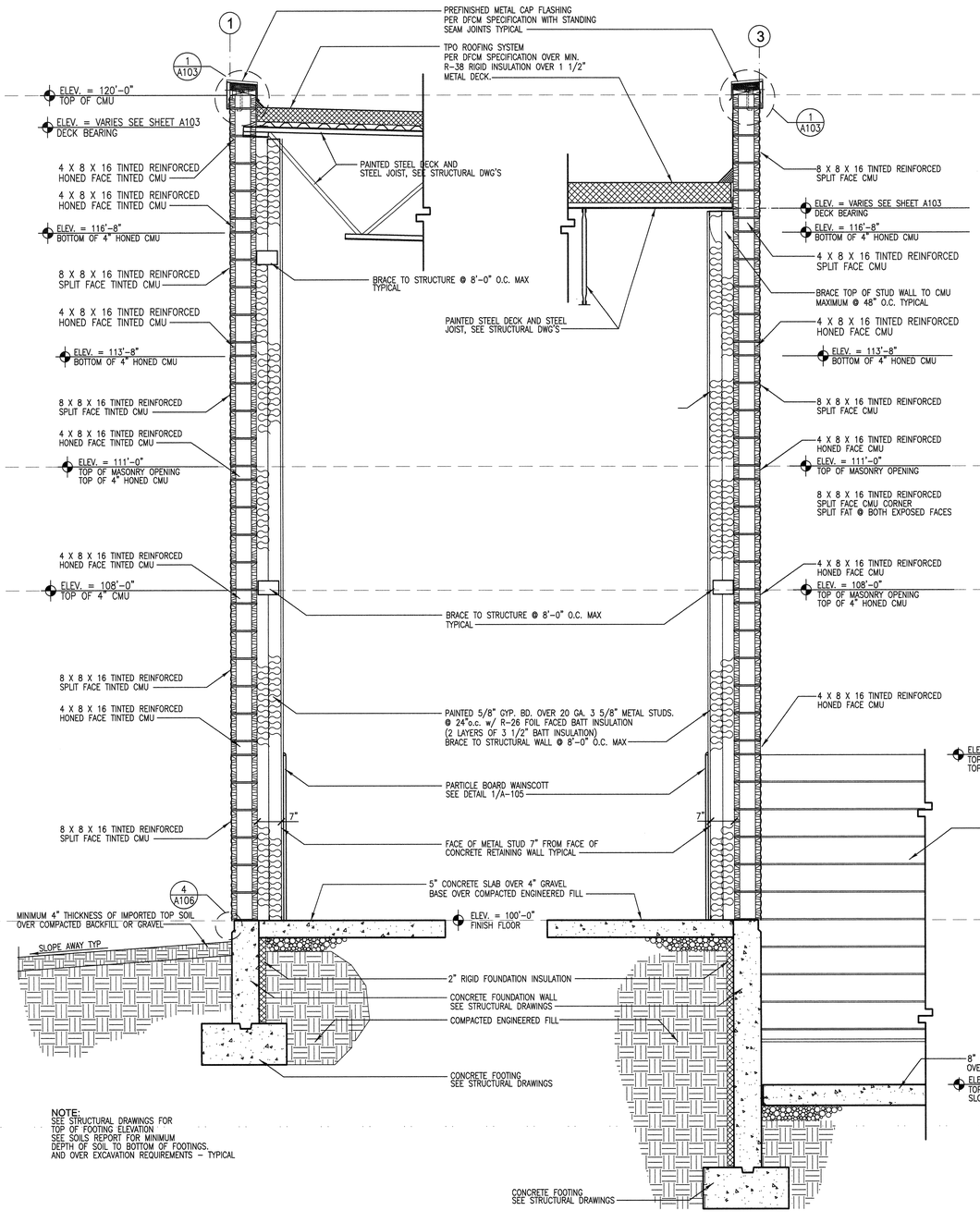

NOTE:
SEE STRUCTURAL DRAWINGS FOR
TOP OF FOOTING ELEVATION
SEE SOILS REPORT FOR MINIMUM
DEPTH OF SOIL TO BOTTOM OF FOOTINGS.
AND OVER EXCAVATION REQUIREMENTS – TYPICAL

4 A301 WALL SECTION @ GRID "1"
SCALE: 3/4" = 1'-0"

3 A301 WALL SECTION @ GRID "G"
SCALE: 3/4" = 1'-0"

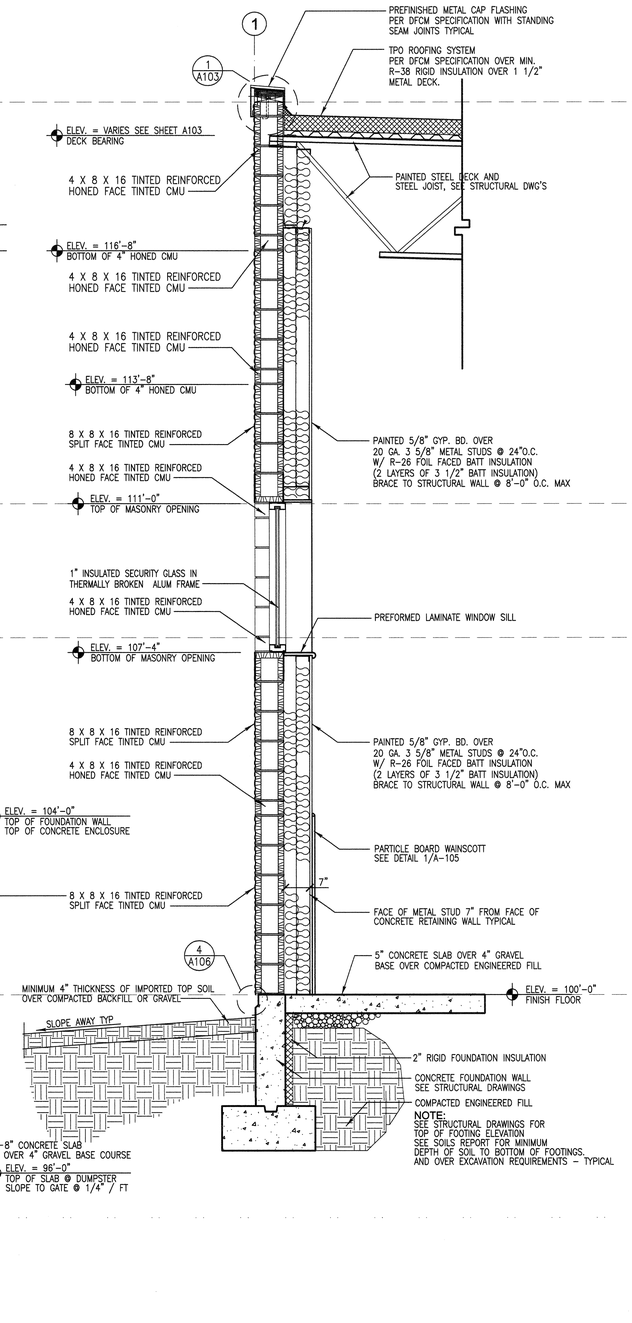

NOTE:
SEE STRUCTURAL DRAWINGS FOR
TOP OF FOOTING ELEVATION
SEE SOILS REPORT FOR MINIMUM
DEPTH OF SOIL TO BOTTOM OF FOOTINGS.
AND OVER EXCAVATION REQUIREMENTS – TYPICAL

2 A301 WALL SECTION @ GRID "1"
SCALE: 3/4" = 1'-0"

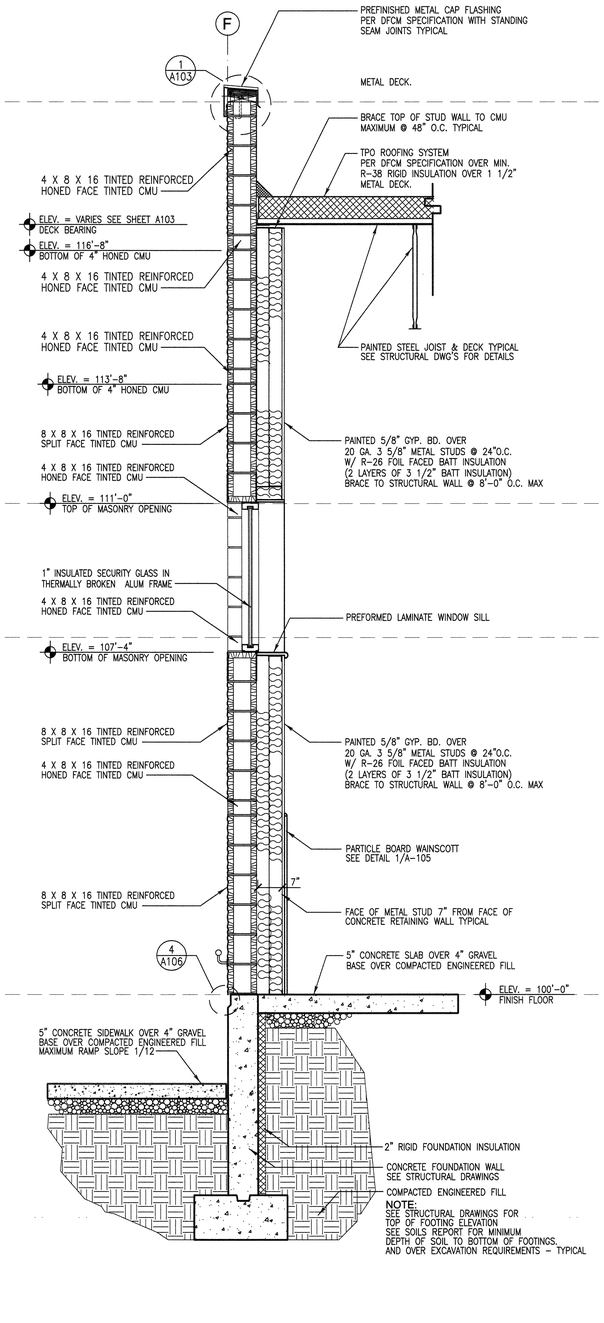

NOTE:
SEE STRUCTURAL DRAWINGS FOR
TOP OF FOOTING ELEVATION
SEE SOILS REPORT FOR MINIMUM
DEPTH OF SOIL TO BOTTOM OF FOOTINGS.
AND OVER EXCAVATION REQUIREMENTS – TYPICAL

1 A301 WALL SECTION @ GRID "F"
SCALE: 3/4" = 1'-0"

NEW HEBER CITY LIQUOR STORE

DEPT OF ALCOHOLIC BEVERAGE CONTROL
HEBER CITY, UTAH

FRANK N MURDOCK JR ■ Architect & Associates
975 East 100 South Suite 100, Salt Lake City, Utah 84102 TEL: (801) 532-4441 FAX (801) 532-4220

WALL SECTIONS

STATE OF UTAH
FRANK N. MURDOCK JR.
124498
5/8/09
LICENSED ARCHITECT

REVISION # DATE:

DFCM PROJECT NO.:
08224030
CONST. DOC.
FILE NAME: ABCHB-A301
PLOT SCALE: 1:16
DRAWN BY: STAFF
CHECKED BY: FNM
DATE: MAY 2009

A
301

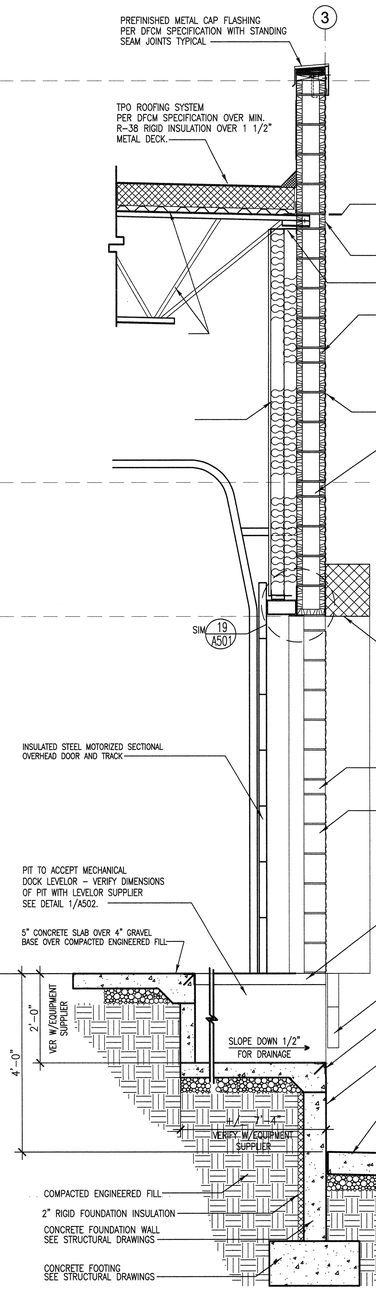

3 A302 WALL SECTION @ GRID "2"
SCALE: 3/4" = 1'-0"
0 1' 2'

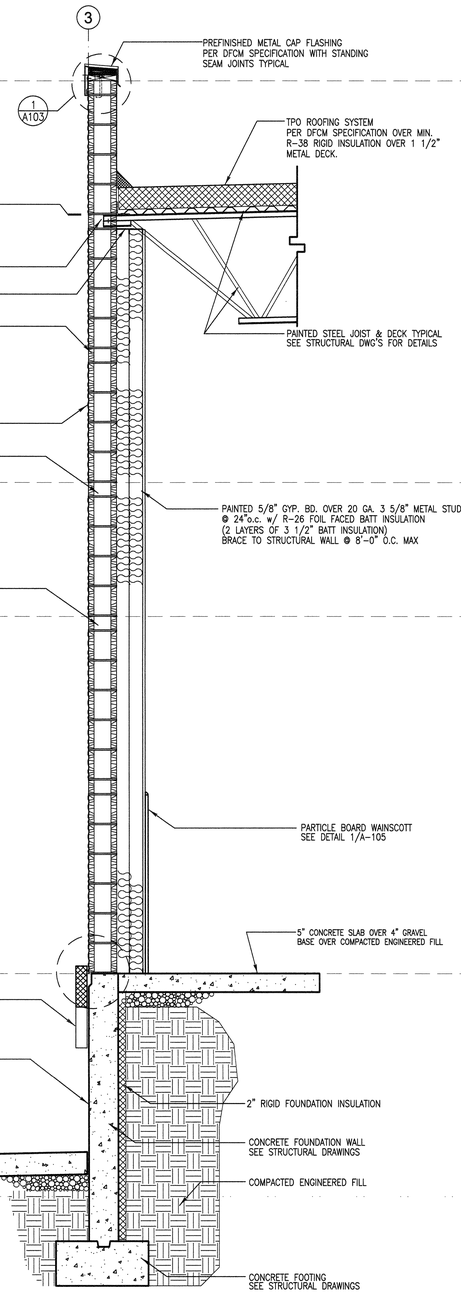

NOTE:
SEE STRUCTURAL DRAWINGS FOR TOP OF FOOTING ELEVATION SEE SOILS REPORT FOR MINIMUM DEPTH OF SOIL TO BOTTOM OF FOOTINGS, AND OVER EXCAVATION REQUIREMENTS - TYPICAL

2 A302 WALL SECTION @ GRID "2"
SCALE: 3/4" = 1'-0"
0 1' 2'

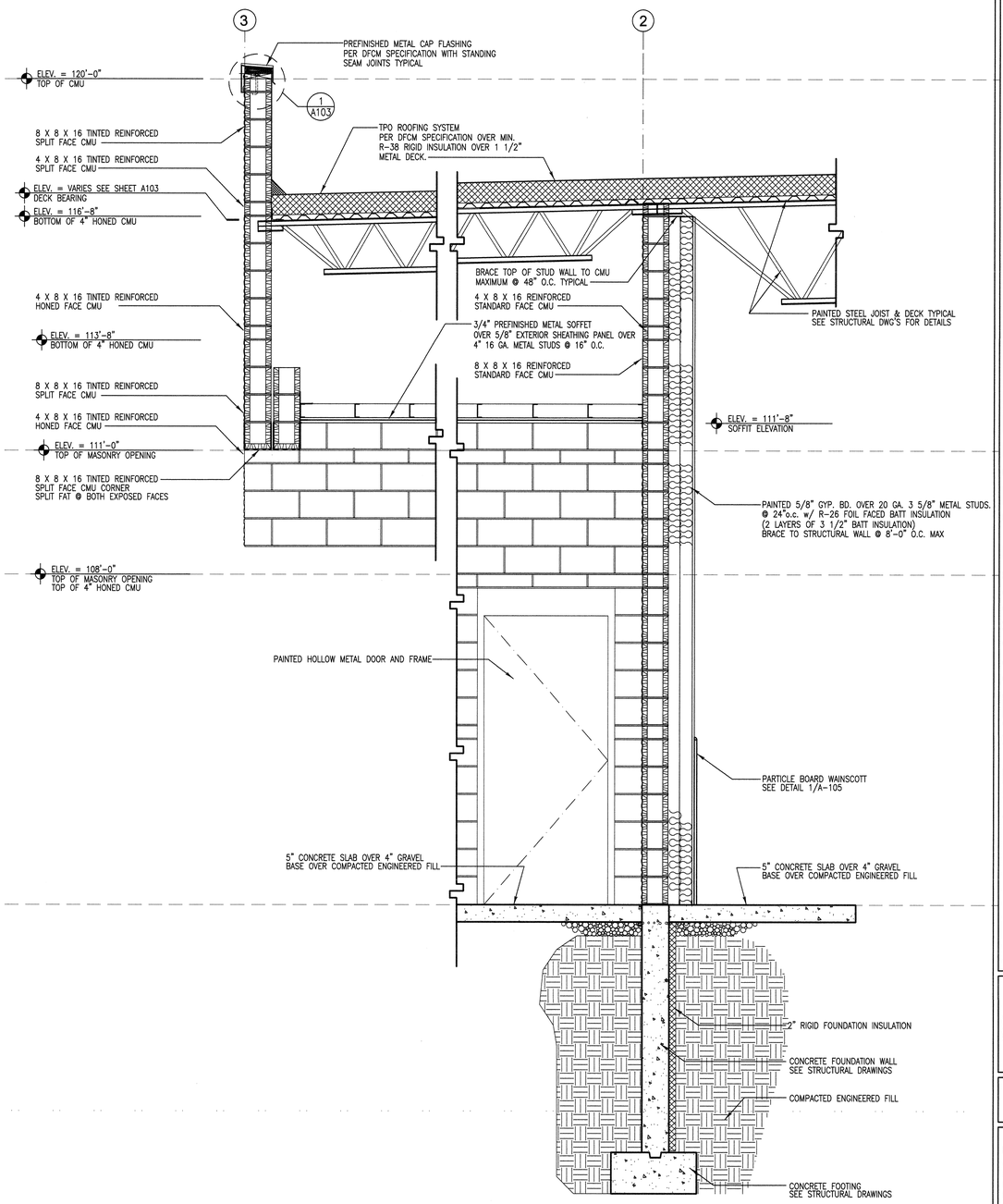

1 A302 WALL SECTION @ GRID "F"
SCALE: 3/4" = 1'-0"
0 1' 2'

NEW HEBER CITY LIQUOR STORE

DEPT OF ALCOHOLIC BEVERAGE CONTROL
HEBER CITY, UTAH

WALL SECTIONS

FRANK N MURDOCK JR ■ Architect & Associates
975 East 100 South Suite 100, Salt Lake City, Utah 84102 TEL: (801) 532-4441 FAX (801) 532-4220

STATE OF UTAH FRANK N. MURDOCK 124498 LICENSED ARCHITECT

REVISION # DATE:

DFCM PROJECT NO.: 08224030
CONST. DOC.
FILE NAME: ABCHB-A302
PLOT SCALE: 1:16
DRAWN BY: STAFF
CHECKED BY: FNM
DATE: MAY 2009

A 302

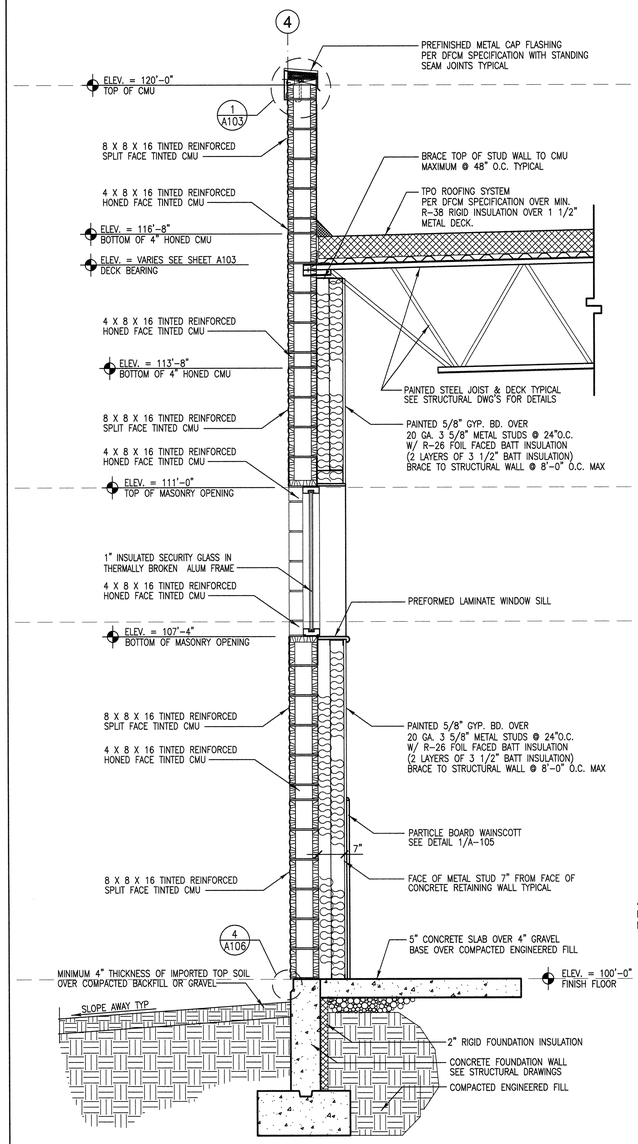

4 A303 WALL SECTION @ GRID "4"
SCALE: 3/4" = 1'-0"

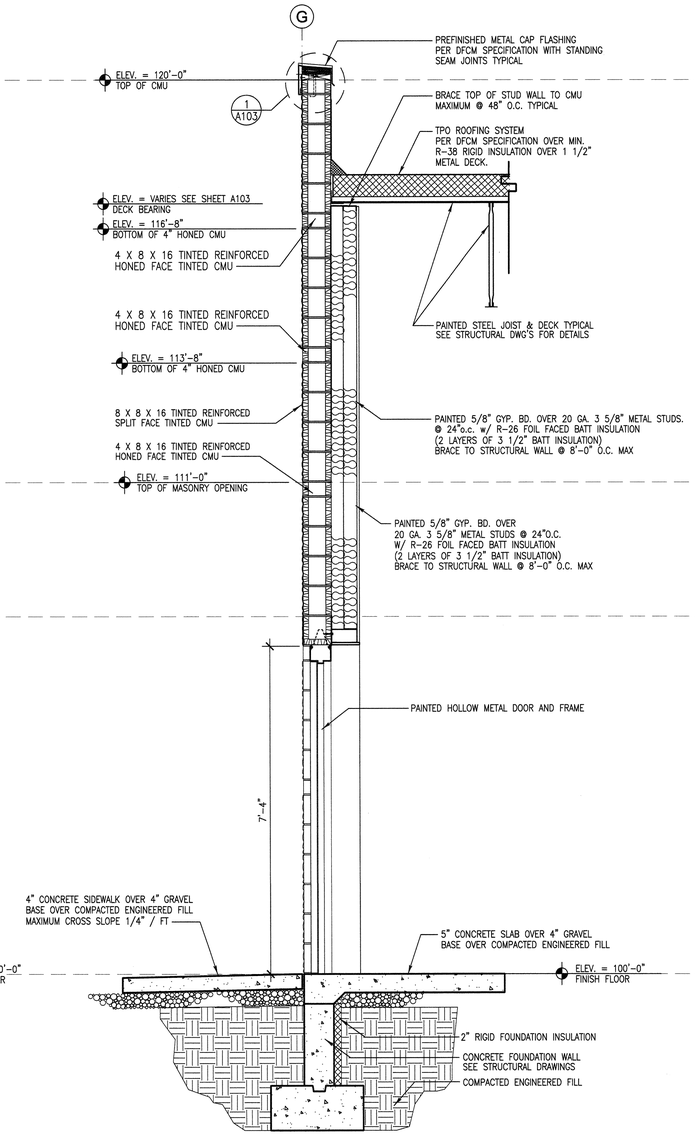

3 A303 WALL SECTION @ GRID "G"
SCALE: 3/4" = 1'-0"

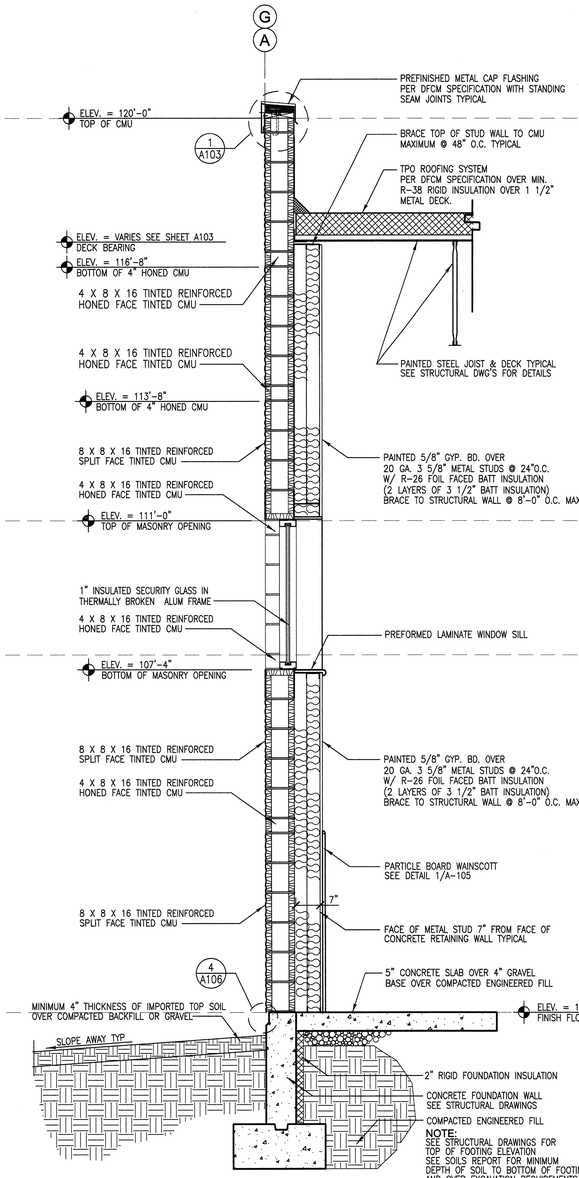

NOTE:
SEE STRUCTURAL DRAWINGS FOR TOP OF FOOTING ELEVATION
SEE SOILS REPORT FOR MINIMUM DEPTH OF SOIL TO BOTTOM OF FOOTINGS. AND OVER EXCAVATION REQUIREMENTS – TYPICAL

2 A303 WALL SECTION @ GRID "G"
SCALE: 3/4" = 1'-0"

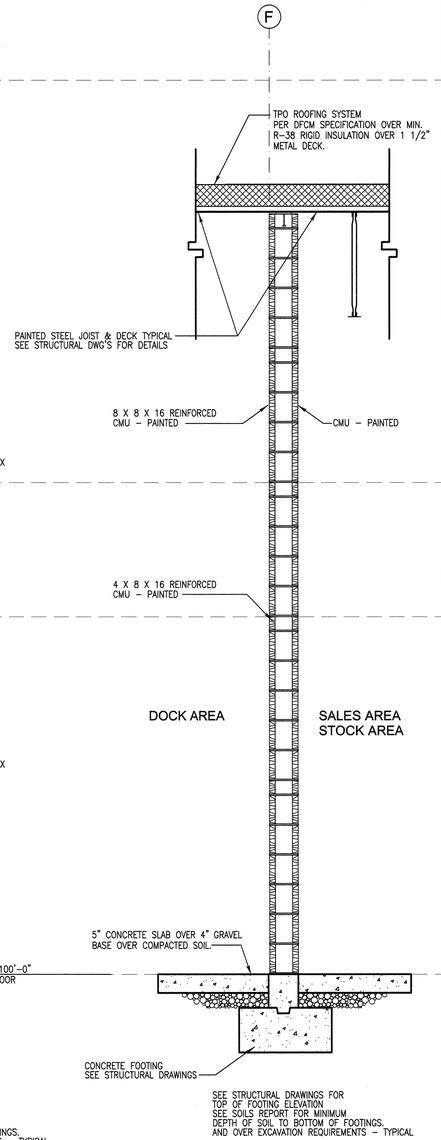

SEE STRUCTURAL DRAWINGS FOR TOP OF FOOTING ELEVATION
SEE SOILS REPORT FOR MINIMUM DEPTH OF SOIL TO BOTTOM OF FOOTINGS. AND OVER EXCAVATION REQUIREMENTS – TYPICAL

1 A303 WALL SECTION @ GRID "F"
SCALE: 3/4" = 1'-0"

NEW HEBER CITY LIQUOR STORE

DEPT OF ALCOHOLIC BEVERAGE CONTROL
HEBER CITY, UTAH

FRANK N MURDOCK JR ■ Architect & Associates
975 East 100 South Suite 100, Salt Lake City, Utah 84102 TEL: (801) 532-4441 FAX (801) 532-4220

WALL SECTIONS

STATE OF UTAH
FRANK N. MURDOCK JR.
12498
LICENSED ARCHITECT

REVISION # DATE:

DFCM PROJECT NO.:
08224030
CONST. DOC.
FILE NAME: ABCHB-A303
PLOT SCALE: 1:16
DRAWN BY: STAFF
CHECKED BY: FNM
DATE: MAY 2009

A
303

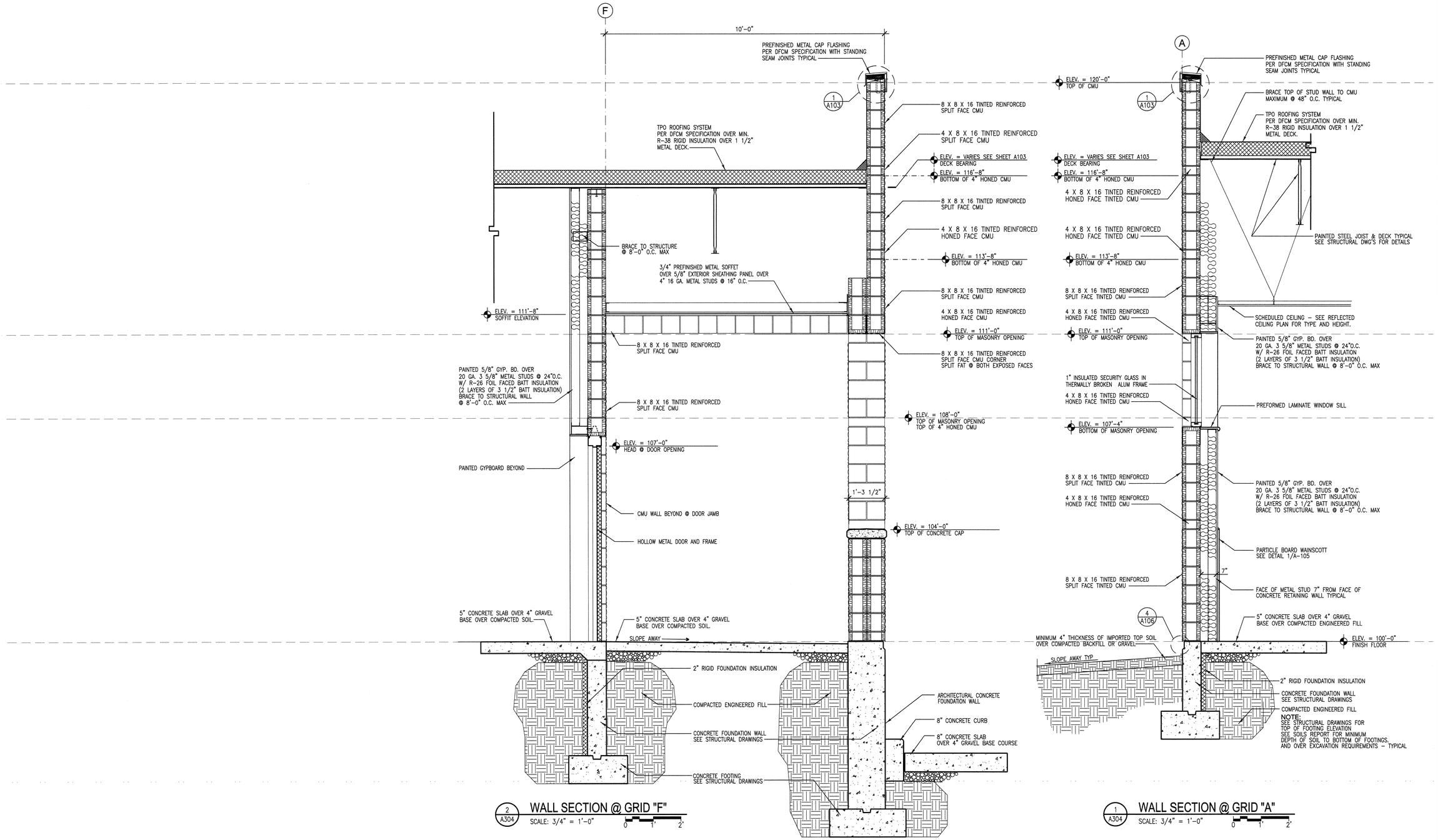

NEW HEBER CITY LIQUOR STORE

DEPT OF ALCOHOLIC BEVERAGE CONTROL
HEBER CITY, UTAH

WALL SECTIONS

FRANK N MURDOCK JR ■ Architect & Associates
975 East 100 South Suite 100, Salt Lake City, Utah 84102 TEL: (801) 532-4441 FAX (801) 532-4220

STATE OF UTAH
FRANK N. MURDOCK JR.
124498
5/12/09
LICENSED ARCHITECT

REVISION # DATE:

DFCM PROJECT NO.:
08224030
CONST. DOC.
FILE NAME: ABCHB-A304
PLOT SCALE: 1:16
DRAWN BY: STAFF
CHECKED BY: FNM
DATE: MAY 2009

A
304

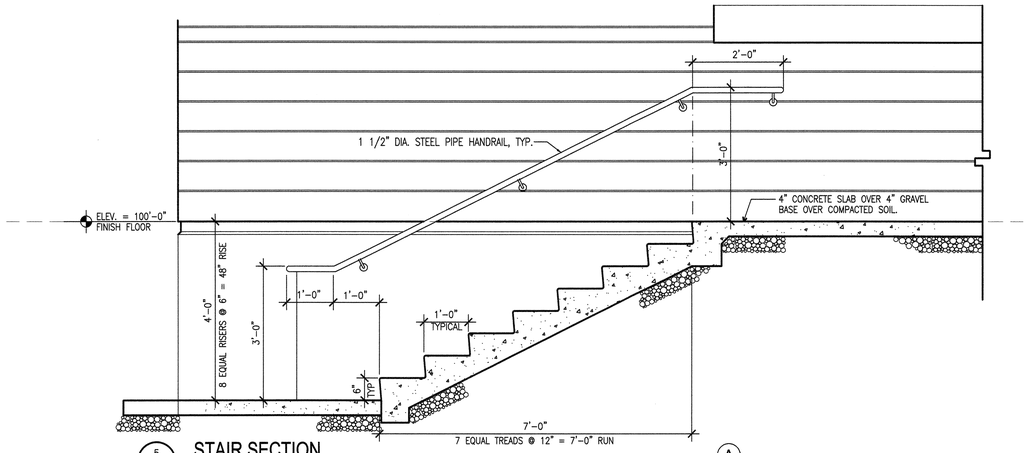

5 A304 STAIR SECTION
SCALE: 3/4" = 1'-0"

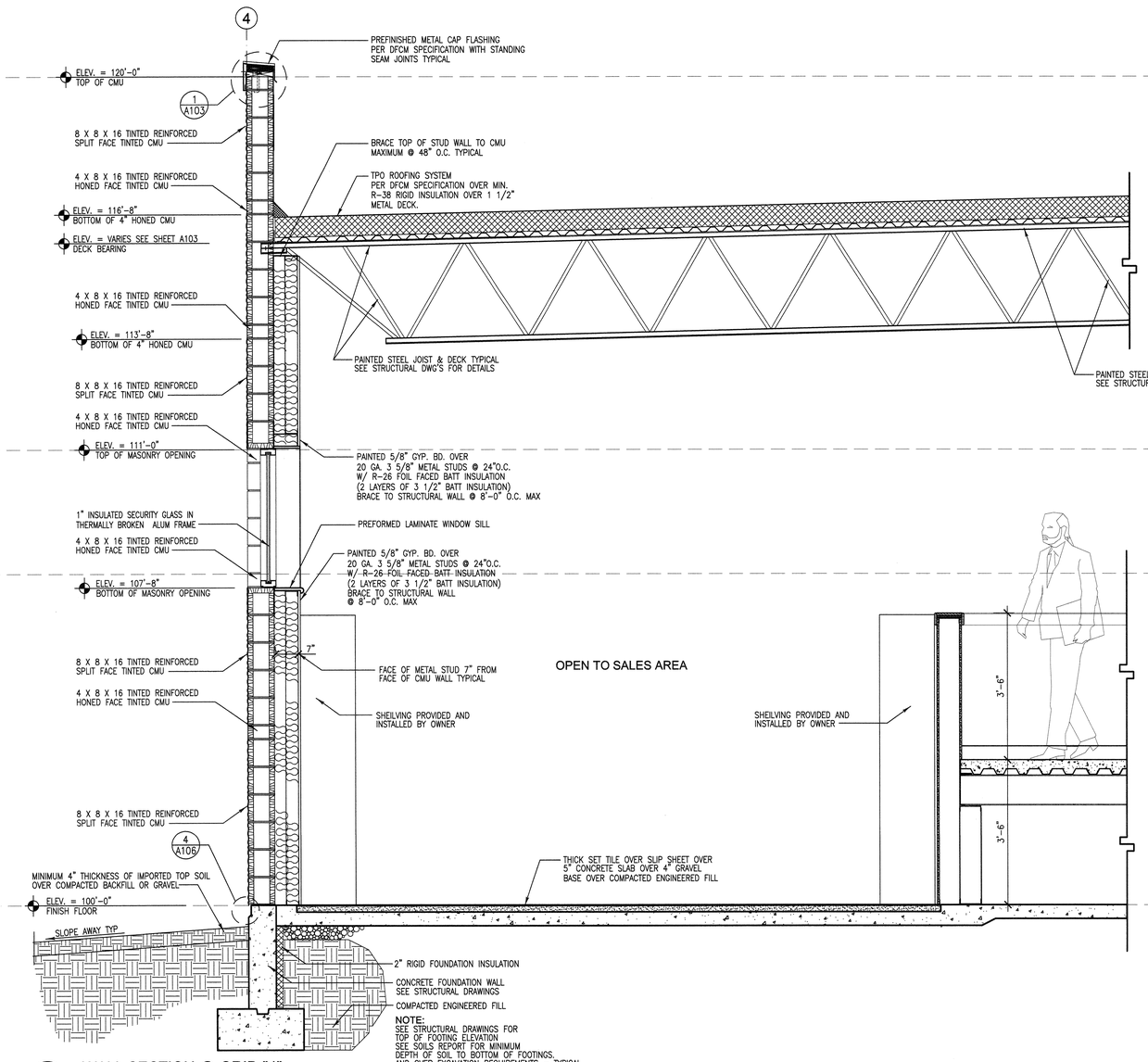

NOTE:
SEE STRUCTURAL DRAWINGS FOR TOP OF FOOTING ELEVATION
SEE SOILS REPORT FOR MINIMUM DEPTH OF SOIL TO BOTTOM OF FOOTINGS, AND OVER EXCAVATION REQUIREMENTS - TYPICAL

3 A305 WALL SECTION @ GRID "4"
SCALE: 3/4" = 1'-0"

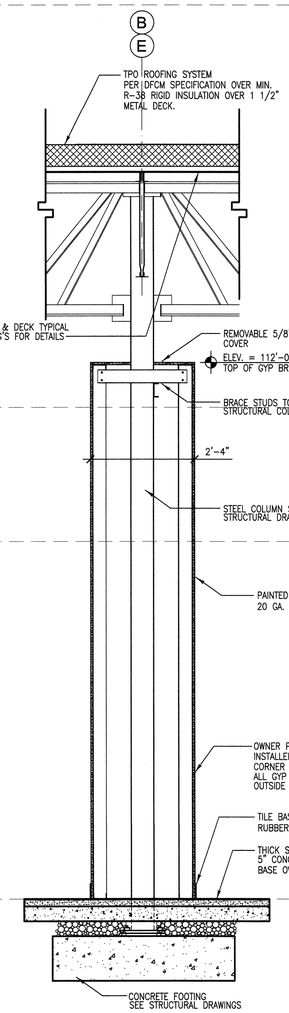

2 A305 WALL SECTION @ GYP BRD PIERS
SCALE: 3/4" = 1'-0"

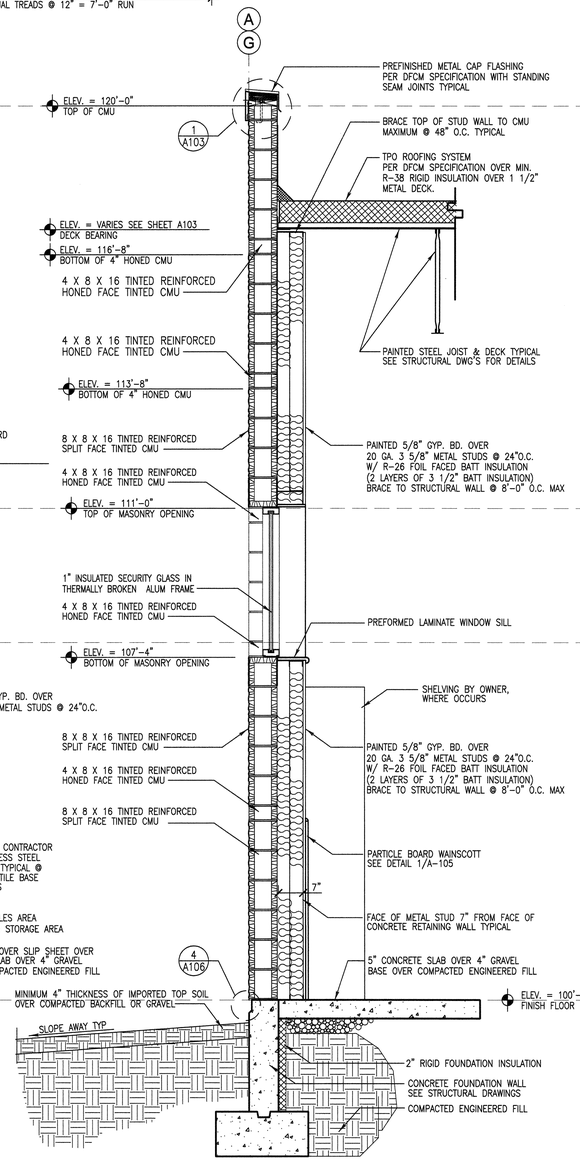

1 A305 WALL SECTION @ GRIDS "A" & "G"
SCALE: 3/4" = 1'-0"

NEW HEBER CITY LIQUOR STORE

DEPT OF ALCOHOLIC BEVERAGE CONTROL
HEBER CITY, UTAH

WALL SECTIONS

FRANK N MURDOCK JR ■ Architect & Associates
975 East 100 South Suite 100, Salt Lake City, Utah 84102 TEL: (801) 532-4441 FAX (801) 532-4220

STATE OF UTAH
FRANK N. MURDOCK
124698
LICENSED ARCHITECT

REVISION # DATE:

DFCM PROJECT NO.:
08224030
CONST. DOC.
FILE NAME: ABCHB-A305
PLOT SCALE: 1:16
DRAWN BY: STAFF
CHECKED BY: FNM
DATE: MAY 2009

A
305

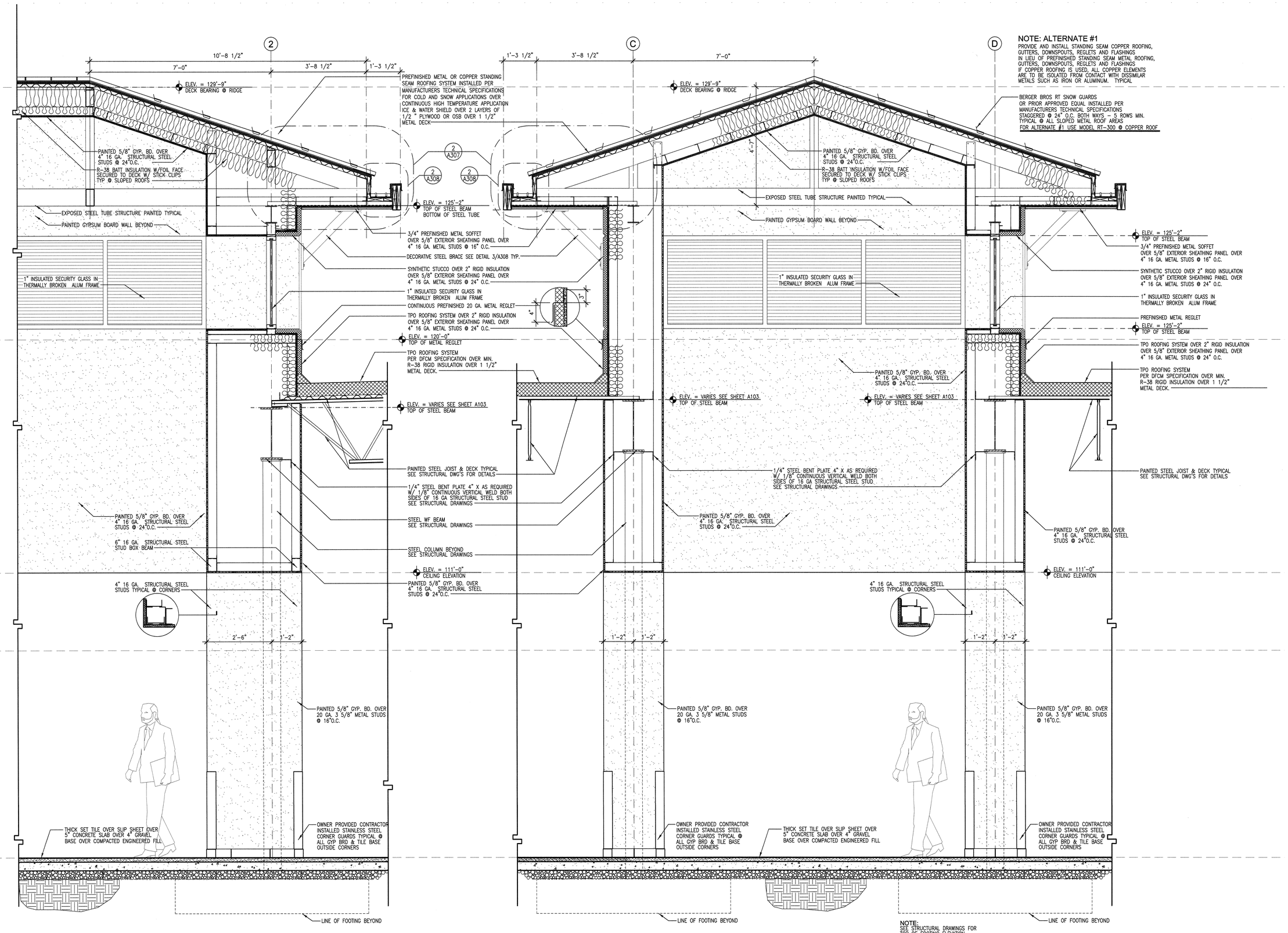

2 A306 WALL SECTION @ GRID "2"
SCALE: 3/4" = 1'-0"

1 A306 WALL SECTION @ GRIDS "D" & "E"
SCALE: 3/4" = 1'-0"

NEW HEBER CITY LIQUOR STORE

DEPT OF ALCOHOLIC BEVERAGE CONTROL
HEBER CITY, UTAH

WALL SECTIONS

FRANK N MURDOCK JR ■ Architect & Associates
975 East 100 South Suite 100, Salt Lake City, Utah 84102 TEL: (801) 532-4441 FAX (801) 532-4220

STATE OF UTAH
FRANK N. MURDOCK JR.
124498
LICENSED ARCHITECT

REVISION # DATE:

DFCM PROJECT NO.:
08224030
CONST. DOC.
FILE NAME: ABCHB-A306
PLOT SCALE: 1:16
DRAWN BY: STAFF
CHECKED BY: FNM
DATE: MAY 2009

A
306

2/A307 DETAIL @ SLOPED ROOF GUTTERS

SCALE: 1 1/2" = 1'-0"

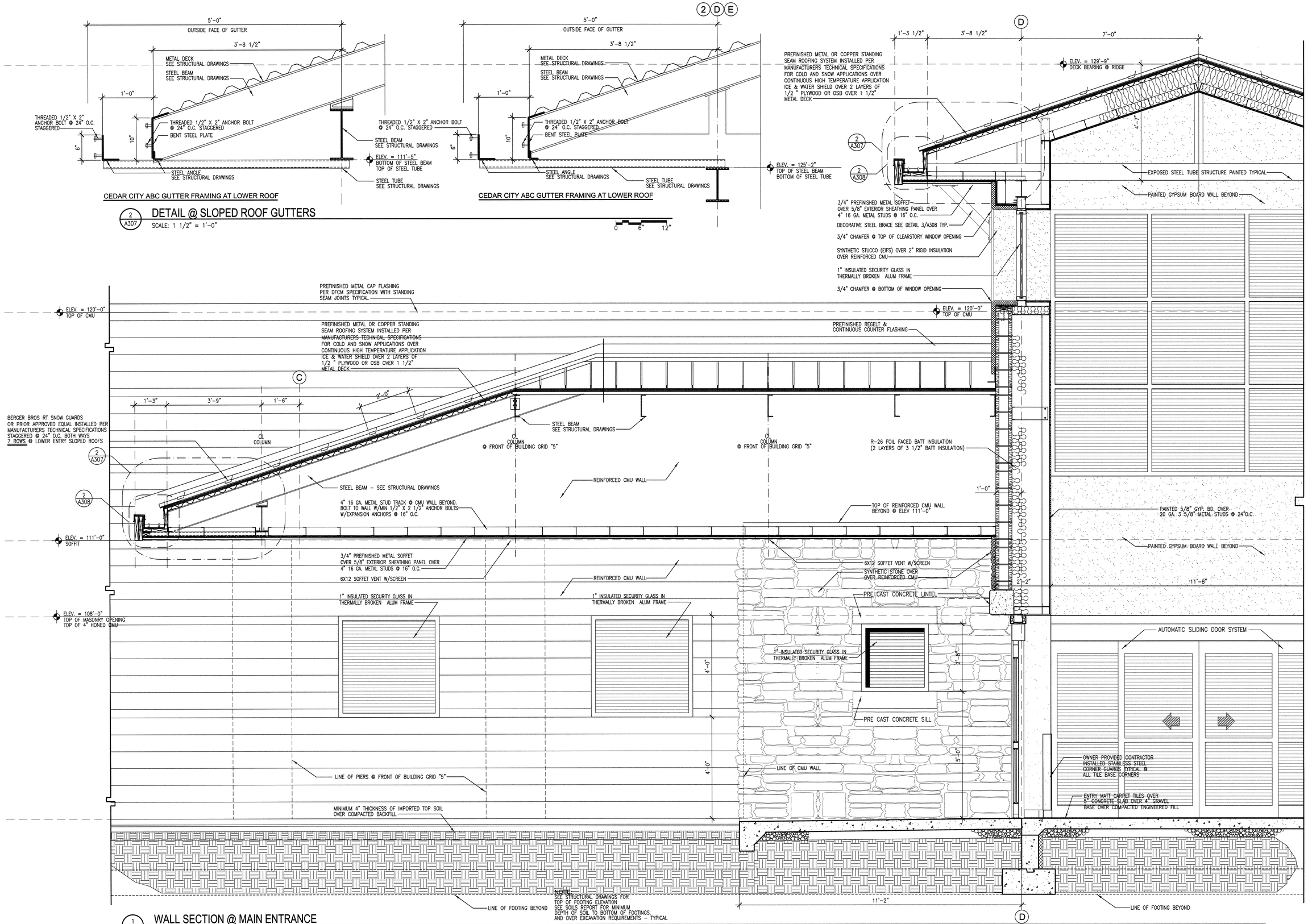

1/A307 WALL SECTION @ MAIN ENTRANCE

SCALE: 3/4" = 1'-0"

NEW HEBER CITY LIQUOR STORE

DEPT OF ALCOHOLIC BEVERAGE CONTROL
HEBER CITY, UTAH

WALL SECTIONS

FRANK N MURDOCK JR ■ Architect & Associates
975 East 100 South Suite 100, Salt Lake City, Utah 84102 TEL: (801) 532-4441 FAX (801) 532-4220

STATE OF UTAH
FRANK N. MURDOCK
#234498
Stamp
LICENSED ARCHITECT

REVISION #	DATE:

DFCM PROJECT NO.:
08224030
CONST. DOC.
FILE NAME: ABCHB-A307
PLOT SCALE: 1:16
DRAWN BY: STAFF
CHECKED BY: FNM
DATE: MAY 2009

A
307

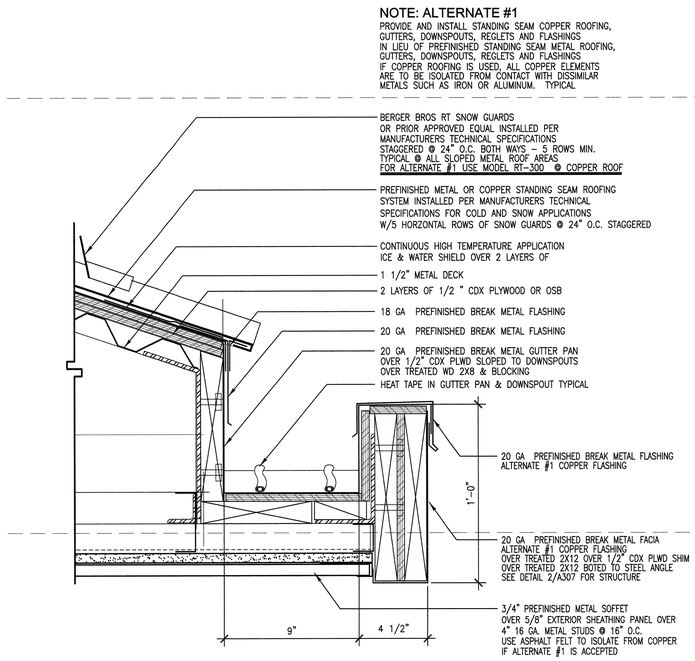

2 A308 TYPICAL SLOPED ROOF GUTTER DETAIL

SCALE: 3" = 1'-0"

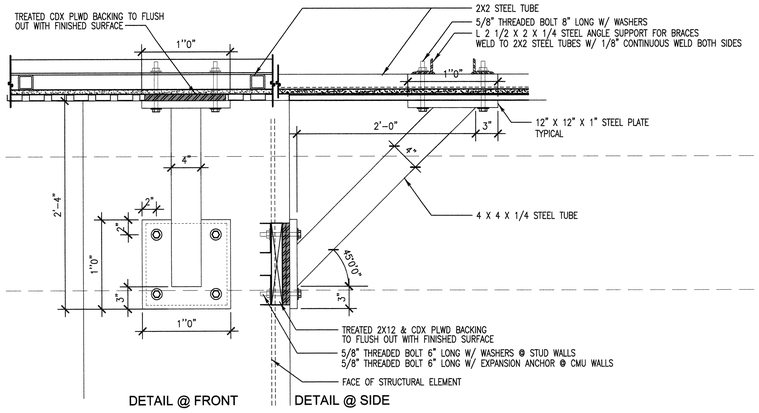

PROVIDE AND INSTALL 22 DECORATIVE STEEL BRACES IN LOCATION AS INDICATED ON THE EXTERIOR ELEVATIONS SHEET A201 & A202

3 A308 TYPICAL ARCHITECTURAL DECORATIVE BRACE (DODAD)

SCALE:1 1/2" = 1'-0"

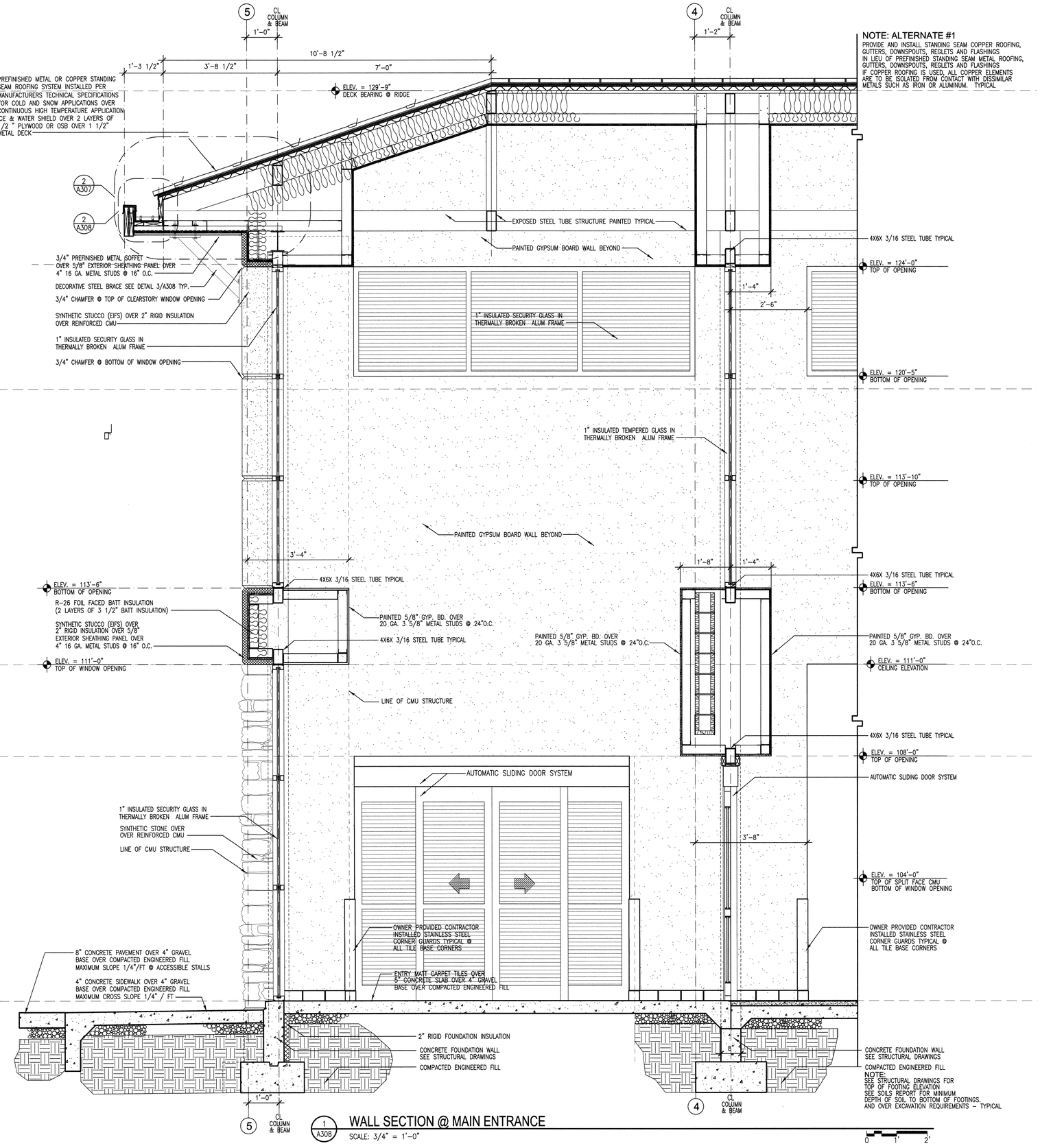

1 A308 WALL SECTION @ MAIN ENTRANCE

SCALE: 3/4" = 1'-0"

NEW HEBER CITY LIQUOR STORE

DEPT OF ALCOHOLIC BEVERAGE CONTROL
HEBER CITY, UTAH

FRANK N MURDOCK JR ■ Architect & Associates
975 East 100 South Suite 100, Salt Lake City, Utah 84102 TEL: (801) 532-4441 FAX (801) 532-4220

STATE OF UTAH
FRANK N. MURDOCK
124498-5
5/20/09
LICENSED ARCHITECT

WALL SECTIONS

REVISION #	DATE:

DFCM PROJECT NO.:
08224030
CONST. DOC.
FILE NAME: ABCHB-A308
PLOT SCALE: 1:16
DRAWN BY: STAFF
CHECKED BY: FNM
DATE: MAY 2009

A
308

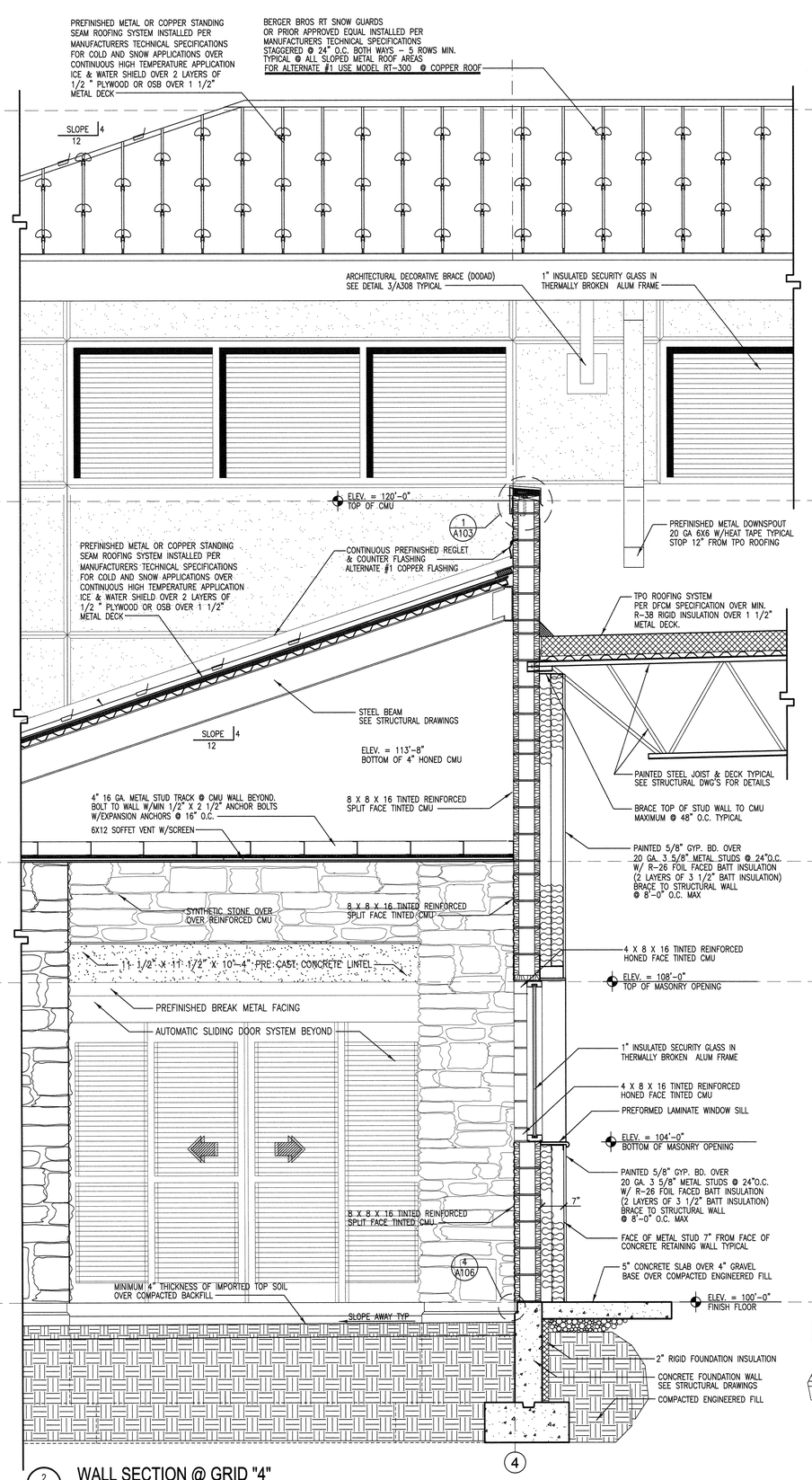

2 A309 WALL SECTION @ GRID "4"

SCALE: 3/4" = 1'-0"

0 1' 2'

NOTE: ALTERNATE #1

PROVIDE AND INSTALL STANDING SEAM COPPER ROOFING, GUTTERS, DOWNSPOUTS, REGLETS AND FLASHINGS IN LIEU OF PREFINISHED STANDING SEAM METAL ROOFING, GUTTERS, DOWNSPOUTS, REGLETS AND FLASHINGS IF COPPER ROOFING IS USED, ALL COPPER ELEMENTS ARE TO BE ISOLATED FROM CONTACT WITH DISSIMILAR METALS SUCH AS IRON OR ALUMINUM. TYPICAL

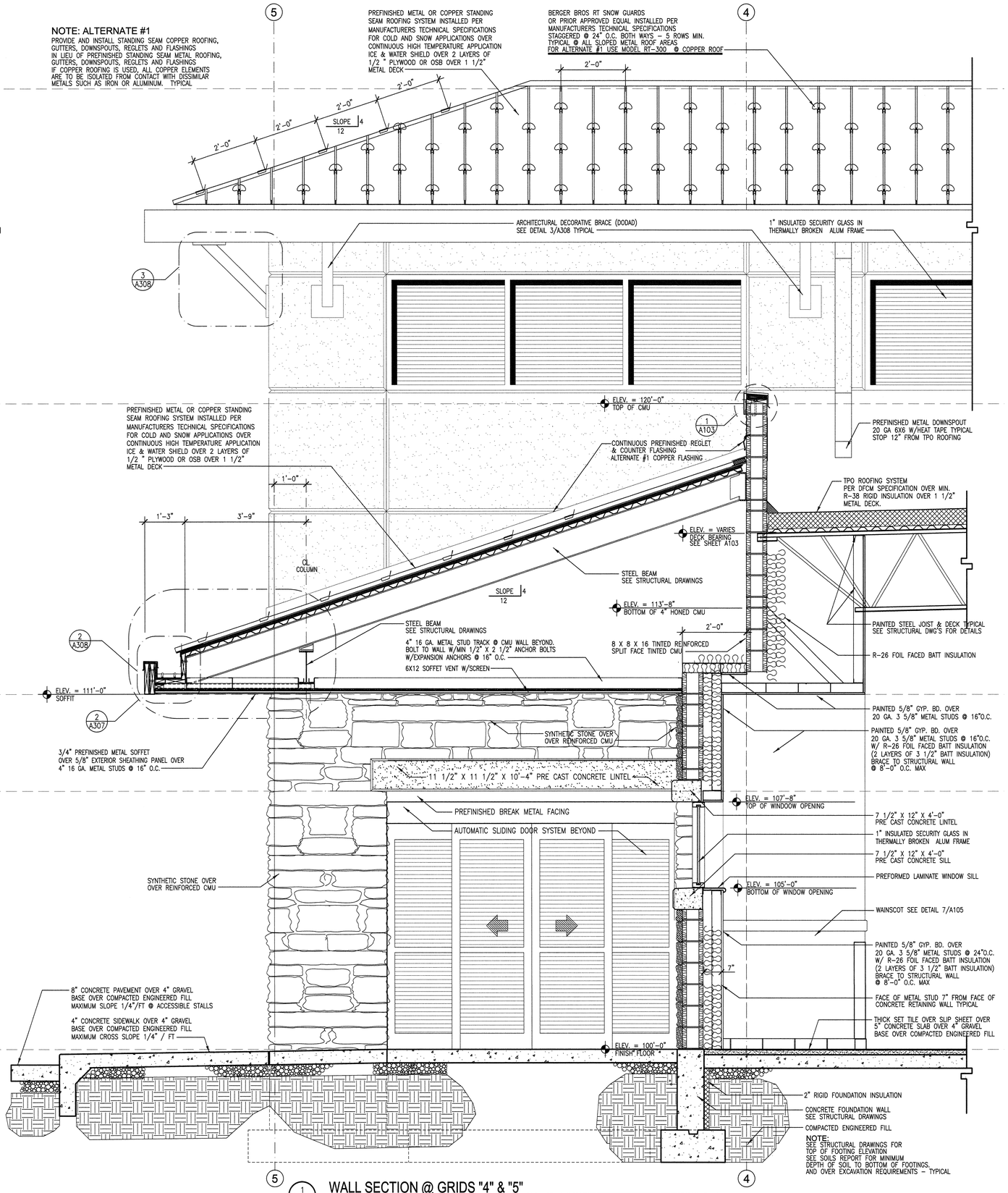

1 A309 WALL SECTION @ GRIDS "4" & "5"

SCALE: 3/4" = 1'-0"

0 1' 2'

NEW HEBER CITY LIQUOR STORE

DEPT OF ALCOHOLIC BEVERAGE CONTROL
HEBER CITY, UTAH

FRANK N MURDOCK JR ■ Architect & Associates
975 East 100 South Suite 100, Salt Lake City, Utah 84102 TEL: (801) 532-4441 FAX (801) 532-4220

WALL SECTIONS

STATE OF UTAH FRANK N. MURDOCK 124498 5/20/09 LICENSED ARCHITECT

REVISION #	DATE:

DFCM PROJECT NO.:
08224030
CONST. DOC.
FILE NAME: ABCHB-A309
PLOT SCALE: 1:16
DRAWN BY: STAFF
CHECKED BY: FNM
DATE: MAY 2009

A
309

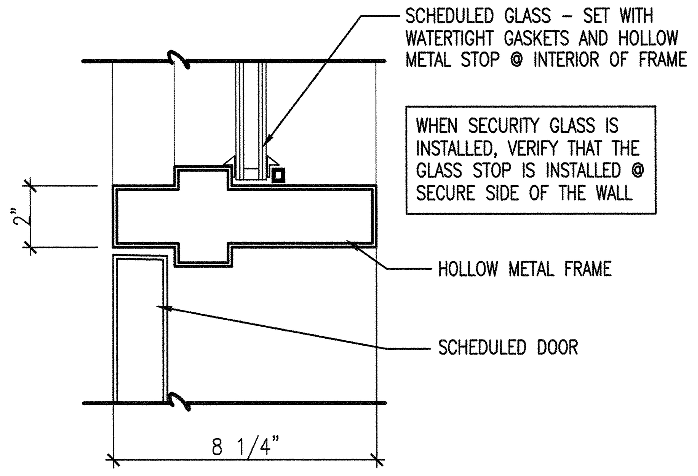

26 A501 **HM DOOR HEAD/TRANSOM SILL**
SCALE: NONE

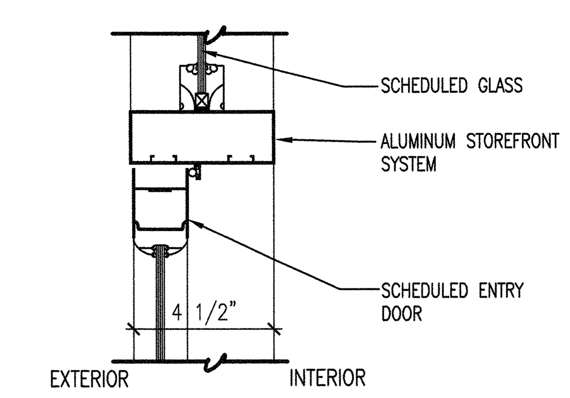

25 A501 **STOREFRONT DOOR HEAD/TRANSOM SILL**
SCALE: NONE

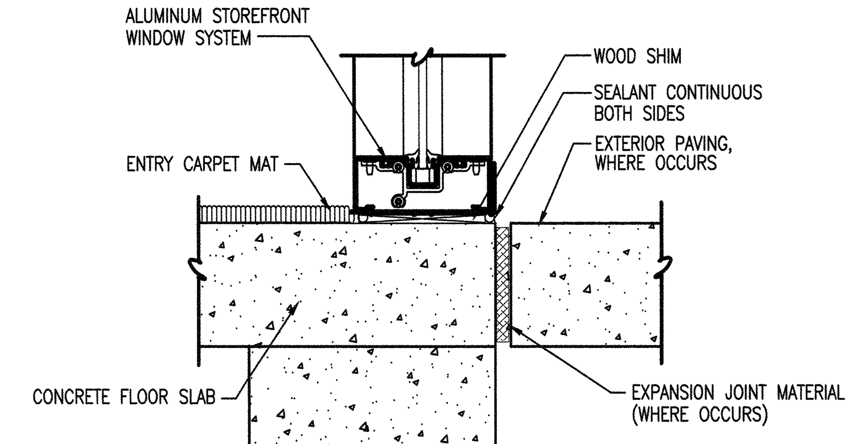

24 A501 **STOREFRONT WINDOW SILL**
SCALE: NONE

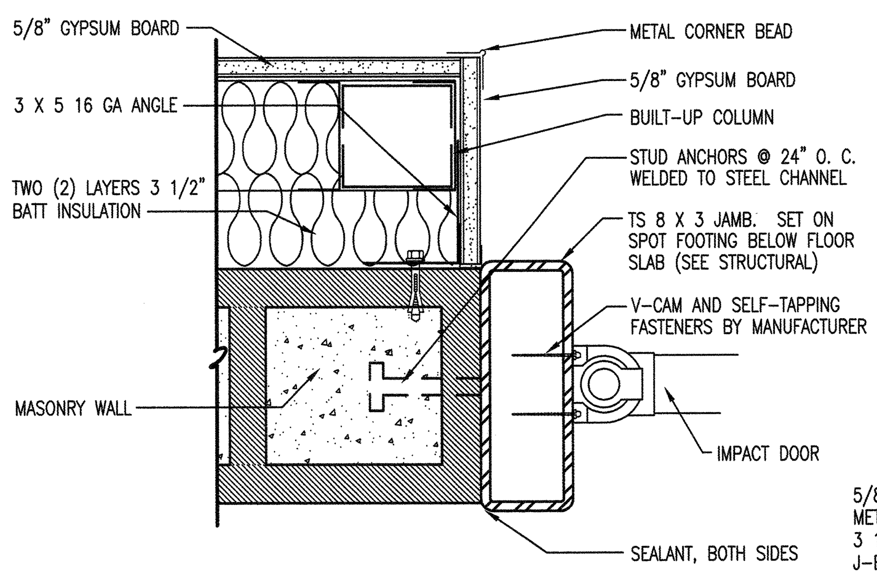

18 A501 **IMPACT DOOR JAMB/head sim.**
SCALE: NONE

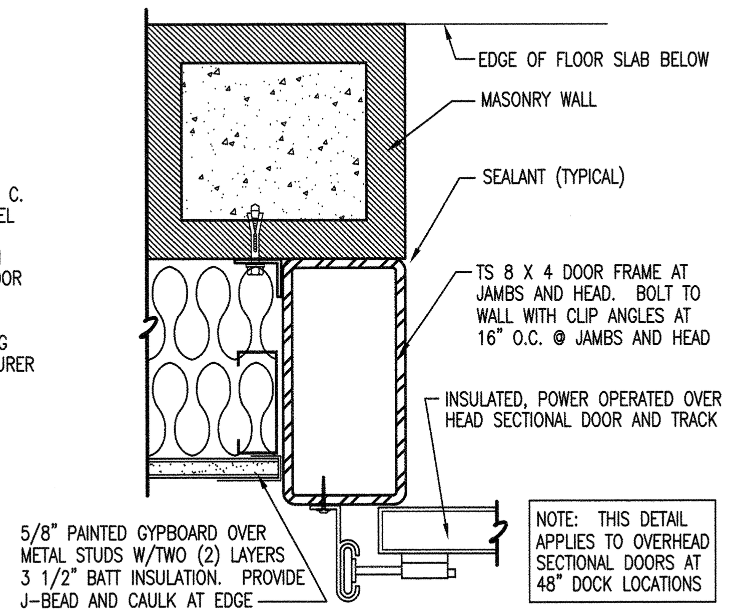

19 A501 **OVERHEAD DOOR JAMB**
SCALE: NONE

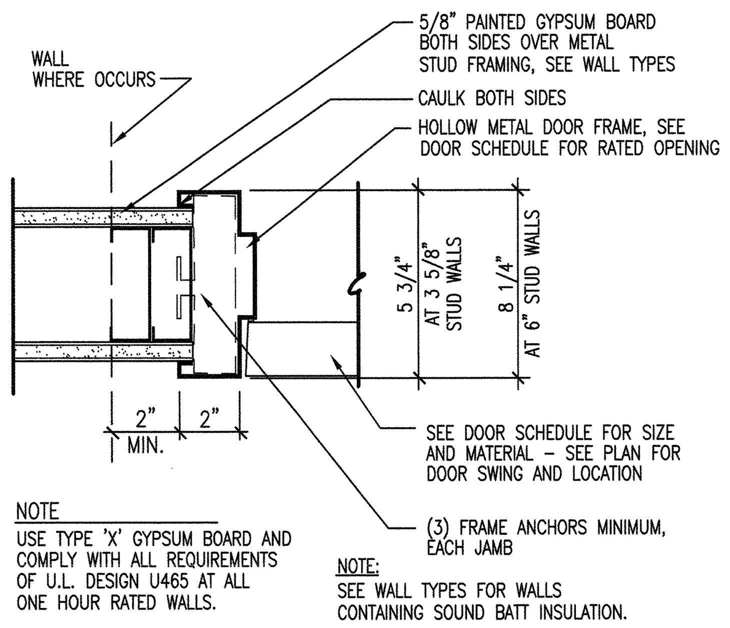

20 A501 **HOLLOW METAL DOOR (INTERIOR)**
SCALE: NONE

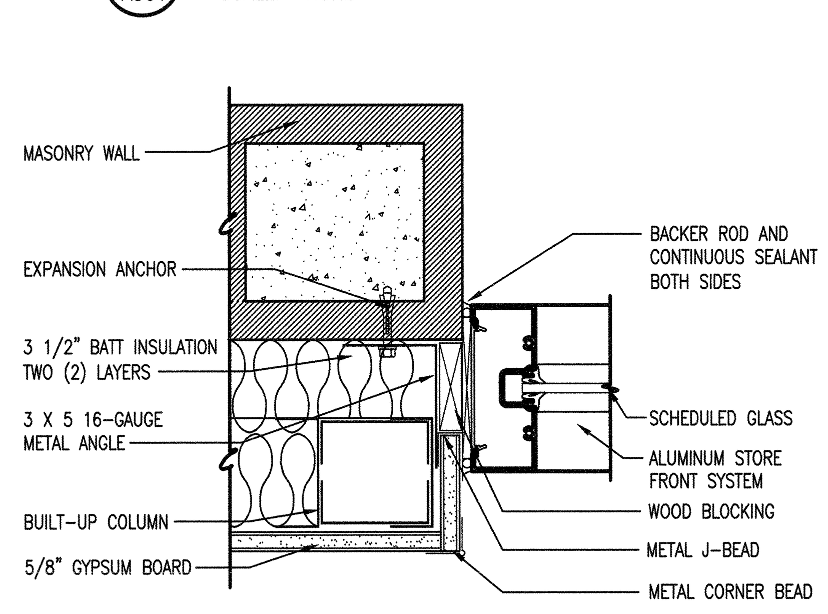

21 A501 **STOREFRONT WINDOW JAMB**
SCALE: NONE

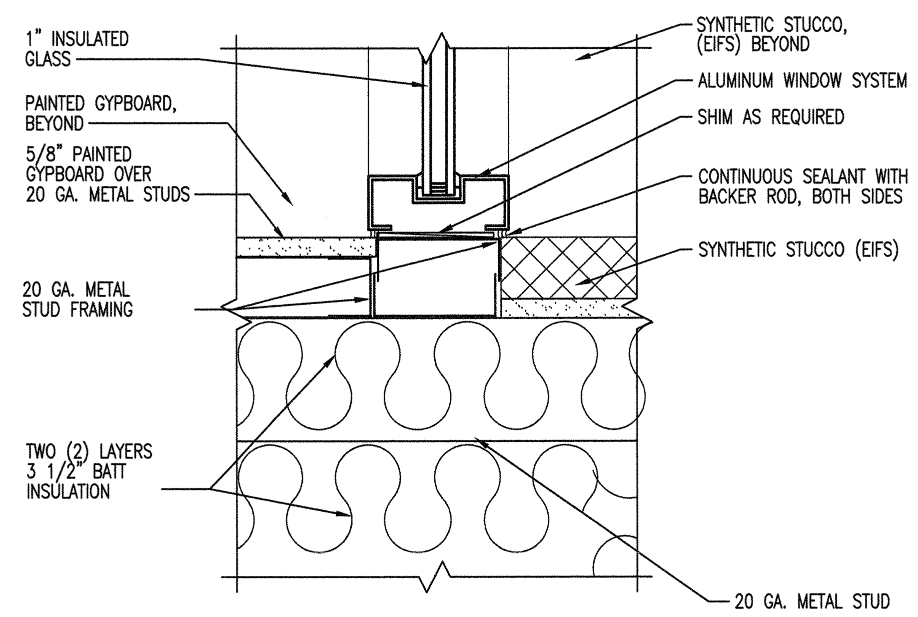

22 A501 **STOREFRONT WINDOW SILL**
SCALE: NONE

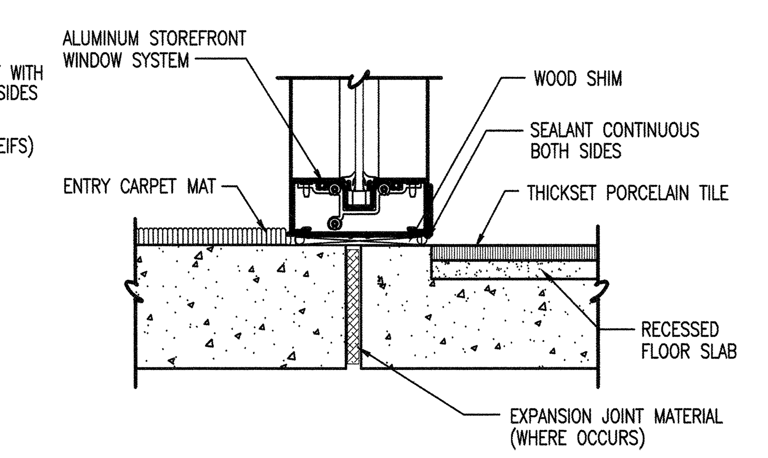

23 A501 **STOREFRONT WINDOW SILL**
SCALE: NONE

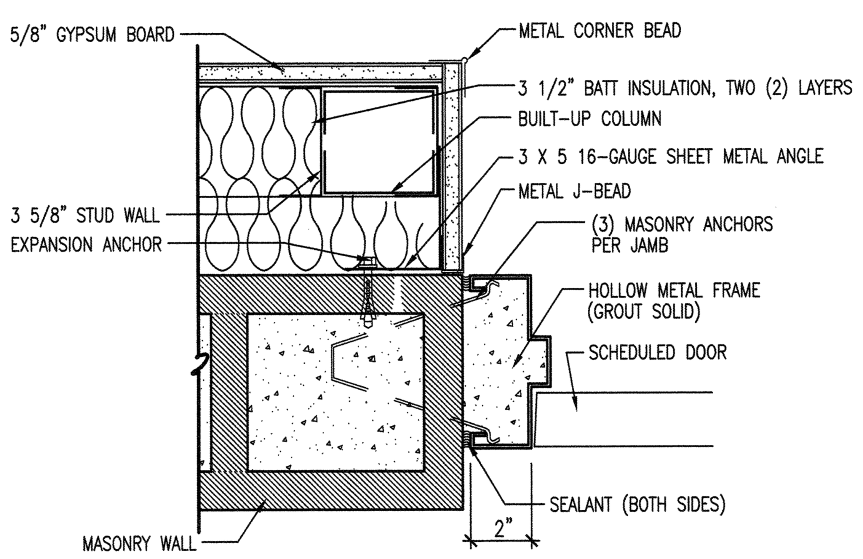

17 A501 **HOLLOW METAL DOOR JAMB**
SCALE: NONE

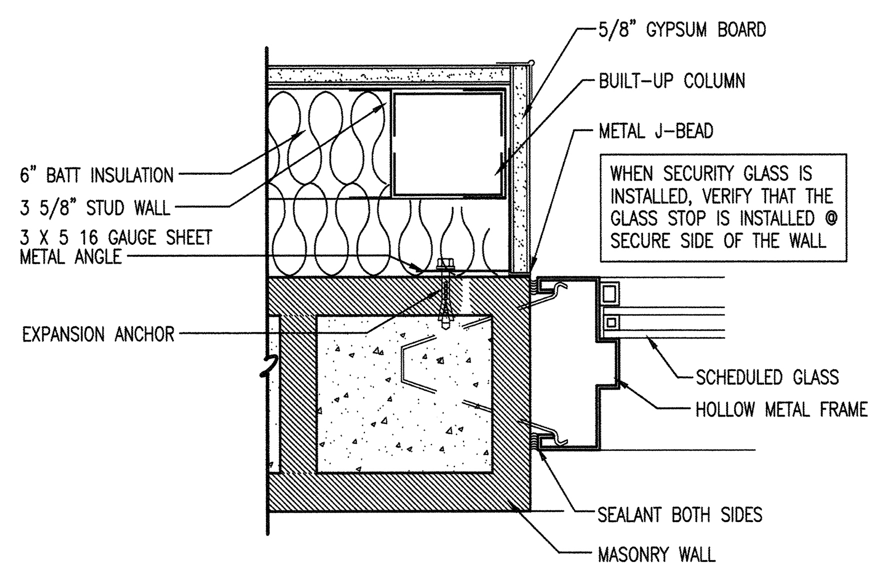

16 A501 **HOLLOW METAL WINDOW JAMB**
SCALE: NONE

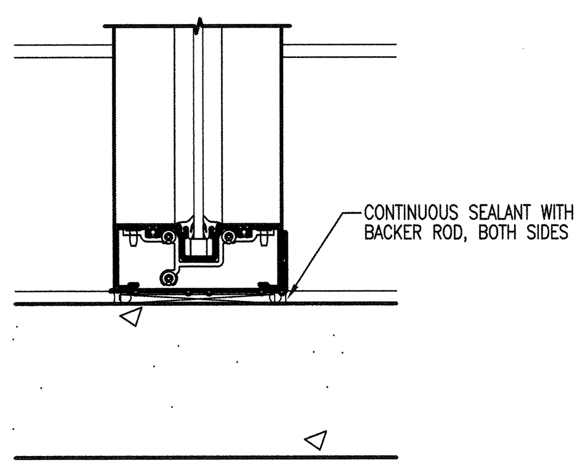

15 A501 **STOREFRONT WINDOW SILL**
SCALE: NONE

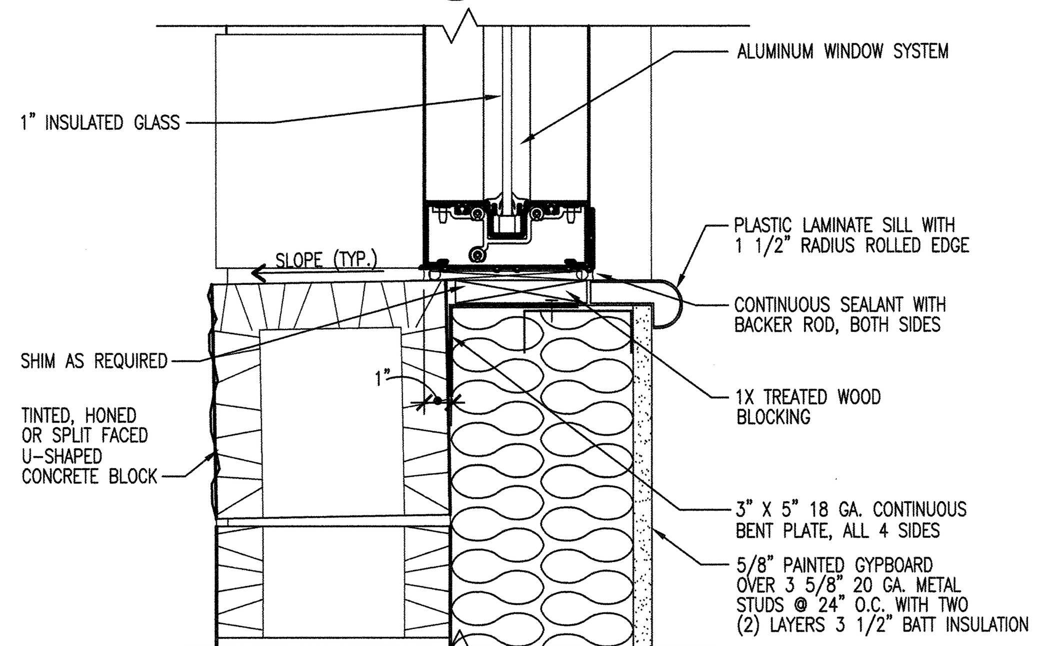

14 A501 **STOREFRONT WINDOW SILL**
SCALE: NONE

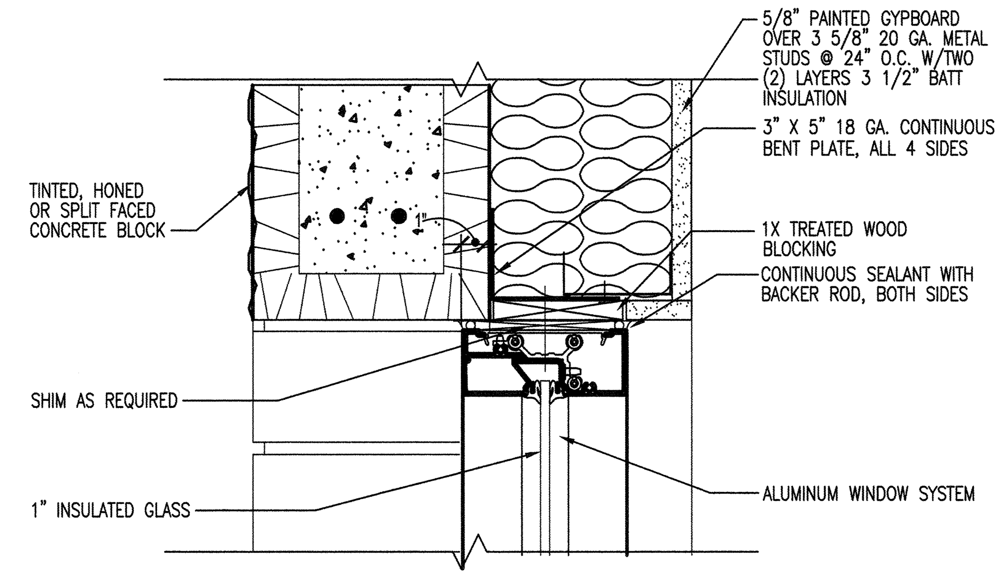

13 A501 **STOREFRONT WINDOW HEAD**
SCALE: NONE

NOTE: ALL ALUMINUM WINDOW AND DOOR FRAMES SHALL INCLUDE AN INTEGRALLY CONCEALED LOW CONDUCTANCE THERMAL BARRIER (THERMAL-BREAK)

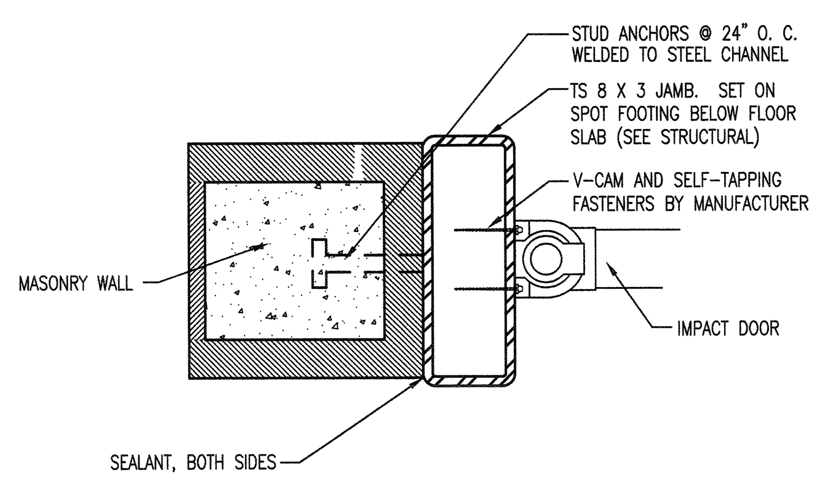

7 A501 **IMPACT DOOR JAMB**
SCALE: NONE

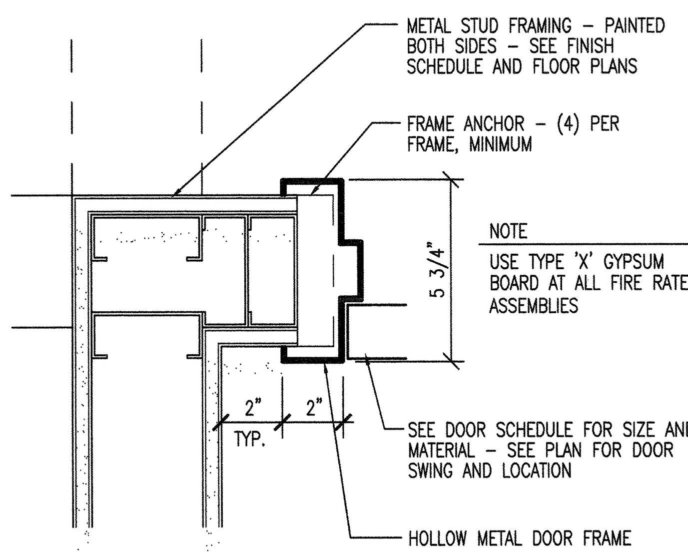

8 A501 **DOOR JAMB DETAIL**
SCALE: NONE

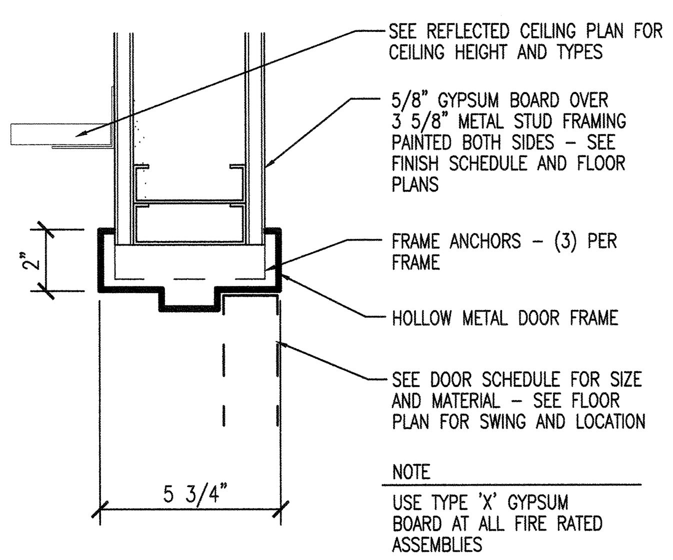

9 A501 **DOOR HEAD**
SCALE: NONE

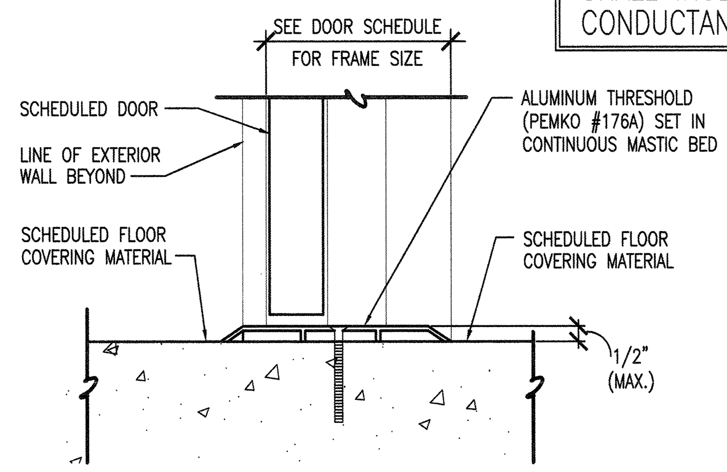

10 A501 **DOOR THRESHOLD**
SCALE: NONE

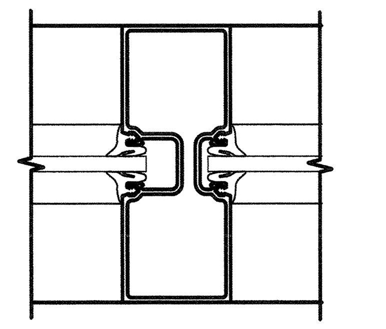

11 A501 **STOREFRONT MULLION/MUNTON**
SCALE: NONE

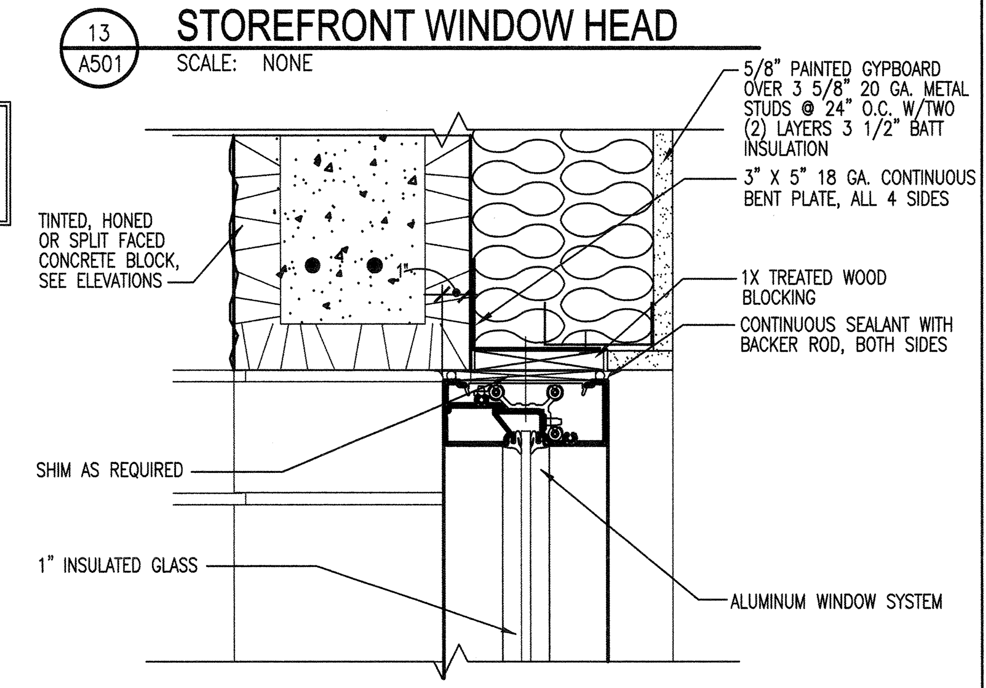

12 A501 **STOREFRONT WINDOW JAMB**
SCALE: NONE

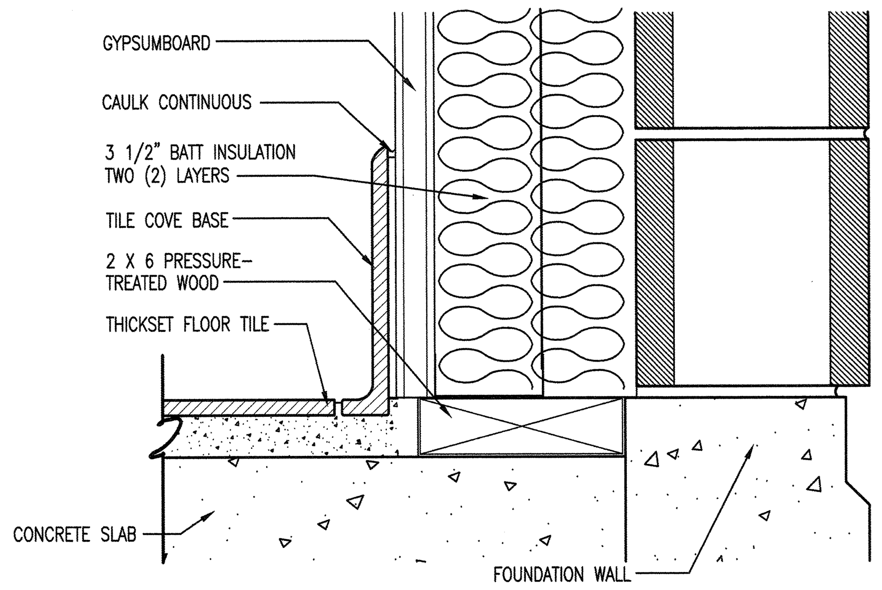

6 A501 **THICKSET TILE BASE**
SCALE: NONE

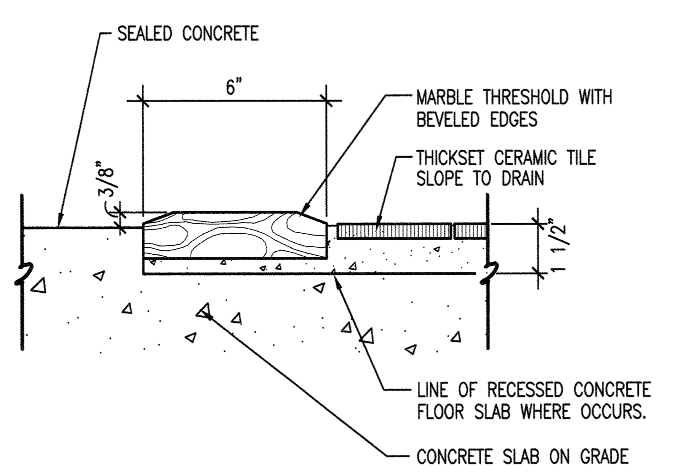

5 A501 **MARBLE THRESHOLD**
SCALE: NONE

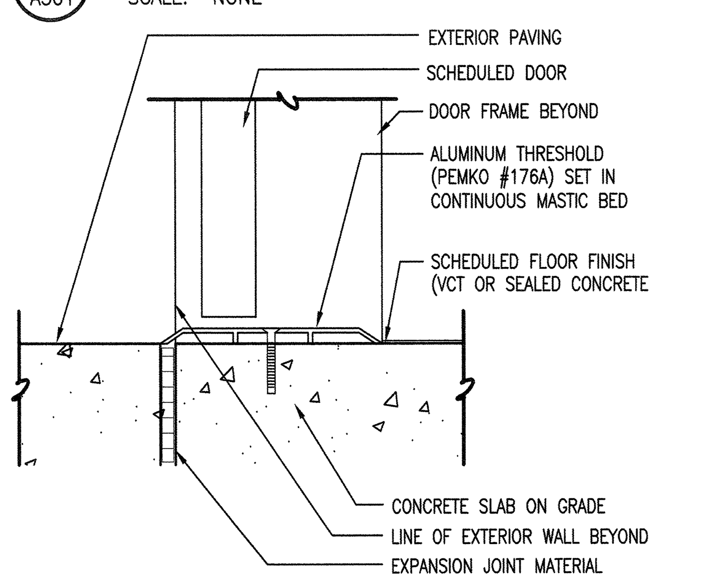

4 A501 **DOOR THRESHOLD**
SCALE: NONE

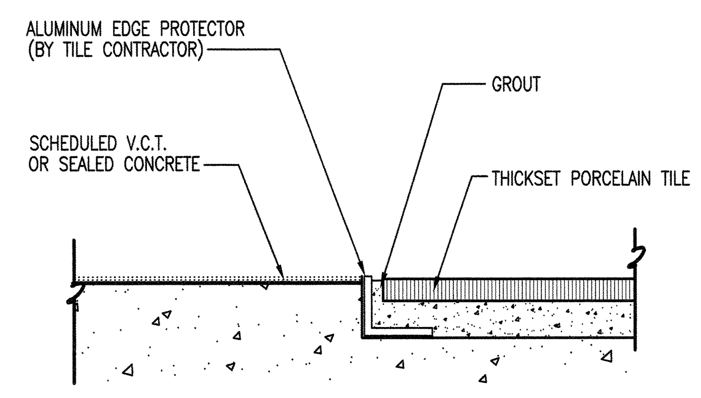

3 A501 **CONCRETE TO TILE TRANSITION**
SCALE: NONE

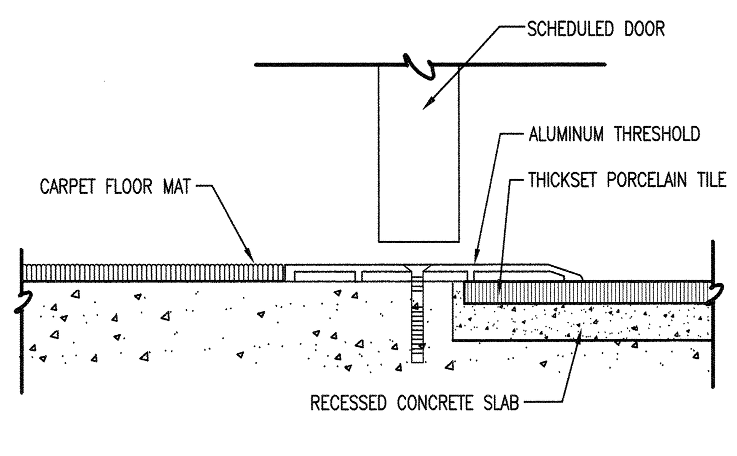

2 A501 **TILE TO FLOOR MAT DETAIL**
SCALE: NONE

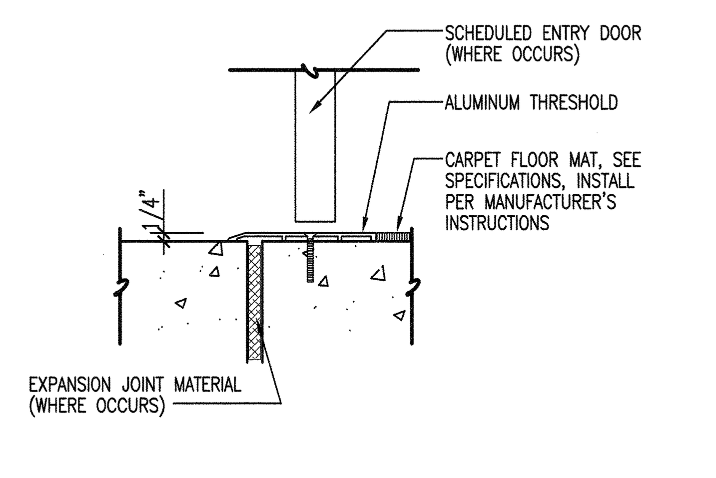

1 A501 **DOOR THRESHOLD (entry mat)**
SCALE: NONE

NEW HEBER CITY LIQUOR STORE

DEPARTMENT OF ALCOHOLIC BEVERAGE CONTROL
HEBER CITY, UTAH

MISCELLANEOUS DETAILS

FRANK N MURDOCK JR ■ Architect & Associates
975 East 100 South Suite 100, Salt Lake City, Utah 84102 TEL: (801) 532-4441 FAX (801) 532-4220

STATE OF UTAH — FRANK N. MURDOCK, JR — 124498 — 5/20/09 — LICENSED ARCHITECT

REVISION # DATE:

DFCM PROJECT NO.:
08224030
CONSTR. DOC.
FILE NAME: ABCHB-A501
PLOT SCALE: 3:12
DRAWN BY: STAFF
CHECKED BY: FNM
DATE: MAY 2009

A
501

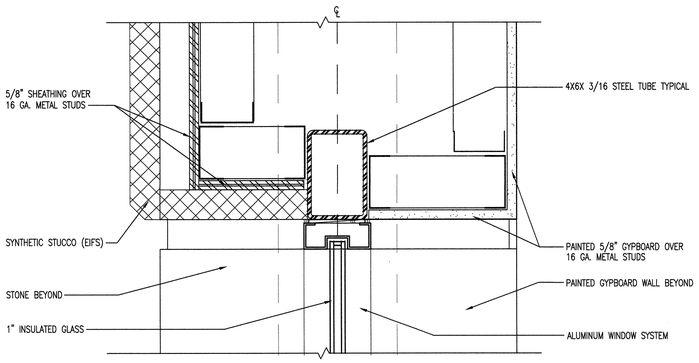

10 A502 STOREFRONT WINDOW HEAD
SCALE: NONE

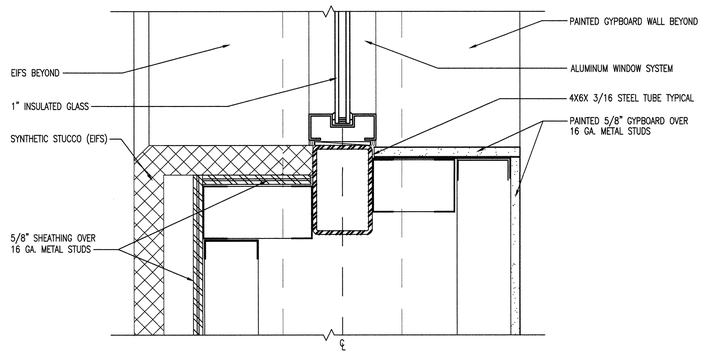

9 A502 STOREFRONT WINDOW SILL
SCALE: NONE

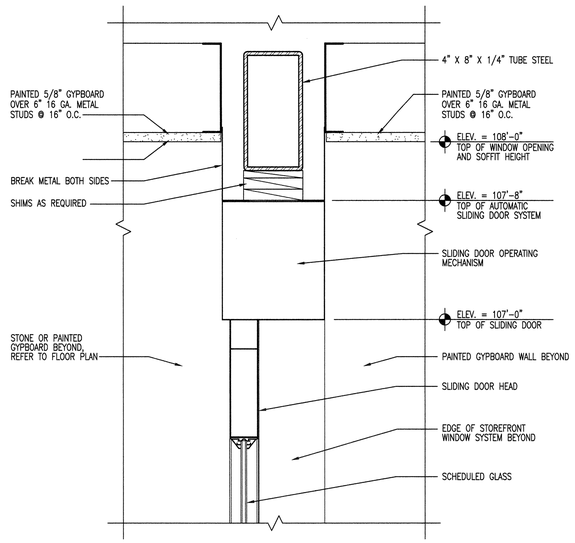

8 A502 AUTOMATIC SLIDING DOOR HEAD
SCALE: NONE

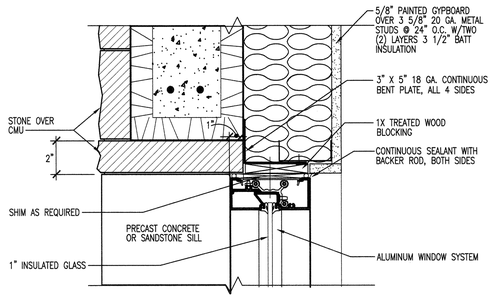

5 A502 STOREFRONT WINDOW JAMB
SCALE: NONE

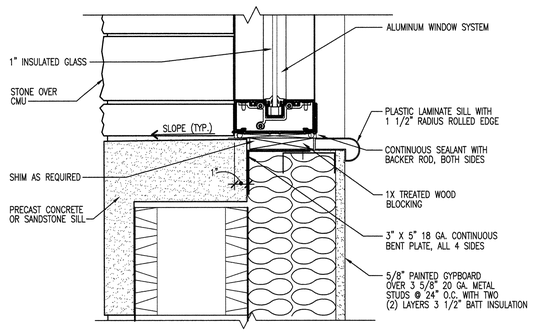

6 A502 STOREFRONT WINDOW SILL
SCALE: NONE

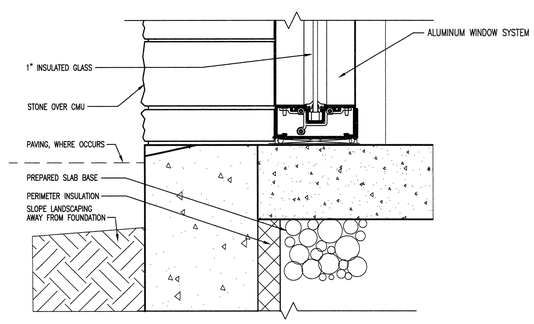

7 A502 STOREFRONT WINDOW SILL
SCALE: NONE

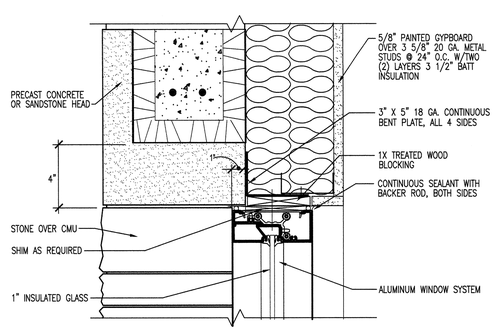

4 A502 STOREFRONT WINDOW HEAD
SCALE: NONE

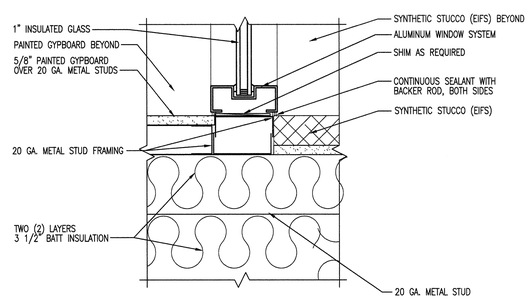

3 A502 WINDOW SILL
SCALE: NONE

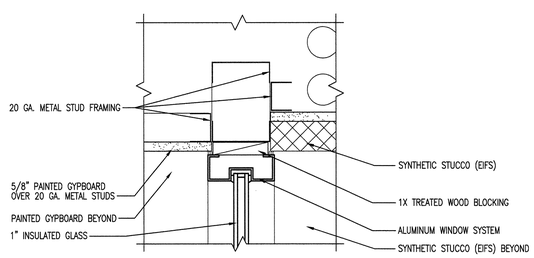

2 A502 WINDOW JAMB
SCALE: NONE

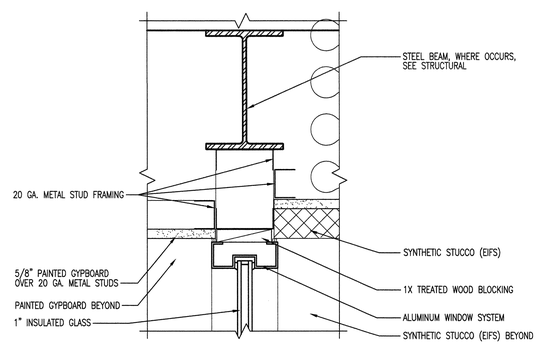

1 A502 WINDOW HEAD
SCALE: NONE

NEW HEBER CITY LIQUOR STORE

DEPARTMENT OF ALCOHOLIC BEVERAGE CONTROL
HEBER CITY, UTAH

FRANK N MURDOCK JR ■ Architect & Associates
975 East 100 South Suite 100, Salt Lake City, Utah 84102 TEL: (801) 532-4441 FAX (801) 532-4220

MISCELLANEOUS DETAILS

STATE OF UTAH
FRANK N. MURDOCK
124498
LICENSED ARCHITECT

REVISION # DATE:

DFCM PROJECT NO.:
08224030
CONSTR. DOC.
FILE NAME: ABCHB-A502
PLOT SCALE: 3:12
DRAWN BY: STAFF
CHECKED BY: FNM
DATE: MAY 2009

A
502

FINISH SCHEDULE

ROOM	FLOOR	WALL	BASE	CEILING	HEIGHT	REMARKS
ENTRY VESTIBULE	ENTRY MAT	PAINTED GYPBOARD	CERAMIC TILE	PAINTED GYPBOARD	14'-0"	
CLERESTORY	---	PAINTED GYPBOARD	---	PAINTED GYPBOARD	VARIES	
SALES AREA	THICKSET TILE	PAINTED GYPBOARD	CERAMIC TILE	EXPOSED STRUCTURE	VARIES	
STORAGE ROOM	SEALED CONCRETE	PAINTED GYPBOARD	VINYL	PAINTED GYPBOARD	11'-6"	
OFFICE AND STAIRS	CARPET (TILES/BROADLOOM)	PAINTED GYPBOARD	VINYL	EXPOSED STRUCTURE	VARIES	RAISED PLATFORM @ 3'-6" A.F.F.
STORAGE	SEALED CONCRETE	PAINTED GYPBOARD	VINYL	EXPOSED STRUCTURE	VARIES	
JANITOR'S ROOM	SEALED CONCRETE	PAINTED GYPBOARD	VINYL	PAINTED GYPBOARD	11'-6"	PARTIAL TILE @ TWO WALLS, SEE 22/A104
WOMEN'S TOILET	THICKSET TILE	TILE/PAINTED GYPBOARD	TILE	PAINTED GYPBOARD	11'-6"	WALL TILE TO 8'-0" A.F.F., ALL WALLS
MEN'S TOILET	THICKSET TILE	TILE/PAINTED GYPBOARD	TILE	PAINTED GYPBOARD	11'-6"	WALL TILE TO 8'-0" A.F.F., ALL WALLS
LUNCH COUNTER	SEALED CONCRETE	PAINTED GYPBOARD	VINYL	EXPOSED STRUCTURE	VARIES	SEE INTERIOR ELEVATIONS FOR CABINETRY
ENCLOSED DOCK	SEALED CONCRETE	PAINTED GYPBOARD	VINYL	EXPOSED STRUCTURE	VARIES	

WALL PAINT SCHEDULE

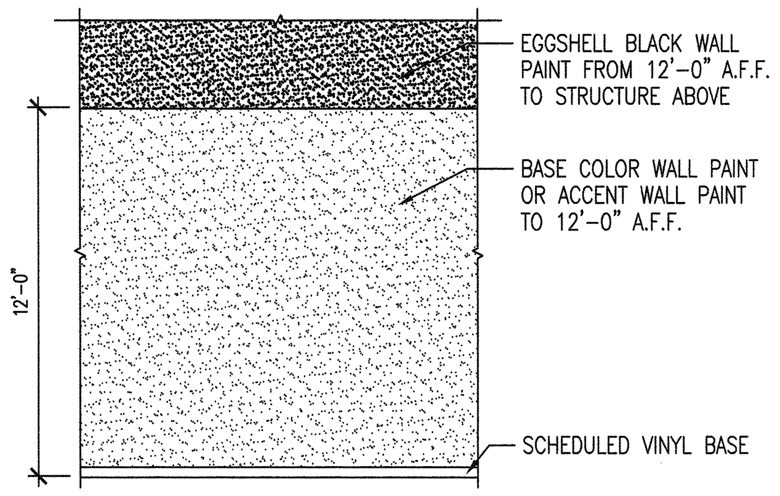

NOTE: WALL PAINT SHALL INCLUDE EGGSHELL BLACK, BASE WALL COLOR PLUS THREE ACCENT COLORS. ACCENT COLORS SHALL BE ON WALL LOCATIONS AS SELECTED BY ARCHITECT. ACCENT COLORS SHALL BE FROM FLOOR TO 12' A.F.F. AND FROM CORNER TO CORNER OF SELECTED WALLS UNLESS OTHERWISE DIRECTED BY ARCHITECT.

DOOR SCHEDULE NOTES

NOTE 1 – AUTOMATIC SLIDERS W/SENSOR ACTIVATION AND FULL BREAKOUT. PROVIDE 10" BOTTOM RAIL AND CONTINUOUS THRESHOLD.

NOTE 2 – INSULATED OVERHEAD SECTIONAL DOOR W/OPERATOR. PROVIDE AUTO REVERSING MECHANISM AND OPERATIONAL INTERFACE WITH DOCK LEVELER CONTROLS.

NOTE 3 – PROVIDE TWO (2) PEEPHOLE VIEWERS IN EACH DOOR, SEE DOOR TYPE D-1 FOR INSTALLATION HEIGHTS.

GLASS TYPES

- A – 1" THICK "LOW E" INSULATING GLASS: 1/4" TINTED FLOAT GLASS EXTERIOR AND 1/4" CLEAR FLOAT GLASS INTERIOR WITH 1/2" AIR SPACE.
- ACT – 1" THICK "LOW E" INSULATING GLASS: 1/4" CLEAR FLOAT TEMPERED GLASS EXTERIOR AND 1/4" CLEAR FLOAT TEMPERED GLASS INTERIOR WITH 1/2" AIR SPACE.
- BT – 1/4" CLEAR FLOAT TEMPERED GLASS
- P – 1/8" POLYCARBONATE AT IMPACT DOORS AND OVERHEAD DOORS (PROVIDED AND INSTALLED BY DOOR MANUFACTURER).
- S – SECURITY GLASS "LOW E": 1" THICK INSULATING GLASS: 1/4 TINTED FLOAT GLASS EXTERIOR, AND 5/16" SECURITY-LAMINATED SHEETS OF GLASS WITH INNER LAYER OF .075" VINYL OR POLYCARBONATE @ INTERIOR WITH 7/16" AIRSPACE BETWEEN INTERIOR AND EXTERIOR GLASS.
- ST – SECURITY GLASS "LOW E": 1" THICK INSULATING GLASS: 1/4 TINTED FLOAT TEMPERED GLASS EXTERIOR, AND 5/16" SECURITY-LAMINATED SHEETS OF GLASS WITH INNER LAYER OF .075" VINYL OR POLYCARBONATE @ INTERIOR WITH 7/16" AIRSPACE BETWEEN INTERIOR AND EXTERIOR GLASS.
- SCT – SECURITY GLASS "LOW E": 1" THICK INSULATING GLASS: 1/4 CLEAR FLOAT TEMPERED GLASS EXTERIOR, AND 5/16" SECURITY-LAMINATED SHEETS OF GLASS WITH INNER LAYER OF .075" VINYL OR POLYCARBONATE @ INTERIOR WITH 7/16" AIRSPACE BETWEEN INTERIOR AND EXTERIOR GLASS.

FRAME TYPES

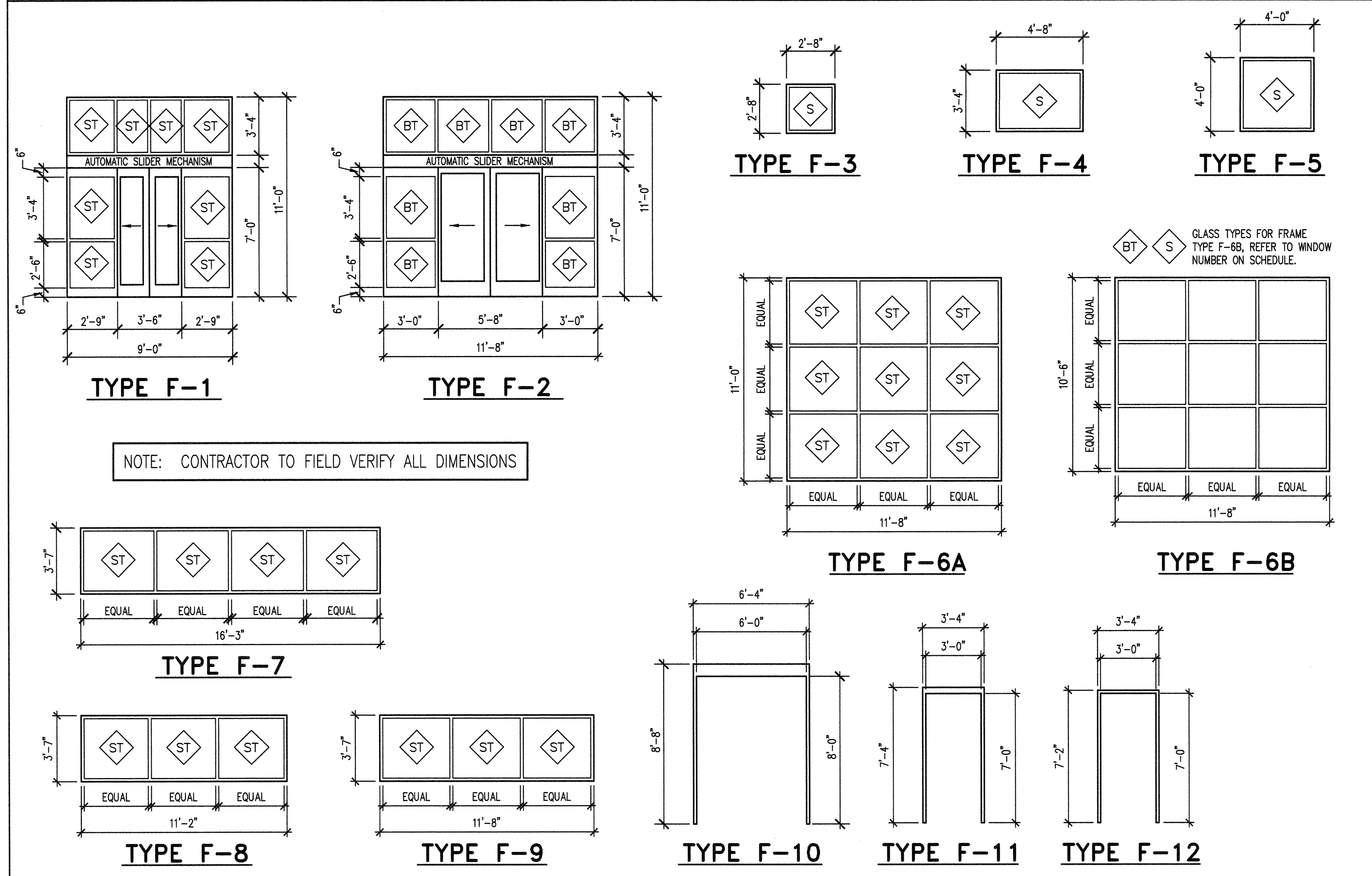

DOOR TYPES

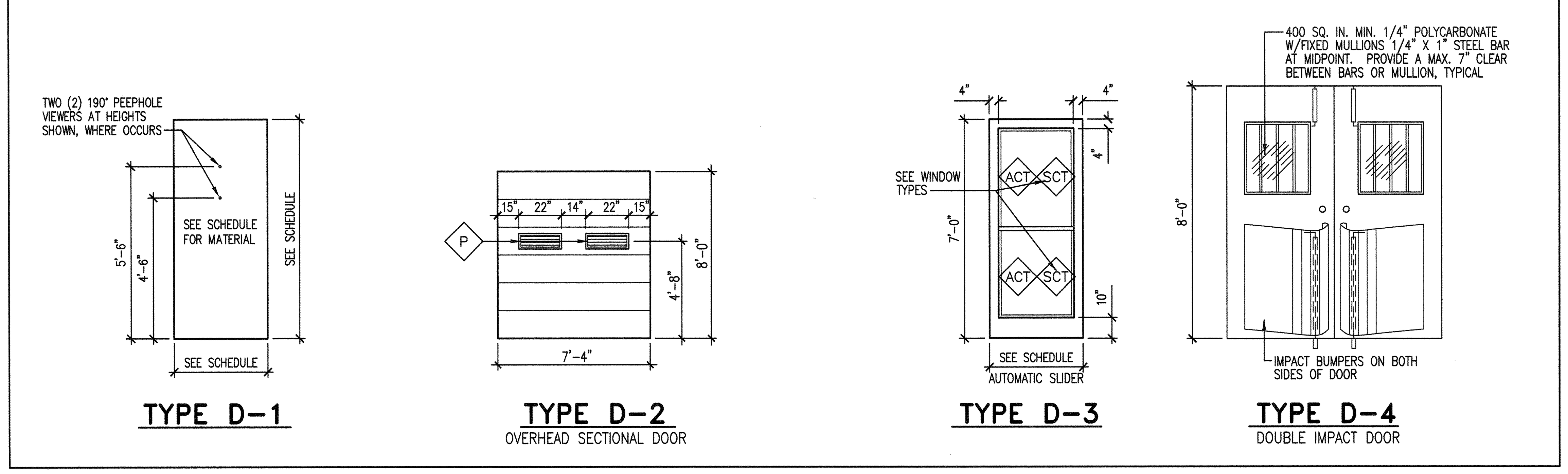

WINDOW SCHEDULE

NO.	SIZE		FRAME			GLASS	WDW	DETAIL REFERENCE				NO.	REMARKS
△	WIDTH	HEIGHT	MATERIAL	TYPE	FINISH	TYPE	BLINDS	HEAD	LEFT JAMB	RIGHT JAMB	SILL	△	CONTRACTOR TO VERIFY ALL WINDOW DIMENSIONS WITH THE MANUFACTURER
1	9'-0"	11'-0"	ALUM	F-1	FF	SCT	---	8/A502	12/A501	12/A501	24/A501	1	ENTRY DOOR INTEGRAL TO WDW FRAME
2	12'-0"	11'-0"	ALUM	F-2	FF	SCT	---	8/A502	12/A501	12/A501	23/A501	2	ENTRY DOOR INTEGRAL TO WDW FRAME
3	9'-0"	11'-0"	ALUM	F-1	FF	SCT	---	8/A502	12/A501	12/A501	24/A501	3	ENTRY DOOR INTEGRAL TO WDW FRAME
4	11'-8"	11'-0"	ALUM	F-6A	FF	SCT	---	10/A502	5/A502	5/A502	7/A502	4	
5	2'-8"	2'-8"	ALUM	F-3	FF	SCT	---	4/A502	5/A502	5/A502	6/A502	5	
6	4'-0"	4'-0"	ALUM	F-5	FF	S	---	13/A501	12/A501	12/A501	14/A501	6	
7	4'-0"	4'-0"	ALUM	F-5	FF	S	---	13/A501	12/A501	12/A501	14/A501	7	
8	4'-8"	3'-4"	ALUM	F-4	FF	S	---	13/A501	12/A501	12/A501	14/A501	8	
9	4'-8"	3'-4"	ALUM	F-4	FF	S	---	13/A501	12/A501	12/A501	14/A501	9	
10	4'-8"	3'-4"	ALUM	F-4	FF	S	---	13/A501	12/A501	12/A501	14/A501	10	
11	4'-8"	3'-4"	ALUM	F-4	FF	S	---	13/A501	12/A501	12/A501	14/A501	11	
12	4'-8"	3'-4"	ALUM	F-4	FF	S	---	13/A501	12/A501	12/A501	14/A501	12	
13	4'-8"	3'-4"	ALUM	F-4	FF	S	---	13/A501	12/A501	12/A501	14/A501	13	
14	4'-8"	3'-4"	ALUM	F-4	FF	S	---	13/A501	12/A501	12/A501	14/A501	14	
15	4'-8"	3'-4"	ALUM	F-4	FF	S	---	13/A501	12/A501	12/A501	14/A501	15	
16	4'-8"	3'-4"	ALUM	F-4	FF	S	---	13/A501	12/A501	12/A501	14/A501	16	
17	4'-8"	3'-4"	ALUM	F-4	FF	S	---	13/A501	12/A501	12/A501	14/A501	17	
18	4'-8"	3'-4"	ALUM	F-4	FF	S	---	13/A501	12/A501	12/A501	14/A501	18	
19	4'-8"	3'-4"	ALUM	F-4	FF	S	---	13/A501	12/A501	12/A501	14/A501	19	
20	4'-8"	3'-4"	ALUM	F-4	FF	S	---	13/A501	12/A501	12/A501	14/A501	20	
21	4'-8"	3'-4"	ALUM	F-4	FF	S	---	13/A501	12/A501	12/A501	14/A501	21	
22	4'-8"	3'-4"	ALUM	F-4	FF	S	---	13/A501	12/A501	12/A501	14/A501	22	
23	4'-8"	3'-4"	ALUM	F-4	FF	S	---	13/A501	12/A501	12/A501	14/A501	23	
24	4'-8"	3'-4"	ALUM	F-4	FF	S	---	13/A501	12/A501	12/A501	14/A501	24	
25	4'-8"	3'-4"	ALUM	F-4	FF	S	---	13/A501	12/A501	12/A501	14/A501	25	
26	4'-8"	3'-4"	ALUM	F-4	FF	S	---	13/A501	12/A501	12/A501	14/A501	26	
27	4'-8"	3'-4"	ALUM	F-4	FF	S	---	13/A501	12/A501	12/A501	14/A501	27	
28	4'-8"	3'-4"	ALUM	F-4	FF	S	---	13/A501	12/A501	12/A501	14/A501	28	
29	4'-8"	3'-4"	ALUM	F-4	FF	S	---	13/A501	12/A501	12/A501	14/A501	29	
30	4'-8"	3'-4"	ALUM	F-4	FF	S	---	13/A501	12/A501	12/A501	14/A501	30	
31	4'-8"	3'-4"	ALUM	F-4	FF	S	---	13/A501	12/A501	12/A501	14/A501	31	
32	4'-8"	3'-4"	ALUM	F-4	FF	S	---	13/A501	12/A501	12/A501	14/A501	32	
33	4'-8"	3'-4"	ALUM	F-4	FF	S	---	13/A501	12/A501	12/A501	14/A501	33	
34	4'-8"	3'-4"	ALUM	F-4	FF	S	---	13/A501	12/A501	12/A501	14/A501	34	
35	4'-0"	4'-0"	ALUM	F-5	FF	S	---	13/A501	12/A501	12/A501	14/A501	35	
36	4'-0"	4'-0"	ALUM	F-5	FF	S	---	13/A501	12/A501	12/A501	14/A501	36	
37	2'-8"	2'-8"	ALUM	F-3	FF	S	---	4/A502	5/A502	5/A502	6/A502	37	
38	11'-8"	10'-6"	ALUM	F-6B	FF	S	---	10/A502	10/A502sim	10/A502sim	9/A502	38	
39	11'-2"	3'-7"	ALUM	F-8	FF	S	---	1/A502	2/A502	2/A502	3/A502	39	
40	16'-3"	3'-7"	ALUM	F-7	FF	S	---	1/A502	2/A502	2/A502	3/A502	40	
41	16'-3"	3'-7"	ALUM	F-7	FF	S	---	1/A502	2/A502	2/A502	3/A502	41	
42	11'-8"	3'-7"	ALUM	F-9	FF	S	---	1/A502	2/A502	2/A502	3/A502	42	
43	16'-3"	3'-7"	ALUM	F-7	FF	S	---	1/A502	2/A502	2/A502	3/A502	43	
44	16'-3"	3'-7"	ALUM	F-7	FF	S	---	1/A502	2/A502	2/A502	3/A502	44	
45	11'-2"	3'-7"	ALUM	F-8	FF	S	---	1/A502	2/A502	2/A502	3/A502	45	
46	11'-8"	10'-6"	ALUM	F-6B	FF	BT	---	1/A502	2/A502	2/A502	3/A502	46	

DOOR SCHEDULE

	SIZE			DOOR			FRAME			DETAIL REFERENCE			HDW.	REMARKS
NO.	WIDTH	HEIGHT	THICK.	TYPE	MATERIAL	FINISH	TYPE	MATERIAL	FINISH	HEAD	JAMB	THRESH.		
01	PR. 1'-11"	7'-0"	---	D-3	ALUMINUM	FF	F-1	ALUMINUM	FF	25/A501	---	1/A501	1	SEE DOOR SCHEDULE NOTE 1.
02	PR. 3'-0"	7'-0"	---	D-3	ALUMINUM	FF	F-2	ALUMINUM	FF	25/A501	---	2/A501	1	SEE DOOR SCHEDULE NOTE 1.
03	PR. 1'-11"	7'-0"	---	D-3	ALUMINUM	FF	F-1	ALUMINUM	FF	25/A501	---	1/A501	1	SEE DOOR SCHEDULE NOTE 1.
04	3'-0"	7'-0"	---	D-1	HOLLOW METAL	FF	F-11	HOL. MTL.	PAINTED	17/A501	17/A501 SIM	1/A501	7	SEE DOOR SCHEDULE NOTE 3.
05	7'-4"	8'-0"	---	D-2	SEE SPECS	FF	---	STEEL	PAINTED	19/A501sim.	19/A501	---	6	SEE DOOR SCHEDULE NOTE 2.
06	3'-0"	7'-0"	---	D-1	HOLLOW METAL	FF	F-11	HOL. MTL.	PAINTED	17/A501	17/A501 SIM	1/A501	7	SEE DOOR SCHEDULE NOTE 3.
07	3'-0"	7'-0"	1 3/4"	D-1	WOOD	STAINED	F-12	HOL. MTL.	PAINTED	20/A501sim.	20/A501	5/A501	5	
08	3'-0"	7'-0"	1 3/4"	D-1	WOOD	STAINED	F-12	HOL. MTL.	PAINTED	20/A501sim.	20/A501	5/A501	5	
09	3'-0"	7'-0"	1 3/4"	D-1	WOOD	STAINED	F-12	HOL. MTL.	PAINTED	20/A501sim.	20/A501	---	4	
10	3'-0"	7'-0"	1 3/4"	D-1	WOOD	STAINED	F-12	HOL. MTL.	PAINTED	20/A501sim.	20/A501	---	4	
11	PR. 3'-0"	8'-0"	---	D-4	IMPACT	FF	F-10	HOL. MTL.	PAINTED	18/A501sim.	7 & 18/A501	---	8	LIGHTWEIGHT IMPACT DOORS

NEW HEBER CITY LIQUOR STORE
DEPARTMENT OF ALCOHOLIC BEVERAGE CONTROL
HEBER CITY, UTAH

FRANK N MURDOCK JR ■ Architect & Associates
975 East 100 South Suite 100, Salt Lake City, Utah 84102 TEL: (801) 532-4441 FAX (801) 532-4220

DOOR, WINDOW AND FINISH SCHEDULES

STATE OF UTAH – FRANK N. MURDOCK, JR. – 124498 – LICENSED ARCHITECT – 5/20/09

REVISION # DATE:

DFCM PROJECT NO.: 08224030
CONST. DOC.
FILE NAME: ABCHB-A601
PLOT SCALE: 1:48
DRAWN BY: STAFF
CHECKED BY: FNM
DATE: MAY 2009

A 601

STRUCTURAL NOTES

STRUCTURAL DESIGN LOADS

ROOF:
- DEAD LOAD: DL = 20 PSF
- GROUND SNOW LOAD: Pg = 97 PSF
- FLAT ROOF SNOW LOAD: Pf = 68 PSF
- SNOW EXPOSURE FACTOR: Ce = 1.0
- SNOW IMPORTANCE FACTOR: I = 1.0
- THERMAL FACTOR: Ct = 1.0

WIND LOAD:
- BASIC WIND SPEED: V = 90 MPH (3 SEC GUST)
- IMPORTANCE FACTOR: I = 1.0
- WIND EXPOSURE: "C"
- COMPONENT AND CLADDING PRESSURE: P = 20 PSF

SEISMIC:
- OCCUPANCY CATEGORY: II
- IMPORTANCE FACTOR: I = 1.0
- DESIGN CATEGORY: D
- SPECTRAL RESPONSE COEF: SDS = 0.55, SD1 = 0.30
- SITE CLASS: D
- BASIC SEISMIC-FORCE-RESISTING SYSTEM:
  - SPECIAL REINFORCED MASONRY SHEAR WALLS
  - R=5, OMEGA=2.5, Cd=3.5, Cs=0.11

SOILS:
- NET ALLOWABLE SOIL PRESSURE = 3,000 PSF, PER REPORT

GENERAL

1. ALL DESIGN, CONSTRUCTION, AND INSPECTION SHALL BE IN CONFORMANCE WITH THE 2006 INTERNATIONAL BUILDING CODE.
2. THE CONTRACTOR SHALL VERIFY ALL DIMENSIONS AND CONDITIONS AT THE SITE.
3. ALL OMISSIONS OR CONFLICTS BETWEEN THE VARIOUS ELEMENTS OF THE WORKING DRAWINGS AND/OR SPECIFICATIONS SHALL BE BROUGHT TO THE ATTENTION OF THE ARCHITECT AND/OR STRUCTURAL ENGINEER BEFORE PROCEEDING WITH ANY WORK INVOLVED.
4. DRAWINGS INDICATE THE FINISHED PRODUCT. THEY DO NOT INDICATE A METHOD OF CONSTRUCTION. CONTRACTOR SHALL TAKE ALL PRECAUTIONS NECESSARY TO PROTECT THE STRUCTURE DURING CONSTRUCTION. SUCH PRECAUTIONS SHALL INCLUDE, BUT NOT BE LIMITED TO, BRACING, SHORING FOR CONSTRUCTION EQUIPMENT, ETC.
5. THE CONTRACTOR SHALL BE RESPONSIBLE FOR COMPENSATING THE OWNER FOR ANY CHANGES MADE AS A RESULT OF A DEVIATION FROM THE CONTRACT DOCUMENTS, DEVIATION FROM THE SPECIFICATIONS, FAULTY MATERIALS, OR FAULTY WORKMANSHIP.
6. OPTIONS ARE FOR THE CONTRACTORS CONVENIENCE. THE CONTRACTOR SHALL BE RESPONSIBLE FOR COORDINATING ALL REQUIRED DESIGN CHANGES. COST ASSOCIATED WITH ANY DESIGN WORK INITIATED BY THE OPTION SHALL BE BORN BY THE CONTRACTOR.
7. CONTRACTOR SHALL BE RESPONSIBLE FOR SAFETY AND PROTECTION WITHIN AND ADJACENT TO THE JOB SITE.
8. TEMPORARY SHORING AND BRACING SHALL BE PROVIDED WHEREVER NECESSARY TO TAKE CARE OF ALL LOADS TO WHICH THE STRUCTURE MAY BE SUBJECTED INCLUDING WIND. SUCH BRACING SHALL BE LEFT IN PLACE AS LONG AS MAY BE REQUIRED FOR SAFETY OR UNTIL ALL THE STRUCTURAL ELEMENTS ARE COMPLETE.
9. DURING AND AFTER CONSTRUCTION THE CONTRACTOR AND/OR OWNER SHALL KEEP LOADS ON THE STRUCTURE WITHIN THE LIMITS OF THE DESIGN LOADS.
10. THE GENERAL CONTRACTOR SHALL HAVE SHOP DRAWINGS REVIEWED BY THE ARCHITECT PRIOR TO THE FABRICATION OR ERECTION FOR THE FOLLOWING ITEMS: REINFORCING STEEL, STRUCTURAL STEEL, MISCELLANEOUS METALS, AND PREFABRICATED STEEL JOISTS.
11. ALL DETAILS, SECTIONS, AND NOTES ARE INTENDED TO BE TYPICAL AND SHALL APPLY TO SIMILAR SITUATIONS UNLESS NOTED OR SHOWN OTHERWISE.
12. REFER TO THE SPECIFICATIONS FOR ADDITIONAL INFORMATION NOT COVERED ON THE DRAWINGS.
13. OBSERVATION VISITS TO THE JOB SITE BY FIELD REPRESENTATIVES OF CALDER RICHARDS CONSULTING ENGINEERS SHALL NEITHER BE CONSTRUED AS INSPECTION NOR APPROVAL OF CONSTRUCTION.
14. SIZES, LOCATIONS, AND ANCHORAGES OF EQUIPMENT SHALL BE VERIFIED IN THE FIELD WITH EQUIPMENT MANUFACTURERS (SUPPLIERS) PRIOR TO PLACING CONCRETE OR FABRICATING STEEL.

QUALITY ASSURANCE PLAN

1. SPECIAL INSPECTION SHALL BE PROVIDED BY THE OWNER ACCORDING TO IBC CHAPTER 17 FOR THE ITEMS IDENTIFIED IN THIS SECTION AND ON THE CONTRACT DOCUMENTS.
2. THE NAMES AND CREDENTIALS OF SPECIAL INSPECTORS TO BE USED SHALL BE SUBMITTED TO THE BUILDING DEPARTMENT WHEN APPLYING FOR A BUILDING PERMIT.
3. SPECIAL INSPECTION REPORTS SHALL BE DELIVERED TO THE ENGINEER OF RECORD, ARCHITECT, AND OWNER (AS REQUESTED) BI-WEEKLY OR MORE FREQUENTLY AS REQUIRED BY THE INSPECTOR OR BUILDING OFFICIAL.
4. OFF-SITE FABRICATION: WHERE FABRICATION OF STRUCTURAL LOAD-BEARING MEMBERS AND ASSEMBLIES IS BEING PERFORMED ON THE PREMISES OF A FABRICATORS SHOP, SPECIAL INSPECTION OF THE FABRICATED ITEMS SHALL BE IN ACCORDANCE WITH IBC SECTION 1704.2 UNLESS THE FABRICATOR IS APPROVED ACCORDING TO IBC SECTION 1704.2.2.
5. STEEL CONSTRUCTION: SPECIAL INSPECTIONS FOR STEEL ELEMENTS SHALL BE PROVIDED IN ACCORDANCE WITH SECTIONS 1704.3 AND TABLE 1704.3.
6. WELDING: WELDING INSPECTION SHALL BE PROVIDED IN ACCORDANCE WITH TABLE 1704.3.
7. HIGH-STRENGTH BOLTS: PERIODIC SPECIAL INSPECTION SHALL BE PROVIDED FOR INSTALLATION OF HIGH-STRENGTH BOLTS IN ACCORDANCE WITH AISC SPECIFICATIONS. SEE IBC SECTION 1704.3.3.
8. CONCRETE CONSTRUCTION: SPECIAL INSPECTIONS AND VERIFICATIONS SHALL BE PROVIDED IN ACCORDANCE WITH TABLE 1704.4.
9. MASONRY CONSTRUCTION: LEVEL 1 SPECIAL INSPECTION SHALL BE PROVIDED FOR MASONRY CONSTRUCTION IN ACCORDANCE WITH SECTION 1704.5.2 AND TABLE 1704.5.1. TESTING SHALL COMPLY WITH SECTION 1708.1.3
10. SOILS: SPECIAL INSPECTION SHALL BE PROVIDED FOR PLACEMENT OF FILL 12 INCHES OR MORE DEEP IN ACCORDANCE WITH SECTION 1704.7.
11. EPOXY ANCHORS: PRIOR TO AND DURING EPOXY INJECTION TO INSURE PROPER INSTALLATION AS PER MANUFACTURERS REQUIREMENTS. CONTRACTOR SHALL SUBMIT PROPOSED EPOXY MANUFACTURERS ICBO REPORT TO STRUCTURAL ENGINEER PRIOR TO INSTALLATION.

QUALITY ASSURANCE - CONTRACTOR RESPONSIBILITY

1. EACH CONTRACTOR RESPONSIBLE FOR THE CONSTRUCTION OF A SEISMIC-FORCE-RESISTING SYSTEM, DESIGNATED SEISMIC SYSTEM, OR COMPONENT LISTED IN THE QUALITY ASSURANCE PLAN SHALL SUBMIT A WRITTEN CONTRACTOR'S STATEMENT OF RESPONSIBILITY TO THE BUILDING OFFICIAL AND TO THE OWNER PRIOR TO THE COMMENCEMENT OF WORK ON THE SYSTEM OR COMPONENT. THE CONTRACTOR'S STATEMENT OF RESPONSIBILITY SHALL CONTAIN THE FOLLOWING:
   - A. ACKNOWLEDGMENT OF AWARENESS OF THE SPECIAL REQUIREMENTS CONTAINED IN THE QUALITY ASSURANCE PLAN.
   - B. ACKNOWLEDGMENT THAT CONTROL WILL BE EXERCISED TO OBTAIN CONFORMANCE WITH THE CONSTRUCTION DOCUMENTS APPROVED BY THE BUILDING OFFICIAL.
   - C. PROCEDURES FOR EXERCISING CONTROL WITHIN THE CONTRACTOR'S ORGANIZATION, THE METHOD AND FREQUENCY OF REPORTING, AND THE DISTRIBUTION OF REPORTS.
   - D. IDENTIFICATION AND QUALIFICATIONS OF THE PERSON(S) EXERCISING SUCH CONTROL AND THE POSITION(S) IN THE ORGANIZATION.

STRUCTURAL DEFERRED SUBMITTALS

1. CONTRACTOR SHALL SUBMIT DRAWINGS AND CALCULATIONS BEARING THE SEAL OF A PROFESSIONAL ENGINEER LICENSED IN THE STATE OF THE PROJECT TO ARCHITECT/ENGINEER BEFORE SUBMITTING TO JURISDICTION FOR REVIEW AND PERMITTING.

ITEMS:
1. OPEN WEB METAL JOISTS AND GIRDERS
2. CONCRETE MIX DESIGN

FOOTINGS

1. ALL FOOTINGS SHALL BEAR ON ENGINEERED COMPACTED FILL EXTENDING DOWN TO SUITABLE SOILS AS PER THE GEOTECHNICAL REPORT BY GORDAN SPILKER HUBER GEOTECHNICAL CONSULTANTS, INC. JOB NUMBER 0128-031-08 DATED MARCH 2, 2009. EXCAVATION MUST BE FIELD VERIFIED BY THE GEOTECHNICAL ENGINEER PRIOR TO PLACING ANY STRUCTURAL FILL.
2. FOOTING ELEVATIONS SHOWN ON PLAN ARE TOP OF FOOTINGS AND ARE MINIMUM DEPTH. DIFFERENT OR UNUSUAL CONDITIONS SHALL BE REPORTED TO THE ARCHITECT AND/OR ENGINEER.
3. EXTERIOR WALL FOOTINGS SHALL BEAR AT A MINIMUM DEPTH OF 3'-0" BELOW FINISHED EXTERIOR GRADE.
4. NO FOOTINGS SHALL BE PLACED IN WATER OR ON FROZEN GROUND.
5. ANY SOIL CONDITION ENCOUNTERED DURING EXCAVATION THAT IS CONTRARY TO THE CONDITIONS USED FOR DESIGN OF FOOTINGS AS OUTLINED IN THE GEOTECHNICAL REPORT AND ON THE DRAWINGS SHALL BE BROUGHT TO THE ATTENTION OF THE ARCHITECT AND ENGINEER BEFORE PROCEEDING.
6. WHERE 6" DIAMETER OR LARGER PIPE PASSES THROUGH AN INTERIOR OR EXTERIOR FOUNDATION WALL, STEP THE FOOTING DOWN TO PASS BELOW PIPE AND THEN STEP BACK UP TO INDICATED ELEVATION. PROVIDE PIPE SLEEVE THROUGH FOUNDATION WALL.
7. ALL FOOTING EXCAVATIONS MUST BE EXAMINED BY A GEOTECHNICAL ENGINEER FOR VERIFICATION OF ADEQUATE BEARING CONDITIONS BEFORE PLACING CONCRETE.

REINFORCING STEEL

1. ALL REINFORCEMENT SHALL BE DETAILED AND PLACED IN ACCORDANCE WITH ACI DETAILING MANUAL 315-05 AND ACI STANDARD 318-05.
2. REINFORCING STEEL SHALL BE ASTM A615 GRADE 60.
3. WELDED WIRE FABRIC SHALL CONFORM TO ASTM A185. LAP ONE MESH TIE.
4. ALL REINFORCEMENT SHALL BE SECURELY TIED AND HELD IN PLACE.
5. REINFORCING BARS THAT ARE TO BE WELDED, INCLUDING DEFORMED BAR ANCHORS (DBA) SHALL COMPLY WITH ASTM A706 OR ANOTHER WELDABLE GRADE AND SHALL BE WELDED IN ACCORDANCE WITH THE AWS RECOMMENDATIONS.
6. ALL CONTINUOUS REINFORCEMENT SHALL TERMINATE WITH A 90 DEGREE TURN OR A SEPARATE CORNER BAR. ALL SPLICE SHALL HAVE A MINIMUM LAP OR EMBEDMENT PER REINFORCING SCHEDULE.
7. WHERE THE LENGTH OF A BAR IS GIVEN AND IT IS TO BE HOOKED, THE HOOK SHALL BE IN ADDITION TO THE LENGTH GIVEN, UNLESS SHOWN OTHERWISE.
8. COVER TO MAIN REINFORCEMENT FROM ADJACENT SURFACES SHALL BE AS FOLLOWS UNLESS SHOWN OTHERWISE:
   - A. UNFORMED SURFACES IN CONTACT WITH GROUND OR EXPOSED TO THE WEATHER (BOTTOM OF FOOTINGS). 3"
   - B. SLABS ON GRADE.......... 2"
   - C. FORMED SURFACES IN CONTACT WITH THE GROUND OR EXPOSED TO THE WEATHER (GRADE BMS, WALLS, ETC), BEAMS AND COLUMNS.......... 2"
   - D. STRUCTURAL SLABS AND JOISTS NOT EXPOSED TO WEATHER OR EARTH.......... 1"
   - E. INTERIOR WALL SURFACES.......... 1"
   - F. INTERIOR BEAMS AND COLUMNS.......... 1-1/2"
   - G. IN ALL CASES MINIMUM COVER SHALL NOT BE LESS THAN THE DIAMETER OF ADJACENT BARS.
9. PRIOR TO FABRICATION AND PLACEMENT, SHOP DRAWINGS FOR ALL REINFORCING STEEL SHALL BE REVIEWED BY THE STRUCTURAL ENGINEER.

CONCRETE

1. CONCRETE SHALL ATTAIN THE FOLLOWING MINIMUM COMPRESSIVE STRENGTHS AT 28 DAYS:
   - FOOTINGS, FOUNDATION WALLS, & COLUMNS/PIERS.......... 3000 PSI
   - INTERIOR SLABS ON GRADE.......... 4000 PSI
   - EXTERIOR FLAT WORK.......... 4000 PSI
   - LT WEIGHT CONCRETE ON METAL DECK.......... 3000 PSI
2. A STATEMENT OF MIX DESIGN FOR ALL CONCRETE SHALL BE SUBMITTED TO AND REVIEWED BY THE STRUCTURAL ENGINEER PRIOR TO COMMENCING WORK.
3. ALL CONCRETE WORK SHALL BE PLACED, CURED, STRIPPED, AND PROTECTED AS DIRECTED BY THE SPECIFICATIONS AND ACI STANDARDS AND PRACTICES.
4. UNLESS NOTED OTHERWISE ON THE DRAWINGS, REINFORCE CONCRETE WALLS AS FOLLOWS:

WIDTH	HORIZ REINF	VERT REINF
8" WALL	#5 @ 12"	#5 @ 16" CENTER OF WALL

CONCRETE, CONT

5. DOWEL VERTICAL BARS 36 DIAMETERS INTO STRUCTURE ABOVE AND FOOTINGS BELOW. PROVIDE 90 DEGREE HOOK WHERE 36 DIAMETER IS NOT POSSIBLE. IN ADDITION, PROVIDE (2) #5 CONTINUOUS BARS TOP AND BOTTOM OF 6" AND 8" WALLS AND (2) #6 BARS TOP AND BOTTOM OF WALLS 10" OR THICKER.
6. BEFORE CONCRETE IS POURED CHECK WITH ALL TRADES TO ENSURE PROPER PLACEMENT OF ALL OPENINGS, SLEEVES, CURBS, CONDUITS, BOLTS, INSERTS, ETC. RELATIVE TO WORK.
7. ADD (2) #5 BARS MINIMUM AROUND ALL OPENINGS (UNLESS OTHERWISE NOTED) AND EXTEND 24" BEYOND CORNER OF OPENING.
8. WHERE OPENINGS LARGER THAN 16" IN ANY DIRECTION OCCUR IN WALLS OR SLABS, PROVIDE SAME SIZE ADDITIONAL, FULL LENGTH REINFORCING AT EACH SIDE OF OPENING EQUAL TO 1/2 THE NUMBER OF BARS INTERRUPTED BY THE OPENING. SPACE ADDITIONAL BARS AT 4 x BAR DIAMETER.
9. ALL SLABS ON GRADE SHALL BE PLACED IN ALTERNATE PANELS WITH A MAXIMUM WIDTH OF 20' BETWEEN CONTROL OR CONSTRUCTION JOINTS; REFER TO TYPICAL DETAILS ON DRAWINGS. UNLESS OTHERWISE NOTED, SLABS ON GRADE SHALL BE 4" THICK AND SHALL BE REINFORCED WITH 6x6-W1.4xW1.4 WELDED WIRE FABRIC.
10. REFER TO DRAWINGS FOR TYPICAL CONSTRUCTION JOINT DETAILS. UNLESS NOTED IN DRAWINGS, ALL REINFORCEMENT SHALL BE CONTINUOUS THRU JOINTS AND EACH CONSTRUCTION JOINT SHALL BE KEYED.
11. WHERE EXTERIOR SLABS ON GRADE ABUT WALLS OR COLUMNS PROVIDE 3/8" PREFORMED EXPANSION JOINT WITH SEALANT.

MASONRY (CMU)

1. ALL MASONRY SHALL BE REINFORCED WITH BOTH HORIZONTAL AND VERTICAL REINFORCEMENT. ALL BLOCK CELLS OR BRICK CAVITIES WITH REINFORCEMENT SHALL BE GROUTED FULL USING CONCRETE 2000 PSI GROUT. CELLS SHALL BE ALIGNED TO PRESERVE UNOBSTRUCTED VERTICAL CAVITIES OF 2"x3" MINIMUM.
2. CONCRETE FOR BLOCK FILL SHALL HAVE 3/8" MAXIMUM SIZE COURSE AGGREGATE AND SUFFICIENT WATER SO THE CONCRETE WILL FLOW INTO THE BLOCK CELLS WITHOUT LEAVING VOIDS. WHERE BEAMS BEAR ON CONCRETE BLOCK WALLS. BLOCK CELLS SHALL BE FILLED WITH CONCRETE 1'-4" WIDE TO FOUNDATION AND REINFORCE WITH A #5 EACH CELL, UNLESS OTHERWISE SHOWN.
3. AN ADDITIONAL VERTICAL BAR (MATCHING WALL REINFORCEMENT) SHALL BE PLACED AT EACH CORNER, END OF WALL, AND JAMB OF ALL OPENINGS.
4. ALL STEEL JOIST, JOIST GIRDER, AND STEEL BEAM POCKETS IN MASONRY SHALL BE GROUTED SOLID UNLESS OTHERWISE INDICATED ON THE DRAWINGS.
5. HORIZONTAL BARS SHALL BE PLACED IN BOND BEAMS FILLED WITH GROUT AT THE TOP OF ALL WALLS AND AT 48" OC MAXIMUM BETWEEN TOP OF WALL AND FOUNDATION. BOND BEAM UNITS AND REINFORCING SHALL CONTINUE UNINTERRUPTED AROUND ALL CORNERS AND WALL INTERSECTIONS. WHERE STRUCTURAL STEEL COLUMNS OR BEAMS INTERRUPT THE CONTINUITY OF A BOND BEAM, DOWELS MATCHING BOND BEAM REINFORCEMENT SHALL BE WELDED TO THE STRUCTURAL STEEL TO PROVIDE CONTINUITY.
6. ALL VERTICAL REINFORCING BARS SHALL BE DOWELED TO STRUCTURE BELOW WITH BARS OF SAME SIZE AND SPACING. LAP ALL SPLICES IN MASONRY PER REBAR SHEDULE. PLACE ALL BARS SECURELY PRIOR TO GROUTING.
7. MASONRY REINFORCEMENT: THE MINIMUM REINFORCEMENT IN GROUTED CELLS FOR ALL MASONRY WALLS SHALL BE AS FOLLOWS:
   8" WALLS: #5 @ 32" OC VERTICAL AND
   (2) #4 @ 48" OC HORIZONTAL
8. ALL HORIZONTAL REINFORCING SHALL TERMINATE WITH A HOOK AROUND VERTICAL REINFORCING.
9. IN ADDITION LADDER-TYPE REINFORCING CONSISTING OF #9 WIRE FOR EACH FACE SHELL OF EACH WYTHE SHALL BE USED AT 16" OC HORIZONTALLY IN ALL MASONRY WALLS. REINFORCEMENT SHALL BE FOR TOTAL WIDTH OF CAVITY WALLS.
10. CONCRETE MASONRY UNITS SHALL BE GRADE N UNITS CONFORMING TO ASTM DESIGNATION C90 AND SHALL HAVE A MINIMUM ULTIMATE COMPRESSIVE STRENGTH OF 1900 PSI ON THE NET SECTION.
11. MORTAR SHALL BE TYPE "S" AND SHALL HAVE THE FOLLOWING PROPORTIONS BY VOLUMES:
    - PORTLAND CEMENT....... 1 PART
    - HYDRATED LIME......... 1/4 - 1/2 PART
    - DAMP LOOSE AGGREGATE.. NOT LESS THAN 2-1/4 AND NOT MORE THAN (3) TIMES THE SUM OF CEMENT AND LIME USED.
12. STOP GROUT POURS 1/2" BELOW TOP OF BLOCK UNITS.
13. ALL ANCHOR BOLTS MUST BE PLACED IN GROUTED CELLS.
14. NO MASONRY SHALL BE LAID WHEN THE TEMPERATURE OF THE OUTSIDE AIR IS BELOW 40 DEGREES FARENHEIT, UNLESS APPROVED METHODS ARE USED DURING CONSTRUCTION TO PREVENT DAMAGE TO THE MASONRY. SUCH METHODS SHALL INCLUDE PROTECTION OF THE MASONRY FOR A PERIOD OF AT LEAST 48 HOURS.
15. ALL REINFORCING SHALL BE IN PLACE PRIOR TO GROUTING. VERTICAL REINFORCING BARS SHALL BE HELD IN POSITION AT THE TOP, BOTTOM AND AT INTERVALS NOT FARTHER APART THAN 200 BAR DIAMETERS. PROVIDE WIRE TIES AT ALL LAP SPLICES.
16. ALL MASONRY WALLS SHALL HAVE VERTICAL CONTROL JOINTS AT: MAJOR CHANGES IN WALL HEIGHT, AT CHANGES IN WALL THICKNESS, AT BUILDING CONSTRUCTION JOINTS, AND NOT FARTHER APART THAN 40 FEET ELSEWHERE. PROVIDE MATCHING CONTROL JOINTS FOR BRICK VENEER. CONSULT ARCHITECTURAL DRAWINGS FOR LOCATIONS. VERTICAL CELLS EACH SIDE OF CONTROL JOINTS SHALL BE GROUTED AND REINFORCED WITH REBARS TO MATCH VERTICAL REINFORCEMENT USED THROUGHOUT THAT WALL. ONLY HORIZONTAL REBARS IN BOND BEAMS AT FLOORS AND AT ROOF LEVEL SHALL CONTINUE THROUGH CONTROL JOINTS. PROVIDE FULL HEIGHT HARD RUBBER KEY AT JOINT. WHERE JOINT LOCATIONS ARE NOT SHOWN ON THE DRAWINGS THE CONTRACTOR SHALL SUBMIT PROPOSED LOCATIONS TO ARCHITECT/ENGINEER FOR REVIEW.

STRUCTURAL STEEL

1. ALL STRUCTURAL STEEL AND STRUCTURAL STEEL WORK SHALL COMPLY WITH BOTH THE AISC "MANUAL OF STEEL CONSTRUCTION" CONTAINING THE SPECIFICATIONS FOR THE DESIGN, FABRICATION AND ERECTION OF STRUCTURAL STEEL BUILDINGS, INCLUDING THE "CODE OF STANDARD PRACTICES" (LATEST EDITION), AND WITH THE IBC 2006 EDITION.
2. ALL WIDE FLANGE STRUCTURAL STEEL SHALL BE ASTM A992 AND ALL MISCELLANEOUS SHAPES SHALL BE ASTM A36, UNO.
3. STRUCTURAL STEEL TUBING SHALL CONFORM TO ASTM A500 GRADE B; YIELD STRESS = 46 KSI.
4. STRUCTURAL STEEL PIPE COLUMNS SHALL CONFORM TO ASTM A501, GRADE B; YIELD STRESS = 35 KSI.
5. USE A325 BOLTS FOR STEEL TO STEEL CONNECTIONS AND A307 BOLTS FOR ALL OTHER CONNECTIONS. USE 3/4" DIAMETER MINIMUM.
6. PRIOR TO FABRICATION AND ERECTION, SHOP DRAWINGS FOR ALL STEEL ITEMS SHALL BE REVIEWED BY THE STRUCTURAL ENGINEER. THE CONTRACTOR SHALL VERIFY ALL SHOP DRAWING DIMENSIONS WITH STRUCTURAL AND ARCHITECTURAL PLANS AND DETAILS.

STRUCTURAL STEEL, CONT

7. ALL WELDS SHALL BE MADE WITH E70XX ELECTRODES AND BY WELDERS CERTIFIED BY AWS STANDARDS WITHIN THE PAST 12 MONTHS; PROVIDE WRITTEN CERTIFICATION IF REQUESTED.
8. ALL HIGH-STRENGTH BOLTS SHALL BE TIGHTENED TO THE APPROPRIATE MINIMUM BOLT TENSION IN ACCORDANCE WITH "AISC SPECIFICATIONS FOR STRUCTURAL JOINTS USING ASTM A325 OR A490 BOLTS." THE PREFERRED METHOD OF TIGHTENING IS BY USE OF A "DIRECT TENSION INDICATOR." THE TURN-OF-NUT METHOD MAY ALSO BE USED. PROVIDE CARBONIZED WASHERS UNDER THE TURNED ELEMENT.
9. ALL STEEL JOISTS, JOIST GIRDERS, AND ASSOCIATED WORK SHALL COMPLY WITH THE LATEST EDITION OF THE "STANDARD SPECIFICATIONS OF THE STEEL JOIST INSTITUTE". UNLESS SHOWN OTHERWISE, PROVIDE BRIDGING IN ACCORDANCE WITH THIS SPECIFICATION AS A MINIMUM. JOIST FABRICATOR SHALL BE A MEMBER OF THE STEEL JOIST INSTITUTE (SJI). JOISTS SHALL BE DESIGNED BY A PROFESSIONAL ENGINEER, REGISTERED IN THE STATE OF THE PROJECT AND HE SHALL SEAL AND SIGN ALL DESIGN CALCULATIONS AND JOISTS SHOP DRAWINGS. DESIGN SHALL COMPLY WITH ALL LOADING REQUIREMENTS INDICATED ON THE DRAWINGS AND NOTES. DESIGN CALCULATIONS AND SHOP DRAWINGS SHALL CLEARLY INDICATE ALL LOADINGS, DIMENSIONS, MEMBER FORCES, REACTIONS, MEMBER SIZES, WELD REQUIREMENTS AND JOINT DETAILS. JOISTS SHALL BE DESIGNED ASSUMING HORIZONTAL MOVEMENT IS ALLOWED AT ONE END, UNLESS NOTED OTHERWISE.
10. ALL BRIDGING SHALL BE SECURELY ANCHORED AT END OF EACH RUN. WELD TO STEEL BEAM OR ANCHOR TO MASONRY WALL WITH 3/8" ANCHOR BOLTS.
11. WHERE JOISTS CAN NOT BEAR 2-1/2" ON STEEL BEAMS, STAGGER LOCATION OF JOISTS TO PROVIDE 2-1/2" MINIMUM BEARING ON BEAM.
12. CONCENTRATED LOADS SHALL NOT BE PLACED ON NOR HUNG FROM JOISTS UNLESS THEY ARE PLACED AT PANEL POINTS OR A BRACE (L1-1/2x1-1/2x1/8) IS INSTALLED BETWEEN THE LOAD AND PANEL POINT. CONCENTRATED LOADS NOT SHOWN ON THE DRAWINGS SHALL BE BROUGHT TO THE ATTENTION OF THE ARCHITECT/ENGINEER FOR REVIEW.
13. A CERTIFICATE OF COMPLIANCE FOR THE STEEL ROOF JOISTS MUST BE SUBMITTED TO THE BUILDING OFFICIAL UPON COMPLETION OF FABRICATIONS, PER IBC 2206.5.
14. OPEN WEB ROOF JOISTS AND GIRDERS SHALL BE DESIGNED FOR A NET WIND UPLIFT OF 10 PSF, UNLESS NOTED OTHERWISE.
15. OPEN WEB ROOF JOISTS AND GIRDERS SHALL BE DESIGNED FOR THE FOLLOWING DEFLECTION LIMITS:
    - LIVE OR SNOW LOAD SPAN/360
    - TOTAL LOAD SPAN/240
16. PROVIDE CAMBER IN OPEN WEB JOIST AND GIRDER PER STEEL JOIST INSTITUTE RECOMMENDATIONS, UNLESS NOTED OTHERWISE.
17. JOIST MANUFACTURER TO DESIGN JOIST TOP CHORD WITH UNBRACED LENGTH EQUAL TO SKYLIGHT OPENING.
18. WHERE STEEL JOIST OR GIRDER SLOPE EXCEEDS 1/4" PER FOOT, PROVIDE SLOPED BEARING SEAT.
19. THE STEEL JOIST AND GIRDER MANUFACTURER SHALL SUBMIT ERECTION DRAWINGS AND STAMPED CALCULATIONS BY A LICENSED CIVIL OR STRUCTURAL ENGINEER TO THE ENGINEER OF RECORD FOR REVIEW.
20. JOISTS SHALL BE DESIGNED FOR AN ADDITIONAL 500 LBS CONCENTRATED LOAD AT ANY ONE PANEL POINT.
21. GIRDERS SHALL BE DESIGNED FOR AN ADDITIONAL 1000 LBS CONCENTRATED LOAD AT ANY ONE PANEL POINT.
22. JOIST MANUFACTURER TO DESIGN FOR THE MECHANICAL UNITS SHOWN WITH WEIGHTS GREATER THAN 500 LBS.
23. SPECIAL INSPECTIONS AND TESTING OF WELDS AS REQUIRED BY IBC 2006 SHALL BE PROVIDED BY THE OWNER.
24. MECHANICAL ROOF TOP UNITS SHALL BE PLACED OVER ADDITIONAL OR SPECIAL JOISTS AS SHOWN ON DRAWINGS. THE WEIGHT, SIZE AND LOCATION OF ALL PROPOSED UNITS AND CURBS SHALL BE SUBMITTED TO THE ARCHITECT/ENGINEER FOR VERIFICATION BEFORE FABRICATION OF STEEL.
25. FRAMES FOR ROOF OPENINGS AND SUPPORTS FOR ROOF MOUNTED MECHANICAL EQUIPMENT ARE INDICATED ON DRAWINGS FOR BID PURPOSES ONLY. UPON RECEIPT OF MECHANICAL SUBMITTALS, THE CONTRACTOR SHALL FURNISH STEEL SUPPLIER SUPPLEMENTARY DRAWINGS OR OTHER INFORMATION NECESSARY TO LAYOUT AND DETAIL THIS PORTION OF THE WORK. OTHER STEEL WORK SHALL NOT BE DELAYED BY THIS PORTION OF THE WORK. SHOP DRAWINGS SHALL BE SUBMITTED TO ENGINEER FOR REVIEW.
26. STEEL ROOF DECK SHALL COMPLY WITH THE LATEST REQUIREMENTS OF THE STEEL DECK INSTITUTE, SDI. SUBMIT ICBO REPORT WITH SHOP DRAWINGS.
27. WHERE POSSIBLE, ALL DECK SHALL BE (3) SPAN CONTINUOUS MINIMUM. IN AREAS WHERE (3) SPAN CONDITIONS ARE NOT POSSIBLE, THE DECK SHALL MEET THE LOADING CRITERIA FOR THE SPAN CONDITION. THE CONTRACTOR SHALL PROVIDE HEAVIER GAGE DECK AND/OR SHORING AS REQUIRED.
28. DECK SHALL HAVE A MINIMUM BEARING LENGTH OF 2".

LIGHT GAGE METAL FRAMING

1. DESIGN, FABRICATION AND ERECTION OF LIGHT-GAGE METAL FRAMING SHALL COMPLY WITH REQUIREMENTS OF: AISC "MANUAL OF STEEL CONSTRUCTION", AWS "STRUCTURAL WELDING CODE", AISI "SPECIFICATION FOR THE DESIGN OF COLD FORMED STEEL STRUCTURAL MEMBERS", AND ICBO REPORT ER-4943P.
2. FRAMING SHOWN ON PLANS ARE MINIMUM SIZES AND CONDITIONS. SUBSTITUTION OF FRAMING MEMBERS SHALL BE APPROVED BY ARCHITECT AND ENGINEERS. THEY SHALL HAVE CAPACITY FOR GRAVITY LOADS AND LATERAL LOADS EQUAL TO OR BETTER THAN SPECIFIED FRAMING MEMBERS AND SHALL BE ICBO APPROVED.
3. ALL COMPONENTS SHALL BE GALVANIZED ACCORDING TO REQUIREMENTS OF ASTM A-525 FOR MINIMUM G-60 COATING.
4. ALL 16 AND 18 GAGE STUDS, AND ALL TRACK, BRIDGING, END CLOSURES AND ACCESSORIES SHALL BE FORMED FROM STEEL THAT CORRESPONDS TO THE MINIMUM REQUIREMENTS OF ASTM A-446, WITH A MINIMUM YIELD OF 33 KSI FOR 18 GAGE AND 50 KSI FOR 16 GAGE, FOR STUDS AND 33 KSI FOR RUNNERS, BRIDGING, END CLOSURES AND ACCESSORIES.
5. ALL WELDS SHALL BE ACCOMPLISHED USING 1/8" AWS TYPE 6013 OR 7014 ROD WITH A WELDING HEAT OF 60 TO 110 AMPERES DEPENDING ON THE GAGE OF MATERIAL AND THE FIT OF THE PARTS. WIRE TYING OF FRAMING COMPONENTS IS NOT PERMITTED.
6. ADEQUATE LATERAL BRACING MUST BE PROVIDED DURING CONSTRUCTION.
7. UNLESS NOTED OTHERWISE, METAL FRAMING MEMBERS AT LOAD BEARING, SHEAR WALLS AND EXTERIOR WALLS SHALL BE 18 GAGE FOR STUDS, 16 GAGE FOR TOP AND BOTTOM RUNNER.
8. RUNNER TRACKS: INSTALL CONTINUOUS TRACKS SIZED TO MATCH STUDS. ALIGN TRACKS ACCURATELY TO LAYOUT AT BASE AND TOPS OF STUDS. UNLESS INDICATED OTHERWISE, SECURE TRACKS AS RECOMMENDED BY STUD MANUFACTURER FOR TYPE OF CONSTRUCTION INVOLVED, EXCEPT DO NOT EXCEED 24" OC SPACING FOR NAIL OR POWER-DRIVEN FASTENERS, OR 16" OC FOR OTHER TYPES OF ATTACHMENT. PROVIDE FASTENERS AT CORNERS AND ENDS OF TRACK.
9. FASTENINGS: FASTENING OF COMPONENTS SHALL BE WITH SELF-DRILLING SCREWS OR BY WELDING. SCREWS AND WELDS SHALL BE OF SUFFICIENT SIZE TO ENSURE THE STRENGTH OF THE CONNECTION. WIRE TYING OF COMPONENTS SHALL NOT BE PERMITTED. ALL WELDS SHALL BE TOUCHED UP WITH A ZINC-RICH PAINT. FASTENING OF PLYWOOD DIAPHRAGMS AND SILL PLATES SHALL BE AS INDICATED IN STRUCTURAL NOTES, AND DETAILED.

DRILL & EPOXY

1. USE HILTI HIT RE 500 ADHESIVE SYSTEM OR EQUIVALENT FOR CONNECTIONS INTO EXISTING CONCRETE & HILTI HIT HY 150 OR EQUIVALANT FOR CONNECTIONS WITH SOLID GROUTED MASONRY.
2. USE HILTI HY20 ADHESIVE SYSTEM OR EQUIVALENT FOR ALL HOLLOW UNIT CMU CONNECTIONS AND UNREINFORCED MASONRY WALLS, INCLUDING MULTI-WYTHE WALLS.
3. TEN PERCENT OF ALL ANCHORS PLACED SHALL BE RANDOMLY TESTED TO 100% OF MANUFACTURER'S SPECIFIED ALLOWABLE LOAD. IF ANY ANCHOR FAILS IT SHALL BE REPLACED AND RETESTED AT NO ADDITIONAL COST TO THE OWNER. IF AN ANCHOR FAILS, 100% OF ALL OTHER ANCHORS INSTALLED BY THAT SAME CREW SHALL BE TESTED AT NO ADDITIONAL COST TO THE OWNER.

TERMS AND ABBREVIATIONS (SYMBOLS, A - K)

ABBRV	TERM	ABBRV	TERM
(#)	NUMERICAL QUANTITIES WHEN ENCLOSED IN PARENTHESES	(E)	EXISTING
		E	MODULUS OF ELASTICITY
		EA	EACH
		EJ	EXPANSION JOINT
A/E	ARCHITECT/ENGINEER	EL	ELEVATION
AB	ANCHOR BOLT	ELEV	ELEVATOR
ADDM	ADDENDUM	ENGR	ENGINEER
ALUM	ALUMINUM	EQ	EQUAL
APPROX	APPROXIMATELY	EQL SP	EQUALLY SPACED (EQUAL SPACES)*
ARCH	ARCHITECT (ARCHITECTURAL)*	EQUIP	EQUIPMENT
ASTM	AMERICAN SOCIETY FOR TESTING AND MATERIALS	EQUIV	EQUIVALENT
		EST	ESTIMATE
		ETC	AND SO FORTH
B PL	BASE PLATE	EW	EACH WAY
B/B	BACK TO BACK	EXCL	EXCLUDE
BLW	BELOW	EXP	EXPANSION
BLKG	BLOCKING	EXT	EXTERIOR
BM	BEAM		
BOS	BOTTOM OF STEEL	(F)	FUTURE
BOT	BOTTOM	FDTN	FOUNDATION
BRG	BEARING	FFE	FINSHED FLOOR ELEVATION
BTWN	BETWEEN		
		FIN	FINISH (FINISHED)*
C TO C	CENTER TO CENTER	FLR	FLOOR
CD	CONTRACT DOCUMENTS	FRMG	FRAMING
CIP	CAST-IN-PLACE	FSE	FINISHED SLAB ELEVATION
CJ	CONSTRUCTION JOINT*	FTG	FOOTING
CJ	CONTROL JOINT*	FV	FIELD VERIFY
CL	CENTERLINE		
CMU	CONCRETE MASONRY UNIT	GA	GAGE
COL	COLUMN	GALV	GALVANIZED
CONC	CONCRETE	GLB	GLUED LAMINATED WOOD BEAM
CONN	CONNECTION		
CONT	CONTINUOUS (CONTINUE)*		
CONTR	CONTRACTOR	HGR	HANGER
COORD	COORDINATE	HORIZ	HORIZONTAL (HORIZONTALLY)*
CTR	CENTER		
		HSA	HEADED STUD ANCHOR
D	DEPTH	HSS	HOLLOW STRUCTURAL SECTION
d	PENNY NAIL		
DB	DECK BEARING		
DBA	DEFORMED BAR ANCHOR	I	MOMENT OF INERTIA
DBL	DOUBLE	ID	INSIDE DIAMETER
DFS	DOUGLAS FIR - SOUTH	INT	INTERIOR
DIA	DIAMETER		
DIAG	DIAGONAL	JST	JOIST
DIM	DIMENSION		
DL	DEAD LOAD	KIP, (K)	THOUSAND POUNDS
DTL	DETAIL	KIP FT	THOUSAND FOOT/POUNDS
DWG	DRAWING	KLF	KIPS PER LINEAL FOOT

TERMS AND ABBREVIATIONS (L - Z)

ABBRV	TERM	ABBRV	TERM
LB	POUND	SCHED	SCHEDULE
LHS	LEFT HAND SIDE	SECT	SECTION
LL	LIVE LOAD	SF	SQUARE FOOT (FEET)*
LLH	LONG LEG HORIZONTAL	SGL	SINGLE
LLV	LONG LEG VERTICAL	SHTHG	SHEATHING
LONG	LONGITUDINAL	SIM	SIMILAR
LSL	LAMINATED STRAND LUMBER	SL	SNOW LOAD
		SOG	SLAB ON GRADE
LTWT	LIGHTWEIGHT	SPCL	SPECIAL
LVL	LAMINATED VENEER LUMBER	SPEC	SPECIFICATION
		SQ	SQUARE
		STD	STANDARD
MAX	MAXIMUM	STIF	STIFFENER
MECH	MECHANICAL	STRUCT	STRUCTURE (STRUCTURAL)*
MFR	MANUFACTURER		
MIN	MINIMUM	SYMM	SYMMETRICAL
MISC	MISCELLANEOUS		
		T&B	TOP AND BOTTOM
NA	NOT APPLICABLE	T&G	TONGUE AND GROOVE
NTS	NOT TO SCALE	THRU	THROUGH
		TO FDN	TOP OF FOUNDATION
OC	ON CENTER	TOB	TOP OF BEAM
OD	OUTSIDE DIAMETER	TOC	TOP OF CONCRETE
OPNG	OPENING	TOF	TOP OF FOOTING
OPP	OPPOSITE	TOJ	TOP OF JOIST
OPT	OPTIONAL	TOM	TOP OF MASONRY
OSB	ORIENTED STRAND BOARD	TOP	TOP OF PARAPET
		TOS	TOP OF STEEL
PERP	PERPENDICULAR	TOW	TOP OF WALL
PLF	POUNDS PER LINEAL FOOT	TWS	THREADED WELDED STUD
		TYP	TYPICAL
PSL	PARALLEL STRAND LUMBER		
		UNO	UNLESS NOTED OTHERWISE
PT	POST TENSIONED		
QA	QUALITY ASSURANCE	VERT	VERTICAL (VERTICALLY)*
QC	QUALITY CONTROL		
		W/	WITH
(RE)	REMOVE EXISTING	W/O	WITHOUT
REINF	REINFORCE (REINFORCED, REINFORCING)*	WL	WIND LOAD
		WLD	WELD (WELDED)*
REQD	REQUIRED	WWF	WELDED WIRE FABRIC
RFI	REQUEST FOR INFORMATION		
		XS	EXTRA STRONG
RS	ROUGH SAWN	XXS	DOUBLE EXTRA STRONG
RTU	ROOF TOP UNIT		

NOTES:
1. * CONTEXT INDICATES WHICH ABBREVIATION TERM IS IMPLIED. CONTACT ENGINEER IF MEANING IS NOT OBVIOUS.
2. NOT ALL ABBREVIATIONS ARE USED.
3. MANY ABBREVIATIONS MAY BE MADE PLURAL BY ADDING AN S SUFFIX.
4. FOR ABBREVIATIONS NOT LISTED, REFER TO THE US NATIONAL CAD STANDARD, VERSION 3.1. TERMS AND ABBREVIATIONS SECTION, OR CONTACT ENGINEER.

A6 TERMS AND ABBREVIATIONS
1717_01 Abbreviations SCALE: NONE

CALDER RICHARDS
CONSULTING ENGINEERS
634 SOUTH 400 WEST, SUITE 100, SALT LAKE CITY, UT 84101
T: 801.466.1699 F: 801.467.2495

ALL DRAWINGS, PLANS AND DETAILS ARE INSTRUMENTS OF SERVICE AND SHALL REMAIN THE PROPERTY OF CALDER RICHARDS CONSULTING ENGINEERS AND ARE NOT SUITABLE FOR REUSE NOR INTENDED FOR ANY OTHER PROJECT.

NEW HEBER CITY LIQUOR STORE
DEPT. OF ALCHOLIC BEVERAGE CONTROL
HEBER CITY, UT

STRUCTURAL NOTES

FRANK N MURDOCK JR Architect & Associates
975 East 100 South Suite 100, Salt Lake City, Utah 84102 TEL: (801) 532-4441 FAX (801) 532-4220

PROFESSIONAL STRUCTURAL ENGINEER SHAUN A. PACKER #191304 STATE OF UTAH 5.20.09

REVISION # DATE:

DFCM PROJECT NO.: 08224030
CONSTRUCTION DOCS
FILE NAME: S001.dwg
PLOT SCALE: AS NOTED
DRAWN BY: JRS
CHECKED BY: SP
DATE: MAY 20, 2009

S001

PLAN NOTES (FTG & FDTN):

◯ CIRCLED NOTES ARE KEYED ON PLAN.

SEE ARCHITECTURAL DRAWINGS FOR ALL DIMENSIONS, TYPICAL.

1. SEE STRUCTURAL NOTES ON **SHEET S001** FOR ADDITIONAL INFORMATION.
2. FINISH SLAB ELEVATION = 100'-0", UNLESS NOTED THUS: FSE=xxx'-xx" SLOPE UNIFORMLY TO FLOOR DRAINS.
3. SEE DETAIL **A1/S201** FOR TYPICAL STEP IN SLAB. SEE ARCHITECTURAL PLANS FOR EXACT LOCATION OF STEPS.
4. SLAB ON GRADE SHALL BE 5" CONCRETE OVER 4" FREE-DRAINING GRAVEL. REINFORCE SLAB WITH #4 @ 24" OC EA DIR.
5. PLACE CONTROL JOINTS AND CONSTRUCTION JOINTS IN SLAB PER STRUCTURAL NOTES. SEE DETAIL **B2/S201**.
6. SEE PLAN FOR FOOTING TYPE. SEE SCHEDULE **THIS SHEET** FOR FOOTING SIZE AND REINFORCEMENT.
7. CENTER FOOTINGS ON WALLS AND COLUMNS UNLESS DIMENSIONED OTHERWISE ON PLANS.
8. SEE PLAN AND SECTIONS FOR TOP OF FOUNDATION WALL ELEVATIONS.
9. SEE DETAIL **D5/S201** FOR MASONRY COLUMN SCHEDULE INDICATING SIZE AND REINFORCEMENT.
10. SEE DETAIL **B1/S201** FOR CONTROL JOINTS IN MASONRY. SEE ARCHITECTURAL DRAWINGS FOR LOCATION.
11. SEE DETAILS **B3/S201** & **C2/S201** FOR TYPICAL CONCRETE AND MASONRY WALL REINFORCEMENT DETAILS.
12. SEE DETAIL **B4/S201** FOR TYPICAL STEP IN FOOTING.
13. FOUNDATION DESIGN INFORMATION WAS OBTAINED FROM THE SOILS REPORT PREPARED BY GSH GEOTECHNICAL CONSULTANTS, INC. ALL SITE PREPARATION, EXCAVATION, FILL, COMPACTION, AND PLACEMENT WORK PREFORMED SHALL COMPLY WITH RECOMMENDATIONS OUTLINED IN THE ABOVE REFERENCED REPORT.
14. SEE ARCHITECTURAL/SITE DRAWINGS FOR INFORMATION AND LOCATION OF SITE WALLS, STEPS, PLANTERS, RAMPS, ETC.
15. SEE DETAILS **D2, E3, E4, E5, & E6** ON **SHEET S201** FOR SMALL OVERBUILD OFFICE MEZZ FRAMING.
16. FLOOR SLAB SHALL BE A TOTAL OF 4" THICK (WITH STEEL DECK), LIGHT WEIGHT CONCRETE (110 PCF). REINFORCE SLAB WITH 6x6 – W1.4xW1.4 WWF IN ADDITION TO ANY MILD REINFORCEMENT SHOWN ON PLANS.
17. FLOOR DECK SHALL BE 1½" VERCO TYPE "B-FORMLOK", 22 GAUGE, GALVANIZED. MINIMUM DECK BEARING = 2". ANCHOR DECK TO SUPPORTING MEMBERS WITH #10 SELF DRILLING SCREWS @ 12" OC ALL DECK FLUTES. BUTTON PUNCH ALL DECK LAPS @ 36" OC.
18. SEE DETAILS **B5/S201** & **C5/S201** FOR REINFORCEMENT LAP SPLICE SCHEDULES.

LEGEND:

FCx.0, FSx.0, FRx.0/y.0	CONTINUOUS FOOTING, SPOT FOOTING TYPES RESPECTIVELY, SEE SCHEDULE	FCx.x	CONCRETE FOOTING & FDTN WALL
xx'-xx"	TOP OF FTG ELEVATION		CONC WALL
	CONC SLAB ON GRADE	MC-#	RECESS IN CONC FDTN WALL
	BEAM	MC-#	MASONRY COLUMN IN WALL ABOVE
	JOIST		STEEL COLS – TUBE
			STEEL STUD WALL

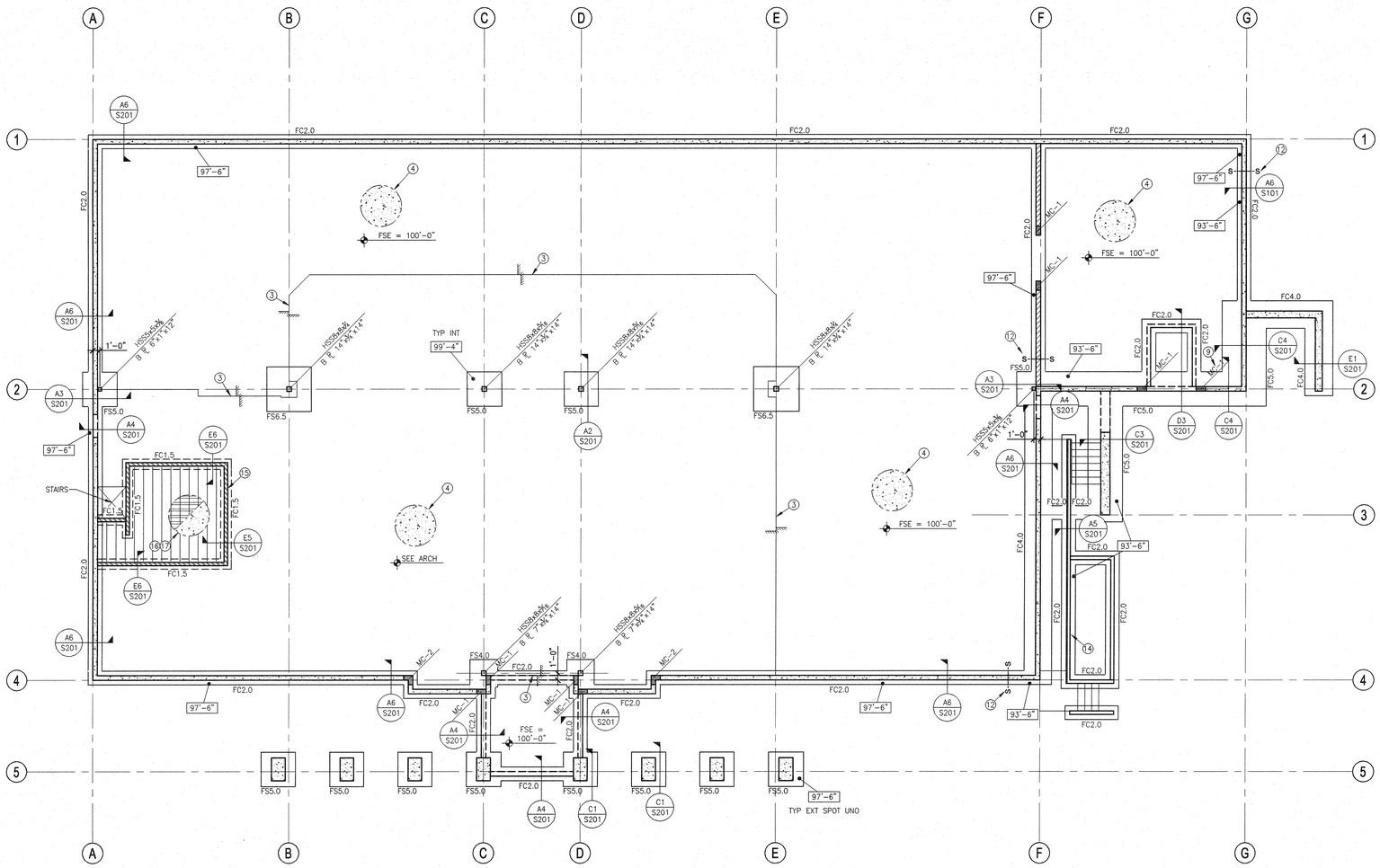

FOOTING SCHEDULE

MARK	SIZE	REINFORCEMENT		NOTES
	WIDTH x THICK x LENGTH	LONGITUDINAL	TRANSVERSE	
FC1.5	1'-6" x 1'-0" x CONT	(3) #4	–	
FC2.0	2'-0" x 1'-0" x CONT	(3) #4	–	
FC4.0	4'-0" x 1'-0" x CONT	(4) #5	#5 @ 18"	
FC5.0	5'-0" x 1'-0" x CONT	(5) #5	#5 @ 16"	
FS4.0	4'-0" x 1'-0" x 4'-0"	(4) #5	(4) #5	
FS5.0	5'-0" x 1'-2" x 5'-0"	(5) #6	(5) #6	
FS6.5	6'-6" x 1'-6" x 6'-6"	(6) #7	(6) #7	

FOOTING NOTES:

1. PLACE CROSSWISE REINFORCING 3" CLEAR FROM GRADE AND LENGTHWISE REINFORCING ON TOP OF CROSSWISE.
2. ALL CONTINUOUS FOOTINGS SHALL BE FC2.0 AND SQUARE FOOTINGS SHALL BE FS5.0, MINIMUM, UNO ON PLANS.

B6 — FOOTING SCHEDULE
3110.00 R-SCHFTGS FOOTING SCHEDULE — SCALE: NONE

FOOTING & FOUNDATION PLAN

SCALE: 1/8" = 1'-0"

CALDER RICHARDS CONSULTING ENGINEERS
634 SOUTH 400 WEST, SUITE 100, SALT LAKE CITY, UT 84101
T: 801.466.1029 F: 801.487.3495

ALL DRAWINGS, PLANS AND DETAILS ARE INSTRUMENTS OF SERVICE AND SHALL REMAIN THE PROPERTY OF CALDER RICHARDS CONSULTING ENGINEERS AND ARE NOT SUITABLE FOR REUSE NOR INTENDED FOR ANY OTHER PROJECT.

NEW HEBER CITY LIQUOR STORE

DEPT. OF ALCHOLIC BEVERAGE CONTROL
HEBER CITY, UT

FRANK N MURDOCK JR Architect & Associates
975 East 100 South Suite #100, Salt Lake City, Utah 84102 TEL: (801) 532-4441 FAX (801) 532-4220

FOOTING & FOUNDATION PLAN

PROFESSIONAL STRUCTURAL ENGINEER — SHAUN A. PAPKER # 191304 — STATE OF UTAH

REVISION # DATE:

DFCM PROJECT NO.: 08224030
CONSTRUCTION DOCS
FILE NAME: S101.dwg
PLOT SCALE: AS NOTED
DRAWN BY: JRS
CHECKED BY: SP
DATE: MAY 20, 2009

S101

X:\Project Files\2008\08023.03 DABC - Heber City\Drawings\S101.dwg, S101, 5/20/2009 3:20:34 PM

PLAN NOTES (ROOF FRAMING):

◯ CIRCLED NOTES ARE KEYED ON PLAN.

SEE ARCHITECTURAL DRAWINGS FOR ALL DIMENSIONS, TYPICAL.

1. SEE STRUCTURAL NOTES ON **SHEET S001** FOR ADDITIONAL INFORMATION.
2. SEE ARCHITECTURAL DRAWINGS FOR ALL DECK BEARING ELEVATIONS, ADJUST TOP OF FRAMING TO PROVIDE UNIFORM SLOPE BETWEEN ELEVATIONS.
3. ROOF DECK SHALL BE 1½" VERCO TYPE HSB-36, 20 GAUGE, GALVANIZED, OR EQUIVALENT. PLACE DECK 3 SPANS CONTINUOUS, MINIMUM.
4. DECK ATTACHMENT AS FOLLOWS:
   A. DECK SPAN PERPENDICULAR TO SUPPORTS: (7) ¾"ø PUDDLE WELDS
   B. DECK SPAN PARALLEL TO SUPPORTS: ¾"ø PUDDLE WELDS @ 12" OC
   C. SEAMS: 1½" TOP SEAM WELDS OR VERCO PUNCH LOCK @ 24" OC
5. ALL CONTINUOUS DECK ANGLES TO BE FULL DEVELOPMENT BUTT WELDED AT SPLICES.
6. SEE **A2/S202** FOR TYPICAL ROOF OPENING DETAIL.
7. SEE DETAIL **B5/S202** FOR MASONRY BEAM SCHEDULE INDICATING SIZE & REINFORCEMENT. PROVIDE MB-1 LINTEL UNO ON PLAN.
8. SEE DETAIL **B1/S201** FOR CONTROL JOINTS IN MASONRY. SEE ARCHITECTURAL DRAWINGS FOR LOCATION.
9. SEE DTL **B3/S202** FOR DECK SUPPORT AT ROOF PIPE/DRAINS.
10. ROOF HATCH, SEE ARCHITECTURAL DRAWINGS.
11. DENOTES SNOW DRIFT LOADING ALONG WALL LINE. JOIST MFR TO DESIGN JOISTS FOR SNOW DRIFT LOAD IN ADDITION TO UNIFORM LOADS.
12. JOIST MANUFACTURER SHALL DESIGN TOP CHORD OF JOIST OR JOIST GIRDER FOR AXIAL SEISMIC LOADS IN ADDITION TO UNIFORM LOADS. SERVICE LEVEL TENSION & COMPRESSION AXIAL LOADS ARE SHOWN THUS: (X K)
13. SEE DETAIL **D6/S202** FOR TYPICAL BEAM TO BEAM OR CHANNEL TO BEAM CONNECTION.
14. JOIST MFR TO DESIGN JOISTS AND GIRDERS FOR MECH UNIT LOAD IN ADDITION TO TYPICAL UNIFORM LOADS. SEE MECH DRAWINGS FOR ALL MECH UNIT LOCATIONS, SIZES, AND WEIGHTS. SEE DETAIL **A2/S202** FOR PERIMETER SUPPORT AT ROOF FRAMING.
15. EPOXY ANCHOR EDGE CHANNEL TO SOLID GROUTED CMU WALL PER DTL **C1/S202**.
16. SEE ARCH DWGS FOR TOP OF CMU AT ENTRY.
17. POCKET END OF BEAM IN WALL PER DETAIL **D1/S202, SIM**.
18. APPROX EDGE OF GUTTER SYSTEM, SEE ARCH DWGS.
19. L2x GUTTER SUPPORTS, SEE DETAIL **D2/S202** FOR LOW CANOPY ROOF AND DETAIL **E5/S202** FOR HIGH ROOF.

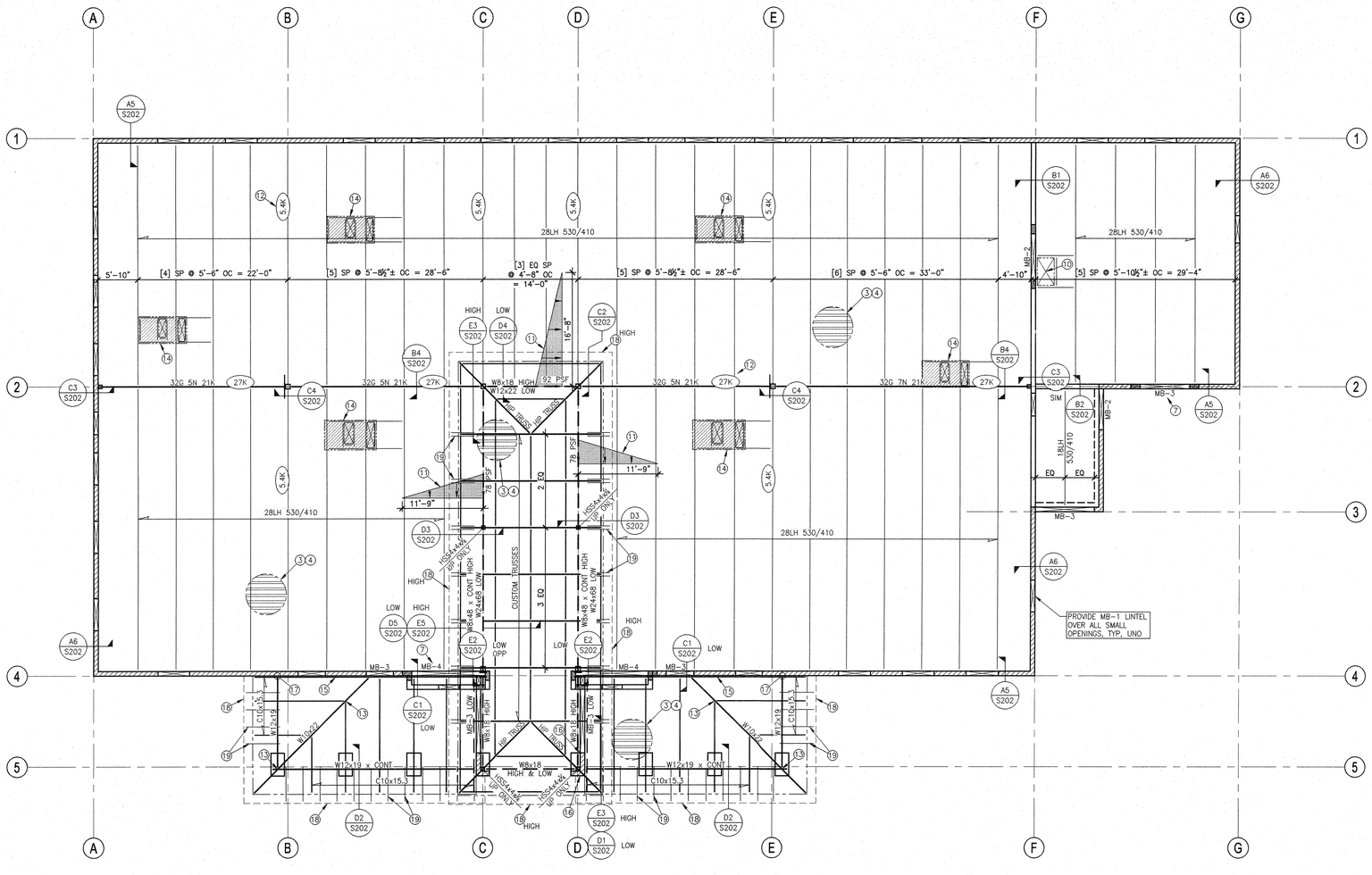

LEGEND:

- STEEL ROOF DECK, W/ SPAN DIRECTION INDICATED
- BEAM
- JOIST
- SNOW DRIFT DIAGRAM
- MASONRY WALL (SHADED IF GROUTED SOLID)
- MASONRY BEAM
- STEEL COLS – TUBE

ROOF FRAMING PLAN

SCALE: 1/8" = 1'-0"

CALDER RICHARDS CONSULTING ENGINEERS
634 SOUTH 400 WEST, SUITE 100, SALT LAKE CITY, UT 84101
T: 801.466.1699 F: 801.467.3495

ALL DRAWINGS, PLANS AND DETAILS ARE INSTRUMENTS OF SERVICE AND SHALL REMAIN THE PROPERTY OF CALDER RICHARDS CONSULTING ENGINEERS AND ARE NOT SUITABLE FOR REUSE NOR INTENDED FOR ANY OTHER PROJECT.

NEW HEBER CITY LIQUOR STORE

DEPT. OF ALCHOLIC BEVERAGE CONTROL
HEBER CITY, UT

FRANK N MURDOCK JR Architect & Associates
975 East 100 South Suite 100, Salt Lake City, Utah 84102 TEL: (801) 532-4441 FAX (801) 532-4220

PROFESSIONAL STRUCTURAL ENGINEER SHAUN A. PACKER # 191304 STATE OF UTAH

REVISION # DATE:

DFCM PROJECT NO.: 08224030
CONSTRUCTION DOCS
FILE NAME: S102.dwg
PLOT SCALE: AS NOTED
DRAWN BY: JRS
CHECKED BY: SP
DATE: MAY 20, 2009

ROOF FRAMING PLAN

S102

X:\Project Files\2009\09023.03 DABC - Heber City\Drawings\S102.dwg, S102, 5/20/2009 3:00:37 PM

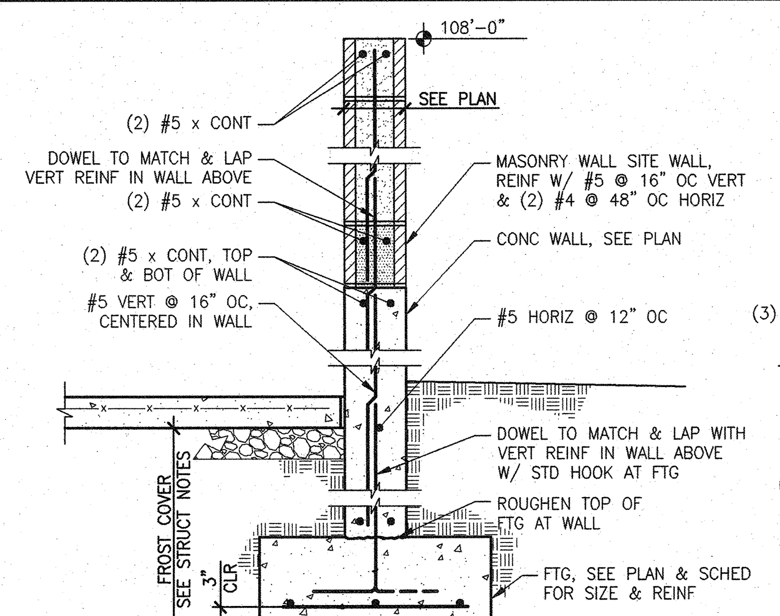

E1 — SCALE: 3/4" = 1'-0"

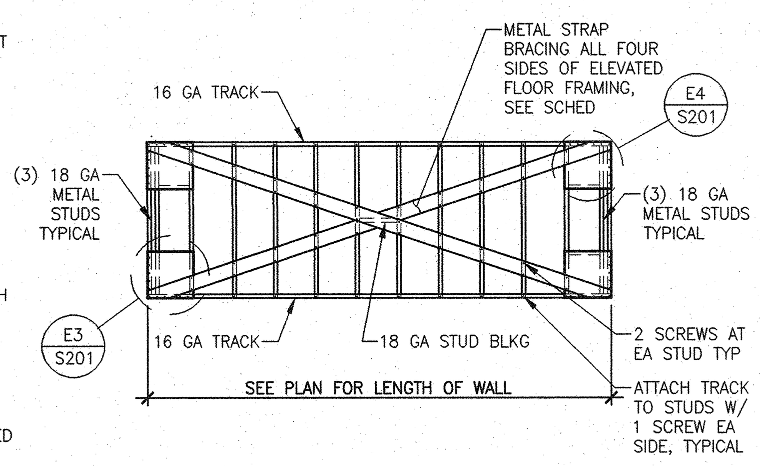

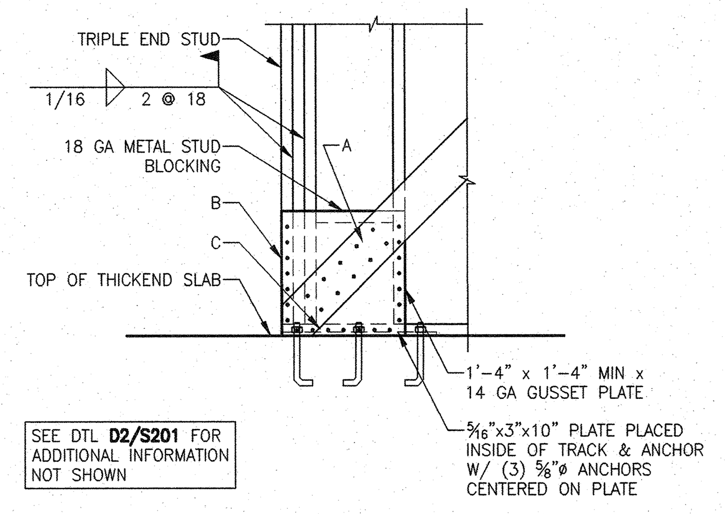

SEE DTL **D2/S201** FOR ADDITIONAL INFORMATION NOT SHOWN

E3 — SCALE: 3/4" = 1'-0"

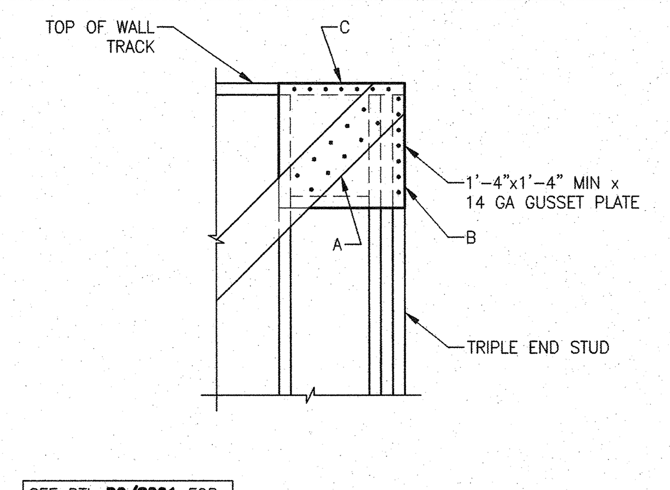

SEE DTL **D2/S201** FOR ADDITIONAL INFORMATION NOT SHOWN

E4 — SCALE: 3/4" = 1'-0"

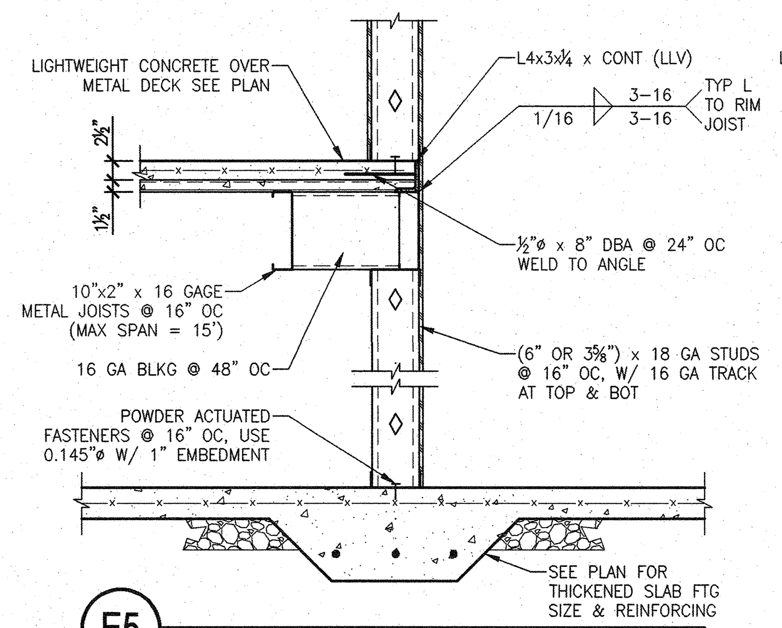

E5 — SCALE: 3/4" = 1'-0"

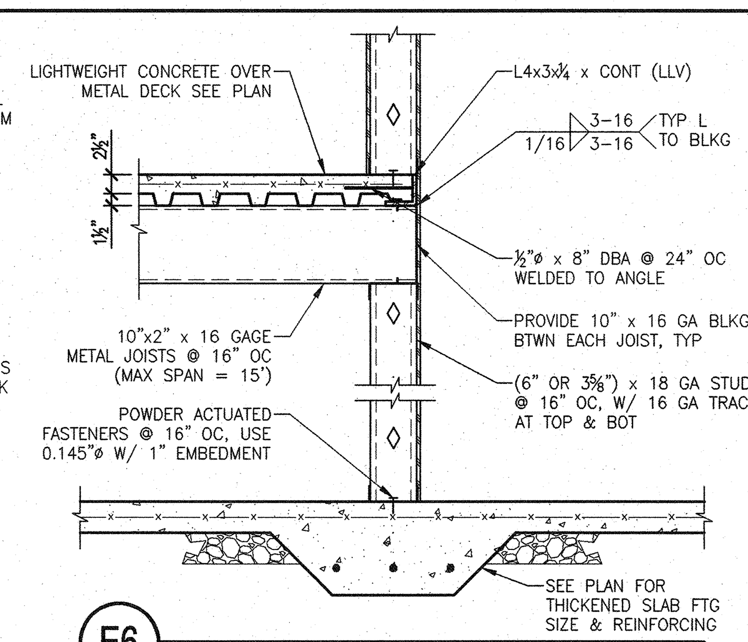

E6 — SCALE: 3/4" = 1'-0"

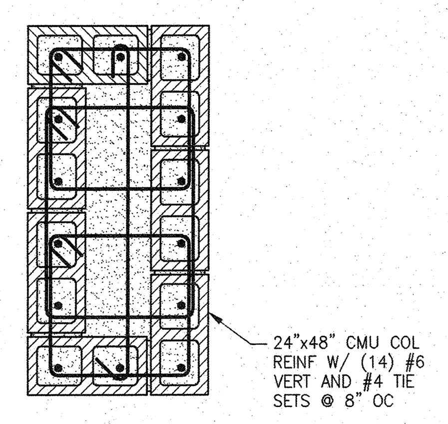

MASONRY COLUMN AT SECTION A-A, COORD WITH PLAN FOR LOCATIONS

STRAP BRACE SCHEDULE

STRAP	FASTENERS (SEE DETAILS) — NUMBER OF #12 x 5/8" MIN SELF DRILLING SCREWS		
	(A) STRAP TO GUSSET PL	(B) GUSSET TO EA END STUD	(C) GUSSET TO CONT TRACK
4" x 16 GA	10	8	8

NOTE:

1/16" FILLET WELDS MAY BE SUBSTITUTED FOR SCREWS. PROVIDE 1"x1/16" FILLET WELD FOR EACH SCREW.

D2 — SCALE: 3/4" = 1'-0"

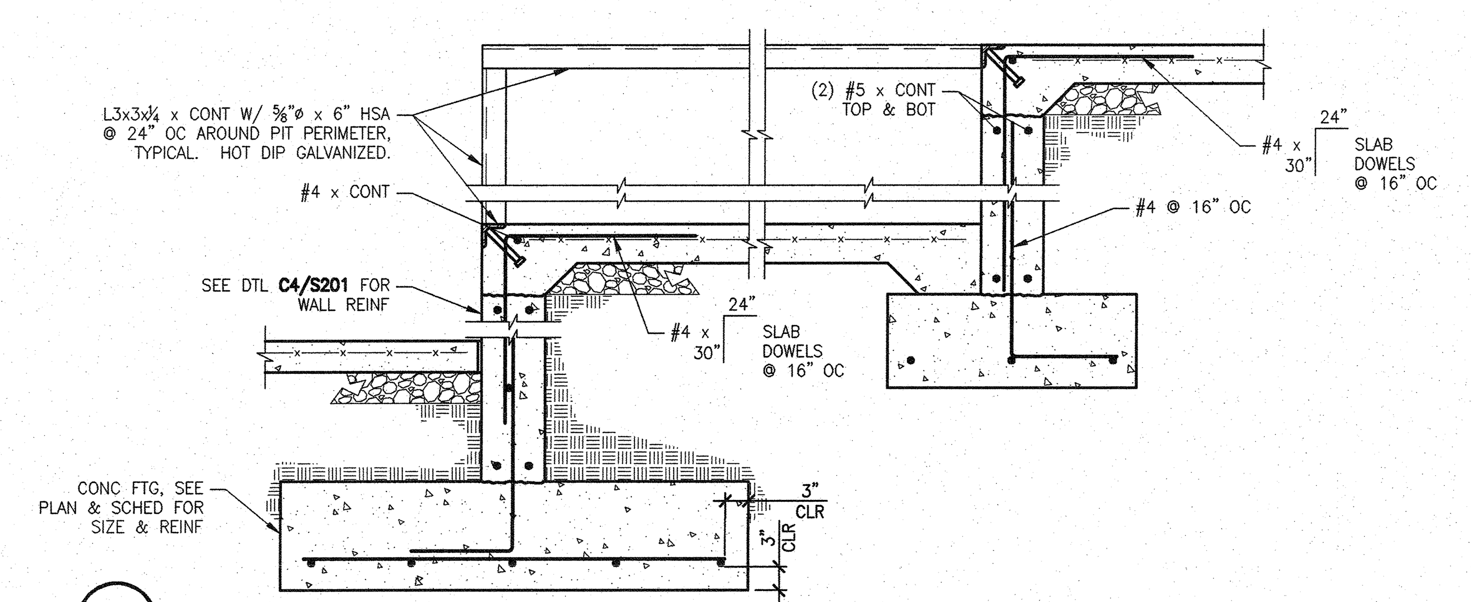

D3 — SCALE: 3/4" = 1'-0"

MASONRY COLUMN SCHEDULE

MARK	LENGTH	WIDTH	REINFORCEMENT — VERTICAL	REINFORCEMENT — HORIZONTAL TIES	TYPE
MC-1	16"	WALL	(4) #5	#3 @ 8" OC	1
MC-2	16"	16"	(3) #5	–	2

MASONRY COLUMN NOTES:

1. HORIZONTAL WALL REINFORCEMENT SHALL RUN CONTINUOUS THROUGH MASONRY COLUMNS.
2. GROUT ALL REINFORCED CELLS AND VOIDS SOLID.
3. MASONRY COLUMNS REINFORCING SHALL EXTEND FULL HEIGHT FROM ROOF DOWN TO FOUNDATION. DOWEL VERT REINF INTO FOUNDATIONS.
4. SEE ARCHITECTURAL DRAWINGS FOR SPECIAL COURSING ARRANGEMENTS.

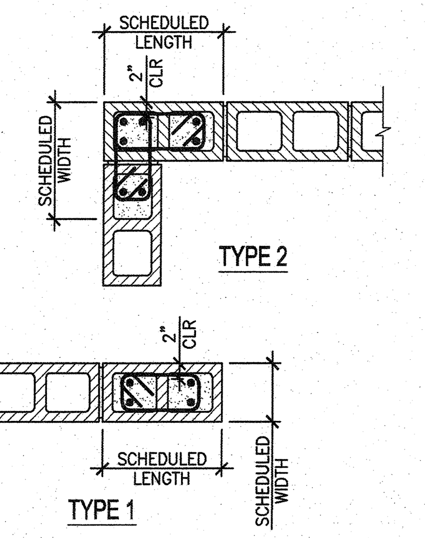

MASONRY COLUMN SCHEDULE

D5 — 5310.00 — SCALE: NONE

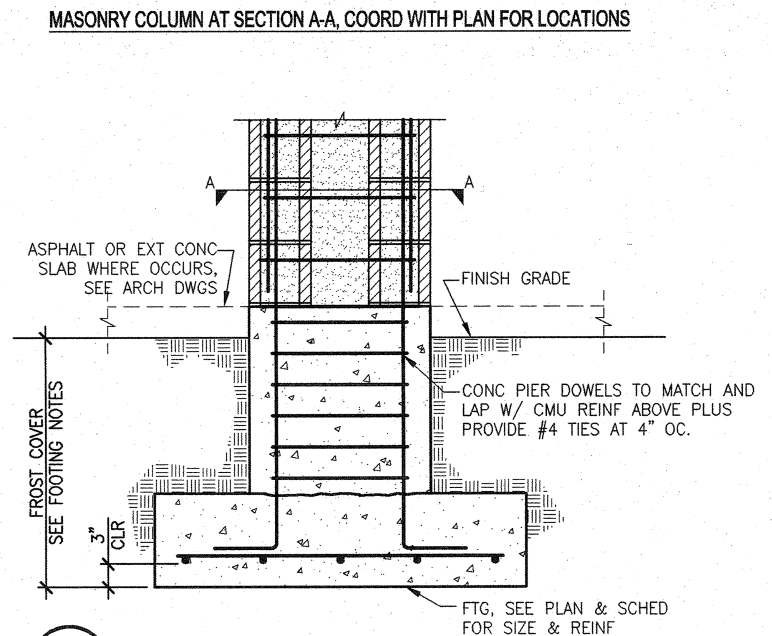

C1 — 3133_01 F-EXTCOL — SCALE: 3/4" = 1'-0"

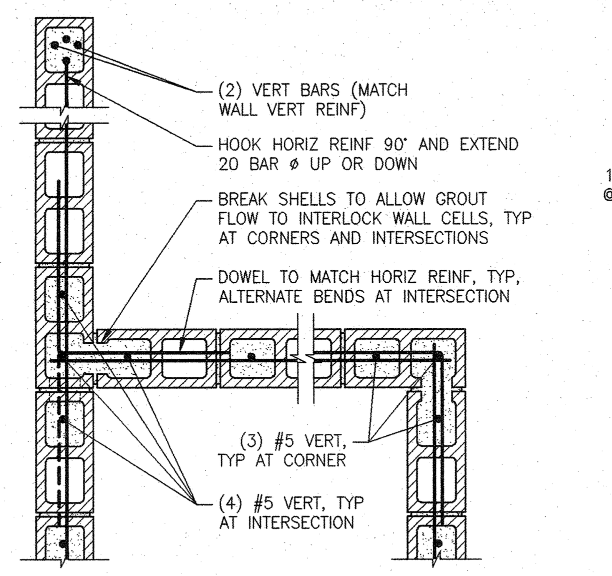

C2 — 5252_03 — SCALE: 3/4" = 1'-0"

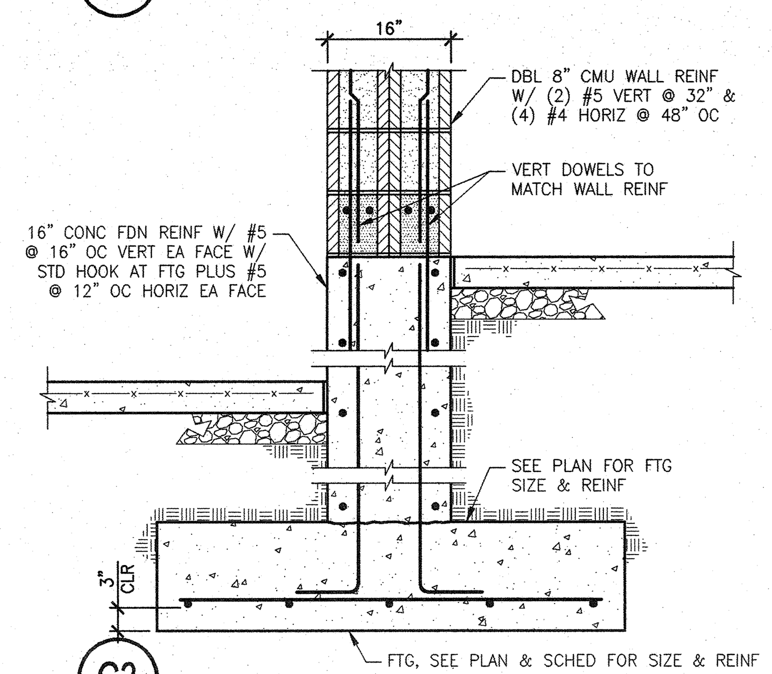

C3 — SCALE: 3/4" = 1'-0"

NOTE:
SEE DTL **A6/S201** FOR ADDITIONAL INFO NOT SHOWN.

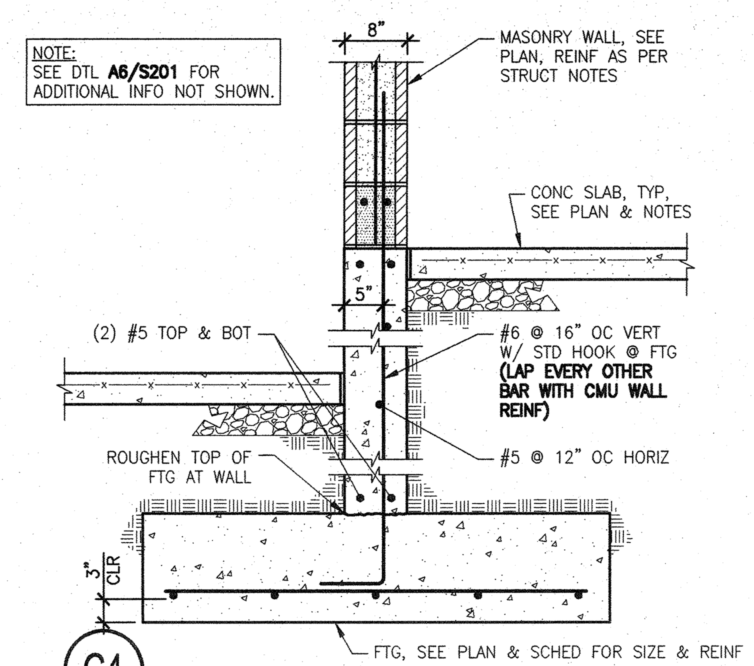

C4 — 3152_01 — SCALE: 3/4" = 1'-0"

MASONRY REINFORCING LAP SPLICE SCHEDULE

BAR SIZE	#3	#4	#5	#6	#7	#8	#9	#10	#11
MASONRY SINGLE MAT	1'-7"	2'-1"	2'-7"	4'-4"	5'-1"	6'-2"	7'-10"	MECH	MECH
MASONRY DOUBLE MAT	1'-7"	2'-4"	3'-6"	6'-10"	9'-1"	12'-5"	15'-4"	MECH	MECH

MASONRY REBAR SPLICE NOTES:

1. MECH = MECHANICAL SPLICE REQUIRED.
2. USE #6 BAR IN 10" OR LARGER WALLS ONLY.
3. f'm = 1500 PSI, fy = 60,000 PSI
4. DOUBLE MAT REINFORCEMENT SHALL HAVE 2" CLEARANCE BETWEEN FACE OF WALL AND EDGE OF VERTICAL BAR.

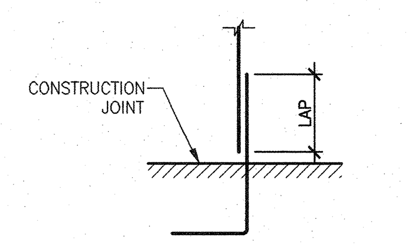

REBAR DEVELOPMENT DETAIL

C5 — SCALE: NONE

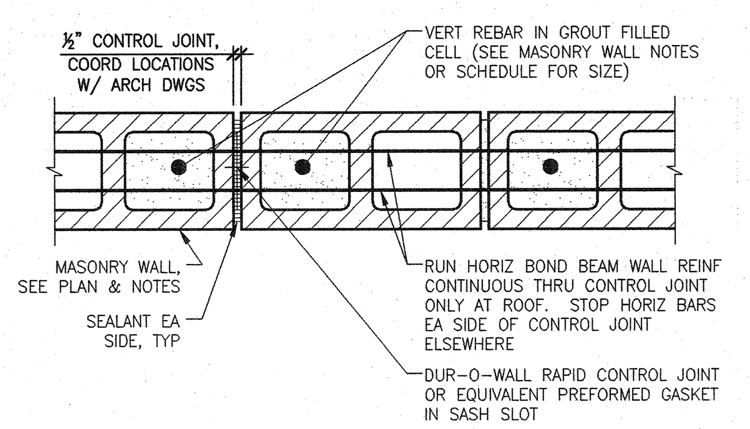

NOTE: WHERE CONTROL JOINT OCCURS AT EDGE OF OPENINGS, ALL WALL BEAM REINF AND GROUT MUST BE CONTINUOUS THROUGH JOINT. USE OPEN END UNITS OR BREAK OUT TOP HALF OF SHELL FOR GROUT FLOW AT JOINT OF BEAM. DELETE PREFORMED GASKET FOR HEIGHT OF BEAM.

TYP MASONRY CONTROL JOINT

B1 — 5257_01 — SCALE: NONE

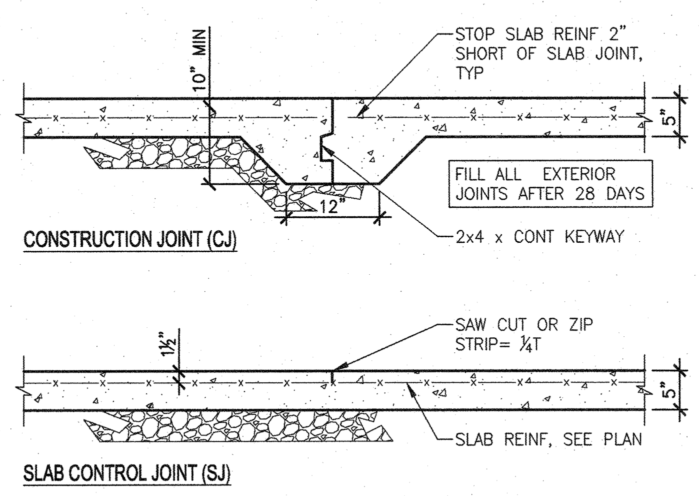

TYPICAL SLAB JOINT DETAILS

B2 — 3600.02 — SCALE: NONE

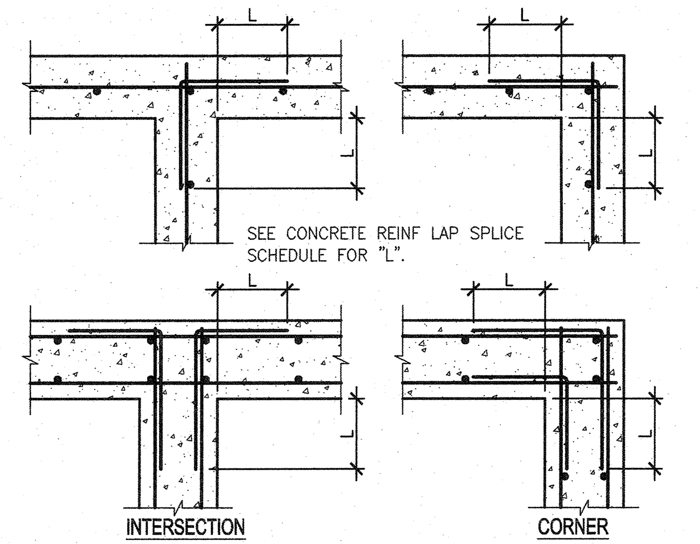

WALL INTERSECTION DOWELS

B3 — 3200.02 — SCALE: NONE

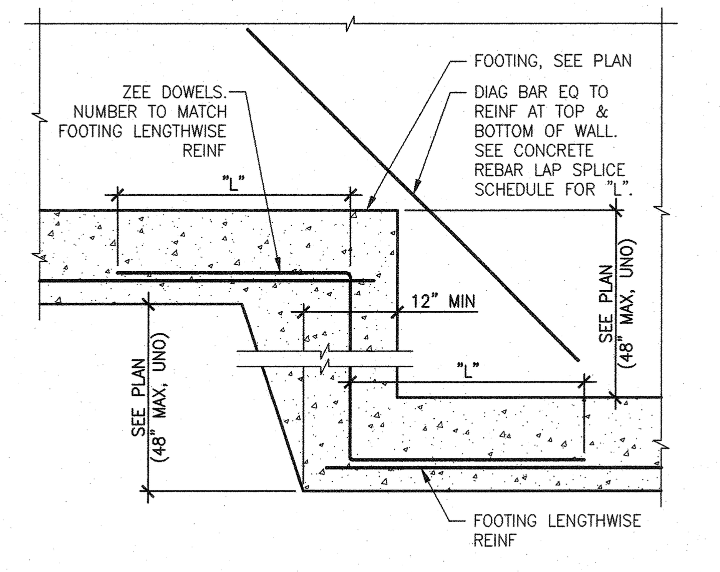

FOOTING STEP (CONC FDTN)

B4 — 3231.02 — SCALE: NONE

CONCRETE REINFORCING LAP SPLICE SCHEDULE

TENSION BARS "Ld"

BAR SIZE	f'c=3000psi REGULAR CLASS A	REGULAR CLASS B	TOP CLASS A	TOP CLASS B	f'c=4000psi REGULAR CLASS A	REGULAR CLASS B	TOP CLASS A	TOP CLASS B	f'c=5000psi REGULAR CLASS A	REGULAR CLASS B	TOP CLASS A	TOP CLASS B	f'c=6000psi REGULAR CLASS A	REGULAR CLASS B	TOP CLASS A	TOP CLASS B
#3	17"	22"	22"	28"	15"	19"	19"	24"	13"	17"	17"	22"	12"	16"	16"	21"
#4	22"	29"	29"	38"	18"	25"	26"	33"	17"	22"	23"	30"	16"	20"	21"	27"
#5	28"	36"	37"	48"	24"	31"	32"	42"	21"	28"	24"	37"	20"	25"	26"	34"
#6	33"	43"	45"	58"	29"	37"	39"	50"	26"	33"	35"	45"	24"	30"	32"	41"
#7	48"	63"	63"	82"	42"	55"	55"	71"	37"	48"	48"	62"	34"	45"	45"	58"
#8	55"	72"	72"	93"	48"	63"	63"	81"	42"	55"	55"	71"	39"	51"	51"	66"
#9	62"	81"	81"	105"	54"	71"	71"	92"	48"	62"	62"	80"	44"	57"	57"	74"
#10	70"	91"	91"	118"	61"	79"	79"	103"	54"	70"	70"	90"	50"	65"	65"	84"
#11	78"	101"	101"	131"	68"	88"	88"	114"	60"	77"	77"	100"	55"	72"	72"	93"

NOTES:

1. THE SCHEDULE SHOWN APPLIES TO REG WT CONCRETE WITH 60ksi GRADE REINFORCING BARS.
2. TOP BARS ARE HORIZONTAL BARS WITH 12" (OR MORE), OF FRESH CONCRETE CAST BELOW THE BARS.
3. CLASS "A" SPLICES SHALL BE USED WHEN 50% (OR LESS) OF BARS SPLICED WITHIN LAP.
4. CLASS "B" SPLICES SHALL BE USED FOR ALL ELSE, TYPICALLY WITH SHEARWALLS, COLUMNS, BEAMS & SLABS.
5. FOR EPOXY COATED BARS, INCREASE LAP LENGTHS AS FOLLOWS:
   TOP BARS: Ld x 1.7
   REGULAR BARS: Ld x 1.5
6. FOR BUNDLED BARS, INCREASE LAP LENGTHS AS FOLLOWS:
   BUNDLED BARS, THREE OR LESS: Ld x 1.2
   BUNDLED BARS, FOUR OR MORE: Ld x 1.33
   INDIVIDUAL BAR SPLICES WITHIN A BUNDLE SHALL NOT OVERLAP.
7. LAP SPLICES ARE NOT ALLOWED FOR TIES AND STIRRUPS

B5 — 3747_01 Reinforcing Lap Splice Schedule — SCALE: NONE

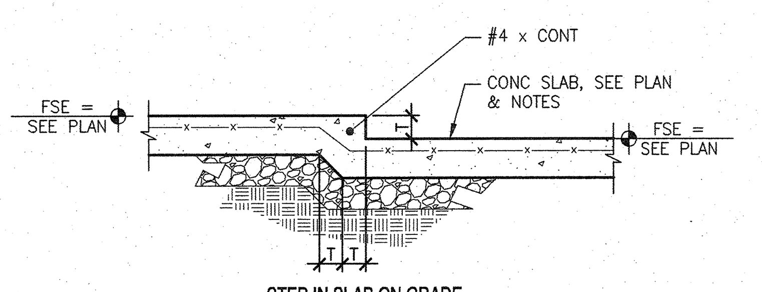

STEP IN SLAB ON GRADE

SLAB STEP DETAIL

A1 — 3677_05 C-SLBSTP — SCALE: 3/4" = 1'-0"

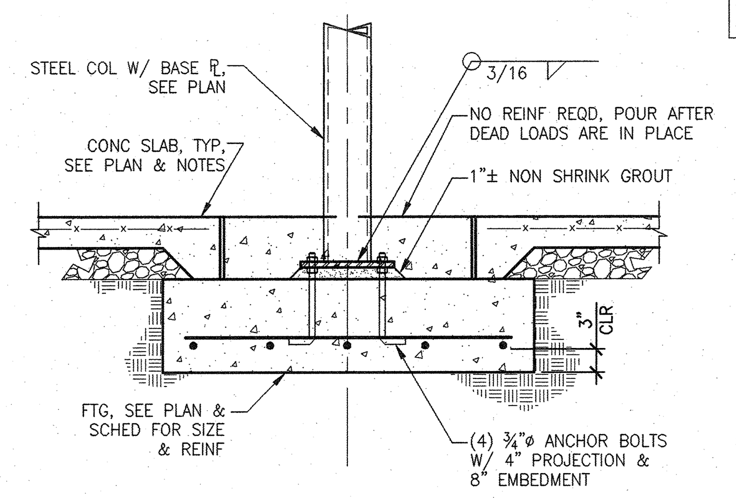

A2 — 4331.01 — SCALE: 3/4" = 1'-0"

NOTE:
SEE DTL **A6/S201** FOR ADDITIONAL INFO NOT SHOWN

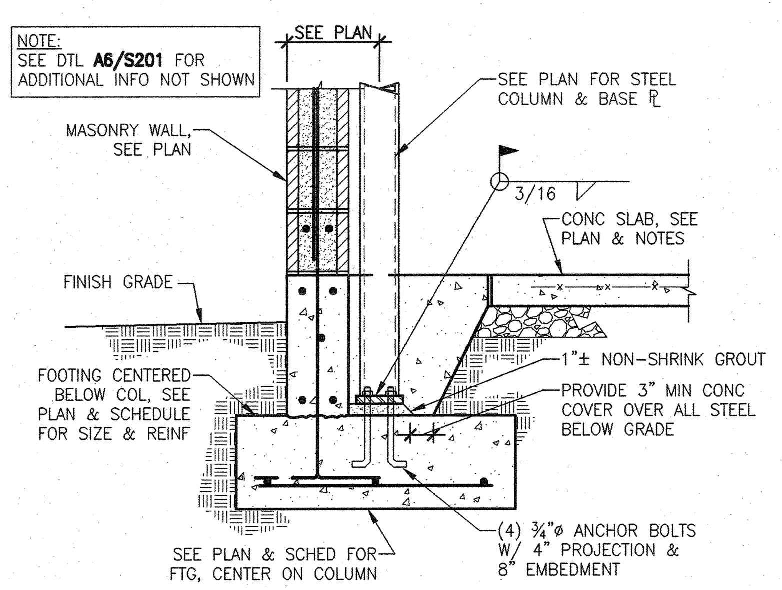

A3 — 3143_03 — SCALE: 3/4" = 1'-0"

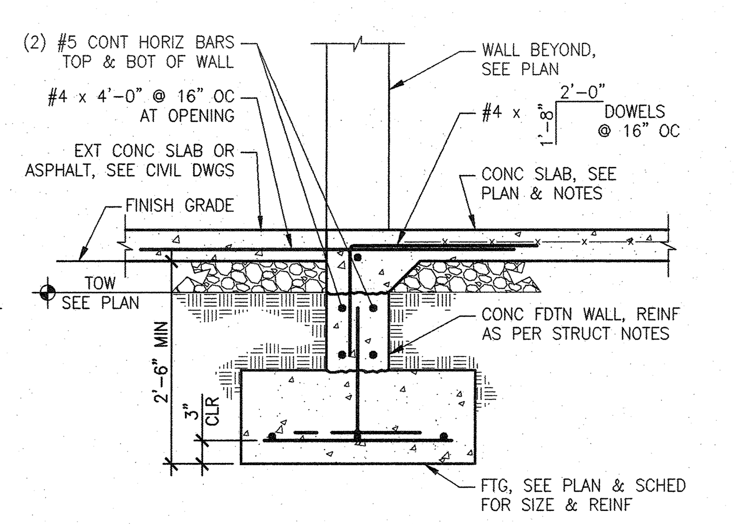

A4 — 3632.02 — SCALE: 3/4" = 1'-0"

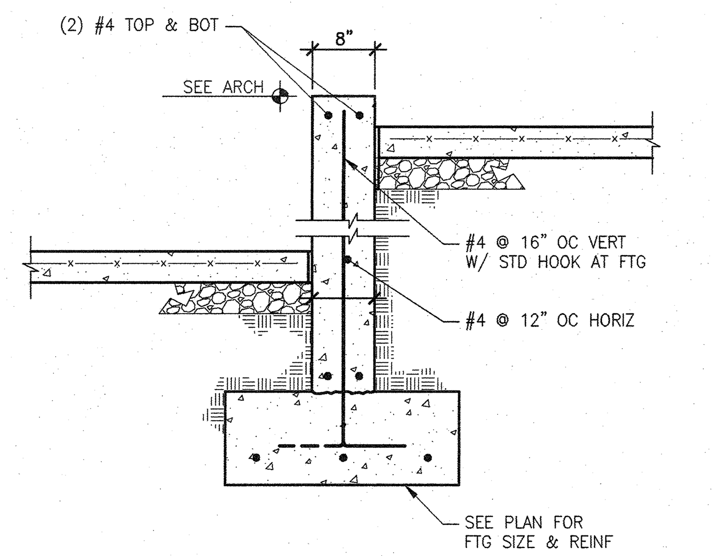

A5 — SCALE: 3/4" = 1'-0"

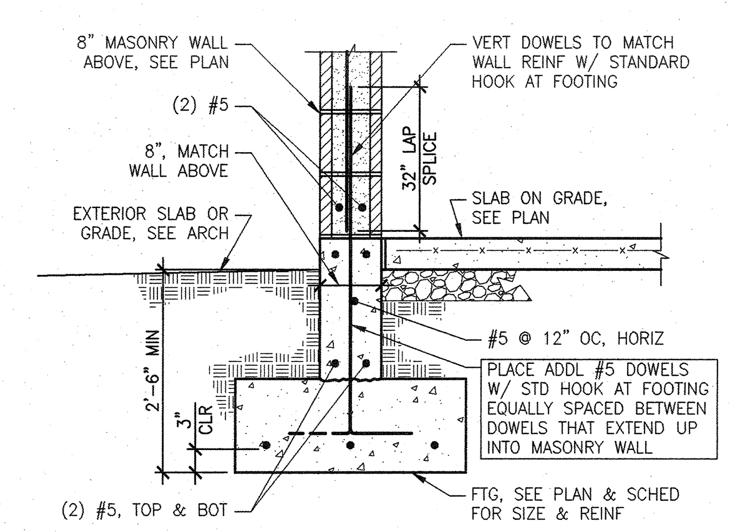

A6 — SCALE: 3/4" = 1'-0"

CALDER RICHARDS
CONSULTING ENGINEERS
634 SOUTH 400 WEST, SUITE 100, SALT LAKE CITY, UT 84101
T: 801.466.1699 F: 801.467.2495

ALL DRAWINGS, PLANS AND DETAILS ARE INSTRUMENTS OF SERVICE AND SHALL REMAIN THE PROPERTY OF CALDER RICHARDS CONSULTING ENGINEERS AND ARE NOT SUITABLE FOR REUSE NOR INTENDED FOR ANY OTHER PROJECT.

NEW HEBER CITY LIQUOR STORE

DEPT. OF ALCHOLIC BEVERAGE CONTROL
HEBER CITY, UT

FRANK N MURDOCK JR Architect & Associates
975 East 100 South Suite 100, Salt Lake City, Utah 84102 TEL: (801) 532-4441 FAX (801) 532-4220

STRUCTURAL DETAILS

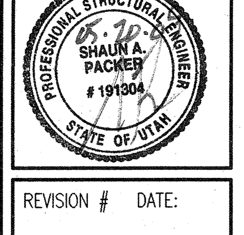

REVISION # DATE:

DFCM PROJECT NO.:
08224030
CONSTRUCTION DOCS
FILE NAME: S201.dwg
PLOT SCALE: AS NOTED
DRAWN BY: JRS
CHECKED BY: SP
DATE: MAY 20, 2009

S201

X:\Project Files\2009\09023.03 DABC - Heber City\Drawings\S201.dwg, S201, 5/20/2009 3:00:40 PM

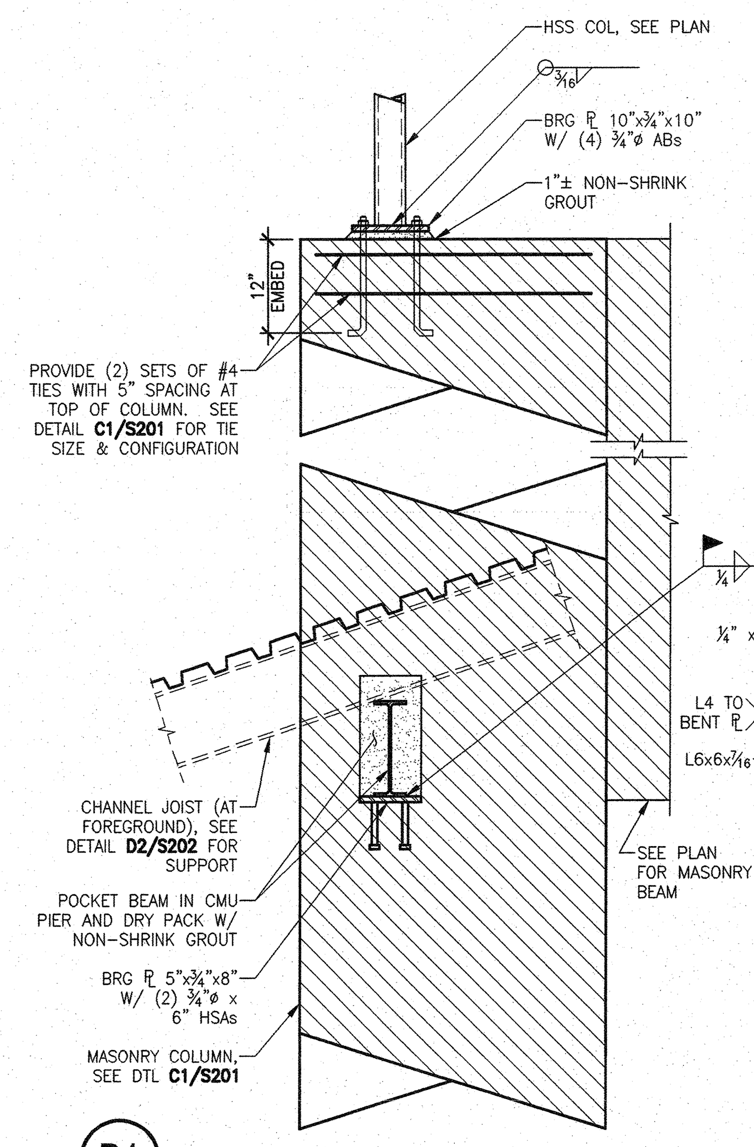

D1 SCALE: 3/4" = 1'-0"

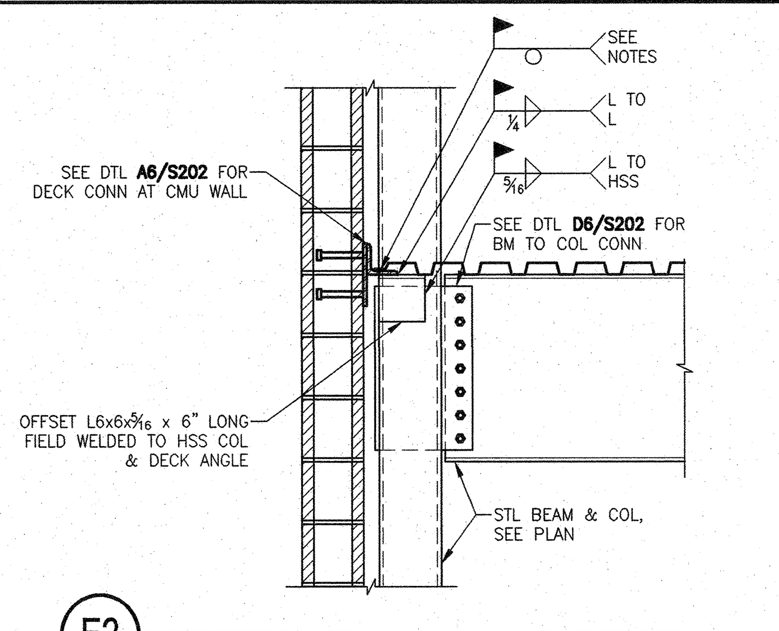

E2 SCALE: 3/4" = 1'-0"

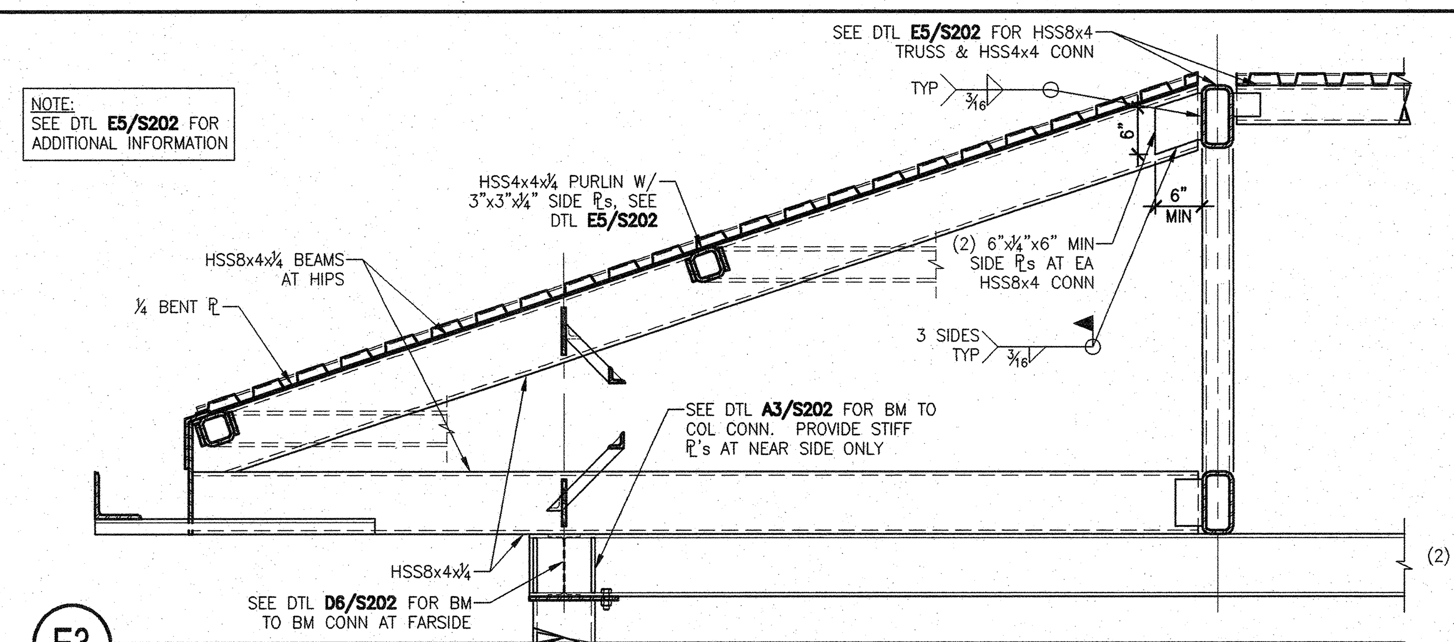

E3 SCALE: 3/4" = 1'-0"

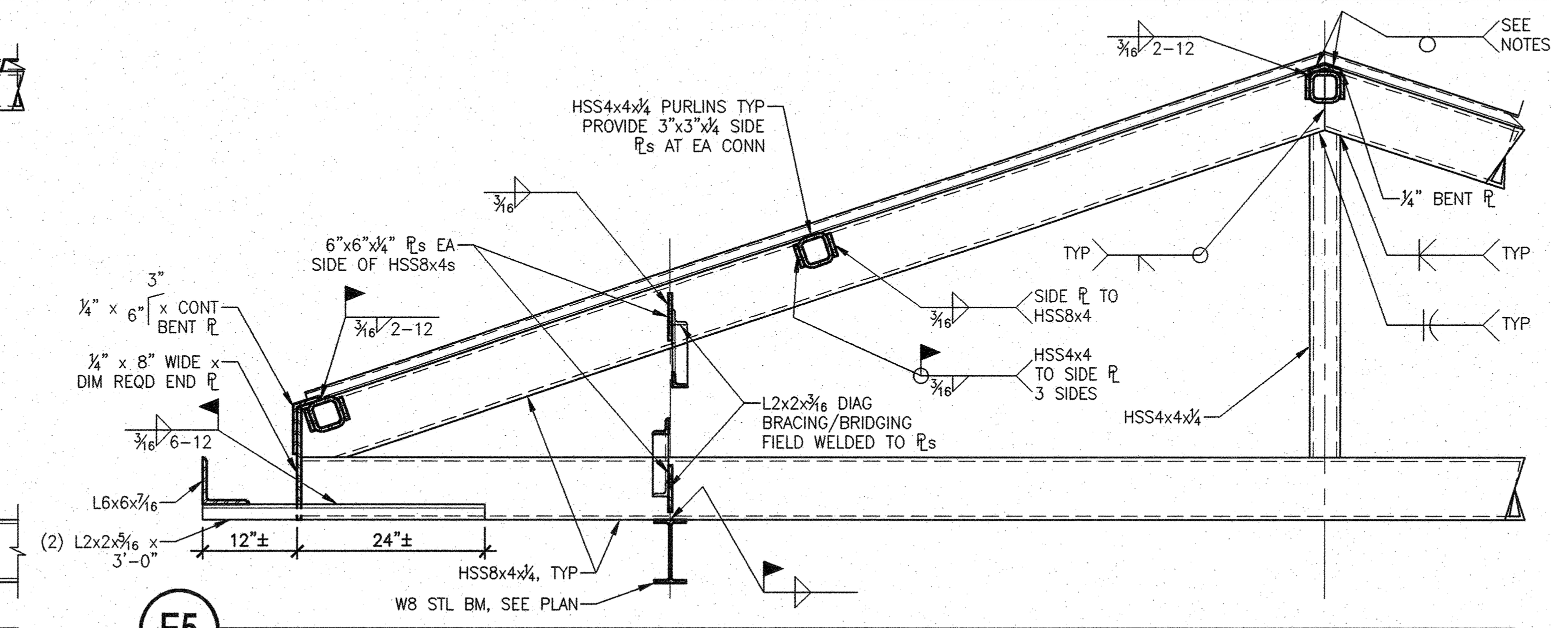

E5 SCALE: 3/4" = 1'-0"

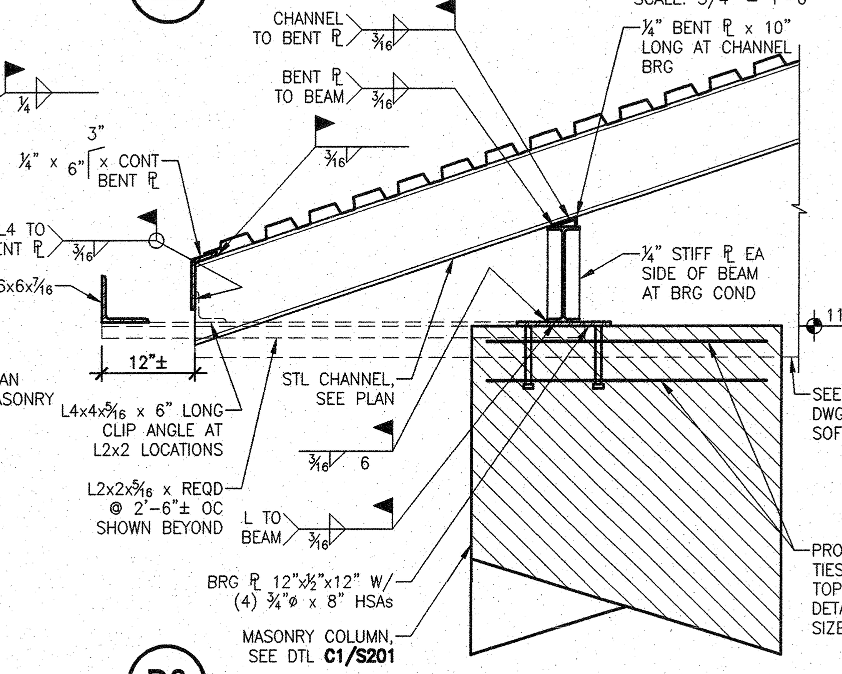

D2 4452_02 MR-OPNG3 SCALE: NONE

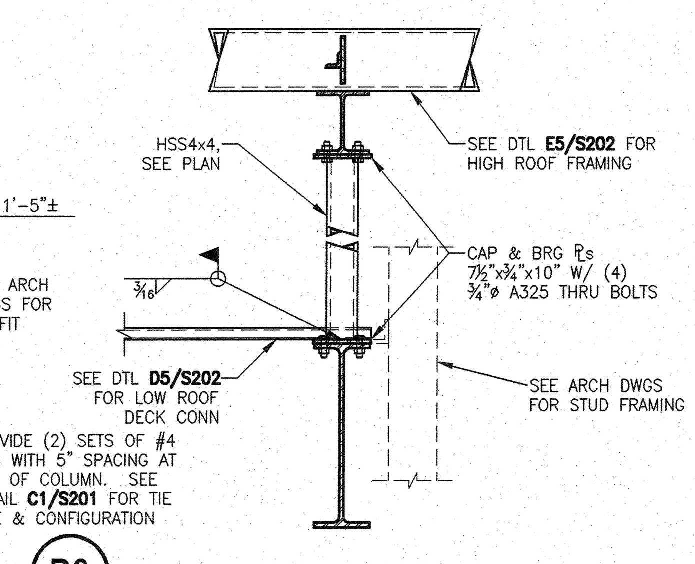

D3 SCALE: 3/4" = 1'-0"

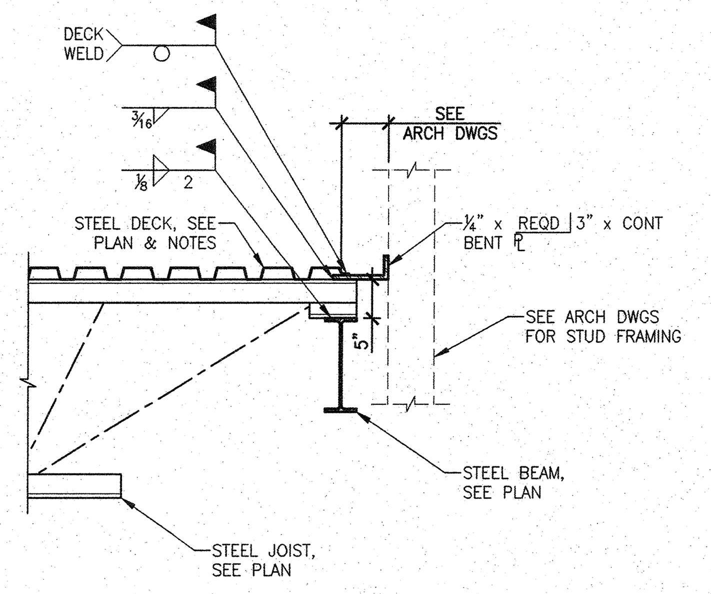

D4 SCALE: 3/4" = 1'-0"

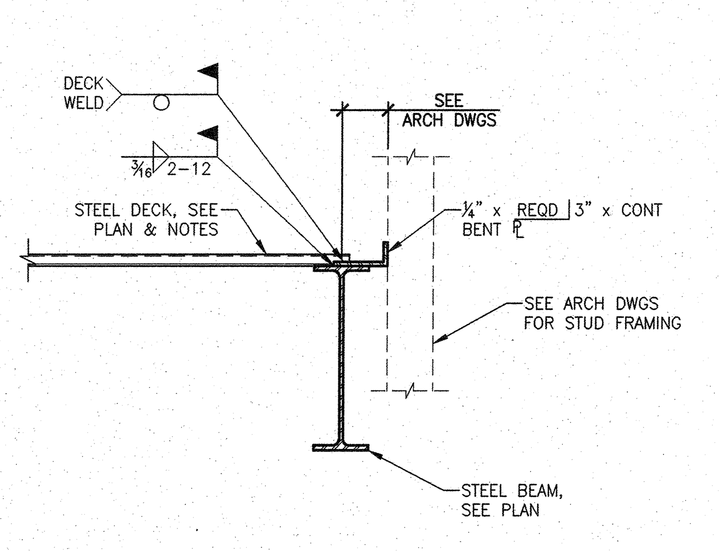

D5 SCALE: 3/4" = 1'-0"

BOLT SCHEDULE		
BEAM SIZE	SHEAR BOLTS	WELD SIZE
W8, W10	(2) 3/4"ø	1/4"
W12, W14	(3) 3/4"ø	1/4"
W16	(4) 3/4"ø	1/4"
W18	(5) 3/4"ø	1/4"
W24	(7) 3/4"ø	1/4"

BOLT SCHEDULE NOTES:

1. SEE FRAMING PLANS FOR BEAM AND/OR COL SIZES.
2. ALL BOLTS SHALL BE A325-N, UNO.
3. DECK AND JOIST NOT SHOWN.
4. BEAM MAY OCCUR HIGHER FOR DECK BEARING COORD W/ PLAN.
5. SLOPE BEAM OR CHANNEL MAY OCCUR, SEE PLAN.

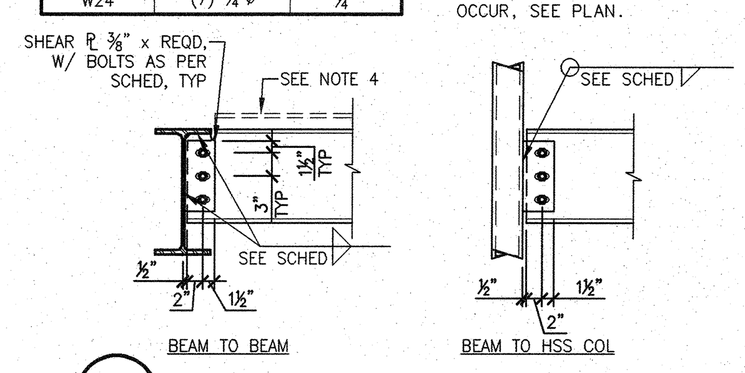

D6 4744_03 S-BMCON1 SCALE: 3/4" = 1'-0"

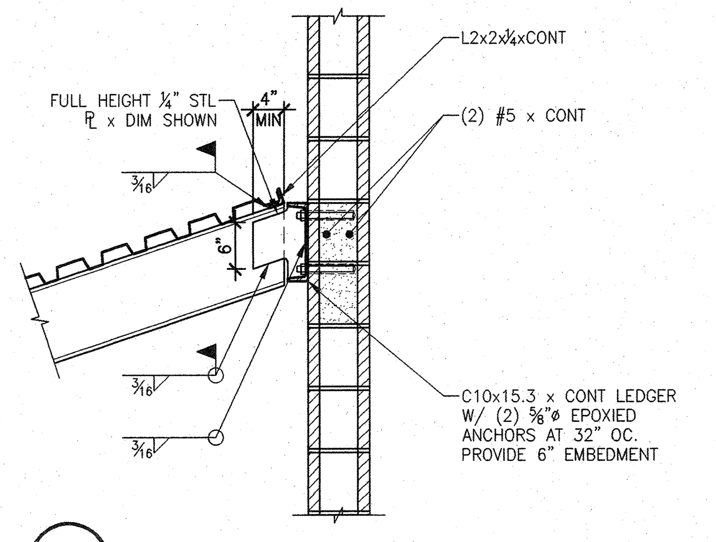

C1 SCALE: 3/4" = 1'-0"

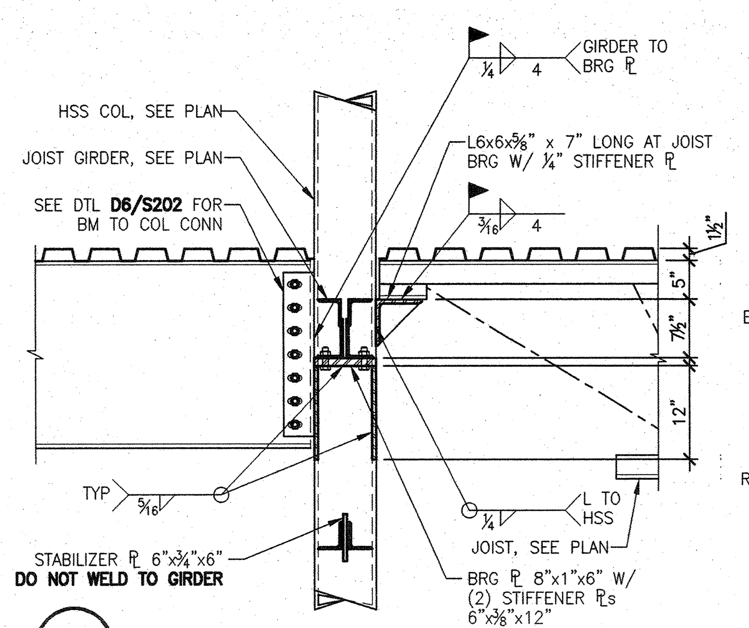

C2 4345_04 SCALE: 3/4" = 1'-0"

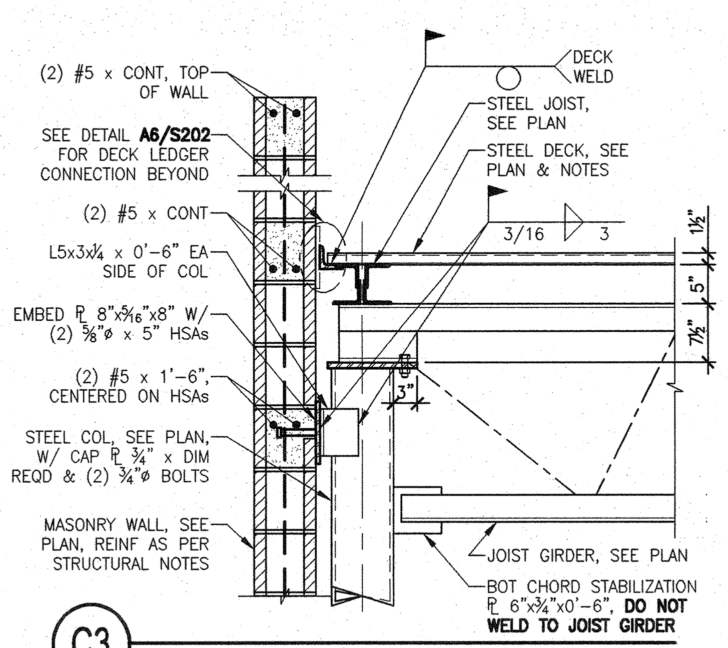

C3 4345_01 SCALE: 3/4" = 1'-0"

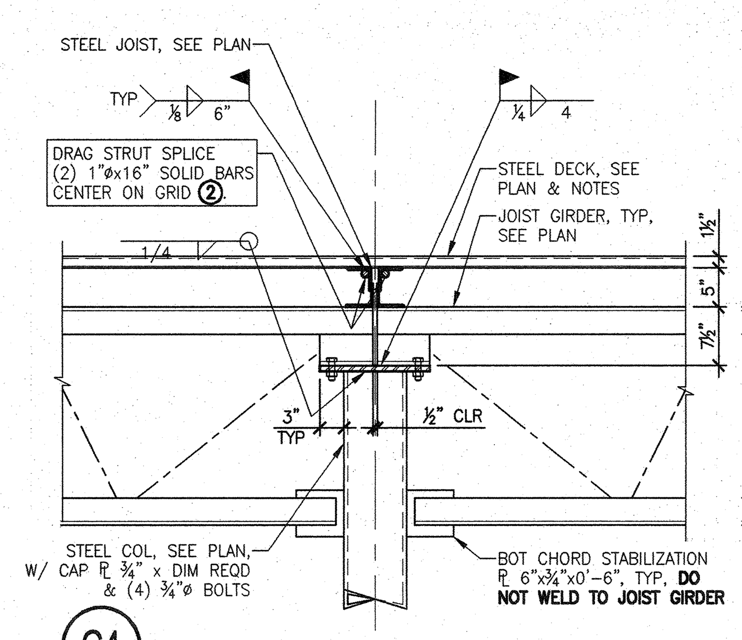

C4 4345_02 SCALE: 3/4" = 1'-0"

MASONRY BEAM SCHEDULE						
MARK	WIDTH	DEPTH	REINFORCEMENT			NOTES
			BOTTOM HORIZONTAL	TOP HORIZONTAL	VERTICAL	
MB-1	WALL	16"	(2) #5	_	MATCH WALL VERTS	TYPICAL, UNO
MB-2	WALL	24"	(2) #5	(2) #5	#4 x S @ 16"	
MB-3	WALL	32"	(2) #5	(2) #5	#4 x S @ 16"	
MB-4	WALL	48"	(2) #5	(2) #5	#4 x S @ 16"	

MASONRY BEAM NOTES:

1. VERTICAL WALL REINFORCEMENT (SIZE AND SPACING) SHALL BE USED, UNO. VERTICAL REINFORCEMENT ENDS WITH STD MASONRY HOOK AND LAP ABOVE BEAM. WHERE NO WALL OCCURS ABOVE BEAM OR LAP IS NOT POSSIBLE, PROVIDE 180° STD HOOK AT TOP.
2. GROUT BEAMS SOLID FOR DEPTH SHOWN IN SCHEDULE, PLUS AS PER DETAILS, STRUCURAL NOTES AND/OR WALL SCHEDULE.
3. TOP BARS SHALL EXTEND THE GREATER OF SUPPORTING COL LENGTH, 24", OR 48 BAR STD LAP BEYOND FACE OF SUPPORTS AND BE SPLICED WHEN NECESSARY AT MID SPAN. BOTTOM BARS SHALL EXTEND 24" INTO SUPPORTS AND BE SPLICED OVER SUPPORTS WHEN NECESSARY. WHERE THE EXTENSIONS NOTED CANNOT BE PROVIDED, HOOK BARS INTO SUPPORTS.
4. GROUT SIDES OF OPENING SOLID 1"/FT OF OPENING WIDTH, MINIMUM ONE 8" CELL FOR UP TO 8'-0" SPAN, (2) CELLS FOR UP TO 16'-0" SPAN, ETC, UNO. PROVIDE ONE VERTICAL BAR IN EACH GROUTED CELL. SEE PLAN AND SCHEDULE WHERE SPECIAL MASONRY COLS OCCUR AT JAMBS, BELOW BEAM BEARING OR OTHER LOCATIONS.
5. AT MECHANICAL OR OTHER OPENINGS IN WALLS USE MASONRY BEAMS OF SIMILAR SIZE AND REINFORCING AS SHOWN IN THOSE WALLS FOR EQUIVALENT WIDTH OPENINGS, UNO. NO MECHANICAL OR OTHER OPENINGS SHALL BE PLACED BELOW BEAM BEARING OR THROUGH SOLID GROUTED MASONRY BEAM DEPTH.
6. NO DUCTS, OPENINGS, OR PENETRATIONS SHALL OCCUR THROUGH BEAMS UNLESS NOTED ON STRUCTURAL DRAWINGS.
7. MASONRY WALLS ABOVE BEAMS, WHERE OCCUR SHALL HAVE MINIMUM REINFORCING AS PER STRUCTURAL NOTES, UNO.
8. REINFORCING INDICATED IN BEAM SCHEDULE IS IN ADDITION TO STANDARD WALL HORIZONTAL AND VERTICAL REINFORCING.

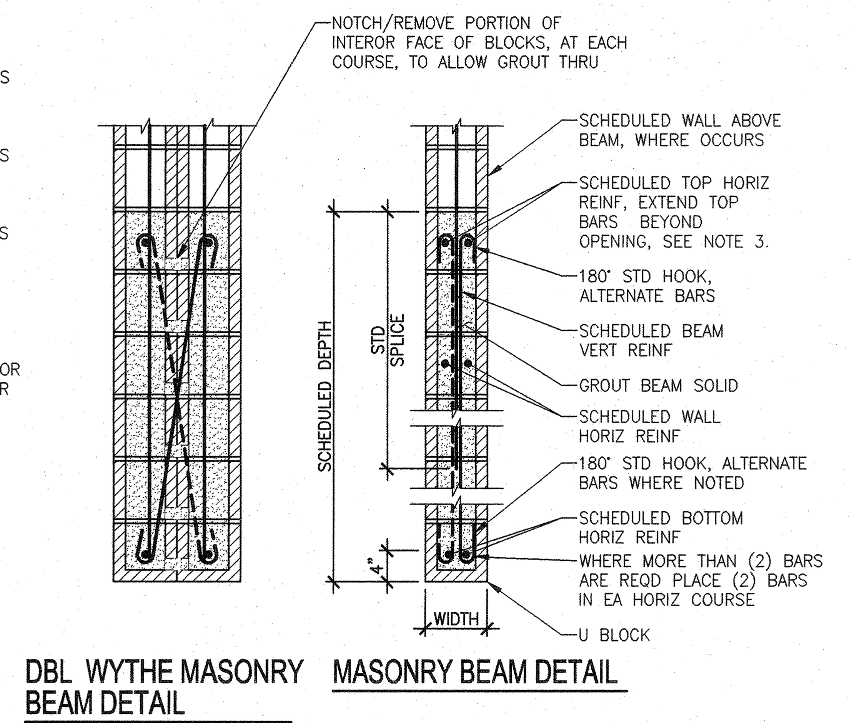

DBL WYTHE MASONRY BEAM DETAIL

MASONRY BEAM DETAIL

B5 5410.00 MASONRY BEAM SCHEDULE SCALE: NONE

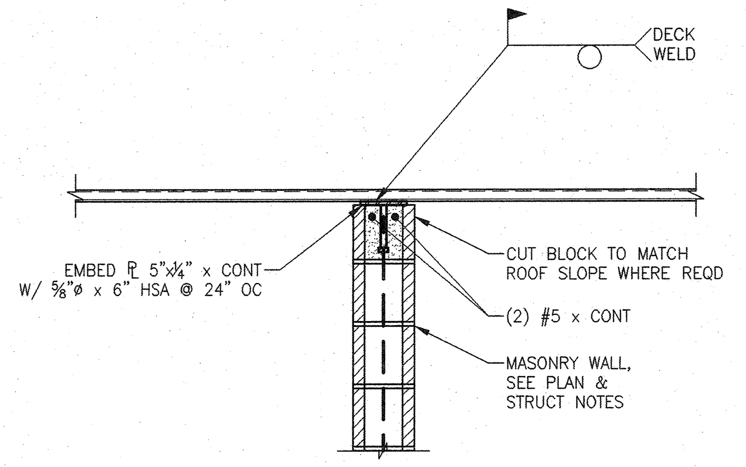

B1 5246_06 SCALE: 3/4" = 1'-0"

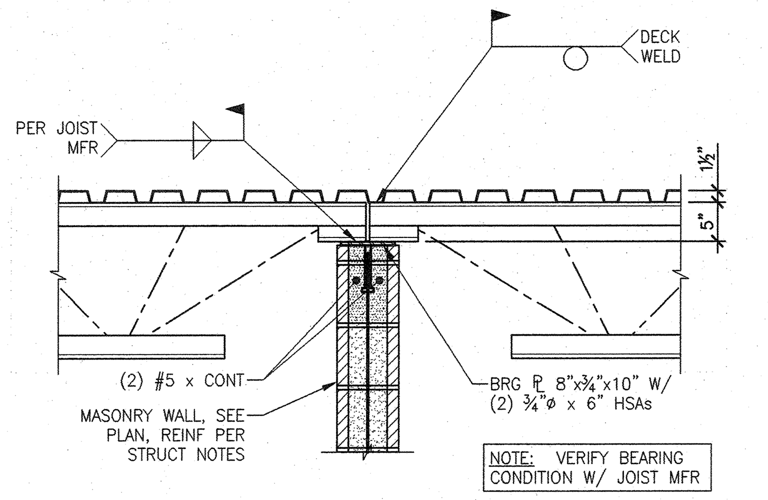

B2 5245_04 SCALE: 3/4" = 1'-0"

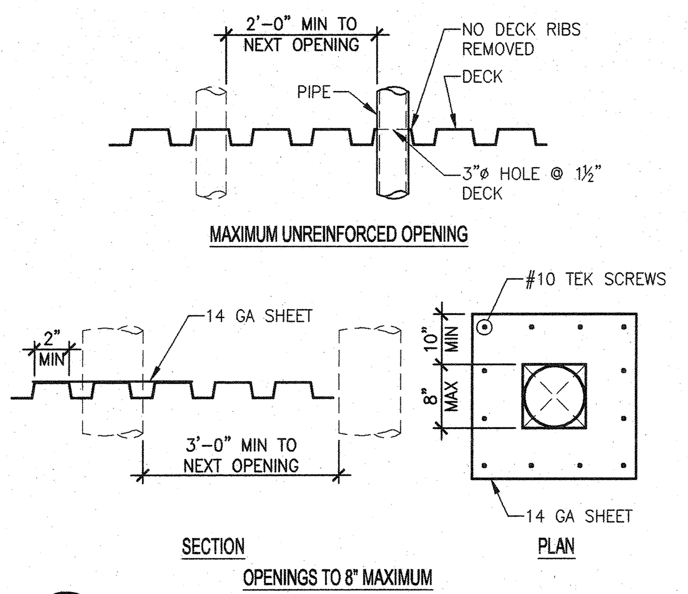

B3 4677_01 SCALE: NONE

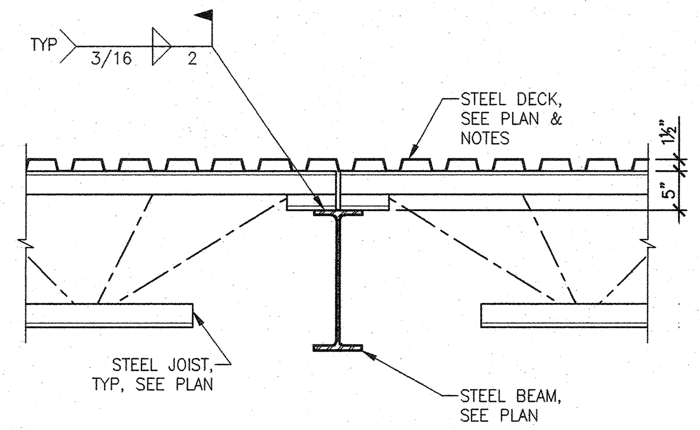

B4 4445_04 SCALE: 3/4" = 1'-0"

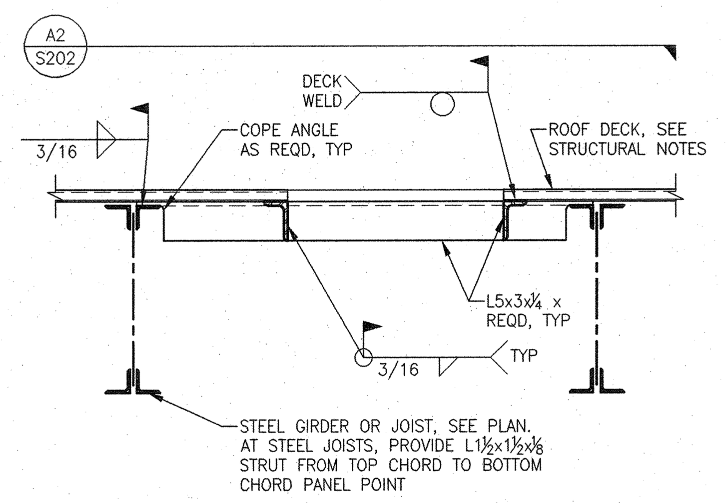

A1 4546_02 SCALE: NONE

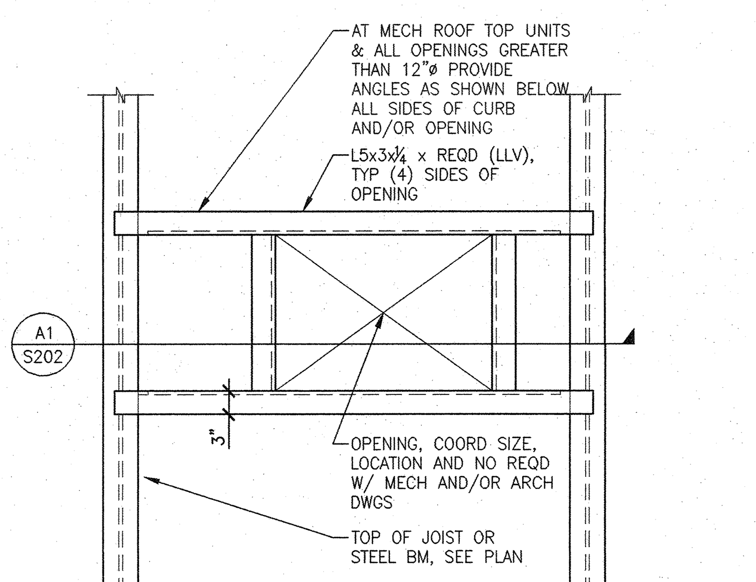

A2 4546_03 SCALE: NONE

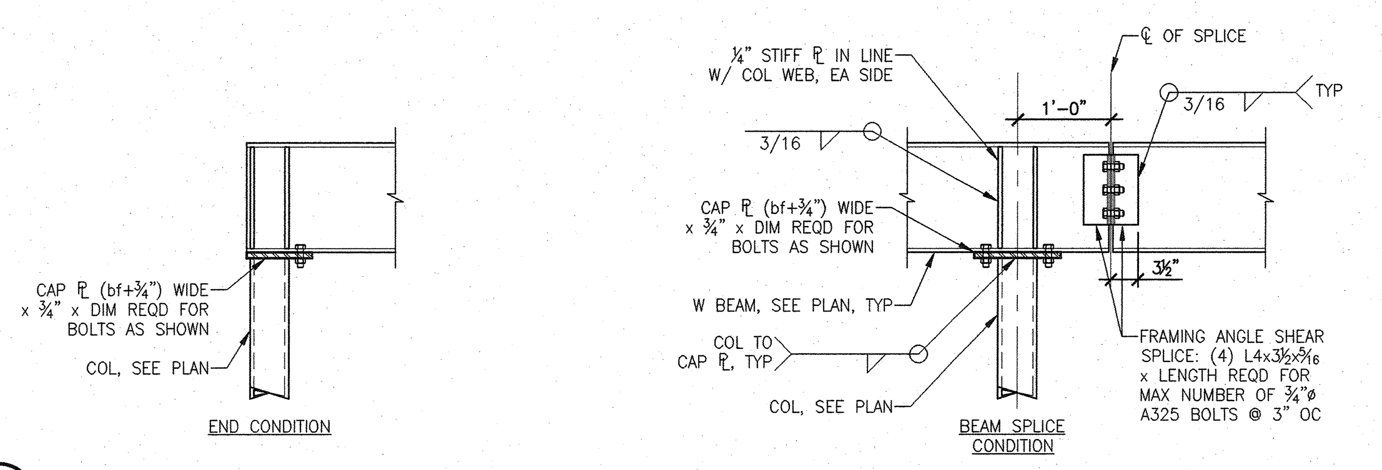

A3 4344_05 S-BMCON2 SCALE: 3/4" = 1'-0"

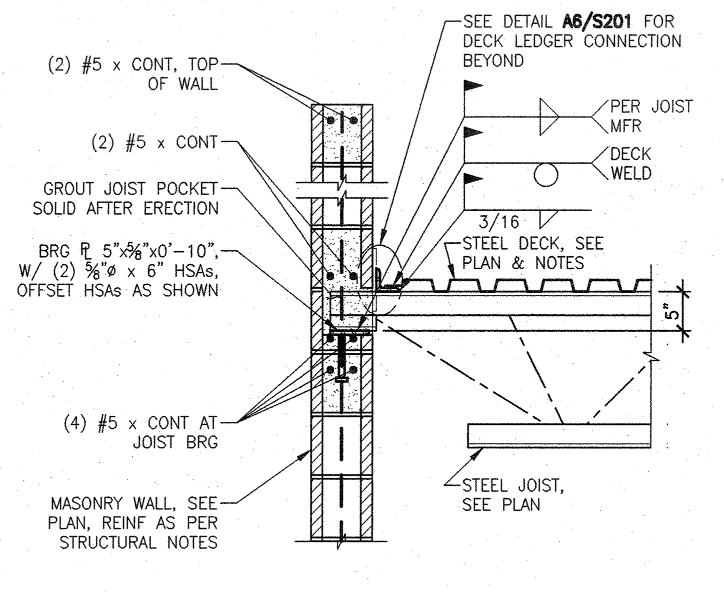

A5 4552.01 SCALE: 3/4" = 1'-0"

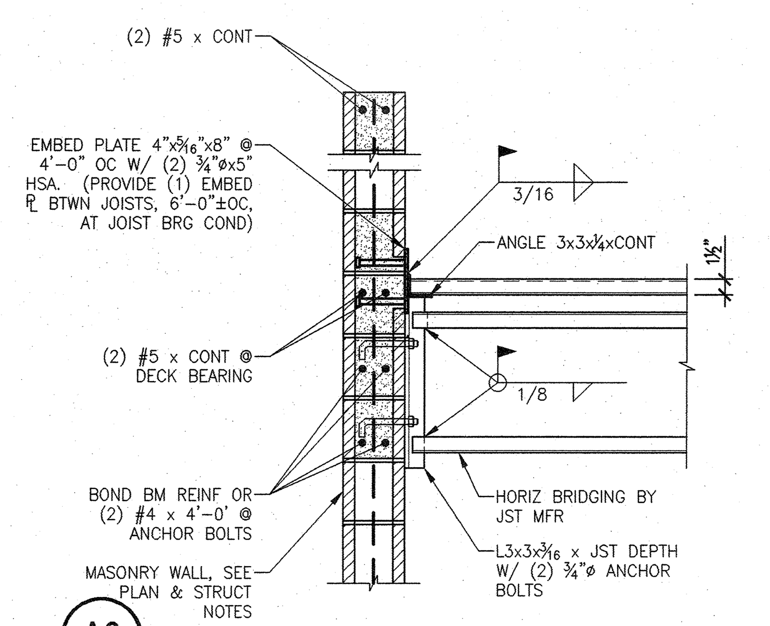

A6 5246_04 Bridging To Wall SCALE: 3/4" = 1'-0"

CALDER RICHARDS
CONSULTING ENGINEERS
634 SOUTH 400 WEST, SUITE 100, SALT LAKE CITY, UT 84101
T: 801.466.1699 F: 801.467.2495

ALL DRAWINGS, PLANS AND DETAILS ARE INSTRUMENTS OF SERVICE AND SHALL REMAIN THE PROPERTY OF CALDER RICHARDS CONSULTING ENGINEERS AND ARE NOT SUITABLE FOR REUSE NOR INTENDED FOR ANY OTHER PROJECT.

NEW HEBER CITY LIQUOR STORE

DEPT. OF ALCHOLIC BEVERAGE CONTROL
HEBER CITY, UT

FRANK N MURDOCK JR Architect & Associates
975 East 100 South Suite 100, Salt Lake City, Utah 84102 TEL: (801) 532-4441 FAX (801) 532-4220

STRUCTURAL DETAILS

PROFESSIONAL STRUCTURAL ENGINEER SHAUN A. PACKER # 191304 STATE OF UTAH 5-20-09

REVISION # DATE:

DFCM PROJECT NO.:
08224030
CONSTRUCTION DOCS
FILE NAME: S202.dwg
PLOT SCALE: AS NOTED
DRAWN BY: JRS
CHECKED BY: SP
DATE: MAY 20, 2009

S202

X:\Project Files\2009\09023.03 DABC - Heber City\Drawings\S202.dwg, S202, 5/20/2009 3:00:43 PM

Copyright (C) 2009 by PVE, Inc. Salt Lake City, Utah. All rights reserved. Unauthorized copying and/or use is illegal and subject to prosecution.

PIPING LEGEND

GATE VALVE		CHILLED WATER SUPPLY	CWS
OS & Y PATTERN GATE VALVE		CHILLED WATER RETURN	CWR
BALL VALVE		CONDENSER WATER SUPPLY	CS
BUTTERFLY VALVE		CONDENSER WATER RETURN	CR
MOTORIZED BUTTERFLY VALVE		HEATING WATER SUPPLY	HWS
HEAT TRACING		HEATING WATER RETURN	HWR
DEIONIZED WATER	DI	WATER TREATMENT	WT
CHECK VALVE (SWING OR LIFT AS REQ'D.)		FIRE DEPT. HORN & LIGHT	
SOLENOID VALVE		HOT GAS	HG
AUTOMATIC CONTROL VALVE (2-WAY)		FLEXIBLE PIPE CONNECTION	
AUTOMATIC CONTROL VALVE (3-WAY)		REDUCED PRESSURE BACKFLOW PREVENTER	RPBP
PRESSURE REDUCING VALVE		DIRECTION OF FLOW	
P & T RELIEF VALVE		ELBOW DOWN	
AIR VENT (AUTOMATIC)		ELBOW UP	
REFRIGERANT LIQUID	RL	PIPE CAP	
REFRIGERANT SUCTION	RS	TEE DOWN	
THERMAL EXPANSION VALVE		UNION	
STRAINER		DOMESTIC COLD WATER	
CIRCUIT SETTER		DOMESTIC HOT WATER	
FLOW METER		HOT WATER CIRC.	
PET COCK OR GAUGE COCK		TEMPERED WATER	T
PRESSURE GAUGE W/GAUGE COCK		SANITARY (PLBG) VENT	
THERMOMETER		SANITARY SEWER ABOVE GRADE	
TEMPERATURE & PRESSURE TEST PLUG		SANITARY SEWER BELOW GRADE	
IN-LINE PUMP		DRAIN	D
FLOW SWITCH	F	ROOF DRAIN PIPING	RD
AQUASTAT	A	OVERFLOW DRAIN PIPING	OD
HOSE BIBB OR SILLCOCK		STORM DRAIN PIPING ABOVE GRADE	SD
VACUUM	V	STORM DRAIN PIPING BELOW GRADE	SD
FLOOR DRAIN		FIRE SERVICE	F
FLOOR SINK		NATURAL GAS	NG
HOT GAS BYPASS	HGBP	COMPRESSED AIR	CA
WALL CLEANOUT		VENT THROUGH ROOF	
FLOOR OR GRADE CLEANOUT		STEAM	S
GRADE CLEANOUT W/ CONCRETE PAD		CONDENSATE	C
SNOWMELT PIPING @ 8" O.C.		GREASE WASTE	GW
ROOF DRAIN WITH SNOWMELT PIPING INSTALLED INSIDE PIPE		SUB-SLAB DRAINAGE	SSD
		FRENCH DRAIN OR RUBBLE DRAIN	FD

MECHANICAL LEGEND

RETURN OR EXHAUST DUCT DOWN	
RETURN OR EXHAUST DUCT UP	
SUPPLY AIR DUCT DOWN	
SUPPLY AIR DUCT UP	
SPIN-IN FITTING W/MVD	
FLEXIBLE DUCT	
CEILING SLOT DIFFUSER	
CEILING DIFFUSER	
CEILING EXHAUST GRILLE	
CEILING GRILLE	
ACCESS PANEL	
MANUAL VOLUME DAMPER	
MOTORIZED DAMPER	
CEILING MOUNTED GRILLE WITH OBD (OPPOSED BLADE DAMPER) INSTALLED IN GRILLE BY MANUF.	OBD
WALL MOUNTED GRILLE WITH OBD (OPPOSED BLADE DAMPER) INSTALLED IN GRILLE BY MANUF.	OBD
DUCT TRANSITION WITH MIN. LENGTH INDICATED	24"
FIRE DAMPER	F
COMBINATION FIRE/SMOKE DAMPER	FS
SMOKE DAMPER	S
THERMOSTAT OR TEMP SENSOR	T
POINT OF CONNECTION TO EXISTING	N
DETAIL TAG	DETAIL NO. / DRAWING NO.
KEYED NOTE	NOTE NO.
SECTION CUT LINE	SECTION NO. / DRAWING NO.
CONTROL TRANSFORMER	TRX
ROUTE DUCT THROUGH JOISTS	RTJ
DUCT ELBOW W/ TURNING VANES OR RADIUS ELBOW	
DIRECTION OF AIRFLOW BALANCER TO TURN ALL SLOTS IN DIFFUSER FACING DIRECTION NOTED	

GENERAL NOTES

1. N INDICATES POINT OF CONNECTION OF NEW TO EXISTING MECHANICAL.
2. (E) INDICATES EXISTING. (N) INDICATES NEW MATERIAL.
3. COORDINATE ALL FIRE SPRINKLER, DIFFUSER AND GRILLE LOCATIONS WITH REFLECTED CEILING PLAN AND ELECTRICAL DRAWINGS.
4. THIS CONTRACTOR SHALL NOT SHUT-OFF/ PUT OUT OF SERVICE ANY SYSTEMS/SERVICES WITHOUT FIRST COORDINATING ALL DOWNTIME WITH THE OWNER'S PERSONAL.
5. ALL RIGID ROUND DUCTWORK SHALL RECEIVE 1-1/2" - 2.0 LBS/CU.FT. FIBERGLASS DUCT WRAP. ALL RECTANGULAR DUCT SHALL RECEIVE 1" - 1.5 LBS/CU.FT. DUCT LINER, TRIM AND SEAL JOINTS W/ MYLAR LINING. LOW PRESSURE ROUND FLEXIBLE DUCT TO BE 1-1/2" THICK INSULATED AND A MAXIMUM OF 10 FT. LONG. ALL INSULATION TO MEET NFPA 90 PER UL 181-CLASS 1. MEDIUM PRESSURE FLEXIBLE DUCT TO BE INSULATED, RATED FOR 6" W.C. AND SHALL BE STRECHED OUT TO PREVENT ANY KINKS OR OFFSETS (3 FT. MAX. LENGTH).
6. DUCTWORK AND PIPE ROUTING IS APPROXIMATE DIAGRAMATIC AND IS NOT TO BE SCALED. WHERE ALTERNATE ROUTING, OFFSETS AND TRANSITIONS ARE REQUIRED FOR COORDINATION OF ALL WORK, THIS CONTRACTOR SHALL MAKE CHANGES WITHOUT ADDITIONAL COSTS.
7. THIS CONTRACTOR SHALL CLOSELY COORDINATE NEW MECHANICAL WITH ALL NEW AND EXISTING MECHANICAL, ELECTRICAL, ARCHITECTURAL AND STRUCTURAL MEMBERS.
8. THIS CONTRACTOR SHALL FIELD VERIFY ALL MECHANICAL ITEMS PRIOR TO COMMENCING NEW WORK. NO ADDITIONAL COST WILL BE ALLOWED FOR CONTRACTOR'S FAILURE TO BECOME FAMILIAR WITH EXISTING MECHANICAL CONDITIONS.
9. THIS CONTRACTOR SHALL USE SMACNA STANDARDS FOR HIGH PRESSURE DUCT CONSTRUCTION OF SUPPLY DUCTWORK UPSTREAM OF VAV BOX - SEAL CLASS "A". ALL OTHER DUCTWORK SHALL BE CONSTRUCTED ACCORDING TO SMACNA STANDARDS FOR LOW PRESSURE DUCT CONSTRUCTION - SEAL CLASS "B".
10. ALL MECHANICAL SYSTEMS SHALL BE INSTALLED IN ACCORDANCE WITH ALL CURRENT LOCAL CODES.
11. THIS CONTRACTOR SHALL PROVIDE SUBMITTALS ON ITEMS LISTED IN MECHANICAL EQUIPMENT LIST TO THE ENGINEER FOR REVIEW PRIOR TO THE ORDER, PURCHASE OR INSTALLATION OF THESE SAME ITEMS.
12. ALL VAV BOXES AND DIFFUSERS MUST BE BALANCED PER PLAN. PROVIDE BALANCE REPORT TO ENGINEER.
13. DUCT DIMENSIONS SHOWN ARE INSIDE CLEAR DIMENSIONS.
14. M.C. IS TO READ ALL KEYED NOTES ON ALL SHEETS BEFORE SUBMITTING BID.
15. SEISMIC REQUIREMENTS SHALL MEET SEISMIC RESTRAINT PROVISIONS OF IBC 1613.1 FOR ALL PLUMBING AND MECHANICAL SYSTEMS. (NO MECHANICAL OR PLUMBING SYSTEMS SHALL BE SUPPORTED DIRECTLY FROM ROOF DECK.)

PLUMBING FIXTURE CONNECTION SCHEDULE

	DESCRIPTION	CONNECTION SIZE				SPECIFICATIONS
		COLD WATER	HOT WATER	WASTE	VENT	
WC-1	WATER CLOSET (HANDICAP)	1½"	N/A	4"	3"	K-4302, SEAT: 1655/C, FLUSH VALVE: ZURN ZR-6000XL-WSI (INSTALL FLUSH HANDLE TO BE ON OPEN SIDE)
U-1	WALL MOUNTED URINAL (ADA) AUTOMATIC FLUSH VALVE	¾"	N/A	2"	1½"	URINAL: KOHLER DEXTER MODEL K-5016-ET ELONGATED URINAL WITH TOP "A" SPUD 1.0 GPF. FLUSH VALVE: KOHLER MODEL: K-10861 BATTERY POWERED. MOUNT AT 17" A.F.F.
L-1	LAVATORY	½"	½"	1½"	1¼"	KOHLER: GREENWICH WALL MOUNT K-2031-N W/ ACCESSORY MODEL #1002G FOR HANDICAP INSTALLATION & K-8998 TRAP FAUCET: SYMMONS ULTRA SENSE S-6000-G W/ GRID DRAIN POWER HYDROGUARD SERIES 480 TEMPERING VALVE.
HB-1	HOSE BIBB	¾"	N/A	N/A	N/A	WOODFORD: MODEL 74P-¾
FD-1	FLOOR DRAIN	N/A	N/A	SEE PLANS	N/A	J. R. SMITH 2005 W/ 405NB NICKEL/BRONZE STRAINER AND TRAP PRIMER
FS-1	FLOOR SINK	N/A	N/A	SEE PLANS	N/A	J. R. SMITH 3140-12-Y W/ NICKEL/BRONZE TOP/ ½ GRATE AND TRAP PRIMER
SC-1	SILLCOCK	¾"	N/A	N/A	N/A	J. R. SMITH 5509QT (w/ INTEGRAL VACUUM BREAKER AND STAINLESS STEEL BOX)
WCO-1	WALL CLEAN OUT	N/A	N/A	SEE PLANS	N/A	J. R. SMITH 4530
FCO-1	FLOOR CLEAN OUT	N/A	N/A	SEE PLANS	N/A	J. R. SMITH 4023
RD-1	ROOF DRAIN	N/A	N/A	SEE PLANS	N/A	J.R. SMITH 1010Y - C - R - CI DOME PROVIDE CAST IRON DOME.
OD-1	OVERFLOW DRAIN	N/A	N/A	SEE PLANS	N/A	J.R. SMITH 1080Y - C - R - CI DOME · PROVIDE CAST IRON DOME.
DSN-1	DOWNSPOUT NOZZLE	N/A	N/A	SEE PLANS	N/A	J.R. SMITH 1770
WHA	WATER HAMMER ARRESTORS	AS REQUIRED	AS REQUIRED	N/A	N/A	J. R. SMITH 5020
SS-1	SERVICE SINK	¾"	¾"	3"	2"	KOHLER: K-6710 W/ K-9142 STRAINER FAUCET: CHICAGO FAUCET MODEL # 897-RCF
S-1	SINK (SS 2 COMPARTMENT)	½"	½"	2"	1½"	JUST: DLX-1829-A-GR WITH J35 STRAINER FAUCET: CHICAGO FAUCET MODEL # 786-SUE29CP PROVIDE W/ GARBAGE DISPOSAL UNIT GDU-1: ISE MODEL PRO 77, 1 hp, 115 V, 1Ø, 9.0 amps
EWC-1	ELECTRIC WATER COOLER	½"	N/A	1½"	1¼"	SUNROC: NUCA-8-BL (BI LEVEL FOUNTAIN) 7.9 gph, 4.5 FLA, 415 Watts, 120v - 1Ø, R-134A
MB-1	ICE MAKER BOX	½"	N/A	N/A	N/A	OATEY MODEL 38608 W/ 1/4 TURN VALVE AND WATER HAMMER ARRESTOR

NOTE: ALL PLUMBING FIXTURES ARE TO HAVE ¼ TURN STOPS INSTALLED (NO EXCEPTIONS TAKEN).

ROOF TOP UNIT SCHEDULE RTU-

PLAN CODE	UNIT TONAGE	TOTAL CFM	EXTERNAL STATIC PRESSURE	DESIGN CRITERIA			LEAVING AIR TEMP	EER	SENSIBLE COOLING CAPACITY (MBH)	HEATING CAPACITY		ELECTRICAL			DIMENSIONS (in.)			OPER. WEIGHT (lbs.)	MANUFACTURER & MODEL NO	REMARKS
				OUTSIDE AIR TEMP.	RETURN AIR DB	RETURN AIR WB				INPUT (MBH)	OUPUT (MBH)	VOLTS PHASE	MCA	MOP	Length	Width	Height			
RTU-1 & RTU-2	8.5	3600	0.6	95	80	62	54.3/53.2	10.2	75.92	166.40	134.78	208 / 3	45.1	60	83	54	55	1,550	TRANE YSC102A3EHA	SEE GENERAL NOTES
RTU-3 thru. RTU-6	5	2,000	0.6	95	80	62	54.3/53.2	10.2	47.41	108.16	86.53	208 / 3	31.5	45	70	45	51	800	TRANE YSC060A3EHA	SEE GENERAL NOTES

GENERAL NOTES:

1. VALUES ARE RATED AT SITE ELEVATION.
2. PROVIDE 10% MINIMUM OUTSIDE AIR SET POINTS.
3. PROVIDE 14" HIGH SEWLF LEVELING FACTORY CURB.
4. PROVIDE ALL WITH CENTRIFUGAL POWER EXHAUST AND ECONOMIZER AS REQUIRED PER THE CURRENT I.E.C.C..
5. PROVIDE FACTORY 2 lb. GAS REGULATOR AND CODE REQUIRED GAS CONNECTION AND GAS TRAIN.
6. PROVIDE COMPRESSOR CRANKCASE HEATER.
7. ALL ROOFTOP UNITS MUST MEET CURRENT ASHRAE ENERGY CODE 90.1 STANDARDS.
8. PROVIDE FACTORY MOUNTED HACR CIRCUIT BREAKER ON 3 TON AND LARGER. PROVIDE FIELD MOUNTED FUSED DISCONNECT ON 2.5 TON AND SMALLER.
9. PROVIDE 7 DAY (AUTO CHANGE OVER) PROGRAMMABLE T-STAT WITH 100 Ft. OF PLENUM RATED T-STAT WIRE.
10. PROVIDE FACTORY MOUNTED CONV. OUTLET TO BE FIELD WIRED.
11. PROVIDE FACTORY SMOKE DETECTOR IN RETURN OPENING OF UNIT AS REQUIRED BY CODE WITH REQUIRED INTERLOCKING WIRING.
12. PROVIDE COIL GUARDS.
13. PROVIDE TXV's ON UNITS 10 TON & SMALLER.
14. IF UNIT DOES NOT HAVE AN ECONOMIZER, UNIT SHALL BE PROVIDED WITH LOW AMBIENT KIT.

AIR DEVICE SCHEDULE

GRILLE NUMBER — GRILLE CFM

PLAN CODE	TYPE & DUTY	NECK SIZE	CEILING TYPE	N.C. LEVEL MAX	MAX. CFM	MANUFACTURER & MODEL NO.	REMARKS
1	SUPPLY	8"Ø	See Plans	30	315	PRICE 8"Ø / RCD / BI2	
2	SUPPLY	10"Ø	See Plans	30	490	PRICE 8"Ø / RCD / BI2	
3	SUPPLY	12"Ø	See Plans	30	630	PRICE 8"Ø / RCD / BI2	
4	SUPPLY	6"Ø	See Plans	30	235	PRICE 6"Ø / 12" x 12" / SCDA / 3 / BI2	
5	SUPPLY	8"Ø	See Plans	30	400	PRICE 8"Ø / 24" x 24" / SCDA / 3 / BI2	
6	SUPPLY	10"Ø	See Plans	30	545	PRICE 10"Ø / 24" x 24" / SCDA / 3 / BI2	
7	EXHAUST	6"Ø	See Plans	16	180	PRICE 6"Ø / 12" x 12" / PDDR / 2 / BI2	PROVIDE OBD
8	RETURN	22" x 22"	See Plans	10	1340	PRICE 22" x 22" / 24" x 24" / PDDR / 3 / BI2	PROVIDE W/SOUND BOOT
9	SUPPLY	16" x 6"	Side Wall	30	415	PRICE 16" x 6" / SLOTD / F / L / A / BI2	

EXHAUST FAN SCHEDULE EF-

PLAN CODE	AREA SERVED	TYPE	CFM @ ELEV.	ESP	FAN RPM	MOTOR			SONES	DAMPER TYPE	METHOD OF CONTROL	OPENING SIZE	OPERATING WT. (LBS.)	MANUFACTURER / MODEL	ACCESSORIES
						WATTS	H.P.	VOLTAGE & PHASE							
EF-1 thru. EF-3	SEE PLANS	ROOF CENTRUGAL	100	.25"	910	NA	1/6	120 / 1	5.2	BACK DRAFT	Switch with lights	12" x 12"	65	PENN BARRY DOMEX DX088	PROVIDE FACTORY 14" CURB

PUMP SCHEDULE P-

PLAN CODE	DUTY	GPM	FEET OF HEAD	PUMP RPM	MOTOR		MANUFACTURER & MODEL NO.	COMMENTS
					H.P.	VOLTAGE & PHASE		
P-1	CIRCULATOR	8	26	3250	1/8	120 / 1	TACO 0013	BRONZE FITTED

GAS FIRED UNIT HEATER SCHEDULE UH-

PLAN CODE	HEATING MBH OUTPUT REQ'D. ELEVATION	MANUFACTURER & MODEL NO.	SPECIFIED UNIT CAP.		CFM (STD.)	THROW AT 12' MOUNTING (FT.)	ELECTRICAL		FLUE SIZE / TYPE	SIZE				REMARKS
			INPUT (S.L.) (MBH)	OUTPUT (S.L.) (MBH)			VOLT/ PHASE	FAN H.P.		LENGTH	WIDTH	HEIGHT	WEIGHT	
UH-1	80	MODINE PD 100	100	80	1,460	41	120 / 1	1/12	6"Ø / "B"	30"	18"	23"	110 lbs.	W/T-STAT, PIPE HANGER KIT AND FACTORY 2LB. GAS TRAIN.

THIS APPLIES TO ALL:

ALL EQUIPMENT, SUPPLIES AND INSTALL ION SHALL COMPLY TO DFCM STANDARDS. THE DFCM STANDARDS CAN BE FOUND AT WWW.DFCM.UTAH.GOV. IT IS OUR KNOWLEDGE THAT THESE DRAWINGS MEET THE DFCM STANDARDS, BUT DOES NOT RELIEF CONTRACTOR FROM REFEREENG AND FOLLOWING DFCM STANDARDS.

ELECTRIC WATER HEATER SCHEDULE EWH-

PLAN CODE	INPUT (KW)	RECOVERY RATE (GAL/HR)	TEMP RISE (°F)	DIMENSIONS	ELECTRICAL		MANUFACTURER & MODEL NO.	REMARKS
					VOLT & PHASE	AMPS		
EWH-1	2.500	13	80	26" x 18" x 21"	208 / 1	10.4	A.O. SMITH DEL-15	WITH AMTROL ST-5 EXPANSION TANK

PVE, Inc.
Consulting Mechanical Electrical Engineers
1040 North 2200 West, Suite 100
Salt Lake City, UT 84116
Phone: (801) 359-3158
Fax: (801) 521-4114

MECHANICAL SCHEDULES AND GENERAL NOTES

NEW HEBER LIQUOR STORE
DEPT. OF ALCOHOLIC BEVERAGE CONTROL
HEBER, UTAH

FRANK N MURDOCK JR ■ Architect & Associates
975 East 100 South Suite 100, Salt Lake City, Utah 84102 TEL: (801) 532-4441 FAX (801) 532-4220

REGISTERED PROFESSIONAL ENGINEER ALAN D. SPENDLOVE 166911 STATE OF UTAH

REVISION # DATE:

DFCM PROJECT NO.: 08224030
CONST. DOC.
FILE NAME: N/A
PLOT SCALE: 1:96
DRAWN BY: AJG
CHECKED BY: AJG
DATE: MAY 2009

M0.1

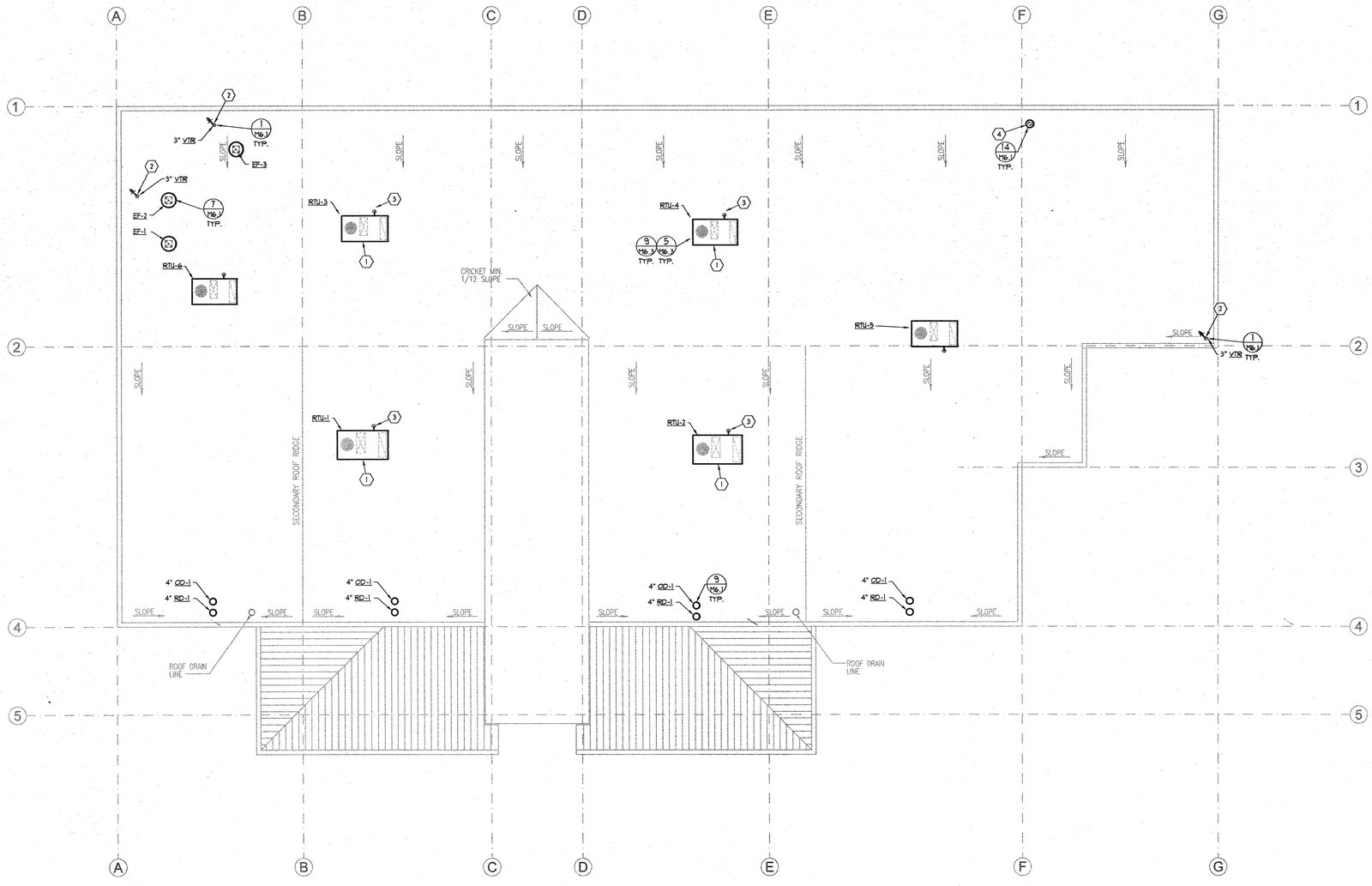

KEYED NOTES:

1. COORDINATE WITH ARCH's PLANS FOR FINAL LOCATIONS OF ALL EQUIPMENT. (TYPICAL).
2. VENT THOUGH ROOF. WATER PROOF AND SEAL ALL PENETRATIONS AS REQUIRED. (TYPICAL).
3. COORDINATE ALL OTHER TRADES AND DROP GAS PIPING DOWN THROUGH ROOF AND SEAL PENETRATION WATER TIGHT. PROVIDE GAS CONNECTION TO ROOF TOP UNIT AS REQUIRED TO MEET CODE. (TYPICAL).
4. 6" TYPE "B" FLUE RISER UP THROUGH ROOF. SEAL WATER TIGHT.

GENERAL NOTES:

1. CONTRACTOR TO COORDINATE ALL INSTALLATIONS WITH OTHER TRADES.
2. PROVIDE CODE REQUIRED DIRT LEG AT ALL GAS CONNECTIONS TO MECHANICAL EQUIPMENT.
3. SEISMIC REQUIREMENTS SHALL MEET SEISMIC RESTRANT PROVISIONS OF IBC 1613.1 FOR ALL PLUMBING AND MECHANICAL SYSTEMS.

1 / M1.1 MECHANICAL ROOF PLAN

SCALE: 1/8" = 1' - 0"

6' 0 4' 8' 12' 16'

PVE Inc.
Consulting Mechanical Electrical Engineers
1040 North 2200 West, Suite 100
Salt Lake City, UT 84116
Phone: (801) 359-3158
Fax: (801) 521-4114

NEW HEBER LIQUOR STORE

DEPT. OF ALCOHOLIC BEVERAGE CONTROL
HEBER, UTAH

MECHANICAL ROOF PLAN

FRANK N MURDOCK JR ■ Architect & Associates
975 East 100 South Suite 100, Salt Lake City, Utah 84102 TEL: (801) 532-4441 FAX (801) 532-4220

REGISTERED PROFESSIONAL ENGINEER
ALAN D. SPENDLOVE
166681
STATE OF UTAH
5/21/09

REVISION # DATE:

DFCM PROJECT NO.:
08224030
CONST. DOC.
FILE NAME: N/A
PLOT SCALE: 1:96
DRAWN BY: AJG
CHECKED BY: AJG
DATE: MAY 2009

M1.1

Copyright (C) 2009 by PVE, Inc. Salt Lake City, Utah. All rights reserved. Unauthorized copying and/or use is illegal and subject to prosecution.

Copyright (C) 2009 by PVE, Inc. Salt Lake City, Utah. All rights reserved. Unauthorized copying and/or use is illegal and subject to prosecution.

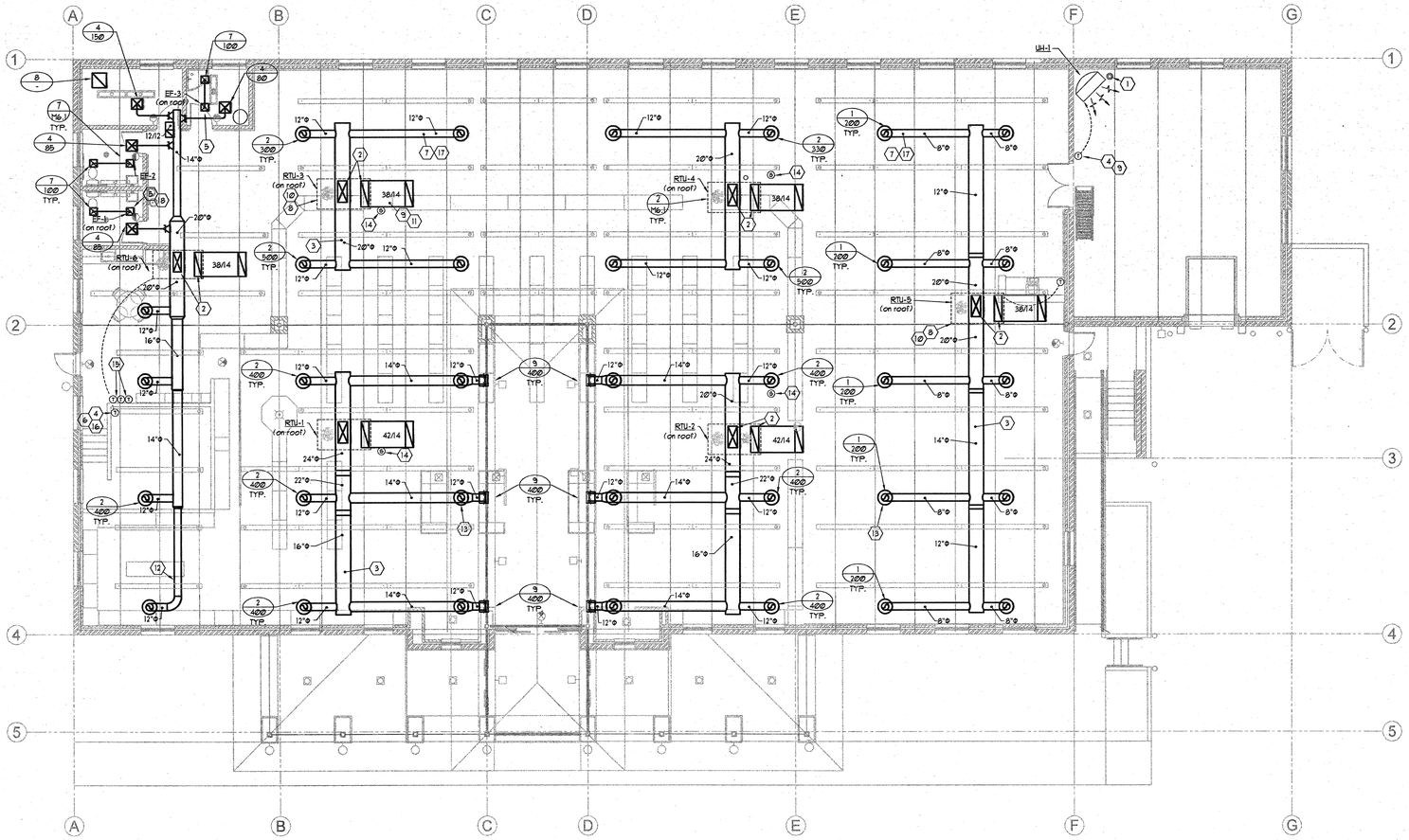

MECHANICAL FLOOR PLAN

1 / M2.1

SCALE: 1/8" = 1' - 0"

6' 0 4' 8' 12' 16'

KEYED NOTES:

1. 6" TYPE "B" FLUE UP THROUGH ROOF SEE DETAIL 6/M6.2
2. PROVIDE AND INSTALL DUCTWORK DROPS DOWN FROM UNIT SIZED FULL SIZE OF UNITS OPENINGS. COORDANITE UNIT LOCATIONS AS REQUIRED TO DROP DOWN BETWEEN STRUCTURE. (TYPICAL)
3. COORDINATE WITH ROOF STRUCTURE AND INSTALL DUCTWORK TIGHT TO BOTTOM OF STRUCTURE. ROUTE MAINS UP IN BETWEEN JOIST. (TYPICAL) OFFSET AND TRANSITION AS REQUIRED.
4. COORDINATE WITH ARCH'S PLANS FOR FINAL ELEVATIONS AND LOCATIONS OF ROBERTSHAW 9715I T-STAT'S. (TYPICAL)
5. 12" x 12" RISER TO EXHAUST FAN ON ROOF. (TYPICAL)
6. PROVIDE LOCKING COVER FOR T-STAT.
7. ROUTE DUCTWORK THOUGH WEBBING OF STRUCTURE. (TYPICAL)
8. OUTLINE OF RTU ON ROOF ABOVE.
9. HOLD DUCTWORK TIGHT TO BOTTOM OF STRUCTURAL. (TYPICAL)
10. COORDINATE WITH ARCH/STRUCTURAL PLANS AS TO FINAL LOCATION/OREIENTATION OF RTU'S. (TYPICAL)
11. PROVIDE 10' OF LINED RETURN AIR DUCTWORK WITH OPENING TURNED UPWARDS ON END.
12. COORDINATE WITH ARCH/STRUCTURAL PLANS TO ROUTE DUCTWORK INTO CEILING OF WINE ROOM.
13. COORDINATE WITH ARCH'S PLANS FOR FINAL ELEVATION OF GRILLES. (TYPICAL).
14. PROVIDE TEMPERATURE SENSOR FOR SPACE TEMP. CONTROL IN RETURN AIR DUCTWORK WITH ADJUSTABLE T-STAT ON WALL BY OFFICE AS SHOWN. (TYPICAL).
15. PROVIDE ROBERTSHAW 9715I T-STAT WITH LOCKING COVER FOR UNITS WITH TEMPERATURE SENSORS AT THIS LOCATION. (TYPICAL).
16. PROVIDE ROBERTSHAW 9715I T-STAT WITH LOCKING COVER. (TYPICAL).
17. M.C. IS NOT TO SUPPORT ANYTHING FROM ROOF DECK UNLESS ENGINEERING IS PROVIDED. SEE DETAILS 1 & 3/M6.4 AND 2, 3 & 11/M6.3. (TYIPCAL).
18. PROVIDE WALL SWITCH WITH 15 MINUTE AUTO DELAY FOR EXHAUST FANS. (TYPICAL)

GENERAL NOTES:

1. ALL EXPOSED DUCTWORK OR DUCTWORK ABOVE GYP. CEILINGS SHALL BE HARD DUCTED.
2. USE YOUNG GEAR TYPE BALANCING REGULATORS ABOVE ALL GYP. BOARD CEILINGS.
3. ALL MEDIUM PRESSURE DUCTWORK SHALL BE HELD TIGHT TO BOTTOM OF STRUCTURE. OFFSET AND TRANSITION AS REQUIRED.
4. OFFSET AND TRANSITION ALL DUCTWORK AND PIPING AS REQUIRED.
5. ALL VALVES SHALL BE LOCATED ABOVE ACCESSIBLE CEILINGS.
6. PROVIDE ACCESS PANELS AS REQUIRED.
7. CONTRACTOR TO COORDINATE ALL INSTALLATIONS WITH OTHER TRADES.
8. CONTRACTOR TO COORDINATE ALL FINAL LOCATION OF T-STAT'S WITH OWNER AND ARCHITECT.
9. CONTRACTOR TO PROVIDE AND INSTALL SOUND BOOTS ON ALL RETURN AIR GRILLES. BOOTS TO BE PAINTED FLAT BLACK.
10. CONTRACTOR TO COORDINATE GRILLES WITH REFLECTED CEILING GRID.
11. CONTRACTOR TO COORDINATE WITH ELECTRICAL AND DO NOT ROUTE DUCTWORK OVER ELECTRICAL EQUIPMENT.
12. SEISMIC REQUIREMENTS SHALL MEET SEISMIC RESTRANT PROVISIONS OF IBC 1613.1 FOR ALL MECHANICAL SYSTEMS.

PVE Inc.
Consulting Mechanical Electrical Engineers
1040 North 2200 West, Suite 100
Salt Lake City, UT 84116
Phone: (801) 359-3158
Fax: (801) 521-4114

NEW HEBER LIQUOR STORE

DEPT. OF ALCOHOLIC BEVERAGE CONTROL
HEBER, UTAH

FRANK N MURDOCK JR ■ Architect & Associates
975 East 100 South Suite 100, Salt Lake City, Utah 84102 TEL: (801) 532-4441 FAX (801) 532-4220

HVAC FLOOR PLAN

REGISTERED PROFESSIONAL ENGINEER
ALAN D. SPENGLOVE
164941
STATE OF UTAH

REVISION # DATE:

DFCM PROJECT NO.:
08224030
CONST. DOC.
FILE NAME: N/A
PLOT SCALE: 1:96
DRAWN BY: AJG
CHECKED BY: AJG
DATE: MAY 2009

M2.1

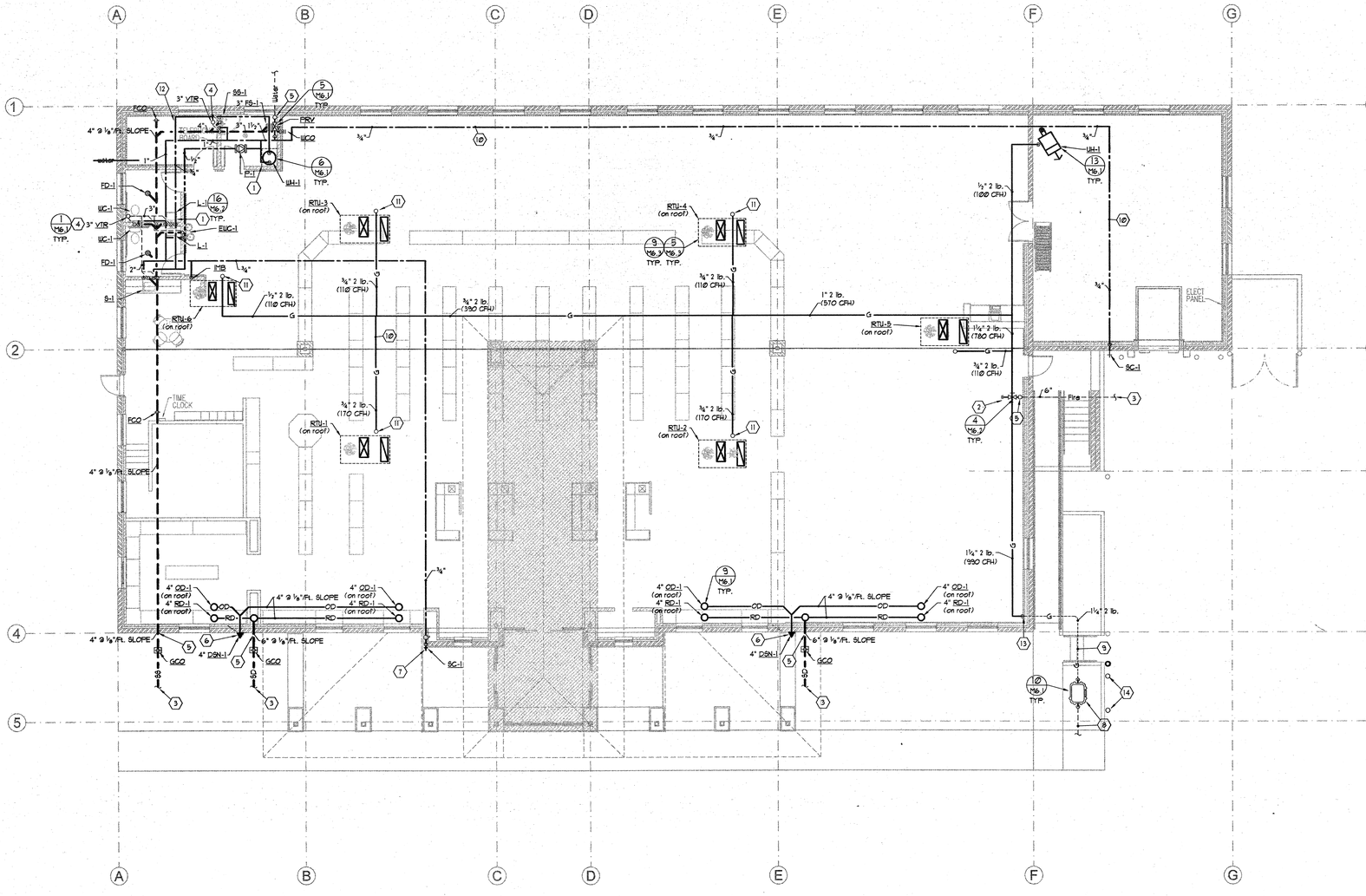

KEYED NOTES:

1. M.C TO PROVIDE 4" THICK HOUSE KEPING UNDER ALL MECHANICAL EQUIPMENT. (TYPICAL).
2. FIRE RISER AND FIRE DEPARTMENT CONNECTION WITH HORN, BELL AND ALARMS. ALL FIRE PROTECTION TO BE SIZED AND PROVIDED BY F.P.C.
3. M.C. TO COORDINATE WITH CIVIL PLANS FOR UTILITY LOCATIONS AND EXTEND ALL UTILITIES 5 FT. OUTSIDE OF BLDG. (TYPICAL).
4. VENT THOUGH ROOF. WATER PROOF AND SEAL ALL PENETRATIONS AS REQUIRED. (TYPICAL).
5. M.C. TO COORDINATE WITH CIVIL AND ARCH's PLANS FOR FINIAL ELEVATIONS AND PROVIDE CODE REQUIRED COVERAGE OVER ALL UTILITY PIPING ENTRY AND LEAVING BLDG. (TYPICAL).
6. 4" RISERS TO ROOF AND OVERFLOW DRAINS ON ROOF. OFFSET AS REQUIRED TO DROP PIPING DOWN TIGHT ALONG AND ROUTE TO OVERFLOW DRAIN OR DROP BELOW SLAB AND OFFSET AS REQUIRED TO ROUTE AROUND FOOTING AND EXIT BLDG. COORDINATE WITH ARCH's PLANS FOR FINAL ELEVATIONS OF DOWN SPOUT NOZZLES. (TYPICAL).
7. COORDINATE WITH ARCH's PLANS FOR FINAL ELEVATION OF SILL COCKS. (TYPICAL).
8. YARD GAS PIPING AND GAS METER BY LOCAL GAS COMPANY. METER SIZE REQUIREMENTS - 1,000 CFH @ 2 lb. PIPING SIZED FOR TOTAL LENGHT OF 250 FT.
9. M.C. TO DROP PIPING TO ROUTE INTO BUILDING BELOW SLAB. PROVIDE REQUIRED PIPING WITH-IN VENTED SLEEVE AS REQUIRED BY CODE, COORDINATE WITH LOCAL GAS COMPANY.
10. ROUTE PIPING UP IN JIOST SPACE BUT DON'T SUPPORT PIPING FROM ROOF DECK. SEE DETAILS 1/M6.3, 4/M6.4 & 7/M6.4. (TYPICAL).
11. RISE GAS PIPING UP THOUGH ROOF AND CONNECT TO MECHANICAL EQUIPMENT AS REQUIRED BY CODE. (TYPICAL).
12. M.C. TO COORDINATE WITH ELECTRICAL SO AS NOT TO ROUTE PIPING OVER ELECTRICAL PANELS. (TYPICAL)
13. RISE GAS UP IN WALL AT THIS POINT.
14. PROVIDE BOLLARD AT THIS LOCATION FOR PROTECTION OF GAS METER.

GENERAL NOTES:

1. CONTRACTOR TO COORDINATE WITH ELECTRICAL AND DO NOT ROUTE PIPING OVER ELECTRICAL EQUIPMENT.
2. ALL PIPING SHALL BE HELD TIGHT TO BOTTOM OF STRUCTURE.
3. OFFSET AND TRANSITION PIPING AS REQUIRED.
4. ALL VALVES SHALL BE LOCATED ABOVE ACCESSIBLE CEILINGS.
5. PROVIDE ACCESS PANELS AS REQUIRED.
6. CONTRACTOR TO COORDINATE ALL INSTALLATIONS WITH OTHER TRADES.
7. PROVIDE 4" DEEP SEAL TRAPS WITH TRAP PRIMERS ON ALL FLOOR DRAINS & FLOOR SINKS.
8. ALL FIRE PROTECTION PIPING SHALL BE SIZED BY FIRE PROTECTION CONTRACTOR.
9. ALL WASTE PIPING TO BE SLOPED AS REQUIRED CODE.
10. PROVIDE CODE REQUIRED DIRT LEG AT ALL GAS CONNECTIONS TO MECHANICAL EQUIPMENT.
11. ALL DRAINAGE PIPING 3" AND SMALLER SHALL SLOPE @ 1/4"/FT. SLOPE AND PIPING 4" AND LARGER SHALL SLOPE @ 1/8"/FT. SLOPE.
12. SEISMIC REQUIREMENTS SHALL MEET SEISMIC RESTRANT PROVISIONS OF IBC 1613.1 FOR ALL PLUMBING SYSTEMS.

1 / M2.2 **PLUMBING FLOOR PLAN**

SCALE: 1/8" = 1' - 0" 6' 0 4' 8' 12' 16'

PVE INC.
Consulting Mechanical Electrical Engineers
1040 North 2200 West, Suite 100
Salt Lake City, UT 84116
Phone: (801) 359-3158
Fax: (801) 521-4114

NEW HEBER LIQUOR STORE

DEPT. OF ALCOHOLIC BEVERAGE CONTROL
HEBER, UTAH

FRANK N MURDOCK JR ■ Architect & Associates
975 East 100 South Suite 100, Salt Lake City, Utah 84102 TEL: (801) 532-4441 FAX (801) 532-4220

REGISTERED PROFESSIONAL ENGINEER ALAN G. SPENDLOVE 166891 STATE OF UTAH 5/20/09

REVISION # DATE:

DFCM PROJECT NO.: 08224030
CONST. DOC.
FILE NAME: N/A
PLOT SCALE: 1:96
DRAWN BY: AJG
CHECKED BY: AJG
DATE: MAY 2009

M2.2

PLUMBING FLOOR PLAN

Copyright (C) 2009 by PVE, Inc. Salt Lake City, Utah. All rights reserved. Unauthorized copying and/or use is illegal and subject to prosecution.

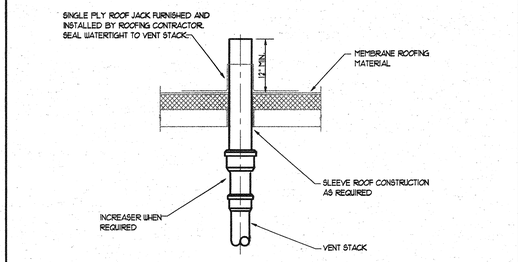

1 M6.1 VENT THROUGH ROOF DETAIL

NOT TO SCALE

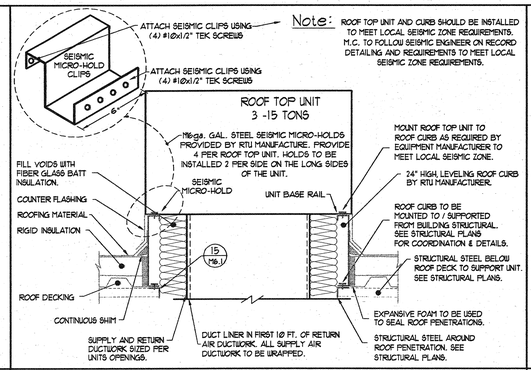

2 M6.1 ROOF TOP UNIT CURB DETAIL

NOT TO SCALE

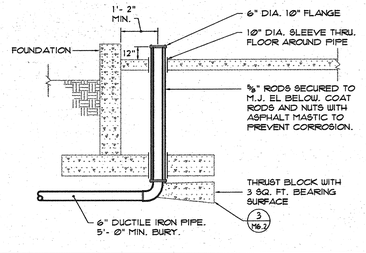

3 M6.1 WATER ENTRY DETAIL

NOT TO SCALE

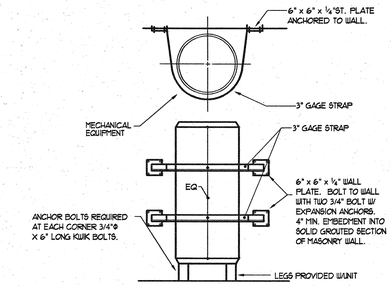

4 M6.1 FLOOR MOUNTED EQUIPMENT ANCHOR & STRAP DETAIL

NOT TO SCALE

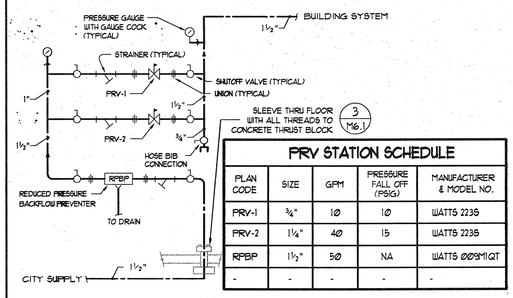

PRV STATION SCHEDULE				
PLAN CODE	SIZE	GPM	PRESSURE FALL OFF (PSIG)	MANUFACTURER & MODEL NO.
PRV-1	3/4"	10	10	WATTS 223S
PRV-2	1 1/4"	40	15	WATTS 223S
RPBP	1 1/2"	50	NA	WATTS 009M1QT
-	-	-	-	-

5 M6.1 PRV STATION DETAIL

NOT TO SCALE

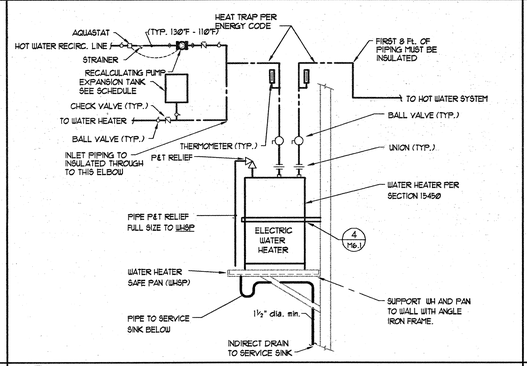

6 M6.1 ELECTRIC WATER HEATER PIPING DETAIL (WALL HUNG)

NOT TO SCALE

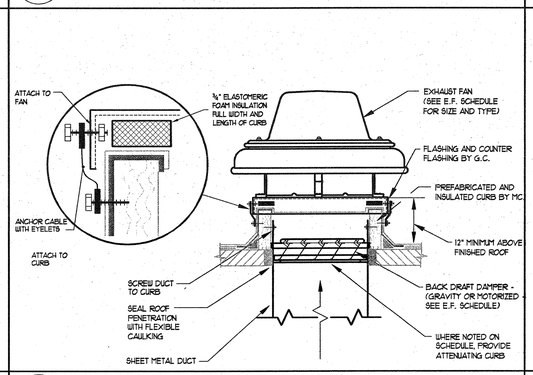

7 M6.1 EXHAUST FAN AND CURB DETAIL

NOT TO SCALE

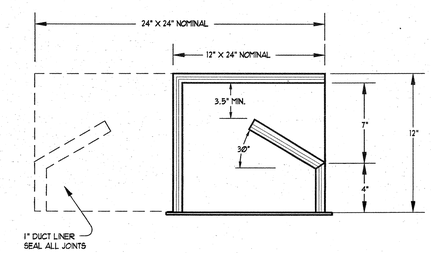

TYPICAL OF ALL RETURN AIR GRILLES

8 M6.1 RETURN AIR GRILLE SOUND BOOT DETAIL

NOT TO SCALE

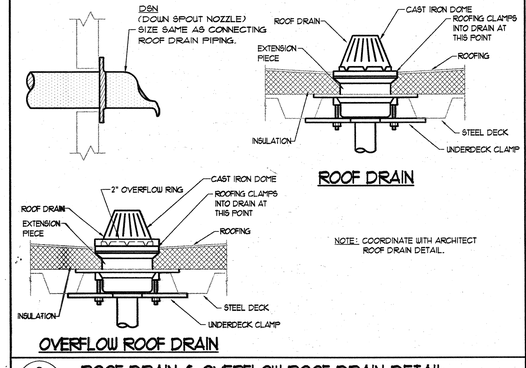

NOTE: COORDINATE WITH ARCHITECT ROOF DRAIN DETAIL.

9 M6.1 ROOF DRAIN & OVERFLOW ROOF DRAIN DETAIL

NOT TO SCALE

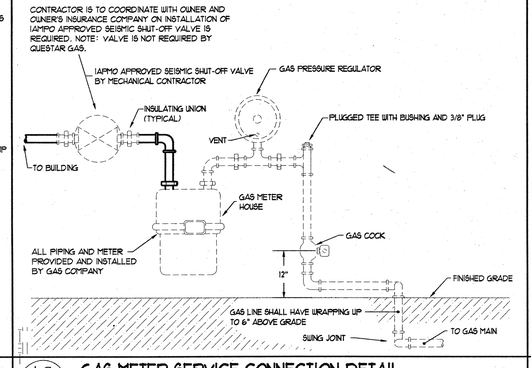

10 M6.1 GAS METER SERVICE CONNECTION DETAIL

NOT TO SCALE

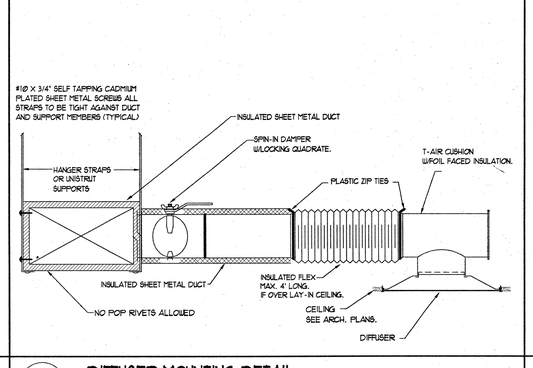

11 M6.1 DIFFUSER MOUNTING DETAIL

NOT TO SCALE

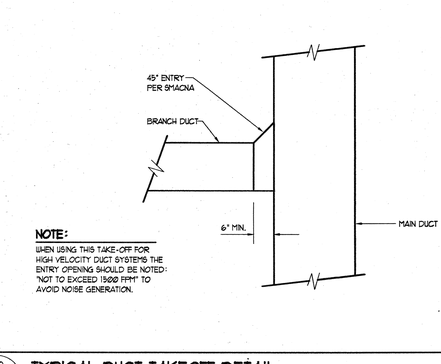

NOTE:
WHEN USING THIS TAKE-OFF FOR HIGH VELOCITY DUCT SYSTEMS THE ENTRY OPENING SHOULD BE NOTED: "NOT TO EXCEED 1500 FPM" TO AVOID NOISE GENERATION.

12 M6.1 TYPICAL DUCT TAKEOFF DETAIL

NOT TO SCALE

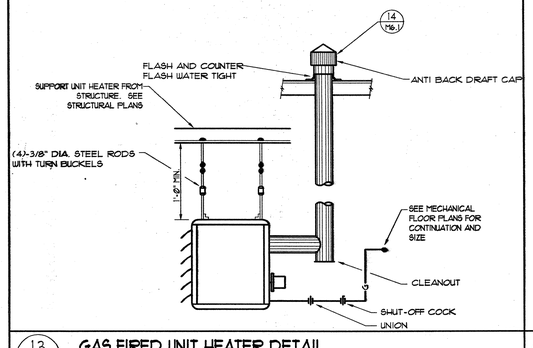

13 M6.1 GAS FIRED UNIT HEATER DETAIL

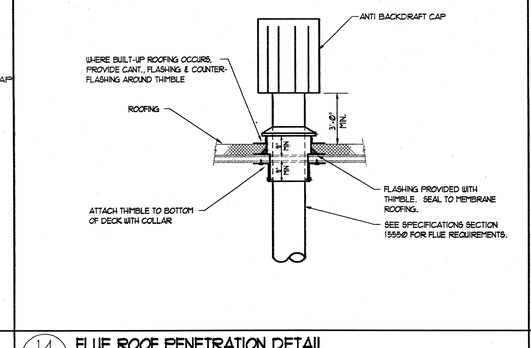

14 M6.1 FLUE ROOF PENETRATION DETAIL

NOT TO SCALE

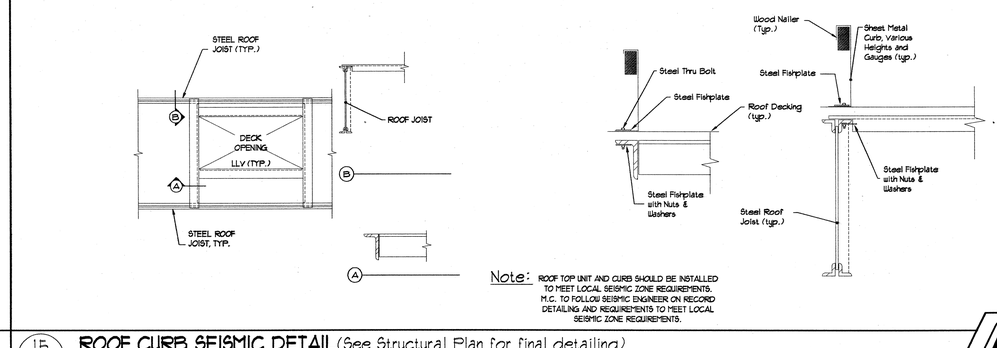

Note: ROOF TOP UNIT AND CURB SHOULD BE INSTALLED TO MEET LOCAL SEISMIC ZONE REQUIREMENTS. M.C. TO FOLLOW SEISMIC ENGINEER ON RECORD DETAILING AND REQUIREMENTS TO MEET LOCAL SEISMIC ZONE REQUIREMENTS.

15 M6.1 ROOF CURB SEISMIC DETAIL (See Structural Plan for final detailing)

NOT TO SCALE

PVE, Inc. Consulting Mechanical Electrical Engineers
1040 North 2200 West, Suite 100
Salt Lake City, UT 84116
Phone: (801) 359-3158
Fax: (801) 521-4114

NEW HEBER LIQUOR STORE

DEPT. OF ALCOHOLIC BEVERAGE CONTROL
HEBER, UTAH

MECHANICAL DETAILS

FRANK N MURDOCK JR ■ Architect & Associates
975 East 100 South Suite 100, Salt Lake City, Utah 84102 TEL: (801) 532-4441 FAX (801) 532-4220

REGISTERED PROFESSIONAL ENGINEER ALAN D. SPENDLOVE 166511 STATE OF UTAH 5/20/09

REVISION # DATE:

DFCM PROJECT NO.: 08224030
CONST. DOC.
FILE NAME: N/A
PLOT SCALE: 1:96
DRAWN BY: AJG
CHECKED BY: AJG
DATE: MAY 2009

M6.1

Copyright (C) 2009 by PVE, Inc. Salt Lake City, Utah. All rights reserved. Unauthorized copying and/or use is illegal and subject to prosecution.

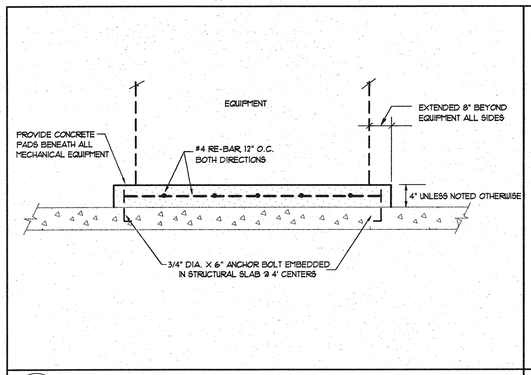

1 M6.2 HOUSEKEEPING PAD DETAIL

NOT TO SCALE

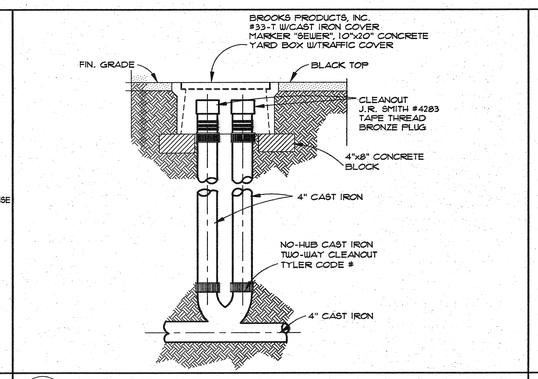

2 M6.2 TWO - WAY CLEANOUT DETAIL

NOT TO SCALE

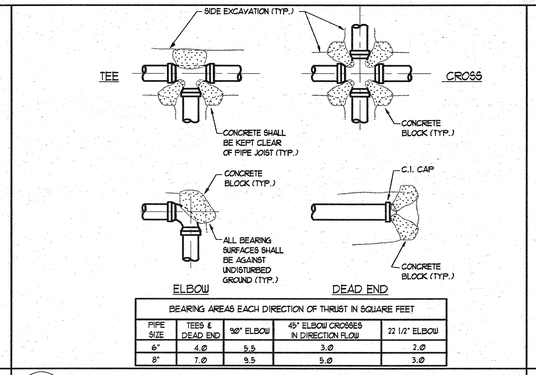

BEARING AREAS EACH DIRECTION OF THRUST IN SQUARE FEET				
PIPE SIZE	TEES & DEAD END	90° ELBOW	45° ELBOW CROSSES IN DIRECTION FLOW	22 1/2° ELBOW
6"	4.0	5.5	3.0	2.0
8"	7.0	9.5	5.0	3.0

3 M6.2 THRUST BLOCK DETAIL

NOT TO SCALE

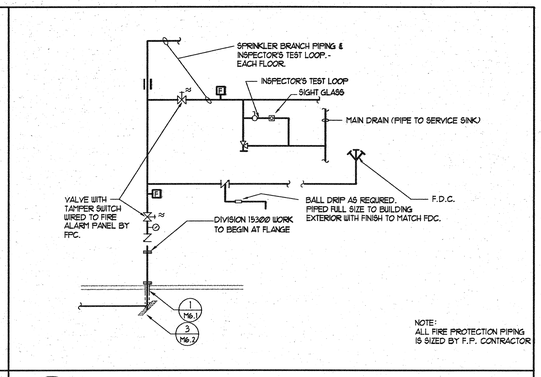

4 M6.2 TYPICAL FIRE SPRINKLER SERVICE ENTRY DETAIL

NOT TO SCALE

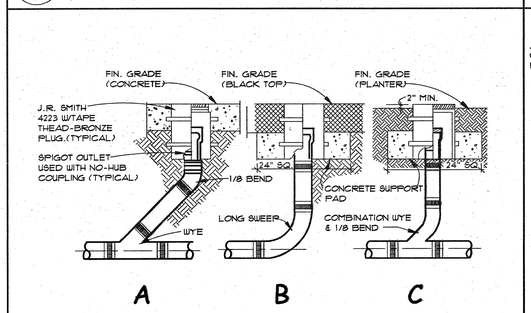

5 M6.2 SURFACE/YARD CLEANOUT DETAIL

NOT TO SCALE

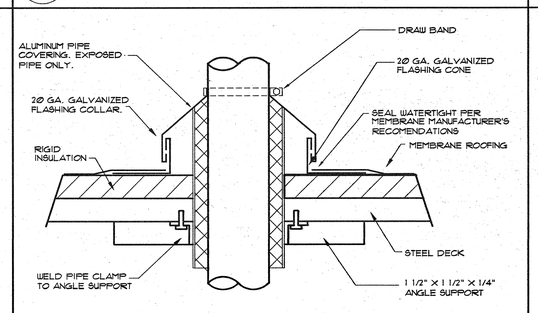

6 M6.2 PIPE PENETRATION THRU ROOF DETAIL

NOT TO SCALE

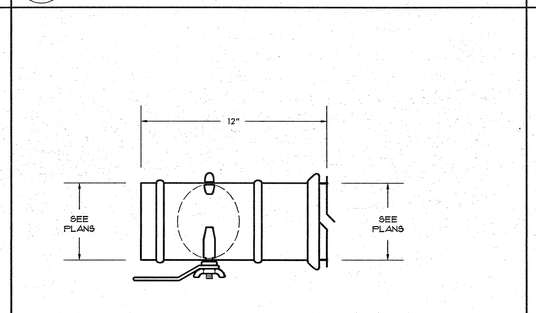

7 M6.2 TYPICAL MANUAL VOLUME DAMPER DETAIL

NOT TO SCALE

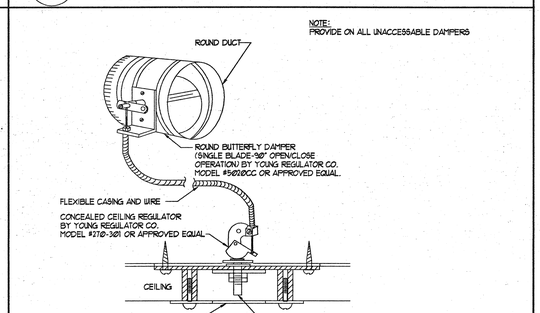

8 M6.2 DAMPER AND REGULATOR DETAIL

NOT TO SCALE

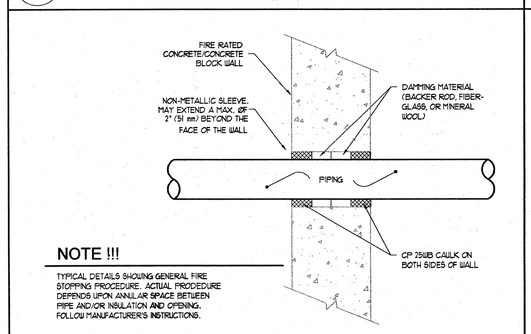

NOTE !!!

TYPICAL DETAILS SHOWING GENERAL FIRE STOPPING PROCEDURE. ACTUAL PRODEDURE DEPENDS UPON ANNULAR SPACE BETWEEN PIPE AND/OR INSULATION AND OPENING. FOLLOW MANUFACTURER'S INSTRUCTIONS.

9 M6.2 FIRESTOP thru. CONCRETE WALL

NOT TO SCALE

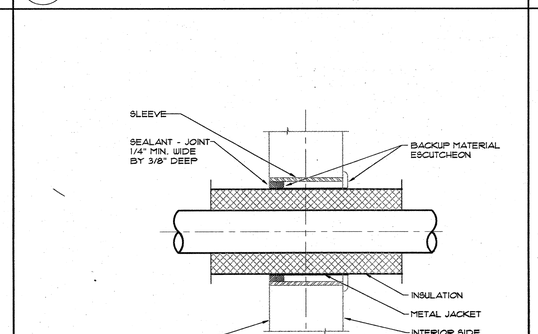

10 M6.2 PIPE SLEEVE FOR INSULATED PIPE THRU WALL

NOT TO SCALE

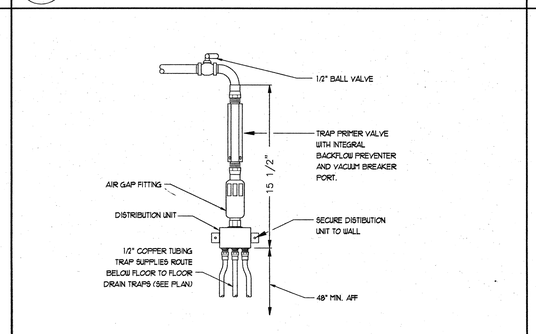

11 M6.2 TRAP PRIMER DETAIL

NOT TO SCALE

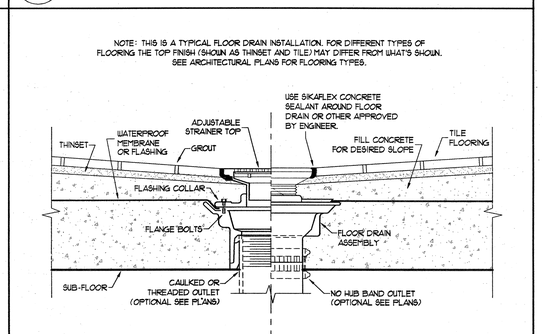

12 M6.2 TYPICAL FLOOR DRAIN / SINK DETAIL

NOT TO SCALE

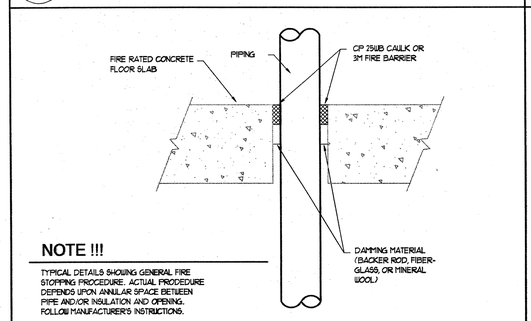

NOTE !!!

TYPICAL DETAILS SHOWING GENERAL FIRE STOPPING PROCEDURE. ACTUAL PRODEDURE DEPENDS UPON ANNULAR SPACE BETWEEN PIPE AND/OR INSULATION AND OPENING. FOLLOW MANUFACTURER'S INSTRUCTIONS.

13 M6.2 FIRESTOP thru. CONCRETE FLOOR

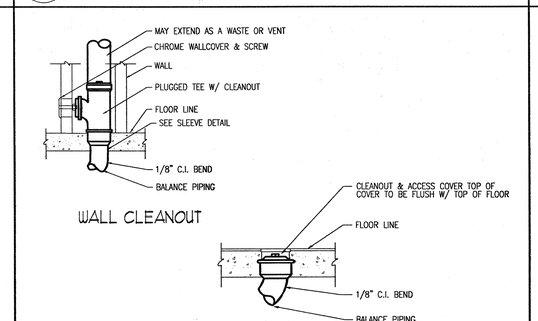

14 M6.2 CLEANOUT DETAIL

NOT TO SCALE

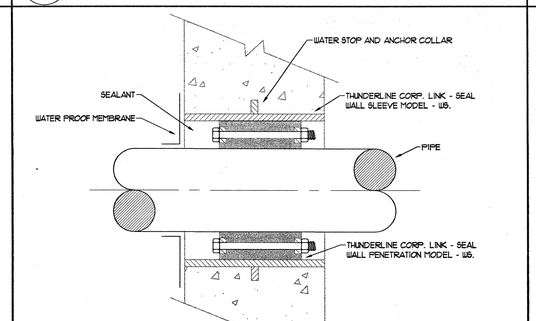

15 M6.2 FOUNDATION WALL SLEEVE DETAIL

NOT TO SCALE

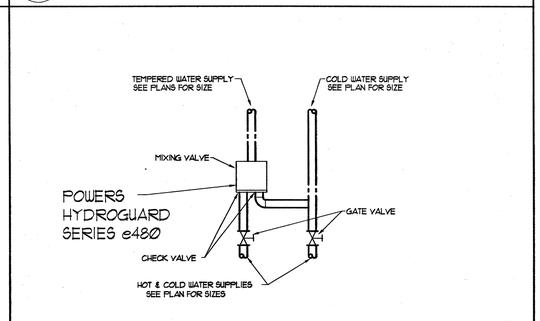

16 M6.2 MIXING VALVE DETAIL

NO SCALE

PVE, Inc. Consulting Mechanical Electrical Engineers
1040 North 2200 West, Suite 100
Salt Lake City, UT 84116
Phone: (801) 359-3158
Fax: (801) 521-4114

NEW HEBER LIQUOR STORE

DEPT. OF ALCOHOLIC BEVERAGE CONTROL
HEBER, UTAH

FRANK N MURDOCK JR ■ Architect & Associates
975 East 100 South Suite 100, Salt Lake City, Utah 84102 TEL: (801) 532-4441 FAX: (801) 532-4220

MECHANICAL DETAILS

REGISTERED PROFESSIONAL ENGINEER ALAN J. SPENCER 166811 STATE OF UTAH

REVISION # DATE:

DFCM PROJECT NO.: 08224030
CONST. DOC.
FILE NAME: N/A
PLOT SCALE: 1:96
DRAWN BY: AJG
CHECKED BY: AJG
DATE: MAY 2009

M6.2

Copyright (C) 2009 by PVE, Inc. Salt Lake City, Utah. All rights reserved. Unauthorized copying and/or use is illegal and subject to prosecution.

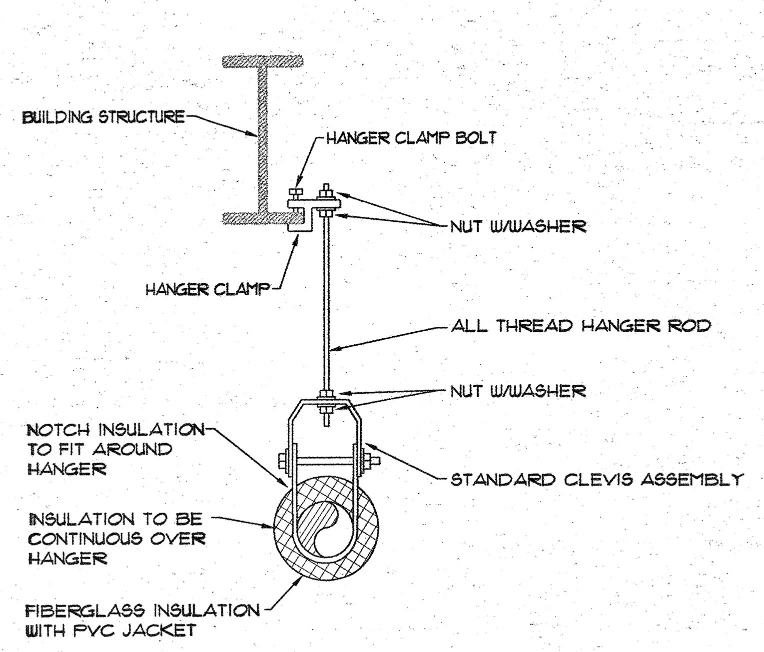

1 M6.3 PIPE HANGER DETAIL

NOT TO SCALE

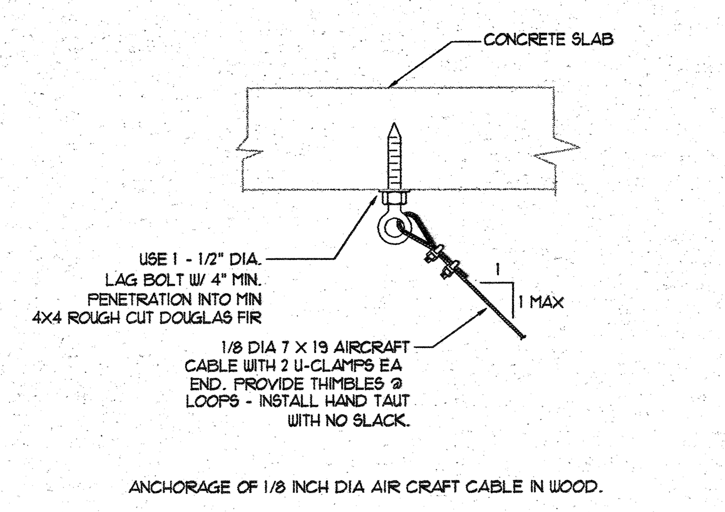

ANCHORAGE OF 1/8 INCH DIA AIR CRAFT CABLE IN WOOD.

2 M6.3 ANCHORAGE OF AIRCRAFT CABLE DETAIL

NOT TO SCALE

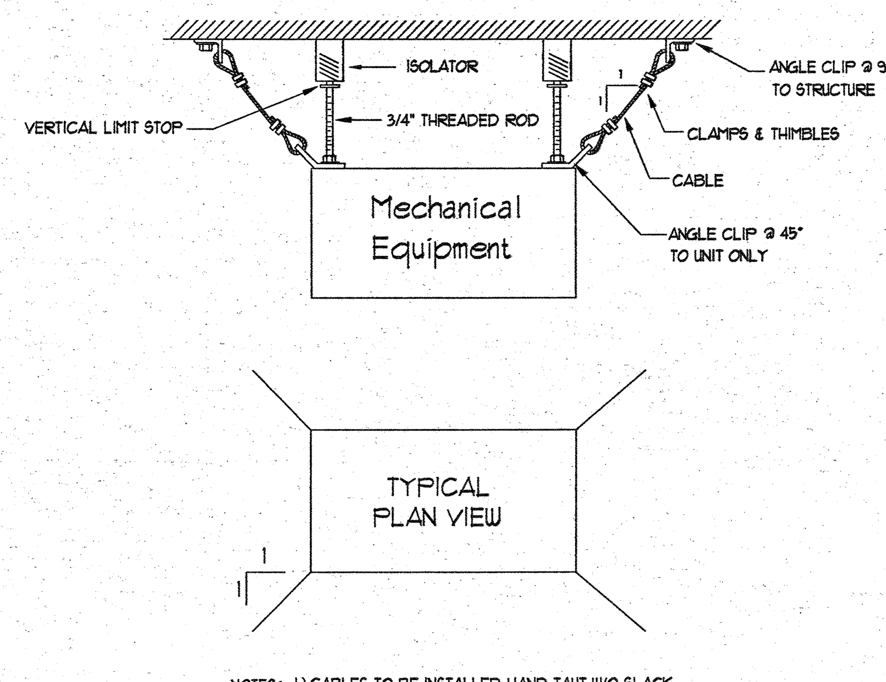

NOTES: 1) CABLES TO BE INSTALLED HAND TAUT W/O SLACK.
2) CABLE IS 7 X 19 AIRCRAFT CABLE.

3 M6.3 CABLE RESTRAINT DETAIL

NOT TO SCALE

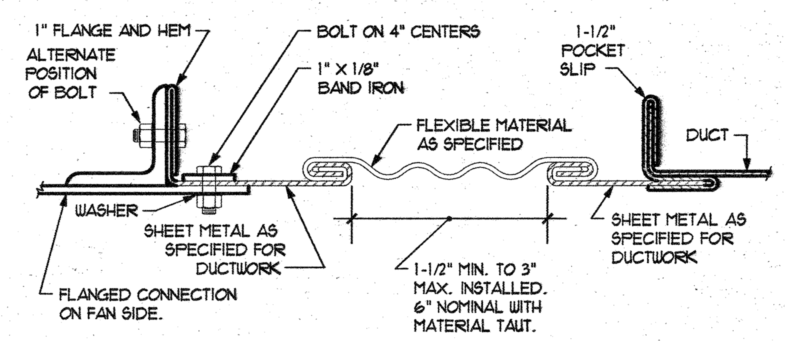

4 M6.3 RETANGULAR FLEXIBLE CONNECTION DETAIL

NOT TO SCALE

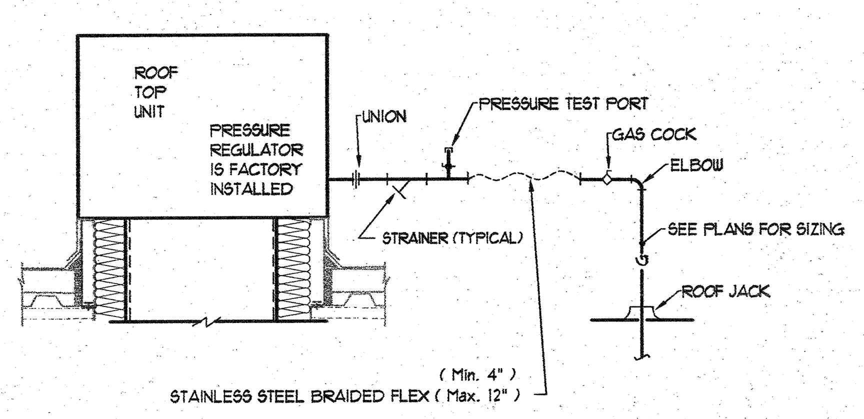

NOTE:
1. PIPING AND PIPING COMPONENTS REQUIREMENT TO MEET ALL CURRENT CODES.
2. CONTRACTOR TO VERIFY UNITS PRESSURE REGULATOR MEETS BUILDING GAS PRESSURE. IF NOT, CONTRACTOR TO PROVIDE EXTERNAL REGULATOR AS REQUIRED.

5 M6.3 **GAS PIPING FOR RTU**

NOT TO SCALE

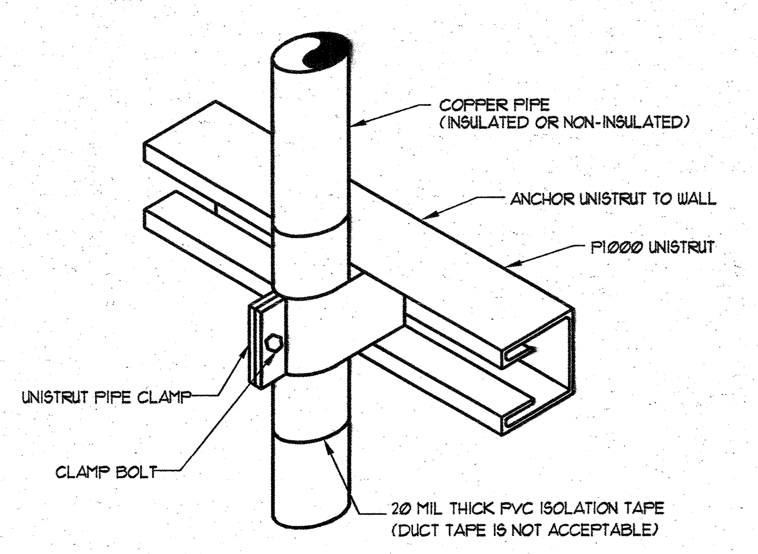

6 M6.3 PIPE SUPPORT DETAIL

NOT TO SCALE

HANGER SIZES FOR RECTANGULAR DUCT			
MAX. SIDE	HANGER	HORIZANTAL SUPPORT ANGLE	MAXIMUM SPACING
30"	1"X18" GAGE STRAP	NONE REQUIRED	10'-0"
36"	1/4" ROUND ROD	1 1/2" X 1 1/2" X 1/8"	8'-0"
48"	1/4" ROUND ROD	2" X 2" X 1/8"	8'-0"
60"	5/16" ROUND ROD	2" X 2" X 1/8"	8'-0"
84"	3/8" ROUND ROD	2" X 2" X 1/8"	8'-0"

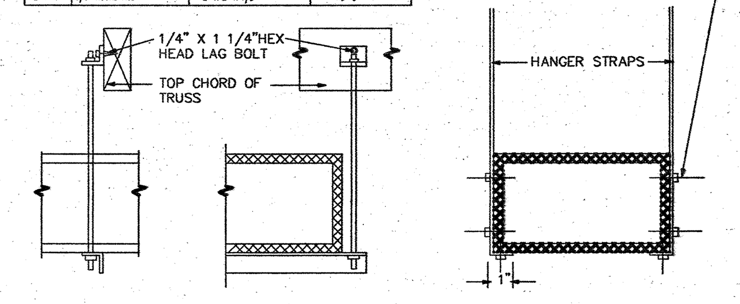

7 M6.3 DUCT STRAP HANGER DETAIL

NOT TO SCALE

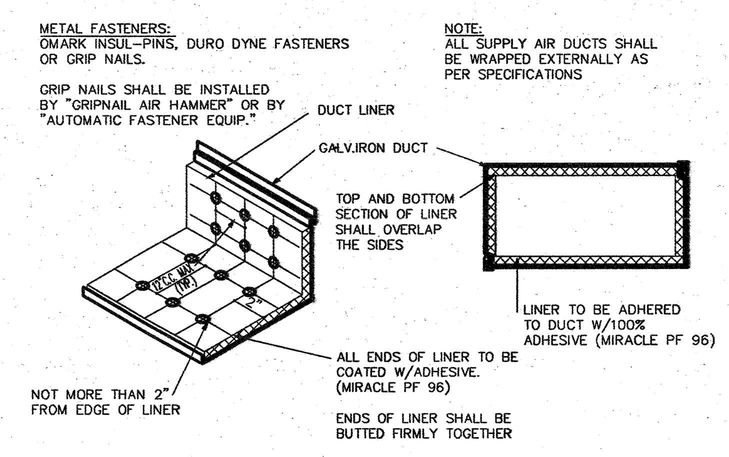

8 M6.3 DUCT LINER DETAIL

NOT TO SCALE

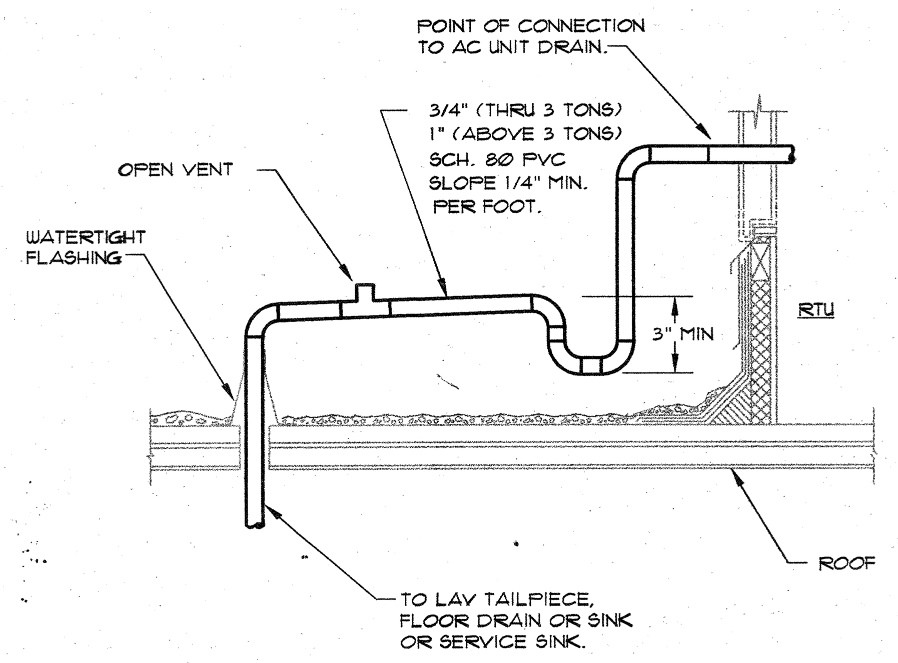

9 M6.3 **CONDENSATE DRAINAGE DETAIL**

SCALE: NTS

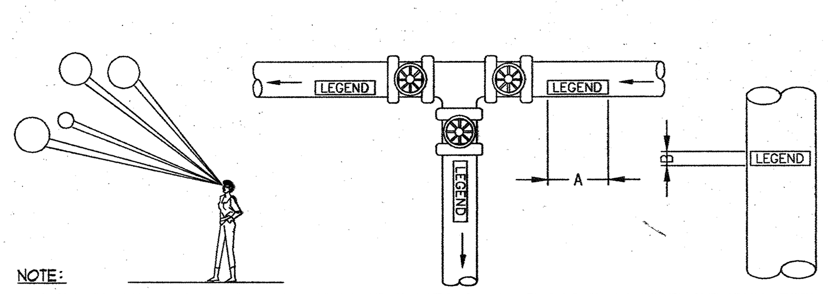

NOTE:
IDENDIFICATION MARKERS OR STRIPS TO BE PLACED ON ALL EXPOSED COVERED AND UNCOVERED PIPES AT 50'-0" INTERVALS AND AT ALL VALVES, BRANCHES, CHANGE IN DIRECTION OF FLOW AND ON BOTH SIDES OF WALLS WHERE PIPES PASS THROUGH SAME, ARROWS OF SAME COLOR AS IDENTIFICATION MARKERS SHALL ALSO BE PLACED ON PIPES POINTING AWAY FROM MARKER INDICATION DIRECTION OF FLOW.

OUTSIDE DIAMETER OF PIPE OR COVERING		LENGTH OF COLOR FIELD A		SIZE OF LETTERS B	
INCHES	MM	INCHES	MM	INCHES	MM
3/4" TO 1-1/4"	19 TO 32	8"	200	1/2"	13
1-1/2" TO 2"	38 TO 51	8"	200	3/4"	19
2-1/2" TO 6"	64 TO 150	12"	300	1-1/4"	32
8" TO 10"	200 TO 250	24"	600	2-1/2"	64
OVER 10"	OVER 250	32"	800	3-1/2"	89

SERVICE	BACKGROUND OR COLOR BAND	IDENTIFICATION MARKER
DOMESTIC COLD WATER	GREEN	WHITE ON GREEN
DOMESTIC HOT WATER	YELLOW	BLACK ON YELLOW
DOMESTIC HOT WATER RETURN	YELLOW	BLACK ON YELLOW
FIRE PROTECTION (SPRINKLER)	RED	WHITE ON RED
NATURAL GAS	YELLOW	BLACK ON YELLOW
SANITARY DRAIN	GREEN	WHITE ON GREEN
STORM WATER	GREEN	WHITE ON GREEN

10 M6.3 PIPE IDENTIFICATION DETAIL

NOT TO SCALE

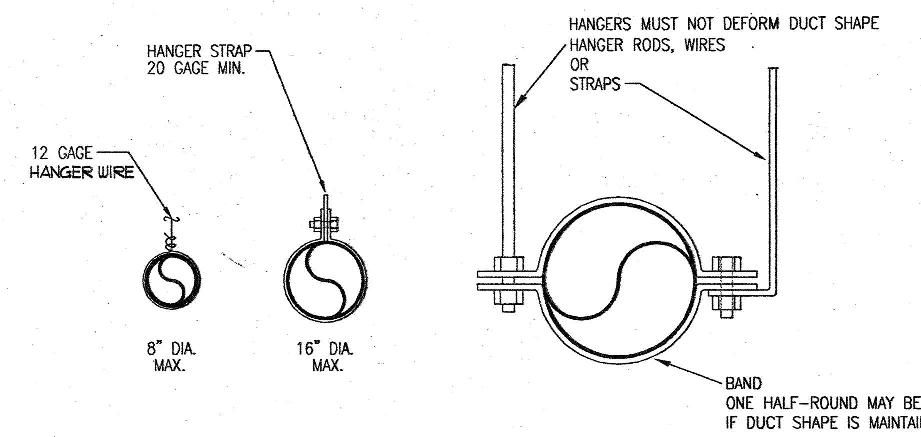

REFERENCE:
LATEST EDITION OF SMACNA HVAC DUCT CONSTRUCTION STANDARDS
LOWER HANGER ATTACHMENTS FIGURE

MINIMUM HANGER SIZE FOR ROUND DUCT				
DIAMETER	MAXIMUM SPACING	WIRE DIA.	ROD	STRAP
10" DN	12'	ONE 12 Ga.	1/4"	1"x22 Ga.
11–18"	12'	TWO 12 Ga. OR ONE 8 Ga.	1/4"	1"x20 Ga.
19–24"	12'	TWO 10 Ga.	1/4"	1"x20 Ga.
25–36"	12'	TWO 8 Ga.	3/8"	1"x20 Ga.
37–50"	12'	N/A	TWO 3/8"	TWO 1"x20 Ga.
51"–60"	12'	N/A	TWO 3/8"	TWO 1"x18 Ga.
61"–84"	12'	N/A	TWO 3/8"	TWO 1"x16 Ga.

11 M6.3 ROUND DUCT HANGER DETAIL

NOT TO SCALE

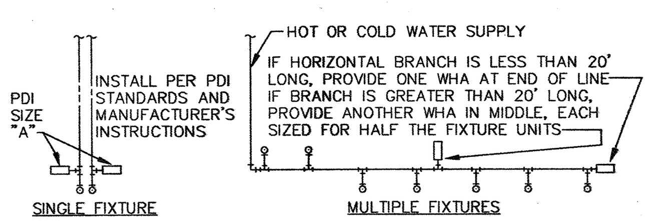

PDI SIZE	PIPE SIZE	FIXTURE UNIT LOAD
A	1/2"	1–11
B	3/4"	12–32
C	1"	33–60
D	1–1/4"	61–113
E	1–1/2"	114–154
F	2"	154–330

FIXTURE UNIT TABULATION		
FIXTURE	COLD	HOT
VALVE WATER CLOSET	10	--
TANK WATER CLOSET	5	--
URINAL	5	--
LAVATORY/SINK	1.5	1.5
JANITOR'S SINK	3	3
SHOWER/BATHTUB	2	2

PC TO PROVIDE WATER HAMMER ARRESTERS BY SIOUX CHIEF, PRECISION PLUMBING PRODUCTS, WATTS OR APPROVED EQUIVALENT WITH PISTON AND O-RING CONSTRUCTION, HAVING PDI #WH-201, ASSE #1010 AND ANSI #A112.26.1M CERTIFICATION. INSTALL IN HORIZONTAL OR VERTICAL POSITION, BUT NEVER UPSIDE DOWN. INSTALL IN LINE WITH WATER FLOW DIRECTION IF POSSIBLE. SIZE THE UNITS AS SHOWN ON THE DRAWINGS AND/OR PER THE TABLES SHOWN ABOVE. SIZING CHARTS ARE BASED ON SIOUX CHIEF. USE SPECIFIC MANUFACTURERS SIZING CHARTS.

12 M6.3 **WATERHAMMER ARRESTERS DETAILS**

SCALE: NTS

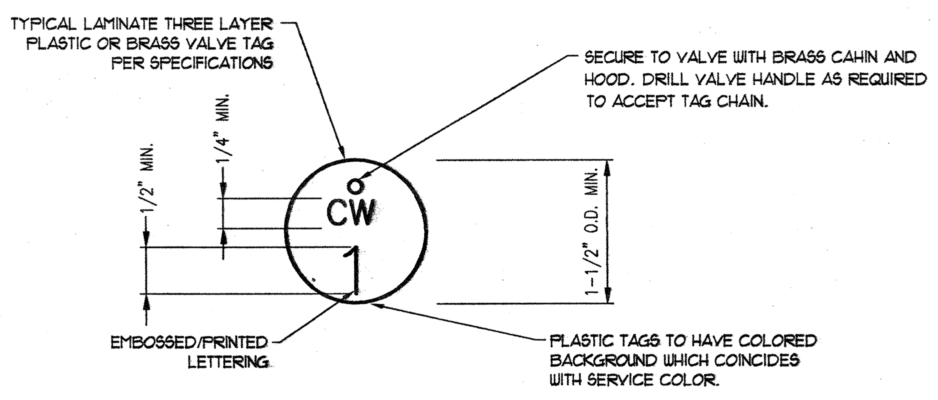

NOTE:
REFERENCE ALL "VALVE TAGS" TO "VALVE TAG CHART", "O&M MANUALS DATA" (INDEX VALVES PER CHART).

TAG LEGEND (PLUMBING EXAMPLE)

CW = COLD WATER
HW = HOT WATER
HWC = HOT WATER RECIRCULATING
G = NATURAL GAS
FP = FIRE PROTECTION

TAG LEGEND (FIRE PROTECTION EXAMPLE)

FP-C = FIRE PROTECTION CONTROL VALVES
FP-D = FIRE PROTECTION DRAIN VALVES

(1) ABBRIVIATIONS TO BE AS INDICATED FOR EACH DESIGN SYSTEM AS INDICATED ON DESIGN DRAWINGS.

(2) VALVE TAGS SHOULD BE INDICATED IN "VALVE CHARTS" AND ON "PROJECT RECORD DRAWINGS TO CORRELATED WITH TAG I.D.'S.

EXAMPLE VALVE TAG CHART

VALVE TAG CHART FOR: XXXXXXXX MOD: XXX AREA: XXX WING : XX FLOOR: XX

VALVE TAG #	LOCATION (ALSO SEE AS-BUILT DWGS)	FUNCITON (WHAT IT DOES & WHAT/WHERE IT SERVICES)	TYPE	SIZE	MFG.	MODEL #
CW-1	RM. XXX - ABOVE CEILING	ON/OFF - FIXTURES IN RM. XXX & XXX	BV	1"	XXXX	XX-XXX-XX
CW-2	CORR. XXX - ABOVE DOOR @ RM. XXX	BALANCE - 2nd FLOOR, EAST SIDE, NORTH WING...	BF.V	1-1/2"	XXXX	XX-XXX-XX
CW-3	BOILER RM. XXX - NE CORNER	ON/OFF - MAIN - BLDGS X,Y, & Z	GV	8"	XXXX	XX-XXX-XX
CW-4	RM. XXX - BEHIND N. ACCESS PANEL	ON/OFF - EXT. FIELDHOUSE & FIELD HYD. - IRRIGATION	BV	3"	XXXX	XX-XXX-XX
HW-1	RM. XXX - ABOVE CEILING	ON/OFF - MIXING VALVE - EYEWASH	BV	1"	XXXX	XX-XXX-XX

* ALL MAJOR SYSTEMS ON-OFF, CONTROL AND BALANCING VALVES SHALL HAVE AN ASTERIK "*"

13 M6.3 VALVE TAG DETAIL & VALVE CHART FORMAT

NOT TO SCALE

DIMENSION OF LONGEST SIDE, INCHES	SHEET METAL GAGE (ALL FOUR SIDES)	TRANSVERSE REINFORCING (1): MINIMUM REINFORCING ANGLE SIZE & MAXIMUM LONGITUDINAL SPACING BETWEEN JOINTS &/OR INTERMEDIATE REINFORCING	AT JOINTS: MIN. H, IN.	DRIVE SLIP / PLAIN S SLIP: RECOMMENDED GAGE	HEMMED S SLIP: RECOMMENDED GAGE	ALTERNT. BAR SLIP: RECOMMENDED GAGE	REINFOR. BAR SLIP: RECOMMENDED GAGE	BAR SLIP / ANGLE SLIP: RECOMMENDED GAGE	BAR SLIP / ANGLE SLIP: REINFORCED ANGLE SIZE	STAND. SEAM / ANGLE REINFOR. STAND.SEAM: REINFORCED ANGLE SIZE	POCKET LOCK / ANGLE REINFORCED POCKET LOCK: RECOMMENDED GAGE	POCKET LOCK / ANGLE REINFORCED POCKET LOCK: REINFORCED ANGLE SIZE
UP THRU 12	26	NONE REQ.	1	26	26	24	24	24	NOT REQ.	NOT REQ.	24	NOT REQ.
13 – 18	24	NONE REQ.	1	24	24	24	24	24	NOT REQ.	NOT REQ.	24	NOT REQ.
19 – 30	24	1X1X1/8 @ 60"	1	–	24	24	24	24	NOT REQ.	NOT REQ.	24	NOT REQ.
31 – 42	22	1X1X1/8 @ 60"	1	–	–	22	22	22	NOT REQ.	NOT REQ.	22	NOT REQ.
43 – 54	22	1.5X1.5X1/8@60"	1 1/2	–	–	22	22	22	1.5X1.5X1/8	NOT REQ.	22	NOT REQ.
55 – 60	20	1.5X1.5X1/8@60"	1 1/2	–	–	–	22	22	1.5X1.5X1/8	NOT REQ.	22	NOT REQ.
61 – 84	20	1.5X1.5X1/8@30"	1 1/2	–	–	–	22	22	1.5X1.5X1/8	1.5X1.5X1/8	22	1.5X1.5X1/8

(1) TRANSVERSE REINFORCING SIZE IS DETERMINED BY DIMENSION OF SIDE TO WHICH ANGLE IS APPLIED

14 M6.3 DUCT CONSTRUCTION DETAIL

NOT TO SCALE

Copyright (C) 2009 by PVE, Inc. Salt Lake City, Utah. All rights reserved. Unauthorized copying and/or use is illegal and subject to prosecution.

PVE, Inc.
Consulting Mechanical Electrical Engineers
1040 North 2200 West, Suite 100
Salt Lake City, UT 84116
Phone: (801) 359-3158
Fax: (801) 521-4114

NEW HEBER LIQUOR STORE

DEPT. OF ALCOHOLIC BEVERAGE CONTROL
HEBER, UTAH

FRANK N MURDOCK JR ■ Architect & Associates
975 East 100 South Suite 100, Salt Lake City, Utah 84102 TEL: (801) 532-4441 FAX (801) 532-4220

MECHANICAL DETAILS

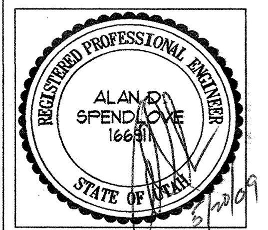

REVISION # DATE:

DFCM PROJECT NO.:
08224030
CONST. DOC.
FILE NAME: N/A
PLOT SCALE: 1:96
DRAWN BY: AJG
CHECKED BY: AJG
DATE: MAY 2009

M6.3

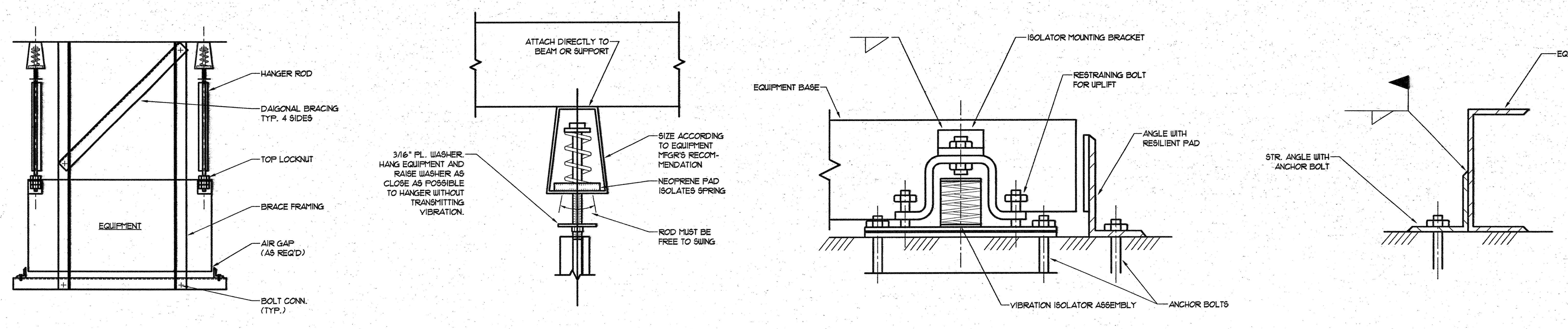

EQUIPMENT SUSPENSION DETAIL

EQUIPMENT RESTRAINT DETAIL

EQUIPMENT BRACE DETAIL

EQUIPMENT BRACING NOTES:

1. DESIGN SUPPORT SYSTEM FOR SEISMIC ZONE 4.
2. REFERENCE SMACNA SEISMIC RESTRAINT MANUAL.
3. SIZE RESTRAINTS PER EQUIPMENT OPERATING WEIGHTS.
4. PROVIDE LATERAL BRACING FOR ALL SUSPENDED EQUIPMENT.
5. SECURE FLOOR MOUNTED SPRING ISOLATED EQUIPMENT USING SEISMIC SPRING ISOLATORS.
6. RIGIDLY MOUNTED EQUIPMENT SHALL BE SECURED WITH ANCHOR BOLTS SIZED FOR OPERATING WEIGHTS. PROVIDE NEOPRENE WASHERS AND SLEEVES FOR EQUIPMENT MOUNTED ON NEOPRENE PADS.
7. FOR EQUIPMENT REQUIRING SEISMIC BRACING, INSTALL BRACES AS FOLLOWS:
   a. DO NOT USE JOIST BRIDGING FOR SUPPORT OF ANY LOAD.
   b. IF SUPPORTING LOADS ABOVE 50 LBS. BETWEEN JOIST PANEL POINTS REINFORCE BOTTOM CORD OF JOIST AS PER STRUCTURAL ENGINEERS REQUIREMENTS. REFER TO SUPPORT DETAILS ON STRUCTURAL DRAWINGS.

1 M6.4 EQUIPMENT SUSPENSION DETAIL

NOT TO SCALE

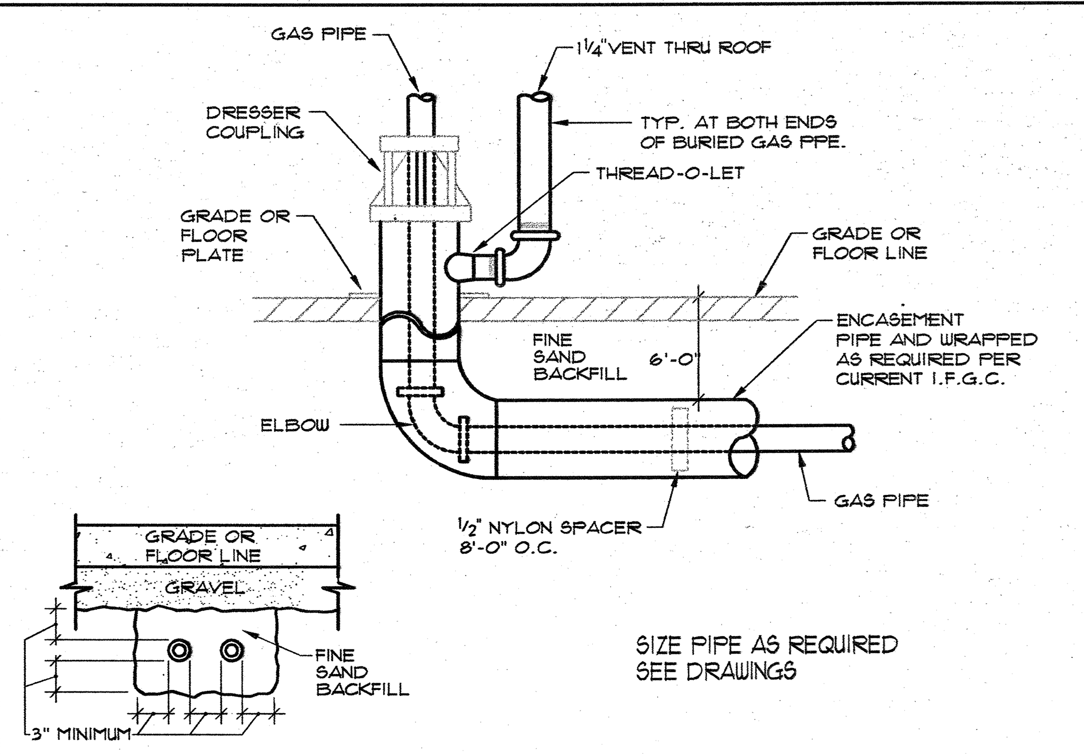

SIZE PIPE AS REQUIRED
SEE DRAWINGS

2 M6.4 GAS PIPE SLEEVE VENTING DETAIL

NO SCALE

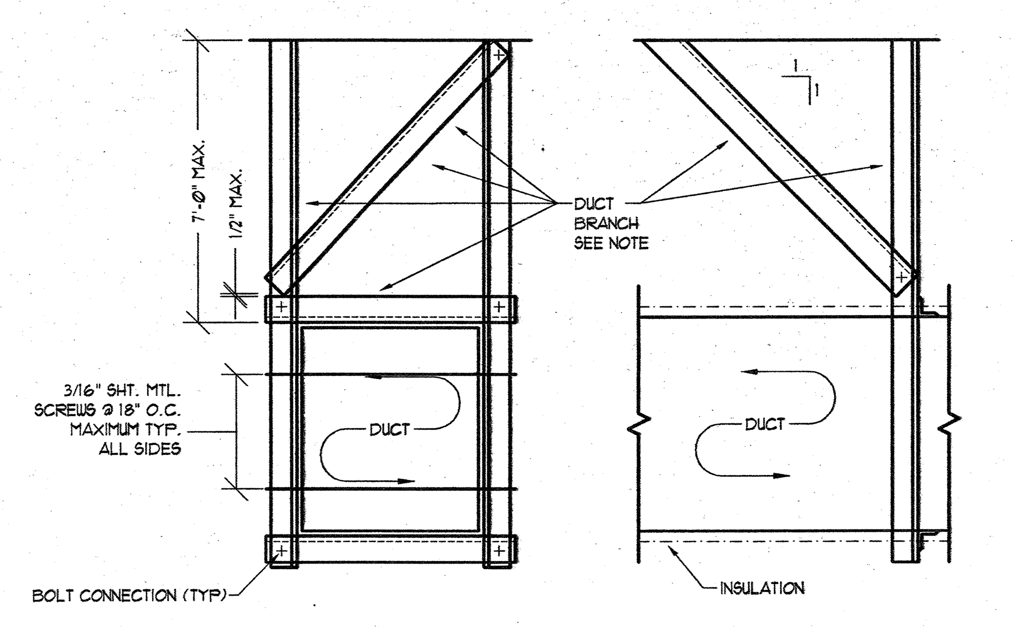

SCHEDULE "A" BRACING OF RECTANGULAR DUCTS						
DUCT SIZE INCHES	VERTICAL ANGLES	DIAGONAL ANGLES	HORIZONTAL ANGLES	LONGITUDINAL ANGLES	BOLT SIZE **	WT. PER LINEAR FOOT
30" SQ.	2-1/2" X 2-1/2" X 16 GA.	2-1/2" X 2-1/2" X 16 GA.	2" X 2" X 16 GA.	3" X 3" X GA.	1/4"Φ	13
42" SQ.	4" X 4" X 16 GA.	2-1/2" X 2-1/2" X 16 GA.	2-1/2" X 2-1/2" X 16 GA.	D.O.	3/8"Φ	20
54" SQ.	4" X 4" X 16 GA.	2-1/2" X 2-1/2" X 16 GA.	2-1/2" X 2-1/2" X 16 GA.	D.O.	3/8"Φ	27
60" SQ.	4" X 4" X 12 GA.	3" X 3" X 16 GA.	3" X 3" X 16 GA.	D.O.	3/8"Φ	36
84" SQ.	4" X 4" X 1/4"	4" X 4" X 14 GA.	4" X 4" X 14 GA.	D.O.	3/8"Φ	53
96" SQ.	5" X 3" X 1/4"	4" X 4" X 12 GA.	4" X 4" X 12 GA.	D.O.	1/2"Φ	30

* MAXIMUM DIMENSION OF DUCT SHALL GOVERN WHAT BRACING REQUIRED.
EX: A 42" X 32" DUCT SHALL BE BRACED AS A 42" SQ. DUCT.

** MINIMUM EDGE DISTANCE FOR BOLTS:
1/4"Φ - 1" 5/8"Φ - 1-1/8"
3/8"Φ - 1" 3/4"Φ - 1-1/4"
1/2"Φ - 1" 7/8"Φ - 1-1/2"

DUCT BRACING NOTES:

1. DESIGN RESTRAINTS PER SEISMIC ZONE 4.
2. REFERENCE SMACNA SEISMIC RESTRAINT MANUAL.
3. FOR DUCTWORK REQUIRING SEISMIC BRACING, INSTALL BRACES AS FOLLOWS:
   a. TRANSVERSE BRACE AT EACH DUCT CHANGE OF DIRECTION, END OF DUCT RUN, AND AT 30'-0" O.C. FOR STRAIGHT RUNS.
   b. LONGITUDINAL BRACE AT 60'-0" O.C.
   c. TRANSVERSE BRACING OF ONE DUCT SECTION MAY ACT AS A LONGITUDAL BRACE FOR A DUCT SECTION CONNECTED PERPENDICULAR TO IT, PROVIDING THE BRACE IS INSTALLED WITHIN FOUR FEET OF THE INTERSECTION AND IS SIZED FOR THE LARGEST DUCT.
   d. WALLS WHICH HAVE DUCTS PASSING THROUGH THEM MAY SUBSTITUTE FOR A TRANSVERSE BRACE.
   e. DO NOT USE JOIST BRIDGING FOR SUPPORT OF ANY LOAD.
   f. IF SUPPORTING LOADS ABOVE 50 LBS. BETWEEN JOIST PANEL POINTS REINFORCE BOTTOM CORD OF JOIST AS PER STRUCTURAL ENGINEERS REQUIREMENTS. REFER TO SUPPORT DETAILS ON STRUCTURAL DRAWINGS.

3 M6.4 SEISMIC RESTRAINT OF DUCTS DETAIL

NOT TO SCALE

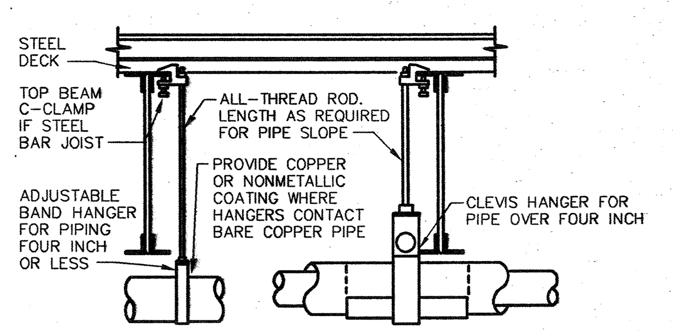

DO NOT HANG PIPE LARGER THAN 3" FROM BOTTOM OF JOISTS.

PROVIDE GALVANIZED STEEL SADDLE FOR ALL INSULATED PIPE LARGER THAN 3/4". VERIFY INSULATION THICKNESS WHEN SIZING HANGERS.

PROVIDE UPPER ATTACHMENT AS REQUIRED FOR CASES NOT SHOWN HERE. DO NOT INSTALL HANGER INSIDE INSULATION OR OTHERWISE PENETRATE VAPOR BARRIER. DO NOT HANG ONE PIPE FROM ANOTHER EXCEPT IN CHASES. TRAPEZE HANGERS MAY BE USED FOR MULTIPLE PARALLEL PIPES. HANGER SPACING FOR PIPE SIZE: COPPER: 4"=12' 3"=11' 2-1/2"=10' 2"=9' 1-1/2"=8' 1-1/4"=7' 1"=6' 3/4"=6' 1/2"=5'. CAST IRON: 10' AND ONE NEAR ALL JOINTS. STEEL: 4"=14' 3"=12' 2-1/2"=11' 2"=10' 1-1/2"=9' 1"=7' 3/4"=6' 1/2"=5'. LOCATE HANGERS AS CLOSE AS POSSIBLE TO TURNS AND TEES OF PIPE. PROVIDE SUPPLEMENTARY STEEL STRUTS BETWEEN JOISTS IF REQUIRED. LOCATE HANGERS TO TAKE LOAD OFF OF EQUIPMENT CONNECTIONS. ANCHOR WATER PIPE AGAINST SWAYING DUE TO CHANGES IN WATER VELOCITY. PROVIDE SEISMIC BRACING IF/AS REQUIRED BY LOCAL AUTHORITIES. CHAINS OR PERFORATED STRAP IRON OR STEEL IS NOT ACCEPTABLE. REFER TO CODES FOR FURTHER INFORMATION.

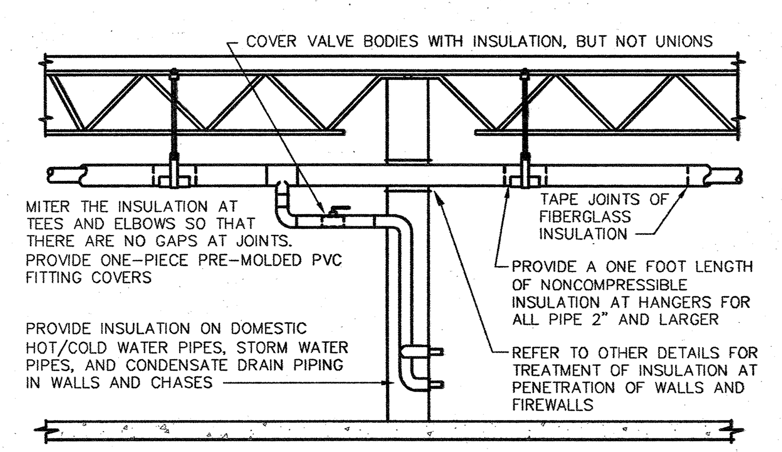

PROVIDE FIBERGLASS INSULATION WITH ALL-SERVICE JACKET WITH VAPOR BARRIER ON ALL COLD/HOT WATER PIPING AND CONDENSATE DRAIN PIPE. REFER TO SPECIFICATIONS FOR FURTHER INFORMATION REGARDING INSULATION. INSTALL ALL ITEMS PER SPECIFICATIONS AND MANUFACTURERS INSTRUCTIONS. MAINTAIN VAPOR BARRIER ON COLD PIPING BY MEANS OF SEALANT AND TAPE. FLAME-SPREAD AND SMOKE-DEVELOPED INDEXES SHALL NOT EXCEED 25/50. SEAL EXPOSED ENDS OF FIBERGLASS INSULATION WITH ADHESIVE MASTIC.

* INSULATE ALL PIPING IN CONDITIONED AND UNCONDITIONS SPACES.

4 M6.4 PIPE INSULATION DETAILS

NO SCALE

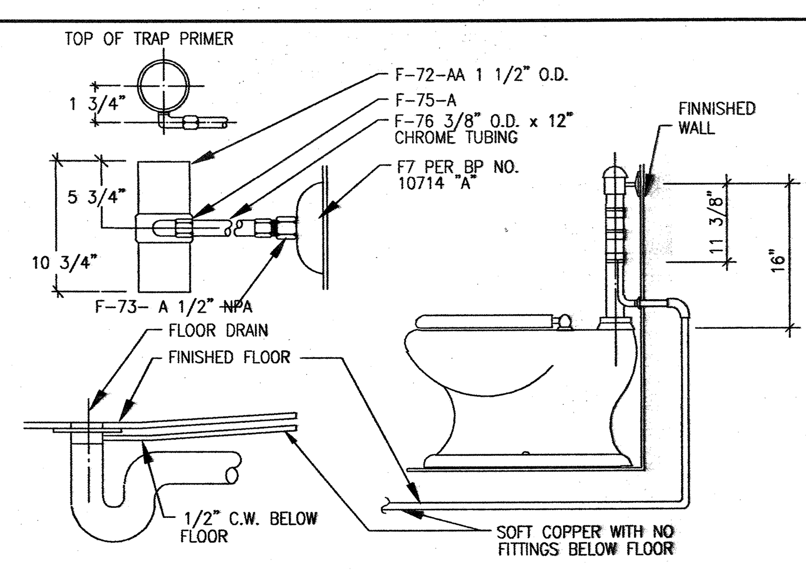

5 M6.4 TRAP PRIMER DETAIL

SCALE: NTS

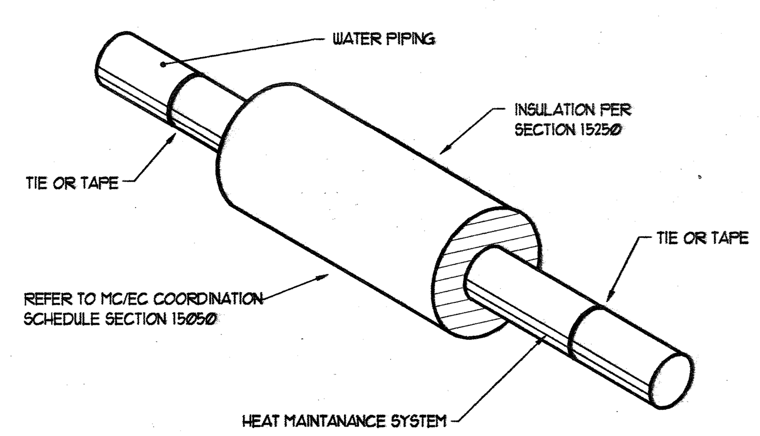

6 M6.4 HEAT MAINTENANCE CABLE INSTALLATION DETAIL

SCALE: NTS

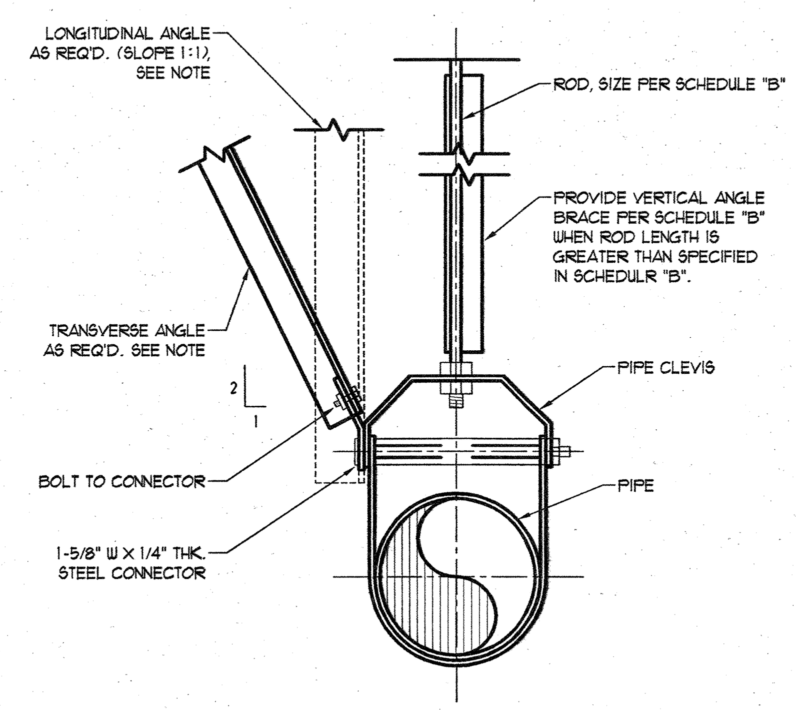

PIPING BRACING NOTES:

1. DESIGN SUPPORT SYSTEM FOR SEISMIC ZONE 4.
2. REFERENCE SMACNA SEISMIC RESTRAINT MANUAL.
3. SEISMIC BRACING IS REQUIRED FOR ALL PIPING 2-1/2" AND LARGER.
4. DO NOT USE BRANCH SECTIONS TO BRACE PIPING MAINS.
5. PROVIDE FLEXIBLE COUPLINGS AT PENETRATIONS THROUGH BUILDING SEISMIC AND EXPANSION JOINTS AND WHERE PIPING IS RIGIDLY CONNECTED TO EQUIPMENT.
6. FOR EQUIPMENT REQUIRING SEISMIC BRACING, INSTALL BRACES AS FOLLOWS:
   a. DO NOT USE JOIST BRIDGING FOR SUPPORT OF ANY LOAD.
   b. IF SUPPORTING LOADS ABOVE 50 LBS. BETWEEN JOIST PANEL POINTS REINFORCE BOTTOM CORD OF JOIST AS PER STRUCTURAL ENGINEERS REQUIREMENTS. REFER TO SUPPORT DETAILS ON STRUCTURAL DRAWINGS.

7 M6.4 TRANSVERSE SWAY BRACING DETAIL

NOT TO SCALE

SCHEDULE "B" TRANSVERSE BRACING FOR PIPE						
PIPE SIZE INCHES	BOLTS TO ANGLES	LONGITUDAL, TRANSVERSE & VERTICAL ANGLES	ROD DIAMETER INCHES	MAXIMUM ROD LENGTH	MAXIMUM INTERVAL OF BRACES IN FEET: 40-S STEEL OR CAST IRON	MAXIMUM INTERVAL OF BRACES IN FEET: COPPER TUBE
1	3/8"	1-1/2" X 1-1/2" X 3/16"	3/8"	19"	24.2	12.1
1-1/4	3/8"	1-1/2" X 1-1/2" X 3/16"	3/8"	19"	24.2	12.1
1-1/2	3/8"	1-1/2" X 1-1/2" X 3/16"	3/8"	19"	27.5	13.2
2	3/8"	1-1/2" X 1-1/2" X 3/16"	1/2"	25"	31.9	15.4
2-1/2	3/8"	2" X 2" X 5/16"	1/2"	25"	35.2	16.5
3	3/8"	2" X 2" X 5/16"	1/2"	25"	37.4	18.7
3-1/2	3/8"	2" X 2" X 5/16"	1/2"	25"	39.6	19.8
4	3/8"	2" X 2" X 5/16"	5/8"	31"	42.9	20.9
5	1/2"	2" X 2" X 5/16"	5/8"	31"	45.1	22.0
6	1/2"	2" X 2" X 5/16"	3/4"	37"	49.5	24.2
8	1/2"	2-1/2" X 2-1/2" X 1/4"	7/8"	43"	53.9	28.6
10	1/2"	3" X 3" 1/4"	7/8"	43"	59.4	30.8

Copyright (C) 2009 by PVE, Inc. Salt Lake City, Utah. All rights reserved. Unauthorized copying and/or use is illegal and subject to prosecution.

PVE, Inc.
Consulting Mechanical Electrical Engineers
1040 North 2200 West, Suite 100
Salt Lake City, UT 84116
Phone: (801) 359-3158
Fax: (801) 521-4114

NEW HEBER LIQUOR STORE
DEPT. OF ALCOHOLIC BEVERAGE CONTROL
HEBER, UTAH

FRANK N MURDOCK JR ■ Architect & Associates
975 East 100 South Suite 100, Salt Lake City, Utah 84102 TEL: (801) 532-4441 FAX (801) 532-4220

MECHANICAL DETAILS

REGISTERED PROFESSIONAL ENGINEER
ALAN D. SPENDLOVE
16691
STATE OF UTAH
5/20/09

REVISION # DATE:

DFCM PROJECT NO.:
08224030
CONST. DOC.
FILE NAME: N/A
PLOT SCALE: 1:96
DRAWN BY: AJG
CHECKED BY: AJG
DATE: MAY 2009

M6.4

By: khoacke; May 20, 2009 – 2:00 PM, Date Plotted: May 20, 2009 – 4:06 PM X:\Projects\2008\08223.00.01– Liquor Store – Heber\E100 – 08223.01.dwg

ELECTRICAL SYMBOLS

NOTE: SYMBOLS SHOWN IN THIS SCHEDULE ARE TYPICAL. NOT ALL ARE USED IN THIS PROJECT. DASHED SYMBOLS INDICATE EXISTING FIXTURE, EQUIPMENT, ETC.

SYMBOL	DESCRIPTION	MOUNTING HEIGHT
	ELECTRICAL WIRING	
	CROSS LINES INDICATE NUMBER OF CONDUCTORS GROUNDING CONDUCTORS NOT INCLUDED.	N/A
	BRANCH CIRCUIT CONCEALED IN CEILING OR WALL	N/A
	BRANCH CIRCUIT CONCEALED IN GROUND OR FLOOR	N/A
A-13	BRANCH CIRCUIT HOMERUNS TO PANEL W/PANEL & CIRCUIT NUMBER DESIGNATIONS.	N/A
	CONDUIT RISER UP	N/A
	CONDUIT RISER DOWN	N/A
	CONDUIT STUB (CAP CONDUIT)	AS NOTED
CT	CABLE TRAY	AS NOTED
BD	BUS DUCT	AS NOTED
	ELECTRICAL POWER	
J	JUNCTION BOX	AS NOTED
	DUPLEX RECEPTACLE	+16"
	QUAD RECEPTACLE	+16"
	SPLIT WIRED DUPLEX RECEPTACLE	+16"
WP	DUPLEX RECEPTACLE WEATHERPROOF AND GFCI	+16"
	DUPLEX RECEPTACLE OUTLET WITH GROUND FAULT CIRCUIT INTERRUPTION PROTECTION	+16"
EWC	RECEPTACLE ELECTRIC WATER COOLER (EWC) WITH GROUND FAULT CIRCUIT INTERRUPTION PROTECTION	+16"
	EQUIPMENT RECEPTACLE	+16"
	SPECIAL PURPOSE RECEPTACLE	+16"
	DUPLEX RECEPTACLE FLOOR	FLOOR
	QUAD RECEPTACLE FLOOR	FLOOR
	POWER/TELEPHONE POLE	FLOOR
	SNOW MELT CABLE	+46"
	ELECTRICAL CONNECTIONS	
	NON-FUSED DISCONNECT SWITCH	TOP AT 6'-0"
	FUSED DISCONNECT SWITCH	TOP AT 6'-0"
	MOTOR STARTER/DISCONNECT SWITCH COMBINATION NON-FUSED	TOP AT 6'-0"
	MOTOR STARTER/DISCONNECT SWITCH COMBINATION FUSED	TOP AT 6'-0"
	MOTOR STARTER ONLY	TOP AT 6'-0"
VFD	VARIABLE FREQUENCY DRIVE	+78"
	MOTOR CONNECTION	AS NOTED
	ELECTRICAL DISTRIBUTION	
T	TELEPHONE COMPANY PEDESTAL	AS NOTED
GS	POWER COMPANY GROUND SLEEVE	AS NOTED
	POWER COMPANY SITE TRANSFORMER	AS NOTED
	HIGH VOLTAGE (277/480 VOLT) PANELBOARD	TOP AT 6'-0"
	LOW VOLTAGE (120/208 VOLT) PANELBOARD	TOP AT 6'-0"
	DRY TYPE TRANSFORMER	AS NOTED
	DISTRIBUTION SWITCHBOARD	AS NOTED
	TELEPHONE AND/OR DATA TERMINAL BOARD	AS NOTED
	ELECTRICAL DEVICES	
	PUSHBUTTON	+48"
	STOP/START STATION	+48"
EPO	"EMERGENCY POWER OFF" MUSHROOM TYPE BUTTON	+48"
T	LINE VOLTAGE THERMOSTAT	+48"
	CLOCK	AS NOTED
N	NURSE CALL BED/BATH STATION	+48"
	NURSE CALL LIGHT	+84"
NURS	NURSE CALL STATION PANEL	TOP AT 6'-0"

SYMBOL	DESCRIPTION	MOUNTING HEIGHT
	LIGHTING CONTROL	
$	SINGLE POLE SWITCH	+48"
$3	3-WAY SWITCH	+48"
$4	4-WAY SWITCH	+48"
$P	SWITCH WITH PILOT LIGHT	+48"
$D	DIMMER SWITCH	+48"
$K	KEYED SWITCH	+48"
$TM	TIMER SWITCH (SPRING WOUND)	+48"
$T	MANUAL STARTER WITH THERMAL OVERLOAD	AS NOTED
$L	LOW VOLTAGE SWITCH	+48"
$°	CONTROLLING SWITCH (LETTER INDICATES CONTROL CIRCUIT)	+48"
	SINGLE POLE SWITCH/OCCUPANCY SENSOR COMBINATION, MANUAL ON/AUTO OFF (WALL MOUNTED) DUAL TECHNOLOGY*	+48"
	OCCUPANCY SENSOR DUAL TECHNOLOGY	CEILING
TS	TIME SWITCH	+60"
	LIGHTING CONTACTOR	+60"
	PHOTOCELL	AS NOTED
	LIGHTING	
	FLUORESCENT FIXTURE (TYPICAL)	CEILING
EM	FLUORESCENT EMERGENCY FIXTURE (TYPICAL)	CEILING
	SURFACE MOUNTED FIXTURE	CEILING
	RECESSED FIXTURE	CEILING
	WALL MOUNTED FIXTURE	AS NOTED
	WALL MOUNTED EMERGENCY EGRESS FIXTURE	AS NOTED
	FLUORESCENT STRIP	CEILING
	TRACK LIGHTING	CEILING
	EMERGENCY LIGHTING UNIT	+84"
F#X	FIXTURE TYPE SYMBOL (ATTACHED TO FIXTURE SYMBOL)	N/A
	POST TOP AREA LIGHT POLE & FIXTURE	AS NOTED
	AREA LIGHT POLE AND FIXTURE (HEAD QTY AS SHOWN ON PLAN)	AS NOTED
	BOLLARD FIXTURE	GROUND
	FLOOD OR SPOT FIXTURE	AS NOTED
	WALL MOUNTED EXIT LIGHT (SINGLE FACE)	+84"
	WALL MOUNTED EXIT LIGHT (DOUBLE FACE)	+84"
	CEILING MOUNTED EXIT LIGHT (SINGLE FACE)	CEILING
	CEILING MOUNTED EXIT LIGHT (DOUBLE FACE)	CEILING
	TELECOMMUNICATIONS	
	TELEPHONE OUTLET	+16"
	COMPUTER DATA OUTLET	+16"
	VOICE / DATA OUTLET	+16"
	TELEPHONE OUTLET FLOOR	FLOOR
	COMPUTER DATA OUTLET FLOOR	FLOOR
	NETWORK AND VOICE OUTLET FLOOR	FLOOR
	REFERENCE SYMBOLS	
XXX	FEEDER TAG (ONE LINE DIAGRAM)	N/A
#	REVISION TAG INDICATOR	N/A
#/#	DETAIL INDICATOR. TOP DETAIL IDENTIFICATION BOTTOM INDICATES SHEET WHERE DETAIL IS LOCATED.	N/A
X-XX	MECHANICAL EQUIPMENT SYMBOL	N/A
X	KEYED NOTE REFERENCE	N/A

SYMBOL	DESCRIPTION	MOUNTING HEIGHT
	AUDIO / VIDEO	
TV	TELEVISION OUTLET	AS NOTED
V	VOLUME CONTROL	+48"
S	SPEAKER	CEILING
M	MICROPHONE JACK	+16"
A	AUXILIARY JACK	+16"
IC	INTERCOM STATION	+48"
	BELL	+84"
CH	CHIME	+84"
	FIRE ALARM	
F	FIRE ALARM MANUAL PULL STATION	SEE DETAIL
	FIRE ALARM HORN/STROBE	SEE DETAIL
	FIRE ALARM HORN/STROBE WITH GUARD	SEE DETAIL
WP	FIRE ALARM HORN/STROBE WATERPROOF	SEE DETAIL
S	FIRE ALARM STROBE	SEE DETAIL
	SMOKE DETECTOR	CEILING
D	SMOKE DETECTOR BATTERY-BACKED	CEILING
D	DUCT SMOKE DETECTOR	IN DUCT
D	SMOKE DETECTOR (ELEVATOR RECALL)	CEILING
	HEAT DETECTOR	CEILING
G	GAS DETECTOR	+16"
	DOOR HOLDER	AS NOTED
	PRESSURE SWITCH	AS NOTED
	FIRE ALARM FLOW SWITCH	AS NOTED
	FIRE ALARM TAMPER SWITCH	AS NOTED
	FIRE ALARM FIREFIGHTER PHONE	+48"
CM	CONTROL MODULE	AS NOTED
MM	MONITOR MODULE	AS NOTED
FSD	FIRE/SMOKE DAMPER	AS NOTED
R	FIRE ALARM RELAY	AS NOTED
GAA	FIRE ALARM GENERATOR ANNUNCIATOR	TOP AT 6'-0"
FST	FIRE ALARM TRANSMISSION (MONITORING) DEVICE	AS NOTED
FACP	FIRE ALARM CONTROL PANEL	TOP AT 6'-0"
FAA	FIRE ALARM REMOTE ANNUNCIATOR PANEL	TOP AT 6'-0"
	SECURITY	
$D1	SECURITY SYSTEM DOOR CONTACT	DOOR JAMB
$D2	SECURITY SYSTEM OVERHEAD DOOR CONTACT	AS NOTED
KP	SECURITY SYSTEM KEYPAD ARM/DISARM	+48"
ES	SECURITY SYSTEM DOOR ELECTRIC STRIKE	AS NOTED
ML	SECURITY SYSTEM MAGNETIC DOOR LOCK	AS NOTED
REX	REQUEST TO EXIT MOTION DETECTOR	AS NOTED
	SECURITY SYSTEM AREA MOTION SENSOR	AS NOTED
	SECURITY SYSTEM GLASS BREAK SENSOR	AS NOTED
CR	SECURITY SYSTEM CARD READER	+48"
AK	SECURITY SYSTEM DOOR ACCESS KEYPAD	+48"
	SECURITY SYSTEM CCTV CAMERA	AS NOTED
DVR	DIGITAL VIDEO RECORDER	AS NOTED
MON	SECURITY SYSTEM CCTV MONITOR	AS NOTED
SPRT	SECURITY SYSTEM PANEL	TOP AT 6'-0"
PS	POWER SUPPLY LOW VOLTAGE	AS NOTED

ABBREVIATIONS

AFF	ABOVE FINISHED FLOOR	EWC	ELECTRIC WATER COOLER	(N)	NEW
AFP	ARC FAULT PROTECTOR	EWH	ELECTRIC WATER HEATER	NIC	NOT IN CONTRACT
AIC	AMP INTERRUPTING CURRENT (SYMMETRICAL)	(A)	FUTURE	NL	NIGHT LIGHT
AL	ALUMINUM	FA	FIRE ALARM	OFCI	OWNER FURNISHED CONTRACTOR INSTALLED
BG	BELOW GRADE	FLA	FULL LOAD AMPS	OFOI	OWNER FURNISHED OWNER INSTALLED
C	CONDUIT	GFI	GROUND FAULT INTERRUPTER	PNL	PANEL
CFCI	CONTRACTOR FURNISHED CONTRACTOR INSTALLED	GFP	GROUND FAULT PROTECTOR	(R)	RELOCATE
CKT	CIRCUIT	GRC	GALVANIZED RIGID CONDUIT	TVSS	TRANSIENT VOLTAGE SURGE SUPPRESSOR
CO	CONDUIT ONLY	GRND	GROUND	TYP	TYPICAL
CU	COPPER	IG	ISOLATED GROUND	UNO	UNLESS NOTED OTHERWISE
C/M	COMPLETE WITH	MCB	MAIN CIRCUIT BREAKER	WP	WEATHER PROOF
E	EMERGENCY	MCC	MOTOR CONTROL CENTER	(X)	DEMOLISH/DELETE
(E)	EXISTING	MH	MANHOLE	XMR	TRANSFORMER
EPO	EMERGENCY POWER OFF	MLO	MAIN LUGS ONLY		

* THIS IS A TYPICAL ABBREVIATION LIST. NOT ALL ABBREVIATIONS AE USED ON THIS PROJECT.

GENERAL NOTES:

1. THE ELECTRICAL CONTRACTOR SHALL REVIEW AND COORDINATE WITH ARCHITECTURAL, CIVIL, STRUCTURAL, MECHANICAL, PLUMBING AND OTHER DRAWINGS PRIOR TO BID.
2. SUBMIT SHOP DRAWINGS IN ACCORDANCE WITH THE SPECIFICATIONS BOUND IN A THREE RING BINDER, INDEXED IN A NEAT AND ORDERLY MANNER WITH TYPE AND MODEL NUMBERS INDICATED. SUBMITTALS SHALL INCLUDE BUT NOT LIMITED TO: LIGHTING FIXTURES, LAMPS, WIRING DEVICES, OCCUPANCY SENSORS, CONTACTORS, TIME CLOCKS, PHOTOCELLS, RELAYS, SWITCHBOARDS, PANELBOARDS, MOTOR CONTROL CENTERS, SAFETY SWITCHES, MOTOR STARTERS, OVERCURRENT PROTECTION DEVICES, TRANSFORMERS, CONDUCTORS OVER 600 VOLTS AND ALL SPECIAL SYSTEMS SUCH AS FIRE ALARM, LIGHTING CONTROLS, SECURITY SYSTEMS, SOUND SYSTEMS ETC.
3. IT IS THE INTENT OF THESE DRAWINGS AND SPECIFICATIONS TO ESTABLISH A STANDARD OF QUALITY. MANUFACTURES CATALOG NUMBERS ARE LISTED AS A BASIS OF DESIGN. ELECTRICAL CONTRACTOR SHALL SUBMIT PRODUCT INFORMATION THAT DEVIATES FROM ORIGINAL DESIGN INTENT AND SPECIFICATION.
4. CONTRACTOR SHALL SECURE AND PAY FOR ALL NECESSARY BUILDING PERMITS AND INSPECTION FEES.
5. ALL IMPACT FEES ASSOCIATED WITH CITY, UTILITY OR SERVICE COMPANIES FOR BUT NOT LIMITED TO POWER, TELEPHONE, FIBER OPTIC & INTERNET SHALL BE THE RESPONSIBILITY OF THE OWNER.
6. THE ELECTRICAL CONTRACTOR SHALL BE RESPONSIBLE TO COORDINATE WITH THE GENERAL CONTRACTOR TO PROVIDE AND INSTALL TEMPORARY POWER FOR PROJECT CONSTRUCTION AS REQUIRED. ALL ENERGY COSTS ARE THE RESPONSIBILITY OF THE GENERAL CONTRACTOR.
7. THE ELECTRICAL CONTRACTOR SHALL NOTIFY AND COOPERATE WITH THE MECHANICAL CONTRACTOR SUCH THAT NO DUCTS, PIPING, OR EQUIPMENT FOREIGN TO THE OPERATION OF THE ELECTRICAL EQUIPMENT SHALL BE PERMITTED TO BE INSTALLED IN, ENTER, OR PASS THROUGH ELECTRICAL ROOMS OR SPACES, OR ABOVE OR BELOW ELECTRICAL EQUIPMENT IN OTHER AREAS. THE ELECTRICAL CONTRACTOR SHALL COMPLY WITH THE MOST RECENT VERSION OF THE NATIONAL ELECTRICAL CODE REGARDING CLEARANCES REQUIRED AROUND THE PANELBOARD(S).
8. DO NOT SCALE DRAWINGS VERIFY DIMENSIONS IN FIELD PRIOR TO MAKING ANY ROUGH-INS.
9. ELECTRICAL CONTRACTOR SHALL REVIEW ALL ARCHITECTS ELEVATIONS, SECTIONS AND FLOOR PLANS PRIOR TO ROUGH IN OF ELECTRICAL DEVICE JUNCTION BOXES.
10. CONSULT ARCHITECTS REFLECTED CEILING PLANS FOR EXACT LOCATIONS OF LIGHTING FIXTURES, SPEAKERS, SMOKE DETECTORS ETC.
11. ELECTRICAL CONTRACTOR SHALL MEET WITH THE CEILING AND MECHANICAL CONTRACTORS TO COORDINATE LOCATIONS, CLEARANCES, CEILING TYPES AND ROUGH-IN REQUIREMENTS OF ALL LIGHTING FIXTURES PRIOR TO DUCT, PIPING AND CEILING INSTALLATIONS.
12. VERIFY EXACT LOCATION OF EQUIPMENT TO BE FURNISHED BY OTHERS PRIOR TO ROUGH-IN.
13. ELECTRICAL CONTRACTOR SHALL VERIFY ALL EQUIPMENT DIMENSIONS AND LOCATIONS BEFORE BEGINNING ROUGH-INS. CONSULT CONTRACT DOCUMENT DRAWINGS AND SHOP DRAWINGS TO VERIFY AND MAINTAIN REQUIRED CLEARANCES.
14. ELECTRICAL ROOM DRAWINGS ARE FOR REFERENCE ONLY OF EQUIPMENT QUANTITIES. ELECTRICAL CONTRACTOR SHALL PROVIDE SHOP DRAWINGS OF ELECTRICAL ROOM SHOWING DIMENSIONS AND CLEARANCES OF ALL EQUIPMENT AND ELECTRICAL GEAR PROVIDED. COORDINATE LAYOUT WITH ONE-LINE DRAWINGS.
15. CONTRACTOR SHALL VERIFY ACTUAL ELECTRICAL LOADS FROM NAMEPLATE RATINGS OF EACH PIECE OF EQUIPMENT REQUIRING POWER. BRING ANY DISCREPANCIES TO THE ATTENTION OF THE PROJECT ENGINEER.
16. WORK SHALL BE PERFORMED IN A WORKMANLIKE MANNER, PER INDUSTRY STANDARD AND TO THE SATISFACTION OF THE ARCHITECT AND ENGINEER.
17. WORK, MATERIALS AND EQUIPMENT SHALL CONFORM TO THE LATEST EDITIONS OF LOCAL, STATE AND NATIONAL CODES, STANDARDS AND ORDINANCES.
18. FINAL CONNECTIONS TO EQUIPMENT SHALL BE MADE AS PER MANUFACTURERS WRITTEN INSTRUCTIONS AND APPROVED WIRING DIAGRAMS AND DETAILS. IT SHALL BE THE CONTRACTORS RESPONSIBILITY TO PROVIDE ALL MATERIALS AND EQUIPMENT COMPATIBLE WITH EQUIPMENT ACTUALLY SUPPLIED.
19. ALL EMPTY RACEWAY SYSTEMS SHALL HAVE A 200LB RATED PULL CORD INSTALLED AND SHALL BE IDENTIFIED AT EACH JUNCTION, PULL AND TERMINATION POINT, USING PERMANENT MARKER IN THE BOX. ID SHALL INDICATE INTENDED USE OF CONDUIT, ORIGINATION AND TERMINATION POINTS OF EACH INDIVIDUAL CONDUIT.
20. ALL PENETRATIONS OF FIRE RATED FLOORS, CEILING AND WALLS SHALL BE SEALED WITH UL LISTED AND RATED FIRE STOP MATERIAL TO MAINTAIN FIRE RATING OF ASSEMBLY.
21. ELECTRICAL BOXES SHALL NOT BE LOCATED IN MASONRY OR CONCRETE COLUMNS, BOND BEAMS OR GROUTED CELLS OF MASONRY WALLS ADJACENT TO OPENINGS WITHOUT COORDINATION WITH THE MASONRY CONTRACTOR.
22. WIRE FOR GENERAL USE SHALL BE COPPER "75° C RATED". WIRING FOR HID FIXTURES WITHIN 9" OF FLUORESCENT BALLAST SHALL BE COPPER, MINIMUM 90° C RATED. CONDUCTOR SIZES INDICATED ARE FOR INSTALLATION IN A MAXIMUM 30° C AMBIENT TEMPERATURE ENVIRONMENT. CONDUCTOR AMPACITY SHALL BE DERATED FOR HIGHER AMBIENT INSTALLATIONS.
23. CONDUCTORS HAVE BEEN SIZED FOR VOLTAGE DROP AS PER PLANS AND DIRECT ROUTING. ANY DEVIATION IN CONDUIT ROUTING MAY INCREASE THE WIRE AND CONDUIT SIZE. ELECTRICAL CONTRACTOR IS RESPONSIBLE TO INSURE PROPER OPERATING VOLTAGE ON ALL CIRCUITS BOTH INTERIOR AND EXTERIOR. THE VOLTAGE DROP SHALL NOT EXCEED 3% FOR BRANCH CIRCUITS AND 2% FOR FEEDERS FOR A TOTAL OF 5% COMBINED TOGETHER OF BRANCH AND FEEDER CIRCUITS TO THE FARTHEST OUTLET.
24. ALL WIRING SHALL BE ENCLOSED IN METAL RACEWAYS. ALL RECEPTACLES, LIGHTING FIXTURES, ETC. SHALL HAVE A SEPARATE INSULATED GROUNDING CONDUCTOR FROM EACH DEVICE TO THE BRANCH PANEL.
25. ELECTRICAL CONTRACTOR SHALL PROVIDE ALL UTILITY METERING EQUIPMENT TO COMPLY WITH THE STANDARDS OF THE LOCAL OR PROJECT SPECIFIC POWER COMPANY.
26. VERIFY EXACT LOCATIONS OF ALL NEW AND EXISTING UNDERGROUND SITE UTILITIES, PIPING AND RACEWAY SYSTEMS PRIOR TO TRENCHING. A UTILITY LOCATING COMPANY SUCH AS "BLUE STAKE" OR EQUAL SHALL BE USED TO VERIFY AND MARK UTILITIES BEFORE TRENCHING. PROVIDE NECESSARY TRENCHING, BACKFILL EXCAVATION, SUPPORTS, SERVICE FEEDERS, (CONDUIT AND/OR WIRE), PULL BOXES, TRANSFORMER PADS, SAW CUTTING AND PATCHING, CONCRETE PAVING ETC. REQUIRED. BACKFILL TRENCHES TO 90% COMPACTION. PATCHING SHALL MATCH EXISTING SURROUNDING SURFACES. CONTRACTOR SHALL OBTAIN AND VERIFY UTILITY COMPANY DRAWINGS AND REQUIREMENTS FOR ALL SITE UTILITIES. ELECTRICAL CONTRACTOR SHALL ALSO COORDINATE ELECTRICAL RELATED UTILITIES WITH THE CIVIL, MECHANICAL, AND SITE EXCAVATION CONTRACTORS.
27. PULLBOXES, CABINETS, ETC. MOUNTED ON THE EXTERIOR OF THE BUILDING SHALL BE WEATHERPROOF TYPE WITH HINGED GASKETED LOCKABLE COVERS SECURED WITH TAMPERPROOF SCREWS.
28. SPLICES IN EXTERIOR PULLBOXES AND MANHOLES SHALL BE MADE WATERPROOF USING "SCOTCHCAST" SPLICE KIT OR APPROVED EQUAL. SEAL ENDS OF CONDUITS AND DUCTS ENTERING BOXES WITH "DUCTSEAL" OR EQUAL.
29. ELECTRICAL CONTRACTOR SHALL TEST AND VERIFY ALL SYSTEMS WITH PROJECT ENGINEER DURING FINAL INSPECTION TO INSURE PROPER OPERATION. IF TESTS RESULT IN DEFECT THE CONTRACTOR SHALL MAKE ANY CORRECTIONS NECESSARY AT NO ADDITIONAL COSTS TO THE OWNER.
30. PROVIDE RECORD DRAWINGS IN ACCORDANCE WITH THE PROJECT SPECIFICATIONS.
31. THE CONTRACTOR SHALL GUARANTEE THE INSTALLATION AGAINST DEFECTS IN MATERIALS AND WORKMANSHIP WHICH MAY OCCUR UNDER NORMAL USAGE FOR A PERIOD OF ONE YEAR AFTER SUBSTANTIAL COMPLETION. DEFECTS SHALL BE PROMPTLY CORRECTED.
32. ALL CABLES AND RACEWAYS INSTALLED UNDER METAL CORRUGATED ROOF DECK SHALL BE INSTALLED AND SUPPORTED NOT LESS THAN ½" FROM THE NEAREST SURFACE OF THE ROOF DECKING IN ACCORDANCE WITH THE NATIONAL ELECTRICAL CODE ARTICLE 300.4(E).

LIGHTING CONTROL PANEL NOTES:

1. SYSTEM DESCRIPTION FOR LIGHTING INTEGRATOR PANEL SYSTEM WITH AUTOMATION CARD (NON-PC CONTROL)
2. THE LIGHTING CONTROL SYSTEM SHALL CONSIST OF ANY OF THE FOLLOWING COMPONENTS. RELAY PANELS, DATALINE WIRING, SWITCHES, SENSORS AND REMOTE OVERRIDE DEVICES. ALL EQUIPMENT TO BE UL/CUL CERTIFIED TO MEET UL 916.
3. THE RELAY PANELS SHALL BE SUITABLE FOR MOUNTING IN ELECTRICAL CLOSETS AND MOUNTED IN ACCORDANCE WITH NATIONAL AND LOCAL ELECTRICAL CODES. THE RELAYS WILL CONTROL INDIVIDUAL CIRCUITS OR BRANCH CIRCUITS AS INDICATED IN THE RELAY PANEL SCHEDULES. ALL POWER WIRING WILL BE IDENTIFIED AT THE RELAY BY ITS CONTROLLING CIRCUIT BREAKER AND BRANCH LETTER.
4. LOW VOLTAGE SWITCHES, OCCUPANCY SENSORS, AND/OR PHOTOCELLS SHALL BE MOUNTED IN THE SPACES AS INDICATED ON THE REFLECTED CEILING PLANS. LOW VOLTAGE WIRING FROM THE SWITCHES AND SENSORS TO THE RELAY PANEL SHALL BE CLASS 2 OR CLASS 2P (PLENUM RATED) AS REQUIRED BY THE NATIONAL ELECTRICAL CODE AND LOCAL STANDARDS. USE ONLY PROPERLY COLOR-CODED, STRANDED #20 AWG (OR LARGER) WIRE AS INDICATED ON THE DRAWINGS.
5. PANEL COMPONENTS TO INCLUDE: ENCLOSURE AND COVER, POWER SUPPLY, AND PANEL INTERIOR ASSEMBLY WITH MOTHERBOARD, AND CONTROL ELECTRONICS. PANELS ARE TO BE SHIPPED FULLY ASSEMBLED YET DESIGNED FOR DISASSEMBLY FOR MOUNTING THE ENCLOSURE FIRST, AND REASSEMBLY AFTER CONDUIT ROUGH-IN. THE PANEL SHALL INCLUDE VISUAL LED STATUS AND MANUAL OVERRIDE FOR EACH RELAY. TERMINALS FOR EACH RELAY FOR DIRECT-WIRED DEVICES SUCH AS SENSORS AND SWITCHES, SYSTEM DATALINE TERMINALS, AND PROGRAMMABLE SYSTEM SWITCHES.
6. EACH RELAY PANEL SHALL USE 30A BALLAST RATED, 120/277VAC, MECHANICALLY LATCHING RELAYS AS REQUIRED. RELAYS SHALL HAVE A MINIMUM 10,000 AMP SHORT CIRCUIT CURRENT RATING. ELECTRICALLY HELD RELAYS WILL NOT BE ACCEPTABLE. PANELS SHALL BE SIZED TO MAXIMUM 8, 24, OR 48 RELAYS. EACH RELAY SHALL PROVIDE PILOT OUTPUT CONTACTS, RATED AT 1AMPS AC/DC.
7. AN OPTIONAL GROUP SWITCHING (GS) CARD SHALL BE PROVIDED FOR CONTROLLING 8 GROUPS OF LIGHTING, PLUS PATTERN CONTROL FOR EACH GROUP. EACH GS CARD SHALL PROVIDE 8 TERMINALS FOR CONNECTION TO DIRECT WIRED SWITCHES, OVERRIDE DEVICES AND OCCUPANCY SENSORS. EACH GROUP SHALL HAVE AN LED ASSOCIATED TO INDICATE ITS STATUS AND A MANUAL OVERRIDE PUSHBUTTON.
8. PANEL INTELLIGENCE CARD FOR AUTOMATION FUNCTIONS SHALL BE PROVIDED VIA A PLUG-IN CARD SLOT ON THE PANEL MOTHERBOARD. THE INTELLIGENCE BOARD SHALL BE A DISTRIBUTED INTELLIGENCE COMPONENT, CAPABLE OF EXECUTING ALL SCHEDULES, PROGRAMMABLE SWITCHES, AND OCCUPANT OVERRIDES WITHOUT RELYING ON ANY OTHER COMPONENT IN THE SYSTEM.

   AUTOMATION INTELLIGENCE CARD SHALL PROVIDE TWO DATALINE COMMUNICATIONS PORTS FOR PROGRAMMING, MONITORING, AND CONTROL, AND THE OTHER PORT FOR CONNECTION TO DIGITAL SIGNALING DATALINE SWITCHES. THE DATALINE SHALL ALLOW COMMUNICATIONS OVER UNSHIELDED TWISTED PAIR WIRING FOR NETWORKING UP TO 10 PANELS AND FOR DISTANCES UP TO 1500 FEET BETWEEN PANELS, AND FOR CONNECTING UP TO 65 DATALINE SWITCHES PER PANEL.

   THE AUTOMATION INTELLIGENCE CARD SHALL PROVIDE CONNECTION TO OPTIONAL MODULES THAT PROVIDE CLOCK SCHEDULING, OR TO A BUILDING MANAGEMENT SYSTEM VIA DRY CONTACTS, OR A TELEPHONE CONTROL MODULE, OR A PHOTOSENSOR CONTROL MODULE FOR EXTERIOR LIGHTING CONTROL.
9. A PROGRAMMABLE NETWORK CLOCK WITH AN 8 LINE LCD DISPLAY SHALL BE INSTALLED IN THE PANEL. THE CLOCK SHALL PROVIDE MENU DRIVEN CONTROL FOR 8 DIFFERENT LIGHTING GROUPS, WITH 7 DAY REPEATING SCHEDULES AND PROVISION FOR HOLIDAYS. THE CLOCK SHALL PROVIDE USER SELECTABLE PRE-PROGRAMMED SCENARIOS FOR: SCHEDULED ON/OFF, MANUAL ON/ SCHEDULED OFF, MANUAL ON/ SHEEP WITH AUTOMATIC CONTROL SWITCH, ASTRO ON/OFF, ASTRO ON/SCHEDULED OFF, AND DARK ON/OFF WHEN USED WITH THE PHOTOSENSOR CONTROL MODULE.
10. AN PHOTOSENSOR CONTROL (PC) MODULE WITH COMPATIBLE OUTDOOR PHOTOCELL SHALL BE PROVIDED FOR EXTERIOR LIGHTING CONTROL. THE PC MODULE SHALL PROVIDE 8 AUTOMATION CHANNELS WITH USER PROGRAMMABLE SET POINTS FOR EACH CHANNEL. THE PROGRAMMABLE RANGE FOR EACH CHANNEL SHALL BE 0-200 FOOTCANDLES. A TWO-LINE LCD WINDOW SHALL DISPLAY REAL-TIME LIGHT LEVELS FOR EACH CHANNEL AND USER PROGRAMMED SETPOINTS.
11. RELAY PANELS WILL BE CAPABLE OF FOLLOWING STANDARD FEATURES: SCHEDULED ON/OFF, ASTRONOMICAL TIME OF DAY, BLINK WARNING, TRUE AFTER HOURS TIME DELAY, JANITOR SCENARIO SWITCHES, TELEPHONE OVERRIDES, PULSE ON/OFF.
12. COLOR CODED WIRE SHALL BE PROVIDED FOR NETWORKING PANELS TOGETHER AND FOR CONNECTION TO DIGITAL SIGNALING DATALINE SWITCHES.
13. WIRE CONNECTING PANELS TOGETHER SHALL BE DUAL 18/2 TWISTED PAIR, UNSHIELDED, DATALINE WIRE (4 CONDUCTOR) TO PROVIDE A ROBUST, HIGH-SPEED COMMUNICATIONS PATH. DATALINE CAN BE RUN IN ANY CONVENIENT TOPOLOGY SERIES AS BENEFITS THE INSTALLATION, I.E. T-TAP, STAR, OR LOOP. USE ONE PAIR ONLY FOR NETWORKING PANELS TOGETHER. WIRE SHALL BE THE WATT STOPPER HOLJ44 DATALINE WIRE. USE ONE PAIR FOR CONNECTING PANELS TOGETHER. USE PLENUM RATED WIRE WHEN APPLICABLE.
14. WIRE CONNECTING DIGITAL SIGNALING DATALINE SWITCHES TO PANELS SHALL BE DUAL 18/2 TWISTED PAIR, UNSHIELDED, DATALINE WIRE (4 CONDUCTOR) TO PROVIDE A ROBUST, HIGH-SPEED COMMUNICATIONS PATH. DATALINE CAN BE RUN IN ANY CONVENIENT TOPOLOGY SERIES AS BENEFITS THE INSTALLATION, I.E. T-TAP, STAR, OR LOOP. WIRE SHALL BE THE WATT STOPPER HOLJ44 DATALINE WIRE. USE BOTH PAIRS FOR CONNECTING PANELS TO DATALINE SWITCHES. USE PLENUM RATED WIRE WHEN APPLICABLE.
15. MANUFACTURER SHALL PROVIDE A FACTORY AUTHORIZED TECHNICIAN TO CONFIRM PROPER INSTALLATION AND OPERATION OF ALL SYSTEM COMPONENTS INCLUDING OCCUPANCY SENSORS AND DAYLIGHTING CONTROLS.
16. MANUFACTURER SHALL PROVIDE FACTORY AUTHORIZED APPLICATION ENGINEER TO TRAIN OWNER PERSONNEL IN THE OPERATION AND PROGRAMMING OF THE LIGHTING CONTROL SYSTEM.
17. MANUFACTURER SHALL PROVIDE SYSTEM DOCUMENTATION INCLUDING:
    A. SYSTEM 1-LINE SHOWING ALL PANELS, NUMBER AND TYPE OF SWITCHES AND SENSORS, DATALINE, FRONT END MATERIAL.
    B. DRAWINGS FOR EACH PANEL SHOWING HARDWARE CONFIGURATION AND NUMBERING.
    C. PANEL WIRING SCHEDULES.
    D. TYPICAL WIRING DIAGRAMS FOR EACH COMPONENT.

PVE Inc. Consulting Mechanical Electrical Engineers
1040 North 2200 West, Suite 100
Salt Lake City, UT 84116
Phone: (801) 359-3158
Fax: (801) 521-4114

NEW HEBER LIQUOR STORE

DEPT. OF ALCOHOLIC BEVERAGE CONTROL
HEBER, UTAH

FRANK N MURDOCK JR ■ Architect & Associates
975 East 100 South, Suite 100, Salt Lake City, Utah 84102 TEL: (801) 532-4220 FAX (801) 532-4441

ELECTRICAL SYMBOLS, NOTES, & LEGEND

REGISTERED PROFESSIONAL ENGINEER No. 154867 DEAN P. LEVORSEN STATE OF UTAH 5/20/09

REVISION # DATE:

DFCM PROJECT NO.: 08224030
CONST. DOC.
FILE NAME: E100 - 08223.01
SCALE: AS SHOWN
DESIGNED BY: KJH
CHECKED BY: RKR
DATE: MAY 2009

E 100

Copyright (C) 2008 by PVE, Inc. Salt Lake City, Utah. All rights reserved. Unauthorized copying and/or use is illegal and subject to prosecution.

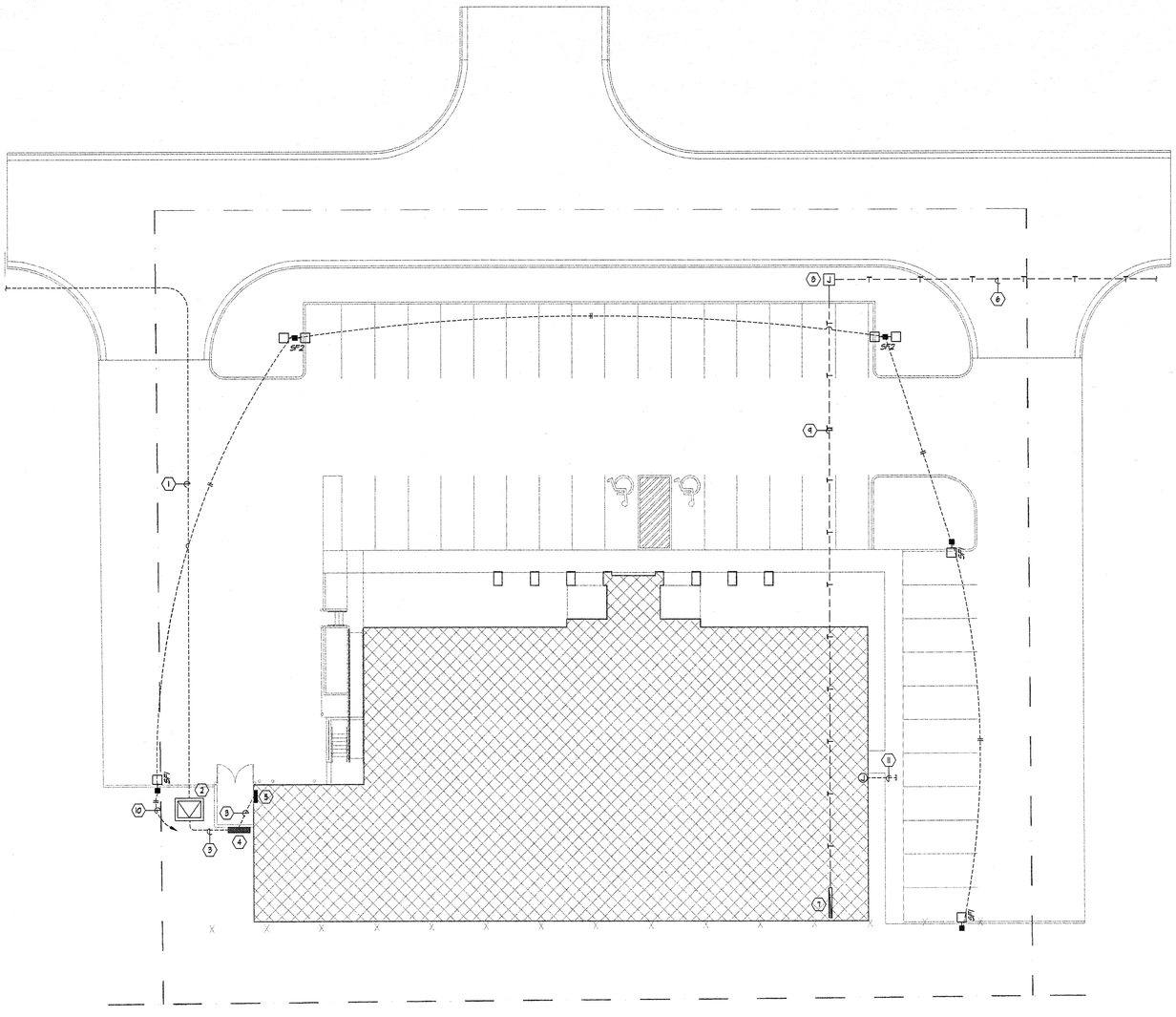

A SITE PLAN - ELECTRICAL
E101 SCALE: 1/16" = 1' - 0"

12' 0 8' 16' 24' 32'

NORTH

GENERAL SITE PLAN NOTES:

1. ELECTRICAL CONTRACTOR TO REFER TO THE CIVIL ENGINEER'S DRAWING AND COORDINATE ELECTRICAL INSTALLATION WITH ALL UTILITIES.
2. ELECTRICAL CONTRACTOR TO INCLUDE A MINIMUM AMOUNT OF $20,000 IN HIS BID FOR POWER COMPANY UTILITY WORK. IF ACTUAL FEES ARE LESS THAN THIS AMOUNT, CONTRACTOR SHALL REIMBURSE THE DIFFERENCE TO THE OWNER BY CHANGE ORDER.
3. ELECTRICAL CONTRACTOR TO VERIFY ALL THE UTILITY COMPANY SERVICE (POWER, TELEPHONE, ETC.) TERMINATION POINTS DURING THE BIDDING PROCESS. PROVIDE CONDUIT AS REQUIRED TO THE BUILDING TO ACCOMMODATE ALL UTILITY COMPANY SERVICES. REPORT ANY CONFLICTING CONDITIONS TO THE ARCHITECT.

KEYED NOTES (#):

1. POWER COMPANY PRIMARY FEEDER TO GROUND SLEEVE (SEE ONE LINE DIAGRAM). VERIFY THE EXACT GROUND SLEEVE LOCATION WITH THE POWER COMPANY DURING THE BIDDING PROCESS.
2. NEW TRANSFORMER AND VAULT. (SEE ONE LINE DIAGRAM).
3. MAIN SERVICE FEEDER (SEE ONE LINE DIAGRAM).
4. EUSERC RATED CT/MAIN BREAKER ENCLOSURE (SEE ONE LINE DIAGRAM). PROVIDE AND INSTALL AS PER POWER COMPANY SPECIFICATIONS.
5. PANELBOARD 'P1'.
6. MAIN TELEPHONE COMPANY SERVICE CONDUIT TO TELEPHONE COMPANY PEDESTAL. VERIFY EXACT PEDESTAL LOCATION WITH TELEPHONE COMPANY DURING THE BIDDING PROCESS. PROVIDE ALL CONDUIT AND TRENCHING. (SEE TELEPHONE RISER DIAGRAM).
7. MAIN TELEPHONE BOARD (SEE RISER).
8. TELEPHONE JUNCTION BOX AS PER UTAH STATE REQUIREMENTS (SEE TELEPHONE/DATA RISER DIAGRAM).
9. MAIN TELEPHONE SERVICE CONDUIT (SEE RISER DIAGRAM).
10. TO P1-1618, CIRCUIT V/A LIGHTING CONTROL PANEL 'RP'. SEE PANEL SCHEDULE FOR BRANCH FEEDER CONDUIT AND WIRE SIZE. SEE LIGHTING CONTROL PANEL SCHEDULE AND DETAIL FOR LIGHTING CONTROL.
11. 2" CONDUIT STUBBED 5'-0" FROM EDGE OF BUILDING. STUB, CAP AND MARK AS REQUIRED.

PVE Inc.
Consulting Mechanical Electrical Engineers
1040 North 2200 West, Suite 100
Salt Lake City, UT 84116
Phone: (801) 359-3158
Fax: (801) 521-4114

NEW HEBER LIQUOR STORE
DEPT. OF ALCOHOLIC BEVERAGE CONTROL
HEBER, UTAH

FRANK N MURDOCK JR ■ Architect & Associates
975 East 100 South Suite 100, Salt Lake City, Utah 84102 TEL: (801) 532-4441 FAX (801) 532-4220

SITE PLAN - ELECTRICAL

REGISTERED PROFESSIONAL ENGINEER No. 154867 DEAN P. LEVORSEN STATE OF UTAH
5/20/09

REVISION # DATE:

DFCM PROJECT NO.:
08224030
CONST. DOC.
FILE NAME: E101-E102 - 08223.01
SCALE: AS SHOWN
DESIGNED BY: KJH
CHECKED BY: RKR
DATE: MAY 2009

E
101

By: khoacke; May 20, 2009 - 2:20 PM, Date Plotted: May 20, 2009 - 4:06 PM X:\Projects\2008\08223.00.01- Liquor Store - Heber\E101-E102 - 08223.01.dwg

Copyright (C) 2009 by PVE, Inc. Salt Lake City, Utah. All rights reserved. Unauthorized copying and/or use is illegal and subject to prosecution.

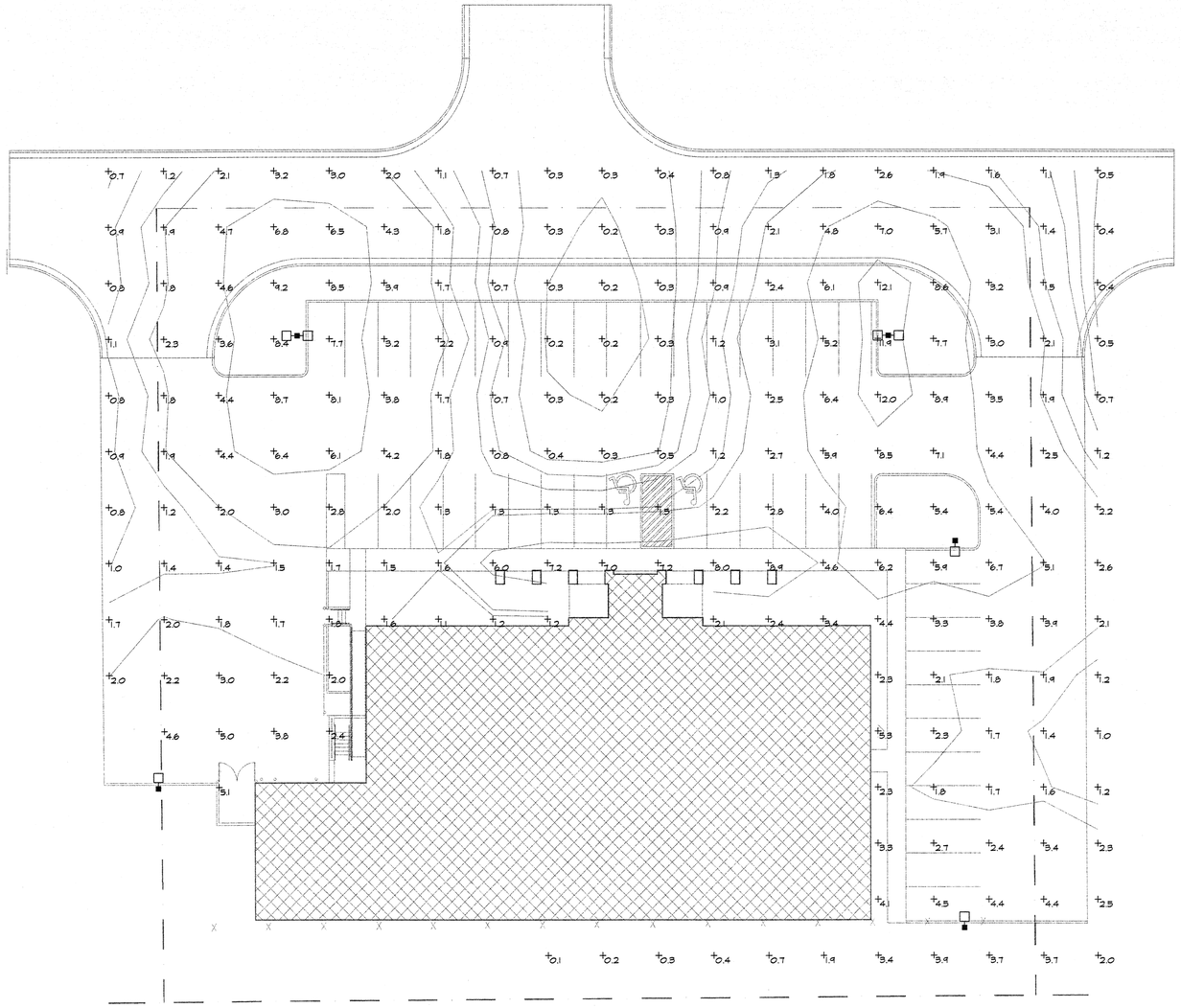

A SITE PLAN - LIGHTING CALCULATIONS
E102 SCALE: 1/16" = 1' - 0"

12' 0 8' 16' 24' 32'

NORTH

STATISTICS									
DESCRIPTION	SYMBOL	AVG	MAX	MIN	MAX/MIN	AVG/MIN	UG	CV	AVG/MAX
CALC ZONE	+	2.8 FC	12.1 FC	0.1 FC	121.0:1	28.0:1	6.7	0.45	0.2:1

PVE Inc.
Consulting Mechanical Electrical Engineers
1040 North 2200 West, Suite 100
Salt Lake City, UT 84116
Phone: (801) 359-3158
Fax: (801) 521-4114

NEW HEBER LIQUOR STORE

DEPT. OF ALCOHOLIC BEVERAGE CONTROL
HEBER, UTAH

FRANK N MURDOCK JR ■ Architect & Associates
975 East 100 South Suite 100, Salt Lake City, Utah 84102 TEL: (801) 532-4441 FAX (801) 532-4220

SITE PLAN - LIGHTING CALCULATIONS

REGISTERED PROFESSIONAL ENGINEER No. 154867 DEAN P. LEVORSEN STATE OF UTAH 5/20/09

REVISION # DATE:

DFCM PROJECT NO.:
08224030
CONST. DOC.
FILE NAME: E101-E102 - 08223.01
SCALE: AS SHOWN
DESIGNED BY: KJH
CHECKED BY: RKR
DATE: MAY 2009

E
102

By: khoacke; May 20, 2009 - 2:20 PM, Date Plotted: May 20, 2009 - 4:06 PM K:\Projects\2008\08223.00.01- Liquor Store - Heber\E101-E102 - 08223.01.dwg

Copyright (c) 2009 by PVE, Inc. Salt Lake City, Utah. All rights reserved. Unauthorized copying and/or use is illegal and subject to prosecution.

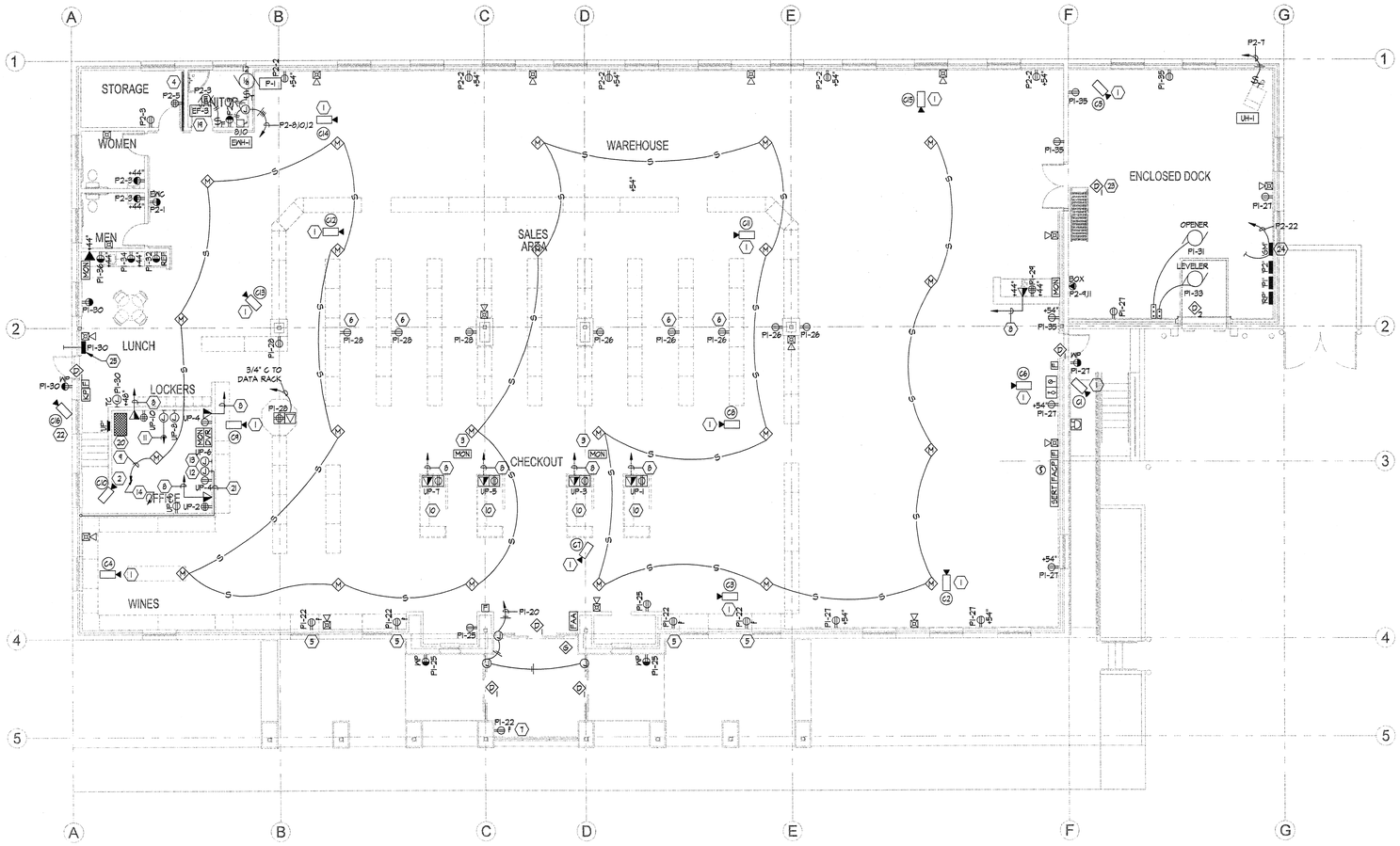

A FLOOR PLAN - POWER & SYSTEMS
E201 SCALE: 1/8" = 1'-0"

NORTH

GENERAL NOTES:

1. PROVIDE AND INSTALL A ¾" CONDUIT WITH SECURITY SYSTEM WIRE FROM EACH SECURITY DEVICE TO THE SECURITY PANEL LOCATED IN THE OFFICE.
2. ALL CABLES AND RACEWAYS INSTALLED UNDER METAL CORRUGATED ROOF DECK SHALL BE INSTALLED AND SUPPORTED TO THE NEAREST OUTSIDE SURFACE IF THE CABLE OR RACEWAY IS NOT LESS THAN ½" FROM THE NEAREST SURFACE OF THE ROOF DECKING.

KEYED NOTES (◉):

1. SECURITY CCTV CAMERA TO BE STEM MOUNTED ON A PEDESTAL (18" TO 24" AS REQUIRED) TO CLEAR LIGHTING FIXTURES. PROVIDE AND INSTALL A ¾" CONDUIT TO CCTV/SECURITY PANEL LOCATED IN THE OFFICE.
2. SECURITY CCTV CAMERA TO BE STEM MOUNTED ON A PEDESTAL (18" TO 24" AS REQUIRED) TO CLEAR LIGHTING FIXTURES. CAMERA TO BE POINTED AT OFFICE SAFE. PROVIDE AND INSTALL A ¾" CONDUIT WITH COAXIAL CABLE (AS SPECIFIED BY THE SECURITY SYSTEM EQUIPMENT SUPPLIER/CONTRACTOR) TO CCTV/SECURITY PANEL LOCATED IN THE OFFICE, SEE CCTV RISER DIAGRAM.
3. PUBLIC VIEWING SECURITY CCTV LCD MONITOR.
4. TELEPHONE/DATA BOARD (SEE TELEPHONE/DATA RISER DIAGRAM).
5. DUPLEX RECEPTACLE FOR SIGNAGE. SEE ARCHITECTURAL INTERIOR ELEVATIONS FOR MOUNTING HEIGHT. CIRCUIT VIA LIGHTING CONTROL PANEL (SEE LIGHTING CONTROL DETAIL AND SCHEDULE).
6. DUPLEX CONVENIENCE OUTLET MOUNTED HORIZONTALLY IN BASE OF SHELVING.
7. OUTLET MOUNTED AT +84" FOR "OPEN" SIGN. CIRCUIT VIA LIGHTING CONTROL PANEL (SEE LIGHTING CONTROL DETAIL AND SCHEDULE). SEE LIGHTING PLAN FOR OVERRIDE SWITCH LOCATION.
8. (1)-1" CONDUIT WITH NYLON PULL STRING TO THE DATA RACK AND (1)-1"CONDUIT WITH NYLON PULL STRING TO THE TELEPHONE BOARD. SEE SHEET TELEPHONE/DATA RISER DIAGRAM.
9. ¾" CONDUIT WITH SECURITY SYSTEM WIRE TO SECURITY PANEL.
10. SEE POINT OF SALE UNDER COUNTER DETAIL.
11. DATA RACK. 2" CONDUIT WITH NYLON PULL STRING TO MAIN TELEPHONE BOARD.
12. CCTV SYSTEM JUNCTION BOX, SIZE AS REQUIRED. ROUTE TO CCTV EQUIPMENT IN RACK UNDER COUNTER MONITOR ON DESK.
13. JUNCTION BOX FOR CCTV SYSTEM POWER SUPPLY.
14. SEE ARCHITECTURAL INTERIOR AND CABINET ELEVATIONS FOR EXACT LOCATIONS OF ALL EQUIPMENT IN OFFICE AREA. ARCHITECTURAL ELEVATIONS TAKE PRECEDENCE OVER THESE DRAWINGS FOR ALL OUTLET AND EQUIPMENT LOCATIONS.
15. JUNCTION BOX FOR SPRINKLER CONTROLLER, PROVIDED BY OTHERS, INSTALLED BY THE ELECTRICAL CONTRACTOR.
16. 2" CONDUIT WITH NYLON PULL STRING, STUB CAP AND MARK FOR SPRINKLER CONTROLS.
17. EUSERC RATED CT/MAIN BREAKER CABINET (SEE ONE LINE DIAGRAM).
18. METER BASE (SEE ONE LINE DIAGRAM).
19. UNIT LOCATED ON ROOF.
20. UPS SYSTEM.
21. (2)-2" CONDUITS WITH NYLON PULL STRING TO STRUCTURE FOR VIDEO CABLES TO CAMERAS AND MONITORS.
22. SECURITY CCTV CAMERA TO BE MOUNTED ON WALL AS REQUIRED IN A SECURITY ENCLOSURE. PROVIDE AND INSTALL A ¾" CONDUIT TO CCTV/SECURITY PANEL LOCATED IN THE OFFICE.
23. ROOF HATCH SECURITY DOOR CONTACT.
24. GUTTER MELT SYSTEM CONTROLLER.
25. SPRINKLER CONTROLLER. STUB 2" CONDUIT OUT OF BUILDING BELOW GRADE FOR VALVE CONTROL WIRES.

PVE Inc.
Consulting Mechanical Electrical Engineers
1040 North 2200 West, Suite 100
Salt Lake City, UT 84116
Phone: (801) 359-3158
Fax: (801) 521-4114

NEW HEBER LIQUOR STORE
DEPT. OF ALCOHOLIC BEVERAGE CONTROL
HEBER, UTAH

FLOOR PLAN - POWER & SYSTEMS

FRANK N MURDOCK JR ■ Architect & Associates
975 East 100 South Suite 100, Salt Lake City, Utah 84102 TEL: (801) 532-4441 FAX (801) 532-4220

REGISTERED PROFESSIONAL ENGINEER NO. 154887 DEAN F. ALEVOMSEN STATE OF UTAH
5/21/09

REVISION # DATE:

DFCM PROJECT NO.: 08224030
CONST. DOC.
FILE NAME: E201-E202 - 08223.01
SCALE: AS SHOWN
DESIGNED BY: KJH
CHECKED BY: RKR
DATE: MAY 2009

E 201

By: khacke; May 21, 2009 - 9:00 AM, Date Plotted: May 21, 2009 - 9:01 AM X:\Projects\2008\08223.00.01- Liquor Store - Heber\E201-E202 - 08223.01.dwg
Copyright (C) 2009 by PVE, Inc. Salt Lake City, Utah. All rights reserved. Unauthorized copying and/or use is illegal and subject to prosecution.

By: khoacke; May 20, 2009 – 4:02 PM, Date Plotted: May 20, 2009 – 4:05 PM X:\Projects\2008\08223.00.01– Liquor Store – Heber\E201-E202 – 08223.01.dwg

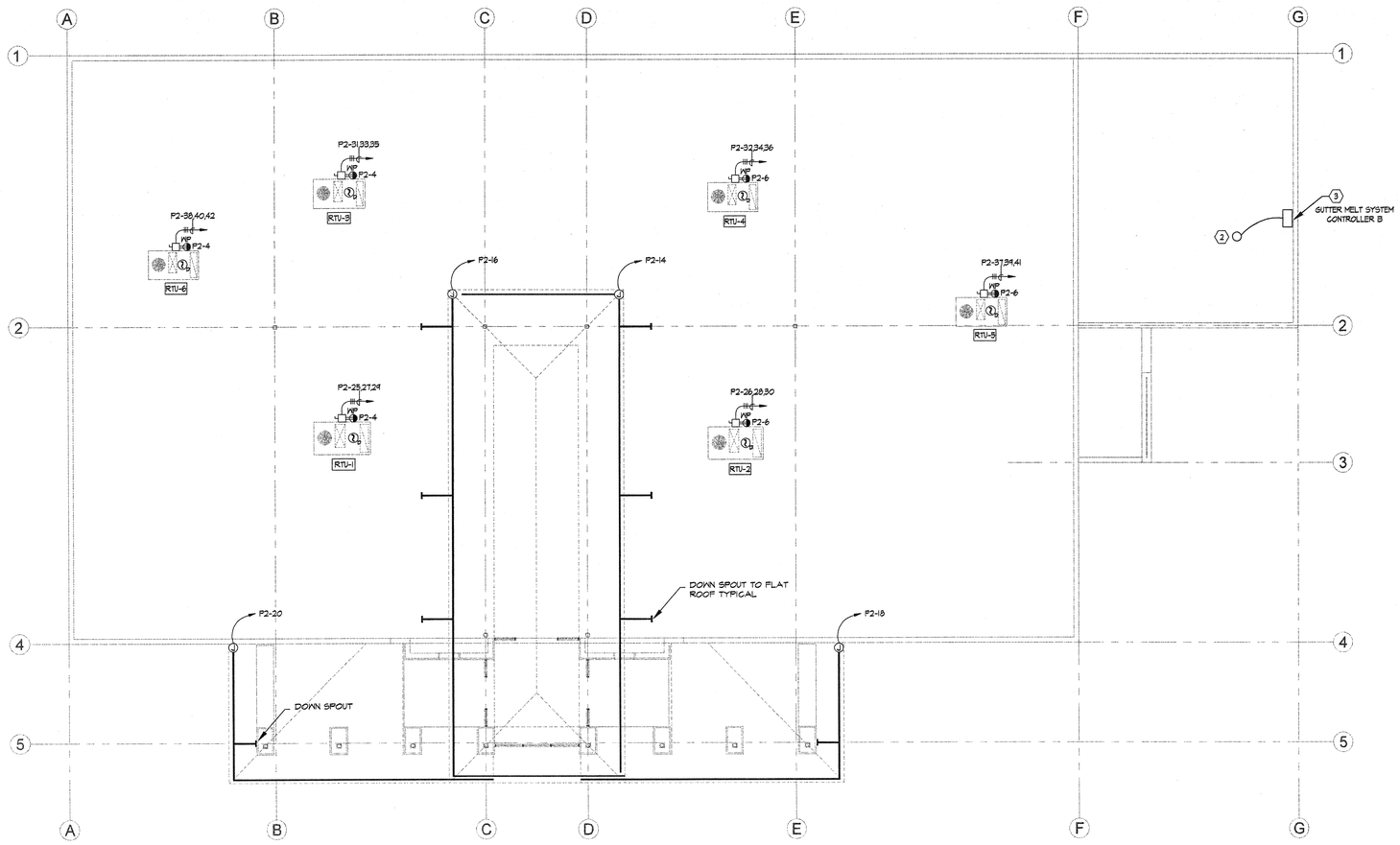

A ROOF PLAN - POWER
E202 SCALE: 1/8" = 1'-0"

6' 0 4' 8' 12' 16'

NORTH

KEYED NOTES (◎):

1. GUTTER MELT CIRCUIT TO PANEL VIA SNOW MELTING SYSTEM CONTROLLER.
2. GUTTER MELT SYSTEM TEMPERATURE / MOISTURE SENSOR WIRE TO SYSTEM CONTROLLER.
3. GUTTER MELT SYSTEM CONTROLLER IN DOCK BELOW.

PVE Inc.
Consulting Mechanical Electrical Engineers
1040 North 2200 West, Suite 100
Salt Lake City, UT 84116
Phone: (801) 359-3158
Fax: (801) 521-4114

NEW HEBER LIQUOR STORE

DEPT. OF ALCOHOLIC BEVERAGE CONTROL
HEBER, UTAH

FRANK N MURDOCK JR. ■ Architect & Associates
975 East 100 South Suite 100, Salt Lake City, Utah 84102 TEL. (801) 532-4441 FAX (801) 532-4220

ROOF PLAN - POWER

REGISTERED PROFESSIONAL ENGINEER
No. 154867
DEAN P. LEVORSEN
STATE OF UTAH
5/14/09

REVISION # DATE:

DFCM PROJECT NO.:
08224030
CONST. DOC.
FILE NAME: E201-E202 - 08223.01
SCALE: AS SHOWN
DESIGNED BY: KJH
CHECKED BY: RKR
DATE: MAY 2009

E
202

Copyright (C) 2009 by PVE, Inc. Salt Lake City, Utah. All rights reserved. Unauthorized copying and/or use is illegal and subject to prosecution.

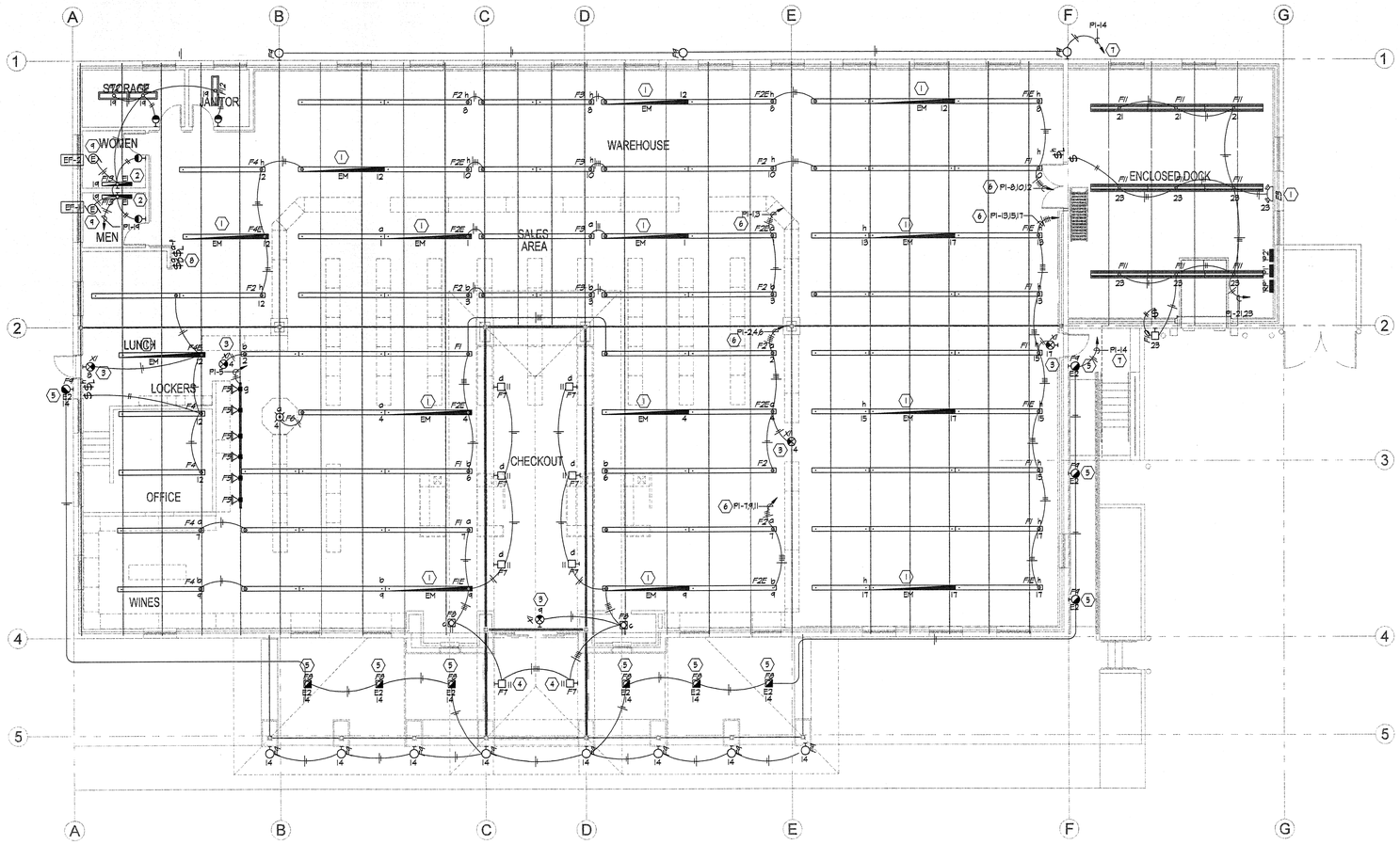

A FLOOR PLAN - LIGHTING
E301 SCALE: 1/8" = 1'-0"

6' 0 4' 8' 12' 16'

NORTH

GENERAL NOTES:

1. ALL WALL MOUNTED MOTION SENSORS SHALL BE A DUAL TECHNOLOGY MOTION SENSOR WITH INTEGRAL OVERRIDE SWITCH. MOTION SENSOR TO MOUNT IN A STANDARD SWITCH BOX. MOTION SENSOR TO HAVE A FIFTEEN MINUTE TIME DELAY SET AT TEN MINUTES. USE WATT-STOPPER SENSOR SWITCH OR APPROVED EQUAL.
2. ALL CEILING MOUNTED MOTION SENSORS SHALL BE A DUAL TECHNOLOGY MOTION SENSOR WITH POWER PACK AS REQUIRED TO CONTROL LIGHTING. MOTION SENSOR TO HAVE A FIFTEEN MINUTE DELAY SET AT TEN MINUTES. CONTRACTOR TO SUBMIT FLOOR PLAN TO MOTION SENSOR SUPPLIER FOR FACTORY TO LOCATE MOTION SENSOR FOR OPTIMAL PERFORMANCE TO AVOID NUISANCE SHUT OFF OF LIGHTING. MANUFACTURERS LAYOUT PLAN TO BE PART OF SUBMITTALS. PROVIDE SUFFICIENT BOX DEPTH AND CORRECT PLASTER RING TO ACCOMMODATE ACTUAL RELAY UNIT AND OCCUPANCY SENSOR INSTALLED. PROVIDE PROPER SEPARATION OF 120 VOLT AND CLASS 2 WIRING AS NECESSARY IN ACCORDANCE WITH NATIONAL ELECTRICAL CODE. USE WATT-STOPPER SENSOR SWITCH OR APPROVED EQUAL.
3. SUB-LETTERS NEXT TO SWITCHES INDICATE SWITCHING ASSIGNMENTS. ELECTRICAL CONTRACTOR IS TO FURNISH AND INSTALL ALL NECESSARY CONDUIT, WIRE, JUNCTION BOXES, ETC., AS REQUIRED TO EXTEND CIRCUITING FROM WALL BOX AND/OR THE LIGHTING CONTROL PANEL TO FIXTURES FOR SWITCHING ASSIGNMENTS. LOWER CASE LETTERS ON OR NEAR FIXTURES INDICATE CONTROLLING SWITCHES. SWITCH LE2(S) NOT SHOWN.
4. ARCHITECTURAL REFLECTED CEILING PLAN TAKES PRECEDENCE OVER THIS PLAN FOR FIXTURE LOCATIONS AND PLACEMENT. SEE ARCHITECTURAL INTERIOR ELEVATIONS FOR WALL MOUNTED FIXTURE MOUNTING HEIGHTS.
5. ALL CABLES AND RACEWAYS INSTALLED UNDER METAL CORRUGATED ROOF DECK SHALL BE INSTALLED AND SUPPORTED TO THE NEAREST OUTSIDE SURFACE IF THE CABLE OR RACEWAY IS NOT LESS THAN 1½" FROM THE NEAREST SURFACE OF THE ROOF DECKING.

KEYED NOTES (⊙):

1. EMERGENCY LIGHT FIXTURE TO BE UNSWITCHED, PROVIDE CONTINUOUS CIRCUIT (SEE EMERGENCY BALLAST OPERATION DETAIL).
2. EMERGENCY LIGHT FIXTURE TO BE SWITCHED (SEE EMERGENCY BALLAST OPERATION DETAIL).
3. EXIT SIGN TO BE UNSWITCHED, PROVIDE CONTINUOUS CIRCUIT.
4. NITE LIGHT FIXTURE TO BE ON CONTINUOUS UNSWITCHED CIRCUIT.
5. EMERGENCY EGRESS FIXTURE ON BATTERY PACK (SEE EMERGENCY BALLAST OPERATION DETAIL). FIXTURE TO BE CONTROLLED V/A LIGHTING CONTROL PANEL 'RP'.
6. CIRCUIT V/A LIGHTING CONTROL PANEL 'RP' (SEE LIGHTING CONTROL DETAIL). PROVIDE A SWITCHED AND UNSWITCHED CIRCUIT(S) AS REQUIRED.
7. CIRCUIT V/A LIGHTING CONTROL PANEL 'RP' (SEE LIGHTING CONTROL DETAIL).
8. LOW VOLTAGE SWITCH BANK FOR SWITCHES a THRU f (SEE LIGHTING CONTROL DETAIL) AND LIGHT TRACK DIMMER CONTROL.
9. UNIT LOCATED ON ROOF.

PVE Inc.
Consulting Mechanical Electrical Engineers
1040 North 2200 West, Suite 100
Salt Lake City, UT 84116
Phone: (801) 359-3158
Fax: (801) 521-4114

NEW HEBER LIQUOR STORE

DEPT. OF ALCOHOLIC BEVERAGE CONTROL
HEBER, UTAH

FRANK N MURDOCK JR ■ Architect & Associates
975 East 100 South Suite 100A, Salt Lake City, Utah 84102 TEL: (801) 532-4441 FAX (801) 532-4220

FLOOR PLAN - POWER & SYSTE1S

REGISTERED PROFESSIONAL ENGINEER No. 154867 DEAN P. LEVORSEN STATE OF UTAH
5/21/09

REVISION # DATE:

DFCM PROJECT NO.:
08224030
CONST. DOC.
FILE NAME: E301 - 08223.01
SCALE: AS SHOWN
DESIGNED BY: KJH
CHECKED BY: RKR
DATE: MAY 2009

E
301

By: khoacke; May 21, 2009 – 8:35 AM, Date Plotted: May 21, 2009 – 8:36 AM X:\Projects\2008\08223.00.01– Liquor Store – Heber\E301 – 08223.01.dwg

Copyright (C) 2009 by PVE, Inc. Salt Lake City, Utah. All rights reserved. Unauthorized copying and/or use is illegal and subject to prosecution.

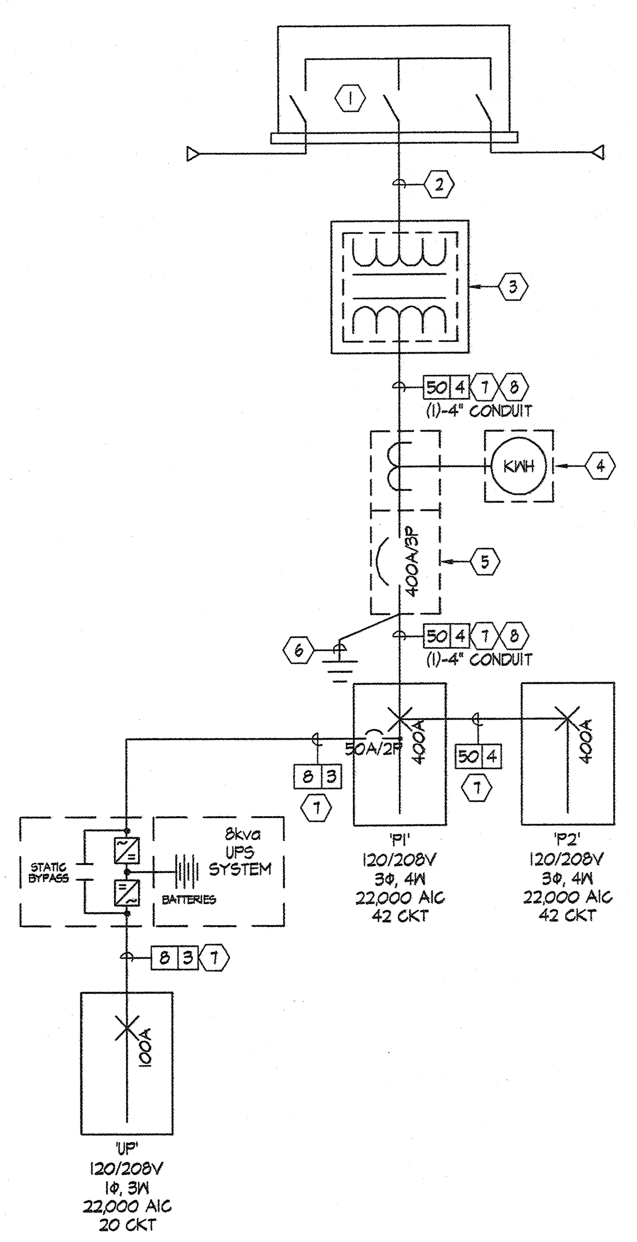

A ONE LINE DIAGRAM
E401

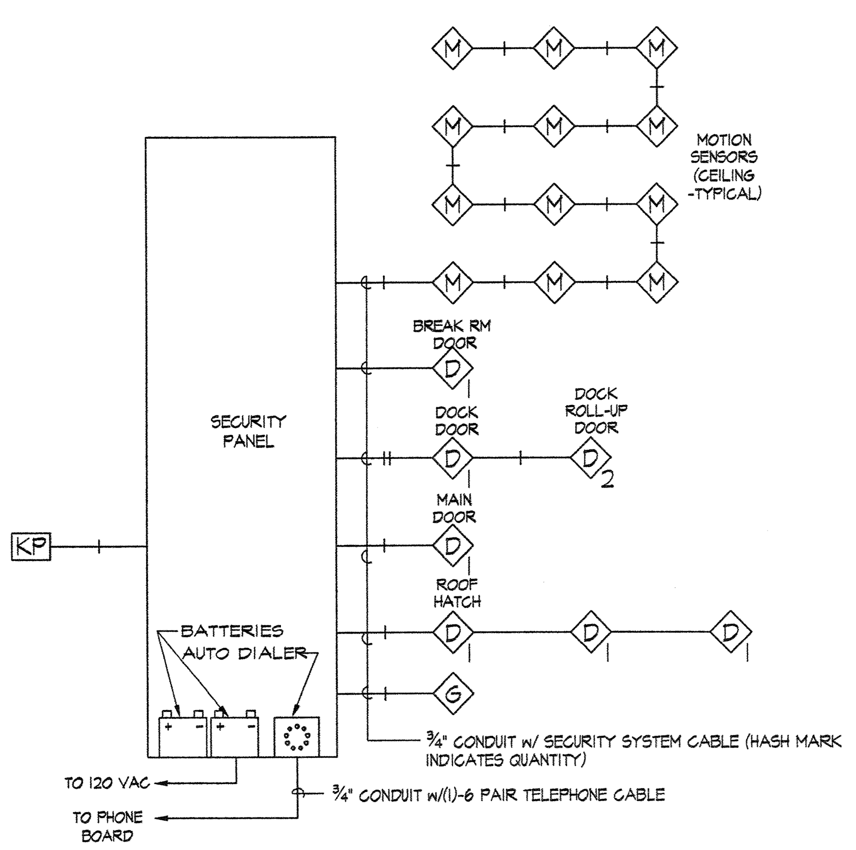

B SECURITY SYSTEM RISER DIAGRAM
E401

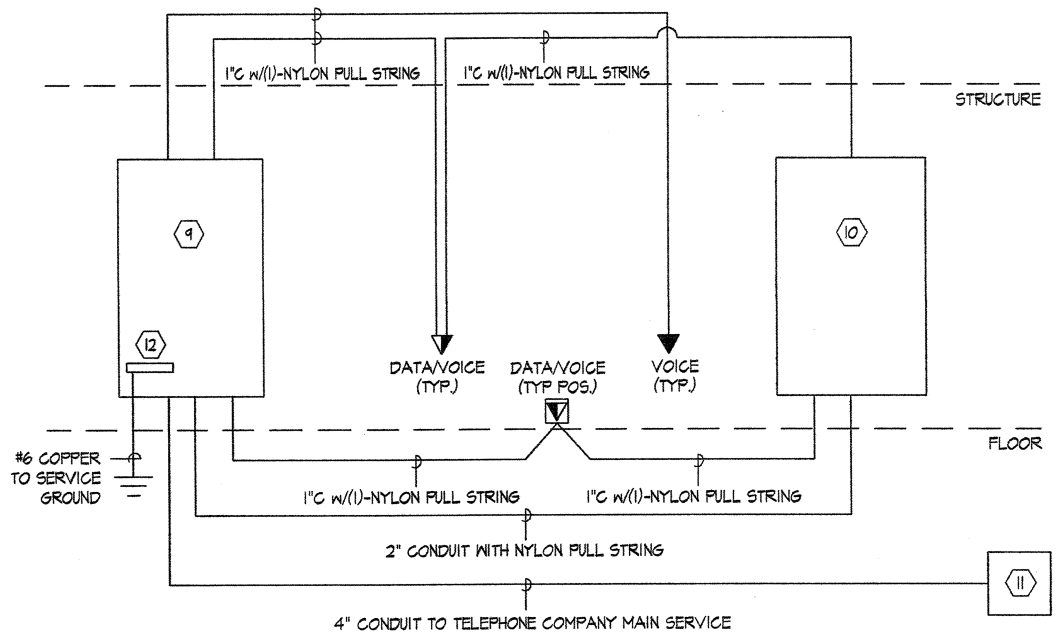

C TELEPHONE/DATA RISER DIAGRAM
E401

ROCKY MOUNTAIN POWER SERVICE ENTRANCE SCHEDULE

(SCHEDULE IS SHOWN HERE FOR REFERENCE ONLY, VERIFY LATEST VERSION WITH POWER COMPANY PRIOR TO ROUGH-IN. SEE POWER COMPANY FORM GS 031 TABLE 3)

SERVICE ENTRANCE MAX. RATING (AMPS)	SERVICE ENTRANCE CONTINUOUS DUTY (AMPS)	AVAILABLE CONDUIT RUNS	SERVICE SIZE: 75% LOAD FACTOR PHASE	75% LOAD FACTOR NEUTRAL	100% LOAD FACTOR PHASE	100% LOAD FACTOR NEUTRAL
200	160	(1)-3"	(1)-4/0	(1)-2/0	(1)-4/0	(1)-2/0
400	320	(1)-4"	(1)-350	(1)-4/0	(1)-500	(1)-350
600	480	(2)-4"	(2)-350	(2)-4/0	(2)-350	(2)-4/0
800	640	(3)-4"	(3)-350	(3)-4/0	(3)-350	(3)-4/0
1,000	800	(4)-4"	(3)-350	(3)-4/0	(4)-350	(4)-4/0
1,200	960	(4)-4"	(3)-500	(3)-350	(4)-500	(4)-350
1,600	1,280	(6)-4"	(5)-500	(5)-350	(6)-500	(6)-350
2,000	1,600	(8)-4"	(6)-500	(6)-350	(8)-500	(8)-350
2,400	1,920	(9)-4"	(8)-500	(8)-350	(7)-500 CU	(7)-500 CU
3,000	2,400	(9)-5"	(SEE NOTE #4)			
4,000	3,200	(9)-5"	(SEE NOTE #4)			

NOTES:

1. ABOVE CONDUCTORS ARE CROSS-LINKED POLYETHYLENE (XLPE) INSULATED 600 VOLT ALUMINUM CABLES UNLESS OTHERS SPECIFIED.
2. SERVICE SIZES GIVEN ABOVE CAN CARRY CONTINUOUSLY (THREE HOURS OR MORE) THE SERVICE ENTRANCE LIMIT AMPERAGES GIVEN IN THE SECOND COLUMN/ IF THE ACTUAL LOAD IS ESTIMATED TO BE LESS THAN THESE VALUES, THE SERVICE SIZE MAY BE REDUCED ACCORDINGLY.
3. AFTER SELECTING SERVICE CABLES, USE CONSTRUCTION STANDARD GS 051 TO DETERMINE THE VOLTAGE DROP. IF THE VOLTAGE DROP IS GREATER THAN 3 PERCENT INSTALL THE NEXT LARGER SIZE SERVICE.
4. REFER TO TABLE 2 FOR 1,500 kVA OR 2500 kVA TRANSFORMER.

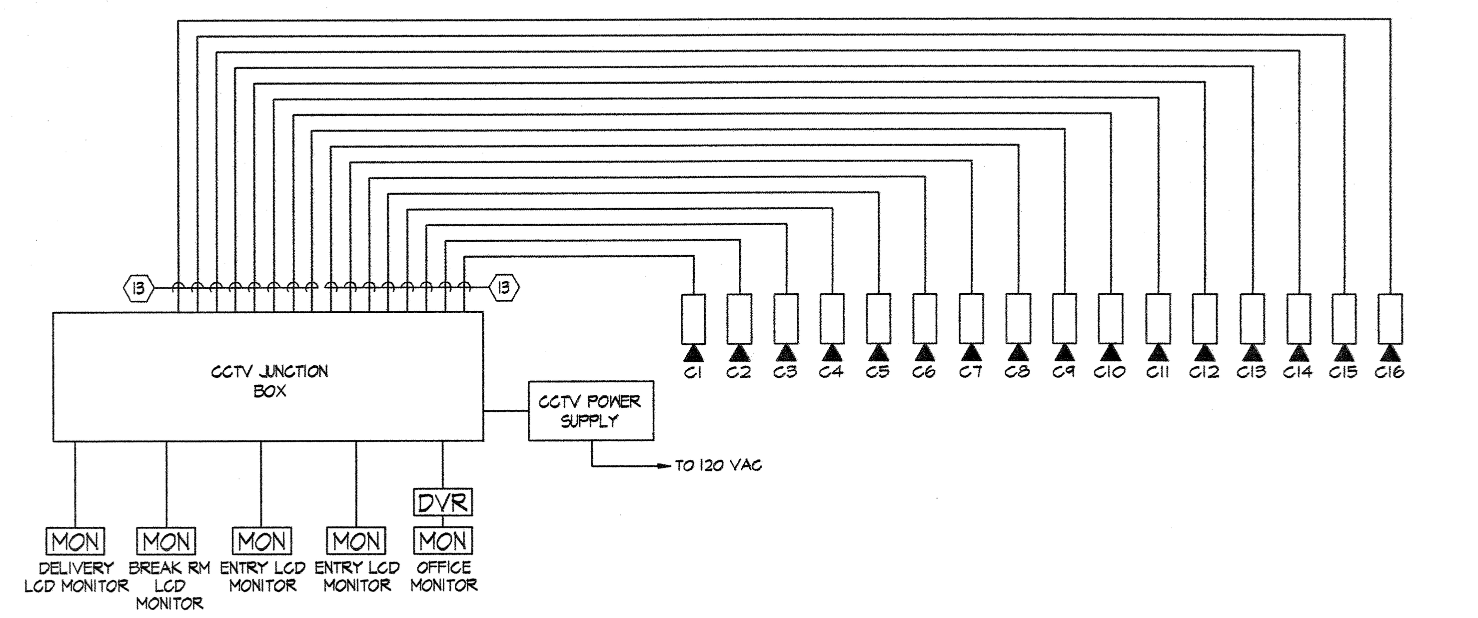

D CCTV RISER DIAGRAM
E401

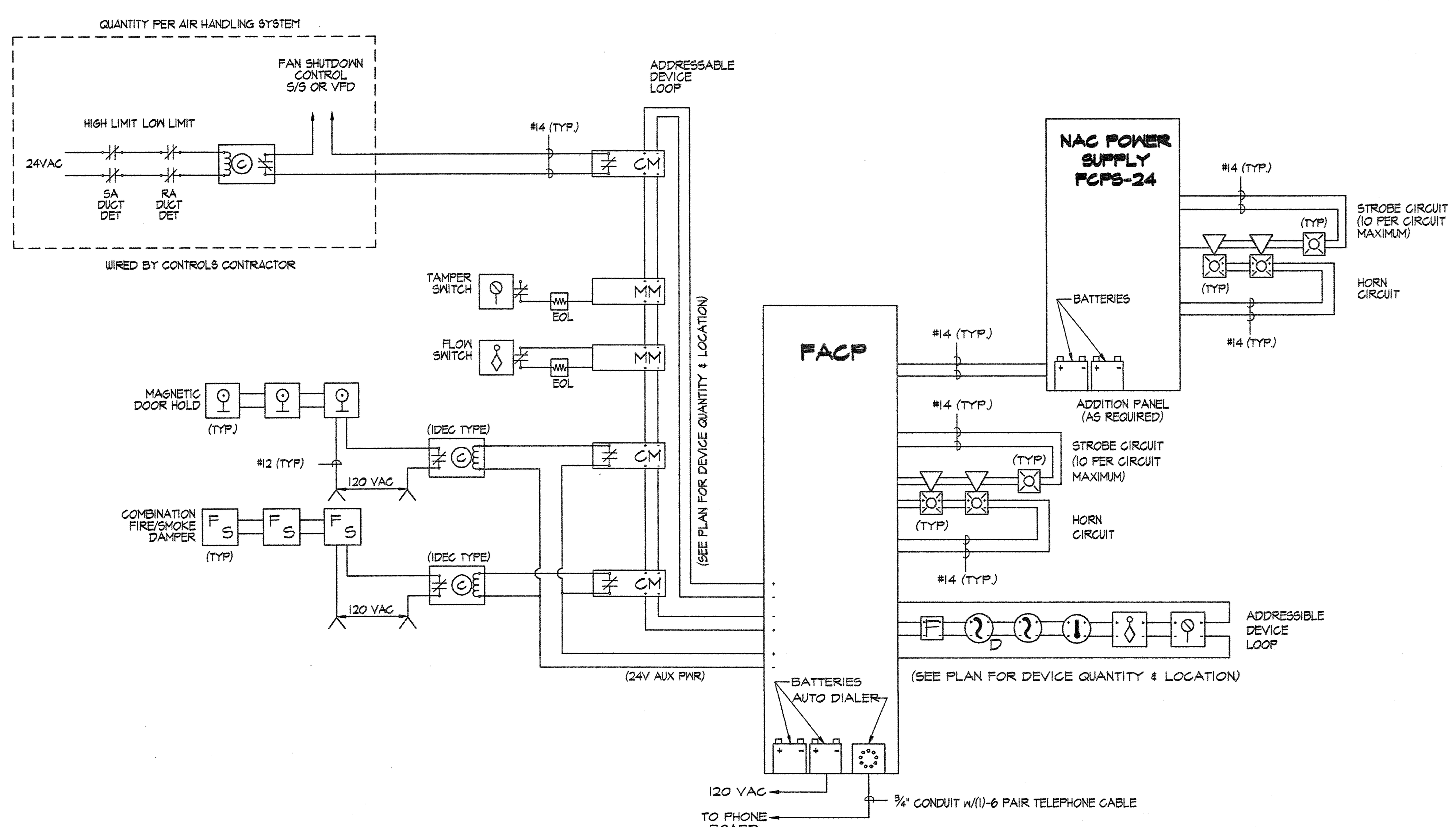

E FIRE ALARM RISER DIAGRAM
E401

CONDUIT & WIRE SCHEDULE

SYMBOL SIZE	SYMBOL QTY	CONDUIT	WIRE SIZE & TYPE	GROUND	AMPS	REMARKS
12	2	3/4"	#12 THHN CU	#12 THHN CU	25	
	3	3/4"				
	4	3/4"				
10	2	3/4"	#10 THHN CU	#10 THHN CU	30	
	3	3/4"				
	4	3/4"				
8	2	3/4"	#8 THHN CU	#10 THHN CU	40	
	3	3/4"				
	4	3/4"				
6	2	3/4"	#6 THHN CU	#8 THHN CU	55	
	3	3/4"				
	4	3/4"				
4	2	3/4"	#4 THHN CU	#8 THHN CU	70	
	3	1				
	4	1¼"				
3	2	1	#3 THHN CU	#8 THHN CU	85	
	3	1				
	4	1¼"				
2	2	1¼"	#2 THHN CU	#6 THHN CU	95	
	3	1¼"				
	4	1¼"				
1	2	1½"	#1 THHN CU	#6 THHN CU	110	
	3	1½"				
	4	1½"				
1A	2	1½"	#1/0 THHN CU	#6 THHN CU	150	
	3	1½"				
	4	1½"				
2A	2	1½"	#2/0 THHN CU	#6 THHN CU	175	
	3	1½"				
	4	2"				
3A	2	1½"	#3/0 THHN CU	#6 THHN CU	200	
	3	2"				
	4	2"				
4A	2	2"	#4/0 THHN CU	#4 THHN CU	230	
	3	2"				
	4	2½"				
25	2	2"	#250 KMCM THHN CU	#4 THHN CU	255	
	3	2"				
	4	2½"				
30	2	2"	#300 KMCM THHN CU	#3 THHN CU	285	
	3	3"				
	4	3"				
35	2	2"	#350 KMCM THHN CU	#3 THHN CU	310	
	3	3"				
	4	3"				
40	2	2½"	#400 KMCM THHN CU	#3 THHN CU	335	
	3	3"				
	4	3"				
50	2	3"	#500 KMCM THHN CU	#3 THHN CU	380	
	3	4"				
	4	4"				
60	2	3"	#600 KCM THHN CU	#3 THHN CU	420	
	3	4"				
	4	4"				

EXAMPLE:

3A 4 =(4)-#3/0 THHN/THWN + (1)#6 THHN/THWN GND, 2"CONDUIT

50 4 =(4)-#500kmcm THHN CU + (1)-#1/0 THHN CU GND, 4"CONDUIT
2 SETS 2 SETS, PARALLEL FEEDERS
1/A GND.

NOTES :

1. PARALLEL RUNS REQUIRE A LARGER GROUND WIRE PER CONDUIT - SEE NATIONAL ELECTRICAL CODE.
2. WHERE THHN CONDUCTORS SHALL BE RUN UNDERGROUND, PROVIDE THHW INSULATION IN LIEW OF THHN INSULATION ON ALL UNDERGROUND CONDUCTORS.

GENERAL NOTES:

1. CONTRACTOR TO PROVIDE ALL TRENCHING AND BACKFILL. POWER COMPANY TO PROVIDE AND INSTALL PRIMARY CABLE. CONTRACTOR TO FIELD VERIFY ALL EXISTING CONDITIONS. ALL SERVICE WORK SHALL CONFORM TO POWER COMPANY INSTALLATION STANDARDS.

KEYED NOTES (#):

1. GROUND SLEEVE PROVIDED AND INSTALLED BY POWER COMPANY.
2. (1)-4" PRIMARY CONDUIT PROVIDED AND INSTALLED BY THE ELECTRICAL CONTRACTOR. MINIMUM DEPTH 48". PRIMARY CONDUCTORS PROVIDED AND INSTALLED BY POWER COMPANY.
3. TRANSFORMER AND CONCRETE VAULT. TRANSFORMER PROVIDED AND INSTALLED BY POWER COMPANY. CONCRETE VAULT PROVIDED AND INSTALLED BY THE ELCTRICAL CONTRACTOR AS PER POWER COMPANY REQUIREMENTS AND SPECIFICATIONS.
4. PROVIDE AND INSTALL METER BASE AS PER POWER COMPANY SPECIFICATIONS.
5. EUSERC RATED MAIN BREAKER/CT ENCLOSURE AS PER POWER COMPANY STANDARDS. MOUNTED ON BUILDING AT A LOCATION DESIGNATED BY THE ARCHITECT.
6. #1/0 COPPER TO GROUND (SEE SERVICE GROUNDING DETAIL).
7. GROUND REQUIRED REGARDLESS OF CONDUIT TYPE.
8. TRANSFORMER SECONDARY CONDUCTORS. PROVIDE AND INSTALL CONDUIT AS SHOWN ON THE ROCKY MOUNTAIN POWER FEEDER SCHEDULE. ELECTRICAL CONTRACTOR SHALL INCLUDE FEEDER CONDUCTORS SHOWN ON THE ONE LINE DIAGRAM AS A SEPARATE LINE ITEM IN HIS BID PRICE. THIS PRICE SHALL BE FOR THE CONDUCTORS ONLY. THE CONDUIT PRICE SHOWN IN THE ROCKY MOUNTAIN POWER SCHEDULE SHALL BE INCLUDED IN THE GENERAL BID. ELECTRICAL CONTRACTOR SHALL CONTACT THE POWER COMPANY TO DETERMINE WHETHER THE POWER COMPANY OR THE ELECTRICAL CONTACTOR IS TO PROVIDE THE CONDUCTORS TO THE PROJECT. IN THE EVENT THAT THE POWER COMPANY SHALL BE PROVIDE AND INSTALL CONDUCTORS THE ELECTRICAL CONTRACTOR SHALL CREDIT BACK TO THE OWNER THE PRICE OF THE CONDUCTORS.
9. TELEPHONE TERMINAL BOARD. PROVIDE 96W"x48H"x3/4TH" CDX PLYWOOD PAINTED WITH THREE COATS OF FIRE RETARDANT PAINT.
10. DATA TERMINAL JUNCTION BOX. PROVIDE AND INSTALL A 12"x12"x6" JUNCTION BOX AS REQUIRED. JUNCTION BOX SHALL MEET THE STATE OF UTAH LIQUOR CONTROL COMMISSION STANDARDS AND SPECIFICATIONS.
11. 12"x24"x24" COMMUNICATIONS JUNCTION BOX AS PER UTAH STATE DEPARTMENT OF ITS AT THE PROPERTY LINE.
12. COPPER TERMINAL GROUND STRIP.
13. PROVIDE (1)-2" CONDUIT PER EIGHT CCTV VIDEO CABLES. PROVIDE AND INSTALL (2)- 2" CONDUITS TOTAL.

GENERAL FIRE ALARM NOTES:

1. COORDINATE FIRE ALARM DEVICES WITH LIGHTING FIXTURES, SPEAKERS, GRILLS, ETC.
2. DO NOT INSTALL SMOKE DETECTORS WITHIN 3'-0" OF ANY MECHANICAL GRILL.
3. FIRE ALARM CONTROL PANEL AND ANNUNCIATOR ENCLOSURES SHALL CONTAIN A FLANGE AROUND PERIMETER TO FACILITATE AND IMPROVE THE AESTHETIC TRANSITION FROM ENCLOSURE TO SHEETROCK.
4. VERIFY ANY POTENTIAL ADDITIONAL REQUIREMENTS WITH THE AUTHORITY HAVING JURISDICTION.
5. DUCT SMOKE DETECTORS SHOWN FOR REFERENCE.COORDINATE DUCT SMOKE DETECTOR LOCATIONS WITH MECHANICAL PLANS.
6. PLANS ARE BASED UPON 99 MONITOR AND CONTROL DEVICES PER ADDRESSABLE LOOP. OTHER CONFIGURATIONS ARE ACCEPTABLE SUBJECT TO CONTRACTOR ALLOWING FOR INCREASED WIRING CONFIGURATION. MAXIMUM INITIAL DEVICES PER LOOP SHALL NOT EXCEED 75% MAXIMUM ALLOWABLE.
7. PLANS ARE BASED UPON THE WIRING SCHEDULE SHOWN. WHERE MANUFACTURER'S REQUIREMENTS EXCEED REQUIREMENTS SHOWN, INCLUDE ADDITIONAL ASSOCIATED COSTS & SUBMITTAL DRAWINGS INDICATING NEW WIRING CONFIGURATION.
8. PLANS ARE BASED UPON 10 TOTAL STROBE LIGHTS (WHATEVER COMBINATION HOR.STROBE OR INDIVIDUAL STROBES) PER CIRCUIT. PROVIDE FIRE ALARM HORN ON EXTERIOR OF BUILDING. SELECT STROBES BASED UPON ROOM SIZE AND MANUFACTURER.
9. FLOW & TAMPER CONFIGURATION BASED UPON FIRE SPRINKLER DESIGN CONCEPT. FIELD VERIFY ACTUAL REQUIREMENTS. INCLUDE ANY ADDITIONAL MONITORING DEVICES REQUIRED BY ACTUAL REQUIREMENTS.
10. HEAT DETECTORS WHEN INSTALLED IN ELEVATOR SHAFTS OR MECHANICAL ROOMS FOR ELEVATOR SHUT DOWN SHALL HAVE LOCKED HEAT DETECTOR WITH LOWER RESPONSE TIME INDEX THAN THE SPRINKLER HEAD.
11. ALL OUTPUT DEVICES ARE DESIGNED ON SYSTEMS WITH 2 AMP POWER SUPPLY.
12. HORN/STROBE BASED ON 120 MILLIAMPS, DOOR HOLDERS (IF REQUIRED) BASED ON 70 MILLIAMPS.
13. BATTERY CAPACITY TO BE ADEQUATE TO OPERATE 15 MINUTES AFTER 60 HOURS PLUS 25% SPARE CAPACITY.
14. VFD REQUIRES TWO RELAYS, ONE FOR SMOKE CONTROL, ONE SPARE.
15. RUN SPARE LOOPS IN SAME CONDUIT.
16. PROVIDE DUCT DETECTOR AT EACH FLOOR PRIOR TO CONNECTION TO A COMMON RETURN & PRIOR TO RE-CIRCULATING OR REFRESH AIR INLET IN AIR RETURN SYSTEMS OVER 15,000 CFM CAPACITY & SERVING MORE THAN ONE STORY.
17. PROVIDE MANUAL PULL STATIONS IN BOILER ROOM.
18. INSTALL DUCT DETECTORS PER NFPA 72 REQUIREMENTS & PROVIDE ADDITIONAL DUCT DETECTORS DEPENDING UPON FINAL DUCT ARRANGEMENT.
19. PROVIDE AND INSTALL SMOKE DETECTOR AND/OR DUCT SMOKE DETECTOR WITHIN 5'-0' OF A SMOKE/FIRE DAMPER AS PER REQUIREMENTS OF THE INTERNATIONAL BUILDING CODE.

PVE Inc.
Consulting Mechanical Electrical Engineers
1040 North 2200 West, Suite 100
Salt Lake City, UT 84116
Phone: (801) 359-3158
Fax: (801) 521-4114

NEW HEBER LIQUOR STORE
DEPT. OF ALCOHOLIC BEVERAGE CONTROL
HEBER, UTAH

FRANK N MURDOCK JR ■ Architect & Associates
975 East 100 South Suite 100, Salt Lake City, Utah 84102 TEL: (801) 532-4441 FAX (801) 532-4220

ELECTRICAL RISER DIAGRAMS

REGISTERED PROFESSIONAL ENGINEER No. 154867 DEAN P. LEVORSEN STATE OF UTAH

REVISION # DATE:

DFCM PROJECT NO.:
08224030
CONST. DOC.
FILE NAME: E401 - 08223.01
SCALE: AS SHOWN
DESIGNED BY: KJH
CHECKED BY: RKR
DATE: MAY 2009

E
401

By: khaacke; May 20, 2009 - 2:45 PM, Date Plotted: May 20, 2009 - 4:05 PM X:\Projects\2008\08223.00.01- Liquor Store - Heber\E401 - 08223.01.dwg

Copyright (C) 2009 by PVE, Inc. Salt Lake City, Utah. All rights reserved. Unauthorized copying and/or use is illegal and subject to prosecution.

By: khaacke; May 21, 2009 – 9:02 AM, Date Plotted: May 21, 2009 – 9:03 AM X:\Projects\2008\08223.00.01– Liquor Store – Heber\E501 – 08223.01.dwg

LIGHT FIXTURE SCHEDULE

FIXTURE NUMBER	FIXTURE MANUFACTURER	FIXTURE CATALOG #	DESCRIPTION	LAMPS TYPE	LAMPS QTY.	FIXTURE VOLTS	FIXTURE WATTS	FIXTURE MOUNTING	REMARKS
F1	AXIS DMC	SOSSW-32-T8-2-SCBA-E-36-C E565-DI-AC-(ADJ)-2-T8-32'-PBL/STL-CBA	32 FOOT PENDANT DIRECT	F32T8/SP35 ECO	16	120	528	PENDANT	PROVIDE WITH ELECTRONIC BALLASTS
F1E	AXIS DMC	SOSSW-32-T8-2-SCBA-E-36-B1100-C E565-DI-AC-(ADJ)-2-T8-32'-PBL/STL-CBA-EM	32 FOOT PENDANT DIRECT w/EM	F32T8/SP35 ECO	16	120	528	PENDANT	PROVIDE WITH ELECTRONIC BALLASTS PROVIDE WITH ELECTRONIC EM BALLAST
F2	AXIS DMC	SOSSW-24-T8-2-SCBA-E-36-C E565-DI-AC-(ADJ)-2-T8-24'-PBL/STL-CBA	24 FOOT PENDANT DIRECT	F32T8/SP35 ECO	12	120	396	PENDANT	PROVIDE WITH ELECTRONIC BALLASTS
F2E	AXIS DMC	SOSSW-24-T8-2-SCBA-E-36-B1100-C E565-DI-AC-(ADJ)-2-T8-24'-PBL/STL-CBA-EM	24 FOOT PENDANT DIRECT w/EM	F32T8/SP35 ECO	12	120	396	PENDANT	PROVIDE WITH ELECTRONIC BALLASTS PROVIDE WITH ELECTRONIC EM BALLAST
F3	AXIS DMC	SOSSW-16-T8-2-SCBA-E-36-C E565-DI-AC-(ADJ)-2-T8-16'-PBL/STL-CBA	16 FOOT PENDANT DIRECT	F32T8/SP35 ECO	8	120	264	PENDANT	PROVIDE WITH ELECTRONIC BALLASTS
F4	AXIS DMC	SOSSW-12-T8-2-SCBA-E-36-C E565-DI-AC-(ADJ)-2-T8-12'-PBL/STL-CBA	12 FOOT PENDANT DIRECT	F32T8/SP35 ECO	6	120	198	PENDANT	PROVIDE WITH ELECTRONIC BALLASTS
F4E	AXIS DMC	SOSSW-12-T8-2-SCBA-E-36-B1100-C E565-DI-AC-(ADJ)-2-T8-12'-PBL/STL-CBA-EM	12 FOOT PENDANT DIRECT w/EM	F32T8/SP35 ECO	6	120	198	PENDANT	PROVIDE WITH ELECTRONIC BALLASTS PROVIDE WITH ELECTRONIC EM BALLAST
F5	HALO CAPRI	L652+ACCW/L2R1330 CT8+ACCW/CT6035	PENDANT MOUNTEDTRACK AND TRACK LIGHTING	70W PAR 30	1	75	75	PENDANT MOUNTED TRACK	PROVIDE ALL LIVE ENDS, DEAD ENDS, CABLE, ETC. AS REQUIRED
F6	SHAPER OMEGA	461-CFL/1/26-SAL DM61H26PLTPCCSSFFN	PENDANT MOUNTED FLOURESCENT	26DTT	1	120	27	PENDANT	PROVIDE WITH ELECTRONIC BALLAST
F7	AMETRIX LAM	VP-S1-P-1-E070-W-Y104 HAA-158-70CMHT6-10M-MAH3-1-SGW-PM	70 WATT METAL HALIDE UPLIGHT	70W MH	1	120	80	SURFACE WALL	PROVIDE WITH ELECTRONIC BALLAST
F8	PORTFOLIO OMEGA	C6042-E-6001-L1 S632PLTU-T6CS	FLUOR. DOWNLIGHT W/ALZAK TRIM 32 TRT LAMP	32 TRT	8	120	34	RECESSED	PROVIDE WITH ELECTRONIC BALLAST
F9	INVUE	ENV-42-CF-EB-3S-BZ-CFG	WALL SCONCE	42 TRT	1	120	45	SURFACE WALL	COLOR TO BE SELECTED BY ARCHITECT
F10	DAYBRITE LUMARK	WLD100M-LP MHGP-100H-MT-LL	100 WATT METAL HALIDE WALL PACK	100W MH	1	120	118	SURFACE WALL	
F11	METALUX DAYBRITE	8T1A-232-EB81 T1A232-1/4EB	96" INDUSTRIAL FLUORESCENT (TANDEM)	F32T8/SP35 ECO	8	120	132	SURFACE/CHAIN	PROVIDE WITH ELECTRONIC BALLAST
F12	METALUX DAYBRITE	WS-232A-EB81 CAN232-1/2EB	1X4 SURFACE FLUORESCENT (2 LAMP)	F32T8/SP35 ECO	2	120	66	SURFACE CEILING	PROVIDE WITH ELECTRONIC BALLAST
F13	DAYBRITE METALUX	CD 232W-2/1-EB BE-232-EB81	48" WALL MTD. FLUORESCENT WITH 2-LAMP	F32T8/SP35 ECO	2	120	66	SURFACE WALL	PROVIDE WITH ELECTRONIC BALLAST
E1	BODINE IOTA	B50 I-320	EMERGENCY BALLAST ((2)-4 FOOT T-8 LAMP)	----	1	120	----	----	EMERGENCY BALLAST (1)-4 FOOT T8 LAMP, 1100 LUMENS MIN. VERIFY COMPATIBILITY BEFORE ORDERING
E2	BODINE IOTA	B4CFI ICE-420-EM-I	EMERGENCY BALLAST ((1)-39 WATT COMPACT FLUORESCENT, COLD WEATHER)	----	----	120	----	----	EMERGENCY BALLAST COMPACT FLUOR., COLD WEATHER VERIFY COMPATIBILITY BEFORE ORDERING
E3	SURE-LITES McPHILBEN	CC-6-WH CT6	2-HEAD EM WALL PACK (SURFACE)	INCLUDED	2	120	5.4	SURFACE WALL	
X1	ISOLITE MCPHILBEN	LPDCEMSG-WHWHC ER55L-1-WB	POWERED SINGLE FACE EXIT W/ "EM" BATTERY PACK	INCLUDED	2	120	11.2	UNIVERSAL	NICKEL/CADMIUM BATTERY SINGLE FACE EXIT

NOTE:
ELECTRICAL CONTRACTOR SHALL PROVIDE A 'QUICK DISCONNECT HARNESS' FOR EACH FLUORESCENT LIGHTING FIXTURE TO SERVE AS A MEANS OF DISCONNECT TO ALLOW THE FIXTURE BALLAST TO BE SERVICED IN PLACE, AS PER THE NATIONAL ELECTRICAL CODE 2008, ARTICLE 410.130 (G).

SITE LIGHTING FIXTURE SCHEDULE

FIXT #	FIXTURE MANUFACTURER	FIXTURE CATALOG #	VOLTS	#/POLE	WATTS	MOUNTING	LAMPS TYPE	LAMPS QTY/FIXT.	POLE MANUFACTURER	POLE HEIGHT	POLE CATALOG #	REMARKS
SF1	INVUE GARDCO	ICM-400-MH-3S-BZ-PRCPR G1813XL400PSMH-SCBA	208	1	465	POLE	400W MH	1	INVUE	25'-0"	SRT-25-S-BZ-K-1-G-H TRS2511DISCBA	
SF2	INVUE GARDCO	ICM-400-MH-3S-BZ-PRCPR G1813XL400PSMH-SCBA	208	2	930	POLE	400W MH	1	INVUE	25'-0"	SRT-25-S-BZ-K-1-G-H TRS2511DISCBA	

LIGHTING CONTROL PANEL

Name: RP
VOLTS: 120/208 V 3Φ, 4-WIRE
LOCATION: LOADING DOCK
MOUNTING: SURFACE

RELAY #	RELAY AMP	RELAY POLE	SUPPLY	AREA SERVED	LV SWITCH*	A	B	C	D	E
1	20	1	P1-1	RETAIL LTG	a		X			
2	20	1	P1-3	RETAIL LTG	b		X			
	20	1	P1-2	RETAIL LTG	a		X			
4	20	1	P1-4	RETAIL LTG	b		X			
5	20	1	P1-6	RETAIL LTG	a		X			
6	20	1	P1-7	RETAIL LTG	b		X			
7	20	1	P1-9	RETAIL LTG	a		X			
8	20	1	P1-11	RETAIL LTG	b		X			
9	20	1	P1-11	RETAIL DOWNLIGHTS	c		X			
10	20	1	P1-11	CHECKPOUT LTG	d		X			
11	20	1	P1-11	WINES LTG	e		X			
12	20	1	P1-22	SIGN RCPT	f	X				
13	20	1	P1-8	STORAGE LTG	g		X			
14	20	1	P1-10	STORAGE LTG	g		X			
15	20	1	P1-12	STORAGE LTG	g		X			
16	20	1	P1-13	STORAGE LTG	g		X			
17	20	1	P1-15	STORAGE LTG	g		X			
18	20	1	P1-17	STORAGE LTG	g		X			
19	20	1	P1-14	EXTERIOR LTG					X	
20	20	2	P1-16,18	PARKING LTG					X	
21	--	--	----------	----------------------					X	
22				SPACE						
23				SPACE						
24				SPACE						

Automation Schedules: (A) Auto ON / Auto OFF
(B) Manual ON / Auto OFF
(C) Dusk - Dawn
(D) Dusk - Auto OFF
(E) Daylight Sensor

* SEE PLAN FOR LOCATION OF LOW VOLTAGE SWITCH

NOTE: ELECTRICAL CONTRACTOR TO PROVIDE SPACE IN THIS PANEL FOR FUTURE EXPANSION

EQUIPMENT SCHEDULE

UNIT #	DESCRIPTION	LOAD	VOLTS	PHASE	AMPS	DISCONNECT	SIZE (AMPS)	FUSE (AMPS)	STARTER SIZE	ENCLOSURE	REMARKS
RTU-1	ROOFTOP UNIT	16248 VA	208	3	45.1	1A	60	--	--	17	
RTU-2	ROOFTOP UNIT	16248 VA	208	3	45.1	1A	60	--	--	17	
RTU-3	ROOFTOP UNIT	11348 VA	208	3	31.5	1A	60	--	--	17	
RTU-4	ROOFTOP UNIT	11348 VA	208	3	31.5	1A	60	--	--	17	
RTU-5	ROOFTOP UNIT	11348 VA	208	3	31.5	1A	60	--	--	17	
RTU-6	ROOFTOP UNIT	11348 VA	208	3	31.5	1A	60	--	--	17	
EF-1	EXHAUST FAN	1/6 HP	120	1	4.4	11A	--	--	--	--	
EF-2	EXHAUST FAN	1/6 HP	120	1	4.4	11A	--	--	--	--	
EF-3	EXHAUST FAN	1/6 HP	120	1	4.4	11A	--	--	--	--	
UH-1	UNIT HEATER	1/12 HP	120	1	3.0	4A	--	--	--	16	
P-1	RECIRC PUMP	1/8 HP	120	1	3.8	4A	--	--	--	16	
EWH-1	ELECTRIC WATER HEATER	2163 VA	208	1	10.4	1A	30	--	--	16	

NOTES:
1. NON-FUSED DISCONNECT SWITCH
2. FUSED DISCONNECT SWITCH
3. BREAKER IN ENCLOSURE
4. MANUAL STARTER WITH THERMAL OVERLOAD
5. MAGNETIC STARTER
6. MAGNETIC STARTER/NON-FUSED DISCONNECT COMBINATION
7. MAGNETIC STARTER/FUSED DISCONNECT COMBINATION
8. MAGNETIC STARTER/BREAKER COMBINATION
9. VARIABLE SPEED DRIVE
10. REDUCED VOLTAGE STARTER
11. DIRECT CONNECTION
12. RECEPTACLE/SPECIAL PURPOSE OUTLET ETC.
13. TWO-SPEED STARTER, COORDINATE WITH MOTOR TYPE
14. MAXIMUM CIRCUIT AMPS (MCA)
15. FULL LOAD CURRENT
16. PROVIDE WITH NEMA 1 ENCLOSURE
17. PROVIDE WITH NEMA 3R ENCLOSURE

A. FURNISHED, INSTALLED AND FINAL CONNECTION BY THE ELECTRICAL CONTRACTOR.
B. FURNISHED AND INSTALLED UNDER ANOTHER DIVISION, FINAL CONNECTION BY THE ELECTRICAL CONTRACTOR.
C. FURNISHED UNDER ANOTHER DIVISION, INSTALLED AND FINAL CONNECTION BY THE ELECTRICAL CONTRACTOR.
D. FURNISHED, INSTALLED AND FINAL CONNECTION UNDER ANOTHER DIVISION.

OVERCURRENT PROTECTION DEVICES:
CB = THERMAL MAGNETIC CIRCUIT BREAKER
FN = FUSE, NON-INDUCTIVE LOAD
FI = FUSE, INDUCTIVE LOAD
MO = MAGNETIC ONLY CIRCUIT BREAKER
NA = NOT APPLICABLE

GENERAL NOTES:
1. VERIFY ALL EQUIPMENT LOCATIONS AND CONNECTION REQUIREMENTS (i.e. VOLTAGE, PHASE, FLA, ETC.) WITH MECHANICAL DRAWINGS/SUBMITTALS PRIOR TO STARTING ROUGH IN.
2. ALL FUSES SHALL BE DUAL ELEMENT, TIME DELAY. FINAL BREAKER/FUSE & DISCONNECT SIZE SHALL BE DETERMINED BY MANUFACTURER'S RECOMMENDATION FOR ACTUAL EQUIPMENT INSTALLED.
3. ALL INSULATION ON CONDUCTORS TO BE THHN UNLESS NOTED OTHERWISE. INSULATION ON ALL UNDERGROUND EXTERIOR CONDUCTORS SHALL BE THHW.

PANEL SCHEDULE

PANEL: P1
VOLTAGE: 208 / 120 PHASE: 3
MOUNTING: SURFACE WIRE: 4
ENCLOSURE: NEMA 1
REMARKS: PROVIDE WITH SUB-FEED LUGS

BUS AMPS: 400
MAIN OVERCURRENT DEVICE: LUGS
MAIN OVERCURRENT AMPS: N/A
MINIMUM EQUIPMENT RATING: 22,000 AMPS (RMS-SYM)

USE
E = Equipment Load M = Motor Load
L = Lighting Load K = Kitchen Equipment
R = Receptacle Load

No.	AMPS	POLE	KEYED NOTE	CIRCUIT NAME	C	WIRE	GRD	USE	WATTS	ΦA	ΦB	ΦC	WATTS	USE	GRD	WIRE	C	CIRCUIT NAME	KEYED NOTE	POLE	AMPS	No.
1	20	1		RETAIL LTG	3/4"	#10	#10	L	1,056	1,953			897	L	#10	#10	3/4"	RETAIL LTG		1	20	2
3	20	1		RETAIL LTG	3/4"	#10	#10	L	1,056		1,953		897	L	#10	#10	3/4"	RETAIL LTG		1	20	4
5	20	1		TRACK LTG	3/4"	#10	#10	L	1,000			1,944	944	L	#10	#10	3/4"	RETAIL LTG		1	20	6
7	20	1		RETAIL LTG	3/4"	#10	#10	L	1,848	3,564			1,716	L	#10	#10	3/4"	STORAGE LTG		1	20	8
9	20	1		RETAIL LTG	3/4"	#10	#10	L	1,848		3,564		1,716	L	#10	#10	3/4"	STORAGE LTG		1	20	10
11	20	1		RETAIL LTG	3/4"	#10	#10	L	1,210			2,860	1,650	L	#10	#10	3/4"	STORAGE LTG		1	20	12
13	20	1		STORAGE LTG	3/4"	#10	#10	L	1,584	2,434			850	L	#10	#10	3/4"	EXTERIOR LTG		1	20	14
15	20	1		STORAGE LTG	3/4"	#10	#10	L	1,584		2,584		1,000	L	#10	#10	1"	PARKING LTG		2	20	16
17	20	1		STORAGE LTG	3/4"	#10	#10	L	1,452			2,452	1,000	L	--	#10	--	--------------------		--	--	18
19	20	1		RESTRM/STORAGE LTG	3/4"	#12	#12	L	396	896			500	L	#12	#12	3/4"	AUTOMATIC DOOR		1	20	20
21	20	1		DOCK LTG	3/4"	#10	#10	L	792		992		200	L	#12	#12	3/4"	OPEN/CLOSE SIGN		1	20	22
23	20	1		SPARE														SPARE		1	20	24
25	20	1		RETAILS RCPT	3/4"	#12	#12	R	1,080	2,160			1,080	R	#12	#12	3/4"	RETAIL RCPT		1	20	26
27	20	1		STORAGE/DOCK RCPT	3/4"	#10	#10	R	1,080		2,160		1,080	R	#12	#12	3/4"	RETAIL RCPT		1	20	28
29	20	1		DOCK CMPTR	3/4"	#10	#10	R	400			900	500	E	#12	#12	3/4"	TIME CLOCK/BREAK RM RCPT		1	20	30
31	20	1		DOOR OPENER	3/4"	#10	#10	M	1,200	2,400			1,200	E	#12	#12	3/4"	REFRIGERATOR		1	20	32
33	20	1		DOCK LEVELER	3/4"	#10	#10	M	1,200		2,400		1,200	E	#12	#12	3/4"	MICROWAVE		1	20	34
35	20	1		STORAGE RCPT	3/4"	#10	#10	R	1,080			1,260	180	R	#12	#12	3/4"	BREAK RM RCPT		1	20	36
37	20	1		SPARE		#N/A	#N/A											SPARE		1	20	38
39	20	1		SPARE		#N/A	#N/A											SPARE		1	20	40
41	20	1		SPARE		#N/A	#N/A											SPARE		1	20	42

	ΦA	ΦB	ΦC	DEMAND
LIGHTING LOAD (VA)	8,847	9,093	7,261	25,201
LIGHTING CONTINUOUS LOAD PER NEC 210.20(A) (VA)				6,300
RECEPTACLE LOAD PER NEC 220.44 (VA)	2,160	2,160	1,660	5,980
EQUIPMENT LOAD (VA)	2,400	2,400	500	5,300
25% LARGEST MOTOR (VA)				300
KITCHEN EQUIPMENT LOAD (VA) 0 UNITS @ 100%	0	0	0	0
TOTAL LOAD (VA)	13,407	13,653	9,421	43,081
TOTAL LOAD (AMPS):	112	114	79	120

GENERAL NOTES:
1. ALL INSULATION ON CONDUCTORS TO BE THHN UNLESS NOTED OTHERWISE. INSULATION ON ALL UNDERGROUND CONDUCTORS SHALL BE THHW.
2. RECEPTACLE LOAD CALCULATED AS PER SECTION 220 OF THE NATIONAL ELECTRICAL CODE.
3. PANEL COVER SHALL BE FIELD MARKED FOR FLASH PROTECTION WITH A PERMANENT LABEL AS REQUIRED BY THE NATIONAL ELECTRICAL CODE SECTION 110. LABEL SHALL READ AS FOLLOWS: "DANGER: POTENTIAL ARC FLASH HAZARD".

KEYED NOTES:
A. LOCK-ON BREAKER.
B. PROVIDE ARC FAULT (AFCI) BREAKER.
C. PROVIDE GFCI BREAKER.

PANEL SCHEDULE

PANEL: P2
VOLTAGE: 208 / 120 PHASE: 3
MOUNTING: SURFACE WIRE: 4
ENCLOSURE: NEMA 1
REMARKS:

BUS AMPS: 400
MAIN OVERCURRENT DEVICE: LUGS
MAIN OVERCURRENT AMPS: N/A
MINIMUM EQUIPMENT RATING: 22,000 AMPS (RMS-SYM)

USE
E = Equipment Load M = Motor Load
L = Lighting Load K = Kitchen Equipment
R = Receptacle Load

No.	AMPS	POLE	KEYED NOTE	CIRCUIT NAME	C	WIRE	GRD	USE	WATTS	ΦA	ΦB	ΦC	WATTS	USE	GRD	WIRE	C	CIRCUIT NAME	KEYED NOTE	POLE	AMPS	No.
1	20	1		EWC	3/4"	#12	#12	E	500	1,400			900	R	#10	#10	3/4"	STORAGE RCPT		1	20	2
3	20	1		RESTRM/STOR/JAN RCPT	3/4"	#12	#12	R	720		1,260		540	R	#10	#10	3/4"	ROOFTOP RCPT		1	20	4
5	20	1		TELCO BOARD RCPT	3/4"	#12	#12	R	360			1,080	720	R	#10	#10	3/4"	ROOFTOP RCPT		1	20	6
7	20	1		UNIT HEATER UH-1	3/4"	#10	#10	M	360	1,442			1,082	E	#12	#12	3/4"	ELEC WTR HTR EWH-1		2	20	8
9	20	2		BOX CRUSHER	3/4"	#12	#12	E	1,000		2,082		1,082	E	--	#12	--	--------------------		--	--	10
11	---	--		--------------------	---	#12	---	E	1,000			1,456	456	M	#12	#12	3/4"	PUMP P-1		1	20	12
13	20	1		SPARE						1,500			1,500	E	#10	#10	3/4"	GUTTER MELT CABLE		1	20	14
15	20	1		SPARE							1,500		1,500	E	#10	#10	3/4"	GUTTER MELT CABLE		1	20	16
17	20	1		SPARE								900	900	E	#10	#10	3/4"	GUTTER MELT CABLE		1	20	18
19	20	1		SPARE						900			900	E	#10	#10	3/4"	GUTTER MELT CABLE		1	20	20
21	20	1		SPARE							200		200	E	#10	#10	3/4"	GUTTER MELT CONTROLLER		1	20	22
23	20	1		SPARE														SPARE		1	20	24
25	60	3		ROOFTOP UNIT RTU-1	3/4"	#6	#10	E	5,416	10,832			5,416	E	#10	#6	1"	ROOFTOP UNIT RTU-2		3	60	26
27	---	---		--------------------	---	#6	---	E	5,416		10,832		5,416	E	---	#6	---	--------------------		---	---	28
29	---	---		--------------------	---	#6	---	E	5,416			10,832	5,416	E	---	#6	---	--------------------		---	---	30
31	40	3		ROOFTOP UNIT RTU-3	3/4"	#8	#10	E	3,782	7,564			3,782	E	#10	#8	3/4"	ROOFTOP UNIT RTU-4		3	40	32
33	---	---		--------------------	---	#8	---	E	3,782		7,564		3,782	E	---	#8	---	--------------------		---	---	34
35	---	---		--------------------	---	#8	---	E	3,782			7,564	3,782	E	---	#8	---	--------------------		---	---	36
37	40	3		ROOFTOP UNIT RTU-5	3/4"	#8	#10	E	3,782	7,564			3,782	E	#10	#8	3/4"	ROOFTOP UNIT RTU-6		3	40	38
39	---	---		--------------------	---	#8	---	E	3,782		7,564		3,782	E	---	#8	---	--------------------		---	---	40
41	---	---		--------------------	---	#8	---	E	3,782			7,564	3,782	E	---	#8	---	--------------------		---	---	42

	ΦA	ΦB	ΦC	DEMAND
LIGHTING LOAD (VA)	0	0	0	0
LIGHTING CONTINUOUS LOAD PER NEC 210.20(A) (VA)				0
RECEPTACLE LOAD PER NEC 220.44 (VA)	900	1,260	1,080	3,240
EQUIPMENT LOAD (VA)	30,302	29,742	28,316	88,360
25% LARGEST MOTOR (VA)				114
KITCHEN EQUIPMENT LOAD (VA) 0 UNITS @ 100%	0	0	0	0
TOTAL LOAD (VA)	31,202	31,002	29,396	91,714
TOTAL LOAD (AMPS):	260	258	245	255

GENERAL NOTES:
1. ALL INSULATION ON CONDUCTORS TO BE THHN UNLESS NOTED OTHERWISE. INSULATION ON ALL UNDERGROUND CONDUCTORS SHALL BE THHW.
2. RECEPTACLE LOAD CALCULATED AS PER SECTION 220 OF THE NATIONAL ELECTRICAL CODE.
3. PANEL COVER SHALL BE FIELD MARKED FOR FLASH PROTECTION WITH A PERMANENT LABEL AS REQUIRED BY THE NATIONAL ELECTRICAL CODE SECTION 110. LABEL SHALL READ AS FOLLOWS: "DANGER: POTENTIAL ARC FLASH HAZARD".

KEYED NOTES:
A. LOCK-ON BREAKER.
B. PROVIDE ARC FAULT (AFCI) BREAKER.
C. PROVIDE GFCI BREAKER.

PANEL SCHEDULE

PANEL: UP
VOLTAGE: 208 / 120 PHASE: 1
MOUNTING: FLUSH WIRE: 3
ENCLOSURE: NEMA 1
REMARKS: LOAD CENTER

BUS AMPS: 100
MAIN OVERCURRENT DEVICE: LUGS
MAIN OVERCURRANT AMPS: N/A
MINIMUM EQUIPMENT RATING: 22,000 AMPS (RMS-SYM)

USE
E = Equipment Load M = Motor Load
L = Lighting Load K = Kitchen Equipment
R = Receptacle Load

NO.	AMPS	POLE	KEYED NOTE	CIRCUIT NAME	C	WIRE	GRD	USE	WATTS	ΦA	ΦB	WATTS	USE	GRD	WIRE	C	CIRCUIT NAME	KEYED NOTE	POLE	AMPS	NO.
1	20	1		POS RCPT	3/4"	#12	#12	R	500	860		360	R	#12	#12	MC	OFFICE RCPT		1	20	2
3	20	1		POS RCPT	3/4"	#12	#12	R	500		1,040	540	R	#12	#12	MC	OFFICE RCPT		1	20	4
5	20	1		POS RCPT	3/4"	#12	#12	R	500	1,000		500	E	#12	#12	MC	CCTV POWER		1	20	6
7	20	1		POS RCPT	3/4"	#12	#12	R	500		1,000	500	E	#12	#12	MC	DATA RACK		1	20	8
9	20	1		SPARE						360		360	R	#12	#12	MC	OFFICE RCPT		1	20	10
11	20	1		SPARE													SPACE				12
13				SPACE													SPACE				14
15				SPACE													SPACE				16
17				SPACE													SPACE				18
19				SPACE													SPACE				20

	ΦA	ΦB	DEMAND
LIGHTING LOAD (VA)	0	0	0
LIGHTING CONTINUOUS LOAD (VA)			0
RECEPTACLE LOAD PER NEC 220.13(VA)	1,720	1,540	3,260
EQUIPMENT LOAD (VA)	500	500	1,000
25% LARGEST MOTOR			0
KITCHEN EQUIPMENT LOAD (VA) 0 UNITS @ 100% (PER NEC TABLE 220.56)	0	0	0
TOTAL LOAD (VA)	2,220	2,040	4,260
TOTAL LOAD (AMPS):	19	17	20

GENERAL NOTES:
1. ALL INSULATION ON CONDUCTORS TO BE THHN UNLESS NOTED OTHERWISE. INSULATION ON ALL UNDERGROUND CONDUCTORS SHALL BE THHW.
2. RECEPTACLE LOAD CALCULATED AS PER SECTION 220 OF THE NATIONAL ELECTRICAL CODE.
3. PANEL COVER SHALL BE FIELD MARKED FOR FLASH PROTECTION WITH A PERMANENT LABEL AS REQUIRED BY THE NATIONAL ELECTRICAL CODE SECTION 110. LABEL SHALL READ AS FOLLOWS: "DANGER: POTENTIAL ARC FLASH HAZARD".

KEYED NOTES:
A. LOCK-ON BREAKER.
B. PROVIDE ARC FAULT (AFCI) BREAKER.
C. PROVIDE GFCI BREAKER.

ELECTRICAL SCHEDULES

NEW HEBER LIQUOR STORE
DEPT. OF ALCOHOLIC BEVERAGE CONTROL
HEBER, UTAH

FRANK N MURDOCK JR ■ Architect & Associates
975 East 100 South Suite 100, Salt Lake City, Utah 84102 TEL: (801) 532-4441 FAX (801) 532-4220

REGISTERED PROFESSIONAL ENGINEER No. 154867 DEAN P. LEVORSEN STATE OF UTAH 5/20/09

REVISION # DATE:

DFCM PROJECT NO.: 08224030
CONST. DOC.
FILE NAME: E501 - 08223.01
SCALE: AS SHOWN
DESIGNED BY: KJH
CHECKED BY: RKR
DATE: MAY 2009

PVE, Inc. Consulting Mechanical Electrical Engineers
1040 North 2200 West, Suite 100
Salt Lake City, UT 84116
Phone: (801) 359-3158
Fax: (801) 521-4114

E 501

Copyright (C) 2009 by PVE, Inc. Salt Lake City, Utah. All rights reserved. Unauthorized copying and/or use is illegal and subject to prosecution.

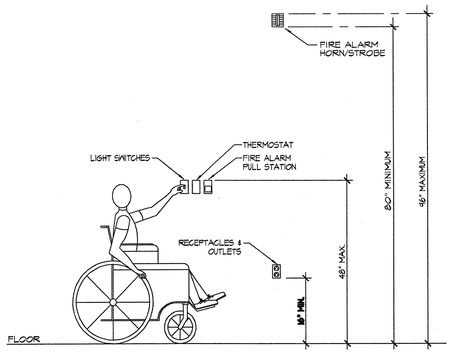

A E601 MOUNTING HEIGHTS DETAIL

NOTES:

1. TYPICAL FOR WOOD AND METAL STUD ROUGH IN.
2. PLASTER RINGS NOT SHOWN.
3. LOCATE ALL OUTLET BOXES IN ACCORDANCE WITH ARCHITECTURAL AND MECHANICAL DRAWINGS, AND WITH ALL APPLICABLE SHOP DRAWINGS.
4. IN ACCORDANCE WITH INTERNATIONAL BUILDING CODE OUTLETS ON OPPOSITE SIDES OF WALLS OR PARTITIONS IN THE SAME STUD SPACE MUST BE SEPERATED BY A MINIMUM OF 24" HORIZONTAL DISTANCE.

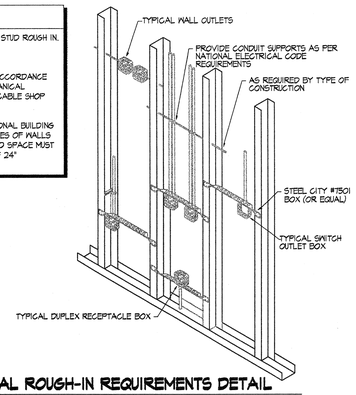

B E601 TYPICAL ROUGH-IN REQUIREMENTS DETAIL

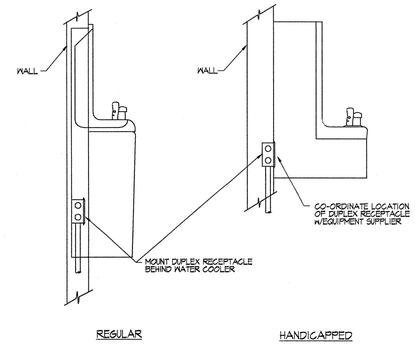

C E601 ELECTRIC WATER COOLER DETAIL

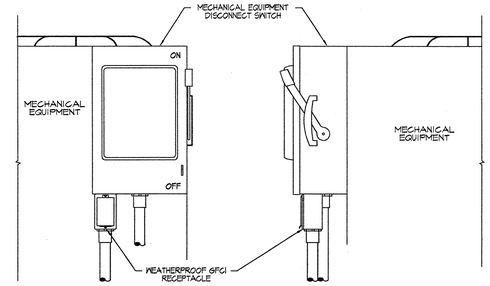

D E601 WEATHER PROOF RECEPTACLE MOUNTING DETAIL

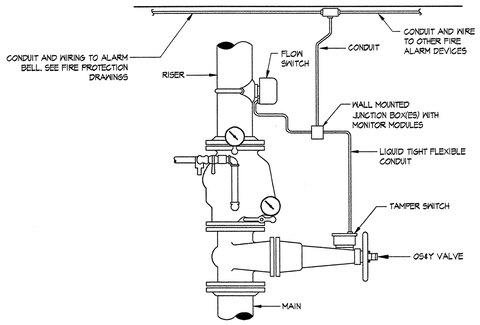

E E601 FIRE SPRINKLER RISER CONNECTION

NOTE:

TYPICAL DETAILS SHOWING GENERAL FIRE STOPPING PROCEDURE. ACTUAL PRODEDURE DEPENDS UPON ANNULAR SPACE BETWEEN PIPE AND/OR INSULATION AND OPENING. FOLLOW MANUFACTURER'S INSTRUCTIONS.

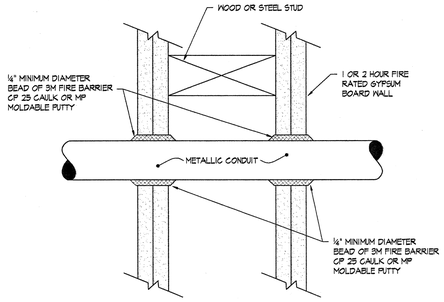

F E601 FIRE STOP THRU GYPSUM BOARD WALL

NOTE:

TYPICAL DETAILS SHOWING GENERAL FIRE STOPPING PROCEDURE. ACTUAL PRODEDURE DEPENDS UPON ANNULAR SPACE BETWEEN PIPE AND/OR INSULATION AND OPENING. FOLLOW MANUFACTURER'S INSTRUCTIONS.

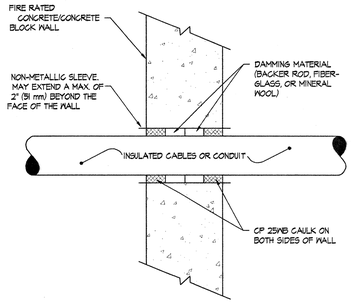

G E601 FIRESTOP THRU CONCRETE/MASONRY WALL

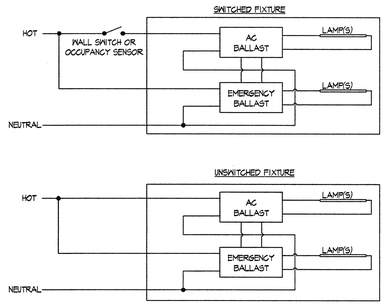

H E601 EMERGENCY BALLAST OPERATION DETAIL

NOTES:

1. PROVIDE AND INSTALL ALL GROUNDING MEANS INDICATED. ELECTRICAL CONTRACTOR TO COMPLY WITH ARTICLE 250 OF THE NATIONAL ELECTRICAL CODE AND PROVIDE AND INSTALL ALL GROUNDING METHODS THAT ARE AVAILABLE FOR THIS PROJECT.
2. ELECTRICAL CONTRACTOR SHALL REFER TO ELECTRICAL ONE LINE DIAGRAM FOR GROUNDING ELECTRODE CONDUCTOR SIZE. GROUNDING CONDUCTOR SIZE SHOWN ON THE ONE LINE DIAGRAM SHALL BE THE SAME FOR ALL METHODS OF GROUNDING SHOWN IN THIS DETAIL. ELECTRICAL CONTRACTOR SHALL REFER TO ELECTRICAL SPECIFICATIONS FOR SPECIFICS OF GROUNDING SYSTEM INSTALLATION AND MATERIALS.

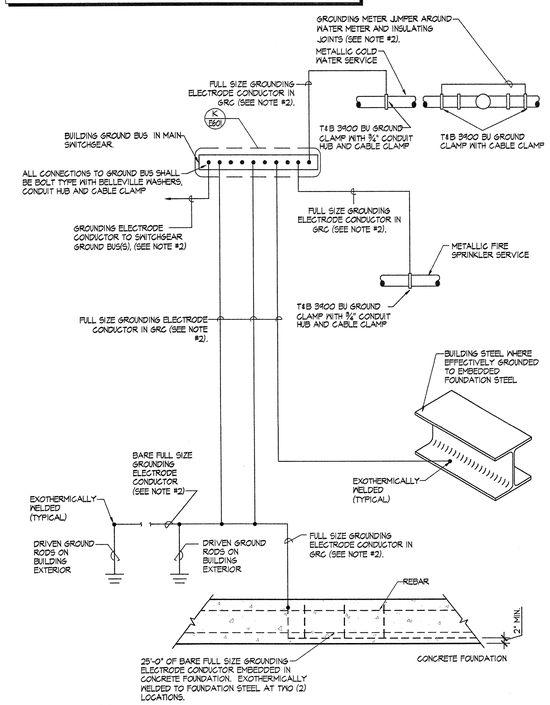

J E601 SERVICE GROUNDING DETAIL

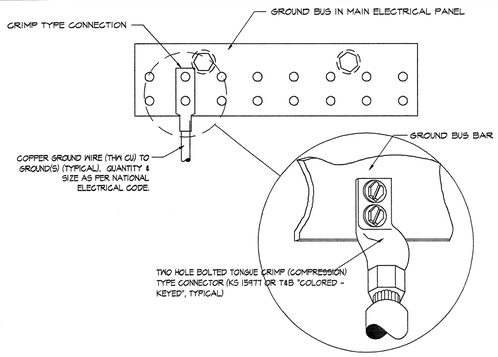

K E601 SERVICE BUS GROUNDING DETAIL

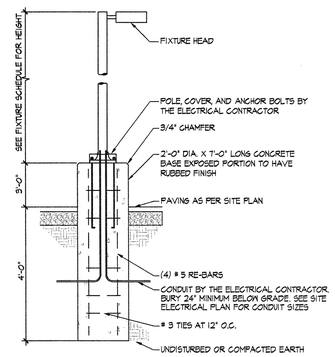

L E601 POLE BASE DETAIL

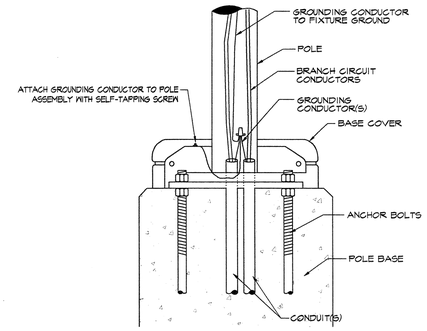

M E601 ENLARGED POLE BASE DETAIL

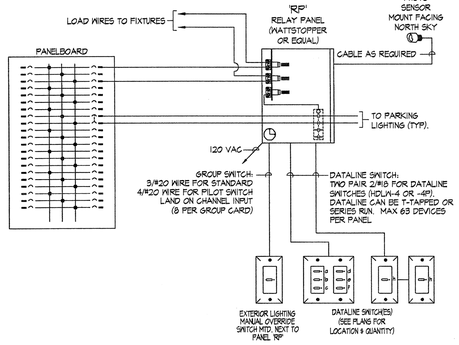

N E601 LIGHTING CONTROL PANEL DETAIL

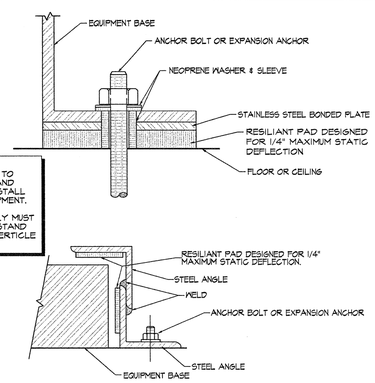

NOTES:

1. 1. SIZE ANCHOR BOLTS TO WITHSTAND LATERAL AND UP LIFTING LOADS. INSTALL ON ALL SIDES OF EQUIPMENT.
2. 2. ISOLATION ASSEMBLY MUST BE DESIGNED TO WITHSTAND 4.5 G LATERAL AND VERTICLE LOADS.

P E6.2 SEISMIC RESTRAINT DETAIL

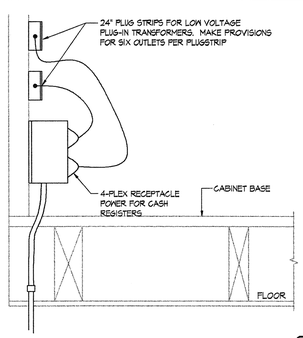

Q E6.2 POINT OF SALE UNDER COUNTER DETAIL

PVE Inc.
Consulting Mechanical Electrical Engineers
1040 North 2200 West, Suite 100
Salt Lake City, UT 84116
Phone: (801) 359-3158
Fax: (801) 521-4114

NEW HEBER LIQUOR STORE

DEPT. OF ALCOHOLIC BEVERAGE CONTROL
HEBER, UTAH

FRANK N MURDOCK JR. ■ Architect & Associates
975 East 100 South Suite 100, Salt Lake City, Utah 84102 TEL: (801) 532-4441 FAX (801) 532-4220

ELECTRICAL DETAILS

REGISTERED PROFESSIONAL ENGINEER No. 154867 DEANI P. LEVORSEN STATE OF UTAH
5/21/09

REVISION # DATE:

DFCM PROJECT NO.: 08224030
CONST. DOC.
FILE NAME: E601 - 082301
SCALE: AS SHOWN
DESIGNED BY: KJH
CHECKED BY: RKR
DATE: MAY 2009

E 601

By: khaacke; May 21, 2009 - 8:19 AM, Date Plotted: May 21, 2009 - 8:30 AM X:\Projects\2008\08223.00.01 - Liquor Store - Heber\E601 - 08223.01.dwg

Copyright (C) 2009 by PVE, Inc. Salt Lake City, Utah. All rights reserved. Unauthorized copying and/or use is illegal and subject to prosecution.