UTAH NATIONAL GUARD

197TH RIGGER FACILITY
625 EAST 5300 SOUTH
OGDEN UTAH

DFCM PROJECT NO. 08243480

CRSA PROJECT NUMBER: B08-062

ARCHITECT

COOPER ROBERTS SIMONSEN
ARCHITECTS
700 NORTH 200 WEST
SALT LAKE CITY, UT 84103
(801) 355-5915
FAX (801) 355-9885
WWW.CRARCHITECTS.COM

STRUCTURAL ENGINEER

CALDER RICHARDS ENGINEERS
2015 S 1100 EAST
SALT LAKE CITY, UT 84111
(801) 466-1699
FAX (801) 467-2495

stephen@crceng.com

ELECTRICAL ENGINEER

SPECTRUM
175 S. MAIN STREET STE. 300
SALT LAKE CITY, UTAH 84111
(801) 328-5151 (801) 401-9471

MECHANICAL ENDINEER

SMD
986 WEST ATHERTON DRIVE STE. 200
TAYLORSVILLE, UTAH 84123
(801) 268- 3828
FAX (801) 268-3297

CIVIL ENGINEER

STANLEY CONSULTANTS INC.
5353 South 960 East
SALT LAKE CITY, UT 84117
(801) 293-8880
FAX (801) 293-8886

dahljames@stanleygroup.com

SHEET INDEX

GENERAL	
GI001	COVER SHEET & SHEET INDEX
CIVIL	
C-1	SITE WATER & SEWER UTILITIES PLAN
C-2	SITE UTILITIES DETAILS
ARCHITECTURAL	
AS101	SITE PLAN
AE101	FLOOR PLAN
AE102	MEZZANINE PLAN
AE103	FIRST LEVEL REFLECTED CEILING PLAN
AE104	MEZZANINE REFLECTED CEILING PLAN
AE105	ROOF PLAN
AE201	EXTERIOR ELEVATIONS
AE301	BUILDING SECTIONS
AE302	WALL SECTIONS
AE401	ENLARGED FLOOR PLANS
AE402	ENLARGED STAIR PLAN
AE501	DETAILS
AE502	WALL TYPE DETAILS
STRUCTURAL	
S001	STRUCTURAL NOTES & DETAILS
S101	FOOTING & FOUNDATION PLAN
S102	MEZZANINE FRAMING & DETAILS
MECHANICAL	
MH001	MECHANICAL LEGEND AND NOTES
MH101	MECHANICAL FIRST FLOOR PLAN
MH501	MECHANICAL DETAILS
MH601	MECHANICAL SCHEDULES
PP101	PLUMBING FIRST FLOOR PLAN
PP401	ENLARGED PLUMBING FIRST FLOOR PLAN
PP501	PLUMBING DETAILS
ELECTRICAL	
EE001	SYMBOL LEGEND, SHEET INDEX & ABBREVIATIONS
EE501	TYPICAL MOUNTING HEIGHT DETAILS
EE502	DETAILS
EE503	DETAILS
EE601	ONE-LINE DIAGRAM
EE602	SCHEDULES
ES101	ELECTRICAL SITE PLAN
EP101	MAIN LEVEL POWER PLAN
EP102	MEZZANINE POWER PLAN
EL101	MAIN LEVEL LIGHTING PLAN
EL102	MEZZANINE LIGHTING PLAN

VICINITY MAP

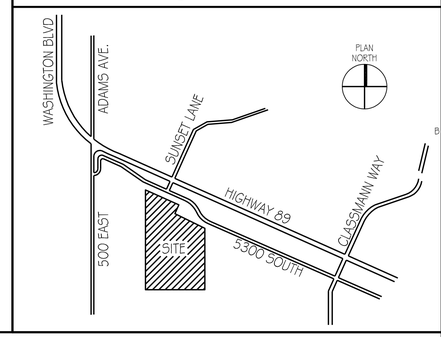

COOPER
ROBERTS
SIMONSEN
ASSOCIATES

crsa

700 NORTH 200 WEST
SALT LAKE CITY,UTAH 84103
(801) 355-5915
(801) 355-9885 FAX
WWW.CRSA-US.COM

STRUCTURAL ENGINEER
CALDER RICHARDS CONSULTING ENGINEERS
634 South 400 East
SALT LAKE CITY, UT 84101
(801) 466-1699 (801) 467-2495 FAX
- stephen@crceng.com

MECHANICAL ENGINEER
SMD
986 WEST ATHERTON DRIVE STE. 200
TAYLORSVILLE, UTAH 84123
(801)268-3828 FAX (801)268-3297
- -

ELECTRICAL ENGINEER
SPECTRUM
175 S MAIN STREET STE. 300
SALT LAKE CITY, UTAH 84111
(801)328-5151 (801)401-9471
- -

CIVIL ENGINEER
Stanley Consultants Inc.
5353 south 960 East
SALT LAKE CITY, UTAH 84117
(801)293-8880 (801)801-8886
- -

PROJECT:
J. M. BROWNING ARMORY
197TH RIGGER FACILITY
DFCM NO. 08243480
625 E. 5300 S.
OGDEN, UTAH 84402

OWNER:
UTAH NATIONAL GUARD
12953 SOUTH
MINUTEMAN DRIVE.
DRAPER UTAH 84020-1776

SYMBOLS LEGEND

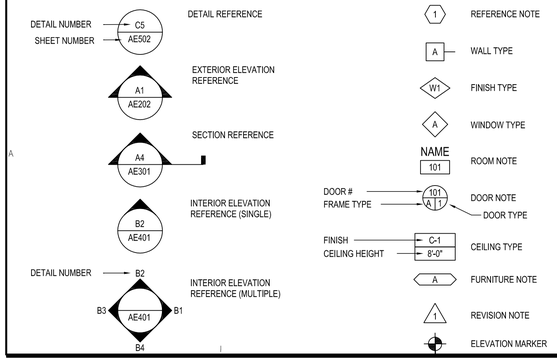

NOTE: ALL MATERIALS REFERENCED ARE NEW UNLESS NOTED OTHERWISE

CODE ANALYSIS

APPLICABLE CODES

	Year		Year
International Building Code	2006	National Electrical Code	2005
International Mechanical Code	2006	Uniform Code for Building Conservation	N/A
International Plumbing Code	2006	ADA Accessibility Guildelines	2006
International Fire Code	2006		
International Energy Conservation Code	2006		

A. Occupancy and Group: F-1

Change in Use: Yes ____ No X Mixed Occupancy: Yes ____ No X

Special Use and Occupancy (e.g, High Rise, Covered Mall): N/A

B. Seismic Design Category: D Design Wind Speed: 90 mph

C. Type of Construction (circle one):

I/A I/B II/A (II/B) III/A III/B IV/HT V/A V/B

D. Fire Resistance Rating Requirements for the Exterior Walls based on the fire separation distance (in hours):

North: 0 South: 0 East: 0 West: 0

E. Mixed Occupancies: N/A Nonseparated Uses: N/A

F: Sprinklers:

Required: NO Provided: NO Type of Sprinkler System: N/A

G: Number of Stories: 1 + MEZZANINE Building Height: 26' (APPROX.)

H: Actual Area per Floor (square feet): 7,040 S.F. CURRENT / 11,784 S.F. FUTURE

I: Tabular Area: 15,500 SF

J: Area Modifications: N/A

a) $A_a = A_t + \left[\frac{A_t\, I_f}{100}\right] + \left[A_t\, I_s\right]$ $\quad I_f = 100\left[\frac{F}{P} - 0.25\right]\frac{W}{30}$

b) Sum of the Ratio Calculations for Mixed Occupancies:

$\frac{\text{Actual Area}}{\text{Allowable Area}} \leq 1$ N/A

c) Total Allowable Area for:

1) One Story: 15,500 SF W/ OUT MODIFIACATIONS
2) Two Story: $A_a(2)$ N/A
3) Three Story: $A_a(3)$ N/A

d) Unlimited Area Building: Yes ____ No X Code Section: N/A

K. Fire Resistance Rating Requirements for Building Elements (hours).

Element	Hours	Assembly Listing	Element	Hours	Assembly Listing
Exterior Bearing Walls	0		Floors - Ceiling Floors	0	
Interior Bearing Walls	0		Roofs - Ceiling Roofs	0	
Exterior Non-Bearing Walls	0		Exterior Doors and Windows	N/A	
Structural Frame	0		Shaft Enclosures	N/A	
Partitions - Permanent	0		Fire Walls	N/A	
Fire Barriers	N/A		Fire Partitions	N/A	
			Smoke Partitions	N/A	

L. Design Occupant Load: 71 (@ 100 SF PER OCC.)

Exit Width Required: 14.2" Exit Width Provided: 160"

M. Minimum Number of Required Plumbing Facilities: (EXISTING TO REMAIN)
EXISTING FACILITIES ON-SITE, INCLUDING PRIMARY BUILDING, EXCEED REQ'S.

a) Water Closets - Required (m) 1 (f) 1 Provided (m) 1+ (f) 1+
b) Lavatories - Required (m) 1 (f) 1 Provided (m) 1+ (f) 1+
c) Bath Tubs or Showers: N/A
d) Drinking Fountains: 1+ Service Sinks: 1+

FOOTNOTES:

1) In case of conflict with the U.S. Department of Justice Federal Registers Parts I through V - ADA Guidelines and specific reference to the International Building Code Accessibility Chapters, the more restrictive requirement shall govern.

2) Additional Code Information shall be provided at the discretion of the Building Official for Complex Buildings. Including, but not limited to:

a) High Rise Requirements.
b) Atriums.
c) Performance Based Criteria.
d) Means or Egress Analysis.
e) Fire Assembly Locator Sheet.
f) Exterior and Interior Accessibility Route.
g) Fire Stopping, Including Tested Design Number.

3	
2	
1	
-	-
-	-
-	-
CD	2 SEP 08 BID DOCUMENTS

PROJECT NO:
CAD DWG FILE: gi101.dwg
DRAWN BY: #
CHECKED BY: ###

COVER SHEET

GI001
SHEET OF

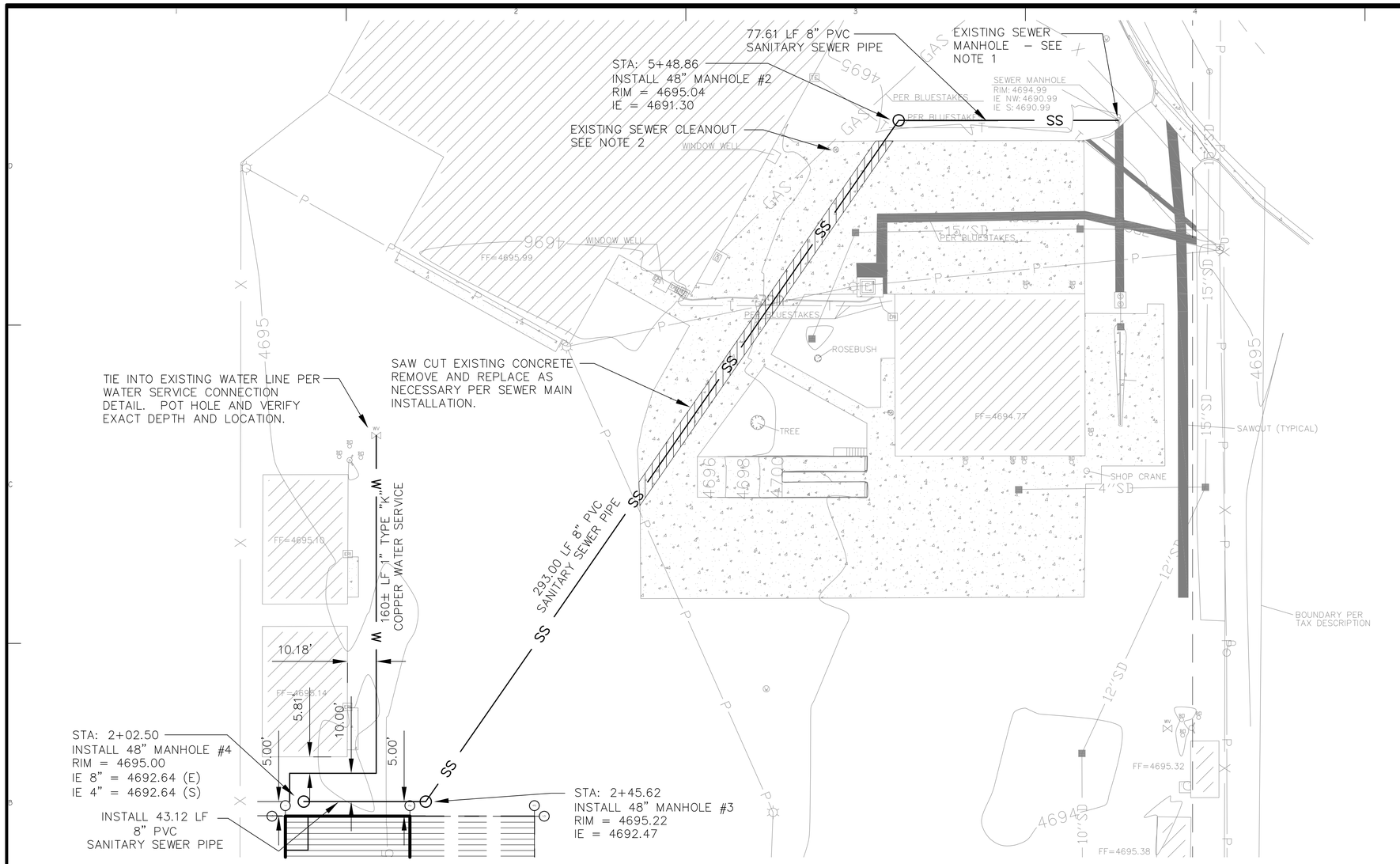

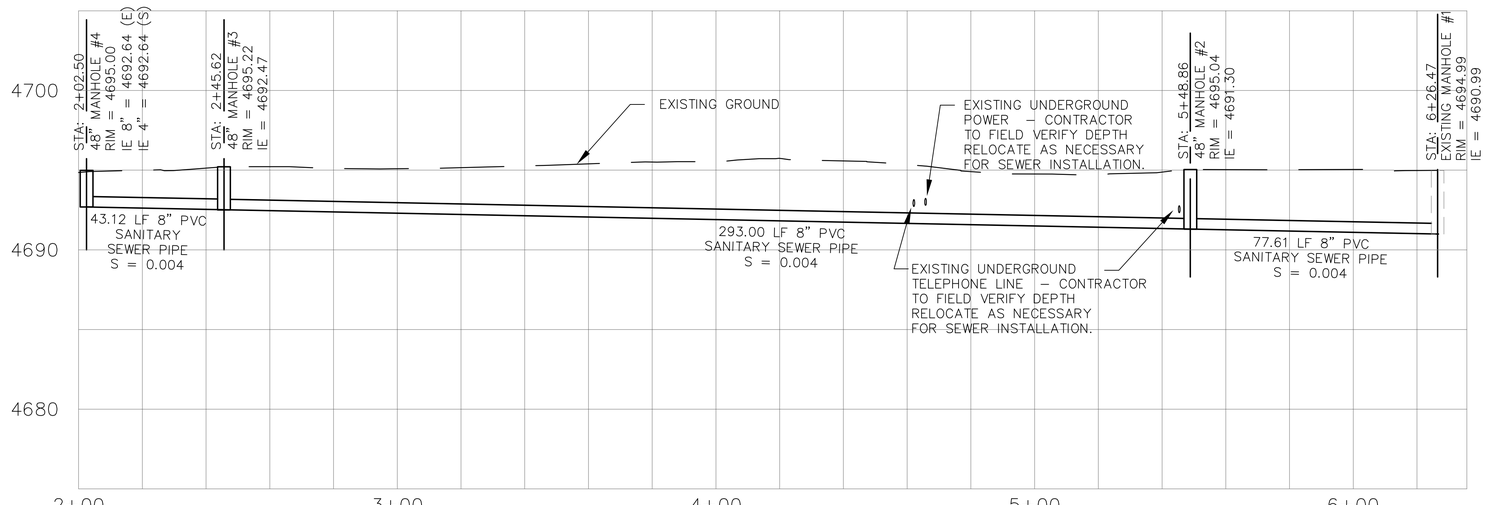

N

GRAPHIC SCALE

20 0 10 20 40

(IN FEET)
1 inch = 20 ft.

LEGEND

GM	GAS METER
	SEWER CLEAN OUT
E	ELECTRIC BOX
	STORM DRAIN INLET BOX
S	SEWER MANHOLE
	FIRE HYDRANT
WV	WATER VALVE
	BOLLARD
	ASPHALT
	CONCRETE
G	BLUE STAKES GAS (EXISTING)
UGE	BLUE STAKES UNDER GROUND ELECTRIC (EXISTING)
X	FENCE (EXISTING)
P	POWER LINE (EXISTING)
T	TELEPHONE LINE (EXISTING)
12" SD	STORM DRAIN (EXISTING)
SS	NEW SEWER LINE
W	NEW WATER LINE

NOTES:

1– CORE AND GROUT EXISTING SANITARY SEWER MANHOLE FOR NEW 8" PVC CONNECTION.

2– POTHOLE AND VERIFY LOCATION AND DEPTH OF EXISTING SEWER LATERAL. IF IN CONFLICT WITH NEW 8" SEWER, CONNECT EXISTING SEWER LATERAL TO NEW 8" SEWER LINE.

3– TRENCH AND REPLACE EXISTING CONCRETE PER CONCRETE PAVEMENT TRENCH DETAIL.

4– TRENCH AND REPAIR EXISTING ASPHALT SURFACE PER ASPHALT PAVEMENT TRENCH DETAIL.

MANHOLE TABLE

MANHOLE #1 (EXISTING)
N 11322.5020 E 10084.6810

MANHOLE #2
N 11322.5020 E 10007.0733

MANHOLE #3
N 11081.8126 E 9839.9751

MANHOLE #4
N 11081.8126 E 9796.8501

LICENSED PROFESSIONAL ENGINEER
#179190
JAMES C. DAHL, JR.
SEAL SIGNED
STATE OF UTAH

COOPER ROBERTS SIMONSEN ASSOCIATES

crsa

700 NORTH 200 WEST
SALT LAKE CITY,UTAH 84103
(801) 355-5915
(801) 355-9885 FAX
WWW.CRSA-US.COM

STRUCTURAL ENGINEER
CALDER RICHARDS CONSULTING ENGINEERS
634 South 400 East
SALT LAKE CITY, UT 84101
(801) 466-1699 (801) 467-2495 FAX
stephen@crceng.com

MECHANICAL ENGINEER
SMD
966 WEST ATHERTON DRIVE STE. 200
TAYLORSVILLE, UTAH 84123
(801)268-3828 FAX (801)268-3297
# #

ELECTRICAL ENGINEER
SPECTRUM
175 S MAIN STREET STE. 300
SALT LAKE CITY, UTAH 84111
(801)328-5151 (801)401-9471
# #

CIVIL ENGINEER
Stanley Consultants Inc.
5353 south 960 East
SALT LAKE CITY, UTAH 84117
(801)293-8880 (801)801-8886
# #

J. M. BROWNING ARMORY
197TH RIGGER FACILITY
DFCM NO. 08243480
625 E.5300 S.
OGDEN, UTAH

UTAH NATIONAL GUARD
12953 SOUTH
MINUTEMAN DRIVE.
DRAPER UTAH 84020-1776

3	-	-
2	-	-
1	-	-
CD	02 SEP 08	BID DOCUMENTS

PROJECT NO:	B08-062
CAD DWG FILE:	
DRAWN BY:	BC
CHECKED BY:	JCD

SITE SEWER AND WATER
UTILITY PLAN

C1

SHEET OF

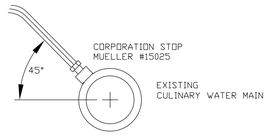

WATER SERVICE CONNECTION

SCALE: NONE

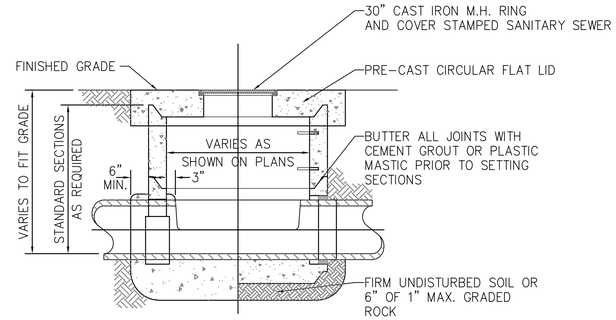

NOTE: MANHOLE BASE MAY BE POURED IN PLACE OR PRE-CAST

POURED IN PLACE BASE

1. SET BOTTOM SECTION ON BLOCKS PRIOR TO POURING CONCRETE BASE 1" MIN. CLEARANCE ABOVE PIPE
2. FINISH FLOOR WHEN CONCRETE BASE IS POURED – CUT TOP HALF OF PIPE OUT (AFTER CONCRETE HAS SET) TO 3" FROM WALLS AND GROUT FACE OF CHANNEL TO COVER EDGE OF PIPE

PRE-CAST BASE

1. P.V.C. MANHOLE ADAPTER OR RUBBER BOOT WITH STAINLESS STEEL BAND. (W.R. WHITE KOR-N-SEAL OR EQUAL)

SHALLOW CONCRETE MANHOLE DETAIL

SCALE: NONE

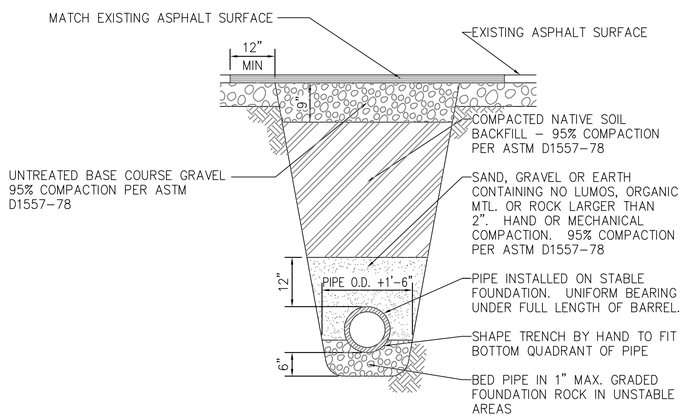

TYP. TRENCH THROUGH ASPHALT PAVEMENT

SCALE: NONE

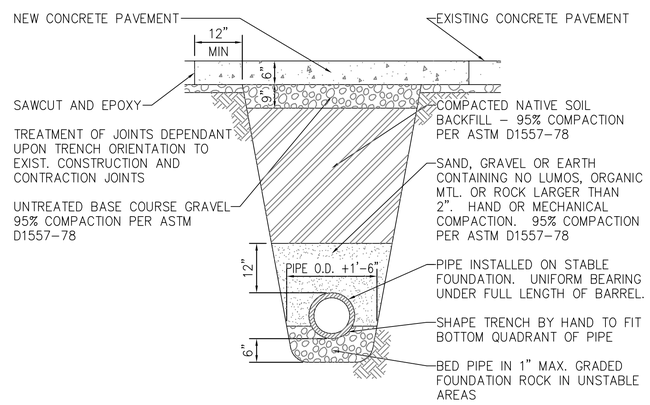

TYP. TRENCH THROUGH CONC. PAVEMENT

SCALE: NONE

COOPER
ROBERTS
SIMONSEN
ASSOCIATES

crsa

700 NORTH 200 WEST
SALT LAKE CITY,UTAH 84103
(801) 355-5915
(801) 355-9885 FAX
WWW.CRSA-US.COM

STRUCTURAL ENGINEER
CALDER RICHARDS CONSULTING ENGINEERS
634 South 400 East
SALT LAKE CITY, UT 84101
(801) 466-1699 (801) 467-2495 FAX
stephen@crceng.com

MECHANICAL ENGINEER
SMD
986 WEST ATHERTON DRIVE STE. 200
TAYLORSVILLE, UTAH 84123
(801)268-3828 FAX (801)268-3297
# #

ELECTRICAL ENGINEER
SPECTRUM
175 S MAIN STREET STE. 300
SALT LAKE CITY, UTAH 84111
(801)328-5151 (801)401-9471
# #

CIVIL ENGINEER
Stanley Consultants Inc.
5353 South 960 East
SALT LAKE CITY, UTAH 84117
(801)293-8880 (801)293-8886
# #

J. M. BROWNING ARMORY
197TH RIGGER FACILITY
DFCM NO. 08243480
625 E.5300 S.
OGDEN, UTAH

UTAH NATIONAL GUARD
12953 SOUTH
MINUTEMAN DRIVE.
DRAPER UTAH 84020-1776

-	-	-
-	-	-
-	-	-
CD	02 SEP 08	BID DOCUMENTS

PROJECT NO:	B08-062
CAD DWG FILE:	
DRAWN BY:	BC
CHECKED BY:	JCD

SITE SEWER AND WATER DETAILS

C2

SHEET OF

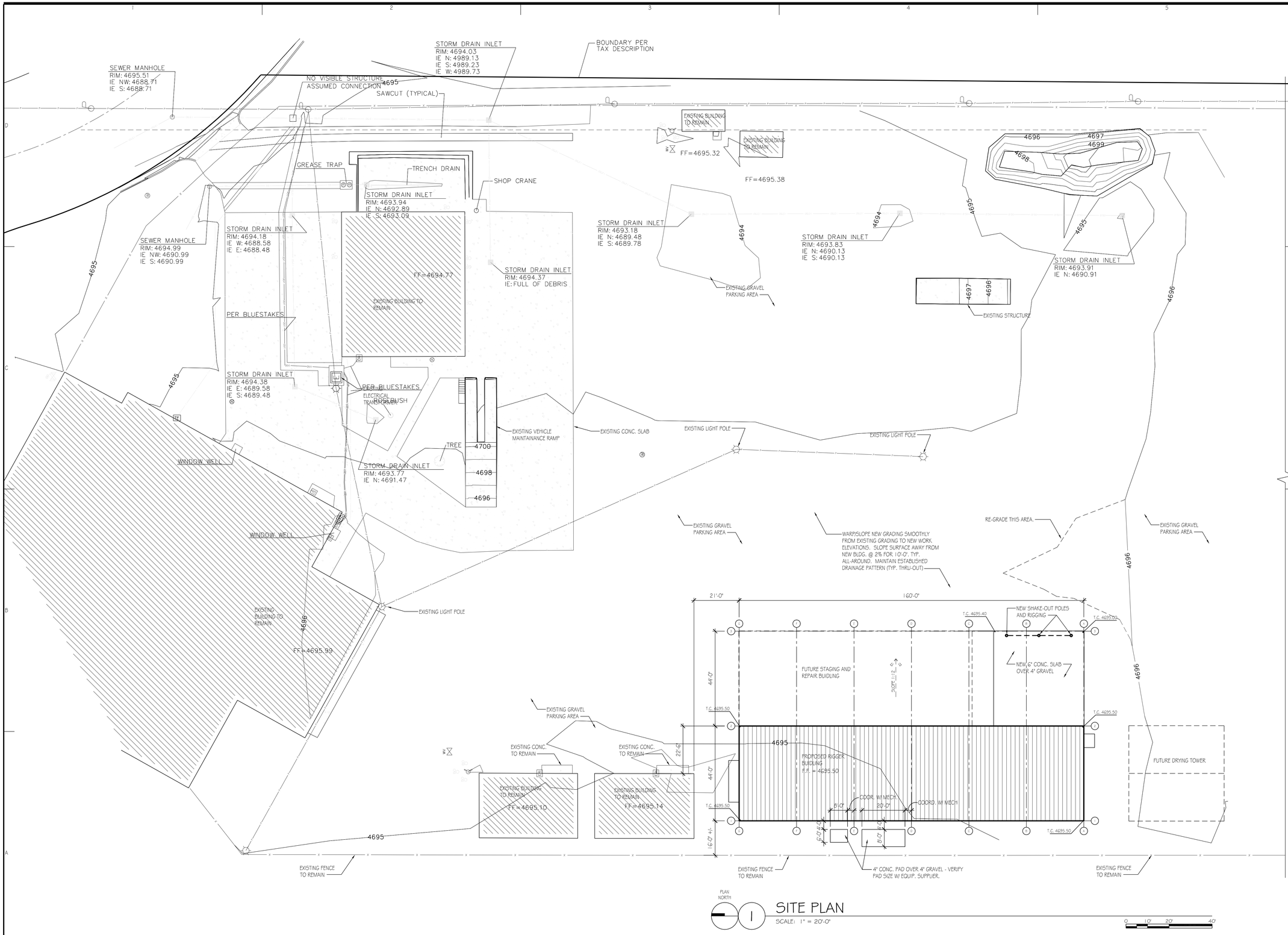

COOPER
ROBERTS
SIMONSEN
ASSOCIATES

crsa

700 NORTH 200 WEST
SALT LAKE CITY,UTAH 84103
(801) 355-5915
(801) 355-9885 FAX
WWW.CRSA-US.COM

STRUCTURAL ENGINEER
CALDER RICHARDS CONSULTING ENGINEERS
634 South 400 East
SALT LAKE CITY, UT 84101
(801) 466-1699 (801) 467-2495 FAX
- stephen@crceng.com

MECHANICAL ENGINEER
SMD
986 WEST ATHERTON DRIVE STE. 200
TAYLORSVILLE, UTAH 84123
(801)268-3828 FAX (801)268-3297
- -

ELECTRICAL ENGINEER
SPECTRUM
175 S MAIN STREET STE. 300
SALT LAKE CITY, UTAH 84111
(801)328-5151 (801)401-9471
- -

CIVIL ENGINEER
Stanley Consultants Inc.
5353 south 960 East
SALT LAKE CITY, UTAH 84117
(801)293-8880 (801)801-8886
- -

PROJECT:
J. M. BROWNING ARMORY
197TH RIGGER FACILITY
DFCM NO. 08243480
625 E. 5300 S.
OGDEN, UTAH 84402

OWNER:
UTAH NATIONAL GUARD
12953 SOUTH
MINUTEMAN DRIVE.
DRAPER UTAH 84020-1776

-	-	-
-	-	-
-	-	-
CD	2 SEP 08	BID DOCUMENTS

PROJECT NO:
CAD DWG FILE: as101.dwg
DRAWN BY: #
CHECKED BY: ###

SITE PLAN

AS101
SHEET OF

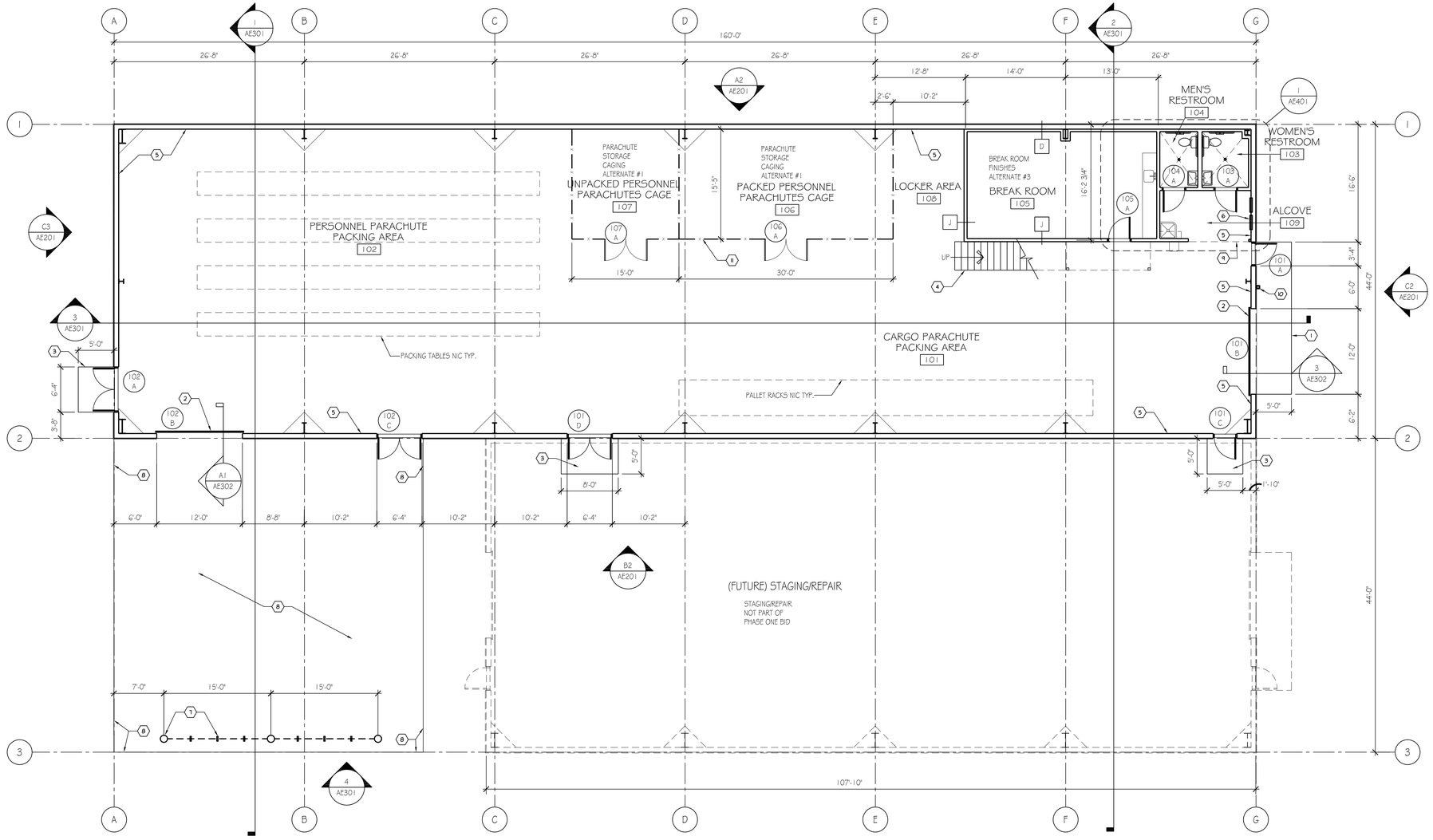

PLAN NORTH

1 LEVEL 1 FLOOR PLAN

SCALE: 1/8" = 1'-0"

FINISH SCHEDULE

ROOM NUMBER	FLOOR	BASE	WALLS NORTH	WALLS EAST	WALLS SOUTH	WALLS WEST	CEILING
101	SC	NONE					OPEN TO STRUCTURE
102	SC	NONE					OPEN TO STRUCTURE
103	CT	CT	CT	CT	CT	CT	PAINT
104	CT	CT	CT	CT	CT	CT	PAINT
105	VCT	4" RUBBER	PAINT	PAINT	PAINT	PAINT	ACCOUSTIC CEILING PANELS IN GRID
106	SC	NONE					OPEN TO STRUCTURE
107	SC	NONE					OPEN TO STRUCTURE
108	SC	NONE		PAINT			OPEN TO STRUCTURE
109	SC	4" RUBBER	PAINT	PAINT	PAINT	PAINT	OPEN TO STRUCTURE
201	CARPET	4" RUBBER	PAINT	PAINT	PAINT	PAINT	ACCOUSTIC CEILING PANELS IN GRID
202	CARPET	4" RUBBER	PAINT	PAINT	PAINT	PAINT	ACCOUSTIC CEILING PANELS IN GRID

CT = CERAMIC TILE

VCT = VINYL COMPOSITION TILE

SC = SEALED CONCRETE

MEZZANINE ROOMS 201 AND 202 ARE PART OF ALTERNATE #2

CABINETS, PLUMBING FIXTURES, FLOOR TILE, RUBBER BASE, IN BREAK ROOM 105 ARE PART OF ALTERNATE #3 - STUB IN ROUGH PLUMBING AS PART OF BASE BID

KEYED NOTES

1. 6" CONC. APRON
2. ROLL-UP DOOR
3. 4" CONC. STOOP ON 4" GRAVEL BASE COURSE
4. STAIR AND LANDING PART OF ALTERNATE #2 - SEE SHEET AE402
5. 3/4" CDX PLYWOOD LINER PANEL SCREWED TO METAL BUILDING GIRTS - PAINT - TYP. AT EXTERIOR WALLS - 8'-0" HIGH
6. ELECTRICAL EQUIPMENT PER ELECTRICAL DRAWINGS
7. SHAKE-OUT POLES AND RIGGING - SEE ELEVATIONS ON SHEET AE201
8. 6" CONC. SLAB ON 4" GRAVEL BASE COURSE
9. LINE OF MEZZANINE ABOVE - MEZZANINE FLOOR STRUCTURE AND DECK PART OF BASE BID
10. KNOX BOX MOUNTED TO STRUCTURAL GIRTS 4'-0" A.F.F.
11. WIRE CAGE ENCLOSURE

DOOR SCHEDULE

DOOR NUMBER	SINGLE	DOUBLE	DOOR TYPE	DOOR SIZE	HARDWARE GROUP	FRAME TYPE	COMMENTS
101A	●		T-1	S-1	H-1	F-1	
101B	●		T-3	S-2	H-5	F-2	
101C	●		T-1	S-1	H-1	F-1	
101D		●	T-1	S-3	H-1	F-1	
102A		●	T-1	S-3	H-2	F-1	
102B	●		T-3	S-2	H-5	F-2	
102C		●	T-1	S-3	H-2	F-1	
103A	●		T-1	S-1	H-4	F-1	
104A	●		T-1	S-1	H-4	F-1	
105A	●		T-2	S-1	H-3	F-1	
106A		●	T-4	S-1			
107A		●	T-4	S-1			
MEZZANINE LEVEL (ALT. #2)							
201A	●		T-2	S-1	H-3	F-1	
202A	●		T-2	S-1	H-3	F-1	

DOOR TYPES

T-1 = HOLLOW METAL INSULATED FLUSH
T-2 = HOLLOW METAL NON-INSULATED FLUSH
T-3 = INSULATED OVERHEAD ROLL-UP - MOTORIZED
T-4 = WIRE MESH GATE

DOOR SIZES

S-1 = 3'-0" X 7'-0" X 1-3/4"
S-2 = 12'-0" X 14'-0"
S-3 = 6'-0" X 7'-0"
S-4 = 8'-0" X 10'-0"
S-5 = 3'-0" X 7'-0"

HARDWARE GROUPS

H-1 SINGLE EXTERIOR ENTRY DOOR
H-2 DOUBLE EXTERIOR ENTRY DOOR
H-3 SINGLE INTERIOR OFFICE / BREAK ROOM DOOR
H-4 SINGLE INTERIOR RESTROOM DOOR
H-5 OVERHEAD ROLL-UP TRUCK / DOCK DOOR (EXTERIOR)

FRAME TYPES

F-1 = HOLLOW METAL
F-2 = PER OVERHEAD DOOR MFR.

COMMENTS

SEE SHEET AE501 FOR DOOR DETAILS

COOPER ROBERTS SIMONSEN ASSOCIATES

crsa

700 NORTH 200 WEST
SALT LAKE CITY,UTAH 84103
(801) 355-5915
(801) 355-9885 FAX
WWW.CRSA-US.COM

STRUCTURAL ENGINEER
CALDER RICHARDS CONSULTING ENGINEERS
634 South 400 East
SALT LAKE CITY, UT 84101
(801) 466-1699 (801) 467-2495 FAX
- stephen@crceng.com

MECHANICAL ENGINEER
SMD
986 WEST ATHERTON DRIVE STE. 200
TAYLORSVILLE, UTAH 84123
(801)268-3828 FAX (801)268-3297

ELECTRICAL ENGINEER
SPECTRUM
175 S MAIN STREET STE. 300
SALT LAKE CITY, UTAH 84111
(801)328-5151 (801)401-9471

CIVIL ENGINEER
Stanley Consultants Inc.
5353 south 960 East
SALT LAKE CITY, UTAH 84117
(801)293-8880 (801)801-8886

PROJECT:
J. M. BROWNING ARMORY
197TH RIGGER FACILITY
DFCM NO. 08243480
625 E. 5300 S.
OGDEN, UTAH 84402

OWNER:
UTAH NATIONAL GUARD
12953 SOUTH
MINUTEMAN DRIVE.
DRAPER UTAH 84020-1776

2	-	-
1	-	-
-	-	-
CD	2 SEP 08	BID DOCUMENTS

PROJECT NO:
CAD DWG FILE: ae101.dwg
DRAWN BY: #
CHECKED BY: ###

FLOOR PLAN

AE101
SHEET OF

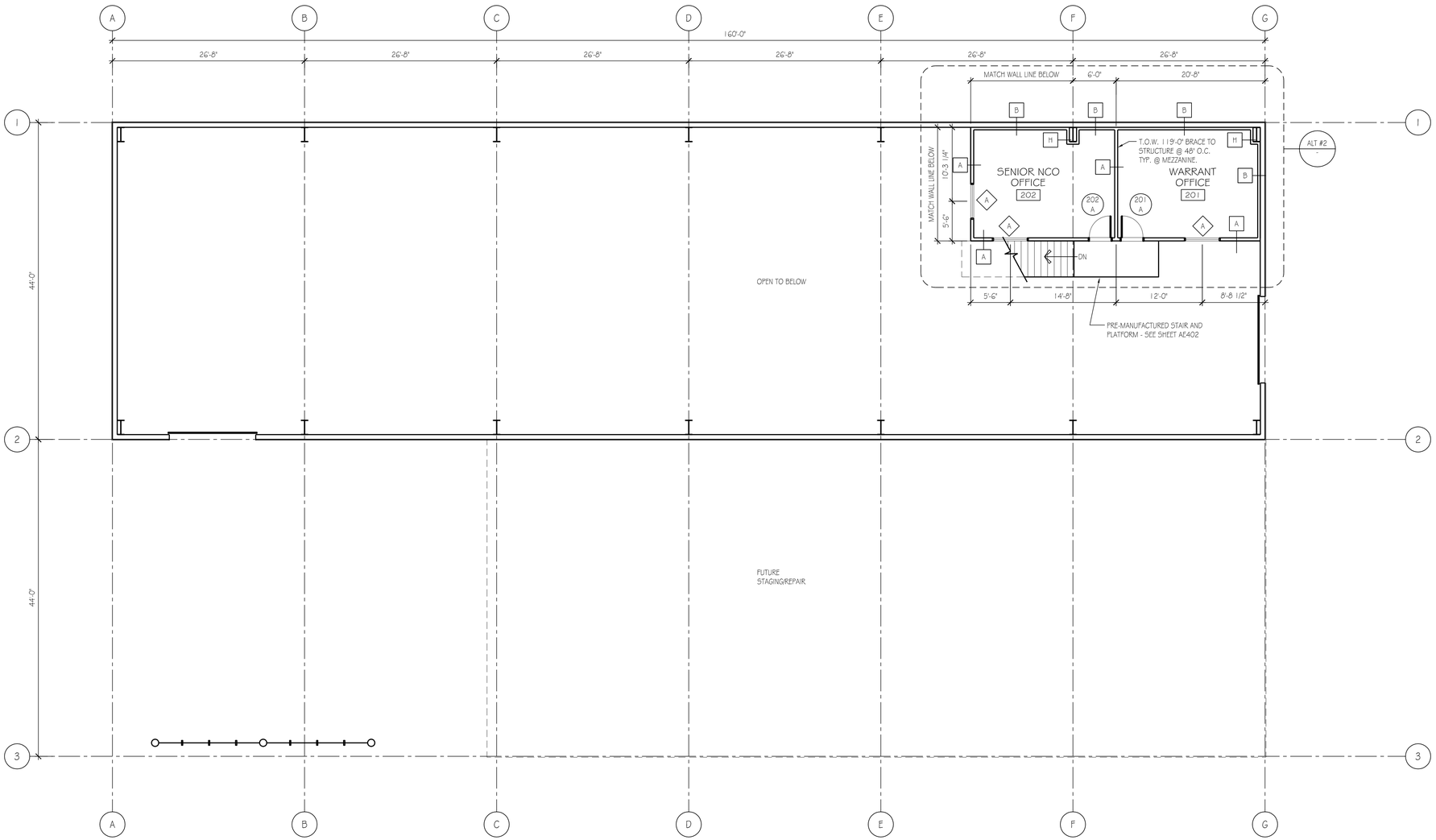

PLAN NORTH

1 MEZZANINE REFLECTED CEILING PLAN (ALT. #2)

SCALE: 1/8" = 1'-0"

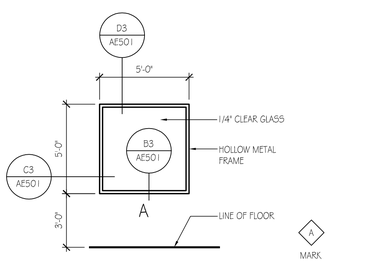

2 TYPICAL INTERIOR WINDOW

SCALE: 1/4" = 1'-0"

COOPER ROBERTS SIMONSEN ASSOCIATES

crsa

700 NORTH 200 WEST
SALT LAKE CITY,UTAH 84103
(801) 355-5915
(801) 355-9885 FAX
WWW.CRSA-US.COM

STRUCTURAL ENGINEER
CALDER RICHARDS CONSULTING ENGINEERS
634 South 400 East
SALT LAKE CITY, UT 84101
(801) 466-1699 (801) 467-2495 FAX
- stephen@crceng.com

MECHANICAL ENGINEER
SMD
986 WEST ATHERTON DRIVE STE. 200
TAYLORSVILLE, UTAH 84123
(801)268-3828 FAX (801)268-3297
- -

ELECTRICAL ENGINEER
SPECTRUM
175 S MAIN STREET STE. 300
SALT LAKE CITY, UTAH 84111
(801)328-5151 (801)401-9471
- -

CIVIL ENGINEER
Stanley Consultants Inc.
5353 south 960 East
SALT LAKE CITY, UTAH 84117
(801)293-8880 (801)801-8886
- -

PROJECT:
J. M. BROWNING ARMORY
197TH RIGGER FACILITY
DFCM NO. 08243480
625 E. 5300 S.
OGDEN, UTAH 84402

OWNER:
UTAH NATIONAL GUARD
12953 SOUTH
MINUTEMAN DRIVE.
DRAPER UTAH 84020-1776

2		
1		
-	-	-
-	-	-
-	-	-
CD	2 SEP 08	BID DOCUMENTS

PROJECT NO:
CAD DWG FILE: ae102.dwg
DRAWN BY: #
CHECKED BY: ###

MEZZANINE PLAN

AE102

SHEET OF

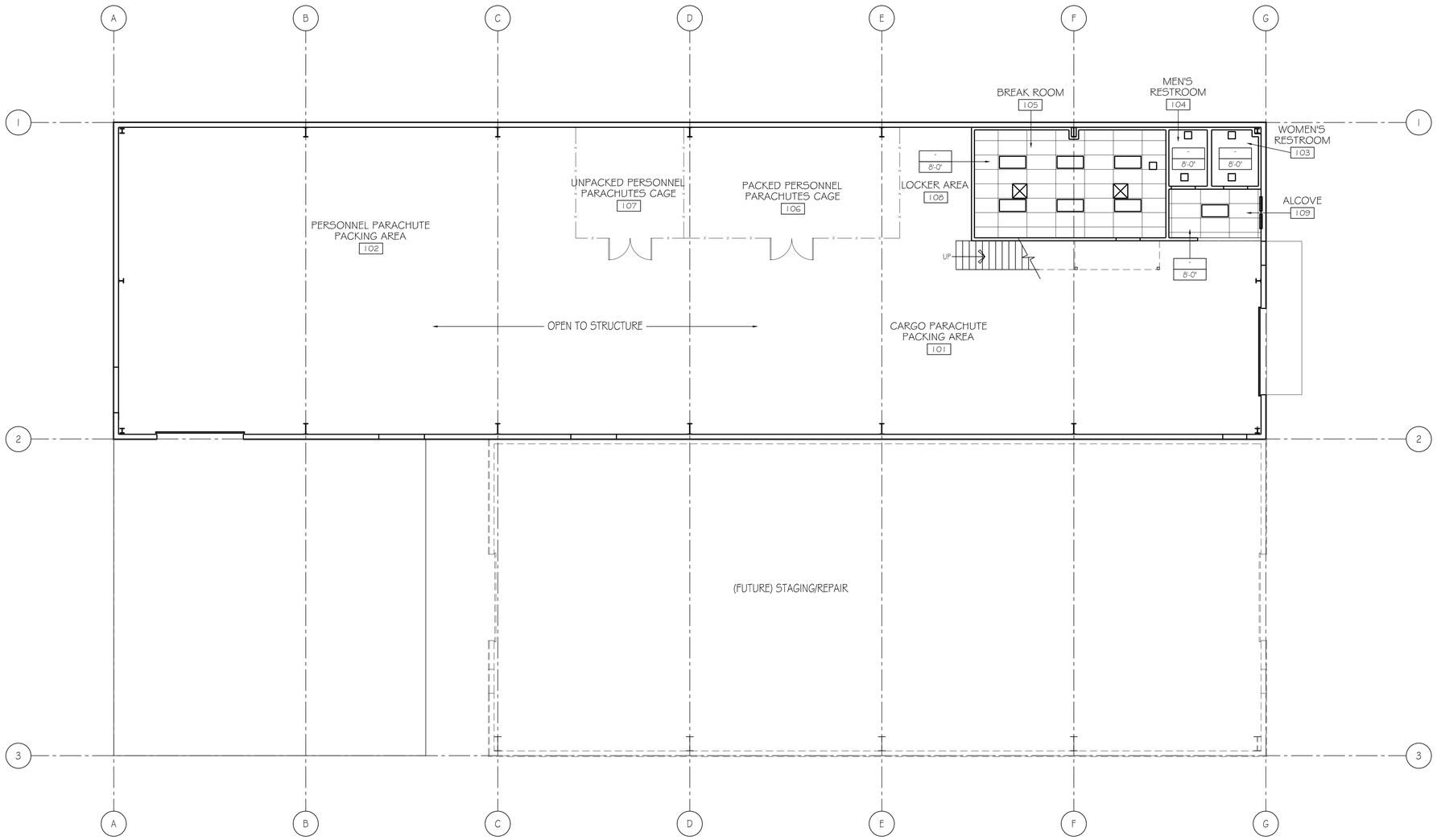

PLAN NORTH

LEVEL 1 REFLECTED CEILING PLAN

SCALE: 1/8" = 1'-0"

0 4' 8' 16'

COOPER ROBERTS SIMONSEN ASSOCIATES

crsa

700 NORTH 200 WEST
SALT LAKE CITY,UTAH 84103
(801) 355-5915
(801) 355-9885 FAX
WWW.CRSA-US.COM

STRUCTURAL ENGINEER
CALDER RICHARDS CONSULTING ENGINEERS
634 South 400 East
SALT LAKE CITY, UT 84101
(801) 466-1699 (801) 467-2495 FAX
- stephen@crceng.com

MECHANICAL ENGINEER
SMD
986 WEST ATHERTON DRIVE STE. 200
TAYLORSVILLE, UTAH 84123
(801)268-3828 FAX (801)268-3297
- -

ELECTRICAL ENGINEER
SPECTRUM
175 S MAIN STREET STE. 300
SALT LAKE CITY, UTAH 84111
(801)328-5151 (801)401-9471
- -

CIVIL ENGINEER
Stanley Consultants Inc.
5353 south 960 East
SALT LAKE CITY, UTAH 84117
(801)293-8880 (801)801-8886
- -

PROJECT:
J. M. BROWNING ARMORY
197TH RIGGER FACILITY
DFCM NO. 08243480
625 E. 5300 S.
OGDEN, UTAH 84402

OWNER:
UTAH NATIONAL GUARD
12953 SOUTH
MINUTEMAN DRIVE.
DRAPER UTAH 84020-1776

3		
2		
1		
-	-	-
-	-	-
-	-	-
CD	2 SEP 08	BID DOCUMENTS

PROJECT NO:
CAD DWG FILE: ae103.dwg
DRAWN BY: #
CHECKED BY: ###

LEVEL 1
REFLECTED
CEILING PLAN

AE103

SHEET OF

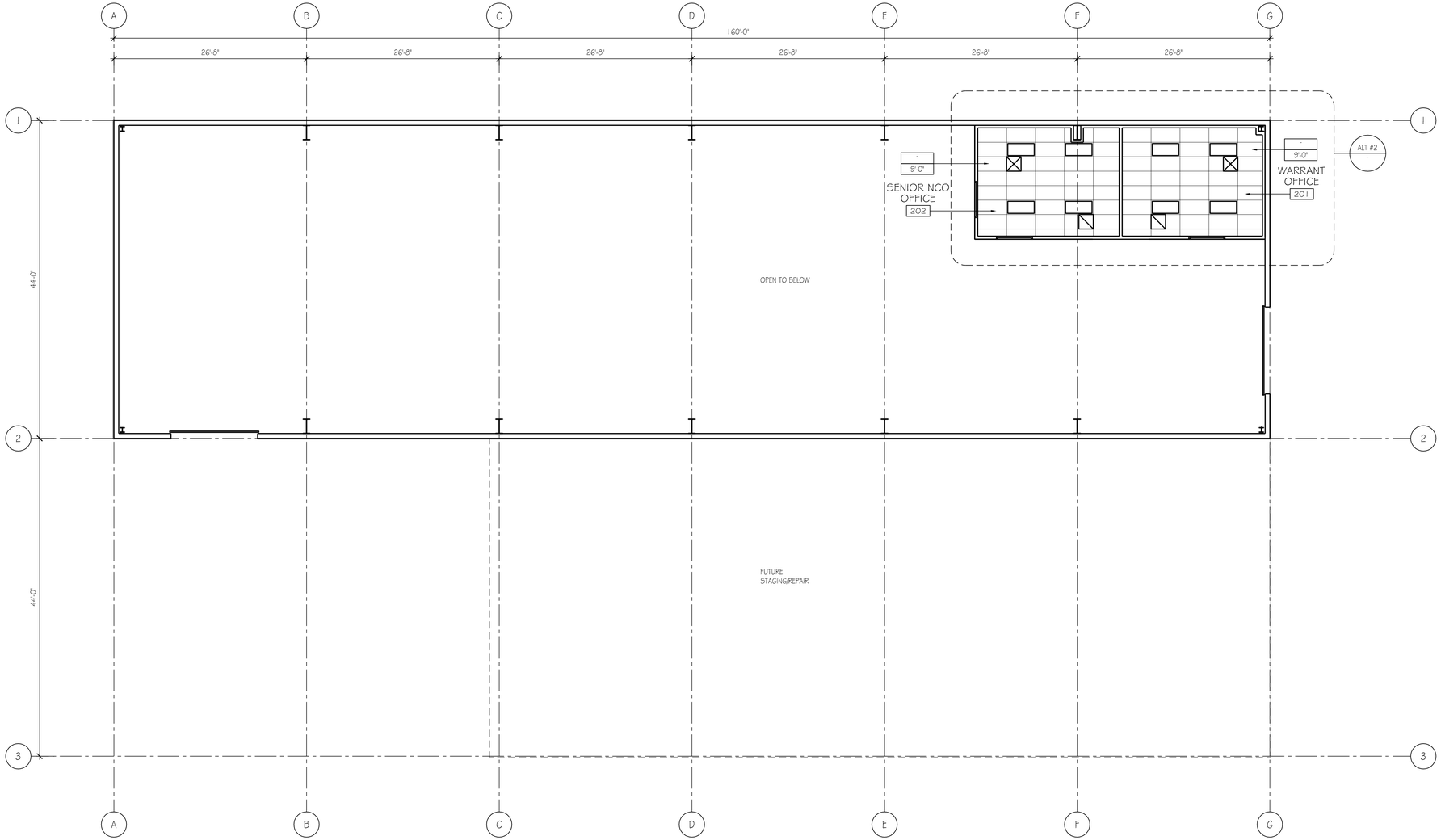

PLAN NORTH

1 MEZZANINE REFLECTED CEILING PLAN (ALT. #2)

SCALE: 1/8" = 1'-0"

0 4' 8' 16'

COOPER
ROBERTS
SIMONSEN
ASSOCIATES

crsa
700 NORTH 200 WEST
SALT LAKE CITY,UTAH 84103
(801) 355-5915
(801) 355-9885 FAX
WWW.CRSA-US.COM

STRUCTURAL ENGINEER
CALDER RICHARDS CONSULTING ENGINEERS
634 South 400 East
SALT LAKE CITY, UT 84101
(801) 466-1699 (801) 467-2495 FAX
- stephen@crceng.com

MECHANICAL ENGINEER
SMD
986 WEST ATHERTON DRIVE STE. 200
TAYLORSVILLE, UTAH 84123
(801)268-3828 FAX (801)268-3297
- -

ELECTRICAL ENGINEER
SPECTRUM
175 S MAIN STREET STE. 300
SALT LAKE CITY, UTAH 84111
(801)328-5151 (801)401-9471
- -

CIVIL ENGINEER
Stanley Consultants Inc.
5353 south 960 East
SALT LAKE CITY, UTAH 84117
(801)293-8880 (801)801-8886
- -

PROJECT:
J. M. BROWNING ARMORY
197TH RIGGER FACILITY
DFCM NO. 08243480
625 E. 5300 S.
OGDEN, UTAH 84402

OWNER:
UTAH NATIONAL GUARD
12953 SOUTH
MINUTEMAN DRIVE.
DRAPER UTAH 84020-1776

2		
1		
-	-	-
-	-	-
-	-	-
CD	2 SEP 08	BID DOCUMENTS

PROJECT NO:
CAD DWG FILE: ae104.dwg
DRAWN BY: #
CHECKED BY: ###

MEZZANINE
REFLECTED
CEILING PLAN

AE104
SHEET OF

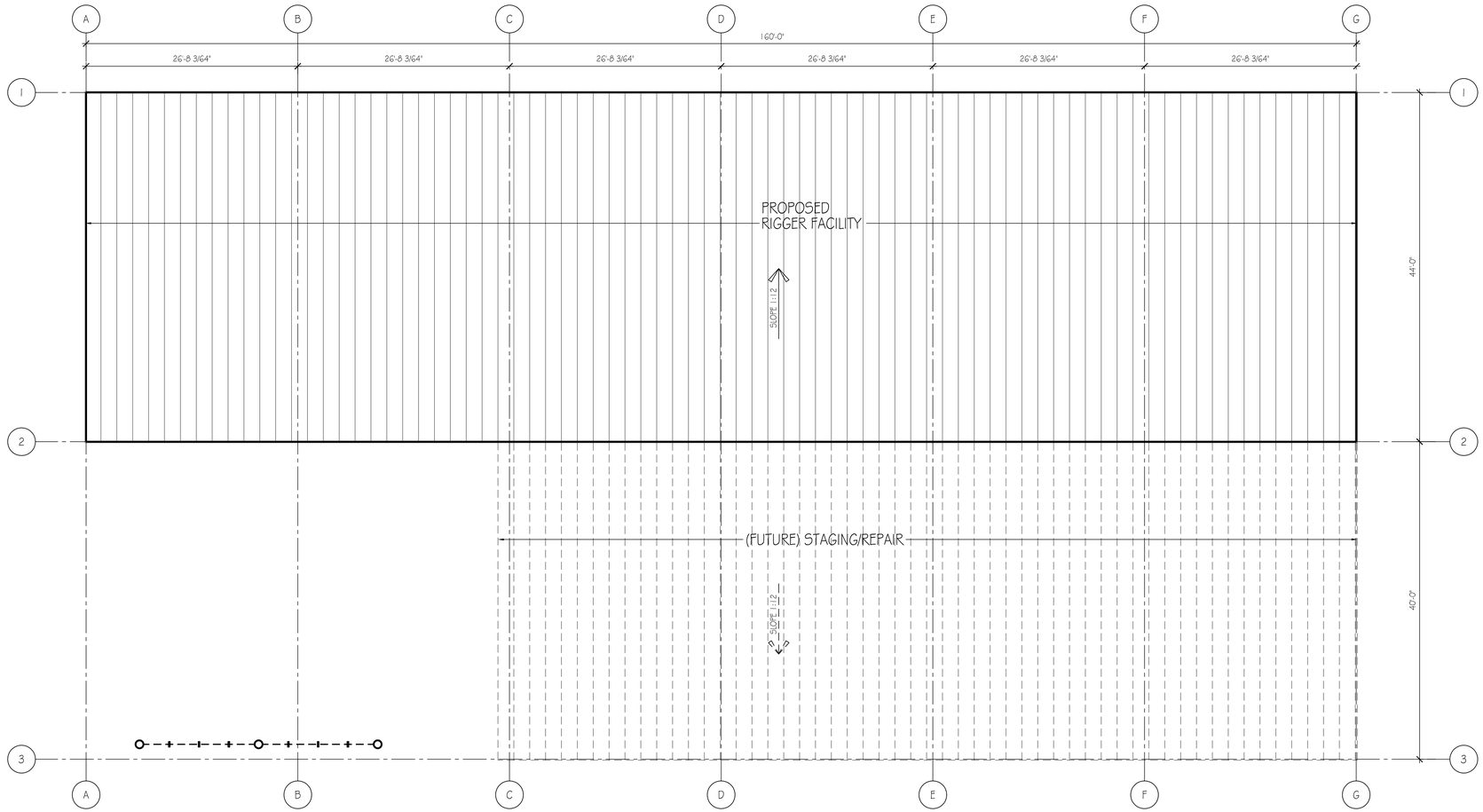

PLAN NORTH

ROOF PLAN

SCALE: 1/8" = 1'-0"

0 4' 8' 16'

COOPER
ROBERTS
SIMONSEN
ASSOCIATES

crsa

700 NORTH 200 WEST
SALT LAKE CITY,UTAH 84103
(801) 355-5915
(801) 355-9885 FAX
WWW.CRSA-US.COM

STRUCTURAL ENGINEER
CALDER RICHARDS CONSULTING ENGINEERS
634 South 400 East
SALT LAKE CITY, UT 84101
(801) 466-1699 (801) 467-2495 FAX
- stephen@crceng.com

MECHANICAL ENGINEER
SMD
986 WEST ATHERTON DRIVE STE. 200
TAYLORSVILLE, UTAH 84123
(801)268-3828 FAX (801)268-3297
- -

ELECTRICAL ENGINEER
SPECTRUM
175 S MAIN STREET STE. 300
SALT LAKE CITY, UTAH 84111
(801)328-5151 (801)401-9471
- -

CIVIL ENGINEER
Stanley Consultants Inc.
5353 south 960 East
SALT LAKE CITY, UTAH 84117
(801)293-8880 (801)801-8886
- -

PROJECT:
J. M. BROWNING ARMORY
197TH RIGGER FACILITY
DFCM NO. 08243480
625 E. 5300 S.
OGDEN, UTAH 84402

OWNER:
UTAH NATIONAL GUARD
12953 SOUTH
MINUTEMAN DRIVE.
DRAPER UTAH 84020-1776

3	####	####
2	####	####
####	####	####
####	####	####
####	####	####
####	####F 08 ###	DOCUMENTS

PROJECT NO:
CAD DWG FILE: ae105.dwg
DRAWN BY: #
CHECKED BY: ###

ROOF PLAN

AE105

SHEET OF

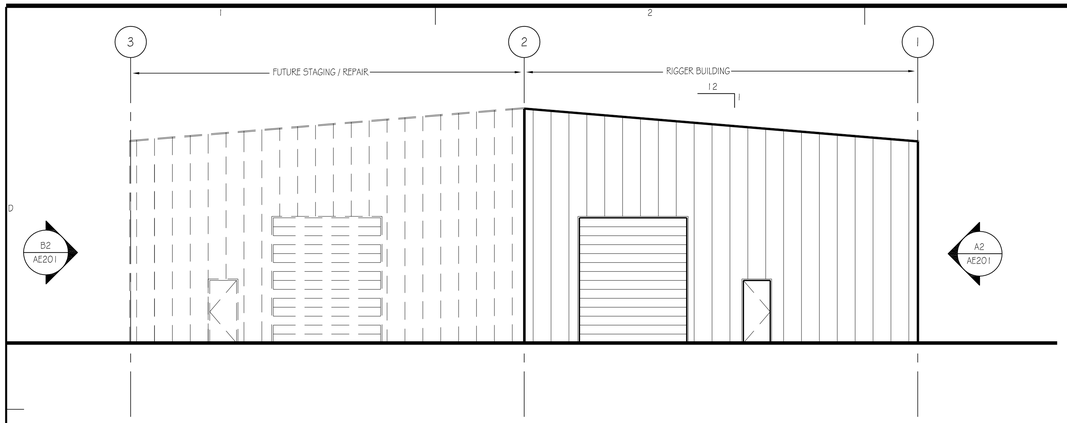

C2 NORTH ELEVATION
SCALE: 1/8" = 1'-0"

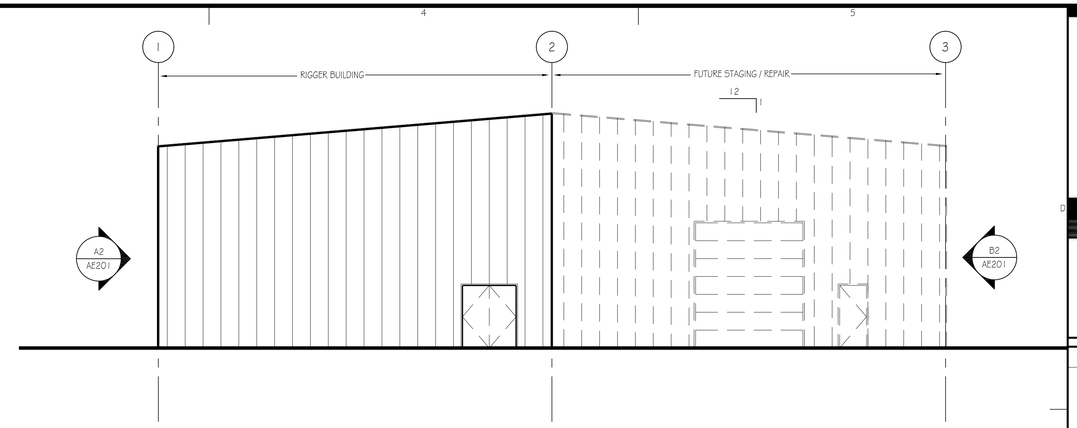

C3 SOUTH ELEVATION
SCALE: 1/8" = 1'-0"

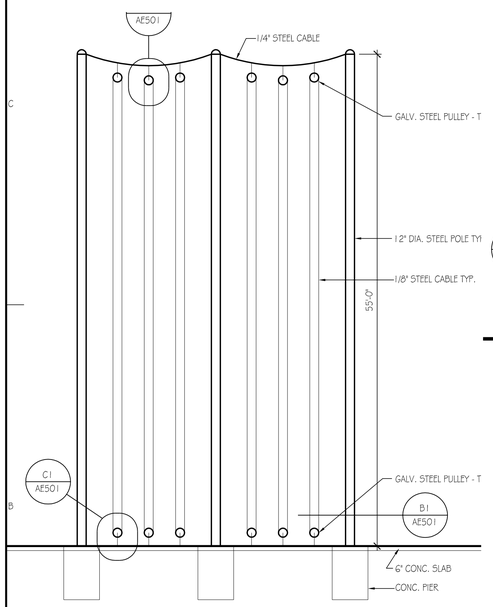

B1 SHAKE-OUT POLES
SCALE: 1/8" = 1'-0"

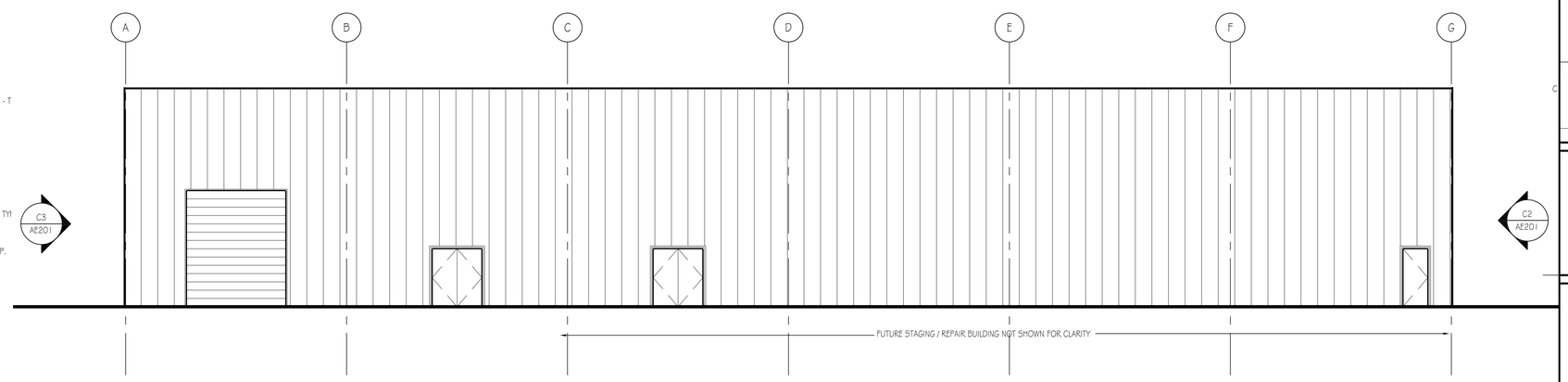

B2 EAST ELEVATION
SCALE: 1/8" = 1'-0"

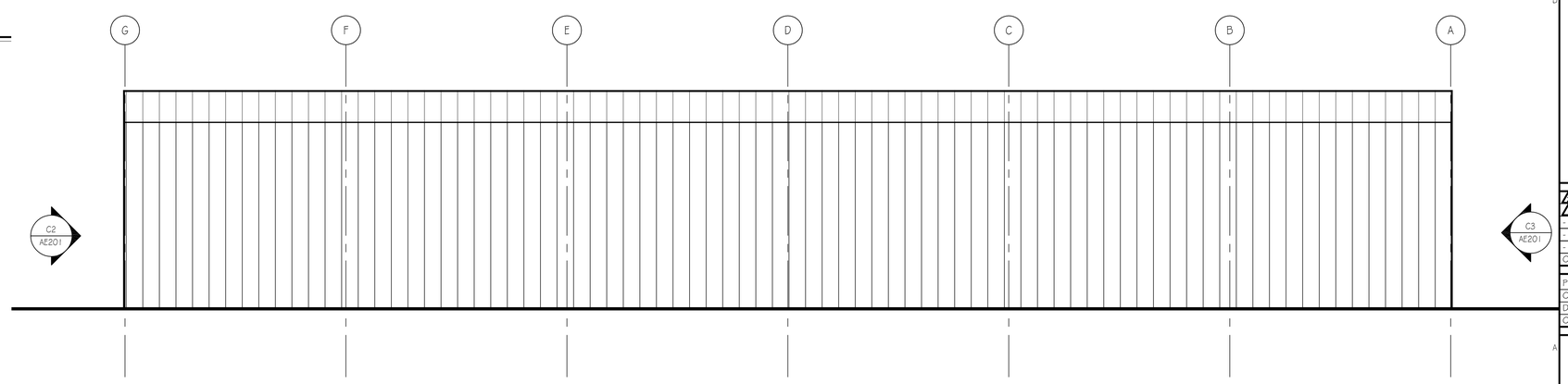

A2 WEST ELEVATION
SCALE: 1/8" = 1'-0"

COOPER
ROBERTS
SIMONSEN
ASSOCIATES

crsa

700 NORTH 200 WEST
SALT LAKE CITY,UTAH 84103
(801) 355-5915
(801) 355-9885 FAX
WWW.CRSA-US.COM

STRUCTURAL ENGINEER
CALDER RICHARDS CONSULTING ENGINEERS
634 South 400 East
SALT LAKE CITY, UT 84101
(801) 466-1699 (801) 467-2495 FAX
- stephen@crceng.com

MECHANICAL ENGINEER
SMD
986 WEST ATHERTON DRIVE STE. 200
TAYLORSVILLE, UTAH 84123
(801)268-3828 FAX (801)268-3297
- -

ELECTRICAL ENGINEER
SPECTRUM
175 S MAIN STREET STE. 300
SALT LAKE CITY, UTAH 84111
(801)328-5151 (801)401-9471
- -

CIVIL ENGINEER
Stanley Consultants Inc.
5353 south 960 East
SALT LAKE CITY, UTAH 84117
(801)293-8880 (801)801-8886
- -

PROJECT:
J. M. BROWNING ARMORY
197TH RIGGER FACILITY
DFCM NO. 08243480
625 E. 5300 S.
OGDEN, UTAH 84402

OWNER:
UTAH NATIONAL GUARD
12953 SOUTH
MINUTEMAN DRIVE.
DRAPER UTAH 84020-1776

2		
1		
-	-	-
-	-	-
-	-	-
CD	2 SEP 08	BID DOCUMENTS

PROJECT NO:
CAD DWG FILE: ae201.dwg
DRAWN BY: SW
CHECKED BY: DT

EXTERIOR
ELEVATIONS

AE201
SHEET OF

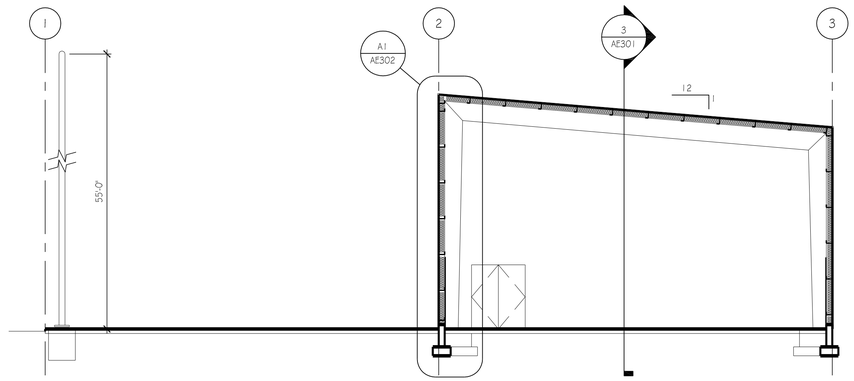

1 BUILDING SECTION
SCALE: 1/8" = 1'-0"

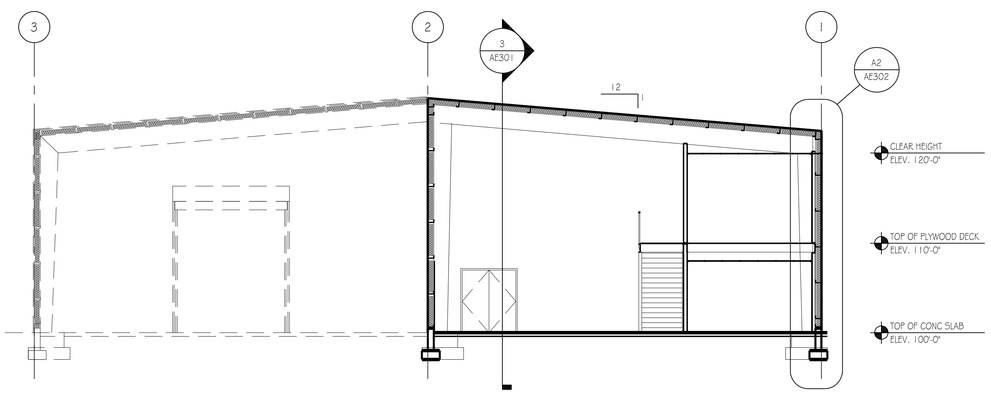

2 BUILDING SECTION
SCALE: 1/8" = 1'-0"

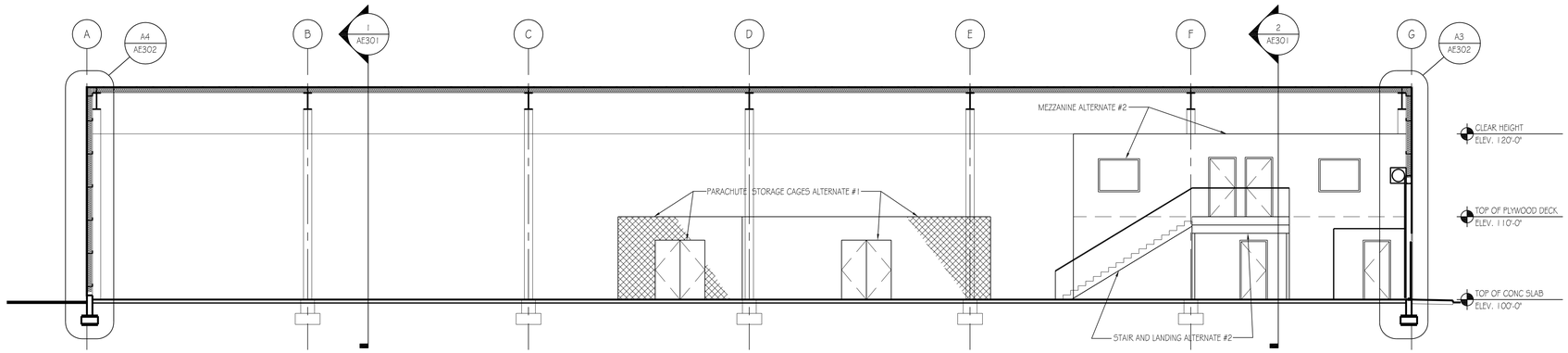

3 BUILDING SECTION
SCALE: 1/8" = 1'-0"

COOPER
ROBERTS
SIMONSEN
ASSOCIATES

crsa

700 NORTH 200 WEST
SALT LAKE CITY,UTAH 84103
(801) 355-5915
(801) 355-9885 FAX
WWW.CRSA-US.COM

STRUCTURAL ENGINEER
CALDER RICHARDS CONSULTING ENGINEERS
634 South 400 East
SALT LAKE CITY, UT 84101
(801) 466-1699 (801) 467-2495 FAX
- stephen@crceng.com

MECHANICAL ENGINEER
SMD
986 WEST ATHERTON DRIVE STE. 200
TAYLORSVILLE, UTAH 84123
(801)268-3828 FAX (801)268-3297
- -

ELECTRICAL ENGINEER
SPECTRUM
175 S MAIN STREET STE. 300
SALT LAKE CITY, UTAH 84111
(801)328-5151 (801)401-9471
- -

CIVIL ENGINEER
Stanley Consultants Inc.
5353 south 960 East
SALT LAKE CITY, UTAH 84117
(801)293-8880 (801)801-8886
- -

PROJECT:
J. M. BROWNING ARMORY
197TH RIGGER FACILITY
DFCM NO. 08243480
625 E. 5300 S.
OGDEN, UTAH 84402

OWNER:
UTAH NATIONAL GUARD
12953 SOUTH
MINUTEMAN DRIVE.
DRAPER UTAH 84020-1776

2		
1		
-	-	-
-	-	-
-	-	-
CD	2 SEP 08 BID DOCUMENTS	

PROJECT NO:
CAD DWG FILE: ae301.dwg
DRAWN BY: SW
CHECKED BY: DT

BUILDING
SECTIONS

AE301
SHEET OF

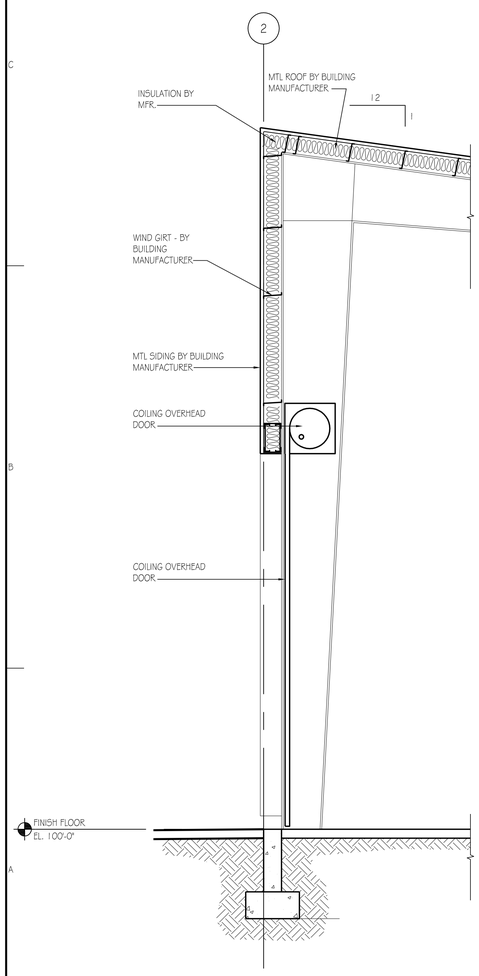

A1 WALL SECTION
SCALE: 3/8" = 1'-0"

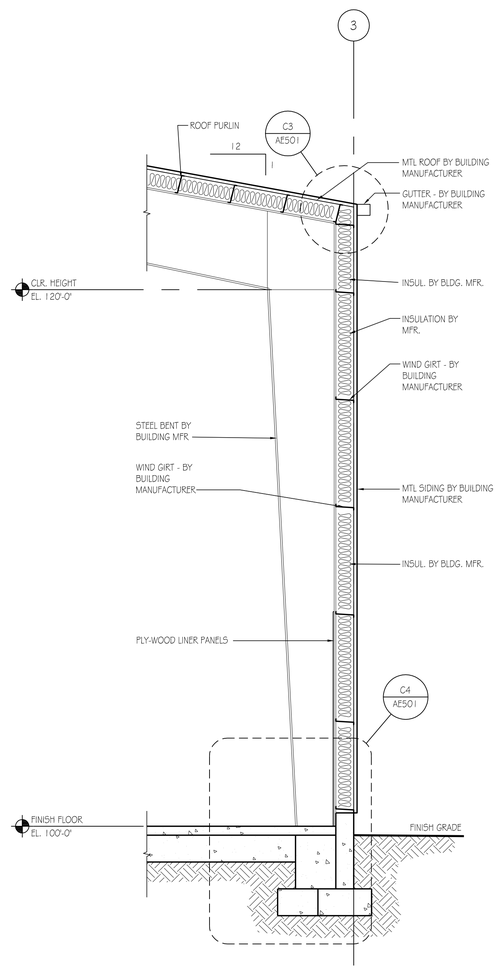

A2 WALL SECTION
SCALE: 3/8" = 1'-0"

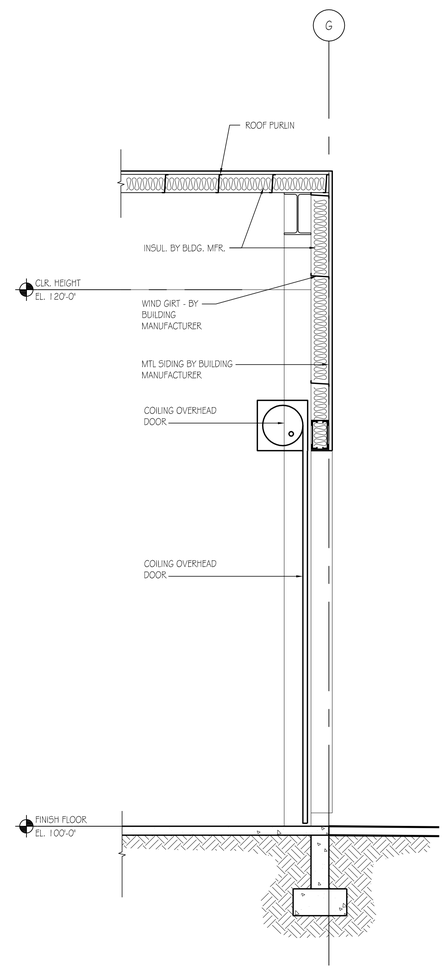

A3 WALL SECTION
SCALE: 3/8" = 1'-0"

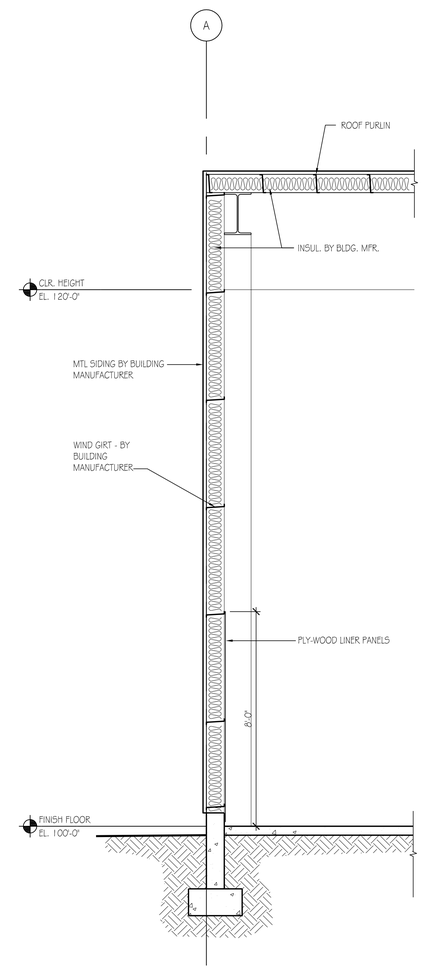

A4 WALL SECTION
SCALE: 3/8" = 1'-0"

COOPER
ROBERTS
SIMONSEN
ASSOCIATES

crsa

700 NORTH 200 WEST
SALT LAKE CITY,UTAH 84103
(801) 355-5915
(801) 355-9885 FAX
WWW.CRSA-US.COM

STRUCTURAL ENGINEER
CALDER RICHARDS CONSULTING ENGINEERS
634 South 400 East
SALT LAKE CITY, UT 84101
(801) 466-1699 (801) 467-2495 FAX
- stephen@crceng.com

MECHANICAL ENGINEER
SMD
986 WEST ATHERTON DRIVE STE. 200
TAYLORSVILLE, UTAH 84123
(801)268-3828 FAX (801)268-3297
- -

ELECTRICAL ENGINEER
SPECTRUM
175 S MAIN STREET STE. 300
SALT LAKE CITY, UTAH 84111
(801)328-5151 (801)401-9471
- -

CIVIL ENGINEER
Stanley Consultants Inc.
5353 south 960 East
SALT LAKE CITY, UTAH 84117
(801)293-8880 (801)801-8886
- -

PROJECT:
J. M. BROWNING ARMORY
197TH RIGGER FACILITY
DFCM NO. 08243480
625 E. 5300 S.
OGDEN, UTAH 84402

OWNER:
UTAH NATIONAL GUARD
12953 SOUTH
MINUTEMAN DRIVE.
DRAPER UTAH 84020-1776

3		
2		
1	-	-
-	-	-
-	-	-
CD	2 SEP 08	BID DOCUMENTS

PROJECT NO: B08-062
CAD DWG FILE: ae302.dwg
DRAWN BY: JLG
CHECKED BY: DT

WALL SECTIONS

AE302
SHEET OF

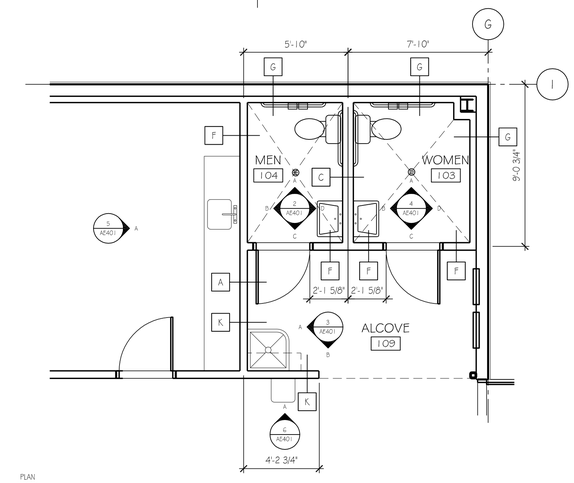

1 PARTIAL ENLARGED PLAN

SCALE: 1/4" = 1'-0"

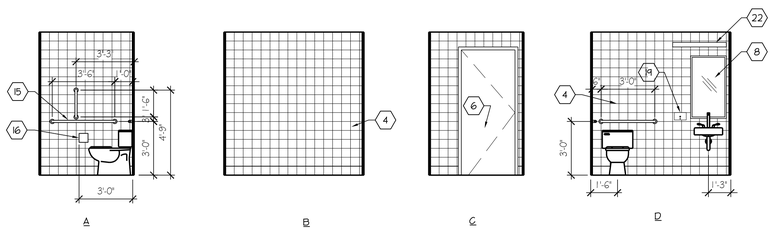

2 MENS RESTROOM

SCALE: 1/4" = 1'-0"

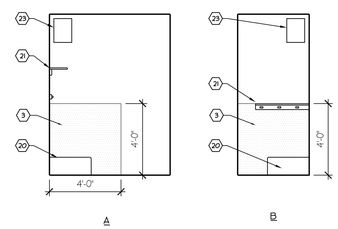

3 MOP SINK

SCALE: 1/4" = 1'-0"

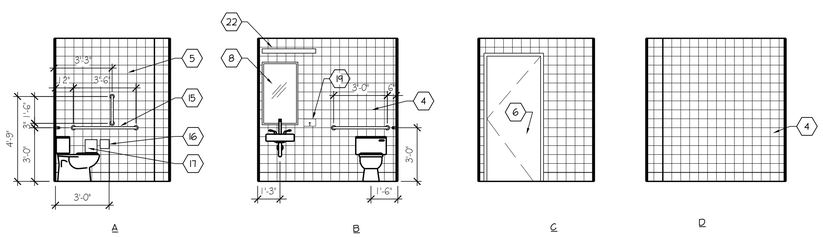

4 WOMENS RESTROOM

SCALE: 1/4" = 1'-0"

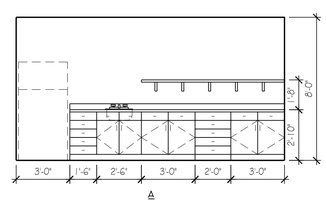

5 BREAK ROOM

SCALE: 1/4" = 1'-0"

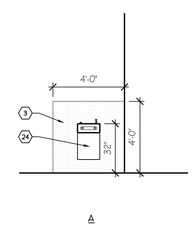

6 DRINKING FOUNTAIN ELEV.

SCALE: 1/4" = 1'-0"

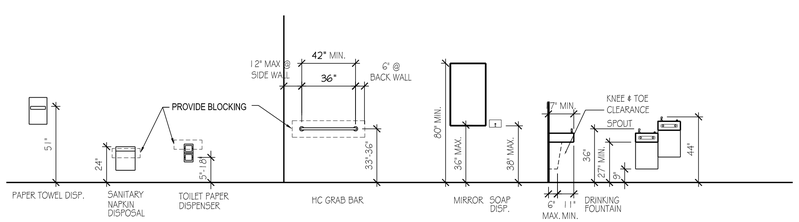

7 ACCESSIBLITY MOUNTING HEIGHTS

SCALE: 1/4" = 1'-0"

KEYED NOTES

1. DEPRESS SLAB 2" FOR SETTING BED - SLOPE 1" TO DRAIN.
2. FLOOR DRAIN. SEE PLUMBING.
3. ¼" RFP
4. CERAMIC TILE - FLOOR TO CEILING.
5. PAINTED GYP. BOARD.
6. DOOR.
7. NOT USED.
8. 2'-0" X 3'-6" MIRROR ON PLYWOOD SPACER ABOVE WAINSCOT.
9. TOILET.
10. URINAL.
11. SINK.
12. COUNTER TOP.
13. SURFACE MOUNTED FLURESCENT FIXTURE. SEE ELECTRICAL.
14. TOILET PARTITION.
15. GRAB BAR.
16. TOILET PAPER DISPENSER.
17. SANITARY NAPKIN RECEPTACLE.
18. PAPER TOWEL DISPENSER.
19. SOAP DISPENSER.
20. MOP SINK.
21. 36" X 8" FIXED SHELF W/ MOP HOLDER @ 6'-0" A.F.F.
22. LIGHT FIXTURE
23. WATER HEATER
24. DRINKING FOUNTAIN EWC

COOPER ROBERTS SIMONSEN ASSOCIATES

crsa

700 NORTH 200 WEST
SALT LAKE CITY,UTAH 84103
(801) 355-5915
(801) 355-9885 FAX
WWW.CRSA-US.COM

STRUCTURAL ENGINEER
CALDER RICHARDS CONSULTING ENGINEERS
634 South 400 East
SALT LAKE CITY, UT 84101
(801) 466-1699 (801) 467-2495 FAX
- stephen@crceng.com

MECHANICAL ENGINEER
SMD
986 WEST ATHERTON DRIVE STE. 200
TAYLORSVILLE, UTAH 84123
(801)268-3828 FAX (801)268-3297
- -

ELECTRICAL ENGINEER
SPECTRUM
175 S MAIN STREET STE. 300
SALT LAKE CITY, UTAH 84111
(801)328-5151 (801)401-9471
- -

CIVIL ENGINEER
Stanley Consultants Inc.
5353 south 960 East
SALT LAKE CITY, UTAH 84117
(801)293-8880 (801)801-8886
- -

PROJECT:
J. M. BROWNING ARMORY
197TH RIGGER FACILITY
DFCM NO. 08243480
625 E. 5300 S.
OGDEN, UTAH 84402

OWNER:
UTAH NATIONAL GUARD
12953 SOUTH
MINUTEMAN DRIVE.
DRAPER UTAH 84020-1776

3		
2		
1	-	-
-	-	-
-	-	-
CD	2 SEP 08	BID DOCUMENTS

PROJECT NO:
CAD DWG FILE: ae401.dwg
DRAWN BY: JLG
CHECKED BY: DT

ENLARGED FLOOR PLANS

AE401

SHEET OF

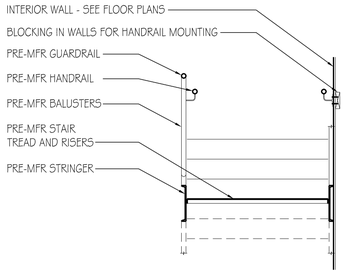

D2 STAIR SECTION
SCALE: 1/2" = 1'-0"

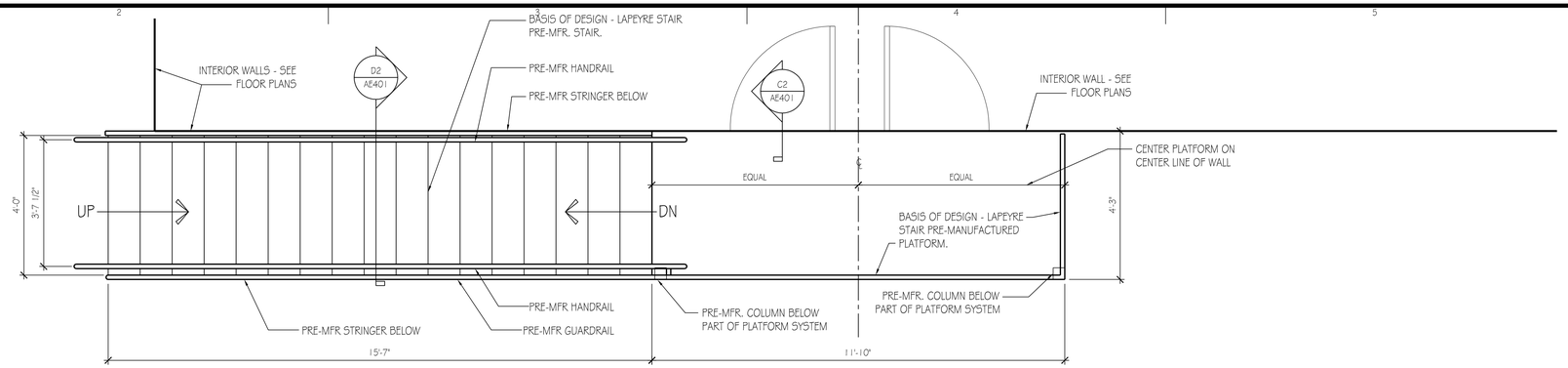

C3 STAIR PLAN (ALT. #2)
SCALE: 1/2" = 1'-0"

A3 AE401

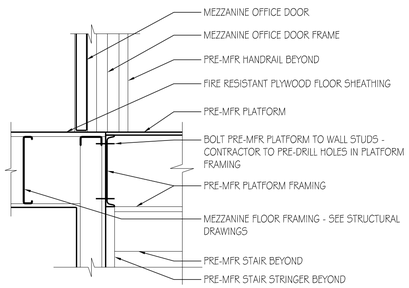

C2 PLATFORM TO WALL
SCALE: 1" = 1'-0"

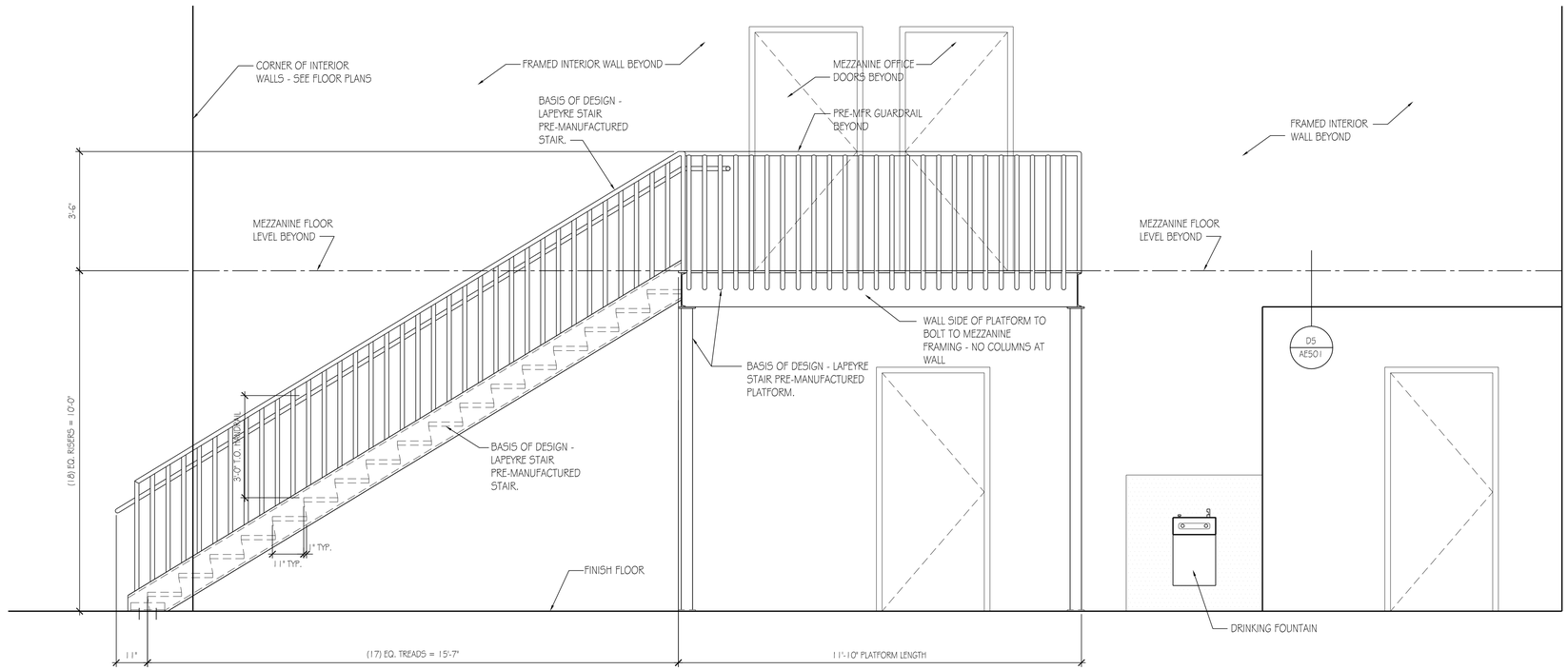

A3 STAIR ELEVATION (ALT. #2)
SCALE: 1/2" = 1'-0"

COOPER ROBERTS SIMONSEN ASSOCIATES

crsa

700 NORTH 200 WEST
SALT LAKE CITY,UTAH 84103
(801) 355-5915
(801) 355-9885 FAX
WWW.CRSA-US.COM

STRUCTURAL ENGINEER
CALDER RICHARDS CONSULTING ENGINEERS
634 South 400 East
SALT LAKE CITY, UT 84101
(801) 466-1699 (801) 467-2495 FAX
- stephen@crceng.com

MECHANICAL ENGINEER
SMD
986 WEST ATHERTON DRIVE STE. 200
TAYLORSVILLE, UTAH 84123
(801)268-3828 FAX (801)268-3297
- -

ELECTRICAL ENGINEER
SPECTRUM
175 S MAIN STREET STE. 300
SALT LAKE CITY, UTAH 84111
(801)328-5151 (801)401-9471
- -

CIVIL ENGINEER
Stanley Consultants Inc.
5353 south 960 East
SALT LAKE CITY, UTAH 84117
(801)293-8880 (801)801-8886
- -

PROJECT:
J. M. BROWNING ARMORY
197TH RIGGER FACILITY
DFCM NO. 08243480
625 E. 5300 S.
OGDEN, UTAH 84402

OWNER:
UTAH NATIONAL GUARD
12953 SOUTH
MINUTEMAN DRIVE.
DRAPER UTAH 84020-1776

2		
1		
-	-	-
-	-	-
-	-	-
CD	2 SEP 08	BID DOCUMENTS

PROJECT NO:
CAD DWG FILE: ae402.dwg
DRAWN BY: SW
CHECKED BY: DT

ENLARGED STAIR PLAN

AE402

SHEET OF

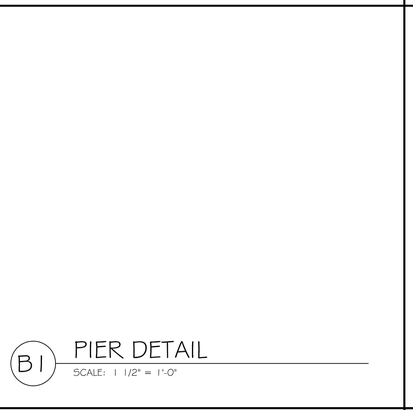

D1 PULLEY DETAIL - TOP
SCALE: 1 1/2" = 1'-0"

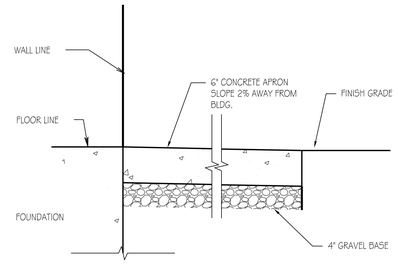

D2 CONCRETE APRON DETAIL
SCALE: 1"=1'-0"

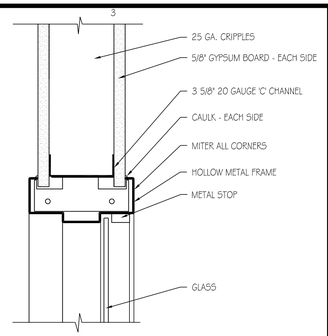

D3 INTERIOR WINDOW HEAD
SCALE: 3" = 1'-0"

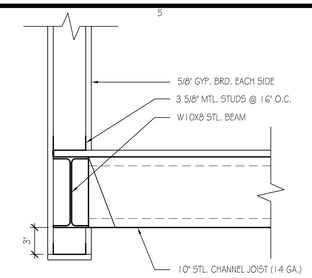

D5 WALL FURRING @ BEAM
SCALE: 1 1/2" = 1'-0"

C1 PULLEY DETAIL - BOTTOM
SCALE: 1 1/2" = 1'-0"

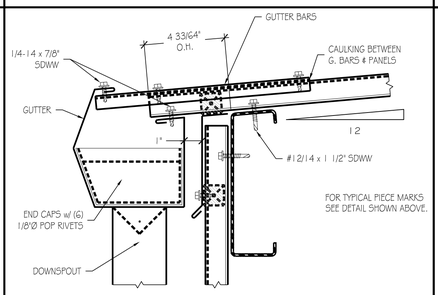

C2 GUTTER DETAIL
SCALE: 3" = 1'-0"

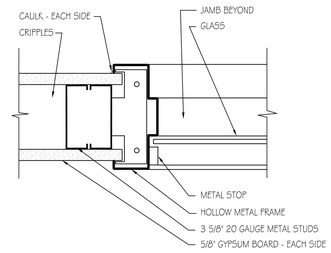

C3 INTERIOR WINDOW JAMB
SCALE: 3" = 1'-0"

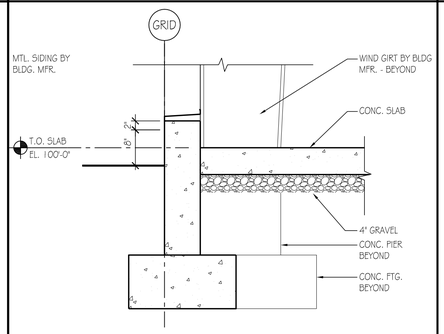

C4 TYPICAL FOUNDATION
SCALE: 1 1/2" = 1'-0"

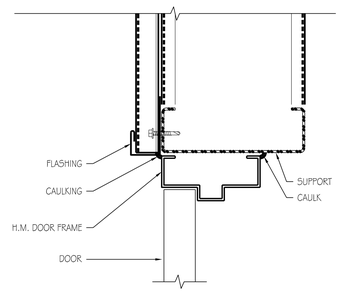

C5 H.M. DOOR HEAD (EXT.)
SCALE: 3" = 1'-0"

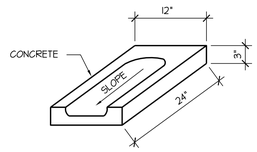

B1 PIER DETAIL
SCALE: 1 1/2" = 1'-0"

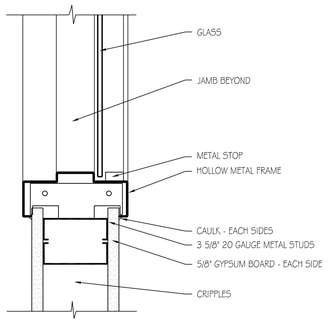

B3 INTERIOR WINDOW SILL
SCALE: 3" = 1'-0"

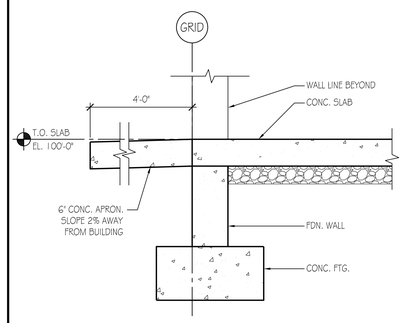

B4 FOUNDATION @ DOOR
SCALE: 3/4" = 1'-0"

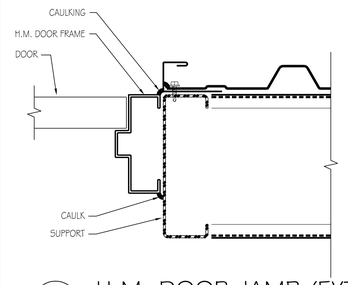

B5 H.M. DOOR JAMB (EXT.)
SCALE: 3" = 1'-0"

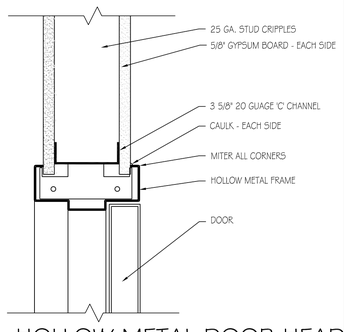

A2 HOLLOW METAL DOOR HEAD
SCALE: 3" = 1'-0"

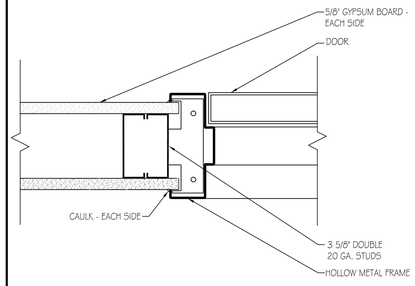

A3 INTERIOR WINDOW JAMB
SCALE: 3" = 1'-0"

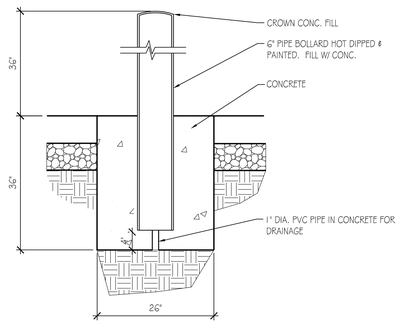

A4 BOLLARD DETAIL
SCALE: 3/4" = 1'-0"

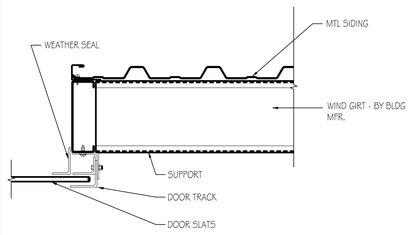

A5 OVERHEAD DOOR JAMB
SCALE: 1 1/2" = 1'-0"

COOPER
ROBERTS
SIMONSEN
ASSOCIATES

crsa

700 NORTH 200 WEST
SALT LAKE CITY,UTAH 84103
(801) 355-5915
(801) 355-9885 FAX
WWW.CRSA-US.COM

STRUCTURAL ENGINEER
CALDER RICHARDS CONSULTING ENGINEERS
634 South 400 East
SALT LAKE CITY, UT 84101
(801) 466-1699 (801) 467-2495 FAX
- stephen@crceng.com

MECHANICAL ENGINEER
SMD
986 WEST ATHERTON DRIVE STE. 200
TAYLORSVILLE, UTAH 84123
(801)268-3828 FAX (801)268-3297
- -

ELECTRICAL ENGINEER
SPECTRUM
175 S MAIN STREET STE. 300
SALT LAKE CITY, UTAH 84111
(801)328-5151 (801)401-9471
- -

CIVIL ENGINEER
Stanley Consultants Inc.
5353 south 960 East
SALT LAKE CITY, UTAH 84117
(801)293-8880 (801)801-8886
- -

PROJECT:
J. M. BROWNING ARMORY
197TH RIGGER FACILITY
DFCM NO. 08243480
625 E. 5300 S.
OGDEN, UTAH 84402

OWNER:
UTAH NATIONAL GUARD
12953 SOUTH
MINUTEMAN DRIVE.
DRAPER UTAH 84020-1776

-	-	-
-	-	-
-	-	-
CD	2 SEP 08	BID DOCUMENTS

PROJECT NO: B08-062
CAD DWG FILE: ae501.dwg
DRAWN BY: JLG
CHECKED BY: DT

DETAILS

AE501
SHEET OF

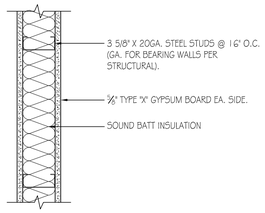

C4 WALL TYPE 'A' (PLAN)
1 1/2" = 1'-0"

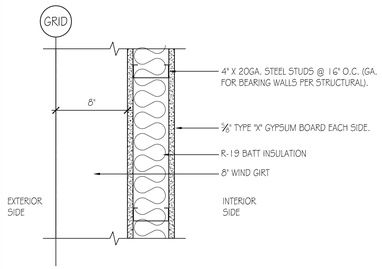

D4 WALL TYPE 'E' (PLAN)
1 1/2" = 1'-0"

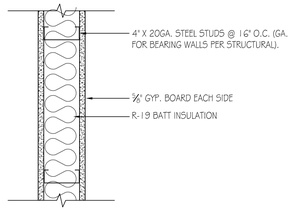

E4 WALL TYPE 'J' (PLAN)
1 1/2" = 1'-0"

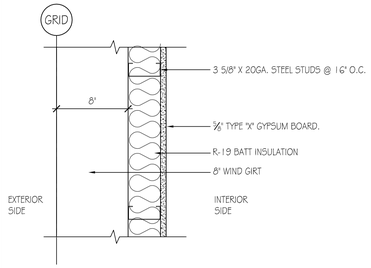

C3 WALL TYPE 'B' (PLAN)
1 1/2" = 1'-0"

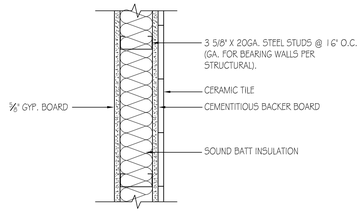

D3 WALL TYPE 'F' (PLAN)
1 1/2" = 1'-0"

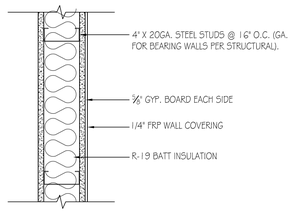

E3 WALL TYPE 'K' (PLAN)
1 1/2" = 1'-0"

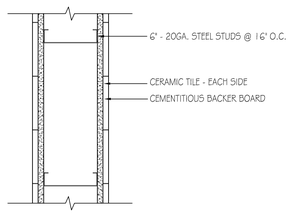

C2 WALL TYPE 'C' (PLAN)
1 1/2" = 1'-0"

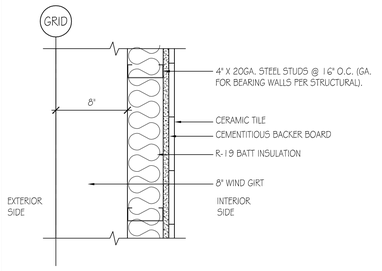

D2 WALL TYPE 'G' (PLAN)
1 1/2" = 1'-0"

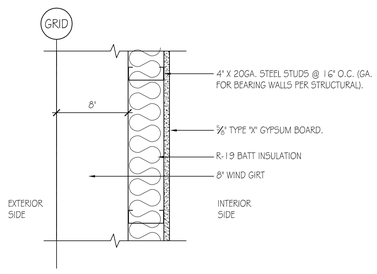

C1 WALL TYPE 'D' (PLAN)
1 1/2" = 1'-0"

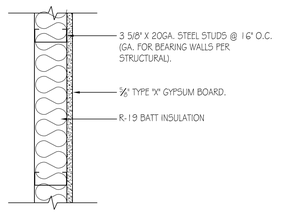

D1 WALL TYPE 'H' (PLAN)
1 1/2" = 1'-0"

COOPER
ROBERTS
SIMONSEN
ASSOCIATES

crsa

700 NORTH 200 WEST
SALT LAKE CITY,UTAH 84103
(801) 355-5915
(801) 355-9885 FAX
WWW.CRSA-US.COM

STRUCTURAL ENGINEER
CALDER RICHARDS CONSULTING ENGINEERS
634 South 400 East
SALT LAKE CITY, UT 84101
(801) 466-1699 (801) 467-2495 FAX
- stephen@crceng.com

MECHANICAL ENGINEER
SMD
986 WEST ATHERTON DRIVE STE. 200
TAYLORSVILLE, UTAH 84123
(801)268-3828 FAX (801)268-3297
- -

ELECTRICAL ENGINEER
SPECTRUM
175 S MAIN STREET STE. 300
SALT LAKE CITY, UTAH 84111
(801)328-5151 (801)401-9471
- -

CIVIL ENGINEER
Stanley Consultants Inc.
5353 south 960 East
SALT LAKE CITY, UTAH 84117
(801)293-8880 (801)801-8886
- -

PROJECT:
J. M. BROWNING ARMORY
197TH RIGGER FACILITY
DFCM NO. 08243480
625 E. 5300 S.
OGDEN, UTAH 84402

OWNER:
UTAH NATIONAL GUARD
12953 SOUTH
MINUTEMAN DRIVE.
DRAPER UTAH 84020-1776

2		
1		
-	-	-
-	-	-
-	-	-
CD	2 SEP 08	BID DOCUMENTS

PROJECT NO: B08-062
CAD DWG FILE: ae502.dwg
DRAWN BY: JLG
CHECKED BY: DT

WALL TYPE
DETAILS

AE502
SHEET OF

STRUCTURAL NOTES

STRUCTURAL DESIGN LOADS

ROOF:
DEAD LOAD: TO BE DETERMINED BY METAL BLDG MFR + 10 PSF
SNOW: I = 1.0

MEZZANINE:
DEAD LOAD: 20 PSF
LIVE LOAD: 50 PSF

WIND LOAD:
BASIC WIND SPEED: V = 90 MPH (3 SEC GUST)
IMPORTANCE FACTOR: I = 1.0
WIND EXPOSURE: "C"

SEISMIC:
OCCUPANCY CATEGORY: D
SPECTRAL RESPONSE COEF: SDS = 0.901, SD1 = 0.569
BASIC SEISMIC-FORCE-RESISTING SYSTEM:
ORDINARY STEEL MOMENT FRAME
R=3.5, OMEGA=3.0, Cd=3

SOILS:
NET ALLOWABLE SOIL PRESSURE = 1500 PSF, (ASSUMED AND TO BE FIELD VERIFIED)

GENERAL

1. ALL DESIGN, CONSTRUCTION, AND INSPECTION SHALL BE IN CONFORMANCE WITH THE 2006 INTERNATIONAL BUILDING CODE.
2. THE CONTRACTOR SHALL VERIFY ALL DIMENSIONS AND CONDITIONS AT THE SITE.
3. ALL OMISSIONS OR CONFLICTS BETWEEN THE VARIOUS ELEMENTS OF THE WORKING DRAWINGS AND/OR SPECIFICATIONS SHALL BE BROUGHT TO THE ATTENTION OF THE ARCHITECT AND/OR STRUCTURAL ENGINEER BEFORE PROCEEDING WITH ANY WORK INVOLVED.
4. DRAWINGS INDICATE THE FINISHED PRODUCT. THEY DO NOT INDICATE A METHOD OF CONSTRUCTION. CONTRACTOR SHALL TAKE ALL PRECAUTIONS NECESSARY TO PROTECT THE STRUCTURE DURING CONSTRUCTION. SUCH PRECAUTIONS SHALL INCLUDE, BUT NOT BE LIMITED TO, BRACING, SHORING FOR CONSTRUCTION EQUIPMENT, ETC.
5. THE CONTRACTOR SHALL BE RESPONSIBLE FOR COMPENSATING THE OWNER FOR ANY CHANGES MADE AS A RESULT OF A DEVIATION FROM THE CONTRACT DOCUMENTS, DEVIATION FROM THE SPECIFICATIONS, FAULTY MATERIALS, OR FAULTY WORKMANSHIP.
6. CONTRACTOR SHALL BE RESPONSIBLE FOR SAFETY AND PROTECTION WITHIN AND ADJACENT TO THE JOB SITE.
7. TEMPORARY SHORING AND BRACING SHALL BE PROVIDED WHEREVER NECESSARY TO TAKE CARE OF ALL LOADS TO WHICH THE STRUCTURE MAY BE SUBJECTED INCLUDING WIND, AND SOIL LOADS. SUCH BRACING SHALL BE LEFT IN PLACE AS LONG AS MAY BE REQUIRED FOR SAFETY OR UNTIL ALL THE STRUCTURAL ELEMENTS ARE COMPLETE.
8. DURING AND AFTER CONSTRUCTION THE CONTRACTOR AND/OR OWNER SHALL KEEP LOADS ON THE STRUCTURE WITHIN THE LIMITS OF THE DESIGN LOADS.
9. THE GENERAL CONTRACTOR SHALL HAVE SHOP DRAWINGS REVIEWED BY THE ARCHITECT PRIOR TO THE FABRICATION OR ERECTION FOR THE FOLLOWING ITEMS: REINFORCING STEEL, STRUCTURAL STEEL, AND MISCELLANEOUS METALS.
10. ALL DETAILS, SECTIONS, AND NOTES ARE INTENDED TO BE TYPICAL AND SHALL APPLY TO SIMILAR SITUATIONS UNLESS NOTED OR SHOWN OTHERWISE.
11. REFER TO THE SPECIFICATIONS FOR ADDITIONAL INFORMATION NOT COVERED ON THE DRAWINGS.
12. OBSERVATION VISITS TO THE JOB SITE BY FIELD REPRESENTATIVES OF CALDER RICHARDS CONSULTING ENGINEERS SHALL NEITHER BE CONSTRUED AS INSPECTION NOR APPROVAL OF CONSTRUCTION.
13. SIZES, LOCATIONS, AND ANCHORAGES OF EQUIPMENT SHALL BE VERIFIED IN THE FIELD WITH EQUIPMENT MANUFACTURERS (SUPPLIERS) PRIOR TO PLACING CONCRETE OR FABRICATING STEEL.

QUALITY ASSURANCE PLAN

1. SPECIAL INSPECTION SHALL BE PROVIDED BY THE OWNER ACCORDING TO IBC CHAPTER 17 FOR THE ITEMS IDENTIFIED IN THIS SECTION AND ON THE CONTRACT DOCUMENTS.
2. THE NAMES AND CREDENTIALS OF SPECIAL INSPECTORS TO BE USED SHALL BE SUBMITTED TO THE BUILDING DEPARTMENT WHEN APPLYING FOR A BUILDING PERMIT.
3. SPECIAL INSPECTION REPORTS SHALL BE DELIVERED TO THE ENGINEER OF RECORD, ARCHITECT, AND OWNER (AS REQUESTED) BI-WEEKLY OR MORE FREQUENTLY AS REQUIRED BY THE INSPECTOR OR BUILDING OFFICIAL.
4. OFF-SITE FABRICATION: WHERE FABRICATION OF STRUCTURAL LOAD-BEARING MEMBERS AND ASSEMBLIES IS BEING PERFORMED ON THE PREMISES OF A FABRICATORS SHOP, SPECIAL INSPECTION OF THE FABRICATED ITEMS SHALL BE IN ACCORDANCE WITH IBC SECTION 1704.2 UNLESS THE FABRICATOR IS APPROVED ACCORDING TO IBC SECTION 1704.2.2.
5. STEEL CONSTRUCTION: SPECIAL INSPECTIONS FOR STEEL ELEMENTS SHALL BE PROVIDED IN ACCORDANCE WITH SECTIONS 1704.3 AND TABLE 1704.3.
6. WELDING: WELDING INSPECTION SHALL BE PROVIDED IN ACCORDANCE WITH TABLE 1704.3. ELEMENTS THAT ARE PART OF THE SEISMIC-FORCE-RESISTING SYSTEM SHALL ALSO BE INSPECTED ACCORDING TO SECTION 1707.2 AND 1708.4.
7. SOILS: SPECIAL INSPECTION SHALL BE PROVIDED FOR PLACEMENT OF FILL 12 INCHES OR MORE DEEP IN ACCORDANCE WITH SECTION 1704.7.
8. NO SPECIAL INSPECTION OF CONCRETE FOOTINGS AND FOUNDATION IS REQUIRED SINCE THE DESIGN STRENGTH f'c IS EQUAL TO 2500 PSI. SEE IBC SECTION 1704.4 EXCEPTION 2.2.
9. NO SPECIAL INSPECTION OF CONCRETE REINFORCING STEEL IS REQUIRED SINCE THE CONCRETE ITSELF REQUIRES NO SPECIAL INSPECTION. SEE IBC SECTION 1704.4 EXCEPTION 2.2.
10. NO INSPECTION OF BOLTS INSTALLED IN CONCRETE IS REQUIRED SINCE THE STRESS INCREASES PERMITTED BY SECTION 1912.5 ARE NOT UTILIZED.

QUALITY ASSURANCE - CONTRACTOR RESPONSIBILITY

EACH CONTRACTOR RESPONSIBLE FOR THE CONSTRUCTION OF A SEISMIC-FORCE-RESISTING SYSTEM, DESIGNATED SEISMIC SYSTEM, OR COMPONENT LISTED IN THE QUALITY ASSURANCE PLAN SHALL SUBMIT A WRITTEN CONTRACTOR'S STATEMENT OF RESPONSIBILITY TO THE BUILDING OFFICIAL AND TO THE OWNER PRIOR TO THE COMMENCEMENT OF WORK ON THE SYSTEM OR COMPONENT. THE CONTRACTOR'S STATEMENT OF RESPONSIBILITY SHALL CONTAIN THE FOLLOWING:

1. ACKNOWLEDGMENT OF AWARENESS OF THE SPECIAL REQUIREMENTS CONTAINED IN THE QUALITY ASSURANCE PLAN.
2. ACKNOWLEDGMENT THAT CONTROL WILL BE EXERCISED TO OBTAIN CONFORMANCE WITH THE CONSTRUCTION DOCUMENTS APPROVED BY THE BUILDING OFFICIAL.
3. PROCEDURES FOR EXERCISING CONTROL WITHIN THE CONTRACTOR'S ORGANIZATION, THE METHOD AND FREQUENCY OF REPORTING, AND THE DISTRIBUTION OF REPORTS.
4. IDENTIFICATION AND QUALIFICATIONS OF THE PERSON(S) EXERCISING SUCH CONTROL AND THE POSITION(S) IN THE ORGANIZATION.

STRUCTURAL OBSERVATION

CALDER RICHARDS CONSULTING ENGINEERS SHALL BE NOTIFIED BY THE CONTRACTOR 5 BUSINESS DAYS BEFORE THE COMPLETION OF THE ITEMS LISTED IN THIS SECTION SO THAT STRUCTURAL OBSERVATION MAY BE PERFORMED IN ACCORDANCE WITH IBC SECTION 1709. THE OBSERVATIONS WILL BE PERFORMED AT THE DISCRETION OF CALDER RICHARDS CONSULTING ENGINEERS.

1. GYPBOARD FASTENING AFTER COMPLETION AND PRIOR TO FINISHING.
2. PLYWOOD SHEATHING AND FLOOR JOIST PRIOR TO PLACING CEILINGS AND FLOOR COVERINGS.
3. STRUCTURAL STEEL AFTER ERECTION IS COMPLETED.

FOOTINGS

1. ALL FOOTINGS SHALL BEAR 12" MINIMUM INTO ORIGINAL UNDISTURBED EARTH OR ON ENGINEERED FILL COMPACTED TO 95% OF MAXIMUM RELATIVE DENSITY BASED ON ASTM D1557-91. SUCH FILL SHALL BE PLACED IN LAYERS NOT TO EXCEED 6" IN DEPTH AFTER COMPACTION AND SHALL EXTEND DOWN TO IN-SITU GRANULAR SOILS.
2. ALL FOOTING EXCAVATIONS SHALL BE EXAMINED BY A GEOTECHNICAL ENGINEER FOR VERIFICATION OF ADEQUATE BEARING CONDITIONS BEFORE PLACING CONCRETE.
3. EXTERIOR WALL FOOTINGS SHALL BEAR AT A MINIMUM DEPTH OF 2'-6" BELOW FINISHED EXTERIOR GRADE.

REINFORCING STEEL

1. ALL REINFORCEMENT SHALL BE DETAILED AND PLACED IN ACCORDANCE WITH ACI DETAILING MANUAL 315-99 AND ACI STANDARD 318-05.
2. REINFORCING STEEL SHALL BE ASTM A615 GRADE 60.
3. ALL REINFORCEMENT SHALL BE SECURELY TIED AND HELD IN PLACE.
4. ALL CONTINUOUS REINFORCEMENT SHALL TERMINATE WITH A 90 DEGREE TURN OR A SEPARATE CORNER BAR. ALL SPLICE SHALL HAVE A MINIMUM LAP OR EMBEDMENT PER REINFORCING SCHEDULE.
5. COVER TO MAIN REINFORCEMENT FROM ADJACENT SURFACES SHALL BE AS FOLLOWS UNLESS SHOWN OTHERWISE:
   A. UNFORMED SURFACES IN CONTACT WITH GROUND OR EXPOSED TO THE WEATHER (BOTTOM OF FOOTINGS). 3"
   B. SLABS ON GRADE..... 2"
   C. FORMED SURFACES IN CONTACT WITH THE GROUND OR EXPOSED TO THE WEATHER (GRADE BMS, WALLS, ETC), BEAMS AND COLUMNS..... 2"
   D. STRUCTURAL SLABS AND JOISTS NOT EXPOSED TO WEATHER OR EARTH..... 1"
   E. INTERIOR WALL SURFACES..... 1"
   F. INTERIOR BEAMS AND COLUMNS..... 1-1/2"
   G. IN ALL CASES MINIMUM COVER SHALL NOT BE LESS THAN THE DIAMETER OF ADJACENT BARS.
6. PRIOR TO FABRICATION AND PLACEMENT, SHOP DRAWINGS FOR ALL REINFORCING STEEL SHALL BE REVIEWED BY THE STRUCTURAL ENGINEER.

CONCRETE

1. CONCRETE SHALL ATTAIN THE FOLLOWING MINIMUM COMPRESSIVE STRENGTHS AT 28 DAYS:
   FOOTINGS ..... 3000 PSI
   INTERIOR SLABS ON GRADE ..... 4000 PSI
   EXTERIOR FLAT WORK..... 4000 PSI
2. A STATEMENT OF MIX DESIGN FOR ALL CONCRETE SHALL BE SUBMITTED TO AND REVIEWED BY THE STRUCTURAL ENGINEER PRIOR TO COMMENCING WORK.
3. ALL CONCRETE WORK SHALL BE PLACED, CURED, STRIPPED, AND PROTECTED AS DIRECTED BY THE SPECIFICATIONS AND ACI STANDARDS AND PRACTICES.
4. UNLESS NOTED OTHERWISE ON THE DRAWINGS, REINFORCE CONCRETE WALLS AS FOLLOWS:

WIDTH	HORIZ REINF	VERT REINF
8" WALL	#5 @ 18"	#4 @ 18" CENTER OF WALL

5. DOWEL VERTICAL BARS PER SCHEDULE INTO STRUCTURE ABOVE AND FOOTINGS BELOW. PROVIDE 90 DEGREE HOOK WHERE 36 DIAMETER IS NOT POSSIBLE. IN ADDITION, PROVIDE (2) #5 CONTINUOUS BARS TOP AND BOTTOM OF WALLS.
6. BEFORE CONCRETE IS POURED CHECK WITH ALL TRADES TO ENSURE PROPER PLACEMENT OF ALL OPENINGS, SLEEVES, CURBS, CONDUITS, BOLTS, INSERTS, ETC. RELATIVE TO WORK.
7. ADD (2) #5 BARS MINIMUM AROUND ALL OPENINGS (UNLESS OTHERWISE NOTED) AND EXTEND 24" BEYOND CORNER OF OPENING.
8. PROVIDE A #3 NOSING BAR IN ALL STAIR TREADS.
9. REFER TO DRAWINGS FOR TYPICAL CONSTRUCTION JOINT DETAILS. UNLESS NOTED IN DRAWINGS, ALL REINFORCEMENT SHALL BE CONTINUOUS THRU JOINTS AND EACH CONSTRUCTION JOINT SHALL BE KEYED.
10. WHERE EXTERIOR SLABS ON GRADE ABUT WALLS OR COLUMNS PROVIDE 3/8" PREFORMED EXPANSION JOINT WITH SEALANT.

STRUCTURAL STEEL

1. ALL STRUCTURAL STEEL AND STRUCTURAL STEEL WORK SHALL COMPLY WITH BOTH THE AISC "MANUAL OF STEEL CONSTRUCTION" CONTAINING THE SPECIFICATIONS FOR THE DESIGN, FABRICATION AND ERECTION OF STRUCTURAL STEEL BUILDINGS, INCLUDING THE "CODE OF STANDARD PRACTICES" (LATEST EDITION), AND WITH THE IBC 2006 EDITION.
2. ALL WIDE FLANGE STRUCTURAL STEEL SHALL BE ASTM A992 AND ALL MISCELLANEOUS SHAPES SHALL BE ASTM A36, UNO.
3. STRUCTURAL STEEL TUBING SHALL CONFORM TO ASTM A500 GRADE B; YIELD STRESS = 46 KSI.
4. USE A325 BOLTS FOR STEEL TO STEEL CONNECTIONS AND A307 BOLTS FOR ALL OTHER CONNECTIONS. USE 3/4" DIAMETER MINIMUM.
5. PRIOR TO FABRICATION AND ERECTION, SHOP DRAWINGS FOR ALL STEEL ITEMS SHALL BE REVIEWED BY THE STRUCTURAL ENGINEER. THE CONTRACTOR SHALL VERIFY ALL SHOP DRAWING DIMENSIONS WITH STRUCTURAL AND ARCHITECTURAL PLANS AND DETAILS.
6. ALL WELDS SHALL BE MADE WITH E70XX ELECTRODES AND BY WELDERS CERTIFIED BY AWS STANDARDS WITHIN THE PAST 12 MONTHS; PROVIDE WRITTEN CERTIFICATION IF REQUESTED.
7. UNLESS SHOWN OTHERWISE. BEAMS SUPPORTING FLOOR SYSTEMS SHALL BE CAMBERED ¼ INCH PER 10 FEET OF SPAN.

PRE-ENGINEERED METAL BUILDING FRAME

1. THE COMPLETE DESIGN OF METAL BUILDING INCLUDING ALL COMPONENTS SHOWN OR NOT SHOWN ON THE DRAWINGS SHALL BE ACCOMPLISHED BY THE BUILDING MANUFACTURER.
2. THE DESIGN SHALL BE MADE BY A PROFESSIONAL ENGINEER REGISTERED IN THE STATE WHERE PROJECT IS CONSTRUCTED AND HE SHALL AFFIX HIS REQISTRATION NUMBER AND SEAL TO ALL SHOP DRAWINGS AND CALCULATIONS. HE SHALL SUBMIT SHOP DRAWINGS AMD CALCULATIONS TO ARCHITECT/ENGINEER FOR REVIEW BEFORE FABRICATION. CALCULATIONS SHALL INCLUDE ALL BUILDING REACTIONS ON THE FOUNDATIONS. THESE REACTIONS SHALL BE REVIEWED FOR COMPLIANCE WITH THE FOUNDATION DESIGN.
3. THE BUILDING AND ALL OF ITS COMPONENTS SHALL BE DESIGNED FOR THE FOLLOWING DEAD AND LIVE LOADS;
   A. ACTUAL WEIGTH OF STEEL STRUCTURE.
   B. 10 PSF DEAD LOAD IN ADDITION TO ACTUAL WEIGHT.
   C. 30 PSF ROOF SNOW LOAD, + DRIFT ON THE LOW ROOF AND OTHER APPLICABLE AREAS. AS PER IBC 2006.
   D. ANY ADDITIONAL LOADS AND REACTIONS THAT ARE SHOWN OR NOTED ON THE DRAWINGS, SEE PLAN NOTES.
   E. WIND LOAD AS REQUIRED BY THE IBC 2006. (SEE STRUCTURAL DESIGN LOADS)
   F. SEISMIC LOADS AS REQUIRED BY THE IBC 2006. (SEE STRUCTURAL DESIGN LOADS)
   G. THRU-WALL FAN, SEE MECHANICAL DRAWINGS & DETAILS.
   H. SUSPENED UNIT HEATERS, SEE MECHANICAL DRAWINGS AND DETAILS.
4. SEE PLAN FOR ADDTIONAL DESIGN NOTES (i.e. FUTURE EXPANSION LOADS, SUSPENDED LOADS, ETC.).
5. PROVIDE BRACED BAYS ONLY WHERE INDICATED. SUBMIT PROPOSED LOCATIONS TO ARCHITECT FOR APPORVAL BEFORE FABRICATIONS. RIGID FRAME COLUMN BASES SHALL BE DESIGNED FOR A PINNED CONDITION. NO DIAGONAL BRACING SHALL BE USED AT ENDWALLS UNLESS INDICATED. PROVIDE PORTAL FRAMES, AS REQUIRED. PROVIDE TURNBACKS ON ALL ROD "X" BRACING.
6. WHERE RIGID FRAMES ARE INDICATED AT ENDWALLS DESIGN FRAMES FOR CLEAR SPAN CONDITION WITH NO INTERMEDIATE SUPPORTS. INTERIOR ENDWALL COLUMNS SHALL BE FOR LATER LOAD ONLY.
7. NO LIVE LOAD REDUCTION SHALL BE TAKEN FOR THE DESIGN OF THE RIGID LOAD FRAMES.
8. WHERE MEMBER SIZES AND GAGES ARE SHOWN THEY SHALL BE CONSIDERED A MINIMUM SIZE. THE MANUFACTURE SHALL NOT USE SMALLER OT LIGHTER GAGES, OR OMIT FRAMING WHERE INDICATED. HE SHALL USE ONLY LARGER SIZE AND HEAVIER GAGES IF HIS DESIGN INDICATES THESE ARE REQUIRED TO MEET THE LOADING CRITERIA.
9. THE DEFLECTION OF GIRTS AND PURLINS SHALL BE LIMTED TO 1/240 OF THE SPAN. DEFLECTION OF RIGID FRAMES SHALL BE BASED ON TOTAL LOAD. (DEAD LOAD PLUS LIVE LOAD).
10. SEE THE SPECIFICATIONS FOR ADDITIONAL DESIGN AND FABRICATION CRITERIA.
11. THE PREFABRICATION METAL BUILDING SHALL BE DESIGNED, FABRICATED AND ERECTED IN ACCORDANCE WITH THE ABOVE NOTES, THE PLANS AND DETAILS, THE SPECIFICATIONS AND IN ACCORDANCE WITH RECOMMENDED DESIGN PRACTICES MANUAL OF THE METAL BUILDING MANUFACTURERS ASSOCIATION (MBMA) AND IN ACCORDANCE WITH MBMA SPECIFICATIONS.

LIGHT GAGE METAL FRAMING

1. DESIGN, FABRICATION AND ERECTION OF LIGHT-GAGE METAL FRAMING SHALL COMPLY WITH REQUIREMENTS OF: AISC "MANUAL OF STEEL CONSTRUCTION", AWS "STRUCTURAL WELDING CODE", AISI "SPECIFICATION FOR THE DESIGN OF COLD FORMED STEEL STRUCTURAL MEMBERS", AND ICBO REPORT ER-4943P.
2. FRAMING SHOWN ON PLANS ARE MINIMUM SIZES AND CONDITIONS. SUBSTITUTION OF FRAMING MEMBERS SHALL BE APPROVED BY ARCHITECT AND ENGINEERS. THEY SHALL HAVE CAPACITY FOR GRAVITY LOADS AND LATERAL LOADS EQUAL TO OR BETTER THAN SPECIFIED FRAMING MEMBERS AND SHALL BE ICBO APPROVED.
3. ALL COMPONENTS SHALL BE GALVANIZED ACCORDING TO REQUIREMENTS OF ASTM A-525 FOR MINIMUM G-60 COATING.
4. ALL 14, 16, 18, AND 20 GAGE STUDS, AND ALL TRACK, BRIDGING, END CLOSURES AND ACCESSORIES SHALL BE FORMED FROM STEEL THAT CORRESPONDS TO THE MINIMUM REQUIREMENTS OF ASTM A-446, WITH A MINIMUM YIELD OF 33 KSI FOR 18 AND 20 GAGE, AND 50 KSI FOR 16 GAGE, FOR STUDS AND 33 KSI FOR RUNNERS, BRIDGING, END CLOSURES AND ACCESSORIES.
5. ALL WELDS SHALL BE ACCOMPLISHED USING 1/8" AWS TYPE 6013 OR 7014 ROD WITH A WELDING HEAT OF 60 TO 110 AMPERES DEPENDING ON THE GAGE OF MATERIAL AND THE FIT OF THE PARTS. WIRE TYING OF FRAMING COMPONENTS IS NOT PERMITTED.
6. ADEQUATE LATERAL BRACING MUST BE PROVIDED DURING CONSTRUCTION.
7. UNLESS NOTED OTHERWISE, METAL FRAMING MEMBERS AT LOAD BEARING, SHEAR WALLS AND EXTERIOR WALLS SHALL BE 20 GAGE FOR STUDS, 16 GAGE FOR TOP AND BOTTOM RUNNER. 16 GAGE FOR STUDS AT HOLD DOWNS.
8. RUNNER TRACKS: INSTALL CONTINUOUS TRACKS SIZED TO MATCH STUDS. ALIGN TRACKS ACCURATELY TO LAYOUT AT BASE AND TOPS OF STUDS. UNLESS INDICATED OTHERWISE, SECURE TRACKS AS RECOMMENDED BY STUD MANUFACTURER FOR TYPE OF CONSTRUCTION INVOLVED, EXCEPT DO NOT EXCEED 24" OC SPACING FOR NAIL OR POWER-DRIVEN FASTENERS, OR 16" OC FOR OTHER TYPES OF ATTACHMENT. PROVIDE FASTENERS AT CORNERS AND ENDS OF TRACK.
9. FASTENINGS: FASTENING OF COMPONENTS SHALL BE WITH SELF-DRILLING SCREWS OR BY WELDING. SCREWS AND WELDS SHALL BE OF SUFFICIENT SIZE TO ENSURE THE STRENGTH OF THE CONNECTION. WIRE TYING OF COMPONENTS SHALL NOT BE PERMITTED. ALL WELDS SHALL BE TOUCHED UP WITH A ZINC-RICH PAINT. FASTENING OF PLYWOOD DIAPHRAGMS AND SILL PLATES SHALL BE AS INDICATED IN STRUCTURAL NOTES, AND DETAILED.
10. STUD SECTIONS USED AS RAFTERS OR JOISTS SHALL BE UNPUNCHED.
11. ALL NON-LOAD BEARING WALLS SHALL BE ERECTED SO AS TO ALLOW FOR PROPER DEFLECTION OF STRUCTURE ABOVE. THE TOPS OF ALL SUCH WALLS SHALL BE HORIZONTALLY BRACED TO THE STRUCTURE ABOVE AT A MAXIMUM OF 8'-0" OC.

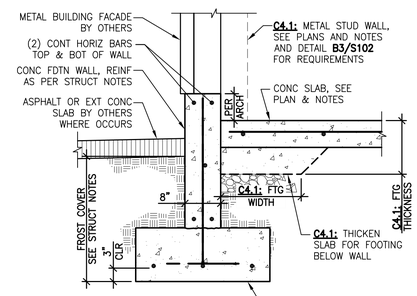

C4 C4.1 SCALE: 3/4" = 1'-0"

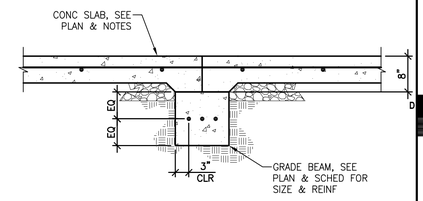

D5 SCALE: 3/4" = 1'-0"

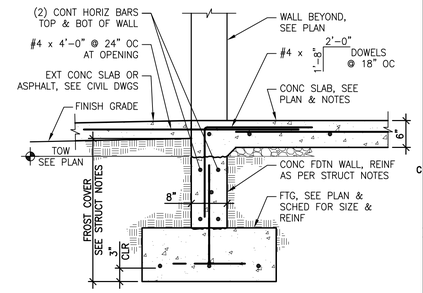

C5 EXT DOOR OPENING DETAIL 3136_03 SCALE: 3/4" = 1'-0"

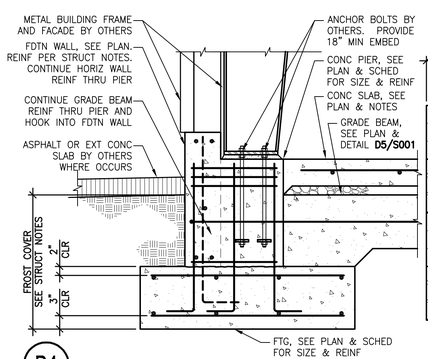

B4 SCALE: 3/4" = 1'-0"

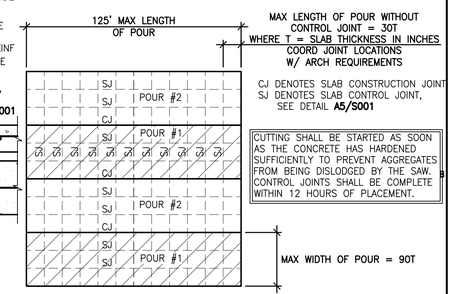

B5 SLAB CONTROL JOINT CRITERIA 3677_01 SCALE: NONE

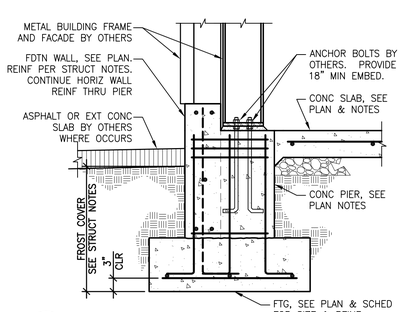

A4 SCALE: 3/4" = 1'-0"

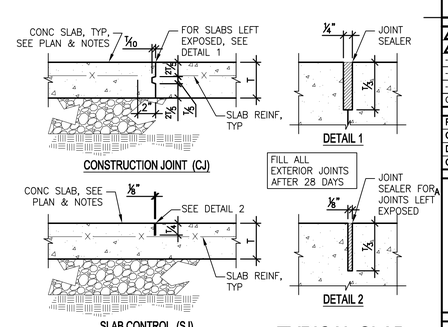

A5 TYPICAL SLAB JOINT DETAILS 3677_03 SCALE: NONE

COOPER ROBERTS SIMONSEN ARCHITECTURE

crsa

700 NORTH 200 WEST
SALT LAKE CITY,UTAH 84103
(801) 355-5915
(801) 355-9885 FAX
WWW.CRSA-US.COM

STRUCTURAL ENGINEER
CALDER RICHARDS CONSULTING ENGINEERS
634 South 400 East
SALT LAKE CITY, UT 84101
(801) 466-1699 (801) 467-2495 FAX
- stephen@crceng.com

MECHANICAL ENGINEER
SMD
986 WEST ATHERTON DRIVE STE. 200
TAYLORSVILLE, UTAH 84123
(801)268-3828 FAX (801)268-3297
- -

ELECTRICAL ENGINEER
SPECTRUM
175 S MAIN STREET STE. 300
SALT LAKE CITY, UTAH 84111
(801)328-5151 (801)401-9471
- -

CIVIL ENGINEER
Stanley Consultants Inc.
5353 south 960 East
SALT LAKE CITY, UTAH 84117
(801)293-8880 (801)801-8886
- -

J. M. BROWNING ARMORY
197TH RIGGER FACILITY
DFCM NO. 08243480
625 E. 5300 S.
OGDEN, UTAH 84402

UTAH NATIONAL GUARD
12953 SOUTH
MINUTEMAN DRIVE.
DRAPER UTAH 84020-1776

1		
2		
-	-	-
-	-	-
-	-	-
CD	02 SEP 08	BID DOCUMENTS

PROJECT NO: B08-062
CAD DWG FILE: S001.dwg
DRAWN BY: JRS / DJK
CHECKED BY: SDC

STRUCTURAL NOTES & DETAILS

S001

X:\Project Files\2008\08xxx UTNG 197 Rigger Facility\Drawings\S001.dwg, S001, 9/2/2008 4:52:47 PM

FOOTING SCHEDULE

MARK	WIDTH	LENGTH	THICK	CROSSWISE REINF				LENGTHWISE REINF				NOTES
				NO	SIZE	LENGTH	SPACING	NO	SIZE	LENGTH	SPACING	
GB1.0	1'–0"	CONT	12"	–	–	–	–	3	#5	CONT	EQ	GRADE BEAM
FC1.5	1'–6"	CONT	12"	–	–	–	–	2	#4	CONT	EQ	
FC2.0	2'–0"	CONT	12"	–	–	–	–	3	#5	CONT	9" OC	
FS4.0	4'–0"	4'–0"	12"	4	#5	3'–6"	14" OC	4	#5	3'–6"	14" OC	
FS5.0	5'–0"	5'–0"	12"	5	#5	4'–6"	EQ	5	#5	4'–6"	EQ	
FS6.0	6'–0'	6'–0"	14"	7	#5	5'–6"	11" OC	7	#5	5'–6"	11" OC	

NOTES

1. PLACE CROSSWISE REINFORCING 3" CLEAR FROM GRADE AND LENGTHWISE REINFORCING ON TOP OF CROSSWISE.
2. WHERE TOP REINFORCING IS INDICATED, PLACE TOP CROSSWISE REINFORCING 2" CLEAR FROM TOP OF FOOTING AND LENGTHWISE REINFORCING UNDER CROSSWISE REINFORCING.
3. ALL CONTINUOUS FOOTINGS SHALL BE FC2.0 AND SQUARE FOOTINGS SHALL BE FS4.0, MINIMUM, UNO ON PLANS.
4. REINFORCE FOOTINGS MARKED WITH AN ASTERISK (*) EQUALLY TOP AND BOTTOM.

D1 FOOTING SCHEDULE
3110.00 SCALE: NONE

CONCRETE PIER SCHEDULE

MARK	CONCRETE PIER SIZE A	CONCRETE PIER SIZE B	REINFORCING VERTICAL	REINFORCING TIES	CONFIGURATION
CP–1	1'–8"	1'–8"	(8) #5	#3 @ 6" OC	TYPE A

NOTES

1. PROVIDE (3) SETS OF TIES IN TOP 5" OF PIER IN ADDITION TO TIE SPACING SHOWN.
2. EMBED COLUMN ANCHOR BOLTS PER DETAILS.
3. NOT ALL BAR CONFIGURATIONS ARE SHOWN. PROVIDE CROSS TIES WHERE VERT REINF IS SPACED MORE THAN 6" APART OR AT EVERY OTHER VERT BAR.
4. CROSS TIES SHALL HAVE ONE END WITH A 90° HOOK AND ONE END WITH A 135° HOOK. ALTERNATE ENDS OF HOOKS ALONG VERT BARS.
5. TOP OF PIER AND TOP OF WALL MAY BE AT DIFFERENT ELEVATIONS. COORDINATE ELEVATIONS WITH PLANS AND DETAILS.

D3 CONCRETE PIER SCHEDULE
3310.01 SCALE: NONE

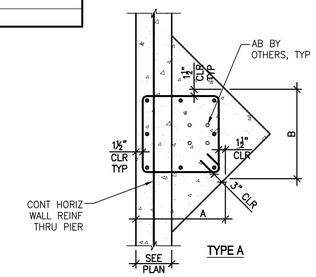

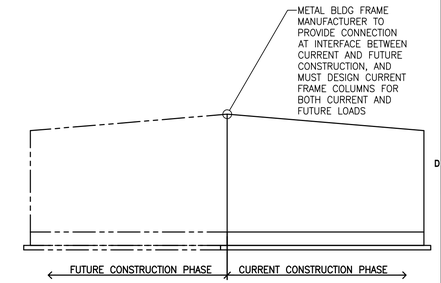

D5 SCHEMATIC SECTION
SCALE: 1/16" = 1'–0"

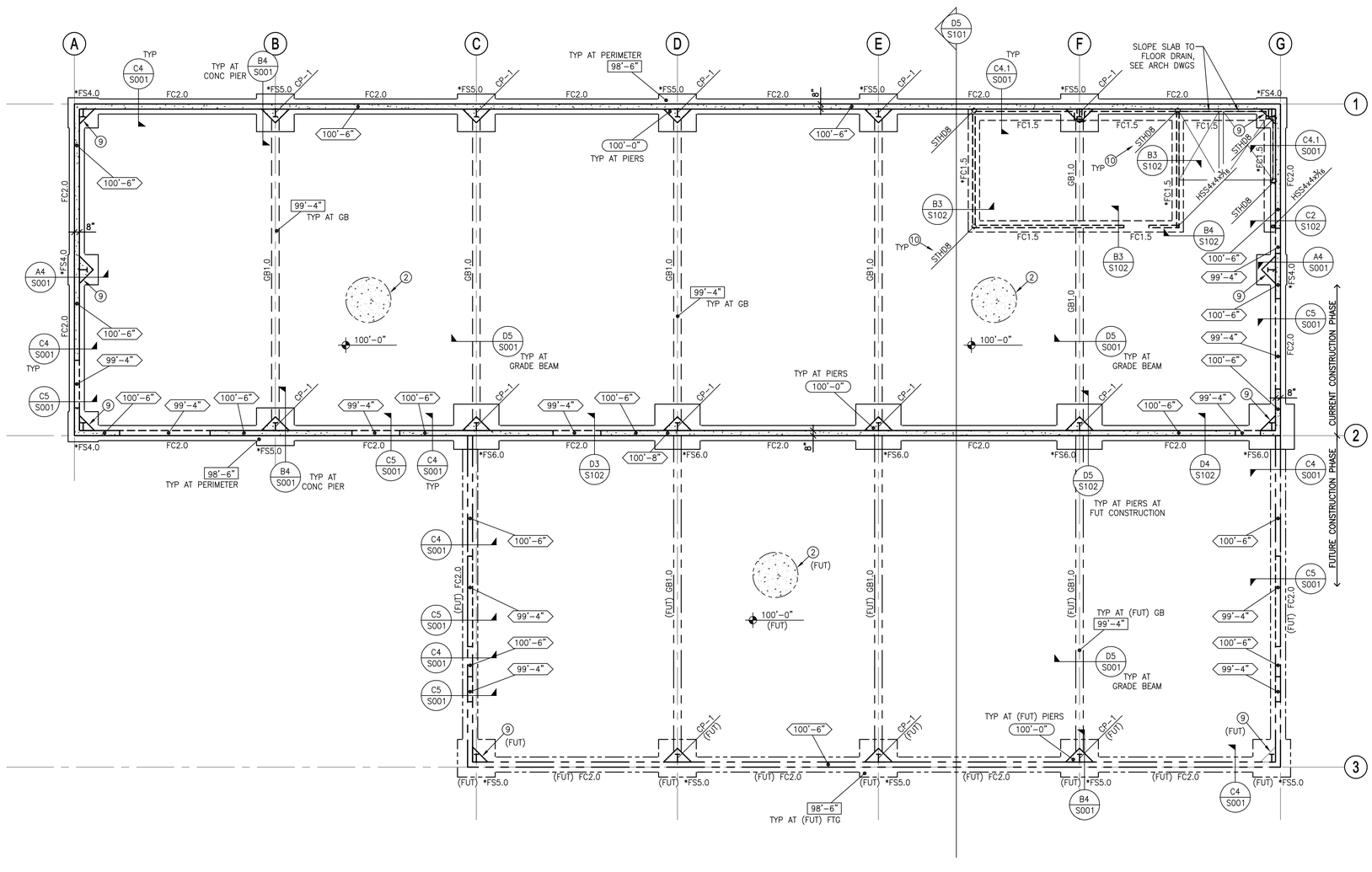

FOOTING & FOUNDATION PLAN
SCALE: 1/8" = 1'–0"

PLAN NOTES (FTG & FDTN):

CIRCLED NOTES ARE KEYED ON PLAN.

SEE ARCHITECTURAL DRAWINGS FOR ALL DIMENSIONS, TYPICAL.

1. SEE STRUCTURAL NOTES ON SHEET **S001** FOR ADDITIONAL INFORMATION.
2. SLAB ON GRADE SHALL BE 6" CONCRETE OVER 4" FREE–DRAINING GRAVEL. REINFORCE SLAB WITH #4 @ 18" OC EA WAY.
3. PLACE CONTROL JOINTS AND CONSTRUCTION JOINTS IN SLAB PER GENERAL NOTES. SEE DETAIL **B5/S001**. COORDINATE W/ ARCH REQUIREMENTS.
4. CENTER FOOTINGS ON WALLS AND COLUMNS UNLESS DIMENSIONED OTHERWISE ON PLANS.
5. SEE PLAN AND SECTIONS FOR TOP OF FOUNDATION WALL ELEVATIONS.
6. COORDINATE METAL BUILDING FRAME COLUMN LOCATIONS, BASE PLATE SIZES, AND ANCHOR BOLT CONFIGURATIONS W/ METAL BUILDING MANUFACTURER'S PLANS. CONTRACTOR SHALL NOTIFY ENGINEER REGARDING ANY DISCREPANCIES.
7. ALL SITE PREPARATION, EXCAVATION, FILL, COMPACTION, AND PLACEMENT WORK PERFORMED SHALL COMPLY WITH RECOMMENDATIONS OUTLINED IN THE SITE PREPARATION NOTES ON **S001**.
8. SEE ARCHITECTURAL/SITE DRAWINGS FOR INFORMATION AND LOCATION OF SITE WALLS, STEPS, PLANTERS, RAMPS, ETC.
9. AT ALL PIERS NOT SCHEDULED, PROVIDE PIERS WITH DIM REQD TO SUPPORT METAL BUILDING COLUMNS ABOVE. REINF PIERS W/ (4) #5 BARS VERTICAL & #3 TIES @ 6" OC W/ (3) ADDITIONAL #3 TIES @ TOP.
10. STHD8 DENOTES TYPICAL SIMPSON HOLDDOWN. INSTALL PER MANUFACTURER'S SPECIFICATIONS.

LEGEND:

GBx.x, FCx.x, FSx.x	GRADE BEAM, CONTINUOUS FOOTING, SPOT FOOTING TYPES RESPECTIVELY, SEE SCHEDULE **THIS SHEET**	FCx.x	CONCRETE FOOTING & FDTN WALL
	SLAB BLOCK–OUT AT COLUMN		CONCRETE FOOTING & FDTN WALL
xx'–xx"	TOP OF FTG ELEVATION		RECESS IN CONC FDTN WALL
xxx'–xx"	TOP OF WALL ELEVATION	CP–#	CONCRETE PIER, SEE SCHEDULE **THIS SHEET**
xx'–xx"	TOP OF PIER ELEVATION		STEEL COLS – TUBE, WIDE FLANGE, PIPE
xxx'–xx"	TOP OF SLAB ELEVATION	STHD#	SHEARWALL HOLDDOWN, SEE **NOTE 10**
	CONC SLAB ON GRADE		

COOPER ROBERTS SIMONSEN ARCHITECTURE
crsa
700 NORTH 200 WEST
SALT LAKE CITY,UTAH 84103
(801) 355-5915
(801) 355-9885 FAX
WWW.CRSA-US.COM

STRUCTURAL ENGINEER
CALDER RICHARDS CONSULTING ENGINEERS
634 South 400 East
SALT LAKE CITY, UT 84101
(801) 466-1699 (801) 467-2495 FAX
- stephen@crceng.com

MECHANICAL ENGINEER
SMD
986 WEST ATHERTON DRIVE STE. 200
TAYLORSVILLE, UTAH 84123
(801)268-3828 FAX (801)268-3297
- -

ELECTRICAL ENGINEER
SPECTRUM
175 S MAIN STREET STE. 300
SALT LAKE CITY, UTAH 84111
(801)328-5151 (801)401-9471
- -

CIVIL ENGINEER
Stanley Consultants Inc.
5353 south 960 East
SALT LAKE CITY, UTAH 84117
(801)293-8880 (801)801-8886
- -

J. M. BROWNING ARMORY
197TH RIGGER FACILITY
DFCM NO. 08243480
625 E. 5300 S.
OGDEN, UTAH 84402

UTAH NATIONAL GUARD
12953 SOUTH
MINUTEMAN DRIVE.
DRAPER UTAH 84020-1776

CD	02 SEP 08 BID DOCUMENTS

PROJECT NO: B08-062
CAD DWG FILE: S101.dwg
DRAWN BY: JRS / DJK
CHECKED BY: SDC

FOOTING & FOUNDATION PLAN

S101

X:\Project Files\2008\08xxx UTNG 197 Rigger Facility\Drawings\S101.dwg, S101, 9/2/2008 4:53:08 PM

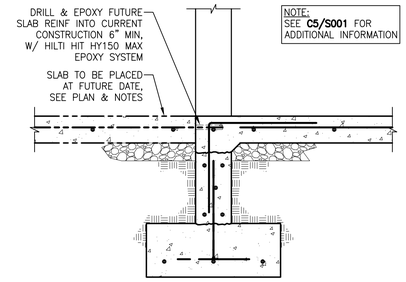

D3 SCALE: 3/4" = 1'-0"

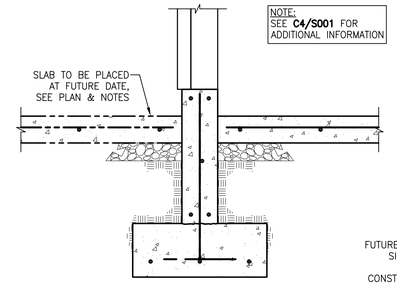

D4 SCALE: 3/4" = 1'-0"

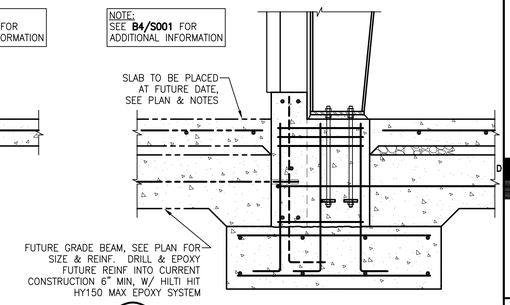

D5 SCALE: 3/4" = 1'-0"

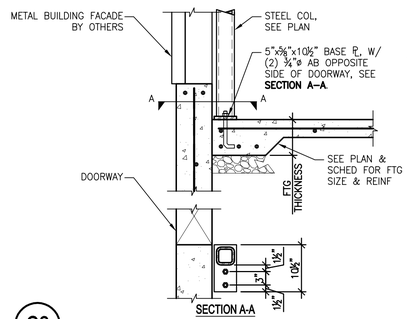

C2 SCALE: 3/4" = 1'-0"

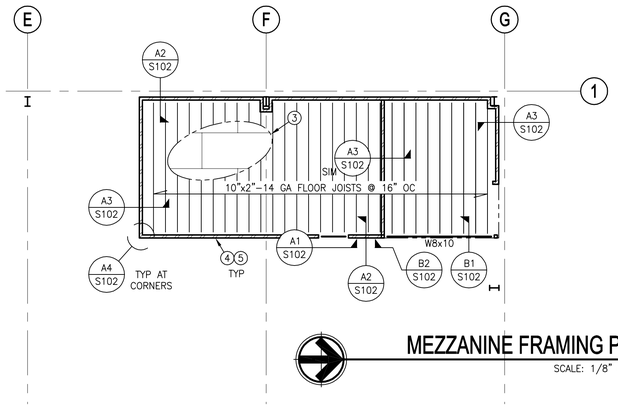

MEZZANINE FRAMING PLAN

SCALE: 1/8" = 1'-0"

PLAN NOTES (MEZZANINE FRAMING):

CIRCLED NOTES ARE KEYED ON PLAN.

SEE ARCHITECTURAL DRAWINGS FOR ALL DIMENSIONS, TYPICAL.

1. SEE STRUCTURAL NOTES ON SHEET **S001** FOR ADDITIONAL INFORMATION.
2. SEE ARCHITECTURAL/SITE DRAWINGS FOR INFORMATION AND LOCATION OF SITE WALLS, STEPS, PLANTERS, RAMPS, ETC.
3. MEZZANINE FLOOR SHEATHING SHALL BE ¾" FIRE TREATED, APA RATED, STURD-1-FLOOR, EXPOSURE I, PANEL INDEX #48/24, T&G.
   ATTACH TO METAL JOIST WITH:
   #10 SCREWS @ 6" OC – PANEL EDGES & PERIMETER
   #10 SCREWS @ 12" OC – ELSEWHERE
4. WALL SHEATHING SHALL BE ⅝" GYPSUM-BOARD TYPICAL EACH SIDE FOR ALL WALLS.
   ATTACH TO METAL STUDS, TRACKS, AND JOISTS W:
   #8 SCREWS @ 6" OC – PANEL EDGES & PERIMETER "BLOCKED".
   #8 SCREWS @ 6" OC – ELSEWHERE
5. 4"x1⅝" – 20 GA METAL STUDS AT 16" OC. ATTACH 16 GA TRACKS TOGETHER W/ SIMPSON HRS6 STRAP EACH SIDE. ATTACH TRACK TO STUDS W/ (2) #10 SCREWS EACH CONNECTION, MINIMUM.

MEZZANINE FLOOR DESIGN LOADS	
DL =	20 PSF
LL =	50 PSF
TL =	70 PSF

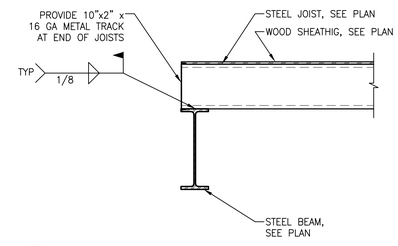

B1 SCALE: 3/4" = 1'-0"

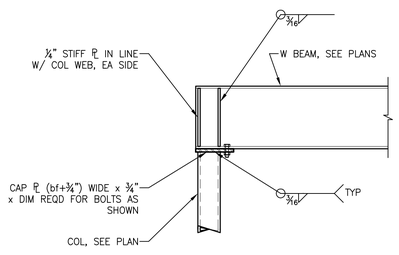

END CONDITION

B2 SCALE: 3/4" = 1'-0"

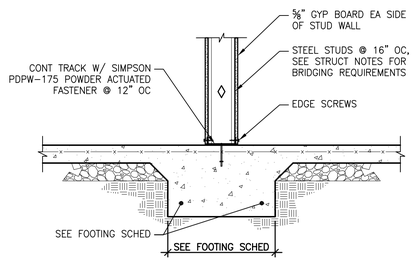

B3 3142_01 SCALE: 3/4" = 1'-0"

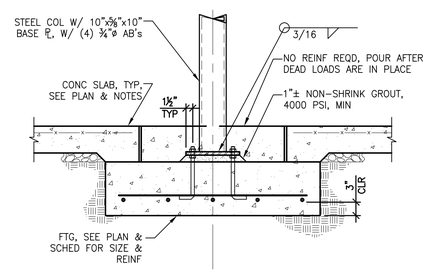

B4 3143_05 SCALE: 3/4" = 1'-0"

LEGEND:

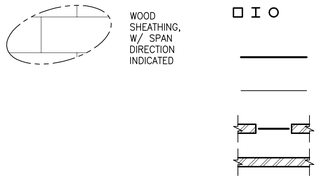

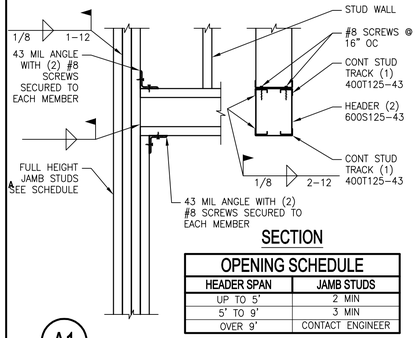

SECTION

OPENING SCHEDULE	
HEADER SPAN	JAMB STUDS
UP TO 5'	2 MIN
5' TO 9'	3 MIN
OVER 9'	CONTACT ENGINEER

A1 SCALE: 3/4" = 1'-0"

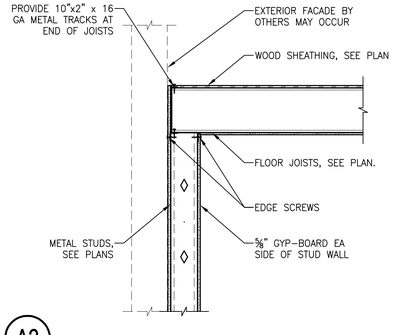

A2 SCALE: 3/4" = 1'-0"

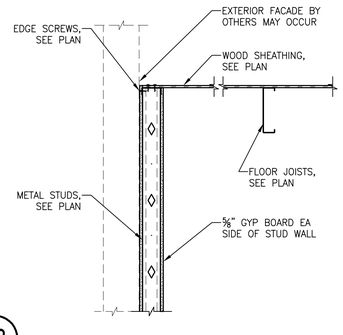

A3 SCALE: 3/4" = 1'-0"

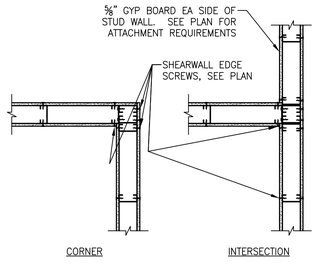

A4 SCALE: 3/4" = 1'-0"

COOPER ROBERTS SIMONSEN ARCHITECTURE

crsa

700 NORTH 200 WEST
SALT LAKE CITY,UTAH 84103
(801) 355-5915
(801) 355-9885 FAX
WWW.CRSA-US.COM

STRUCTURAL ENGINEER
CALDER RICHARDS CONSULTING ENGINEERS
634 South 400 East
SALT LAKE CITY, UT 84101
(801) 466-1699 (801) 467-2495 FAX
- stephen@crceng.com

MECHANICAL ENGINEER
SMD
986 WEST ATHERTON DRIVE STE. 200
TAYLORSVILLE, UTAH 84123
(801)268-3828 FAX (801)268-3297
- -

ELECTRICAL ENGINEER
SPECTRUM
175 S MAIN STREET STE. 300
SALT LAKE CITY, UTAH 84111
(801)328-5151 (801)401-9471
- -

CIVIL ENGINEER
Stanley Consultants Inc.
5353 south 960 East
SALT LAKE CITY, UTAH 84117
(801)293-8880 (801)801-8886
- -

J. M. BROWNING ARMORY
197TH RIGGER FACILITY
DFCM NO. 08243480
625 E. 5300 S.
OGDEN, UTAH 84402

UTAH NATIONAL GUARD
12953 SOUTH
MINUTEMAN DRIVE.
DRAPER UTAH 84020-1776

1			
2			
-	-	-	-
-	-	-	-
-	-	-	-
CD	02 SEP 08 BID DOCUMENTS		

PROJECT NO: B08-062
CAD DWG FILE: S102.dwg
DRAWN BY: JRS / DJK
CHECKED BY: SDC

MEZZANINE FRAMING PLAN & STRUCTURAL DETAILS

S102

X:\Project Files\2008\08xxx UTNG 197 Rigger Facility\Drawings\S102.dwg, S102, 9/2/2008 4:53:31 PM

THIS DRAWING, AS AN INSTRUMENT OF SERVICE, IS AND SHALL REMAIN THE PROPERTY OF SMD ENGINEERING, PLLC. THE INFORMATION, DESIGN, OR CONCEPTS REPRESENTED ON THIS DRAWING ARE CONFIDENTIAL AND ARE NOT FOR GENERAL DISTRIBUTION. © SMD ENGINEERING, PLLC 2008
THIS DRAWING MAY NOT BE REPRODUCED, PUBLISHED, OR USED IN ANY WAY WITHOUT THE PERMISSION OF SMD ENGINEERING, PLLC AND SHALL NOT BE REPRODUCED, PUBLISHED, OR USED IN ANY WAY

ABBREVIATIONS

ø	ROUND, DIAMETER, PHASE	EWT	ENTERING WATER TEMPERATURE	OZ	OUNCE
ABS	ACRYLONITRILE–BUTADIENE–STYRENE, ABSOLUTE	EXH	EXHAUST	P	PUMP
ACCU	AIR COOLED CONDENSING UNIT	EXP	EXPANSION	PD	PRESSURE DROP/DIFFERENCE
A/C	AIR CONDITIONING	EXT	EXTERIOR	PE	POLYETHYLENE
AD	ACCESS DOOR, AREA DRAIN	F	FAHRENHEIT	PEX	CROSS–LINKED POLYETHYLENE
ADA	AMERICAN DISABILITIES ACT	FC	FLEXIBLE CONNECTION, FORWARD CURVED	PF	PRE–FILTER
AF	AIR FOIL, AIR FILTER	FCO	FLOOR CLEAN OUT	PH	PHASE
AFF	ABOVE FINISH FLOOR	FCU	FAN COIL UNIT	PIV	POST INDICATOR VALVE
AHU	AIR HANDLING UNIT	FD	FLOOR DRAIN, FIRE DAMPER	PLMB	PLUMBING
ALT	ALTITUDE, ALTERNATE	FDC	FIRE DEPARTMENT CONNECTION	POC	POINT OF CONNECTION
AMB	AMBIENT	FF	FINISH FLOOR, FINAL FILTER	PPM	PARTS PER MILLION
AMP	AMPERE (AMP, AMPS)	FL	FLOW LINE	PRS	PRESSURE REDUCING STATION
AP	ACCESS PANEL	FLEX	FLEXIBLE	PRV	PRESSURE REDUCING VALVE
APD	AIR PRESSURE DROP	FO	FLAT OVAL	PSF	POUNDS PER SQUARE FOOT
ARCH	ARCHITECT	FP	FIRE PROTECTION	PSI	POUNDS PER SQUARE INCH
AS	AIR SEPARATOR	FPM	FEET PER MINUTE	PTAC	PACKAGED TERMINAL AIR CONDITIONER
AV	ACID VENT, AIR VENT	FS	FLOOR SINK	PVC	POLYVINYL CHLORIDE
B	BOILER	FSD	FIRE SMOKE DAMPER	R	THERMAL RESISTANCE, RANKINE, RETURN
BAL	BALANCE	FSTAT	FREEZESTAT	RA	RETURN AIR
BAS	BUILDING AUTOMATION SYSTEM	FT	FEET	RAD	RADIUS
BBR	BASEBOARD RADIATOR	FTR	FIN TUBE RADIATION	RCP	RADIANT CEILING PANEL
BDD	BACKDRAFT DAMPER	FURN	FURNACE, FURNISH, FURNITURE	RD	ROOF DRAIN
BFP	BACKFLOW PREVENTER	FV	FACE VELOCITY	RECIRC	RECIRCULAT(E),(OR),(ING)
BFV	BUTTERFLY VALVE	G	GAUGE, NATURAL GAS	REF	REFRIGERAT(OR),(ION)
BHP	BRAKE HORSEPOWER	GA	GAGE	REQ'D	REQUIRED
BI	BACKWARD INCLINED	GAL	GALLON	RF	RETURN FAN
BOD	BOTTOM OF DUCT	GALV	GALVANIZED	RH	RELATIVE HUMIDITY
BOP	BOTTOM OF PIPE	GC	GENERAL CONTRACTOR	RM	ROOM
BT	BATH TUB	GD	GARAGE DRAIN	RPBP	REDUCED PRESS. BACKFLOW PREVENTER
BTU	BRITISH THERMAL UNIT	GH	GRAVITY HOOD	RPM	REVOLUTIONS PER MINUTE
BTUH	BRITISH THERMAL UNITS/HR	GPM	GALLONS PER MINUTE	RTU	ROOF TOP UNIT
BV	BALL VALVE	GT	GREASE TRAP	REV	REVOLUTION, REVISION, REVERSE
C	CHILLER	HB	HOSE BIBB	S	SECONDS, SUPPLY, SINK
CA	COMPRESSED AIR, COMBUSTION AIR	H/C, HC	HEATING COIL	SA	SUPPLY AIR, SOUND ATTENUATOR
CAP	CAPACITY	HEPA	HIGH EFFICIENCY PARTICULATE AIR	SAN	SANITARY
CAV	CONSTANT AIR VOLUME	HOA	HAND, OFF, AUTO	SAT	SATURATED
C/C, CC	COOLING COIL	HP	HORSEPOWER, HEAT PUMP	SCFM	STANDARD CUBIC FEET PER MINUTE
CD	CONDENSATE DRAIN, CEILING DIFFUSER	HR	HOUR	SD	STORM DRAIN, SMOKE DAMPER
CFM	CUBIC FEET PER MINUTE	HSTAT	HUMIDISTAT	SECT	SECTION
CFOI	CONTRACTOR FURN., OWNER INSTALLED	HT	HEIGHT	SEN	SENSIBLE
CHW	CHILLER WATER	HVAC	HEATING, VENTILATING, AIR–CONDITIONING	SHT	SHEET
CO	CLEAN OUT, CARBON MONOXIDE	HX	HEAT EXCHANGER	SIM	SIMILAR
CO2	CARBON DIOXIDE	HZ	FREQUENCY	SL	SEA LEVEL
CONC	CONCRETE	IAQ	INDOOR AIR QUALITY	SP	STATIC PRESSURE
COND	CONDENS(ER),(ING),(ATE),(ATION)	ID	INSIDE DIAMETER	SPEC	SPECIFICATION
CONT	CONTINUOUS	IE	INVERT ELEVATION	SQ	SQUARE
COP	COEFFICIENT OF PERFORMANCE, COPPER	IN	INCH	SS	SERVICE SINK, STAINLESS STEEL
COTG	CLEANOUT TO GRADE	IN WC	INCHES, WATER COLUMN	STC	SOUND TRANSMISSION CLASS
CPVC	CHLORINATED POLY VINYL CHLORIDE	INV	INVERT	STD	STANDARD
CT	COOLING TOWER	I/O	INPUT/OUTPUT	STRUCT	STRUCTUR(E),(AL)
CU	CONDENSING UNIT, CUBIC	JS	JANITORS SINK	SUCT	SUCTION
CV	CONTROL VALVE, CONSTANT VOLUME	KEC	KITCHEN EQUIPMENT CONTRACTOR	T	TEMPERATURE, TIME
CUH	CABINET UNIT HEATER	KW	KILOWATT	T&P	TEMPERATURE AND PRESSURE
CW	CONDENSER WATER, CLOCKWISE	KWH	KILOWATT HOUR	TAB	TEST, ADJUST AND BALANCE
DA	DISCHARGE AIR	LAT	LEAVING AIR TEMPERATURE	TDH	TOTAL DYNAMIC HEAD
dB	DECIBELS	LAV	LAVATORY	TEMP	TEMPERATURE, TEMPORARY
DB	DRY BULB TEMPERATURE	LBS	POUNDS	TONS	TONS OF REFRIGERATION
DDC	DIRECT DIGITAL CONTROL	LF	LINEAR FEET	TOD	TOP OF DUCT
DF	DRINKING FOUNTAIN	LVR	LOUVER	TOP	TOP OF PIPE
DIA	DIAMETER	LWT	LEAVING WATER TEMPERATURE	TSP	TOTAL STATIC PRESSURE
DMPR	DAMPER	MA	MEDICAL AIR, MIXED AIR	TSTAT	THERMOSTAT
DP	DEWPOINT, DIFFERENTIAL PRESSURE	MAT	MATERIAL, MIXED AIR TEMPERATURE	TYP	TYPICAL
DR	DRAIN	MAU	MAKE UP AIR HANDLING UNIT	U	URINAL
DSN	DOWNSPOUT NOZZLE	MAV	MANUAL AIR VENT	UH	UNIT HEATER
DW	DISHWASHER	MAX	MAXIMUM	UNO	UNLESS NOTED OTHERWISE
DWG	DRAWING	MBH	BTU/HR X 1,000	V	VENT, VALVE
DWV	DRAIN, WASTE, VENT	MC	MECHANICAL CONTRACTOR	VA	VOLT AMPERE
DX	DIRECT EXPANSION	MCC	MOTOR CONTROL CENTER	VAC	VACUUM
(E) EXIST	EXISTING	MECH	MECHANICAL	VAV	VARIABLE AIR VOLUME
EAT	ENTERING AIR TEMPERATURE	MH	MAN HOLE	VD	VOLUME DAMPER
EC	ELECTRICAL CONTRACTOR	MIN	MINIMUM, MINUTE	VFD	VARIABLE FREQUENCY DRIVE
ECON	ECONOMIZER	MVD	MANUAL VOLUME DAMPER	VI	VIBRATION ISOLATOR
EDH	ELECTRIC DUCT HEATER	NA	NOT APPLICABLE	VOL	VOLUME
EER	ENERGY EFFICIENCY RATIO	NC	NOISE CRITERIA, NORMALLY CLOSED	VP	VELOCITY PRESSURE
EF	EXHAUST FAN	NIC	NOT IN CONTRACT	VSC	VARIABLE SPEED CONTROLLER
EFF	EFFICIENCY	NO	NORMALLY OPEN, NITROUS OXIDE	VTR	VENT THROUGH ROOF
EL, ELEV	ELEVATION	NO.	NUMBER	W	WASTE
EMER	EMERGENCY	NOM	NOMINAL	W/	WITH
ENCL	ENCLOSURE	NR	NOISE REDUCTION	W/O	WITHOUT
ESP	EXTERNAL STATIC PRESSURE	NRC	NOISE REDUCTION COEFFICIENT	WB	WET BULB
ET	EXPANSION TANK	NTS	NOT TO SCALE	WC	WATER CLOSET
EUH	ELECTRIC UNIT HEATER	OA	OUTSIDE AIR	WCO	WALL CLEAN OUT
EVAP	EVAPORAT(E),(ING),(ED),(OR)	OBD	OPPOSED BLADE DAMPER	WHA	WATER HAMMER ARRESTOR
EWB	ENTERING WET BULB	OD	OVERFLOW DRAIN, OUTSIDE DIAMETER	WT	WEIGHT
EWC	ELECTRIC WATER COOLER	OF/CI	OWNER FURN./CONTRACTOR INSTALLED	YCO	YARD CLEANOUT
EWH	ELECTRIC WATER HEATER	OF/OI	OWNER FURNISHED/OWNER INSTALLED		
EWS	EYE WASH STATION	OS&Y	OPEN SCREW & YOLK		

MECHANICAL LEGEND

BALL VALVE
BUTTERFLY VALVE
GATE VALVE
ANGLE GATE VALVE, PLAN VIEW
GLOBE VALVE
PLUG VALVE
3–WAY VALVE
NON–RISING STEM/OS&Y VALVE ACTUATOR
LEVER VALVE ACTUATOR
ELECTRONIC/PNEUMATIC VALVE ACTUATOR
SOLENOID/DIAPHRAGM VALVE ACTUATOR
CHECK VALVE
SPRING CHECK VALVE
BALL VALVE W/HOSE END & CAP
NEEDLE VALVE
PRESSURE REDUCING VALVE
REDUCED PRESSURE BACKFLOW PREVENTER — RPBP
INLINE PUMP
PRESSURE & TEMPERATURE RELIEF VALVE
SQUARE HEAD COCK
STRAINER, W/BV HOSE END & CAP
TEMPERATURE & PRESSURE PLUG
CIRCUIT SETTER
AUTOMATIC FLOW CONTROL VALVE
AUTOMATIC/MANUAL AIR VENT — AV, MAV
VENTURI FLOW MEASURING DEVICE
THERMOMETER/PRESSURE GAGE W/COCK
TEMPERATURE SENSOR
CONCENTRIC/ECCENTRIC REDUCER
UNION
BUSHING/CAP
ELBOW UP/DOWN
TOP/BOTTOM CONNECTION, 45° OR 90°
TEE UP/SIDE/DOWN
FLOW/PITCH DOWN DIRECTION — 2%
ANCHOR/GUIDE
EXPANSION JOINT/FLEX CONNECTOR
FLOOR OR GRADE CLEANOUT, W/CONC PAD
WALL CLEANOUT, HOSE BIBB OR WALL HYDRANT — HB, WH
FLOOR DRAIN/FLOOR SINK
VENT
COLD WATER
HOT WATER
SANITARY SEWER
SANITARY SEWER BELOW GRADE
NATURAL GAS — G

DUCT SIZE, (1ST FIGURE, SIDE SHOWN; 2ND FIGURE, OTHER SIDE) — 24/12
DIRECTION OF FLOW
LINED DUCT — 24/12
HIDDEN DUCT — (24/12)
WYE W/45° ENTRY
TEE W/45° ENTRY
ELBOW W/TURNING VANES
HELICAL FLEX DUCT
SUPPLY DUCT SECTION UP/DOWN — 24/12
RETURN DUCT SECTION UP/DOWN — 24/12
EXHAUST DUCT SECTION UP/DOWN — 24/12
SUPPLY DUCT SECTION UP/DOWN — 18ø
ROUND BRANCH — 12ø, 18ø
DUCT TRANSITION — 24/12, 18/12
SPIN–IN W/VOLUME DAMPER — 24/12
FIRE SMOKE DAMPER
FIRE DAMPER
SMOKE DAMPER
MOTORIZED DAMPER — M
GRAVITY BACKDRAFT DAMPER — G
MANUAL VOLUME DAMPER — VD
SIDE/PLAN ACCESS DOOR
SUPPLY AIR DEVICE
RETURN AIR DEVICE
EXHAUST AIR DEVICE
DUCT PRESSURE CLASS/CHANGE — 2", 2"/1"
THERMOSTAT/HUMIDISTAT — T, H
POINT OF CONNECTION/REMOVAL
KEYED NOTE/REVISION — 1, 1
WALL SWITCH — $
EQUIPMENT CALLOUT — DESIGNATOR, CHARACTERISTIC
PLUMBING FIXTURE CALLOUT — FIXTURE
DETAIL TAG — DETAIL NO. 1, SHEET NO. M601

PROJECT NOTES

1. ALL WORK SHALL BE PERFORMED IN ACCORDANCE WITH, 2006 INTERNATIONAL BUILDING CODE, 2006 INTERNATIONAL MECHANICAL CODE, 2006 INTERNATIONAL PLUMBING CODE, 2006 INTERNATIONAL FUEL GAS CODE, AND 2006 INTERNATIONAL ENERGY CODE, INCLUDING STATE AND LOCAL AMENDMENTS, SUBJECT TO AUTHORITY HAVING JURISDICTION INTERPRETATION.
2. CLOSELY COORDINATE NEW MECHANICAL AND PLUMBING CONSTRUCTION WITH ALL MECHANICAL, ELECTRICAL, ARCHITECTURAL AND STRUCTURAL MEMBERS. DUCTWORK AND PIPE ROUTING IS APPROXIMATE, DIAGRAMMATIC AND IS NOT TO BE SCALED. PROVIDE ALTERNATE ROUTING, OFFSETS AND TRANSITIONS AS REQUIRED FOR COORDINATION OF ALL WORK WITHOUT ADDITIONAL COST.
3. DO NOT SHUT–OFF/PUT OUT SERVICE ANY SYSTEMS/SERVICES WITHOUT FIRST COORDINATING ALL DOWNTIME WITH THE OWNER'S PERSONNEL.
4. PROVIDE SEISMIC RESTRAINT FOR ALL MECHANICAL AND PLUMBING EQUIPMENT AND PIPING IN ACCORDANCE WITH 2006 IBC, IMC, AND IPC.
5. RECORD ALL FIELD CHANGES ON RECORD DRAWINGS AND SUBMIT TO ENGINEER DURING PROJECT CLOSE OUT.
6. INSTALL ALL EQUIPMENT IN ACCORDANCE WITH MANUFACTURERS INSTALLATION INSTRUCTIONS.
7. PROJECT ELEVATION IS 5000 FT FOR EQUIPMENT SELECTION.
8. PROVIDE ALL DUCT IN ACCORDANCE WITH SMACNA STANDARDS FOR 2" WC PRESSURE CLASS. SEAL ALL TRANSVERSE AND LONGITUDINAL SEAMS AND JOINTS EXCEPT FOR WELDED OR LOCKING–TYPE LONGITUDINAL JOINTS.
9. LINE ALL INTERIOR RECTANGULAR DUCT WITH 1" THICK INSULATED DUCT LINER. LINE ALL EXTERIOR RECTANGULAR DUCT WITH 2" INSULATED DUCT LINER. GLUED AND STICK PINNED IN ACCORDANCE WITH MANUFACTURERS INSTALLATION INSTRUCTIONS.
10. INSULATE ALL SUPPLY ROUND DUCTWORK ABOVE CEILINGS WITH 1–1/2" THICK 1.5 LBS/CF FIBERGLASS DUCT WRAP. TRIM AND SEAL JOINTS.
11. PROVIDE 1–1/2" THICK INSULATED FLEXIBLE DUCT AS INDICATED ON DRAWINGS CONFORMING TO NFPA 90A, UL 181–CLASS 0 OR 1 STANDARDS. INSTALL FLEXIBLE DUCT AS SHORT AS POSSIBLE WITHOUT KINKS.
12. LOCATE DIFFUSERS AND RETURN GRILLES ACCORDING TO THE ARCHITECTURAL REFLECTED CEILING PLANS.
13. DUCT DIMENSIONS SHOWN ARE INSIDE FLOW DIMENSIONS.
14. PROVIDE TEST AND BALANCE REPORT TO ENGINEER FOR REVIEW AND APPROVAL.
15. PROVIDE ISOLATION VALVES SERVING EACH PIECE OF EQUIPMENT.
16. DISINFECT NEW DOMESTIC WATER PIPING. SUBMIT DISINFECTION REPORT TO ENGINEER FOR REVIEW.
17. ALL WASTE AND VENT IS 2" UNLESS OTHERWISE NOTED.
18. ALL WASTE AND VENT PIPE ABOVE GRADE SHALL BE SERVICE WEIGHT CAST IRON. ALL WASTE AND VENT PIPE BELOW GRADE SHALL BE SCHEDULE 40 ABS, SCHEDULE 40 PVC, OR SERVICE WEIGHT CAST IRON.
19. PROVIDE TRAP PRIMERS AND CONNECT TO ALL FLOOR DRAINS, ALL FLOOR SINKS, AND ALL STANDPIPES THAT DO NOT HAVE A RELIABLE SOURCE TO MAINTAIN TRAP SEAL.
20. ALL WATER PIPE SHALL BE TYPE "L" COPPER.
21. T–DRILL FITTINGS SHALL NOT BE USED IN THIS PROJECT.
22. INSULATE ALL HOT WATER WITH 1" INSULATION WITH ASJ. INSULATE ALL COLD WATER PIPE WITH 1" INSULATION WITH ASJ.
23. ALL "BRANCH" HOT AND COLD WATER LINES FEEDING ONE OR TWO SINKS OR LAV'S ARE 1/2". DROP IN WALL AND DISTRIBUTE TO SINKS OR LAV'S AS REQ'D. PROVIDE INDIVIDUAL STOPS FOR EACH SINK OR LAV.
24. ALL NATURAL GAS PIPE SHALL BE SCHEDULE 40 STEEL PIPE WITH SCREWED FITTINGS FOR 2 LB SERVICE. CONTRACTOR MAY USE CSST DOWNSTREAM OF REGULATORS FOR FINAL EQUIPMENT CONNECTION.
25. PROVIDE "DIRT LEG" AHEAD OF EACH PIECE OF FUEL FIRED EQUIPMENT.

SHEET LIST

MH001 – LEGEND AND NOTES
MH101 – MECHANICAL FIRST FLOOR PLAN
MH501 – MECHANICAL DETAILS
MH601 – MECHANICAL SCHEDULES
PP101 – PLUMBING FIRST FLOOR PLAN
PP401 – ENLARGED PLUMBING FIRST FLOOR PLAN
PP501 – PLUMBING DETAILS

COOPER ROBERTS SIMONSEN ASSOCIATES
crsa
700 NORTH 200 WEST
SALT LAKE CITY,UTAH 84103
(801) 355-5915
(801) 355-9885 FAX
WWW.CRSA-US.COM

STRUCTURAL ENGINEER
CALDER RICHARDS CONSULTING ENGINEERS
634 South 400 East
SALT LAKE CITY, UT 84101
(801) 466-1699 (801) 467-2495 FAX
- stephen@crceng.com

MECHANICAL ENGINEER
SMD
986 WEST ATHERTON DRIVE STE. 200
TAYLORSVILLE, UTAH 84123
(801)268-3828 FAX (801)268-3297
- -

ELECTRICAL ENGINEER
SPECTRUM
175 S MAIN STREET STE. 300
SALT LAKE CITY, UTAH 84111
(801)328-5151 (801)401-9471
- -

CIVIL ENGINEER
Stanley Consultants Inc.
5353 south 960 East
SALT LAKE CITY, UTAH 84117
(801)293-8880 (801)801-8886
- -

SMD ENGINEERING, PLLC
"Engineered Mechanical Solutions"
986 WEST ATHERTON DRIVE
TAYLORSVILLE, UT 84123
(801) 268-3828, FAX (801) 268-3297

J. M. BROWNING ARMORY
197TH RIGGER FACILITY
DFCM NO. 08243480
625 E. 5300 S.
OGDEN, UTAH 84402

UTAH NATIONAL GUARD
12953 SOUTH
MINUTEMAN DRIVE.
DRAPER UTAH 84020-1776

2	-	-
1	-	-
-	-	-
-	-	-
CD	02 SEP 08	BID DOCUMENTS

PROJECT NO:	B08-062
CAD DWG FILE:	
DRAWN BY:	ABG
CHECKED BY:	SMD

MECHANICAL LEGEND AND NOTES

MH001

SHEET OF

THE DRAWING, AS AN INSTRUMENT OF SERVICE, IS AND SHALL REMAIN THE PROPERTY OF SMD ENGINEERING, PLLC AND SHALL NOT BE REPRODUCED, PUBLISHED, OR USED IN ANY WAY WITHOUT THE PERMISSION OF SMD ENGINEERING, PLLC. THE INFORMATION, DESIGN, OR CONCEPTS REPRESENTED ON THIS DRAWING ARE CONFIDENTIAL AND ARE NOT FOR GENERAL DISTRIBUTION. © SMD ENGINEERING, PLLC 2008

SCHEDULE OF ALTERNATES

1. ALTERNATE NO. 1 (ADDITIVE): ALL MATERIALS AND LABOR REQUIRED FOR PROVISION AND INSTALLATION OF THE WIRE MESH CAGING ENCLOSURES FOR PACKED & UNPACKED PARACHUTES, INCLUDING DOOR AND/OR GATE HARDWARE.

2. ALTERNATE NO. 2 (ADDITIVE): ALL WORK ASSOCIATED WITH ENCLOSURE AND FINISHING OF THE MEZZANINE OFFICES, INCLUDING STAIRWAY & LANDING, WALLS, CEILINGS, WINDOWS, LIGHTING, ELECTRICAL WORK, HVAC AND OTHER ASSEMBLIES AND COMPONENTS. (FLOOR STRUCTURE, INCLUDING JOISTS AND SHEATHING ARE A PART OF THE BASE BID.)

3. ALTERNATE NO. 3 (ADDITIVE): FINISH WORK IN THE BREAK ROOM, TO INCLUDE FINISH FLOORING, WALL BASE, PAINT, CABINETRY & CASEWORK, PLUMBING FIXTURES. (BASE BID INCLUDES DRYWALL AS REQUIRED FOR STRUCTURAL INTEGRITY WITH TAPE AND MUD FOR A LEVEL 4 FINISH, WALL PRIMER, CEILING, DUCTS & DIFFUSERS FOR HVAC, LIGHTING, PLUMBING ROUGH-IN FOR FIXTURES AND CONNECTIONS AS INDICATED, ELECTRICAL ROUGH-IN FOR CONVENIENCE AND APPLIANCE OUTLETS.)

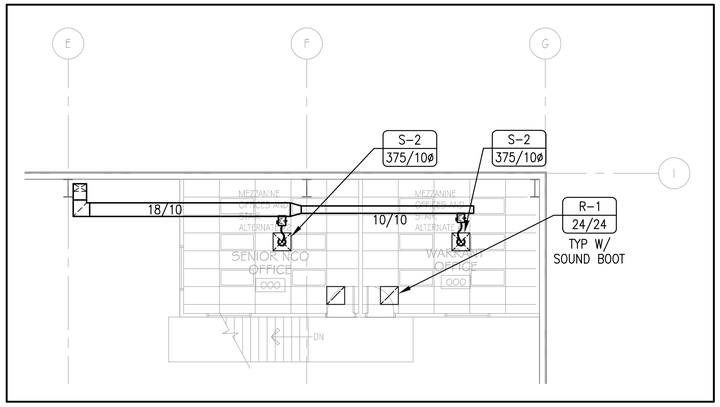

2 MH101 MECHANICAL MEZZANINE FLOOR PLAN

SCALE: 1/8" = 1'-0"

NORTH

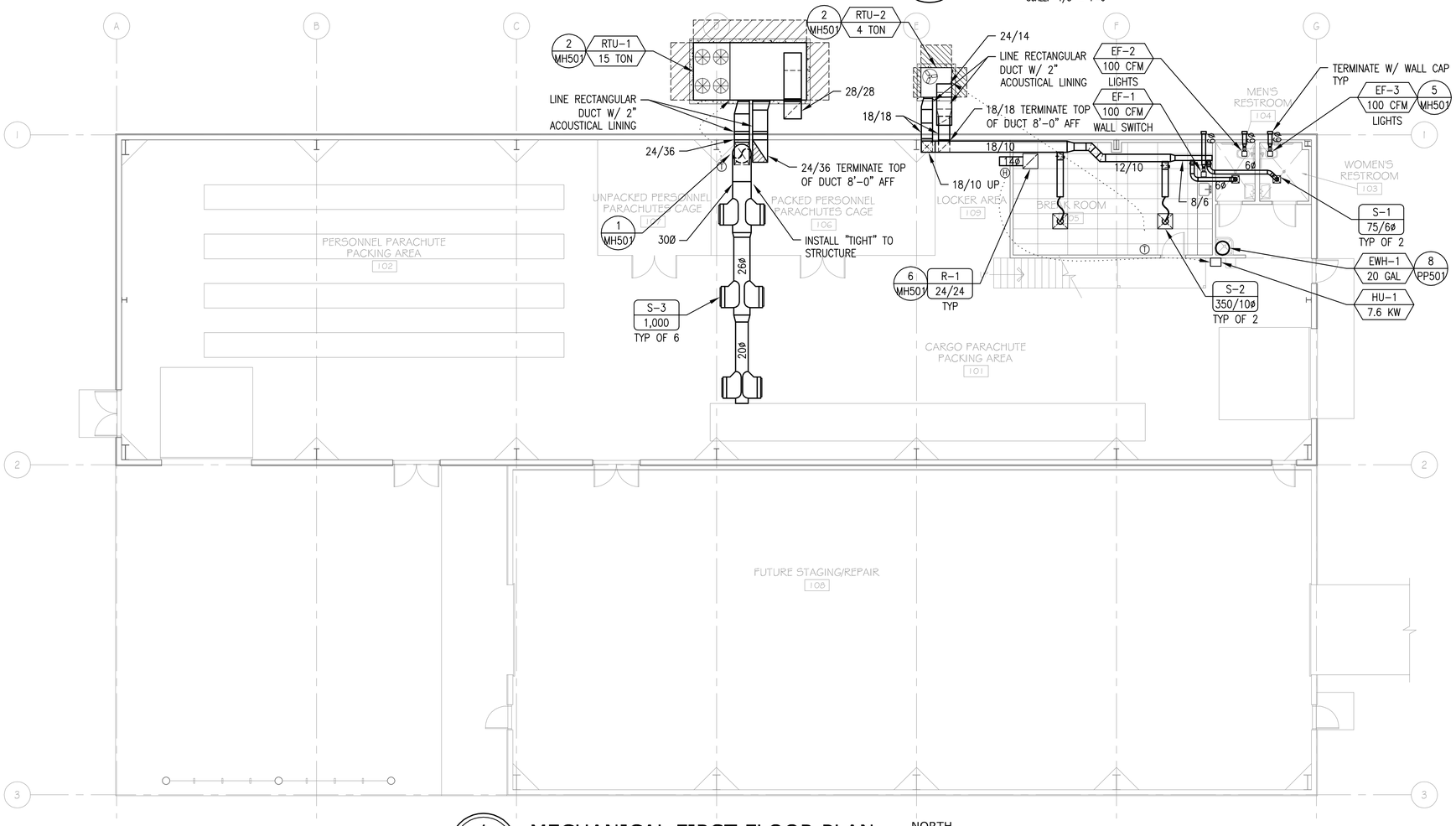

1 MH101 MECHANICAL FIRST FLOOR PLAN

SCALE: 1/8" = 1'-0"

NORTH

COOPER
ROBERTS
SIMONSEN
ASSOCIATES

crsa

700 NORTH 200 WEST
SALT LAKE CITY,UTAH 84103
(801) 355-5915
(801) 355-9885 FAX
WWW.CRSA-US.COM

STRUCTURAL ENGINEER
CALDER RICHARDS CONSULTING ENGINEERS
634 South 400 East
SALT LAKE CITY, UT 84101
(801) 466-1699 (801) 467-2495 FAX
- stephen@crceng.com

MECHANICAL ENGINEER
SMD
986 WEST ATHERTON DRIVE STE. 200
TAYLORSVILLE, UTAH 84123
(801)268-3828 FAX (801)268-3297
- -

ELECTRICAL ENGINEER
SPECTRUM
175 S MAIN STREET STE. 300
SALT LAKE CITY, UTAH 84111
(801)328-5151 (801)401-9471
- -

CIVIL ENGINEER
Stanley Consultants Inc.
5353 south 960 East
SALT LAKE CITY, UTAH 84117
(801)293-8880 (801)801-8886
- -

SMD ENGINEERING, PLLC
"Engineered Mechanical Solutions"
986 WEST ATHERTON DRIVE
TAYLORSVILLE, UT 84123
(801) 268-3828, FAX (801) 268-3297

J. M. BROWNING ARMORY
197TH RIGGER FACILITY
DFCM NO. 08243480
625 E. 5300 S.
OGDEN, UTAH 84402

UTAH NATIONAL GUARD
12953 SOUTH
MINUTEMAN DRIVE.
DRAPER UTAH 84020-1776

2		
1		
-	-	-
-	-	-
-	-	-
CD	02 SEP 08	BID DOCUMENTS

PROJECT NO:	B08-062
CAD DWG FILE:	
DRAWN BY:	ABG
CHECKED BY:	SMD

MECHANICAL FIRST FLOOR PLAN

MH101

SHEET OF

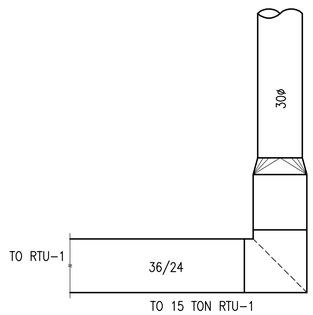

1 MH501 DUCT TRANSITION

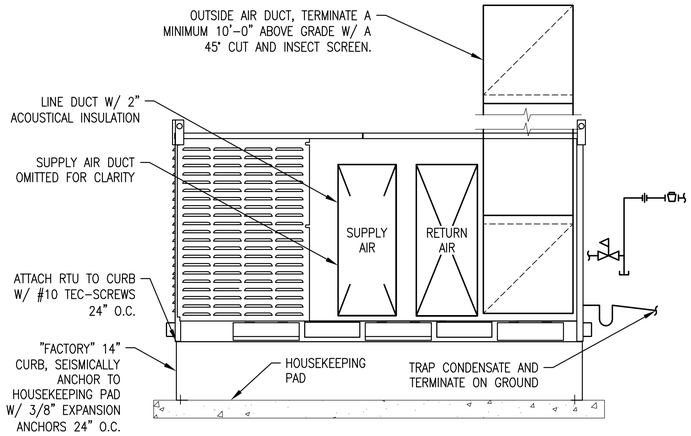

2 MH501 RTU-ON-GROUND

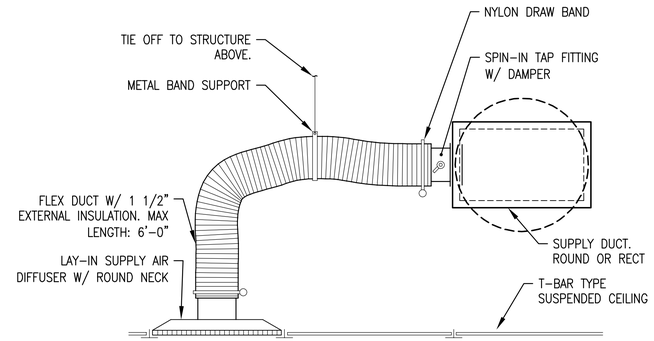

3 MH501 FLEX DUCT CONNECTION

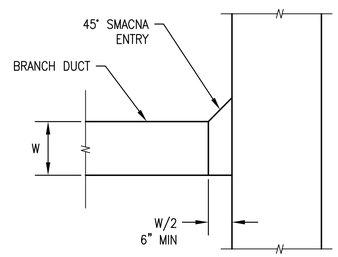

4 MH501 45° SMACNA ENTRY DUCT TAKE OFF

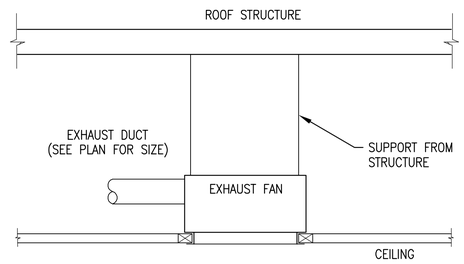

5 MH501 CEILING EXHAUST FAN

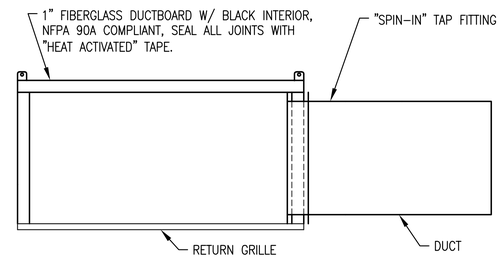

6 MH501 RETURN AIR SOUND BOOT

7 MH501 NOT USED

8 MH501 NOT USED

9 MH501 NOT USED

COOPER ROBERTS SIMONSEN ASSOCIATES
crsa
700 NORTH 200 WEST
SALT LAKE CITY,UTAH 84103
(801) 355-5915
(801) 355-9885 FAX
WWW.CRSA-US.COM

STRUCTURAL ENGINEER
CALDER RICHARDS CONSULTING ENGINEERS
634 South 400 East
SALT LAKE CITY, UT 84101
(801) 466-1699 (801) 467-2495 FAX
- stephen@crceng.com

MECHANICAL ENGINEER
SMD
986 WEST ATHERTON DRIVE STE. 200
TAYLORSVILLE, UTAH 84123
(801)268-3828 FAX (801)268-3297
- -

ELECTRICAL ENGINEER
SPECTRUM
175 S MAIN STREET STE. 300
SALT LAKE CITY, UTAH 84111
(801)328-5151 (801)401-9471
- -

CIVIL ENGINEER
Stanley Consultants Inc.
5353 south 960 East
SALT LAKE CITY, UTAH 84117
(801)293-8880 (801)801-8886
- -

SMD ENGINEERING, PLLC
"Engineered Mechanical Solutions"
986 WEST ATHERTON DRIVE
TAYLORSVILLE, UT 84123
(801) 268-3828, FAX (801) 268-3297

J. M. BROWNING ARMORY
197TH RIGGER FACILITY
DFCM NO. 08243480
625 E. 5300 S.
OGDEN, UTAH 84402

UTAH NATIONAL GUARD
12953 SOUTH
MINUTEMAN DRIVE.
DRAPER UTAH 84020-1776

2		
1		
-	-	-
-	-	-
-	-	-
CD	02 SEP 08	BID DOCUMENTS

PROJECT NO:	B08-062
CAD DWG FILE:	
DRAWN BY:	ABG
CHECKED BY:	SMD

MECHANICAL DETAILS

MH501

SHEET OF

THIS DRAWING, AS AN INSTRUMENT OF SERVICE, IS AND SHALL REMAIN THE PROPERTY OF SMD ENGINEERING, PLLC AND SHALL NOT BE REPRODUCED, PUBLISHED, OR USED IN ANY WAY WITHOUT THE PERMISSION OF SMD ENGINEERING, PLLC. THE INFORMATION, DESIGN, OR CONCEPTS REPRESENTED ON THIS DRAWING ARE CONFIDENTIAL AND ARE NOT FOR GENERAL DISTRIBUTION. © SMD ENGINEERING, PLLC 2008

THIS DRAWING, AS AN INSTRUMENT OF SERVICE, IS AND SHALL REMAIN THE PROPERTY OF SMD ENGINEERING, PLLC AND SHALL NOT BE REPRODUCED, PUBLISHED, OR USED IN ANY WAY WITHOUT THE PERMISSION OF SMD ENGINEERING, PLLC. THE INFORMATION, DESIGN, OR CONCEPTS REPRESENTED ON THIS DRAWING ARE CONFIDENTIAL AND ARE NOT FOR GENERAL DISTRIBUTION. © SMD ENGINEERING, PLLC 2008

ROOF TOP UNIT SCHEDULE (RTU)

RTU / NOM. TON

MARK	AREA SERVED	NOM. TONS	SEER ARI	EER	CFM @ ELEV.	ESP IN WC	COOLING CAPACITY (ARI 210/240, 340/360)						HEATING CAPACITY (PROJECT)							COMPRESSORS			CONDENSER FAN MOTORS			EVAPORATOR FAN MOTOR				ELECTRICAL			ECONOMIZER		DIMENSIONS				MANUFACTURER MODEL	REMARKS
							TOTAL MBH	SENS. MBH	EAT °F DB/WB	LAT °F DB	AMB °F	REFRIG	STAGE	IN MBH	OUT MBH	TEMP RISE °F	CONN. IN	MIN AFUE	FUEL	NO.	RLA	LRA	NO.	HP	FLA	NO.	HP	BHP	FLA	VOLT/ PHASE	MCA	MCOP	PD IN WC	MIN. OA %	L IN	W IN	H IN	WT LBS		
RTU-1	PARACHUTE PACKING	15	N/A	12.4	6,000	0.5	196.9	144.0	80/67	55	95	R-410A	2	300	240	35	1	80	NAT. GAS	4	14.7	115	4	1/3	2.1	1	5.0	3.5	15.4	208/ 3ø	96.5	110	0.10	30	181	92	53	2615	YORK ZJ180	NOTE 1
RTU-2	BREAK ROOM/ OFFICES	4	15.0	N/A	1,600	0.5	48.0	35.5	80/67	55	95	R-410A	1	80	64	35	1/2	80	NAT. GAS	1	13.4	88	1	1/3	1.8	1	1.0	1.0	9.1	208/ 3ø	26.7	35	0.04	30	49	48	42	575	YORK DINX048	NOTE 2

NOTE 1: ASHRAE 90.1 COMPLIANT, W/ "FACTORY" SMOKE DETECTOR MOUNTED IN RETURN," "FACTORY" POWERED EXHAUST, THROUGH THE BOTTOM GAS AND ELECTRICAL KIT, ECONOMIZER, "FACTORY" 14" DEEP ROOF CURB, CONVENIENCE OUTLET, DISCONNECT, AND 7-DAY PROGRAMMABLE THERMOSTAT W/ NIGHT SETBACK.
NOTE 2: ASHRAE 90.1 COMPLIANT, W/ THROUGH THE BOTTOM GAS AND ELECTRICAL KIT, HIGH STATIC SUPPLY MOTOR, ECONOMIZER, "FACTORY" 14" DEEP ROOF CURB, CONVENIENCE OUTLET, DISCONNECT, AND 7-DAY PROGRAMMABLE THERMOSTAT W/ NIGHT SETBACK.

EXHAUST FAN SCHEDULE (EF)

EF / CFM

MARK	AREA SERVED	TYPE	CFM	ESP IN WC	FAN RPM	MOTOR			SONES	DAMPER	CONTROL	OPENING SIZE IN	MANUFACTURER MODEL	REMARKS
						BHP	HP	VOLT/ PHASE						
EF-1	BREAK ROOM	CABNET	100	.25	1103	64 WATTS	N/A	120/ 1ø	3.3	GRAVITY	WALL SWITCH	13/15	COOK GEMC GC-162	W/ 6ø DUCT WALL CAP W/ DAMPER
EF-2	MEN'S RESTROOM	CABNET	100	.25	1103	64 WATTS	N/A	120/ 1ø	3.3	GRAVITY	LIGHTS	13/15	COOK GEMC GC-162	W/ 6ø DUCT WALL CAP W/ DAMPER
EF-3	WOMEN'S RESTROOM	CABNET	100	.25	1103	64 WATTS	N/A	120/ 1ø	3.3	GRAVITY	LIGHTS	13/15	COOK GEMC GC-162	W/ 6ø DUCT WALL CAP W/ DAMPER

AIR DEVICE SCHEDULE

DEVICE / CFM/NCK

MARK	TYPE & DUTY	FACE SIZE H X W	NECK SIZE H X W	CEILING TYPE	MAX. CFM	MAX. T.P. (IN WC)	MAX. NC LEVEL	MIN T50 THROW (FT)	PATTERN	MANUFACTURER MODEL	REMARKS
S-1	LOUVERED FACE DIFFUSER	12/12	6/6-6ø	GYP.	75	0.06	15	8	4-WAY	KRUEGER SH	W/ SURFACE MOUNT FRAME AND TRANSITION
S-2	LOUVERED FACE DIFFUSER	24/24	10ø	LAY-IN	380	0.09	19	16	4-WAY	KRUEGER 1400	W/ LAY-IN FRAME
S-3	DRUM LOUVER	32/14	30/12	DUCT	1,000	0.05	12	58	ADJ.	KRUEGER DPL	
R-1	PERFORATED RETURN	24/24	22/22	LAY-IN	1,000	0.05	28	N/A	N/A	KRUEGER 6490	W/ LAY-IN FRAME

HUMIDIFIER SCHEDULE (HUM)

HUM / KW

MARK	SYSTEM SERVED	HUMID. RATE LBS/HR	INPUT POWER KW	ELECTRICAL			DIMENSIONS				MANUFACTURER MODEL	REMARKS
				VOLT/ PHASE	FLA	MCOP	L (IN)	W (IN)	H (IN)	WT (LBS)		
HUM-1	OUTSIDE AIR	20	7.6	208/ 3ø	29.6	35	17	13	25	25	NORTEC NHTC-020	SET TO START AT 20% RH W/ BLOWER PACK

PRV SCHEDULE (PRV)

PRV / SETTING

MARK	SIZE	GPM	PD PSI	SETTING	MANUFACTURER MODEL
PRV-1	1"	15	15	65	WATTS 223S

PLUMBING FIXTURE SCHEDULE

FIXTURE

MARK	FIXTURE	ROUGH IN SIZE					MANUFACTURER MODEL	REMARKS
		WASTE IN	TRAP IN	VENT IN	HW IN	CW IN		
WC-1	WATER CLOSET, FLOOR MOUNTED, TANK TYPE, ADA COMPLIANT	3	2	1 1/2	N/A	1/2	TOTO "DRAKE" CST744SL	WHITE VITREOUS CHINA, 1.6 GPF, 3" FLUSH VALVE, 17" FLOOR TO RIM, 12" ROUGH IN, ELONGATED BOWL, W/OLSENITE #95 OPEN FRONT SEAT LESS COVER, CHROMED ANGLE STOP AND CHROMED BRASS SUPPLY.
LAV-1	LAVATORY, WALL-HUNG ADA COMPLIANT W/ SINGLE CONTROL LAV FAUCET	1 1/2	1 1/4	1 1/2	1/2	1/2	AMERICAN STANDARD "LUCERNE" LAVATORY W/"SEVA" FAUCET	VITREOUS CHINA, 18"X21", WALL MOUNTED LAVATORY W/ FLOOR MOUNTED CONCEALED ARM CARRIER, FAUCET HOLES ON 4" CENTERS, GRID STRAINER, CHROMED ANGLE STOPS, CHROMED BRASS SUPPLIES, AND CHROMED BRASS "P" TRAP.
SINK-1	SINK, SINGLE COMPARTMENT, STAINLESS STEEL, COUNTER MOUNTED, W/ GOOSENECK FAUCET	1 1/2	1 1/2	1 1/2	1/2	1/2	ELKAY DLR252110 SINK W/ LK2442 FAUCET, AND LK99 STRAINER	STAINLESS STEEL COUNTERTOP SINK, INSIDE BOWL 21"X16"X10" W/ TWO-HANDLE 10" GOOSENECK FAUCET, STRAINER, CHROMED ANGLE STOPS, CHROMED BRASS SUPPLIES, AND CHROMED BRASS "P" TRAP.
EWC-1	ELECTRIC WATER COOLER, SINGLE STATION, ADA COMPLIANT	1 1/2	1 1/2	1 1/2	N/A	1/2	ELKAY EZS8L	W/ ADA COMPLIANT, FRONT CONTROLS, 9.6 GPH 50°F DRINKING WATER, 120V/1ø/3.7A
ICE	ICE MAKER	N/A	N/A	N/A	N/A	1/4	N/A	1/4" CHROME STOP FOR ICE MAKER
TP	TRAP PRIMER	N/A	N/A	N/A	N/A	1/2	PPP 500	TRAP PRIMER.
WH-1	FREEZELESS WALL HYDRANT	N/A	N/A	N/A	N/A	3/4	WOODFORD MFG 65	W/ LOOSE KEY, AND INTEGRAL VACUUM BREAKER.
FD-1	FLOOR DRAIN	X	X	X/2 1-1/2" MIN	N/A	N/A	ZURN Z415-B-X "X" INDICATED ON DRAWINGS	CAST IRON BODY, ADJUSTABLE NICKEL BRONZE STRAINER ASSEMBLY, MEMBRANE CLAMP, WEEP HOLES, AND TRAP PRIMER CONNECTION.
SS-1	SERVICE SINK, ENAMELED CAST IRON	3	3	1 1/2	1/2	1/2	AMERICAN STANDARD FLORWELL W/FAUCET 8344.112	28"X28"X13" DEEP ENAMELED CAST IRON SERVICE SINK W/ FLAT GRID DRAIN, REMOVABLE VINYL-COATED RIM GUARD, HOSE AND HOSE BRACKET. POLISHED CHROME FAUCET W/TOP BRACE, STOPS AND VACUUM BREAKER.

ELECTRIC WATER HEATER SCHEDULE

EWH / TANK GAL

MARK	CAP GAL	INPUT WATTS	RECOVERY GAL/HR	TEMP RISE °F	DIMENSIONS			ELECT.		MANUFACTURER MODEL	REMARKS
					DIA IN	HEIGHT IN	OP. WT LBS	VOLT/ PHASE	AMPS		
EWH-1	20	3000	20	60	21	22	200	120/ 1ø	30.0	A. O. SMITH DEL-20	W/ WALL MOUNTING BRACKET, SAFETY PAN, AND AMTROL ST-5-C EXPANSION TANK.

COOPER ROBERTS SIMONSEN ASSOCIATES
crsa
700 NORTH 200 WEST
SALT LAKE CITY,UTAH 84103
(801) 355-5915
(801) 355-9885 FAX
WWW.CRSA-US.COM

STRUCTURAL ENGINEER
CALDER RICHARDS CONSULTING ENGINEERS
634 South 400 East
SALT LAKE CITY, UT 84101
(801) 466-1699 (801) 467-2495 FAX
- stephen@crceng.com

MECHANICAL ENGINEER
SMD
986 WEST ATHERTON DRIVE STE. 200
TAYLORSVILLE, UTAH 84123
(801)268-3828 FAX (801)268-3297
- -

ELECTRICAL ENGINEER
SPECTRUM
175 S MAIN STREET STE. 300
SALT LAKE CITY, UTAH 84111
(801)328-5151 (801)401-9471
- -

CIVIL ENGINEER
Stanley Consultants Inc.
5353 south 960 East
SALT LAKE CITY, UTAH 84117
(801)293-8880 (801)801-8886
- -

SMD ENGINEERING, PLLC
"Engineered Mechanical Solutions"
986 WEST ATHERTON DRIVE
TAYLORSVILLE, UT 84123
(801) 268-3828, FAX (801) 268-3297

J. M. BROWNING ARMORY
197TH RIGGER FACILITY
DFCM NO. 08243480
625 E. 5300 S.
OGDEN, UTAH 84402

UTAH NATIONAL GUARD
12953 SOUTH
MINUTEMAN DRIVE.
DRAPER UTAH 84020-1776

3		
2		
1	-	-
-	-	-
-	-	-
CD	02 SEP 08	BID DOCUMENTS

PROJECT NO:	B08-062
CAD DWG FILE:	
DRAWN BY:	ABG
CHECKED BY:	SMD

MECHANICAL SCHEDULES

MH601

SHEET OF

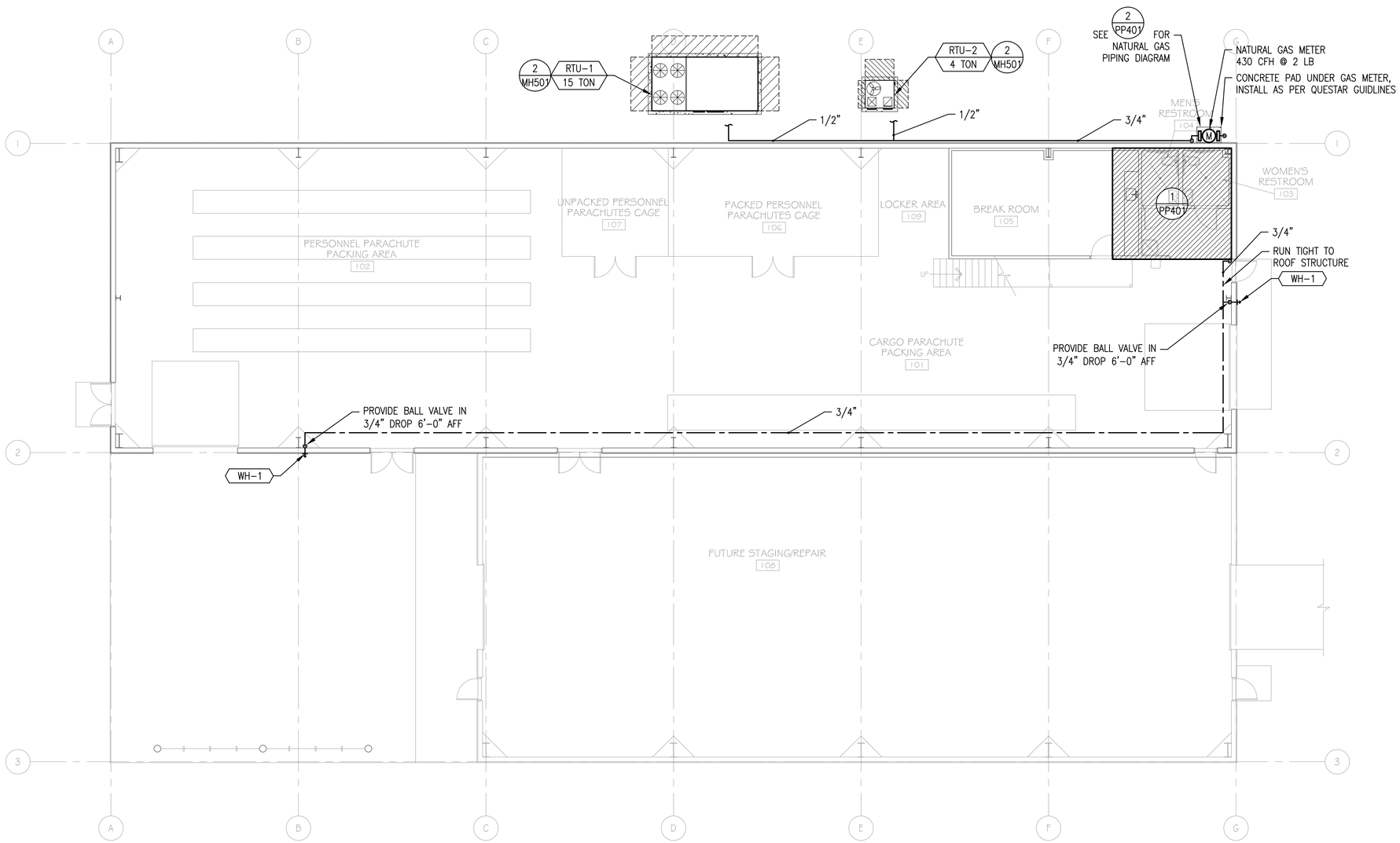

1
PP101

PLUMBING FIRST FLOOR PLAN

NORTH

8' 4' 2' 0 8' 16'

SCALE: 1/8" = 1'-0"

COOPER
ROBERTS
SIMONSEN
ASSOCIATES

crsa

700 NORTH 200 WEST
SALT LAKE CITY,UTAH 84103
(801) 355-5915
(801) 355-9885 FAX
WWW.CRSA-US.COM

STRUCTURAL ENGINEER
CALDER RICHARDS CONSULTING ENGINEERS
634 South 400 East
SALT LAKE CITY, UT 84101
(801) 466-1699 (801) 467-2495 FAX
- stephen@crceng.com

MECHANICAL ENGINEER
SMD
986 WEST ATHERTON DRIVE STE. 200
TAYLORSVILLE, UTAH 84123
(801)268-3828 FAX (801)268-3297
- -

ELECTRICAL ENGINEER
SPECTRUM
175 S MAIN STREET STE. 300
SALT LAKE CITY, UTAH 84111
(801)328-5151 (801)401-9471
- -

CIVIL ENGINEER
Stanley Consultants Inc.
5353 south 960 East
SALT LAKE CITY, UTAH 84117
(801)293-8880 (801)801-8886
- -

SMD
ENGINEERING, PLLC
"Engineered Mechanical Solutions"
986 WEST ATHERTON DRIVE
TAYLORSVILLE, UT 84123
(801) 268-3828, FAX (801) 268-3297

J. M. BROWNING ARMORY
197TH RIGGER FACILITY
DFCM NO. 08243480
625 E. 5300 S.
OGDEN, UTAH 84402

UTAH NATIONAL GUARD
12953 SOUTH
MINUTEMAN DRIVE.
DRAPER UTAH 84020-1776

3		
2		
1		
-	-	-
-	-	-
-	-	-
CD	02 SEP 08 BID DOCUMENTS	

PROJECT NO:	B08-062
CAD DWG FILE:	
DRAWN BY:	ABG
CHECKED BY:	SMD

PLUMBING FIRST
FLOOR PLAN

PP101

SHEET OF

THIS DRAWING, AS AN INSTRUMENT OF SERVICE, IS AND SHALL REMAIN THE PROPERTY OF SMD ENGINEERING, PLLC AND SHALL NOT BE REPRODUCED, PUBLISHED, OR USED IN ANY WAY WITHOUT THE PERMISSION OF SMD ENGINEERING, PLLC. THE INFORMATION, DESIGN, OR CONCEPTS REPRESENTED ON THIS DRAWING ARE CONFIDENTIAL AND ARE NOT FOR GENERAL DISTRIBUTION. © SMD ENGINEERING, PLLC 2008

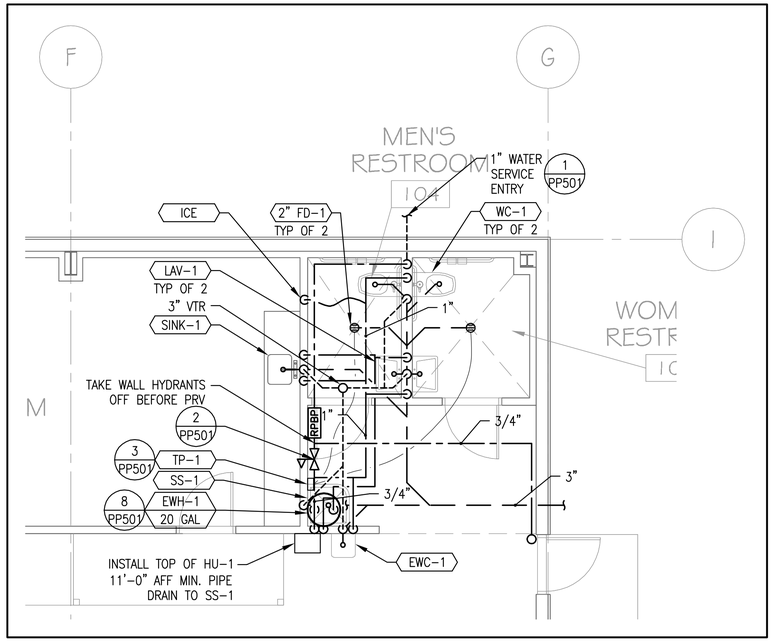

1 / PP401 ENLARGED PLUMBING FIRST FLOOR PLAN

NORTH

8' 4' 2' 0 8' 16'

SCALE: 1/8" = 1'-0"

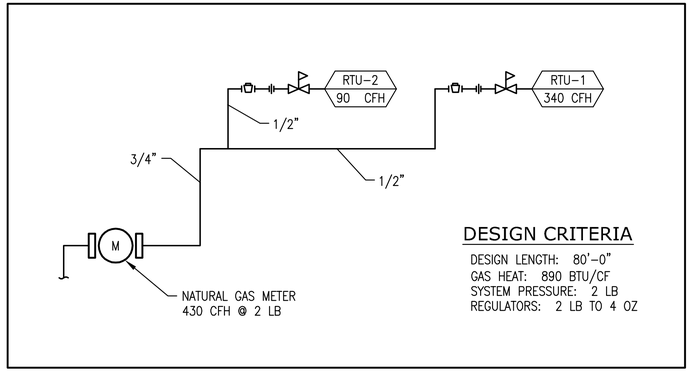

2 / PP401 NATURAL GAS PIPING DIAGRAM

8' 4' 2' 0 8' 16'

SCALE: 1/8" = 1'-0"

COOPER ROBERTS SIMONSEN ASSOCIATES

crsa

700 NORTH 200 WEST
SALT LAKE CITY,UTAH 84103
(801) 355-5915
(801) 355-9885 FAX
WWW.CRSA-US.COM

STRUCTURAL ENGINEER
CALDER RICHARDS CONSULTING ENGINEERS
634 South 400 East
SALT LAKE CITY, UT 84101
(801) 466-1699 (801) 467-2495 FAX
- stephen@crceng.com

MECHANICAL ENGINEER
SMD
986 WEST ATHERTON DRIVE STE. 200
TAYLORSVILLE, UTAH 84123
(801)268-3828 FAX (801)268-3297
- -

ELECTRICAL ENGINEER
SPECTRUM
175 S MAIN STREET STE. 300
SALT LAKE CITY, UTAH 84111
(801)328-5151 (801)401-9471
- -

CIVIL ENGINEER
Stanley Consultants Inc.
5353 south 900 East
SALT LAKE CITY, UTAH 84117
(801)293-8880 (801)801-8886
- -

SMD ENGINEERING, PLLC
"Engineered Mechanical Solutions"
986 WEST ATHERTON DRIVE
TAYLORSVILLE, UT 84123
(801) 268-3828, FAX (801) 268-3297

J. M. BROWNING ARMORY
197TH RIGGER FACILITY
DFCM NO. 08243480
625 E. 5300 S.
OGDEN, UTAH 84402

UTAH NATIONAL GUARD
12953 SOUTH
MINUTEMAN DRIVE.
DRAPER UTAH 84020-1776

2		
1		
-	-	-
-	-	-
-	-	-
CD	02 SEP 08	BID DOCUMENTS

PROJECT NO:	B08-062
CAD DWG FILE:	
DRAWN BY:	ABG
CHECKED BY:	SMD

ENLARGED PLUMBING FIRST FLOOR PLAN

PP401

SHEET OF

THIS DRAWING, AS AN INSTRUMENT OF SERVICE, IS AND SHALL REMAIN THE PROPERTY OF SMD ENGINEERING, PLLC AND SHALL NOT BE REPRODUCED, PUBLISHED, OR USED IN ANY WAY WITHOUT THE PERMISSION OF SMD ENGINEERING, PLLC. THE INFORMATION, DESIGN, OR CONCEPTS REPRESENTED ON THIS DRAWING ARE CONFIDENTIAL AND ARE NOT FOR GENERAL DISTRIBUTION. © SMD ENGINEERING, PLLC 2008

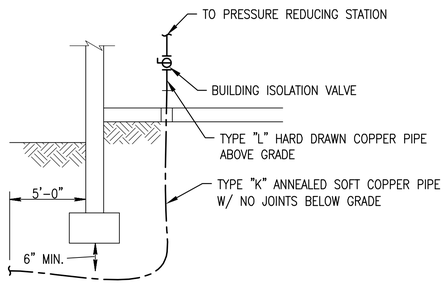

1 PP501 WATER SERVICE ENTRANCE

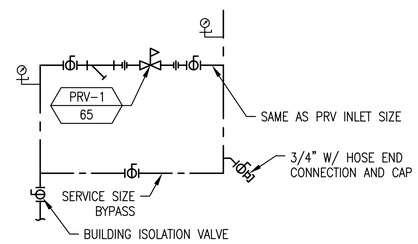

2 PP501 PRESSURE REDUCING STATION

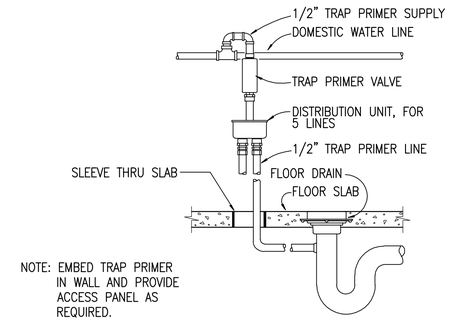

3 PP501 TRAP PRIMER

4 PP501 NOT USED

5 PP501 NOT USED

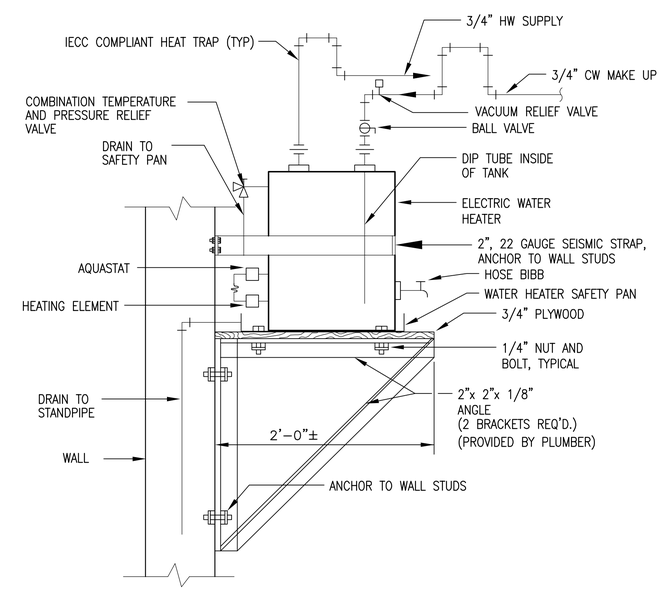

8 PP501 WALL MOUNTED ELECTRIC WATER HEATER

6 PP501 NOT USED

7 PP501 NOT USED

COOPER ROBERTS SIMONSEN ASSOCIATES
crsa
700 NORTH 200 WEST
SALT LAKE CITY,UTAH 84103
(801) 355-5915
(801) 355-9885 FAX
WWW.CRSA-US.COM

STRUCTURAL ENGINEER
CALDER RICHARDS CONSULTING ENGINEERS
634 South 400 East
SALT LAKE CITY, UT 84101
(801) 466-1699 (801) 467-2495 FAX
- stephen@crceng.com

MECHANICAL ENGINEER
SMD
986 WEST ATHERTON DRIVE STE. 200
TAYLORSVILLE, UTAH 84123
(801)268-3828 FAX (801)268-3297
- -

ELECTRICAL ENGINEER
SPECTRUM
175 S MAIN STREET STE. 300
SALT LAKE CITY, UTAH 84111
(801)328-5151 (801)401-9471
- -

CIVIL ENGINEER
Stanley Consultants Inc.
5353 south 960 East
SALT LAKE CITY, UTAH 84117
(801)293-8880 (801)801-8886
- -

SMD ENGINEERING, PLLC
"Engineered Mechanical Solutions"
986 WEST ATHERTON DRIVE
TAYLORSVILLE, UT 84123
(801) 268-3828, FAX (801) 268-3297

J. M. BROWNING ARMORY
197TH RIGGER FACILITY
DFCM NO. 08243480
625 E. 5300 S.
OGDEN, UTAH 84402

UTAH NATIONAL GUARD
12953 SOUTH
MINUTEMAN DRIVE.
DRAPER UTAH 84020-1776

3		
2		
1		
-	-	-
-	-	-
-	-	-
CD	02 SEP 08 BID DOCUMENTS	

PROJECT NO:	B08-062
CAD DWG FILE:	
DRAWN BY:	ABG
CHECKED BY:	SMD

PLUMBING DETAILS

PP501

SHEET OF

THIS DRAWING, AS AN INSTRUMENT OF SERVICE, IS AND SHALL REMAIN THE PROPERTY OF SMD ENGINEERING, PLLC AND SHALL NOT BE REPRODUCED, PUBLISHED, OR USED IN ANY WAY WITHOUT THE PERMISSION OF SMD ENGINEERING, PLLC. THE INFORMATION, DESIGN, OR CONCEPTS REPRESENTED ON THIS DRAWING ARE CONFIDENTIAL AND ARE NOT FOR GENERAL DISTRIBUTION. © SMD ENGINEERING, PLLC 2008

SYMBOL LEGEND

SYMBOL	DESCRIPTION
REFERENCE AND LINE SYMBOLS	
A5 / E-501	DETAIL INDICATOR: A5 INDICATES DETAIL NUMBER, E-501 INDICATES DRAWING SHEET WHERE DETAIL IS SHOWN.
A5 / E-201	ELEVATION OR SECTION INDICATOR, EXTERIOR: A5 INDICATES ELEVATION OR SECTION NUMBER, E-201 INDICATES DRAWING SHEET WHERE ELEVATION OR SECTION IS SHOWN.
A5 / E-201	ELEVATION OR SECTION INDICATOR, INTERIOR: A5 INDICATES ELEVATION OR SECTION NUMBER, E-201 INDICATES DRAWING SHEET WHERE ELEVATION OR SECTION IS SHOWN.
100	ROOM OR SPACE NUMBER.
1	KEYNOTE INDICATOR.
1	REVISION INDICATOR.
CU-1	EQUIPMENT INDICATOR.
	BREAK, STRAIGHT: TO BREAK PARTS OF DRAWING.
	BREAK, ROUND.
	NEW LINE: MEDIUM LINE.
	HIDDEN FEATURES LINE: HIDDEN, THIN LINE.
WIRING METHODS	
	WIRING.
A-1,3,5	BRANCH CIRCUIT HOME RUN TO PANELBOARD: NUMBER OF ARROWS INDICATES NUMBER OF CIRCUITS. LETTER AND NUMBER NOTATIONS IDENTIFY PANEL AND CIRCUIT NUMBERS. USE #12 CONDUCTORS, EXCEPT #10 CONDUCTORS SHALL BE INSTALLED IF DISTANCES EXCEED THOSE SPECIFIED IN SECTION 16120.
1 A-1,3,5	BRANCH CIRCUIT HOME RUN TO PANELBOARD: NUMBER OF ARROWS INDICATES NUMBER OF CIRCUITS. LETTER AND NUMBER NOTATIONS IDENTIFY PANEL AND CIRCUIT NUMBERS. NUMBER IN BOX REFERS TO THE CONDUCTOR AND CONDUIT SCHEDULE. FOR BRANCH WIRING USE #12 CONDUCTORS, EXCEPT #10 CONDUCTORS SHALL BE INSTALLED IF DISTANCES EXCEED THOSE SPECIFIED IN SECTION 16120.
— X —	WIRING AND/OR RACEWAY: THIN LINE. WHERE "X" = : CATV = CABLE TELEVISION CCTV = CLOSED CIRCUIT TELEVISION FA = FIRE ALARM FO = FIBER OPTICS I = INTERCOM NC = NURSE CALL P = POWER RC = RIGID CONDUIT S = SOUND T = TELEPHONE TV = TELEVISION OTHERS AS NOTED IN OTHER SCHEDULES. RACEWAYS AND WIRING SHALL BE SIZED AS SHOWN AND/OR SPECIFIED.
	LOW VOLTAGE WIRING: DIVIDE, MEDIUM LINE.
	CONDUIT STUB. DIMENSION RECORD DRAWINGS AND MARK.
1	CONDUCTOR & CONDUIT ("CC") SCHEDULE INDICATOR. REFER TO ONE-LINE DIAGRAM.
	JUNCTION BOX.
PB	PULL BOX.
	EARTH GROUND (ONE-LINE DIAGRAM).
LIGHTING (REFER TO FIXTURE SCHEDULE FOR SYMBOLS)	
(W-3)	FIXTURE IDENTIFICATION: (W-3) INDICATES FIXTURE TYPE AS SCHEDULED.
(W-3)	FIXTURE IDENTIFICATION, EMERGENCY WITH BATTERY PACK, CONNECTED TO GENERATOR AS INDICATED: (W-3) INDICATES FIXTURE TYPE AS SCHEDULED.
LIGHTING CONTROL	
	OCCUPANCY SENSOR, DUAL TECHNOLOGY, OMNI-DIRECTIONAL, CEILING.
P	PHOTOCELL.
TC	TIME CLOCK.
STRUCTURED CABLING	
W	TELEPHONE, WALL MOUNTED: WALL PHONE.
	OUTLET, BUILDING STANDARD COMBINATION TELEPHONE/ DATA COMMUNICATION.
	TELEPHONE TERMINAL BOARD, FIRE TREATED PLYWOOD PAINTED.

SYMBOL LEGEND

SYMBOL	DESCRIPTION
WIRING DEVICES	
	RECEPTACLE, DUPLEX: NEMA 5-20R.
A	RECEPTACLE, DUPLEX, ABOVE COUNTER: NEMA 5-20R.
C	RECEPTACLE, DUPLEX, CEILING: NEMA 5-20R.
D	RECEPTACLE, DUPLEX, DEDICATED CIRCUIT: NEMA 5-20R.
DF	RECEPTACLE, DUPLEX, DRINKING FOUNTAIN: CONCEAL WATER COOLER RECEPTACLE BEHIND WATER COOLER. SEE DIVISION 15 SHOP DRAWINGS FOR INSTALLATION REQUIREMENTS.
	RECEPTACLE, DUPLEX WITH GROUND FAULT CIRCUIT INTERRUPTER: NEMA 5-20R.
WP	RECEPTACLE, DUPLEX WITH GROUND FAULT CIRCUIT INTERRUPTER, WEATHERPROOF: NEMA 5-20R.
	RECEPTACLE, QUADRAPLEX: NEMA 5-20R.
X $	SWITCH, SINGLE POLE ("x" INDICATES FIXTURES CONTROLLED).
X $3	SWITCH, THREE-WAY ("x" INDICATES FIXTURES CONTROLLED).
X $4	SWITCH, FOUR-WAY ("x" INDICATES FIXTURES CONTROLLED).
ELECTRICAL POWER AND DISTRIBUTION	
	CIRCUIT BREAKER, MOLDED CASE (ONE-LINE DIAGRAM).
	MOTOR.
	TRANSFORMER (ONE-LINE DIAGRAM).
225/3 "1H" 225/3 "1H"	PANELBOARD WITH SUB FEED LUGS (ONE-LINE DIAGRAM).
	CT CABINET PER UTILITY'S REQUIREMENTS (ONE-LINE DIAGRAM).
M	METER.
	DISCONNECT SWITCH, FUSED.
	DISCONNECT SWITCH, UNFUSED.
	STARTER, COMBINATION WITH DISCONNECT SWITCH.
	STARTER OR MOTOR CONTROLLER.
	PUSHBUTTON.
	PUSHBUTTONS, MOTOR CONTROL.
	PANELBOARD CABINET, SURFACE MOUNTED, 2 SECTION.
DP#__	DISTRIBUTION PANEL OR SWITCHBOARD.
LP	LIGHTING RELAY, CONTACTOR PANEL, OR DIMMING ENCLOSURE.
$ST	SWITCH, TOGGLE MOTOR STARTER WITH OVERLOAD PROTECTION.
75	TRANSFORMER: NUMBER INDICATES kVA.

ELECTRICAL SHEET INDEX

SHEET NO	SHEET TITLE
EE001	SYMBOL LEGEND, SHEET INDEX & ABBREVIATIONS
EE501	TYPICAL MOUNTING HEIGHT DETAILS
EE502	DETAILS
EE503	DETAILS
EE601	ONE-LINE DIAGRAM
EE602	SCHEDULES
ES101	ELECTRICAL SITE PLAN
EP101	MAIN LEVEL POWER PLAN
EP102	MEZZANINE POWER PLAN
EL101	MAIN LEVEL LIGHTING PLAN
EL102	MEZZANINE LIGHTING PLAN

ABBREVIATIONS

NOTE: ALL ABBREVIATIONS MAY NOT BE USED.

1P	SINGLE POLE	KV	KILOVOLT
1PH	SINGLE-PHASE	KVA	KILOVOLT AMPERE
1WAY	ONE-WAY	kVAR	KILOVOLT AMPERE REACTIVE
2/C	TWO-CONDUCTOR	kW	KILOWATT
2WAY	TWO-WAY	kWh	KILOWATT HOUR
3/C	THREE-CONDUCTOR	LED	LIGHT EMITTING DIODE
3PH	THREE-PHASE	LFMC	LIQUID TIGHT FLEXIBLE METAL CONDUIT
3WAY	THREE-WAY	LFNC	LIQUID TIGHT FLEXIBLE NONMETALLIC CONDUIT
4OUT	QUADRUPLE RECEPTACLE OUTLET	LPS	LOW PRESSURE SODIUM
4PDT	FOUR-POLE DOUBLE THROW	LRA	LOCKED ROTOR AMPS
4PST	FOUR-POLE SINGLE THROW	LTG	LIGHTING
4W	FOUR-WIRE	LV	LOW VOLTAGE
4WAY	FOUR-WAY	MATV	MASTER ANTENNA TELEVISION SYSTEM
A	ABOVE COUNTER	MAX	MAXIMUM
AC	ARMORED CABLE	MC	METAL CLAD
ADA	AMERICANS WITH DISABILITIES ACT	MCA	MINIMUM CIRCUIT AMPS
ADJ	ADJACENT	MCB	MAIN CIRCUIT BREAKER
AFF	ABOVE FINISHED FLOOR	MCC	MOTOR CONTROL CENTER
AFG	ABOVE FINISHED GRADE	MCP	MOTOR CIRCUIT PROTECTION
AIC	AMPERE INTERRUPTING CAPACITY	MDP	MAIN DISTRIBUTION PANEL
ALUM	ALUMINUM	MG	MOTOR GENERATOR
AMP	AMPERE	MH	MANHOLE
ANN	ANNUNCIATOR	MIN	MINIMUM
AP	ACCESS POINT (WIRELESS DATA)	MLO	MAIN LUGS ONLY
AR	AS REQUIRED	MOCP	MAXIMUM OVERCURRENT PROTECTION
ASC	AMPS SHORT CIRCUIT	NA	NOT APPLICABLE
ATS	AUTOMATIC TRANSFER SWITCH	NC	NORMALLY CLOSED
AV	AUDIO VISUAL	NEC	NATIONAL ELECTRICAL CODE
AWG	AMERICAN WIRE GAGE	NEMA	NATIONAL ELECTRICAL MANUFACTURERS ASSOCIATION
BB XFMR	BUCK-BOOST TRANSFORMER	NFC	NATIONAL FIRE CODE
C	CEILING MOUNTED	NFPA	NATIONAL FIRE PROTECTION ASSOCIATION
CATV	COMMUNITY ANTENNA TELEVISION	NIC	NOT IN CONTRACT
CB	CIRCUIT BREAKER	NL	NIGHT LIGHT
CCBA	CUSTOM COLOR AS SELECTED BY ARCHITECT	NO	NORMALLY OPEN
CCTV	CLOSED CIRCUIT TELEVISION	NTS	NOT TO SCALE
CFBA	CUSTOM FINISH AS SELECTED BY ARCHITECT	OC	ON CENTER
CF/CI	CONTRACTOR FURNISHED/ CONTRACTOR INSTALLED	OCP	OVER CURRENT PROTECTION
CF/OI	CONTRACTOR FURNISHED/ OWNER INSTALLED	OF/CI	OWNER FURNISHED/ CONTRACTOR INSTALLED
CKT	CIRCUIT	OF/OI	OWNER FURNISHED/ OWNER INSTALLED
CM	CONSTRUCTION MANAGER	OFP	OBTAIN FROM PLANS
CND	CONDUIT	OH DR	OVERHEAD (COILING) DOOR
CO	CONVENIENCE OUTLET	OL	OVERLOAD
COR	CONTRACTING OFFICER'S REPRESENTATIVE	PB	PUSHBUTTON
CP	CONTROL PANEL	PF	POWER FACTOR
CT	CURRENT TRANSFORMER	PH	PHASE
CTV	CABLE TELEVISION	PNL	PANEL
CU	COPPER	PT	POTENTIAL TRANSFORMER
dBA	UNIT OF SOUND LEVEL	PTZ	PAN/TILT/ZOOM
DPDT	DOUBLE POLE DOUBLE THROW	QTY	QUANTITY
DS	DISCONNECT SWITCH	R	REMOVE
EA	EACH	RCP	REFLECTED CEILING PLAN
EM	EMERGENCY	RMC	RIGID METAL CONDUIT
EMT	ELECTRICAL METALLIC TUBING	RNC	RIGID NONMETALLIC CONDUIT
ENT	ELECTRICAL NONMETALLIC TUBING	RPM	REVOLUTIONS PER MINUTE
EPO	EMERGENCY POWER OFF	RR	REMOVE AND RELOCATE
EQUIP	EQUIPMENT	SCA	SHORT CIRCUIT AMPS
EX	EXISTING	SCBA	STANDARD COLOR AS SELECTED BY ARCHITECT
F	FURNITURE MOUNTED	SF	SQUARE FOOT (FEET)
FA	FIRE ALARM	SFBA	STANDARD FINISH AS SELECTED BY ARCHITECT
FCP	FIRE ALARM CONTROL PANEL	SPDT	SINGLE POLE, DOUBLE THROW
FLA	FULL LOAD AMPS	SPEC	SPECIFICATION
FMC	FLEXIBLE METALCONDUIT	SPST	SINGLE POLE, SINGLE THROW
FOB	FREIGHT ON BOARD	S/S	START/STOP
FVNR	FULL VOLTAGE NON-REVERSING	ST	SINGLE THROW
FVR	FULL VOLTAGE REVERSING	SWBD	SWITCHBOARD
G	GROUND	SWGR	SWITCHGEAR
GEN	GENERATOR	TL	TWIST LOCK
GFCI	GROUND FAULT CIRCUIT INTERRUPTER	TP	TELEPHONE POLE
GFP	GROUND FAULT PROTECTION	TP	TWISTED PAIR
HD	HEAVY DUTY	TTB	TELEPHONE TERMINAL BOARD
HID	HIGH INTENSITY DISCHARGE	TV	TELEVISION
HOA	HAND-OFF-AUTOMATIC	TVSS	TRANSIENT VOLTAGE SURGE SUPPRESSER
HP	HORSE POWER	TYP	TYPICAL
HPF	HIGH POWER FACTOR	UF	UNDERFLOOR
HPS	HIGH PRESSURE SODIUM	UGND	UNDERGROUND
HV	HIGH VOLTAGE	UPS	UNINTERRUPTIBLE POWER SUPPLY
HZ	HERTZ	V	VOLTS
IG	ISOLATED GROUND	VA	VOLT AMPERE
IMC	INTERMEDIATE METAL CONDUIT	VFC/VFD	VARIABLE FREQUENCY MOTOR CONTROLLER
IN/IS	INSULATED/ISOLATED	W/	WITH
I/O	INPUT/OUTPUT	W/O	WITHOUT
IR	INFRARED	WP	WEATHERPROOF
J-BOX	JUNCTION BOX	XFMR	TRANSFORMER

GENERAL ELECTRICAL NOTES

1. CLARIFICATION METHODS: AT THE TIME OF BIDDING, BIDDERS SHALL FAMILIARIZE THEMSELVES WITH THE DRAWINGS AND SPECIFICATIONS. ANY QUESTIONS, MISUNDERSTANDINGS, CONFLICTS, DELETIONS, DISCONTINUED PRODUCTS, CATALOG NUMBER DISCREPANCIES, DISCREPANCIES BETWEEN THE EQUIPMENT SUPPLIED AND THE INTENT OR FUNCTION OF THE EQUIPMENT, ETC, SHALL BE SUBMITTED TO THE ARCHITECT/ENGINEER IN WRITING FOR CLARIFICATION PRIOR TO ISSUANCE OF THE FINAL ADDENDUM AND BIDDING OF THE PROJECT. WHERE DISCREPANCIES OR MULTIPLE INTERPRETATIONS OCCUR, THE MOST STRINGENT (WHICH IS GENERALLY RECOGNIZED AS THE MOST COSTLY) THAT MEETS THE INTENT OF THE DOCUMENTS SHALL BE ENFORCED.

2. OWNER FURNISHED ITEMS: THE OWNER WILL FURNISH MATERIAL AND EQUIPMENT AS INDICATED IN THE CONTRACT DOCUMENTS TO BE INCORPORATED INTO THE WORK. THESE ITEMS ARE ASSIGNED TO THE INSTALLER AND COSTS FOR RECEIVING, HANDLING, STORAGE, IF REQUIRED, AND INSTALLATION ARE INCLUDED IN THE CONTRACT SUM.

   A. THE INSTALLER'S RESPONSIBILITIES ARE THE SAME AS IF THE INSTALLER FURNISHED THE MATERIALS OR EQUIPMENT.

   B. THE OWNER WILL ARRANGE AND PAY FOR DELIVERY OF OWNER FURNISHED ITEMS FREIGHT ON BOARD JOB SITE AND THE INSTALLER WILL INSPECT DELIVERIES FOR DAMAGE. IF OWNER FURNISHED ITEMS ARE DAMAGED, DEFECTIVE OR MISSING, DOCUMENT DAMAGED ITEMS WITH THE TRANSPORT COMPANY AND THE OWNER WILL ARRANGE FOR REPLACEMENT. THE OWNER WILL ALSO ARRANGE FOR MANUFACTURER'S FIELD SERVICES, AND THE DELIVERY OF MANUFACTURER'S WARRANTIES AND BONDS TO THE INSTALLER.

   C. THE INSTALLER IS RESPONSIBLE FOR DESIGNATING THE DELIVERY DATES OF OWNER FURNISHED ITEMS AND FOR RECEIVING, UNLOADING AND HANDLING OWNER FURNISHED ITEMS AT THE SITE. THE INSTALLER IS RESPONSIBLE FOR PROTECTING OWNER FURNISHED ITEMS FROM DAMAGE, INCLUDING DAMAGE FROM EXPOSURE TO THE ELEMENTS, AND TO REPAIR OR REPLACE ITEMS DAMAGED AS A RESULT OF HIS OPERATIONS.

3. EXPOSED STRUCTURE AREAS (EXCLUDING MECHANICAL, ELECTRICAL, AND COMMUNICATION SPACES): INSTALL RACEWAYS BETWEEN DECK AND STRUCTURE WHEREVER POSSIBLE IN EXPOSED STRUCTURE CEILING AREAS. ROUTE RACEWAYS IN CONCEALED AREAS WHEREVER POSSIBLE. REFER ALL CONDITIONS WHERE RACEWAYS MUST BE INSTALLED WHICH CANNOT COMPLY WITH THESE REQUIREMENTS TO THE ARCHITECT.

4. SUBMITTALS: PROVIDE SUBMITTALS IN THREE RING BINDERS WITH JOB NAME, SUBCONTRACTOR, AND VOLUME ON THE BINDING. PREPARE TABS FOR EACH SPECIFICATION SECTION REQUIRING SUBMITTALS. PREPARE INDEX OF EQUIPMENT SUBMITTED IN EACH TAB.

5. REFLECTED CEILING PLANS: COORDINATE THE LOCATION OF LIGHT FIXTURES WITH THE ARCHITECTURAL REFLECTED CEILING PLANS. REFER ALL DISCREPANCIES TO THE ARCHITECT AND ENGINEER.

DEFINITIONS

NOTE: ALL DEFINITIONS MAY NOT BE USED.

INDICATED: THE TERM "INDICATED" REFERS TO GRAPHIC REPRESENTATIONS, NOTES, OR SCHEDULES ON THE DRAWINGS, OTHER PARAGRAPHS OR SCHEDULES IN THE SPECIFICATIONS, AND SIMILAR REQUIREMENTS IN THE CONTRACT DOCUMENTS. WHERE TERMS SUCH AS "SHOWN", "NOTED", "SCHEDULED", AND "SPECIFIED" ARE USED, IT IS TO HELP THE READER LOCATE THE REFERENCE, NO LIMITATION ON LOCATION IS INTENDED.

DIRECTED: TERMS SUCH AS "DIRECTED", "REQUESTED", AUTHORIZED", "SELECTED", "APPROVED", "REQUIRED", AND "PERMITTED" MEAN "DIRECTED BY THE ENGINEER", "REQUESTED BY THE ENGINEER", AND SIMILAR PHRASES.

APPROVED: THE TERM "APPROVED", WHERE USED IN CONJUNCTION WITH THE ENGINEER'S ACTION ON THE CONTRACTOR'S SUBMITTALS, APPLICATIONS, AND REQUESTS, IS LIMITED TO THE ENGINEER'S DUTIES AND RESPONSIBILITIES AS STATED IN GENERAL AND SUPPLEMENTARY CONDITIONS.

FURNISH: THE TERM "FURNISH" IS USED TO MEAN "SUPPLY AND DELIVER TO THE PROJECT SITE, READY FOR UNLOADING, UNPACKING, ASSEMBLY, INSTALLATION, AND SIMILAR OPERATIONS."

INSTALL: THE TERM "INSTALL" IS USED TO DESCRIBE OPERATIONS AT PROJECT SITE INCLUDING THE ACTUAL "UNLOADING, UNPACKING, ASSEMBLY, ERECTION, PLACING, ANCHORING, APPLYING, WORKING TO DIMENSION, FINISHING, CURING, PROTECTING, CLEANING, AND SIMILAR OPERATIONS."

PROVIDE: THE TERM "PROVIDE" MEANS "TO FURNISH AND INSTALL, COMPLETE AND READY FOR THE INTENDED USE."

INSTALLER: AN "INSTALLER" IS THE CONTRACTOR OR AN ENTITY ENGAGED BY THE CONTRACTOR, EITHER AS AN EMPLOYEE, SUBCONTRACTOR, OR SUB-SUBCONTRACTOR, FOR PERFORMANCE OF A PARTICULAR CONSTRUCTION ACTIVITY, INCLUDING INSTALLATION, ERECTION, APPLICATION, AND SIMILAR OPERATIONS. INSTALLERS ARE REQUIRED TO BE EXPERIENCED IN THE OPERATIONS THEY ARE ENGAGED TO PERFORM.

TECHNOLOGY SYSTEMS: THE TERM "TECHNOLOGY SYSTEMS" IS USED TO DESCRIBE ALL LOW VOLTAGE SYSTEMS GENERALLY REFERRED TO AS "SPECIAL SYSTEMS". THESE SYSTEMS INCLUDE BUT ARE NOT NECESSARILY LIMITED TO ALL SYSTEMS WHICH UTILIZE VOLTAGES OF LESS THAN 71 VOLTS SUCH AS SOUND SYSTEMS, VIDEO SYSTEMS, TV SYSTEMS, SECURITY SYSTEMS, VOICE AND DATA CABLING SYSTEMS, ETC...

COOPER ROBERTS SIMONSEN ASSOCIATES

crsa

700 NORTH 200 WEST
SALT LAKE CITY,UTAH 84103
(801) 355-5915
(801) 355-9885 FAX
WWW.CRSA-US.COM

STRUCTURAL ENGINEER
CALDER RICHARDS CONSULTING ENGINEERS
634 South 400 East
SALT LAKE CITY, UT 84101
(801) 466-1699 (801) 467-2495 FAX
- stephen@crceng.com

MECHANICAL ENGINEER
SMD
986 WEST ATHERTON DRIVE STE. 200
TAYLORSVILLE, UTAH 84123
(801)268-3828 FAX (801)268-3297
- -

ELECTRICAL ENGINEER
SPECTRUM
175 S MAIN STREET STE. 300
SALT LAKE CITY, UTAH 84111
(801)328-5151 (801)401-9471
- -

CIVIL ENGINEER
Stanley Consultants Inc.
5353 south 960 East
SALT LAKE CITY, UTAH 84117
(801)293-8880 (801)801-8886
- -

J. M. BROWNING ARMORY
197TH RIGGER FACILITY
DFCM NO. 08243480
625 E. 5300 S.
OGDEN, UTAH 84402

UTAH NATIONAL GUARD
12953 SOUTH
MINUTEMAN DRIVE.
DRAPER UTAH 84020-1776

2		
1		
-	-	-
-	-	-
-	-	-
CD	2 SEP 08	BID DOCUMENTS

PROJECT NO:	B08-062
CAD DWG FILE:	
DRAWN BY:	PSS
CHECKED BY:	DLA

SYMBOL LEGEND, SHEET INDEX & ABBREVIATIONS

EE001

SHEET OF

File Name: P:\2008\20080416\1Drawings\Sheet\16EE-001.dwg Last Plotted: 2008/09/02 @ 3:07 PM By: pss

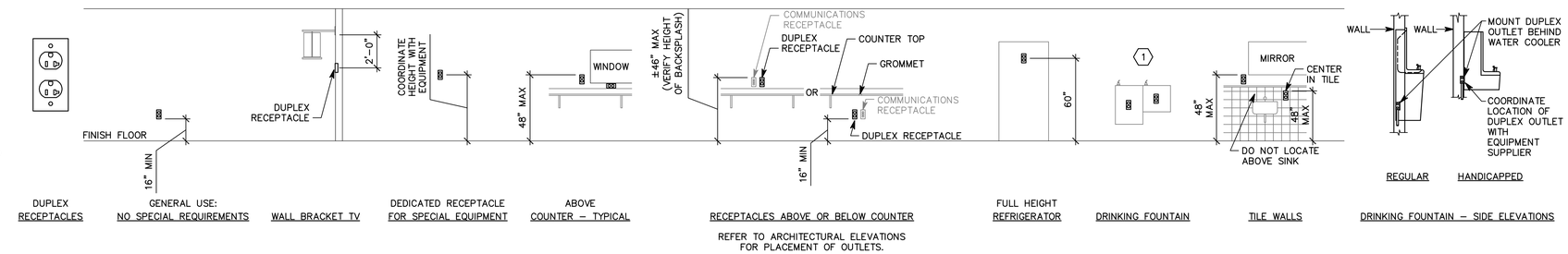

DUPLEX RECEPTACLES | GENERAL USE: NO SPECIAL REQUIREMENTS | WALL BRACKET TV | DEDICATED RECEPTACLE FOR SPECIAL EQUIPMENT | ABOVE COUNTER – TYPICAL | RECEPTACLES ABOVE OR BELOW COUNTER | FULL HEIGHT REFRIGERATOR | DRINKING FOUNTAIN | TILE WALLS | DRINKING FOUNTAIN – SIDE ELEVATIONS

REFER TO ARCHITECTURAL ELEVATIONS FOR PLACEMENT OF OUTLETS.

D1 RECEPTACLE MOUNTING DETAILS

NTS

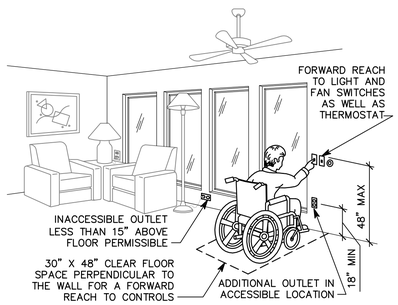

C1 ADA DETAIL

NTS

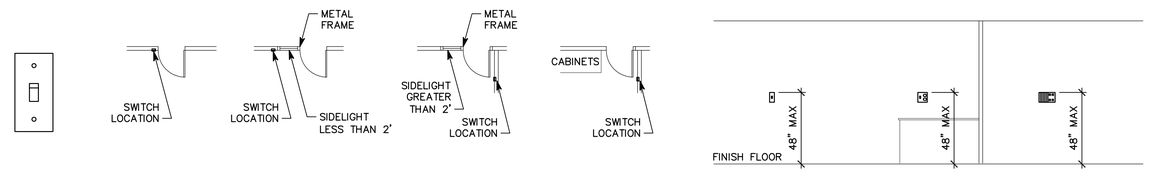

SWITCHES | STANDARD DOOR | DOOR WITH SIDELIGHT LESS THAN 2' | DOOR WITH SIDELIGHT GREATER THAN 2' | DOOR WITH NO PLACE FOR SWITCH AT LATCH SIDE | GENERAL USE: ADA | COMBINATION 48" MAX PLATE FOR SWITCH AND RECEPTACLE IN RESIDENTIAL BATHROOM | LIGHTING CONTROL STATION

C2 SWITCH MOUNTING DETAILS

NTS

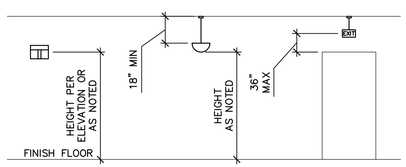

WALL MOUNTED LIGHT FIXTURE | PENDANT LIGHT FIXTURE | PENDANT EXIT SIGNS

B1 LIGHTING MOUNTING DETAILS

NTS

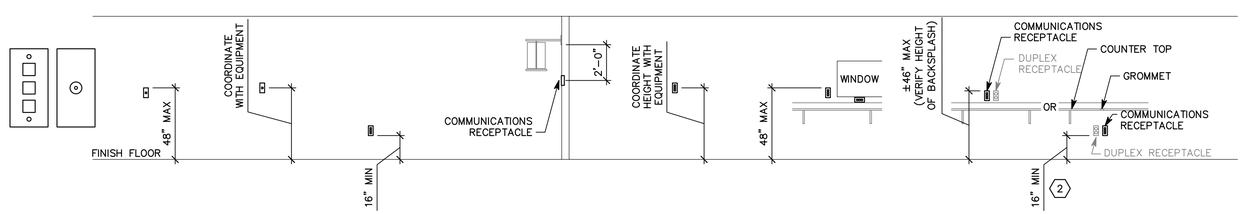

COMMUNICATION RECEPTACLES | WALL PHONE | PAY PHONE | GENERAL USE: NO SPECIAL REQUIREMENTS | WALL BRACKET TV | DEDICATED RECEPTACLE FOR SPECIAL EQUIPMENT | ABOVE COUNTER – TYPICAL | RECEPTACLES ABOVE OR BELOW COUNTER

B2 COMMUNICATION MOUNTING DETAILS

NTS

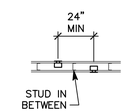

BOXES ON OPPOSITE SIDES OF WALL

B5 BOX MOUNTING DETAILS

NTS

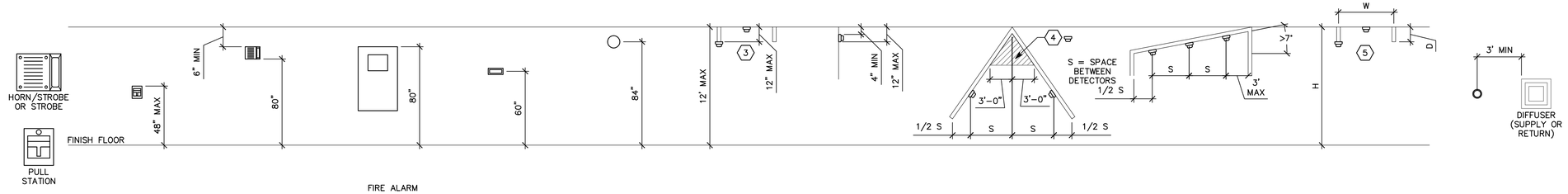

FIRE ALARM | PULL STATION | HORN, CHIME, OR STROBE | FIRE ALARM CONTROL PANEL "FCP" | FIRE SYSTEM ANNUNCIATOR "FSA" | BELL | SMOKE DETECTOR BETWEEN BEAMS | WALL MOUNTED SMOKE DETECTOR | SMOKE DETECTOR ON SLOPED CEILING (PEAKED) | SMOKE DETECTOR ON SLOPED CEILING (SHED) | HEAT DETECTOR BETWEEN BEAMS | SMOKE DETECTOR ADJACENT TO SUPPLY AIR

A1 FIRE ALARM MOUNTING DETAILS

NTS

GENERAL SHEET NOTES

1. DETERMINE MOUNTING HEIGHTS OF ELECTRICAL AND ELECTRONIC EQUIPMENT IN THE FOLLOWING ORDER OF PRIORITY:

   1 – ELEVATIONS (ARCHITECTURAL, ELECTRICAL, MECHANICAL, ETC).
   2 – EQUIPMENT SHOP DRAWINGS.
   3 – FIELD INSTRUCTIONS.

2. LOCATE RECEPTACLES SERVING THE SAME TYPE OF USE AT A UNIFORM HEIGHT UNLESS DIRECTED OTHERWISE.
3. MECHANICAL, ELECTRICAL, AND COMMUNICATION ROOMS: COORDINATE LOCATION OF LIGHTING AND POWER RECEPTACLES WITH EQUIPMENT, PIPING, AND DUCTWORK. DO NOT INSTALL RECEPTACLES BEHIND EQUIPMENT OR WHERE OTHERWISE INACCESSIBLE. POSITION LIGHTING REGARDLESS OF WHERE SHOWN ON DRAWING TO PROVIDE PROPER ILLUMINATION.
4. MOUNT RECEPTACLE BOXES FOR SWITCHES AND RECEPTACLES WITH LONG AXIS OF THE DEVICE VERTICAL UNLESS OTHERWISE INDICATED.
5. SET BOXES WITH PLASTER RINGS FLUSH WITH FINISHED SURFACE.
6. LOCATE BOX COVERS OR DEVICE PLATES SO THEY WILL NOT SPAN DIFFERENT TYPES OF BUILDING FINISHES EITHER VERTICALLY OR HORIZONTALLY.
7. VERIFY ALL DOOR CONDITIONS ON ARCHITECTURAL DRAWINGS PRIOR TO INSTALLING SWITCHES.
8. LOCATE WIRING DEVICES WHICH ARE ADJACENT AND ARE COMPATIBLE VOLTAGES IN ONE PLATE.

⬡ SHEET KEYNOTES

1. LOCATE RECEPTACLES BEHIND DRINKING FOUNTAINS.
2. REFER TO ARCHITECTURAL ELEVATIONS FOR PLACEMENT OF OUTLETS.
3. LOCATE AT BOTTOM OF BEAMS (OR JOISTS) OR AT CEILING. (REDUCE SPACING BY .5 PERPENDICULAR TO BEAM OR JOIST DIRECTION.) FOR OTHER CONDITIONS, REFER TO NFPA 72.
4. LOCATE SMOKE DETECTOR ANYWHERE IN SHADED AREA.
5. LOCATE AT BOTTOM OF BEAMS IF EITHER D/H < .1 OR W/H < .4; OTHERWISE, LOCATE IN BEAM POCKET.

COOPER ROBERTS SIMONSEN ASSOCIATES

crsa

700 NORTH 200 WEST
SALT LAKE CITY,UTAH 84103
(801) 355-5915
(801) 355-9885 FAX
WWW.CRSA-US.COM

STRUCTURAL ENGINEER
CALDER RICHARDS CONSULTING ENGINEERS
634 South 400 East
SALT LAKE CITY, UT 84101
(801) 466-1699 (801) 467-2495 FAX
- stephen@crceng.com

MECHANICAL ENGINEER
SMD
986 WEST ATHERTON DRIVE STE. 200
TAYLORSVILLE, UTAH 84123
(801)268-3828 FAX (801)268-3297
- -

ELECTRICAL ENGINEER
SPECTRUM
175 S MAIN STREET STE. 300
SALT LAKE CITY, UTAH 84111
(801)328-5151 (801)401-9471
- -

CIVIL ENGINEER
Stanley Consultants Inc.
5353 south 960 East
SALT LAKE CITY, UTAH 84117
(801)293-8880 (801)801-8886
- -

J. M. BROWNING ARMORY
197TH RIGGER FACILITY
DFCM NO. 08243480
625 E. 5300 S.
OGDEN, UTAH 84402

UTAH NATIONAL GUARD
12953 SOUTH
MINUTEMAN DRIVE.
DRAPER UTAH 84020-1776

2		
1		
-	-	-
-	-	-
-	-	-
CD	2 SEP 08	BID DOCUMENTS

PROJECT NO: B08-062
CAD DWG FILE:
DRAWN BY: PSS
CHECKED BY: DLA

TYPICAL MOUNTING HEIGHT DETAILS

EE501

SHEET OF

File Name: P:\2008\20080416\1Drawings\Sheet\16EE-501.dwg Last Plotted: 2008/09/02 @ 3:07 PM By: pss

NOTE:
TIE WIRE SHALL NOT BE USED AS A COMPONENT OF ANY RACEWAY HANGER SYSTEM.

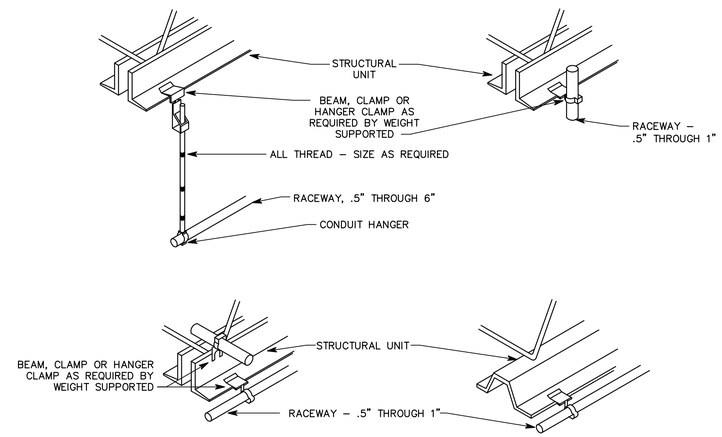

C4 TYPICAL RACEWAY SUPPORT METHODS DETAIL
NTS

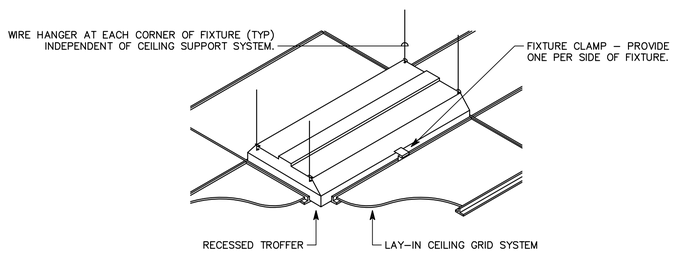

B2 RECESSED FIXTURE MOUNTING DETAIL
NTS

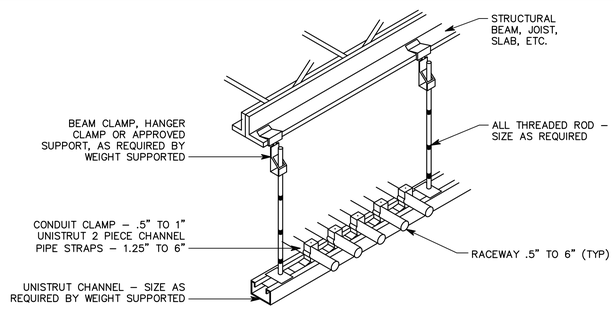

A2 TYPICAL CONDUIT RACK DETAIL
NTS

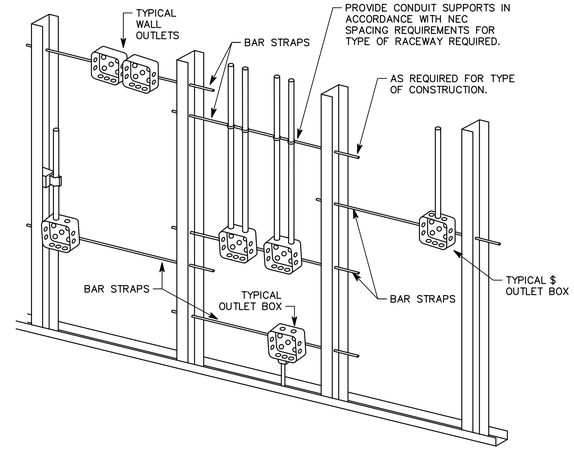

NOTES:

1. TYPICAL FOR WOOD AND METAL STUD ROUGH-IN.
2. PLASTER RINGS NOT SHOWN.
3. LOCATE ALL OUTLET BOXES IN ACCORDANCE WITH ARCHITECTURAL AND MECHANICAL DRAWINGS AND WITH ALL APPLICABLE SHOP DRAWINGS.
4. IN ACCORDANCE WITH IBC 711.3.2 EXCEPTION 1, OUTLETS ON OPPOSITE SIDES OF WALLS OR PARTITIONS IN THE SAME STUD SPACE IN A RATED FIRE SEPARATION WALL MUST BE SEPARATED BY A MINIMUM OF 24" HORIZONTAL DISTANCE.
5. IN NON-RATED WALLS, OUTLETS ON OPPOSITE SIDES OF WALLS OR PARTITIONS MUST BE SEPARATED BY 16" FOR SOUND ATTENUATION.

A4 TYPICAL ROUGH-IN REQUIREMENTS DETAIL
NTS

COOPER ROBERTS SIMONSEN ASSOCIATES
crsa
700 NORTH 200 WEST
SALT LAKE CITY,UTAH 84103
(801) 355-5915
(801) 355-9885 FAX
WWW.CRSA-US.COM

STRUCTURAL ENGINEER
CALDER RICHARDS CONSULTING ENGINEERS
634 South 400 East
SALT LAKE CITY, UT 84101
(801) 466-1699 (801) 467-2495 FAX
- stephen@crceng.com

MECHANICAL ENGINEER
SMD
986 WEST ATHERTON DRIVE STE. 200
TAYLORSVILLE, UTAH 84123
(801)268-3828 FAX (801)268-3297
- -

ELECTRICAL ENGINEER
SPECTRUM
175 S MAIN STREET STE. 300
SALT LAKE CITY, UTAH 84111
(801)328-5151 (801)401-9471
- -

CIVIL ENGINEER
Stanley Consultants Inc.
5353 south 960 East
SALT LAKE CITY, UTAH 84117
(801)293-8880 (801)801-8886
- -

J. M. BROWNING ARMORY
197TH RIGGER FACILITY
DFCM NO. 08243480
625 E. 5300 S.
OGDEN, UTAH 84402

UTAH NATIONAL GUARD
12953 SOUTH
MINUTEMAN DRIVE.
DRAPER UTAH 84020-1776

2		
1		
-	-	-
-	-	-
-	-	-
CD	2 SEP 08	BID DOCUMENTS

PROJECT NO:	B08-062
CAD DWG FILE:	
DRAWN BY:	PSS
CHECKED BY:	DLA

DETAILS

EE502

SHEET OF

File Name: P:\2008\20080416\1Drawings\Sheet\16EE-502.dwg Last Plotted: 2008/09/02 @ 3:07 PM By: pss

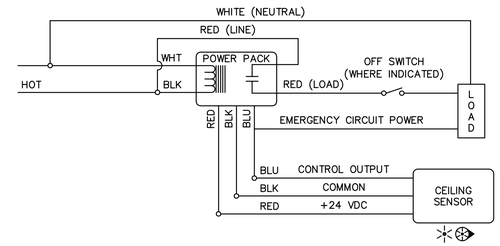

D4 TYPICAL ROOM WITH ONE CEILING SENSOR, WITH OR WITHOUT WALL SWITCH

NO SCALE

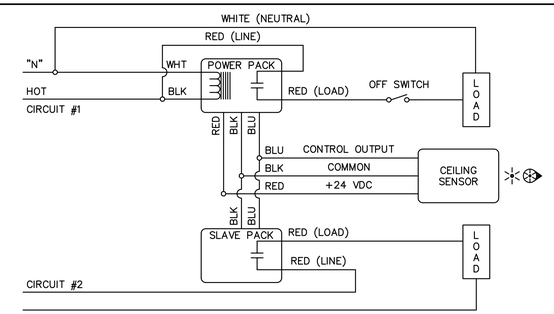

C4 TYPICAL ROOM WITH ONE CEILING SENSOR, CONTROLLING TWO CIRCUITS

NO SCALE

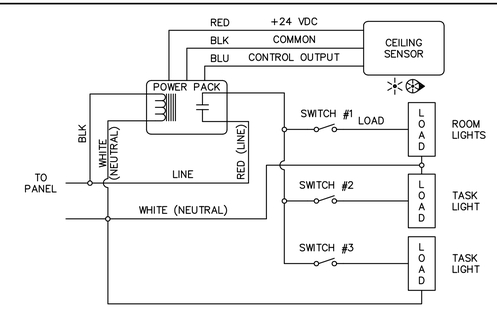

B4 TYPICAL ROOM WITH ONE CEILING SENSOR, ONE CIRCUIT AND MULTIPLE SWITCHED LOADS

NO SCALE

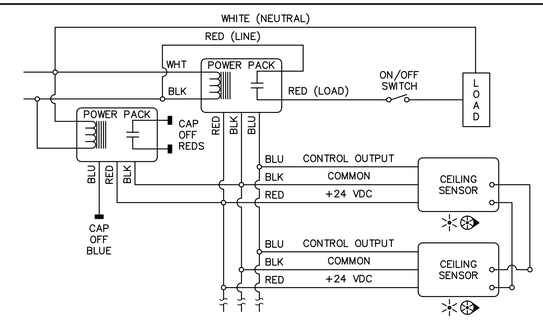

A4 TYPICAL ROOM WITH MULTIPLE CEILING SENSORS

NO SCALE

COOPER ROBERTS SIMONSEN ASSOCIATES

crsa

700 NORTH 200 WEST
SALT LAKE CITY,UTAH 84103
(801) 355-5915
(801) 355-9885 FAX
WWW.CRSA-US.COM

STRUCTURAL ENGINEER
CALDER RICHARDS CONSULTING ENGINEERS
634 South 400 East
SALT LAKE CITY, UT 84101
(801) 466-1699 (801) 467-2495 FAX
- stephen@crceng.com

MECHANICAL ENGINEER
SMD
986 WEST ATHERTON DRIVE STE. 200
TAYLORSVILLE, UTAH 84123
(801)268-3828 FAX (801)268-3297
- -

ELECTRICAL ENGINEER
SPECTRUM
175 S MAIN STREET STE. 300
SALT LAKE CITY, UTAH 84111
(801)328-5151 (801)401-9471
- -

CIVIL ENGINEER
Stanley Consultants Inc.
5353 south 960 East
SALT LAKE CITY, UTAH 84117
(801)293-8880 (801)801-8886
- -

J. M. BROWNING ARMORY
197TH RIGGER FACILITY
DFCM NO. 08243480
625 E. 5300 S.
OGDEN, UTAH 84402

UTAH NATIONAL GUARD
12953 SOUTH
MINUTEMAN DRIVE.
DRAPER UTAH 84020-1776

2		
1		
-	-	-
-	-	-
-	-	-
CD	2 SEP 08	BID DOCUMENTS

PROJECT NO:	B08-062
CAD DWG FILE:	
DRAWN BY:	PSS
CHECKED BY:	DLA

DETAILS

EE503

SHEET OF

File Name: P:\2008\20080416\1Drawings\Sheet\16EE-503.dwg Last Plotted: 2008/09/02 @ 3:07 PM By: pss

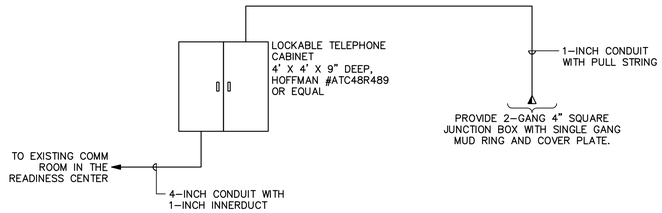

C4 COMMUNICATIONS CONDUIT RISER DIAGRAM

NO SCALE

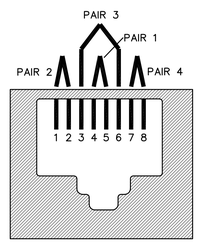

T568B

PAIR ID	PIN #
T1	5
R1	4
T2	1
R2	2
T3	3
R3	6
T4	7
R4	8

COLOR SCHEME
PAIR 1 – BLUE
PAIR 2 – ORANGE
PAIR 3 – GREEN
PAIR 4 – BROWN

B2 RJ45 WIRING DETAIL

NO SCALE

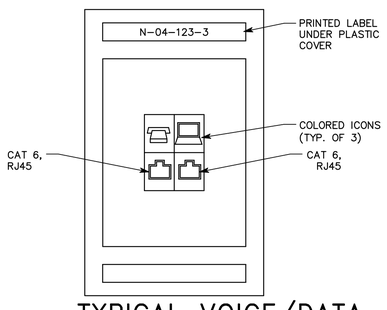

A2 TYPICAL VOICE/DATA PLATE DETAIL

NO SCALE

DETAIL KEYNOTES

1. PROVIDE NEW 4-INCH CONDUIT WITH PULL STRING. COORDINATE REQUIREMENTS WITH ROCKY MOUNTAIN POWER (RMP).

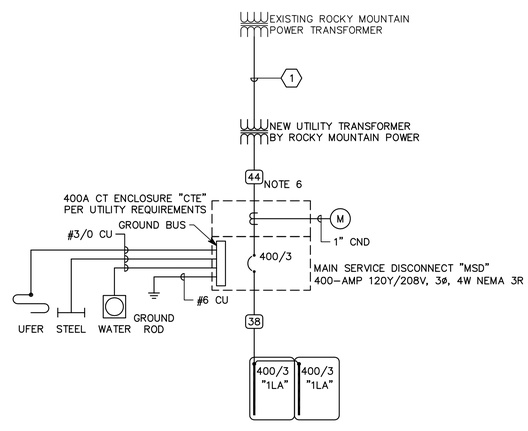

A3 ONE-LINE DIAGRAM

NO SCALE

GENERAL SHEET NOTES

1. PROVIDE NEMA 3R ENCLOSURES FOR EQUIPMENT LOCATED OUTDOORS. REFER TO PLANS FOR EQUIPMENT LOCATIONS.
2. REFER TO PLANS FOR CONSTRAINTS ON PHYSICAL DIMENSIONS AND CLEARANCE REQUIREMENTS OF EQUIPMENT. PROVIDE EQUIPMENT DIMENSIONS THAT FALL WITHIN THE CONSTRAINTS OF EACH SPECIFIC LOCATION.
3. ALL EQUIPMENT SHALL BE CONSTRUCTED AND BRACED FOR THE SEISMIC CONDITIONS OF THE PROJECT. REFER TO SPECIFICATIONS SECTION 16071 FOR REQUIREMENTS.

CONDUCTOR AND CONDUIT SCHEDULE

** — SCHEDULE NUMBER; SUBSCRIPT (NOTE 5)

(E.G.) 5 IG

SYM	AMP	CONDUIT SIZE	CONDUCTOR(NOTE 1) QTY	SIZE	G	IG	SE	NOTES
1	20	.75	2	12	12	12	8	2
2	20	.75	3	12	12	12	8	2,3
3	20	.75	4	12	12	12	8	2,3
4	30	.75	2	10	10	10	8	2
5	30	.75	3	10	10	10	8	2
6	30	.75	4	10	10	10	8	2
7	40	1	2	8	10	8	6	2
8	40	1	3	8	10	8	6	2
9	40	1	4	8	10	8	6	2
10	55	1	2	6	10	8	4	2
11	55	1	3	6	10	8	4	2
12	55	1.25	4	6	10	8	4	2
13	70	1	2	4	8	4	2	2
14	70	1.25	3	4	8	4	2	2
15	70	1.25	4	4	8	4	2	2
16	85	1.25	2	3	8	3	2	2
17	85	1.25	3	3	8	3	2	2
18	85	1.25	4	3	8	3	2	2
19	95	1.25	3	2	8	2	2	2
20	95	1.50	4	2	8	2	2	2
21	130	1.50	3	1	6	2	2	2
22	130	1.50	4	1	6	2	2	2
23	150	2	3	1/0	6	2	1/0	2
24	150	2	4	1/0	6	2	1/0	2
25	175	2	3	2/0	6	2	2/0	2
26	175	2	4	2/0	6	2	2/0	2
27	200	2	3	3/0	6	2	2/0	2
28	200	2.50	4	3/0	6	2	2/0	2
29	230	2.50	3	4/0	4	2	2/0	2
30	230	2.50	4	4/0	4	2	2/0	2
31	255	2.50	3	250	4	1	2/0	2
32	255	2.50	4	250	4	1	2/0	2
33	310	3	3	350	3	1/0	3/0	2
34	310	3	4	350	3	1/0	3/0	2
35	380	3.50	3	500	3	3/0	3/0	2
36	380	4	4	500	3	3/0	3/0	2
37	400	2 EA 2	3	3/0	3	3/0	3/0	2
38	400	2 EA 2.50	4	3/0	3	3/0	3/0	2
39	510	2 EA 2.50	3	250	1	4/0	3/0	2
40	510	2 EA 3	4	250	1	4/0	3/0	2
41	620	2 EA 3	3	350	1/0	4/0	3/0	2,4
42	620	2 EA 3	4	350	1/0	4/0	3/0	2,4
43	760	2 EA 3.50	3	500	1/0	4/0	3/0	2,4
44	760	2 EA 4	4	500	1/0	4/0	3/0	2,4
45	855	3 EA 3	3	300	2/0	4/0	3/0	2,4
46	855	3 EA 3	4	300	2/0	4/0	3/0	2,4
47	1000	3 EA 3.50	3	400	2/0	4/0	3/0	4
48	1000	3 EA 3.50	4	400	2/0	4/0	3/0	4
49	1140	3 EA 4	3	500	3/0	4/0	3/0	4
50	1140	3 EA 4	4	500	3/0	4/0	3/0	4
51	1240	4 EA 3	3	350	3/0	4/0	3/0	4
52	1240	4 EA 3	4	350	3/0	4/0	3/0	4
53	1675	5 EA 3.50	4	400	4/0	4/0	4/0	4
54	2010	6 EA 3.50	4	400	250	250	250	4
55	2660	7 EA 4	4	500	350	350	350	4
56	3040	8 EA 4	4	500	500	500	500	4
57	4180	11 EA 4	4	500	500	500	500	4
58		5 EA 4						6
59		5						6
60		10 EA 4						6

CONDUCTOR AND CONDUIT SCHEDULE NOTES

1. CONDUCTORS SHOWN ARE SHOWN FOR EACH CONDUIT WITH MODIFICATIONS AS NOTED IN NOTE 5. ALL CONDUCTORS SHOWN ARE THWN UNLESS OTHERWISE NOTED.
2. PROVIDE EQUIPMENT GROUND CONDUCTORS PER TABLE 250-122 WHEN CIRCUIT BREAKERS ARE SIZED GREATER THAN AMPERE RATING SHOWN IN TABLE.
3. PROVIDE #10 NEUTRALS FOR MULTIWIRE BRANCH CIRCUITS SERVING COMPUTERS.
4. GROUND (G) CONDUCTOR MAY BE DELETED ON SERVICE ENTRANCE CONDUCTORS.
5. WHEN SYMBOL SUBSCRIPT INDICATES "IG", INCLUDE "IG" OR INSULATED GROUND CONDUCTOR SCHEDULED ALONG WITH GROUND OR EQUIPMENT GROUND CONDUCTOR. WHEN SYMBOL SUBSCRIPT INDICATES "SE", SUBSTITUTE "SE" CONDUCTOR FOR "G" CONDUCTOR SHOWN WHICH IS SIZED FOR THE GROUNDING OF THE SECONDARY OF THE SEPARATELY DERIVED SYSTEMS.
6. RACEWAY ONLY. CONDUCTORS PROVIDED BY UTILITY.

COOPER ROBERTS SIMONSEN ASSOCIATES
crsa
700 NORTH 200 WEST
SALT LAKE CITY,UTAH 84103
(801) 355-5915
(801) 355-9885 FAX
WWW.CRSA-US.COM

STRUCTURAL ENGINEER
CALDER RICHARDS CONSULTING ENGINEERS
634 South 400 East
SALT LAKE CITY, UT 84101
(801) 466-1699 (801) 467-2495 FAX
- stephen@crceng.com

MECHANICAL ENGINEER
SMD
986 WEST ATHERTON DRIVE STE. 200
TAYLORSVILLE, UTAH 84123
(801)268-3828 FAX (801)268-3297
- -

ELECTRICAL ENGINEER
SPECTRUM
175 S MAIN STREET STE. 300
SALT LAKE CITY, UTAH 84111
(801)328-5151 (801)401-9471
- -

CIVIL ENGINEER
Stanley Consultants Inc.
5353 south 960 East
SALT LAKE CITY, UTAH 84117
(801)293-8880 (801)801-8886
- -

J. M. BROWNING ARMORY
197TH RIGGER FACILITY
DFCM NO. 08243480
625 E. 5300 S.
OGDEN, UTAH 84402

UTAH NATIONAL GUARD
12953 SOUTH
MINUTEMAN DRIVE.
DRAPER UTAH 84020-1776

2		
1		
-	-	-
-	-	-
-	-	-
CD	2 SEP 08	BID DOCUMENTS

PROJECT NO: B08-062
CAD DWG FILE:
DRAWN BY: PSS
CHECKED BY: DLA

ONE-LINE DIAGRAM

EE601

SHEET OF

File Name: P:\2008\20080416\1Drawings\Sheet\16EE-601.dwg Last Plotted: 2008/09/02 @ 3:07 PM By: pss

PANEL "1LA"

VOLTS/PHASE/WIRE:	PANEL SIZE & TYPE:	MAIN SIZE & TYPE:	LOCATION:	CABINET:	NOTES:
120/208 V, 3 PH 4 WIRE	22" W x 6" D, BOLT-ON	400 AMPERE MAIN LUG		SURFACE	42,000 AIC

ACCESSORIES: PANEL DIRECTORY, IDENTIFICATION, GROUNDING BAR, SUBFEED LUGS, HINGED COVER

CKT	OCP		LOAD (kVA)			DESCRIPTION	LCL	PHASE LOAD			LCL	DESCRIPTION	LOAD (kVA)			OCP		CKT
NO	AMP	POLE	LTG	CO	PWR		kVA	A	B	C	kVA		LTG	CO	PWR	AMP	POLE	NO
1	20	1		0.4		PACKING AREA	0.4	1.6			1.5	PACKING AREA LIGHTS	1.2			20	1	2
3	20	1		0.8		PACKING AREA	0.8		2.1		1.6	PACKING AREA LIGHTS	1.3			20	1	4
5	20	1		0.8		PACKING AREA	0.8			1.7	1.1	PACKING AREA LIGHTS	0.9			20	1	6
7	20	1		0.6		PACKING AREA	0.6	1.8			1.5	PACKING AREA LIGHTS	1.2			20	1	8
9	20	1		0.8		PACKING AREA	0.8		1.5		0.9	BREAK ROOM/RESTRM	0.7			20	1	10
11	20	1		1.0		PACKING AREA	1.0			1.9	1.1	EXTERIOR LIGHTS	0.9			20	1	12
13	20	1		0.6		BREAK ROOM	0.6	1.4			1.0	MEZZANINE LIGHTS	0.8			20	1	14
15	20	1		0.4		BREAK ROOM	0.4		1.2		0.8	MEZZANINE OFFICE		0.8		20	1	16
17	20	1		0.2		BREAK ROOM COUNTER	0.2			1.0	0.8	MEZZANINE OFFICE		0.8		20	1	18
19	20	1		0.2		BREAK ROOM COUNTER	0.2	0.2			0.0	SPARE				20	1	20
21	20	1		0.4		BREAK ROOM COUNTER	0.4		0.4		0.0	SPARE				20	1	22
23	20	1			1.5	BREAK ROOM REFRIG	1.5			3.2	1.7	OVERHEAD DOOR			1.7	20	1	24
25	20	1		0.4		RESTROOMS	0.4	2.1			1.7	OVERHEAD DOOR			1.7	20	1	26
27	20	1			0.3	EF-1,2,3	0.3		0.3		0.0	SPARE				20	1	28
29	40	1			3.6	WATER HEATER	3.6			3.6	0.0	SPARE				20	1	30
31	20	1				SPARE	0.0	0.0			0.0	SPARE				20	1	32
33	20	1			0.8	DRINKING FOUNTAIN	0.8		0.8		0.0	SPARE				20	1	34
35	20	1			1.0	COMMUNICATIONS CABINET	1.0			1.0	0.0	SPARE				20	1	36
37	20	1				SPARE	0.0	9.0			9.5	FUTURE ADDITION	2.0		7.0	100	3	38
39	20	1				SPARE	0.0		9.0		9.5	----	2.0		7.0	–	–	40
41	20	1				SPARE	0.0			9.0	9.5	----	2.0		7.0	–	–	42
43	40	3			3.5	HUM-1	3.5	3.5			0.0	SPARE				20	1	44
45	–	–			3.5	----	3.5		3.5		0.0	SPARE				20	1	46
47	–	–			3.5	----	3.5			3.5	0.0	SPARE				20	1	48
49	125	3			11.6	RTU-1	11.6	11.6			0.0	SPARE				20	1	50
51	–	–			11.6	----	11.6		11.6		0.0	SPARE				20	1	52
53	–	–			11.6	----	11.6			11.6	0.0	SPARE				20	1	54
55	40	3			3.2	RTU-2	3.2	3.2			0.0	SPARE				20	1	56
57	–	–			3.2	----	3.2		3.2		0.0	SPARE				20	1	58
59	–	–			3.2	----	3.2			3.2	0.0	SPARE				20	1	60
61	20	1				SPARE	0.0	0.0			0.0	SPARE				20	1	62
63	20	1				SPARE	0.0		0.0		0.0	SPARE				20	1	64
65	20	1				SPARE	0.0			0.0	0.0	SPARE				20	1	66
67	20	1				SPARE	0.0	0.0			0.0	BLANK				–	1	68
69	20	1				SPARE	0.0		0.0		0.0	BLANK				–	1	70
71	20	1				SPARE	0.0			0.0	0.0	BLANK				–	1	72
73	–	1				BLANK	0.0	0.0			0.0	BLANK				–	1	74
75	–	1				BLANK	0.0		0.0		0.0	BLANK				–	1	76
77	–	1				BLANK	0.0			0.0	0.0	BLANK				–	1	78
79	–	1				BLANK	0.0	0.0			0.0	BLANK				–	1	80
81	–	1				BLANK	0.0		0.0		0.0	BLANK				–	1	82
83	–	1				BLANK	0.0			0.0	0.0	BLANK				–	1	84

TOTALS:			
CONNECTED kVA PER PHASE	34	34	40
CONNECTED AMPS PER PHASE	287	280	331

CONNECTED TOTAL kVA 108

CONNECTED AVERAGE AMPS PER PHASE 299

NEC DIVERSIFIED LOAD CALCULATIONS

LIGHTING 13kVA @125% =	16 kVA	ALL OTHER LOADS @100% =	87 kVA	DIVERSIFIED TOTAL kVA =	111
RECEPTACLES 8kVA @100% =	8 kVA	25% OF LARGEST MOTOR =	0 kVA	AVERAGE AMPS PER PHASE =	308
REMAINDER 0kVA @ 50% =	0 kVA				

*-PROVIDE NEW 20/1 BREAKER TO MATCH PANEL TYPE. FIELD VERIFY.

EQUIPMENT SCHEDULE KEY

E	DIVISION 16
Q	FURNISHED WITH THE EQUIPMENT
*	COORDINATE WITH THE DIVISION 15 TEMPERATURE CONTROL INSTALLER
**	AUTOMATIC CONTROL WIRING BY DIVISION 15

LIGHTING FIXTURE SCHEDULE

NOTE TO BIDDERS: COMPLY WITH SECTIONS 16511, 16521, AND 16570 OF THE SPECIFICATIONS.
REFER TO SPECIFICATIONS FOR IMPORTANT TECHNICAL REQUIREMENTS FOR LIGHTING FIXTURES, BALLASTS, AND LAMPS. THE CATALOG NUMBERS LISTED BELOW HAVE BEEN CAREFULLY PREPARED TO ASSIST BIDDERS IN SELECTING PRODUCTS TO ACHIEVE THE DESIGN CONCEPT, HOWEVER, PRIOR TO BIDDING, EACH MANUFACTURER SHALL COMPARE THE CATALOG NUMBERS SHOWN WITH THE DESCRIPTION AND REQUIREMENTS ON THE DRAWINGS, AND SHALL NOTIFY THE ARCHITECT/ENGINEER OF ANY DISCREPANCIES. SPECIFICALLY INCLUDED IN THIS EVALUATION SHALL BE THE VERIFYING OF PROPER MOUNTING KITS OR ACCESSORIES TO FACILITATE INSTALLATION AS SHOWN AT EACH LOCATION ON THE DRAWINGS. NO ALLOWANCE OR REDRESS WILL BE ALLOWED FOR DISCREPANCIES THAT WERE NOT REPORTED TO THE ARCHITECT/ENGINEER IN TIME FOR CORRECTION OR CLARIFICATION BEFORE THE BID. THE REPORTING OF ANY AMBIGUITY IS THE RESPONSIBILITY OF THE BIDDER. PROVIDE UNIT PRICES AND FIXTURE BRAND SELECTED FOR ADD/DELETE CHANGES FOR EACH FIXTURE TYPES SHOWN WITHIN 48 BUSINESS HOURS OF THE BID DATE. FAILURE TO COMPLY WITH THIS REQUIREMENT MAY DISQUALIFY THE PRODUCTS AND EMPOWER THE ENGINEER TO DETERMINE FAIR VALUE FOR FIXTURE AND INSTALLATION CHANGES, WITHOUT FURTHER INPUT FROM THE CONTRACTOR OR INSTALLER. SUBMITTAL PACKAGE SHALL INCLUDE LAMP MANUFACTURER AND CATALOG NUMBER ON EACH FIXTURE SHEET. ON ALL PENDANT MOUNTED FIXTURES, PROVIDE A SECOND SET OF PENDANTS, OF A DIFFERENT LENGTH, AS DIRECTED BY THE ARCHITECT/ENGINEER, PROVIDED AND INSTALLED AT NO ADDITIONAL CHARGE. ALL FIXTURES SHALL BE APPROVED BY UL OR ANOTHER ACCEPTABLE TESTING LAB FOR THE PURPOSE INTENDED AND WITH THE LAMP AND BALLAST PROPOSED. CONTRACTOR ALLOWANCE PRICES ARE ACCURATE WHEN THIS JOB WAS SPECIFIED, CONTRACTOR AND ELECTRICAL DISTRIBUTOR SHALL VERIFY THIS ALLOWANCE AND REPORT ANY PROBLEMS TO THE ENGINEER BEFORE THE BID. ALLOWANCE PRICE MAY OR MAY NOT INCLUDE LAMP(S) OR FREIGHT AS NOTED, AND DO NOT INCLUDE ANY TAXES. UNIVERSAL VOLTAGE (120/277) BALLASTS REQUIRED UNLESS NOTED OTHERWISE. DIMENSION SEQUENCE = (LENGTH X WIDTH X DEPTH) IN INCHES.

SYMBOL	MARK	FIXTURE CHARACTERISTICS BODY / AIR / MOUNTING / DOOR LENS/LOUVER/REFLECTOR/OTHER	LAMP	WATTS	VOLTS	MANUFACTURER	CATALOG NUMBER	NOTES
	E	E PREFIX INDICATES THAT FIXTURE IS PROVIDED WITH AN EMERGENCY BATTERY PACK TO PROVIDE POWER TO ANY 2, 3, 4 OR 8 FOOT FLOURESCENT LAMP COMPATIBLE WITH ALL STANDARD AND ELECTRONIC BALLASTS; COMPLETELY SELF-CONTAINED TO PROVIDE 90 MINUTES OF EMERGENCY POWER TO FIXTURE BALLAST; MINIMUM LIGHT OUTPUT FOR TYPICAL 4' LAMP SHALL BE 1100 LUMENS OR HIGHER;UNIVERSAL TRANSFORMER FOR 120 OR 277 VOLTS; LOW VOLTAGE PROTECTION, COMBINATION TEST SWITCH AND AC "ON" INDICATOR; 10 YEAR PRO-RATA WARRANTY; INSTALL TEST SWITCH IN A MANNER THAT REQUIRES NO DISASSEMBLY FOR TESTING.						
	E	EMERGENCY BATTERY PACK.		120/277V3W		IOTA	I-80	
						BODINE	B50	
						LITHONIA	PS-1400	
						PRESCOLITE	EFPS-5	
						EELP	EB1400 (CONTRACTOR INSTALLED)	
						CHLORIDE	CFP841	
						LIGHTOLIER	FBP50	
						SIDELITE	S60F	
	E1	EXIT SIGN: THERMOPLASTIC HOUSING; UNIVERSAL MOUNTING; UNIVERSAL ARROWS PER PLANS; EMERGENCY BATTERY PACK WITH 10 YEAR PRO-RATA WARRANTY; LED, DIFFUSE LENS PANEL; GREEN LETTERS ON WHITE BACKGROUND. MUST MEET NFPA ILLUMINATION STANDARDS.						
	E1-1	SINGLE FACE:	LED	1W	120/277V	MCPHILBEN	CXXL-1-GW	
						DUAL-LITE	LXSGWE	
						EELP	XE 1 GW EM	
						LITHONIA	LQM S W 1 G 120/277 ELN	
						SURE-LITES	LPX70DGW	
						DAY-BRITE	CXL-1-GW-EM	
						CHLORIDE	SLN1GW	
						LIGHTOLIER	LTN1GW	
	GS	TROFFERS: RECESSED FOR LAY-IN GRID; STATIC; HINGED AND LATCHED STEEL DOOR; .125 ACRYLIC PRISMATIC LENS, MINIMUN 1/8"; EARTHQUAKE CLIPS; MAX 5" DEEP; SPECIFICATION GRADE; PROGRAM START ELECTRONIC BALLASTS, T8 LAMPS; ONE BALLAST PER FIXTURE WHERE POSSIBLE, UNLESS TWO LEVEL SWITCHING IS SHOWN ON THE PLANS.						
	GS-3	2X4, 2 LAMP.	2-F32T8 RE835	65W	277/120V	LITHONIA	2 SP8G 232 A12125 MVOLT TUBRHP (4-1/2" DEPTH)	
						METALUX	2GP-232A125-UNV-EB81-PROGRAM START (3-3/4" DEPTH)	
						DAYBRITE	2DPG232-FS21-UNV-1/2EB-SPEC (4-3/8" DEPTH)	
						LSI	LA125 232 SD SSO10PS UE (4" DEPTH)	
						LIGHTOLIER	XT2GVI232-UNV-SOP (3-5/8" DEPTH)	
						COLUMBIA	ST824-232G-FSA12.125-EB8LHPRUNV (3-3/4" DEPTH)	
	GS-4	2X4, 3 LAMP.	3-F32T8 RE835	95W	277/120V	LITHONIA	2 SP8G 332 A12125 1/3 MVOLT TUBRHP (4-1/2" DEPTH)	
						METALUX	2GP-332A125-UNV-EB81-PROGRAM START (3-3/4" DEPTH)	
						DAYBRITE	2DPG332-FS21-UNV-1/3EB-SPEC (4-3/8" DEPTH)	
						COLUMBIA	ST824-332G-FSA12.125-3EB8LHPRUNV (3-3/4" DEPTH)	
						LIGHTOLIER	XT2GVI332-UNV-03P (3-5/8" DEPTH)	
						LSI	LA125 332 SD SSO10PS UE (4" DEPTH)	
	OC	WALL PACK: ADJUSTABLE CUT OFF; FULL PERIMETER GASKETING: WET LOCATION; STAINLESS STEEL HINGES AND LATCHES; PROJECTING LENS; HPF BALLAST; SEE ELEVATION FOR MOUNTING HEIGHT, COLOR AS SPECIFIED BY ARCHITECT.						
	OC-11	200 PSMH, RECESSED J BOX. TYPE 4 CUTOFF OPTICS, DECORATIVE	200PSMH	250W	277/120V	KIM	WD18D4/200PSMH120/XX	
						LSI	WDRS-FT-200MH-F-MT-XXX-NO	
						GREENLEE	WWM-250MH-MT-FT-CBA-PSB	
						GE	CCSX20P0H1BDKBZD	
						MCGRAW-ED	VWM-200-MH-MT-4S-XX	
	OC-32	CF42, RECESSED J BOX. MEDIUM THROW, SQUARE, DECORATIVE	CF42 RE835	50W	277/120V	MCPHILBEN	101MT-42TRF-CBA-DT	
						LSI	GBWS-FTM-42CFL-F-120/277-XX-NO	
						LITHONIA	WST 42TRT MD MVOLT	
						LUMARK	PLIP-T-42-MT-XX	
						LSI	GBWS FTM 42CFL F UE XXX W/LAMP	
	WB	WALL MOUNTED FLUORESCENT LOCATED ABOVE WALL ELEMENT (MIRROR/WHITEBOARD, ETC.): AS INDICATED ON DRAWINGS; WITH ACRYLIC INJECTION MOLDED; PROGRAM START ELECTRONIC BALLASTS; T8 LAMPS; ONE BALLAST PER FIXTURE WHERE POSSIBLE, UNLESS TWO LEVEL SWITCHING IS SHOWN ON THE PLANS.						
	WB-3	2-LAMP, WALL MOUNT 48", STEEL ENCLOSURE, DOWNLIGHT ONLY; ACRYLIC INJECTION MOLDED PRISMATIC DIFFUSER.	2-F32T8 RE835	65W	277/120V	DAYBRITE	CD232W-UNV-1/2-EB-SPEC	
						LIGHTOLIER	CWB232-WB-U-SOP	
						METALUX	BI-232-UNV-PROGRAM START	
						L.A.L.	BSQ100-2-4R-INJ-WHT-T8EB-120/277-UPS	
						COLUMBIA	WAL4-232-EBPS120/277	
						LITHONIA	WP 232 DO MVOLT-TUBPHP	
						LSI	WB 232 SSO10PRS UE	

EQUIPMENT SCHEDULE

MARK	ITEM DESCRIPTION	LOAD DATA HP	kW	MCA	FLA	VOLT	PH	Hz	WIRE AND CONDUIT SIZE (CC-INDICATES CONDUCTOR AND CONDUIT SCHEDULE)	OVERCURRENT PROTECTION FURN BY	SWITCH TYPE	DISCONNECT SWITCH NEMA RATING	FUSED SWITCH	FUSE RATING	FUSE CLASS	CIRCUIT BREAKER CB	PANEL	RATING	NOTES	MARK
EF-1	EXHAUST FAN		64W			120	1	60	CC#1	E	THERMAL SWITCH					20/1		HACR	1	EF-1
EF-2	EXHAUST FAN		64W			120	1	60	CC#1	E	THERMAL SWITCH					20/1		HACR	1	EF-2
EF-3	EXHAUST FAN		64W			120	1	60	CC#1	E	THERMAL SWITCH					20/1		HACR	1	EF-3
EWC-3	ELECTRIC WATER COOLER				3.7	120	1	60	CC#1	E	CORD AND PLUG					20/1		HACR	1	EWC-3
EWH-1	ELECTRIC WATER HEATER				30	120	1	60	CC#7	E	60/2	3R	YES	35A	RK5	40/1		HACR	1	EWH-1
HUM-1	HUMIDIFIER		7.60		29.6	208	3	60	CC#8	E	60/3	3R	YES	35A	RK5	40/3		HACR	1	HUM-1
OH-1	OVERHEAD DOOR	3/4			13.8	120	1	60	CC#4	E	THERMAL SWITCH					20/1		HACR	1	OH-1
RTU-1	ROOF TOP UNIT			96.5		208	3	60	CC#21	E	200/3	3R	YES	110A	RK5	125/3		HACR	1	RTU-1
RTU-2	ROOF TOP UNIT			26.7		208	3	60	CC#8	E	60/3	3R	YES	35A	RK5	40/3		HACR	1	RTU-2

NOTES:
1. LOCATE DISCONNECT ADJACENT TO UNIT.

COOPER ROBERTS SIMONSEN ASSOCIATES
crsa
700 NORTH 200 WEST
SALT LAKE CITY,UTAH 84103
(801) 355-5915
(801) 355-9885 FAX
WWW.CRSA-US.COM

STRUCTURAL ENGINEER
CALDER RICHARDS CONSULTING ENGINEERS
634 South 400 East
SALT LAKE CITY, UT 84101
(801) 466-1699 (801) 467-2495 FAX
- stephen@crceng.com

MECHANICAL ENGINEER
SMD
986 WEST ATHERTON DRIVE STE. 200
TAYLORSVILLE, UTAH 84123
(801)268-3828 FAX (801)268-3297
- -

ELECTRICAL ENGINEER
SPECTRUM
175 S MAIN STREET STE. 300
SALT LAKE CITY, UTAH 84111
(801)328-5151 (801)401-9471
- -

CIVIL ENGINEER
Stanley Consultants Inc.
5353 south 960 East
SALT LAKE CITY, UTAH 84117
(801)293-8880 (801)801-8886
- -

J. M. BROWNING ARMORY
197TH RIGGER FACILITY
DFCM NO. 08243480
625 E. 5300 S.
OGDEN, UTAH 84402

UTAH NATIONAL GUARD
12953 SOUTH
MINUTEMAN DRIVE.
DRAPER UTAH 84020-1776

2		
1		
-	-	-
-	-	-
-	-	-
CD	2 SEP 08	BID DOCUMENTS

PROJECT NO:	B08-062
CAD DWG FILE:	
DRAWN BY:	PSS
CHECKED BY:	DLA

SCHEDULES

EE602

SHEET OF

File Name: P:\2008\20080416\1Drawings\Sheet\16EE-602.dwg Last Plotted: 2008/09/02 @ 3:07 PM By: pss

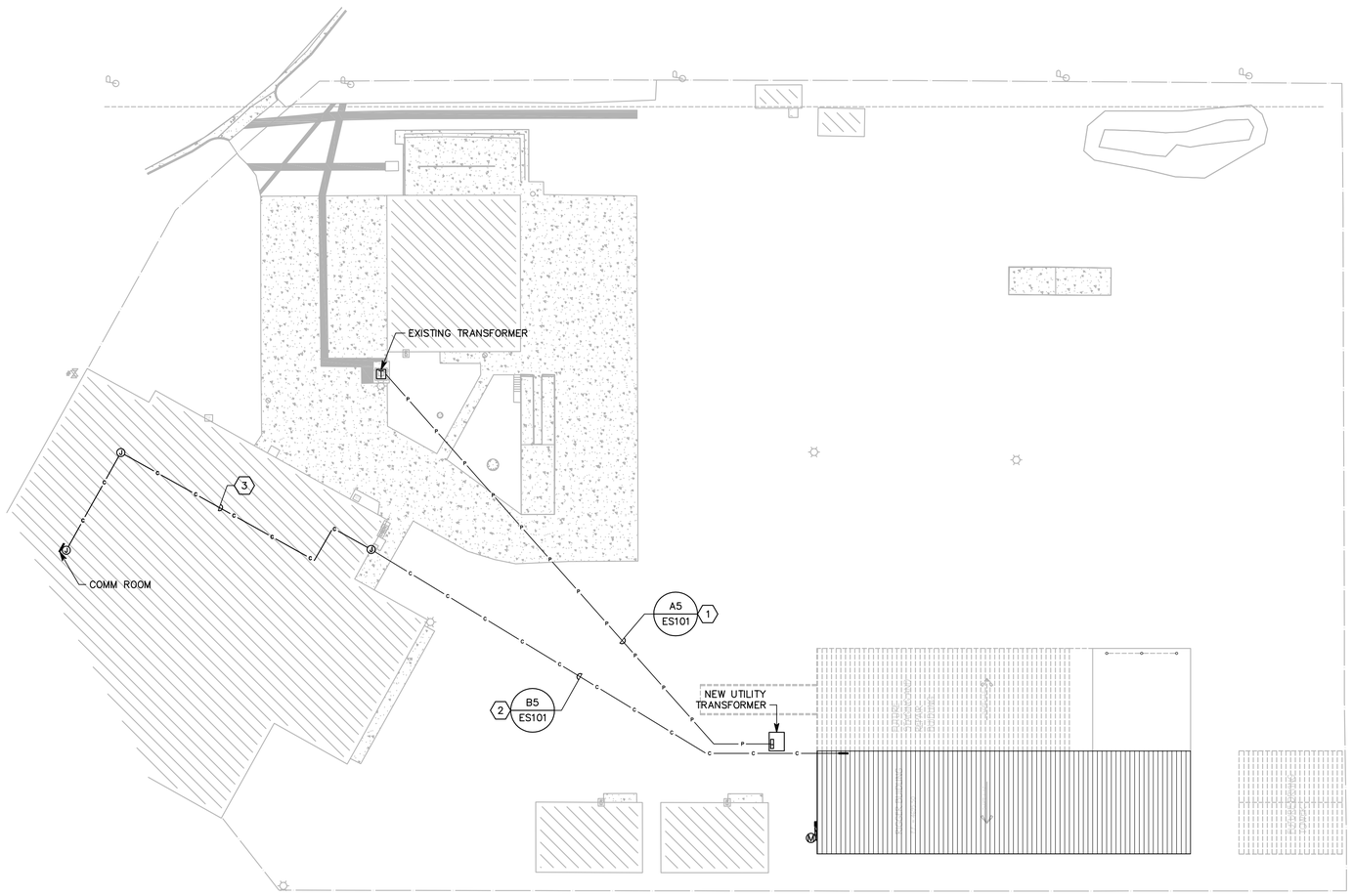

NORTH

0 15' 30' 60'

A1 ELECTRICAL SITE PLAN

1" = 30'-0"

SHEET KEYNOTES

1. NEW UNDERGROUND PRIMARY CONDUIT. COORDINATE REQUIREMENTS WITH ROCKY MOUNTAIN POWER.
2. NEW UNDERGROUND COMMUNICATIONS CONDUIT.
3. ROUTE CONDUIT THROUGH BUILDING TO EXISTING COMM ROOM. COORDINATE REQUIREMENTS WITH UTAH NATIONAL GUARD.

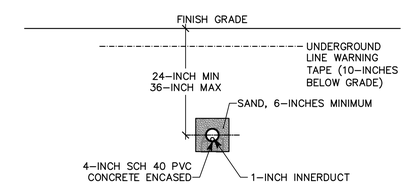

B5 UNDERGROUND COMMUNICATIONS CONDUIT DETAIL

NTS

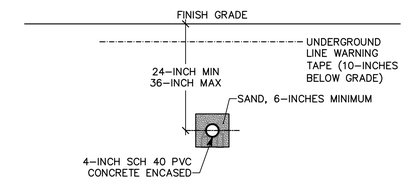

A5 UNDERGROUND PRIMARY FEEDER CONDUIT DETAIL

NTS

COOPER ROBERTS SIMONSEN ASSOCIATES

crsa

700 NORTH 200 WEST
SALT LAKE CITY,UTAH 84103
(801) 355-5915
(801) 355-9885 FAX
WWW.CRSA-US.COM

STRUCTURAL ENGINEER
CALDER RICHARDS CONSULTING ENGINEERS
634 South 400 East
SALT LAKE CITY, UT 84101
(801) 466-1699 (801) 467-2495 FAX
- stephen@crceng.com

MECHANICAL ENGINEER
SMD
986 WEST ATHERTON DRIVE STE. 200
TAYLORSVILLE, UTAH 84123
(801)268-3828 FAX (801)268-3297
- -

ELECTRICAL ENGINEER
SPECTRUM
175 S MAIN STREET STE. 300
SALT LAKE CITY, UTAH 84111
(801)328-5151 (801)401-9471
- -

CIVIL ENGINEER
Stanley Consultants Inc.
5353 south 960 East
SALT LAKE CITY, UTAH 84117
(801)293-8880 (801)801-8886
- -

J. M. BROWNING ARMORY
197TH RIGGER FACILITY
DFCM NO. 08243480
625 E. 5300 S.
OGDEN, UTAH 84402

UTAH NATIONAL GUARD
12953 SOUTH
MINUTEMAN DRIVE.
DRAPER UTAH 84020-1776

2		
1		
-	-	-
-	-	-
-	-	-
CD	2 SEP 08	BID DOCUMENTS

PROJECT NO:	B08-062
CAD DWG FILE:	
DRAWN BY:	PSS
CHECKED BY:	DLA

ELECTRICAL SITE PLAN

ES101

SHEET OF

File Name: P:\2008\20080416\1Drawings\Sheet\16ES-101.dwg Last Plotted: 2008/09/02 @ 3:06 PM By: pss

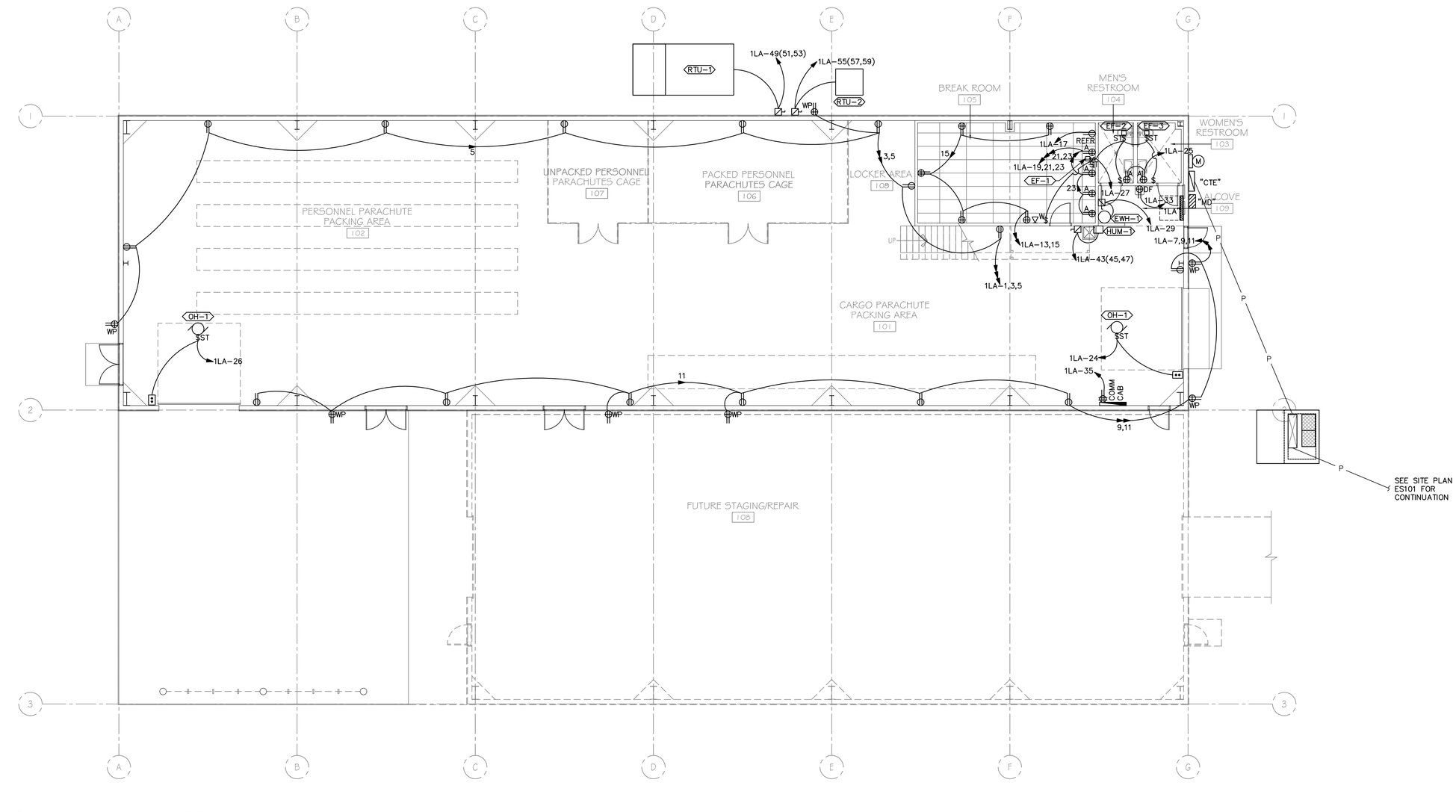

B1 MAIN LEVEL POWER PLAN

1/8" = 1'-0"

SCHEDULE OF ALTERNATES

A. ALTERNATE NO. 1 (ADDITIVE): ALL MATERIALS AND LABOR REQUIRED FOR PROVISION AND INSTALLATION OF THE WIRE MESH CAGING ENCLOSURES FOR PACKED & UNPACKED PARACHUTES, INCLUDING DOOR AND/OR GATE HARDWARE.

B. ALTERNATE NO. 2 (ADDITIVE): ALL WORK ASSOCIATED WITH ENCLOSURE AND FINISHING OF THE MEZZANINE OFFICES, INCLUDING STAIRWAY & LANDING, WALLS, CEILINGS, WINDOWS, LIGHTING, ELECTRICAL WORK, HVAC AND OTHER ASSEMBLIES AND COMPONENTS. (FLOOR STRUCTURE, INCLUDING JOISTS AND SHEATHING ARE A PART OF THE BASE BID.)

C. ALTERNATE NO. 3 (ADDITIVE): FINISH WORK IN THE BREAK ROOM, TO INCLUDE FINISH FLOORING, WALL BASE, PAINT, CABINETRY & CASEWORK, PLUMBING FIXTURES. (BASE BID INCLUDES DRYWALL AS REQUIRED FOR STRUCTURAL INTEGRITY WITH TAPE AND MUD FOR A LEVEL 4 FINISH, WALL PRIMER, CEILING, DUCTS & DIFFUSERS FOR HVAC, LIGHTING, PLUMBING ROUGH-IN FOR FIXTURES AND CONNECTIONS AS INDICATED, ELECTRICAL ROUGH-IN FOR CONVENIENCE AND APPLIANCE OUTLETS.)

COOPER ROBERTS SIMONSEN ASSOCIATES

crsa

700 NORTH 200 WEST
SALT LAKE CITY,UTAH 84103
(801) 355-5915
(801) 355-9885 FAX
WWW.CRSA-US.COM

STRUCTURAL ENGINEER
CALDER RICHARDS CONSULTING ENGINEERS
634 South 400 East
SALT LAKE CITY, UT 84101
(801) 466-1699 (801) 467-2495 FAX
- stephen@crceng.com

MECHANICAL ENGINEER
SMD
986 WEST ATHERTON DRIVE STE. 200
TAYLORSVILLE, UTAH 84123
(801)268-3828 FAX (801)268-3297
- -

ELECTRICAL ENGINEER
SPECTRUM
175 S MAIN STREET STE. 300
SALT LAKE CITY, UTAH 84111
(801)328-5151 (801)401-9471
- -

CIVIL ENGINEER
Stanley Consultants Inc.
5353 south 960 East
SALT LAKE CITY, UTAH 84117
(801)293-8880 (801)801-8886
- -

J. M. BROWNING ARMORY
197TH RIGGER FACILITY
DFCM NO. 08243480
625 E. 5300 S.
OGDEN, UTAH 84402

UTAH NATIONAL GUARD
12953 SOUTH
MINUTEMAN DRIVE.
DRAPER UTAH 84020-1776

2		
1		
-	-	-
-	-	-
-	-	-
CD	2 SEP 08	BID DOCUMENTS

PROJECT NO: B08-062
CAD DWG FILE:
DRAWN BY: PSS
CHECKED BY: DLA

MAIN LEVEL POWER PLAN

EP101

SHEET OF

File Name: P:\2008\20080416\1Drawings\Sheet\16EP-101.dwg Last Plotted: 2008/09/02 @ 3:06 PM By: pss

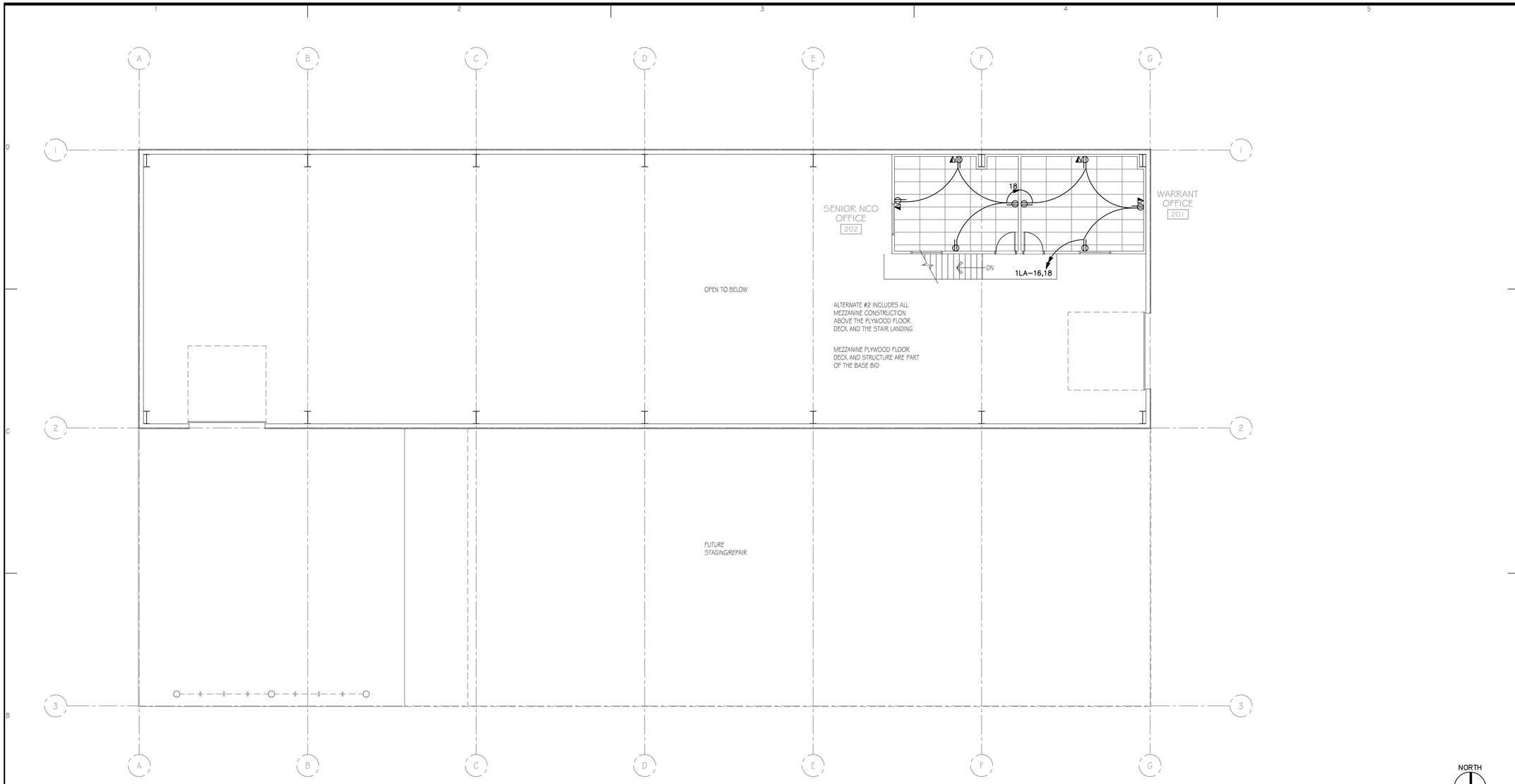

B1 MEZZANINE POWER PLAN
1/8" = 1'-0"

SCHEDULE OF ALTERNATES

A. ALTERNATE NO. 1 (ADDITIVE): ALL MATERIALS AND LABOR REQUIRED FOR PROVISION AND INSTALLATION OF THE WIRE MESH CAGING ENCLOSURES FOR PACKED & UNPACKED PARACHUTES, INCLUDING DOOR AND/OR GATE HARDWARE.

B. ALTERNATE NO. 2 (ADDITIVE): ALL WORK ASSOCIATED WITH ENCLOSURE AND FINISHING OF THE MEZZANINE OFFICES, INCLUDING STAIRWAY & LANDING, WALLS, CEILINGS, WINDOWS, LIGHTING, ELECTRICAL WORK, HVAC AND OTHER ASSEMBLIES AND COMPONENTS. (FLOOR STRUCTURE, INCLUDING JOISTS AND SHEATHING ARE A PART OF THE BASE BID.)

C. ALTERNATE NO. 3 (ADDITIVE): FINISH WORK IN THE BREAK ROOM, TO INCLUDE FINISH FLOORING, WALL BASE, PAINT, CABINETRY & CASEWORK, PLUMBING FIXTURES. (BASE BID INCLUDES DRYWALL AS REQUIRED FOR STRUCTURAL INTEGRITY WITH TAPE AND MUD FOR A LEVEL 4 FINISH, WALL PRIMER, CEILING, DUCTS & DIFFUSERS FOR HVAC, LIGHTING, PLUMBING ROUGH-IN FOR FIXTURES AND CONNECTIONS AS INDICATED, ELECTRICAL ROUGH-IN FOR CONVENIENCE AND APPLIANCE OUTLETS.)

COOPER
ROBERTS
SIMONSEN
ASSOCIATES

crsa

700 NORTH 200 WEST
SALT LAKE CITY,UTAH 84103
(801) 355-5915
(801) 355-9885 FAX
WWW.CRSA-US.COM

STRUCTURAL ENGINEER
CALDER RICHARDS CONSULTING ENGINEERS
634 South 400 East
SALT LAKE CITY, UT 84101
(801) 466-1699 (801) 467-2495 FAX
- stephen@crceng.com

MECHANICAL ENGINEER
SMD
986 WEST ATHERTON DRIVE STE. 200
TAYLORSVILLE, UTAH 84123
(801)268-3828 FAX (801)268-3297
- -

ELECTRICAL ENGINEER
SPECTRUM
175 S MAIN STREET STE. 300
SALT LAKE CITY, UTAH 84111
(801)328-5151 (801)401-9471
- -

CIVIL ENGINEER
Stanley Consultants Inc.
5353 south 960 East
SALT LAKE CITY, UTAH 84117
(801)293-8880 (801)801-8886
- -

J. M. BROWNING ARMORY
197TH RIGGER FACILITY
DFCM NO. 08243480
625 E. 5300 S.
OGDEN, UTAH 84402

UTAH NATIONAL GUARD
12953 SOUTH
MINUTEMAN DRIVE.
DRAPER UTAH 84020-1776

2		
1		
-	-	-
-	-	-
-	-	-
CD	2 SEP 08	BID DOCUMENTS

PROJECT NO:	B08-062
CAD DWG FILE:	
DRAWN BY:	PSS
CHECKED BY:	DLA

MEZZANINE
POWER PLAN

EP102

SHEET OF

File Name: P:\2008\20080416\1Drawings\Sheet\16EP-102.dwg Last Plotted: 2008/09/02 @ 3:06 PM By: pss

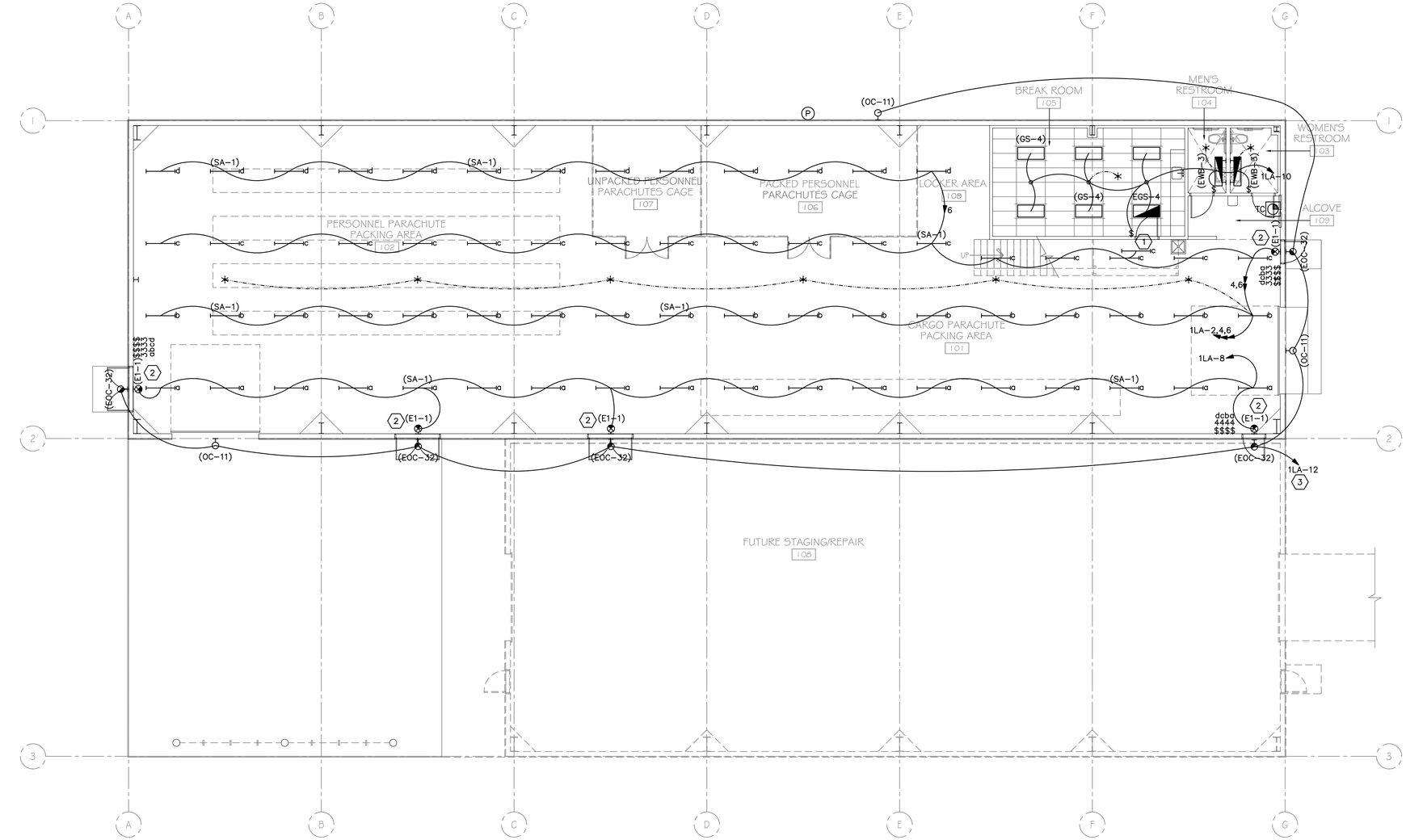

B1 MAIN LEVEL LIGHTING PLAN

1/8" = 1'-0"

0 4' 8' 16'

SHEET KEYNOTES

1. MOUNT LIGHT FIXTURE BENEATH STAIR WELL LANDING.
2. CONNECT EXIT SIGN TO UNSWITCHED LEG OF THE CIRCUIT.
3. CONNECT THROUGH TIMECLOCK AND PHOTOCELL. PHOTOCELL ENABLE/TIMECLOCK OFF.

SCHEDULE OF ALTERNATES

A. ALTERNATE NO. 1 (ADDITIVE): ALL MATERIALS AND LABOR REQUIRED FOR PROVISION AND INSTALLATION OF THE WIRE MESH CAGING ENCLOSURES FOR PACKED & UNPACKED PARACHUTES, INCLUDING DOOR AND/OR GATE HARDWARE.

B. ALTERNATE NO. 2 (ADDITIVE): ALL WORK ASSOCIATED WITH ENCLOSURE AND FINISHING OF THE MEZZANINE OFFICES, INCLUDING STAIRWAY & LANDING, WALLS, CEILINGS, WINDOWS, LIGHTING, ELECTRICAL WORK, HVAC AND OTHER ASSEMBLIES AND COMPONENTS. (FLOOR STRUCTURE, INCLUDING JOISTS AND SHEATHING ARE A PART OF THE BASE BID.)

C. ALTERNATE NO. 3 (ADDITIVE): FINISH WORK IN THE BREAK ROOM, TO INCLUDE FINISH FLOORING, WALL BASE, PAINT, CABINETRY & CASEWORK, PLUMBING FIXTURES. (BASE BID INCLUDES DRYWALL AS REQUIRED FOR STRUCTURAL INTEGRITY WITH TAPE AND MUD FOR A LEVEL 4 FINISH, WALL PRIMER, CEILING, DUCTS & DIFFUSERS FOR HVAC, LIGHTING, PLUMBING ROUGH-IN FOR FIXTURES AND CONNECTIONS AS INDICATED, ELECTRICAL ROUGH-IN FOR CONVENIENCE AND APPLIANCE OUTLETS.)

COOPER ROBERTS SIMONSEN ASSOCIATES

crsa

700 NORTH 200 WEST
SALT LAKE CITY,UTAH 84103
(801) 355-5915
(801) 355-9885 FAX
WWW.CRSA-US.COM

STRUCTURAL ENGINEER
CALDER RICHARDS CONSULTING ENGINEERS
634 South 400 East
SALT LAKE CITY, UT 84101
(801) 466-1699 (801) 467-2495 FAX
- stephen@crceng.com

MECHANICAL ENGINEER
SMD
986 WEST ATHERTON DRIVE STE. 200
TAYLORSVILLE, UTAH 84123
(801)268-3828 FAX (801)268-3297
- -

ELECTRICAL ENGINEER
SPECTRUM
175 S MAIN STREET STE. 300
SALT LAKE CITY, UTAH 84111
(801)328-5151 (801)401-9471
- -

CIVIL ENGINEER
Stanley Consultants Inc.
5353 south 960 East
SALT LAKE CITY, UTAH 84117
(801)293-8880 (801)801-8886
- -

J. M. BROWNING ARMORY
197TH RIGGER FACILITY
DFCM NO. 08243480
625 E. 5300 S.
OGDEN, UTAH 84402

UTAH NATIONAL GUARD
12953 SOUTH
MINUTEMAN DRIVE.
DRAPER UTAH 84020-1776

2		
1		
-	-	-
-	-	-
-	-	-
CD	2 SEP 08	BID DOCUMENTS

PROJECT NO:	B08-062
CAD DWG FILE:	
DRAWN BY:	PSS
CHECKED BY:	DLA

MAIN LEVEL LIGHTING PLAN

EL101

SHEET OF

File Name: P:\2008\20080416\1Drawings\Sheet\16EL-101.dwg Last Plotted: 2008/09/02 @ 3:07 PM By: dla

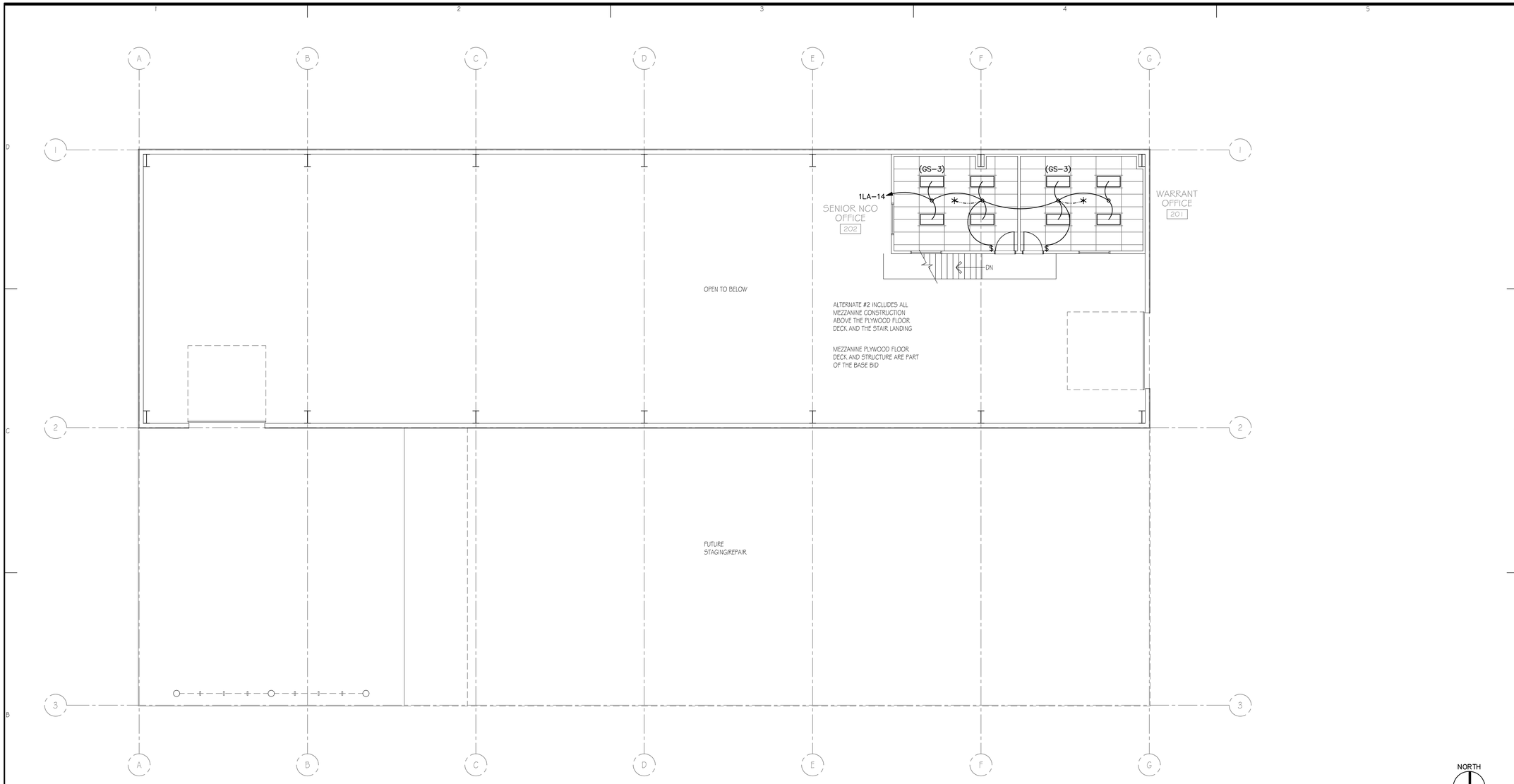

B1 MEZZANINE LIGHTING PLAN

1/8" = 1'-0"

SCHEDULE OF ALTERNATES

A. ALTERNATE NO. 1 (ADDITIVE): ALL MATERIALS AND LABOR REQUIRED FOR PROVISION AND INSTALLATION OF THE WIRE MESH CAGING ENCLOSURES FOR PACKED & UNPACKED PARACHUTES, INCLUDING DOOR AND/OR GATE HARDWARE.

B. ALTERNATE NO. 2 (ADDITIVE): ALL WORK ASSOCIATED WITH ENCLOSURE AND FINISHING OF THE MEZZANINE OFFICES, INCLUDING STAIRWAY & LANDING, WALLS, CEILINGS, WINDOWS, LIGHTING, ELECTRICAL WORK, HVAC AND OTHER ASSEMBLIES AND COMPONENTS. (FLOOR STRUCTURE, INCLUDING JOISTS AND SHEATHING ARE A PART OF THE BASE BID.)

C. ALTERNATE NO. 3 (ADDITIVE): FINISH WORK IN THE BREAK ROOM, TO INCLUDE FINISH FLOORING, WALL BASE, PAINT, CABINETRY & CASEWORK, PLUMBING FIXTURES. (BASE BID INCLUDES DRYWALL AS REQUIRED FOR STRUCTURAL INTEGRITY WITH TAPE AND MUD FOR A LEVEL 4 FINISH, WALL PRIMER, CEILING, DUCTS & DIFFUSERS FOR HVAC, LIGHTING, PLUMBING ROUGH-IN FOR FIXTURES AND CONNECTIONS AS INDICATED, ELECTRICAL ROUGH-IN FOR CONVENIENCE AND APPLIANCE OUTLETS.)

COOPER ROBERTS SIMONSEN ASSOCIATES

crsa

700 NORTH 200 WEST
SALT LAKE CITY,UTAH 84103
(801) 355-5915
(801) 355-9885 FAX
WWW.CRSA-US.COM

STRUCTURAL ENGINEER
CALDER RICHARDS CONSULTING ENGINEERS
634 South 400 East
SALT LAKE CITY, UT 84101
(801) 466-1699 (801) 467-2495 FAX
- stephen@crceng.com

MECHANICAL ENGINEER
SMD
986 WEST ATHERTON DRIVE STE. 200
TAYLORSVILLE, UTAH 84123
(801)268-3828 FAX (801)268-3297
- -

ELECTRICAL ENGINEER
SPECTRUM
175 S MAIN STREET STE. 300
SALT LAKE CITY, UTAH 84111
(801)328-5151 (801)401-9471
- -

CIVIL ENGINEER
Stanley Consultants Inc.
5353 south 960 East
SALT LAKE CITY, UTAH 84117
(801)293-8880 (801)801-8886
- -

J. M. BROWNING ARMORY
197TH RIGGER FACILITY
DFCM NO. 08243480
625 E. 5300 S.
OGDEN, UTAH 84402

UTAH NATIONAL GUARD
12953 SOUTH
MINUTEMAN DRIVE.
DRAPER UTAH 84020-1776

2		
1		
-	-	-
-	-	-
-	-	-
CD	2 SEP 08	BID DOCUMENTS

PROJECT NO:	B08-062
CAD DWG FILE:	
DRAWN BY:	PSS
CHECKED BY:	DLA

MEZZANINE LIGHTING PLAN

EL102

SHEET OF

File Name: P:\2008\20080416\1Drawings\Sheet\16EL-102.dwg Last Plotted: 2008/09/02 @ 3:07 PM By: pss