SPRINGVILLE FISH HATCHERY – PHASE II

WATER DISTRIBUTION SYSTEM

UTAH COUNTY, UTAH

GENERAL AND STRUCTURAL NOTES

1. Elevations shown on these drawings are based on mean sea level U.S.C. & G.S. datum.
2. All stationing refers to centerline of construction & is the measured horizontal distance.
3. All exposed concrete edges shall be chamfered 1" or rounded.
4. Spacing of reinforcement bars is measured center to center of bars. Bar cover is clear distance between surface of bar & face of concrete, and unless otherwise shown is 2" for formed & top surfaces & 3" for surfaces placed against earth.
5. All bar splices not shown on these drawings shall be staggered with bars lapped a minimum of 30 diameters of the smallest bar in the splice.
6. All nuts, bolts & washers used in the permanent works of this project shall be galvanized.
7. Quantities are for bid purposes only. Contractor will be responsible for furnishing & placing of all materials required to complete the permanent works.

INDEX OF DRAWINGS

1 ..... TITLE SHEET

2 ..... VICINITY MAP AND SYSTEM LAYOUT

3 ..... PLAN AND PROFILE

4 ..... INTAKE STRUCTURE

5 ..... PIPING DETAILS ON PONDS

6 ..... PIPING DETAILS ON PONDS

7 ..... COLLECTION BOX DETAILS

8 ..... HIGHWAY CROSSINGS AND WYE JUNCTIONS

9 ..... DRAINAGE SYSTEM

10 ..... IRRIGATION SYSTEM

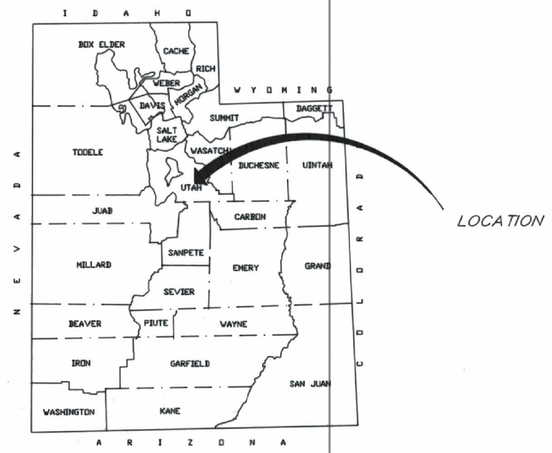

ACCEPTED AND APPROVED BY:

January 19, 1990 — DATE

UTAH STATE DIVISION OF WILDLIFE RESOURCES

AS BUILTS

UTAH DEPARTMENT OF NATURAL RESOURCES
DIVISION OF WATER RESOURCES

REVISIONS				
NO.	DATE	INITS.	DESCRIPTION	APPV'D
1	8/20/89	SWP	MISC. DETAILS ON LENGTHS, ANGLES, & FITTINGS OF PIPE	SWP
2	12/89	SWP	DRAINAGE SYSTEM	SWP
3	12/89	SWP	IRRIGATION SYSTEM	SWP

		DATE
SCALE:		
DESIGNER:	S. PAXMAN	5/89
DESIGNER:		
DRAFTSMAN:		
CHECKED:		

APPROVED	DATE
W. James Palmer, CHIEF ENGINEER	6-5-89
Scott W. Paxman, PROJECT MANAGER / PROJECT ENGINEER	6-5-89

REGISTERED PROFESSIONAL ENGINEER No. 8151 SCOTT W. PAXMAN State of Utah

STATE OF UTAH
DIVISION OF WILDLIFE RESOURCES
DIVISION OF WATER RESOURCES
SPRINGVILLE FISH HATCHERY – PHASE II

UTAH (COUNTY) — S-207 (APPL. NO.)

TITLE SHEET

SHEET 1 OF 10

FILE NO.

AS BUILTS

UTAH DEPARTMENT OF NATURAL RESOURCES

DIVISION OF WATER RESOURCES

REVISIONS				
NO.	DATE	INITS.	DESCRIPTION	APPV'D

SCALE: 1" = 100'	DATE	APPROVED	DATE
DESIGNER: S. PAXMAN	3/89	CHIEF ENGINEER	
DESIGNER:		PROJECT MANAGER	
DRAFTSMAN: P. CROCKETT	3/89	PROJECT ENGINEER	
CHECKED:			

STATE OF UTAH
DIVISION OF WILDLIFE RESOURCES
DIVISION OF WATER RESOURCES
SPRINGVILLE FISH HATCHERY – PHASE II

VICINITY MAP AND SYSTEM LAYOUT

SHEET 2 OF 10

FILE NO.

Run on 5

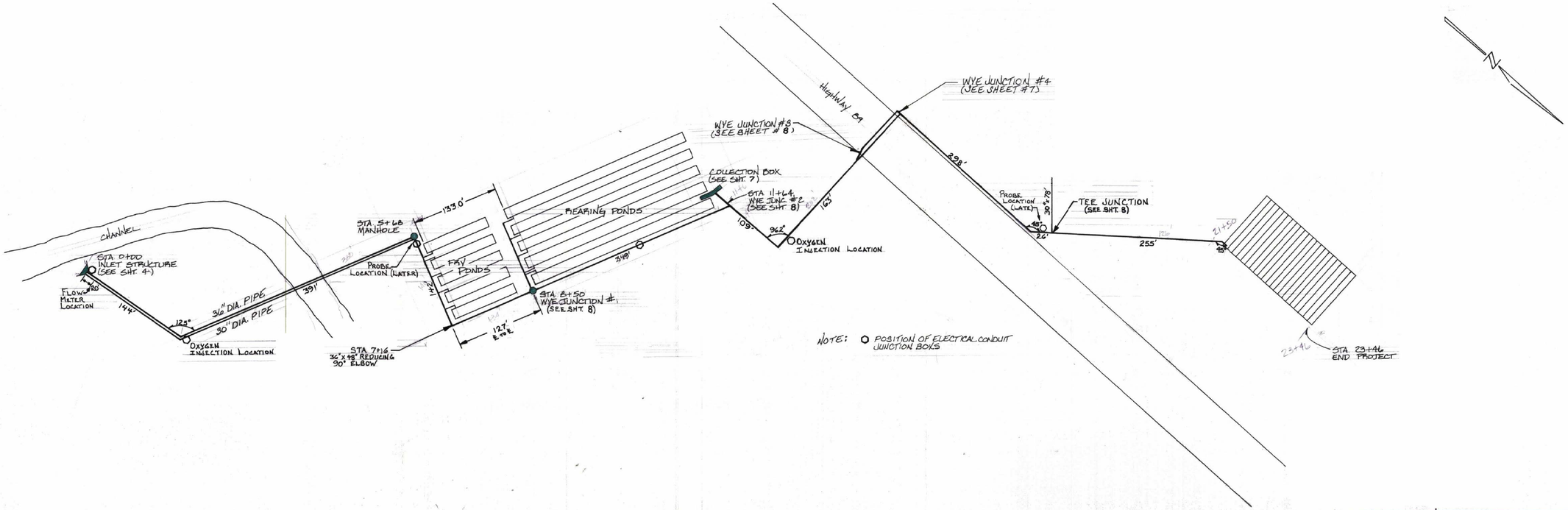

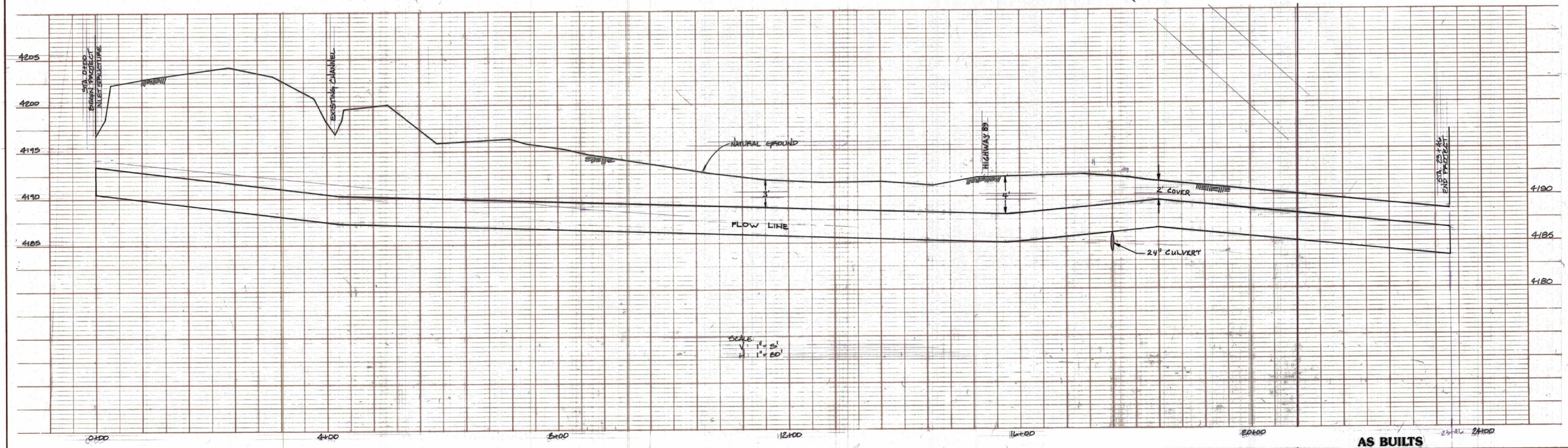

AS BUILTS

UTAH DEPARTMENT OF NATURAL RESOURCES

DIVISION OF WATER RESOURCES

REVISIONS				
NO.	DATE	INITS.	DESCRIPTION	APPV'D

SCALE:		DATE
DESIGNER: SCOTT P.		3/89
DESIGNER:		
DRAFTSMAN: P. CROCKETT		3/89
CHECKED:		

APPROVED	DATE
CHIEF ENGINEER	
PROJECT MANAGER	
PROJECT ENGINEER	

STATE OF UTAH
DIVISION OF WILDLIFE RESOURCES
DIVISION OF WATER RESOURCES
SPRINGVILLE FISH HATCHERY – PHASE II

UTAH — COUNTY

S-207 — APPL. NO.

PLAN & PROFILE

SHEET 3 OF 10

FILE NO.

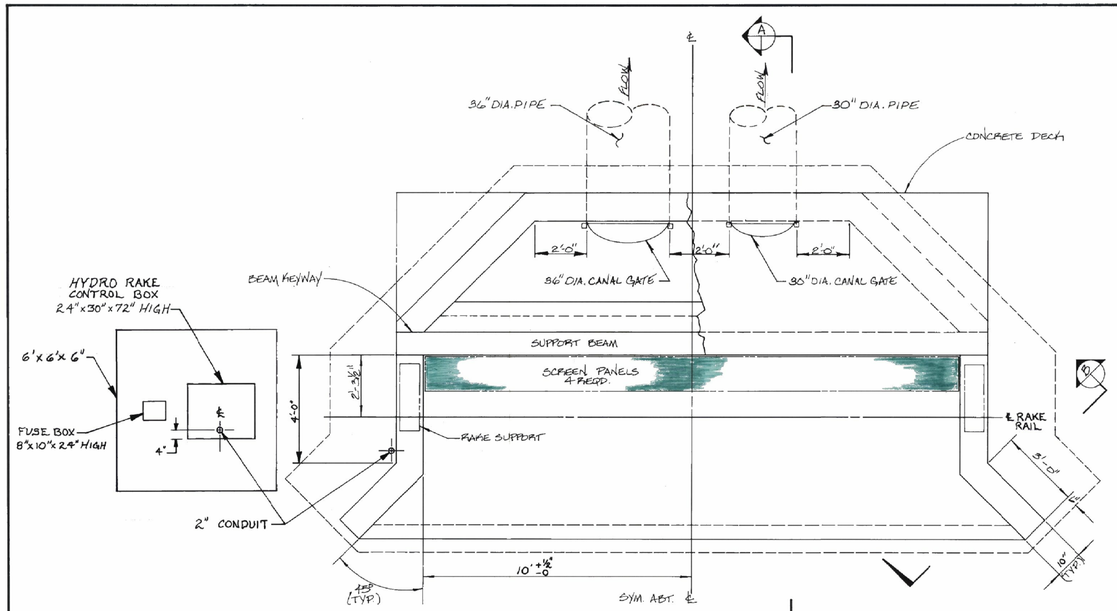

PLAN VIEW
INLET STRUCTURE

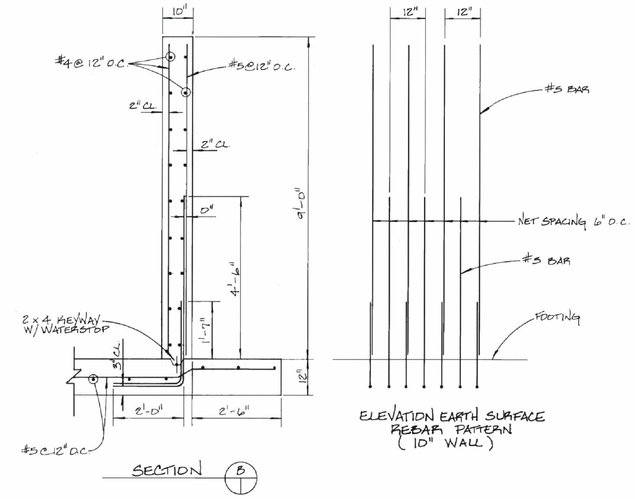

SECTION B

ELEVATION EARTH SURFACE REBAR PATTERN (10" WALL)

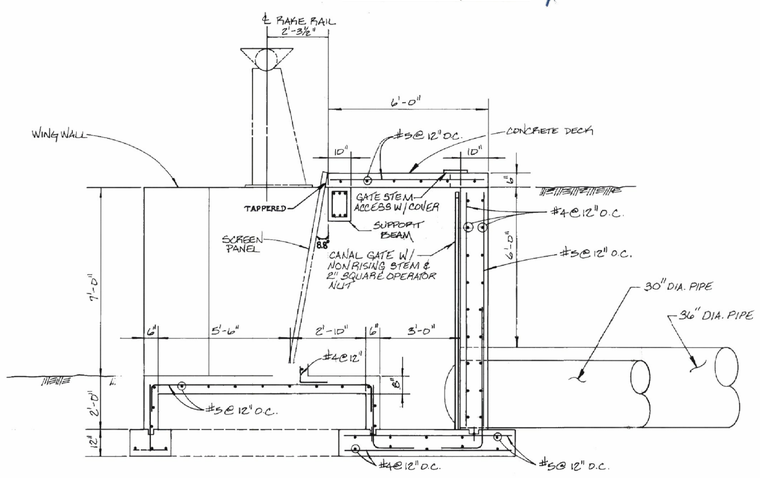

SECTION A

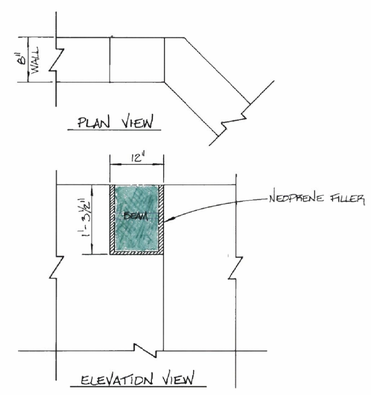

PLAN VIEW

ELEVATION VIEW

BEAM KEYWAY

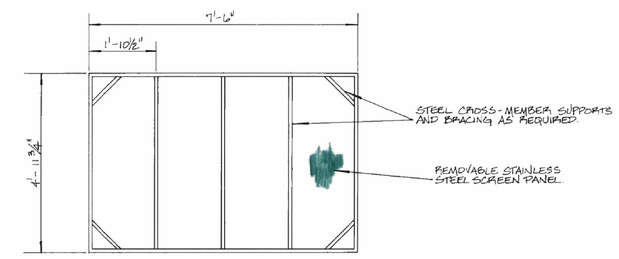

SCREEN PANEL
(4 REQD.)

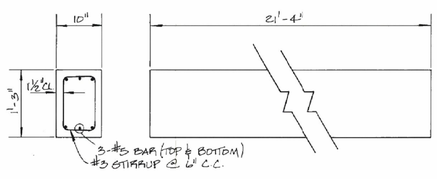

SUPPORT BEAM DETAIL

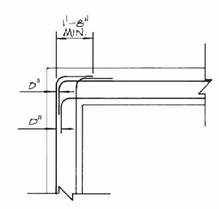

TYPICAL CORNER DETAIL

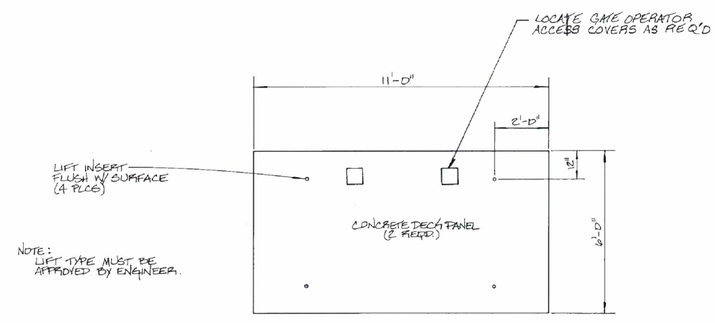

NOTE: LIFT TYPE MUST BE APPROVED BY ENGINEER.

CONCRETE DECK LIFT INSERT LOCATION

AS BUILTS

UTAH DEPARTMENT OF NATURAL RESOURCES

DIVISION OF WATER RESOURCES

REVISIONS				
NO.	DATE	INITS.	DESCRIPTION	APPV'D

	DATE
SCALE:	
DESIGNER:	
DESIGNER: S. PAXMAN	6/89
DRAFTSMAN: P.R.C. & D.H.C.	6/89
CHECKED:	

APPROVED	DATE
CHIEF ENGINEER	
PROJECT MANAGER	
PROJECT ENGINEER	

STATE OF UTAH
DIVISION OF WILDLIFE RESOURCES
DIVISION OF WATER RESOURCES
SPRINGVILLE FISH HATCHERY – PHASE II

UTAH — COUNTY

S-207 — APPL. NO.

INLET STRUCTURE

SHEET 4 OF 10

FILE NO.

BRUNING 44-131 56824

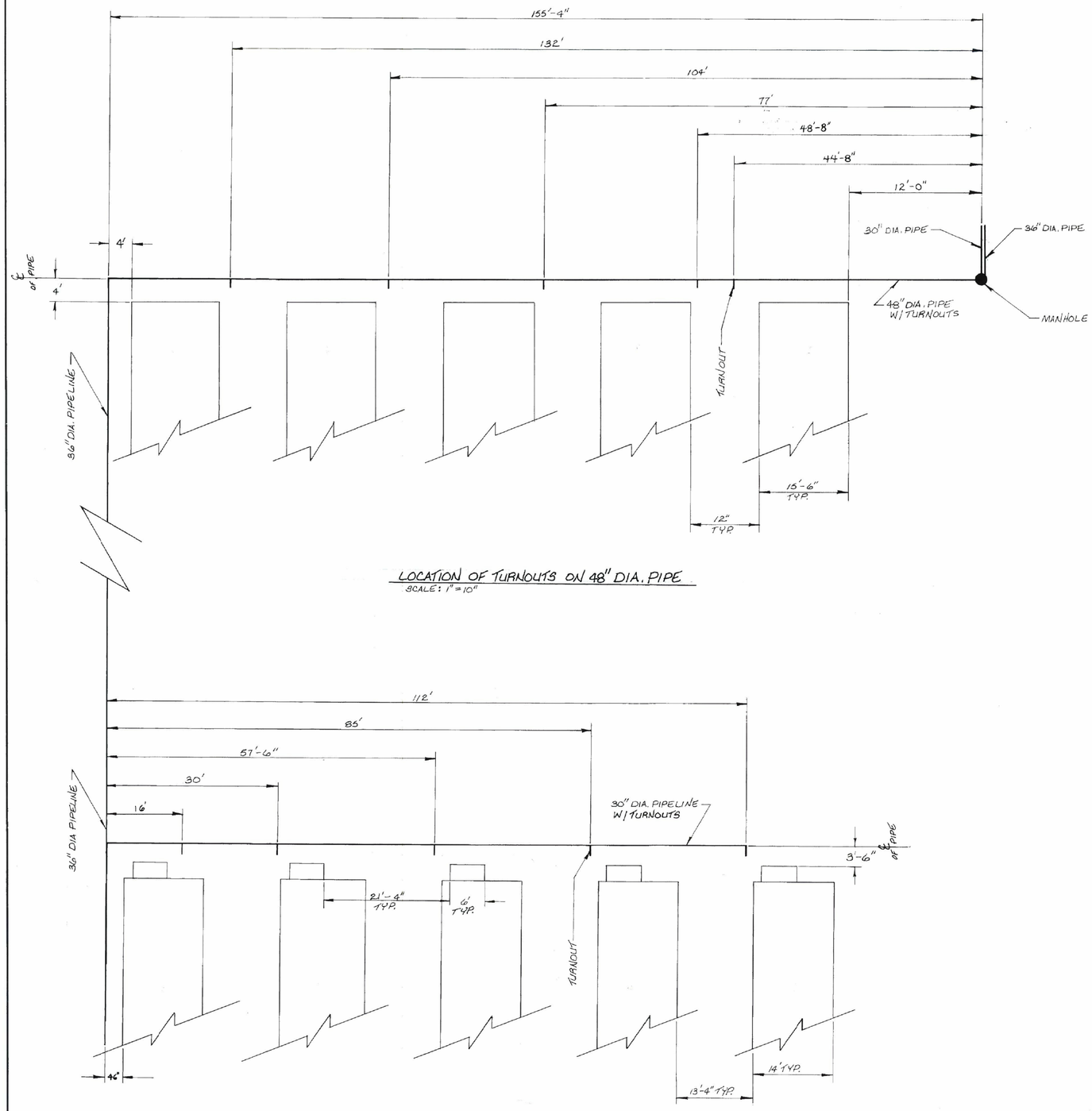

LOCATION OF TURNOUTS ON 48" DIA. PIPE
SCALE: 1" = 10"

LOCATION OF TURNOUTS ON 30" DIA. PIPE
SCALE: 1" = 10'

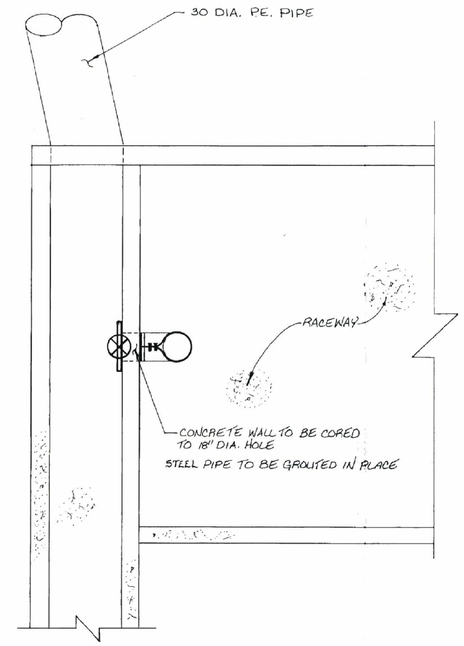

WESTSIDE RACEWAYS
PLAN VIEW
SCALE: NONE

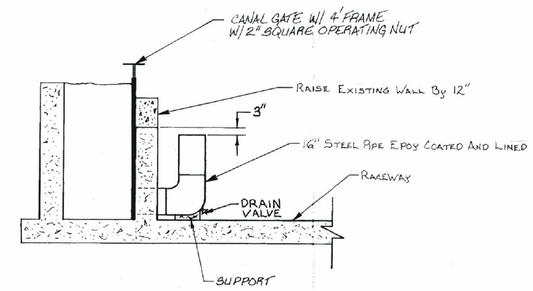

WESTSIDE RACEWAYS
ELEVATION VIEW
SCALE: NONE

AS BUILTS

UTAH DEPARTMENT OF NATURAL RESOURCES
DIVISION OF WATER RESOURCES

REVISIONS				
NO.	DATE	INITS.	DESCRIPTION	APPV'D

SCALE: AS SHOWN		DATE
DESIGNER:		
DESIGNER: S. PAXMAN	5/89	
DRAFTSMAN: P. HANSEN	5/89	
CHECKED:		

APPROVED	DATE
CHIEF ENGINEER	
PROJECT MANAGER	
PROJECT ENGINEER	

STATE OF UTAH
DIVISION OF WILDLIFE RESOURCES
DIVISION OF WATER RESOURCES
SPRINGVILLE FISH HATCHERY - PHASE II

UTAH — COUNTY
S-207 — APPL. NO.

PIPING DETAILS ON PONDS

SHEET 5 OF 10
FILE NO.

BRUNING 44-131 56824

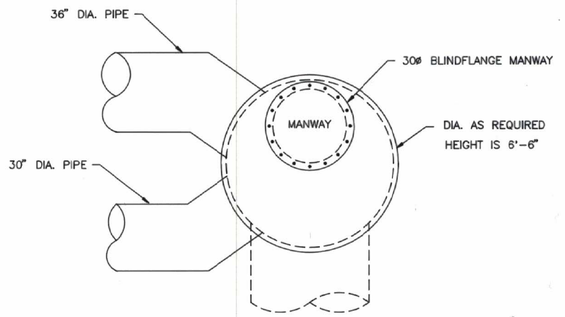

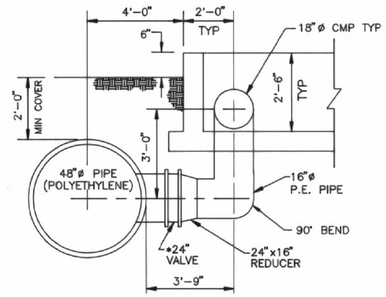

SECTION A–A

NOT TO SCALE

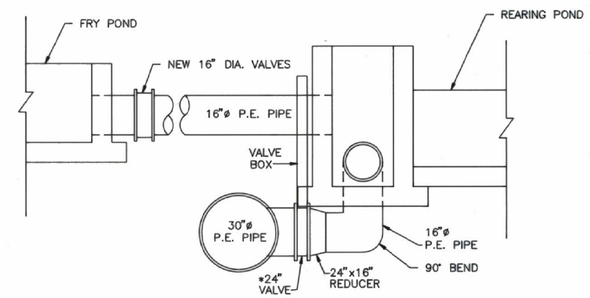

SECTION B–B

SCALE: 1"=2'

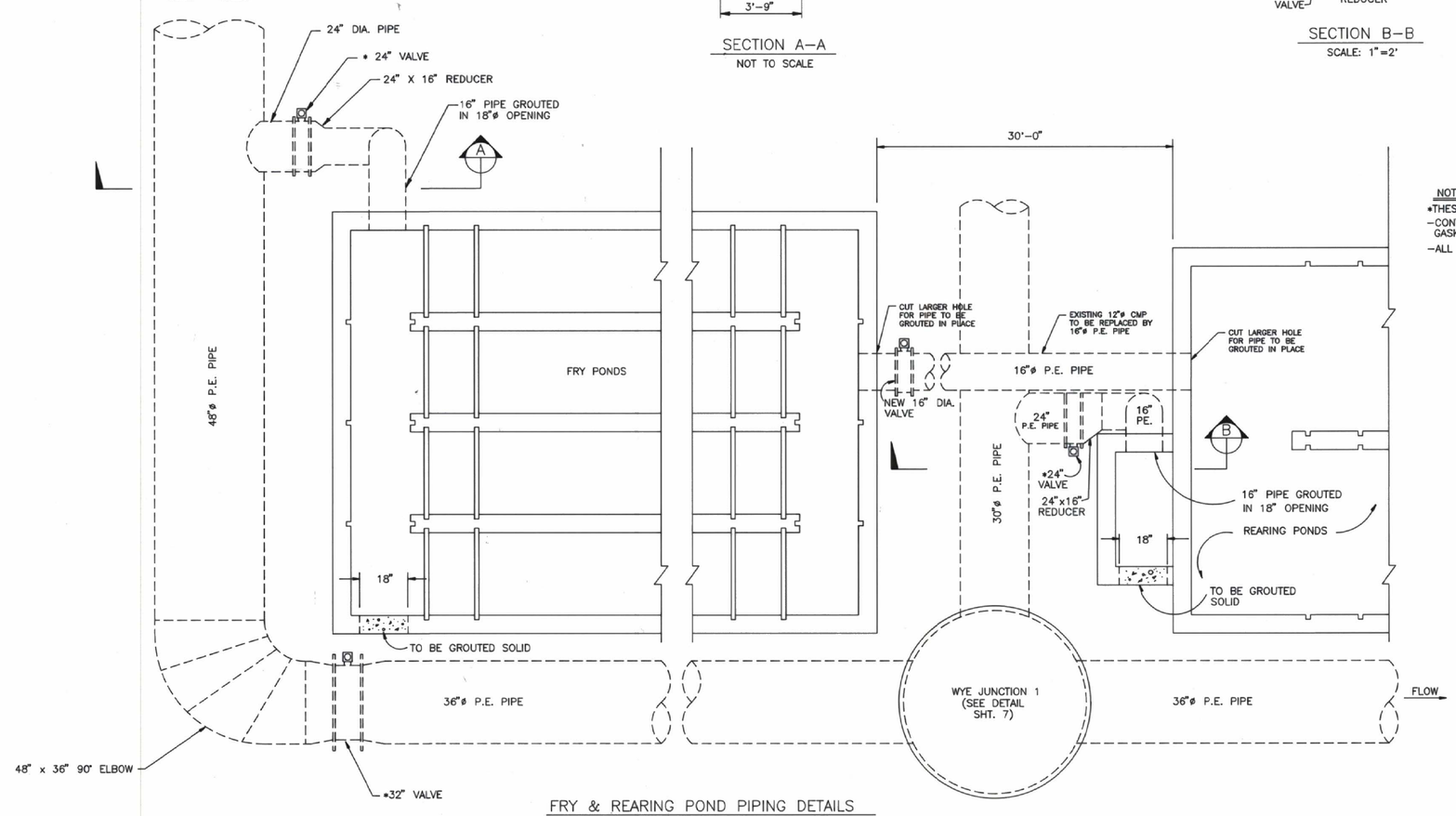

FRY & REARING POND PIPING DETAILS

SCALE: 1"=2'

NOTE:

*THESE VALVES ARE FURNISHED BY OWNER

–CONTRACTOR NEEDS ONLY TO SUPPLY VALVES BOXES GASKETS, AND FASTENERS.

–ALL VALVES ARE WAFER BUTTERFLY VALVES.

AS BUILTS

UTAH DEPARTMENT
OF NATURAL RESOURCES

DIVISION OF WATER RESOURCES

REVISIONS				
NO.	DATE	INITS.	DESCRIPTION	APPV'D
1	7/27/89	J.H.		

		DATE
SCALE:	1" = 2'	
DESIGNER:		
DESIGNER:	S. PAXMAN	
DRAFTSMAN:	P. HANSEN	
CHECKED:		

APPROVED	DATE
CHIEF ENGINEER	
PROJECT MANAGER	
PROJECT ENGINEER	

STATE OF UTAH
DIVISION OF WILDLIFE RESOURCES
DIVISION OF WATER RESOURCES
SPRINGVILLE FISH HATCHERY – PHASE II

UTAH — COUNTY — S-207 — APPL. NO.

PIPING DETAILS
ON PONDS

SHEET
6 OF 10

FILE NO.

NOTES:

* 1. VALVES ARE TO BE FURNISHED BY OWNER.
2. VALVE BOXES, FASTNERS, AND GASKETS ARE TO BE FURNISHED BY CONTRACTOR.
3. VALVES ARE WAFER TYPE BUTTERFLY.

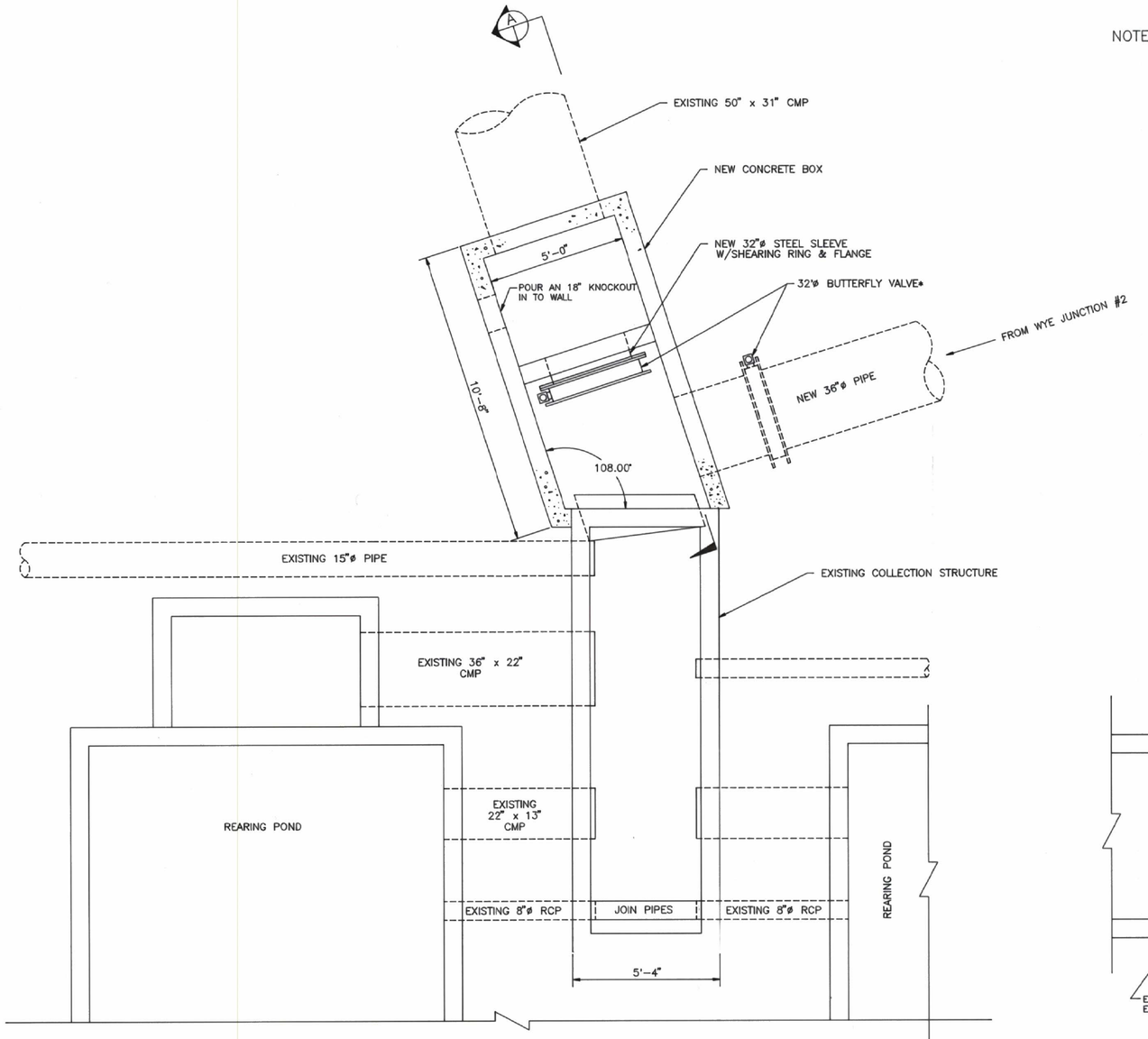

COLLECTION BOX DETAILS

SCALE: 1" = 2'

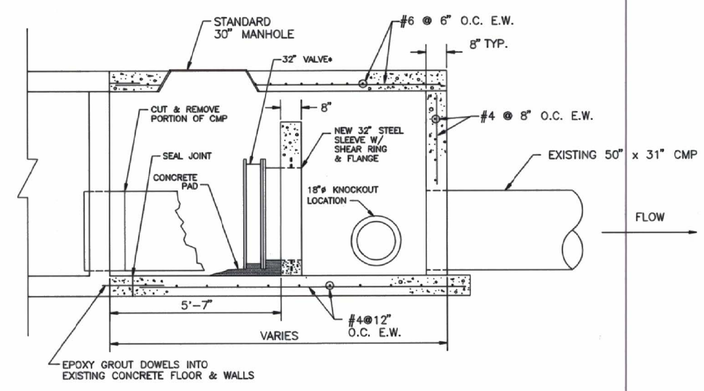

SECTION A–A

SCALE: 1"=2'

AS BUILTS

UTAH DEPARTMENT OF NATURAL RESOURCES
DIVISION OF WATER RESOURCES

REVISIONS				
NO.	DATE	INITS.	DESCRIPTION	APPV'D
1	7/27/89	J.H.		

		DATE
SCALE:	1" = 2'	
DESIGNER:		
DESIGNER:	S. PAXMAN	
DRAFTSMAN:	P. HANSEN	
CHECKED:		

APPROVED	DATE
CHIEF ENGINEER	
PROJECT MANAGER	
PROJECT ENGINEER	

STATE OF UTAH
DIVISION OF WILDLIFE RESOURCES
DIVISION OF WATER RESOURCES
SPRINGVILLE FISH HATCHERY – PHASE II

UTAH — COUNTY
S–207 — APPL. NO.

COLLECTION BOX DETAILS

SHEET 7 OF 10

FILE NO.

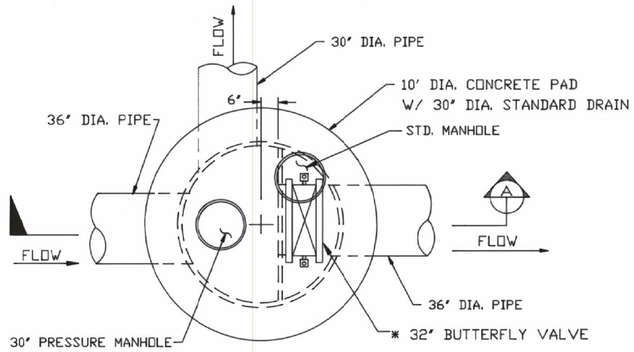

WYE JUNCTION #1
PLAN VIEW

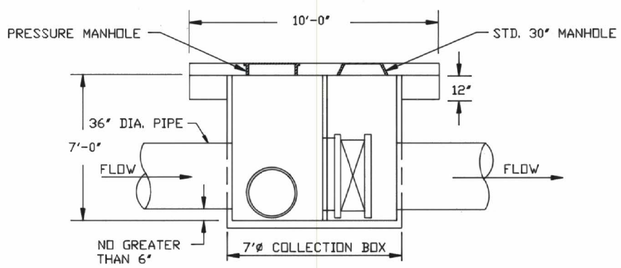

SECTION A—A
WYE JUNCTION #1

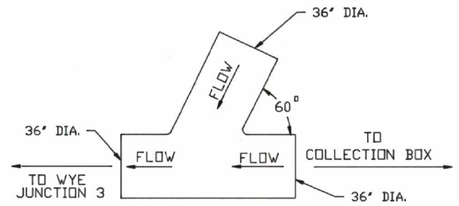

36" X 36" X 36"
WYE JUNCTION #2

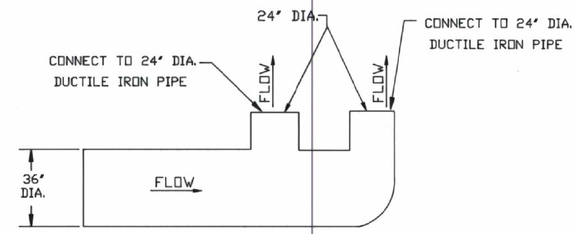

WYE JUNCTION #4

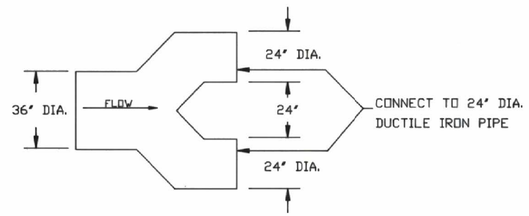

WYE JUNCTION #3

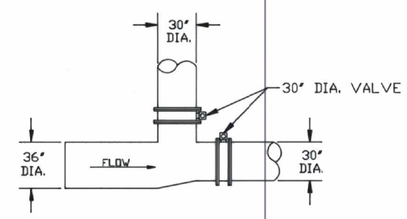

TEE JUNCTION #5

NOTES:

1. OVEREXCAVATION NOT REQ'D EXCEPT IN ROCKY AREAS
2. MACHINE COMPACTED IN 4" LIFTS TO 95% DENSITY AS PER AASHTO T-99, OR PEA GRAVEL MODERATELY COMPACTED FOR GRAVEL ROAD
3. MACHINE COMPACTED IN 4" LIFTS TO 95% DENSITY AS PER AASHTO T-99, OR PEA GRAVEL MODERATELY COMPACTED
4. VALVES ARE TO BE FURNISHED BY OWNER
5. VALVE BOXES, FASTNERS, AND GASKETS ARE TO BE FURNISHED BY CONTRACTOR
6. VALVES ARE WAFER TYPE BUTTERFLY

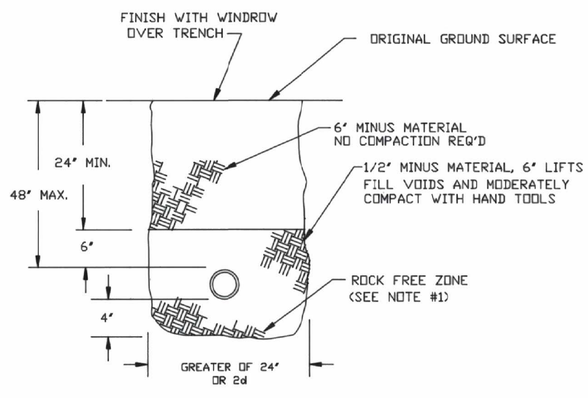

TYPICAL TRENCH CROSS SECTION
FIELD & OPEN AREA

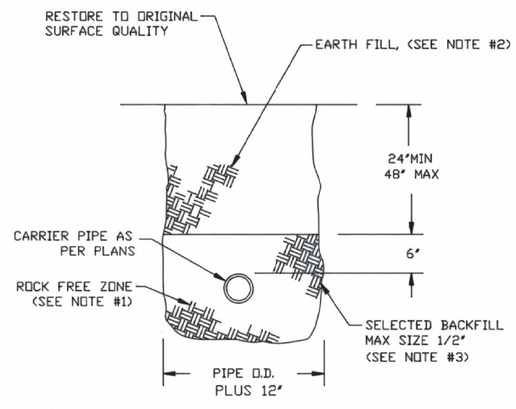

GRAVEL OR FIELD
ROAD CROSSING

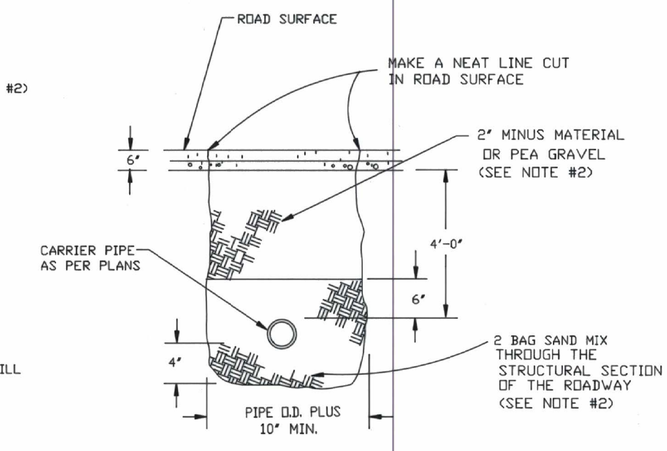

HIGHWAY CROSSING
W/ SAND MIX BEDDING

AS BUILTS

UTAH DEPARTMENT
OF NATURAL RESOURCES
DIVISION OF WATER RESOURCES

REVISIONS				
NO.	DATE	INITS.	DESCRIPTION	APP'D

SCALE:	NONE	DATE
DESIGNER:	S. PAXMAN	5/89
DESIGNER:		
DRAFTSMAN:	P. HANSEN	5/89
CHECKED:		

APPROVED	DATE
CHIEF ENGINEER	
PROJECT MANAGER	
PROJECT ENGINEER	

STATE OF UTAH
DIVISION OF WILDLIFE RESOURCES
DIVISION OF WATER RESOURCES
SPRINGVILLE FISH HATCHERY - PHASE II

UTAH — COUNTY
S-207 — APPL. NO.

HIGHWAY CROSSINGS
&
WYE JUNCTIONS

SHEET
8 OF 10
FILE NO.

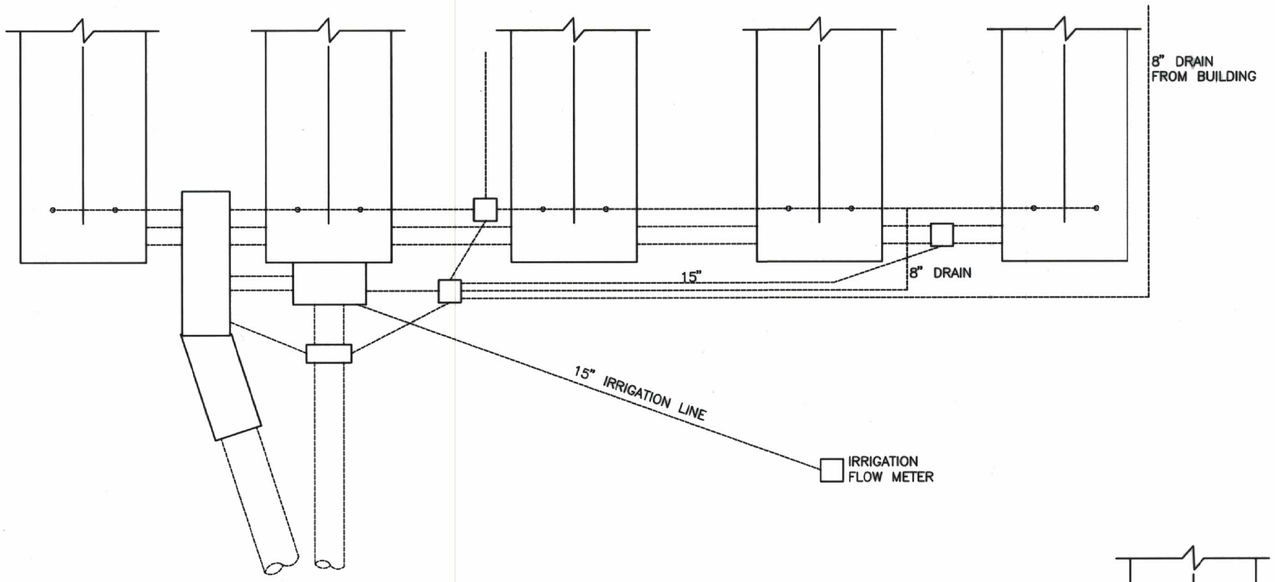

EXISTING DRAINAGE SYSTEM
SCALE: 1/8"=1'

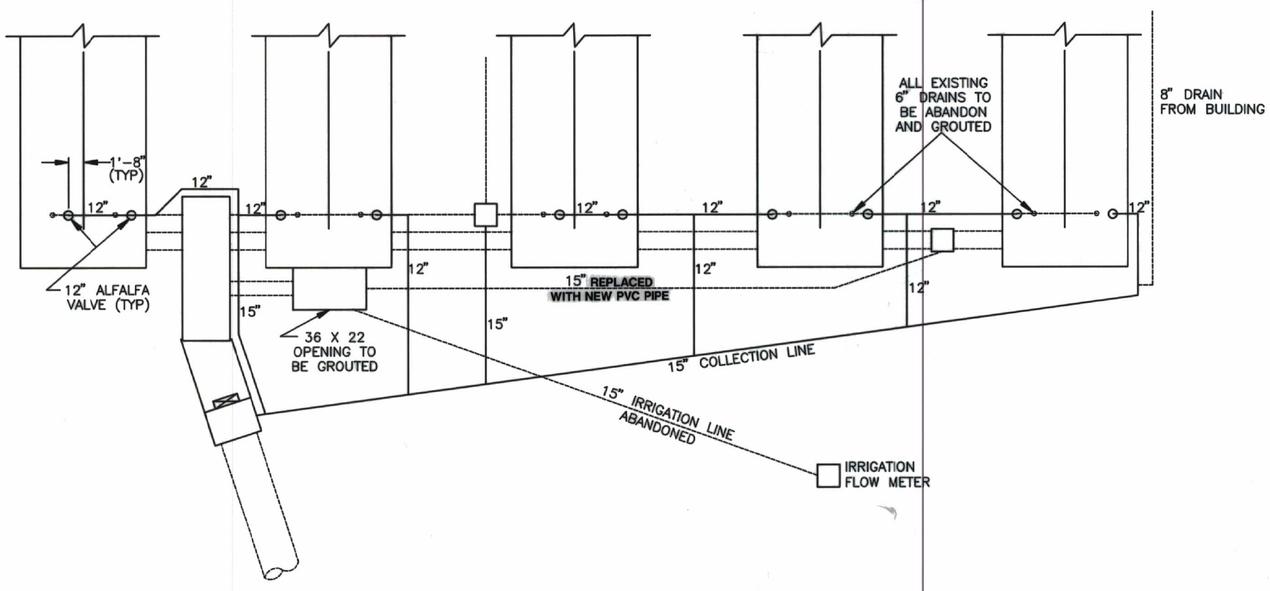

RESTORED DRAINAGE SYSTEM
SCALE: 1/8"=1'

AS BUILTS

UTAH DEPARTMENT
OF NATURAL RESOURCES

DIVISION OF WATER RESOURCES

REVISIONS				
NO.	DATE	INITS.	DESCRIPTION	APPV'D

	DATE
SCALE:	
DESIGNER:	
DESIGNER: S. PAXMAN	11/89
DRAFTSMAN: J. HOLMAN	11/89
CHECKED:	

APPROVED	DATE
CHIEF ENGINEER	
PROJECT MANAGER	
PROJECT ENGINEER	

STATE OF UTAH
DIVISION OF WILDLIFE RESOURCES
DIVISION OF WATER RESOURCES

SPRINGVILLE FISH HATCHERY-PHASE II

UTAH — COUNTY
S-207 — APPL. NO.

DRAINAGE SYSTEM

SHEET
9 OF 10

FILE NO.

BRUNING 44-131 56824

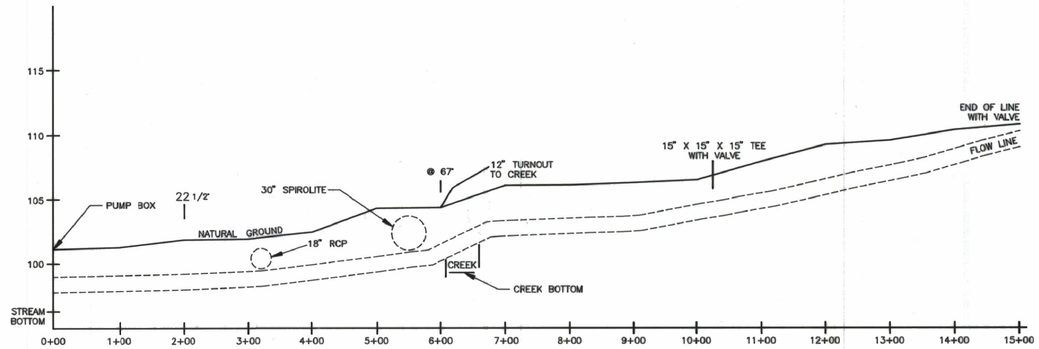

IRRIGATION SYSTEM PROFILE

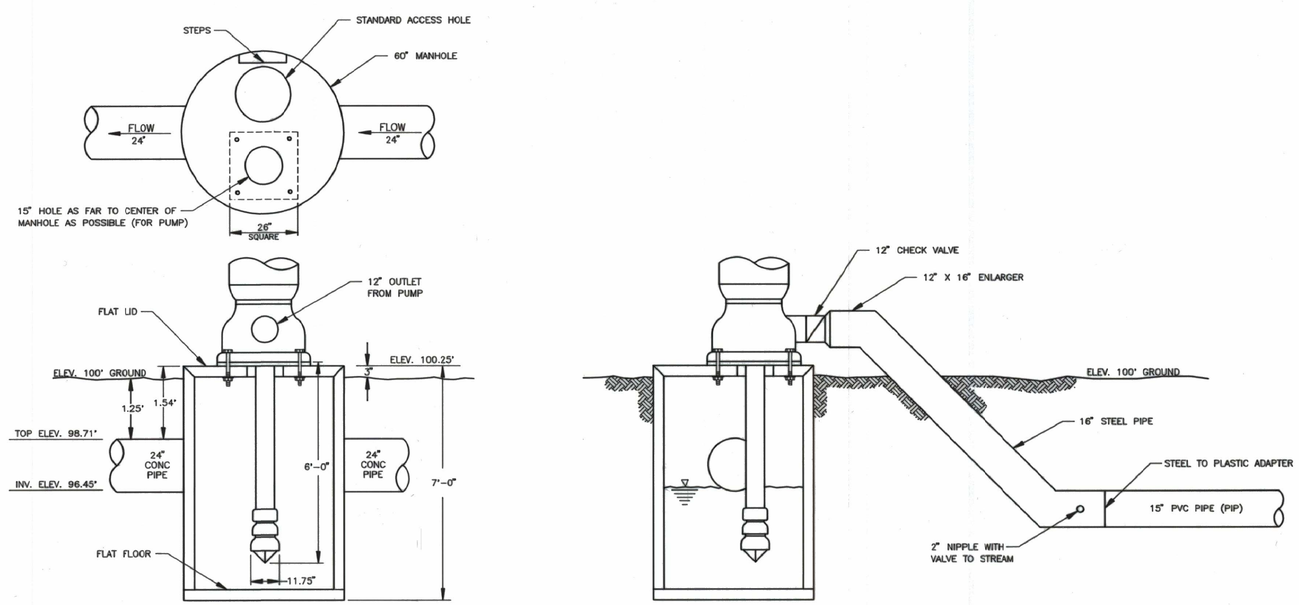

PUMP DETAILS
IRRIGATION SYSTEM

AS BUILTS

UTAH DEPARTMENT OF NATURAL RESOURCES

DIVISION OF WATER RESOURCES

REVISIONS				
NO.	DATE	INITS.	DESCRIPTION	APPV'D

		DATE
SCALE: NONE		
DESIGNER: S. PAXMAN		1/90
DESIGNER:		
DRAFTSMAN: J. HOLMAN		1/90
CHECKED:		

APPROVED	DATE
CHIEF ENGINEER	
PROJECT MANAGER	
PROJECT ENGINEER	

STATE OF UTAH
DIVISION OF WILDLIFE RESOURCES
DIVISION OF WATER RESOURCES
SPRINGVILLE FISH HATCHERY-PHASE II

UTAH | S-207
COUNTY | APPL. NO.

IRRIGATION SYSTEM PROFILE & PUMP DETAILS

SHEET 10 OF 10

FILE NO.

RUNING 44-131 56824

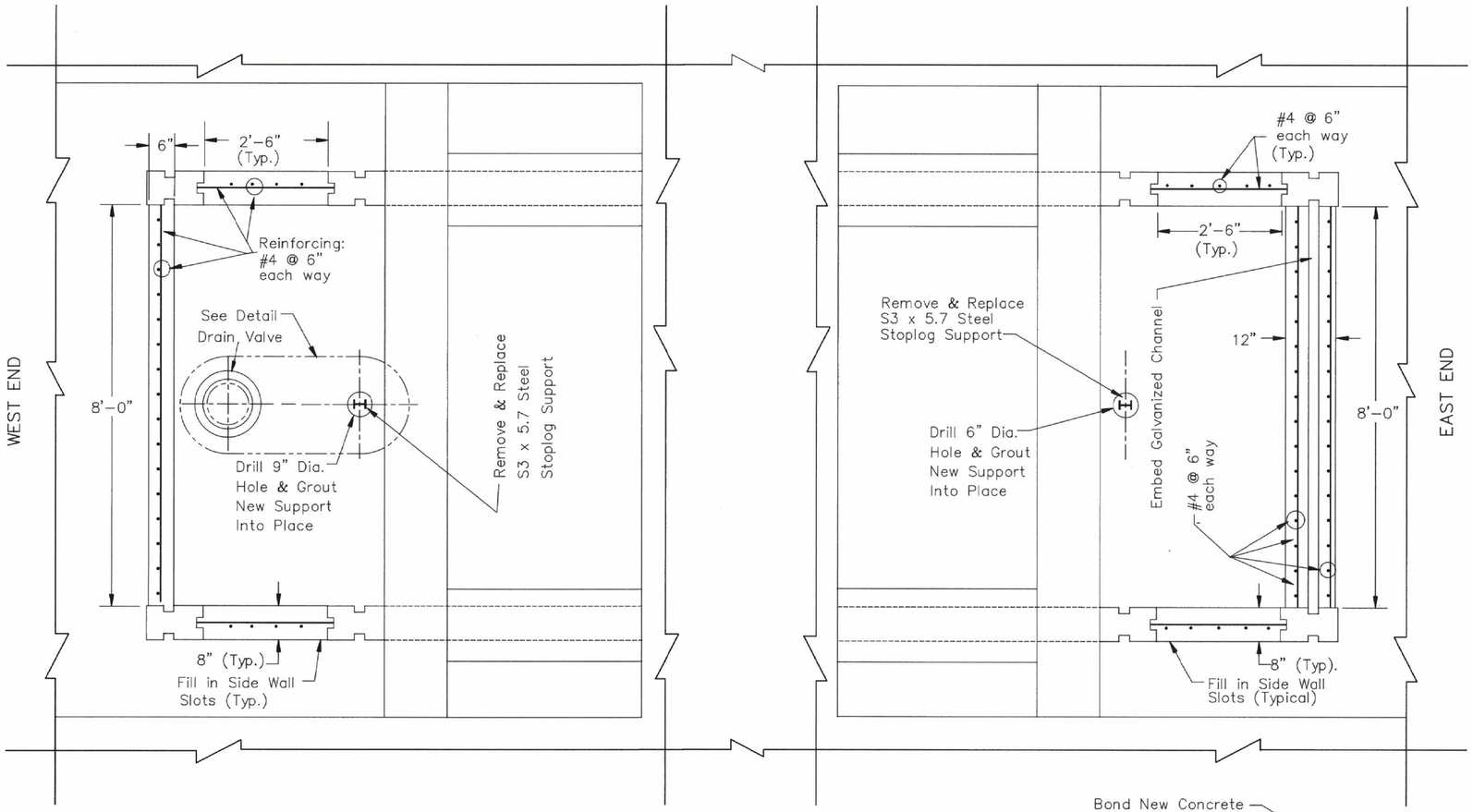

TYPICAL RACEWAY

SCALE: 3/4" = 1'

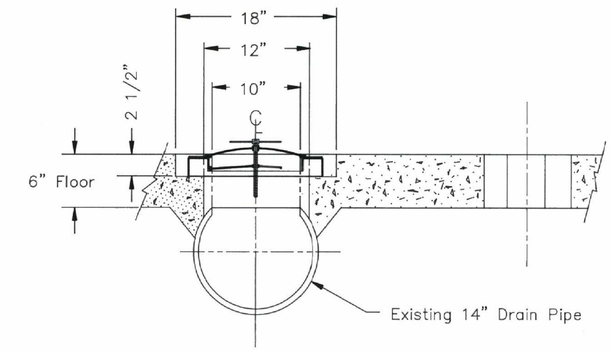

SECTION A/11

SCALE: 1 1/2" =1'

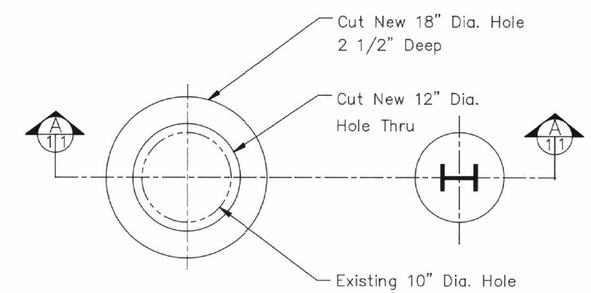

DRAIN DETAIL

SCALE: 1 1/2" = 1'

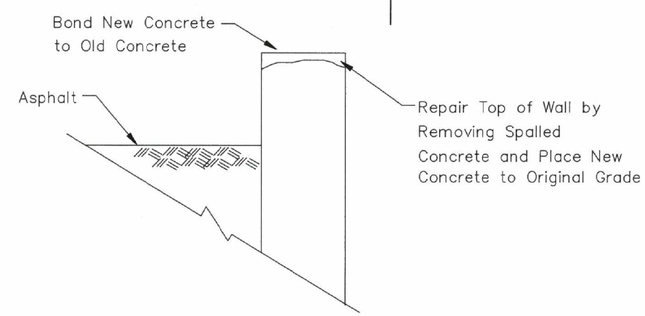

CONCRETE WALL DETAIL

SCALE: NONE

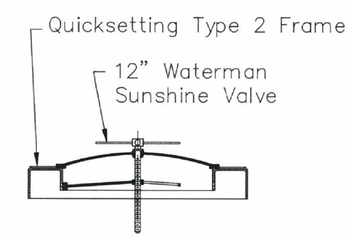

SUNSHINE VALVE DETAIL

SCALE: NONE

UTAH DEPARTMENT OF NATURAL RESOURCES
DIVISION OF WATER RESOURCES

REVISIONS				
NO.	DATE	INITS.	DESCRIPTION	APPV'D

SCALE: As Shown
DESIGNER: J. Palmer
DESIGNER:
DRAFTSMAN: P.H., P.R.C.
CHECKED:

	APPROVED	DATE
CHIEF ENGINEER	W. James Palmer	12-7-88
PROJECT MANAGER		
PROJECT ENGINEER		

REGISTERED PROFESSIONAL ENGINEER #4030 W. JAMES PALMER State of Utah

STATE OF UTAH
DIVISION OF WILDLIFE RESOURCES
DIVISION OF WATER RESOURCES
SPRINGVILLE FISH HATCHERY

UTAH — COUNTY
S-207 — APPL. NO.

RACEWAY REPAIR DETAILS

SHEET 1 OF 1
FILE NO.

BRUNING 44-131 56824

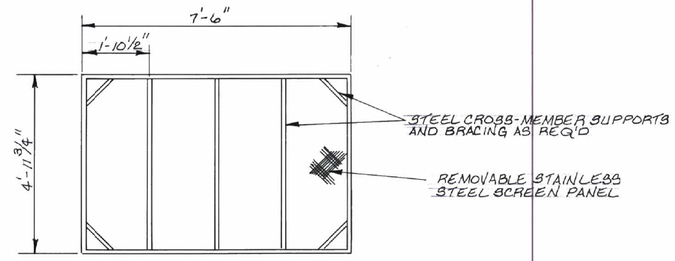

SCREEN PANEL
4 REQUIRED

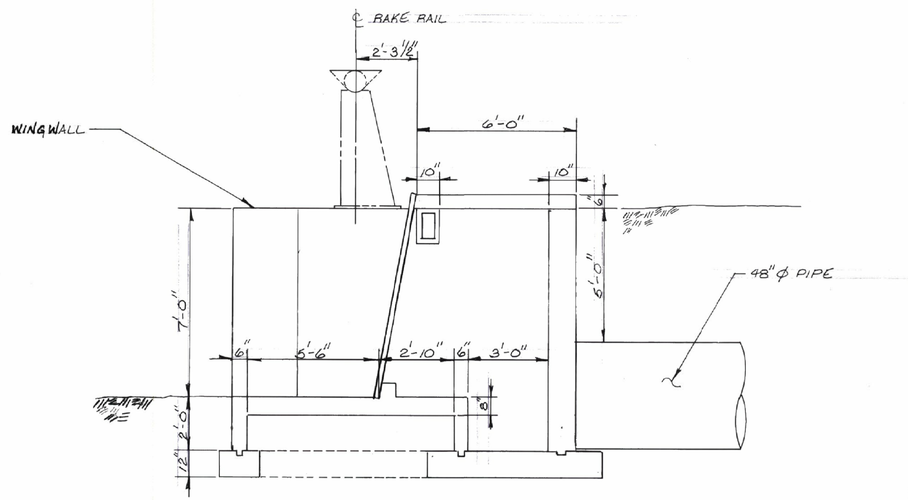

SECTION A

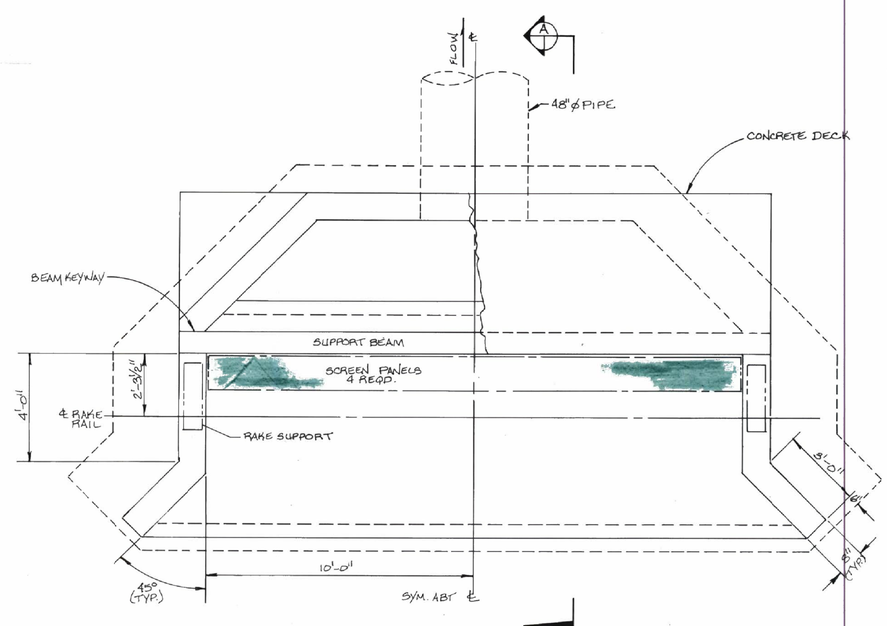

PLAN VIEW
INLET STRUCTURE

UTAH DEPARTMENT OF NATURAL RESOURCES
DIVISION OF WATER RESOURCES

REVISIONS				
NO.	DATE	INITS.	DESCRIPTION	APPV'D

SCALE: NONE	DATE	APPROVED: James Palmer, CHIEF ENGINEER	DATE 5-12-89
DESIGNER:		PROJECT MANAGER: Scott Paxman, PROJECT ENGINEER	5-12-89
DESIGNER: S.PAXMAN			
DRAFTSMAN: P.HANSEN			
CHECKED:			

REGISTERED PROFESSIONAL ENGINEER No. 8151 SCOTT W. PAXMAN State of Utah

STATE OF UTAH
DIVISION OF WILDLIFE RESOURCES
DIVISION OF WATER RESOURCES
SPRINGVILLE FISH HATCHERY - PHASE II

UTAH — COUNTY
S-207 — APPL. NO.

SCREENING DEVICE SUPPORT STRUCTURE

SHEET 1 OF 1

FILE NO.

BRUNING 44-131 56824