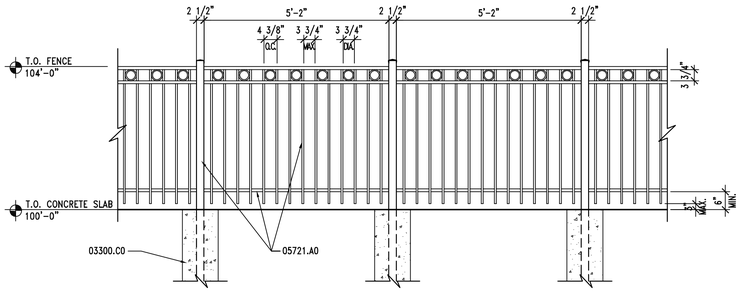

NOTE: EMBED FENCE POSTS IN CONCRETE FOOTING PER MANUFACTURER RECOMMENDATIONS. COORDINATE FENCE INSTALLATION WITH CONCRETE FLAT WORK.

D1 FENCE ELEVATION DETAIL – TYP.

2' 18" 1' 6" 0' 1' 2' 4'

AE702 | REF. AE701 | SCALE: 1/2" = 1'-0"

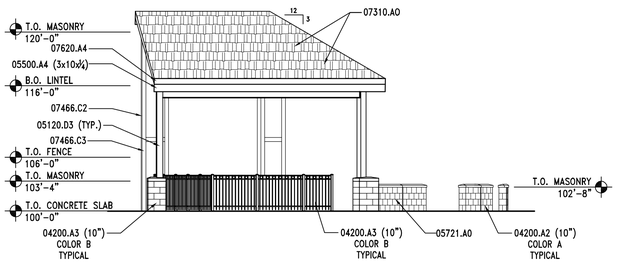

C1 EAST ELEVATION

8' 6' 4' 2' 0' 4' 8' 16'

AE702 | REF. AE701 | SCALE: 1/8" = 1'-0"

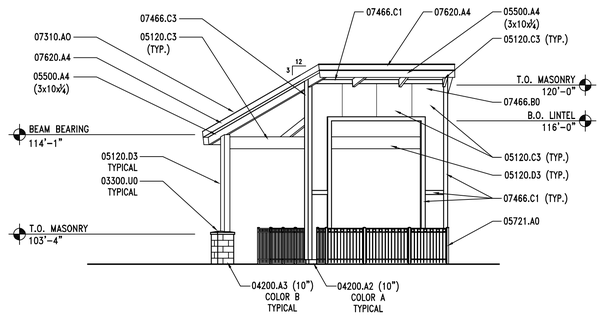

C3 WEST ELEVATION

8' 6' 4' 2' 0' 4' 8' 16'

AE702 | REF. AE701 | SCALE: 1/8" = 1'-0"

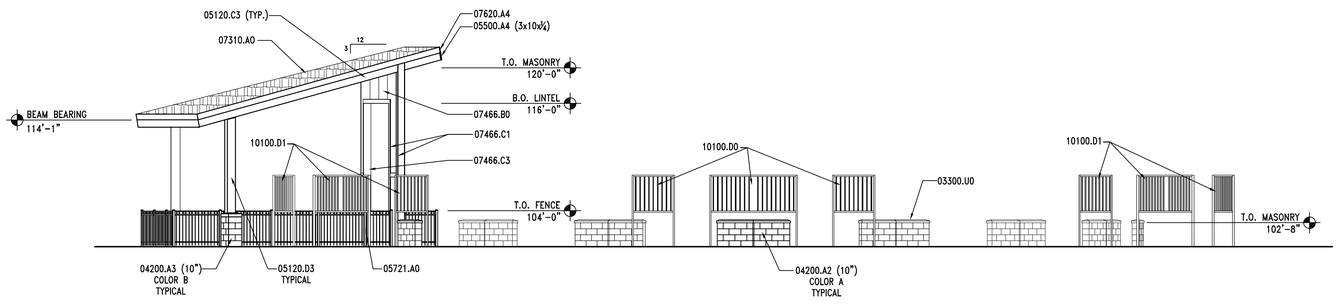

B1 NORTH ELEVATION

8' 6' 4' 2' 0' 4' 8' 16'

AE702 | REF. AE701 | SCALE: 1/8" = 1'-0"

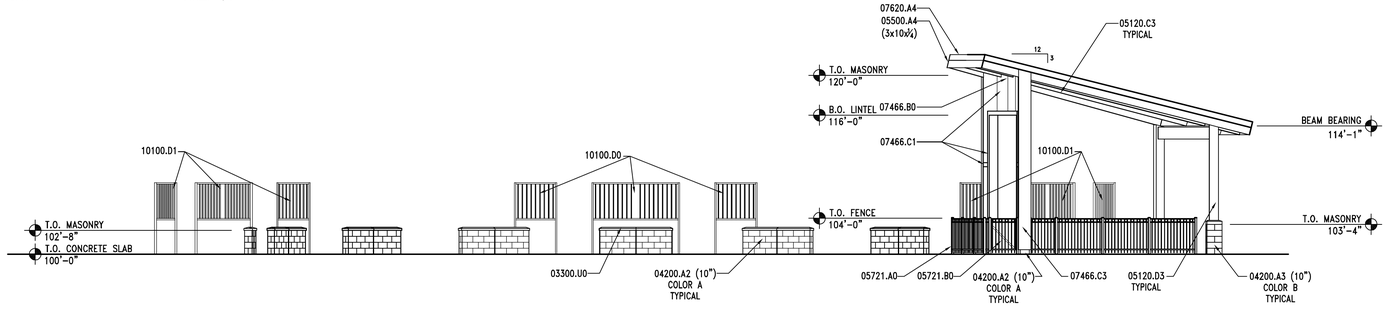

A1 SOUTH ELEVATION

8' 6' 4' 2' 0' 4' 8' 16'

AE702 | REF. AE701 | SCALE: 1/8" = 1'-0"

KEYNOTES

03300.C0	CONCRETE FOOTING
03300.U0	4" PRE-FABRICATED COLORED CONCRETE CAP – SIZE BASED ON WALL THICKNESS
04200.A2	CMU (SIZE)
04200.A3	SPLIT FACE (SIZE)
04200.B0	GROUT SOLID
05120.C3	TUBE STEEL BEAM – SEE STRUCTURAL – GALVANIZED & PAINTED
05120.D3	TUBE STEEL COLUMN – SEE STRUCTURAL – GALVANIZED & PAINTED
05500.A4	CONTINUOUS STEEL ANGLE – (SIZE) GALVANIZED & PAINTED
05721.A0	6' IRON FENCE – SEE SPECIFICATIONS
05721.B0	3' WIDE IRON FENCE GATE – SEE SPECIFICATIONS
07310.A0	ASPHALT ROOF SHINGLE W/ICE AND WATER SHIELD
07466.B0	CEDAR 8" GROVE VERTICAL SIDING
07466.C1	7/16" FIBER CEMENT TRIM (5½" WIDE) COLOR BY ARCHITECT
07466.C3	7/16" FIBER CEMENT TRIM (11½" WIDE) COLOR BY ARCHITECT
07620.A4	METAL FLASHING – PRE FINISHED
10100.D0	EXISTING DISPLAY BOARDS REMOUNTED, BACK SURFACE PRIMED & PAINTED. SEE D3/AE702A.
10100.D1	NEW DISPLAY BOARDS MOUNTED. SEE D4/AE705.

GENERAL NOTES

1. FIELD VERIFY ALL EXISTING CONDITIONS AND THEIR COMPATIBILITY WITH NEW CONSTRUCTION PRIOR TO THE COMMENCEMENT OF WORK. COORDINATE DISCREPANCIES WITH ARCHITECT.

2. DO NOT SCALE DRAWINGS.

3. SEE CIVIL, STRUCTURAL, AND ELECTRICAL DRAWINGS FOR MORE INFORMATION.

4. ALL DIMENSIONS ARE TO FACE OF WALL, UNLESS NOTED OTHERWISE.

5. SEE SPECIFICATIONS FOR ALL EXTERIOR MATERIAL FINISHES AND COLORS.

6. PROVIDE ANTI-GRAFFITI COATING PER SPECIFICATION SECTION 09860 ON ALL EXPOSED CMU.

7. ALL CMU GROUT JOINTS TOOLED, SQUARE, 1/2" DEPTH FROM FACE OF BLOCK.

8. SEE SHEET AE503 FOR QUANTITY AND TYPES OF PICNIC TABLES, TRASH RECEPTACLES, AND BENCHES.

CLIENT

UDOT CONNECTING COMMUNITIES

TIE FORK VISITORS CENTER
17845 E HIGHWAY 6
SPANISH FORK, UTAH 84660

DESIGNER

ARCHIPLEX GROUP
architecture · planning · design services
255 Crossroad Square
Salt lake City, UT 84115
P:(801) 961-7070
F:(801) 961-7373

CONSULTANTS

PROFESSIONAL SEAL

STATE OF UTAH
RALPH M. STANISLAW
95-312619-0301
8-12-09
LICENSED ARCHITECT

ISSUE

MARK	DATE	DESCRIPTION
	8-09	CONSTRUCTION DOCUMENTS
	6-22-09	PS & E REVIEW
	3-09	95% REVIEW SUBMITTAL
	1-5-09	50% REVIEW SUBMITTAL

DFCM PROJECT NO:	08264900
DFCM CONTRACT NO:	097130
ARCHIPLEX PROJECT NO:	0832.01
DRAWN BY:	A. PHILLIPS
CHECKED BY:	R. STANISLAW
SCALE:	AS SHOWN
DATE:	AUGUST, 2009

SHEET TITLE

ROUND HOUSE ELEVATIONS BASE BID

AE702

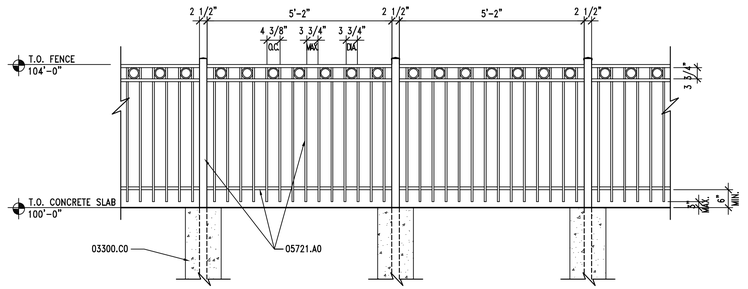

NOTE: EMBED FENCE POSTS IN CONCRETE FOOTING PER MANUFACTURER RECOMMENDATIONS. ANCHOR TO MASONRY PIERS AS REQUIRED. COORDINATE FENCE INSTALLATION WITH CONCRETE FLAT WORK.

D1 | FENCE ELEVATION DETAIL – TYP.

AE702A | REF. AE701A | SCALE: 1/2" = 1'-0"

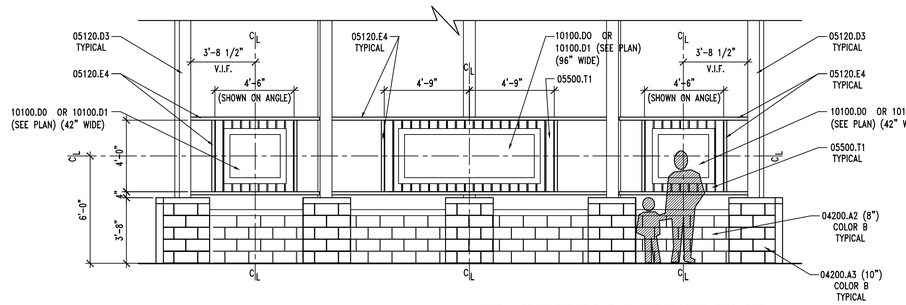

NOTE: CONTINUOUS WELD AT ALL CONTACT POINTS (STEEL TUBE & METAL DECK). DISPLAY BOARDS BOLTED TO METAL DECK.

D3 | DISPLAY BOARDS DETAIL

AE702A | REF. AE701A | SCALE: 1/4" = 1'-0"

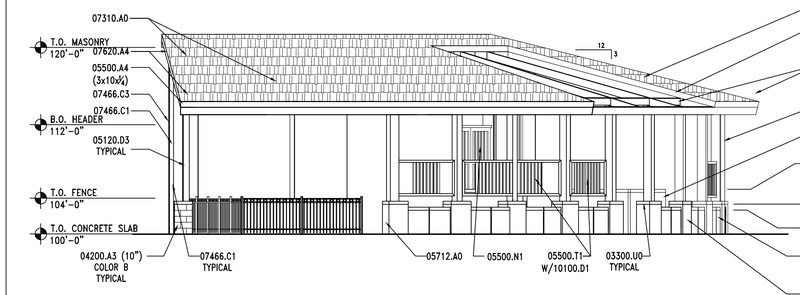

C1 | WEST ELEVATION

AE702A | REF. AE701A | SCALE: 1/8" = 1'-0"

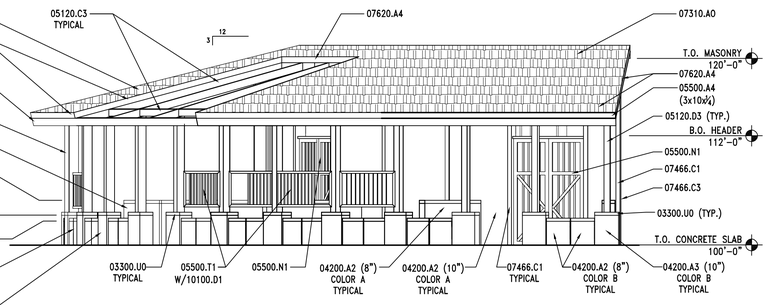

C3 | EAST ELEVATION

AE702A | REF. AE701A | SCALE: 1/8" = 1'-0"

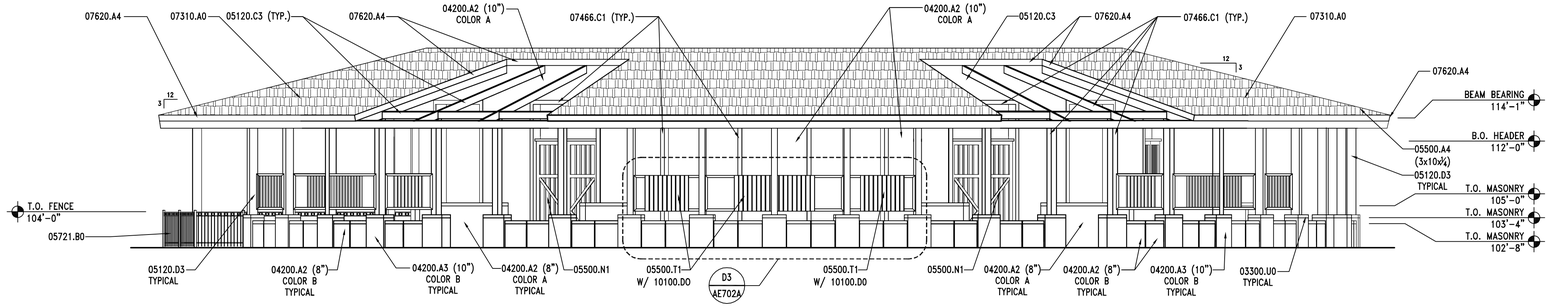

B1 | REAR ELEVATION

AE702A | REF. AE701A | SCALE: 1/8" = 1'-0"

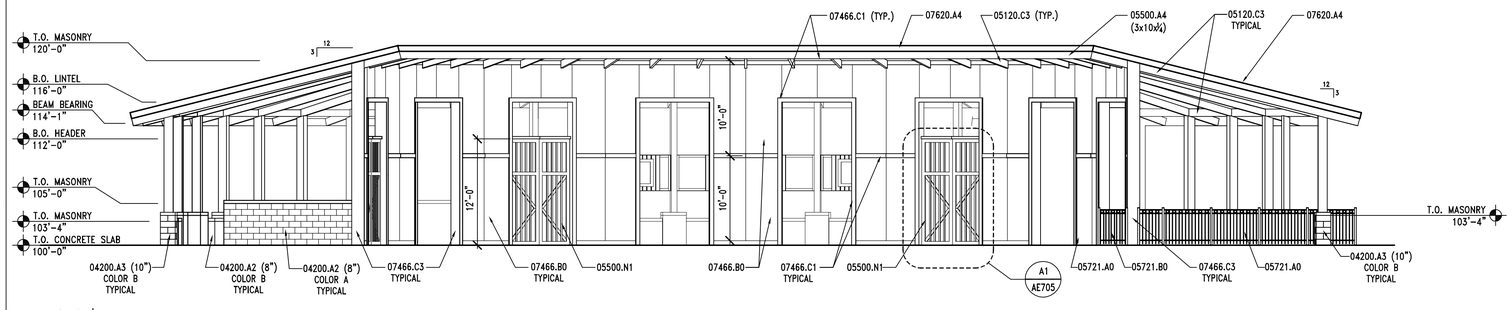

A1 | FRONT ELEVATION

AE702A | REF. AE701A | SCALE: 1/8" = 1'-0"

KEYNOTES

03300.C0	CONCRETE FOOTING
03300.U0	4" PRE-FABRICATED COLORED CONCRETE CAP – SIZE BASED ON WALL THICKNESS
04200.A2	CMU (SIZE)
04200.A3	SPLIT FACE (SIZE)
05120.C3	TUBE STEEL BEAM – SEE STRUCTURAL – GALVANIZED & PAINTED
05120.D3	TUBE STEEL COLUMN – SEE STRUCTURAL – GALVANIZED & PAINTED
05120.E4	TUBE STEEL 2x2 – GALVANIZED & PAINTED – CONTINUOUS WELD AT ALL CONTACT POINTS
05500.A4	CONTINUOUS STEEL ANGLE – (SIZE) GALVANIZED & PAINTED
05500.N1	CUSTOM METAL GATE – GALVANIZED & PAINTED
05500.T1	½" STEEL DECK – GALVANIZED – 20 GA. MINIMUM
05721.A0	6' IRON FENCE – SEE SPECIFICATIONS
05721.B0	IRON FENCE GATE (36" WIDE) – SEE SPECIFICATIONS
07310.A0	ASPHALT ROOF SHINGLE W/ICE AND WATER SHIELD
07466.B0	CEDAR 8" GROVE VERTICAL SIDING
07466.C1	7/16" FIBER CEMENT TRIM (5½" WIDE)
07466.C3	7/16" FIBER CEMENT TRIM (11½" WIDE)
07620.A4	METAL FLASHING – PRE FINISHED
10100.D0	EXISTING DISPLAY BOARDS REMOUNTED, BACK SURFACE PRIMED & PAINTED. SEE D3/AE702A.
10100.D1	NEW DISPLAY BOARDS MOUNTED. SEE D4/AE705.

GENERAL NOTES

1. FIELD VERIFY ALL EXISTING CONDITIONS AND THEIR COMPATIBILITY WITH NEW CONSTRUCTION PRIOR TO THE COMMENCEMENT OF WORK. COORDINATE DISCREPANCIES WITH ARCHITECT.
2. DO NOT SCALE DRAWINGS.
3. SEE CIVIL, STRUCTURAL, AND ELECTRICAL DRAWINGS FOR MORE INFORMATION.
4. ALL DIMENSIONS ARE TO FACE OF WALL, UNLESS NOTED OTHERWISE.
5. SEE SPECIFICATIONS FOR ALL EXTERIOR MATERIAL FINISHES AND COLORS.
6. PROVIDE ANTI-GRAFFITI COATING PER SPECIFICATION SECTION 09860 ON ALL EXPOSED CMU.
7. ALL CMU GROUT JOINTS TOOLED, SQUARE, 1/2" DEPTH FROM FACE OF BLOCK.
8. SEE SHEET AE503 FOR QUANTITY AND TYPES OF PICNIC TABLES, TRASH RECEPTACLES, AND BENCHES.

CLIENT

UDOT CONNECTING COMMUNITIES

TIE FORK VISITORS CENTER
17845 E HIGHWAY 6
SPANISH FORK, UTAH 84660

DESIGNER

ARCHIPLEX GROUP
architecture · planning · design services
255 Crossroad Square
Salt lake City, UT 84115
P:(801) 961-7070
F:(801) 961-7373

CONSULTANTS

PROFESSIONAL SEAL

STATE OF UTAH
RALPH M. STANISLAW
95-312619-0301
8-12-09
LICENSED ARCHITECT

ISSUE

MARK	DATE	DESCRIPTION
	8-09	CONSTRUCTION DOCUMENTS
	6-22-09	PS & E REVIEW
	3-09	95% REVIEW SUBMITTAL
	1-5-09	50% REVIEW SUBMITTAL

DFCM PROJECT NO:	08264900
DFCM CONTRACT NO:	097130
ARCHIPLEX PROJECT NO:	0832.01
DRAWN BY:	A. PHILLIPS
CHECKED BY:	R. STANISLAW
SCALE:	AS SHOWN
DATE:	AUGUST, 2009

SHEET TITLE

ROUND HOUSE ELEVATIONS ADD-ALTERNATE 1

AE702A

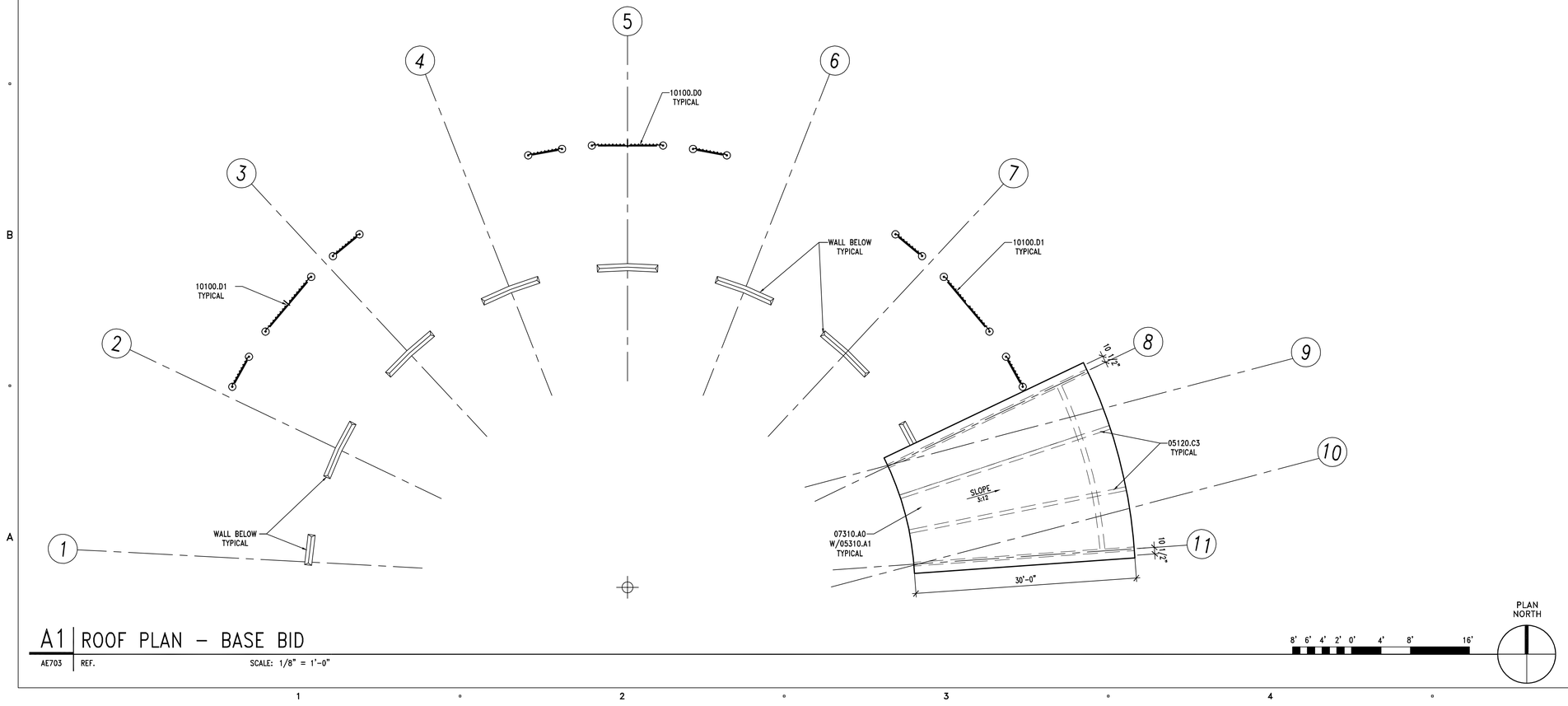

A1 | ROOF PLAN – BASE BID

AE703 | REF. SCALE: 1/8" = 1'-0"

KEYNOTES

05120.C3	TUBE STEEL BEAM – SEE STRUCTURAL – GALVANIZED & PAINTED
05310.A1	METAL DECK – SEE STRUCTURAL
07310.A0	ASPHALT ROOF SHINGLE W/ICE AND WATER SHIELD
10100.D0	EXISTING DISPLAY BOARDS REMOUNTED, BACK SURFACES PRIMED & PAINTED. SEE D3/AE702A
10100.D1	NEW DISPLAY BOARDS MOUNTED. SEE D4/AE705.

GENERAL NOTES

1. FIELD VERIFY ALL EXISTING CONDITIONS AND THEIR COMPATIBILITY WITH NEW CONSTRUCTION PRIOR TO THE COMMENCEMENT OF WORK. COORDINATE DISCREPANCIES WITH ARCHITECT.
2. DO NOT SCALE DRAWINGS.
3. SEE CIVIL, STRUCTURAL, AND ELECTRICAL DRAWINGS FOR MORE INFORMATION.
4. ALL DIMENSIONS ARE TO FACE OF WALL, UNLESS NOTED OTHERWISE.
5. SEE SPECIFICATIONS FOR ALL EXTERIOR MATERIAL FINISHES AND COLORS.
6. PROVIDE ANTI-GRAFFITI COATING PER SPECIFICATION SECTION 09860 ON ALL EXPOSED CMU.
7. ALL CMU GROUT JOINTS TOOLED, SQUARE, 1/2" DEPTH FROM FACE OF BLOCK.
8. SEE SHEET AE503 FOR QUANTITY AND TYPES OF PICNIC TABLES, TRASH RECEPTACLES, AND BENCHES.

CLIENT

UDOT CONNECTING COMMUNITIES

TIE FORK VISITORS CENTER
17845 E HIGHWAY 6
SPANISH FORK, UTAH 84660

DESIGNER

ARCHIPLEX GROUP
architecture · planning · design services
255 Crossroad Square
Salt lake City, UT 84115
P:(801) 961-7070
F:(801) 961-7373

CONSULTANTS

PROFESSIONAL SEAL

STATE OF UTAH
RALPH M. STANISLAW
95-319619-0301
8-12-09
LICENSED ARCHITECT

ISSUE

MARK	DATE	DESCRIPTION
	8-09	CONSTRUCTION DOCUMENTS
	6-22-09	PS & E REVIEW
	3-09	95% REVIEW SUBMITTAL
	1-5-09	50% REVIEW SUBMITTAL

DFCM PROJECT NO:	08264900
DFCM CONTRACT NO:	097130
ARCHIPLEX PROJECT NO:	0832.01
DRAWN BY:	A. PHILLIPS
CHECKED BY:	R. STANISLAW
SCALE:	1/8" = 1'-0"
DATE:	AUGUST, 2009

SHEET TITLE

ROUND HOUSE ROOF PLAN BASE BID

AE703

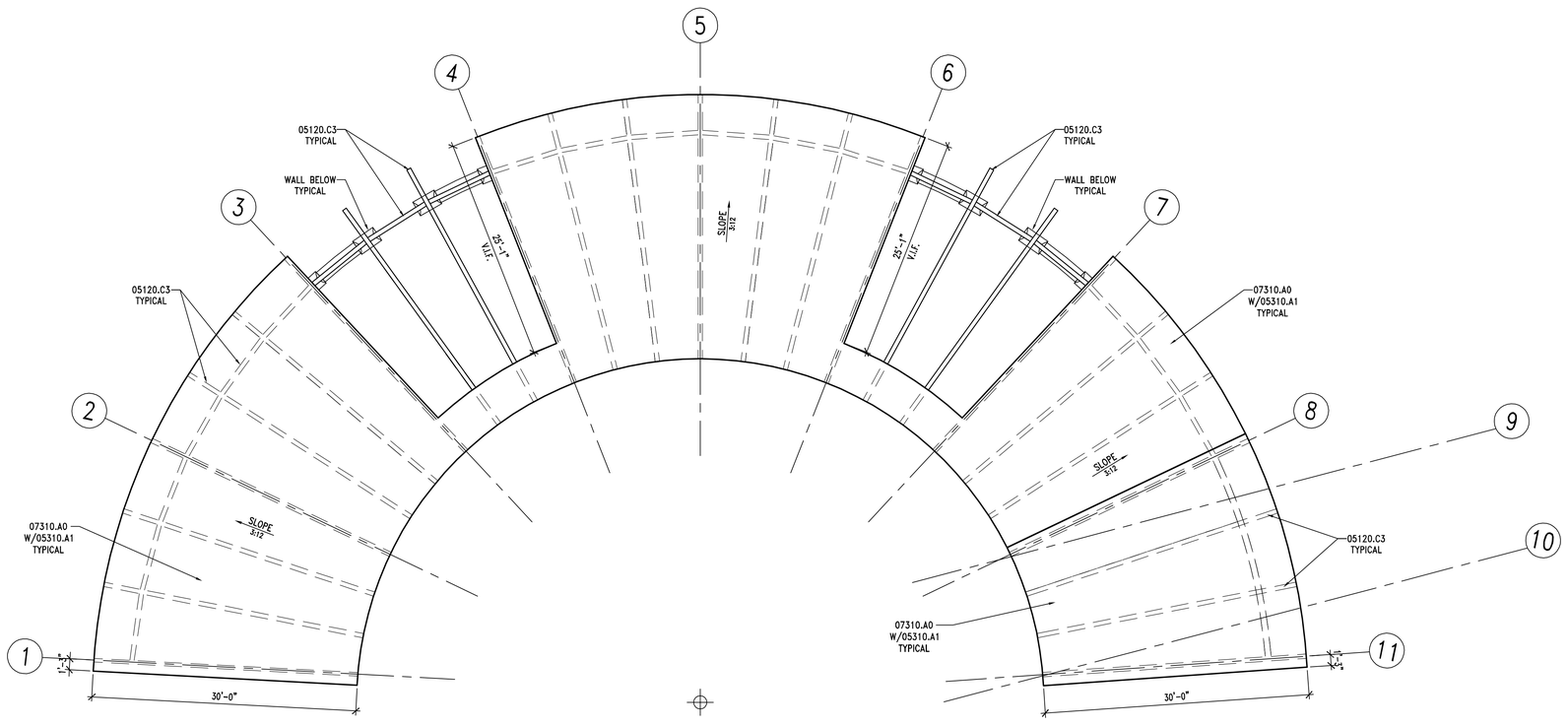

A1 | ROOF PLAN – ADD ALTERNATE 1

AE703A | REF. SCALE: 1/8" = 1'-0"

8' 6' 4' 2' 0' 4' 8' 16'

PLAN NORTH

KEYNOTES

05120.C3 TUBE STEEL BEAM – SEE STRUCTURAL – GALVANIZED & PAINTED

05310.A1 METAL DECK – SEE STRUCTURAL

07310.A0 ASPHALT ROOF SHINGLE W/ICE AND WATER SHIELD

GENERAL NOTES

1. FIELD VERIFY ALL EXISTING CONDITIONS AND THEIR COMPATIBILITY WITH NEW CONSTRUCTION PRIOR TO THE COMMENCEMENT OF WORK. COORDINATE DISCREPANCIES WITH ARCHITECT.

2. DO NOT SCALE DRAWINGS.

3. SEE CIVIL, STRUCTURAL, AND ELECTRICAL DRAWINGS FOR MORE INFORMATION.

4. ALL DIMENSIONS ARE TO FACE OF WALL, UNLESS NOTED OTHERWISE.

5. SEE SPECIFICATIONS FOR ALL EXTERIOR MATERIAL FINISHES AND COLORS.

6. PROVIDE ANTI-GRAFFITI COATING PER SPECIFICATION SECTION 09860 ON ALL EXPOSED CMU.

7. ALL CMU GROUT JOINTS TOOLED, SQUARE, 1/2" DEPTH FROM FACE OF BLOCK.

8. SEE SHEET AE503 FOR QUANTITY AND TYPES OF PICNIC TABLES, TRASH RECEPTACLES, AND BENCHES.

CLIENT

UDOT CONNECTING COMMUNITIES

TIE FORK VISITORS CENTER
17845 E HIGHWAY 6
SPANISH FORK, UTAH 84660

DESIGNER

ARCHIPLEX GROUP
architecture · planning · design services
255 Crossroad Square
Salt lake City, UT 84115
P:(801) 961-7070
F:(801) 961-7373

CONSULTANTS

PROFESSIONAL SEAL

STATE OF UTAH
RALPH M. STANISLAW
95-319519-0301
8-12-09
LICENSED ARCHITECT

ISSUE

MARK	DATE	DESCRIPTION
	8-09	CONSTRUCTION DOCUMENTS
	6-22-09	PS & E REVIEW
	3-09	95% REVIEW SUBMITTAL
	1-5-09	50% REVIEW SUBMITTAL

DFCM PROJECT NO:	08264900
DFCM CONTRACT NO:	097130
ARCHIPLEX PROJECT NO:	0832.01
DRAWN BY:	A. PHILLIPS
CHECKED BY:	R. STANISLAW
SCALE:	1/8" = 1'-0"
DATE:	AUGUST, 2009

SHEET TITLE

ROUND HOUSE ROOF PLAN ADD-ALTERNATE 1

AE703A

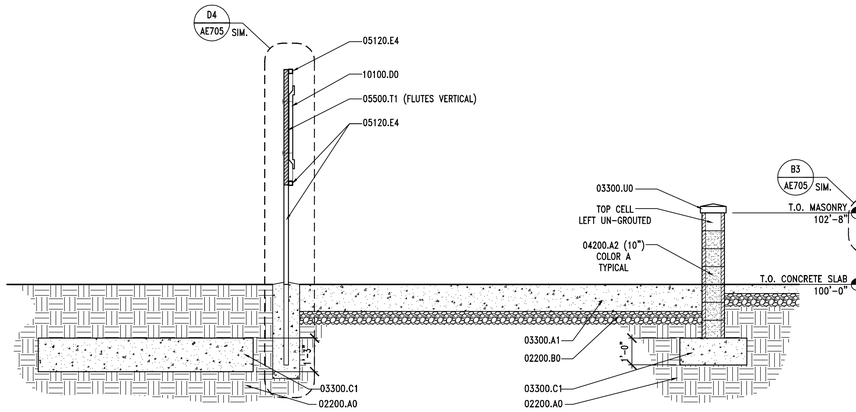

D1 | ROUND HOUSE BUILDING SECTION – BASE BID ONLY

AE704 | REF. AE701 | SCALE: 3/8" = 1'-0"

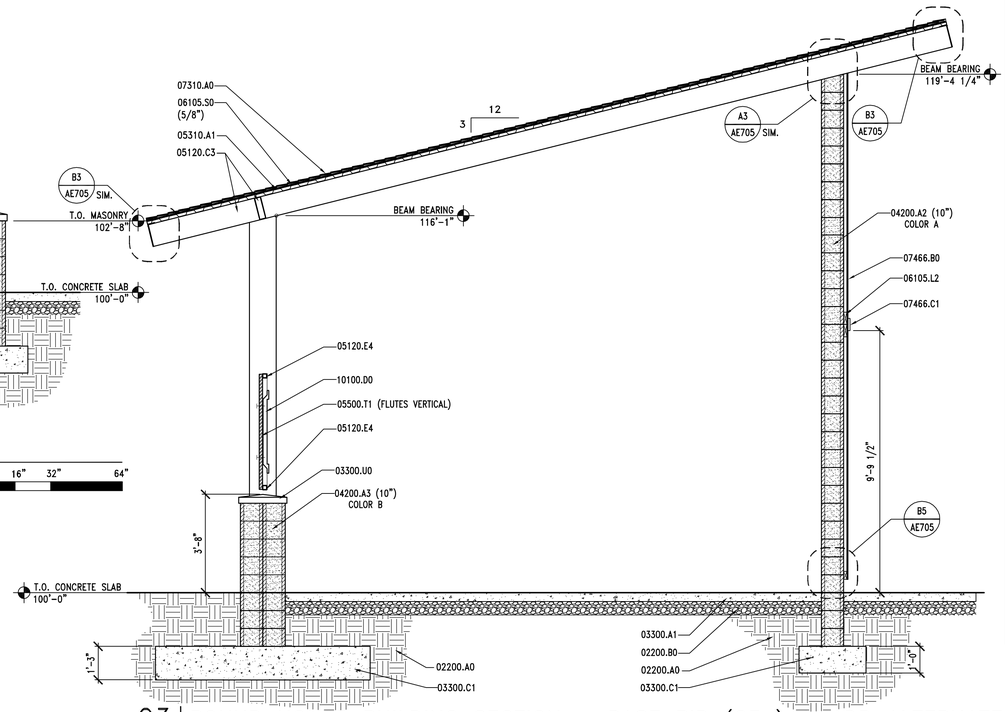

C3 | ROUND HOUSE BUILDING SECTION – BASE BID (C3a) & ADD ALTERNATE 1 (C3b)

AE704 | REF. AE701, AE701A | SCALE: 3/8" = 1'-0"

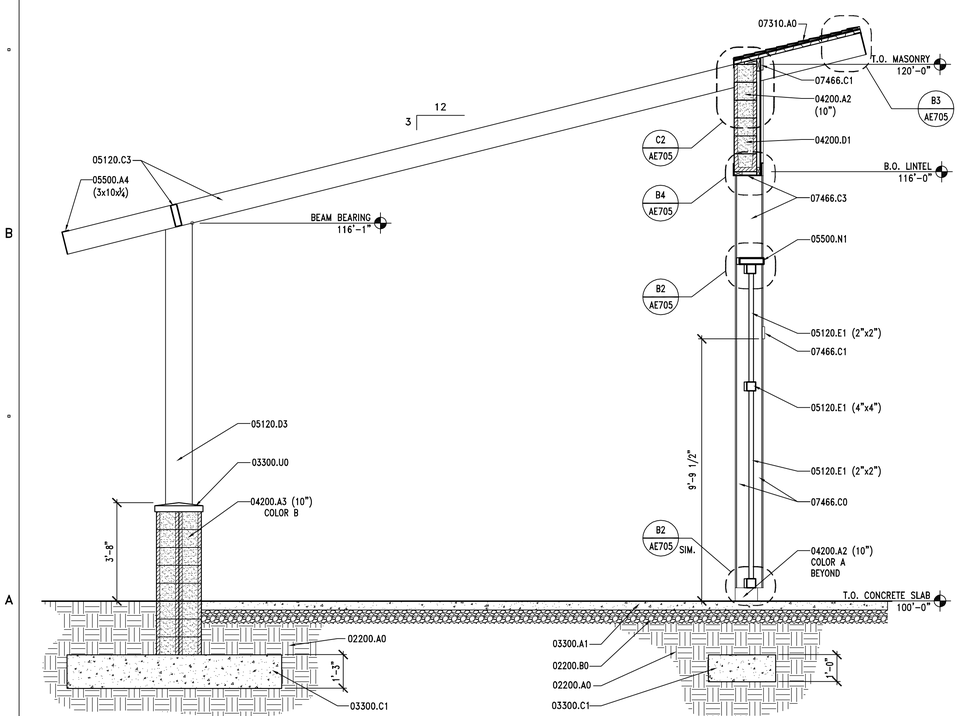

A1 | ROUND HOUSE BUILDING SECTION – ADD ALTERNATE 1 ONLY

AE704 | REF. AE701A | SCALE: 3/8" = 1'-0"

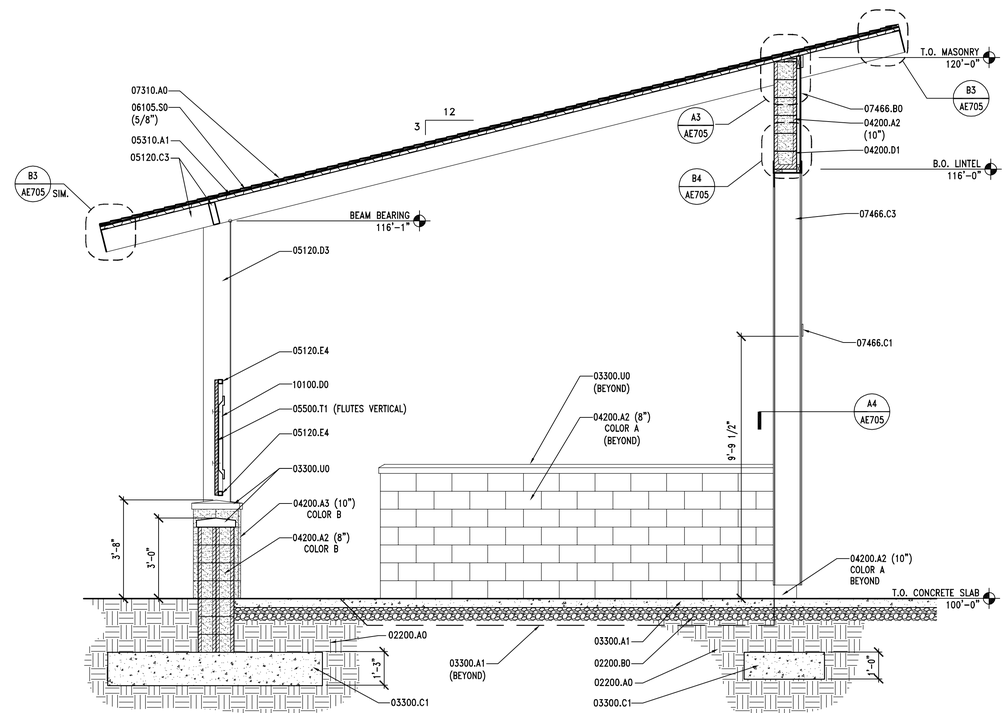

A3 | ROUND HOUSE BUILDING SECTION – ADD ALTERNATE 1 ONLY

AE704 | REF. AE701A | SCALE: 3/8" = 1'-0"

KEYNOTES

02200.A0 COMPACTED FILL
02200.B0 GRAVEL BASE

03300.A1 CONCRETE SLAB ON GRADE – SEE STRUCTURAL
03300.C1 FOOTING – SEE STRUCTURAL
03300.U0 4" PRE-CAST COLORED CONCRETE CAP – SIZE BASED ON WALL THICKNESS

04200.A2 CMU (SIZE)
04200.A3 SPLIT-FACE (SIZE)
04200.D1 CMU LINTEL – SEE STRUCTURAL

05120.C3 TUBE STEEL BEAM – SEE STRUCTURAL – GALVANIZED & PAINTED
05120.D3 TUBE STEEL COLUMN – SEE STRUCTURAL – GALVANIZED & PAINTED
05120.E0 TUBE STEEL (SIZE)
05120.E1 TUBE STEEL (SIZE) – GALVANIZED AND PAINTED
05120.E2 TUBE STEEL FRAME (SIZE) – GALVANIZED AND PAINTED
05120.E4 TUBE STEEL 2x2 – GALVANIZED & PAINTED – CONTINUOUS WELD AT ALL CONTACT POINTS
05310.A1 METAL DECK – SEE STRUCTURAL
05500.N1 CUSTOM METAL GATE – PRIMED AND PAINTED
05500.T1 ½" STEEL DECK – GALVANIZED – 20 GA. MINIMUM

06105.L2 2x BLOCKING
06105.P1 PRESSURE TREATED WOOD (SIZE)
06105.S0 SHEATHING – OSB (THICKNESS)

07310.A0 ASPHALT ROOF SHINGLE W/ICE AND WATER SHIELD
07466.B0 FIBER CEMENT CEDAR 8" GROOVE VERTICAL SIDING
07466.C0 7/16" FIBER CEMENT TRIM (3 1/2" WIDE) W/MITERED CORNERS
07466.C1 7/16" FIBER CEMENT TRIM (5 1/2" WIDE)
07466.C3 7/16" FIBER CEMENT TRIM (11 1/4" WIDE)

10100.D0 EXISTING DISPLAY BOARDS, REMOUNTED, BACK SURFACES PRIMED & PAINTED – SEE D3/AE702A

GENERAL NOTES

1. FIELD VERIFY ALL EXISTING CONDITIONS AND THEIR COMPATIBILITY WITH NEW CONSTRUCTION PRIOR TO THE COMMENCEMENT OF WORK. COORDINATE DISCREPANCIES WITH ARCHITECT.
2. DO NOT SCALE DRAWINGS.
3. SEE CIVIL, STRUCTURAL, AND ELECTRICAL DRAWINGS FOR MORE INFORMATION.
4. ALL DIMENSIONS ARE TO FACE OF WALL, UNLESS NOTED OTHERWISE.
5. SEE SPECIFICATIONS FOR ALL EXTERIOR MATERIAL FINISHES AND COLORS.
6. PROVIDE ANTI-GRAFFITI COATING PER SPECIFICATION SECTION 09860 ON ALL EXPOSED CMU.
7. ALL CMU GROUT JOINTS TOOLED, SQUARE, 1/2" DEPTH FROM FACE OF BLOCK.
8. SEE SHEET AE503 FOR QUANTITY AND TYPES OF PICNIC TABLES, TRASH RECEPTACLES, AND BENCHES.

CLIENT

UDOT CONNECTING COMMUNITIES

TIE FORK VISITORS CENTER
17845 E HIGHWAY 6
SPANISH FORK, UTAH 84660

DESIGNER

ARCHIPLEX GROUP
architecture · planning · design services
255 Crossroad Square
Salt lake City, UT 84115
P:(801) 961-7070
F:(801) 961-7373

CONSULTANTS

PROFESSIONAL SEAL

STATE OF UTAH
RALPH M. STANISLAW
05-312619-0301
8-12-09
LICENSED ARCHITECT

ISSUE

MARK	DATE	DESCRIPTION
	8-09	CONSTRUCTION DOCUMENTS
	6-22-09	PS & E REVIEW
	3-09	95% REVIEW SUBMITTAL
	1-5-09	50% REVIEW SUBMITTAL

DFCM PROJECT NO:	08264900
DFCM CONTRACT NO:	097130
ARCHIPLEX PROJECT NO:	0832.01
DRAWN BY:	B. BEECHER
CHECKED BY:	R. STANISLAW
SCALE:	3/8" = 1'-0"
DATE:	AUGUST, 2009

SHEET TITLE

ROUND HOUSE BUILDING SECTIONS

AE704

ADD-ALTERNATE 1 (ONLY) DETAILS

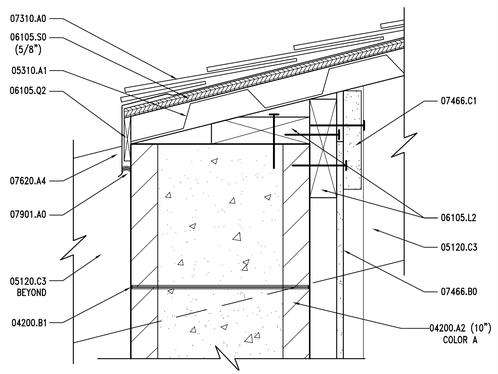

C2 | ROOF END DETAIL – TYP.

AE705 | REF. AE704, AE705 | SCALE: 3" = 1'-0"

4" 3" 2" 1" 0' 2" 4" 8"

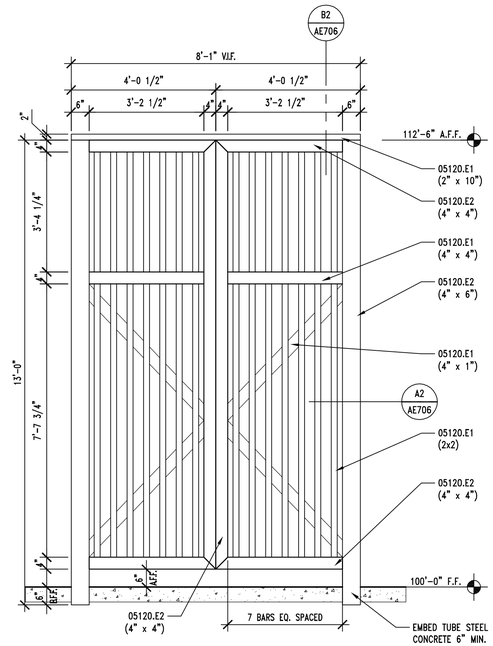

A1 | ROUND HOUSE METAL GATE DETAIL

AE705 | REF. AE701, AE702 | SCALE: 1/2" = 1'-0"

2' 18" 1' 6" 0' 1' 2' 4'

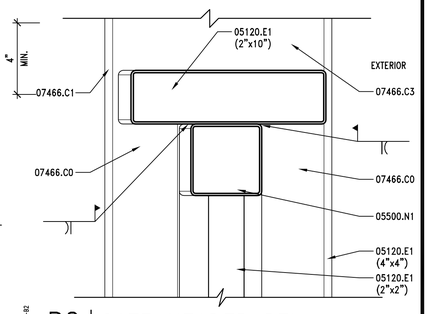

B2 | GATE HEADER DTL.

AE705 | REF. AE704, AE706 | SCALE: 3" = 1'-0"

4" 3" 2" 1" 0 2" 4" 8"

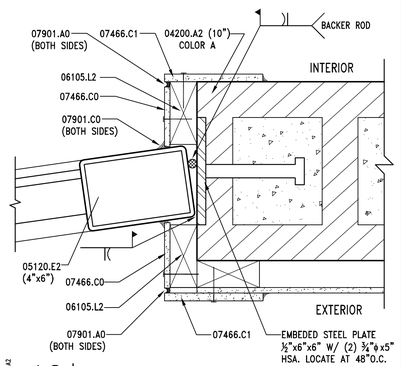

A2 | GATE JAMB DTL.

AE705 | REF. AE704, AE706 | SCALE: 3" = 1'-0"

4" 3" 2" 1" 0 2" 4" 8"

BASE BID (ONLY) DETAILS

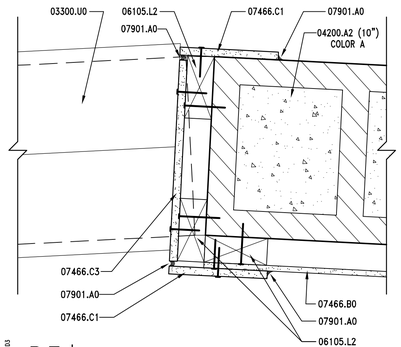

D3 | CMU WALL DETAIL

AE705 | REF. AE701 | SCALE: 3" = 1'-0"

4" 3" 2" 1" 0 2" 4" 8"

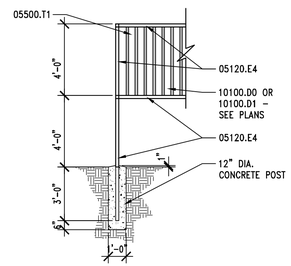

D4 | SIGNAGE POST DETAIL

AE705 | REF. AE701, AE702, AE703, AE704 | SCALE: 1/4" = 1'-0"

BASE BID & ADD-ALTERNATE 1 DETAILS

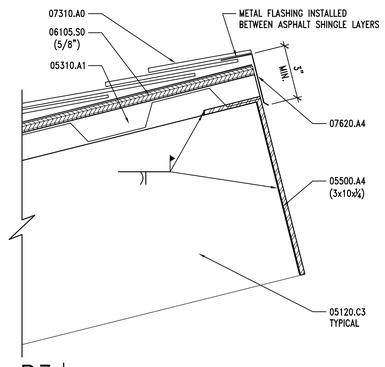

B3 | ROOF END DETAIL – TYP.

AE705 | REF. AE704, AE705 | SCALE: 3" = 1'-0"

4" 3" 2" 1" 0' 2" 4" 8"

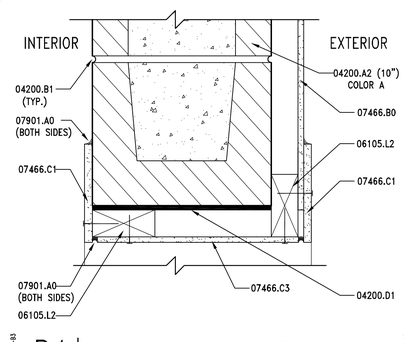

B4 | OPENING HEAD DTL.

AE705 | REF. AE704, AE705 | SCALE: 3" = 1'-0"

4" 3" 2" 1" 0 2" 4" 8"

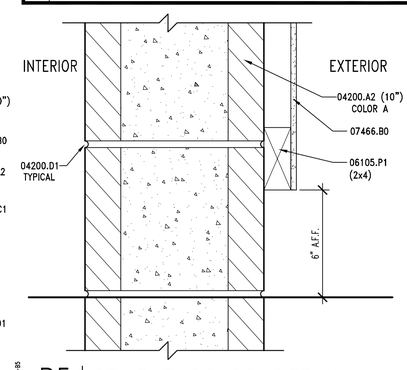

B5 | CEMENT BOARD DETAIL

AE705 | REF. AE704 | SCALE: 3" = 1'-0"

4" 3" 2" 1" 0 2" 4" 8"

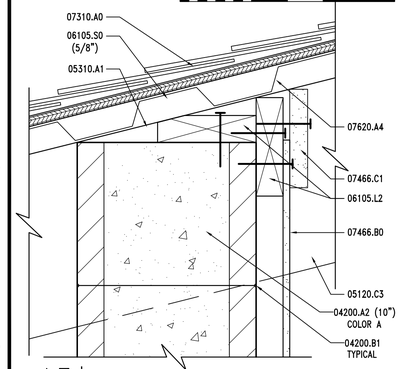

A3 | WALL & ROOF JOINT DTL.

AE705 | REF. AE704, AE705 | SCALE: 3" = 1'-0"

4" 3" 2" 1" 0' 2" 4" 8"

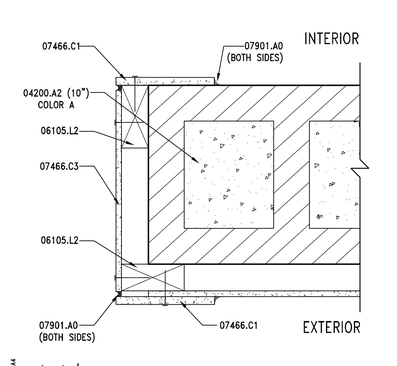

A4 | OPENING JAMB DTL.

AE705 | REF. AE701, AE701A, AE704, AE705 | SCALE: 3" = 1'-0"

4" 3" 2" 1" 0 2" 4" 8"

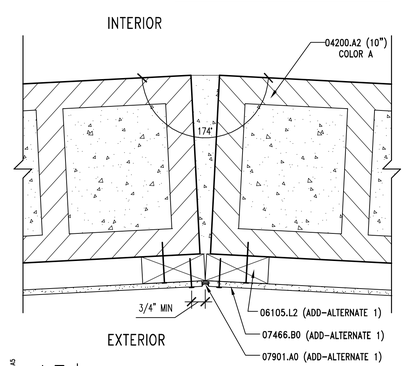

A5 | CMU WALL DETAIL

AE705 | REF. AE701, AE701A | SCALE: 3" = 1'-0"

4" 3" 2" 1" 0 2" 4" 8"

KEYNOTES

03300.U0	4" PRE-CAST COLORED CONCRETE CAP – SIZE BASED ON WALL THICKNESS
04200.A2	CMU (SIZE)
04200.B1	GROUT JOINT TOOLED
04200.D1	CMU LINTEL – SEE STRUCTURAL
05120.C3	TUBE STEEL BEAM – SEE STRUCTURAL – GALVANIZED & PAINTED
05120.D3	TUBE STEEL COLUMN – SEE STRUCTURAL – GALVANIZED & PAINTED
05120.E0	TUBE STEEL (SIZE)
05120.E1	TUBE STEEL (SIZE) – GALVANIZED AND PAINTED
05120.E2	TUBE STEEL FRAME (SIZE) – GALVANIZED AND PAINTED
05120.E4	TUBE STEEL 2x2 – GALVANIZED & PAINTED – CONTINUOUS WELD AT ALL CONTACT POINTS
05310.A1	METAL DECK – SEE STRUCTURAL
05500.A4	CONTINUOUS STEEL ANGLE – (SIZE) GALVANIZED & PAINTED
05500.T1	1 1/2" STEEL DECK – GALVANIZED – 20 GA. MINIMUM
06105.L2	2x BLOCKING
06105.P1	PRESSURE TREATED WOOD (SIZE)
06105.Q2	SHIM AS REQUIRED
06105.S0	SHEATHING – OSB (THICKNESS)
07310.A0	ASPHALT ROOF SHINGLE W/ ICE AND WATER SHIELD
07466.B0	FIBER CEMENT CEDAR 8" GROOVE VERTICAL SIDING
07466.C0	7/16" FIBER CEMENT TRIM (3½" WIDE) COLOR BY ARCHITECT W/MITERED CORNERS
07466.C1	7/16" FIBER CEMENT TRIM (5½" WIDE)
07466.C3	7/16" FIBER CEMENT TRIM (11¼" WIDE)
07620.A4	METAL FLASHING – PRE FINISHED
07901.A0	CONTINUOUS SEALANT
10100.D0	EXISTING DISPLAY BOARDS REMOUNTED, BACK SURFACE PRIMED & PAINTED – SEE D3/AE702A
10100.D1	NEW DISPLAY BOARDS MOUNTED – SEE D3/AE702A

GENERAL NOTES

1. FIELD VERIFY ALL EXISTING CONDITIONS AND THEIR COMPATIBILITY WITH NEW CONSTRUCTION PRIOR TO THE COMMENCEMENT OF WORK. COORDINATE DISCREPANCIES WITH ARCHITECT.
2. DO NOT SCALE DRAWINGS.
3. SEE CIVIL, STRUCTURAL, AND ELECTRICAL DRAWINGS FOR MORE INFORMATION.
4. ALL DIMENSIONS ARE TO FACE OF WALL, UNLESS NOTED OTHERWISE.
5. SEE SPECIFICATIONS FOR ALL EXTERIOR MATERIAL FINISHES AND COLORS.
6. PROVIDE ANTI-GRAFFITI COATING PER SPECIFICATION SECTION 09860 ON ALL EXPOSED CMU.
7. ALL CMU GROUT JOINTS TOOLED, SQUARE, 1/2" DEPTH FROM FACE OF BLOCK.
8. SEE SHEET AE503 FOR QUANTITY AND TYPES OF PICNIC TABLES, TRASH RECEPTACLES, AND BENCHES.

CLIENT

UDOT CONNECTING COMMUNITIES

TIE FORK VISITORS CENTER
17845 E HIGHWAY 6
SPANISH FORK, UTAH 84660

DESIGNER

ARCHIPLEX GROUP
architecture · planning · design services
255 Crossroad Square
Salt lake City, UT 84115
P:(801) 961-7070
F:(801) 961-7373

CONSULTANTS

PROFESSIONAL SEAL

RALPH M. STANISLAW
95-310619-0301
8-12-09
LICENSED ARCHITECT
STATE OF UTAH

ISSUE		
	8-09	CONSTRUCTION DOCUMENTS
	6-22-09	PS & E REVIEW
	3-09	95% REVIEW SUBMITTAL
	1-5-09	50% REVIEW SUBMITTAL
MARK	DATE	DESCRIPTION

DFCM PROJECT NO:	08264900
DFCM CONTRACT NO:	097130
ARCHIPLEX PROJECT NO:	0832.01
DRAWN BY:	B. BEECHER
CHECKED BY:	R. STANISLAW
SCALE:	AS SHOWN
DATE:	AUGUST, 2009

SHEET TITLE

ROUND HOUSE DETAILS

AE705

GENERAL STRUCTURAL NOTES

GENERAL

1. The structural notes are intended to complement the project specifications. Specific notes and details in the drawings shall govern over the structural notes and typical details.
2. Typical details and sections shall apply where specific details are not shown.
3. The contractor shall verify all site conditions and dimensions. If actual conditions differ from those shown in the contract drawings, the contractor shall immediately notify the architect/engineer before proceeding with the fabrication or construction of any effected elements.
4. Omissions or conflicts between the contract drawings and/or specifications shall be brought to the attention of the architect/engineer before proceeding with any work involved. In case of conflict, follow the most stringent requirement as directed by the architect/engineer at no additional cost to the owner.
5. The contractor shall submit a written request to the architect/engineer before proceeding with any changes, substitutions or modifications. Any work done by the contractor before receiving written approval will be at the contractor's risk.
6. The contractor shall coordinate with all trades any items that are to be integrated into the structural system such as openings, penetrations, mechanical and electrical equipment, etc. Sizes and locations of mechanical and other equipment that differs from those shown on the contract drawings shall be reported to the architect/engineer.
7. The contractor shall provide adequate shoring and bracing as required for his method of erection. Shoring and bracing shall remain in place until final connections for the permanent members are completed. The building shall not be considered stable until all connections are completed. Walls shall not be considered self-supporting and shall be braced until the roof system is completed.
8. Site observations by BHB Consulting Engineers, P.C.'s field representative shall not be construed as approval of construction procedures nor special inspection.
9. Detailing and shop drawing production for structural elements will require information (including dimensions) contained in the architectural, structural and/or other consultants' drawings. The structural drawings shall be used in conjunction with the architectural and other consultant's drawings. Some dimensions and elements such as elevations, depressions, slopes, mechanical housekeeping pads, etc. are not shown in the structural drawings. All dimensions shown on structural drawings shall be verified by contractor with architectural, mechanical and electrical drawings.
10. Review of shop drawing submittals by BHB Consulting Engineers, P.C. is for general compliance only and is not intended for approval. The shop drawing review shall not relieve the contractor from the responsibility of completing the project according to the contract documents.
11. Shop drawings made from reproductions of the contract drawings will be rejected unless the contractor signs a release agreement prior to the shop drawings being reviewed.
12. Only an authorized representative of BHB Consulting Engineers, P.C. may make changes to these contract drawings. BHB Consulting Engineers, P.C. shall not be held responsible or liable for any claims arising directly or indirectly from changes made without written authorization by an authorized representative of BHB Consulting Engineers, P.C.

BASIS OF DESIGN

1. Governing Building Code — International Building Code 2006
2. Roof Snow Load
   a. Ground Snow Load — P_g = 114 psf
   b. Snow Importance Factor — I_s = 1.0
   c. Snow Exposure Coefficient — C_e = 1.0
   d. Thermal Exposure Coefficient — C_t = 1.0 (Heated), C_t = 1.2 (Unheated)
   e. Roof Snow Load — $P_f = 0.7 * C_e * C_t * I_s * P_g$ = 80 psf plus Snow Drift; $P_f = 0.7 * C_e * C_t * I_s * P_g$ = 96 psf (Roundhouse)
3. Seismic Loads
   a. Short Period Mapped Spectral Acceleration — S_S = 0.568
   b. Soil Site Class — D
   c. Short Period Site Coefficient — F_a = 1.346
   d. 5% Damped Design Spectral Response Acceleration — $S_{DS} = 2/3 * F_a * S_S$ = 0.51
   e. Seismic Importance Factor — I_e = 1.00
   f. Response Modification Coefficient — Main Building: R = 6.5; Roundhouse: R = 1.25

   Basic Seismic-Force-Resisting System:
   Main Building: Light-framed walls sheathed with Wood structural panels
   Round house: Cantilevered Column System

   g. Seismic Response Coefficient — $C_s = S_{DS} * I_e / R$
   h. W — Dead Loads of Structure
   i. Building Seismic Design Category — D
   j. System Overstrength Factor — 2.5
   k. Deflection Amplification Factor — 3.5
   l. Base Shear — Main Building: $V = C_S * W = 0.08 * W$ (Strength Design); Roundhouse: $V = C_S * W = 0.408 * W$ (Strength Design)
5. Wind Loads
   a. Wind Velocity (3 Second Gust) — 90 mph
   b. Exposure Type — C
   c. Wind Importance Factor — 1.00

FOUNDATION

1. Soils Report by PEPG ENGINEERING, L.L.C. ,Dated December 3, 2008.
2. Soil Bearing Pressure: 1,750 psf, on 12" Imported Structural Fill.
3. Frost Protection: 36 inches minimum.
4. Lateral Soil Pressure Fluid Equivalent Density.
   a. Active ......35 pcf (retaining walls)
   b. At Rest ......55 pcf (rigid foundation walls)
   c. Passive ......300 pcf
5. Coefficient of Friction 0.4

EARTHWORK

1. All footings shall bear on 1'-0" Imported compacted structural fill over 3'-0" of over-excavated and re-compacted native soils (4'-0" total fill depth) as per the soils report. See detail A1/SB502 for placement of imported structural fill.
2. Collapsible soil beneath the slab on grade shall be removed for a full depth of 4'-0" and replaced with compacted fill material as per the soils report.
3. Consult the project specifications and soils report for further earthwork requirements.

CONCRETE

1. Materials, unless noted otherwise:
   a. Normal weight aggregates — ASTM C 33
   b. Reinforcing Steel — ASTM 615 Grade 60 (Fy = 60 ksi); Use Grade 40 (Fy = 40 ksi) for field bent dowels with spacings indicated reduced by 1/3.
   c. Deformed Bar Anchors (DBA) — ASTM A496
   d. Headed Stud Anchors (HSA) — ASTM A108
   e. Anchor Rods
      Typical, uno — ASTM F1554, Grade 36, with ASTM A563 heavy hex nuts and hardened washers Grade A

      Admixtures:
      i. Air-entraining admixtures comply with ASTM C 260 (when used).
      ii Calcium chloride shall not be added to the concrete mix.
   f. Type I/II cement complying with ASTM C-150 shall be used for all concrete.
   g. The water/cement ratios shall meet the requirements of ACI 318.
   h. Provide air entraining as recommended by ACI 318.
   i. No aluminum conduit or product containing aluminum or any other material injurious to concrete shall be embedded in concrete.
2. Compressive strengths of concrete at 28 days shall be as follows:
   a. Footings ......3,000 psi
   b. Interior Slabs on Grade ......3,000 psi
   c. Walls ......3,000 psi
   d. All Site Concrete ......4,000 psi
3. Only one grade or type of concrete shall be poured on the site at any given time.
4. The contractor shall be responsible for the design, detailing, care, placement and removal of all formwork and shores.
   a. Supporting forms and shoring shall not be removed until structural members have acquired sufficient strength to safely support their own weight and any construction load to which they may be subjected. In no case, however, shall forms and shoring be removed in less than 24 hours after concrete placement.
5. Reinforcement shall have the following concrete cover:
   Cast-in-place Concrete: ......Clear Cover
   a. Cast against and permanently exposed to earth ......3"
   b. Formed concrete exposed to earth or weather:
      #6 thru #18 bars ......2"
      #5 and smaller bars ......1-1/2"
   c. Concrete not exposed to weather or in contact with ground:
      Slabs, Walls, Joists; #11 bars and smaller ......3/4"
      Beams, Columns: Primary Reinf., Ties, Stirrups, Spirals ......1-1/2"
6. Construction Joints and Control Joints:
   a. Provide a formed and beveled 2 x 4 x continuous keyway in all horizontal and vertical construction joints including between top of footing and foundation walls, unless noted otherwise. In addition, all joints shall be intentionally roughened to a full amplitude of approximately 1/4 inch.
   b. Control joints shall be installed in slabs on grade so the length to width ratio of the slab is no more than 1.25:1. Control joints shall be completed within 12 hours of concrete placement. Control joints may be installed by:
      i. Saw cut a depth of 1/4 the thickness of the slab
      ii. Tooled joints a depth of 1/4 the thickness of the slab
   c. Install construction or control joints in slabs on grade at a spacing not to exceed 30 times the slab thickness in any direction, unless noted otherwise. Construction joints shall not exceed a distance of 125'-0" o.c. in any direction.
8. Construction
   a. Use chairs or other support devices recommended by the CRSI to support and tie reinforcement bars prior to placing concrete. Reinforcing steel for slabs on grade shall be adequately supported on precast concrete units. Lifting the reinforcing off the grade during placement of concrete is not permitted.
   b. Concrete to be mechanically consolidated during placement per ACI standards.
   c. Contractor shall coordinate placement of all openings, curbs, dowels, sleeves, conduits, bolts, inserts and other embedded items prior to concrete placement.
   d. All embeds and dowels shall be securely tied to formwork or to adjacent reinforcing prior to the placement of concrete.
   e. No pipes, ducts, sleeves, etc shall be placed in structural concrete unless specifically detailed or approved by the structural engineer. Penetrations through walls when approved shall be built into the wall prior to concrete placement. Penetrations will not be allowed in footings or grade beams unless detailed. Piping shall be routed around these elements and footings stepped to avoid piping.
   f. Reinforcing Bars shall not be welded. Do not substitute reinforcing bars for DBAs or HSAs.
9. Detailing:
   a. Lap splice lengths shall be detailed to comply with the "Concrete Reinforcing Bar Lap Splice Schedule" on sheet SB601. Splices may be made with mechanical splices capable of 125% tension capacity of the bar being spliced. Mechanical splices shall be the positive connecting type coupler and shall meet all International Building Code requirements. Use "Cadweld", "Lenton" Standard Couplers, "Bar-Lock" or equal with internal protector. If mechanical splices are used, splices or couplers on adjacent bars shall be staggered a minimum of 24" apart along the longitudinal axis of the reinforcing bars.
   b. At joints provide reinforcing dowels to match the member reinforcing, unless noted otherwise.
   c. At all discontinuous control or construction slab on grade joints, provide 2 - #4 x 48 inches.
   d. Provide corner bars at intersecting wall corners using the same bar size and spacing as the horizontal wall reinforcing.
   e. All vertical reinforcing shall be doweled to footings, or to the structure below with the same size and spacing as the vertical reinforcing for the element above. Dowels extending into footings shall terminate with a 90 degree standard hook and shall extend to within 4" of the bottom of the footing. Footing dowels (#8 bars and smaller) with hooks need not extend more than 20" into footings.
   f. Horizontal wall reinforcing shall terminate at ends of walls and openings into the far end of the jamb column with a 90-degree standard hook plus a 6 bar diameter extension. Horizontal wall reinforcing shall be continuous through construction and control joints.
   g. See detail B3/SB501 for reinforcing around miscellaneous openings (8" to 36" wide). For openings wider than 36", contact the engineer. All recesses that interrupt reinforcing shall be reinforced the same as an opening.

EPOXY

1. Epoxy shall be "HIT RE 500-SD" by Hilti Corporation, ITW Redhead Epcon G5 or SET-XP by Simpson Strong Tie for concrete.
2. Epoxy shall be "HIT HY 150 MAX" by Hilti Corporation or "SET" by Simpson Strong Tie for Masonry.
3. All drilled holes for bars or anchors rods 1" in diameter and smaller shall be 1/8 inch larger in diameter than the bar of anchor rod being installed. All drilled holes for bars or anchors rods greater than 1" in diameter shall be 1/4 inch larger in diameter than the bar of anchor rod being installed.
4. After drilling the proper size hole, clean the walls and bottom of the drilled hole of all dust and debris using a nylon brush in conjunction with oil free compressed air. The hole shall be free of dust, debris and standing water.
5. Follow all of the manufacturer's recommendations for epoxy installation.

MASONRY

1. Materials, unless noted otherwise:
   a. Concrete Masonry Units (CMU): Lightweight Grade N, Type 1 (minimum unit strength of 1900 psi psi). f'_m = 1500 psi
   b. Mortar: Use Type "S" 1800 psi minimum compressive
   c. Grout shall attain a minimum compressive strength of 2,000 psi at 28 days.
   d. Reinforcing Steel — ASTM 615 Grade 60 (Fy = 60 ksi)
   e. Deformed Bar Anchors (DBA) — ASTM A496
   f. Headed Stud Anchors (HSA) — ASTM A108
   g. Anchor Rods — ASTM F1554, Grade 36,with ASTM A563 heavy hex nuts hardened washers
2. Reinforcement shall have the following cover:
   a. Reinforcement shall have a minimum coverage of one bar diameter over all the bars, but not less than 3/4". When masonry is exposed to soil, minimum coverage shall be 1.5".
3. Construction Requirements:
   a. All units shall be laid with full mortar beds on the face shells. All head joints shall be filled solidly with mortar for a distance in from the face of the units not less than the thickness of the longitudinal face shells. Cells which are to be grouted shall have full head joints.
   b. Masonry walls, beams and columns shall be constructed with running bond, unless noted otherwise.
   c. All cells containing reinforcement, embeds, anchor bolts, etc. shall be filled solid with grout. Grout shall be placed by mechanical vibration during placing and revibrated after excess moisture has been absorbed but before workability is lost. Rodding of grout is not allowed.
   d. Where walls are not grouted solid, each grout pour shall terminate flush with the top of the uppermost unit except at cells with vertical reinforcing where the grout shall be 1-1/2 inches below top of unit to provide construction key.
   e. Grout pours shall be limited to 4'-0" unless written approval is obtained from the engineer of record.
   f. All walls below grade shall be grouted solid.
   g. Vertical cells to be filled with grout shall have vertical alignment sufficient to maintain a clear, unobstructed vertical cell measuring not less than 2 inches by 3 inches. All steel reinforcement shall be secured against displacement prior to grouting by wire positioners or other suitable devices at intervals not exceeding 200 bar diameters or 10 feet maximum, or at bar splice locations. Vertical reinforcing shall be located at the center of the wall unless noted otherwise
   h. Reinforcing Bars shall not be welded. Do not substitute reinforcing bars for DBAs or HSAs.
   i. Control Joints: Spacing shall not exceed 40'-0". See architectural drawings for locations.
   j. Grout all beam and joist pockets solid after installation of beams and joists.
   k. Embed channels and plates shall be placed so as to create a flush surface with the face of the wall.
   l. Anchor bolts and headed stud anchors shall be set in a grouted cell. Anchor bolts and headed stud anchors shall have 1" grout surrounding the shank at its penetration. Grout shall be flush with the face or top of the masonry.
4. Detailing Requirement
   a. Lap all masonry reinforcing per "Masonry Reinforcing Lap Schedule" on sheet SF602.
   b. All vertical reinforcing shall be doweled to the foundation wall, footing (structure below) and to the structure below with the same size dowel, spacing (and in the same core) as the vertical wall reinforcing above.
   c. Corner Bars: Horizontal reinforcement shall be continuous at all corners and at intersecting walls. Provide corner bars with the required lap splice length.
   d. Wall Openings: For unscheduled openings wider than 24 inches, provide reinforcing on all sides per detail C1/SF702. Also, for all scheduled openings, provide horizontal bar at bottom of opening per detail C1/SF702. Vertical bars shall extend from floor level below to the floor, or roof level above. Horizontal bars for all openings shall extend a minimum of 48 bar diameters beyond the corners of the opening. Where a 48 bar diameter extension is not possible, extend bars as far beyond the opening as possible and terminate the bar(s) with a 90 degree standard ACI hook.
   e. Horizontal wall reinforcing shall be continuous through joining concrete walls, masonry walls, columns, and pilasters. Provide a key between the wall and the column or pilaster. Horizontal wall reinforcing shall be placed inside the column vertical reinforcing.
   f. Horizontal wall reinforcing shall terminate with a hook at edge of openings and at each side of control joints except at floor and roof levels, lintels, beams and at top of parapets. See details B3&B4/SF702.
   g. All masonry column ties shall terminate with 135 degree hooks plus a 6 bar diameter extension (4" minimum)

STRUCTURAL STEEL

1. Material:
   a. Wide Flanges Section — ASTM A992 (50 ksi)
   b. Other shapes & Plates — ASTM A36 (36 ksi)
   c. Standard (Schedule 40) Pipe — ASTM A53 (35 ksi) Grade B
   d. Square or Rectangular HSS — ASTM A500 (46 ksi) Grade B
   e. Deformed Bar Anchors (DBA) — ASTM A496
   f. Headed Stud Anchors (HSA) — ASTM A108
   g. Anchor Rods
      Gravity Columns — ASTM F1554, Grade 36, with ASTM A563 heavy hex nuts and hardened washers Grade A
   h. Bolted Connections: — ASTM A325
2. Fabrication and construction shall comply with the latest edition of the following Codes and Standards:
   a. American Institute of Steel Construction (AISC), "Specification for the Design, Fabrication and Erection of Structural Steel for Buildings," with "Commentary".
   b. AISC "Code of Standard Practice" excluding the following: Section 3.4, Section 4.4, Section 4.4.1,
   c. AISC "Specification for Structural Joints Using ASTM A325 or A490 Bolts"
   d. American Welding Society (AWS), Structural Welding Code (specific items do not apply when they conflict with the AISC requirements).
   e. AISC "Seismic Provision for Structural Steel Buildings"
3. Welding
   a. All welding and cutting shall be performed by AWS certified welders.
   b. Use E-70 XX or as noted otherwise. E60 XX may be used for welding steel roof decks.
   c. All intersecting steel shapes which are not bolted shall be connected by a fillet weld all around, unless noted otherwise. Where fillet weld sizes are not shown they shall be 1/16" less than the thinnest of the connected parts for thicknesses 1/4" and larger. Fillet welds on plates less than 1/4" shall be of the same size as the thinnest of the connected part.
   d. Reinforcing Bars: Do not weld rebar. Do not substitute reinforcing bars for deformed bar anchors (DBAs), machine bolts, or headed stud anchors (HSAs).
   e. Do not weld anchor bolts, including "tack" welds.
   f. Headed Stud Anchors (HSAs) welding and deformed bar anchor welding shall conform to the manufacturer's specifications.
4. Bolted Connections:
   a. Use ASTM A325N bolts for steel to steel connections, as noted herein or as noted on the drawings. A325N bolts shall be used in connections for simple span framing and beam (or girder) to bearing plate connections. Tighten bolts to a snug tight condition.
   b. Use hardened washers beneath the turned element of all bolts or nuts. Use hardened beveled washers, to compensate for the lack of parallelism, where the outer face of the bolted parts has a slope greater than one in twenty with respect to the plane normal to the bolt axis. At oversized holes hardened washers or plates shall conform with ASTM F-436 and shall completely cover the slot after installation.
   c. Where a steel to steel beam connection is not shown, provide a standard AISC framed connection for one half the total uniform load capacities of the beam for the span and steel specified.
   d. Bolts, nuts and washers shall not be reused.
5. Provide full-depth web-stiffener plates at each side of all beams at all bearing points. Stiffener plates shall be the thickness called out below unless noted otherwise and shall be welded both sides with fillet welds all around:

FLANGE WIDTH	STIFFENER THICKNESS	WELD SIZE
Less than 8 1/4"	1/4"	3/16"
8 1/4" to 12 1/4"	3/8"	1/4"
12 1/4" to 16 ½"	1/2"	5/16"
16 ½" to 20 ¾"	5/8"	3/8"

METAL DECKING

1. Steel deck shall comply with the latest requirements of the Steel Deck Institute.
2. All deck shall be 3-span continuous minimum. In areas where 3-span conditions are not possible, the contractor shall provide heavier gage deck as required to provide the equivalent loading of the deck under a three span condition.
3. Steel roof deck shall not be used to support loads from plumbing, HVAC ducts, light fixtures, architectural elements or equipment of any kind, unless specifically noted. Light weight suspended acoustical ceilings with a total weight of 50 lbs per attachment may be hung from roof deck. The hangers shall be staggered to distribute the loads over multiple deck flutes.
4. All deck supporting members shall be dry before welding.
5. Clinch seams before welding interlocking seams.

Steel Roof Deck
   a. Steel roof deck shall be cellular 1.1/2" deep X 18 gage minimum galvanized, type "B" wide rib deck (20/20 HSB-CD) with interlocking side seams with the following properties:

	18 Gage
Minimum S ($in^3/_{ft}$) =	0.322
Minimum I ($in^4/_{ft}$) =	0.302

   b. Minimum allowable deck diaphragm shear values shall be 550 lb/ft. for a 8'-0" deck span.
   c. Weld steel roof deck to supporting framing members with 3/4" diameter puddle welds at the following spacings (Closer spacing may be used to develop minimum shear requirements.):
      i. 6" o.c. to all supports perpendicular to deck corrugations (7 welds per 36" sheet).
      ii. 6" o.c. to all supports parallel to deck corrugations.
   d. Hilti power driven fasteners are acceptable as an alternative to welds provided the connection meets the diaphragm shear capacity given above. Call Hilti at 800-879-8000 extension 6337 for connection information comparison. If Hilti power driven fasteners are used, the contractor shall submit Hilti's calculations to the Architect/Engineer for review. Also if Hilti power driven fasteners are used, a Hilti representative shall be present before the decking is installed to make sure the installer is properly trained in using the equipment. The Hilti representative shall also make a site visit the day after deck has been started to be installed to verify the power driven fasteners are being installed correctly.
   e. Attach interlocking seams with 1 1/2" long top seam welds at 24" o.c. maximum or with Verco PunchLok System at 12" o.c. maximum, with ASC Delta Grip System at 24" o.c. maximum or with Wheeling Gator-Seismic Shearloc at 18" o.c maximum. Closer spacing may be used to develop minimum shear requirements. A standard button punch can **not** be used in place of Verco PunchLok, DeltaGrip or Gator-Seismic Shearloc.
   f. Provide a 2-inch minimum bearing and a 4-inch lap at the splice points.

WOOD

1. Materials:
   a. Glu-lam beams shall be Douglas-fir combination number 24F-V4 except cantilevered and continuous beams shall be combination number 24F-V8.
   b. Framing Lumber shall be # 2 Douglas Fir-Larch or better unless noted otherwise.
   c. Wood sheathing shall be interior grade with exterior glue, span index ratio, unless noted otherwise,
      24/0 — Walls (7/16 inch thick)
      40/20 — Roof (19/32 inch thick)
   d. Nails: Standard Common with the following properties:

Nail Size	Shank Diameter	Min. Penetration into Support Member
6d	0.113"	1.25"
8d	0.131"	1.50"
10d	0.148"	1.63"
12d	0.148"	1.63"
16d	0.162"	1.75"

      Fasteners other than common nails are not permitted without prior written approval from the engineer.
   f. All fasteners, including nails, for preservative-treated and fire retardant-treated wood shall be hot-dipped zinc-coated galvanized steel, stainless steel, silicon bronze or copper.
   g. Bolts shall be ASTM A36 or equal with ASTM A563 heavy hex nuts and hardened washers, Grade A, unless noted otherwise.
2. All wood in contact with concrete, masonry or soil shall be pressure treated or be redwood.
3. General framing and carpentry shall be connected as per "Minimum Nailing Schedule" on sheet SF601 unless noted otherwise.
4. All framing anchors, post caps, hold downs, column bases, etc. shall be provided by Simpson Strong-Tie or approved equal.
5. Provide solid shaped blocking at least 2 in.(nominal) thick and full depth of joist at ends and at each support of joist. Provide approved bridging at a 8'-0" o.c. maximum between joist end supports. Solid blocking between joists shall be nailed to the wood plate at the top of the wall with one Simpson "A35" framing anchor per each piece of blocking. Fill all holes in the framing anchors with 8-d x 1-1/2" nails (12 nails per A35).
6. Built-up beams of 2X-member 12 in. or less in depth shall be spiked together with not less than 16-d spikes at twelve-inch (12 in.) centers, staggered. If the depth of beam is more than twelve inches (12 in.), the members shall be connected together with 1/2" Ø bolts @ 24 in. o.c. staggered. Bolts shall be placed 1/4 the depth of the member from the top and bottom of the member.
7. All walls shall have a minimum of two top plates. Splices in top plates shall be staggered a minimum of four feet from the nearest splice in adjoining top plate.

PRE-FABRICATED METAL PLATE WOOD TRUSSES

1. The Pre-fabricated metal plate wood trusses shall be designed, signed, and sealed by a Professional Engineer registered in the same state as the project location. They shall be designed to support the concentrated and other distributed loads as shown on the framing plans in addition to the following uniform loads:
   a. Dead Load (Top Chord)= — 10 psf
   b. Dead Load (Bottom Chord)= — 10 psf
   c. Snow Load (Top Chord)= — <u>80 psf</u>
   100 psf Total Load + Snow Drift

   Correlate the design with all mechanical equipment, fire sprinkling systems and hanging walls supported by the trusses. Provide extra trusses where required.
2. Design all wood trusses and bearing attachments for wind uplift. Assume a dead load of 8 psf to resist uplift.
3. No stress increase is allowed for snow loads.
4. All truss-to-truss connections shall be designed and provided by the truss manufacturer.
5. Design, handling, erection, and permanent bracing of metal plate connected wood trusses shall be in accordance with ANSI/TPI-1, National Design Standard for Metal Plated Connected Wood Truss Construction.
6. Steel Connector Plates: All steel gusset plates shall be galvanized and shall be approved by the "Research Committee for the International Code Council". Submit a copy of the ICC Report for the connector plate used. Values established by this committee must be indicated on the shop drawings.
   a. The minimum size for any connector shall be 8 square inches.
   b. All steel gusset plates shall be located on the joint as the stresses require and shall provide a minimum bite of 2.5" length on all tension members.
   c. Plates shall be pressed or rolled into member to obtain full penetration without crushing the outer surfaces of wood.
   d. All steel plate dimensions shall be increased by 10% above that required by analysis. Stress increases for steel connector plate values for duration of load are not allowed.
7. No wane, knots, skips, or other defects shall occur in the plated contact area or scarfed area of web members. Plates shall be centered with one required each side of wood truss.
8. The trusses shall be handled and stored in a manner to prevent moisture from being absorbed by the wood.
9. Requirements for truss stability and erection shall comply with the Truss Plate Institute publications entitled "Commentary and Recommendations for Bracing Wood Trusses" and "Commentary and Recommendations for Handling and Erecting Wood Trusses." The contractor shall have copies of these publications on site and shall be familiar with their contents.
10. Shop Drawings: Complete calculations and shop drawings indicating all member forces, stresses, duration factors, lumber grades, dimensions, truss to truss connections, steel truss plate sizes and locations shall be submitted and reviewed by the engineer before fabrication. Each connector shall be dimensioned on the shop drawings as to its exact location at the joint.

WOOD DECKING

1. Wood decking shall be 3" nominal (2 3/16" net) x 6" nominal tongue and groove. Deck may be installed in either two-span continuous or controlled-random lay-up unless specifically noted in the drawings.
2. Species and appearance grade of decking shall be according to the Architect's specifications. Minimum properties shall be as follows:
   Fb = 875 psi
   E = 1,300,000 psi
3. The maximum moisture content shall be 15%.
4. Decking is to be installed with tongues up slope on pitched roofs. It shall be installed with pattern faces down, unless noted otherwise. The minimum nailing shall be as follows:

   Face Nail to Beams: (2) 20d nails at each decking piece to each beam.
   Course Nail: Nail adjacent pieces of decking together with 8d slant nails at 30 inches o/c. Offset alternate courses by 15 inches. Install slant nails within 12" of all joints
5. Controlled random lay-up may only be used when all decking pieces are continuous for three or more spans
   a. The distance between end joints in adjacent courses must be at least two feet. Joints in the same general line (within 6 inches) shall be separated by at least two intervening courses.
   b. Contiguous pieces must bear (and butt) on at least one support. The pieces the first and second courses, and repeating at least after each group of seven intervening courses, shall bear on two or more supports with end joints in these two courses occurring in alternate spans or on alternate supports.
   c. Decking pieces may be of specified length or may be of random lengths. If random lengths, odd or even lengths are permitted, and the minimum length percentages shall be as follows:
      i. Not less than 40% to be 14 ft. and longer
      ii. Not over 10% to be less than 10 ft.
      iii. Not over 1% to be 4 or 5 ft.
      iv. Minimum length is limited to 75% of the span length.
6. Two-Span Continuous. Alternate pieces in end spans are simple spans; adjacent pieces are two-span continuous. End joints shall be staggered in adjacent courses and occur over supports.

SPECIAL INSPECTION AND QUALITY ASSURANCE

Special inspection and quality assurance, as required by section 1704 thru 1709 of the IBC, shall be provided by an independent agency employed by the owner unless waived by the building official. The contractor shall coordinate and cooperate with the required inspections. All testing and inspection reports shall be sent within 24 hours of the test to the architect, engineer, building official and contractor for review. Special inspection during fabrication is not required if the fabricator is registered and approved to perform such work with out special inspection. Items requiring special inspection and quality assurance are:

1. Soils (IBC 1704.7)
   a. Prior to placement of the prepared fill, the special inspector shall determine that the site has been prepared in accordance with the soils report.
   b. During placement and compaction of the fill material, the special inspector shall determine that the material being used and the maximum lift thickness comply with the soils report.
   c. The special inspector shall determine that the in-place dry density of the compacted fill material complies with the soils report.
      i. Continuous Footing Backfill: At each compacted backfill layer, at least one test for each 25 linear feet or less of wall length, but no fewer than 2 tests.
      ii. Spot Footing Backfill: Minimum of one compaction test for each lift for each spot footing.
   d. See specifications for further requirements.
2. Concrete placement (IBC Section 1704.4)
   a. Continuous special inspection shall be provided
   b. Cylinders, slump, temperature and air-entrainment shall be done for every 50 cubic yards or each day's production if the day's production is less than 50 cubic yards.
   c. Protection of concrete during cold and hot weather
3. Bolts installed in concrete (IBC Section 1704.4)
   a. All bolts shall be special inspected prior to and during concrete placement.
4. Embeds and Inserts installed in concrete (IBC Section 1704.4)
   a. All embeds and inserts shall be special inspected prior to and during concrete placement.
5. Concrete reinforcing steel placement (IBC Section 1704.4)
   a. All Reinforcing shall be special inspected prior to concrete placement.
6. Structural welding, including steel deck (IBC 1707.2 and 1704.3)
   a. Periodic special inspection of roof decks.
   b. Periodic special inspection of single pass fillet welds less than or equal to 5/16"
   c. Continuous special inspection of single pass fillet welds greater than 5/16" and multi-pass fillet welds.
7. Metal deck using mechanical attachments (IBC 1704.13)
   Periodic special inspection of roof decks. Special inspection shall be done to verify size and spacing for deck attachment to the supporting structure. Also special inspection shall be done to verify spacing and size of seam attachments
8. Prefabricated metal plate wood trusses (IBC Sections 1704.6 and 1704.2)
   a. The special inspector shall verify that the fabricator maintains detailed fabrication and quality control procedures that provide a basis of inspection control of the workmanship and the fabricator's ability to conform to approved construction documents and referenced standards.
9. Wood diaphragms (IBC Section 1704.6 and 1707.3)
   a. The special inspector shall verify wood panel sheathing, grade, thickness and nominal size of framing members, adjoining panel edges, nail size and spacing.
10. Epoxy Anchors (IBC Section 1704.13)
   a. Special inspection shall verify all drilled holes' size and depth prior to installation of epoxy and anchor rod.
11. Structural masonry shall have Level 1(Non-Essential Facilities) special inspection per IBC section 1704.5.2
   a. Periodic special inspection shall be performed for
      i Proportions of site-prepared mortar, construction of mortar joints,
      ii Location of reinforcement and connectors,
      iii. Size and location of structural elements
      iv. Type, size and location and placement of anchors
      v. Size, grade and type and placement of reinforcement
      vi. Verify grout space is clean prior to grouting
      vii Protection of masonry during cold and hot weather
   b. Continuous special inspection shall be provided for grout placement and preparation of any required grout specimens, mortar specimens and prisms.
   c. Quality Assurance shall be according to Level 2 quality assurance (Table 1.14.1.2 of ACI 530/ASCE 5/TMS 402).
      i. Prior to construction, a letter of strength certification from the suppliers of the masonry units and grout shall be submitted.
      ii. During construction, the grout and mortar shall be tested for every 5,000 square feet of masonry constructed.
      iii. The contractor has the option of using the "Masonry Prism Test Method" per IBC Section 2105.2.2.2 in lieu of the "Unit Strength Method."

SITE OBSERVATIONS BY STRUCTURAL ENGINEER

Site observations, as required by IBC section 1709, shall be done by the Engineer of Record or an approved subordinate at the stages of construction listed below. The contractor shall notify the engineer when he has reached the construction stage listed below and before the work to be observed is covered up, walled in or becomes otherwise hidden from view or in-accessible to any necessary corrections. At the conclusion of the project, the structural observer shall submit to the building official a written statement that the site visits have been made and identify any reported deficiencies that to the best of the structural observer's knowledge have not been resolved (See 1709.1).

1. No structural observations are required by code.

DEFERRED SUBMITTALS

For the purpose of this section, deferred submittals are defined as per section 106.3.4.2 of the IBC. Submittal documents for deferred submittal items shall be submitted to the engineer, architect and building official for their review for general conformance with the design of the building. Deferred structural submittals for this project are:

1. Prefabricated Metal Plate Wood Trusses

LEGEND OF MARKS AND ABREVIATIONS

AB	ANCHOR BOLT(S)	k	KIP(S) = 1000 POUNDS
ABV	ABOVE	KLF	KIPS PER LINEAL FOOT
ALT	ALTERNATE	KSF	KIPS PER SQUARE FOOT
APPROX	APPROXIMATE	LBS	POUNDS
ARCH	ARCHITECT(URAL)	LF	LINEAL FOOT
BLDG	BUILDING	LLH	LONG LEG HORIZONTAL
BLW	BELOW	LLV	LONG LEG VERTICAL
BM	BEAM	LSV	LONG SIDE VERTICAL
BOT	BOTTOM	MAS	MASONRY
BRG	BEARING	MAX	MAXIMUM
BTWN	BETWEEN	MCJ	MASONRY CONTROL JOINT
CC.	CENTER-TO CENTER	MC-x	MASONRY COLUMN MARK
C.J.	CONST/CONTROL JOINT	MECH	MECHANICAL
CMU	CONCRETE MASONRY UNIT	MFR	MANUFACTURER
COL	COLUMN	MIN	MINIMUM
CONC	CONCRETE	MISC	MISCELLANEOUS
CONST	CONSTRUCTION	ML-x	MASONRY LINTEL
CP-x	CONCRETE PIER	MW-x	MASONRY WALL
CTR	CENTER	NIC	NOT IN CONTRACT
CW-x	CONCRETE WALL	NTS	NOT TO SCALE
DB	DECK BEARING	O.C.	ON CENTER
DBA	DEFORMED BAR ANCHOR	O.F.	OUTSIDE FACE
DBE	DECK BEARING ELEVATION	OPNG	OPENING
DBL	DOUBLE	OPP	OPPOSITE
DET	DETAIL	PCF	POUNDS PER CUBIC FOOT
DIA	DIAMETER	PL	PLATE
DIM	DIMENSION	PLF	POUNDS PER LINEAL FOOT
DN	DOWN	PSF	POUNDS PER SQUARE FOOT
DWG	DRAWING	PSI	POUNDS PER SQUARE INCH
DWL	DOWEL	PT	POINT
EA	EACH	REINF	REINFORCING
E.F.	EACH FACE	REQD	REQUIRED
E.J.	EXPANSION JOINT	R.D.	ROOF DRAIN
ELEC	ELECTRICAL	RTU	ROOF TOP UNITS
ELEV	ELEVATION	SBP-x	STEEL BASE PLATE MARK
EQUIP	EQUIPMENT	SC-x	STEEL COLUMN MARK
EQ	EQUAL	SCP-x	STEEL CAP PLATE MARK
E.W.	EACH WAY	SHT	SHEET
EXST	EXISTING	SI	SPECIAL INSPECTION
EXP	EXPANSION	SIM	SIMILAR
EXT	EXTERIOR	SMU	SUSPENDED MECHANICAL UNITS
FC-x	CONTINUOUS FOOTING MARK	SOG	SLAB-ON-GRADE
F.D.	FLOOR DRAIN	SQ	SQUARE
FDN	FOUNDATION	STAG	STAGGERED
F.F.	FINISHED FLOOR	STD	STANDARD
FR-x	RECTANGULAR FOOTING MARK	STL	STEEL
FS-x	SQUARE FOOTING MARK	STR	STRUCTURAL
FT	FOOT	STS	SELF TAPPING SCREWS
FTG	FOOTING	T&B	TOP AND BOTTOM
FTS-x	THICKEN SLAB MARK	TEMP	TEMPERATURE
GA	GAUGE	THDS	THREADS
GALV	GALVANIZED	T.O.	TOP OF
GLB	GLULAM BEAM	TOC	TOP OF CONCRETE
GSN	GENERAL STRUCTURAL NOTES	TOD	TOP OF DECK
HB	HORIZONTAL BRIDGING	TOF	TOP OF FOOTING
HORIZ	HORIZONTAL	TOS	TOP OF STEEL
HSA	HEADED STUD ANCHOR	TOW	TOP OF WALL
HT	HEIGHT	TYP	TYPICAL
ICBO	INTERNATIONAL CONFERENCE OF BUILDING OFFICIALS	UNO	UNLESS NOTED OTHERWISE
IBC	INTERNATIONAL BUILDING CODE	VERT	VERTICAL
I.F.	INSIDE FACE	W/	WITH
IN.	INCH	WWF	WELDED WIRE FABRIC
INT	INTERIOR	WWM	WELDED WIRE MESH
JT	JOINT		
JST	JOIST		

CLIENT

UDOT — CONNECTING COMMUNITIES

TIE FORK VISITORS CENTER
17845 E HIGHWAY 6
SPANISH FORK, UTAH 84660

DESIGNER

ARCHIPLEX GROUP
architecture • planning • design services
255 Crossroad Square
Slat lake City, UT 84115
P:(801) 961-7070
F:(801) 961-7373

CONSULTANTS

"Engineering Results"
BHB Consulting Engineers
A Professional Corporation
2766 South Main Street
Salt Lake City, Utah 84115
Phone: 801.355.5656
Fax: 801.355.5950
Email: bhb@bhbengineers.com

PROFESSIONAL SEAL

LICENSED PROFESSIONAL ENGINEER — No. 323922 — GERALD R. McKENZIE — 8-09 — STATE OF UTAH

ISSUE

MARK	DATE	DESCRIPTION
	8-09	CONSTRUCTION DOCUMENTS
	6-22-09	PS & E REVIEW
	3-09	95% REVIEW SUBMITTAL
	1-5-09	50% REVIEW SUBMITTAL

DFCM PROJECT NO:	08264900
DFCM CONTRACT NO:	097130
ARCHIPLEX PROJECT NO:	0832.01
DRAWN BY:	
CHECKED BY:	
SCALE:	
DATE:	AUGUST, 2009

SHEET TITLE

GENERAL STRUCTURAL NOTES

SJ001

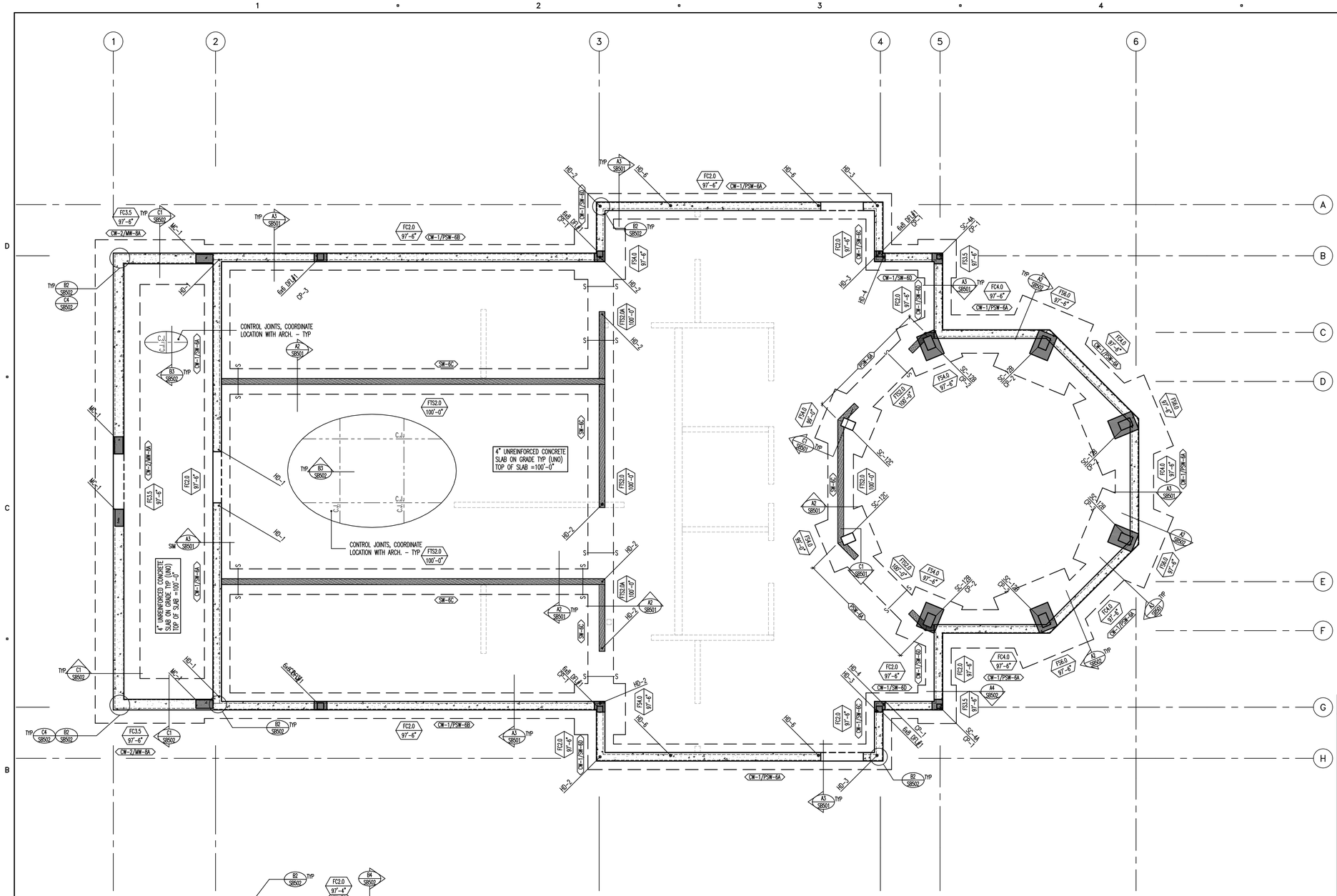

FOOTING AND FOUNDATION PLAN

SCALE: 1/4"=1'-0"

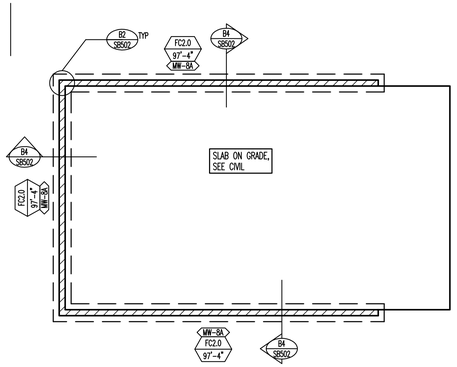

DUMPSTER ENCLOSURE FOOTING AND FOUNDATION PLAN

SCALE: 1/8"=1'-0"

FOOTING AND FOUNDATION PLAN NOTES

1. COORDINATE LOCATION OF DEPRESSED SLABS, SLOPED SLABS, AND FLOOR DRAINS WITH ARCHITECTURAL AND MECHANICAL DRAWINGS.
2. SEE ARCHITECTURAL AND CIVIL DRAWINGS FOR EXTERIOR CONCRETE WORK AT DOORS, SIDEWALKS, ETC.
3. SEE ARCHITECTURAL DRAWINGS FOR CONTROL JOINT LOCATIONS.
4. SEE "EARTHWORK" NOTES ON SHEET SJ001 AND DETAIL A1/SB502 FOR MINIMUM FILL REQUIRED BENEATH FOOTINGS.
5. ALL SPOT FOOTINGS SHALL BE CENTERED UNDER COLUMNS (UNO).
6. SEE DETAILS C2/SB501 AND C3/SB501 FOR CONDITION WHERE BURIED PIPES RUN PARALLEL AND PERPENDICULAR TO FOOTINGS.
7. SEE DETAIL B3/SB502 FOR TYPICAL CONTROL/CONSTRUCTION JOINTS IN CONCRETE SLAB ON GRADE.
8. SEE DETAIL B2/SB501 FOR SLAB REINFORCING WHERE CONTROL JOINTS ARE DISCONTINUOUS.
9. SEE DETAIL B3/SB501 FOR ADDITIONAL REINFORCING AT MISCELLANEOUS OPENINGS IN CONCRETE WALLS.
10. SEE SHEET SF601 FOR HOLDOWN SCHEDULE.
11. SEE DETAIL A1/SB501 FOR TYPICAL SILL PLATE BOLTING DETAIL.
12. ALL EXTERIOR BEARING WALLS SHALL BE 2x6 STUDS AT 16" O.C. - TYPICAL (UNO).
13. ALL INTERIOR BEARING WALLS SHALL BE 2x6 STUDS AT 16" O.C. - TYPICAL (UNO).
14. SEE DETAIL B1/SB502 FOR ANCHORAGE OF HOUSEKEEPING PADS.
15. SEE ARCHITECTURAL DRAWINGS FOR DIMENSIONS TO ALL STEEL COLUMNS.

WOOD_S-NOTE-FTGS

MARKS AND SYMBOLS LEGEND

- SECTION MARK / SHEET NUMBER
- FOOTING DESIGNATION / TOP OF FOOTING ELEVATION
- S——S INDICATES FOOTING STEP, SEE DETAIL C4/SB501.
- INDICATES CONCRETE WALL.
- INDICATES WOOD STUD WALL.
- DEPRESS FOUNDATION WALL AND POUR SLAB OVER. SEE DETAIL A3/SB501.
- INDICATES DEPRESSED SLAB, SEE ARCHITECTURAL PLANS.
- CW-x INDICATES CONCRETE FOUNDATION WALL TYPE, SEE SCHEDULE ON SHEET SB601.
- SW-x INDICATES WOOD SHEARWALL TYPE, SEE SCHEDULE ON SHEET SF601.
- MW-x INDICATES MASONRY WALL TYPE, SEE SCHEDULE ON SHEET SF602.
- PSW-x INDICATES PERFORATED WOOD SHEARWALL. SEE SCHEDULE ON SHEET SF601.
- CW-x/SW-x INDICATES WOOD SHEARWALL (AND TYPE) OVER CONCRETE WALL (AND TYPE), SEE SCHEDULES ON SHEET SB601 AND SF601.
- FCxx INDICATES CONTINUOUS FOOTING. SEE SCHEDULE ON SHEET SB601.
- FSxx INDICATES SPOT FOOTING. SEE SCHEDULE ON SHEET SB601.
- FTSxx INDICATES THICKENED SLAB FOOTING. SEE SCHEDULE ON SHEET SB601.
- C.J. INDICATES CONTROL/CONSTRUCTION JOINT. SEE DETAILS B1/SB501 AND B3/SB502.
- SC-x INDICATES STEEL COLUMN. SEE SCHEDULE ON SHEET SF601.
- CP-x INDICATES CONCRETE PIER. SEE SCHEDULE ON SHEET SB601.

CLIENT

UDOT CONNECTING COMMUNITIES

TIE FORK VISITORS CENTER
17845 E HIGHWAY 6
SPANISH FORK, UTAH 84660

DESIGNER

ARCHIPLEX GROUP
architecture · planning · design services
255 Crossroad Square
Slat lake City, UT 84115
P:(801) 961-7070
F:(801) 961-7373

CONSULTANTS

"Engineering Results"
BHB Consulting Engineers
A Professional Corporation
2766 South Main Street
Salt Lake City, Utah 84115
Phone: 801.355.3636
Fax: 801.355.5950
Email: bhb@bhbengineers.com

PROFESSIONAL SEAL

LICENSED PROFESSIONAL ENGINEER
No 323922
GERALD W. MCKENZIE
8-09
STATE OF UTAH

ISSUE

MARK	DATE	DESCRIPTION
	8-09	CONSTRUCTION DOCUMENTS
	6-22-09	PS & E REVIEW
	3-09	95% REVIEW SUBMITTAL
	1-5-09	50% REVIEW SUBMITTAL

DFCM PROJECT NO:	08264900
DFCM CONTRACT NO:	097130
ARCHIPLEX PROJECT NO:	0832.01
DRAWN BY:	
CHECKED BY:	
SCALE:	
DATE:	AUGUST, 2009

SHEET TITLE

FOOTING AND FOUNDATION PLAN

SB101

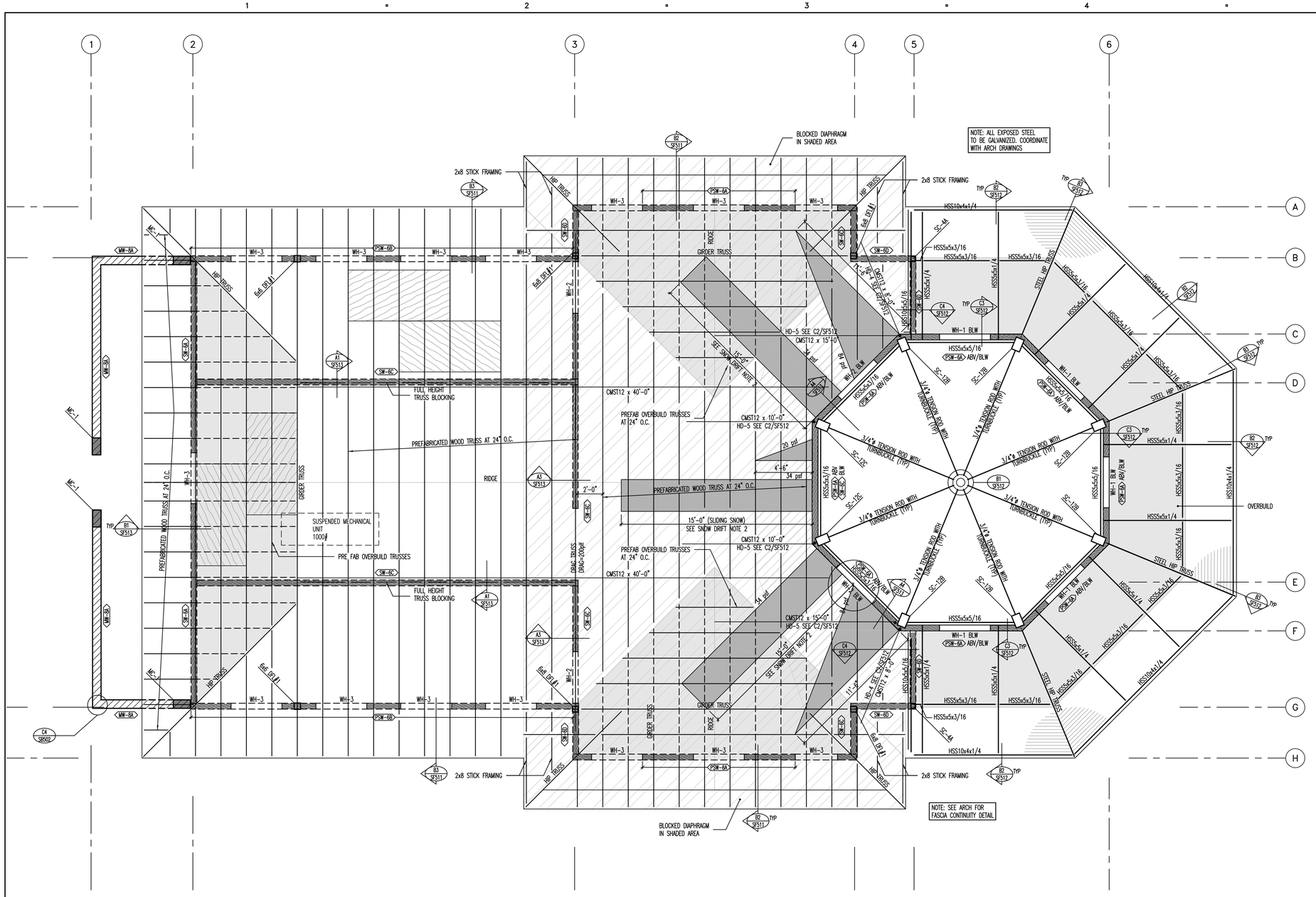

LOWER ROOF FRAMING PLAN

SCALE: 1/4"=1'-0"

DRIFT-S-NOTE-SNOW

SNOW DRIFT LEGEND

- INDICATES AREA OF SNOW DRIFT
- X / Y — INDICATES ADDITIONAL LOADING DUE TO SNOW DRIFT (SEE NOTE #1). X = LOAD AT DRIFT HIGH POINT Y = LENGTH OF DRIFT

1. SEE PLAN FOR SNOW DRIFT LOADING. THESE LOADS ARE IN ADDITION TO THE JOIST UNIFORM AND POINT LOADS SHOWN ON PLANS. JOIST SUPPLIER TO ADD SNOW DRIFT LOAD TO BOTH JOISTS AND GIRDERS.
2. TRUSSES SHALL BE DESIGNED FOR THE WORST CASE SNOW LOADING, EITHER SLIDING SNOW OR DRIFT.

WOOD-S-NOTE-ROOF

MARKS AND SYMBOLS LEGEND

- SECTION MARK / SHEET NUMBER
- INDICATES WOOD STUD WALL WHICH EXTENDS ABOVE ROOF.
- INDICATES WOOD STUD WALL WHICH STOPS AT ROOF.
- INDICATES METAL ROOF DECK. SEE GENERAL STRUCTURAL ON SHEET SJ001.
- INDICATES WOOD ROOF SHEATHING, SEE SCHEDULE ON SHEET SF602.
- INDICATES LOCATION OF BLOCKED DIAPHRAGM
- SW-x — INDICATES WOOD SHEARWALL TYPE, SEE SCHEDULE ON SHEET SF601.
- MW-x — INDICATES MASONRY WALL TYPE, SEE SCHEDULE ON SHEET SF602.
- PSW-x — INDICATES PERFORATED WOOD SHEARWALL. SEE SCHEDULE ON SHEET SF601.
- WH-x — INDICATES WOOD HEADER TYPE. SEE SCHEDULE ON SHEET B1/SF511.
- HD-x — INDICATES HOLD DOWN TYPE. SEE SCHEDULE ON SHEET SF601.
- SC-x — INDICATES STEEL COLUMN. SEE SCHEDULE ON SHEET SF601.

ROOF FRAMING DESIGN LOADS

ROOF LOADS:	
DEAD LOAD	20 psf
SNOW LOAD	80 psf
TOTAL LOAD	100 psf + SNOW DRIFT

ROOF FRAMING PLAN NOTES

1. VERIFY ALL ROOF OPENINGS FOR MECHANICAL SHAFTS, DRAINS, ETC. WITH ARCHITECTURAL AND MECHANICAL DRAWINGS.
2. SEE DETAIL A1/SF511 FOR FRAMING AROUND ALL OPENINGS.
3. SEE DETAIL A2/SF511 FOR TYPICAL BUILT-UP BEAM DETAIL.
4. SEE DETAIL A3/SF511 FOR TYPICAL TOP PLATE SPLICE DETAIL.
5. SEE DETAIL A4/SF511 FOR TYPICAL TOP PLATE SPLICE SCHEDULE AT PIPE.
6. SEE ARCHITECTURAL PLANS FOR DIMENSIONS TO ALL STEEL COLUMNS.

CLIENT

UDOT CONNECTING COMMUNITIES

TIE FORK VISITORS CENTER
17845 E HIGHWAY 6
SPANISH FORK, UTAH 84660

DESIGNER

ARCHIPLEX GROUP
architecture · planning · design services
255 Crossroad Square
Slat lake City, UT 84115
P:(801) 961-7070
F:(801) 961-7373

CONSULTANTS

"Engineering Results"
BHB Consulting Engineers
A Professional Corporation
2766 South Main Street
Salt Lake City, Utah 84115
Phone: 801.355.5656
Fax: 801.355.5950
Email: bhb@bhbengineers.com

PROFESSIONAL SEAL

LICENSED PROFESSIONAL ENGINEER
No. 323922
GERALD W. MCKENZIE
8-09
STATE OF UTAH

ISSUE

MARK	DATE	DESCRIPTION
	8-09	CONSTRUCTION DOCUMENTS
	6-22-09	PS & E REVIEW
	3-09	95% REVIEW SUBMITTAL
	1-5-09	50% REVIEW SUBMITTAL

DFCM PROJECT NO:	08264900
DFCM CONTRACT NO:	097130
ARCHIPLEX PROJECT NO:	0832.01
DRAWN BY:	
CHECKED BY:	
SCALE:	
DATE:	AUGUST, 2009

SHEET TITLE

MAIN ROOF FRAMING

SF111

ROTUNDA ROOF FRAMING PLAN

SCALE: 1/4"=1'-0" 0 4' 8' 16' NORTH

WOOD_S-NOTE-ROOF

MARKS AND SYMBOLS LEGEND

- SECTION MARK / SHEET NUMBER
- INDICATES WOOD STUD WALL WHICH EXTENDS ABOVE ROOF.
- INDICATES WOOD STUD WALL WHICH STOPS AT ROOF.
- INDICATES WOOD ROOF SHEATHING, SEE SCHEDULE ON SHEET SF601.
- SW-x: INDICATES WOOD SHEARWALL TYPE, SEE SCHEDULE ON SHEET SF601.
- PSW-x: INDICATES PERFORATED WOOD SHEARWALL. SEE SCHEDULE ON SHEET SF601.
- SC-x: INDICATES STEEL COLUMN. SEE SCHEDULE ON SHEET SF601.

ROOF FRAMING DESIGN LOADS

ROOF LOADS:

DEAD LOAD	20 psf
SNOW LOAD	80 psf
TOTAL LOAD	100 psf + SNOW DRIFT

ROOF FRAMING PLAN NOTES

1. VERIFY ALL ROOF OPENINGS FOR MECHANICAL SHAFTS, DRAINS, ETC. WITH ARCHITECTURAL AND MECHANICAL DRAWINGS.
2. SEE DETAIL A1/SF511 FOR FRAMING AROUND ALL OPENINGS.
3. SEE DETAIL A2/SF511 FOR TYPICAL BUILT-UP BEAM DETAIL.
4. SEE DETAIL A3/SF511 FOR TYPICAL TOP PLATE SPLICE DETAIL.
5. SEE DETAIL A4/SF511 FOR TYPICAL TOP PLATE SPLICE SCHEDULE AT PIPE.
6. SEE ARCHITECTURAL PLANS FOR DIMENSIONS TO ALL STEEL COLUMNS.

CLIENT

UDOT CONNECTING COMMUNITIES

TIE FORK VISITORS CENTER
17845 E HIGHWAY 6
SPANISH FORK, UTAH 84660

DESIGNER

ARCHIPLEX GROUP
architecture · planning · design services
255 Crossroad Square
Slat lake City, UT 84115
P:(801) 961-7070
F:(801) 961-7373

CONSULTANTS

"Engineering Results"
BHB Consulting Engineers
A Professional Corporation
2766 South Main Street
Salt Lake City, Utah 84115
Phone: 801.355.5656
Fax: 801.355.5950
Email: bhb@bhbengineers.com

PROFESSIONAL SEAL

LICENSED PROFESSIONAL ENGINEER No. 323922 GERALD R. McKENZIE 8-09 STATE OF UTAH

ISSUE

MARK	DATE	DESCRIPTION
	8-09	CONSTRUCTION DOCUMENTS
	6-22-09	PS & E REVIEW
	3-09	95% REVIEW SUBMITTAL
	1-5-09	50% REVIEW SUBMITTAL

DFCM PROJECT NO:	08264900
DFCM CONTRACT NO:	097130
ARCHIPLEX PROJECT NO:	0832.01
DRAWN BY:	
CHECKED BY:	
SCALE:	
DATE:	AUGUST, 2009

SHEET TITLE

ROTUNDA ROOF FRAMING

SF121

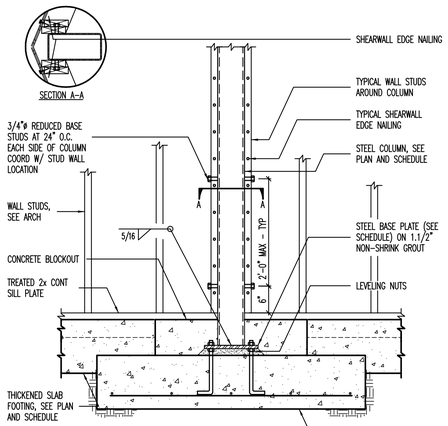

C1 TYPICAL WOOD FRAMED INTERIOR STEEL COLUMN TO FOOTING DETAIL

NO SCALE

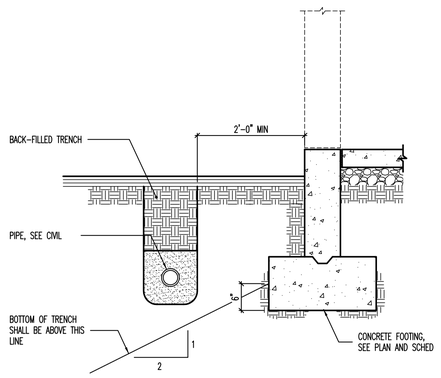

C2 CONDITION AT PIPE PARALLEL TO CONCRETE FOOTING

NO SCALE

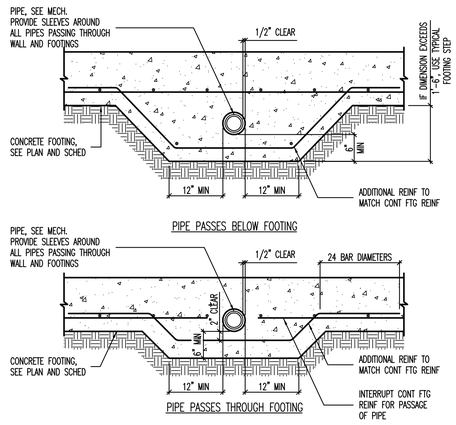

C3 CONDITIONS AT PIPE PERPENDICULAR TO FOOTING

NO SCALE

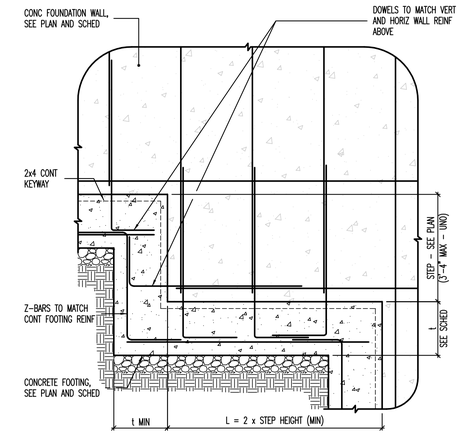

C4 TYPICAL FOOTING STEP DETAIL

NO SCALE

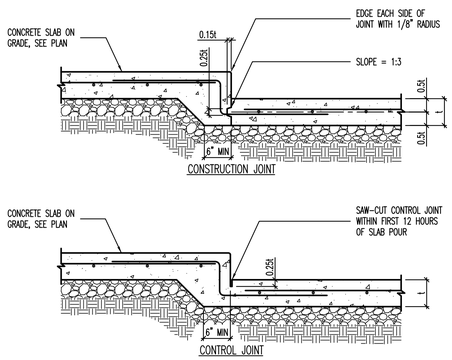

B1 JOINT DETAILS AT SLAB DEPRESSIONS

NO SCALE

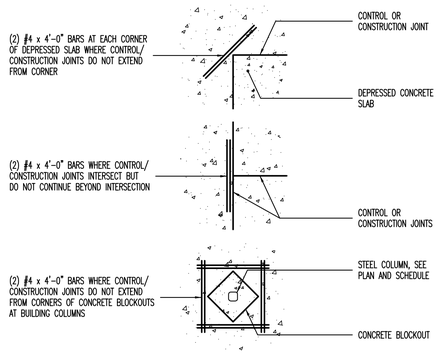

B2 LOCATIONS REQUIRING ADDITIONAL SLAB REINFORCING [PLAN VIEW]

NO SCALE

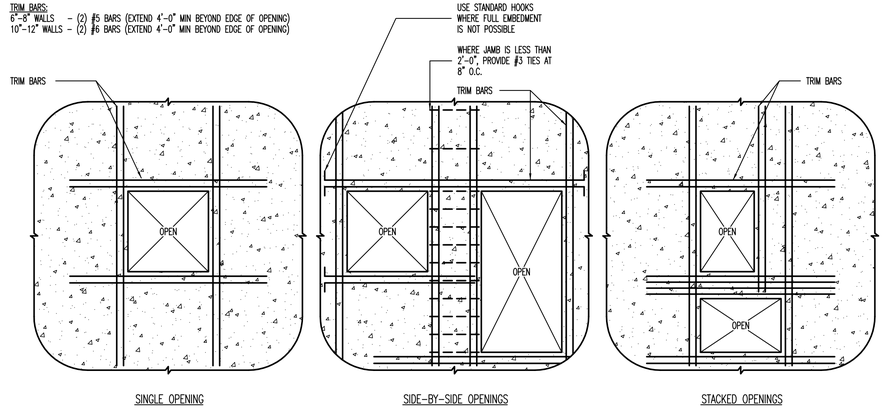

B3 TYPICAL REINFORCING FOR MISCELLANEOUS OPENINGS LESS THAN 3'-0" IN CONCRETE WALLS

WHERE MISCELLANEOUS OPENING WIDTH IS GREATER THAN 3'-0" WIDE, CONTACT STRUCTURAL ENGINEER.

NO SCALE

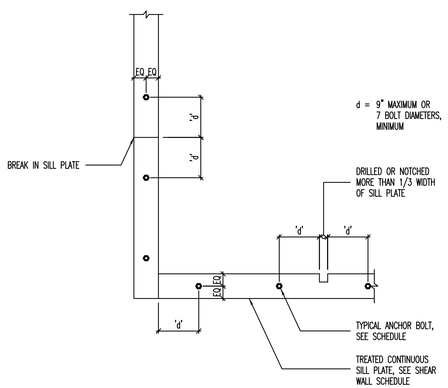

A1 SILL PLATE BOLTING DETAIL [PLAN VIEW]

NO SCALE

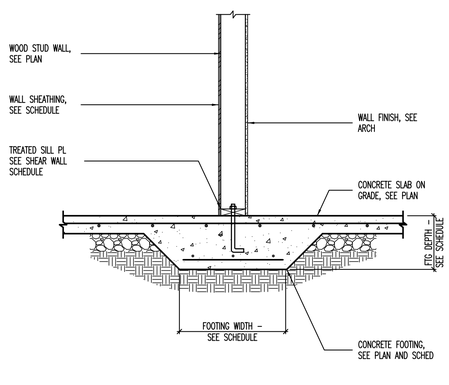

A2 THICKENED SLAB FOOTING AT INTERIOR STUD WALL

NO SCALE

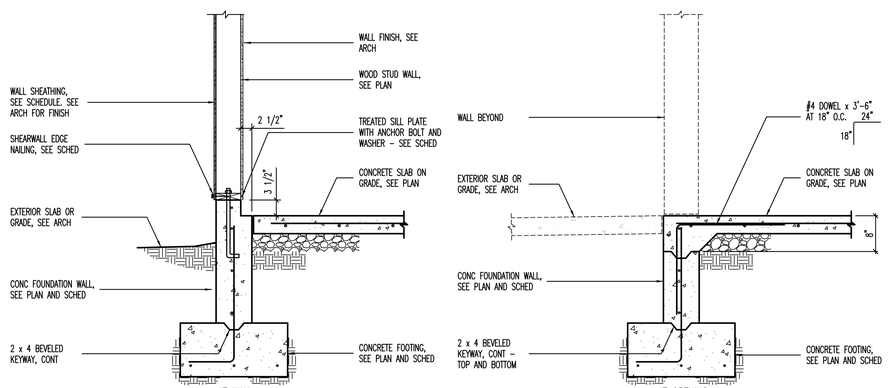

A3 WOOD STUD WALL/VENEER AT CONCRETE FOUNDATION WALL

NO SCALE

CLIENT

UDOT CONNECTING COMMUNITIES

TIE FORK VISITORS CENTER
17845 E HIGHWAY 6
SPANISH FORK, UTAH 84660

DESIGNER

ARCHIPLEX GROUP
architecture · planning · design services
255 Crossroad Square
Slat lake City, UT 84115
P:(801) 961-7070
F:(801) 961-7373

CONSULTANTS

"Engineering Results"
BHB Consulting Engineers
A Professional Corporation
2766 South Main Street
Salt Lake City, Utah 84115
Phone: 801.355.3656
Fax: 801.355.5950
Email: bhb@bhbengineers.com

PROFESSIONAL SEAL

LICENSED PROFESSIONAL ENGINEER
No 323922
GERALD W. MCKENZIE
8-09
STATE OF UTAH

ISSUE

MARK	DATE	DESCRIPTION
	8-09	CONSTRUCTION DOCUMENTS
	6-22-09	PS & E REVIEW
	3-09	95% REVIEW SUBMITTAL
	1-5-09	50% REVIEW SUBMITTAL

DFCM PROJECT NO:	08264900
DFCM CONTRACT NO:	097130
ARCHIPLEX PROJECT NO:	0832.01
DRAWN BY:	
CHECKED BY:	
SCALE:	
DATE:	AUGUST, 2009

SHEET TITLE

FOOTING AND FOUNDATION DETAILS

SB501

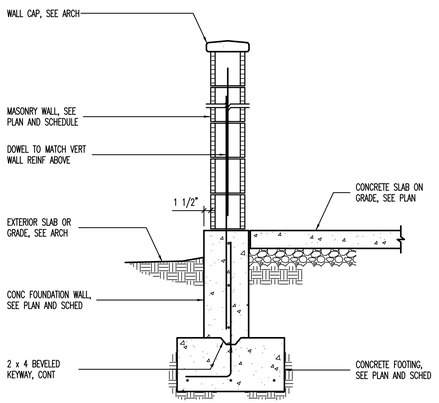

AT TYPICAL MASONRY WALL

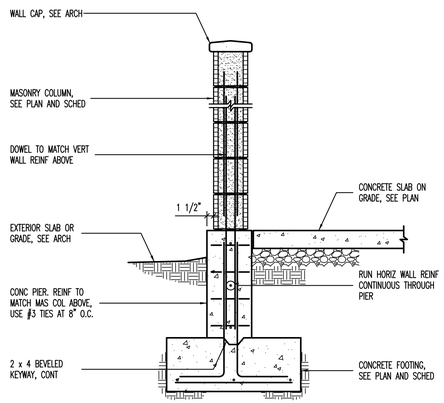

AT TYPICAL MASONRY COLUMN

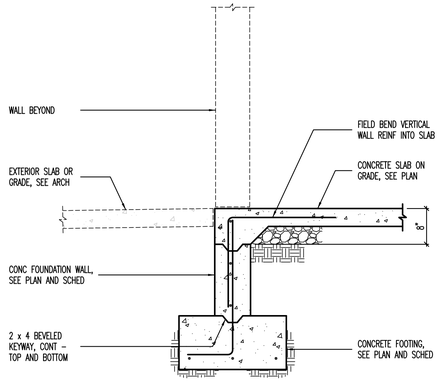

AT TYPICAL OPENING IN MASONRY WALL

C1 FOUNDATION WALL DETAIL AT 8" OR 10" MASONRY WALL

NO SCALE

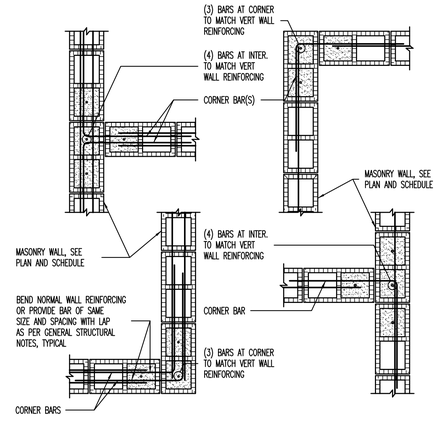

C4 TYPICAL CORNER WALL REINFORCING AT MASONRY WALLS [PLAN VIEW]

NO SCALE

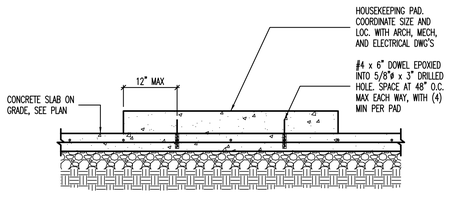

CONDITION AT CONCRETE SLAB ON GRADE

B1 HOUSEKEEPING PAD DETAIL

NO SCALE

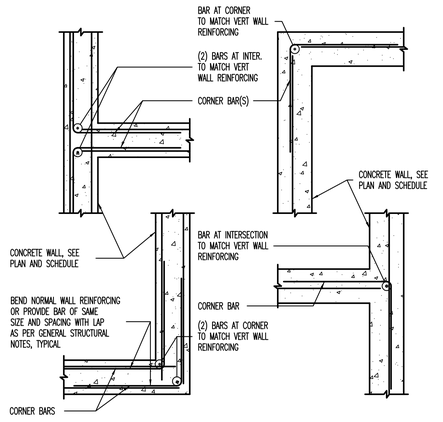

B2 TYPICAL CORNER WALL REINFORCING AT CONCRETE WALLS [PLAN VIEW]

NO SCALE

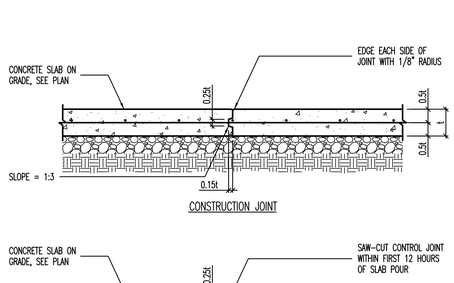

CONSTRUCTION JOINT

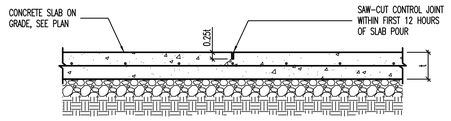

CONTROL JOINT

B3 TYPICAL SLAB ON GRADE JOINT DETAILS

NO SCALE

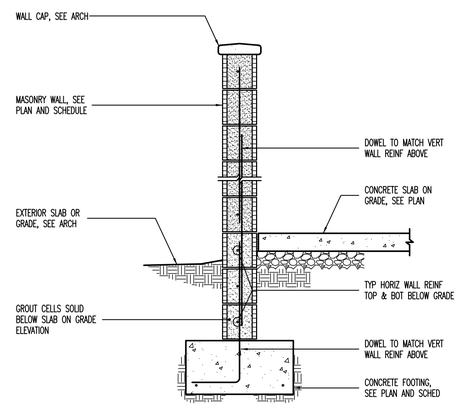

B4 MASONRY FOUNDATION WALL AT TRASH ENCLOSURE

NO SCALE

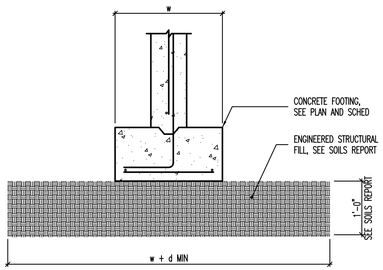

A1 ENGINEERED STRUCTURAL FILL DETAIL

NO SCALE

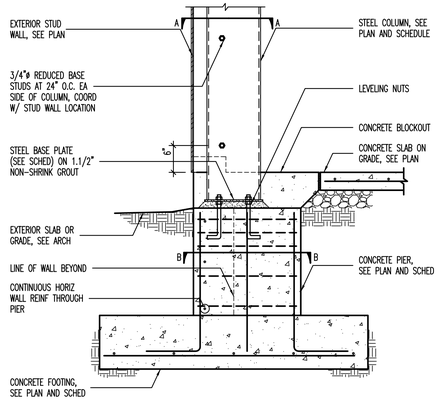

A2 TYPICAL EXTERIOR COLUMN AT ROTUNDA

NO SCALE

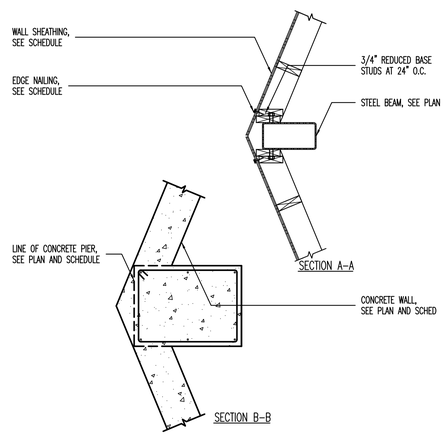

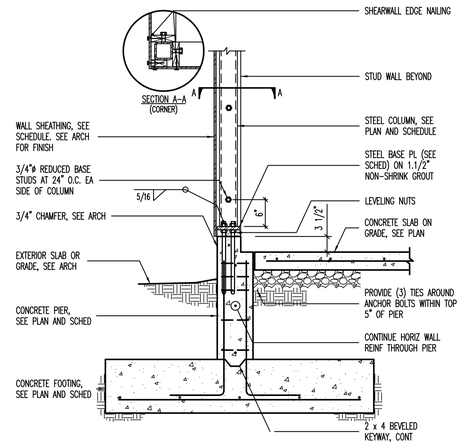

A4 TYPICAL STEEL COLUMN IN PLYWOOD SHEARWALL TO CONCRETE PIER WITH BRICK VENEER

NO SCALE

CLIENT

UDOT CONNECTING COMMUNITIES

TIE FORK VISITORS CENTER
17845 E HIGHWAY 6
SPANISH FORK, UTAH 84660

DESIGNER

ARCHIPLEX GROUP
architecture · planning · design services
255 Crossroad Square
Slat lake City, UT 84115
P:(801) 961-7070
F:(801) 961-7373

CONSULTANTS

"Engineering Results"
BHB Consulting Engineers
A Professional Corporation
2766 South Main Street
Salt Lake City, Utah 84115
Phone: 801.355.3656
Fax: 801.355.5950
Email: bhb@bhbengineers.com

PROFESSIONAL SEAL

LICENSED PROFESSIONAL ENGINEER
No 323922
GERALD W. MCKENZIE
8-09
STATE OF UTAH

ISSUE

MARK	DATE	DESCRIPTION
	8-09	CONSTRUCTION DOCUMENTS
	6-22-09	PS & E REVIEW
	3-09	95% REVIEW SUBMITTAL
	1-5-09	50% REVIEW SUBMITTAL

DFCM PROJECT NO:	08264900
DFCM CONTRACT NO:	097130
ARCHIPLEX PROJECT NO:	0832.01
DRAWN BY:	
CHECKED BY:	
SCALE:	
DATE:	AUGUST, 2009

SHEET TITLE

FOOTING AND FOUNDATION DETAILS

SB502

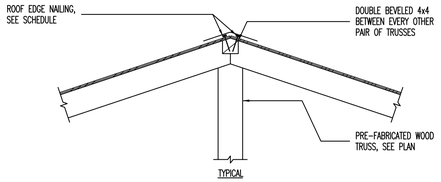

C1 RIDGE BLOCKING DETAIL

NO SCALE

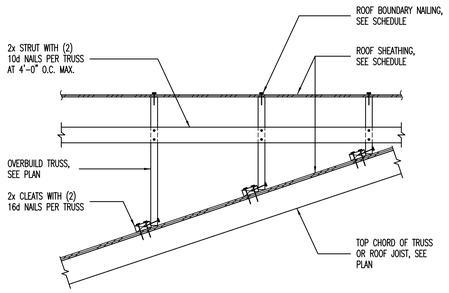

C2 OVERBUILD DETAIL

NO SCALE

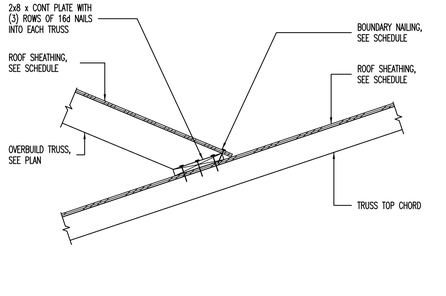

C3 OVERBUILD DETAIL

NO SCALE

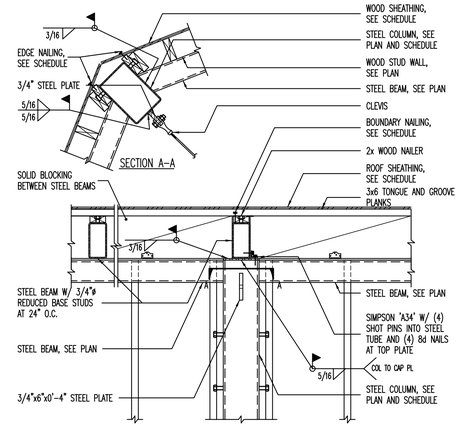

C4 ROTUNDA ROOF BEAM AT STEEL COLUMN

NO SCALE

NOTE: ALL EXPOSED STEEL TO BE GALVANIZED. COORDINATE WITH ARCH DRAWINGS

HEADER BEARING SCHEDULE FOR 2x6 STUD WALL

MARK	HEADER	MAXIMUM HEADER SPAN	JAMB		COMMENTS
			BEARING STUDS	KING STUDS	
WH-1	(3) 2x4	5'-0"	(1) 2x6	(2) 2x6	.
WH-2	(3) 2x6	–	(1) 2x6	(1) 2x6	
WH-3	(3) 2x8	–	(1) 2x6	(2) 2x6	

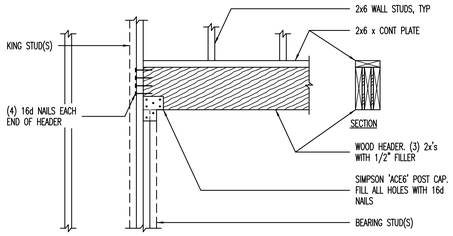

B1 HEADER BEARING SCHEDULE FOR 2x6 STUD WALL

NO SCALE

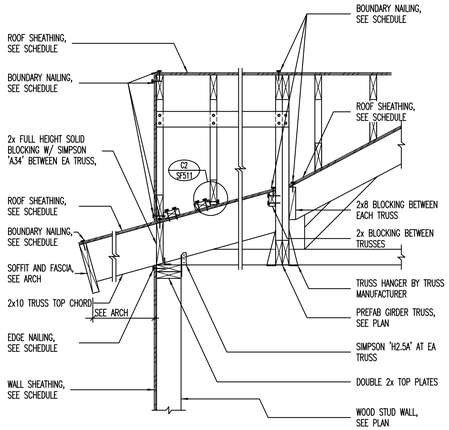

B2 TRUSS BEARING AT GABLE ENDS

NO SCALE

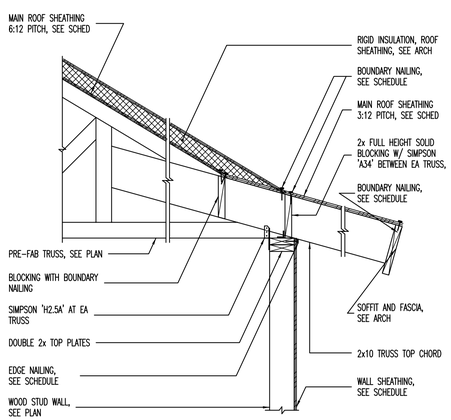

B3 TRUSS BEARING DETAIL

NO SCALE

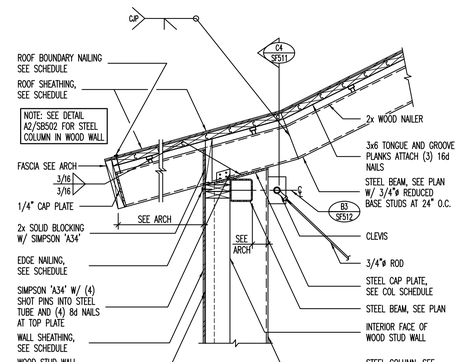

B4 ROTUNDA STEEL BEAM BEARING AT STEEL COLUMN

NO SCALE

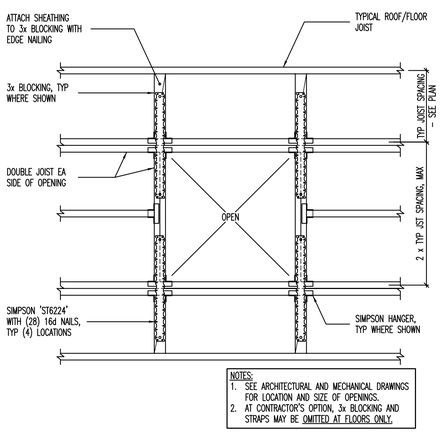

A1 FRAMING AT ROOF OPENINGS [PLAN VIEW]

NO SCALE

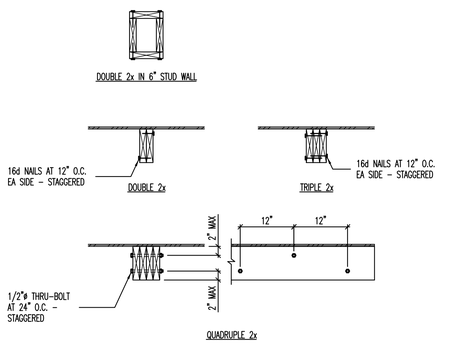

A2 BUILT-UP BEAM DETAILS

NO SCALE

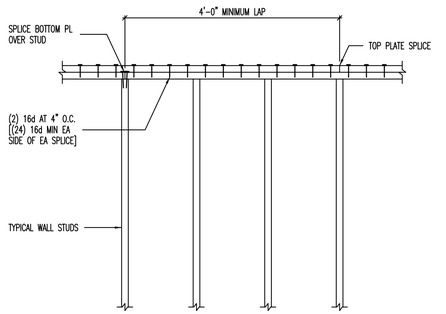

A3 TYPICAL TOP PLATE SPLICE DETAIL

NO SCALE

TOP PLATE SPLICE

HOLE SIZE	STRAPS
LESS THAN OR EQUAL TO 1/3 STUD WIDTH	NONE REQUIRED
GREATER THAN 1/3 AND LESS THAN OR EQUAL TO 2/3 STUD WIDTH	ST2122 WITH (4) 16d NAILS EACH END
GREATER THAN 2/3 STUD WIDTH	ST2215 WITH (6) 16d NAILS EACH END

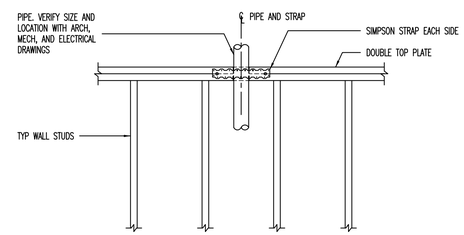

A4 TOP PLATE SPLICE SCHEDULE AT PIPE

NO SCALE

CLIENT

UDOT CONNECTING COMMUNITIES

TIE FORK VISITORS CENTER
17845 E HIGHWAY 6
SPANISH FORK, UTAH 84660

DESIGNER

ARCHIPLEX GROUP
architecture · planning · design services
255 Crossroad Square
Slat lake City, UT 84115
P:(801) 961-7070
F:(801) 961-7373

CONSULTANTS

"Engineering Results"
BHB Consulting Engineers
A Professional Corporation
2766 South Main Street
Salt Lake City, Utah 84115
Phone: 801.355.3636
Fax: 801.355.5950
Email: bhb@bhbengineers.com

PROFESSIONAL SEAL

LICENSED PROFESSIONAL ENGINEER
No. 323922
GERALD W. MCKENZIE
8-09
STATE OF UTAH

ISSUE

MARK	DATE	DESCRIPTION
	8-09	CONSTRUCTION DOCUMENTS
	6-22-09	PS & E REVIEW
	3-09	95% REVIEW SUBMITTAL
	1-5-09	50% REVIEW SUBMITTAL

DFCM PROJECT NO:	08264900
DFCM CONTRACT NO:	097130
ARCHIPLEX PROJECT NO:	0832.01
DRAWN BY:	
CHECKED BY:	
SCALE:	
DATE:	AUGUST, 2009

SHEET TITLE

ROOF FRAMING DETAIL

SF511

NOTE: ALL EXPOSED STEEL TO BE GALVANIZED. COORDINATE WITH ARCH DRAWINGS

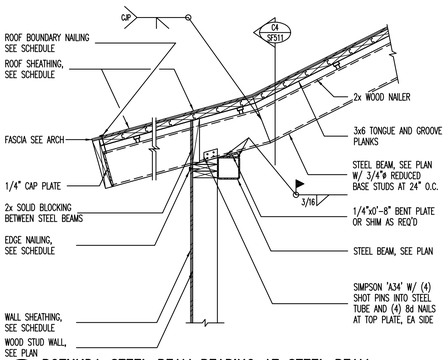

C1 ROTUNDA STEEL BEAM BEARING AT STEEL BEAM

NO SCALE

08718_SF512

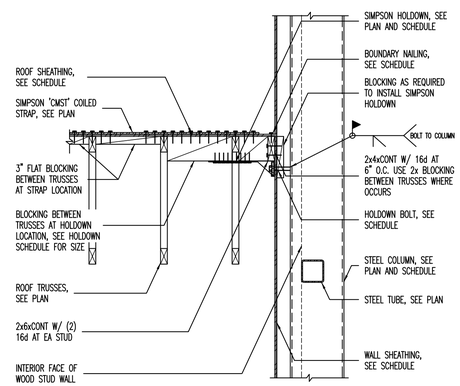

C2 FORCE TRANSFER AT TOWER STEEL COLUMNS

NO SCALE

08718_A-011

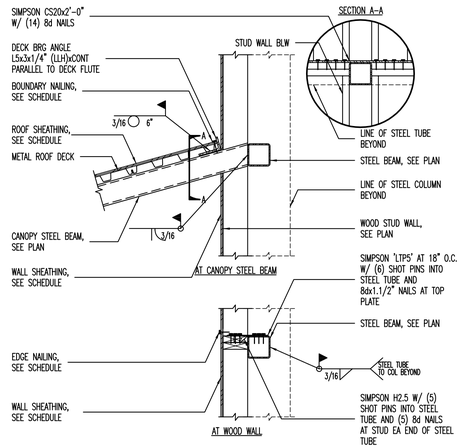

C3 ROTUNDA CANOPY CONNECTIONS

NO SCALE

08718_SF511

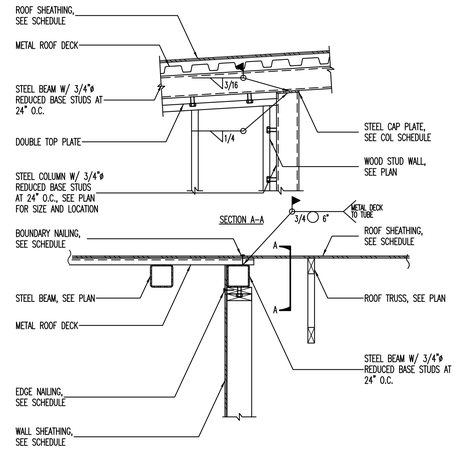

C4 DETAIL

NO SCALE

08718_SF512

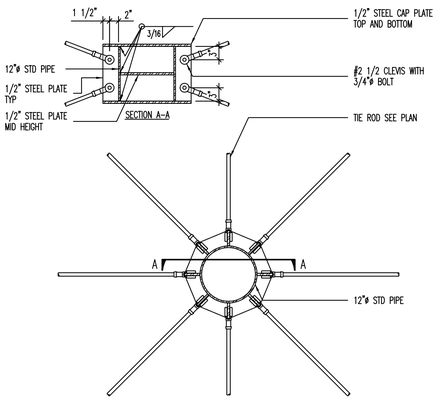

B1 ROTUNDA TIE ROD CONNECTION

NO SCALE

08718_A-512

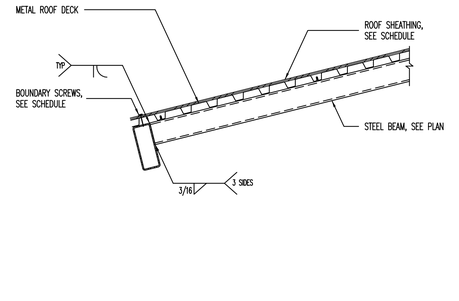

B2 ROTUNDA CANOPY CONNECTIONS

NO SCALE

08718_A-512

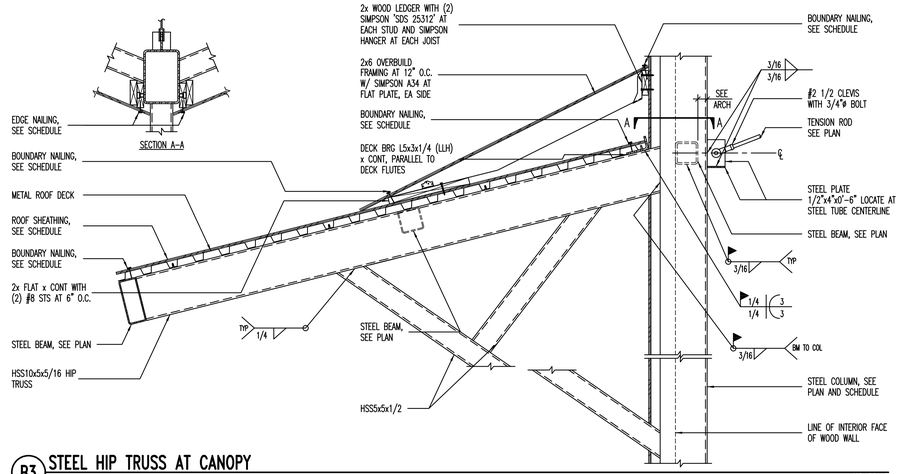

B3 STEEL HIP TRUSS AT CANOPY

NO SCALE

08718_SF512

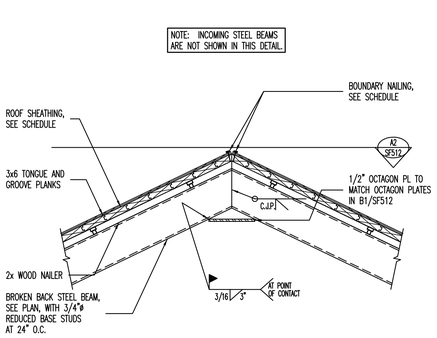

A1 ROTUNDA BEAM CONNECTION AT APEX

NO SCALE

08718_A-512

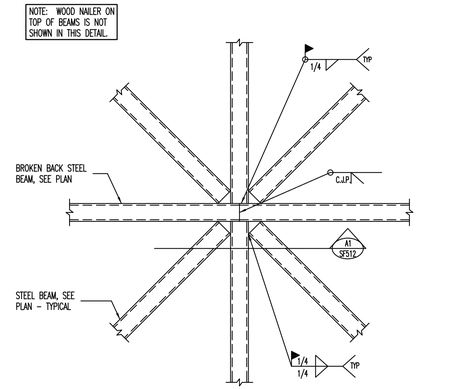

A2 ROTUNDA APEX BEAM CONNECTION [PLAN VIEW]

NO SCALE

08718SD12

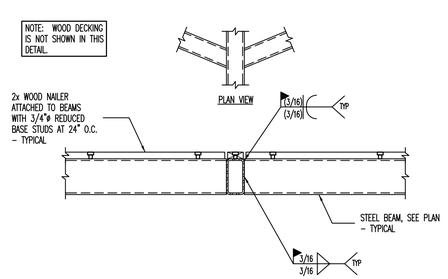

A3 ROTUNDA BEAM-TO-BEAM CONNECTION

NO SCALE

08718SF512

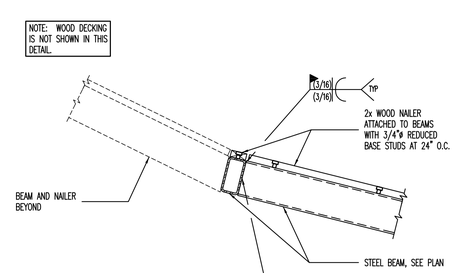

A4 ROTUNDA BEAM-TO-BEAM CONNECTION

NO SCALE

08718SD12

CLIENT

UDOT CONNECTING COMMUNITIES

TIE FORK VISITORS CENTER
17845 E HIGHWAY 6
SPANISH FORK, UTAH 84660

DESIGNER

ARCHIPLEX GROUP
architecture · planning · design services
255 Crossroad Square
Salt lake City, UT 84115
P:(801) 961-7070
F:(801) 961-7373

CONSULTANTS

"Engineering Results"
BHB Consulting Engineers
A Professional Corporation
2766 South Main Street
Salt Lake City, Utah 84115
Phone: 801.355.3656
Fax: 801.355.5950
Email: bhb@bhbengineers.com

PROFESSIONAL SEAL

LICENSED PROFESSIONAL ENGINEER
No. 323922
GERALD W. MCKENZIE
8-09
STATE OF UTAH

ISSUE

MARK	DATE	DESCRIPTION
	8-09	CONSTRUCTION DOCUMENTS
	6-22-09	PS & E REVIEW
	3-09	95% REVIEW SUBMITTAL
	1-5-09	50% REVIEW SUBMITTAL

DFCM PROJECT NO:	08264900
DFCM CONTRACT NO:	097130
ARCHIPLEX PROJECT NO:	0832.01
DRAWN BY:	
CHECKED BY:	
SCALE:	
DATE:	AUGUST, 2009

SHEET TITLE

ROOF FRAMING DETAIL

SF512

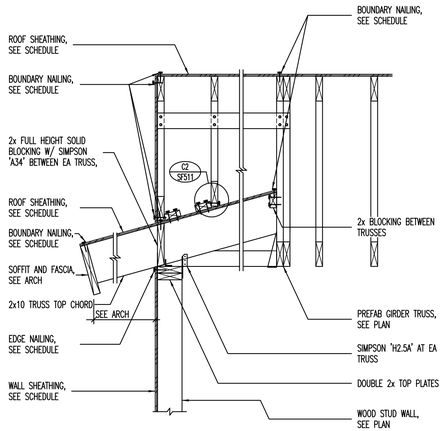

B1 TRUSS BEARING AT GABLE END (NORTH SIDE)

NO SCALE

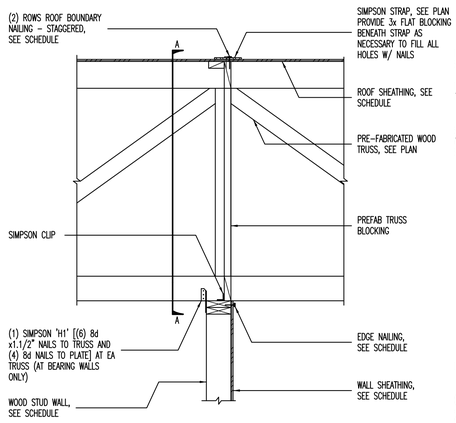

A1 TYPICAL INTERIOR SHEAR WALL PERPENDICULAR TO TRUSS

3020-34-R

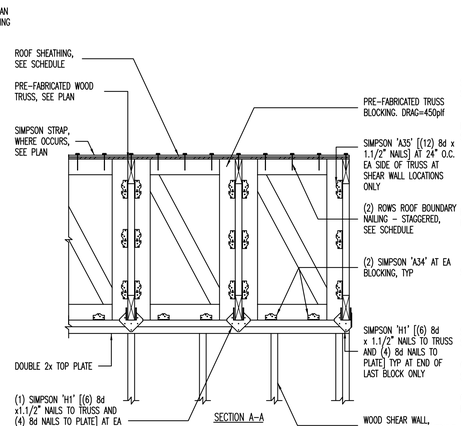

NO SCALE

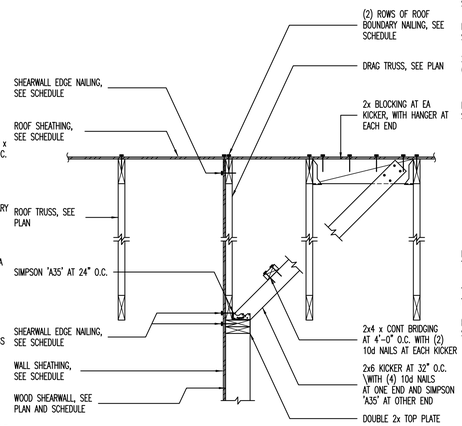

A3 TYPICAL INTERIOR SHEAR WALL PARALLEL TO ROOF TRUSS

NO SCALE

3020A-01

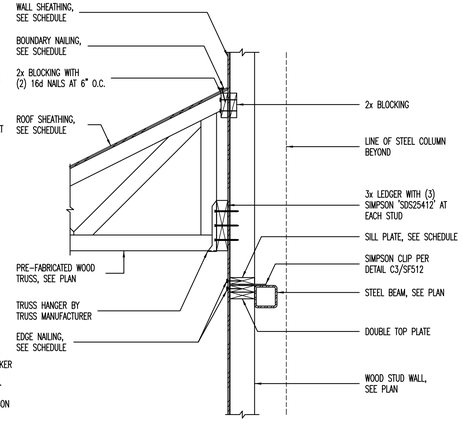

A4 TRUSS DETAIL

NO SCALE

08TRUSS

CLIENT

UDOT CONNECTING COMMUNITIES

TIE FORK VISITORS CENTER
17845 E HIGHWAY 6
SPANISH FORK, UTAH 84660

DESIGNER

ARCHIPLEX GROUP
architecture · planning · design services
255 Crossroad Square
Slat lake City, UT 84115
P:(801) 961-7070
F:(801) 961-7373

CONSULTANTS

"Engineering Results"
BHB Consulting Engineers
A Professional Corporation
2766 South Main Street
Salt Lake City, Utah 84115
Phone: 801.355.3656
Fax: 801.355.5950
Email: bhb@bhbengineers.com

PROFESSIONAL SEAL

LICENSED PROFESSIONAL ENGINEER
No 323922
GERALD W. MCKENZIE
8-09
STATE OF UTAH

ISSUE

MARK	DATE	DESCRIPTION
	8-09	CONSTRUCTION DOCUMENTS
	6-22-09	PS & E REVIEW
	3-09	95% REVIEW SUBMITTAL
	1-5-09	50% REVIEW SUBMITTAL

DFCM PROJECT NO:	08264900
DFCM CONTRACT NO:	097130
ARCHIPLEX PROJECT NO:	0832.01
DRAWN BY:	
CHECKED BY:	
SCALE:	
DATE:	AUGUST, 2009

SHEET TITLE

ROOF FRAMING DETAIL

SF513

CONCRETE FOOTING SCHEDULE

MARK	WIDTH	LENGTH	DEPTH	REINFORCING CROSSWISE				REINFORCING LENGTHWISE				COMMENTS
				No.	SIZE	LENGTH	SPACING	No.	SIZE	LENGTH	SPACING	
FTS2.0	2'-0"	CONT	12"	–	–	–	–	3	#4	CONT	EQ	THICKENED SLAB
FTS2.0A	2'-0"	CONT	24"	–	–	–	–	3	#4	CONT	EQ	THICKENED SLAB, REINF TOP AND BOTTOM
FTS2.5	2'-6"	CONT	12"	–	#5	2'-0"	14"	3	#5	CONT	EQ	
FC1.5	1'-6"	CONT	12"	–	–	–	–	2	#5	CONT	EQ	
FC2.0	2'-0"	CONT	12"	–	–	–	–	3	#4	CONT	EQ	
FC2.5	2'-6"	CONT	12"	–	#5	2'-0"	14"	3	#5	CONT	EQ	
FC3.0	3'-0"	CONT	12"	–	#5	2'-6"	14"	3	#5	CONT	EQ	
FC3.5	3'-6"	CONT	12"	–	#5	3'-0"	14"	3	#5	CONT	EQ	
FC4.0	4'-0"	CONT	12"	–	#5	3'-6"	14"	4	#5	CONT	EQ	
FC8.0	8'-0"	CONT	15"	–	#6	7'-6"	18"	6	#6	CONT	EQ	BOTTOM REINFORCING
					#4	7'-6"	18"	6	#4	CONT	EQ	TOP REINFORCING
FS3.0	3'-0"	3'-0"	12"	3	#5	2'-6"	EQ	3	#5	2'-6"	EQ	
FS3.5	3'-6"	3'-6"	12"	3	#5	3'-0"	EQ	3	#5	3'-0"	EQ	
FS4.0	4'-0"	4'-0"	12"	4	#5	3'-6"	EQ	4	#5	3'-6"	EQ	
FS4.5	4'-6"	4'-6"	12"	4	#5	4'-0"	EQ	4	#5	4'-0"	EQ	
FS5.0	5'-0"	5'-0"	12"	5	#5	4'-6"	EQ	4	#5	4'-6"	EQ	
FS5.5	5'-6"	5'-6"	12"	5	#5	5'-0"	EQ	5	#5	5'-0"	EQ	
FS6.0	6'-0"	6'-0"	12"	6	#5	5'-6"	EQ	6	#5	5'-6"	EQ	
FS6.5	6'-6"	6'-6"	13"	6	#5	6'-0"	EQ	6	#5	6'-0"	EQ	
FS7.0	7'-0"	7'-0"	13"	7	#5	6'-6"	EQ	7	#5	6'-6"	EQ	
FS7.5	7'-6"	7'-6"	14"	8	#5	7'-0"	EQ	8	#5	7'-0"	EQ	
FS8.0	8'-0"	8'-0"	15"	6	#6	7'-6"	EQ	6	#6	7'-6"	EQ	

CONCRETE FOOTING NOTES:
1. PLACE ALL FOOTING REINFORCING IN THE BOTTOM OF THE FOOTING WITH 3" CLEAR CONCRETE COVER (UNO).
2. TOP REINFORCING, WHERE OCCURS, SHALL BE PLACED IN THE TOP OF THE FOOTING WITH 2" MINIMUM CONCRETE COVER.
3. IF FOOTINGS ARE EARTH-FORMED, FOOTINGS SHALL BE 6" LONGER AND WIDER THAN SCHEDULED.
4. SEE GENERAL STRUCTURAL NOTES FOR ADDITIONAL REQUIREMENTS.
5. SOME SCHEDULED FOOTINGS MAY NOT BE USED, SEE FOOTING AND FOUNDATION PLAN FOR FOOTING MARKS.

B1 CONCRETE FOOTING SCHEDULE
SCHED_CONC_FTG-C2500-5100

NO SCALE

CONCRETE REINFORCING BAR LAP SPLICE SCHEDULE

BAR SIZE	f'c = 3000psi				f'c = 4000psi				f'c = 5000psi				f'c = 6000psi			
	REGULAR CLASS		TOP CLASS		REGULAR CLASS		TOP CLASS		REGULAR CLASS		TOP CLASS		REGULAR CLASS		TOP CLASS	
	A	B	A	B	A	B	A	B	A	B	A	B	A	B	A	B
#3	13"	17"	17"	21"	12"	16"	16"	21"	12"	16"	16"	21"	12"	16"	16"	21"
#4	17"	22"	22"	28"	15"	19"	19"	25"	13"	17"	17"	22"	12"	16"	16"	21"
#5	21"	27"	27"	35"	18"	24"	24"	31"	16"	21"	21"	27"	15"	19"	19"	25"
#6	27"	36"	36"	46"	24"	31"	31"	40"	21"	28"	28"	36"	20"	25"	25"	33"
#7	37"	48"	48"	63"	32"	42"	42"	54"	29"	38"	38"	49"	27"	34"	34"	44"
#8	49"	64"	64"	82"	42"	55"	55"	71"	38"	49"	49"	64"	35"	45"	45"	58"
#9	62"	80"	80"	104"	54"	70"	70"	90"	48"	62"	62"	81"	44"	57"	57"	74"
#10	78"	102"	102"	132"	68"	88"	88"	115"	61"	79"	79"	102"	56"	72"	72"	94"
#11	96"	125"	125"	162"	83"	108"	108"	141"	76"	97"	97"	126"	68"	88"	88"	115"

CONCRETE REINFORCING BAR LAP SPLICE NOTES:
1. THIS SCHEDULE SHALL BE USED FOR ALL BAR SPLICES IN CONCRETE WALLS, UNLESS NOTED OTHERWISE.
2. CLASS 'A' SPLICES MAY BE USED ONLY IN CASES WHERE 50% OR LESS OF THE BARS ARE SPLICED WITHIN THE LAP SPLICE LENGTH.
3. CLASS 'B' SPLICES SHALL BE USED FOR ALL SPLICES UNLESS THE REQUIREMENTS OF NOTE No. 2 ABOVE ARE MET.
4. TIES AND STIRRUPS SHALL NOT BE SPLICED.
5. SPLICES FOR BUNDLED BARS:
   a. FOR BUNDLED BARS OF THREE OR LESS, LAP SPLICE LENGTHS SHALL BE MULTIPLIED BY 1.2.
   b. FOR BUNDLED BARS OF FOUR OR MORE, LAP SPLICE LENGTHS SHALL BE MULTIPLIED BY 1.33.
   c. INDIVIDUAL BAR SPLICES WITHIN A BUNDLE SHALL NOT OVERLAP.
   d. ENTIRE BUNDLES SHALL NOT BE LAP SPLICED.
6. FOR ALL LIGHTWEIGHT CONCRETE, LAP LENGTHS SHALL BE MULTIPLIED BY 1.3.
7. FOR ALL EPOXY COATED BARS, LAP LENGTHS SHALL BE MULTIPLIED BY 1.3 FOR TOP BARS AND 1.5 FOR REGULAR BARS.
8. TOP BARS ARE CLASSIFIED AS HORIZONTAL BARS WHERE 12", OR MORE, OF FRESH CONCRETE IS CAST BELOW THE REINFORCING BAR.
9. SEE GENERAL STRUCTURAL NOTES FOR ADDITIONAL REQUIREMENTS.

B2 CONCRETE REINFORCING BAR LAP SPLICE SCHEDULE
SCHED_CONC_REINF-01

NO SCALE

CONCRETE WALL SCHEDULE

MARK	THICKNESS	REINFORCING			WALL TYPE	COMMENTS
		VERTICAL	HORIZONTAL	TOP AND BOTTOM		
CW-1	8"	#4 AT 18" O.C.	#4 AT 12" O.C.	#4	A	.
CW-2	10"	#4 AT 16" O.C.	#5 AT 15" O.C.	#5	A	

CONCRETE FOUNDATION WALL NOTES:
1. SEE GENERAL STRUCTURAL NOTES FOR ADDITIONAL REQUIREMENTS.
2. CONCRETE FOUNDATION WALLS NOT DESIGNATED ON PLANS SHALL BE REINFORCED AS FOLLOWS:

THICKNESS	VERTICAL REINFORCING	HORIZONTAL REINFORCING
6"	#4 BARS AT 18" O.C.	#4 BARS AT 16" O.C.
8"	#4 BARS AT 18" O.C.	#4 BARS AT 12" O.C.
10"	#4 BARS AT 16" O.C.	#5 BARS AT 15" O.C.
12"	#4 BARS AT 18" O.C. E.F.	#4 BARS AT 16" O.C. E.F.

ABBREVIATIONS:
E.F. EACH FACE
I.F. INSIDE FACE
O.F. OUTSIDE FACE

WALL REINFORCING PLACEMENT TYPES:

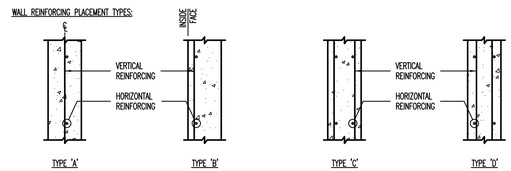

A1 CONCRETE WALL SCHEDULE
SCHED_CONC_WALL-01

NO SCALE

CONCRETE PIER SCHEDULE

MARK	PIER SIZE	REINFORCING		TYPE	COMMENTS
		VERTICAL	TIES		
CP-1	8"x10"x10"	(7) #4	(2) #3 AT 8" O.C.	A	.
CP-2	18" x 24"	(9) #5	(3) #3 AT 8" O.C.	B	
CP-3	8" x 12"	(4) #5	#3 AT 8" O.C.	C	

CONCRETE PIER NOTES:
1. INSTALL (3) SETS OF TIES WITHIN TOP 5" OF ALL PIERS (UNO).
2. RUN HORIZONTAL CONCRETE WALL REINFORCING CONTINUOUS THROUGH PIER WHEN PIER IS POURED MONOLITHICALLY WITH CONCRETE WALL.
3. SEE GENERAL STRUCTURAL NOTES FOR ADDITIONAL REQUIREMENTS.

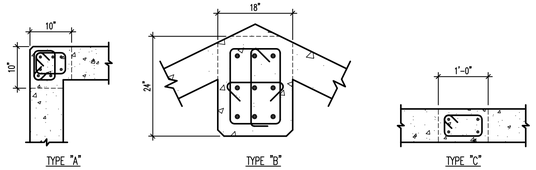

A2 CONCRETE PIER SCHEDULE
SCHED_CONC_PIER-01

NO SCALE

CLIENT

UDOT CONNECTING COMMUNITIES

TIE FORK VISITORS CENTER
17845 E HIGHWAY 6
SPANISH FORK, UTAH 84660

DESIGNER

ARCHIPLEX GROUP
architecture · planning · design services
255 Crossroad Square
Slat lake City, UT 84115
P:(801) 961-7070
F:(801) 961-7373

CONSULTANTS

"Engineering Results"
BHB Consulting Engineers
A Professional Corporation
2766 South Main Street
Salt Lake City, Utah 84115
Phone: 801.355.3656
Fax: 801.355.5950
Email: bhb@bhbengineers.com

PROFESSIONAL SEAL

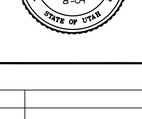

ISSUE

MARK	DATE	DESCRIPTION
	8-09	CONSTRUCTION DOCUMENTS
	6-22-09	PS & E REVIEW
	3-09	95% REVIEW SUBMITTAL
	1-5-09	50% REVIEW SUBMITTAL

DFCM PROJECT NO:	08264900
DFCM CONTRACT NO:	097130
ARCHIPLEX PROJECT NO:	0832.01
DRAWN BY:	
CHECKED BY:	
SCALE:	
DATE:	AUGUST, 2009

SHEET TITLE

SCHEDULES

SB601

STEEL COLUMN SCHEDULE

MARK	SIZE	STEEL BASE PLATE	STEEL CAP PLATE	COMMENTS
SC-4A	HSS4x4x3/16	3/4" (SBP-3)	1/4" CAP PLATE	.
SC-12A	HSS12x8x5/16	1 1/2" (SBP-4)	1/2" CAP PLATE	USE 1" ø ANCHOR ROD, SEE DETAIL C3/SF702
SC-12B	HSS12x8x3/8"	7/8" (SBP-5)	1/2" CAP PLATE	
SC-12C	HSS12x8x3/8"	7/8" (SBP-6)	1/2" CAP PLATE	

STEEL COLUMN NOTES:
1. UNLESS NOTED OTHERWISE, ALL COLUMNS SHALL BE INSTALLED WITH (4) 3/4"ø ANCHOR RODS WITH 3" MINIMUM HOOKS. PROJECT ANCHOR RODS 3" MINIMUM ABOVE THE TOP OF THE BASE PLATE. EMBEDMENT SHALL BE 9" MINIMUM. ALL RODS SHALL BE INSTALLED WITH HARDENED WASHERS BENEATH THE NUT. ANY BOLT HOLES LARGER THAN THE ROD DIAMETER PLUS 5/16" SHALL HAVE 5/16" PLATE WASHERS INSTALLED BENEATH THE HARDENED WASHERS.
2. ALL CAP PLATE BOLTS SHALL BE 3/4"ø A325N BOLTS, TYPICAL UNLESS NOTED OTHERWISE.
3. ANCHOR RODS SHALL NOT BE WELDED (INCLUDING TACK WELDS).
4. SEE GENERAL STRUCTURAL NOTES FOR ADDITIONAL REQUIREMENTS.

STEEL BASE PLATE TYPES:

BASE PLATE LEGEND
co = 1/2" MINIMUM
ed = 1.1/2" MINIMUM
bc = 3" MINIMUM

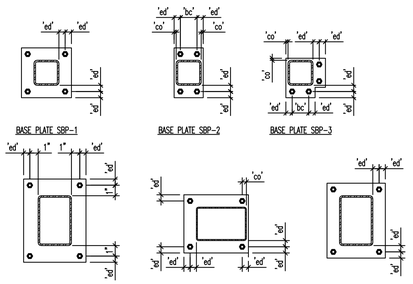

STEEL CAP PLATE TYPES:

CAP PLATE LEGEND
co = 1/2" MINIMUM
ed = 1.1/2" MINIMUM
bc = BEAM OR GIRDER GAGE
w = BEAM OR GIRDER GAGE + 3"
OR
BEAM OR GIRDER WIDTH + 1"
OR
COLUMN WIDTH + 1"
WHICHEVER IS GREATER

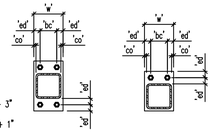

C1 STEEL COLUMN SCHEDULE
S2403_05_COL-01
NO SCALE

PERFORATED WOOD SHEATHING SHEARWALL SCHEDULE

MARK	WALL FRAMING: STUDS	TOP PLATE	BOTTOM PLATE	BOTTOM PLATE ANCHORS	STUD & BLOCK AT JOINTS	WALL SHEATHING: THICKNESS	NAIL SIZE	EDGE NAIL	EDGE NAIL ZONE A	FIELD NAIL	HORIZONTAL STRAP	COMMENTS
PSW-6A	2x6 AT 16" O.C.	(2) 2x6	2x6	5/8"ø AT 32" O.C.	3x	7/16	8d	6"	2"	12"	CS14x3"-0" W/ (30) 8d NAILS	
PSW-6B	2x6 AT 16" O.C.	(2) 2x6	2x6	5/8"ø AT 32" O.C.	3x	7/16	8d	4"	4"	12"	CS16x2"-0" W/ (22) 8d NAILS	

WOOD SHEATHING SHEARWALL NOTES:
1. PROVIDE 1/4"x3"x0"-3" WASHER PLATES AT BOLTS. CONTRACTOR HAS OPTION TO PROVIDE A DIAGONAL SLOTTED HOLE WITH A WIDTH OF UP TO 3/16" LARGER THAN THE BOLT DIAMETER AND A SLOT LENGTH OF UP TO 1.3/4", PROVIDED A STANDARD CUT WASHER IS PLACED BETWEEN THE PLATE WASHER AND THE NUT.
2. USE COMMON NAILS. AT SILL PLATE USE HOT-DIPPED OR TUMBLED GALVANIZED NAILS.
3. ANCHOR BOLTS SHALL HAVE A 7" MINIMUM EMBEDMENT INTO CONCRETE AND TERMINATE WITH A 3" STANDARD 90° HOOK.
4. WHERE STUDS ARE CUT FOR PLACEMENT OF ANCHOR BOLTS OR OTHER ELEMENTS, AN ADJACENT STUD SHALL BE ADDED.
5. WHERE WOOD SHEATHING IS APPLIED TO BOTH SIDES OF A WALL AND NAIL SPACING IS LESS THAN 6" O.C. ON EITHER SIDE, PANEL JOINTS SHALL BE OFFSET TO FALL ON DIFFERENT FRAMING MEMBERS, OR FRAMING MEMBER SHALL BE 3" OR THICKER AND NAILS ON EITHER SIDE SHALL BE STAGGERED.
6. PRE-DRILLED HOLES ARE REQUIRED AT 20d NAILS.
7. SEE GENERAL STRUCTURAL NOTES FOR ADDITIONAL REQUIREMENTS.
8. ANCHOR BOLTS, NUTS, AND WASHERS, SHALL BE HOT DIPPED GALVANIZED OR STAINLESS STEEL I.A.W. IBC 2304.9.5 ON ALL SHEARWALL TYPES WHERE SILL PLATE IS PLACED BELOW GRADE OR EXPOSED TO WEATHER. DO NOT MIX GALVANIZED WITH STAINLESS STEEL.
9. ALL NAILS PENETRATING A PRESSURE TREATED SILL PLATE SHALL BE GALVANIZED BOX NAILS, OF THE SAME SIZE SPECIFIED IN THE SHEARWALL SCHEDULE I.A.W. IBC 2304.9.5 ON ALL SHEARWALL TYPES, WHERE SILL PLATE IS PLACED BELOW GRADE OR EXPOSED TO WEATHER.

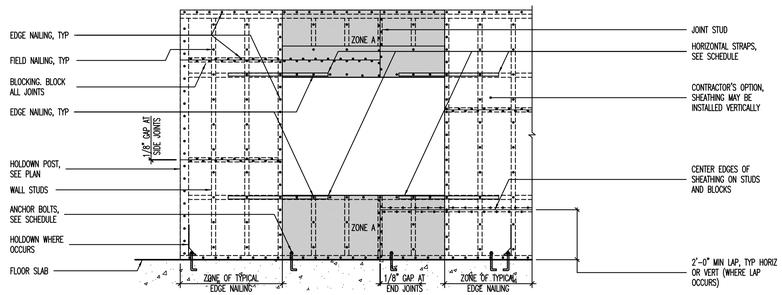

C2 PERFORATED WOOD SHEATHING SHEARWALL SCHEDULE [ELEVATION VIEW]
S2403_WOOD_SHEAR-01
NO SCALE

HOLDOWN SCHEDULE

MARK	SIMPSON HOLDOWN	BOUNDARY MEMBER	BOUNDARY MEMBER BOLTING/NAILING	ANCHOR ROD	EMBEDMENT	DETAIL	COMMENTS
HD-1	HDU2-SDS2.5	(2) STUDS	(6) SDS	5/8"ø SSTB16	12 5/8"	A	.
HD-2	HDU4-SDS2.5	(2) STUDS	(10) SDS	5/8"ø SSTB20	16 5/8"	A	
HD-3	HDU5-SDS2.5	4x4	(14) SDS	5/8"ø SSTB24	20 5/8"	A	
HD-4	HDU8-SDS2.5	4x4	(20) SDS	7/8"ø SSTB28	24 7/8"	A	
HD-5	HDU11-SDS2.5	6x6	(30) SDS	7/8"ø SSTB34	28 7/8"	A	
HD-6	STHD8	(2) STUDS	(24) 16d	–	–	B	

HOLDOWN NOTES:
1. ANCHOR RODS SHALL BE HEADED BOLTS OR RODS THREADED WITH HEAVY HEX NUT.
2. INCREASE FOOTING DEPTH WHERE EMBEDMENT LENGTH PLUS 3" IS GREATER THAN FOOTING DEPTH SPECIFIED.
3. ALL HOLDOWNS SPECIFIED ARE "SIMPSON – STRONG TIE", SEE GENERAL STRUCTURAL NOTES FOR SUBSTITUTIONS.
4. LAG SCREWS SHALL NOT BE USED.
5. DO NOT OVER TORQUE NUTS; SEE MANUFACTURER'S TORQUE REQUIREMENTS.
6. SEE GENERAL STRUCTURAL NOTES FOR ADDITIONAL REQUIREMENTS.

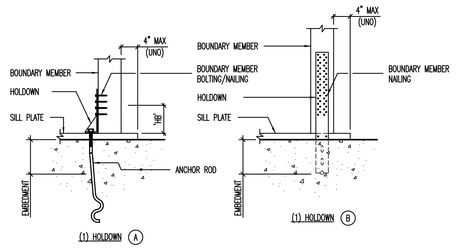

A2 HOLDOWN SCHEDULE
S2403_WOOD_HDWN-01
NO SCALE

WOOD SHEATHING SHEARWALL SCHEDULE

MARK	WALL FRAMING: STUDS	TOP PLATE	BOTTOM PLATE	BOTTOM PLATE ANCHORS	STUD & BLOCK AT JOINTS	WALL SHEATHING: THICKNESS	NAIL SIZE	EDGE NAIL	FIELD NAIL	COMMENTS
SW-6A	2x6 AT 16" O.C.	(2) 2x6	2x6	5/8"ø A.B. AT 48" O.C.	2x	7/16"	8d	6" O.C.	12" O.C.	
SW-6B	2x6 AT 16" O.C.	(2) 2x6	2x6	5/8"ø A.B. AT 32" O.C.	2x	7/16"	8d	4" O.C.	12" O.C.	
SW-6C	2x4 AT 16" O.C.	(2) 2x4	3x4	5/8"ø A.B. AT 24" O.C.	3x	7/16"	8d	2" O.C.	12" O.C.	
SW-6D	2x6 AT 16" O.C.	(2) 2x6	3x6	5/8"ø A.B. AT 24" O.C.	3x	7/16"	8d	2" O.C.	12" O.C.	

WOOD SHEATHING SHEARWALL NOTES:
1. PROVIDE 1/4"x3"x0"-3" WASHER PLATES AT BOLTS. CONTRACTOR HAS OPTION TO PROVIDE A DIAGONAL SLOTTED HOLE WITH A WIDTH OF UP TO 3/16" LARGER THAN THE BOLT DIAMETER AND A SLOT LENGTH OF UP TO 1.3/4", PROVIDED A STANDARD CUT WASHER IS PLACED BETWEEN THE PLATE WASHER AND THE NUT.
2. USE COMMON NAILS. AT SILL PLATE USE HOT-DIPPED OR TUMBLED GALVANIZED NAILS.
3. ANCHOR BOLTS SHALL HAVE A 7" MINIMUM EMBEDMENT INTO CONCRETE AND TERMINATE WITH A 3" STANDARD 90° HOOK AND BE HOT-DIPPED GALVANIZED OR STAINLESS STEEL IN ACCORDANCE WITH IBC 2304.9.5.
4. WHERE STUDS ARE CUT FOR PLACEMENT OF ANCHOR BOLTS OR OTHER ELEMENTS, AN ADJACENT STUD SHALL BE ADDED.
5. WHERE WOOD SHEATHING IS APPLIED TO BOTH SIDES OF A WALL AND NAIL SPACING IS LESS THAN 6" O.C. ON EITHER SIDE, PANEL JOINTS SHALL BE OFFSET TO FALL ON DIFFERENT FRAMING MEMBERS, OR FRAMING MEMBER SHALL BE 3" OR THICKER AND NAILS ON EITHER SIDE SHALL BE STAGGERED.
6. PRE-DRILLED HOLES ARE REQUIRED AT 20d NAILS.
7. SEE GENERAL STRUCTURAL NOTES FOR ADDITIONAL REQUIREMENTS.

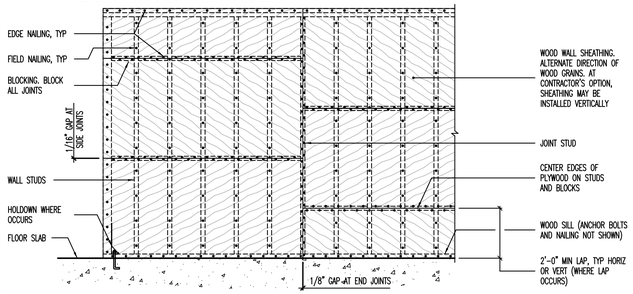

A1 WOOD SHEATHING SHEARWALL SCHEDULE [ELEVATION VIEW]
S2403_WOOD_SHWL-01
NO SCALE

SHEATHING SCHEDULE AT ROOF

LOCATION	WOOD SHEATHING THICKNESS	NAIL SIZE	EDGE NAIL: CONT EDGE	EDGE NAIL: OTHER EDGE	FIELD NAIL	BOUNDARY NAIL	EDGE BLOCK	COMMENTS
MAIN ROOF 3:12 PITCH	19/32"	10d	6"	6"	12"	6"	SEE PLAN	40/20 SPAN RATING
MAIN ROOF 6:12 PITCH	3/4"	10d	6"	6"	12"	6"	SEE PLAN	40/20 SPAN RATING
CANOPY ROOF W/ METAL DECK	7/16"	#8 STS	6"	6"	12"	6"	NONE	32/16 SPAN RATING
OVER BUILD AT CANOPY	7/16"	8d	6"	6"	12"	6"	NONE	32/16 SPAN RATING

SHEATHING NOTES:
1. MINIMUM NAIL PENETRATION INTO FRAMING: 8d–1.1/2", 10d–1.5/8".
2. USE COMMON NAILS (8d DIAMETER = 0.131", 10d DIAMETER = 0.148").
3. SEE GENERAL STRUCTURAL NOTES FOR ADDITIONAL REQUIREMENTS.

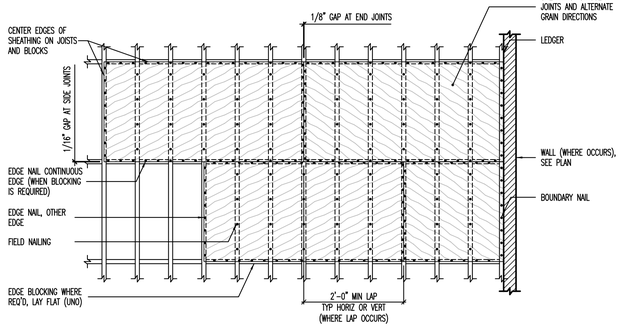

C4 SHEATHING SCHEDULE AT ROOF AND FLOOR [PLAN VIEW]
S2403_WOOD_SHEATH-01
NO SCALE

MINIMUM NAILING SCHEDULE

CONNECTION	NAILING
SOLE PLATE TO JOIST OR BLOCKING, FACE NAIL	16d AT 16" O.C.
BRIDGING TO JOIST, TOENAIL EACH END	(2) 8d
BLOCKING BETWEEN JOIST OR RAFTERS TO TOP PLATE, TOE NAIL	(3) 8d
RIM JOIST TO TOP PLATE, TOE NAIL	8d AT 6" O.C.
COLLAR TIE TO RAFTER, FACE NAIL	(3) 10d
JACK RAFTER TO HIP, TOE NAIL	(3) 10d
FACE NAIL	(2) 16d
ROOF RAFTER TO 2x RIDGE BEAM, TOE NAIL	(2) 16d
FACE NAIL	(2) 16d
JOIST TO BAND JOIST, FACE NAIL	(3) 16d
LEDGER STRIP, FACE NAIL	(3) 16d
TOP PLATE TO STUD, END NAIL	(2) 16d
DOUBLE STUDS, FACE NAIL	16d AT 24" O.C.
DOUBLED TOP PLATES, FACE NAIL	16d AT 16" O.C.
TOP PLATES, LAPS & INTERSECTION, FACE NAIL	(2) 16d
CONTINUOUS HEADER, TWO PIECES	16d AT 16" O.C. ALONG EACH EDGE
CEILING JOISTS TO PLATE, TOENAIL	(3) 8d
CONTINUOUS HEADER TO STUD, TOENAIL	(4) 8d
CEILING JOISTS, LAPS OVER PARTITIONS, FACE NAIL	(3) 16d
CEILING JOISTS TO PARALLEL RAFTERS, FACE NAIL	(3) 16d
RAFTER TO PLATE, TOENAIL	(3) 8d
1" BRACE TO EACH STUD & PLATE, FACE NAIL	(2) 8d
BUILT-UP CORNER STUDS	16d AT 24" O.C.
BUILT-UP GIRDER & BEAMS	20d AT 32" O.C. AT TOP, BOTTOM, AND STAGGERED. (2) 20d AT ENDS AND AT EACH SPLICE.
PLYWOOD & PARTICLEBOARD:	
SUBFLOOR, ROOF & WALL SHEATHING (TO FRAMING)*	
1/2" AND LESS	8d
19/32" – 3/4"	8d OR 10d
7/8" – 1"	8d
1.1/8" – 1.1/4"	8d OR 10d
COMBINATION SUBFLOOR-UNDERLAYMENT (TO FRAMING)*	
3/4" AND LESS	6d
7/8" – 1"	8d
1.1/8" – 1.1/4"	8d OR 10d

* NAILS SPACED AT 6" O.C. AT EDGES, 12" O.C. AT INTERMEDIATE SUPPORTS (EXCEPT WHERE SPANS ARE 48" OR MORE, THEN SPACE AT 6" O.C. AT SUPPORTS). FOR NAILING OF DIAPHRAGMS AND SHEAR WALLS, REFER TO SHEARWALL SCHEDULE.

MINIMUM NAILING NOTES:
1. NAILING SCHEDULE IS PER TABLE 2304.9.1 OF THE I.B.C. 2006.
2. NAILING REQUIREMENTS SHOWN HERE DO NOT REPLACE HARDWARE SHOWN ON THE PLANS OR DETAILS.
3. ALL NAILS USED ARE COMMON NAILS.
4. SEE GENERAL STRUCTURAL NOTES FOR ADDITIONAL REQUIREMENTS.

A4 MINIMUM NAILING SCHEDULE
S2403_WOOD_NAIL-01
NO SCALE

CLIENT

UDOT CONNECTING COMMUNITIES

TIE FORK VISITORS CENTER
17845 E HIGHWAY 6
SPANISH FORK, UTAH 84660

DESIGNER

ARCHIPLEX GROUP
architecture · planning · design services
255 Crossroad Square
Salt lake City, UT 84115
P:(801) 961-7070
F:(801) 961-7373

CONSULTANTS

"Engineering Results"
BHB Consulting Engineers
A Professional Corporation
2766 South Main Street
Salt Lake City, Utah 84115
Phone: 801.355.3636
Fax: 801.355.5950
Email: bhb@bhbengineers.com

PROFESSIONAL SEAL

LICENSED PROFESSIONAL ENGINEER
No. 323922
GERALD W. MCKENZIE
8-09
STATE OF UTAH

ISSUE

MARK	DATE	DESCRIPTION
	8-09	CONSTRUCTION DOCUMENTS
	6-22-09	PS & E REVIEW
	3-09	95% REVIEW SUBMITTAL
	1-5-09	50% REVIEW SUBMITTAL

DFCM PROJECT NO:	08264900
DFCM CONTRACT NO:	097130
ARCHIPLEX PROJECT NO:	0832.01
DRAWN BY:	
CHECKED BY:	
SCALE:	
DATE:	AUGUST, 2009

SHEET TITLE

SCHEDULES

SF601

MASONRY LINTEL SCHEDULE

MARK	DEPTH	MAXIMUM SPAN	REINFORCING		COMMENTS
			HORIZONTAL	STIRRUPS	
ML-1	8"	3'-4"	(1) #7 x CONT	NONE	.
ML-2	16"	6'-0"	(1) #7 x CONT TOP AND BOTTOM	#4 AT 8" O.C.	
ML-3	24"	8'-0"	(1) #7 x CONT TOP AND BOTTOM	#4 AT 8" O.C.	
ML-4	32"	10'-0"	(1) #7 x CONT TOP AND BOTTOM	#4 AT 8" O.C.	
ML-5	40"	.	(1) #7xCONT TOP AND BOTTOM	#4 AT 8" O.C.	

MASONRY LINTEL NOTES:
1. LINTEL WIDTH AND MATERIAL TYPE SHALL BE THE SAME AS THE WALL IN WHICH THE LINTEL IS CONSTRUCTED.
2. GROUT MASONRY LINTELS MONOLITHICALLY WITH THE SUPPORT WALL OR COLUMN AT EACH END.
3. MASONRY LINTELS ML-1 THROUGH ML-4 SHALL BE USED OVER OPENINGS IN MASONRY WALLS WHEN A SPECIFIC MASONRY LINTEL IS NOT OTHERWISE SPECIFIED. WHEN A LINTEL IS SPECIFIED ON THE PLANS, THE MAXIMUM SPAN AS NOTED IN THIS SCHEDULE SHALL NOT APPLY. CONSULT THE STRUCTURAL ENGINEER FOR LINTELS NOT SPECIFIED ON THE PLANS WHICH HAVE A SPAN GREATER THAN 10'-0".
4. MASONRY LINTELS ML-1 THROUGH ML-4 SHALL NOT BE LOCATED DIRECTLY BELOW FLOOR OR ROOF BEAMS OR GIRDERS UNLESS NOTED OTHERWISE ON THE PLANS. JOISTS SHALL NOT BEAR ON ANY LINTEL LESS THAN 16" DEEP. CONSULT THE STRUCTURAL ENGINEER FOR LINTELS NOT SHOWN ON THE PLANS WHICH ARE LOCATED DIRECTLY BELOW FLOOR OR ROOF BEAMS OR GIRDERS.
5. EXTEND ALL HORIZONTAL REINFORCING 48 BAR DIAMETERS MINIMUM BEYOND THE EDGE OF ALL OPENINGS. IF HORIZONTAL REINFORCING CANNOT EXTEND 48 BAR DIAMETERS BEYOND EDGE OF OPENING, PROVIDE 90° STANDARD HOOK.
6. SPLICE TOP BARS AT MIDSPAN OF LINTEL ONLY AND BOTTOM BARS OVER SUPPORTS ONLY.
7. HORIZONTAL WALL REINFORCING SHALL CONTINUE THROUGH MASONRY LINTELS. WHERE BOTH HORIZONTAL WALL REINFORCING AND LINTEL REINFORCING OCCUR IN THE SAME COURSE, USE THE LARGER REINFORCING.
8. DOWEL VERTICAL REINFORCING OF WALL ABOVE LINTEL INTO THE FULL DEPTH OF LINTEL OR 48 BAR DIAMETERS, WHICHEVER IS LESS.
9. SEE GENERAL STRUCTURAL NOTES FOR ADDITIONAL REQUIREMENTS.

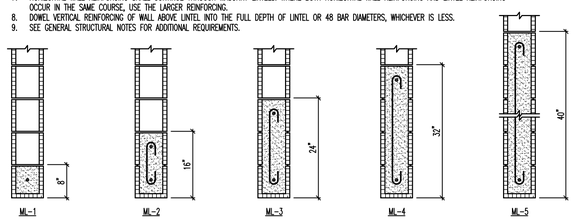

C1 MASONRY LINTEL SCHEDULE
S2403_MAS_LINTEL-01
NO SCALE

MASONRY COLUMN SCHEDULE

MARK	SIZE	REINFORCING		REINFORCING SCHEMATIC
		VERTICAL	TIES	
MC-1	8" x 16"	(2) #5	NONE	
MC-2	10" x 16"	(4) #5	#2 AT 8" O.C.	
MC-3	10" x 24"	(6) #5	#3 AT 8" O.C.	
MC-4	20" x 24"	(6) #6	#3 AT 8" O.C.	
MC-5	20" x 32"	(8) #6	#3 AT 8" O.C.	
MC-6	10" x 48"	(6) #5	#3 AT 8" O.C.	
MC-7	10" x 32"	(8) #5	#3 AT 8" O.C.	

MASONRY COLUMN NOTES:
1. THE CENTERLINE OF THE VERTICAL BARS SHALL BE LOCATED 2.1/2" FROM THE FACE OF THE MASONRY. HORIZONTAL WALL REINFORCING SHALL BE LOCATED TO THE INSIDE OF THE VERTICAL BARS.
2. VERTICAL REINFORCING AND TIES SHALL EXTEND FULL HEIGHT OF WALL (UNO).
3. VERTICAL MASONRY COLUMN REINFORCING SHALL EXTEND INTO THE FOOTING AND TERMINATE WITH A STANDARD 90° HOOK. FOR CONCRETE FOUNDATION WALLS TALLER THAN 5'-0", VERTICAL COLUMN REINFORCING SHALL DOWEL 4'-0" MINIMUM INTO THE FOUNDATION WALL.
4. IN CONCRETE FOUNDATION WALLS, VERTICAL MASONRY COLUMN REINFORCING SHALL BE TIED WITH #3 TIES AT THE SAME SPACING AND CONFIGURATION AS THE MASONRY COLUMN ABOVE.
5. SEE GENERAL STRUCTURAL NOTES FOR ADDITIONAL REQUIREMENTS.

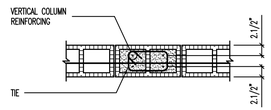

TYPICAL COLUMN CONFIGURATION SCHEMATIC

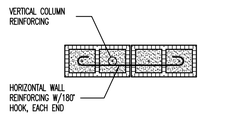

TYPICAL ISOLATED COLUMN CONFIGURATION SCHEMATIC

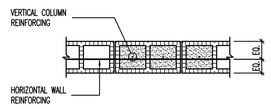

TYPICAL COLUMN CONFIGURATION SCHEMATIC

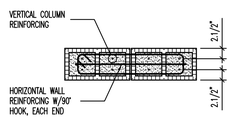

TYPICAL ISOLATED COLUMN CONFIGURATION SCHEMATIC

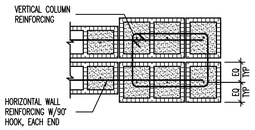

TYPICAL DOUBLE WHYTE COLUMN CONFIGURATION SCHEMATIC

C2 MASONRY COLUMN SCHEDULE
S2403_MAS_COL-01
NO SCALE

MASONRY WALL SCHEDULE

MARK	THICKNESS	MATERIAL	SOLID GROUT	REINFORCING			COMMENTS
				VERTICAL	HORIZONTAL	JOINTS	
MW-8A	8"	CMU	YES	#5 AT 32" O.C.	#5 AT 48" O.C.	NONE	
MW-8B	16"	CMU	YES	#5 AT 32" O.C.	#5 AT 48" O.C.	NONE	DOUBLE WHYTE, REINFORCE EA WHYTE AS SCHEDULED, 16" TOTAL THICKNESS
MW-10	10"	CMU	NO	#5 AT 24" O.C.	#4 AT 24" O.C.	NONE	FROM BOTTOM TO TOP OF OPENING
			NO	#5 AT 24" O.C.	#6 AT 48" O.C.	NONE	FROM TOP OF OPENING TO DECK BRG

MASONRY WALL NOTES:
1. COORDINATE WALL FINISHES, MATERIALS, COURSING, ETC. WITH ARCHITECTURAL DRAWINGS.
2. DO NOT SOLID GROUT WALLS UNLESS REQUIRED BY SCHEDULE, NOTES, OR DETAILS.
3. SOLID GROUT ALL MASONRY COURSES BELOW GRADE.
4. VERTICAL REINFORCING SHALL BE CENTER IN WALL (UNO).
5. PROVIDE TWO VERTICAL BARS (MIN) AT ALL CORNERS AND END OF WALLS.
6. HORIZONTAL WALL REINFORCING SHALL BE PLACED BETWEEN VERTICAL MASONRY COLUMN REINFORCING BARS.
7. HORIZONTAL WALL REINFORCING SHALL CONTINUE THROUGH MASONRY LINTELS. WHERE BOTH HORIZONTAL WALL REINFORCING AND LINTEL REINFORCING OCCUR IN THE SAME COURSE, USE THE LARGER REINFORCING.
8. MASONRY WALL NOT DESIGNATED IN THE PLANS SHALL BE REINFORCED AS FOLLOWS:

THICKNESS	VERTICAL REINFORCING	HORIZONTAL REINFORCING
6"	#5 BARS AT 32" O.C.	#4 BARS AT 48" O.C.
8"	#5 BARS AT 32" O.C.	#5 BARS AT 48" O.C.
10"	#5 BARS AT 24" O.C.	#6 BARS AT 48" O.C.
12"	#5 BARS AT 24" O.C.	(2) #5 BARS AT 48" O.C.

9. SEE GENERAL STRUCTURAL NOTES FOR ADDITIONAL REQUIREMENTS.

A1 MASONRY WALL SCHEDULE
S2403_MAS_WALL-01
NO SCALE

MASONRY REINFORCING LAP SCHEDULE

BAR SIZE	(1) BAR PER CELL	(2) BARS PER CELL
#3	19"	19"
#4	29"	29"
#5	48"	48"
#6	57"	104"
#7	79"	152"
#8	112"	229"

2003 IBC

A2 MASONRY REINFORCING LAP SCHEDULE (1500psi)
S2403_MAS_REINF-2003-IBC-02
NO SCALE

EPOXY DOWEL EMBED SCHEDULE

DOWEL SIZE	MINIMUM EMBEDMENT INTO EXISTING CONCRETE
#4	6.1/2"
#5	7.1/2"
#6	10"
#7	1'-1"
#8	1'-4"

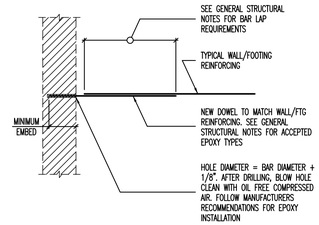

A4 EPOXY DOWEL EMBED SCHEDULE
S2403_SSAC_EPOXY-01
NO SCALE

CLIENT

UDOT CONNECTING COMMUNITIES

TIE FORK VISITORS CENTER
17845 E HIGHWAY 6
SPANISH FORK, UTAH 84660

DESIGNER

ARCHIPLEX GROUP
architecture · planning · design services
255 Crossroad Square
Slat lake City, UT 84115
P:(801) 961-7070
F:(801) 961-7373

CONSULTANTS

"Engineering Results"
BHB Consulting Engineers
A Professional Corporation
2766 South Main Street
Salt Lake City, Utah 84115
Phone: 801.355.3636
Fax: 801.355.5950
Email: bhb@bhbengineers.com

PROFESSIONAL SEAL

LICENSED PROFESSIONAL ENGINEER
No. 323922
GERALD R. MCKENZIE
8-09
STATE OF UTAH

ISSUE		
	8-09	CONSTRUCTION DOCUMENTS
	6-22-09	PS & E REVIEW
	3-09	95% REVIEW SUBMITTAL
	1-5-09	50% REVIEW SUBMITTAL
MARK	DATE	DESCRIPTION

DFCM PROJECT NO:	08264900
DFCM CONTRACT NO:	097130
ARCHIPLEX PROJECT NO:	0832.01
DRAWN BY:	
CHECKED BY:	
SCALE:	
DATE:	AUGUST, 2009

SHEET TITLE

SCHEDULES

SF602

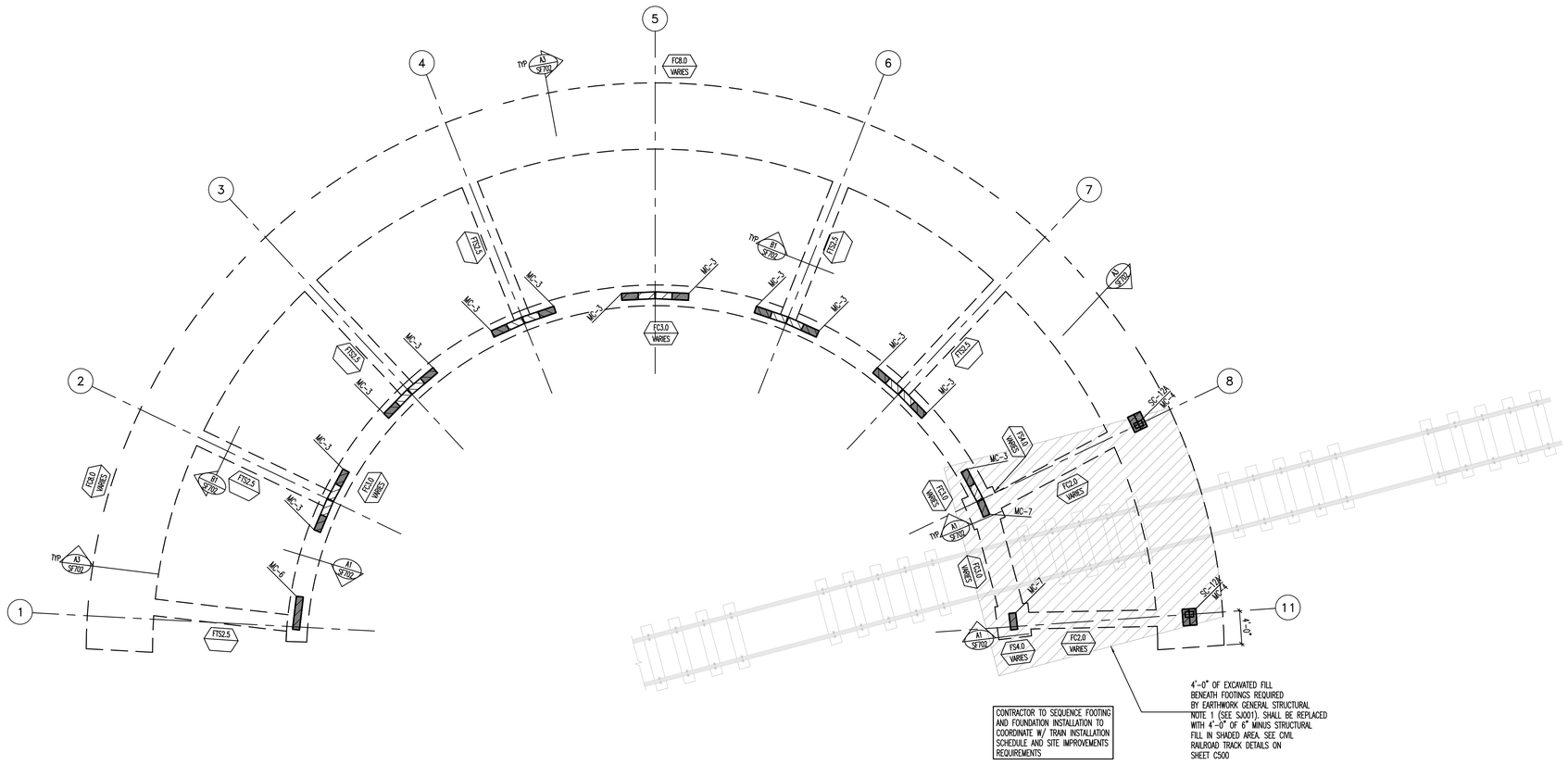

CONTRACTOR TO SEQUENCE FOOTING AND FOUNDATION INSTALLATION TO COORDINATE W/ TRAIN INSTALLATION SCHEDULE AND SITE IMPROVEMENTS REQUIREMENTS

4'-0" OF EXCAVATED FILL BENEATH FOOTINGS REQUIRED BY EARTHWORK GENERAL STRUCTURAL NOTE 1 (SEE S.001). SHALL BE REPLACED WITH 4'-0" OF 6" MINUS STRUCTURAL FILL IN SHADED AREA. SEE CIVIL RAILROAD TRACK DETAILS ON SHEET C500

BASE BID FOOTING AND FOUNDATION PLAN

SCALE: 1/8"=1'-0" 0 4' 8' 16' NORTH

FOOTING AND FOUNDATION PLAN NOTES

1. COORDINATE LOCATION OF DEPRESSED SLABS, SLOPED SLABS, AND FLOOR DRAINS WITH ARCHITECTURAL AND MECHANICAL DRAWINGS.
2. SEE ARCHITECTURAL AND CIVIL DRAWINGS FOR EXTERIOR CONCRETE WORK AT DOORS, SIDEWALKS, ETC.
3. SEE ARCHITECTURAL DRAWINGS FOR CONTROL JOINT LOCATIONS.
4. SEE "EARTHWORK" NOTES ON SHEET S.001 AND DETAIL A1/SB502 FOR MINIMUM FILL REQUIRED BENEATH FOOTINGS.
5. ALL SPOT FOOTINGS SHALL BE CENTERED UNDER COLUMNS (UNO).
6. SEE DETAILS C2/SB501 AND C3/SB501 FOR CONDITION WHERE BURIED PIPES RUN PARALLEL AND PERPENDICULAR TO FOOTINGS.
7. SEE DETAIL B3/SB502 FOR TYPICAL CONTROL/CONSTRUCTION JOINTS IN CONCRETE SLAB ON GRADE.
8. SEE DETAIL B2/SB501 FOR SLAB REINFORCING WHERE CONTROL JOINTS ARE DISCONTINUOUS.
9. SEE DETAIL C1/SB503 FOR ADDITIONAL REINFORCING AT MISCELLANEOUS OPENINGS IN MASONRY WALLS.
10. SEE DETAIL B3/SB503 FOR TYPICAL CONTROL JOINTS IN MASONRY WALLS.
11. SEE DETAIL B4/SB503 FOR TERMINATION OF HORIZONTALREINFORCING IN MASONRY WALLS.
12. SEE ARCHITECTURAL DRAWINGS FOR DIMENSIONS TO ALL STEEL COLUMNS.
13. SEE ARCHITECTURAL DRAWINGS FOR TOP OF MASONRY COLUMN ELEVATIONS AT STEEL COLUMNS.
14. SEE DETAIL C3/SF702 FOR ALTERNATE STEEL CONNECTION AT MASONRY PIERS.

WOOD-S-NOTE-FTGS

MARKS AND SYMBOLS LEGEND

	SECTION MARK / SHEET NUMBER
	FOOTING DESIGNATION / TOP OF FOOTING ELEVATION
	INDICATES MASONRY WALL.
MW-x	INDICATES MASONRY WALL TYPE, SEE SCHEDULE ON SHEET SF602.
FCxx	INDICATES CONTINUOUS FOOTING. SEE SCHEDULE ON SHEET SB601.
C.J.	INDICATES CONTROL/CONSTRUCTION JOINT. SEE DETAILS B3/S502.
SC-x	INDICATES STEEL COLUMN. SEE SCHEDULE ON SHEET SF601.
MC-x	INDICATES MASONRY COLUMN TYPE. SEE SCHEDULE ON SHEET SF602.
CP-x	INDICATES CONCRETE PIER. SEE SCHEDULE ON SHEET SB601.

CLIENT

UTAH DEPARTMENT OF TRANSPORTATION
CONNECTING COMMUNITIES

TIE FORK VISITORS CENTER
17845 E HIGHWAY 6
SPANISH FORK, UTAH 84660

DESIGNER

ARCHIPLEX GROUP
architecture · planning · design services
255 Crossroad Square
Slat lake City, UT 84115
P:(801) 961-7070
F:(801) 961-7373

CONSULTANTS

"Engineering Results"
BHB Consulting Engineers
A Professional Corporation
2766 South Main Street
Salt Lake City, Utah 84115
Phone: 801.355.3636
Fax: 801.355.5950
Email: bhb@bhbengineers.com

PROFESSIONAL SEAL

LICENSED PROFESSIONAL ENGINEER
No 323922
GERALD W. MCKENZIE
8-09
STATE OF UTAH

ISSUE

MARK	DATE	DESCRIPTION
	8-09	CONSTRUCTION DOCUMENTS
	6-22-09	PS & E REVIEW
	3-09	95% REVIEW SUBMITTAL
	1-5-09	50% REVIEW SUBMITTAL

DFCM PROJECT NO:	08264900
DFCM CONTRACT NO:	097130
ARCHIPLEX PROJECT NO:	0832.01
DRAWN BY:	
CHECKED BY:	
SCALE:	
DATE:	AUGUST, 2009

SHEET TITLE

ROUND HOUSE FOOTING AND FOUNDATION PLAN

SF700

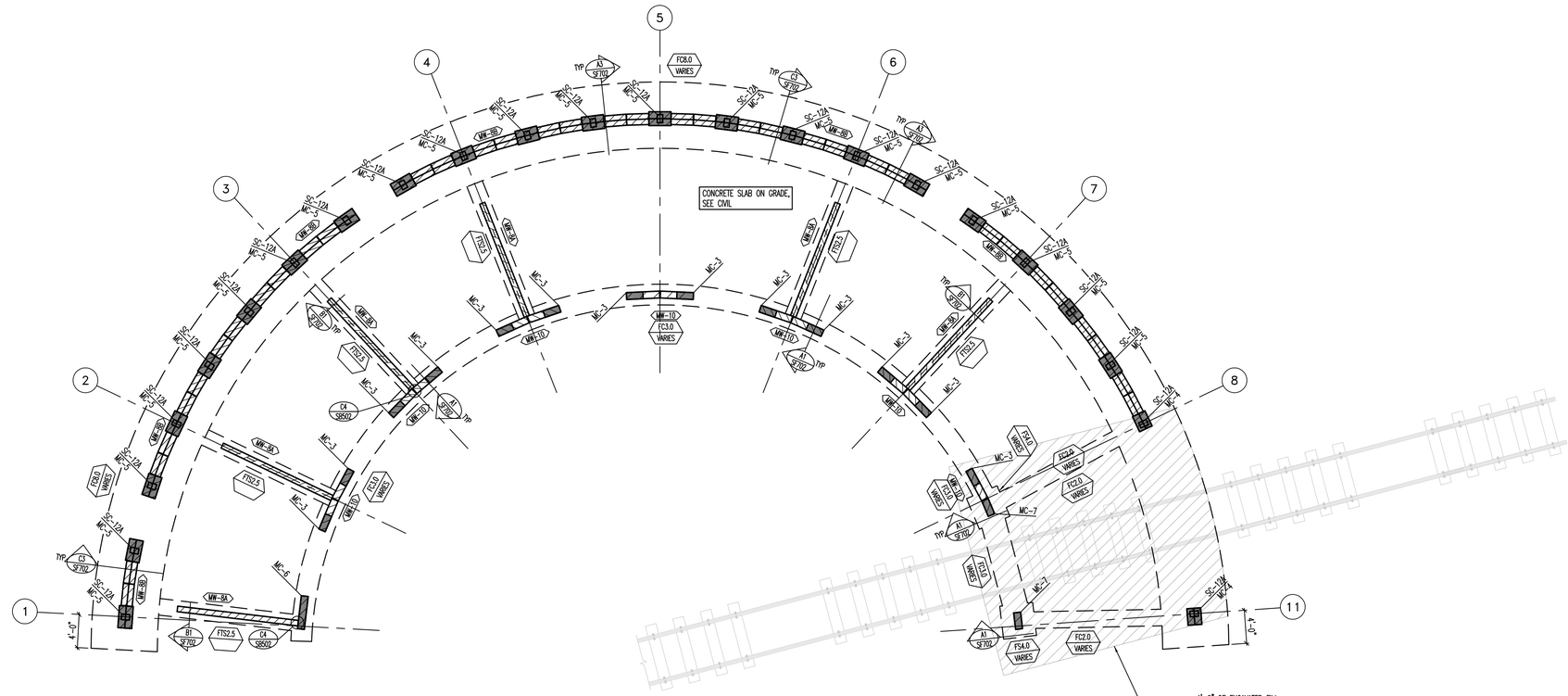

ALTERNATE BID FOOTING AND FOUNDATION PLAN

SCALE: 1/8"=1'-0"

CONTRACTOR TO SEQUENCE FOOTING AND FOUNDATION INSTALLATION TO COORDINATE W/ TRAIN INSTALLATION SCHEDULE AND SITE IMPROVEMENTS REQUIREMENTS

FOOTING AND FOUNDATION PLAN NOTES

1. COORDINATE LOCATION OF DEPRESSED SLABS, SLOPED SLABS, AND FLOOR DRAINS WITH ARCHITECTURAL AND MECHANICAL DRAWINGS.
2. SEE ARCHITECTURAL AND CIVIL DRAWINGS FOR EXTERIOR CONCRETE WORK AT DOORS, SIDEWALKS, ETC.
3. SEE ARCHITECTURAL DRAWINGS FOR CONTROL JOINT LOCATIONS.
4. SEE "EARTHWORK" NOTES ON SHEET SJ001 AND DETAIL A1/SB502 FOR MINIMUM FILL REQUIRED BENEATH FOOTINGS.
5. ALL SPOT FOOTINGS SHALL BE CENTERED UNDER COLUMNS (UNO).
6. SEE DETAILS C2/SB501 AND C3/SB501 FOR CONDITION WHERE BURIED PIPES RUN PARALLEL AND PERPENDICULAR TO FOOTINGS.
7. SEE DETAIL B3/SB502 FOR TYPICAL CONTROL/CONSTRUCTION JOINTS IN CONCRETE SLAB ON GRADE.
8. SEE DETAIL B2/SB501 FOR SLAB REINFORCING WHERE CONTROL JOINTS ARE DISCONTINUOUS.
9. SEE DETAIL C1/SB503 FOR ADDITIONAL REINFORCING AT MISCELLANEOUS OPENINGS IN MASONRY WALLS.
10. SEE DETAIL B3/SB503 FOR TYPICAL CONTROL JOINTS IN MASONRY WALLS.
11. SEE DETAIL B4/SB503 FOR TERMINATION OF HORIZONTALREINFORCING IN MASONRY WALLS.
12. SEE ARCHITECTURAL DRAWINGS FOR DIMENSIONS TO ALL STEEL COLUMNS.
13. SEE ARCHITECTURAL DRAWINGS FOR TOP OF MASONRY COLUMN ELEVATIONS AT STEEL COLUMNS.
14. SEE DETAIL C3/SF702 FOR ALTERNATE STEEL CONNECTION AT MASONRY PIERS.

MOD_5-NOTE-FTG5

MARKS AND SYMBOLS LEGEND

	SECTION MARK / SHEET NUMBER
	FOOTING DESIGNATION / TOP OF FOOTING ELEVATION
	INDICATES MASONRY WALL.
MW-x	INDICATES MASONRY WALL TYPE, SEE SCHEDULE ON SHEET SF602.
FCxx	INDICATES CONTINUOUS FOOTING. SEE SCHEDULE ON SHEET SB601.
C.J.	INDICATES CONTROL/CONSTRUCTION JOINT. SEE DETAILS B3/S502.
SC-x	INDICATES STEEL COLUMN. SEE SCHEDULE ON SHEET SF601.
MC-x	INDICATES MASONRY COLUMN TYPE. SEE SCHEDULE ON SHEET SF602.
CP-x	INDICATES CONCRETE PIER. SEE SCHEDULE ON SHEET SB601.

CLIENT

UDOT CONNECTING COMMUNITIES

TIE FORK VISITORS CENTER
17845 E HIGHWAY 6
SPANISH FORK, UTAH 84660

DESIGNER

ARCHIPLEX GROUP
architecture · planning · design services
255 Crossroad Square
Slat lake City, UT 84115
P:(801) 961-7070
F:(801) 961-7373

CONSULTANTS

"Engineering Results"
BHB Consulting Engineers
A Professional Corporation
2766 South Main Street
Salt Lake City, Utah 84115
Phone: 801.355.3636
Fax: 801.355.5950
Email: bhb@bhbengineers.com

PROFESSIONAL SEAL

LICENSED PROFESSIONAL ENGINEER
No. 323922
GERALD W. MCKENZIE
8-09
STATE OF UTAH

ISSUE

MARK	DATE	DESCRIPTION
	8-09	CONSTRUCTION DOCUMENTS
	6-22-09	PS & E REVIEW
	3-09	95% REVIEW SUBMITTAL
	1-5-09	50% REVIEW SUBMITTAL

DFCM PROJECT NO:	08264900
DFCM CONTRACT NO:	097130
ARCHIPLEX PROJECT NO:	0832.01
DRAWN BY:	
CHECKED BY:	
SCALE:	
DATE:	AUGUST, 2009

SHEET TITLE

ALTERNATE BID ROUND HOUSE FOOTING AND FOUNDATION PLAN

SF700A

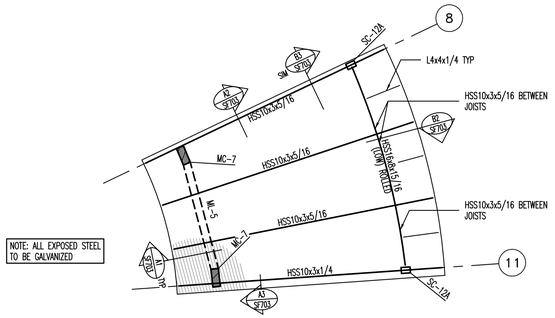

BASE BID ROOF FRAMING PLAN

SCALE: 1/8"=1'-0"

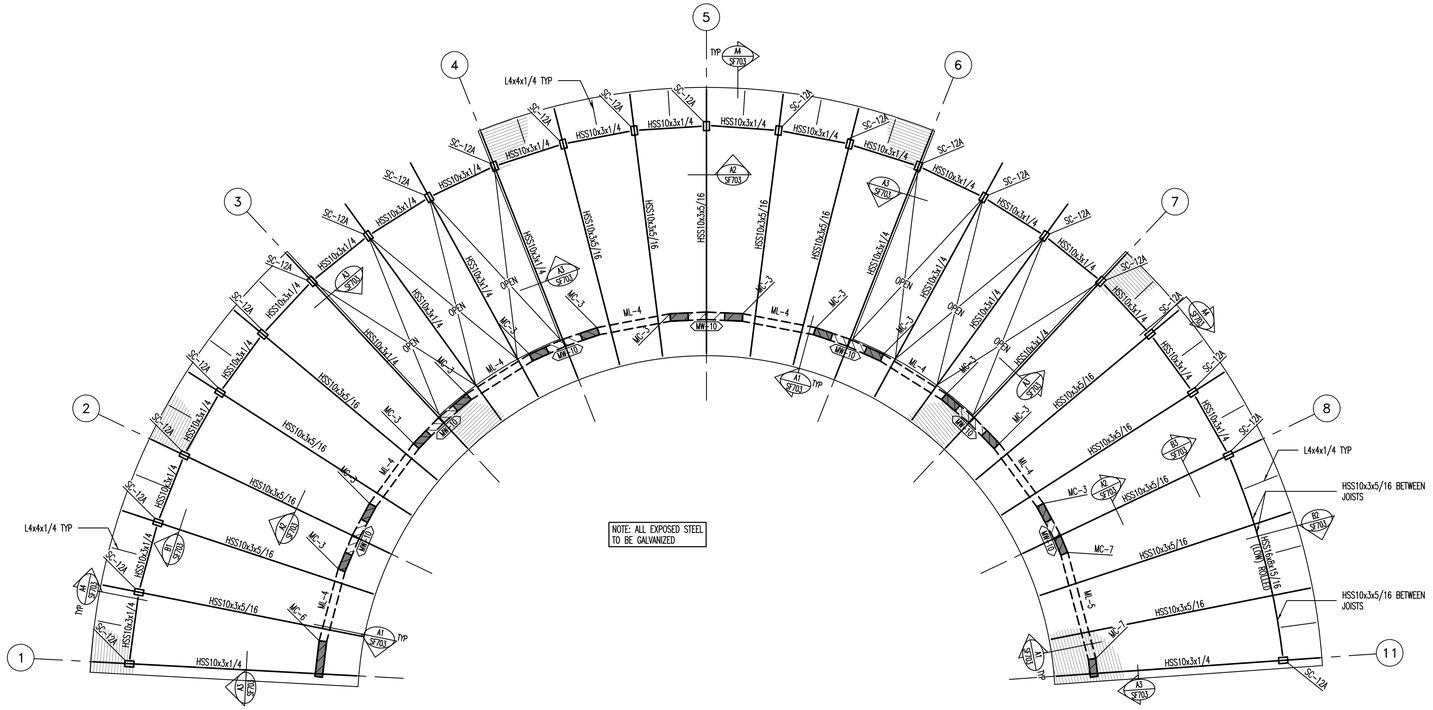

ALTERNATE BID ROOF FRAMING PLAN

SCALE: 1/8"=1'-0"

ROOF FRAMING PLAN NOTES

1. VERIFY ALL ROOF OPENINGS FOR MECHANICAL SHAFTS, DRAINS, ETC. WITH ARCHITECTURAL AND MECHANICAL DRAWINGS.
2. SEE DETAIL C1/SB503 FOR ADDITIONAL REINFORCING AT MISCELLANEOUS OPENINGS IN MASONRY WALLS.
3. SEE DETAIL B3/SB503 FOR TYPICAL CONTROL JOINTS IN MASONRY WALLS.
4. SEE DETAIL B4/SB503 FOR TERMINATION OF HORIZONTAL REINFORCING IN MASONRY WALLS.
5. SEE ARCHITECTURAL PLANS FOR DIMENSIONS TO ALL STEEL COLUMNS.

MASONRY_S-NOTE-ROOF

MARKS AND SYMBOLS LEGEND

- SECTION MARK / SHEET NUMBER
- INDICATES MASONRY WALL WHICH EXTENDS ABOVE ROOF DECK.
- INDICATES MASONRY WALL WHICH STOPS AT ROOF DECK.
- INDICATES METAL ROOF DECK. SEE GENERAL STRUCTURAL ON SHEET SJ001.
- MW-x — INDICATES MASONRY WALL TYPE, SEE SCHEDULE ON SHEET SF602.
- SC-x — INDICATES STEEL COLUMN. SEE SCHEDULE ON SHEET SF601.
- MC-x — INDICATES MASONRY COLUMN TYPE. SEE SCHEDULE ON SHEET SF602.
- ML-x — INDICATES MASONRY LINTEL TYPE. SEE SCHEDULE ON SHEET SF602.

CLIENT

UDOT CONNECTING COMMUNITIES

TIE FORK VISITORS CENTER
17845 E HIGHWAY 6
SPANISH FORK, UTAH 84660

DESIGNER

ARCHIPLEX GROUP
architecture · planning · design services
255 Crossroad Square
Slat lake City, UT 84115
P:(801) 961-7070
F:(801) 961-7373

CONSULTANTS

"Engineering Results"
BHB Consulting Engineers
A Professional Corporation
2766 South Main Street
Salt Lake City, Utah 84115
Phone: 801.355.5656
Fax: 801.355.5950
Email: bhb@bhbengineers.com

PROFESSIONAL SEAL

LICENSED PROFESSIONAL ENGINEER — No. 323922 — GERALD K. MCKENZIE — 8-09 — STATE OF UTAH

ISSUE

MARK	DATE	DESCRIPTION
	8-09	CONSTRUCTION DOCUMENTS
	6-22-09	PS & E REVIEW
	3-09	95% REVIEW SUBMITTAL
	1-5-09	50% REVIEW SUBMITTAL

DFCM PROJECT NO:	08264900
DFCM CONTRACT NO:	097130
ARCHIPLEX PROJECT NO:	0832.01
DRAWN BY:	
CHECKED BY:	
SCALE:	
DATE:	AUGUST, 2009

SHEET TITLE

ROUND HOUSE ROOF FRAMING PLAN

SF701

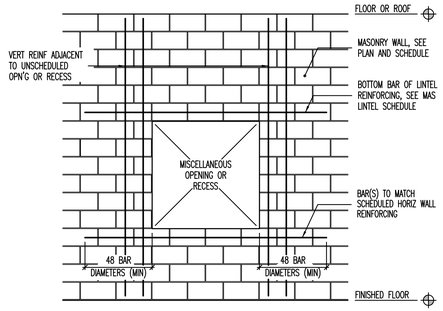

C1 REINFORCING AT UNSCHEDULED MISCELLANEOUS OPENINGS OR RECESSES IN MASONRY WALLS

NO SCALE

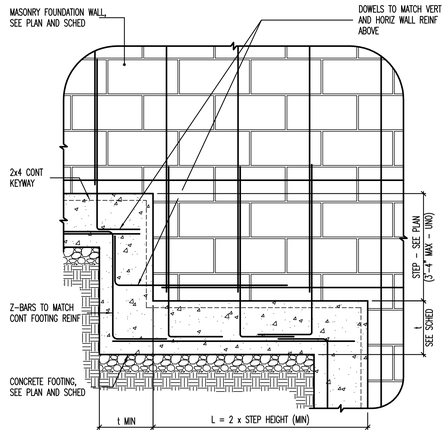

C2 TYPICAL FOOTING STEP DETAIL

NO SCALE

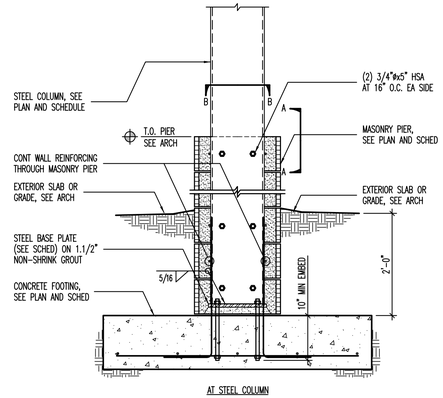

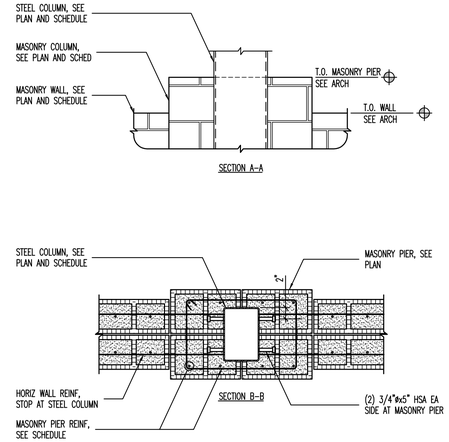

C3 ROUND HOUSE STEEL COLUMN CONNECTION PIER

NO SCALE

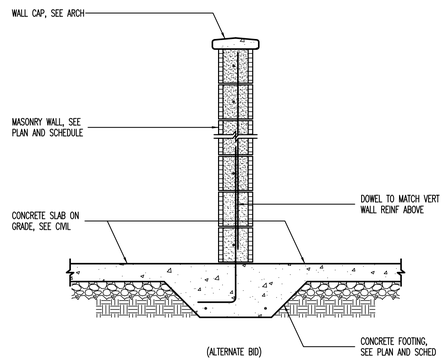

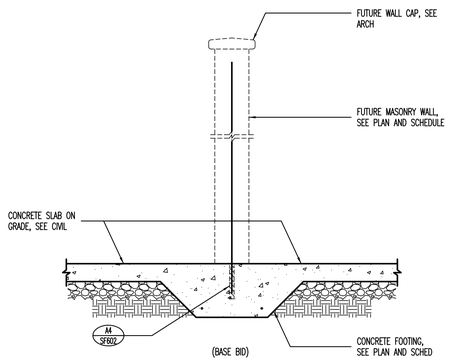

B1 MASONRY DEMISING WALL

NO SCALE

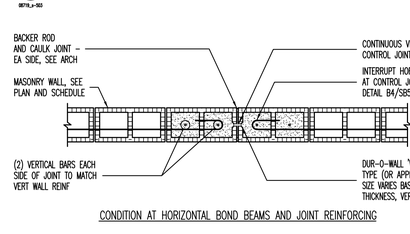

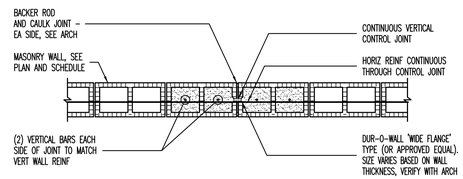

B3 MASONRY CONTROL JOINT DETAIL AT 8" OR 10" MASONRY WALLS

NO SCALE

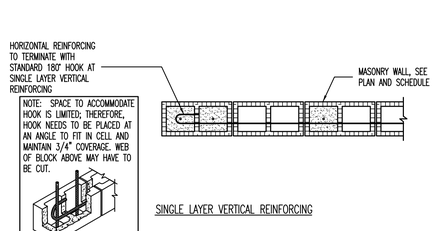

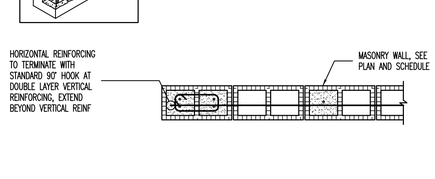

B4 TERMINATION OF HORIZONTAL REINFORCING IN 8" OR 10" MASONRY WALL [PLAN VIEW]

NO SCALE

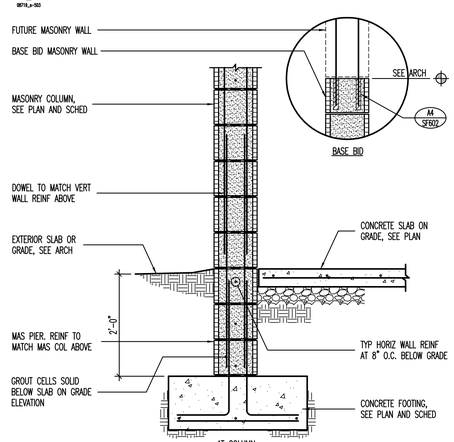

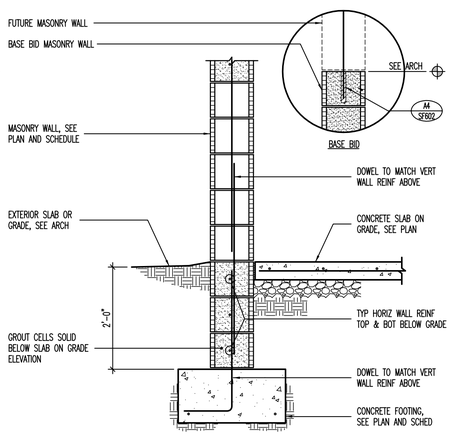

A1 MASONRY FOUNDATION WALL DETAIL

NO SCALE

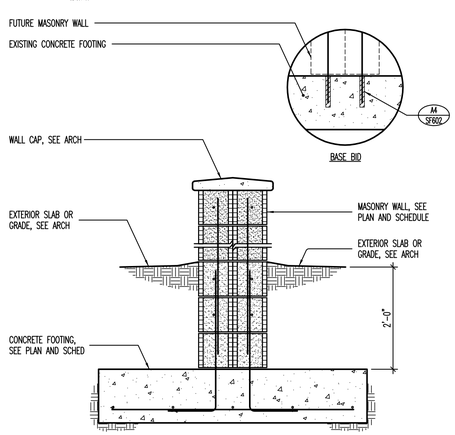

A3 ROUND HOUSE MASONRY FOUNDATION WALL DETAIL

NO SCALE

CLIENT

UDOT CONNECTING COMMUNITIES

TIE FORK VISITORS CENTER
17845 E HIGHWAY 6
SPANISH FORK, UTAH 84660

DESIGNER

ARCHIPLEX GROUP
architecture · planning · design services
255 Crossroad Square
Salt lake City, UT 84115
P:(801) 961-7070
F:(801) 961-7373

CONSULTANTS

"Engineering Results"
BHB Consulting Engineers
A Professional Corporation
2766 South Main Street
Salt Lake City, Utah 84115
Phone: 801.355.3636
Fax: 801.355.5950
Email: bhb@bhbengineers.com

PROFESSIONAL SEAL

LICENSED PROFESSIONAL ENGINEER
No. 323922
GERALD W. MCKENZIE
8-09
STATE OF UTAH

ISSUE		
	8-09	CONSTRUCTION DOCUMENTS
	6-22-09	PS & E REVIEW
	3-09	95% REVIEW SUBMITTAL
	1-5-09	50% REVIEW SUBMITTAL
MARK	DATE	DESCRIPTION

DFCM PROJECT NO:	08264900
DFCM CONTRACT NO:	097130
ARCHIPLEX PROJECT NO:	0832.01
DRAWN BY:	
CHECKED BY:	
SCALE:	
DATE:	AUGUST, 2009

SHEET TITLE

ROUND HOUSE FOOTING AND FOUNDATION DETAILS

SF702

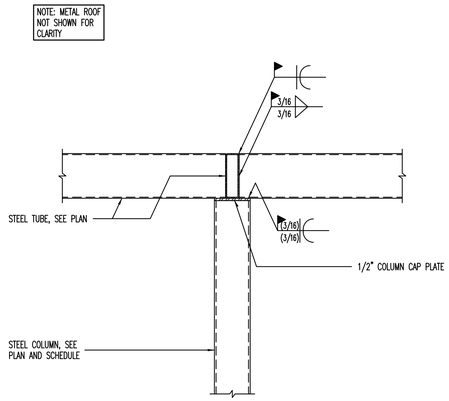

B1 ROUND HOUSE ROOF BEAM CONNECTIONS

NO SCALE

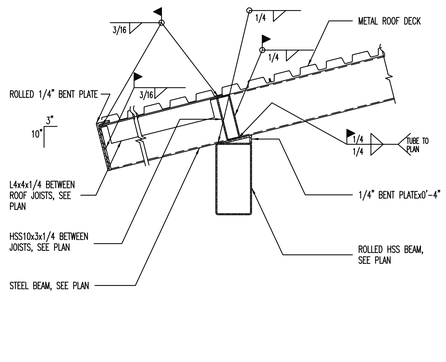

B2 HSS BEAM BETWEEN JOISTS DETAIL

NO SCALE

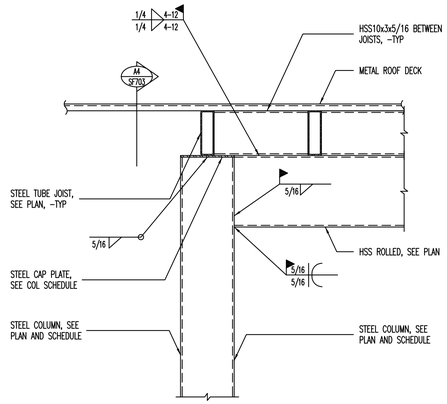

B3 HSS TO BEAM COLUMN DETAIL

NO SCALE

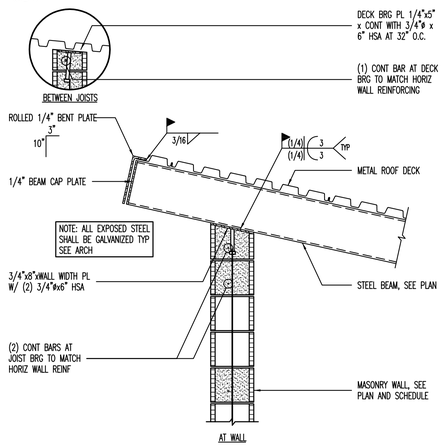

A1 CANTILEVER BEAM BEARING AT 10" CMU WALL

NO SCALE

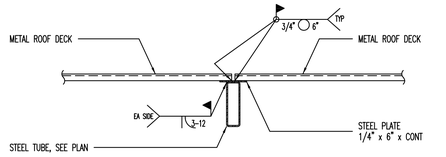

A2 ROUND HOUSE DECK BEARING AT STEEL JOIST

NO SCALE

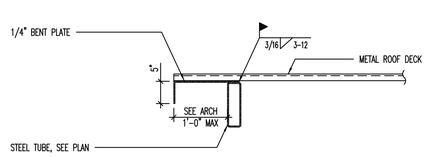

A3 ROUND HOUSE DECK EDGE DETAIL

NO SCALE

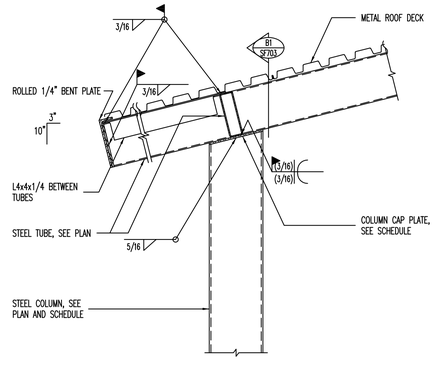

A4 ROUND HOUSE ROOF BEAM TO COLUMN CONNECTION

NO SCALE

CLIENT

UTAH DEPARTMENT OF TRANSPORTATION
CONNECTING COMMUNITIES

TIE FORK VISITORS CENTER
17845 E HIGHWAY 6
SPANISH FORK, UTAH 84660

DESIGNER

ARCHIPLEX GROUP
architecture · planning · design services
255 Crossroad Square
Slat lake City, UT 84115
P:(801) 961-7070
F:(801) 961-7373

CONSULTANTS

"Engineering Results"
BHB Consulting Engineers
A Professional Corporation
2766 South Main Street
Salt Lake City, Utah 84115
Phone: 801.355.3636
Fax: 801.355.5950
Email: bhb@bhbengineers.com

PROFESSIONAL SEAL

LICENSED PROFESSIONAL ENGINEER
No. 323922
GERALD M. MCKENZIE
8-09
STATE OF UTAH

ISSUE

MARK	DATE	DESCRIPTION
	8-09	CONSTRUCTION DOCUMENTS
	6-22-09	PS & E REVIEW
	3-09	95% REVIEW SUBMITTAL
	1-5-09	50% REVIEW SUBMITTAL

DFCM PROJECT NO:	08264900
DFCM CONTRACT NO:	097130
ARCHIPLEX PROJECT NO:	0832.01
DRAWN BY:	
CHECKED BY:	
SCALE:	
DATE:	AUGUST, 2009

SHEET TITLE

ROUND HOUSE ROOF FRAMING DETAILS

SF703

Copyright (C) 2007 by PVE, Inc. Salt Lake City, Utah. All rights reserved. Unauthorized copying and/or use is illegal and subject to prosecution.

MECHANICAL LEGEND

- RETURN OR EXHAUST DUCT DOWN
- RETURN OR EXHAUST DUCT UP
- SUPPLY AIR DUCT DOWN
- SUPPLY AIR DUCT UP
- SPIN-IN FITTING W/MVD
- FLEXIBLE DUCT CONNECTION
- CEILING SLOT DIFFUSER
- CEILING DIFFUSER
- CEILING EXHAUST GRILLE
- CEILING GRILLE
- ACCESS PANEL
- MANUAL VOLUME DAMPER
- MOTORIZED DAMPER
- FIRE DAMPER (F)
- COMBINATION FIRE/SMOKE DAMPER (FS)
- THERMOSTAT OR TEMP SENSOR (T)
- POINT OF CONNECTION TO EXISTING
- DETAIL TAG — DETAIL NO. / DRAWING NO.
- KEYED NOTE — NOTE NO.
- SECTION CUT LINE — SECTION NO. / DRAWING NO.

GENERAL NOTES:

1. INDICATES POINT OF CONNECTION OF NEW TO EXISTING MECHANICAL, EQUIPMENT, PIPING OR DUCTWORK.
2. COORDINATE ALL FIRE SPRINKLER HEADS AND AIR DEVICE LOCATIONS WITH REFLECTED CEILING PLANS AND ELECTRICAL DRAWINGS.
3. ALL RIGID ROUND DUCTWORK SHALL RECEIVE 1-½" - Ø.75 LBS/CU.FT. FIBERGLASS DUCT WRAP. ALL LOW PRESSURE RECTANGULAR DUCT SHALL RECEIVE 1" - 1.5 LBS/CU.FT. DUCT LINER, ATTACH TO DUCT WITH MECHANICAL FASTENERS AND TRIM AND SEAL JOINTS. LOW PRESSURE ROUND FLEXIBLE DUCT TO BE 1-½" THICK INSULATED AND A MAXIMUM OF 6 FT. LONG. ALL INSULATION TO MEET NFPA 90 PER UL 181-CLASS 1. NO DUCTBOARD ALLOWED.
4. ALL DUCTWORK IS TO BE LINED OR WRAPPED IF ROUND. NO DUCTBOARD IS ALLOWED.
5. DUCTWORK AND PIPE ROUTING AS SHOWN ON DRAWINGS IS DIAGRAMMATIC AND IS NOT TO BE SCALED. WHERE ALTERNATE ROUTING, OFFSETS AND TRANSITIONS ARE REQUIRED FOR COORDINATION OF WORK, THIS CONTRACTOR SHALL MAKE CHANGES WITHOUT ADDITIONAL COSTS.
6. THIS CONTRACTOR SHALL CLOSELY COORDINATE NEW MECHANICAL WITH NEW AND EXISTING MECHANICAL, ELECTRICAL, ARCHITECTURAL AND BUILDING STRUCTURE.
7. THIS CONTRACTOR SHALL FIELD VERIFY ALL MECHANICAL ITEMS PRIOR TO STARTING NEW WORK. ADDITIONAL COST WILL NOT BE ALLOWED FOR CONTRACTOR'S FAILURE TO BECOME FAMILIAR WITH EXISTING SITE CONDITIONS.
8. THIS CONTRACTOR SHALL USE SMACNA DUCT CONSTRUCTION STANDARDS FOR SHEET METAL DUCTS. ALL HIGH PRESSURE DUCTWORK UPSTREAM OF VAV TERMINAL BOXES SHALL BE CONSTRUCTED FOR 2" W.C. STATIC PRESSURE, SEAL CLASS "A". ALL OTHER DUCTWORK (UNLESS OTHERWISE NOTED ON FLOOR PLANS) SHALL BE CONSTRUCTED OF 1" W.C. SEAL CLASS "B".
9. ALL MECHANICAL SYSTEMS SHALL BE INSTALLED IN ACCORDANCE WITH THE CURRENT ADOPTED EDITION OF THE BUILDING CODES, FIRE CODES, MECHANICAL CODES AND PLUMBING CODES.
10. THIS CONTRACTOR SHALL PROVIDE SUBMITTALS ON ITEMS LISTED IN MECHANICAL EQUIPMENT LIST TO THE ENGINEER FOR REVIEW PRIOR TO THE ORDER, PURCHASE OR INSTALLATION.
11. ALL VAV BOXES, RTU's, WATER FLOW RATES AND DIFFUSERS MUST BE BALANCED TO THE VALUES INDICATED ON THE FLOOR PLANS. PROVIDE BALANCE REPORT TO ENGINEER PRIOR TO PROJECT CLOSEOUT.
12. DUCT DIMENSIONS SHOWN ARE INSIDE CLEAR DIMENSIONS.
13. VENT THE HIGH POINTS OF NEW MECHANICAL PIPING.
14. MECHANICAL CONTRACTOR IS TO COORDINATE WITH ELECTRICAL ON SIZE/QUANTITY OF MOTORIZED DAMPERS. I. E. FIRE/SMOKE DAMPERS, FIRE DAMPERS, MOTORIZED DAMPERS, ETC. . .
15. EACH TRADE IS RESPONSIBLE THEIR OWN FIRE CAULKING.
16. DIVISION 15 MUST PROVIDE AND INSTALL ALL ACCESS DOORS FOR FCU's, VALVES, FLOW METERS, AND DAMPERS, ETC. COORDINATE LOCATION WITH GENERAL CONTRACTOR.
17. HOUSEKEEPING PADS FOR ALL EQUIPMENT IS PROVIDED AND INSTALLED BY GENERAL CONTRACTOR. COORDINATE LOCATION WITH MECHANICAL CONTRACTOR.
18. ALL TAKE-OFF'S THROUGHOUT THE ENTIRE BUILDING SHALL BE HIGH EFFICIENCY TAKE-OFF'S (HET's). NO EXCEPTIONS TAKEN.
19. DIVISION 15 TO SUBMIT TO ENGINEER ALL AS-BUILDS OF BUILDINGS MECHANCIAL AND PLUMBING SYSTEMS PRIOR TO JOB COMPLETION AND FINAL PAYMENT.
20. ALL INVERT ELEVATIONS SHOWN ON PLANS ARE BASED OFF OF FINISHED FLOOR ELEVATION AT 100.0'. CONTRACTOR TO COORDINATE WITH ARCHITECTURAL AND CIVIL DRAWINGS FOR EXACT INVERT ELEVATIONS OF ALL LEVELS.
21. ALL GAS METER REGUALTORS ARE TO BE VENTED TO THE OUTSIDE OF THE BUILDING BY THE MECHANICAL CONTRACTOR OR PROVIDE / INSTALL VENTLESS REGULATORS IF ALLOWED BY THE LOCAL JURISDICTION. NONE OF THE VENT PIPING OFF THE REGULATORS ARE SHOWN ON THE PLANS FOR CLARITY.
22. ALL DUCTWORK IS TO BE PROVIDED / INSTALLED AS HIGH UP AS POSSIBLE. ALL DUCTWORK MUST BE INSTALLED NO LOWER THAN 12" FROM WHERE IT IS BEING SUPPORTED OR SEISMIC BRACING WILL BE REQUIRED. IF DUCTWORK IS INSTALLED BELOW 12" FROM WHERE IT IS SUPPORTED, IT IS THE MECHANICAL CONTRACTOR'S RESPONSIBILITY TO HAVE SEISMIC SUPPORTS ENGINEERED FOR THE JOB BY A LICENSED ENGINEER.
23. AIR BALANCE AND WATER DISINFECTANT REPORTS ARE TO BE SUBMITTED TO ENGINEER PRIOR TO SUBSTANTIAL COMPLETION WALK THROUGH.

** AIR DEVICE SCHEDULE

GRILLE NUMBER / GRILLE CFM

PLAN CODE	TYPE & DUTY	NECK SIZE	CEILING TYPE	SP (INCH OF WATER)	DAMPER	N.C. LEVEL MAX	MAX. CFM	REMARKS
S-1	4-WAY SUPPLY	8"Ø	SEE PLANS	Ø.068	IN DUCT	22	279	
S-2	4-WAY SUPPLY	8"Ø	SEE PLANS	Ø.079	IN DUCT	-	140	
S-3	LINEAR-SUPPLY 24"L	8"Ø	SEE PLANS	Ø.10	IN DUCT	34	240	
S-4	WALL MOUNTED SUPPLY	14" x 12"	-	Ø.042	IN DUCT	-	430	SET BLADES AT 45°
R-1	RETURN / EXHAUST	10" x 10"	SEE PLANS	Ø.093	IN DUCT	16	360	-
R-2	RETURN / EXHAUST	8" x 6"	SEE PLANS	Ø.047	IN DUCT	-	130	-
R-3	RETURN	24" x 12"	SEE PLANS	Ø.132	OBD	31	1800	-

CONDENSING UNIT SCHEDULE

CODE	SEN. MBH	AMB. TEMP.	SEER	SUCTION TEMP.	FLA	MCA	MOCP	VOLTAGE/ PHASE	REMARKS
AC-1	35.2	95	13	45	2.2	27	45	240/1	1 2 3 5 6 7 8 9 10

1 PROVIDE WITH FUSED DISCONNECT 2 LOW AMBIENT 3 ANTI-SHORT CYCLE 4 R410A 5 THERMOSTAT
6 HIGH/LOW PRESSURE SWITCH 7 FACTORY INSTALLED ACCUMULATOR 8 NOMINAL 4 TON UNIT
9 CONDENSER, EVAPORATOR AND FURNACE BY SAME MANUFACTURER 10 CRANK CASE HEATER
11 4" CONCRETE EQUIPMENT PADS 12 INSTALL PER MANUFACTURERS REQUIREMENTS
13 REFRIGERANT LINE SETS AS RECOMMENDED BY MANUFACTURER
14 EXTERIOR SUCTION LINE INSULATION TO BE PAINTED WITH LATEX PAINT, COLORED BY ARCHITECT

FURNACE SCHEDULE

SYMBOL	INPUT BTU	OUTPUT BTU (2)	CFM	EXT S.P.	FAN SPEED	FILTER NO.	FILTER SIZE	MOTOR HP	MOTOR Φ	MOTOR CYCLES	MOTOR VOLT	MOTOR DRIVE	COMMENTS
F-1	80,000	64,000	1,600	Ø.5	1075 RPM	1	20"X25"X1"	1/2	60	1	115	DIRECT	1 3 4 5 6 7 8 9

1 AFUE - 92 2 AT ELEVATION 3 R410A 4 PROVIDE W/EVAPORATOR 5 PROPANE GAS KIT 6 CONCENTRIC VENT KIT
7 CONDENSER, EVAPORATOR AND FURNACE BY SAME MANUFACTURER 8 HIGH ALTITUDE KIT 9 INSTALL PER MANUFACTURERS REQUIREMENTS

LOUVER SCHEDULE L-

PLAN CODE	SYSTEM SERVED	CFM	VELOCITY FPM	FREE AREA (SF)	DIMENSIONS (W x H) (IN)	COLOR	COMMENTS
L-1	MAKE-UP AIR UNIT	1200	500	2.45	30"x24"	COLOR BY ARCH.	PROVIDE WITH INSECT SCREEN
L-2-3	UNIT HEATER	-	-	Ø.26	12"x12"	COLOR BY ARCH.	COMBUSTION AIR FOR UNIT HEATER W/INSECT SCREEN
L-4	FURNACE OUTSIDE AIR	400	600	Ø.97	18"x18"	COLOR BY ARCH.	PROVIDE WITH INSECT SCREEN

MAKE-UP AIR UNIT SCHEDULE MUA-

PLAN CODE	AREA SERVED	CFM (ALT.)	ESP (ALT.) WC	HEATING CAPACITY MBH (OUTPUT)	HEATING CAPACITY MBH (INPUT)	FUEL	EAT °F	LAT °F	FAN HP	VOLT/PH	ACCESSORIES
MUA-1	ALL RESTROOMS	1200	Ø.5	120	150	PROPANE	Ø	92.5	3/4	115/1	1 2 3 4 5 6 7 8 9

1 TWO STAGE DUCT MOUNTED THERMOSTAT 2 SEPERATED COMBUSTION 3 TWO STAGE GAS CONTROL 4 INSTALL PER MANUFACTURERS REQUIREMENTS
5 SUPPLY FAN TO RUN CONTINUOUS 6 BELT DRIVE 7 VERTICAL CONCENTRIC VENT KIT 8 STAINLESS STEEL HEAT EXCHANGER 9 MANUFACTURERS SAFTIES

EXHAUST FAN SCHEDULE EF-

PLAN CODE	AREA SERVED	TYPE	CFM @ ELEV.	ESP	FAN RPM	MOTOR B.H.P.	MOTOR H.P.	MOTOR VOLTAGE & PHASE	N.C.	DAMPER TYPE	METHOD OF CONTROL	OPENING SIZE	OPERATING WT. (LBS.)	COMMENTS
EF-1	LARGE RESTROOMS	INLINE	1000	Ø.4	970	Ø.14	1/4	120/1	5.7	BACK DRAFT	CONTINOUS	19-7/8" SQUARE	80	1 2
EF-2	SMALL RESTROOMS	INLINE	375	Ø.35	985	Ø.056	1/4	120/1	5.2	BACK DRAFT	CONTINOUS	13-7/8" SQUARE	80	1 2

1 DISCONNECT 2 BELT DRIVE

UNIT HEATER SCHEDULE UH-

PLAN CODE	MOUNTING	HEATING CAP. MBH (INPUT) @ SEA LEVEL	HEATING CAP. MBH (OUTPUT) @ ALT.	EFFICIENCY (%)	FLUE SIZE (in.)	FLUE TYPE	UNIT WEIGHT (lbs.)	MOTOR HP	MOTOR VOLTAGE & PHASE	COMMENTS
UH-1	HORIZONTAL	60	36	80%	4"Ø	B	109	1/30	115 / 1	PROVIDE WALL MOUNTED THERMOSTAT. INSTALL PER MANUFACTURERS REQUIREMENTS. OPERATE WITH PROPANE FUEL.

CLIENT

LTDOT CONNECTING COMMUNITIES

TIEFORK VISITORS CENTER
17845 E HIGHWAY 6
SPANISH FORK, UTAH 84660

DESIGNER

ARCHIPLEX GROUP
architecture · planning · design services
255 Crossroad Square
Salt lake City, UT 84115
P:(801) 961-7070
F:(801) 961-7373

CONSULTANTS

PVE Inc. Consulting Mechanical Electrical Engineers
1040 North 2200 West, Suite 100
Salt Lake City, UT 84116
Phone: (801) 359-3158
Fax: (801) 521-4114

THESE DOCUMENTS ARE INSTRUMENTS OF PROFESSIONAL SERVICE AND THE INFORMATION CONTAINED HEREIN IS INCOMPLETE UNLESS IN CONJUNCTION WITH A PV ENGINEERING'S INTERPRETATIONS, DECISIONS, OBSERVATIONS AND ADMINISTRATIONS. USE OR REPRODUCTION OF THESE DOCUMENTS IN WHOLE OR IN PART WITHOUT PV ENGINEERING'S CONSENT IS IN VIOLATION OF COMMON LAW, COPYRIGHTS, STATUTORY AND OTHER RESERVED RIGHTS. REFER TO ACT 17 U.S.C. PAR. 511 (1991), WHICH PREEMPTS STATE AND LOCAL PUBLIC RECORD ACTS. REFER TO ACT 17 U.S.C. PAR. 301 (1991).

PROFESSIONAL SEAL

REGISTERED PROFESSIONAL ENGINEER — ALAN D. SPENDLOVE 166911 — STATE OF UTAH

ISSUE

MARK	DATE	DESCRIPTION
	8-09	CONSTRUCTION DOCUMENTS
	6-22-09	PS & E REVIEW
	3-09	95% REVIEW SUBMITTAL
	1-5-09	50% REVIEW SUBMITTAL

DFCM PROJECT NO:	08264900
DFCM CONTRACT NO:	097130
ARCHIPLEX PROJECT NO:	0832.01
DRAWN BY:	JB
CHECKED BY:	ADS
PVE PROJECT NO:	08277.00.01
DATE:	APRIL 2009

SHEET TITLE

MECHAICAL LEGENDS AND SCHEDULES

M001

Copyright (C) 2007 by PVE, Inc. Salt Lake City, Utah. All rights reserved. Unauthorized copying and/or use is illegal and subject to prosecution.

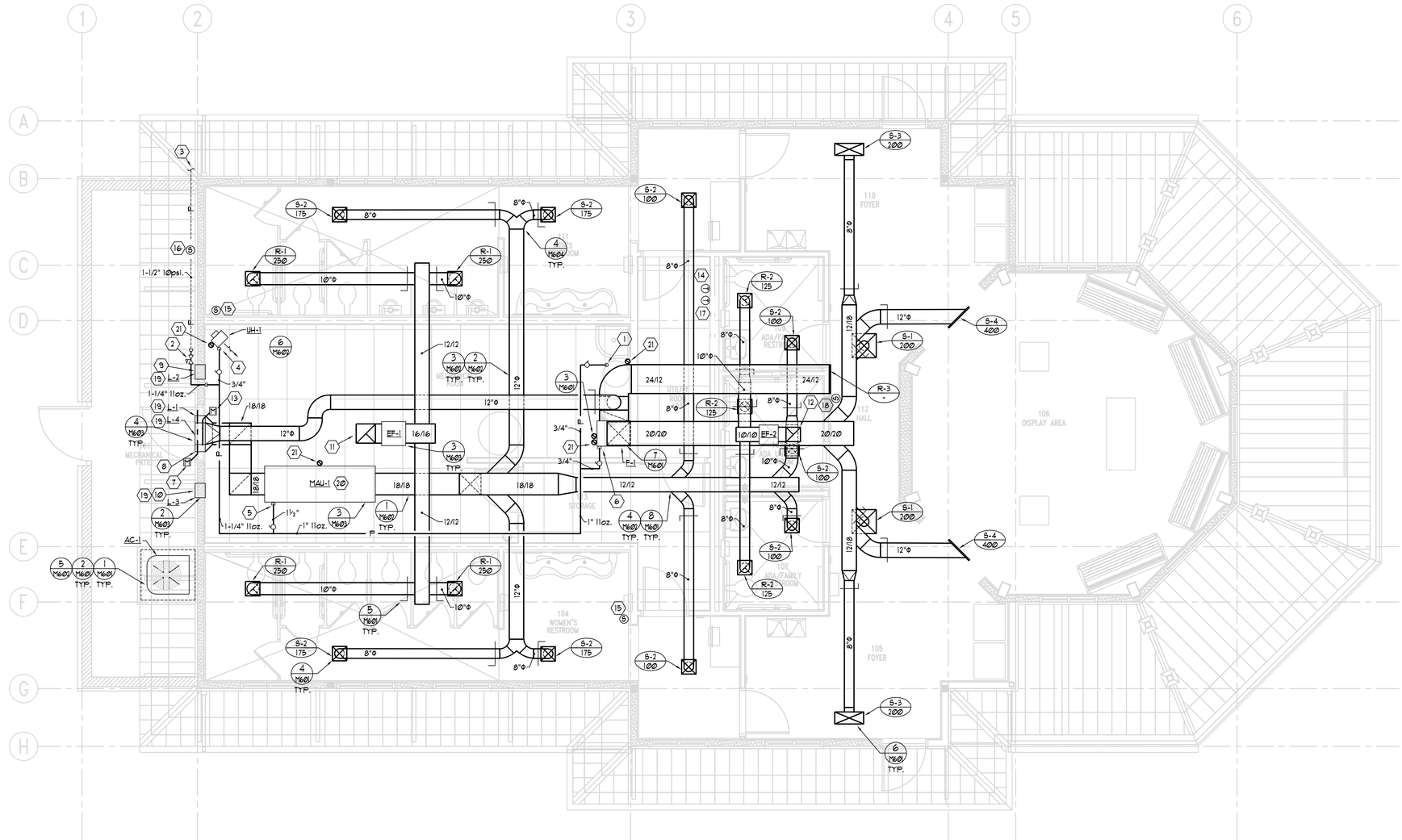

KEYED NOTES:

1. DROP ¾" PROPANE LINE DOWN TO WATER HEATER.
2. PROPANE REGULATOR CAPABLE OF REDUCING THE PROPANE GAS PRESSURE FROM 10psi TO 11oz WHILE PROVIDING 394,000 BTU/H PROPANE REQUIREMENT ESTIMATED PIPE LENGTH IS 125'.
3. 1-½" PIPE TO PROPANE TANK. PROVIDE 394,000 BTU/H PROPANE AT 10psi TO BUILDING REGULATOR. ESTIMATED PIPE LENGTH IS 325'. SEE CIVIL UTILITIES DRAWING FOR CONTINUATION.
4. ½" GAS PIPE DOWN TO UNIT HEATER.
5. ¾" GAS PIPE DOWN TO MAKE-UP AIR UNIT.
6. ¾" GAS PIPE DOWN TO FURNACE.
7. INTERLOCK MOTORIZED DAMPER WITH MAKE-UP AIR UNIT SUCH THAT WHEN THE MAKE-UP AIR IS DEACTIVATED THE DAMPER IS CLOSED. DAMPER MAY COME AS PART OF MAU-1.
8. RAISE DUCT UP SO LOUVER IS HIGH IN GABLE. REFERENCE ARCHITECTS DRAWINGS FOR EXACT LOCATION.
9. MOUNT LOUVER WITHIN 12" OF ROOM CEILING.
10. MOUNT LOUVER 12" ABOVE FINISHED FLOOR.
11. 16" x 16" DUCT UP TO CHIMNEY ON ROOF.
12. 10" x 10" DUCT UP TO CHIMNEY ON ROOF.
13. INTERLOCK MOTORIZED DAMPER WITH FURNACE SUCH THAT WHEN THE FURNACE IS DEACTIVATED THE DAMPER IS CLOSED.
14. REMOTE THERMOSTAT LOCATION FOR THE MAKE-UP AIR UNIT.
15. REMOTE ROOM SENSOR LOCATION FOR THE MAKE-UP AIR UNIT THERMOSTAT.
16. REMOTE OUTDOOR SENSOR LOCATION FOR THE MAKE-UP AIR UNIT
17. REMOTE THERMOSTAT LOCATION FOR THE FURNACE
18. REMOTE ROOM SENSOR LOCATION FOR THE FURNACE THERMOSTAT.
19. SEE ARCHITECT DRAWING A3/AE202 FOR LOCATION AND ELEVATION OF LOUVER.
20. MAU-1 CAN BE INSTALLED MORE TO THE CENTER OF THE ROOM. SHOWN OFFSET FOR CLARITY.
21. PAINT ALL EXPOSED FLUES THROUGH ROOF TO MATCH EXTERIOR ROOF COLOR.

1 M201 MECHANICAL FLOOR PLAN

SCALE: 1/4" = 1' - 0"

3' 0 2' 4' 6' 8'

CLIENT

UTAH DEPARTMENT OF TRANSPORTATION
CONNECTING COMMUNITIES

TIEFORK VISITORS CENTER
17845 E HIGHWAY 6
SPANISH FORK, UTAH 84660

DESIGNER

ARCHIPLEX GROUP
architecture · planning · design services
255 Crossroad Square
Salt lake City, UT 84115
P:(801) 961-7070
F:(801) 961-7373

CONSULTANTS

PVE Inc.
Consulting Mechanical Electrical Engineers
1040 North 2200 West, Suite 100
Salt Lake City, UT 84116
Phone: (801) 359-3158
Fax: (801) 521-4114

THESE DOCUMENTS ARE INSTRUMENTS OF PROFESSIONAL SERVICE AND THE INFORMATION CONTAINED HEREIN IS INCOMPLETE UNLESS IN CONJUNCTION WITH A PV ENGINEERING'S INTERPRETATIONS, DECISIONS, OBSERVATIONS AND ADMINISTRATIONS. USE OR REPRODUCTION OF THESE DOCUMENTS IN WHOLE OR IN PART WITHOUT PV ENGINEERING'S CONSENT IS IN VIOLATION OF COMMON LAW COPYRIGHTS, STATUTORY AND OTHER RESERVED RIGHTS. REFER TO ACT 17 U.S.C. PAR. 511 (1991), WHICH PREEMPTS STATE AND LOCAL PUBLIC RECORD ACTS. REFER TO ACT 17 U.S.C. PAR. 301 (1991).

PROFESSIONAL SEAL

REGISTERED PROFESSIONAL ENGINEER
ALAN D. SPENDLOVE
166911
STATE OF UTAH

ISSUE

MARK	DATE	DESCRIPTION
	8-09	CONSTRUCTION DOCUMENTS
	6-22-09	PS & E REVIEW
	3-09	95% REVIEW SUBMITTAL
	1-5-09	50% REVIEW SUBMITTAL

DFCM PROJECT NO:	08264900
DFCM CONTRACT NO:	097130
ARCHIPLEX PROJECT NO:	0832.01
DRAWN BY:	JB
CHECKED BY:	ADS
PVE PROJECT NO:	08277.00.01
DATE:	APRIL 2009

SHEET TITLE

MECHANICAL FLOOR PLAN

M201

Copyright (C) 2007 by PVE, Inc. Salt Lake City, Utah. All rights reserved. Unauthorized copying and/or use is illegal and subject to prosecution.

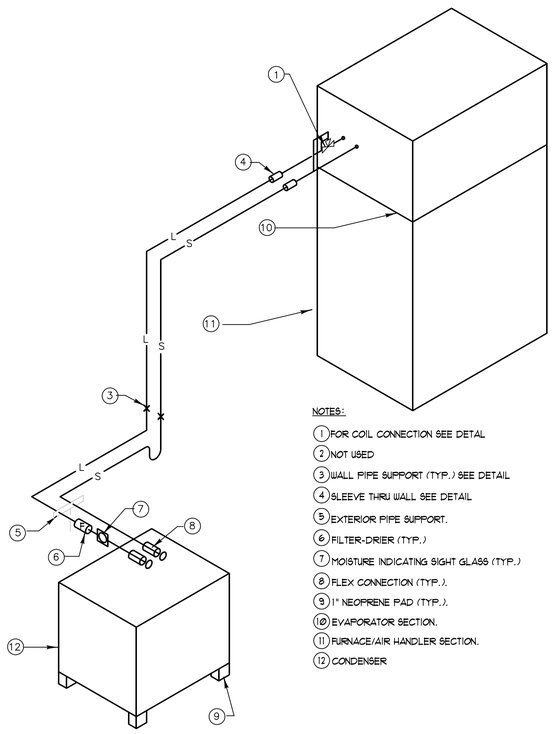

NOTES:

1. FOR COIL CONNECTION SEE DETAL
2. NOT USED
3. WALL PIPE SUPPORT (TYP.) SEE DETAIL
4. SLEEVE THRU WALL SEE DETAIL
5. EXTERIOR PIPE SUPPORT.
6. FILTER-DRIER (TYP.)
7. MOISTURE INDICATING SIGHT GLASS (TYP.)
8. FLEX CONNECTION (TYP.).
9. 1" NEOPRENE PAD (TYP.).
10. EVAPORATOR SECTION.
11. FURNACE/AIR HANDLER SECTION.
12. CONDENSER

1 M601 RERIGERANT PIPING SCHEMATIC DETAIL

NO SCALE

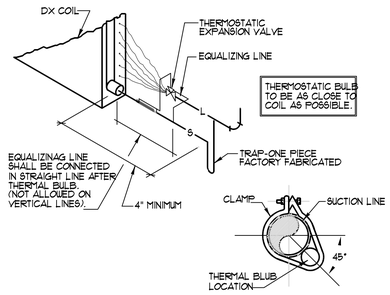

2 M601 REFRIGERANT COIL CONNECTION DETAIL

NO SCALE

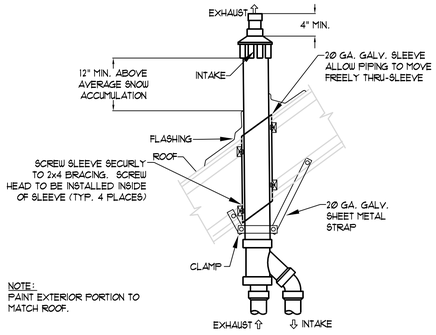

3 M601 CONCENTRIC ROOF TEMINATION DETAIL

NO SCALE

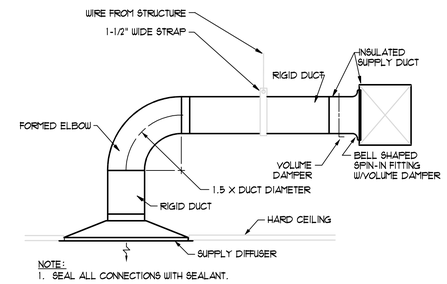

4 M601 HARD CEILING DIFFUSER INSTALLATION DETAIL

NO SCALE

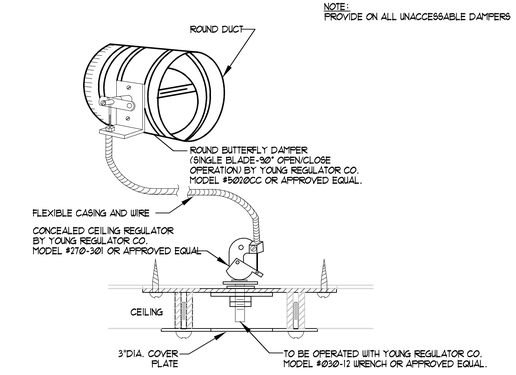

5 M601 DAMPER AND REGULATOR DETAIL

NO SCALE

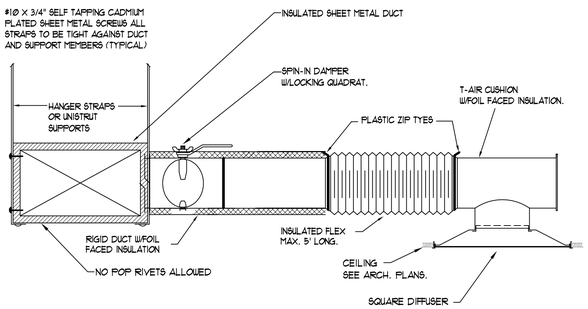

6 M601 DIFFUSER MOUNTING DETAIL (SQUARE)

NO SCALE

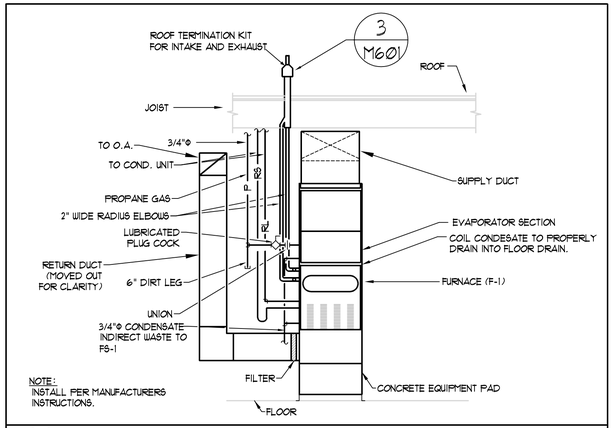

7 M601 90% EFFICIENT FURNACE DETAIL

NO SCALE

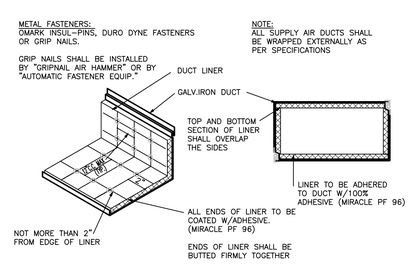

8 M601 DUCT LINER DETAIL

NO SCALE

CLIENT

LDOT CONNECTING COMMUNITIES

TIEFORK VISITORS CENTER
17845 E HIGHWAY 6
SPANISH FORK, UTAH 84660

DESIGNER

ARCHIPLEX GROUP
architecture · planning · design services
255 Crossroad Square
Salt lake City, UT 84115
P:(801) 961-7070
F:(801) 961-7373

CONSULTANTS

PVE Inc.
Consulting Mechanical Electrical Engineers
1040 North 2200 West, Suite 100
Salt Lake City, UT 84116
Phone: (801) 359-3158
Fax: (801) 521-4114

THESE DOCUMENTS ARE INSTRUMENTS OF PROFESSIONAL SERVICE AND THE INFORMATION CONTAINED HEREIN IS INCOMPLETE UNLESS IN CONJUNCTION WITH A PV ENGINEERING'S INTERPRETATIONS, DECISIONS, OBSERVATIONS AND ADMINISTRATIONS. USE OR REPRODUCTION OF THESE DOCUMENTS IN WHOLE OR IN PART WITHOUT PV ENGINEERING'S CONSENT IS IN VOLATION OF COMMON LAW, COPYRIGHTS, STATUTORY AND OTHER RESERVED RIGHTS. REFER TO ACT 17 U.S.C. PAR. 511 (1991). WHICH PREEMPTS STATE AND LOCAL PUBLIC RECORD ACTS. REFER TO ACT 17 U.S.C. PAR. 301 (1991).

PROFESSIONAL SEAL

REGISTERED PROFESSIONAL ENGINEER
ALAN D. SPENDLOVE
166911
STATE OF UTAH

ISSUE

MARK	DATE	DESCRIPTION
	8-09	CONSTRUCTION DOCUMENTS
	6-22-09	PS & E REVIEW
	3-09	95% REVIEW SUBMITTAL
	1-5-09	50% REVIEW SUBMITTAL

DFCM PROJECT NO:	08264900
DFCM CONTRACT NO:	097130
ARCHIPLEX PROJECT NO:	0832.01
DRAWN BY:	JB
CHECKED BY:	ADS
PVE PROJECT NO:	08277.00.01
DATE:	APRIL 2009

SHEET TITLE

MECHANICAL DETAILS

M601

Copyright (C) 2007 by PVE, Inc. Salt Lake City, Utah. All rights reserved. Unauthorized copying and/or use is illegal and subject to prosecution.

HANGER SIZES FOR RECTANGULAR DUCT			
MAX. SIDE	HANGER	HORIZANTAL SUPPORT ANGLE	MAXIMUM SPACING
30"	.1"x4" GAGE STRAP	NONE REQUIRED	10'-0"
36"	1/4" ROUND ROD	1 1/2" x 1 1/2" x 1/8"	8'-0"
48"	1/4" ROUND ROD	2" x 2" x 1/8"	8'-0"
60"	3/8" ROUND ROD	2" x 2" x 1/8"	8'-0"
84"	3/8" ROUND ROD	2" x 2" x 1/8"	8'-0"

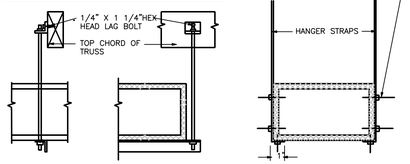

NO POP RIVETS ALLOWED

SELF TAPPING CADMIUM PLATED HEX HEAD SHEET METAL SCREW STRAPS TO BE TIGHT AGAINST DUCT.

1 M602 DUCT STRAP HANGER DETAIL

NO SCALE

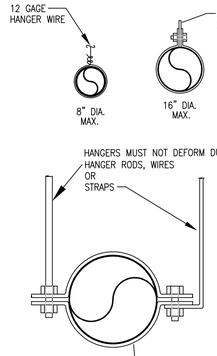

MINIMUM HANGER SIZE FOR ROUND DUCT				
DIAMETER	MAXIMUM SPACING	WIRE DIA.	ROD	STRAP
10" DN	12'	ONE 12 Ga.	1/4"	1"x22 Ga.
11–18"	12'	TWO 12 Ga. OR ONE 8 Ga.	1/4"	1"x20 Ga.
19–24'	12'	TWO 10 Ga.	1/4"	1"x20 Ga.
25–36"	12'	TWO 8 Ga.	3/8"	1"x20 Ga.
37–50"	12'	N/A	TWO 3/8"	TWO 1"x20 Ga.
51"–60"	12'	N/A	TWO 3/8"	TWO 1"x18 Ga.
61"–84"	12'	N/A	TWO 3/8"	TWO 1"x16 Ga.

REFERENCE:
LATEST EDITION OF SMACNA HVAC DUCT CONSTRUCTION STANDARDS
LOWER HANGER ATTACHMENTS FIGURE

2 M602 ROUND DUCT HANGER DETAIL

DIMENSION OF LONGEST SIDE, INCHES	SHEET METAL GAGE (ALL FOUR SIDES)	MINIMUM REINFORCING ANGLE SIZE & MAXIMUM LONGITUDINAL SPACING BETWEEN JOINTS &/OR INTERMEDIATE REINFORCING	TRANSVERSE REINFORCING ① AT JOINTS: MIN H, IN.	DRIVE SLIP PLAIN S SLIP RECOM-MENDED GAGE	HEMMED S SLIP RECOM-MENDED GAGE	ALTERNT. BAR SLIP REINFOR. BAR SLIP RECOM-MENDED GAGE	BAR SLIP ANGLE SLIP RECOM-MENDED GAGE	BAR SLIP RECOM-MENDED GAGE	STAND. SEAM ANGLE REINFOR. STAND.SEAM REINFORCED ANGLE SIZE	POCKET LOCK ANGLE REINFORCED POCKET LOCK RECOM-MENDED GAGE	POCKET LOCK REINFORCED ANGLE SIZE
UP THRU 12	26	NONE REQ.	1	26	26	24	24	24	NOT REQ.	NOT REQ.	24	NOT REQ.
13 – 18	24	NONE REQ.	1	24	24	24	24	24	NOT REQ.	NOT REQ.	24	NOT REQ.
19 – 30	24	1X1X1/8 @ 60"	1	–	24	24	24	24	NOT REQ.	NOT REQ.	24	NOT REQ.
31 – 42	22	1X1X1/8 @ 60"	1	–	–	22	22	22	NOT REQ.	NOT REQ.	22	NOT REQ.
43 – 54	22	1.5X1.5X1/8@60"	1 1/2	–	–	22	22	22	1.5X1.5X1/8	NOT REQ.	22	NOT REQ.
55 – 60	20	1.5X1.5X1/8@60"	1 1/2	–	–	–	22	22	1.5X1.5X1/8	NOT REQ.	22	NOT REQ.
61 – 84	20	1.5X1.5X1/8@30"	1 1/2	–	–	–	22	22	1.5X1.5X1/8	1.5X1.5X1/8	22	1.5X1.5X1/8

① TRANSVERSE REINFORCING SIZE IS DETERMINED BY DIMENSION OF SIDE TO WHICH ANGLE IS APPLIED

3 M602 DUCT CONSTRUCTION DETAIL

NO SCALE

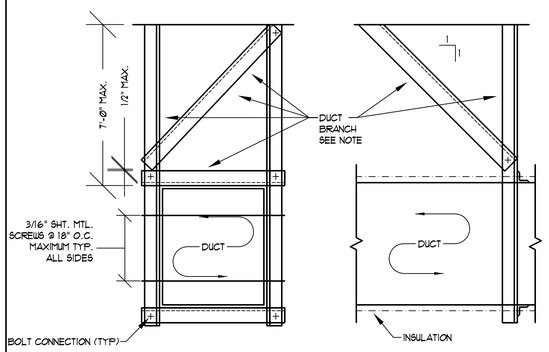

SCHEDULE "A" BRACING OF RECTANGULAR DUCTS						
DUCT SIZE INCHES	VERTICAL ANGLES	DIAGONAL ANGLES	HORIZONTAL ANGLES	LONGITUDINAL ANGLES	BOLT SIZE ##	WT. PER LINEAR FOOT
30" SQ.	2-1/2" X 2-1/2" X 16 GA.	2-1/2" X 2-1/2" X 16 GA.	2" X 2" X 16 GA.	3" X 3" X GA.	1/4"Φ	13
42" SQ.	4" X 4" X 16 GA.	2-1/2" X 2-1/2" X 16 GA.	2-1/2" X 2-1/2" X 16 GA.	D.O.	3/8"Φ	20
54" SQ.	4" X 4" X 16 GA.	2-1/2" X 2-1/2" X 16 GA.	2-1/2" X 2-1/2" X 16 GA.	D.O.	3/8"Φ	27
60" SQ.	4" X 4" X 12 GA.	3" X 3" X 16 GA.	3" X 3" X 16 GA.	D.O.	3/8"Φ	36
84" SQ.	4" X 4" X 1/4"	4" X 4" X 14 GA.	4" X 4" X 14 GA.	D.O.	3/8"Φ	53
96" SQ.	5" X 3" X 1/4"	4" X 4" X 12 GA.	4" X 4" X 12 GA.	D.O.	1/2"Φ	30

MAXIMUM DIMENSION OF DUCT SHALL GOVERN WHAT BRACING REQUIRED. EX: A 42" X 32" DUCT SHALL BE BRACED AS A 42" SQ. DUCT.

MINIMUM EDGE DISTANCE FOR BOLTS:
1/4"Φ - 1" 5/8"Φ - 1-1/8"
3/8"Φ - 1" 3/4"Φ - 1-1/4"
1/2"Φ - 1" 7/8"Φ - 1-1/2"

DUCT BRACING NOTES:

1. DESIGN RESTRAINTS PER SEISMIC ZONE 3.
2. REFERENCE SMACNA SEISMIC RESTRAINT MANUAL.
3. FOR DUCTWORK REQUIRING SEISMIC BRACING, INSTALL BRACES AS FOLLOWS:
   a. TRANSVERSE BRACE AT EACH DUCT CHANGE OF DIRECTION, END OF DUCT RUN, AND AT 30'-0" O.C. FOR STRAIGHT RUNS.
   b. LONGITUDINAL BRACE AT 60'-0" O.C.
   c. TRANSVERSE BRACING OF ONE DUCT SECTION MAY ACT AS A LONGITUDAL BRACE FOR A DUCT SECTION CONNECTED PERPENDICULAR TO IT, PROVIDING THE BRACE IS INSTALLED WITHIN FOUR FEET OF THE INTERSECTION AND IS SIZED FOR THE LARGEST DUCT.
   d. WALLS WHICH HAVE DUCTS PASSING THROUGH THEM MAY SUBSTITUTE FOR A TRANSVERSE BRACE.
   e. DO NOT USE JOIST BRIDGING FOR SUPPORT OF ANY LOAD.
   f. IF SUPPORTING LOADS ABOVE 50 LBS. BETWEEN JOIST PANEL POINTS REINFORCE BOTTOM CORD OF JOIST AS PER STRUCTURAL ENGINEERS REQUIREMENTS. REFER TO SUPPORT DETAILS ON STRUCTURAL DRAWINGS.

4 M602 SEISMIC RESTRAINT OF DUCTS DETAIL

NO SCALE

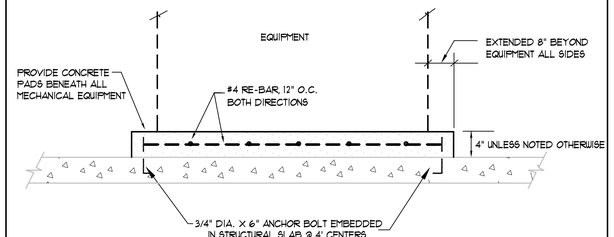

5 M602 HOUSEKEEPING PAD DETAIL

NOT TO SCALE

PVED-HKPAD/PD

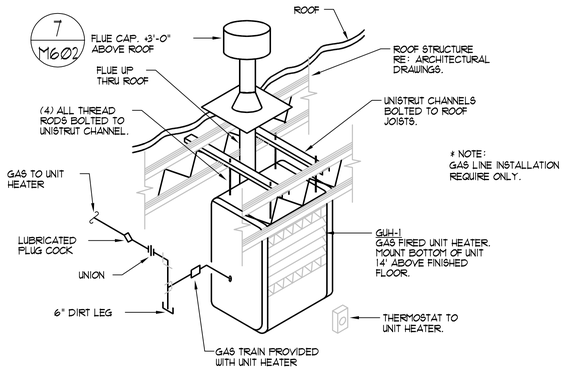

6 M602 GAS FIRED UNIT HEATER

NO SCALE

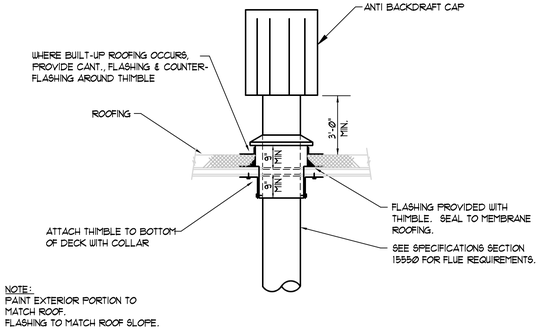

7 M602 FLUE ROOF PENETRATION DETAIL

NO SCALE

CLIENT

UDOT CONNECTING COMMUNITIES

TIEFORK VISITORS CENTER
17845 E HIGHWAY 6
SPANISH FORK, UTAH 84660

DESIGNER

ARCHIPLEX GROUP
architecture · planning · design services
255 Crossroad Square
Salt lake City, UT 84115
P:(801) 961-7070
F:(801) 961-7373

CONSULTANTS

PVE Inc. Consulting Mechanical Electrical Engineers
1040 North 2200 West, Suite 100
Salt Lake City, UT 84116
Phone: (801) 359-3158
Fax: (801) 521-4114

THESE DOCUMENTS ARE INSTRUMENTS OF PROFESSIONAL SERVICE AND THE INFORMATION CONTAINED HEREIN IS INCOMPLETE UNLESS IN CONJUNCTION WITH A PV ENGINEERING'S INTERPRETATIONS, DECISIONS, OBSERVATIONS AND ADMINISTRATIONS. USE OR REPRODUCTION OF THESE DOCUMENTS IN WHOLE OR IN PART WITHOUT PV ENGINEERING'S CONSENT IS IN VIOLATION OF COMMON LAW. COPYRIGHTS, STATUTORY AND OTHER RESERVED RIGHTS REFER TO ACT 17 U.S.C. PAR. 511 (1991). WHICH PREEMPTS STATE AND LOCAL PUBLIC RECORD ACTS. REFER TO ACT 17 U.S.C. PAR. 301 (1991).

PROFESSIONAL SEAL

REGISTERED PROFESSIONAL ENGINEER
ALAN D. SPENDLOVE
166911
STATE OF UTAH

ISSUE		
	8–09	CONSTRUCTION DOCUMENTS
	6–22–09	PS & E REVIEW
	3–09	95% REVIEW SUBMITTAL
	1–5–09	50% REVIEW SUBMITTAL
MARK	DATE	DESCRIPTION

DFCM PROJECT NO:	08264900
DFCM CONTRACT NO:	097130
ARCHIPLEX PROJECT NO:	0832.01
DRAWN BY:	JB
CHECKED BY:	ADS
PVE PROJECT NO:	08277.00.01
DATE:	APRIL 2009

SHEET TITLE

MECHANICAL DETAILS

M602

Copyright (C) 2007 by PVE, Inc. Salt Lake City, Utah. All rights reserved. Unauthorized copying and/or use is illegal and subject to prosecution.

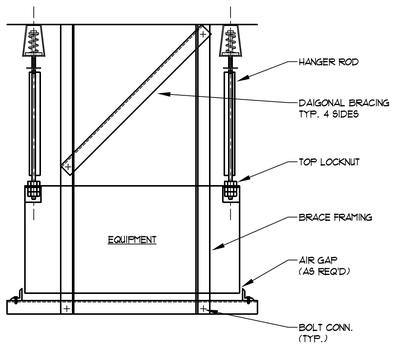

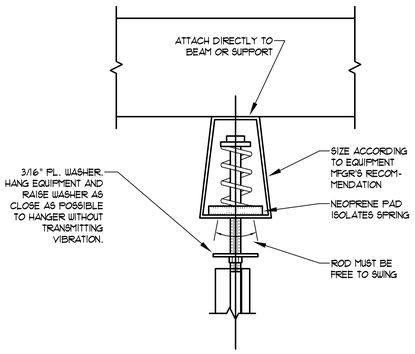

EQUIPMENT SUSPENSION DETAIL

EQUIPMENT BRACING NOTES:

1. DESIGN SUPPORT SYSTEM FOR SEISMIC ZONE 4.
2. REFERENCE SMACNA SEISMIC RESTRAINT MANUAL.
3. SIZE RESTRAINTS PER EQUIPMENT OPERATING WEIGHTS.
4. PROVIDE LATERAL BRACING FOR ALL SUSPENDED EQUIPMENT.
5. SECURE FLOOR MOUNTED SPRING ISOLATED EQUIPMENT USING SEISMIC SPRING ISOLATORS.
6. RIGIDLY MOUNTED EQUIPMENT SHALL BE SECURED WITH ANCHOR BOLTS SIZED FOR OPERATING WEIGHTS. PROVIDE NEOPRENE WASHERS AND SLEEVES FOR EQUIPMENT MOUNTED ON NEOPRENE PADS.
7. FOR EQUIPMENT REQUIRING SEISMIC BRACING, INSTALL BRACES AS FOLLOWS:
   a. DO NOT USE JOIST BRIDGING FOR SUPPORT OF ANY LOAD.
   b. IF SUPPORTING LOADS ABOVE 50 LBS. BETWEEN JOIST PANEL POINTS REINFORCE BOTTOM CORD OF JOIST AS PER STRUCTURAL ENGINEERS REQUIREMENTS. REFER TO SUPPORT DETAILS ON STRUCTURAL DRAWINGS.

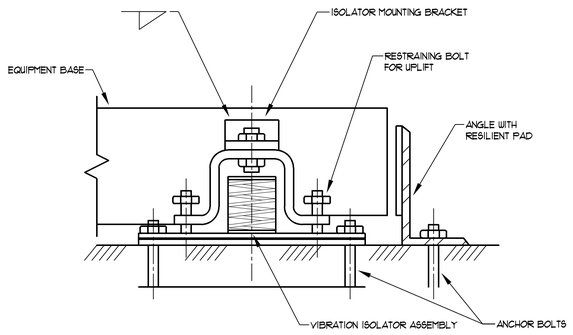

EQUIPMENT RESTRAINT DETAIL

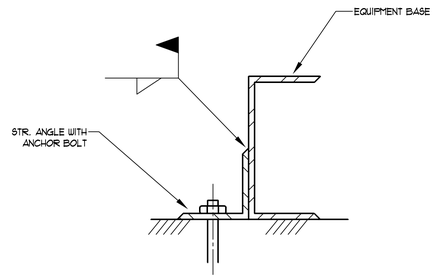

EQUIPMENT BRACE DETAIL

1 / M603 — EQUIPMENT SUSPENSION DETAIL
NOT TO SCALE

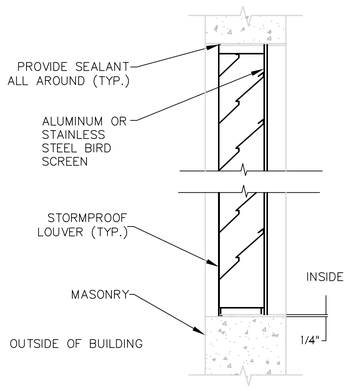

2 / M603 — LOUVER DETAIL
NO SCALE

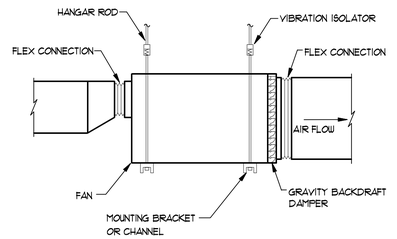

NOTE: SUPPORT STRUCTURE MEMBERS AND HARDWARE TO BE SIZED IN ACCORDANCE WITH MANUFACTURER'S RECOMMENDATIONS.

3 / M603 — INLINE SQUARE FAN DETAIL
NO SCALE

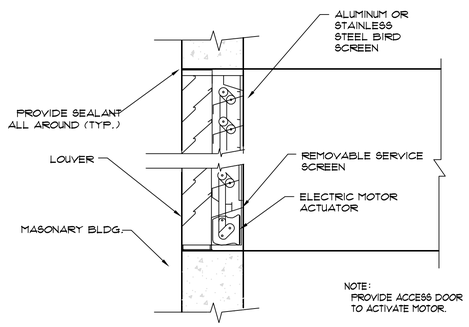

4 / M603 — OUTLET / INLET LOUVER DETAIL
NO SCALE

INSTALLATION NOTE:
CONTRACTOR SHALL PROVIDE & INSTALL ADDITIONAL STEEL MULLIONS PER MFR INSTALLATION INSTRUCTIONS FOR MULTIPLE FIRE DAMPER ASSEMBLIES.

NOTE:
VERTICAL TYPE FIRE DAMPER SHOWN. FOR HORIZONTAL TYPE, TURN ASSEMBLY 90° AND PROVIDE W/NEGATOR CLOSURE SPRING

PROVIDE RATED ACCESS DOOR FOR DAMPER MAINTENANCE

INSTALL PER MANUFACTURER'S REQUIREMENTS TO MAINTAIN UL LISTING.

DETAIL SIMILAR FOR FIRE/SMOKE DAMPERS.

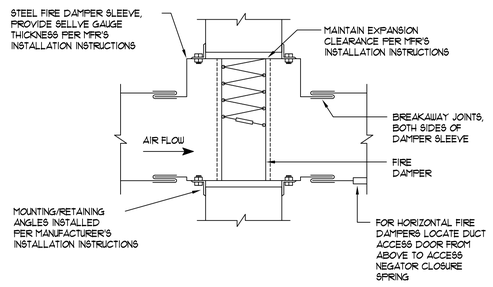

5 / M603 — FIRE/SMOKE DAMPER INSTALLATION DETAIL
NO SCALE

CLIENT

UTAH DEPARTMENT OF TRANSPORTATION
CONNECTING COMMUNITIES
TIEFORK VISITORS CENTER
17845 E HIGHWAY 6
SPANISH FORK, UTAH 84660

DESIGNER

ARCHIPLEX GROUP
architecture · planning · design services
255 Crossroad Square
Salt lake City, UT 84115
P:(801) 961-7070
F:(801) 961-7373

CONSULTANTS

PVE Inc.
Consulting Mechanical Electrical Engineers
1040 North 2200 West, Suite 100
Salt Lake City, UT 84116
Phone: (801) 359-3158
Fax: (801) 521-4114

THESE DOCUMENTS ARE INSTRUMENTS OF PROFESSIONAL SERVICE AND THE INFORMATION CONTAINED HEREIN IS INCOMPLETE UNLESS IN CONJUNCTION WITH A PV ENGINEERING'S INTERPRETATIONS, DECISIONS, OBSERVATIONS AND ADMINISTRATIONS. USE OR REPRODUCTION OF THESE DOCUMENTS IN WHOLE OR IN PART WITHOUT PV ENGINEERING'S CONSENT IS IN VIOLATION OF COMMON LAW COPYRIGHTS, STATUTORY AND OTHER RESERVED RIGHTS. REFER TO ACT 17 U.S.C. PAR. 511 (1991), WHICH PREEMPTS STATE AND LOCAL PUBLIC RECORD ACTS. REFER TO ACT 17 U.S.C. PAR. 301 (1991).

PROFESSIONAL SEAL

REGISTERED PROFESSIONAL ENGINEER
ALAN D. SPENDLOVE
166911
STATE OF UTAH

ISSUE

MARK	DATE	DESCRIPTION
	8-09	CONSTRUCTION DOCUMENTS
	6-22-09	PS & E REVIEW
	3-09	95% REVIEW SUBMITTAL
	1-5-09	50% REVIEW SUBMITTAL

DFCM PROJECT NO:	08264900
DFCM CONTRACT NO:	097130
ARCHIPLEX PROJECT NO:	0832.01
DRAWN BY:	JB
CHECKED BY:	ADS
PVE PROJECT NO:	08277.00.01
DATE:	APRIL 2009

SHEET TITLE

MECHANICAL DETAILS

M603

Copyright (C) 2007 by PVE, Inc. Salt Lake City, Utah. All rights reserved. Unauthorized copying and/or use is illegal and subject to prosecution.

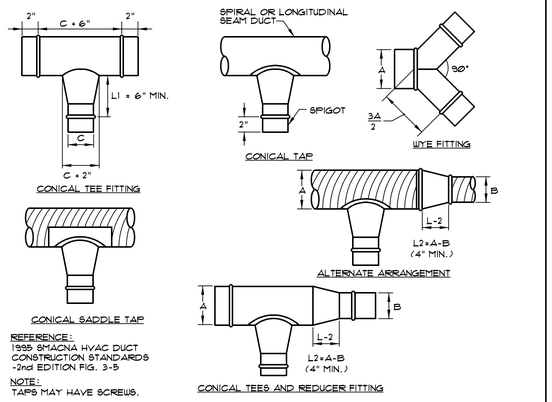

1 M604 **CONICAL TEES DETAIL**

NO SCALE

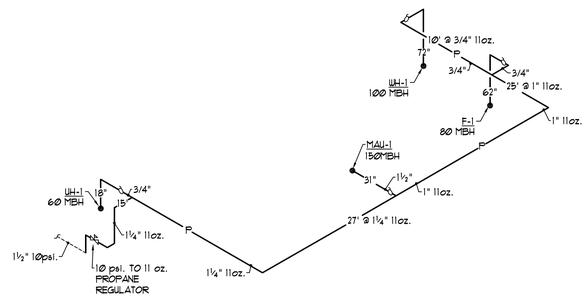

2 M604 **PROPANE GAS ISOMETRIC**

NO SCALE

CLIENT

UTAH DEPARTMENT OF TRANSPORTATION
CONNECTING COMMUNITIES

TIEFORK VISITORS CENTER
17845 E HIGHWAY 6
SPANISH FORK, UTAH 84660

DESIGNER

ARCHIPLEX GROUP
architecture · planning · design services
255 Crossroad Square
Salt lake City, UT 84115
P:(801) 961-7070
F:(801) 961-7373

CONSULTANTS

PVE Inc.
Consulting Mechanical Electrical Engineers
1040 North 2200 West, Suite 100
Salt Lake City, UT 84116
Phone: (801) 359-3158
Fax: (801) 521-4114

THESE DOCUMENTS ARE INSTRUMENTS OF PROFESSIONAL SERVICE AND THE INFORMATION CONTAINED HEREIN IS INCOMPLETE UNLESS IN CONJUNCTION WITH A PV ENGINEERING'S INTERPRETATIONS, DECISIONS, OBSERVATIONS AND ADMINISTRATIONS. USE OR REPRODUCTION OF THESE DOCUMENTS IN WHOLE OR IN PART WITHOUT PV ENGINEERING'S CONSENT IS IN VIOLATION OF COMMON LAW COPYRIGHTS, STATUTORY AND OTHER RESERVED RIGHTS. REFER TO ACT 17 U.S.C. PAR. 511 (1991), WHICH PREEMPTS STATE AND LOCAL PUBLIC RECORD ACTS. REFER TO ACT 17 U.S.C. PAR. 301 (1991).

PROFESSIONAL SEAL

REGISTERED PROFESSIONAL ENGINEER
ALAN D. SPENDLOVE
166911
STATE OF UTAH

ISSUE

MARK	DATE	DESCRIPTION
	8-09	CONSTRUCTION DOCUMENTS
	6-22-09	PS & E REVIEW
	3-09	95% REVIEW SUBMITTAL
	1-5-09	50% REVIEW SUBMITTAL

DFCM PROJECT NO:	08264900
DFCM CONTRACT NO:	097130
ARCHIPLEX PROJECT NO:	0832.01
DRAWN BY:	JB
CHECKED BY:	ADS
PVE PROJECT NO:	08277.00.01
DATE:	APRIL 2009

SHEET TITLE

MECHANICAL DETAILS

M604

Copyright (C) 2007 by PVE, Inc. Salt Lake City, Utah. All rights reserved. Unauthorized copying and/or use is illegal and subject to prosecution.

PIPING LEGEND
(NOT ALL USED)

GATE VALVE		CHILLED WATER SUPPLY	CHS
OS & Y PATTERN GATE VALVE		CHILLED WATER RETURN	CHR
BALL VALVE		CONDENSER WATER SUPPLY	CWS
BUTTERFLY VALVE		CONDENSER WATER RETURN	CWR
MOTORIZED BUTTERFLY VALVE	M	HEATING WATER SUPPLY	HWS
HEAT TRACING		HEATING WATER RETURN	HWR
DEIONIZED WATER	DI	WATER TREATMENT	WT
CHECK VALVE		FIRE DEPT. HORN & LIGHT	
SOLENOID VALVE		HOT GAS	HG
AUTOMATIC CONTROL VALVE (2-WAY)		FLEXIBLE PIPE CONNECTION	
AUTOMATIC CONTROL VALVE (3-WAY)		REDUCED PRESSURE BACKFLOW PREVENTER	RPBP
PRESSURE REDUCING VALVE		DIRECTION OF FLOW	
P & T RELIEF VALVE		ELBOW DOWN (DN)	
AIR VENT (AUTOMATIC)		ELBOW UP	
REFRIGERANT LIQUID	RL	PIPE CAP	
REFRIGERANT SUCTION	RS	TEE DOWN	
THERMAL EXPANSION VALVE		UNION	
STRAINER		DOMESTIC COLD WATER	
CIRCUIT SETTER		DOMESTIC HOT WATER	
FLOW METER		HOT WATER CIRC.	
PET COCK OR GAUGE COCK		TEMPERED WATER	T
PRESSURE GAUGE W/GAUGE COCK		SANITARY (PLBG) VENT	
THERMOMETER		SANITARY SEWER ABOVE GRADE	
TEMPERATURE & PRESSURE TEST PLUG		SANITARY SEWER BELOW GRADE	
IN-LINE PUMP		DRAIN	D
FLOW SWITCH		ROOF DRAIN PIPING	RD
AQUASTAT		OVERFLOW DRAIN PIPING	OD
HOSE BIBB OR SILLCOCK		STORM DRAIN PIPING ABOVE GRADE	SD
VACUUM	V	STORM DRAIN PIPING BELOW GRADE	SD
FLOOR DRAIN		FIRE SERVICE	F
FLOOR SINK		NATURAL GAS	G
HOT GAS BYPASS	HGBP	COMPRESSED AIR	CA
WALL CLEANOUT OR CLEANOUT		VENT THROUGH ROOF	
FLOOR OR GRADE CLEANOUT		STEAM	S
GRADE CLEANOUT W/ CONCRETE PAD		CONDENSATE	C

GENERAL NOTES:

1. COORDINATE ALL AIR DEVICE, EQUIPMENT AND PLUMBING LOCATIONS WITH REFLECTED CEILING PLANS AND ELECTRICAL DRAWINGS.
2. DUCTWORK AND PIPE ROUTING AS SHOWN ON DRAWINGS IS DIAGRAMMATIC AND IS NOT TO BE SCALED. WHERE ALTERNATE ROUTING, OFFSETS AND TRANSITIONS ARE REQUIRED FOR COORDINATION OF WORK, THIS CONTRACTOR SHALL MAKE CHANGES WITHOUT ADDITIONAL COSTS.
3. THIS CONTRACTOR SHALL CLOSELY COORDINATE NEW MECHANICAL AND PLUMBING WITH NEW ELECTRICAL, ARCHITECTURAL AND BUILDING STRUCTURE.
4. THIS CONTRACTOR SHALL FIELD VERIFY ALL MECHANICAL AND PLUMBING ITEMS PRIOR TO STARTING NEW WORK. ADDITIONAL COST WILL NOT BE ALLOWED FOR CONTRACTOR'S FAILURE TO BECOME FAMILIAR WITH SITE CONDITIONS.
5. ALL MECHANICAL AND PLUMBING SYSTEMS SHALL BE INSTALLED IN ACCORDANCE WITH THE CURRENT ADOPTED EDITION OF THE BUILDING CODES, FIRE CODES, MECHANICAL CODES AND PLUMBING CODES.
6. THIS CONTRACTOR SHALL PROVIDE SUBMITTALS ON ITEMS LISTED IN MECHANICAL AND PLUMBING EQUIPMENT LIST TO THE ENGINEER FOR REVIEW PRIOR TO THE ORDER, PURCHASE OR INSTALLATION.
7. NOT USED
8. ALL DOMESTIC COLD AND DOMESTIC HEATING WATER PIPING SHALL BE TYPE 'L' COPPER. ALL WASTE AND VENT PIPING SHALL BE CAST IRON. ALL ROOF AND OVERFLOW DRAINAGE PIPING TO BE CAST IRON.
9. PROVIDE INSULATION FOR THE FOLLOWING:
   a. DOMESTIC HOT WATER PIPING:
      1" THICK FOR ALL PIPE SIZES.
   b. DOMESTIC COLD WATER PIPING:
      ½" THICK FOR PIPE SIZES ½" TO 6".
      (PROVIDE CONTINUOUS VAPOR BARRIER.)
10. INSULATE PIPING WITH FIBERGLASS PIPE COVERING WITH ALL SERVICE JACKET AND SELF-CAP SEAL. FITTINGS SHALL BE MITERED PIPING COVERING OF GLASS FIBER MOLDED FITTINGS FOR USE IN A RETURN AIR PLENUM. THERMAL CONDUCTIVITY SHALL BE A MAXIMUM OF .25/INCH THICKNESS AT 75°F.
11. EACH TRADE IS RESPONSIBLE THEIR OWN FIRE CAULKING.
12. HOUSEKEEPING PADS FOR ALL EQUIPMENT IS PROVIDED AND INSTALLED BY GENERAL CONTRACTOR. COORDINATE LOCATION WITH MECHANICAL CONTRACTOR.
13. DIVISION 15 TO SUBMIT TO ENGINEER ALL AS-BUILTS OF BUILDINGS MECHANICAL AND PLUMBING SYSTEMS PRIOR TO JOB COMPLETION AND FINAL PAYMENT.
14. AIR BALANCE AND WATER DISENFECTANT TO BE SUBMITTED TO THE ENGINEER PRIOR TO SUBSTANTIAL COMPLETION WALK-THRU.
15. PLUMBING SYSTEMS SHALL BE HUNG FROM BUILDING STRUCTURE AND NOT FROM THE ROOF SHEETING.

GAS FIRED WATER HEATER SCHEDULE

SYMBOL	SERVICE	CAPACITY GALLONS	FUEL GAS	INPUT BTU	POWER VOLTS	POWER AMPS	RECOV GPH 90° RISE	TANK SIZE	TEMP F IN/OUT	FLUE SIZE	REMARKS
GWH-1	HOT WATER	50	PROPANE	100,000	120	5.0	126	22"Øx62"	40°/140°	3"	① ② ③ ④ ⑤ ⑥

① PROVIDE WITH EXPANSION TANK. A.O. SMITH-AMTROL ST-5-2 GAL, 8"Øx12"H ② 95% EFFICIENCY ③ CONCENTRIC VENT KIT
④ INSTALL PER MANUFACTURER'S REQUIREMENTS ⑤ FLUE SIZE AS RECOMMENDED BY MANUFACTURER ⑥ BLOWER

CIRCULATION PUMP SCHEDULE CP-

PLAN CODE	DUTY	GPM	FEET OF HEAD	PUMP RPM	MOTOR H.P.	MOTOR VOLTAGE & PHASE	COMMENTS
CP-1	DOMESTIC HOT WATER RECIRCULATION	1/2	4	3250	1/40	115	SEE HOT WATER HEATER DETAIL FOR INSTALLATION REQ.

TEMPERATURE MIXING VALVE SCHEDULE

CODE	MAXIMUM FLOW CAPACITY GPM	SYSTEM PRESSURE DROP P.S.I.	INLET	OUTLET	REMARKS
TMV-1	21.0	15	3/4"	1"	① ② ③ ④ ⑤ ⑥ ⑦ ⑧ ⑨
TMV-2	4.5	5	1/2"	1/2"	⑪ ⑫ ⑬ ⑭
TMV-3I	1.0	5	3/8"	3/8"	⑪ ⑫ ⑬ ⑭

① CHROME PLATED FINISH ② PIPED ASSEMBLY WITH INLET AND OUTLET SHUTOFF ③ 4" DIAMETER OUTLET THERMOMETER
④ SURFACE MOUNTED STAINLESS STEEL BOX ⑤ POSITIVE HOT WATER SHUTOFF WHEN COLD WATER SUPPLY IS LOST
⑧ BUILT IN COLD WATER BYPASS ⑦ FOR BUILDING HOT WATER SUPPLY ⑧ HIGH - LOW MIXING VALVE
⑨ SET TEMPERATURE TO 115°F. ⑩ SET TEMPERATURE TO 105°F. ⑪ CHECKS ⑫ BRASS BODY WITH STAINLESS STEEL INTERNAL COMPONENTS ⑬ DUAL STAINLESS STEEL STRAINERS ⑭ ULTRA SENSITIVE TEMPERATURE-RESPONSE ELEMENT

PLUMBING FIXTURE CONNECTION SCHEDULE

PLAN CODE	DESCRIPTION	CONNECTION SIZE (INCHES) C.W.	H.W.	WASTE	VENT	TRAP	SPECIFICATIONS
DF-1	BI-LEVEL DRINKING FOUNTAIN	1/2	-	1-1/2	1-1/2	1-1/2	BI-LEVEL WATER COOLER PROVIDE WITH ANTIROTATION NON-SQUIRT BUBBLERS, COPPER TUBE ON STAINLESS TANK EVAPORATOR, 100 MESH INLET STRAINER, 8.0 GPH R-134a REFRIGERANT. 115v., 4.8 AMPS, 400 WATTS, ADA COMPLIANT. STAINLESS STEEL BACK PANEL CONCEALED SUPPORT CARRIER. COLOR BY ARCHITECT.
FD-1	FLOOR DRAIN	-	-	2	2	2	FLOOR DRAIN PROVIDE WITH BRONZE BODY, VANDAL PROOF SCREW, STAINLESS STEEL STRAINER. PROVIDE PROSET TRAP GUARD IN BOTTOM OF THE FLOOR DRAIN.
HB-1	FREEZELESS WALL HYDRANT	1/2	-	-	-	-	WALL HYDRANT PROVIDE WITH 8" BOX WITH CONCEALED HOSE CONNECTION, 1/4 TURN VALVE, NON-FREEZE HYDRANT WITH INTERGRAL VACUUM BREAKER PROTECTION, PROVIDE WITH HINGED LOCKING COVER.
HB-2	FREEZELESS WALL HYDRANT	1/2	1/2	-	-	-	WALL HYDRANT PROVIDE WITH 8" BOX WITH CONCEALED HOSE CONNECTION, 1/4 TURN HOT WATER AND COLD WATER VALVES, NON-FREEZE HYDRANT NOT REQUIRED FOR INSIDE INSTALLATON, WITH VACUUM BREAKER PROTECTION, PROVIDE WITH HINGED LOCKING COVER.
SA-A SA-B SA-C SA-D	WATER HAMMER ARRESTER	1/2 SEE PLANS	1/2 SEE PLANS	-	-	-	WATER HAMMER ARRESTER PROVIDE WITH PRE-CHARGE AND PERMANENTLY FACTORY SEALED SA-A-ITO 11 FIXTURE UNITS, SA-B-12 TO 32 FIXTURE UNITS SA-C-33 TO 60 FIXTURE UNITS, SA-D - 61 TO 113 FIXTURE UNITS. PROVIDE ACCESS DOOR AS NEEDED TO ACCESS THE ARRESTER.
WC-1	WALL HUNG WATER CLOSET	1	-	4	2	INT.	VITEROUS CHINA WATER CLOSET PROVIDE WITH 1-1/2" TOP SPUD, 1.8 GPF WALL MOUNTED, ELONGATED BOWL, WITH ELONGATED OPEN FRONT TOILET SEAT, HANGER AND FLUSH VALVE. FLUSH VALVE TO HAVE MANUAL OVERRIDE. MOUNT WC AT 15" AFF.
WC-2	ADA COMPLIANT WALL HUNG WATER CLOSET	1	-	4	2	INT.	VITEROUS CHINA WATER CLOSET PROVIDE WITH 1-1/2" TOP SPUD, 1.8 GPF WALL MOUNTED, ELONGATED BOWL, WITH ELONGATED OPEN FRONT TOILET SEAT, HANGER AND FLUSH VALVE. FLUSH VALVE TO HAVE MANUAL OVERRIDE. MOUNT WC AT 18" AFF.
U-1	URINAL	3/4	-	2	2	INT.	VITEROUS CHINA ADA COMPLIANT URINAL PROVIDE WITH 1-1/4" TOP SPUD, 1.0 GPF, WALL MOUNTED WITH CARRIER, FLUSH VALVE. FLUSH VALVE TO HAVE MANUAL OVERRIDE, MOUNT 17" A.F.F.
WCO-1	WALL CLEAN OUT	-	-	-	-	-	WALL CLEAN OUT PROVIDE WITH DUCO CAST IRON CLEANOUT TEE WITH COUNTERSUNK PLUG AND STAINLESS STEEL ROUND COVER, VANDAL PROOF SCREW.
FCO-1	FLOOR CLEAN OUT	-	-	-	-	-	FLOOR CLEAN OUT PROVIDE WITH DUCO CAST IRON CLEANOUT WITH COUNTERSUNK PLUG AND NICKEL BRONZE ROUND TOP.
L-1	WALL HUNG LAVATORY SYSTEM	1/2"	1/2"	2"	2"	2"	ADA COMPLIANT WALL HUNG LAVATORY SYSTEM PROVIDE WITH MOLDED CONTINUOUS BOWL OF TERREON SOLID SURFACE MATERIAL, 3 EA BATTERY OPERATED INFRARED CONTROL, SINGLE TEMPERED WATER SUPPLY, COBBLESTONE COLOR, Ø.5 GPM FLOW RATE AERATOR PER SPRAYHEAD (THREE REQUIRED), WAVE DESIGN, RESISTANT TO CHEMICAL STAINS, BURNS, IMPACT. 1-PIECE SUPPORT FRAME CONSTRUCTED OF 300 STAINLESS STEEL, LIQUID SOAP DISPENSER, 18 GAUGE P-TRAP, SUPPLIES AND ANGLE VALVES, 300 STAINLESS STEEL CONTOURED ACCESS PANEL, SUPPLY AND WASTE CONNECTIONS SHALL BE FULLY CONCEALED WITHIN THE FRAME. VERIFY FINISH/COLOR WITH ARCHITECT. PROVIDE TMV-2 MIXING VALVE.
L-2	WALL HUNG LAVATORY SYSTEM	1/2"	1/2"	2"	1-1/2"	1-1/2"	ADA COMPLIANT WALL HUNG LAVATORY SYSTEM PROVIDE WITH MOLDED BOWL OF TERREON SOLID SURFACE MATERIAL, BATTERY OPERATED INFRARED CONTROL FAUCET, FAUCET TO BE PROVIDED BY THE MANUFACTURER OF LAVATORY, SINGLE TEMPERED WATER SUPPLY, COBBLESTONE COLOR, Ø.5 GPM FLOW RATE AERATOR, WAVE DESIGN, RESISTANT TO CHEMICAL STAINS, BURNS, IMPACT. 1-PIECE SUPPORT FRAME CONSTRUCTED OF 300 STAINLESS STEEL, LIQUID SOAP DISPENSER, 18 GAUGE P-TRAP, SUPPLY AND ANGLE VALVE, GRAY TRAP COVER, TRAP COVER TO CONCEAL SUPPLY AND WASTE CONNECTIONS. LANNONSTONE FINISH. VERIFY FINISH/COLOR WITH ARCHITECT. PROVIDE TMV-3 MIXING VALVE.
FS-1	FLOOR SINK	-	-	2"	1-1/2"	2"	FLOOR SINK PROVIDE WITH COMPLETE WITH ACID RESISTANT COATED INTERIOR AND POLISHED ALUMINUM DOME BOTTOM STRAINER. PROVIDE PROSET TRAP GUARD IN THE BOTTOM OF THE FLOOR SINK.
SS-1	MOP SINK	1/2"	1/2"	3"	2"	3"	MOP SINK, 28"x28" ENAMEL CAST IRON FLOOR MOUNTED CORNER SINK. 3" DRAIN WITH STRAINER AND SOCKET, REMOVABLE VINYL COATED GUARD, FAUCET WITH VACUUM BREAKER, SCREW DRIVER STOPS IN SHANKS, 5 FT. RUBBER HOSE AND WALL HOOK, AND 3-STATION MOP HOLDER.

CLIENT

UDOT CONNECTING COMMUNITIES
TIEFORK VISITORS CENTER
17845 E HIGHWAY 6
SPANISH FORK, UTAH 84660

DESIGNER

ARCHIPLEX GROUP
architecture · planning · design services
255 Crossroad Square
Salt lake City, UT 84115
P:(801) 961-7070
F:(801) 961-7373

CONSULTANTS

PVE Inc. Consulting Mechanical Electrical Engineers
1040 North 2200 West, Suite 100
Salt Lake City, UT 84116
Phone: (801) 359-3158
Fax: (801) 521-4114

THESE DOCUMENTS ARE INSTRUMENTS OF PROFESSIONAL SERVICE AND THE INFORMATION CONTAINED HEREIN IS INCOMPLETE UNLESS IN CONJUNCTION WITH A PV ENGINEERING'S INTERPRETATIONS, DECISIONS, OBSERVATIONS AND ANNOTATIONS. USE OR REPRODUCTION OF THESE DOCUMENTS IN WHOLE OR IN PART WITHOUT PV ENGINEERING'S CONSENT IS IN VIOLATION OF COMMON LAW, COPYRIGHTS, STATUTORY AND OTHER RESERVED RIGHTS. REFER TO ACT 17 U.S.C. PAR. 511 (1991), WHICH PREEMPTS STATE AND LOCAL PUBLIC RECORD ACTS. REFER TO ACT 17 U.S.C. PAR. 301 (1991).

PROFESSIONAL SEAL

REGISTERED PROFESSIONAL ENGINEER — ALAN D. SPENDLOVE 166911 — STATE OF UTAH

ISSUE

MARK	DATE	DESCRIPTION
	8-09	CONSTRUCTION DOCUMENTS
	6-22-09	PS & E REVIEW
	3-09	95% REVIEW SUBMITTAL
	1-5-09	50% REVIEW SUBMITTAL

DFCM PROJECT NO:	08264900
DFCM CONTRACT NO:	097130
ARCHIPLEX PROJECT NO:	0832.01
DRAWN BY:	JB
CHECKED BY:	ADS
PVE PROJECT NO:	08277.00.01
DATE:	APRIL 2009

SHEET TITLE

PLUMBING LEGENDS AND SCHEDULES

P001

Copyright (C) 2007 by PVE, Inc. Salt Lake City, Utah. All rights reserved. Unauthorized copying and/or use is illegal and subject to prosecution.

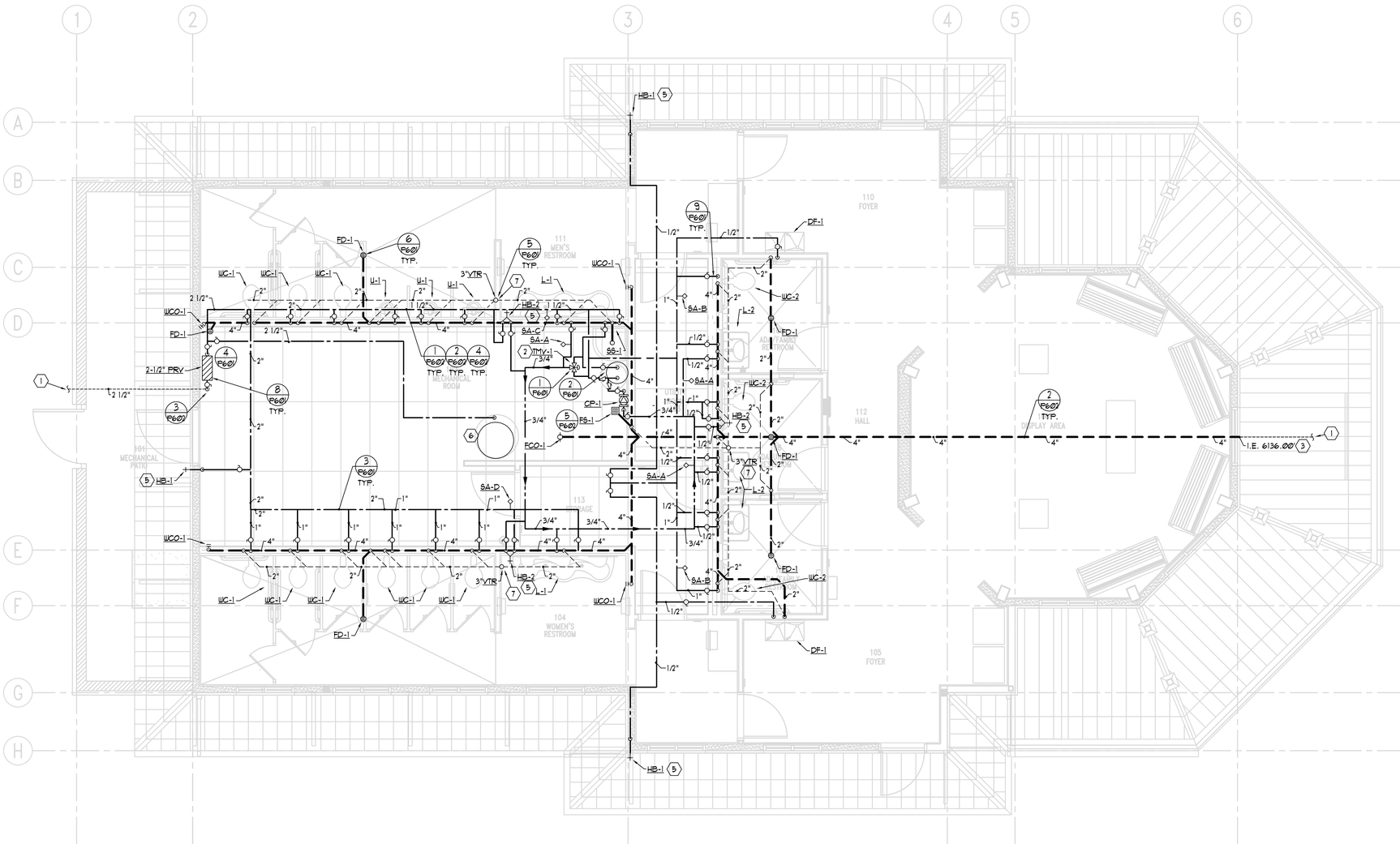

PLUMBING FLOOR PLAN

1 / P201

SCALE: 1/4" = 1' - 0"

3' 0 2' 4' 6' 8'

KEYED NOTES:

1. RUN UTILITY LINE 5' OUTSIDE BUILDING FOR CONNECTION BY OTHERS.
2. MOUNT TMV-1 ON WALL ABOVE SS-1. SHOWN OFF SET FOR CLARITY.
3. SEE CIVIL DRAWINGS FOR INVERT ELEVATION. GENERAL CONTRACTOR IS TO COORDINATE WITH HIS SUBS TO VERIFY SITE SANITARY SEWER AND BUILDING SANITARY SEWER PIPE WILL PROPERLY CONNECT PRIOR TO INSTALLING ANY SANITARY PIPE IN THE SITE OR BUILDING. IF A PROBLEM EXIST, THE CONTRACTOR IS TO INFORM THE ARCHITECT OF THE PROBLEM PRIOR TO INSTALLING ANY PIPE. IF PIPE IS INSTALLED AND A PROBLEM ARISES, THE CONTRACTOR, AT HIS EXPENSE, SHALL PERFORM ANY WORK REQUIRED SUCH THAT THE SANITARY PIPE CAN BE INSTALLED CORRECTLY TO CODE STANDARDS.
4. COORDINATE PIPING SO PIPES ARE NOT INSTALLED OVER ELECTRICAL PANELS.
5. INSTALL HB 18" ABOVE FINISH GRADE.
6. DOMESTIC WATERBLADDER TANK, 185 GALLONS, 30"DX80" HIGH, OPERATING WEIGHT 2150 LBS. 250 PSI WORKING PRESSURE. PRECHARGED TO 60 PSI. ANCHOR TO WALL SIMILIAR TO WATER HEATER.
7. PAINT ALL EXPOSED VENT THROUGH ROOF PIPES TO MATCH EXTERIOR ROOF COLOR.

GENERAL NOTES:

1. COORDINATE PIPING WITH ELECTRICAL SO PIPES ARE NOT INSTALLED OVER ELECTRICAL PANELS.

CLIENT

UDOT CONNECTING COMMUNITIES

TIEFORK VISITORS CENTER
17845 E HIGHWAY 6
SPANISH FORK, UTAH 84660

DESIGNER

ARCHIPLEX GROUP
architecture · planning · design services
255 Crossroad Square
Salt lake City, UT 84115
P:(801) 961-7070
F:(801) 961-7373

CONSULTANTS

PVE Inc.
Consulting Mechanical Electrical Engineers
1040 North 2200 West, Suite 100
Salt Lake City, UT 84116
Phone: (801) 359-3158
Fax: (801) 521-4114

THESE DOCUMENTS ARE INSTRUMENTS OF PROFESSIONAL SERVICE AND THE INFORMATION CONTAINED HEREIN IS INCOMPLETE UNLESS IN CONJUNCTION WITH A PV ENGINEERING'S INTERPRETATIONS, DECISIONS, OBSERVATIONS AND ADMINISTRATIONS. USE OR REPRODUCTION OF THESE DOCUMENTS IN WHOLE OR IN PART WITHOUT PV ENGINEERING'S CONSENT IS IN VIOLATION OF COMMON LAW COPYRIGHTS, STATUTORY AND OTHER RESERVED RIGHTS. REFER TO ACT 17 U.S.C. PAR. 511 (1991), WHICH PREEMPTS STATE AND LOCAL PUBLIC RECORD ACTS. REFER TO ACT 17 U.S.C. PAR. 301 (1991).

PROFESSIONAL SEAL

REGISTERED PROFESSIONAL ENGINEER
ALAN D. SPENDLOVE
166911
STATE OF UTAH

ISSUE

MARK	DATE	DESCRIPTION
	8-09	CONSTRUCTION DOCUMENTS
	6-22-09	PS & E REVIEW
	3-09	95% REVIEW SUBMITTAL
	1-5-09	50% REVIEW SUBMITTAL

DFCM PROJECT NO:	08264900
DFCM CONTRACT NO:	097130
ARCHIPLEX PROJECT NO:	0832.01
DRAWN BY:	JB
CHECKED BY:	ADS
PVE PROJECT NO:	08277.00.01
DATE:	APRIL 2009

SHEET TITLE

PLUMBING FLOOR PLAN

P201

Copyright (C) 2007 by PVE, Inc. Salt Lake City, Utah. All rights reserved. Unauthorized copying and/or use is illegal and subject to prosecution.

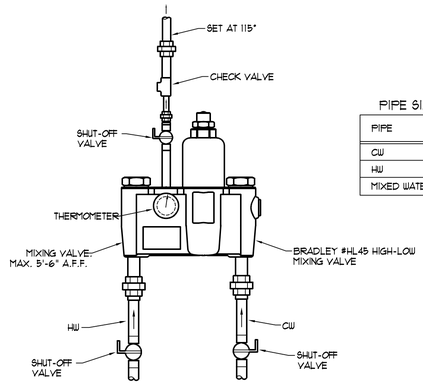

PIPE SIZE TABLE

PIPE	BLDG.
CW	1-1/4"
HW	1-1/4"
MIXED WATER	1-1/2"

1 / P601 HIGH-LOW TEMPERATURE MIXING VALVE
NO SCALE

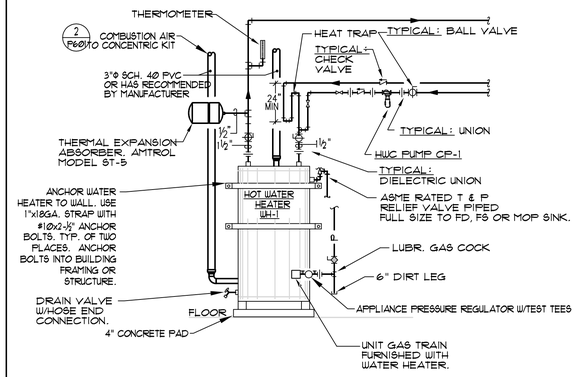

2 / P601 GAS FIRED WATER HEATER
NO SCALE

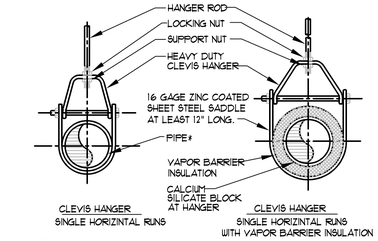

NOTE:

INSTALL 20 MIL THICK PVC ISOLATION TAPE BETWEEN PIPE AND HANGER FOR DISSIMILAR MATERIAL. WRAP TAPE AROUND PIPE (DUCT TAPE OR ELECTRICIAN TAPE IS NOT ACCEPTABLE)

SUPPORT PIPE HANGERS FROM BUILDING STRUCTURE.

3 / P601 PIPE HANGERS DETAIL
NO SCALE

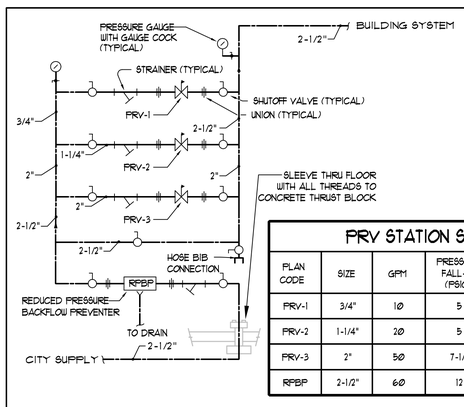

PRV STATION SCHEDULE

PLAN CODE	SIZE	GPM	PRESSURE FALL-OFF (PSIG)	MANUFACTURER & MODEL NO.
PRV-1	3/4"	10	5	WATTS #2236
PRV-2	1-1/4"	20	5	WATTS #2236
PRV-3	2"	50	7-1/2	WATTS #2236
RPBP	2-1/2"	60	12	WATTS #009M2QT-S

4 / P601 PRV STATION W/BYPASS DETAIL
NO SCALE

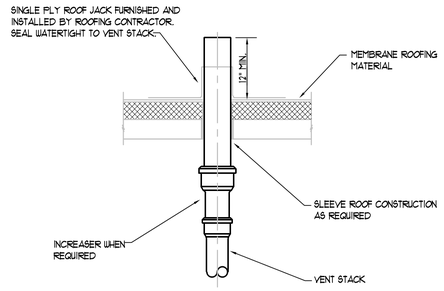

NOTE:
PAINT EXTERIOR PORTION TO MATCH ROOF.

5 / P601 VENT THROUGH ROOF DETAIL
NO SCALE

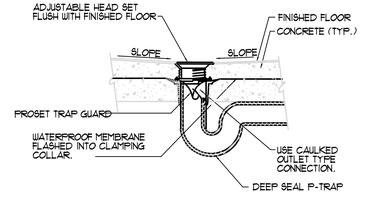

6 / P601 FLOOR DRAIN W/TRAP GUARD DETAIL
NO SCALE

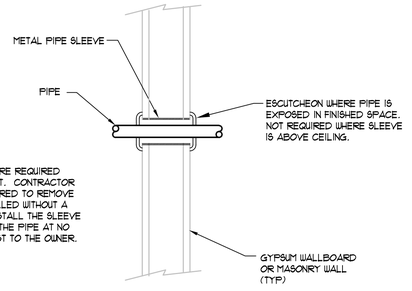

NOTE:
PIPE SLEEVES ARE REQUIRED ON THIS PROJECT. CONTRACTOR SHALL BE REQUIRED TO REMOVE ANY PIPE INSTALLED WITHOUT A PIPE SLEEVE, INSTALL THE SLEEVE AND REINSTALL THE PIPE AT NO ADDITIONAL COST TO THE OWNER.

7 / P602 PIPING THRU GYPSUM WALL
NO SCALE

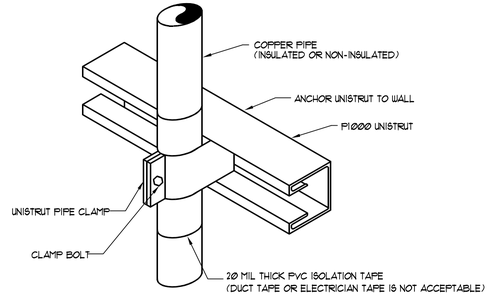

8 / P601 PIPE SUPPORT DETAIL
NO SCALE

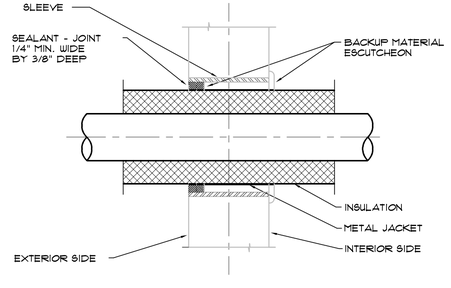

9 / P601 PIPE SLEEVE FOR INSULATED PIPE THRU WALL
NO SCALE

CLIENT

UDOT CONNECTING COMMUNITIES
TIEFORK VISITORS CENTER
17845 E HIGHWAY 6
SPANISH FORK, UTAH 84660

DESIGNER

ARCHIPLEX GROUP
architecture · planning · design services
255 Crossroad Square
Salt lake City, UT 84115
P:(801) 961-7070
F:(801) 961-7373

CONSULTANTS

PVE Inc. Consulting Mechanical Electrical Engineers
1040 North 2200 West, Suite 100
Salt Lake City, UT 84116
Phone: (801) 359-3158
Fax: (801) 521-4114

THESE DOCUMENTS ARE INSTRUMENTS OF PROFESSIONAL SERVICE AND THE INFORMATION CONTAINED HEREIN IS INCOMPLETE UNLESS IN CONJUNCTION WITH A PV ENGINEERING'S INTERPRETATIONS, DECISIONS, OBSERVATIONS AND ADMINISTRATIONS. USE OR REPRODUCTION OF THESE DOCUMENTS IN WHOLE OR IN PART WITHOUT PV ENGINEERING'S CONSENT IS IN VIOLATION OF COMMON LAW. COPYRIGHTS, STATUTORY AND OTHER RESERVED RIGHTS REFER TO ACT 17 U.S.C. PAR. 511 (1991), WHICH PREEMPTS STATE AND LOCAL PUBLIC RECORD ACTS. REFER TO ACT 17 U.S.C. PAR. 301 (1991).

PROFESSIONAL SEAL

REGISTERED PROFESSIONAL ENGINEER — ALAN D. SPENDLOVE 166911 — STATE OF UTAH

ISSUE

MARK	DATE	DESCRIPTION
	8-09	CONSTRUCTION DOCUMENTS
	6-22-09	PS & E REVIEW
	3-09	95% REVIEW SUBMITTAL
	1-5-09	50% REVIEW SUBMITTAL

DFCM PROJECT NO:	08264900
DFCM CONTRACT NO:	097130
ARCHIPLEX PROJECT NO:	0832.01
DRAWN BY:	JB
CHECKED BY:	ADS
PVE PROJECT NO:	08277.00.01
DATE:	APRIL 2009

SHEET TITLE

PLUMBING DETAILS

P601

Copyright (C) 2007 by PVE, Inc. Salt Lake City, Utah. All rights reserved. Unauthorized copying and/or use is illegal and subject to prosecution.

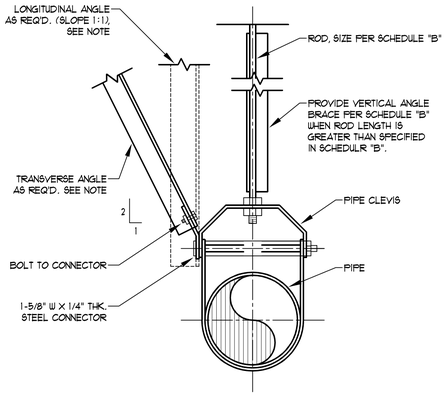

SCHEDULE "B" TRANSVERSE BRACING FOR PIPE						
PIPE SIZE INCHES	BOLTS TO ANGLES	LONGITUDAL, TRANSVERSE & VERTICAL ANGLES	ROD DIAMETER INCHES	MAXIMUM ROD LENGTH	MAXIMUM INTERVAL OF BRACES IN FEET	
					40-S STEEL OR CAST IRON	COPPER TUBE
1	3/8"	1-1/2" X 1-1/2" X 3/16"	3/8"	19"	24.2	12.1
1-1/4	3/8"	1-1/2" X 1-1/2" X 3/16"	3/8"	19"	24.2	12.1
1-1/2	3/8"	1-1/2" X 1-1/2" X 3/16"	3/8"	19"	27.5	13.2
2	3/8"	1-1/2" X 1-1/2" X 3/16"	1/2"	25"	31.9	15.4
2-1/2	3/8"	2" X 2" X 5/16"	1/2"	25"	35.2	16.5
3	3/8"	2" X 2" X 5/16"	1/2"	25"	37.4	18.7
3-1/2	3/8"	2" X 2" X 5/16"	1/2"	25"	39.6	19.8
4	3/8"	2" X 2" X 5/16"	5/8"	31"	42.9	20.9
5	1/2"	2" X 2" X 5/16"	5/8"	31"	45.1	22.0
6	1/2"	2" X 2" X 5/16"	3/4"	37"	49.5	24.2
8	1/2"	2-1/2" X 2-1/2" X 1/4"	7/8"	43"	53.9	28.6
10	1/2"	3" X 3" 1/4"	7/8"	43"	59.4	30.8

PIPING BRACING NOTES:

1. DESIGN SUPPORT SYSTEM FOR SEISMIC ZONE 4.
2. REFERENCE SMACNA SEISMIC RESTRAINT MANUAL. ALTERNATE SEISMIC RESTRAINT METHODS CAN BE FOUND IN SMACNA SEISMIC RESTRAINT MANUAL.
3. SEISMIC BRACING IS REQUIRED FOR ALL PIPING 2-1/2" AND LARGER.
4. DO NOT USE BRANCH SECTIONS TO BRACE PIPING MAINS.
5. PROVIDE FLEXIBLE COUPLINGS AT PENETRATIONS THROUGH BUILDING SEISMIC AND EXPANSION JOINTS AND WHERE PIPING IS RIGIDLY CONNECTED TO EQUIPMENT.
6. FOR EQUIPMENT REQUIRING SEISMIC BRACING, INSTALL BRACES AS FOLLOWS:
   DO NOT USE JOIST BRIDGING FOR SUPPORT OF ANY LOAD.
   a. IF SUPPORTING LOADS ABOVE 50 LBS. BETWEEN JOIST PANEL POINTS REINFORCE BOTTOM CORD OF JOIST AS PER STRUCTURAL ENGINEERS REQUIREMENTS. REFER TO SUPPORT DETAILS ON STRUCTURAL DRAWINGS.

1 / P602 — TRANSVERSE PIPING SWAY BRACING DETAIL

NOT TO SCALE

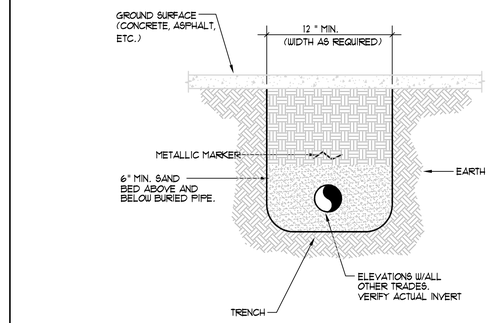

2 / P602 — BURIED PIPE DETAIL

NO SCALE

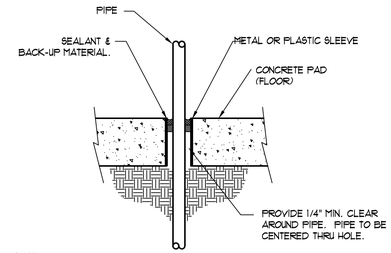

NOTE:
ALL PIPES TO BE SLEEVED. THIS INCLUDES WATER, SEWER ETC.

3 / P602 — PIPING THRU ON GRADE FLOOR

NO SCALE

PIPING

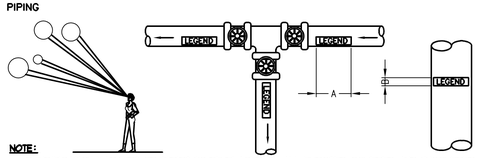

NOTE:
IDENDIFICATION MARKERS OR STRIPS TO BE PLACED ON ALL EXPOSED COVERED AND UNCOVERED PIPES AT 50'-0" INTERVALS AND AT ALL VALVES, BRANCHES, CHANGE IN DIRECTION OF FLOW AND ON BOTH SIDES OF WALLS WHERE PIPES PASS THROUGH SAME, ARROWS OF SAME COLOR AS IDENTIFICATION MARKERS SHALL ALSO BE PLACED ON PIPES POINTING AWAY FROM MARKER INDICATION DIRECTION OF FLOW.

OUTSIDE DIAMETER OF PIPE OR COVERING		LENGTH OF COLOR FIELD A		SIZE OF LETTERS B	
INCHES	MM	INCHES	MM	INCHES	MM
3/4" TO 1-1/4"	19 TO 32	8"	200	1/2"	13
1-1/2" TO 2"	38 TO 51	8"	200	3/4"	19
2-1/2" TO 6"	64 TO 150	12"	300	1-1/4"	32
8" TO 10"	200 TO 250	24"	600	2-1/2"	64
OVER 10"	OVER 250	32"	800	3-1/2"	89

SERVICE	BACKGROUND OR COLOR BAND	IDENTIFICATION MARKER
DOMESTIC COLD WATER	GREEN	WHITE ON GREEN
DOMESTIC HOT WATER	YELLOW	BLACK ON YELLOW
DOMESTIC HOT WATER RETURN	YELLOW	BLACK ON YELLOW
FIRE PROTECTION (SPRINKLER)	RED	WHITE ON RED
NATURAL/PROPANE GAS	YELLOW	BLACK ON YELLOW
SANITARY DRAIN	GREEN	WHITE ON GREEN
STORM WATER	GREEN	WHITE ON GREEN

4 / P602 — PIPE IDENTIFICATION DETAIL

NO SCALE

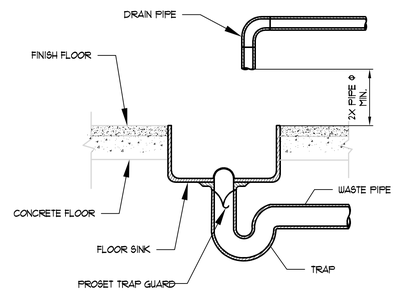

5 / P602 — INDIRECT WASTE DETAIL

NO SCALE

CLIENT

UDOT CONNECTING COMMUNITIES

TIEFORK VISITORS CENTER
17845 E HIGHWAY 6
SPANISH FORK, UTAH 84660

DESIGNER

ARCHIPLEX GROUP
architecture · planning · design services
255 Crossroad Square
Salt lake City, UT 84115
P:(801) 961-7070
F:(801) 961-7373

CONSULTANTS

PVE Inc. Consulting Mechanical Electrical Engineers
1040 North 2200 West, Suite 100
Salt Lake City, UT 84116
Phone: (801) 359-3158
Fax: (801) 521-4114

THESE DOCUMENTS ARE INSTRUMENTS OF PROFESSIONAL SERVICE AND THE INFORMATION CONTAINED HEREIN IS INCOMPLETE UNLESS IN CONJUNCTION WITH A PV ENGINEERING'S INTERPRETATIONS, DECISIONS, OBSERVATIONS AND ADMINISTRATIONS. USE OR REPRODUCTION OF THESE DOCUMENTS IN WHOLE OR IN PART WITHOUT PV ENGINEERING'S CONSENT IS IN VIOLATION OF COMMON LAW COPYRIGHTS, STATUTORY AND OTHER RESERVED RIGHTS REFER TO ACT 17 U.S.C. PAR. 511 (1991), WHICH PREEMPTS STATE AND LOCAL PUBLIC RECORD ACTS. REFER TO ACT 17 U.S.C. PAR. 301 (1991).

PROFESSIONAL SEAL

REGISTERED PROFESSIONAL ENGINEER — ALAN D. SPENDLOVE 166911 — STATE OF UTAH

ISSUE

MARK	DATE	DESCRIPTION
	8-09	CONSTRUCTION DOCUMENTS
	6-22-09	PS & E REVIEW
	3-09	95% REVIEW SUBMITTAL
	1-5-09	50% REVIEW SUBMITTAL

DFCM PROJECT NO:	08264900
DFCM CONTRACT NO:	097130
ARCHIPLEX PROJECT NO:	0832.01
DRAWN BY:	JB
CHECKED BY:	ADS
PVE PROJECT NO:	08277.00.01
DATE:	APRIL 2009

SHEET TITLE

PLUMBING DETAILS

P602

ELECTRICAL SYMBOLS

NOTE: SYMBOLS SHOWN IN THIS SCHEDULE ARE TYPICAL. NOT ALL ARE USED IN THIS PROJECT. DASHED SYMBOLS INDICATE EXISTING FIXTURE, EQUIPMENT, ETC.

SYMBOL	DESCRIPTION	MOUNTING HEIGHT
	ELECTRICAL WIRING	
	CROSS LINES INDICATE NUMBER OF CONDUCTORS GROUNDING CONDUCTORS NOT INCLUDED.	N/A
	BRANCH CIRCUIT CONCEALED IN CEILING OR WALL	N/A
	BRANCH CIRCUIT CONCEALED IN GROUND OR FLOOR	N/A
A-13	BRANCH CIRCUIT HOMERUNS TO PANEL w/PANEL & CIRCUIT NUMBER DESIGNATIONS.	N/A
	CONDUIT RISER UP	N/A
	CONDUIT RISER DOWN	N/A
	CONDUIT STUB (CAP CONDUIT)	AS NOTED
CT	CABLE TRAY	AS NOTED
BD	BUS DUCT	AS NOTED
	ELECTRICAL POWER	
J	JUNCTION BOX	AS NOTED
	DUPLEX RECEPTACLE	+16"
	QUAD RECEPTACLE	+16"
	SPLIT WIRED DUPLEX RECEPTACLE	+16"
WP	DUPLEX RECEPTACLE WEATHERPROOF AND GFCI	+16"
	DUPLEX RECEPTACLE OUTLET WITH GROUND FAULT CIRCUIT INTERRUPTION PROTECTION	+16"
EWC	RECEPTACLE ELECTRIC WATER COOLER (EWC) WITH GROUND FAULT CIRCUIT INTERRUPTION PROTECTION	+16"
	EQUIPMENT RECEPTACLE	+16"
	SPECIAL PURPOSE RECEPTACLE	+16"
	DUPLEX RECEPTACLE FLOOR	FLOOR
	QUAD RECEPTACLE FLOOR	FLOOR
	POWER/TELEPHONE POLE	FLOOR
	MUTI-OUTLET WIREWAY	+46"
	ELECTRICAL CONNECTIONS	
	NON-FUSED DISCONNECT SWITCH	TOP AT 6'-0"
	FUSED DISCONNECT SWITCH	TOP AT 6'-0"
	MOTOR STARTER/DISCONNECT SWITCH COMBINATION NON-FUSED	TOP AT 6'-0"
	MOTOR STARTER/DISCONNECT SWITCH COMBINATION FUSED	TOP AT 6'-0"
	MOTOR STARTER ONLY	TOP AT 6'-0"
VFD	VARIABLE FREQUENCY DRIVE	+78"
	MOTOR CONNECTION	AS NOTED
	ELECTRICAL DISTRIBUTION	
T	TELEPHONE COMPANY PEDESTAL	AS NOTED
GS	POWER COMPANY GROUND SLEEVE	AS NOTED
	POWER COMPANY SITE TRANSFORMER	AS NOTED
	HIGH VOLTAGE (277/480 VOLT) PANELBOARD	TOP AT 6'-0"
	LOW VOLTAGE (120/208 VOLT) PANELBOARD	TOP AT 6'-0"
	DRY TYPE TRANSFORMER	AS NOTED
	DISTRIBUTION SWITCHBOARD	AS NOTED
	TELEPHONE AND/OR DATA TERMINAL BOARD	AS NOTED
	ELECTRICAL DEVICES	
	PUSHBUTTON	+48"
	STOP/START STATION	+48"
EPO	"EMERGENCY POWER OFF" MUSHROOM TYPE BUTTON	+48"
T	LINE VOLTAGE THERMOSTAT	+48"
	CLOCK	AS NOTED
N	NURSE CALL BED/BATH STATION	+48"
	NURSE CALL LIGHT	+84"
NURS	NURSE CALL STATION PANEL	TOP AT 6'-0"

SYMBOL	DESCRIPTION	MOUNTING HEIGHT
	LIGHTING CONTROL	
$	SINGLE POLE SWITCH	+48"
$3	3-WAY SWITCH	+48"
$4	4-WAY SWITCH	+48"
$P	SWITCH WITH PILOT LIGHT	+48"
$D	DIMMER SWITCH	+48"
$K	KEYED SWITCH	+48"
$TM	TIMER SWITCH (SPRING WOUND)	+48"
$T	MANUAL STARTER WITH THERMAL OVERLOAD	AS NOTED
$L	LOW VOLTAGE SWITCH	+48"
$O	CONTROLLING SWITCH (LETTER INDICATES CONTROL CIRCUIT)	+48"
	SINGLE POLE SWITCH/OCCUPANCY SENSOR COMBINATION, MANUAL ON/AUTO OFF (WALL MOUNTED) DUAL TECHNOLOGY	+48"
	OCCUPANCY SENSOR DUAL TECHNOLOGY	CEILING
TS	TIME SWITCH	+60"
LC	LIGHTING CONTACTOR	+60"
P	PHOTOCELL	AS NOTED
	LIGHTING	
	FLUORESCENT FIXTURE (TYPICAL)	CEILING
EM	FLUORESCENT EMERGENCY FIXTURE (TYPICAL)	CEILING
	SURFACE MOUNTED FIXTURE	CEILING
	RECESSED FIXTURE	CEILING
	WALL MOUNTED FIXTURE	AS NOTED
	WALL MOUNTED EMERGENCY EGRESS FIXTURE	AS NOTED
	FLUORESCENT STRIP	CEILING
	TRACK LIGHTING	CEILING
	EMERGENCY LIGHTING UNIT	+84"
FXX	FIXTURE TYPE SYMBOL (ATTACHED TO FIXTURE SYMBOL)	N/A
	POST TOP AREA LIGHT POLE & FIXTURE	AS NOTED
	AREA LIGHT POLE AND FIXTURE (HEAD QTY AS SHOWN ON PLAN)	AS NOTED
	BOLLARD FIXTURE	GROUND
	FLOOD OR SPOT FIXTURE	AS NOTED
	WALL MOUNTED EXIT LIGHT (SINGLE FACE)	+84"
	WALL MOUNTED EXIT LIGHT (DOUBLE FACE)	+84"
	CEILING MOUNTED EXIT LIGHT (SINGLE FACE)	CEILING
	CEILING MOUNTED EXIT LIGHT (DOUBLE FACE)	CEILING
	TELECOMMUNICATIONS	
	TELEPHONE OUTLET	+16"
	COMPUTER DATA OUTLET	+16"
	VOICE / DATA OUTLET	+16"
	TELEPHONE OUTLET FLOOR	FLOOR
	COMPUTER DATA OUTLET FLOOR	FLOOR
	NETWORK AND VOICE OUTLET FLOOR	FLOOR
	REFERENCE SYMBOLS	
XX|X	FEEDER TAG (ONE LINE DIAGRAM)	N/A
A	REVISION TAG INDICATOR	N/A
X/EX	DETAIL INDICATOR: TOP DETAIL IDENTIFICATION BOTTOM INDICATES SHEET WHERE DETAIL IS LOCATED.	N/A
X-XX	MECHANICAL EQUIPMENT SYMBOL	N/A
X	KEYED NOTE REFERENCE	N/A

SYMBOL	DESCRIPTION	MOUNTING HEIGHT
	AUDIO / VIDEO	
TV	TELEVISION OUTLET	AS NOTED
V	VOLUME CONTROL	+48"
S	SPEAKER	CEILING
M	MICROPHONE JACK	+16"
A	AUXILIARY JACK	+16"
IC	INTERCOM STATION	+48"
	BELL	+84"
	CHIME	+84"
	FIRE ALARM	
F	FIRE ALARM MANUAL PULL STATION	SEE DETAIL
	FIRE ALARM HORN/STROBE	SEE DETAIL
	FIRE ALARM HORN/STROBE WITH GUARD	SEE DETAIL
WP	FIRE ALARM HORN/STROBE WATERPROOF	SEE DETAIL
	FIRE ALARM STROBE	SEE DETAIL
	SMOKE DETECTOR	CEILING
B	SMOKE DETECTOR BATTERY-BACKED	CEILING
D	DUCT SMOKE DETECTOR	IN DUCT
E	SMOKE DETECTOR (ELEVATOR RECALL)	CEILING
	HEAT DETECTOR	CEILING
	GAS DETECTOR	+16"
	DOOR HOLDER	AS NOTED
	PRESSURE SWITCH	AS NOTED
	FIRE ALARM FLOW SWITCH	AS NOTED
	FIRE ALARM TAMPER SWITCH	AS NOTED
	FIRE ALARM FIREFIGHTER PHONE	+48"
CM	CONTROL MODULE	AS NOTED
MM	MONITOR MODULE	AS NOTED
FSD	FIRE/SMOKE DAMPER	AS NOTED
R	FIRE ALARM RELAY	AS NOTED
GAA	FIRE ALARM GENERATOR ANNUNCIATOR	TOP AT 6'-0"
FST	FIRE ALARM TRANSMISSION (MONITORING) DEVICE	AS NOTED
FACP	FIRE ALARM CONTROL PANEL	TOP AT 6'-0"
FAA	FIRE ALARM REMOTE ANNUNCIATOR PANEL	TOP AT 6'-0"
	SECURITY	
	SECURITY SYSTEM DOOR CONTACT	DOOR JAMB
	SECURITY SYSTEM OVERHEAD DOOR CONTACT	AS NOTED
KP	SECURITY SYSTEM KEYPAD ARM/DISARM	+48"
	SECURITY SYSTEM DOOR ELECTRIC STRIKE	AS NOTED
	SECURITY SYSTEM MAGNETIC DOOR LOCK	AS NOTED
REX	REQUEST TO EXIT MOTION DETECTOR	AS NOTED
	SECURITY SYSTEM AREA MOTION SENSOR	AS NOTED
	SECURITY SYSTEM GLASS BREAK SENSOR	AS NOTED
CR	SECURITY SYSTEM CARD READER	+48"
AK	SECURITY SYSTEM DOOR ACCESS KEYPAD	+48"
	SECURITY SYSTEM CCTV CAMERA	AS NOTED
DVR	DIGITAL VIDEO RECORDER	AS NOTED
MON	SECURITY SYSTEM CCTV MONITOR	AS NOTED
SERT	SECURITY SYSTEM PANEL	TOP AT 6'-0"
PS	POWER SUPPLY LOW VOLTAGE	AS NOTED

ABBREVIATIONS

AFF	ABOVE FINISHED FLOOR	EWC	ELECTRIC WATER COOLER	(N)	NEW
AFP	ARC FAULT PROTECTOR	EWH	ELECTRIC WATER HEATER	NIC	NOT IN CONTRACT
AIC	AMP INTERRUPTING CURRENT (SYMMETRICAL)	(F)	FUTURE	NL	NIGHT LIGHT
AL	ALUMINUM	FA	FIRE ALARM	OFCI	OWNER FURNISHED CONTRACTOR INSTALLED
BG	BELOW GRADE	FLA	FULL LOAD AMPS	OFOI	OWNER FURNISHED OWNER INSTALLED
C	CONDUIT	GFI	GROUND FAULT INTERRUPTER	PNL	PANEL
CFCI	CONTRACTOR FURNISHED CONTRACTOR INSTALLED	GFP	GROUND FAULT PROTECTOR	(R)	RELOCATE
CKT	CIRCUIT	GRC	GALVANIZED RIGID CONDUIT	TVSS	TRANSIENT VOLTAGE SURGE SUPPRESSOR
CO	CONDUIT ONLY	GRND	GROUND	TYP	TYPICAL
CU	COPPER	IG	ISOLATED GROUND	UNO	UNLESS NOTED OTHERWISE
C/W	COMPLETE WITH	MCB	MAIN CIRCUIT BREAKER	WP	WEATHER PROOF
E	EMERGENCY	MCC	MOTOR CONTROL CENTER	(X)	DEMOLISH/DELETE
(E)	EXISTING	MH	MANHOLE	XMR	TRANSFORMER
EPO	EMERGENCY POWER OFF	MLO	MAIN LUGS ONLY		

* THIS IS A TYPICAL ABBREVIATION LIST. NOT ALL ABBREVIATIONS AE USED ON THIS PROJECT.

GENERAL NOTES:

1. THE ELECTRICAL CONTRACTOR SHALL REVIEW AND COORDINATE WITH ARCHITECTURAL, CIVIL, STRUCTURAL, MECHANICAL, PLUMBING AND OTHER DRAWINGS PRIOR TO BID.
2. SUBMIT SHOP DRAWINGS IN ACCORDANCE WITH THE SPECIFICATIONS BOUND IN A THREE RING BINDER, INDEXED IN A NEAT AND ORDERLY MANNER WITH TYPE AND MODEL NUMBERS INDICATED. SUBMITTALS SHALL INCLUDE BUT NOT LIMITED TO: LIGHTING FIXTURES, LAMPS, WIRING DEVICES, OCCUPANCY SENSORS, CONTACTORS, TIME CLOCKS, PHOTOCELLS, RELAYS, SWITCHBOARDS, PANELBOARDS, MOTOR CONTROL CENTERS, SAFETY SWITCHES, MOTOR STARTERS, OVERCURRENT PROTECTION DEVICES, TRANSFORMERS, CONDUCTORS OVER 600 VOLTS AND ALL SPECIAL SYSTEMS SUCH AS FIRE ALARM, LIGHTING CONTROLS, SECURITY SYSTEMS, SOUND SYSTEMS ETC.
3. IT IS THE INTENT OF THESE DRAWINGS AND SPECIFICATIONS TO ESTABLISH A STANDARD OF QUALITY. MANUFACTURES CATALOG NUMBERS ARE LISTED AS A BASIS OF DESIGN. ELECTRICAL CONTRACTOR SHALL SUBMIT PRODUCT INFORMATION THAT DEVIATES FROM ORIGINAL DESIGN INTENT AND SPECIFICATION.
4. CONTRACTOR SHALL SECURE AND PAY FOR ALL NECESSARY BUILDING PERMITS AND INSPECTION FEES.
5. ALL IMPACT FEES ASSOCIATED WITH CITY, UTILITY OR SERVICE COMPANIES FOR BUT NOT LIMITED TO POWER, TELEPHONE, FIBER OPTIC & INTERNET SHALL BE THE RESPONSIBILITY OF THE OWNER.
6. THE ELECTRICAL CONTRACTOR SHALL BE RESPONSIBLE TO COORDINATE WITH THE GENERAL CONTRACTOR TO PROVIDE AND INSTALL TEMPORARY POWER FOR PROJECT CONSTRUCTION AS REQUIRED. ALL ENERGY COSTS ARE THE RESPONSIBILITY OF THE GENERAL CONTRACTOR.
7. THE ELECTRICAL CONTRACTOR SHALL NOTIFY AND COOPERATE WITH THE MECHANICAL CONTRACTOR SUCH THAT NO DUCTS, PIPING, OR EQUIPMENT FOREIGN TO THE OPERATION OF THE ELECTRICAL EQUIPMENT SHALL BE PERMITTED TO BE INSTALLED IN, ENTER, OR PASS THROUGH ELECTRICAL ROOMS OR SPACES, OR ABOVE OR BELOW ELECTRICAL EQUIPMENT IN OTHER AREAS. THE ELECTRICAL CONTRACTOR SHALL COMPLY WITH THE MOST RECENT VERSION OF THE NATIONAL ELECTRICAL CODE REGARDING CLEARANCES REQUIRED AROUND THE PANELBOARD(S).
8. DO NOT SCALE DRAWINGS VERIFY DIMENSIONS IN FIELD PRIOR TO MAKING ANY ROUGH-INS.
9. ELECTRICAL CONTRACTOR SHALL REVIEW ALL ARCHITECTS ELEVATIONS, SECTIONS AND FLOOR PLANS PRIOR TO ROUGH IN OF ELECTRICAL DEVICE JUNCTION BOXES.
10. CONSULT ARCHITECTS REFLECTED CEILING PLANS FOR EXACT LOCATIONS OF LIGHTING FIXTURES, SPEAKERS, SMOKE DETECTORS ETC.
11. ELECTRICAL CONTRACTOR SHALL MEET WITH THE CEILING AND MECHANICAL CONTRACTORS TO COORDINATE LOCATIONS, CLEARANCES, CEILING TYPES AND ROUGH-IN REQUIREMENTS OF ALL LIGHTING FIXTURES PRIOR TO DUCT, PIPING AND CEILING INSTALLATIONS.
12. VERIFY EXACT LOCATION OF EQUIPMENT TO BE FURNISHED BY OTHERS PRIOR TO ROUGH-IN.
13. ELECTRICAL CONTRACTOR SHALL VERIFY ALL EQUIPMENT DIMENSIONS AND LOCATIONS BEFORE BEGINNING ROUGH-INS. CONSULT CONTRACT DOCUMENT DRAWINGS AND SHOP DRAWINGS TO VERIFY AND MAINTAIN REQUIRED CLEARANCES.
14. ELECTRICAL ROOM DRAWINGS ARE FOR REFERENCE ONLY OF EQUIPMENT QUANTITIES. ELECTRICAL CONTRACTOR SHALL PROVIDE SHOP DRAWINGS OF ELECTRICAL ROOMS SHOWING DIMENSIONS AND CLEARANCES OF ALL EQUIPMENT AND ELECTRICAL GEAR PROVIDED. COORDINATE LAYOUT WITH ONE-LINE DRAWINGS.
15. CONTRACTOR SHALL VERIFY ACTUAL ELECTRICAL LOADS FROM NAMEPLATE RATINGS OF EACH PIECE OF EQUIPMENT REQUIRING POWER. BRING ANY DISCREPANCIES TO THE ATTENTION OF THE PROJECT ENGINEER.
16. WORK SHALL BE PERFORMED IN A WORKMANLIKE MANNER, PER INDUSTRY STANDARD AND TO THE SATISFACTION OF THE ARCHITECT AND ENGINEER.
17. WORK, MATERIALS AND EQUIPMENT SHALL CONFORM TO THE LATEST EDITIONS OF LOCAL, STATE AND NATIONAL CODES, STANDARDS AND ORDINANCES.
18. FINAL CONNECTIONS TO EQUIPMENT SHALL BE MADE AS PER MANUFACTURERS WRITTEN INSTRUCTIONS AND APPROVED WIRING DIAGRAMS AND DETAILS. IT SHALL BE THE CONTRACTORS RESPONSIBILITY TO PROVIDE ALL MATERIALS AND EQUIPMENT COMPATIBLE WITH EQUIPMENT ACTUALLY SUPPLIED.
19. ALL EMPTY RACEWAY SYSTEMS SHALL HAVE A 200LB RATED PULL CORD INSTALLED AND SHALL BE IDENTIFIED AT EACH JUNCTION, PULL AND TERMINATION POINT USING PERMANENT MARKER IN THE BOX. ID SHALL INDICATE INTENDED USE OF CONDUIT, ORIGINATION AND TERMINATION POINTS OF EACH INDIVIDUAL CONDUIT.
20. ALL PENETRATIONS OF FIRE RATED FLOORS, CEILING AND WALLS SHALL BE SEALED WITH UL LISTED AND RATED FIRE STOP MATERIAL TO MAINTAIN FIRE RATING OF ASSEMBLY.
21. ELECTRICAL BOXES SHALL NOT BE LOCATED IN MASONRY OR CONCRETE COLUMNS, BOND BEAMS OR GROUTED CELLS OF MASONRY WALLS ADJACENT TO OPENINGS WITHOUT COORDINATION WITH THE MASONRY CONTRACTOR.
22. WIRE FOR GENERAL USE SHALL BE COPPER 75° C RATED . WIRING FOR HID FIXTURES WITHIN 5' OF FLUORESCENT BALLAST SHALL BE COPPER, MINIMUM 90° C RATED. CONDUCTOR SIZES INDICATED ARE FOR INSTALLATION IN A MAXIMUM 30° C AMBIENT TEMPERATURE ENVIRONMENT. CONDUCTOR AMPACITY SHALL BE DERATED FOR HIGHER AMBIENT INSTALLATIONS.
23. CONDUCTORS HAVE BEEN SIZED FOR VOLTAGE DROP AS PER PLANS AND DIRECT ROUTING. ANY DEVIATION IN CONDUIT ROUTING MAY INCREASE THE WIRE AND CONDUIT SIZE. ELECTRICAL CONTRACTOR IS RESPONSIBLE TO INSURE PROPER OPERATING VOLTAGE ON ALL CIRCUITS BOTH INTERIOR AND EXTERIOR. THE VOLTAGE DROP SHALL NOT EXCEED 3% FOR BRANCH CIRCUITS AND 2% FOR FEEDERS FOR A TOTAL OF 5% COMBINED TOGETHER OF BRANCH AND FEEDER CIRCUITS TO THE FARTHEST OUTLET.
24. ALL WIRING IN PATIENT TREATMENT AREAS SHALL BE ENCLOSED IN METAL RACEWAYS. ALL RECEPTACLES, LIGHTING FIXTURES, ETC. SHALL HAVE A SEPARATE INSULATED GROUNDING CONDUCTOR FROM EACH DEVICE TO THE BRANCH PANEL. ELECTRICAL CONTRACTOR SHALL COMPLY WITH ARTICLE 517 OF THE 2008 NATIONAL ELECTRICAL CODE (e.g. WIRING, DEVICE PLACEMENT, ETC.).
25. ELECTRICAL CONTRACTOR SHALL PROVIDE ALL UTILITY METERING EQUIPMENT TO COMPLY WITH THE STANDARDS OF THE LOCAL OR PROJECT SPECIFIC POWER COMPANY.
26. VERIFY EXACT LOCATIONS OF ALL NEW AND EXISTING UNDERGROUND SITE UTILITIES, PIPING AND RACEWAY SYSTEMS PRIOR TO TRENCHING. A UTILITY LOCATING COMPANY SUCH AS "BLUE STAKE" OR EQUAL SHALL BE USED TO VERIFY AND MARK UTILITIES BEFORE TRENCHING. PROVIDE NECESSARY TRENCHING, BACKFILL, EXCAVATION, SUPPORTS, SERVICE FEEDERS, (CONDUIT AND/OR WIRE), PULL BOXES, TRANSFORMER PADS, SAW CUTTING AND PATCHING, CONCRETE PAVING ETC. REQUIRED. BACKFILL TRENCHES TO 90% COMPACTION. PATCHING SHALL MATCH EXISTING SURROUNDING SURFACES. CONTRACTOR SHALL OBTAIN AND VERIFY UTILITY COMPANY DRAWINGS AND REQUIREMENTS FOR ALL SITE UTILITIES. ELECTRICAL CONTRACTOR SHALL ALSO COORDINATE ELECTRICAL RELATED UTILITIES WITH THE CIVIL, MECHANICAL, AND SITE EXCAVATION CONTRACTORS.
27. PULLBOXES, CABINETS, ETC. MOUNTED ON THE EXTERIOR OF THE BUILDING SHALL BE WEATHERPROOF TYPE WITH HINGED GASKETED LOCKABLE COVERS SECURED WITH TAMPERPROOF SCREWS.
28. SPLICES IN EXTERIOR PULLBOXES AND MANHOLES SHALL BE MADE WATERPROOF USING "SCOTCAST" SPLICE KIT OR APPROVED EQUAL. SEAL ENDS OF CONDUITS AND DUCTS ENTERING BOXES WITH "DUCTSEAL" OR EQUAL.
29. ELECTRICAL CONTRACTOR SHALL TEST AND VERIFY ALL SYSTEMS WITH PROJECT ENGINEER DURING FINAL INSPECTION TO INSURE PROPER OPERATION. IF TESTS RESULT IN DEFECT THE CONTRACTOR SHALL MAKE ANY CORRECTIONS NECESSARY AT NO ADDITIONAL COSTS TO THE OWNER.
30. PROVIDE RECORD DRAWINGS IN ACCORDANCE WITH THE PROJECT SPECIFICATIONS.
31. THE CONTRACTOR SHALL GUARANTEE THE INSTALLATION AGAINST DEFECTS IN MATERIALS AND WORKMANSHIP, WHICH MAY OCCUR UNDER NORMAL USAGE FOR A PERIOD OF ONE YEAR AFTER SUBSTANTIAL COMPLETION. DEFECTS SHALL BE PROMPTLY CORRECTED.

Copyright (C) 2009 by PVE, Inc. Salt Lake City, Utah. All rights reserved. Unauthorized copying and/or use is illegal and subject to prosecution.

By: khaacke; Apr 8, 2009 - 8:27 AM, Date Plotted: Aug 13, 2009 - 10:11 AM X:\Projects\2008\08277.00.01 - Tie Fork Rest Area\E100 - 08277.01.dwg

CLIENT

LIDOT CONNECTING COMMUNITIES

TIEFORK VISITORS CENTER
17845 E HIGHWAY 6
SPANISH FORK, UTAH 84660

DESIGNER

ARCHIPLEX GROUP
architecture · planning · design services
255 Crossroad Square
Salt lake City, UT 84115
P:(801) 961-7070
F:(801) 961-7373

CONSULTANTS

PVE Inc.
Consulting Mechanical | Electrical Engineers
1040 North 2200 West, Suite 100
Salt Lake City, UT 84116
Phone: (801) 359-3158
Fax: (801) 521-4114

THESE DOCUMENTS ARE INSTRUMENTS OF PROFESSIONAL SERVICE AND THE INFORMATION CONTAINED HEREIN IS INCOMPLETE UNLESS IN CONJUNCTION WITH A PV ENGINEERING'S INTERPRETATIONS, DECISIONS, OBSERVATIONS AND ADMINISTRATIONS. USE OR REPRODUCTION OF THESE DOCUMENTS IN WHOLE OR IN PART WITHOUT PV ENGINEERING'S CONSENT IS IN VIOLATION OF COMMON LAW, COPYRIGHTS, STATUTORY AND OTHER RESERVED RIGHTS. REFER TO ACT 17 U.S.C. PAR. 511 (1991); WHICH PREEMPTS STATE AND LOCAL PUBLIC RECORD ACTS. REFER TO ACT 17 U.S.C. PAR. 301 (1991).

PROFESSIONAL SEAL

REGISTERED PROFESSIONAL ENGINEER
No. 154967
DEAN P. LEVORSEN
STATE OF UTAH

ISSUE

MARK	DATE	DESCRIPTION
	8-09	CONSTRUCTION DOCUMENTS
	6-22-09	PS & E REVIEW
	3-09	95% REVIEW SUBMITTAL
	1-5-09	50% REVIEW SUBMITTAL

DFCM PROJECT NO:	08264900
DFCM CONTRACT NO:	097130
ARCHIPLEX PROJECT NO:	0832.01
DRAWN BY:	TH
CHECKED BY:	RKR
PVE PROJECT NO:	08277.00.01
DATE:	APRIL 2009

SHEET TITLE

ELECTRICAL SYMBOLS AND NOTES

E100

By: jhutchings: Aug 13, 2009 - 9:35 AM, Date Plotted: Aug 13, 2009 - 10:09 AM X:\Projects\2008\08277.00.01- Tie Fork Rest Area\E101 - 08277.01.dwg

GENERAL NOTES:

1. ELECTRICAL CONTRACTOR TO REFER TO THE CIVIL ENGINEER'S DRAWING AND COORDINATE ELECTRICAL INSTALLATION WITH ALL UTILITIES.
2. ELECTRICAL CONTRACTOR TO VERIFY ALL THE UTILITY COMPANY SERVICE (POWER, TELEPHONE, ETC.) TERMINATION POINTS DURING THE BIDDING PROCESS. PROVIDE CONDUIT AS REQUIRED TO THE BUILDING TO ACCOMMODATE ALL UTILITY COMPANY SERVICES. REPORT ANY CONFLICTING CONDITIONS TO THE ARCHITECT.

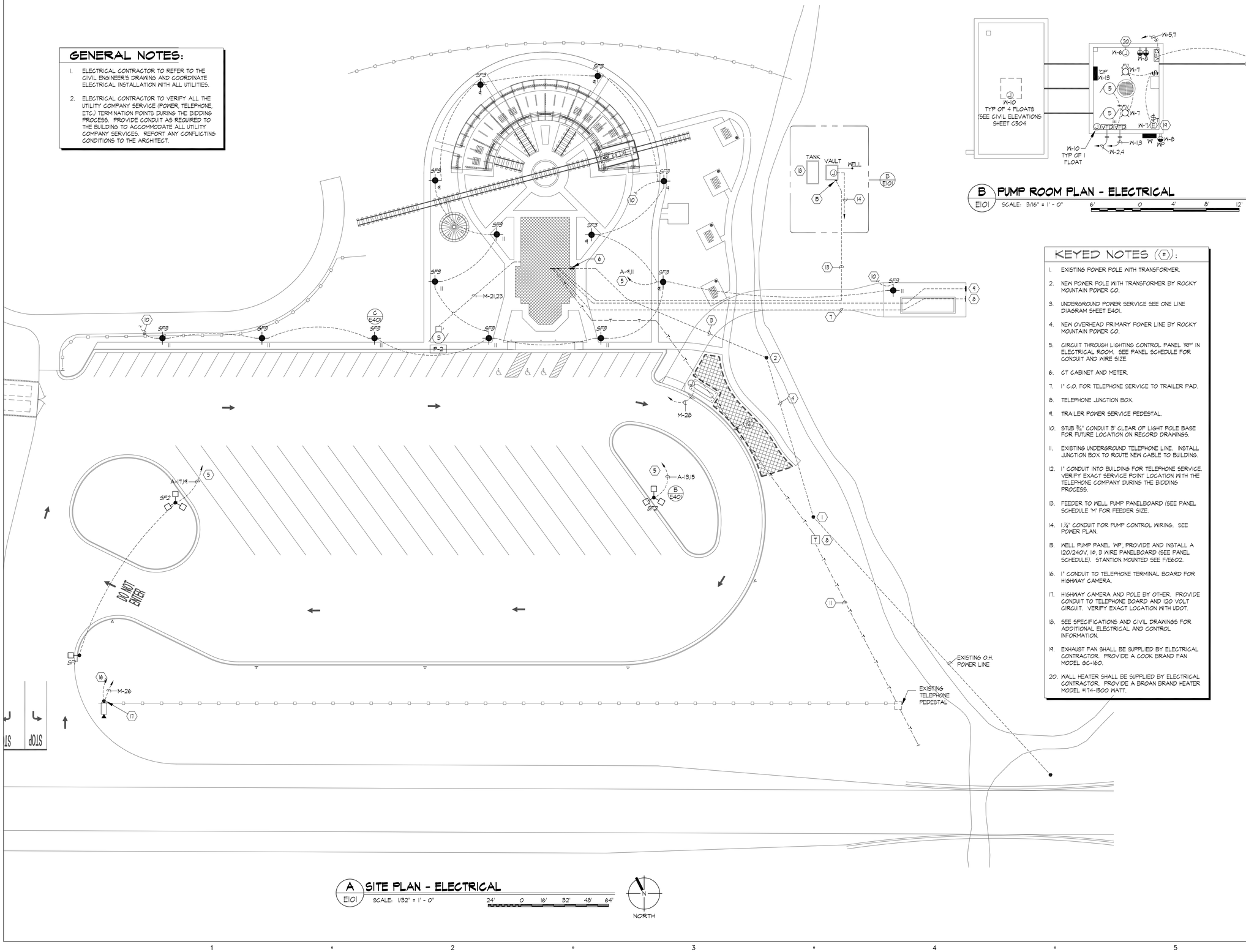

B E101 PUMP ROOM PLAN - ELECTRICAL

SCALE: 3/16" = 1' - 0"

KEYED NOTES (#):

1. EXISTING POWER POLE WITH TRANSFORMER.
2. NEW POWER POLE WITH TRANSFORMER BY ROCKY MOUNTAIN POWER CO.
3. UNDERGROUND POWER SERVICE SEE ONE LINE DIAGRAM SHEET E401.
4. NEW OVERHEAD PRIMARY POWER LINE BY ROCKY MOUNTAIN POWER CO.
5. CIRCUIT THROUGH LIGHTING CONTROL PANEL 'RP' IN ELECTRICAL ROOM. SEE PANEL SCHEDULE FOR CONDUIT AND WIRE SIZE.
6. CT CABINET AND METER.
7. 1" C.O. FOR TELEPHONE SERVICE TO TRAILER PAD.
8. TELEPHONE JUNCTION BOX.
9. TRAILER POWER SERVICE PEDESTAL.
10. STUB ¾" CONDUIT 3' CLEAR OF LIGHT POLE BASE FOR FUTURE LOCATION ON RECORD DRAWINGS.
11. EXISTING UNDERGROUND TELEPHONE LINE. INSTALL JUNCTION BOX TO ROUTE NEW CABLE TO BUILDING.
12. 1" CONDUIT INTO BUILDING FOR TELEPHONE SERVICE. VERIFY EXACT SERVICE POINT LOCATION WITH THE TELEPHONE COMPANY DURING THE BIDDING PROCESS.
13. FEEDER TO WELL PUMP PANELBOARD (SEE PANEL SCHEDULE 'M' FOR FEEDER SIZE.
14. 1 ¼" CONDUIT FOR PUMP CONTROL WIRING. SEE POWER PLAN.
15. WELL PUMP PANEL 'WP', PROVIDE AND INSTALL A 120/240V, 1Ø, 3 WIRE PANELBOARD (SEE PANEL SCHEDULE). STANTION MOUNTED SEE F/E602.
16. 1" CONDUIT TO TELEPHONE TERMINAL BOARD FOR HIGHWAY CAMERA.
17. HIGHWAY CAMERA AND POLE BY OTHER. PROVIDE CONDUIT TO TELEPHONE BOARD AND 120 VOLT CIRCUIT. VERIFY EXACT LOCATION WITH UDOT.
18. SEE SPECIFICATIONS AND CIVIL DRAWINGS FOR ADDITIONAL ELECTRICAL AND CONTROL INFORMATION.
19. EXHAUST FAN SHALL BE SUPPLIED BY ELECTRICAL CONTRACTOR. PROVIDE A COOK BRAND FAN MODEL GC-160.
20. WALL HEATER SHALL BE SUPPLIED BY ELECTRICAL CONTRACTOR. PROVIDE A BROAN BRAND HEATER MODEL #174-1500 WATT.

A E101 SITE PLAN - ELECTRICAL

SCALE: 1/32" = 1' - 0"

24' 0 16' 32' 48' 64'

Copyright (C) 2009 by PVE, Inc. Salt Lake City, Utah. All rights reserved. Unauthorized copying and/or use is illegal and subject to prosecution.

CLIENT

UDOT CONNECTING COMMUNITIES

TIEFORK VISITORS CENTER
17845 E HIGHWAY 6
SPANISH FORK, UTAH 84660

DESIGNER

ARCHIPLEX GROUP
architecture · planning · design services
255 Crossroad Square
Salt lake City, UT 84115
P:(801) 961-7070
F:(801) 961-7373

CONSULTANTS

PVE Inc. Consulting Mechanical Electrical Engineers
1040 North 2200 West, Suite 100
Salt Lake City, UT 84116
Phone: (801) 359-3158
Fax: (801) 521-4114

THESE DOCUMENTS ARE INSTRUMENTS OF PROFESSIONAL SERVICE AND THE INFORMATION CONTAINED HEREIN IS INCOMPLETE UNLESS IN CONJUNCTION WITH A PV ENGINEERING'S INTERPRETATIONS, DECISIONS, OBSERVATIONS AND ADMINISTRATIONS. USE OR REPRODUCTION OF THESE DOCUMENTS IN WHOLE OR IN PART WITHOUT PV ENGINEERING'S CONSENT IS IN VIOLATION OF COMMON LAW, COPYRIGHTS, STATUTORY AND OTHER RESERVED RIGHTS. REFER TO ACT 17 U.S.C. PAR. 511 (1991), WHICH PREEMPTS STATE AND LOCAL PUBLIC RECORD ACTS. REFER TO ACT 17 U.S.C. PAR. 301 (1991).

PROFESSIONAL SEAL

REGISTERED PROFESSIONAL ENGINEER — No. 154867 — DEAN P LEVORSEN — STATE OF UTAH

ISSUE

MARK	DATE	DESCRIPTION
	8-09	CONSTRUCTION DOCUMENTS
	6-22-09	PS & E REVIEW
	3-09	95% REVIEW SUBMITTAL
	1-5-09	50% REVIEW SUBMITTAL

DFCM PROJECT NO:	08264900
DFCM CONTRACT NO:	097130
ARCHIPLEX PROJECT NO:	0832.01
DRAWN BY:	TH
CHECKED BY:	RKR
PVE PROJECT NO:	08277.00.01
DATE:	APRIL 2009

SHEET TITLE

ELECTRICAL SITE PLAN

E101

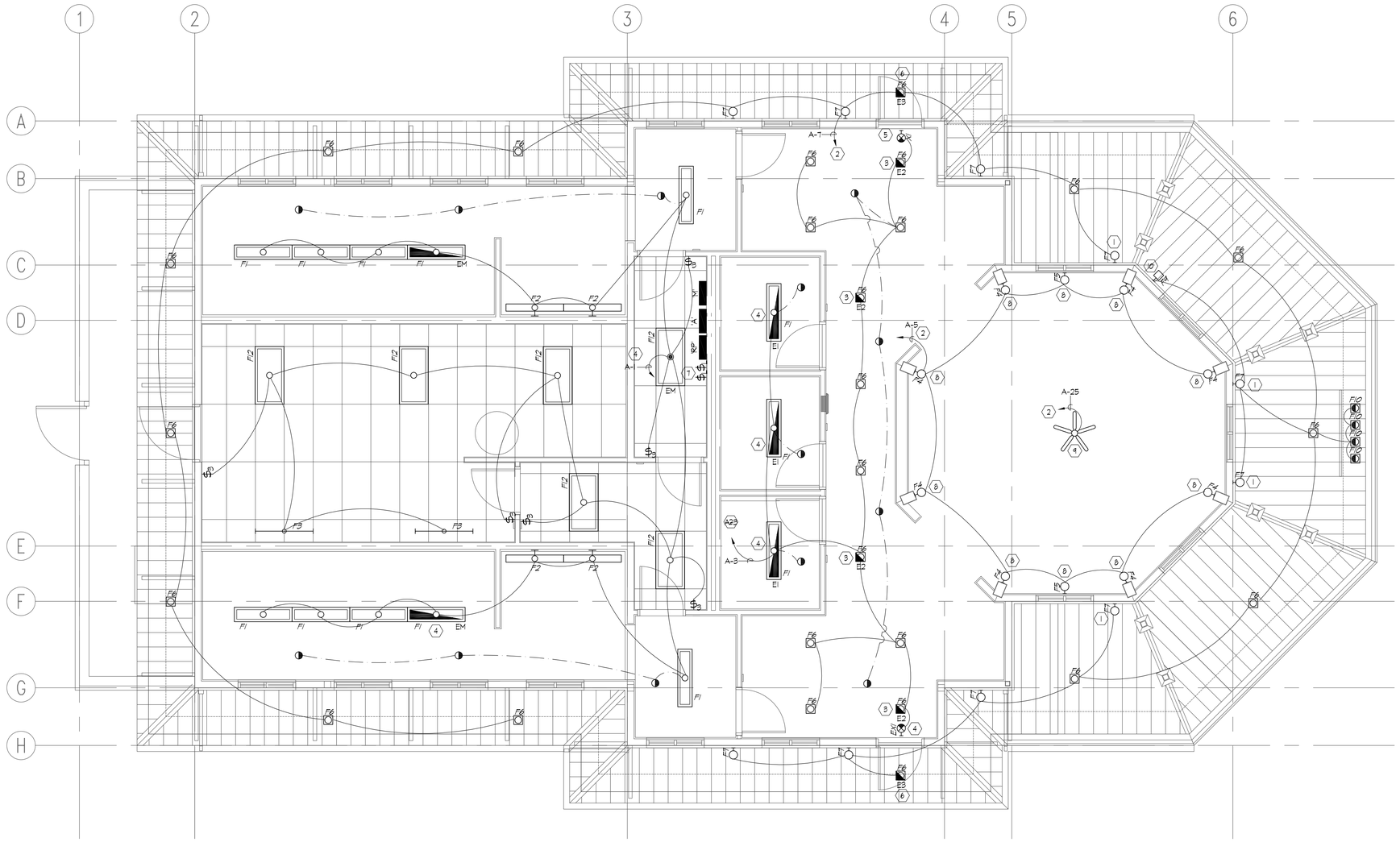

A FLOOR PLAN - LIGHTING

E201 SCALE: 1/4" = 1'-0"

3' 0 2' 4' 6' 8'

NORTH

GENERAL NOTES:

1. ALL WALL MOUNTED MOTION SENSORS SHALL BE A DUAL TECHNOLOGY MOTION SENSOR WITH INTEGRAL OVERRIDE SWITCH. MOTION SENSOR TO MOUNT IN A STANDARD SWITCH BOX. MOTION SENSOR TO HAVE A FIFTEEN MINUTE TIME DELAY SET AT TEN MINUTES. USE WATT-STOPPER SENSOR SWITCH OR APPROVED EQUAL.
2. ALL CEILING MOUNTED MOTION SENSORS SHALL BE A DUAL TECHNOLOGY MOTION SENSOR WITH POWER PACK AS REQUIRED TO CONTROL LIGHTING. MOTION SENSOR TO HAVE A FIFTEEN MINUTE DELAY SET AT TEN MINUTES. CONTRACTOR TO SUBMIT FLOOR PLAN TO MOTION SENSOR SUPPLIER FOR FACTORY TO LOCATE MOTION SENSOR FOR OPTIMAL PERFORMANCE TO AVOID NUISANCE SHUT OFF OF LIGHTING. MANUFACTURERS LAYOUT PLAN TO BE PART OF SUBMITTALS. PROVIDE SUFFICIENT BOX DEPTH AND CORRECT PLASTER RING TO ACCOMMODATE ACTUAL RELAY UNIT AND OCCUPANCY SENSOR INSTALLED. PROVIDE PROPER SEPARATION OF 120 VOLT AND CLASS 2 WIRING AS NECESSARY IN ACCORDANCE WITH NATIONAL ELECTRICAL CODE. USE WATT-STOPPER SENSOR SWITCH OR APPROVED EQUAL.
3. SUB-LETTERS NEXT TO SWITCHES INDICATE SWITCHING ASSIGNMENTS. ELECTRICAL CONTRACTOR IS TO FURNISH AND INSTALL ALL NECESSARY CONDUIT, WIRE, JUNCTION BOXES, ETC., AS REQUIRED TO EXTEND CIRCUITING FROM WALL BOX AND/OR THE LIGHTING CONTROL PANEL TO FIXTURES FOR SWITCHING ASSIGNMENTS. LOWER CASE LETTERS ON OR NEAR FIXTURES INDICATE CONTROLLING SWITCHES. SWITCH LEG(S) NOT SHOWN.
4. ARCHITECTURAL REFLECTED CEILING PLAN TAKES PRECEDENCE OVER THIS PLAN FOR FIXTURE LOCATIONS AND PLACEMENT. SEE ARCHITECTURAL INTERIOR ELEVATIONS FOR WALL MOUNTED FIXTURE MOUNTING HEIGHTS.
5. ALL WIRING DEVICES SHALL BE GRAY IN COLOR WITH STAINLESS STEEL COVERPLATES.

KEYED NOTES (⬢):

1. LIGHT FIXTURE LOCATED ON WALL ABOVE (SEE ARCHITECTURAL EXTERIOR ELEVATIONS AND DRAWINGS FOR EXACT MOUNTING HEIGHTS AND LOCATIONS.
2. CIRCUIT VIA THE LIGHTING CONTROL PANEL 'RP' (SEE LIGHTING CONTROL PANEL DETAIL AND SCHEDULE). PROVIDE UNSWITCHED, CONTINUOUS CIRCUIT(S) AS REQUIRED.
3. EMERGENCY LIGHT FIXTURE TO BE UNSWITCHED, PROVIDE CONTINUOUS CIRCUIT (SEE EMERGENCY BALLAST OPERATION DETAIL).
4. EMERGENCY LIGHT FIXTURE TO BE SWITCHED (SEE EMERGENCY BALLAST OPERATION DETAIL).
5. EXIT SIGN TO BE UNSWITCHED, PROVIDE CONTINUOUS CIRCUIT.
6. EMERGENCY EGRESS FIXTURE ON EM BATTERY PACK (SEE EMERGENCY BALLAST OPERATION DETAIL).
7. LOW VOLTAGE LIGHTING CONTROL INTERIOR AND EXTERIOR LIGHTING CONTROL MANUAL OVERRIDE SWITCHES (SEE LIGHTING CONTROL DETAIL).
8. SEE ARCHITCTURAL ELEVATIONS FOR MOUNTING LOCATION AND HEIGHT.
9. CELING FAN TO BE SELECTED BY THE ARCHITECT AND PROVIDED AND INSTALLED BY THE ELECTRICAL CONTRACTOR.
10. FLAGPOLE LIGHT MOUNTED ON WALL ABOVE. VERIFY EXACT MOUNTING LOCATION WITH THE PROJECT ARCHITECT PRIOR TO ROUGH-IN.

Copyright (C) 2009 by PVE, Inc. Salt Lake City, Utah. All rights reserved. Unauthorized copying and/or use is illegal and subject to prosecution.

By: jhutchings: Aug 13, 2009 - 7:29 AM, Date Plotted: Aug 13, 2009 - 10:08 AM X:\Projects\2008\08277.00.01- Tie Fork Rest Area\E201 - 08277.01.dwg

CLIENT

UDOT CONNECTING COMMUNITIES

TIEFORK VISITORS CENTER
17845 E HIGHWAY 6
SPANISH FORK, UTAH 84660

DESIGNER

ARCHIPLEX GROUP
architecture · planning · design services
255 Crossroad Square
Salt lake City, UT 84115
P:(801) 961-7070
F:(801) 961-7373

CONSULTANTS

PVE Inc.
Consulting Mechanical Electrical Engineers
1040 North 2200 West, Suite 100
Salt Lake City, UT 84116
Phone: (801) 359-3158
Fax: (801) 521-4114

THESE DOCUMENTS ARE INSTRUMENTS OF PROFESSIONAL SERVICE AND THE INFORMATION CONTAINED HEREIN IS INCOMPLETE UNLESS IN CONJUNCTION WITH A PV ENGINEERING'S INTERPRETATIONS, DECISIONS, OBSERVATIONS AND ADMINISTRATIONS. USE OR REPRODUCTION OF THESE DOCUMENTS IN WHOLE OR IN PART WITHOUT PV ENGINEERING'S CONSENT IS IN VIOLATION OF COMMON LAW, COPYRIGHTS, STATUTORY AND OTHER RESERVED RIGHTS. REFER TO ACT 17 U.S.C. PAR. 511 (1991), WHICH PREEMPTS STATE AND LOCAL PUBLIC RECORD ACTS. REFER TO ACT 17 U.S.C. PAR. 301 (1991).

PROFESSIONAL SEAL

REGISTERED PROFESSIONAL ENGINEER
No. 154867
DEAN P. LEVORSEN
STATE OF UTAH

ISSUE

MARK	DATE	DESCRIPTION
	8-09	CONSTRUCTION DOCUMENTS
	6-22-09	PS & E REVIEW
	3-09	95% REVIEW SUBMITTAL
	1-5-09	50% REVIEW SUBMITTAL

DFCM PROJECT NO:	08264900
DFCM CONTRACT NO:	097130
ARCHIPLEX PROJECT NO:	0832.01
DRAWN BY:	TH
CHECKED BY:	RKR
PVE PROJECT NO:	08277.00.01
DATE:	APRIL 2009

SHEET TITLE

ELECTRICAL LIGHTING PLAN

E201

By: khaacke; Aug 12, 2009 - 3:18 PM, Date Plotted: Aug 13, 2009 - 10:07 AM X:\Projects\2008\08277.00.01- Tie Fork Rest Area\E202 - 08277.01.dwg

Copyright (C) 2009 by PVE, Inc. Salt Lake City, Utah. All rights reserved. Unauthorized copying and/or use is illegal and subject to prosecution.

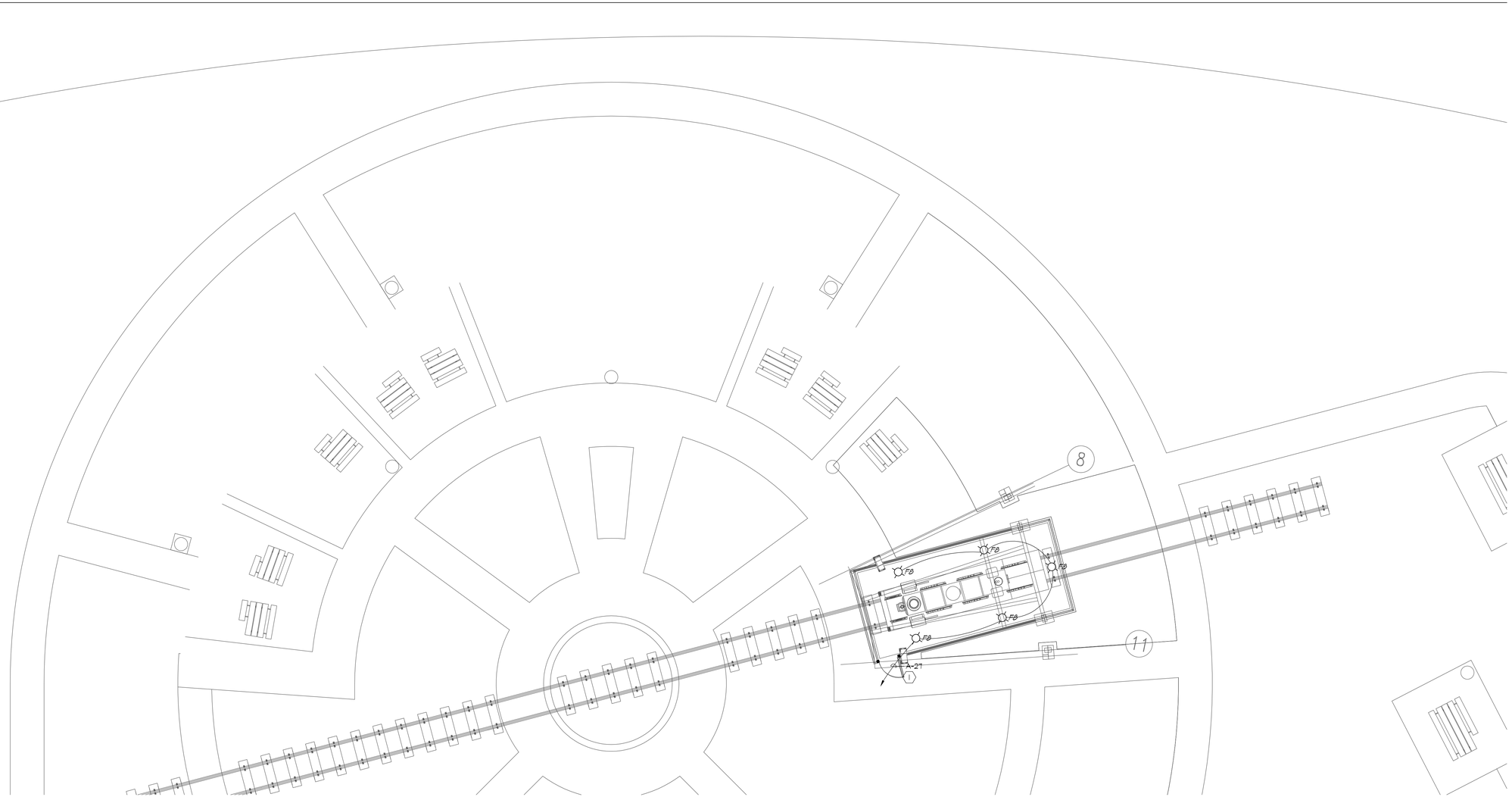

KEYED NOTES (#):

1. CIRCUIT VIA THE LIGHTING CONTROL PANEL 'RP' (SEE LIGHTING CONTROL PANEL DETAIL AND SCHEDULE).

A E202 ROUND HOUSE- LIGHTING
SCALE: 1/8" = 1'-0"

6' 0 4' 8' 12' 16'

NORTH

CLIENT

UDOT CONNECTING COMMUNITIES

TIEFORK VISITORS CENTER
17845 E HIGHWAY 6
SPANISH FORK, UTAH 84660

DESIGNER

ARCHIPLEX GROUP
architecture · planning · design services
255 Crossroad Square
Salt lake City, UT 84115
P:(801) 961-7070
F:(801) 961-7373

CONSULTANTS

PVE Inc.
Consulting Mechanical Electrical Engineers
1040 North 2200 West, Suite 100
Salt Lake City, UT 84116
Phone: (801) 359-3158
Fax: (801) 521-4114

THESE DOCUMENTS ARE INSTRUMENTS OF PROFESSIONAL SERVICE AND THE INFORMATION CONTAINED HEREIN IS INCOMPLETE UNLESS IN CONJUNCTION WITH A PV ENGINEERING'S INTERPRETATIONS, DECISIONS, OBSERVATIONS AND ADMINISTRATIONS. USE OR REPRODUCTION OF THESE DOCUMENTS IN WHOLE OR IN PART WITHOUT PV ENGINEERING'S CONSENT IS IN VIOLATION OF COMMON LAW COPYRIGHTS, STATUTORY AND OTHER RESERVED RIGHTS. REFER TO ACT 17 U.S.C. PAR. 511 (1991), WHICH PREEMPTS STATE AND LOCAL PUBLIC RECORD ACTS. REFER TO ACT 17 U.S.C. PAR. 301 (1991).

PROFESSIONAL SEAL

REGISTERED PROFESSIONAL ENGINEER
No. 154867
DEAN P. LEVORSEN
STATE OF UTAH

ISSUE

MARK	DATE	DESCRIPTION
	8-09	CONSTRUCTION DOCUMENTS
	6-22-09	PS & E REVIEW
	3-09	95% REVIEW SUBMITTAL
	1-5-09	50% REVIEW SUBMITTAL

DFCM PROJECT NO:	08264900
DFCM CONTRACT NO:	097130
ARCHIPLEX PROJECT NO:	0832.01
DRAWN BY:	TH
CHECKED BY:	RKR
PVE PROJECT NO:	08277.00.01
DATE:	APRIL 2009

SHEET TITLE

ROUND HOUSE LIGHTING PLAN

E202

By: khaacke; Aug 12, 2009 - 2:35 PM, Date Plotted: Aug 13, 2009 - 10:06 AM X:\Projects\2008\08277.00.01- Tie Fork Rest Area\E301 - 08277.01.dwg

Copyright (C) 2009 by PVE, Inc. Salt Lake City, Utah. All rights reserved. Unauthorized copying and/or use is illegal and subject to prosecution.

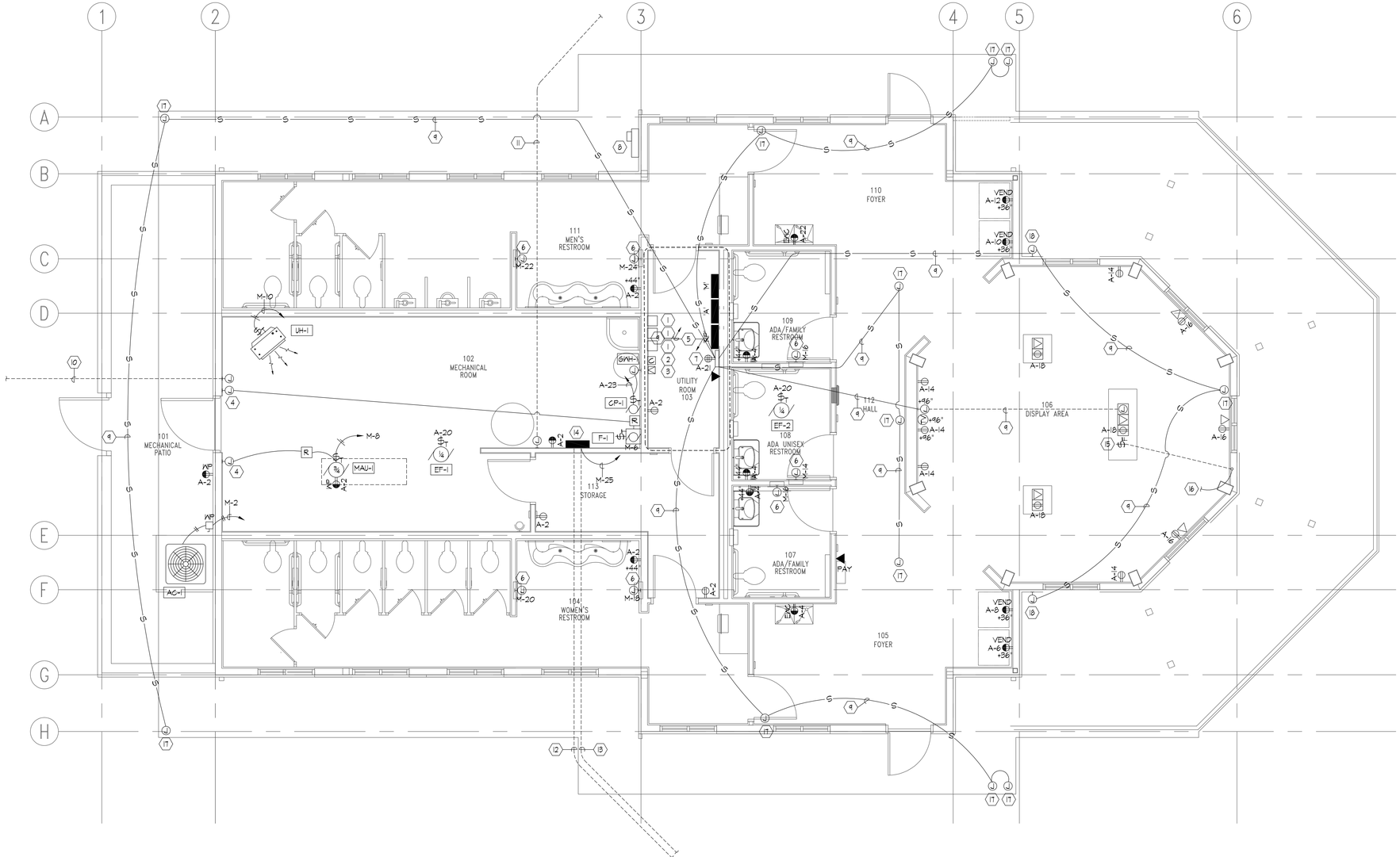

A FLOOR PLAN - POWER & SYSTEMS

E301 SCALE: 1/4" = 1'-0"

3' 0 2' 4' 6' 8'

NORTH

GENERAL NOTES:

1. ALL WIRING DEVICES SHALL BE GRAY IN COLOR WITH STAINLESS STEEL COVERPLATES.

KEYED NOTES (#):

1. SNOW MELTING SYSTEM TRANSFORMERS.
2. CONTACTOR PANEL WITH SNOW MELTING CONTROL PANEL ABOVE.
3. LIGHTING CONTROL PANEL.
4. INTERLOCK MOTORIZED DAMPER WITH MAU-1 OR F-1 VIA RELAY TO CLOSE WHEN UNIT IS OFF.
5. DEDICATED ELECTRICAL WORK SPACE. THE ELECTRICAL CONTRACTOR SHALL NOTIFY THE MECHANICAL CONTRACTOR THAT NO DUCTS, PIPING, OR EQUIPMENT FOREIGN TO THE OPERATION OF THE ELECTRICAL EQUIPMENT SHALL BE PERMITTED TO BE INSTALLED IN, ENTER, PASS THROUGH, ABOVE OR BELOW THE DEDICATED ELECTRICAL ROOMS OR SPACES. THE ELECTRICAL CONTRACTOR SHALL COMPLY WITH THE MOST RECENT VERSION OF THE NATIONAL ELECTRICAL CODE REGARDING CLEARANCES REQUIRED AROUND THE ELECTRICAL EQUIPMENT.
6. WALL MOUNTED HAND DRYER, SEE ARCHITECTURAL DRAWINGS AND ELEVATIONS FOR MOUNTING HEIGHT.
7. MAIN TELEPHONE CABINET (SEE RISER DIAGRAM).
8. EUSERC RATED METER/MAIN (SEE ONE LINE DIAGRAM).
9. ¾" CONDUIT WITH NYLON PULL STRING.
10. SPRINKLER CONTROLLER. STUB,CAP AND MARK A 2" CONDUIT FROM THE BUILDING EXTERIOR TO A POINT 5'-0" BEYOND THE EXTERIOR WALLS. PROVIDE 120 VOLT CIRCUIT TO THE CONTROLLER. COORDINATE THE EXACT LOCATION WITH THE LANDSCAPE SPRINKLER CONTRACTOR/SUPPLIER.
11. 1" CONDUIT WITH (4)-#12 THWN COPPER TO TO THE WELL PUMP FOR WATER SYSTEM CONTROLS. COORDINATE WITH THE CIVIL ENGINEERING DRAWINGS.
12. PROVIDE AND INSTALL A 1" CONDUIT WITH (3)-#10 THWN COPPER + (1)-#10 THWN COPPER GROUND TO TO THE SEPTIC TANK PUMP (SEE ELECTRICAL SITE PLAN).
13. PROVIDE AND INSTALL A 1" CONDUIT WITH (6)-#12 THWN COPPER FOR SEPTIC TANK CONTROLS AND ALARMS.
14. SEPTIC TANK PUMP CONTROLLER. PROVIDED BY OTHERS, INSTALLED AND CONNECTED BY THE ELECTRICAL CONTRACTOR.
15. CEILING FAN CONTROL, MOUNT IN CABINER AS DIRECTED BY THE ARCHITECT.
16. UP TO CEILING FAN.
17. JUNCTION BOX FOR FUTURE CCTV CAMERA.
18. JUNCTION BOX FOR FUTURE CCTV CAMERA, MOUNTED ABOVE THE ROOF.

CLIENT

UDOT CONNECTING COMMUNITIES

TIEFORK VISITORS CENTER
17845 E HIGHWAY 6
SPANISH FORK, UTAH 84660

DESIGNER

ARCHIPLEX GROUP
architecture · planning · design services
255 Crossroad Square
Salt lake City, UT 84115
P:(801) 961-7070
F:(801) 961-7373

CONSULTANTS

PVE Inc. Consulting Mechanical Electrical Engineers
1040 North 2200 West, Suite 100
Salt Lake City, UT 84116
Phone: (801) 359-3158
Fax: (801) 521-4114

THESE DOCUMENTS ARE INSTRUMENTS OF PROFESSIONAL SERVICE AND THE INFORMATION CONTAINED HEREIN IS INCOMPLETE UNLESS IN CONJUNCTION WITH A PV ENGINEERING'S INTERPRETATIONS, DECISIONS, OBSERVATIONS AND ADMINISTRATIONS. USE OR REPRODUCTION OF THESE DOCUMENTS IN WHOLE OR IN PART WITHOUT PV ENGINEERING'S CONSENT IS IN VIOLATION OF COMMON LAW, COPYRIGHTS, STATUTORY AND OTHER RESERVED RIGHTS. REFER TO ACT 17 U.S.C. PAR. 511 (1991), WHICH PREEMPTS STATE AND LOCAL PUBLIC RECORD ACTS. REFER TO ACT 17 U.S.C. PAR. 301 (1991).

PROFESSIONAL SEAL

REGISTERED PROFESSIONAL ENGINEER
No. 154867
DEAN P. LEVORSEN
STATE OF UTAH

ISSUE

MARK	DATE	DESCRIPTION
	8-09	CONSTRUCTION DOCUMENTS
	6-22-09	PS & E REVIEW
	3-09	95% REVIEW SUBMITTAL
	1-5-09	50% REVIEW SUBMITTAL

DFCM PROJECT NO:	08264900
DFCM CONTRACT NO:	097130
ARCHIPLEX PROJECT NO:	0832.01
DRAWN BY:	TH
CHECKED BY:	RKR
PVE PROJECT NO:	08277.00.01
DATE:	APRIL 2009

SHEET TITLE

ELECTRICAL POWER PLAN

E301

By: khaacke; Aug 12, 2009 – 2:18 PM, Date Plotted: Aug 13, 2009 – 10:04 AM X:\Projects\2008\08277.00.01– Tie Fork Rest Area\E302 – 08277.01.dwg

ZMESH UNDER NON-METALLIC SHINGLES

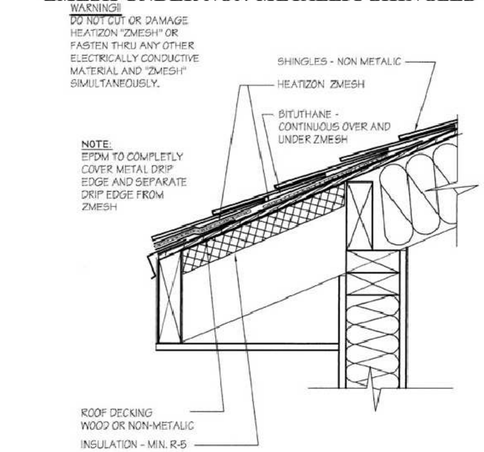

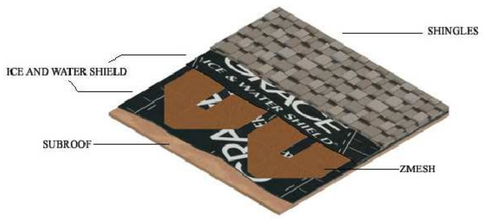

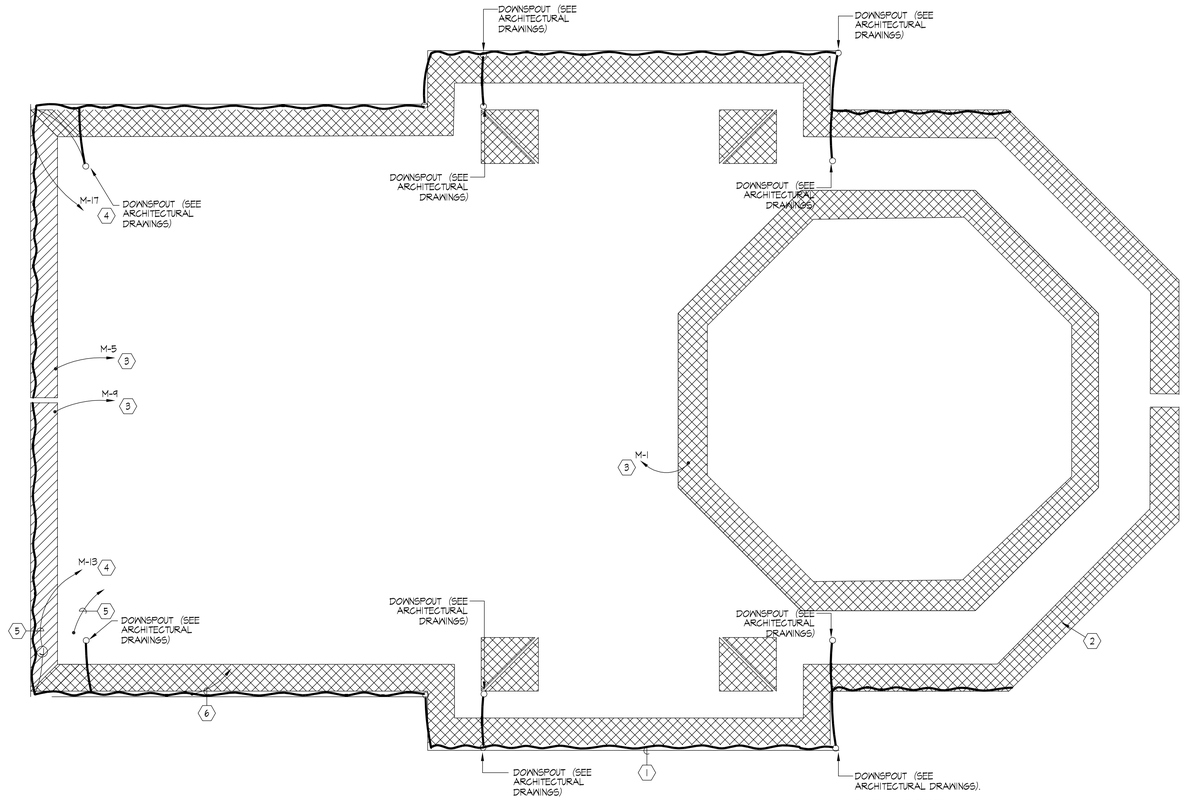

A ROOF PLAN - POWER
E302

SCALE: 3/16" = 1' - 0"

NORTH

KEYED NOTES (⊙):

1. GUTTER MELT CABLE.
2. ROOF MESH NON MELTING MATS.
3. POWER CIRCUIT TO TRANSFORMER IN ELECTRICAL ROOM (3)- #8 THWN, 1" CONDUIT.
4. POWER CIRCUIT TO PANEL VIA CONTACTOR PANEL. (3)-#10 THWN, ¾" CONDUIT.
5. MOISTURE/TEMPERATURE SENSOR WIRED TO SNOW MELTING CONTROL PANEL.
6. GUTTER ICE SENSOR WIRED TO SNOW MELTING CONTROL PANEL.

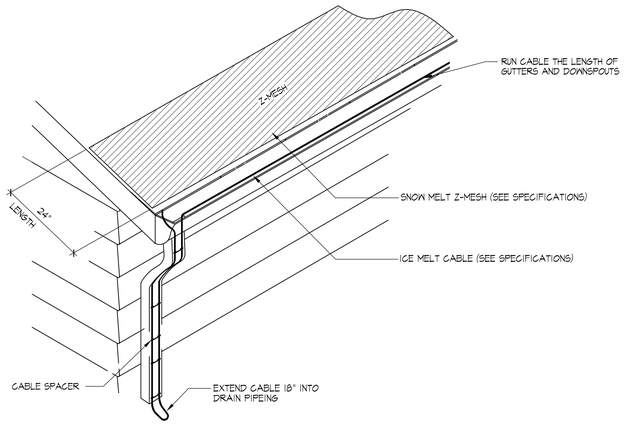

B SNOW MELT CABLE DETAIL
E302

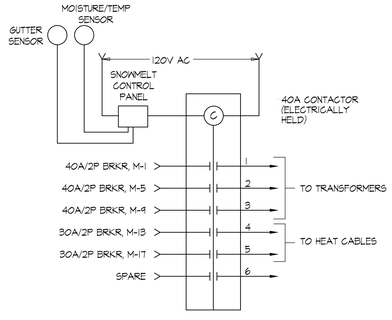

PROVIDE 30-mA GROUND FAULT CIRCUIT PROTECTION BREAKERS FOR ICE MELT EQUIPMENT.

C SNOW MELT CONTROL DIAGRAM
E302

Copyright (C) 2009 by PVE, Inc. Salt Lake City, Utah. All rights reserved. Unauthorized copying and/or use is illegal and subject to prosecution.

CLIENT

UDOT CONNECTING COMMUNITIES

TIEFORK VISITORS CENTER
17845 E HIGHWAY 6
SPANISH FORK, UTAH 84660

DESIGNER

ARCHIPLEX GROUP
architecture • planning • design services
255 Crossroad Square
Salt lake City, UT 84115
P:(801) 961-7070
F:(801) 961-7373

CONSULTANTS

PVE Inc.
Consulting Mechanical Electrical Engineers
1040 North 2200 West, Suite 100
Salt Lake City, UT 84116
Phone: (801) 359-3158
Fax: (801) 521-4114

THESE DOCUMENTS ARE INSTRUMENTS OF PROFESSIONAL SERVICE AND THE INFORMATION CONTAINED HEREIN IS INCOMPLETE UNLESS IN CONJUNCTION WITH A PV ENGINEERING'S INTERPRETATIONS, DECISIONS, OBSERVATIONS AND ADMINISTRATIONS. USE OR REPRODUCTION OF THESE DOCUMENTS IN WHOLE OR IN PART WITHOUT PV ENGINEERING'S CONSENT IS IN VIOLATION OF COMMON LAW, COPYRIGHTS, STATUTORY AND OTHER RESERVED RIGHTS. REFER TO ACT 17 U.S.C. PAR. 511 (1991). WHICH PREEMPTS STATE AND LOCAL PUBLIC RECORD ACTS. REFER TO ACT 17 U.S.C. PAR. 301 (1991).

PROFESSIONAL SEAL

REGISTERED PROFESSIONAL ENGINEER
No. 154867
DEAN P. LEVORSEN
STATE OF UTAH

ISSUE

MARK	DATE	DESCRIPTION
	8-09	CONSTRUCTION DOCUMENTS
	6-22-09	PS & E REVIEW
	3-09	95% REVIEW SUBMITTAL
	1-5-09	50% REVIEW SUBMITTAL

DFCM PROJECT NO:	08264900
DFCM CONTRACT NO:	097130
ARCHIPLEX PROJECT NO:	0832.01
DRAWN BY:	TH
CHECKED BY:	RKR
PVE PROJECT NO:	08277.00.01
DATE:	APRIL 2009

SHEET TITLE

SNOWMELT ROOF PLAN

E302

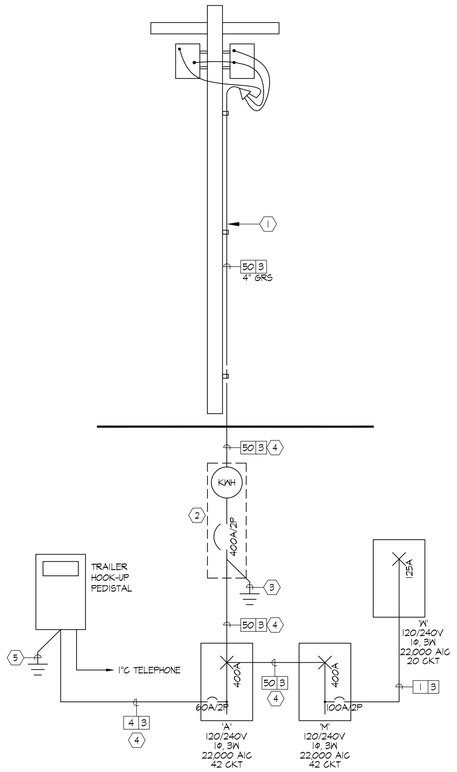

A E401 **ONE LINE DIAGRAM**

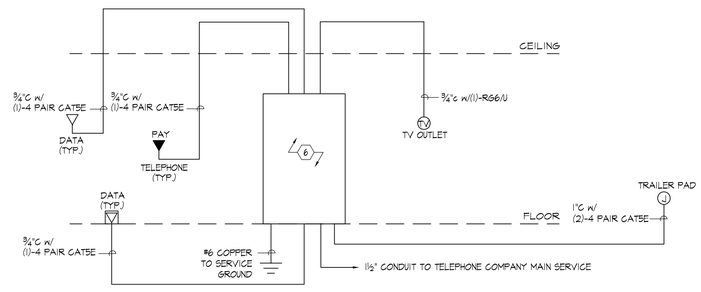

B E401 **TELEPHONE/DATA/CCTV RISER DIAGRAM**

GENERAL NOTES:

1. CONTRACTOR TO PROVIDE ALL TRENCHING AND BACKFILL. POWER COMPANY TO PROVIDE AND INSTALL PRIMARY CABLE. CONTRACTOR TO FIELD VERIFY ALL EXISTING CONDITIONS. ALL SERVICE WORK SHALL CONFORM TO POWER COMPANY INSTALLATION STANDARDS.

KEYED NOTES (◉):

1. POWER COMPANY POWER POLE. PROVIDE 4" GRC CONDUIT AND STANDOFFS AS PER POWER COMPANY SPECIFICATIONS.
2. EUSERC RATED METER/MAIN BREAKER ENCLOSURE AS PER POWER COMPANY STANDARDS. MOUNTED ON BUILDING AT A LOCATION DESIGNATED BY THE ARCHITECT.
3. #1/0 COPPER TO GROUND (SEE SERVICE GROUNDING DETAIL).
4. GROUND REQUIRED REGARDLESS OF CONDUIT TYPE.
5. #6 COPPER TO GROUND. PROVIDE AND INSTALL ¾"DIAX10'-0" LONG COPPER GROUND ROD AND CLAMP AS PER ARTICLE 250 OF THE NATIONAL ELECTRICAL CODE.
6. 24"X36"X8" TELEPHONE TERMINAL CABINET. PROVIDE AND INSTALL CABINET AS REQUIRED. PROVIDE A CABINET TO MEET THE STATE OF UTAH SPECIFCATIONS.

CONDUIT & WIRE SCHEDULE

SYMBOL SIZE	SYMBOL QTY	CONDUIT	WIRE SIZE & TYPE	GROUND	AMPS	REMARKS
12	2	¾"	#12 THHN CU	#12 THHN CU	25	
	3	¾"				
	4	¾"				
10	2	¾"	#10 THHN CU	#10 THHN CU	30	
	3	¾"				
	4	¾"				
8	2	¾"	#8 THHN CU	#10 THHN CU	40	
	3	¾"				
	4	¾"				
6	2	¾"	#6 THHN CU	#8 THHN CU	55	
	3	¾"				
	4	¾"				
4	2	¾"	#4 THHN CU	#8 THHN CU	70	
	3	1"				
	4	1¼"				
3	2	1"	#3 THHN CU	#8 THHN CU	85	
	3	1"				
	4	1¼"				
2	2	1¼"	#2 THHN CU	#6 THHN CU	95	
	3	1¼"				
	4	1¼"				
1	2	1½"	#1 THHN CU	#6 THHN CU	110	
	3	1½"				
	4	1½"				
1A	2	1½"	#1/0 THHN CU	#6 THHN CU	150	
	3	1½"				
	4	1½"				
2A	2	1½"	#2/0 THHN CU	#6 THHN CU	175	
	3	1½"				
	4	2"				
3A	2	1½"	#3/0 THHN CU	#6 THHN CU	200	
	3	2"				
	4	2"				
4A	2	2"	#4/0 THHN CU	#4 THHN CU	230	
	3	2"				
	4	2½"				
25	2	2"	#250 KMCM THHN CU	#4 THHN CU	255	
	3	2"				
	4	2½"				
30	2	2"	#300 KMCM THHN CU	#3 THHN CU	285	
	3	3"				
	4	3"				
35	2	2"	#350 KMCM THHN CU	#3 THHN CU	310	
	3	3"				
	4	3"				
40	2	2½"	#400 KMCM THHN CU	#3 THHN CU	335	
	3	3"				
	4	3"				
50	2	3"	#500 KMCM THHN CU	#3 THHN CU	380	
	3	4"				
	4	4"				
60	2	3"	#600 KCM THHN CU	#3 THHN CU	420	
	3	4"				
	4	4"				

EXAMPLE:

3A 4 =(4)-#3/0 THHN/THWN + (1)#6 THHN/THWN GND, 2"CONDUIT

50 4 =(4)-#500kmcm THHN CU + (1)-#1/0 THHN CU GND, 4"CONDUIT 2 SETS, 2 SETS, PARALLEL FEEDERS 1/A GND.

NOTES:
1. PARALLEL RUNS REQUIRE A LARGER GROUND WIRE PER CONDUIT - SEE NATIONAL ELECTRICAL CODE.
2. WHERE THHN CONDUCTORS SHALL BE RUN UNDERGROUND, PROVIDE THWN INSULATION IN LIEU OF THHN INSULATION ON ALL UNDERGROUND CONDUCTORS.

CLIENT

UDOT CONNECTING COMMUNITIES

TIEFORK VISITORS CENTER
17845 E HIGHWAY 6
SPANISH FORK, UTAH 84660

DESIGNER

ARCHIPLEX GROUP
architecture · planning · design services
255 Crossroad Square
Salt lake City, UT 84115
P:(801) 961-7070
F:(801) 961-7373

CONSULTANTS

PVE Inc. Consulting Mechanical Electrical Engineers
1040 North 2200 West, Suite 100
Salt Lake City, UT 84116
Phone: (801) 359-3158
Fax: (801) 521-4114

THESE DOCUMENTS ARE INSTRUMENTS OF PROFESSIONAL SERVICE AND THE INFORMATION CONTAINED HEREIN IS INCOMPLETE UNLESS IN CONJUNCTION WITH A PV ENGINEERING'S INTERPRETATIONS, DECISIONS, OBSERVATIONS AND ADMINISTRATIONS. USE OR REPRODUCTION OF THESE DOCUMENTS IN WHOLE OR IN PART WITHOUT PV ENGINEERING'S CONSENT IS IN VIOLATION OF COMMON LAW, COPYRIGHTS, STATUTORY AND OTHER RESERVED RIGHTS. REFER TO ACT 17 U.S.C. PAR. 511 (1991), WHICH PREEMPTS STATE AND LOCAL PUBLIC RECORD ACTS. REFER TO ACT 17 U.S.C. PAR. 301 (1991).

PROFESSIONAL SEAL

REGISTERED PROFESSIONAL ENGINEER
No. 154867
DEAN F. LEVORSEN
STATE OF UTAH

ISSUE

MARK	DATE	DESCRIPTION
	8-09	CONSTRUCTION DOCUMENTS
	6-22-09	PS & E REVIEW
	3-09	95% REVIEW SUBMITTAL
	1-5-09	50% REVIEW SUBMITTAL

DFCM PROJECT NO:	08264900
DFCM CONTRACT NO:	097130
ARCHIPLEX PROJECT NO:	0832.01
DRAWN BY:	TH
CHECKED BY:	RKR
PVE PROJECT NO:	08277.00.01
DATE:	APRIL 2009

SHEET TITLE

ELECRTICAL RISER DIAGRAMS

E401

Copyright (C) 2009 by PVE, Inc. Salt Lake City, Utah. All rights reserved. Unauthorized copying and/or use is illegal and subject to prosecution.
By: khaacke; Jul 28, 2009 - 4:01 PM, Date Plotted: Aug 13, 2009 - 10:03 AM X:\Projects\2008\08277.00.01- Tie Fork Rest Area\E401 - 08277.01.dwg

LIGHT FIXTURE SCHEDULE

FIXTURE NUMBER	FIXTURE MANUFACTURER	FIXTURE CATALOG #	DESCRIPTION	LAMPS TYPE	LAMPS QTY.	FIXTURE VOLTS	FIXTURE WATTS	FIXTURE MOUNTING	REMARKS
F1	METALUX DAYBRITE LITHONIA	FC-232A125-EB81 DPF232-FS12-1/2EB SP8 232 A12125 GEB	1X4 FLANGED FIXTURE (2 LAMP)	F32T8/SP35 ECO	2	120	66	RECESSED	PROVIDE WITH ELECTRONIC BALLAST
F2	DAYBRITE METALUX LITHONIA	CD 232W-2/1-EB BE-232-EB81 WP 232 DO	48" WALL MTD. FLUORESCENT WITH 2-LAMP	F32T8/SP35 ECO	2	120	66	SURFACE WALL	PROVIDE WITH ELECTRONIC BALLAST
F3	METALUX DAYBRITE LITHONIA	IA-232-EB81 IA232-1/2EB EJS 232 GEB	48" INDUSTRIAL FLUORESCENT	F32T8/SP35 ECO	2	120	66	SURFACE/CHAIN	PROVIDE WITH ELECTRONIC BALLAST
F4	SELUX DYNAMIC TMS	SA4-SP-W-H042CF-SV DC21OR42WCFL-WM-CBA APW0018CF42SS-F24	WALL MOUNTED DECORATIVE LUMINAIRE	42 TRT	1	120	45	SURFACE WALL	MOUNTED BETWEEN WINDOWS
F5	AMETRIX ELLIPTIPAR ALLSCAPE	RS S1 C 1 E 100 120 W Y103 M12150G-E-01-A-V0-0 FLEL60-ASY-SCBA	WALL MOUNTED METAL HALIDE INDIRECT ACCENT FIXTURE	100W MH	1	120	125	SURFACE WALL	VERIFY MOUNTING HEIGHT BEFORE ROUGH IN
F6	PORTFOLIO OMEGA HALO	C6226-E-6251-L1 S62H26QPLU-T6CS H803E-810	FLUOR. DOWNLIGHT W/ALZAK TRIM 26 DTT LAMP	26DTT	2	120	54	RECESSED	PROVIDE WITH ELECTRONIC BALLAST
F7	SELUX DYNAMIC TMS	SA4-SP-W-H042CF-SV DC21OR-42WCFL-WM-CBA APW0018CF42SS-F24	42 WATT WALL MOUNTED DECORATIVE LUMINAIRE	42 TRT	1	120	45	SURFACE WALL	MOUNTED ABOVE LOWER ROOF SEE ARCHITECTURAL ELEVATIONS FOR MOUNTING HEIGHT
F8	TMS LE LAMPISTE SPERO	A102-AL-F18-DM2-CF42-CM12-F18-G11 1000-1-SW-CF42-SA 514-640-ECF42-42PR-31DCG	FLUOR. DOWNLIGHT W/ALZAK TRIM 42 DTT LAMP	42 TRT	1	120	45	RECESSED	PROVIDE WITH ELECTRONIC BALLAST
F9	INVUE ALLSCAPE DESIGN PLAN	VFSK150MH-MT-WF-SCBA/NM FL15-WF-A50MH-WM DPFL150MH-WL-WM	150 WATT METAL HALIDE FLAGPOLE LIGHT	150W MH	1	120	180	SURFACE	#N/A
F10	PORTFOLIO ATLANTIC DESIGN PLAN	C6142E-6491L1 651261/2-6X11 6HL-26CT-WWAR	RECESSED FLUORESCENT WALLWASHER	26DTT	1	120	27	RECESSED	PROVIDE WITH ELECTRONIC BALLAST
F11	LEVITON GE EAGLE BRYANT	9875 GE5740-7 604 5228	PORCELAIN SOCKET	75WA19	1	120	75	SURFACE	PROVIDE METAL WIRE GUARD
F12	LITHONIA METALUX DAYBRITE	2SP G 332 A12125 GEB 2GC-332A125-EB81 2DPG332-FS12-1/3EB	2X4 PRISMATIC LAYIN FIXTURE SPECIFICATION GRADE (3-LAMP)	F32T8/SP35 ECO	3	120	99	LAY-IN GRID	PROVIDE WITH ELECTRONIC BALLAST
E1	BODINE LITHONIA IOTA	B50 PS1100 I-320	EMERGENCY BALLAST ((2)-4 FOOT T-8 LAMP)	----	----	120	----	----	EMERGENCY BALLAST (1)-4 FOOT T8 LAMP, 1100 LUMENS MIN. VERIFY COMPATIBILITY BEFORE ORDERING
E2	BODINE LITHONIA IOTA	B94C PSDL1 I39 EM	EMERGENCY BALLAST ((1)-39 WATT COMPACT FLUORESCENT)	----	----	120	----	----	EMERGENCY BALLAST (1)-39WATT 4 PIN COMPACT FLUOR., 450 LUMENS MIN. VERIFY COMPATIBILITY BEFORE ORDERING
E3	BODINE IOTA	B4CFI ICE-420-EM-I	EMERGENCY BALLAST ((1)-39 WATT COMPACT FLUORESCENT, COLD WEATHER)	----	----	120	----	----	EMERGENCY BALLAST COMPACT FLUOR., COLD WEATHER VERIFY COMPATIBILITY BEFORE ORDERING
X1	LITHONIA SURE-LITES MCPHILBEN	LE S W 1 G EL N CX71170GW ER55L-1-WB	POWERED SINGLE FACE EXIT W/ "EM" BATTERY PACK	INCLUDED	2	120	11.2	UNIVERSAL	NICKEL/CADMIUM BATTERY SINGLE FACE EXIT

NOTE:
ELECTRICAL CONTRACTOR SHALL PROVIDE A 'QUICK DISCONNECT HARNESS' FOR EACH FLUORESCENT LIGHTING FIXTURE TO SERVE AS A MEANS OF DISCONNECT TO ALLOW THE FIXTURE BALLAST TO BE SERVICED IN PLACE, AS PER THE NATIONAL ELECTRICAL CODE 2008, ARTICLE 410.130 (G).

SITE LIGHTING FIXTURE SCHEDULE

FIXT #	FIXTURE MANUFACTURER	FIXTURE CATALOG #	FIXTURE	VOLTS	#/POLE	WATTS	MOUNTING	LAMPS TYPE	LAMPS QTY/FIXT.	POLE MANUFACTURER	POLE HEIGHT	POLE CATALOG #	REMARKS
SF-1	GARDCO EMCO MCGRAW	H14-3-400MH ECA181-3H-400MH CAL-400MH-MT-3F-CBA-CA40	POLE LIGHT 400 WATT MH	240	1	465	POLE	400W MH	1	GARDCO	30'-0"	SRS-30-5	
SF-2	GARDCO EMCO MCGRAW	G18-4XL-400MH-MT-CBA VXM-400MP-MT-35-CBA	POLE LIGHT 400 WATT MH	240	1	465	POLE	400W MH	3	GARDCO	30'-0"	SRS-30-5	
SF-3	SELUX DYNAMIC TMS	SA4-SP-2-H020-SV 2-DC21OR-42CFL-SL AP2C-42WCFL	POLE LIGHT 250 WATT MH	240	1	236	POLE	100W MH	2	SELUX	16'-0"	A35-16-SV	TWIN FIXTURE

EQUIPMENT SCHEDULE

UNIT #	DESCRIPTION	LOAD	VOLTS	PHASE	AMPS	DISCONNECT	SIZE (AMPS)	FUSE (AMPS)	STARTER SIZE	ENCLOSURE	REMARKS
F-1	FURNACE	1/2 HP	120	1	9.8	4A	---	---	---	16	
AC-1	CONDENSING UNIT	6.48 KVA	240	1	27.0	1A	60	---	---	17	
MAU-1	MAKE-UP AIR UNIT	3/4 HP	120	1	13.8	4A	---	---	---	17	
EF-1	EXHAUST FAN	1/4 HP	120	1	5.8	4A	---	---	---	17	
EF-2	EXHAUST FAN	1/4 HP	120	1	5.8	4A	---	---	---	17	
P-1	WELL PUMP	1/2 HP	240	1	4.9	1A	---	---	---	17	
P-2	SEPTIC TANK PUMP	3 HP	240	1	17.0	1A	---	---	---	17	
CP-1	RECIRC PUMP	1/40 HP	120	1	1.0	4A	---	---	---	16	
GWH-1	WATER HEATER	600 VA	120	1	5.0	11A	---	---	---	---	CONTROL CIRCUIT/BLOWER
UH-1	UNIT HEATER	1/30 HP	120	1	1.5	4A	---	---	---	16	

NOTES:
1. NON-FUSED DISCONNECT SWITCH
2. FUSED DISCONNECT SWITCH
3. BREAKER IN ENCLOSURE
4. MANUAL STARTER WITH THERMAL OVERLOAD
5. MAGNETIC STARTER
6. MAGNETIC STARTER/NON-FUSED DISCONNECT COMBINATION
7. MAGNETIC STARTER/FUSED DISCONNECT COMBINATION
8. MAGNETIC STARTER/BREAKER COMBINATION
9. VARIABLE SPEED DRIVE
10. REDUCED VOLTAGE STARTER
11. DIRECT CONNECTION
12. RECEPTACLE/SPECIAL PURPOSE OUTLET ETC.
13. TWO-SPEED STARTER, COORDINATE WITH MOTOR TYPE
14. MAXIMUM CIRCUIT AMPS (MCA)
15. FULL LOAD CURRENT
16. PROVIDE WITH NEMA 1 ENCLOSURE
17. PROVIDE WITH NEMA 3R ENCLOSURE

A. FURNISHED, INSTALLED AND FINAL CONNECTION BY THE ELECTRICAL CONTRACTOR.
B. FURNISHED AND INSTALLED UNDER ANOTHER DIVISION, FINAL CONNECTION BY THE ELECTRICAL CONTRACTOR.
C. FURNISHED UNDER ANOTHER DIVISION, INSTALLED AND FINAL CONNECTION BY THE ELECTRICAL CONTRACTOR.
D. FURNISHED, INSTALLED AND FINAL CONNECTION UNDER ANOTHER DIVISION.

OVERCURRENT PROTECTION DEVICES:
CB = THERMAL MAGNETIC CIRCUIT BREAKER
FN = FUSE, NON-INDUCTIVE LOAD
FI = FUSE, INDUCTIVE LOAD
MO = MAGNETIC ONLY CIRCUIT BREAKER
NA = NOT APPLICABLE

GENERAL NOTES:
1. VERIFY ALL EQUIPMENT LOCATIONS AND CONNECTION REQUIREMENTS (i.e. VOLTAGE, PHASE, FLA, ETC.) WITH MECHANICAL DRAWINGS/SUBMITTALS PRIOR TO STARTING ROUGH IN.
2. ALL FUSES SHALL BE DUAL ELEMENT, TIME DELAY. FINAL BREAKER/FUSE & DISCONNECT SIZE SHALL BE DETERMINED BY MANUFACTURER'S RECOMMENDATION FOR ACTUAL EQUIPMENT INSTALLED.
3. ALL INSULATION ON CONDUCTORS TO BE THHN UNLESS NOTED OTHERWISE. INSULATION ON ALL UNDERGROUND EXTERIOR CONDUCTORS SHALL BE THHW.

LIGHTING CONTROL PANEL

NAME: RP
VOLTS: 120/208 V 3Φ, 4-WIRE
LOCATION: ELECTRICAL ROOM
MOUNTING: SURFACE

RELAY #	AMP	POLE	SUPPLY	AREA SERVED	LV SWITCH*	A	B	C	D	E
1	20	1	A-5	ROTUNDA LIGHTING		X				
2	20	1	A-25	ROTUNDA CEILING FAN		X				
3	20	1	A-7	BUILDING EXTERIOR LTG					X	
4	20	1	A-9	EXTERIOR SITE LTG					X	
5	20	1	A-11	EXTERIOR SITE LTG					X	
6	20	1	A-27	PARKING LTG					X	
7	20	2	A-13,15	PARKING LTG					X	
8	----	----	----------	-----------------					X	
9	20	2	A-17,19	PARKING LTG					X	
10	----	----	----------	-----------------					X	
11				SPACE						
12				SPACE						
13				SPACE						
14				SPACE						
15				SPACE						
16				SPACE	----					

Automation Schedules: (A) Auto ON / Auto OFF
(B) Manual ON / Auto OFF
(C) Dusk - Dawn
(D) Dusk - Auto OFF
(E) Daylight Sensor

* SEE PLAN FOR LOCATION OF LOW VOLTAGE SWITCH

NOTE: ELECTRICAL CONTRACTOR TO PROVIDE SPACE IN THIS PANEL FOR FUTURE EXPANSION

PANEL SCHEDULE

PANEL: A
VOLTAGE: 240 / 120 PHASE: 1
MOUNTING: SURFACE WIRE: 3
ENCLOSURE: NEMA 1
REMARKS: PROVIDE WITH SUB-FEED LUGS
BUS AMPS: 400
MAIN OVERCURRENT DEVICE: LUGS
MAIN OVERCURRANT AMPS: N/A
MINIMUM EQUIPMENT RATING: 10,000 AMPS (RMS-SYM)
USE
E = Equipment Load M = Motor Load
L = Lighting Load K = Kitchen Equipment
R = Receptacle Load

NO.	AMPS	POLE	CIRCUIT NAME	C	WIRE	GRD	USE	WATTS	ΦA	ΦB	WATTS	USE	GRD	WIRE	C	CIRCUIT NAME	POLE	AMPS	NO.
1	20	1	LIGHTING	3/4"	#12	#12	L	1,300	2380		1,080	R	#12	#12	3/4"	RECPTS-BATHROOM	1	20	2
3	20	1	LIGHTING	3/4"	#12	#12	L	500		1,400	900	R	#12	#12	3/4"	RECPTS-WAITING AREA	1	20	4
5	20	1	LIGHTING	3/4"	#12	#12	L	900	2,100		1,200	R	#12	#12	3/4"	VENDING MACHINE	1	20	6
7	20	1	EXTERIOR LTG	3/4"	#10	#10	L	1,828		3,028	1,200	R	#12	#12	3/4"	VENDING MACHINE	1	20	8
9	20	2	PARKING/SITE LTG	3/4"	#10	#10	L	800	2,000		1,200	R	#12	#12	3/4"	VENDING MACHINE	1	20	10
11	--	--	-----------------	3/4"	#10	#10	L	800		2,000	1,200	R	#12	#12	3/4"	VENDING MACHINE	1	20	12
13	20	2	PARKING/SITE LTG	3/4"	#10	#10	L	1,170	2,370		1,200	R	#12	#12	3/4"	VENDING MACHINE	1	20	14
15	--	--	-----------------	3/4"	#10	#10	L	1,170		1,710	540	R	#12	#12	3/4"	RECPTS-DISPLAY	1	20	16
17	20	2	PARKING/SITE LTG	3/4"	#10	#10	L	930	1,470		540	R	#12	#12	3/4"	RECPTS-DISPLAY	1	20	18
19	--	--	-----------------	3/4"	#10	#10	L	930		2,130	1,200	M	#12	#12	3/4"	EF-1,EF-2,EF-3	1	20	20
21	20	1	TELCO CAB RCPT	3/4"	#12	#12	R	500	1,280		780	R	#12	#12	3/4"	EWC	1	20	22
23	20	1	CP-1	3/4"	#12	#12	R	500		500						SPARE	1	20	24
25	20	1	CEILING FAN	3/4"	#12	#12	R	500	500							SPACE			26
27			SPACE													SPACE			28
29			SPACE													SPACE			30
31			SPACE													SPACE			32
33			SPACE													SPACE			34
35			SPACE													SPACE			36
37			SPACE													SPACE			38
39			SPACE													SPACE			40
41			SPACE													SPACE			42

	ΦA	ΦB	DEMAND
LIGHTING LOAD (VA)	5,100	5,228	10,328
LIGHTING CONTINUOUS LOAD (VA)			2,582
RECEPTACLE LOAD PER NEC 220.13(VA)	7,000	4,340	10,670
EQUIPMENT LOAD (VA)	0	1,200	1,200
25% LARGEST MOTOR			300
KITCHEN EQUIPMENT LOAD (VA) 0 UNITS @ 100% (PER NEC TABLE 220.56)	0	0	0
TOTAL LOAD (VA)	12,100	10,768	25,080
TOTAL LOAD (AMPS):	101	90	105

NOTES:
1. ALL INSULATION ON CONDUCTORS TO BE THHN UNLESS NOTED OTHERWISE. INSULATION ON ALL UNDERGROUND CONDUCTORS SHALL BE THHW.
2. RECEPTACLE LOAD CALCULATED AS PER SECTION 220 OF THE NATIONAL ELECTRICAL CODE.
3. PANEL COVER SHALL BE FIELD MARKED FOR FLASH PROTECTION WITH A PERMANENT LABEL AS REQUIRED BY THE NATIONAL ELECTRICAL CODE SECTION 110. LABEL SHALL READ AS FOLLOWS: "DANGER: POTENTIAL ARC FLASH HAZARD"

PANEL SCHEDULE

PANEL: M
VOLTAGE: 240 / 120 PHASE: 1
MOUNTING: SURFACE WIRE: 3
ENCLOSURE: NEMA 1
REMARKS:
BUS AMPS: 400
MAIN OVERCURRENT DEVICE: MAIN
MAIN OVERCURRANT AMPS: N/A
MINIMUM EQUIPMENT RATING: 10,000 AMPS (RMS-SYM)
USE
E = Equipment Load M = Motor Load
L = Lighting Load K = Kitchen Equipment
R = Receptacle Load

NO.	AMPS	POLE	CIRCUIT NAME	C	WIRE	GRD	USE	WATTS	ΦA	ΦB	WATTS	USE	GRD	WIRE	C	CIRCUIT NAME	POLE	AMPS	NO.
1	40	2	SNOW MELTING	1"	#8	#10	E	3,000	5,900		2,900	M	#10	#8	1"	AC-1 AC COND.	2	45	2
3	--	--	MESH - GFI		#8	#10	E	3,000		5,900	2,900	M	#10	#8	--	--	--	--	4
5	40	2	SNOW MELTING	1"	#8	#10	E	3,000	4,100		1,100	M	#12	#12		F-1 FURNACE	1	20	6
7	--	--	MESH - GFI		#8	#10	E	3,000		4,500	1,500	M	#12	#12		MAU-1	1	30	8
9	40	2	SNOW MELTING	1"	#8	#10	E	3,000	4,100		1,100	M	#12	#12		UNIT HEATER	1	20	10
11	--	--	MESH - GFI		#8	#10	E	3,000		3,800	800	E	#12	#12		HAND DRYER	1	20	12
13	30	2	SNOW MELTING	1"	#10	#10	E	1,200	2,000		800	E	#12	#12		HAND DRYER	1	20	14
15	--	--	CABLE - GFI		#10	#10	E	1,200		2,000	800	E	#12	#12		HAND DRYER	1	20	16
17	30	2	SNOW MELTING	1"	#10	#10	E	1,200	2,000		800	E	#12	#12		HAND DRYER	1	20	18
19	--	--	CABLE - GFI		#10	#10	E	1,200		2,000	800	E	#12	#12		HAND DRYER	1	20	20
21	30	2	SEPTIC TANK PUMP	1"	#8	#10	E	2,040	2,840		800	E	#12	#12		HAND DRYER	1	20	22
23	--	--	----------------------	--	#8	--	M	2,040		2,840	800	E	#12	#12		HAND DRYER	1	20	24
25	20	1	SPARE						200		200	E	#12	#10	1"	HIGHWAY CAMERA	1	20	26
27	20	1	SPARE							500	500	E	#12	#10	1"	PROPANE TANK HTR	1	20	28
29	20	1	SPARE													SPARE	1	20	30
31	20	1	SPARE													SPARE	1	20	32
33	20	1	SPARE													SPARE	1	20	34
35	20	1	SPARE													SPARE	1	20	36
37	20	1	SPARE													SPARE	1	20	38
39	60	2	TRAILER	SEE ONE LINE DIAGRAM			E	4,000		11,500	7,500	E	SEE ONE LINE DIAGRAM			PANELBOARD 'W'	2	100	40
41	--	--	--				E	4,000	11,500		7,500	E				--	--	--	42

	ΦA	ΦB	DEMAND
LIGHTING LOAD (VA)	0	0	0
LIGHTING CONTINUOUS LOAD (VA)			0
RECEPTACLE LOAD PER NEC 220.13(VA)	0	0	0
EQUIPMENT LOAD (VA)	32,640	33,040	65,680
25% LARGEST MOTOR			725
KITCHEN EQUIPMENT LOAD (VA) 0 UNITS @ 100% (PER NEC TABLE 220.56)	0	0	0
TOTAL LOAD (VA)	32,640	33,040	66,405
TOTAL LOAD (AMPS):	272	275	277

NOTES:
1. ALL INSULATION ON CONDUCTORS TO BE THHN UNLESS NOTED OTHERWISE. INSULATION ON ALL UNDERGROUND CONDUCTORS SHALL BE THHW.
2. RECEPTACLE LOAD CALCULATED AS PER SECTION 220 OF THE NATIONAL ELECTRICAL CODE.
3. PANEL COVER SHALL BE FIELD MARKED FOR FLASH PROTECTION WITH A PERMANENT LABEL AS REQUIRED BY THE NATIONAL ELECTRICAL CODE SECTION 110. LABEL SHALL READ AS FOLLOWS: "DANGER: POTENTIAL ARC FLASH HAZARD"

PANEL SCHEDULE

PANEL: W
VOLTAGE: 240 / 120 PHASE: 1
MOUNTING: SURFACE WIRE: 3
ENCLOSURE: NEMA 3R
REMARKS:
BUS AMPS: 125
MAIN OVERCURRENT DEVICE: LUGS
MAIN OVERCURRANT AMPS: N/A
MINIMUM EQUIPMENT RATING: 10,000 AMPS (RMS-SYM)
USE
E = Equipment Load M = Motor Load
L = Lighting Load K = Kitchen Equipment
R = Receptacle Load

NO.	AMPS	POLE	KEYED NOTE	DESCRIPTION	C	WIRE	GRD	USE	WATTS	ΦA	ΦB	WATTS	USE	GRD	WIRE	C	CIRCUIT NAME	KEYED NOTE	POLE	AMPS	NO.
1	40	2		BOOSTER PUMP	3/4"	#8	#10	M	3,360	6,720		3,360	M	#10	#8	3/4"	BOOSTER PUMP		2	40	2
3	--	--		----------------------	--	#8	--	M	3,360		6,720	3,360	M	--	#8	--	-------------------------		--	--	4
5	80	2		WELL PUMP	3/4"	#6	#10	M	4,800	6,300		1,500	E	#12	#12	3/4"	SPACE HEATER		1	20	6
7	--	--		----------------------	--	#6	--	M	4,800		4,980	180	R	#12	#12	3/4"	RECEPTACLE		1	20	8
9	20	1		EXHAUST FAN	3/4"	#12	#12	M	500	600		100	E	#12	#12	3/4"	FLOATS (5)		1	20	10
11	20	1		LIGHTING	3/4"	#12	#12	L	100		100						SPARE		1	20	12
13	20	1		CONTROL PANEL	3/4"	#12	#12	L	100	100							SPACE				14
15				SPACE													SPACE				16
17				SPACE													SPACE				18
19				SPACE													SPACE				20

	ΦA	ΦB	DEMAND
LIGHTING LOAD (VA)	100	100	200
LIGHTING CONTINUOUS LOAD (VA)			50
RECEPTACLE LOAD PER NEC 220.13(VA)	0	180	180
EQUIPMENT LOAD (VA)	13,620	11,520	25,140
25% LARGEST MOTOR			1,200
KITCHEN EQUIPMENT LOAD (VA) 0 UNITS @ 100% (PER NEC TABLE 220.56)	0	0	0
TOTAL LOAD (VA)	13,720	11,800	26,770
TOTAL LOAD (AMPS):	114	98	112

GENERAL NOTES:
1. ALL INSULATION ON CONDUCTORS TO BE THHN UNLESS NOTED OTHERWISE. INSULATION ON ALL UNDERGROUND CONDUCTORS SHALL BE THHW.
2. RECEPTACLE LOAD CALCULATED AS PER SECTION 220 OF THE NATIONAL ELECTRICAL CODE.
3. PANEL COVER SHALL BE FIELD MARKED FOR FLASH PROTECTION WITH A PERMANENT LABEL AS REQUIRED BY THE NATIONAL ELECTRICAL CODE SECTION 110. LABEL SHALL READ AS FOLLOWS: "DANGER: POTENTIAL ARC FLASH HAZARD".

KEYED NOTES:
A. LOCK-ON BREAKER.
B. PROVIDE ARC FAULT (AFCI) BREAKER.
C. PROVIDE GFCI BREAKER.

CLIENT

UDOT CONNECTING COMMUNITIES
TIEFORK VISITORS CENTER
17845 E HIGHWAY 6
SPANISH FORK, UTAH 84660

DESIGNER

ARCHIPLEX GROUP
architecture · planning · design services
255 Crossroad Square
Salt lake City, UT 84115
P:(801) 961-7070
F:(801) 961-7373

CONSULTANTS

PVE Inc.
Consulting Mechanical Electrical Engineers
1040 North 2200 West, Suite 100
Salt Lake City, UT 84116
Phone: (801) 359-3158
Fax: (801) 521-4114

THESE DOCUMENTS ARE INSTRUMENTS OF PROFESSIONAL SERVICE AND THE INFORMATION CONTAINED HEREIN IS INCOMPLETE UNLESS IN CONJUNCTION WITH A PV ENGINEERING'S INTERPRETATIONS, DECISIONS, OBSERVATIONS AND ADMINISTRATIONS. USE OR REPRODUCTION OF THESE DOCUMENTS IN WHOLE OR IN PART WITHOUT PV ENGINEERING'S CONSENT IS IN VIOLATION OF COMMON LAW. COPYRIGHTS, STATUTORY AND OTHER RESERVED RIGHTS. REFER TO ACT 17 U.S.C. PAR. 511 (1991). WHICH PREEMPTS STATE AND LOCAL PUBLIC RECORD ACTS. REFER TO ACT 17 U.S.C. PAR. 301 (1991).

PROFESSIONAL SEAL

REGISTERED PROFESSIONAL ENGINEER
No. 154867
DEAN P. LEVORSEN
STATE OF UTAH

ISSUE

MARK	DATE	DESCRIPTION
	8-09	CONSTRUCTION DOCUMENTS
	6-22-09	PS & E REVIEW
	3-09	95% REVIEW SUBMITTAL
	1-5-09	50% REVIEW SUBMITTAL

DFCM PROJECT NO:	08264900
DFCM CONTRACT NO:	097130
ARCHIPLEX PROJECT NO:	0832.01
DRAWN BY:	TH
CHECKED BY:	RKR
PVE PROJECT NO:	08277.00.01
DATE:	APRIL 2009

SHEET TITLE

ELECTRICAL SCHEDULES

E501

By: jhutchings; Aug 13, 2009 – 9:35 AM, Date Plotted: Aug 13, 2009 – 10:00 AM X:\Projects\2008\08277.00.01– Tie Fork Rest Area\E501 – 08277.01.dwg
Copyright (C) 2009 by PVE, Inc. Salt Lake City, Utah. All rights reserved. Unauthorized copying and/or use is illegal and subject to prosecution.

By: khaacke; Aug 12, 2009 - 3:19 PM, Date Plotted: Aug 13, 2009 - 10:12 AM X:\Projects\2008\08277.00.01- Tie Fork Rest Area\E601-E602 - 08277.01.dwg

Copyright (C) 2009 by PVE, Inc. Salt Lake City, Utah. All rights reserved. Unauthorized copying and/or use is illegal and subject to prosecution.

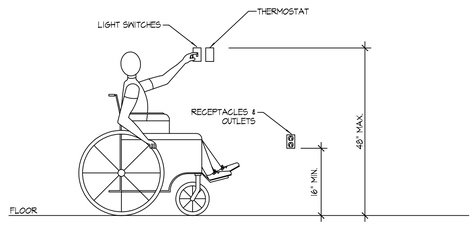

A E601 MOUNTING HEIGHTS DETAIL

NOTES:

1. TYPICAL FOR WOOD AND METAL STUD ROUGH IN.
2. PLASTER RINGS NOT SHOWN.
3. LOCATE ALL OUTLET BOXES IN ACCORDANCE WITH ARCHITECTURAL AND MECHANICAL DRAWINGS, AND WITH ALL APPLICABLE SHOP DRAWINGS.
4. IN ACCORDANCE WITH INTERNATIONAL BUILDING CODE OUTLETS ON OPPOSITE SIDES OF WALLS OR PARTITIONS IN THE SAME STUD SPACE MUST BE SEPERATED BY A MINIMUM OF 24" HORIZONTAL DISTANCE.

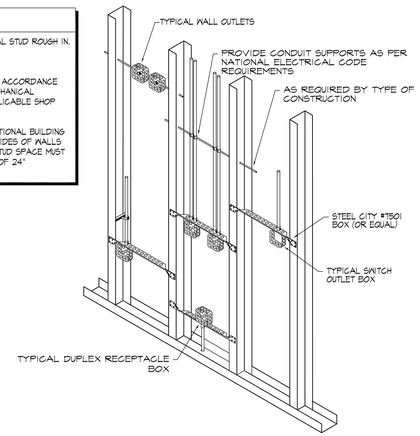

B E601 TYPICAL ROUGH-IN REQUIREMENTS DETAIL

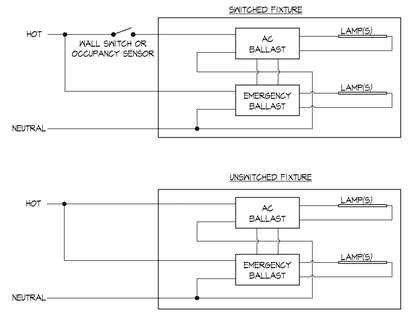

C E601 EMERGENCY BALLAST OPERATION DETAIL

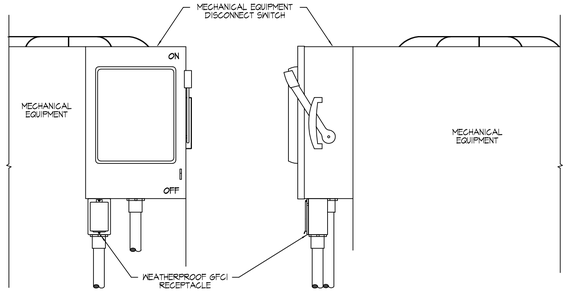

D E601 WEATHER PROOF RECEPTACLE MOUNTING DETAIL

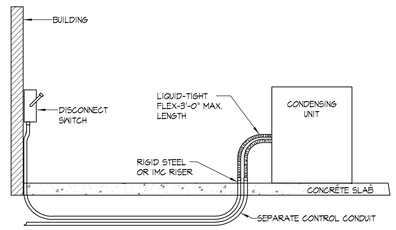

E E601 CONDENSING UNIT CONDUIT DETAIL

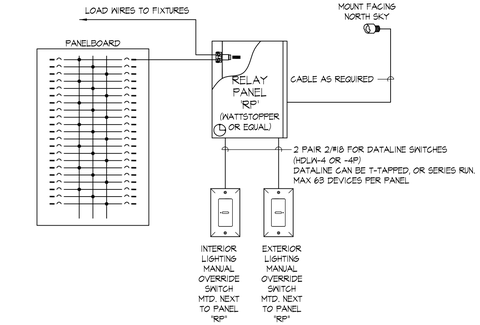

F E602 LIGHTING CONTROL PANEL DETAIL

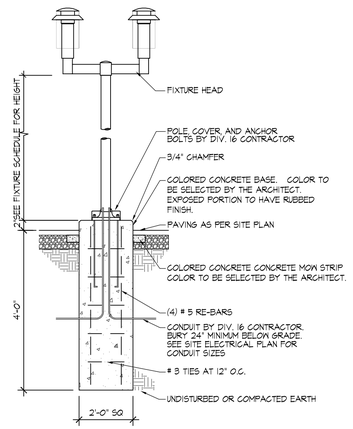

G E601 POLE BASE DETAIL - TYPE 'SF3'

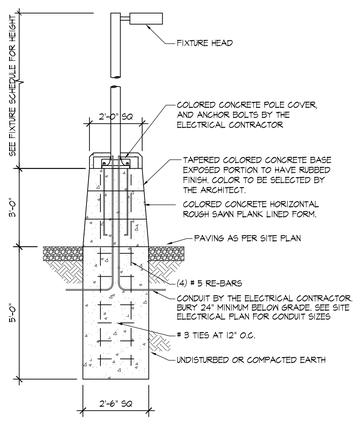

H E601 POLE BASE DETAIL - TYPE SF-1 & SF-2

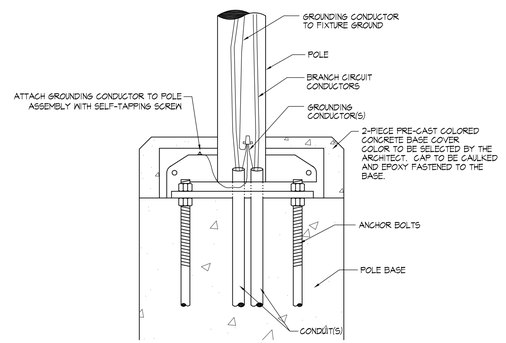

F E601 ENLARGED POLE BASE DETAIL

CLIENT

UDOT CONNECTING COMMUNITIES

TIEFORK VISITORS CENTER
17845 E HIGHWAY 6
SPANISH FORK, UTAH 84660

DESIGNER

ARCHIPLEX GROUP
architecture · planning · design services
255 Crossroad Square
Salt lake City, UT 84115
P:(801) 961-7070
F:(801) 961-7373

CONSULTANTS

PVE Inc.
Consulting Mechanical Electrical Engineers
1040 North 2200 West, Suite 100
Salt Lake City, UT 84116
Phone: (801) 359-3158
Fax: (801) 521-4114

THESE DOCUMENTS ARE INSTRUMENTS OF PROFESSIONAL SERVICE AND THE INFORMATION CONTAINED HEREIN IS INCOMPLETE UNLESS IN CONJUNCTION WITH A PV ENGINEERING'S INTERPRETATIONS, DECISIONS, OBSERVATIONS AND ADMINISTRATIONS. USE OR REPRODUCTION OF THESE DOCUMENTS IN WHOLE OR IN PART WITHOUT PV ENGINEERING'S CONSENT IS IN VIOLATION OF COMMON LAW, COPYRIGHTS, STATUTORY AND OTHER RESERVED RIGHTS. REFER TO ACT 17 U.S.C. PAR. 511 (1991), WHICH PREEMPTS STATE AND LOCAL PUBLIC RECORD ACTS. REFER TO ACT 17 U.S.C. PAR. 301 (1991).

PROFESSIONAL SEAL

REGISTERED PROFESSIONAL ENGINEER — No. 154867 — DEAN F LEVORSEN — STATE OF UTAH

ISSUE

MARK	DATE	DESCRIPTION
	8-09	CONSTRUCTION DOCUMENTS
	6-22-09	PS & E REVIEW
	3-09	95% REVIEW SUBMITTAL
	1-5-09	50% REVIEW SUBMITTAL

DFCM PROJECT NO:	08264900
DFCM CONTRACT NO:	097130
ARCHIPLEX PROJECT NO:	0832.01
DRAWN BY:	TH
CHECKED BY:	RKR
PVE PROJECT NO:	08277.00.01
DATE:	APRIL 2009

SHEET TITLE

ELECTRICAL DETAILS

E601

By: khaacke; Aug 12, 2009 - 3:19 PM, Date Plotted: Aug 13, 2009 - 10:12 AM X:\Projects\2008\08277.00.01- Tie Fork Rest Area\E601-E602 - 08277.01.dwg

Copyright (C) 2009 by PVE, Inc. Salt Lake City, Utah. All rights reserved. Unauthorized copying and/or use is illegal and subject to prosecution.

NOTE:

WHEN AVAILABLE CONTRACTOR SHALL PROVIDE ALL GROUNDING MEANS INDICATED. CONTRACTOR SHALL REFER TO ELECTRICAL ONE LINE DIAGRAM FOR GROUNDING ELECTRODE CONDUCTOR SIZE. GROUNDING CONDUCTOR SIZE SHOWN ON THE ONE LINE DIAGRAM SHALL BE THE SAME FOR ALL METHODS OF GROUNDING SHOWN IN THIS DETAIL. CONTRACTOR SHALL REFER TO ELECTRICAL SPECIFICATIONS FOR SPECIFICS OF GROUNDING SYSTEM INSTALLTION AND MATERIALS

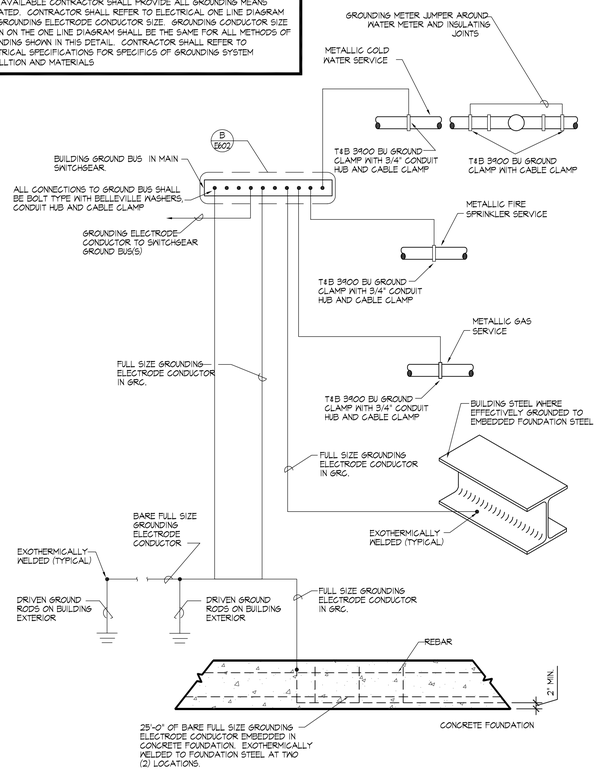

A E602 SERVICE GROUNDING DETAIL

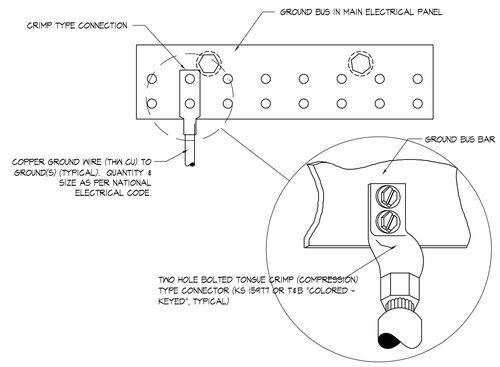

B E602 SERVICE BUS GROUNDING DETAIL

NOTE:

TYPICAL DETAILS SHOWING GENERAL FIRE STOPPING PROCEDURE. ACTUAL PRODEDURE DEPENDS UPON ANNULAR SPACE BETWEEN PIPE AND/OR INSULATION AND OPENING. FOLLOW MANUFACTURER'S INSTRUCTIONS.

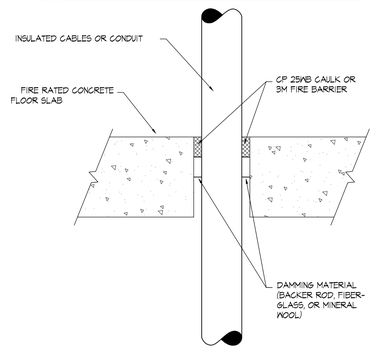

C E602 FIRESTOP THRU CONCRETE FLOOR

NOTE:

TYPICAL DETAILS SHOWING GENERAL FIRE STOPPING PROCEDURE. ACTUAL PRODEDURE DEPENDS UPON ANNULAR SPACE BETWEEN PIPE AND/OR INSULATION AND OPENING. FOLLOW MANUFACTURER'S INSTRUCTIONS.

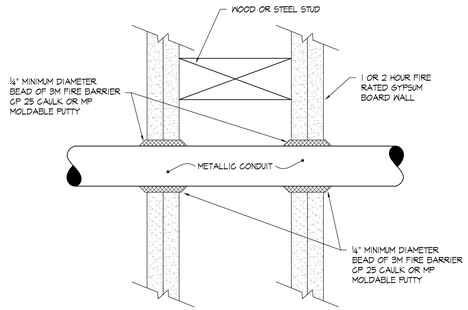

D E602 FIRE STOP THRU GYPSUM BOARD WALL

NOTE:

TYPICAL DETAILS SHOWING GENERAL FIRE STOPPING PROCEDURE. ACTUAL PRODEDURE DEPENDS UPON ANNULAR SPACE BETWEEN PIPE AND/OR INSULATION AND OPENING. FOLLOW MANUFACTURER'S INSTRUCTIONS.

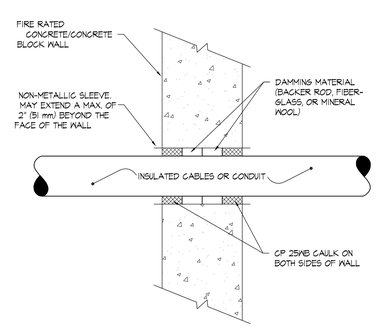

E E602 FIRESTOP THRU CONCRETE/MASONRY WALL

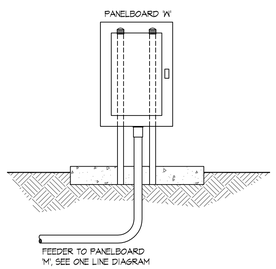

F E602 PANELBOARD 'W' MOUNTING DETAIL

CLIENT

UDOT CONNECTING COMMUNITIES

TIEFORK VISITORS CENTER
17845 E HIGHWAY 6
SPANISH FORK, UTAH 84660

DESIGNER

ARCHIPLEX GROUP
architecture · planning · design services
255 Crossroad Square
Salt lake City, UT 84115
P:(801) 961-7070
F:(801) 961-7373

CONSULTANTS

PVE Inc.
Consulting Mechanical Electrical Engineers
1040 North 2200 West, Suite 100
Salt Lake City, UT 84116
Phone: (801) 359-3158
Fax: (801) 521-4114

THESE DOCUMENTS ARE INSTRUMENTS OF PROFESSIONAL SERVICE AND THE INFORMATION CONTAINED HEREIN IS INCOMPLETE UNLESS IN CONJUNCTION WITH A PV ENGINEERING'S INTERPRETATIONS, DECISIONS, OBSERVATIONS AND ADMINISTRATIONS. USE OR REPRODUCTION OF THESE DOCUMENTS IN WHOLE OR IN PART WITHOUT PV ENGINEERING'S CONSENT IS IN VIOLATION OF COMMON LAW, COPYRIGHTS, STATUTORY AND OTHER RESERVED RIGHTS. REFER TO ACT 17 U.S.C. PAR. 511 (1991), WHICH PREEMPTS STATE AND LOCAL PUBLIC RECORD ACTS. REFER TO ACT 17 U.S.C. PAR. 301 (1991).

PROFESSIONAL SEAL

REGISTERED PROFESSIONAL ENGINEER
No. 154867
DEAN F. LEVORSEN
STATE OF UTAH

ISSUE

MARK	DATE	DESCRIPTION
	8-09	CONSTRUCTION DOCUMENTS
	6-22-09	PS & E REVIEW
	3-09	95% REVIEW SUBMITTAL
	1-5-09	50% REVIEW SUBMITTAL

DFCM PROJECT NO:	08264900
DFCM CONTRACT NO:	097130
ARCHIPLEX PROJECT NO:	0832.01
DRAWN BY:	TH
CHECKED BY:	RKR
PVE PROJECT NO:	08277.00.01
DATE:	APRIL 2009

SHEET TITLE

ELECTRICAL DETAILS

E602

LEGEND

	ACER GRANDIDENTATUM/ BIGTOOTH MAPLE
	CRATAEGUS DOUGLASII/ DOUGLAS HAWTHORNE
	PINUS EDULIS/ PINYON PINE
	JUNIPERUS SOCPULORUM/ ROCKY MOUNTAIN JUNIPER
	CERCOCARPUS LEDIFOLIUS/ CURL-LEAF MOUNTAIN MAHOGANY
	EXISTING TREES TO REMAIN
	CORNUS SERICEA/ REDTWIG DOGWOOD
	AMELANCHIER UTAHENSIS/ UTAH SERVICEBERRY
	RIBES AUREUM/ GOLDEN CURRANT
	CHRYSOTHAMNUS VISCIDIFLORUS/ DOUGLAS RABBITBRUSH
	SYMPHORICARPOS OREOPHILUS/ MOUNTAIN SNOWBERRY
	POTENTILLA FRUTICOSA/ SHRUBBY CINQUEFOIL
	PENSTEMON/ PENSTEMON

- RIVER ROCK
- WOOD PLANK PATTERN COLORED CONCRETE
- HERRINGBONE PATTERN COLORED CONCRETE
- COLORED CONCRETE
- GRAVEL AREA
- REGULAR CONCRETE (NO HATCH)
- KENTUCKY BLUE GRASS
- NATIVE SEED MIX
- BUFFALO GRASS FOR PET AREA
- PROPOSED FENCE LINE, DETAIL F SHEET C500

NOTES

1. SEE SHEET L101 FOR SPECIFIC PLANT SCHEDULE AND NOTES.

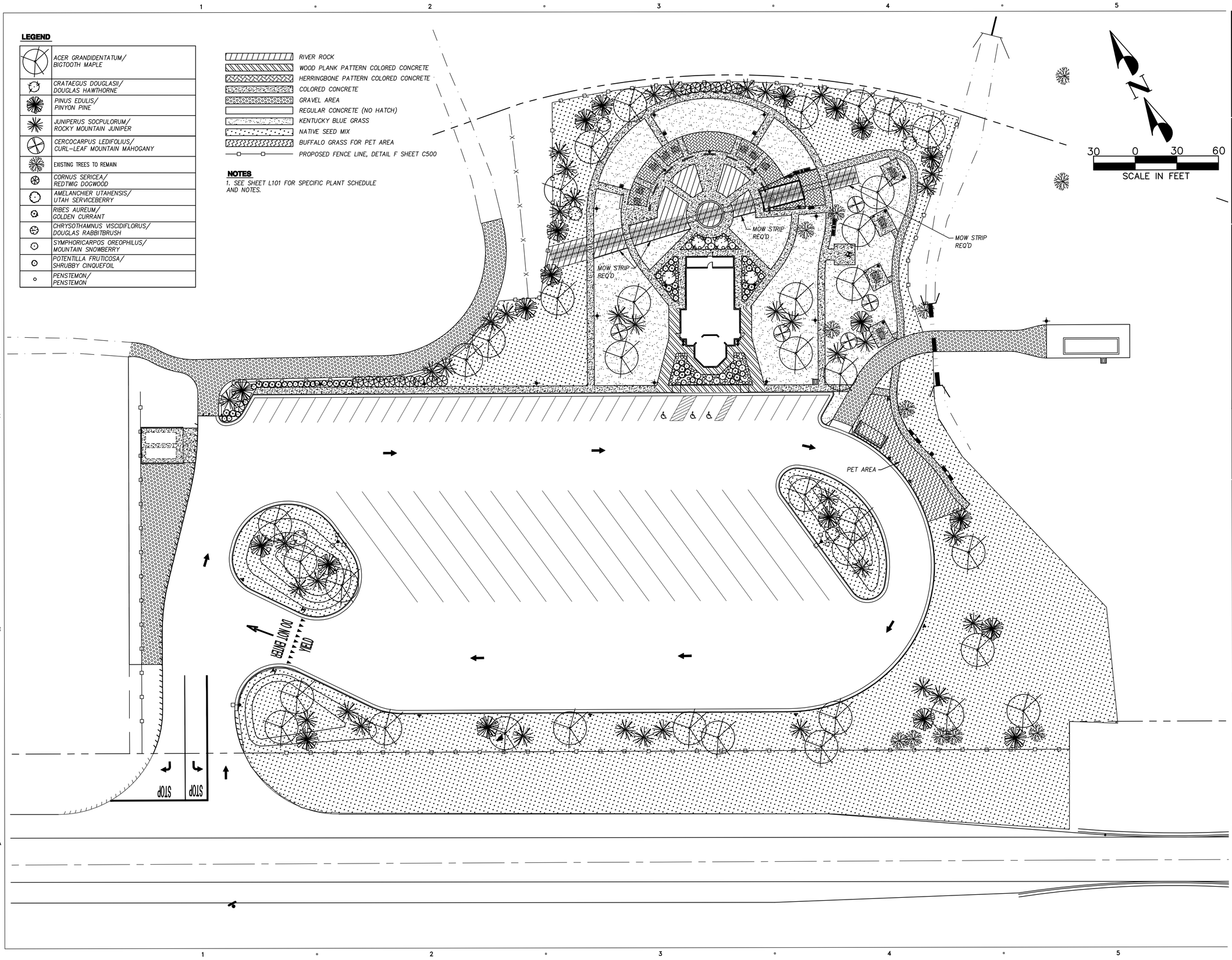

CLIENT

UDOT CONNECTING COMMUNITIES

TIE FORK VISITORS CENTER
17845 E HIGHWAY 6
SPANISH FORK, UTAH 84660

DESIGNER

ARCHIPLEX GROUP
architecture · planning · design services
255 Crossroad Square
Salt Lake City, UT 84115
P:(801) 961-7070
F:(801) 961-7373

CONSULTANTS

PEPG ENGINEERING, L.L.C.
8805 S. SANDY PARKWAY • SANDY, UT 84070
PHONE: (801) 562-2521 • FAX: (801) 562-2551

PROFESSIONAL SEAL

JEFFREY CARTER HUDKINS — LANDSCAPE ARCHITECT — 5776620-5501 — 8-12-09 — STATE OF UTAH

ISSUE

MARK	DATE	DESCRIPTION
	8-09	CONSTRUCTION DOCUMENTS
	6-22-09	PS & E REVIEW
	3-09	95% REVIEW SUBMITTAL
	1-5-09	50% REVIEW SUBMITTAL

DFCM PROJECT NO:	08264900
DFCM CONTRACT NO:	097130
ARCHIPLEX PROJECT NO:	0832.01
PEPG PROJECT NO:	6600.0817
DRAWN BY:	EAB
CHECKED BY:	JCS
SCALE:	1"=30'
DATE:	AUGUST, 2009

SHEET TITLE

LANDSCAPE PLAN

L100

GENERAL CONSTRUCTION NOTES:

1. CONTRACTOR SHALL ADHERE TO ALL LOCAL, STATE, AND/OR FEDERAL LAWS PERTAINING TO THE PROJECT'S WORK.

2. IT IS THE RESPONSIBILITY OF THE CONTRACTOR TO COORDINATE ALL CONSTRUCTION ELEMENTS WITH OTHER TRADES PRIOR TO INSTALLATION AND BECOME FAMILIAR WITH THE LOCATION OF UNDERGROUND SERVICES AND IMPROVEMENTS.

3. THE CONTRACTOR SHALL EXAMINE THE SITE AND FULLY DETERMINE THE CONDITIONS UNDER THIS CONTRACT. NO ALLOWANCE WILL BE MADE FOR FAILURE OF BIDDERS TO ASCERTAIN ALL ASPECTS OF THE PROJECT.

4. PRIOR TO DIGGING, EXCAVATION, OR UNDERGROUND WORK, CONTRACTOR SHALL LOCATE AND PROTECT EXISTING UTILITIES AND SUBSURFACE SYSTEMS. CONTRACTOR SHALL ASSUME RESPONSIBILITY FOR REPAIR AND EXPENSES INCURRED TO UTILITIES THAT BECOME DAMAGED AS A RESULT OF HIS WORK.

5. CONTRACTOR SHALL INSPECT WITH OWNER'S REPRESENTATIVE ALL PAVEMENT, SIDEWALK AND CURB DEFECTS PRIOR TO BEGINNING WORK. ALL HARDSCAPE SHALL BE RE-INSPECTED DURING FINAL INSPECTION. ANY DAMAGED AREAS SHALL BE REPAIRED AT CONTRACTOR'S EXPENSE.

6. IT SHALL BE THE CONTRACTOR'S RESPONSIBILITY TO DETERMINE THE QUANTITIES AND MATERIALS REQUIRED TO COMPLETE THE WORK IN ACCORDANCE WITH THE PLANS. CONTRACTOR SHALL PROVIDE OWNER/LANDSCAPE ARCHITECT ACTUAL AMOUNTS REQUIRED FOR FINISHED INSTALLATION.

7. CONTRACTOR SHALL BE RESPONSIBLE FOR MAINTAINING GRADES AS ESTABLISHED BY THE PROJECT ENGINEER. RUNOFF AND DRAINAGE FLOWS SHALL NOT BE ALTERED OR IMPEDED.

8. THE CONTRACTOR SHALL FURNISH ALL LABOR, TOOLS, EQUIPMENT, MATERIALS, EMPLOYEE AND SUBCONTRACTOR SUPERVISION FOR IT'S PORTION OF THE PROJECT TO IMPLEMENT PLANS AND SPECIFICATIONS.

9. THE CONTRACTOR ASSUMES ALL RISKS IN THE PERFORMANCE OF THE WORK AND RESPONSIBILITY FOR LOSS AND EXPENSE RESULTING FROM ON-SITE INJURY.

10. THE CONTRACTOR IS RESPONSIBLE FOR SUPERVISION, SAFETY, ADMINISTRATION, SCHEDULING, COORDINATION AND MANAGEMENT OF SUBCONTRACTORS.

11. THE CONTRACTOR SHALL PROTECT ALL PERSONS NEAR OR ON THE PREMISES FROM UNREASONABLE RISK OF INJURY. PROVIDE WARNING SIGNS, LIGHTS, BARRICADES, RAILINGS, FLAGMEN OR OTHER NECESSARY SAFEGUARD.

12. OWNER / LANDSCAPE ARCHITECT INSPECTIONS SHALL NOT BE DEEMED SUPERVISION OF CONTROL OF CONSTRUCTION BY CONTRACTOR OR SUBCONTRACTORS.

13. OWNER / LANDSCAPE ARCHITECT SHALL REVIEW SHOP DRAWINGS, PRODUCT DATA AND SAMPLES SUBMITTED BY THE CONTRACTOR FOR THE SOLE PURPOSE OF COMPLIANCE WITH THE DESIGN CONCEPT AND WITH INFORMATION GIVEN IN THE CONTRACT DOCUMENTS. OWNER AND LANDSCAPE ARCHITECT ASSUMES NO LIABILITY FOR CHANGES THAT HAVE NOT BEEN REVIEWED AND AUTHORIZED IN WRITING.

14. WHERE TWO OR MORE REQUIREMENTS CREATE OVERLAPPING CONDITIONS, CONFLICTING MINIMUMS OR LEVELS OF QUALITY, ALL OR THE MORE STRINGENT REQUIREMENTS OR THE HIGHER QUALITY LEVEL IS INTENDED, AND SHALL BE ENFORCED. CONFLICTING REQUIREMENTS SHALL BE REFERRED TO THE LANDSCAPE ARCHITECT OR OWNER'S REPRESENTATIVE WHOSE INTERPRETATION WILL BE FINAL.

15. WALKS AND PLANTERS SHOWN ON LANDSCAPE PLANS ARE FOR LAYOUT REFERENCE ONLY. REFER TO CIVIL PLANS FOR HORIZONTAL AND VERTICAL CONTROL

16. IT IS THE RESPONSIBILITY OF THE CONTRACTOR TO ENSURE THAT THE MOST CURRENT PLANS & SPECIFICATIONS ARE USED & CONVEYED TO ALL SUB-CONTRACTORS AS APPLICABLE.

GENERAL NOTES:

1. CONTRACTOR IS RESPONSIBLE TO VERIFY ALL PLANT & MATERIAL QUANTITIES. THE SCHEDULE IS INTENDED AS A REFERENCE ONLY. SEE ENLARGED PLANTING PLANS FOR SHRUB AND PLANT LOCATIONS. QUANTITIES IN SCHEDULE ARE ESTIMATES ONLY.

2. LANDSCAPE CONTRACTOR NEEDS TO APPROVE ANY AND ALL CHANGES TO BE MADE TO LANDSCAPE PLAN PRIOR TO CHANGES BEING MADE.

3. PROVIDE MATCHING SIZES AND FORMS OF LIKE SHRUB SPECIES AS SHOWN ON DRAWINGS.

4. APPLY A MINIMUM 4" OF TOPSOIL IN ALL TURF AREAS AND A MINIMUM 12" IN SHRUB AND TREE PLANTING AREAS. A SOIL TEST SHALL BE DONE TO VERIFY QUALITY. CONTRACTOR TO AMEND TOP SOIL AS NECESSARY FROM SOIL REPORT TO COMPLY WITH ACCEPTABLE SOIL STANDARDS AND SPECIFICATIONS, AND SHALL ALSO INCLUDE A MICROBIAL AMENDMENT.

5. THE LANDSCAPE & IRRIGATION CONTRACTOR IS RESPONSIBLE FOR ENSURING THAT THEY OBTAIN ANY & ALL DRAWINGS, SPECIFICATIONS, CHANGE ORDERS & AS-BUILDS APPLICABLE TO CONTRACTORS SCOPE OF WORK PRIOR TO & DURING CONSTRUCTION ON SITE. CONFLICTING OR VAGUE INFORMATION SHALL BE NOTED AND SUBMITTED TO OWNER AND LANDSCAPE ARCHITECT FOR CLARIFICATION.

6. CONTRACTOR IS RESPONSIBLE TO REPLACE ALL DAMAGED NEW & EXISTING LANDSCAPE, INCLUDING BUT NOT LIMITED TO ALL PLANTS, TOPSOIL, WEED BARRIER, CURBING, WALKS, ETC.

7. CONTRACTOR SHALL TIE ALL PROPOSED LANDSCAPE MATERIALS WITH EXISTING INCLUDING BUT NOT LIMITED TO ALL PLANTS, TOPSOIL, WEED BARRIER, CURBING, WALKS, ETC.

8. APPLY AT LEAST 4" OF WOOD FIBER MULCH UNDER ALL SHRUBS IN PLANTING AREAS SURROUNDING THE BUILDING AND ALONG NORTHWEST SIDE OF PARKING LOT. TO BE INSTALLED UNDER TREES PLANTED IN TURF AREAS INSIDE A MOWSTRIP. SEE NOTE 15. ALL NATIVE DISTURBED AREAS SHOULD BE COVERED WITH WOOD FIBER MULCH TO HOLD IN MOISTURE.

9. CONTRACTOR SHALL CAREFULLY STUDY AND INSPECT CIVIL AND ARCHITECTURAL PLANS AS-BUILTS DRAWING AND VISUALLY INSPECT. MAKE ON-SITE ADJUSTMENTS TO LANDSCAPE BASED OF FINAL DIMENSIONS AND LAYOUTS OF SITE AND BUILDINGS. PROVIDE A UNIT PRICE CREDIT FOR ANY PLANTS, AREA, OR PORTIONS OF THE LANDSCAPE OMMITED.

10. ANY PORTIONS OF THE LANDSCAPE NOT SHOWN OR CLEARLY IDENTIFIED BY THE LANDSCAPE CONSTRUCTION DOCUMENTS SHALL BE IDENTIFIED, AND A REQUEST FOR INFORMATION AND OR CHANGE ORDER SHALL BE SUBMITTED TO OWNERS REPRESENTATIVE TO ADDRESS.

LEGEND

*ALL QUANTITIES SHOWN ON SCHEDULE ARE ESTIMATES ONLY

SYMBOL n.t.s.	BOTANICAL NAME / COMMON NAME	QTY.	SIZE	NOTES/REQUIREMENTS
	Landscape Contractor shall be required to obtain the exact plant material shown by Botanical Name and reference, any substitutions or variations shall be approved by Landscape Architect prior to installation.	Landscape contractor shall verify on plans all plant quanties.	Report to Owner and or Landscape Architect any problems obtaining specified plant size.	All plants to be planted as shown on plan. Any discrepencies between actual conditions & plans shall be reported to Owner &/or Landscape Architect.
	TREES			
	ACER GRANDIDENTATUM/ BIGTOOTH MAPLE	37	# 5	All trees must be uniformly sized see notes/specifications
	CRATAEGUS DOUGLASII/ DOUGLAS HAWTHORNE	5	# 15	All trees must be uniformly sized see notes/specifications
	JUNIPERUS SCOPULORUM/ ROCKY MOUNTAIN JUNIPER	40	# 5	All trees must be uniformly sized see notes/specifications
	PINUS EDULIS/ PINYON PINE	20	5'	All trees must be uniformly sized see notes/specifications
	CERCOCARPUS LEDIFOLIUS/ CURL-LEAF MOUNTAIN MAHOGANY	5	5'	All trees must be uniformly sized see notes/specifications
	EXISTING TREES			
	EXISTING TREES TO REMAIN	12		
	EXISTING TREES TO BE REMOVED	10		
	SHRUBS			
	CORNUS SERICEA/ REDOSIER DOGWOOD	16	# 5	uniformally sized see notes/specifications
	POTENTILLA FRUTICOSA 'DAKOTA SUNSPOT'/ DAKOTA SUNSPOT CINQUEFOIL	34	# 5	uniformally sized see notes/specifications
	RIBES ALPINUM 'GREEN MOUND'/ GREEN MOUND CURRANT	23	# 5	uniformally sized see notes/specifications
	SYMPHORICARPOS OREOPHILUS/ MOUNTAIN SNOWBERRY	10	# 5	uniformally sized see notes/specifications
	AMELANCHIER UTAHENSIS/ UTAH SERVICEBERRY			
	CHRYSOTHAMNUS VISCIDIFLORUS/ DOUGLAS RABBITBRUSH			
	PERENNIALS			
	PENSTEMON/ PENSTEMON	103	FLAT	uniformally sized see note 13 for varieties
	LANDSCAPE EDGING			
	4"X6" EXTRUDED MOW CURBING OVERALL SITE TYPICAL	± 210 linear ft	Control Joint Req'd Every 3' TYP.	SEE DETAIL tangent curbs, uniform radius req'd
	TURF / MULCH / EROSION CONTROL			
	CLIMATE TOLERANT SOD Poa pratensis / Kentucky Bluegrass	± 22,011 SQ FT	Cimate Tolerant Sod 2" Min. Cut	4" amended topsoil with Nutri-mulch & Utelite as needed. Top dress planter with premium fine organic mulch 4" depth
	PET AREA SOD Buchloe dactyloides / Buffalo Grass	± 2,300 SQ FT	Cimate Tolerant Sod	SEE GENERAL NOTE #15
	RIVER ROCK MULCH	± 3,882 SQ FT	Approxiamtely 2" in diameter or smaller	SEE LANDSCAPE PLAN
	NATIVE SEED AND FORBS MIX: Poa pratensis / Kentucky Blue @ 5 lbs. per acre Agropyron cristatum 'Roadcrest' / Roadcrest Wheatgrass @ 4 lbs. per acre Buchloe dactyloides / Buffalo Grass @ 5 lb. per acre Pascopyrum smithii / Western Wheatgrass @ 3 lb. per acre Granite Seed Low Growing Wildflower Seed Mix @ 7 lb. per acre *see note 12.	± 2 ACRE		SEE GENERAL NOTE #12

11. APPLY AT LEAST 4" OF ROCK MULCH IN SUGGESTED AREAS. A WEED BARRIER FABRIC SHOULD BE INSTALLED PRIOR TO THE INSTALLATION OF THE ROCK MULCH.

12. NATIVE SEED MIX AREAS TO INCLUDE GRANITE SEED LOW GROWING WILDFLOWER SEED MIX TO PROVIDE MORE NATIVE VARIETY IN VEGETATION. SEED MIX INCLUDES ANNUALS: SCARLET FLAX, GILIA SPECIES, CALIFORNIA POPPY, DRUMMOND PHLOX, BABY'S BREATH, WALLFLOWER, TIDY TIPS, WEATHERGLASS, WHITE ALYSSUM, SHIRLEY POPPY, BABY BLUE EYES. SEED MIX INCLUDES PERENNIALS: MOUNTAIN LUPINE, UTAH SWEETVETCH, LEWIS BLUE FLAX, ASTER SPECIES, PENSTEMON SPECIES, SCARLET GLOBEMALLOW, SULFUR BUCKWHEAT, PRIMROSE SPECIES, AND ROCKY MOUNTAIN IRIS.

13. PENSTEMON VARIETY TO INCLUDE PENSTEMON EATONII/ FIRECRACKER PENSTEMON, PENSTEMON CYANANTHUS/ WASATCH PENSTEMON, PENSTEMON HUMILIS/ LOW PENSTEMON, AND PENSTEMON PALMERI/ PALMER PENSTEMON.

14. EXISTING TREES TO REMAIN SHALL BE SAFELY PRUNED BY A PROFESSIONAL ARBORIST AND EXISTING TREES TO BE REMOVED SHALL BE REMOVED BY A PROFESSIONAL ARBORIST.

CLIENT

UDOT CONNECTING COMMUNITIES

TIE FORK VISITORS CENTER
17845 E HIGHWAY 6
SPANISH FORK, UTAH 84660

DESIGNER

ARCHIPLEX GROUP
architecture · planning · design services
255 Crossroad Square
Salt Lake City, UT 84115
P:(801) 961-7070
F:(801) 961-7373

CONSULTANTS

PEPG ENGINEERING, L.L.C.
8805 S. SANDY PARKWAY • SANDY, UT 84070
PHONE: (801) 562-2521 • FAX: (801) 562-2551

PROFESSIONAL SEAL

ISSUE		
	8-09	CONSTRUCTION DOCUMENTS
	6-22-09	PS & E REVIEW
	3-09	95% REVIEW SUBMITTAL
	1-5-09	50% REVIEW SUBMITTAL
MARK	DATE	DESCRIPTION

DFCM PROJECT NO:	08264900
DFCM CONTRACT NO:	097130
ARCHIPLEX PROJECT NO:	0832.01
PEPG PROJECT NO:	6600.0817
DRAWN BY:	EAB
CHECKED BY:	JCS
SCALE:	NOT TO SCALE
DATE:	AUGUST, 2009

SHEET TITLE

LANDSCAPE NOTES & SCHEDULE

L101

NOTES

1. SEE SHEET L103 FOR ADDITIONAL INFORMATION ABOUT THE IRRIGATION SCHEDULE AND NOTES.
2. APPROXIMATE ZONE LAYOUT.
3. CONTROL BOX TO BE LOCATED INSIDE THE BUILDING, IN THE NORTHEAST CORNER.
4. SEE SITE AND UTILITY PLAN, SHEET C200 FOR INFORMATION REGARDING THE MAIN LINE CONNECTIONS AND SIZES.

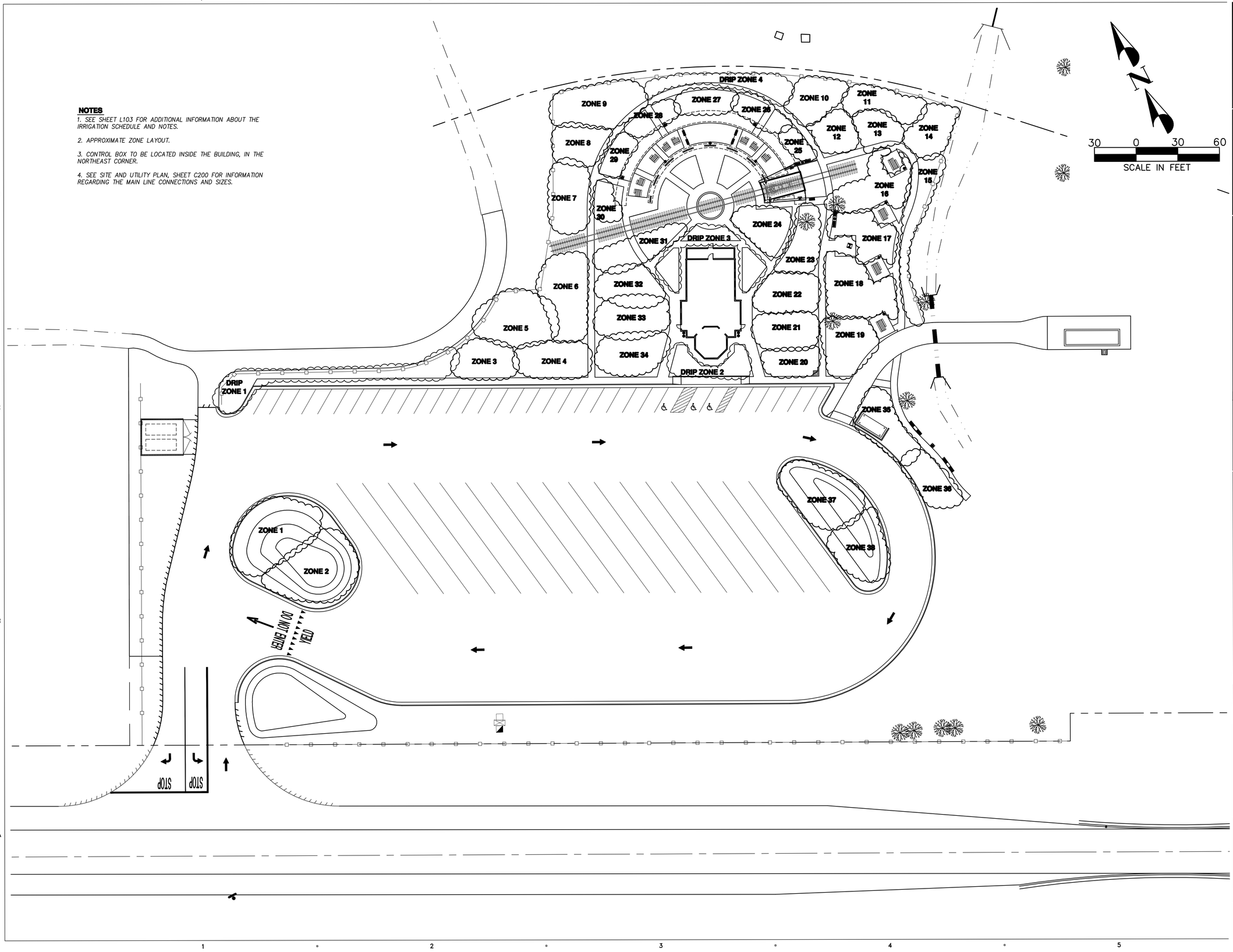

CLIENT

UDOT CONNECTING COMMUNITIES

TIE FORK VISITORS CENTER
17845 E HIGHWAY 6
SPANISH FORK, UTAH 84660

DESIGNER

ARCHIPLEX GROUP

architecture · planning · design services

255 Crossroad Square
Slat lake City, UT 84115
P:(801) 961-7070
F:(801) 961-7373

CONSULTANTS

PEPG ENGINEERING, L.L.C.
8805 S. SANDY PARKWAY • SANDY, UT 84070
PHONE: (801) 562-2521 • FAX: (801) 562-2551

PROFESSIONAL SEAL

ISSUE

MARK	DATE	DESCRIPTION
	8-09	CONSTRUCTION DOCUMENTS
	6-22-09	PS & E REVIEW
	3-09	95% REVIEW SUBMITTAL
	1-5-09	50% REVIEW SUBMITTAL

DFCM PROJECT NO:	08264900
DFCM CONTRACT NO:	097130
ARCHIPLEX PROJECT NO:	0832.01
PEPG PROJECT NO:	6600.0817
DRAWN BY:	EAB
CHECKED BY:	JCS
SCALE:	1"=30'
DATE:	AUGUST, 2009

SHEET TITLE

IRRIGATION PLAN

L102

IRRIGATION SYSTEM NOTES:
THE CONTRACTOR SHALL BE RESPONSIBLE FOR THE FOLLOWING:
SYSTEM DESIGN

1. TO DESIGN, FURNISH AND INSTALL AN AUTOMATED IRRIGATION SYSTEM FOR ALL PLANTING AREAS. SYSTEM SHALL BE DESIGNED USING LOW FLOW DISTRIBUTION COMPONENTS SUCH AS DRIP EMITTERS, INLINE DRIP TUBING, MICRO-SPRAYS AND MICRO-BUBBLERS IN ALL SHRUB BEDS, SPRAY HEADS FOR ALL SMALL TURF AREAS AND AREAS NEAR PEDESTRIAN WALKWAYS, AND ROTARY SPRAYS FOR ALL LARGE TURF AREAS.

2. IRRIGATION DESIGN SHALL ADHERE TO THESE SPECIFICATIONS, NOTES, DETAILS AND PLAN SCHEMATICS. ANY CHANGES OR DEVIATIONS FROM SUCH SHALL FIRST BE APPROVED BY THE LANDSCAPE ARCHITECT PRIOR TO IMPLEMENTING OR INSTALLING CHANGES.

3. IRRIGATION DESIGN SHALL BE ZONED ACCORDING TO PLANT WATER REQUIREMENTS WHICH INCLUDES CONSIDERATION OF SUN EXPOSURE FROM FULL SUN TO SHADE. SYSTEM SHALL BE APPROPRIATELY SIZED FOR AREA. EQUIPMENT SHALL BE SIZED ACCORDING TO INDUSTRY STANDARDS, SUCH AS FLOW SHALL NOT EXCEED 75% OF OF THE MAXIMUM SAFE WATER FLOW THROUGH THE METER AND WATER VELOCITY IN PIPES SHALL NOT EXCEED 5 FEET PER SECOND. SYSTEM SHALL ALSO BE SIZED TO PROVIDE ADEQUATE PRESSURE TO ALL SYSTEM COMPONENTS.

4. A WATER AUDIT SHALL BE REQUIRED FROM A CERTIFIED WATER AUDITOR CONTRACTOR TO VERIFY SYSTEM MEETS PLANT WATER REQUIREMENTS.

5. FINAL IRRIGATION DESIGN BY CONTRACTOR TO BE APPROVED BY A LICENSED LANDSCAPE ARCHITECT.

6. PROVIDE AS-BUILT PLANS UPON COMPLETION.

INSTALLATION

1. WARRANTY ALL IRRIGATION SYSTEM WORK, INCLUDING PERFORMANCE OF COMPONENTS, FOR A PERIOD OF 1 YEAR FOLLOWING SYSTEM COMPLETION. THIS NOTE DOES NOT TAKE PRECEDENCE OVER OTHER WARRANTIES OR GUARANTEES, WRITTEN OR VERBAL AGREEMENTS AS INDICATED ON THESE PLANS OR MADE BETWEEN PARTIES.

2. POINT OF CONNECTION FOR WATER SUPPLY AND ELECTRICAL POWER ARE INDICATED ON PLANS. CONNECTIONS SHALL BE PER LOCAL CODES.

3. PRIOR TO WORK COMMENCING, OBTAIN NECESSARY CONSTRUCTION DOCUMENTS, INCLUDING SPECIFICATIONS, CHANGE ORDERS, PERMITS, ETC. AS REQUIRED.

4. BE RESPONSIBLE TO PROPERLY MAINTAIN ANY EXISTING PLANTS TO REMAIN AND ALL NEW PLANTS TO BE PLANTED UNTIL IRRIGATION SYSTEM IS INSTALLED AND WORKING PROPERLY.

5. INSTALLATION IS SUBJECT TO APPROVAL BY LANDSCAPE ARCHITECT. CONTACT LANDSCAPE ARCHITECT IF ANY CHANGES NEED TO BE MADE TO THE DESIGN.

6. IRRIGATION MAINLINES, LATERAL LINES AND CONTROL WIRES INSTALLED IN AREAS TO BE PAVED SHALL BE INSTALLED IN SLEEVING OR CONDUIT.

7. MAINLINE PIPE SIZE SHALL BE 1" MINIMUM, LATERAL LINES SHALL BE ¾" MINIMUM.

8. CONTROL WIRES FROM CONTROLLER TO VALVE SHALL NOT HAVE ANY SPLICES. SPLICES IN COMMON WIRE, EXCEPT THOSE WITHIN A VALVE BOX, SHALL BE INSTALLED WITHIN AN IRRIGATION SPLICE BOX. BOX LID SHALL BE LABELED AS USED FOR IRRIGATION.

IRRIGATION SCHEDULE

1. APPROXIMATELY 38 SPRAY ZONES. SPRAY ZONES SHOULD LINE THE PARKING LOT AND PEDESTRIAN AREAS.

2. APPROXIMATELY 4 DRIP IRRIGATION ZONES.

3. USE RAIN BIRD 200-PEB-PRS-D CONTROL VALVE, HUNTER PGV VALVE, OR TORO 260 SERIES OR EQUIVALENT FOR SPRAY AND ROTARY ZONE VALVES.

4. USE RAIN BIRD XCZ-100-PRF, HUNTER PCZ/PACZ KIT, OR TORO 500 SERIES BUBBLER OR EQUIVALENT FOR DRIP IRRIGATION VALVES.

5. USE RAIN BIRD 1806 SERIES, HUNTER SRS SERIES, OR TORO 570Z PRX SERIES OR EQUIVALENT FOR SPRAY HEADS.

CLIENT

UDOT CONNECTING COMMUNITIES

TIE FORK VISITORS CENTER
17845 E HIGHWAY 6
SPANISH FORK, UTAH 84660

DESIGNER

ARCHIPLEX GROUP
architecture · planning · design services
255 Crossroad Square
Slat lake City, UT 84115
P:(801) 961-7070
F:(801) 961-7373

CONSULTANTS

PEPG ENGINEERING, L.L.C.
8805 S. SANDY PARKWAY • SANDY, UT 84070
PHONE: (801) 562-2521 • FAX: (801) 562-2551

PROFESSIONAL SEAL

ISSUE

MARK	DATE	DESCRIPTION
	8-09	CONSTRUCTION DOCUMENTS
	6-22-09	PS & E REVIEW
	3-09	95% REVIEW SUBMITTAL
	1-5-09	50% REVIEW SUBMITTAL

DFCM PROJECT NO:	08264900
DFCM CONTRACT NO:	097130
ARCHIPLEX PROJECT NO:	0832.01
PEPG PROJECT NO:	6600.0817
DRAWN BY:	EAB
CHECKED BY:	JCS
SCALE:	NOT TO SCALE
DATE:	AUGUST, 2009

SHEET TITLE

IRRIGATION NOTES & SCHEDULE

L103

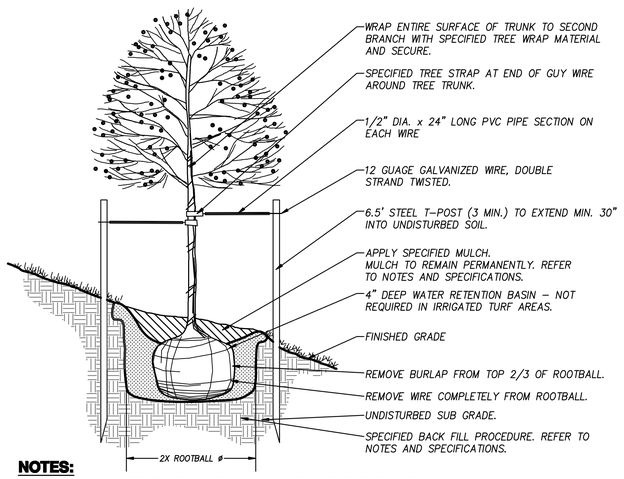

NOTES:

1. CUT BACK SLOPE TO PROVIDE A FLAT SURFACE FOR PLANTING.
2. DO NOT CUT LEADER. PRUNE DAMAGED OR DEAD WOOD IMMEDIATLY PRIOR TO PLANTING.
3. ANY BROKEN OR CRUMBLING ROOTBALL WILL BE REJECTED. REMOVING THE CONTAINER WILL NOT BE AN EXCUSE FOR DAMAGED ROOTBALL.
4. HOLE SHOULD HAVE ROUGHENED SIDES.
5. MULCH TO BE SURROUNDED BY CONCRETE MOWSTRIP. SEE DETAIL 4 SHEET L104.

TREE PLANTING ON SLOPE (1)

(NO SCALE)

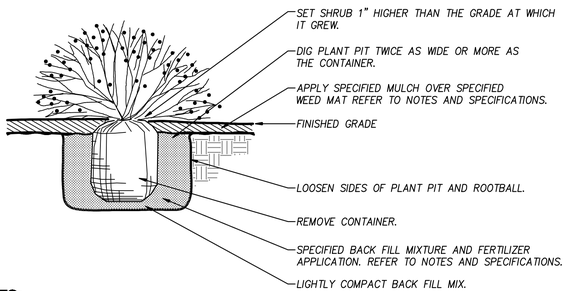

NOTES:

1. PRUNE ALL DAMAGED OR DEAD WOOD IMMEDIATLY PRIOR TO PLANTING.
2. ALL JUNIPER PLANTS SHOULD BE PLANTED SO TOP OF ROOT MASS OCCURS AT FINISHED GRADE OF MULCH LAYER.
3. ANY BROKEN OR CRUMBLING ROOTBALL WILL BE REJECTED. REMOVING THE CONTAINER WILL NOT BE AN EXCUSE FOR DAMAGED ROOTBALL.
4. TYPICAL SHURB PIT DEPTH=DEPTH OF BALL +3".

SHRUB PLANTING (3)

(NO SCALE)

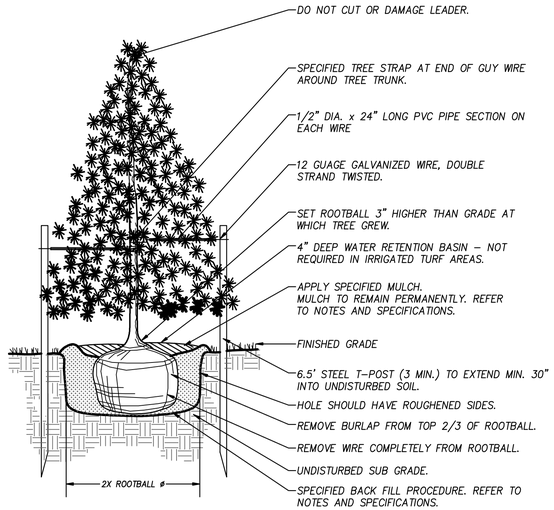

NOTES:

1. MULCH TO BE SURROUNDED BY CONCRETE MOWSTRIP. SEE DETAIL 4 SHEET L104.

EVERGREEN TREE PLANTING (2)

(NO SCALE)

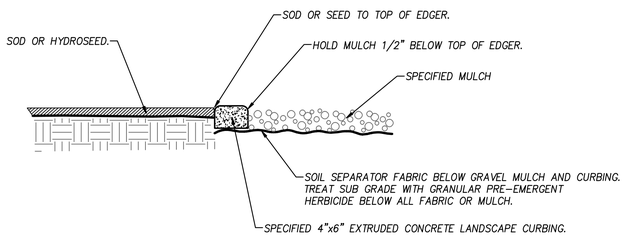

NOTES:

1. EDGER REQ'D AT ALL TURF AREAS.
2. FINE GRADE SUB GRADE TO 4 1/2" BELOW TOP OF WALK OR CURB PRIOR TO LAYING FABRIC OR SPREADING ORGANIC MULCH.

EDGE TREATMENT (4)

(NO SCALE)

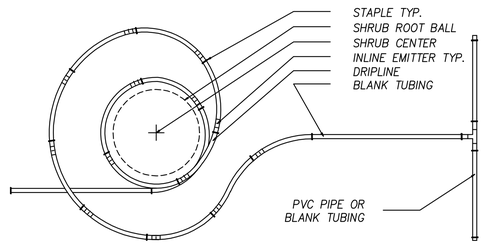

NOTE:

1. LENGTH OF DRIPLINE IS 19.5' PER LARGE SHRUB OR TREE.
2. VERIFY THAT THERE ARE 13 INLINE EMITERS ON DRIPLINE BEFORE PLACING AROUND TREE.
3. STAKE TUBING AT EVERY EMITER, AT EVERY FITTING CONNECTION, AND EVERY 18" ALONG ALL ABOVE GROUND TUBING.

DRIP TUBING (TREE) (5)

(NOT TO SCALE)

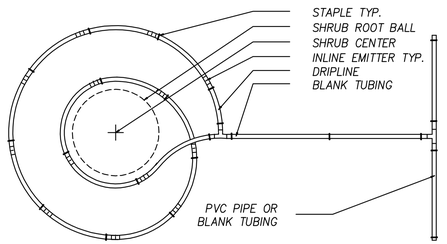

NOTE:

1. LENGTH OF DRIPLINE IS 19.5' PER LARGE SHRUB OR TREE.
2. VERIFY THAT THERE ARE 13 INLINE EMITERS ON DRIPLINE BEFORE PLACING AROUND TREE.
3. STAKE TUBING AT EVERY EMITER, AT EVERY FITTING CONNECTION, AND EVERY 18" ALONG ALL ABOVE GROUND TUBING.

DRIP TUBING (TREE) (5)

(NOT TO SCALE)

CLIENT

UDOT CONNECTING COMMUNITIES

TIE FORK VISITORS CENTER
17845 E HIGHWAY 6
SPANISH FORK, UTAH 84660

DESIGNER

ARCHIPLEX GROUP
architecture · planning · design services
255 Crossroad Square
Salt Lake City, UT 84115
P:(801) 961-7070
F:(801) 961-7373

CONSULTANTS

PEPG ENGINEERING, L.L.C.
8805 S. SANDY PARKWAY • SANDY, UT 84070
PHONE: (801) 562-2521 • FAX: (801) 562-2551

PROFESSIONAL SEAL

LICENSED LANDSCAPE ARCHITECT — JEFFREY E. BOLTON — 7147 — STATE OF UTAH — 12-09

ISSUE		
	8-09	CONSTRUCTION DOCUMENTS
	6-22-09	PS & E REVIEW
	3-09	95% REVIEW SUBMITTAL
	1-5-09	50% REVIEW SUBMITTAL
MARK	DATE	DESCRIPTION

DFCM PROJECT NO:	08264900
DFCM CONTRACT NO:	097130
ARCHIPLEX PROJECT NO:	0832.01
PEPG PROJECT NO:	6600.0817
DRAWN BY:	EAB
CHECKED BY:	JCS
SCALE:	NOT TO SCALE
DATE:	AUGUST, 2009

SHEET TITLE

LANDSCAPE & IRRIGATION DETAILS

L104

NOTES:
1. SNAKE ALL PIPE IN TRENCHES PRIOR TO BACKFILL.
2. PROVIDE A 24" EXPANSION LOOP FOR WIRE WHENEVER CHANGE OF DIRECTION IS GREATER THAN 40 DEG. OR LENGTH EXCEEDS 300' (INSTALL WIRE CONNECTIONS IN 10" ROUND VALVE BOXES).
3. TAPE AND BUNDLE WIRE AT 15' INTERVALS. USE 3MDBY, OR 3M DBR SPLICE KIT OR APPROVED EQUAL FOR WIRE CONNECTIONS.

MAINLINE & WIRING DETAIL (1)
(NO SCALE)

NOTES:
1. ALL P.V.C. PIPING SHALL BE SNAKED IN TRENCHES.
2. ALL WIRING TO BE INSTALLED PER LOCAL CODES.
3. ALL WIRING TO BE BUNDLED AND TAPED AT 10' INTERVALS.
4. ALL MAIN SUPPLY LINES TO BE INSTALLED AS PER MANUFACTURER'S SPECIFICATIONS.
5. PROVIDE PIPE AND WIRE SLEEVING UNDER ALL PAVED SURFACES. WIRE SHALL BE WITHIN SEPARATE 2" ELECTRICAL CHASE.
6. BACKFILL AND COMPACT TRENCHES IN LIFTS TRENCHES THAT SETTLE SHALL BE FILLED AND REGRADED AS REQ'D.

TRENCHING DETAIL (2)
(NO SCALE)

NOTES:
1. CONTROLLER SIZE, LOCATION AND TYPE TO BE DETERMINED BY IRRIGATION CONTRACTOR.
2. GROUND WIRE TO BE #8 WIRE CONNECTING WITHIN THE TOP 4" OF GROUND ROD. CONNECT TO ROD WITH UL APPROVED GROUND CLAMP (NO AUTOMOBILE OR SCREW CLAMPS).
3. EACH CONTROLLER IS TO HAVE TWO SEPARATE GROUND RODS, ONE FOR PRIMARY SURGE PROTECTION AND ONE FOR SECONDARY SURGE PROTECTION
4. CONTROLLERS SHALL BE INSTALLED WITH MANUFACTURER'S SECONDARY SURGE PROTECTION AND INTERMATIC (OR EQUAL) PRIMARY LIGHTNING ARRESTOR

CONTROLLER DETAIL (3)
(NO SCALE)

POINT OF CONNECTION DETAIL (4)
(NO SCALE)

NOTE:
PLACE AT HIGHEST ELEVATION PER CIRCUIT.

AIR RELIEF VALVE DETAIL (5)
(NO SCALE)

NOTES:
1. PVC FITTINGS SHALL BE SCHEDULE 40 UNLESS OTHERWISE NOTED.
2. USE SLIP FITTINGS WHEREVER POSSIBLE. FITTINGS SHALL BE SAME SIZE AS CONTROL VALVE.

SUBSURFACE DRIP CONTROL SYSTEM (6)
(NO SCALE)

NOTE:
DRAIN VALVE MUST BE INSTALLED BELOW MAINLINE.

MANUAL DRAIN VALVE DETAIL (7)
(NO SCALE)

ISOLATION VALVE DETAIL (8)
(NO SCALE)

QUICK COUPLER VALVE DETAIL (9)
(NO SCALE)

FLUSH VALVE DETAIL (10)
(NO SCALE)

NOTES:
1. INSTALLATION TO BE COMPLETED IN ACCORDANCE WITH MANUFACTURERS SPECIFICATIONS.
2. INSTALL ALL VALVE BOXES APPROX. 1/8" BELOW FINISH GRADE.
3. BRAND ALL VALVE BOX LIDS WITH IDENTIFICATION AS INDICATED ON INDIVIDUAL DETAILS.
4. RAINBIRD VALVE BOX AND EXTENSION(S) OR APPROVED EQUAL.
5. MAINTAIN A MINIMUM OF 1" BETWEEN VALVE BOX LID AND TOP OF FLOW CONTROL HANDLE IN OPEN POSITION.
6. INSTALL A MIN. OF ONE 12" EXTENSION FOR EACH VALVE BOX, ADDITIONAL EXTENSIONS AS REQUIRED.
7. INSTALL 3/4" CRUSHED GRAVEL TO WITHIN 1" OF BOTTOM OF VALVE.
8. VALVE BOXES SHALL BE ALIGNED WITH ADJACENT SURFACES, OTHER VALVE BOXES AND GRADE CONTOURS.
9. DO NOT INSTALL VALVE BOXES AT LOW POINTS.

MULTI-VALVE ASSEMBLY, 6-1" REMOTE VALVES (11)
(NO SCALE)

(1) EMITTER TUBE P.O.C. TO RISER UNIT. USE 700-CF-1 COMPRESSION ADAPTER GLUED INTO PVC FITTING.
(2) HEAVY WALLED SUITABLE FOR BOTH ABOVE & BELOW GROUND INSTALLATIONS (XT-700) OR APPROVED EQUAL. ABOVE GROUND
(3) 1.0 GPH PRESSURE COMPENSATING EMITTER WITH 1/4" DISTRIBUTION TUBING.
(4) 1.0 GPH PRESSURE COMPENSATING EMITTER.
(5) 1/2" COMPRESSION TEE FITTING.
(6) TIE DOWN STAKES (STAKE TO FINISH GRADE AS REQ'D).
(7) FLUSH CAP.
(8) TYP. SHRUB/PLANT.
(9) TYP. TREE.

NOTES:
1. USE 1 GALLON PER HOUR DRIP PIPE WITH TWO EMITTERS PER SHRUB. FOUR EMITTERS PER TREE.
2. PLACE EMISSION DEVICES SUCH THAT HARMFUL SALTS ARE PUSHED OUT & AWAY FROM THE PLANT ROOT ZONE. INSTALL 4-INCHES BELOW THE SOIL SURFACE.
3. INSTALL ALL EQUIPMENT PER MANUFACTURER'S INSTALLATION SPECIFICATIONS.
4. USE ONLY COMMERCIAL GRADE FITTINGS.
5. ALL ¼" DISTRIBUTION TUBING SHALL BE BROUGHT ABOVE GRADE BUG EMITTERS SHALL BE ON ALL ENDS ALL TUBING SHALL BE STAKED TO POSITION.
6. ALL EMITTER TUBING SHALL BE DBL STAKED AT ALL FITTINGS AND STAKED EVERY 18".

TYPICAL EMMITER SYSTEM LAYOUT (PLANVIEW) (12)
(NO SCALE)

NOTE:
1. LENGTH OF DRIPLINE IS 19.5' PER LARGE SHRUB OR TREE.
2. VERIFY THAT THERE ARE 13 INLINE EMITERS ON DRIPLINE BEFORE PLACING AROUND TREE.
3. STAKE TUBING AT EVERY EMITER, AT EVERY FITTING CONNECTION, AND EVERY 18" ALONG ALL ABOVE GROUND TUBING.

INLINE DRIP SYSTEM LAYOUT (SHRUB) (13)
(NOT TO SCALE)

NOTE:
1. LENGTH OF DRIPLINE IS 7.5' PER SHRUB.
2. VERIFY THAT THERE ARE FOUR INLINE EMITERS ON DRIPLINE BEFORE PLACING AROUND SHRUB.
3. DRIPLINE MAY NOT BE LOOPED CONTINUOUSLY. BLANK TUBING MAY BE USED TO CONNECT A SERIES OF SHRUB LOOPS.
4 STAKE TUBING AS DETAILED.

INLINE DRIP (SHRUB) (13)
(NO SCALE)

NOTES:
1. INSTALLATION TO BE COMPLETED IN ACCORDANCE WITH MANUFACTURERS SPECIFICATIONS.
2. DO NOT SCALE DRAWINGS
3. CONTRACTOR TO PRICE FULL COST OF INSTALLATION UNLESS OTHERWISE INFORMED.

TYP. SPRAY POP-UP SPRINKLER ASSEMBLY (14)
(NO SCALE)

CLIENT

UDOT CONNECTING COMMUNITIES
TIE FORK VISITORS CENTER
17845 E HIGHWAY 6
SPANISH FORK, UTAH 84660

DESIGNER

ARCHIPLEX GROUP
architecture · planning · design services
255 Crossroad Square
Salt Lake City, UT 84115
P:(801) 961-7070
F:(801) 961-7373

CONSULTANTS

PEPG ENGINEERING, L.L.C.
8805 S. SANDY PARKWAY • SANDY, UT 84070
PHONE: (801) 562-2521 • FAX: (801) 562-2551

PROFESSIONAL SEAL

ISSUE

MARK	DATE	DESCRIPTION
	8-09	CONSTRUCTION DOCUMENTS
	6-22-09	PS & E REVIEW
	3-09	95% REVIEW SUBMITTAL
	1-5-09	50% REVIEW SUBMITTAL

DFCM PROJECT NO:	08264900
DFCM CONTRACT NO:	097130
ARCHIPLEX PROJECT NO:	0832.01
PEPG PROJECT NO:	6600.0817
DRAWN BY:	EAB
CHECKED BY:	JCS
SCALE:	NOT TO SCALE
DATE:	AUGUST, 2009

SHEET TITLE

IRRIGATION DETAILS

L105