PROJECT NO.	SHEET NO.
08278510	1

ISSUE DATE 12-09-2008

STATE OF UTAH
DIVISION OF FACILITIES CONSTRUCTION AND MANAGEMENT

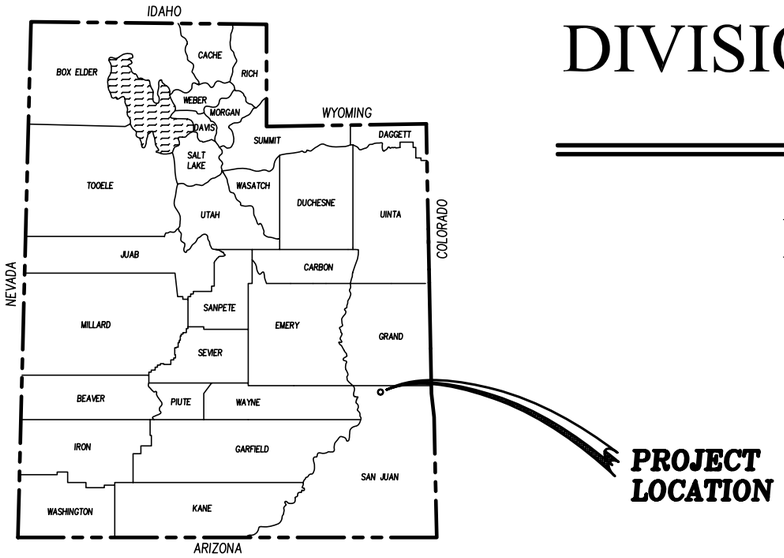

DEAD HORSE POINT STATE PARK
PAVING IMPROVEMENTS

DFCM PROJECT NO. 08278510

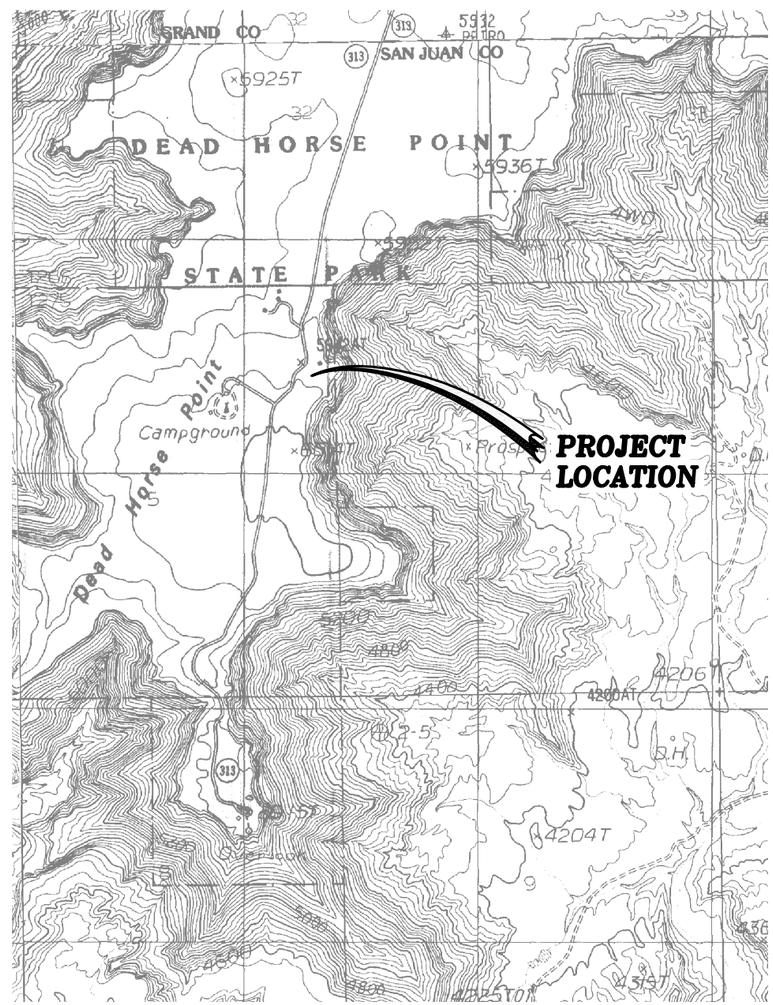

RECOMMENDED FOR APPROVAL:

Craig E. Johansen — 11/21/08
PROJECT ENGINEER — DATE

LICENSED PROFESSIONAL ENGINEER No. 146602 CRAIG E. JOHANSEN STATE OF UTAH

APPROVALS:

B. Lloyd — 12/09/08
STATE OF UTAH DFCM — DATE

Dave Clark — 12/09/08
UTAH STATE DIVISION OF PARKS AND RECREATION — DATE

johansen & tuttle ENGINEERING INC.
BOX 487, CASTLE DALE, UTAH 84513 (435) 381-2523
FAX (435) 381-2522 email jt@etv.net

INDEX TO SHEETS

SHEET	DESCRIPTION
1	TITLE SHEET
2	INDEX TO SHEETS, SUMMARY OF ITEMS
3	TYPICAL SECTIONS
4	DETAIL SHEET
5	ACCESSIBLE PARKING DETAIL
6	PAVENT MARKING ARROW DETAIL
7	PLAN SHEET
8	PLAN SHEET
9	PAINTING SHEET

SUMMARY OF ITEMS

ITEM	DESCRIPTION	UNIT	QUANTITY
1	CLEARING AND GRUBBING	LUMP	1
2	MOBILIZATION	LUMP	1
3	3" HMA AC–10 (1/2 – INCH MAX.)	SQ. FT.	17400
4	2" HMA OVERLAY AC–10 (1/2 – INCH MAX.)	SQ. FT.	17100
5	PAVEMENT AND CONCRETE SAWING	LIN. FT.	460
6	UNTREATED BASE COURSE 1 – INCH MINUS	CU. YD.	250
7	BORROW	CU. YD.	300
8	OBLITERATE ROAD	LUMP	1
9	24–INCH COLORED CONCRETE CURB AND GUTTER	LIN. FT.	215
10	RECONSTRUCT UTILITY ACCESS	EACH	4
11	5–FOOT COLORED CONCRETE SIDEWALK	LIN. FT.	260
12	CURB INLET BOX	EACH	2
13	REMOVE 5–FOOT SIDEWALK	LIN. FT.	75
14	18–INCH CSP CULVERT W/M.E.S. (POLYMERIC COATED)	LIN. FT.	15
15	PAVEMENT MARKING PAINT	LUMP	1

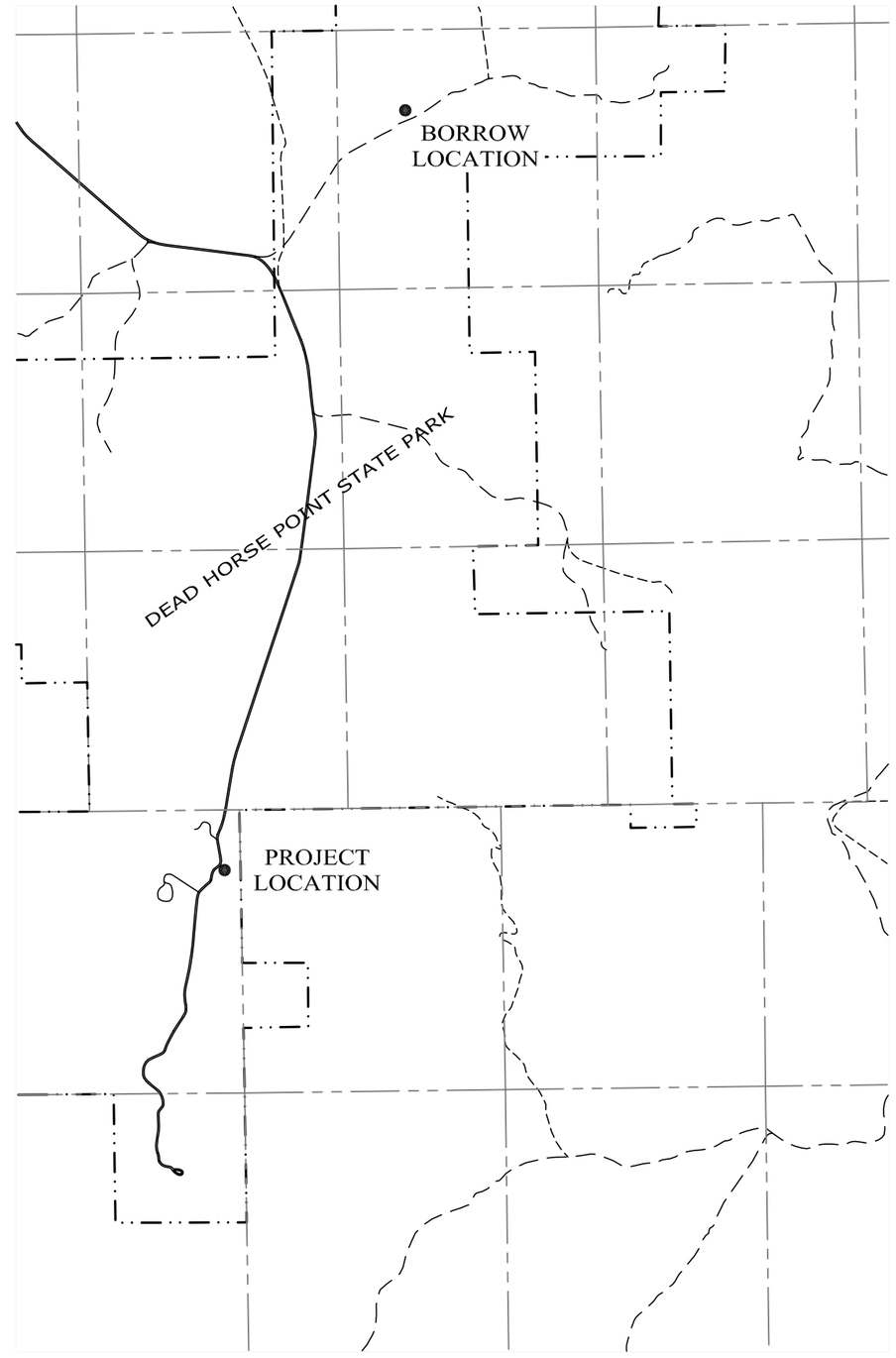

DESIGNED HRT	9–08	CHECKED CEJ	9–08
DRAWN LMS	9–08	CHECKED HRT	9–08
SURVEYED BHT	9–08	CHECKED LMS	9–08
R.O.W.		CHECKED	

johansen & tuttle ENGINEERING INC.
BOX 487, CASTLE DALE, UTAH 84513 (435) 381-2523
FAX (435) 381-2522 EMAIL jt@etv.net

STATE of UTAH DFCM
DEAD HORSE POINT STATE PARK
PAVING IMPROVEMENTS
PROJECT No. 08278510

INDEX TO SHEETS
and SUMMARY of ITEMS

PROJECT NO.
08278510

SHEET NO.
2

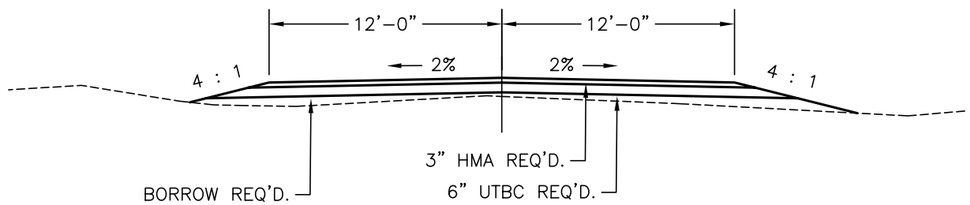

STA. 10+00.00 TO
STA. 11+35.50

TYPICAL SECTION 1

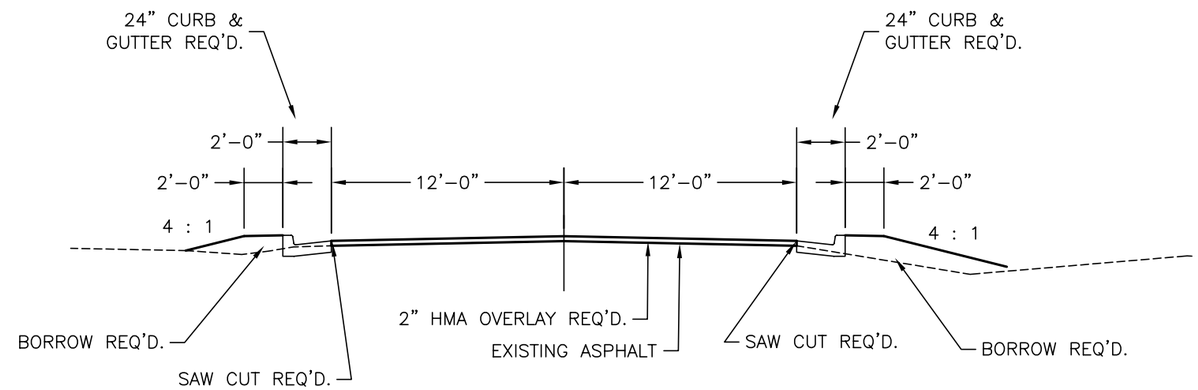

STA. 15+50.00 TO
STA. 16+49.34

TYPICAL SECTION 3

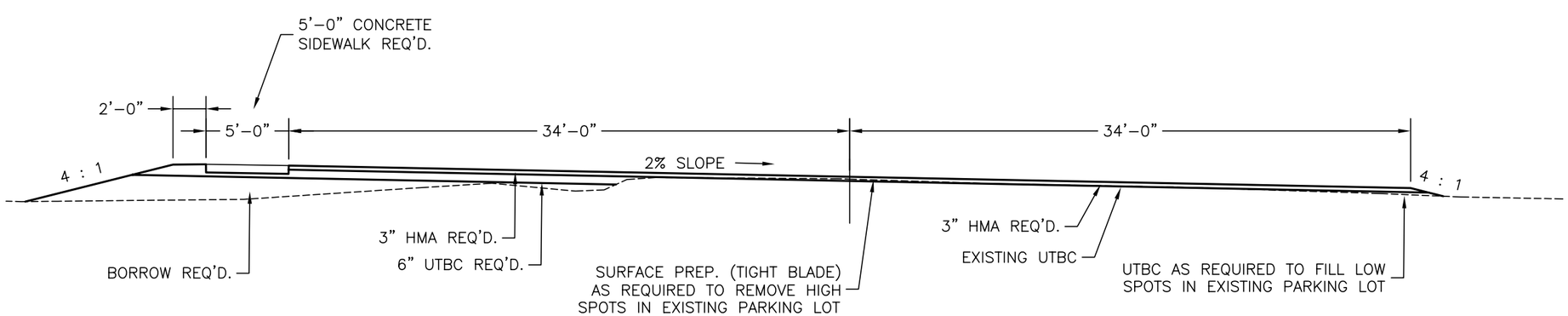

STA. 11+35.50 TO
STA. 13+85.50

TYPICAL SECTION 2

DESIGNED	HRT	10-08	CHECKED	CEJ	10-08
DRAWN	LMS	10-08	CHECKED	HRT	10-08
SURVEYED	BHT	10-08	CHECKED	LMS	10-08
R.O.W.			CHECKED		

johansen & tuttle ENGINEERING INC.
BOX 487, CASTLE DALE, UTAH 84513 (435) 381-2523
FAX (435) 381-2522 EMAIL JT@etv.net

STATE of UTAH DFCM
DEAD HORSE POINT STATE PARK
PAVING IMPROVEMENTS
PROJECT No. 08278510

TYPICAL SECTIONS

PROJECT NO.
08278510

SHEET NO.
3

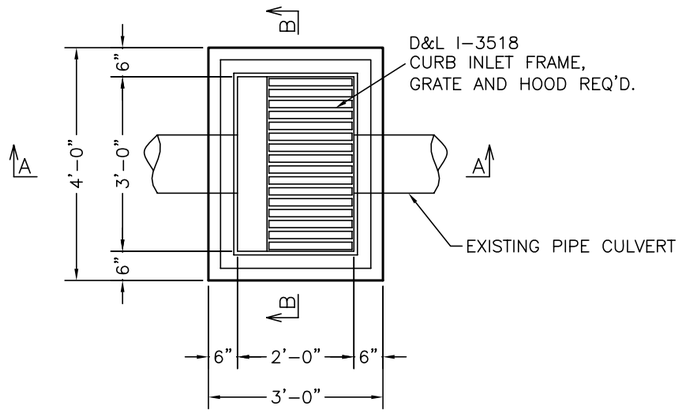

PLAN VIEW

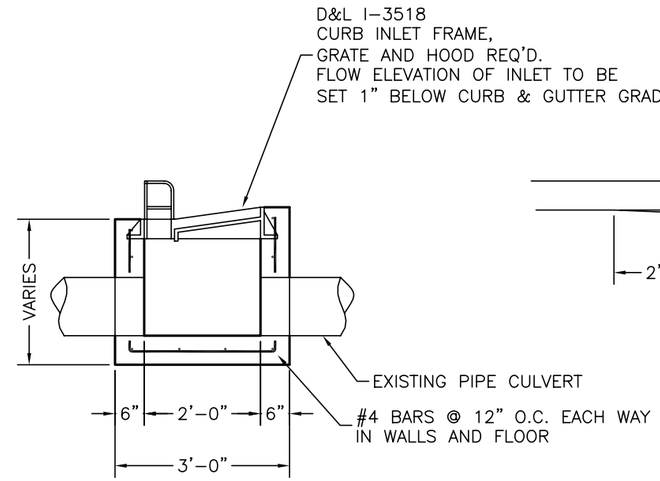

SECTION A–A

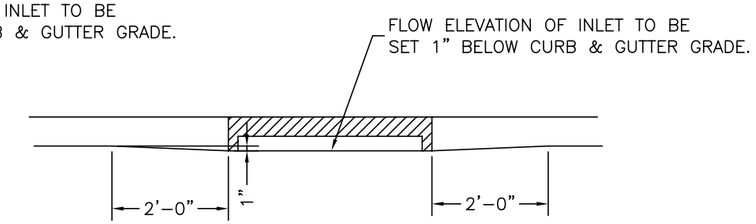

SECTION B–B

TYPICAL CURB INLET BOX

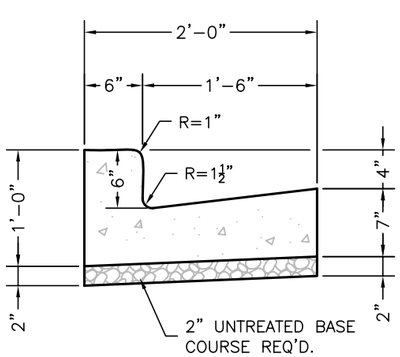

TYPICAL 24" CURB & GUTTER

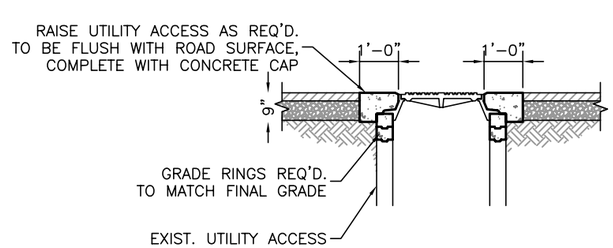

RECONSTRUCT UTILITY ACCESS DETAIL

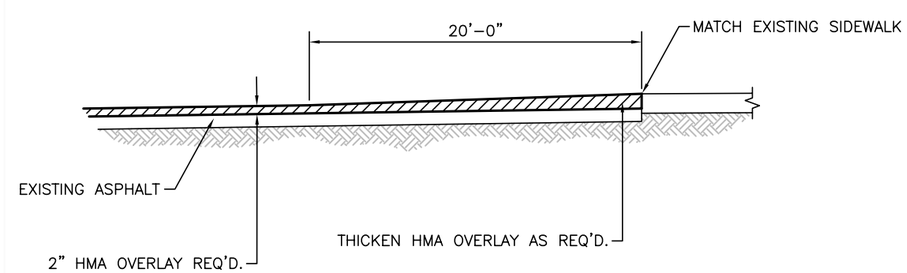

TYPICAL OVERLAY SECTION

DESIGNED	HRT	10-08	CHECKED	CEJ 10-08
DRAWN	LMS	10-08	CHECKED	HRT 10-08
SURVEYED	BHT	10-08	CHECKED	LMS 10-08
R.O.W.			CHECKED	

johansen & tuttle ENGINEERING INC.
BOX 487, CASTLE DALE, UTAH 84513 (435) 381-2523
FAX (435) 381-2522 EMAIL jt@etv.net

STATE of UTAH DFCM
DEAD HORSE POINT STATE PARK
PAVING IMPROVEMENTS
PROJECT No. 08278510

DETAIL SHEET

PROJECT NO.
08278510

SHEET NO.
4

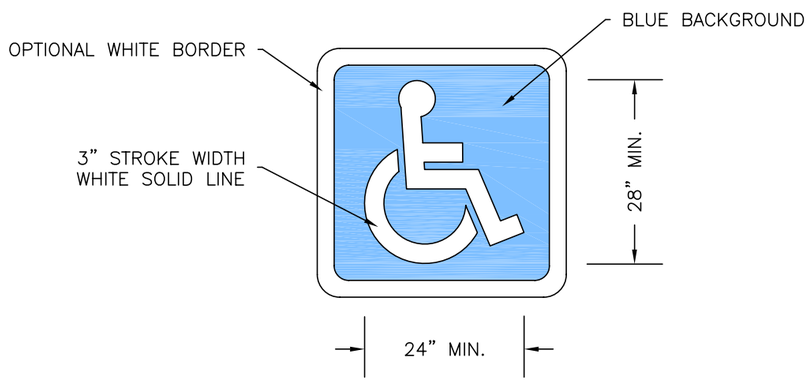

INTERNATIONAL SYMBOL
OF ACCESSIBILITY
PARKING SPACE MARKING

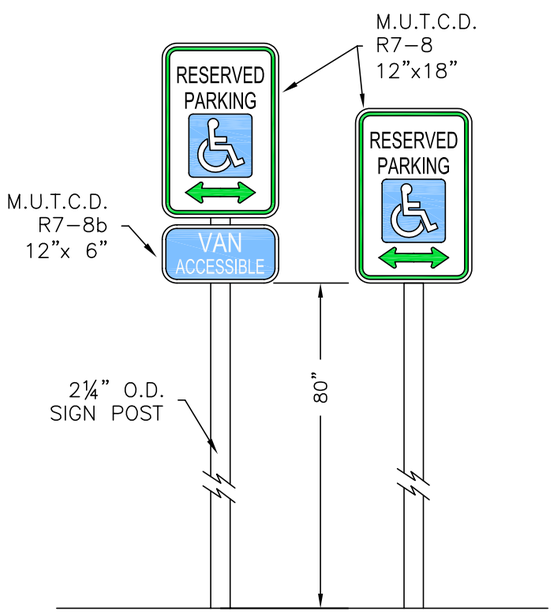

ACCESSIBLE PARKING SIGN
DETAIL

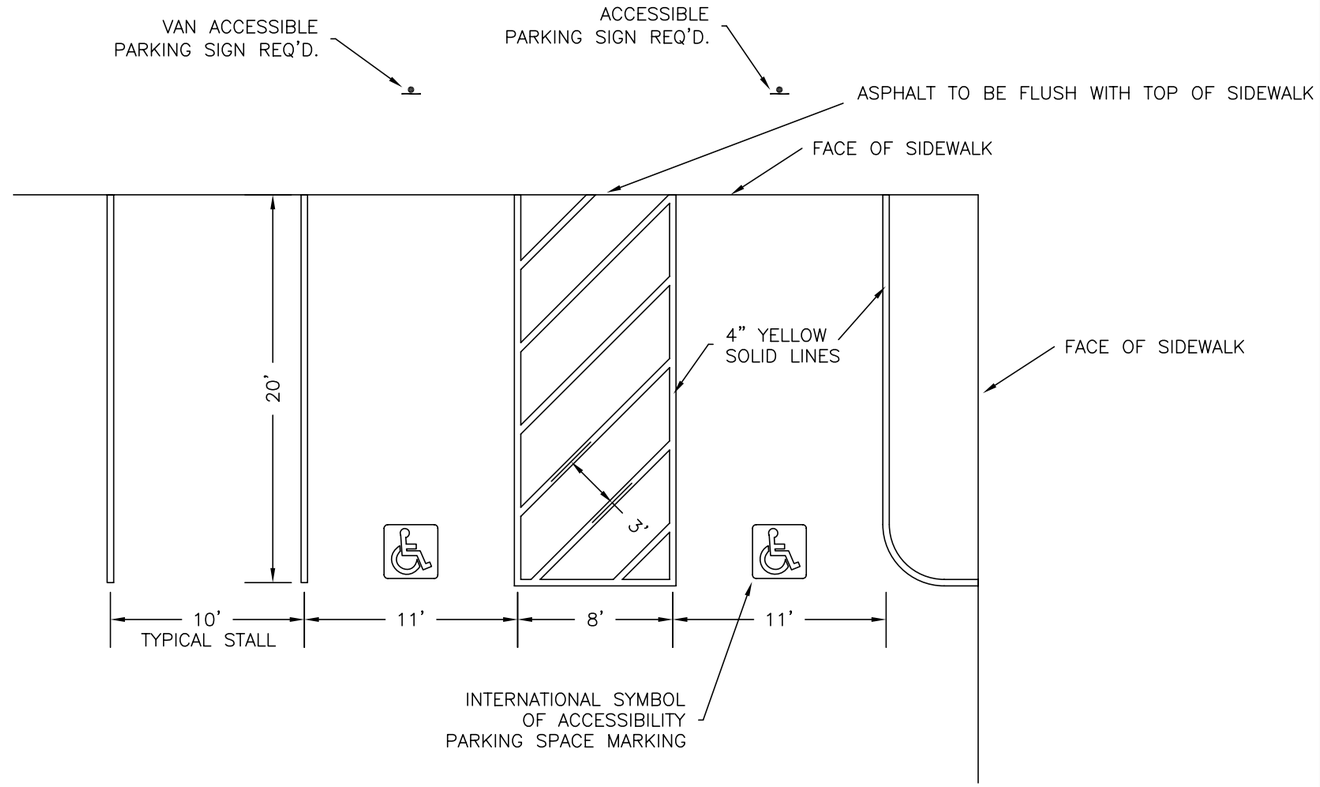

ACCESSIBLE PARKING
SPACE MARKING

DESIGNED HRT	9-08	CHECKED CEJ	9-08
DRAWN LMS	9-08	CHECKED HRT	9-08
SURVEYED BHT	9-08	CHECKED LMS	9-08
R.O.W.		CHECKED	

johansen & tuttle ENGINEERING INC.
BOX 487, CASTLE DALE, UTAH 84513 (435) 381-2523
FAX (435) 381-2522 EMAIL jt@etv.net

STATE of UTAH DFCM
DEAD HORSE POINT STATE PARK
PAVING IMPROVEMENTS
PROJECT No. 08278510

ACCESSIBLE PARKING
DETAIL

PROJECT NO.
08278510

SHEET NO.
5

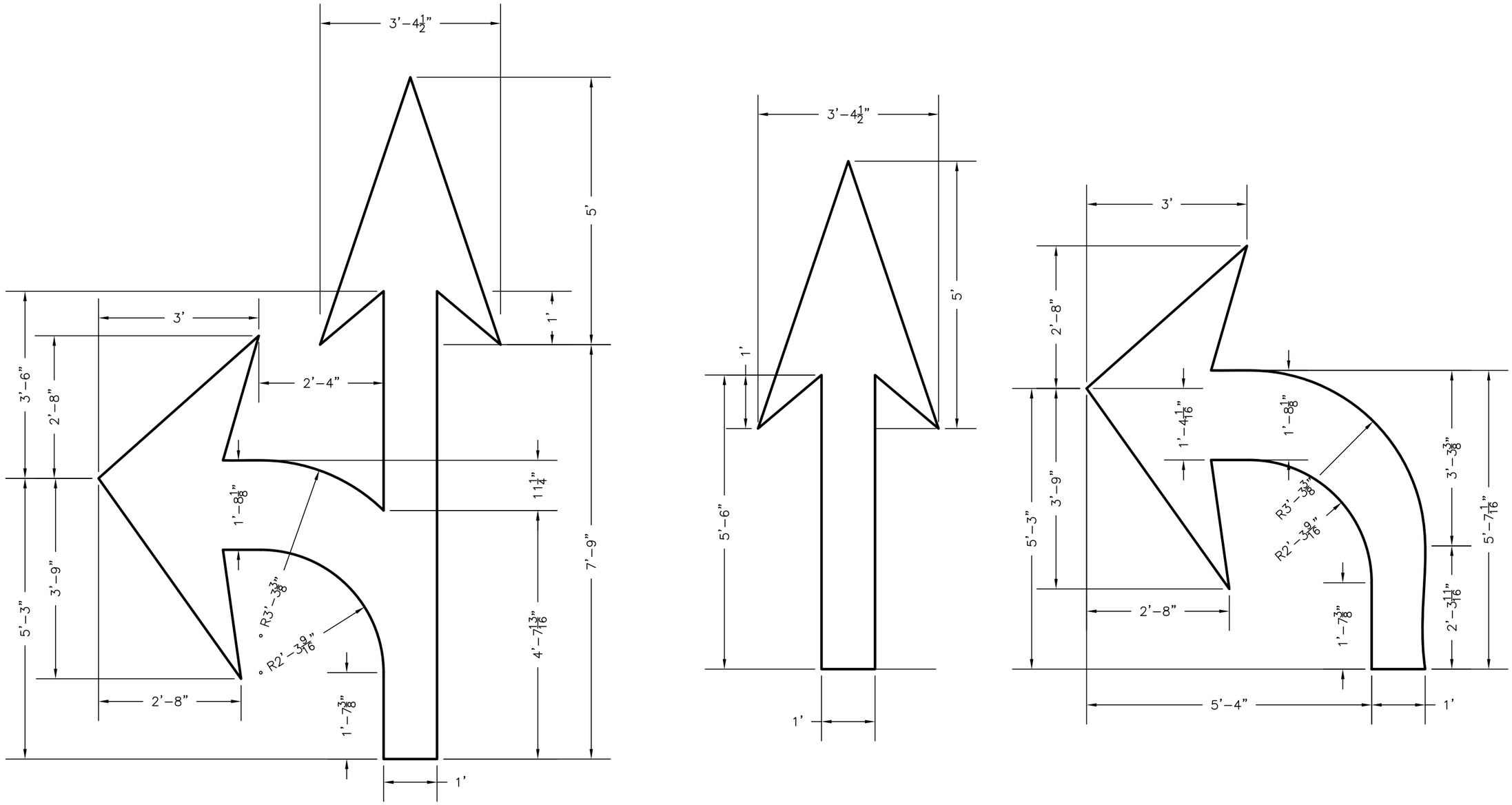

STANDARD PAVEMENT MARKING ARROWS

(MUTCD, STANDARD HIGHWAY SIGNS, PAVEMENT MARKINGS FIG. 10-8 & 10-10)

DESIGNED	HRT	9-08	CHECKED	CEJ 9-08
DRAWN	LMS	9-08	CHECKED	HRT 9-08
SURVEYED	BHT	9-08	CHECKED	LMS 9-08
R.O.W.			CHECKED	

johansen & tuttle ENGINEERING INC.
BOX 487, CASTLE DALE, UTAH 84513 (435) 381-2523
FAX (435) 381-2522 EMAIL jt@etv.net

STATE of UTAH DFCM
DEAD HORSE POINT STATE PARK
PAVING IMPROVEMENTS
PROJECT No. 08278510

PAVEMENT MARKING
ARROW DETAIL

PROJECT NO.
08278510

SHEET NO.
6

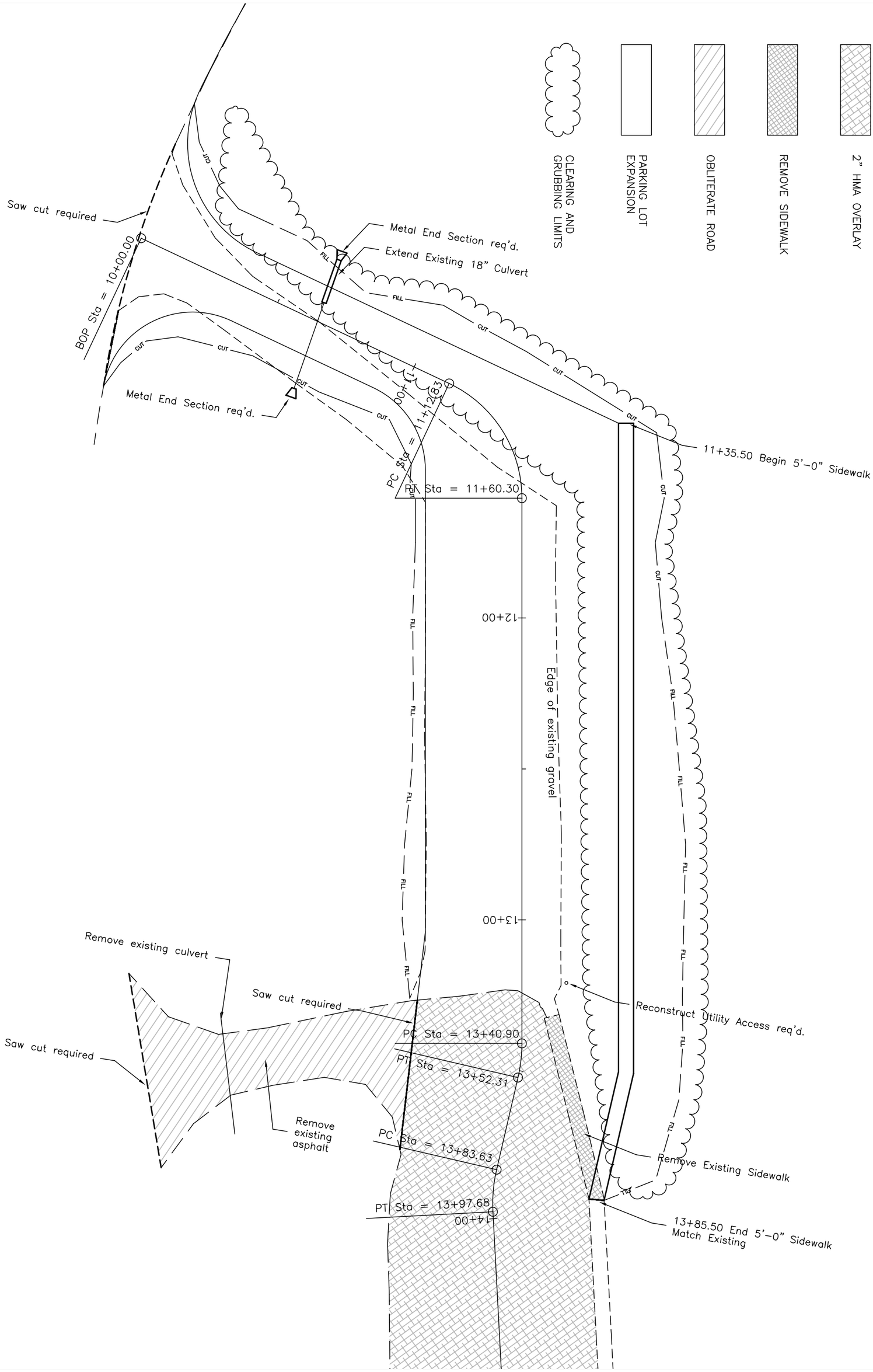

PROJECT NO. 08278510
SHEET NO. 7

PLAN SHEET

STATE of UTAH DFCM
DEAD HORSE POINT STATE PARK
PAVING IMPROVEMENTS
PROJECT No. 08278510

Johansen & Tuttle ENGINEERING INC.
BOX 487, CASTLE DALE, UTAH 84513 (435) 381-2523
FAX (435) 381-2522 EMAIL jt@etv.net

DESIGNED	HRT	10-08	CHECKED	CEJ	10-08
DRAWN	LMS	10-08	CHECKED	HRT	10-08
SURVEYED	BHT	10-08	CHECKED	LMS	10-08
R.O.W.			CHECKED		

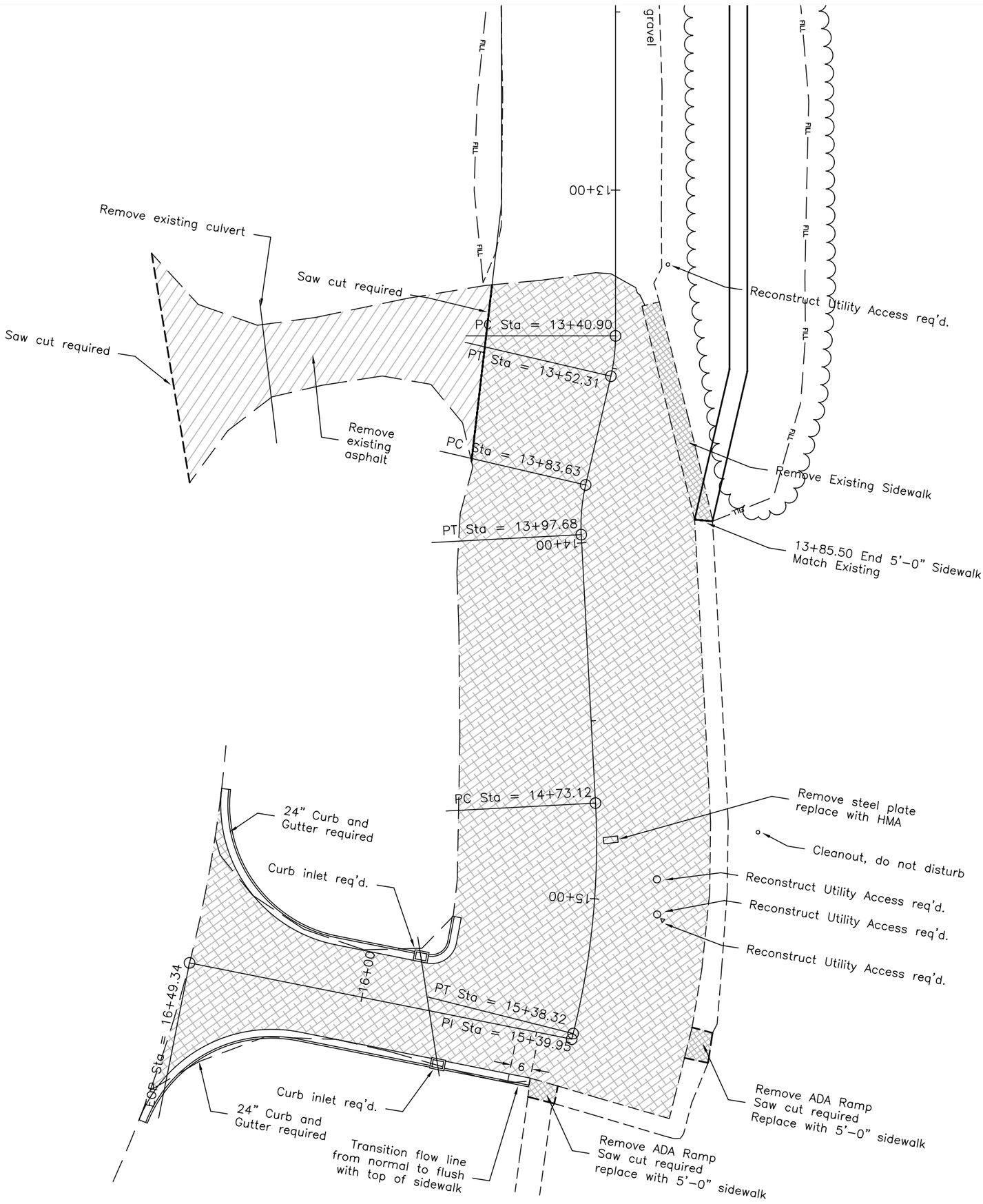

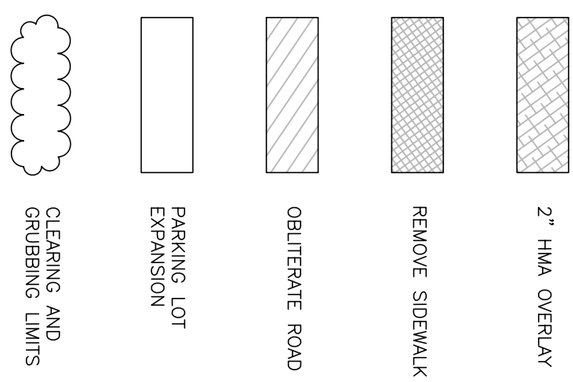

PROJECT NO. 08278510
SHEET NO. 8

PLAN SHEET

STATE of UTAH DFCM
DEAD HORSE POINT STATE PARK
PAVING IMPROVEMENTS
PROJECT No. 08278510

Johansen & Tuttle ENGINEERING INC.
BOX 487, CASTLE DALE, UTAH 84513 (435) 381-2523
FAX (435) 381-2522 EMAIL Jt@etv.net

DESIGNED	HRT	10-08	CHECKED	CEJ	10-08
DRAWN	LMS	10-08	CHECKED	HRT	10-08
SURVEYED	BHT	10-08	CHECKED	LMS	10-08
R.O.W.			CHECKED		

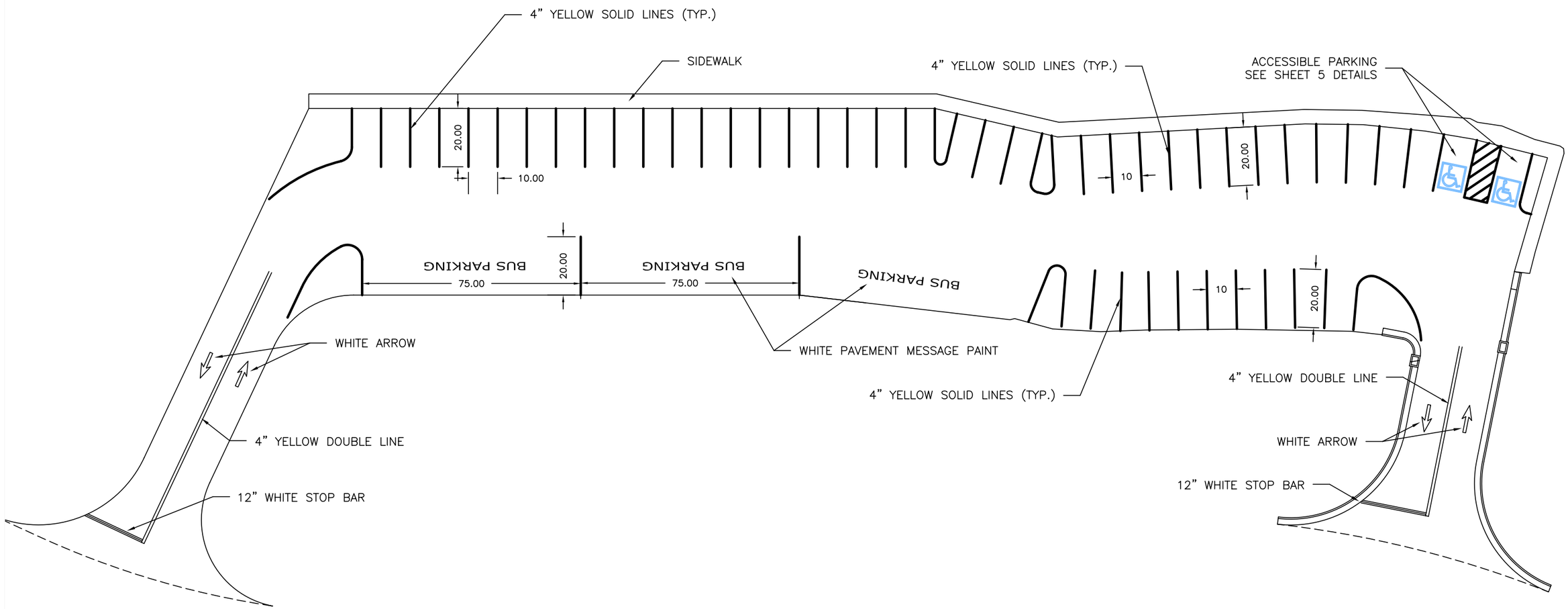

DESIGNED	HRT	10-08	CHECKED	CEJ 10-08
DRAWN	LMS	10-08	CHECKED	HRT 10-08
SURVEYED	BHT	10-08	CHECKED	LMS 10-08
R.O.W.			CHECKED	

johansen & tuttle ENGINEERING INC.
BOX 487, CASTLE DALE, UTAH 84513 (435) 381-2523
FAX (435) 381-2522 EMAIL jt@etv.net

STATE of UTAH DFCM
DEAD HORSE POINT STATE PARK
PAVING IMPROVEMENTS
PROJECT No. 08278510

PAINTING SHEET

PROJECT NO.
08278510

SHEET NO.
9