2nd District Juvenile Courthouse

OGDEN, UTAH
DFCM PROJECT 08284150
BID DOCUMENTS

August 15, 2013
VOLUME I

PROJECT TEAM

OWNER
DFCM
LYNN HINRICHS
4110 STATE OFFICE BUILDING
SALT LAKE CITY, UT 84114
PHONE: 801-538-3255

ARCHITECT
BRENT TIPPETS
VCBO ARCHITECTURE
524 SOUTH 600 EAST
SALT LAKE CITY, UT 84102
PHONE: 801-575-8800

STRUCTURAL ENGINEER
JEROD JOHNSON
REAVELEY ENGINEERS & ASSOCIATES
675 EAST 500 SOUTH SUITE 400
SALT LAKE CITY, UT 84102
PHONE: 801-486-3883

CIVIL ENGINEER
MARK BABBITT
GREAT BASIN ENGINEERING
5746 SOUTH 1475 EAST SUITE 200
Ogdon, UT 84403
PHONE: 801-394-4515

ELECTRICAL ENGINEER
DAVID WESEMANN
SPECTRUM ENGINEERS
324 S. STATE STREET, SUITE 400
SALT LAKE CITY, UT 84111
PHONE: 801-328-5151

MECHANICAL ENGINEER
JADEN PERRY
COLVIN ENGINEERING ASSOCIATES
244 WEST 300 NORTH SUITE 200
SALT LAKE CITY, UT 84103
PHONE: 801-322-2416

SECURITY CONSULTANT
MIKE BICE
SPECTRUM ENGINEERS
324 S. STATE STREET, SUITE 400
SALT LAKE CITY, UT 84111
PHONE: 801-328-5151

COMMISSIONING AGENT
TREY KING
E CUBE
1900 FOLSOM STREET SUITE 109
BOULDER, CO 80302
PHONE: 303-443-2610

LANDSCAPE ARCHITECT
STEVEN GILBERT
ARCSITIO DESIGN
1058 EAST 2100 SOUTH
SALT LAKE CITY, UT 84106
PHONE: 801-487-4923

AUDIO VISUAL ENGINEERING
GERALD NELSON
SPECTRUM ENGINEERS
324 S. STATE STREET, SUITE 400
SALT LAKE CITY, UT 84111
PHONE: 801-328-5151

ENVELOPE CONSULTANT
RICHARD ZIEGLER
ARCHITECTURAL TESTING
324 SOUTH STATE STREET #400
SALT LAKE CITY, UT 84111
PHONE: 801-328-5151

ACOUSTICAL ENGINEERING
SARA ROLLINS
SPECTRUM ENGINEERS
324 S. STATE STREET, SUITE 400
SALT LAKE CITY, UT 84111
PHONE: 801-328-5151

STATE OF UTAH
DEPARTMENT OF ADMINISTRATIVE SERVICES
DIVISION OF FACILITIES CONSTRUCTION AND MANAGEMENT
4110 STATE OFFICE BUILDING
SALT LAKE CITY, UT 84114

801-533-5561

ABBREVIATIONS

NOT ALL ABBREVATIONS MAY BE USED

&	AND	E	EAST	JST	JOIST	REFG	REFRIGERATOR
@	AT	EA	EACH	JT	JOINT	REINF	REINFORCE (ED)
		EIFS	EXTERIOR INSULATION SYSTEM			REM	REMOVE (ED)
ACT	ACOUSTICAL CEILING TILE	EJ	EXPANSION JOINT	LAV	LAVATORY	REPL	REPLACE
ADJ	ADJUSTABLE	ELEC	ELECTRICAL	LB/ LBS	POUND (S)	REQD	REQUIRED
AFF	ABOVE FINISH FLOOR	ELEV	ELEVATION			REV	REVISION (S)
ALT	ALTERNATE	EQ	EQUAL	MAT	MATERIAL (S)	RM	ROOM
AL/ALUM	ALUMINUM	EQUIP	EQUIPMENT	MAX	MAXIMUM	RO	ROUGH OPENING
APPROX	APPROXIMATE	EVAP	EVAPORATIVE	MDF	MEDIUM DENSITY FIBERBOARD		
ARCH	ARCHITECTURAL	EXIST	EXISTING	MECH	MECHANICAL	S	SOUTH
		EXP	EXPANSION	MEMB	MEMBRANE	SALV	SALVAGE (ED)
BD	BOARD	EXT	EXTERIOR	MEZZ	MEZZANINE	SECT	SECTION
BLDG	BUILDING	EWC	ELECTRIC WATER COOLER	MFR	MANUFACTURER	SF	SQUARE FOOT
BLK	BLOCK (ING)			MGR	MANAGER	SIM	SIMILAR
BO	BOTTOM OF	FA	FIRE ALARM	MIN	MINIMUM	SLNT	SEALANT
BRG	BEARING	FD	FLOOR DRAIN	MIR	MIRROR	SPEC	SPECIFICATION (S)
BSMT	BASEMENT	FDN	FOUNDATION	MISC	MISCELLANEOUS	SQ	SQUARE
BS	BOTH SIDES	FE	FIRE EXTINGUISHER	MO	MASONRY OPENING	SS	STAINLESS STEEL
BW	BOTH WAYS	FEC	FIRE EXTINGUISHER CABINET	MTD	MOUNT, (ED)	STC	SOUND TRANSMISSION CLASS
		FG	FINISH GRADE	MTL	METAL	STD	STANDARD
CAB	CABINET	FH	FIRE HYDRANT	MW	MICROWAVE	STL	STEEL
CB	CATCH BASIN					STOR	STORAGE
CCSA	CUSTOM COLOR SELECTED BY ARCHITECT	FIN	FINISHED	N	NORTH	STRUC	STRUCTURE (AL)
CG	CORNER GUARD	FLR	FLOOR	NIC	NOT IN CONTRACT	SUSP	SUSPENDED
CHAM	CHAMFER	F.O.	FACE OF	NO.	NUMBER	SYM	SYMMETRY (ICAL)
CJ	CONTROL JOINT	FT	FOOT, FEET	NOM	NOMINAL		
CL	CENTER LINE	FRP	FIBER REINFORCED PANEL	NRC	NOISE REDUCTION COEFFICIENT	T	THICKNESS
CLG	CEILING	FRT	FIRE RETARDANT TREATED WOOD	NTS	NOT TO SCALE	T & B	TOP AND BOTTOM
CLR	CLEAR	FTG	FOOTING			T & G	TONGUE AND GROOVE
CM	CONSTRUCTION MANAGER	FV	FIELD VERIFY	OC	ON CENTER	TBD	TO BE DETERMINED
COL	COLUMN			OD	OUTSIDE DIAMETER	TEMP	TEMPORARY
COMP	COMPUTER	GA.	GAUGE	OFD	OVERFLOW DRAIN	THRU	THROUGH
CONC	CONCRETE	GALV	GALVANIZED	OH	OVERHEAD	T.O.	TOP OF
CONT	CONTINUOUS	GB	GRAB BAR	OPG	OPENING	TRANS	TRANSFORMER
CMU	CONCRETE MASONRY UNIT	GC	GENERAL CONTRACTOR	OPP	OPPOSITE	TS	TUBE STEEL
CSBA	COLOR SELECTED BY ARCHITECT	GFRC	GLASSFIBER REINFORCED PANEL	OSB	ORIENTED STRAND BOARD	TYP	TYPICAL
CT	CERAMIC TILE	GYP	GYPSUM	OZ	OUNCE		
		GWB	GYPSUM WALLBOARD			UNF	UNFINISHED
D	DEPTH			PERI	PERIMETER	UNO	UNLESS OTHERWISE NOTED
DB	DECK BEARING	HB	HOSE BIBB	PERM	PERMENANT		
DBL	DOUBLE	HC	HANDICAP ACCESSIBLE	PL	PLATE	VAR	VARIES
DEPT	DEPARTMENT	HDW	HARDWARE	PLAM	PLASTIC LAMINATE	VB	VAPOR BARRIER
DF	DRINKING FOUNTAIN	HDF	HIGH DENSITY FIBERBOARD	PNL	PANEL	VCT	VINYL COMPOSITION TILE
DIA	DIAMETER	HM	HOLLOW METAL	P.O.	POINT OF	VERT	VERTICAL
DIM	DIMENSION	H	HEIGHT	PR	PAIR	VEST	VESTIBULE
DN	DOWN	HOR	HORIZONTAL	PT	POST TENSIONED	VWC	VINYL WALLCOVERING
DRN	DRAIN			PART	PARTITION		
DTL/ DET	DETAIL	ID	INSIDE DIAMETER	PLY	PLYWOOD	W	WEST
DW	DISHWASHER	ICF	INSULATED CONCRETE FORM			W	WIDTH
DWG	DRAWING	IN	INCH	QT	QUARRY TILE	W/	WITH
		INCL	INCLUDE			WC	WATER CLOSET
		INFO	INFORMATION	R / RAD	RADIUS	WD	WOOD
		INT	INTERIOR	RCP	REFLECTED CEILING PLAN	W/O	WITHOUT
		INSUL	INSULATE, (D), (ION)	REC	RECESSED	WSCT	WAINSCOT
		INV	INVERT	REF	REFERENCE	WWF	WELDED WIRE FABRIC

REFERENCE SYMBOL LEGEND

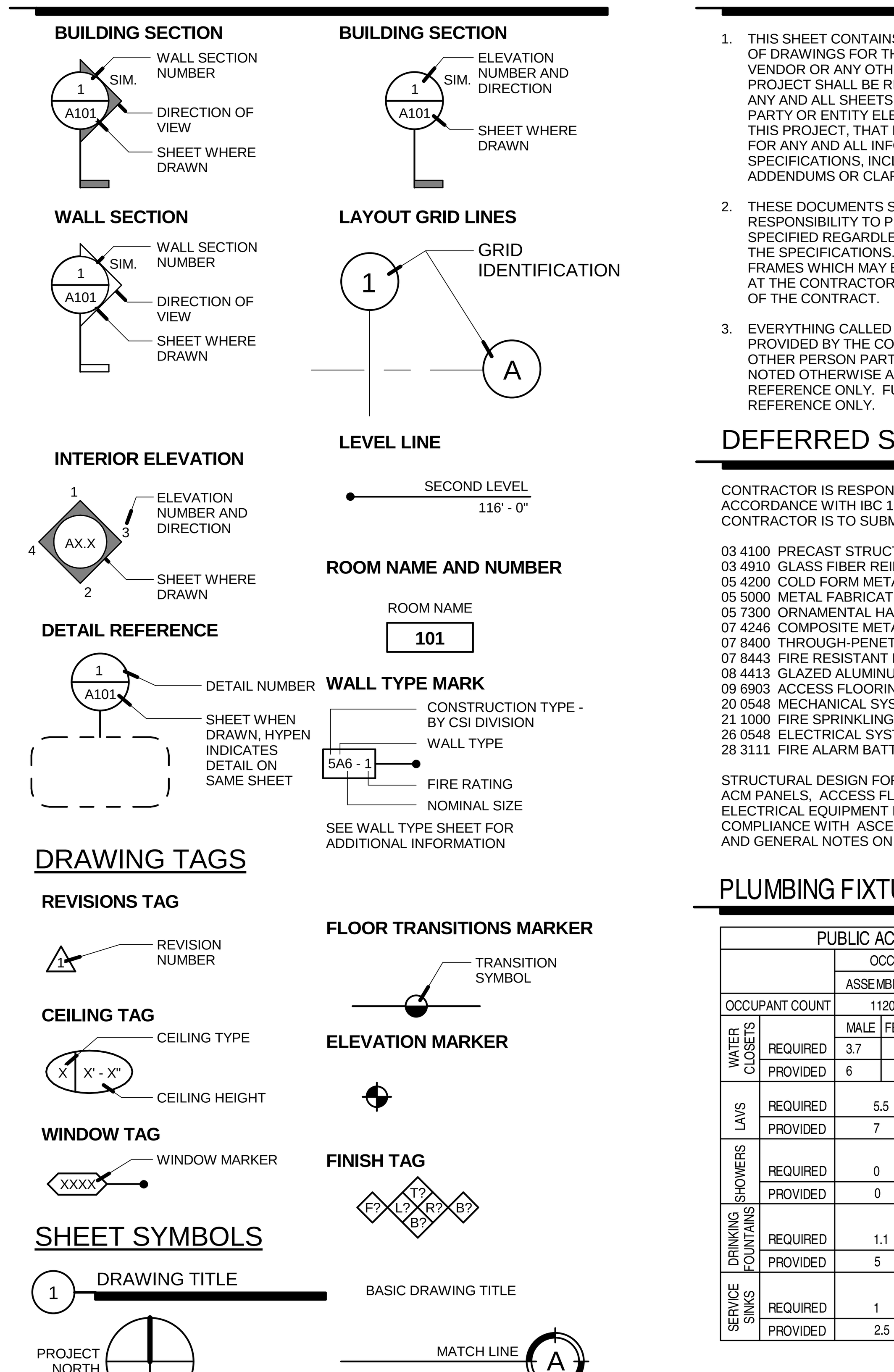

UTILITY CONTACTS

POWER ROCKY MOUNTAIN POWER 201 South Main Street #2300 Salt Lake City, UT 84111 p: 888 221 7070	**WATER** OGDEN CITY WATER UTILITIES 133 West 29th Street Ogden, UT 84401 p: 801 629 8321
NATURAL GAS QUESTAR GAS 2974 Washington Blvd Ogden, UT 84401 p: 801 621 3262	**TELEPHONE** CENTURYLINK 2601 Industrial Drive Ogden, UT 84401 p: 888 997 9378
UTILITY LOCATOR COMMON GROUND ALLIANCE National Hotline: 811 Blue Stakes: 800 662 4111	**SEWER** OGDEN CITY WATER UTILITIES 133 West 29th Street Ogden, UT 84401 p: 801 629 8321

NOTES TO BIDDERS

1. THIS SHEET CONTAINS A LIST OF DRAWINGS WHICH COMPRISE A FULL SET OF DRAWINGS FOR THIS PROJECT. ANY CONTRACTOR, SUBCONTRACTOR, VENDOR OR ANY OTHER PERSON PARTICIPATING IN OR BIDDING ON THIS PROJECT SHALL BE RESPONSIBLE FOR THE INFORMATION CONTAINED IN ANY AND ALL SHEETS OF DRAWINGS AND SPECIFICATIONS. IF ANY PERSON, PARTY OR ENTITY ELECTS TO SUBMIT BIDS FOR ANY PORTION, OR ALL, OF THIS PROJECT, THAT PERSON, PARTY OR ENTITY SHALL BE RESPONSIBLE FOR ANY AND ALL INFORMATION CONTAINED IN THESE DRAWINGS AND SPECIFICATIONS, INCLUDING, BUT NOT LIMITED TO, ANY SUBSEQUENT ADDENDUMS OR CLARIFICATIONS THAT MAY BE ISSUED.
2. THESE DOCUMENTS SHOW THE DESIGN INTENT. IT IS THE CONTRACTORS RESPONSIBILITY TO PROVIDE EVERYTHING SHOWN ON THE DRAWINGS OR SPECIFIED REGARDLESS OF WHERE IT IS SHOWN ON THE DRAWINGS OR IN THE SPECIFICATIONS. FOR EXAMPLE; SOME MILLWORK DETAILS HAVE STEEL FRAMES WHICH MAY BE PROVIDED BY DIVISION 05 OR WITH THE MILLWORK AT THE CONTRACTOR'S DISCRETION, BUT IT SHALL BE PROVIDED AS PART OF THE CONTRACT.
3. EVERYTHING CALLED FOR IN THESE DOCUMENTS SHALL BE "NEW" AND PROVIDED BY THE CONTRACTOR, SUBCONTRACTOR, VENDOR OR ANY OTHER PERSON PARTICIPATING IN OR BIDDING ON THIS PROJECT UNLESS NOTED OTHERWISE AS EXISTING (EXIST), NOT IN CONTRACT (NIC) OR FOR REFERENCE ONLY. FURNISHINGS SHOWN DASHED SHALL BE FOR REFERENCE ONLY.

DEFERRED SUBMITTALS - DFCM

CONTRACTOR IS RESPONSIBLE TO SUBMIT DEFERRED SUBMITTALS IN ACCORDANCE WITH IBC 106.3.4.2. AS PART OF THE SUBMITTAL PROCESS, THE CONTRACTOR IS TO SUBMIT ALL ICC ERS REPORTS FOR ITEMS NOTED.

03 4100 PRECAST STRUCTURAL CONCRETE PANEL DESIGN AND ATTACHMENTS
03 4910 GLASS FIBER REINFORCED CONCRETE PANEL ATTACHMENTS
05 4200 COLD FORM METAL FRAMING
05 5000 METAL FABRICATIONS (STAIRS AND LADDERS)
05 7300 ORNAMENTAL HANDRAILS AND RAILINGS (GLASS RAILS)
07 4246 COMPOSITE METAL WALL PANELS
07 8400 THROUGH-PENETRATION FIRE STOPS
07 8443 FIRE RESISTANT FIRESTOPS AND JOINT SYSTEMS
08 4413 GLAZED ALUMINUM CURTAIN WALLS
09 6903 ACCESS FLOORING
20 0548 MECHANICAL SYSTEMS SEISMIC CONTROL
21 1000 FIRE SPRINKLING AND FIRE PROTECTION SERVICES
26 0548 ELECTRICAL SYSTEMS SEISMIC CONTROL
28 3111 FIRE ALARM BATTERY AND VOLTAGE DROP CALCULATIONS

STRUCTURAL DESIGN FOR SEISMIC SUPPORT OF CURTAINWALL, GFRC PANELS, ACM PANELS, ACCESS FLOOR, FIRE SPRINKLER, MECHANICAL EQUIPMENT AND ELECTRICAL EQUIPMENT IS TO BE PROVIDED BY THE CONTRACTOR SHOWING COMPLIANCE WITH ASCE 7-05. SEE NONSTRUCTURAL COMPLIANCE CHECKLIST AND GENERAL NOTES ON SHEET G003

PLUMBING FIXTURE COUNT

PUBLIC ACCESS SPACES

		ASSEMBLY MALE	ASSEMBLY FEMALE	BUSINESS MALE	BUSINESS FEMALE	TOTALS
OCCUPANT COUNT		1120		242		1362
WATER CLOSETS	REQUIRED	3.7	7.4	2.9	2.9	16.9
	PROVIDED	6	8	5	3	22
LAVS	REQUIRED	5.5		4.03		9.5
	PROVIDED	7		7		14
SHOWERS	REQUIRED	0		0		0
	PROVIDED	0		0		0
DRINKING FOUNTAINS	REQUIRED	1.1		2.4		3.5
	PROVIDED	5		5		10
SERVICE SINKS	REQUIRED	1		1		2
	PROVIDED	2.5		2.5		5

SECURE ACCESS SPACES

		ASSEMBLY MALE	ASSEMBLY FEMALE	BUSINESS MALE	BUSINESS FEMALE	TOTALS
OCCUPANT COUNT		195		304		499
WATER CLOSETS	REQUIRED	.65	1.3	3.5	3.5	8.95
	PROVIDED	6	7	5	5	23
LAVS	REQUIRED	.98		4.75		5.73
	PROVIDED	13		10		23
SHOWERS	REQUIRED	0		0		0
	PROVIDED	1		1		2
DRINKING FOUNTAINS	REQUIRED	.2		3		3.2
	PROVIDED	5		5		10
SERVICE SINKS	REQUIRED	1		1		2
	PROVIDED	2.5		2.5		5

HOLDING

		OCCUPANCY TYPE: INSTITUTIONAL I3
OCCUPANT COUNT		247
WATER CLOSETS	REQUIRED	1 PER CELL (24)
	PROVIDED	24
LAVS	REQUIRED	1 PER CELL (24)
	PROVIDED	24
SHOWERS	REQUIRED	16.4
	PROVIDED	0
DRINKING FOUNTAINS	REQUIRED	2.47
	PROVIDED	0
SERVICE SINKS	REQUIRED	1
	PROVIDED	0

BUILDING TOTALS

OCCUPANT COUNT		2108
WATER CLOSETS	REQUIRED	49.85
	PROVIDED	69
LAVS	REQUIRED	39.23
	PROVIDED	61
SHOWERS	REQUIRED	16.4
	PROVIDED	2
DRINKING FOUNTAINS	REQUIRED	9.17
	PROVIDED	20
SERVICE SINKS	REQUIRED	5
	PROVIDED	10

NOTE: SHOWERS FOR PRISONERS ARE NOT PROVIDED IN A STATE COURTHOUSES DUE TO THE TEMPORARY NATURE OF COURTHOUSE PRISONER HOLDING. NO OVER-NIGHT HOLD IS ALLOWED

VICINITY MAP

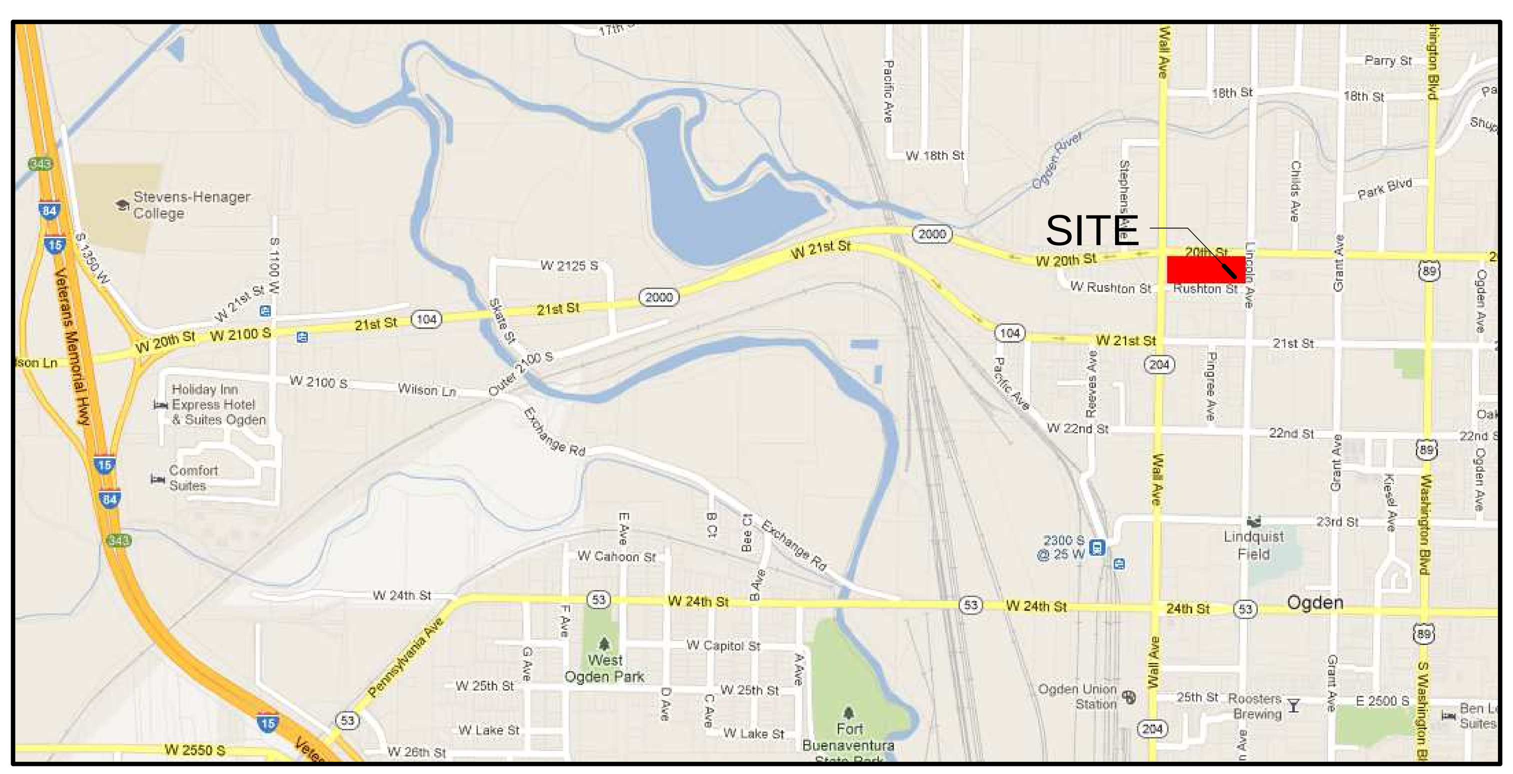

CODE ANALYSIS

APPLICABLE CODES

BOOK	YEAR	BOOK	YEAR
International Building Code	2009 IBC	National Electrical Code	NEC 2011
International Mechanical Code	2009 IMC	Uniform Code for Building Conservation	ICCPC 2009
International Plumbing Code	2009 IPC	ADA Accessibility Guidelines	ANSI A117.1 2006
International Fire Code	2009 IFC		
International Energy Conservation Code	2009 IEC		

A. Occupancy and Group: Assembly A3, Buisness B, Institutional I3 (Condition 5)
Change in Use: Yes ______ No __X__ Mixed Occupancy: Yes __X__ No ______
B. Special Use and Occupancy (e.g. High Rise, Covered Mall): ______None______

C. Seismic Design Category: D Design Wind Speed: 90 MPH

Type of Construction (circle one):

I A, **(I B)**, II A, II B, III A, III B, IV HT, V A, V B

D. Fire Resistance Rating: Requirments for the Exterior Walls based on the fire separation distance (in hours):

North: 0 Hours South: 0 Hours East: 0 Hours West: 0 Hours-

E. Mixed Occupancies: Yes Nonseparated Uses: Yes

F. Sprinklers: IBC Section 903.3.1
Required: Yes Provided: Yes Type of Sprinkler System: WET AND DRY SYSTEMS

G. Number of Stories: Five Building Height: 117'-4"

H. Actual Area per floor (square feet):
1 25631 SQ. FT.
2 16601 SQ. FT.
3 16431 SQ. FT.
4 14772 SQ. FT.
5 14772 SQ. FT.

I. Tabular Area: TYPE 1B - UNLIMITED

K. Fire Resistance Requirements for Building Elements (hours). Table 601

Element	Hours	Assembly Listing	Element	Hours	Assembly Listing
Exterior Bearing Walls	0	-	Floors - Ceiling Floors	2	D916
Interior Bearing Walls	0	-	Roofs - Ceiling Roofs	1	P701
Exterior Non-Bearing Walls	0	-	Exterior Doors and Windows	0	-
Structural Frame	2		Shaft Enclosures	2	U415
Partitions - Permanent	0	-	Fire Walls	-	-
Fire Barriers	2	U419	Fire Partitions	-	-
Strucural Columns	2	X772 / X642	Smoke Partitions	0	-

L. **BUILDING OCCUPANT LOAD**

LEVEL (1) Design Occupant Load: Secure Area 274 + Public Area 312 = 586
Secure Area - Width Required: 54.8" Exit Width Provided: 216"
Public Area - Width Required: 62.4" Exit Width Provided: 216"
Total Exit Width Required: 117.2" Exit Width Provided: 432"

LEVEL (2) Design Occupant Load: Secure Area 170 + Public Area 275 = 445
Secure Area - Width Required: 34" Exit Width Provided: 72"
Public Area - Width Required: 55" Exit Width Provided: 72"
Total Exit Width Required: 89" Exit Width Provided: 144"

LEVEL (3) Design Occupant Load: Secure Area 86 + Public Area 319 = 405
Secure Area - Width Required: 17.5" Exit Width Provided: 72"
Public Area - Width Required: 63.8" Exit Width Provided: 72"
Exit Width Required: 81.3" Exit Width Provided: 144"

LEVEL (4) Design Occupant Load: Secure Area 60 + Public Area 276 = 336
Secure Area - Width Required: 12" Exit Width Provided: 72"
Public Area - Width Required: 55.2" Exit Width Provided: 72"
Exit Width Required: 67.2" Exit Width Provided: 144"

LEVEL (5) Design Occupant Load: Secure Area 60 + Public Area 276 = 336
Secure Area - Width Required: 12" Exit Width Provided: 72"
Public Area - Width Required: 55.2" Exit Width Provided: 72"
Exit Width Required: 67.2" Exit Width Provided: 144"

Total Design Occupant Load = 2108

M. Minimum Number of Required Plumbing Facilities:
See adjacent table

FOOTNOTES:
1) In case of conflict with the U.S. Department of Justice Federal Registers Parts I through V - ADA Guidelines and specific reference to the International Building Code Accessibility Chapters, the more restrictive requirement shall govern.
2) Additional Code Information shall be provided at the discretion of the Building Official for Complex Buildings. Including, but not limited to:
a) High Rise Requirements.
b) Atriums.
c) Performance Based Criteria.
d) Means or Egress Analysis.
e) Fire Assembly Locator Sheet.
f) Exterior and Interior Accessibility Route.
g) Fire Stopping, Including Tested Design Number.

SHEET INDEX

SHEET NUMBER	SHEET NAME
GENERAL	
C1	COVER
C2	COVER
G001	GENERAL INFORMATION AND INDEX
G002	SPECIAL INSPECTIONS
G003	SPECIAL INSPECTIONS AND NONSTRUCTURAL COMPONENT CHECKLIST
G004	FIRE PROTECTION AND OCCUPANCY LOADS
G005	FIRE PROTECTION AND OCCUPANCY LOADS
G200	UL LISTINGS
G201	UL LISTINGS
G202	UL LISTINGS
G203	UL LISTINGS
G300	TYPICAL ANSI ACCESSIBILITY STANDARDS
G400	MOCKUP
GENERAL: 13	
CIVIL	
CD1.02	CIVIL DEMOLITION PLAN
CS1.01	SITE PLAN
CG1.01	GRADING PLAN
ADA1.01	ADA PLAN
CU1.01	UTILITY PLAN
CD5.01	DETAILS
CD5.02	DETAILS
CD5.03	UDOT DETAILS
PP1.01	20TH STREET STRIPING PLAN A
PP1.02	20TH STREET STRIPING PLAN B
PP1.03	WALL STREET PLAN
CW1.01	SWPP PLAN
SG-00	TRAFFIC SIGNAL COVER
SG-1A	TRAFFIC SIGNAL PLANS
SG-2A	TRAFFIC SIGNAL DETAILS
SG-3A	TRAFFIC SIGNAL DETAILS
CIVIL: 16	
LANDSCAPING	
L-L101	LANDSCAPE PLAN
L-L501	LANDSCAPE DETAILS
L-R101	IRRIGATION PLAN
L-R501	IRRIGATION SCHEDULES AND DETAILS
L-R502	IRRIGATION DETAILS
LANDSCAPING: 5	
ARCHITECTURAL	
AS100	OVERALL SITE PLAN
AS101	ENLARGED SITE PLANS
AS500	SITE DETAILS
A010	LEVEL 1 AND 2 OVERALL PLANS
A020	LEVEL 3, 4 AND FIVE OVERALL PLANS
A030	GAS VAPOR BARRIER PLAN AND DETAILS
A031	LEVEL 1 SLAB EDGE PLAN
A032	LEVEL 2 SLAB EDGE PLAN
A033	LEVEL 3 SLAB EDGE PLAN
A034	LEVEL 4 SLAB EDGE PLAN
A035	LEVEL 5 SLAB EDGE PLAN
A036	ROOF DECK EDGE PLAN
A111.1A	LEVEL 1, ANNOTATED
A111.1B	LEVEL 1, ANNOTATED
A111.2A	LEVEL 1, DIMENSION AND WALL TYPES
A111.2B	LEVEL 1, DIMENSION AND WALL TYPES
A111.3A	LEVEL 1, AREA A FINISH PLAN
A111.3B	LEVEL 1, AREA B FINISH PLAN
A111.4A	LEVEL 1, REFLECTED CEILING
A111.4B	LEVEL 1, REFLECTED CEILING
A121.1	LEVEL 2, ANNOTATED
A121.2	LEVEL 2, DIMENSION AND WALL TYPES
A121.3	LEVEL 2, FINISH PLAN
A121.4	LEVEL 2, REFLECTED CEILING
A131.1	LEVEL 3, ANNOTATED
A131.2	LEVEL 3, DIMENSION AND WALL TYPES
A131.3	LEVEL 3, FINISH PLAN
A131.4	LEVEL 3, REFLECTED CEILING
A141.1	LEVEL 4, ANNOTATED
A141.1alt	LEVEL 4, ANNOTATED ALT.
A141.2	LEVEL 4, DIMENSION AND WALL TYPES
A141.2alt	LEVEL 4, DIMENSION AND WALL TYPES ALT.
A141.3	LEVEL 4, FINISH PLAN
A141.3alt	LEVEL 4, FINISH PLAN ALT.
A141.4	LEVEL 4, REFLECTED CEILING
A141.4alt	LEVEL 4, REFLECTED CEILING ALT.
A151.1	LEVEL 5, ANNOTATED
A151.2	LEVEL 5, DIMENSION AND WALL TYPES
A151.3	LEVEL 5, FINISH PLAN
A151.4	LEVEL 5, REFLECTED CEILING
A160	ROOF PLAN
A161	ENLARGED ROOF PLANS
A162	ENLARGED ROOF PLANS
A170	ACCESS FLOORING PLANS
A201	BUILDING ELEVATIONS
A202	BUILDING ELEVATIONS
A203	BUILDING ELEVATIONS
A204	BUILDING ELEVATIONS
A205	PARTIAL BUILDING ELEVATIONS
A206	PARTIAL BUILDING ELEVATIONS
A301	BUILDING SECTIONS
A302	BUILDING SECTIONS
A303	BUILDING SECTIONS
A304	BUILDING SECTIONS
A305	BUILDING SECTIONS
A310	WALL SECTIONS
A311	WALL SECTIONS
A312	WALL SECTIONS
A313	WALL SECTIONS
A314	WALL SECTIONS
A315	WALL SECTIONS
A316	WALL SECTIONS
A317	WALL SECTIONS
A318	WALL SECTIONS
A319	WALL SECTIONS
A320	WALL SECTIONS
A321	WALL SECTIONS
A410	STAIR PLANS, ELEVATIONS & SECTIONS
A411	STAIR PLANS, ELEVATIONS & SECTIONS
A412	STAIR PLANS, ELEVATIONS & SECTIONS
A413	STAIR PLANS, ELEVATIONS & SECTIONS
A414	STAIR PLANS, ELEVATIONS & SECTIONS
A415	STAIR PLANS, ELEVATIONS & SECTIONS
A416	STAIR PLANS, ELEVATIONS & SECTIONS
A417	STAIR PLANS, ELEVATIONS & SECTIONS
A418	STAIR PLANS, ELEVATIONS & SECTIONS
A420	ENLARGED PLANS AND ELEVATIONS
A421	ENLARGED PLANS AND ELEVATIONS
A422	ENLARGED PLANS AND ELEVATIONS
A423	ENLARGED PLANS AND ELEVATIONS
A424	ENLARGED PLANS AND ELEVATIONS
A425	ENLARGED PLANS AND ELEVATIONS
A426	ENLARGED COURT CEILINGS
A427	ENLARGED PLANS AND ELEVATIONS
A428	ENLARGED PLANS AND ELEVATIONS
A429	ENLARGED PLANS AND ELEVATIONS
A430	ENLARGED PLANS AND ELEVATIONS
A431	ENLARGED PLANS AND ELEVATIONS
A432	ENLARGED PLANS AND ELEVATIONS
A500	WALL TYPES AND GENERAL NOTES
A501	WALL TYPES AND GENERAL NOTES
A502	DETAILS - ROOF
A503	DETAILS - EXTERIOR
A504	DETAILS - EXTERIOR
A505	DETAILS - EXTERIOR
A506	DETAILS - DOOR AND WINDOW
A507	DETAILS - DOOR AND WINDOW
A508	DETAILS - DOOR AND WINDOW
A509	DETAILS - DOOR AND WINDOW
A510	DETAILS - DOOR AND WINDOW
A511	DETAILS - INTERIOR - TYPICAL INTERIOR FRAMING DETAILS
A512	DETAILS - INTERIOR
A513	DETAILS - INTERIOR
A514	DETAILS - CEILING
A515	DETAILS - CEILING
A516	DETAILS - VERTICAL CIRCULATION
A517	DETAILS - VERTICAL CIRCULATION
A518	DETAILS - CASEWORK
A519	DETAILS - COLUMN FRAMING
A520	DETAILS - COLUMN FRAMING
A521	DETAILS - COLUMN FRAMING
A522	DETAILS - BEAM FRAMING
A523	DETAILS - BEAM FRAMING
A524	DETAILS - FLOOR
A601	DOOR SCHEDULES
A602	DOOR AND FRAME TYPES
A603	CURTAIN WALL FRAME TYPES
A604	CURTAIN WALL FRAME TYPES
A605	CURTAIN WALL FRAME TYPES
A606	CURTAIN WALL FRAME TYPES
A607	CURTAIN WALL FRAME TYPES
A608	CURTAIN WALL FRAME TYPES
A609	STOREFRONT TYPES
A700	SIGNAGE SCHEDULE
A701	SIGNAGE SCHEDULE - 4TH FLOOR ALTERNATE
A702	ARCHITECTURAL SIGNAGE TYPES & DETAILS
A703	ARCHITECTURAL SIGNAGE TYPES & DETAILS
A704	ARCHITECTURAL SIGNAGE TYPES & DETAILS
A705	ARCHITECTURAL SIGNAGE TYPES & DETAILS
A711A	LEVEL 1 AREA A SIGNAGE PLANS
A711B	LEVEL 1 AREA B SIGNAGE PLAN
A721	LEVEL 2 SIGNAGE PLAN
A731	LEVEL 3 SIGNAGE PLAN
A741	LEVEL 4 SIGNAGE PLAN
A741alt	LEVEL 4 SIGNAGE PLAN ALT.
A751	LEVEL 5 SIGNAGE PLAN
A901	3D PERSPECTIVES
A902	3D PERSPECTIVES
A903	3D PERSPECTIVES
ARCHITECTURAL: 139	
STRUCTURAL	
SE001	GENERAL STRUCTURAL NOTES
SE002	GENERAL STRUCTURAL NOTES
SE003	GENERAL STRUCTURAL NOTES
SB101	FOOTING & FOUNDATION PLAN
SB501	TYPICAL FOOTING & FOUNDATION DETAILS
SB502	TYPICAL FOOTING & FOUNDATION DETAILS
SB601	STRUCTURAL SCHEDULES
SB602	STRUCTURAL SCHEDULES
SF101	LEVEL 2 FLOOR FRAMING PLAN
SF102	LEVEL 3 FLOOR FRAMING PLAN
SF103	LEVEL 4 FLOOR FRAMING PLAN
SF104	LEVEL 5 FLOOR FRAMING PLAN
SF105	ROOF FRAMING PLAN
SF106	PARAPET FRAMING PLAN
SF107	MISC FRAMING PLANS
SF110	HOLDING CELL ROOF FRAMING PLANS
SF111	RAISED FLOOR PLANS
SF201	MOMENT FRAME ELEVATIONS
SF202	MOMENT FRAME ELEVATIONS
SF205	COOLING TOWER PARAPET & FRAME ELEVATIONS
SF210	SIDEPLATE GENERAL NOTES
SF211	SIDEPLATE GENERAL NOTES
SF212	SIDEPLATE A TYPE & B TYPE TYPICAL DETAILS
SF213	SIDEPLATE C TYPE TYPICAL DETAILS
SF214	SIDEPLATE HSS A&B TYPE TYPICAL DETAILS
SF215	SIDEPLATE TYPICAL BEAM DETAILS
SF216	SIDEPLATE MISC DETAILS
SF401	STAIR FRAMING PLANS
SF402	STAIR FRAMING PLANS
SF404	STAIR FRAMING DETAILS
SF501	FLOOR FRAMING DETAILS
SF502	FLOOR FRAMING DETAILS
SF503	FLOOR FRAMING DETAILS
SF504	FLOOR FRAMING DETAILS
SF515	ROOF FRAMING DETAILS
SF516	ROOF FRAMING DETAILS
SF517	ROOF FRAMING DETAILS
SF518	ROOF FRAMING DETAILS
SF601	STRUCTURAL SCHEDULES
SF602	STRUCTURAL SCHEDULES
STRUCTURAL: 40	
MECHANICAL	
M001	MECHANICAL LEGEND, SYMBOLS & ABBREVIATIONS
FP101	LEVEL 1 FIRE PROTECTION
FP102	LEVEL 2 FIRE PROTECTION
FP103	LEVEL 3 FIRE PROTECTION
FP104	LEVEL 4 FIRE PROTECTION
FP105	LEVEL 5 FIRE PROTECTION
FP106	FIRE PROTECTION ROOF ACCESS PLAN
FP501	FIRE PROTECTION DETAILS
MH101	LEVEL 1 MECHANICAL PLAN
MH102	LEVEL 2 MECHANICAL PLAN
MH103	LEVEL 3 MECHANICAL PLAN
MH104	LEVEL 4 MECHANICAL PLAN
MH104ALT	LEVEL 4 MECHANICAL PLAN ALT
MH105	LEVEL 5 MECHANICAL PLAN
MH106	MECHANICAL ROOF ACCESS LEVEL PLAN
MH301	MECHANICAL BUILDING SECTIONS
MH302	MECHANICAL BUILDING SECTIONS
MH303	MECHANICAL BUILDING SECTIONS
MH501	MECHANICAL DETAILS
MH502	MECHANICAL DETAILS
MH503	MECHANICAL DETAILS
MH601	MECHANICAL DETAILS
MH602	MECHANICAL SCHEDULES
MH603	MECHANICAL SCHEDULES
MH604	MECHANICAL SCHEDULES
MH801	CONTROL DIAGRAM/SEQUENCE
MH802	CONTROL DIAGRAM/SEQUENCE
MP101	LEVEL 1 MECHANICAL PIPING PLAN
MP102	LEVEL 2 MECHANICAL PIPING PLAN
MP103	LEVEL 3 MECHANICAL PIPING PLAN
MP104	LEVEL 4 MECHANICAL PIPING PLAN
MP104ALT	LEVEL 4 MEHCANICAL PIPING PLAN ATL
MP105	LEVEL 5 MECHANICAL PIPING PLAN
MP201	MECHANICAL HOT WATER PIPING SCHEMATIC
MP202	MECHANICAL CHILLED WATER PIPING SCHEMATIC
MZ101	LEVEL 1 TEMPERATURE CONTROL ZONE PLAN
MZ102	LEVEL 2 TEMPERATURE CONTROL ZONE PLAN
MZ103	LEVEL 3 TEMPERATURE CONTROL ZONE PLAN
MZ104	LEVEL 4 TEMPERATURE CONTROL ZONE PLAN
MZ105	LEVEL 5 TEMPERATURE CONTROL ZONE PLAN
PL101	LEVEL 1 PLUMBING PLAN
PL102	LEVEL 2 PLUMBING PLAN
PL103	LEVEL 3 PLUMBING PLAN
PL104	LEVEL 4 PLUMBING PLAN
PL104ALT	LEVEL 4 PLUMBING PLAN ATL
PL105	LEVEL 5 PLUMBING PLAN
PL201	PLUMBING SCHEMATIC
PL301	WASTE & VENT SCHEMATICS
PL401	LEVEL 1 ENLARGED PLUMBING PLANS
PL402	LEVEL 2 ENLARGED PLUMBING PLANS
PL403	LEVEL 3 ENLARGED PLUMBING PLANS
PL404	LEVEL 4 ENLARGED PLUMBING PLANS
PL405	LEVEL 5 ENLARGED PLUMBING PLANS
PL501	PLUMBING DETAILS
PL601	PLUMBING SCHEDULES
MECHANICAL: 55	
ELECTRICAL	
EE001	SHEET INDEX, ABBREVIATIONS, AND GENERAL NOTES
EE501	DETAILS
EE502	DETAILS
EE701	TYPICAL MOUNTING HEIGHT DETAILS
ES101	SITE DEMOLITION PLAN
ES102	SITE ELECTRICAL PLAN
ES501	TRANSFORMER AND TRANSFORMER PADVAULT DETAILS
EP101A	LEVEL 1 POWER PLAN - AREA A
EP101B	LEVEL 1 POWER PLAN - AREA B
EP102A	LEVEL 2 POWER PLAN - AREA A
EP102B	LEVEL 2 POWER PLAN - AREA B
EP103	LEVEL 3 POWER PLAN
EP104	LEVEL 4 POWER PLAN
EP104ALT	LEVEL 4 POWER PLAN - ALTERNATE
EP105	LEVEL 5 POWER PLAN
EP106	ROOF/PENTHOUSE POWER PLAN
EP601	ONE-LINE DIAGRAM
EP602	ONE-LINE DIAGRAM - CONT.
EP603	MECHANICAL ELEC EQUIP LOAD SCHEDULE
EP604	MECHANICAL ELEC EQUIP LOAD SCHEDULE
EP605	PANEL SCHEDULES
EP606	PANEL SCHEDULES
EP607	PANEL SCHEDULES
EP608	PANEL SCHEDULES
EP609	PANEL SCHEDULES
EL101A	LEVEL 1 LIGHTING PLAN - AREA A
EL101B	LEVEL 1 LIGHTING PLAN - AREA B
EL102A	LEVEL 2 LIGHTING PLAN - AREA A
EL102B	LEVEL 2 LIGHTING PLAN - AREA B
EL103	LEVEL 3 LIGHTING PLAN
EL104	LEVEL 4 LIGHTING PLAN
EL104ALT	LEVEL 4 LIGHTING PLAN - ALTERNATE
EL105	LEVEL 5 LIGHTING PLAN
EL106	ROOF/PENTHOUSE LIGHTING PLAN
EL501	LIGHTING DETAILS
EL601	FIXTURE SCHEDULE
EL602	LIGHTING SCHEDULES
EL603	DIMMING ONE-LINE AND SCHEDUELS
EL604	RELAY DETAIL AND CONTROL SCHEMATICS
ET101A	LEVEL 1 TELECOMMUNICATIONS PLAN - AREA A
ET101B	LEVEL 1 TELECOMMUNICATIONS PLAN - AREA B
ET102A	LEVEL 2 TELECOMMUNICATIONS PLAN - AREA A
ET102B	LEVEL 2 TELECOMMUNICATIONS PLAN - AREA B
ET103	LEVEL 3 TELECOMMUNICATIONS PLAN
ET104	LEVEL 4 TELECOMMUNICATIONS PLAN
ET105	LEVEL 5 TELECOMMUNICATIONS PLAN
ET601	TELECOMMUNICATIONS RISER AND GROUNDING DIAGRAMS
EY101A	LEVEL 1 AUXILIARY PLAN - AREA A
EY101B	LEVEL 1 AUXILIARY PLAN - AREA B
EY102A	LEVEL 2 AUXILIARY PLAN - AREA A
EY102B	LEVEL 2 AUXILIARY PLAN - AREA B
EY103	LEVEL 3 AUXILIARY PLAN
EY104	LEVEL 4 AUXILIARY PLAN
EY104ALT	LEVEL 4 AUXILIARY PLAN - ALTERNATE
EY105	LEVEL 5 AUXILIARY PLAN
EY401	MANUAL SWITCH CONTROL DETAIL
EY601	SECURITY SYSTEM RISER DIAGRAMS
EY602	SECURITY SYSTEM RISER DIAGRAMS
EJ001	AV ROUGH-IN SCHEDULE AND NOTES
EJ101A	LEVEL 1 AUDIO VIDEO ROUGH-IN CEILING PLAN - AREA A
EJ101B	LEVEL 1 AUDIO VIDEO ROUGH-IN CEILING PLAN - AREA B
EJ102A	LEVEL 2 AUDIO VIDEO ROUGH-IN CEILING PLAN - AREA A
EJ102B	LEVEL 2 AUDIO VIDEO ROUGH-IN CEILING PLAN - AREA B
EJ103	LEVEL 3 AUDIO VIDEO ROUGH-IN CEILING PLAN
EJ104ALT	LEVEL 4 AUDIO VIDEO ROUGH-IN CEILING PLAN - ALTERNATE
EJ105	LEVEL 5 AUDIO VIDEO ROUGH-IN CEILING PLAN
EJ111A	LEVEL 1 AUDIO VIDEO ROUGH-IN FLOOR PLAN - AREA A
EJ111B	LEVEL 1 AUDIO VIDEO ROUGH-IN FLOOR PLAN - AREA B
EJ112A	LEVEL 2 AUDIO VIDEO ROUGH-IN FLOOR PLAN - AREA A
EJ112B	LEVEL 2 AUDIO VIDEO ROUGH-IN FLOOR PLAN - AREA B
EJ113	LEVEL 3 AUDIO VIDEO ROUGH-IN FLOOR PLAN
EJ114	LEVEL 4 AUDIO VIDEO ROUGH-IN FLOOR PLAN
EJ114ALT	LEVEL 4 AUDIO VIDEO ROUGH-IN CEILING PLAN - ALTERNATE
EJ115	LEVEL 5 AUDIO VIDEO ROUGH-IN FLOOR PLAN
EJ301	AV SECTIONS
EJ501	AV SYSTEMS DETAILS
EJ601	AV ROUGH IN RISER AND SCHEDULE
EK101	LIGHTNING PROTECTION PLAN
EK501	LIGHTNING PROTECTION DETAILS
FA101A	LEVEL 1 FIRE ALARM PLAN - AREA A
FA101B	LEVEL 1 FIRE ALARM PLAN - AREA B
FA102A	LEVEL 2 FIRE ALARM PLAN - AREA A
FA102B	LEVEL 2 FIRE ALARM PLAN - AREA B
FA103	LEVEL 3 FIRE ALARM PLAN
FA104	LEVEL 4 FIRE ALARM PLAN
FA104ALT	LEVEL 4 FIRE ALARM PLAN ALTERNATE
FA105	LEVEL 5 FIRE ALARM PLAN
FA106	ROOF FIRE ALARM PLAN
FA601	FIRE ALARM RISER
TA001	AV EQUIPMENT LIST, NOTES, DEFINITIONS AND SHEET INDEX
TA002	AV SYSTEM SINGLE LINE DIAGRAM
TA101	LEVEL 1 AUDIO VISUAL SYSTEMS FLOOR PLAN
TA102	LEVEL 2 AUDIO VISUAL SYSTEMS FLOOR PLAN
TA103	LEVEL 3 AUDIO VISUAL SYSTEMS FLOOR PLAN
TA104ALT	LEVEL 4 AUDIO VISUAL SYSTEMS FLOOR PLAN ALTERNATE
TA105	LEVEL 5 AUDIO VISUAL SYSTEMS FLOOR PLAN
TA111	LEVEL 1 AUDIO VISUAL SYSTEMS CEILING PLAN
TA112	LEVEL 2 AUDIO VISUAL SYSTEMS CEILING PLAN
TA113	LEVEL 3 AUDIO VISUAL SYSTEMS CEILING PLAN
TA114ALT	LEVEL 4 AUDIO VISUAL SYSTEMS CEILING PLAN ALTERNATE
TA115	LEVEL 5 AUDIO VISUAL SYSTEMS CEILING PLAN
TA401	AV EQUIPMENT ROOM PLANS AND ELEVATIONS
TA501	AV SYSTEM DETAILS
TA601	AV SYSTEM SINGLE LINE DIAGRAMS
TA602	AV SYSTEM SINGLE LINE DIAGRAMS AND MATRIX
TA603	AV SYSTEM SINGLE LINE DIAGRAMS
TA701	AV SYSTEM CONNECTION PANEL DETAILS
TA702	AV SYSTEM CONNECTION PANNEL DETAILS
ELECTRICAL: 108	
Grand total: 376	

BUILDING BOARD APPEAL LETTER

UTAH BUILDING CODE APPEALS BOARD

In the Matter of Consideration of Appeal of Utah Administrative Office of the Courts regarding the Building Code and Delayed Egress Doors, State Courthouses, hearing on April 25, 2006 : : :

RESOLUTION NO: 2006-1

It appearing that Utah Building Code Appeals Board (hereinafter "Board") that the above-entitled matter came before this Board for hearing on April 25, 2006 at 3:00 p.m., Room 4112, State Office Building, Salt Lake City, Utah 84114;

It appearing that the following Board members were appointed by the Director of the Division of Facilities Construction and Management of the Utah Department of Administrative Services (hereinafter "DFCM") and were present throughout the hearing and deliberation of the above-entitled matter; Judge Sandra Peuler, Third District Court, as Chair of the Board; Ron Ivie, Building Official/Fire Marshall, Park City, Utah; Roger Evans, Plans Examiner, Park City, Utah; Jack Robertson, Architect, Salt Lake City; and Brad W. Slater, Weber County Sheriff;

It appearing that a presentation was made at the hearing by officials from DFCM as well as the Utah Administrative Office of the Courts (hereinafter "AOC") regarding the above-entitled matter; and

After considering all presentations at said hearing, documents presented and expertise provided from Board members; the following is hereby:

RESOLVED, by the Board, that it finds and declares that:

Occupancy in courtrooms in Courthouses under the jurisdiction of the State of Utah AOC shall have occupancy limits posted at 49 people. When so posted for all Courtrooms in a particular Courthouse, then the occupancy rating under the Building Code is a Class B occupancy which allows for the subject control devices of delayed egress on doors. However, if at any time a Courtroom in such a courthouse exceeds 49 people, then the AOC is responsible to take special precautions to manage safe evacuation procedures; and

State of Utah Courthouses may have delayed egress doors including, but not limited to, doors related to stairwells and exiting. However, when a courtroom exceeds the 49 person occupancy limit, the AOC is responsible to take special precautions to manage safe evacuation procedures.

DATED THIS 21 day of July, 2006.

UTAH BUILDING CODE APPEALS BOARD

By: [signature]
Judge Sandra Peuler
Board Chair

[signature]
F. Keith Stepan, Director of DFCM
Administrator for the Board

APPROVED AS TO FORM:
[signature]
ALAN S. BACHMAN
Assistant Attorney General

GENERAL NOTES

1. IT IS THE CONTRACTORS RESPONSIBILITY TO REVIEW AND COORDINATE THE WORK OF ALL SUB-CONTRACTORS, TRADES AND SUPPLIERS WITH THE REQUIREMENTS OF THE CONTRACT DOCUMENTS BEFORE COMMENCING CONSTRUCTION, AND TO ASSURE THAT ALL PARTIES ARE AWARE OF ALL REQUIREMENTS, REGARDLESS OF WHERE THE REQUIREMENTS OCCUR IN THE CONTRACT DOCUMENTS, WHICH MIGHT AFFECT THE WORK OF THAT PARTY.
2. AS PART OF THE CONTRACTOR'S RESPONSIBILITY TO COORDINATE THE WORK OF ALL SUB-CONTRACTORS, TRADES AND SUPPLIERS, THE CONTRACTOR SHALL ENDEAVOR TO IDENTIFY AND NOTIFY THE ARCHITECT OF ANY CONFLICTS BETWEEN THE WORK OF DIFFERENT PARTIES AT THE EARLIEST POSSIBLE DATE SO AS TO ALLOW REASONABLE AND ADEQUATE TIME FOR THE CONFLICT TO BE RESOLVED WITHOUT DELAYING THE WORK. ALL DEVIATIONS FROM THAT WHICH IS REQUIRED BY THE CONTRACT DOCUMENTS MUST BE APPROVED IN ADVANCE BY THE ARCHITECT.
3. THE ARCHITECTURAL DRAWINGS ESTABLISH AND COORDINATE THE FINISHED APPEARANCE AND EXACT LOCATION OF ALL EXPOSED ELEMENTS OF THE WORK OF ALL THE TRADES, INCLUDING THAT WORK WHICH IS ILLUSTRATED PRIMARILY ON DRAWINGS OF OTHER DISCIPLINES. QUANTITIES ARE TO BE PROVIDED AS SHOWN ON DRAWINGS OF OTHER DISCIPLINES BUT LOCATIONS SHOWN ON OTHER DRAWINGS ARE SCHEMATIC, UNLESS OTHERWISE NOTED ON THE ARCHITECTURAL DRAWINGS. THE ARCHITECTURAL DRAWINGS TAKE PRECEDENCE FOR THE FINISHED APPEARANCE AND EXACT LOCATION OF ALL PARTS OF THE WORK.
4. EXCEPT WHERE DIRECTED TO PLACE ITEMS OF WORK AT THE APPROXIMATE LOCATION SHOWN; DO NOT SCALE DRAWINGS FOR DIMENSIONAL INFORMATION. ALL ELEMENTS OF THE DRAWINGS MAY NOT BE DRAWN TO EXACT SCALE. ALL DIMENSIONS REQUIRED ARE SHOWN OR MAY BE DERIVED FROM THOSE SHOWN ON THE FLOOR PLANS, DETAIL PLANS, ELEVATIONS, SECTIONS, DETAILS, SCHEDULES AND SPECIFICATIONS. IF DIMENSIONS ARE NOT PRESENT, THE ARCHITECT IS TO BE NOTIFIED SO THAT A CLARIFICATION CAN BE ISSUED.
5. CONTRACTOR TO FOLLOW ANSI 117-1 2003 AS REPRESENTED ON SHEET G2.1 FOR ACCESSIBILITY GUIDELINES. NOTIFY ARCHITECT IF THE DESIGN DRAWINGS CONFLICT WITH THIS SHEET.

ALTERNATE BIDS

ALTERNATE 1
ADDITIVE ALTERNATE TO CONSTRUCT THE COURTROOMS AND OFFICE AREAS ON LEVEL 4. SEE THE ALTERNATE SHEETS FOR A FULL DESCRIPTION. ALTERNATE SHEETS ARE DESIGNATED BY AN "ALT" SUFFIX TO THE SHEET NAME.

ALTERNATE 2
ADDITIVE ALTERNATE FOR PROVIDEING CERTIFIED WOOD THROUGHOUT PROJECT PER LEED CREDIT MR 7. SEE DIVISION 6 SPECIFICATIONS FOR MORE INFORMATION.

VCBO
ARCHITECTURE

VCBO ARCHITECTURE
524 SOUTH 600 EAST
SALT LAKE CITY, UT 84102
Phone: (801) 575-8800
Fax: (801) 531-9850
Web: vcbo.com

LICENSED ARCHITECT
No. 133912
BRENT R. TIPPETS
8.15.13
STATE OF UTAH

2nd District Juvenile Courthouse

Utah State Courts
08284150
165 West 20th Street, Ogden, Utah
BID DOCUMENTS

Rev #	Date	Description
1	4/30/2013	Fire Marshal Response

Job # 12500
Date August 15, 2013
Owner # 08284150
Ins. #

GENERAL INFORMATION AND INDEX

G001

8/14/2013 11:18:52 AM

SPECIAL INSPECTION AND TESTING ITEMS
REQUIRED BY CHAPTER 17 OF THE 2009 IBC

Indicate items requiring special inspection or structural testing by checking the appropriate box. All items not requiring inspection/testing should be removed from the form. For items requiring continuous inspection, a special inspector must be present onsite during the performance of that task. In most cases "periodic" inspections/tests shallbe performed prior to commencing the task, intermittently during the task, and at the completion of the task. The "Detailed Instructions & Frequency" provides a description of the presumed requirements for tasks requiring "periodic" inspections. The design professional in responsible should revise the requirements as needed on a project-specific basis.

☐ FABRICATORS (IBC 1704.2)

☑ WELDING (1704.3.1)

Item				Detailed Instructions and Frequencies
Complete & partial penetration groove welds	◉ Continuous	○ Periodic	○ N/A	
Multi-pass fillet welds	◉ Continuous	○ Periodic	○ N/A	
Single-pass fillet welds > 5/16	◉ Continuous	○ Periodic	○ N/A	
Plug, slot, seam or flange welds	◉ Continuous	○ Periodic	○ N/A	
Single-pass fillet welds <= 5/16	○ Continuous	◉ Periodic	○ N/A	Pre-welding inspections are to be performed to ensure that proper materials (i.e. structural steel, weld filler material, etc.), welding procedures, and welding personnel qualifications are appropriate. A visual inspection of all welds must be provided with periodic inspections made of work in progress.
Floor & roof deck welds	○ Continuous	◉ Periodic	○ N/A	
Shear connector (i.e. stud) welds	○ Continuous	◉ Periodic	○ N/A	
Cold-formed steel welds	○ Continuous	◉ Periodic	○ N/A	
Welds of stairs & railing systems	○ Continuous	◉ Periodic	○ N/A	

☑ DETAILS OF STEEL FRAME (1704.3.2)

Item				Detailed Instructions and Frequencies
Member locations, bracing, gusset plates, stiffeners and other connection components	○ Continuous	◉ Periodic	○ N/A	All steel frames shall be inspected to verify compliance with the approved construction documents, such as bracing, stiffening, member size and location, and proper application of joint details at each connection.

☑ HIGH-STRENGTH BOLTING (1704.3.3)

Item				Detailed Instructions and Frequencies
Pretensioned & slip-critical joints	○ Continuous	Periodic ◉ #1 ○ #2 ○ #3	○ N/A	For periodic inspections one of the following methods must be used: (1) turn-of-nut method w/ match-marking, (2) direct tension indicator method or (3) the alternate design fastener (i.e. twist-off bolt) method (see Section 9.2 of 2009 RCSC Specification).
Snug-tightened joints	○ Continuous	◉ Periodic	○ N/A	Verify that all joints use proper fastener components, connected elements are fabricated properly, the bolted joint is drawn into firm contact, and that the nuts cannot be removed without the use of a wrench (see Section 9.1 of 2009 RCSC Specification).

☑ STRUCTURAL STEEL (IBC 1707.2 & 1708.3)

Item				Detailed Instructions and Frequencies
Visual inspection prior to welding	◉ Continuous	○ Periodic	○ N/A	
Visual inspection during welding	◉ Continuous	○ Periodic	○ N/A	
Visual inspection after welding	○ Continuous	◉ Periodic	○ N/A	Verify that welds are clean; welder identification is legible; size, length and location of welds; verify that welds meet acceptance criteria; placement of reinforcement fillets; removal of backing bars and weld tabs as required; and repair activities (see Section Q5.1 of AISC 341-05).
Nondestructive testing	○ Continuous	◉ Periodic	○ N/A	
Inspection prior to bolting	○ Continuous	◉ Periodic	○ N/A	
Inspection during bolting	○ Continuous	◉ Periodic	○ N/A	
Inspection after bolting	◉ Continuous	○ Periodic	○ N/A	Document accepted and rejected (see Section Q5.3 of AISC 341-05).
Reduced beam sections (RBS)	◉ Continuous	○ Periodic	○ N/A	Verify contour and finish as well as dimensional tolerances (see Section Q5.4 of AISC 341-05).
Protected zones	◉ Continuous	○ Periodic	○ N/A	Verify that no holes or unapproved attachments are made within the protected zone (see Section Q5.4 of AISC 341-05)

☑ CONCRETE CONSTRUCTION (IBC 1704.4 & 1708.2)

Item				Detailed Instructions and Frequencies
Reinforcing steel, including prestressing tendons	○ Continuous	◉ Periodic	○ N/A	Verify prior to placing concrete that reinforcing is of specified type, grade and size; that it is free of oil, dirt and rust; that it is located and spaced properly; that hooks, bends, ties, stirrups and supplemental reinforcement are placed correctly; that lap lengths, stagger and offsets are provided; and that all mechanical connections are installed per the manufacturer's instructions and/or evaluation report
Welding of reinforcing steel	○ Continuous	◉ Periodic	○ N/A	Verify weldability of reinforcing steel other than A706. Continuous inspection is required for welding of reinforcing steel used in intermediate or special concrete moment frames, boundary elements of special structural walls or shear reinforcement.
Cast-in bolts & embeds	◉ Continuous	○ Periodic	○ N/A	
Post-installed anchors or dowels	◉ Continuous	○ Periodic	○ N/A	All post-installed anchors/dowels shall be specially inspected as required by the approved ICC-ES report.
Use of required mix design	○ Continuous	◉ Periodic	○ N/A	Verify that all mixes used comply with the approved construction documents; ACI 318. Ch. 4; 5.2-5.4; and IBC 1904.3, 1913.2, 1913.3.
Concrete sampling for strength tests, slump, air content, and temperature	◉ Continuous	○ Periodic	○ N/A	
Concrete & shotcrete placement	◉ Continuous	○ Periodic	○ N/A	
Curing temperature and techniques	○ Continuous	◉ Periodic	○ N/A	Verify that the ambient temperature for concrete is kept at > 50°F for at least 7 days after placement High-early-strength concrete shall be kept at > 50°F for at least 3 days.Accelerated curing methods may be used (see ACT 318:5.11.3). The ambient temperature for shotcrete shall be > 40°F for the same period of time as noted for concrete. Shotcrete shall be kept continuously moist for at least 24 hours after shotcreting. All concrete materials, reinforcement, forms, fillers, and ground shall be free from frost. In hot weather conditions ensure that appropriate measures are taken to avoid plastic shrinkage cracking and that the specified water/cement ratio is not exceeded.
Pre-stressed concrete	◉ Continuous	○ Periodic	○ N/A	
Erection of precast concrete	○ Continuous	◉ Periodic	○ N/A	Verify that all precast elements are lifted,assembled and braced in accordance with the approved construction documents
Strength verification	○ Continuous	◉ Periodic	○ N/A	Verify that adequate strength has been achieved prior to the removal of shores and forms or the stressing of post tensioned tendons
Formwork	○ Continuous	◉ Periodic	○ N/A	Verify that the forms are placed plumb and conform to the shapes,lines,and dimensions of the members as required by the approved construction documents
Reinforcement in special moment frames, special structural walls and coupling beams	○ Continuous	◉ Periodic	○ N/A	Verify that ASTM 615 reinforcing steel used in these areas complies with ACI 318: 21.1.5.2 by means of certified mill test reports. If this reinforcing steel is to beÂ welded chemical tests shall be performed in accordance with ACI 318: 3.5.2.

☑ MASONRY CONSTRUCTION (IBC 1704.5)

Item				Detailed Instructions and Frequencies
Review material certificates, mix designs, test results and construction procedures	○ Continuous	◉ Periodic	○ N/A	It shall be confirmed that materials used conform to the requirements of the approved construction documents. Mortar mix designs shall show compliance with the proportion or property specification of ASTM C270. Grout shall comply with the proportion or strength requirements of ASTM C476 or be based upon compressive strength tests in accordance with ASTM C1019. Material certificates shall be provided for the following: reinforcement; anchors; ties, fasteners, and metal accessories; masonry units; mortar and grout materials. Construction procedures for cold-weather or hot-weather construction shall be reviewed.
Verify f'm and f'AAC prior to construction	○ Continuous	◉ Periodic	○ N/A	Determine the compressive strength for each wythe by the "unit strength method" or by the "prism test method" as specified in Section 1.4B of ACI 530.1-08 prior to construction. For Occupancy Category IV this should be verified at every 5,000ft² of construction.
Self-consolidating grout	◉ Continuous	○ Periodic	○ N/A	
Grout placement	◉ Continuous	○ Periodic	○ N/A	
Preparation of required grout specimens, mortar specimens and/or prisms shall be observed	○ Continuous	◉ Periodic	○ N/A	If the prism test method is used a minimum of three prisms shall be constructed in accordance with ASTM C1314. If the unit strength method is selected the compressive strength of the grout shall be determined per ASTM C1019 (not required if grout complies with ASTM C476). Continuous inspection required for Occupancy Category IV structures.
Post-installed anchors or dowels	◉ Continuous	○ Periodic	○ N/A	All post-installed anchors/dowels shall be specially inspected as required by the approved ICC-ES report.
PRIOR TO GROUTING:				
Grout space is clean	○ Continuous	◉ Periodic	○ N/A	Verify that grout space is free of mortar droppings, debris, loose aggregate, and material deleterious to masonry grout. Continuous inspection required for Occupancy Category IV structures.
Placement of reinforcement an connectors, and prestressing tendons and anchorages	○ Continuous	◉ Periodic	○ N/A	Verify that reinforcement, joint reinforcement, wall ties, anchor bolts and veneer anchors are installed in accordance with Section 3.4 of ACI 530.1-08.
Proportions of site-prepared grout and prestressing grout	○ Continuous	◉ Periodic	○ N/A	Verify that grout is proportioned per ASTM C476 and has a slump between 8-11 inches. Self-consolidated grout shall not be proportioned onsite.
AS MASONRY CONSTRUCTION BEGINS:				
Proportions of site-prepared mortar	○ Continuous	◉ Periodic	○ N/A	Ensure that mortar that begins to stiffen or is not used within 2.5 hours is discarded. No admixtures containing > 0.2% chlorides shall be used. Jobsite pigments shall meet the limitations of Section 2.6A of ACI 530.1-08.
Construction of mortar joints	○ Continuous	◉ Periodic	○ N/A	Unless specified otherwise construct 3/8" bed and head joints, except at foundation or glass unit masonry. Bed joint at foundation shall be over 1/4" and less than or equal to 3/4". Tool joints with a round jointer when mortar is thumbprint hard. Remove masonry protrusions extending 1/2" or more into cells to be grouted. Solidly fill collar joints under 3/4" with mortar during construction.
Location of reinforcement, connectors, prestressing tendons and anchorages	○ Continuous	◉ Periodic	○ N/A	Verify compliance with approved construction documents. Do not place dissimilar metals in contact with each other. Prestressing tendon placement shall conform to Section 3.6A of ACI 530.1-08.
Prestressing technique	○ Continuous	○ Periodic	○ N/A	The pre-stressing force at each tendon shall be verified by two methods: (1) measuring the steel elongation and (2) the observed jacking force applied to the tendon. The measured elongation should be compared to the load-elongation curves for the pre-stressing steel used and not more than a 5% difference should be found when comparing to the actual force applied. A 7% difference is allowed for post-tensioned tendons. (See Section 3.6B of ACI 530.1-08).
Grade and size of prestressing tendons and anchorages	○ Continuous	○ Periodic	○ N/A	Confirm that anchorages and couplers are capable of developing 95% of the specified breaking strength of the prestressing tendons. Confirm that tendons meet the requirements of Section 2.4B in ACI 530.1-08.

VCBO ARCHITECTURE
VCBO ARCHITECTURE
524 SOUTH 600 EAST
SALT LAKE CITY, UT 84102
Phone: (801) 575-8800
Fax: (801) 531-9850
Web: vcbo.com

LICENSED ARCHITECT No. 133012 BRENT R. TIPPETS 8-15-13 STATE OF UTAH

2nd District Juvenile Courthouse
Utah State Courts
08284150
165 West 20th Street, Ogden, Utah
BID DOCUMENTS

Rev #	Date	Description

Job # 12500
Date August 15, 2013
Owner # 08284150
Ins. #

SPECIAL INSPECTIONS

G002

8/14/2013 10:08:26 AM

DURING CONSTRUCTION:				
Size and location of structural elements	Continuous	Periodic	N/A	Verify that structural elements are placed in locations specified on the approved construction documents and to the tolerances noted in Section 3.3F of ACI 530.1-08.
Type, size and location of anchors and other details of masonry anchorages to structural members	Continuous	Periodic	N/A	Verify that structural elements are placed in locations specified on the approved construction documents. Headed or bent bar anchor bolts shall be embedded in grout. Continuous inspection required for Occupancy Category IV structures.
Size, grade and type of reinforcement, prestressing tendons and metal accessories	Continuous	Periodic	N/A	Verify that materials meet the requirements of Section 2.4 of ACI 530.1-08. All reinforcement shall be placed in grout with minimum grout cover of 1/2" for coarse grout and 1/4" for fine grout. Verify that reinforcement protection, standard hooks and minimum bend diameters comply with Section 1.15 of ACI 530-08.
Welding of reinforcing bars	Continuous	Periodic	N/A	
Preparation, construction and protection of masonry during cold or hot weather construction	Continuous	Periodic	N/A	When the ambient air temperature is <40°F ensure that construction complies with Section 1.8C of ACI 530.1-08. When the ambient air temperature is >100°F, or >90°F with a wind velocity >8mph, ensure that construction complies with Section 1.8D of ACI 530.1-08.
Application and measurement of prestressing force	Continuous	Periodic	N/A	
OCCUPANCY CATEGORY IV:				
Verification of proportions of materials in premixed or pre-blended mortar and grout as delivered to the site	Continuous	Periodic	N/A	Verify that proportions for mortar meet ASTM C270 and proportions for grout meet ASTM C476.
Placement of masonry units	Continuous	Periodic	N/A	Verify that face shells and head joints are fully mortared and that vertical cells are aligned and unobstructed openings for grout are provided. All units are to be clean and placed while mortar is soft and plastic. Review Section 3.3B(5) for requirements at glass units.

☐ WOOD CONSTRUCTION (IBC 1704.6, 1706.2 & 1707.3)

☑ SOILS CONSTRUCTION (IBC 1704.7)

Item				Detailed Instructions and Frequencies
Verify subgrade is adequate to achieve design bearing capacity	Continuous	Periodic	N/A	Prior to placement of concrete.
Verify excavations extend to proper depth and material	Continuous	Periodic	N/A	Prior to placement of compacted fill or concrete.
Verify that subgrade has been appropriately prepared prior to placing compacted fill	Continuous	Periodic	N/A	Prior to placement of compacted fill
Perform classification and testing of compacted fill materials	Continuous	Periodic	N/A	All materials shall be checked at each lift for proper classifications and gradations not less than once for each 10,000ft² of surface area.
Verify proper materials, densities and lift thicknesses during placement and compaction.	Continuous	Periodic	N/A	

☐ DRIVEN DEEP FOUNDATIONS (IBC 1704.8)

☐ CAST-IN-PLACE DEEP FOUNDATIONS (IBC 1704.9)

☐ HELICAL PILE FOUNDATIONS (IBC 1704.10)

☑ SPRAYED FIRE-RESISTANT MATERIALS (IBC 1704.12)

Item				Detailed Instructions and Frequencies
Surface preparation	Continuous	Periodic	N/A	Prior to application confirm that surface has been prepared per the approved fire-resistance design and manufacturer's instructions.
Material thickness	Continuous	Periodic	N/A	Samples shall be taken from selected floor, roof and wall assemblies and structural members. No more than 10% of the samples shall be less than the thickness required by the fire-resistance design.
Material density	Continuous	Periodic	N/A	Density tests shall be performed in accordance with ASTM E 605 for every 2,500ft² of floor, roof or wall area. One sample must also be provided for each beam, girder, truss or column at each story.
Bonding strength	Continuous	Periodic	N/A	Bond strength tests shall be performed in accordance with ASTM E 736 for every 2,500ft² of floor, roof or wall area. One sample must also be provided for each beam, girder, truss or column at each story. The bond strength shall not be less than 150psf.

☑ MASTIC AND INTUMESCENT FIRE-RESISTANT COATINGS (IBC 1704.13)

Item				Detailed Instructions and Frequencies
Surface preparation	Continuous	Periodic	N/A	Prior to application confirm that surface temperature and substrate are acceptable and that a compatible primer is used.
Thickness	Continuous	Periodic	N/A	Record thickness of primer or other existing coating on substrate prior to application of coating. Final thickness of coating must be conducted in multiple locations prior to application of top coat (see AWCI Technical Manual 12-B).

☐ EXTERIOR INSULATION AND FINISH SYSTEMS (EIFS) (IBC 1704.142)

☐ SPECIAL CASES (IBC 1704.15) – material alternatives or unusual design applications

☐ SMOKE CONTROL (IBC 1704.16)

☑ COLD-FORMED STEEL LIGHT-FRAME CONSTRUCTION (IBC 1704.3.4, 1706.3 & 1707.4)

Item				Detailed Instructions and Frequencies
Trusses spanning > 60-feet	Continuous	Periodic	N/A	Verify that temporary and permanent truss bracing is installed in accordance with approved truss package. Performed by code inspection firm.
Wind-force-resisting systems or seismic-force-resisting systems	Continuous	Periodic	N/A	Periodic inspections of welding operations. If fastener spacing is < 4"o.c.: Verify that proper screw attachment, bolting, anchoring and other fastening of shearwalls, diaphragms, drag struts, braces, shear panels and holdowns has occurred. Performed by code inspection firm.

☑ STORAGE RACKS & ACCESS FLOORS (IBC 1707.5)

Item				Detailed Instructions and Frequencies
Verify anchorage	Continuous	Periodic	N/A	Verify that anchorage complies with approved construction documents. Inspection of post-installed anchors shall comply with approved ICC-ES report. Performed by code inspection firm.

☑ ARCHITECTURAL COMPONENTS (IBC 1707.6)

Item				Detailed Instructions and Frequencies
Erection and fastening of exterior cladding or interior and exterior veneers	Continuous	Periodic	N/A	Verify appropriate materials, fasteners and attachment at commencement of work and at completion. Performed by code inspection firm. (Not required if < 30 feet or less than 5psf).
Erection and fastening of interior and exterior nonbearing walls	Continuous	Periodic	N/A	Verify appropriate materials, fasteners and attachment at commencement of work and at completion. Performed by code inspection firm. (Not required if < 30 feet or for interior walls < 15psf).

☑ MECHANICAL & ELECTRICAL COMPONENTS (IBC 1707.7, 1707.8 & 1708.4)

Item				Detailed Instructions and Frequencies
Anchorage of emergency or standby power systems	Continuous	Periodic	N/A	Verify that anchorage complies with approved construction documents. Performed by code inspection firm.
Installation of piping systems carrying flammable, combustible or highly toxic materials	Continuous	Periodic	N/A	Verify that installation and restraint comply with approved construction documents. Performed by code inspection firm.
Installation of HVAC ductwork containing hazardous materials	Continuous	Periodic	N/A	Verify that installation and restraint comply with approved construction documents. Performed by code inspection firm.
Installation of vibration isolation systems having a clearance of <=1/4	Continuous	Periodic	N/A	Verify that installation complies with approved construction documents and manufacturer's recommendations. Performed by code inspection firm.
Designated seismic systems	Continuous	Periodic	N/A	Confirm that manufacturer's certificate of compliance conforms to the requirements of Section 13.2.1 of ASCE 7-05. Verify that the label, anchorage or mounting conforms to the manufacturer's certificate of compliance. Performed by code inspection firm.

☐ SEISMICALLY ISOLATED STRUCTURES (IBC 1707.9 & 1708.5)

☑ MISCELLANEOUS AREAS

Item				Detailed Instructions and Frequencies
Suspended Ceiling Grid Clips	Continuous	Periodic	N/A	Performed by code inspection firm.
Suspended Ceiling wire spacing (Seismic)	Continuous	Periodic	N/A	Performed by code inspection firm.
Soils backfill (specify locations and frequency)	Continuous	Periodic	N/A	
Soils for curb and gutter (specify locations and frequency)	Continuous	Periodic	N/A	
Soils for parking lots (specify locations and frequency)	Continuous	Periodic	N/A	
Soils for utility trench backfill	Continuous	Periodic	N/A	
Reinforcement for slab on grade sidewalks and drive approaches (specify locations and frequency)	Continuous	Periodic	N/A	
Reinforcement for interior slab on grade (specify locations and frequency)	Continuous	Periodic	N/A	
Concrete testing for slab on grade sidewalks and drive approaches (specify locations and frequency)	Continuous	Periodic	N/A	
Concrete testing for interior slab on grade (specify locations and frequency)	Continuous	Periodic	N/A	
Asphalt inspection (specify locations and frequency)	Continuous	Periodic	N/A	
Asphalt testing (specify locations and frequency)	Continuous	Periodic	N/A	
Steam and water line welding (specify locations and frequency)	Continuous	Periodic	N/A	
Seismic supports for duct work and sealing of joints for duct work	Continuous	Periodic	N/A	
Seismic supports for electrical raceways, cable trays and lights	Continuous	Periodic	N/A	
Seismic supports for plumbing lines including gas, water and steam and condensation	Continuous	Periodic	N/A	
Seismic bracing for mechanical units both on slab and suspended	Continuous	Periodic	N/A	
TPO Roofing	Continuous	Periodic	N/A	075423
Penetration Firestoping	Continuous	Periodic	N/A	078413
Fire Resistive Joint Systems	Continuous	Periodic	N/A	078446
Operable Partitions	Continuous	Periodic	N/A	102226

Special Inspectors Shall:

- Be approved by the Building Official prior to performing any duties
- Provide proof of licensure as a special inspector by the State of Utah for each type of inspection
- Inspection reports are to meet the requirements of IBC 1704.1.2 and DFCM standards
- Inspection reports are to be submitted to the code consultant, architect, DFCM project manager, and the State of Utah Building Official within 48 hours of performing inspections
- A final inspection report shall be submitted following completion of the project documenting the types of special inspections performed and a statement indicating that the structure is in compliance with the approved construction documents and applicable codes (see IBC 1704.1.2).

NONSTRUCTURAL COMPONENT CHECKLIST

ITEM DESCRIPTION	*NOT REQUIRED*	*ON CONST. DOCUMENTS*	*DEFERRED SUBMITTAL*	*COMMENTS*
Architectural Components:				
Interior Nonstructural Walls & Partitions		X		
Cantilever Elements *(i.e. parapets, etc.)*		X		
Exterior Nonstructural Wall Elements			X	05 4413 Curtainwall deferred submittal, 03 4910 Glass fiber reinforced concrete panel attachments, 07 4246 Composite metal wall panels
Veneer	X			
Penthouses		X		
Ceilings *(i.e. suspended grid or hard-lid)*		X		
Cabinets *(i.e. storage cabinets, equip, etc.)*		X		
Access Floors			X	09 6903 Access floor deferred submittal
Storage Racks	X			
Appendages & Ornamentations	X			
Signs & Billboards	X			
Other:				
Other:				
MEP Components:				
Fire Sprinklers			X	21 1000 Fire sprinkling and fire protection services deferred submittal
Mechanical Equipment *(i.e. HVAC, fans, air handlers, boilers, furnaces, tanks, chillers, water heaters, heat exchangers, evaporators, engines, turbines, pumps, compressors, MFR equipment, etc.)*			X	20 0548 Mechanical systems seismic control deferred submittal
Electrical Equipment *(i.e. generators, batteries, inverters, transformers, MCC, panel boards, switch gear, cabinets, etc.)*			X	26 0548 Electrical systems seismic control deferred submittal
Elevator & Escalator Components		X		
Communication Equipment, Computers, Instrumentation, and Controls		X		
Roof-mounted Chimneys, Stacks, Cooling & Electrical Towers		X		Roof mounted cooling tower
Lighting Fixtures		X		
Vibration Isolated Components			X	20 0548 Mechanical systems seismic control deferred submittal
Piping & Conduit Systems			X	20 0548 Mechanical systems seismic control deferred submittal
Ductwork *(including in-line components)*			X	20 0548 Mechanical systems seismic control deferred submittal
Conveyors	X			
Cable Trays			X	26 0548 Electrical systems seismic control deferred submittal
Other:				
Other:				

NOTES:

1. Deferred submittals for seismic restraint of nonstructural components must be submitted to the DFCM Building Official a minimum of two weeks prior to the planned installation in order to allow for plan review and forwarding to inspectors. In the event that the submittal is deficient additional time may become necessary.
2. If seismic restraints of non-structural components are installed prior to receiving DFCM approval they shall not be covered or concealed until receiving both plan review and inspection approval. Further, installers are proceeding at their own risk until plan review and inspection approval occurs.
3. The requirements for seismic restraint of nonstructural components cannot be satisfied by a general reference to Design Manuals. The design professional may utilize these manuals as a basis of their design, but must provide all supporting documentation to ensure that the design conforms to the requirements of ASCE 7-05, Chapter 13.
4. Submittals must include details of the proposed seismic restraint of nonstructural components. These details must show specific information relating to the materials, type, size, and locations of anchorages; materials used for bracing; attachment requirements of bracing to structure and component; and locations of transverse and

VCBO ARCHITECTURE

VCBO ARCHITECTURE
524 SOUTH 600 EAST
SALT LAKE CITY, UT 84102
Phone: (801) 575-8800
Fax: (801) 531-9850
Web: vcbo.com

LICENSED ARCHITECT No. 133912 BRENT R. TIPPETS 8-15-13 STATE OF UTAH

2nd District Juvenile Courthouse

Utah State Courts
08284150
165 West 20th Street, Ogden, Utah
BID DOCUMENTS

Rev #	Date	Description
1	4/30/2013	Fire Marshal Response

Job # 12500
Date August 15, 2013
Owner # 08284150
Ins. #

SPECIAL INSPECTIONS AND NONSTRUCTURAL COMPONENT CHECKLIST

G003

8/14/2013 10:08:31 AM

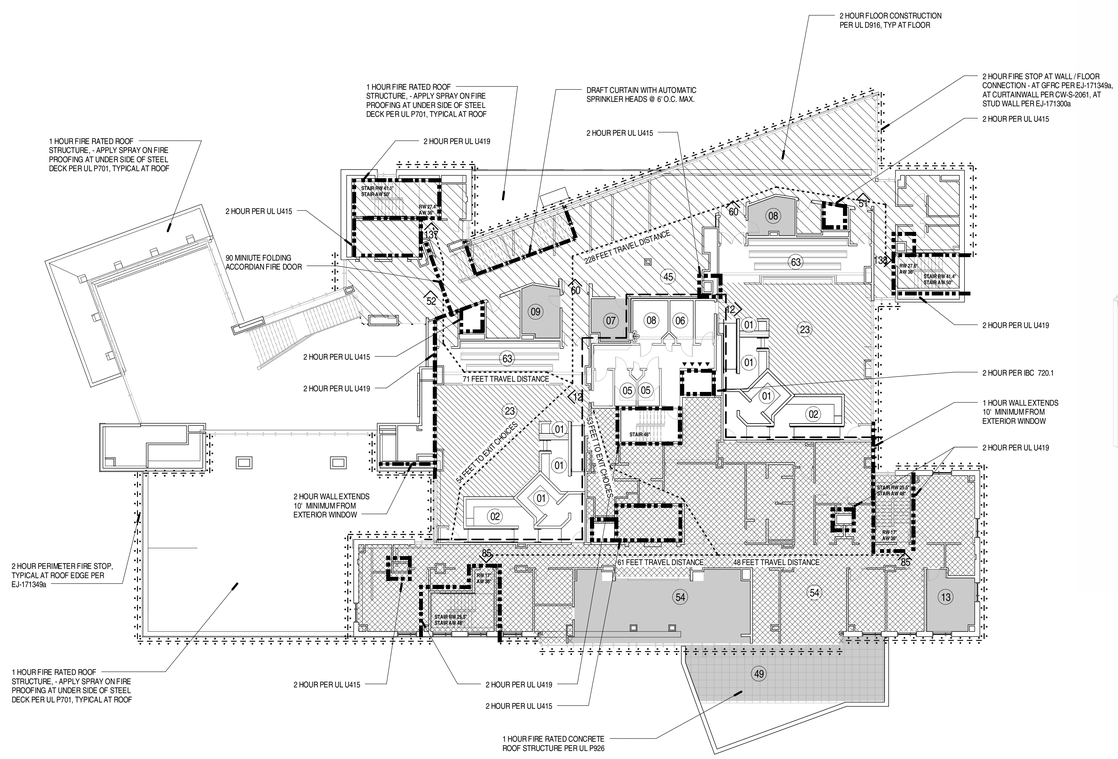

C1 LEVEL 2 EGRESS PLAN

SCALE: 1/16" = 1'-0"

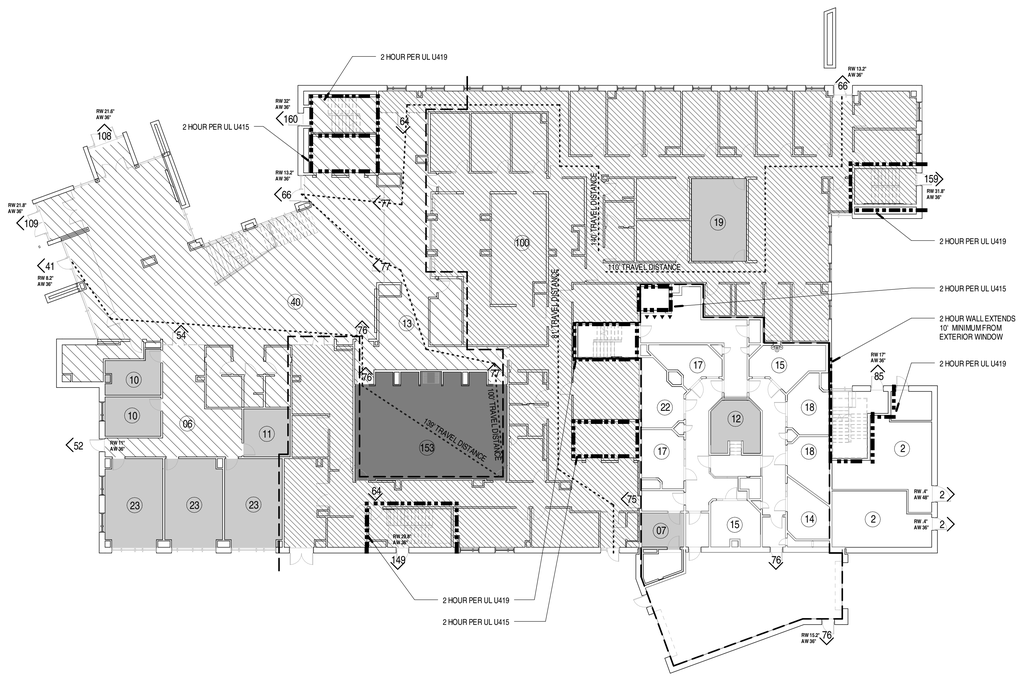

A1 LEVEL 1 EGRESS PLAN

SCALE: 1/16" = 1'-0"

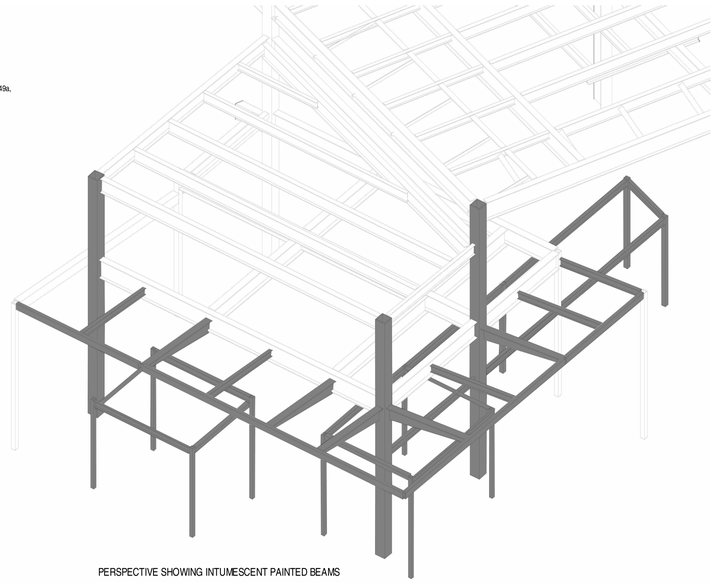

PERSPECTIVE SHOWING INTUMESCENT PAINTED BEAMS

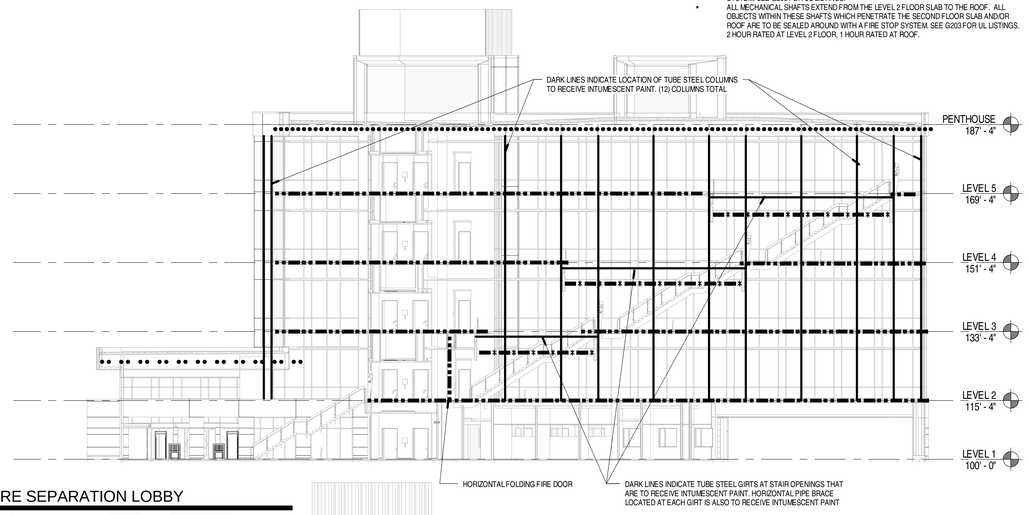

D1 FIRE SEPARATION LOBBY

SCALE: 1/16" = 1'-0"

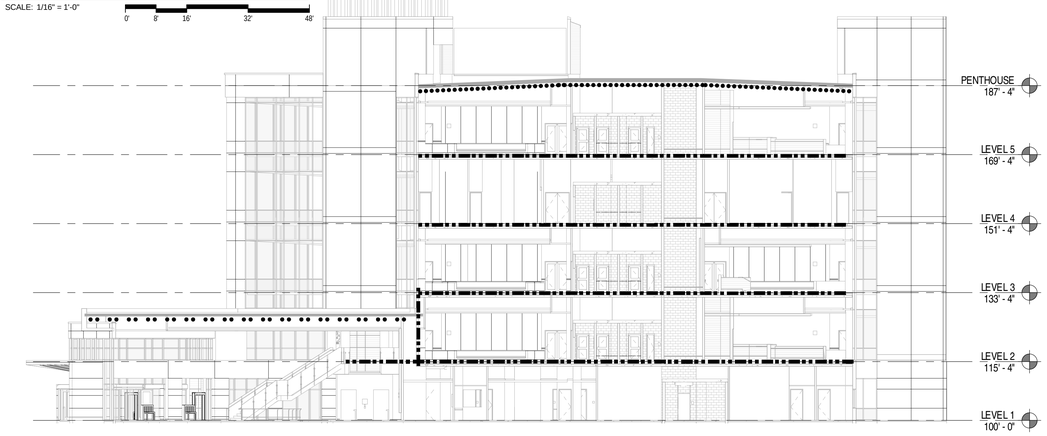

A4 FIRE SEPARATION COURTROOM

SCALE: 1/16" = 1'-0"

OCCUPANCY TYPE KEY

HATCH	DESCRIPTION
	ASSEMBLY (CHAIRS ONLY - NOT FIXED) - 7 NET SF/OCCUPANT
	ASSEMBLY (TABLES AND CHAIRS) - 15 NET SF/OCCUPANT
	COURTROOM - 40 NET SF/OCCUPANT
	BUSINESS (SECURE ACCESS) - 100 GROSS SF/OCCUPANT
	BUSINESS (PUBLIC ACCESS) - 100 GROSS SF/OCCUPANT
	FIXED BENCH SEATING - 18" OF BENCH PER OCCUPANT

FIRE RATING KEY

MARK	DESCRIPTION
	SECURE BOUNDARY - PERSONS ON THE PUBLIC SIDE OF THIS LINE CAN NOT CROSS THIS BOUNDARY WITHOUT PRESENTING THE PROPER KEY CARD
	2 HOUR FIRE BARRIER OR 2 HOUR CONCRETE FLOOR - WALL CONSTRUCTION PER UL ASSEMBLY NUMBER U 415 OR U419 - FLOOR PROTECTION PER UL D916
	1 HOUR ROOF ACHIEVED WITH CONCRETE OVER METAL DECK PER UL ASSEMBLY P926
	1 HOUR ROOF ACHIEVED WITH SPRAY APPLIED FIRE PROOFING PER UL ASSEMBLY P701
	ROLL-DOWN ELEVATOR DRAFT AND SMOKE CURTAIN
	18" DRAFT CURTAIN W/ AUTOMATIC SPRINKLER HEAD @ 6'-0" O.C. MAX. EACH SIDE
	2 HOUR FIRE STOP - FLOOR/WALL TRANSITION PER ENGINEERING JUDGMENTS 171349a AND 171300a - FLOOR/WINDOW TRANSITION PER UL CW-S-2061
	TRAVEL DISTANCE ANALYSIS LINE

FIRE PROOFING GENERAL NOTES

NOTE:
REQUIRED FIRE-RESISTIVE ASSEMBLIES WILL BE ACCOMPLISHED AS FOLLOWS AND PER THE FOLLOWING UL RATED ASSEMBLIES CALLED OUT ON SHEETS G200, G201, G202 AND G203 AND THE WALL TYPES SHEET A500 AND S01:

- ALL ATTACHMENTS TO THE COLUMNS AND BEAMS ARE TO BE APPLIED PRIOR TO THE SPRAY APPLIED FIREPROOFING AND TO BE PROTECTED IN PLACE.
- IF A SUBCONTRACTOR REMOVES OR DAMAGES FIRE PROOFING IT WILL BE THEIR RESPONSIBILITY TO REPAIR THE ASSEMBLY.
- STRUCTURAL STEEL COLUMNS - 2 HOUR SPRAY APPLIED FIRE PROOFING PER X772 AND X771, UNLESS NOTED OTHERWISE
- WITHIN LOBBY 2145, 3145, 4145 AND 5145 ALL TUBE STEEL COLUMNS AND TUBE STEEL HORIZONTAL GIRTS ON AND ADJACENT TO GRID X1 ARE TO BE FIRE PROOFED WITH AN INTUMESCENT COATING PER UL X642.
- AT BUILDING ENTRY 1104 SELECT TUBE STEEL COLUMNS AND BEAMS ARE TO BE FIRE PROOFED WITH AN INTUMESCENT COATING PER UL X642. SEE THE DIAGRAM ON SHEET G004 FOR MORE INFORMATION
- ALL OBJECTS PENETRATING FLOORS, UNLESS ENCLOSED WITHIN A SHAFT, ARE TO BE SEALED AROUND WITH A 2 HOUR FIRE STOP SYSTEM. SEE G203 FOR UL LISTINGS.
- ALL OBJECTS PENETRATING A ROOF ARE TO BE SEALED AROUND WITH A 1 HOUR FIRE STOP SYSTEM. SEE G203 FOR UL LISTINGS.
- ALL MECHANICAL SHAFTS EXTEND FROM THE LEVEL 2 FLOOR SLAB TO THE ROOF. ALL OBJECTS WITHIN THESE SHAFTS WHICH PENETRATE THE SECOND FLOOR SLAB AND/OR ROOF ARE TO BE SEALED AROUND WITH A FIRE STOP SYSTEM. SEE G203 FOR UL LISTINGS. 2 HOUR RATED AT LEVEL 2 FLOOR, 1 HOUR RATED AT ROOF.

VCBO ARCHITECTURE
VCBO ARCHITECTURE
524 SOUTH 600 EAST
SALT LAKE CITY, UT 84102
Phone: (801) 575-8800
Fax: (801) 531-9850
Web: vcbo.com

LICENSED ARCHITECT No. 133912 BRENT R. TIPPETS 8-15-13 STATE OF UTAH

2nd District Juvenile Courthouse

Utah State Courts
08284150
165 West 20th Street, Ogden, Utah
BID DOCUMENTS

Rev #	Date	Description

Job # 12500
Date August 15, 2013
Owner # 08284150
Ins. #

FIRE PROTECTION AND OCCUPANCY LOADS

G004

8/14/2013 10:09:03 AM

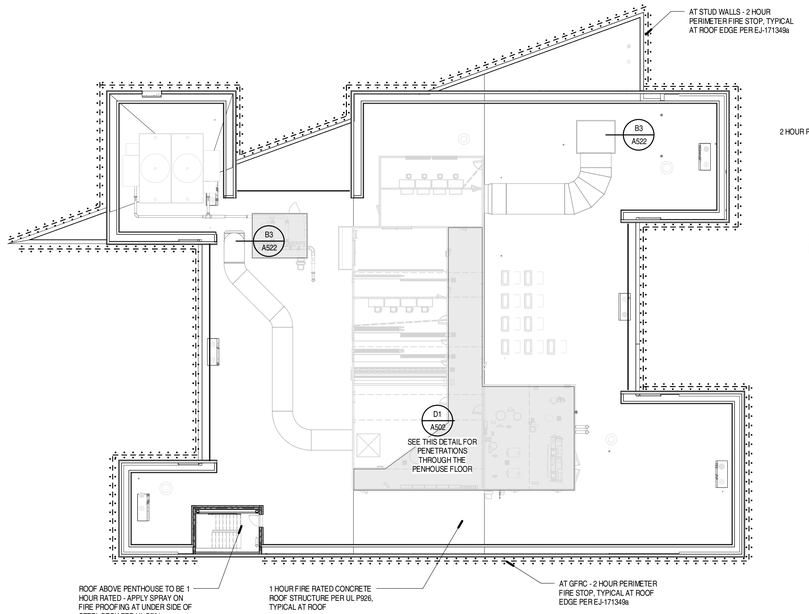

C1 ROOF EGRESS PLAN

SCALE: 1/16" = 1'-0"

0' 8' 16' 32' 48'

PLAN NORTH

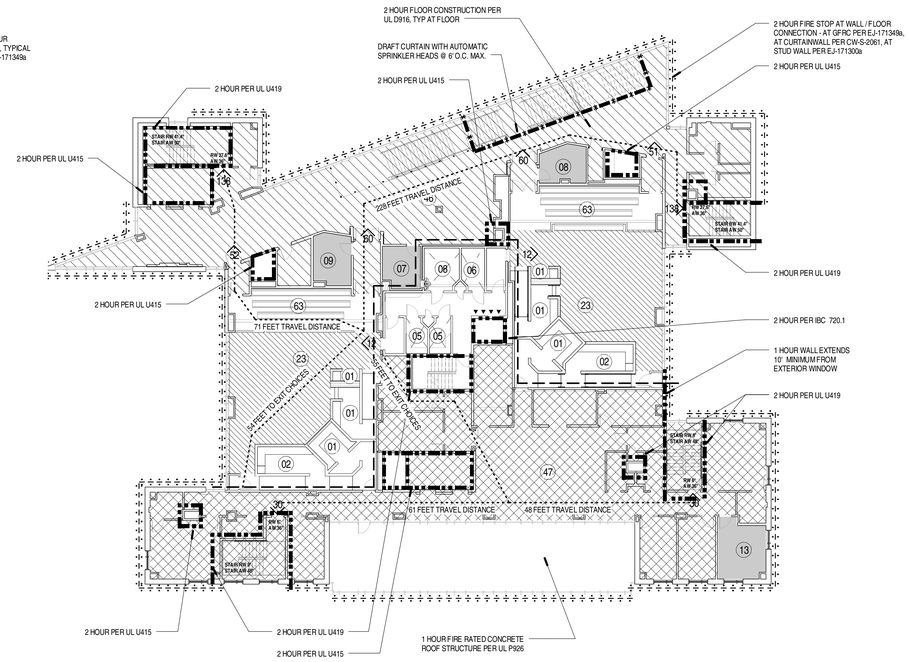

C3 LEVEL 4 EGRESS PLAN

SCALE: 1/16" = 1'-0"

0' 8' 16' 32' 48'

PLAN NORTH

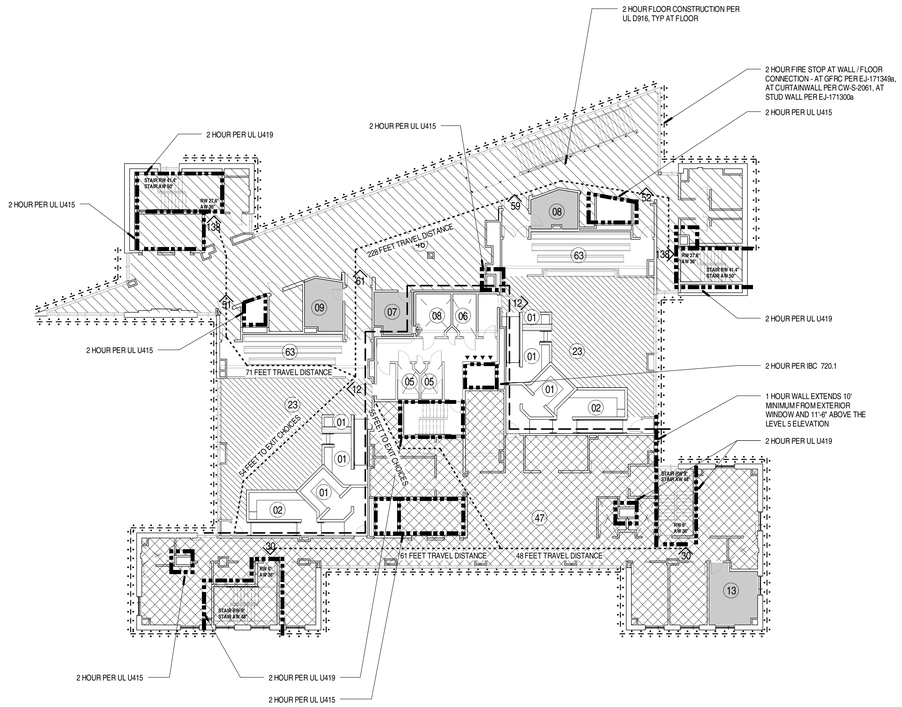

A1 LEVEL 5 EGRESS PLAN

SCALE: 1/16" = 1'-0"

0' 8' 16' 32' 48'

PLAN NORTH

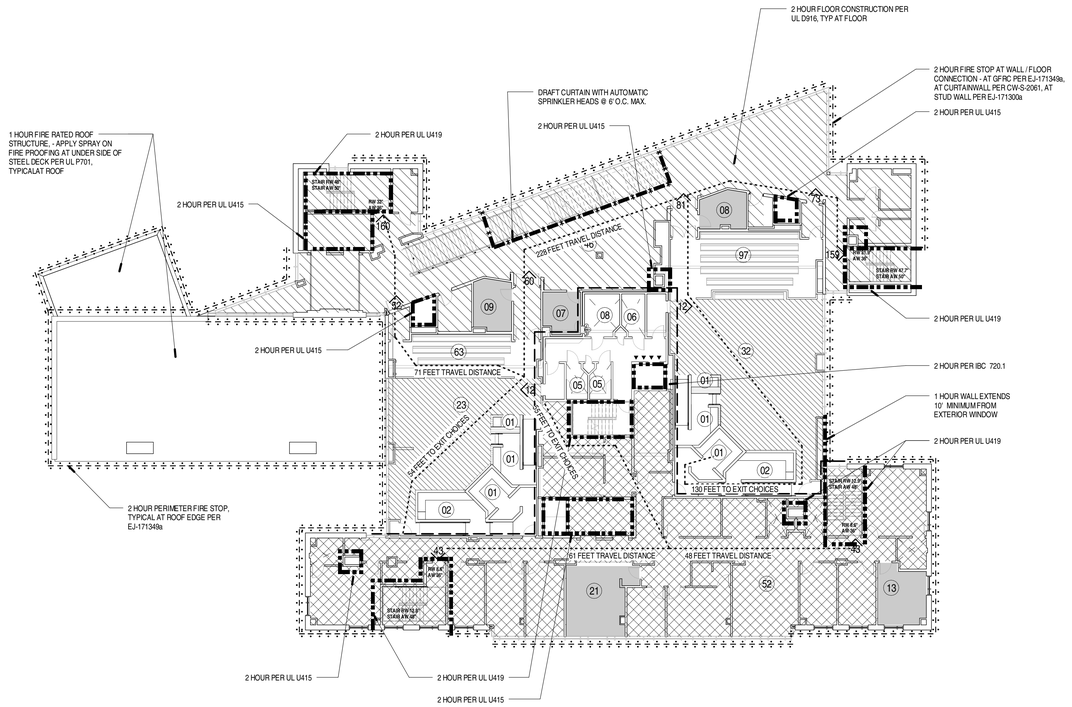

A3 LEVEL 3 EGRESS PLAN

SCALE: 1/16" = 1'-0"

0' 8' 16' 32' 48'

PLAN NORTH

OCCUPANCY TYPE KEY

HATCH	DESCRIPTION
	ASSEMBLY (CHAIRS ONLY - NOT FIXED) - 7 NET SF/OCCUPANT
	ASSEMBLY (TABLES AND CHAIRS) - 15 NET SF/OCCUPANT
	COURTROOM - 40 NET SF/OCCUPANT
	BUSINESS (SECURE ACCESS) - 100 GROSS SF/OCCUPANT
	BUSINESS (PUBLIC ACCESS) - 100 GROSS SF/OCCUPANT
	FIXED BENCH SEATING - 18" OF BENCH PER OCCUPANT

FIRE RATING KEY

MARK	DESCRIPTION
	SECURE BOUNDARY - PERSONS ON THE PUBLIC SIDE OF THIS LINE CAN NOT CROSS THIS BOUNDARY WITHOUT PRESENTING THE PROPER KEY CARD
	2 HOUR FIRE BARRIER OR 2 HOUR CONCRETE FLOOR - WALL CONSTRUCTION PER UL ASSEMBLY NUMBER U 415 OR U419 - FLOOR PROTECTION PER UL D916
	1 HOUR ROOF ACHIEVED WITH CONCRETE OVER METAL DECK PER UL ASSEMBLY P926
	1 HOUR ROOF ACHIEVED WITH SPRAY APPLIED FIRE PROOFING PER UL ASSEMBLY P701
	ROLL-DOWN ELEVATOR DRAFT AND SMOKE CURTAIN
	18" DRAFT CURTAIN W/ AUTOMATIC SPRINKLER HEAD @ 6'-0" O.C. MAX. EACH SIDE
	2 HOUR FIRE STOP - FLOOR/WALL TRANSITION PER ENGINEERING JUDGMENTS 171349a AND 171300a - FLOOR/WINDOW TRANSITION PER UL CW-S-2061
	TRAVEL DISTANCE ANALYSIS LINE

FIRE PROOFING GENERAL NOTES

NOTE:
REQUIRED FIRE-RESISTIVE ASSEMBLIES WILL BE ACCOMPLISHED AS FOLLOWS AND PER THE FOLLOWING UL RATED ASSEMBLIES CALLED OUT ON SHEETS G200, G201, G202 AND G203 AND THE WALL TYPES SHEET A500 AND 501:

- ALL ATTACHMENTS TO THE COLUMNS AND BEAMS ARE TO BE APPLIED PRIOR TO THE SPRAY APPLIED FIREPROOFING AND TO BE PROTECTED IN PLACE.
- IF A SUBCONTRACTOR REMOVES OR DAMAGES FIRE PROOFING IT WILL BE THEIR RESPONSIBILITY TO REPAIR THE ASSEMBLY.
- STRUCTURAL STEEL COLUMNS - 2 HOUR SPRAY APPLIED FIRE PROOFING PER X772 AND X771, UNLESS NOTED OTHERWISE
- WITHIN LOBBY 2145, 3145, 4145 AND 5145 ALL TUBE STEEL COLUMNS AND TUBE STEEL HORIZONTAL GIRTS ON AND ADJACENT TO GRID X1 ARE TO BE FIRE PROOFED WITH AN INTUMESCENT COATING PER UL X642.
- AT BUILDING ENTRY 1104 SELECT TUBE STEEL COLUMNS AND BEAMS ARE TO BE FIRE PROOFED WITH AN INTUMESCENT COATING PER UL X642. SEE THE DIAGRAM ON SHEET G004 FOR MORE INFORMATION
- ALL OBJECTS PENETRATING FLOORS, UNLESS ENCLOSED WITHIN A SHAFT, ARE TO BE SEALED AROUND WITH A 2 HOUR FIRE STOP SYSTEM. SEE G203 FOR UL LISTINGS.
- ALL OBJECTS PENETRATING A ROOF ARE TO BE SEALED AROUND WITH A 1 HOUR FIRE STOP SYSTEM. SEE G203 FOR UL LISTINGS.
- ALL MECHANICAL SHAFTS EXTEND FROM THE LEVEL 2 FLOOR SLAB TO THE ROOF. ALL OBJECTS WITHIN THESE SHAFTS WHICH PENETRATE THE SECOND FLOOR SLAB AND/OR ROOF ARE TO BE SEALED AROUND WITH A FIRE STOP SYSTEM. SEE G203 FOR UL LISTINGS. 2 HOUR RATED AT LEVEL 2 FLOOR, 1 HOUR RATED AT ROOF.

VCBO ARCHITECTURE
524 SOUTH 600 EAST
SALT LAKE CITY, UT 84102
Phone: (801) 575-8800
Fax: (801) 531-9850
Web: vcbo.com

LICENSED ARCHITECT No. 133912 BRENT R. TIPPETS 8-15-13 STATE OF UTAH

2nd District Juvenile Courthouse

Utah State Courts
08284150
165 West 20th Street, Ogden, Utah
BID DOCUMENTS

Rev #	Date	Description

Job # 12500
Date August 15, 2013
Owner # 08284150
Ins. #

FIRE PROTECTION AND OCCUPANCY LOADS

G005

8/14/2013 10:09:31 AM

System No. HW-D-1037

System No. HW-D-1037
Assembly Rating - 2 Hr
Nominal Joint Width - 3-1/2 In.
Class II Movement Capabilities - 14% Compression and Extension

CLASSIFIED C UL US
Classified by Underwriters Laboratories, Inc. to UL 2079 and CAN/ULC-S115

HWD 1037

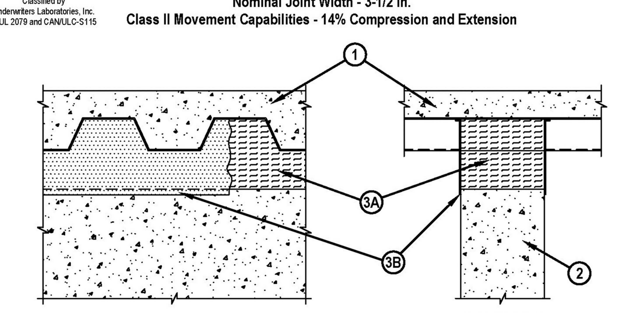

1. Floor Assembly — The fire-rated fluted steel floor unit/concrete floor assembly shall be constructed of the materials and in the manner described in the individual Floor-Ceiling Design in the Fire Resistance Directory and shall include the following construction features:
   A. Steel Floor and Form Units* — Max 3 in. (76 mm) deep galv steel fluted floor units.
   B. Concrete — Min 2-1/2 in. (64 mm) thick reinforced concrete, as measured from the top plane of the floor units.
   C. Spray-Applied Fire Resistive Materials* — (Optional)—(Not Shown)—Prior to the installation of the forming material and fill, void or cavity material (Items 3A, 3B) the steel floor units may be sprayed with a min 5/16 in. (8 mm) to max 1-3/4 in. (44 mm) thickness of fire resistive material.
   W R GRACE & CO - CONN — Type MK-6-HY

1A. Roof Assembly (Not Shown) — As an alternate to the floor assembly, a fire rated fluted steel deck roof assembly may be used. The roof assembly shall be constructed of the materials and in the manner described in the individual P900 Series Roof-Ceiling Design in the UL Fire Resistance Directory. The hourly rating of the roof assembly shall be equal to or greater than the hourly rating of the wall assembly. The roof assembly shall include the following construction features:
   A. Steel Roof Deck — Max 3 in. (76 l fluted roof deck.
   B. Roof Insulation — Min 2-1/4 in. (5 insulating concrete, as measured from the top plane of the floor units.

1B. Roof Assembly — As an alternate tc re rated protected fluted steel deck roof assembly may be used. The roof assembly shall be constructed of the materials a scribed in the individual P700 Series Roof-Ceiling Design in the UL Fire Resistance Directory. The hourly rating of the roof assembly shall be equal to or greater than the hourly rating of the wall assembly. The roof assembly shall include the following construction features:
   A. Steel Roof Deck — Max 3 in. (76 mm) deep galv steel fluted roof deck.
   B. Spray-Applied Fire Resistive Materials* — (Not Shown) - Prior to the installation of the steel ceiling runners, Forming Material and Fill, Void or Cavity Material (Items 2A, 3A, 3B), the roof assembly shall be sprayed with the type and thickness of fire resistive material indicated in the individual P700 Series design.

2. Wall Assembly — Min 8 in. (203 mm) thick steel reinforced lightweight or normal weight (100-150 pcf) (1600 -2400 kg/m3) structural concrete. Wall may also be constructed of any UL Classified Concrete Blocks*.
   See Concrete Blocks (CAZT) category in the Fire Resistance Directory for names of manufacturers.

3. Joint System — Max separation between bottom of floor units and top of concrete wall at time of installation is 3-1/2 in. (89 mm). The joint system is designed to accommodate a max 14 percent compression or extension from its installed width. The joint system shall consist of the following:
   A. Forming Material* — Nom 4 in. (102 mm) thick pieces of nom 4 pcf (64 kg/m3) forming material sized to attain a min compression rate of 50 percent in the thickness direction firmly packed to completely fill the flutes. Additional pieces of batt insulation, min 8 in. (203 mm) wide, shall be compressed 50 percent in thickness and installed edge first into joint opening between bottom of fluted floor or roof units and top of concrete wall.
   THERMAFIBER INC — Type SAF
   A1. Forming Material*—Plugs — Optional-Not Shown) Performed mineral wool plugs, formed to the shape of the fluted floor units, friction fit to completely fill the flutes above the ceiling runner. The plugs shall be flush with both wall surfaces. Additional forming material, described in Item 3A, to be used in conjunction with the plugs to fill the gap between the top of the wall and the bottom of the steel floor units.
   HILTI CONSTRUCTION CHEMICALS, DIV OF
   HILTI INC — CP777 Speed Plugs
   A2. Forming Material — As an alternate to Item 3A, min 6 pcf (96 kg/m3) ceramic blanket insulation installed in joint as a permanent form. Nominal 4 in (102 mm) thick pieces of nominal 6 pcf (96 kg/m3) forming material sized to attain a min compression rate of 50 percent in the thickness direction firmly packed to completely fill the flutes. Additional pieces of batt insulation, min 8 in. (203 mm) wide, shall be compressed 50 percent in thickness and installed edge first into joint opening between bottom of fluted floor or roof units and top of concrete wall.
   B. Fill, Void or Cavity Material* - Sealant — A 1/8 in. (3.2 mm) wet thickness of fill material sprayed of trowled on each side of wall to completely cover mineral wool forming material and to overlap a min 1/2 in. (13 mm) onto steel floor units and concrete wall. When spray-applied fire resistive material* is applied to the steel deck, the fill material is to overlap the wall a min ½ in. and the spray-applied fire resistive material a min of 2 in. (51 mm) on both sides of the wall.
   HILTI CONSTRUCTION CHEMICALS, DIV OF
   HILTI INC — CP672 Firestop Spray or CFS-SP WB Firestop Joint Spray

*Bearing the UL Classification Mark

UL DESIGN No. HW-D-0042 - 1 OR 2 HR TOP OF WALL

System No. HW-D-0042

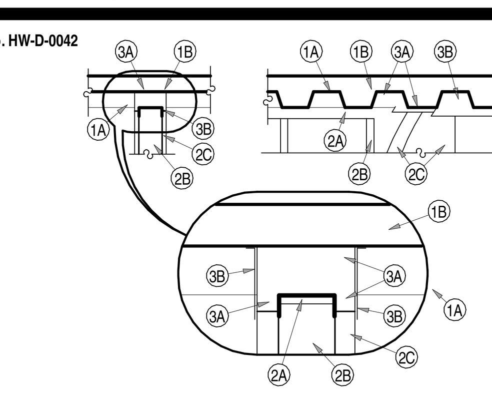

Assembly Ratings - 1 and 2 Hr (See Items 2 & 3A)
Joint Width - 1 In. Max
Class II Movement Capabilities - 50 Percent Compression Or Extension

1. Floor Assembly - The fire-rated fluted steel deck/concrete floor assembly shall be constructed of the materials and in the manner described in the individual D700 or D900 Floor-Ceiling Design in the UL Fire Resistance Directory and shall include the following construction features:

A. Steel Floor And Form Units* - Max 3 in. (76 mm) deep galv steel fluted units.

B. Concrete - Min 2-1/2 in. (64 mm) thick reinforced concrete, as measured from the top plane of the floor units.

C. Spray-Applied Fire Resistive Materials* - (Optional, Not Shown)-Prior to the installation of the steel ceiling runners, Forming Material and Fill, Void or Cavity Material (Items 2A, 3A, 3B, respectively) the steel floor units may be sprayed with a min 5/16 in. (8 mm) to max 1-3/4 in. (45 mm) thickness of fire resistive material.

W R GRACE & CO - CONN - Type MK-6-HY

1A. Roof Assembly - (Not Shown) - As an alternate to the floor assembly, a fire rated fluted steel deck roof assembly may be used. The roof assembly shall be constructed of the materials and in the manner described in the individual P900 Series Roof-Ceiling Design in the UL Fire Resistance Directory. The hourly rating of the roof assembly shall be equal to or greater than the hourly rating of the wall assembly. The roof assembly shall include the following construction features:

A. Steel Roof Deck - Max 3 in. (76 mm) deep galv steel fluted roof deck.

B. Roof Insulation - Min 2-1/4 in. (57 mm) thick poured insulating concrete, as measured from the top plane of the floor units.

1B. Roof Assembly - As an alternate to Items 1 and 1A, a fire rated protected fluted steel deck roof assembly may be used. The roof assembly shall be constructed of the materials and in the manner described in the individual P700 Series Roof-Ceiling Design in the UL Fire Resistance Directory. The hourly rating of the roof assembly shall be equal to or greater than the hourly rating of the wall assembly. The roof assembly shall include the following construction features:

A. Steel Roof Deck - Max 3 in. (76 mm) deep galv steel fluted roof deck.

B. Spray-Applied Fire Resistive Materials* - (Not Shown)-Prior to the installation of the steel ceiling runners, Forming Material and Fill, Void or Cavity Material (Items 2A, 3A, 3B), the roof assembly shall be sprayed with the type and thickness of fire resistive material indicated in the individual P700 Series design.

2. Wall Assembly - The 1 or 2 hr fire rated gypsum board/steel stud wall assembly shall be constructed of the materials and in the manner described in the individual U400 or V400 Series Wall and Partition Design in the UL Fire Resistance Directory and shall include the following construction features:

A. Steel Floor And Ceiling Runners - Floor and ceiling runners of wall assembly shall consist of galv steel channels sized to accommodate steel studs (Item 2B). Ceiling runner to be provided with 2 in. (51 mm) flanges. Ceiling runner installed perpendicular to direction of fluted steel deck and secured to valleys with steel masonry anchors or welds spaced max 12 in. (305 mm) OC. When optional spray-applied fire resistive material is used on steel deck and when deflection channel is not used, ceiling runner secured through spray-applied material to each valleys of steel deck with min 3/16 in. (5 mm) diam steel masonry anchors spaced max 12 in. (305 mm) OC.

A1. Light Gauge Framing*-Slotted Ceiling Runner - As an alternate to the ceiling runner in Item 2A, slotted ceiling runner to consist of galv steel channel with slotted flanges sized to accommodate steel studs (Item 2B). Slotted ceiling runner installed perpendicular to direction of fluted steel deck and secured to valleys with steel masonry anchors spaced max 24 in. (610 mm) OC. When optional spray-applied fire resistive material is used on steel deck, slotted ceiling runner secured through spray-applied material to each valley of steel deck with min 3/16 in. (5 mm) diam steel masonry anchors spaced max 12 in. (305 mm) OC.

BRADY CONSTRUCTION INNOVATIONS INC,

DBA SLIPTRACK SYSTEMS - SLP-TRK

CALIFORNIA EXPANDED METAL PRODUCTS CO - CST

CLARKWESTERN BUILDING SYSTEMS INC - Type SLT, SLT-H

METAL-LITE INC - The System

SCAFCO STEEL STUD MANUFACTURING CO

A2. Light Gauge Framing*-Vertical Deflection Ceiling Runner - When the nom joint width is less than or equal to 3/4 in. (19 mm), vertical deflection ceiling runner may be used as an alternate to the ceiling runners in Items 2A and 2A1. Vertical deflection ceiling runner to consist of galv steel channel with slotted vertical deflection clips mechanically fastened within runner. Slotted clips provided with step bushings for permanent fastening of steel studs. Flanges sized to accommodate steel studs (Item 2B). Vertical deflection ceiling runner installed perpendicular to direction of fluted steel deck and secured to valleys with steel masonry anchors spaced max 24 in. (610 mm) OC. When optional spray-applied fire resistive material is used on steel deck, vertical deflection ceiling runner secured through spray-applied material to each valley of steel deck with min 3/16 in. (5 mm) diam steel masonry anchors spaced max 12 in. (305 mm) OC.

THE STEEL NETWORK INC - VertiTrack VTD250, VTD362, VTD400, VTD600 and VTD800

A3. Light Gauge Framing* - Clipped Ceiling Runner - As an alternate to the ceiling runner in Items 2A, 2A1 and 2A2, clipped runner to consist of galv steel channel with clips preformed in track flanges which positively engage the inside flange of the steel studs (Item 2B). Track sized to accommodate steel studs (Item 2B). Track flanges to be min 2-1/2 in. (64 mm). Clipped ceiling runner installed perpendicular to direction of fluted steel deck and secured to valleys with steel masonry anchors spaced max 24 in. (610 mm) OC. When optional spray-applied fire resistive material is used on steel deck, clipped ceiling runner secured through spray-applied material to each valley of steel deck with min 3/16 in. (5 mm) diam steel masonry anchors spaced max 12 in. (305 mm) OC.

TOTAL STEEL SOLUTIONS L L C - Snap Trak

A4. Light Gauge Framing*- Notched Ceiling Runner - As an alternate to the ceiling runners in Items 2A through 2A3, notched ceiling runners to consist of C-shaped galv steel channel with notched return flanges sized to accommodate steel studs (Item 2B). Notched ceiling runner installed perpendicular to direction of fluted steel deck and secured to valleys with steel masonry anchors spaced max 24 in. (610 mm) OC. When optional spray-applied fire resistive material is used on the steel deck, notched ceiling runner secured through spray-applied material to each valley of steel deck with min 3/16 in. (5 mm) diam steel masonry anchors spaced max 12 in. (305 mm) OC.

DENMAR STEEL INC - Type SCR

B. Studs - Steel studs to be min 2-1/2 in. (64 mm) wide. Studs cut 1/2 to 3/4 in. (13 to 19 mm) less in length than assembly height with bottom nesting in and resting on floor runner and with top nesting in ceiling runner without attachment. When slotted ceiling runner (Item 2A1) is used, steel studs secured to slotted ceiling runner with No. 8 by 1/2 in. (13 mm) long wafer head steel screws at midheight of slot on each side of wall. When vertical deflection ceiling runner (Item 2A2) is used, steel studs secured to slotted vertical deflection clips, through the bushings, with steel screws at midheight of each slot. Stud spacing not to exceed 24 in. (610 mm) OC.

C. Gypsum Board* - Gypsum board installed to a min total thickness of 5/8 in. and 1-1/4 in. (16 and 32 mm) on each side of wall for 1 and 2 hr rated assemblies, respectively. Wall to be constructed as specified in the individual Wall and Partition Design in the UL Fire Resistance Directory, except that a max 1 in. (25 mm) gap shall be maintained between the top of the gypsum board and the bottom of the steel deck units and the top row of screws shall be installed into the studs 3-1/2 to 4 in. (89 to 102 mm) below the lower surface of the floor or roof. The hourly rating of the joint system is dependent on the hourly rating of the wall.

3. Joint System - Max separation between bottom of floor or roof and top of wall at time of installation of joint system is 1 in. (13 mm). The joint system is designed to accommodate a max 50 percent compression or extension from its installed width. The joint system consists of forming material and a fill material, as follows:

A. Forming Material* - Nom 4 pcf (64 kg/m3) density mineral wool batt insulation cut approx 25 percent wider than the flutes and with a length approx equal to the overall thickness of the wall. Multiple pieces stacked on top of each other, as needed, and then compressed 50 percent in thickness and inserted into the flutes of the steel deck above the top of the ceiling runner. The mineral wool batt insulation is to project beyond each side of the ceiling runner, flush with wall surfaces. Additional 5/8 in. and 1-1/4 in. (16 and 32 mm) wide strips for 1 and 2 hr rated assemblies, respectively, of nom 4 pcf (64 kg/m3) mineral wool batt insulation are to be cut to fill the gap between the top of the gypsum board and bottom of the steel deck. The strips of mineral wool are compressed 50 percent and tightly packed, cut edge first, into the gap between the top of the gypsum board and bottom of the steel deck on both sides of the wall.

ROCK WOOL MANUFACTURING CO - Delta- Board

THERMAFIBER INC - Type SAF

3. Joint System - CONTINUED FROM LEFT

A1. Forming Material*-Plugs - (Optional, Not Shown) Preformed mineral wool plugs, formed to the shape of the fluted floor units, friction fit to completely fill the flutes above the ceiling channel. The plugs shall project beyond each side of the ceiling runner, flush with wall surfaces. Additional forming material, described in Item 3A, to be used in conjunction with the plugs to fill the gap between the top of gypsum board and bottom of steel floor units.

HILTI CONSTRUCTION CHEMICALS, DIV OF

HILTI INC - CP777 Speed Plugs

A2. Forming Material* - Strips - (Optional) - Nom 5/8 in. and 1-1/4 in. (16 and 32 mm) wide by 2 in. (51 mm) high precut mineral wool strips for 1 and 2 hr rated assemblies respectively. The strips are compressed 50 percent and firmly packed, cut edge first, into the gap between the top of the gypsum board and bottom of the steel floor units on both sides of the wall.

HILTI CONSTRUCTION CHEMICALS, DIV OF
HILTI INC - CP 767 Speed Strips

B. Fill, Void or Cavity Material* - Min 1/6 in. (1.6 mm) dry thickness (1/8 in. or 3.2 mm wet thickness) of fill material sprayed or troweled on each side of the wall to completely cover mineral wool forming material and to overlap a min of 1/2 in. (13 mm) onto gypsum board and steel deck on both sides of wall. When Spray-Applied Fire Resistive Material* is applied to the Steel Floor and Form Units*, the fill material is to overlap the gypsum board a min of 1/2 in. (13 mm) and the Spray-Applied Fire Resistive Material a min of 2 in. (51 mm) on both sides of wall. When spray-applied fire resistive materials are used, the CP 672 firestop spray shall overlap the wall a min 1/2 in. (13 mm) and overlap the spray-applied fire resistive material a min of 2 in. (51 mm) on both sides of the wall.

HILTI CONSTRUCTION CHEMICALS, DIV OF

HILTI INC - CP 672 Firestop Spray

*Bearing the UL Classification Mark

Last Updated on 2009-05-02

UL DESIGN No. U415 - 1, 2, 3 OR 4 HR SHAFT WALL

Design No. U415
Nonbearing Wall Ratings — 1, 2, 3 or 4 Hr

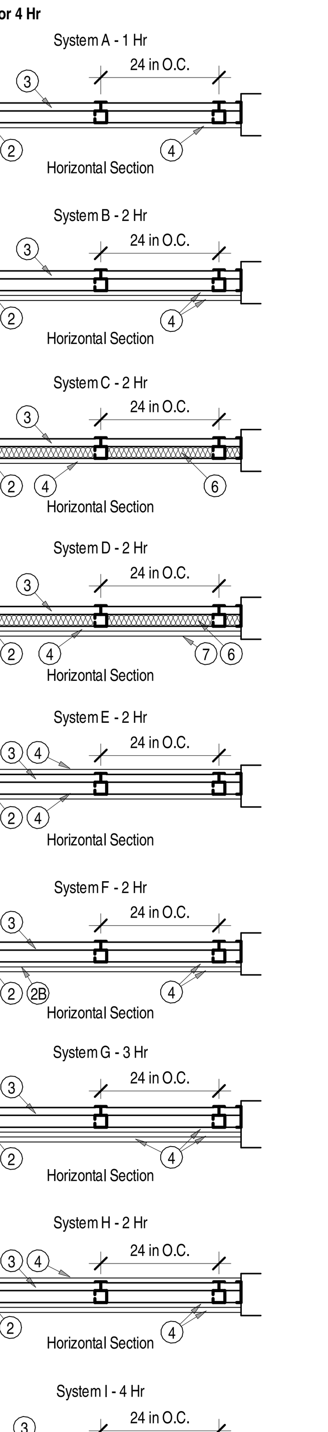

1. Floor, Side and Ceiling Runners -- "J" - shaped runner, min 2-1/2 in. deep (min 4 in. deep when System C is used), with unequal legs of 1 in. and 2 in., fabricated from min 24 MSG (min 20 MSG when Item 4A or 7 are used) galv steel. Runners positioned with short leg toward finished side of wall. Runners attached to structural supports with steel fasteners located not greater than 2 in. from ends and not greater than 24 in. OC. "E" - shaped studs (Item 2A) may be used as side runners in place of "J" - shaped runners.

2. Steel Studs -- "C-H" - shaped studs, min 2-1/2 in. deep (min 4 in. deep when System C is used), fabricated from min 25 MSG (min 20 MSG when Items 2D, 5C, or 7 is used) galv steel. Cut to lengths 3/8 to 1/2 in. less than floor-to-ceiling height and spaced 24 in. or 600 mm OC.

2A. Steel Studs -- (Not Shown) -- "E" - shaped studs installed back to back in place of "C-H" - shaped studs (Item 2) "E" - shaped studs secured together with steel screws spaced a maximum 12 in. OC. Fabricated from min 25 MSG (min 20 MSG when Item 2D or Item 7 is used) galv steel, min 2-1/2 in. deep (min 4 in. deep when System C is used), with one leg 1 in. long and two legs 3/4 in. long. Shorter legs 1 in. apart to engage gypsum liner panels. Cut to lengths 3/8 to 1/2 in. less than floor to ceiling heights.

2B. Furring Channels -- (Optional, not shown) -- For use with single or double layer systems. Resilient furring channels fabricated from min 25MSG corrosion protected steel, installed horizontally, and spaced vertically a max 24 in. OC. Flange portion of channel attached to each intersecting "C-H" or "E" stud on side of stud opposite the 1 in. liner panels with 1/2 in. long Type S or S-12 pan-head steel screws. When furring channels are used, wallboard to be installed vertically only. Not to be used with Type FRX or FRX-G gypsum wallboard (Item 4A) or cementitious backer units (Item 7).

2C. Furring Channels -- For use with System I - "Hat" - shaped, 25 MSG galv steel furring channels attached directly over the inner layers of wallboard to each stud with 2 in. long Type S pan head steel screws. Screws alternate from top flange to bottom flange at each stud intersection. Furring channels spaced vertically max 24 in. OC.

2D. Steel Framing Members* -- (Optional, not shown) -- For use with single or double layer systems. Furring channels and Steel Framing Members as described below. Not to be used with Type FRX or FRX-G gypsum wallboard (Item 4A) or cementitious backer units (Item 7):

a. Furring Channels -- Formed of No. 25 MSG galv steel. 2-3/8 in. wide by 7/8 in. deep, spaced max. 24 in. OC perpendicular to studs. Channels secured to studs as described in Item b. Gypsum board installed vertically only and attached to furring channels as described in Item 3.

b. Steel Framing Members* -- Used to attach furring channels (Item 2Da) to studs (Item 2 or 2A). Clips spaced max. 24 in. OC., and secured to studs with No. 8 x 1-1/2 in. minimum self-drilling, S-12 steel screw through the center grommet. Furring channels are friction fitted into clips.

PAC INTERNATIONAL INC -- Type RSIC-1.

3. Gypsum Board* -- Gypsum liner panels, nom 1 in. thick, 24 in. or 600 mm (for metric spacing) wide. Panels cut 1 in. less in length than floor to ceiling height. Vertical edges inserted in "H" portion of "C-H" studs or the gap between the two 3/4 in. legs of the "E" studs. Free edge of end panels attached to long leg of vertical "J" - runners with 1-5/8 in. long Type S steel screws spaced not greater than 12 in. OC. When wall height exceeds liner panel length, liner panel may be butted to extend to the full height of the wall. Horizontal joints need not be backed by steel framing. In System I, butt joints in liner panels are staggered min 36 in. Butt joints backed with 6 in. by 22 in. strips of 3/4 in. thick gypsum wallboard (Item 4). Wallboard strips centered over butt joints and secured to liner panels with six 1-1/2 in. long Type G steel screws, three screws along the 22 in. dimension at the top and bottom of the strips.

CANADIAN GYPSUM COMPANY -- Type SLX

UNITED STATES GYPSUM CO -- Type SLX

USG MEXICO S A DE C V -- Type SLX

4. Gypsum Board* --

System A - 1 Hr

Gypsum panels, with beveled, square or tapered edges, nom 5/8 in. thick, 48 in. or 1200 mm wide, applied vertically or horizontally, attached to studs with 1 in. long Type S steel screws spaced 12 in. when installed vertically or 8 in OC when installed horizontally. Horizontal joints need not be backed by steel framing.

CANADIAN GYPSUM COMPANY -- Types AR, C, IP-AR, IP-X1, IP-X2, IPC-AR, SCX, SHX, WRC, WRX

UNITED STATES GYPSUM CO -- Types AR, C, FRX-G, IP-AR, IP-X1, IP-X2, IPC-AR, SCX, SHX, WRC, WRX, USGX.

USG MEXICO S A DE C V -- Types AR, C, IP-AR, IP-X1, IP-X2, IPC-AR, SCX, SHX, WRC, WRX

System B - 2 Hr

Gypsum panels, with beveled, square or tapered edges, nom 1/2 in. or 5/8 in. thick, 48 in. or 1200 mm wide, applied vertically or horizontally in two layers. Inner or base layer attached to studs with 1 in. long Type S steel screws spaced 24 in. OC when installed vertically or 16 in. OC when installed horizontally. Outer or face layer attached to studs with 1-5/8 in. long Type S steel screws spaced 12 in. OC when installed vertically and staggered 12 in. from base layer screws or 8 in. OC when installed horizontally and staggered 8 in. from base layer screws. Horizontal joints between inner and outer layers staggered a min of 12 in. Horizontal joints need not be backed by steel framing. Vertical joints centered over studs and staggered 24 in.

CANADIAN GYPSUM COMPANY -- 1/2 in. Type C, IP-X2, IPC-AR or WRC; 5/8 in. Types AR, C, IP-AR, IP-X1, IP-X2, IPC-AR, SCX, SHX, WRC, WRX

UNITED STATES GYPSUM CO -- 1/2 in. Types C, IP-X2, IPC-AR, or WRC; 5/8 in. Types AR, C, FRX-G, IP-AR, IP-X1, IP-X2, IPC-AR, SCX, SHX, WRC, WRX

USG MEXICO S A DE C V -- 1/2 in. Types C, IP-X2, IPC-AR or WRC; 5/8 in. Types AR, C, IP-AR, IP-X1, IP-X2, IPC-AR, SCX, SHX, WRC, WRX

System C - 2 Hr

Gypsum panels, with beveled, square or tapered edges, nom 3/4 in. thick, 48 in. or 1200 mm wide, applied vertically or horizontally, secured with 1-1/4 in. long Type S steel screws spaced 8 in. OC along vertical edges and 12 in. OC in the field when installed vertically or 8 in. OC along the vertical edges and in the field when installed horizontally. Horizontal joints need not be backed by steel framing. Screws along side joints offset 4 in. Requires min 4 in. deep framing per Items 1, 2 and 3. Requires min 3 in. thick mineral wool batts per Item 6.

CANADIAN GYPSUM COMPANY -- Types IP-X3, or ULTRACODE

UNITED STATES GYPSUM CO -- Types IP-X3, or ULTRACODE

USG MEXICO S A DE C V -- Types IP-X3, or ULTRACODE

CONTINUED TO RIGHT

UL DESIGN No. U415 - CONTINUED FROM LEFT

Design No. U415 CONTINUED FROM LEFT

System D - 2 Hr

Gypsum panels, with beveled, square or tapered edges, nom 5/8 in. thick, 48 in. or 1200 mm wide, applied vertically or horizontally, attached directly to studs with 1 in. long Type S steel screws spaced 24 in. when installed vertically or 16 in. OC when installed horizontally. . Horizontal joints need not be backed by steel framing. Requires face layer of 1/2 or 5/8 in. thick cementitious backer units per Item 7 and min 1-1/2 in. thick mineral wool batts per Item 6.

CANADIAN GYPSUM COMPANY -- Types AR, C, IP-AR, IP-X1, IP-X2, IPC-AR, SCX, SHX, WRC, WRX

UNITED STATES GYPSUM CO -- Types AR, C, FRX-G, IP-AR, IP-X1, IP-X2, IPC-AR, SCX, SHX, WRC, WRX, USGX.

USG MEXICO S A DE C V -- Types AR, C, IP-AR, IP-X1, IP-X2, IPC-AR, SCX, SHX, WRC, WRX

System E - 2 Hr

Gypsum panels, with beveled, square or tapered edges, nom 1/2 in. or 5/8 in. thick, 48 in. or 1200 mm wide, applied vertically or horizontally, attached to studs with 1 in. long Type S steel screws spaced 12 in. OC when installed vertically or 8 in. when installed horizontally. Horizontal joints need not be backed by steel framing.

CANADIAN GYPSUM COMPANY -- 1/2 in. Types C, IP-X2, IPC-AR; 5/8 in. Types AR, C, IP-AR, IP-X1, IP-X2, IPC-AR, SCX, SHX, WRC, WRX

UNITED STATES GYPSUM CO -- 1/2 in. Types C, IP-X2, IPC-AR; 5/8 in. Types AR, C, FRX-G, IP-AR, IP-X1, IP-X2, IPC-AR, SCX, SHX, WRC, WRX

USG MEXICO S A DE C V -- 1/2 in. Types C, IP-X2, IPC-AR; 5/8 in. Types AR, C, IP-AR, IP-X1, IP-X2, IPC-AR, SCX, SHX, WRC, WRX

System F - 2 Hr

Gypsum panels, with beveled, square or tapered edges, nom 1/2 in. or 5/8 in. thick, 48 in. or 1200 mm wide, applied vertically in two layers. Inner or base layer attached to resilient furring channels (Item 2B) with 1 in. long Type S steel screws spaced 24 in. Outer or face layer attached to resilient furring channels (Item 2B) with 1-5/8 in. long Type S steel screws spaced 12 in. OC and staggered 12 in. from base layer screws. Joints between inner and outer layers staggered 24 in.

CANADIAN GYPSUM COMPANY -- 1/2 in. Type C, IP-X2, IPC-AR or WRC; 5/8 in. Types AR, C, FRX-G, IP-AR, IP-X1, IP-X2, IPC-AR, SCX, SHX, WRC, WRX

UNITED STATES GYPSUM CO -- 1/2 in. Type C, IP-X2, IPC-AR or WRC; 5/8 in. Types AR, C, FRX-G, IP-AR, IP-X1, IP-X2, IPC-AR, SCX, SHX, WRC, WRX

USG MEXICO S A DE C V -- 1/2 in. Type C, IP-X2, IPC-AR or WRC; 5/8 in. Types AR, C, IP-AR, IP-X1, IP-X2, IPC-AR, SCX, SHX, WRC, WRX

System G - 3 Hr

Gypsum panels, with beveled, square or tapered edges, nom 5/8 in. thick, 48 in. or 1200 mm wide, applied vertically or horizontally in three layers. Inner or base layer attached to studs with 1 in. long Type S steel screws spaced 24 in. OC when installed vertically or 16 in OC when installed horizontally. Middle layer attached to studs with 1-5/8 in. long Type S steel screws spaced 24 in. when installed vertically or 16 in. OC when installed horizontally. Outer or face layer attached to studs with 2-1/4 in. long Type S steel screws spaced 16 in. when installed vertically or 12 in. OC when installed horizontally. Screws offset 6 in. from layer below. Horizontal joints on adjacent layers staggered a min of 12 in. . Horizontal joints need not be backed by steel framing. Vertical joints centered over studs and staggered 24 in. on adjacent layers.

CANADIAN GYPSUM COMPANY -- Types C, IP-X2, IPC-AR, WRC

UNITED STATES GYPSUM CO -- Types C, IP-X2, IPC-AR, WRC

USG MEXICO S A DE C V -- Types C, IP-X2, IPC-AR, WRC

System H - 3 Hr

Gypsum panels, with beveled, square or tapered edges, nom 5/8 in. thick, 48 in. or 1200 mm wide, applied vertically or horizontally, two layers over the flange of the "C" section of the studs, one layer over the flange of the "H" section of the studs. Inner or base layer attached to studs with 1 in. long Type S steel screws spaced 24 in. OC when installed vertically or 16 in. OC when installed horizontally. Face layer attached to studs with 1-5/8 in. long Type S steel screws spaced 16 in. when installed vertically or 12 in. OC when installed horizontally. Screws offset 6 in. from layer below. Horizontal joints on adjacent layers staggered a min of 12 in. Horizontal joints need not be backed by steel framing. Vertical joints centered over studs and staggered 24 in. on adjacent layers.

CANADIAN GYPSUM COMPANY -- Types C, IP-X2, IPC-AR, WRC

UNITED STATES GYPSUM CO -- Types C, IP-X2, IPC-AR, WRC

USG MEXICO S A DE C V -- Types C, IP-X2, IPC-AR, WRC

System I - 4 Hr

Gypsum panels, with beveled, square or tapered edges, nom 3/4 in. thick, 4 ft wide (or 1200 mm for metric spacing) wallboard with square or tapered edges. Total of four layers to be used. First and second (inner) layers applied vertically or horizontally over the steel studs. Horizontal joints need not be backed by steel framing. When applied vertically, joints centered over studs and staggered min 24 in., otherwise all joints staggered min 12 in. First layer secured to studs with 1-1/4 in. long Type S self-drilling, self-tapping bugle-head steel screws spaced 24 in. OC. Second layer secured to studs with 2-1/4 in. long Type S self-drilling, self-tapping bugle-head steel screws spaced 12 in. OC. Third layer applied vertically over the furring channels (Item 2C) with a 1-1/4 in. long Type S self-drilling, self-tapping bugle-head steel screws spaced 12 in. OC. Fourth layer applied vertically or horizontally with 2-1/4 in. long Type S self-drilling, self-tapping bugle-head steel screws spaced 12 in. OC. When applied vertically, joints to be staggered min 24 in. from third layer, otherwise all joints staggered min 12 in.

CANADIAN GYPSUM COMPANY -- Types IP-X3, or ULTRACODE

UNITED STATES GYPSUM CO -- Types IP-X3, or ULTRACODE

USG MEXICO S A DE C V -- Types IP-X3, or ULTRACODE

4A. Gypsum Board* -- (As an alternate to Item 4 Systems A, B, C, D, E, F, G, H, and I when used as the base layer, For direct attachment only) - Nom 5/8 in. thick lead backed gypsum panels with beveled, square or tapered edges, applied vertically. Vertical joints centered over studs and staggered min 1 stud cavity on opposite sides of studs. Wallboard secured to studs with 1-1/4 in. long Type S-12 steel screws spaced 8 in. OC at perimeter and 12 in. OC in the field.

RAY-BAR ENGINEERING CORP -- Type RB-LBG

5. Joint Tape and Compound -- (Not Shown)

Systems A, B, C, E, F, G, H, I

Joints on outer layers of gypsum boards (Item 4 and 4A) covered with paper tape and joint compound. Paper tape and joint compound may be omitted when gypsum boards are supplied with square edges. Exposed screw heads covered with joint compound.

6. Batts and Blankets* --

Systems A, B, E, F, G, H, I

(Optional) -- Mineral wool or glass fiber batts partially or completely filling stud cavity. Any mineral wool or glass fiber batt mineral bearing the UL Classification Marking as to Fire Resistance.

Systems C & D

Min 3 in. (System C) and min 1-1/2 in. (System D) thick mineral wool batts, friction fitted between the studs and floor and ceiling runners.

THERMAFIBER INC -- Type SAFB

7. Cementitious Backer Units* -- (System D) -- Nom 1/2 or 5/8 in. thick panels, square edge, attached to studs over gypsum wallboard with 1-5/8 in. long, Type S-12, corrosion resistant steel screws spaced 8 in. OC and staggered 8 in. from gypsum wall board screws. Joints covered with glass fiber mesh tape. Vertical joints staggered one stud cavity from gypsum wallboard joints. Horizontal joints staggered a min of 12 in. from the gypsum wallboard joints.

UNITED STATES GYPSUM CO -- DUROCK Exterior Cement Board or DUROCK Brand Cement Board.

8. Laminating Adhesive* -- (Optional, Not Shown) -- Used to bond outer layer of Cementitious Backer Units (Item 7) to inner layers of Gypsum Board (Item 4) in System D. ANSI A136.1 Type 1 organic adhesive applied with 1/4 in. square notched trowel. See Adhesives (BYWR) in the Fire Resistance Directory or Adhesives (BJLZ) in the Building Materials Directory for names of Classified companies.

9. Lead Batten Strips -- (Not Shown, For Use With Item 4A) - Lead batten strips, min 1-1/2 in. wide, max 10 ft long with a max thickness of 0.125 in. Strips placed on the interior face of studs and attached from the exterior face of the stud with two 1 in. long Type S-12 pan head steel screws, one at the top of the strip and one at the bottom of the strip. Lead batten strips to have a purity of 99.9% meeting the Federal specification QQ-L-201f, Grade "C". Lead batten strips required behind vertical joints of lead backed gypsum wallboard (Item 4A) and optional at remaining stud locations. Required behind vertical joints.

10. Lead Discs or Tabs -- (Not Shown, For Use With Item 4A) - Used in lieu of or in addition to the lead batten strips (Item 9) or optional at other locations - Max 3/4 in. diam by max 0.125 in. thick lead discs compression fitted or adhered over steel screw heads or max 1/2 in. by 1-1/4 in. by max 0.125 in. thick lead tabs placed on gypsum boards (Item 4A) underneath screw locations prior to the installation of the screws. Lead discs or tabs to have a purity of 99.9% meeting the Federal specification QQ-L-201f, Grade "C".

*Bearing the UL Classification Mark   Last Updated on 2009-02-20

UL DESIGN No. U419 - 1, 2, 3 OR 4 HR NON-BEARING WALL

Design No. U419

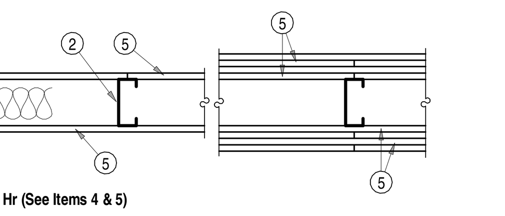

Nonbearing Wall Ratings — 1, 2, 3 or 4 Hr (See Items 4 & 5)

1. Framing Members - Floor and Ceiling Runners — (Not shown) — For use with Item 2 - Channel shaped, fabricated from min 25 MSG corrosion-protected steel, min width to accommodate stud size, with min 1-1/4 in. long legs, attached to floor and ceiling with fasteners 24 in. OC max.

1A. Framing Members - Floor and Ceiling Runners* — Not shown - In lieu of Item 1 — For use with Item 2A, proprietary channel shaped, min. 3-5/8 in. wide, fabricated from min. 0.0150 in. (min bare metal thickness) galvanized steel, attached to floor and ceiling with fasteners 24 in. OC max. Effective thickness is 0.034 in.

CLARKWESTERN BUILDING SYSTEMS INC — UltraSTEEL®

DIETRICH INDUSTRIES INC — UltraSTEEL®.

1B. Framing Members - Floor and Ceiling Runners — (Not shown - In lieu of Item 1) — For use with Item 2A, proprietary channel shaped, min. 2-1/2 in. wide, fabricated from min. 0.0150 in. (min bare metal thickness) galvanized steel, attached to floor and ceiling fasteners 24 in. OC. max. Effective thickness is 0.034 in.

CLARKWESTERN BUILDING SYSTEMS INC — UltraSTEEL®

DIETRICH INDUSTRIES INC — UltraSTEEL®.

1C. Framing Members - Floor and Ceiling Runner* — Not shown - In lieu of Item 1 — For use with Item 2C, proprietary channel shaped runners, 3-5/8 in. wide attached to floor and ceiling with fasteners 24 in. OC max.

CALIFORNIA EXPANDED METAL PRODUCTS CO — ViperTrack™

CRACO MFG INC — SmartTrack™

MARINO\WARE A DIV OF WARE INDUSTRIES

INC — Viper25™ Track

1D. Framing Members - Floor and Ceiling Runner* — Not shown - In lieu of Item 1 — For use with Item 2D, proprietary channel shaped runners, 1-1/4 in. deep by 3-5/8 in. wide fabricated from min 0.0200 in. thick galv steel, attached to floor and ceiling with fasteners spaced 24 in. OC max.

MARINO\WARE A DIV OF WARE INDUSTRIES

INC — Viper20S™ Track, Viper20D™ Track

1E. Framing Members*— Floor and Ceiling Runners — (Not shown) — In lieu of Item 1 - Channel shaped, attached to floor and ceiling with fasteners 24 in. OC. max.

SCAFCO STEEL STUD MANUFACTURING CO — Type SUPREME Framing System

2. Framing Members - Steel Studs — Channel shaped, fabricated from min 25 MSG corrosion-protected steel, min width as indicated under Item 5, min 1-1/4 in. flanges and 1/4 in. return, spaced a max of 24 in. OC. Studs to be cut 3/8 to 3/4 in. less than assembly height.

2A. Framing Members - Steel Studs* — In lieu of Item 2 - Proprietary channel shaped studs, min. width as indicated under Item 5, fabricated from min. 0.0150 in. (min bare metal thickness) galvanized steel, spaced a max of 24 in. OC. Studs to be cut 3/4 in. less than assembly height. Allowable use of studs is shown in the table below. For direct attachment of gypsum board only. Effective thickness is 0.034 in.

CLARKWESTERN BUILDING SYSTEMS INC — UltraSTEEL®

DIETRICH INDUSTRIES INC — UltraSTEEL®.

2B. Framing Members - Steel Studs — (As an alternate to Item 2, For use with Items 5B & 5E) Channel shaped, fabricated from min 20 MSG (0.0327 in. thick) corrosion-protected or galv steel, 3-1/2 in. min width, min 1-1/2 in. flanges and 1/4 in. return, spaced a max of 16 in. OC. Studs friction-fit into floor and ceiling runners. Studs to be cut 5/8 to 3/4 in. less than assembly height.

2C. Framing Members - Steel Studs* — (As an alternate to Item 2, For use with Item 5C) - Proprietary channel shaped studs, 3-5/8 in. wide spaced a max of 24 in. OC. Studs to be cut 3/4 in less than the assembly height and installed with a ½ in. gap between the end of the stud and track at the bottom of the wall. For direct attachment of gypsum board only.

CALIFORNIA EXPANDED METAL PRODUCTS CO — ViperStud ™

CRACO MFG INC — SmartStud™

MARINO\WARE A DIV OF WARE INDUSTRIES

INC — Viper25™

2D. Framing Members - Metal Studs* — Not shown - In lieu of Item 2 — For use with Item 1D, proprietary channel shaped steel studs, min width as indicated under Item 5, spaced a max if 24 in. OC, fabricated from min 0.0200 in. thick galv steel. Studs 3/8 in. to 3/4 in. less in lengths than assembly heights.

MARINO\WARE A DIV OF WARE INDUSTRIES

INC — Viper20S™, Viper20D™

2E. Framing Members*— Steel Studs — In lieu of Item 2 - For Use with Item 1E- Channel shaped studs, , spaced a max of 24 in. OC. Studs to be cut 3/4 in. less than assembly height.

SCAFCO STEEL STUD MANUFACTURING CO — Type SUPREME Framing System

3. Wood Structural Panel Sheathing — (Optional, For use with Item 5 Only.)- (Not Shown) - 4 ft wide, 7/16 in. thick oriented strand board (OSB) or 15/32 in. thick structural 1 sheathing (plywood) complying with DOC PS1 or PS2, or APA Standard PRP-108, manufactured with exterior glue, applied horizontally or vertically to the steel studs. Vertical joints centered on studs, and staggered one stud space from wallboard joints. Attached to studs with flat-head self-drilling tapping screws with a min. head diam. of 0.292 in. at maximum 6 in. OC. in the perimeter and 12 in. OC. in the field. When used, fastener lengths for gypsum panels increased by min. 1/2 in.

4. Batts and Blankets* — (Required as indicated under Item 5) — Mineral wool batts, friction fitted between studs and runners. Min nom thickness as indicated under Item 5. See Batts and Blankets (BKNV or BZJZ) Categories for names of Classified companies.

4A. Batts and Blankets* — (Optional) — Placed in stud cavities, any glass fiber or mineral wool insulation bearing the UL Classification Marking as to Surface Burning Characteristics and/or Fire Resistance. See Batts and Blankets (BKNV or BZJZ) Categories for names of Classified companies.

5. Gypsum Board* — Gypsum panels with beveled, square or tapered edges, applied vertically or horizontally. Vertical joints centered over studs and staggered one stud cavity on opposite sides of studs. Vertical joints in adjacent layers (multilayer systems) staggered one stud cavity. Horizontal joints need not be backed by steel framing. Horizontal edge joints and horizontal butt joints on opposite sides of studs need not be staggered. Horizontal edge joints and horizontal butt joints in adjacent layers (multilayer systems) staggered a min of 12 in. The thickness and number of layers for the 1 hr, 2 hr, 3 hr and 4 hr ratings are as follows:

Wallboard Protection on Each Side of Wall

Rating	Min Stud Depth, Items 2 & 2E	Min Stud Depth, Item 2A	No. of Layers & Thkns of Panel	Min Thkns of Insulation (Item 4)
1	3-1/2	3-5/8	1 layer, 5/8 in. thick	Optional
1	2-1/2	3-5/8	1 layer, 1/2 in. thick	1-1/2 in.
1	1-5/8	3-5/8	1 layer, 3/4 in. thick	Optional
2	1-5/8	2-1/2	2 layers, 1/2 in. thick	Optional
2	1-5/8	2-1/2	2 layers, 5/8 in. thick	Optional
2	3-1/2	3-5/8	1 layer, 3/4 in. thick	3 in.
3	1-5/8	2-1/2	3 layers, 1/2 in. thick	Optional
3	1-5/8	2-1/2	2 layers, 3/4 in. thick	Optional
3	1-5/8	2-1/2	3 layers, 5/8 in. thick	Optional
4	1-5/8	2-1/2	4 layers, 5/8 in. thick	Optional
4	1-5/8	2-1/2	4 layers, 1/2 in. thick	Optional
4	2-1/2	2-1/2	2 layers, 3/4 in. thick	2 in.

CANADIAN GYPSUM COMPANY — 1/2 in. thick Type C, IP-X2 or IPC-AR; WRC, 5/8 in. thick Type AR, C, IP-AR, IP-X1, IP-X2, IPC-AR, SCX, SHX, WRX or WRC; 3/4 in. thick Types IP-X3 or ULTRACODE

UNITED STATES GYPSUM CO — 1/2 in. thick Type C, IP-X2, IPC-AR or WRC; 5/8 in. thick Type SCX, SHX, WRX, IP-X1, AR, C, WRC, FRX-G, IP-AR, IP-X2, IPC-AR ; 3/4 in. thick Types IP-X3 or ULTRACODE

USG MEXICO S A DE C V — 1/2 in. thick Type C, IP-X2, IPC-AR or WRC; 5/8 in. thick Type AR, C, IP-AR, IP-X1, IP-X2, IPC-AR, SCX, SHX, WRX, WRC or; 3/4 in. thick Types IP-X3 or ULTRACODE

When Item 7B, Steel Framing Members*, is used, Nonbearing Wall Rating is limited to 1 Hr. Min. stud depth is 3-1/2 in., min. thickness of insulation (Item 4) is 3 in., and two layers of gypsum board panels (1/2 in. or 5/8 in. thick) shall be attached to furring channels as described in Item 6. One layer of gypsum board panels (1/2 in. or 5/8 in. thick) attached to opposite side of stud without furring channels as described in Item 6.

5A. Gypsum Board* — (As an alternate to Item 5) — 5/8 in. thick, 24 to 54 in. wide, applied horizontally as the outer layer to one side of the assembly. Secured as described in Item 6.

CANADIAN GYPSUM COMPANY — Type SHX.

UNITED STATES GYPSUM CO — Type FRX-G, SHX.

USG MEXICO S A DE C V — Type SHX.

5B. Gypsum Board* - (As an alternate to Item 5 when used as the base layer on one or both sides of wall, For direct attachment only, not to be used with Item 3) - Nom 5/8 in. thick lead backed gypsum panels with beveled, square or tapered edges, applied vertically. Vertical joints centered over studs and staggered min 1 stud cavity on opposite sides of studs. Wallboard secured to studs with 1-1/4 in. long Type S-12 steel screws spaced 8 in. OC at perimeter and 12 in. OC in the field.

RAY-BAR ENGINEERING CORP - Type RB-LBG

CONTINUED TO RIGHT

UL DESIGN No. U419 - CONTINUED FROM LEFT

Design No. U419

5C. Gypsum Board* — (For Use With Item 2C) Rating Limited to 1 Hour. 5/8 in. thick, 48 in. wide, Gypsum panels with beveled, square or tapered edges, applied vertically or horizontally. (Vertical Application) - The gypsum board is to be installed on each side of the studs with 1 in. long Type S coated steel screws spaced 8 in. OC starting 4 in. from the edge of the board at the vertical edges and 12 in. OC starting 6 in. from the edge of the board at the center of each board. Gypsum boards are to be secured to the top and bottom track with screws spaced 8 in. OC starting 4 in. from the board edge. Fasteners shall not penetrate through both the stud and the track at the same time. Vertical joints are to be centered over studs and staggered one stud cavity on opposite sides of studs. (Horizontal Application) - The gypsum board is to be installed on each side of the studs with 1 in. long Type S coated steel screws spaced 8 in. OC starting 4 in. from the edge of the board at the vertical edges and 12 in. OC starting 6 in. from the edge of the board at the center of each board. Gypsum boards are to be secured to the top and bottom track with screws spaced 8 in. OC starting 4 in. from the board edge. Fasteners shall not penetrate through both the stud and the track at the same time. All horizontal joints are to be backed as outlined under section VI of Volume 1 in the Fire Resistive Directory.

CANADIAN GYPSUM COMPANY — Type SCX.

UNITED STATES GYPSUM CO — Type SCX.

USG MEXICO S A DE C V — Type SCX.

5D. Gypsum Board* — (As an alternate to Item 5) — 5/8 in. thick, 48 in. wide, applied vertically or horizontally. Secured as described in Item 6. For use with Items 1 and 2 only.

UNITED STATES GYPSUM CO — Type USGX.

5E. Gypsum Board* — Nominal 5/8 in. thick lead backed gypsum panels with beveled, square or tapered edges, applied vertically. Vertical joints centered over studs and staggered min 1 stud cavity on opposite sides of studs. Wallboard secured to studs with 1-1/4 in. long Type S-12 (or #6 by 1-1/4 in. long bugle head fine driller) steel screws spaced 8 in. OC at perimeter and 12 in. OC in the field.

NEW ENGLAND LEAD BURNING CO INC, DBA

NELCO — Nelco

6. Fasteners — (Not shown) — For use with Item 2 - Type S or S-12 steel screws used to attach panels to studs (Item 2) or furring channels (Item 7). Single layer systems: 1 in. long for 1/2 and 5/8 in. thick panels or 1-1/4 in. long for 3/4 in. thick panels, spaced 8 in. OC when panels are applied horizontally, or 8 in. OC along vertical and bottom edges and 12 in. OC in the field when panels are applied vertically. Two layer systems: First layer- 1 in. long for 1/2 and 5/8 in. thick panels or 1-1/4 in. long for 3/4 in. thick panels, spaced 16 in. OC. Second layer- 1-5/8 in. long for 1/2 in., 5/8 in. thick panels or 2-1/4 in. long for 3/4 in. thick panels, spaced 16 in. OC with screws offset 8 in. from first layer. Three-layer systems: First layer- 1 in. long for 1/2 in., 5/8 in. thick panels, spaced 24 in. OC. Second layer- 1-5/8 in. long for 1/2 in., 5/8 in. thick panels, spaced 24 in. OC. Third layer- 2-1/4 in. long for 1/2 in., 5/8 in. thick panels or 2-5/8 in. long for 5/8 in. thick panels, spaced 12 in. OC. Screws offset min 6 in. from layer below. Four-layer systems: First layer- 1 in. long for 1/2 in., 5/8 in. thick panels, spaced 24 in. OC. Second layer- 1-5/8 in. long for 1/2 in., 5/8 in. thick panels, spaced 24 in. OC. Third layer- 2-1/4 in. long for 1/2 in. thick panels or 2-5/8 in. long for 5/8 in. thick panels, spaced 24 in. OC. Fourth layer- 2-5/8 in. long for 1/2 in. thick panels or 3 in. long for 5/8 in. thick panels, spaced 12 in. OC. Screws offset min 6 in. from layer below.

6A. Fasteners — (Not shown) —For use with Item 2A - Type S or S-12 steel screws used to attach panels to studs (Item 2A). Single layer systems: 1 in. long for 1/2 and 5/8 in. thick panels or 1-1/4 in. long for 3/4 in. thick panels, spaced 8-1/2 in. OC with additional screws 1 in. and 2-1/2 in. from edges of the board when panels are horizontally. or 8 in. OC along vertical and bottom edges and 12 in. OC in the field when panels are applied vertically. Two layer systems applied vertically: First layer- 1 in. long for 1/2 and 5/8 in. thick panels or 1-1/4 in. long for 3/4 in. thick panels, spaced 16 in. OC. Second layer- 1-5/8 in. long for 1/2 in., 5/8 in. thick panels or 2-1/4 in. long for 3/4 in. thick panels, spaced 16 in. OC with screws offset 8 in. from first layer. Two layer systems applied horizontally: First layer- 1 in. long for 1/2 and 5/8 in. thick panels or 1-1/4 in. long for 3/4 in. thick panels, spaced 16 in. OC starting 8 in. from each edge of the board with an additional screw placed 1-1/4 in. from each edge of the board. Second layer- 1-5/8 in. long for 1/2 in., 5/8 in. thick panels or 2-1/4 in. long for 3/4 in. thick panels, spaced 16 in. OC starting 8 in. from each edge of the board with an additional screw placed 1-1/4 in. from each edge of the board with screws offset 8 in. from first layer. Three-layer systems: First layer- 1 in. long for 1/2 in., 5/8 in. thick panels, spaced 24 in. OC. Second layer- 1-5/8 in. long for 1/2 in., 5/8 in. thick panels, spaced 24 in. OC. Third layer- 2-1/4 in. long for 1/2 in., 5/8 in. thick panels or 2-5/8 in. long for 5/8 in. thick panels, spaced 12 in. OC. Screws offset min 6 in. from layer below. For all layers, an additional screw shall be placed 1-1/4 in. from each edge of the board. Four-layer systems: First layer- 1 in. long for 1/2 in., 5/8 in. thick panels, spaced 24 in. OC. Second layer- 1-5/8 in. long for 1/2 in., 5/8 in. thick panels, spaced 24 in. OC. Third layer- 2-1/4 in. long for 1/2 in. thick panels or 2-5/8 in. long for 5/8 in. thick panels, spaced 24 in. OC. Fourth layer- 2-5/8 in. long for 1/2 in. thick panels or 3 in. long for 5/8 in. thick panels, spaced 12 in. OC. Screws offset min 6 in. from layer below. For all layers, an additional screw shall be placed 1-1/4 in. from each edge of the board.

7. Furring Channels — (Optional, not shown, for single or double layer systems) — Resilient furring channels fabricated from min 25 MSG corrosion-protected steel, spaced vertically a max of 24 in. OC. Flange portion attached to each intersecting stud with 1/2 in. long Type S-12 steel screws. Not for use with Item 5A.

7A. Steel Framing Members (Not Shown)* — (Optional on one or both sides, not shown, for single or double layer systems) — As an alternate to Item 7, furring channels and Steel Framing Members as described below:

a. Furring Channels — Formed of No. 25 MSG galv steel. 2-3/8 in. wide by 7/8 in. deep, spaced max. 24 in. OC perpendicular to studs. Channels secured to studs as described in Item b. Gypsum board attached to furring channels as described in Item 6. Not for use with Item 5A.

b. Steel Framing Members* — Used to attach furring channels (Item 7Aa) to studs (Item 2). Clips spaced max. 48 in. OC. RSIC-1 clips secured to studs with No. 8 x 1-1/2 in. minimum self-drilling, S-12 steel screw through the center grommet. RSIC-V clips secured to studs with No. 8 x 9/16 in. minimum self-drilling, S-12 steel screw through the center hole. Furring channels are friction fitted into clips.

PAC INTERNATIONAL INC — Types RSIC-1, RSIC-V.

7B. Steel Framing Members (Optional, Not Shown)* — As an alternate to Item 7, for single or double layer systems, furring channels and Steel Framing Members on only one side of studs as described below:

a. Furring Channels — Formed of No. 25 MSG galv steel, spaced 24 in. OC perpendicular to studs. Channels secured to studs as described in Item b. Batts and Blankets placed in stud cavity as described in Item 5. Two layers of gypsum board attached to furring channels as described in Item 5. Not for use with Item 5A.

b. Steel Framing Members* — Used to attach furring channels (Item 7Ba) to one side of studs (Item 2) only. Clips spaced 48 in. OC., and secured to studs with two No. 8 x 2-1/2 in. coarse drywall screws, one through the hole at each end of the clip. Furring channels are friction fitted into clips.

KINETICS NOISE CONTROL INC — Type Isomax

7C. Steel Framing Members* — Optional - Not Shown - Used as an alternate method to attach resilient channels (Item 7). Clips attached at each intersection of the resilient channel and the steel studs (Item 2). Resilient channels are friction fitted into clips, and then clips are secured to the steel stud with min. 1 in. long Type S-12 steel screws through the center hole of the clip and the resilient channel flange.

KEENE BUILDING PRODUCTS CO INC — Type RC Assurance.

8. Joint Tape and Compound — Vinyl or casein, dry or premixed joint compound applied in two coats to joints and screw heads of outer layers. Paper tape, nom 2 in. wide, embedded in first layer of compound over all joints of outer layer panels. Paper tape and joint compound may be omitted when gypsum panels are supplied with a square edge.

9. Siding, Brick or Stucco — (Optional, not shown) — Aluminum, vinyl or steel siding, brick veneer or stucco, meeting the requirements of local code agencies, installed over gypsum panels. Brick veneer attached to studs with corrugated metal wall ties attached to each stud with steel screws, not more than each sixth course of brick.

10. Caulking and Sealants* — (Optional, not shown) — A bead of acoustical sealant applied around the partition perimeter for sound control.

UNITED STATES GYPSUM CO — Type AS

11. Lead Batten Strips — (Not Shown, For Use With Item 5B) - Lead batten strips, min 1-1/2 in. wide, max 10 ft long with a max thickness of 0.125 in. Strips placed on the interior face of studs and attached from the exterior face of the stud with two 1 in. long Type S-12 pan head steel screws, one at the top of the strip and one at the bottom of the strip. Lead batten strips to have a purity of 99.9% meeting the Federal specification QQ-L-201f, Grade "C". Lead batten strips required behind vertical joints of lead backed gypsum wallboard (Item 5B) and optional at remaining stud locations. Required behind vertical joints.

12. Lead Discs or Tabs — (Not Shown, For Use With Item 5B) - Used in lieu of or in addition to the lead batten strips (Item 11) or optional at other locations - Max 3/4 in. diam by max 0.125 in. thick lead discs compression fitted or adhered over steel screw heads or max 1/2 in. by 1-1/4 in. by max 0.125 in. thick lead tabs placed on gypsum boards (Item 5B) underneath screw locations prior to the installation of the screws. Lead discs or tabs to have a purity of 99.9% meeting the Federal specification QQ-L-201f, Grade "C".

13. Lead Batten Strips — (Not Shown, For Use With Item 5E) Lead batten strips, 2 in. wide, max 10 ft long with a max thickness of 0.142 in. Strips placed on the face of studs and attached to the stud with two min. 1 in. long min. Type S-8 pan head steel screws, one at the top of the strip and one at the bottom of the strip or with one min. 1 in. long min. Type S-8 pan head steel screw at the top of the strip. Lead batten strips to have a purity of 99.9% meeting the Federal specification QQ-L-201f, Grade "C". Lead batten strips required behind vertical joints of lead backed gypsum wallboard (Item 6) and optional at remaining stud locations.

14. Lead Tabs — (Not Shown, For Use With Item 5E) 2 in. wide, 5 in. long with a max thickness of 0.142 in. Tabs friction-fit around front face of stud, the stud folded back flange, and the back face of the stud. Tabs required at each location where a screw (that secures the gypsum boards, Item 6) will penetrate the steel stud. Lead tabs to have a purity of 99.9% meeting the Federal specification QQ-L-201f, Grade "C". Lead tabs may be held in place with standard adhesive tape if necessary.

*Bearing the UL Classification Mark   Last Updated on 2009-07-14

VCBO
ARCHITECTURE

VCBO ARCHITECTURE
524 SOUTH 600 EAST
SALT LAKE CITY, UT 84102
Phone: (801) 575-8800
Fax: (801) 531-9850
Web: vcbo.com

LICENSED ARCHITECT
No. 133912
BRENT R. TIPPETS
8.15.13
STATE OF UTAH

2nd District Juvenile Courthouse
Utah State Courts
08284150
165 West 20th Street, Ogden, Utah
BID DOCUMENTS

Rev #	Date	Description

Job # 12500
Date August 15, 2013
Owner # 08284150
Ins. #

UL LISTINGS

G200

8/14/2013 10:09:40 AM

Design No. P926

Design No. P926

Design No. P926
November 09, 2012

Restrained Assembly Ratings — 1, 1-1/2 and 2 Hr (See Items 4 and 5 through 5C)

Unrestrained Assembly Ratings — 0 Hr (See Item 4)

Unrestrained Beam Ratings — 1-1/2 or 2 Hr (See Items 5 through 5C)

Load Restricted for Canadian Applications — See Guide BXUV7

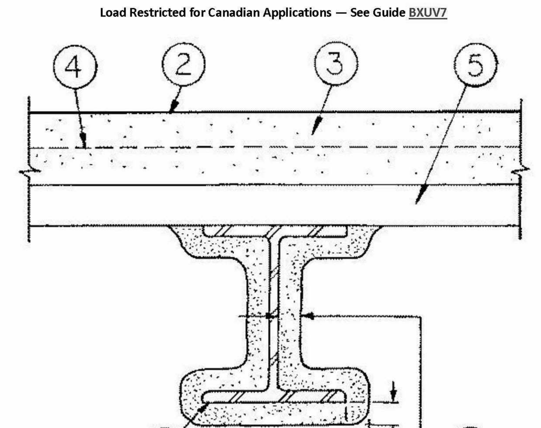

1. **Steel Supports** — W6x16, W8x10 or W8x18 min size **Beams** or Types 12J4, 12K5 or 14K3 min size **Joists.**

2. **Roof Covering*** — Consisting of hot mopped or cold application materials compatible with insulation(s) described herein which provide Class A, B or C coverings. See Roofing Materials and Systems Directory-Roof Covering Materials (TEVT).

2A. **In lieu of Item 1, roof covering consisting of single-ply Roofing Membrane*** — that is either ballasted, adhered or mechanically attached as permitted under the respective manufacturer's Classification. See Fire Resistance Directory-Roofing Membranes (CHCI).

3. **Insulating Concrete** — various types of insulating concrete prepared as indicated below:

A. **Perlite Concrete** — 6 cu ft Perlite Aggregate* per bag of Portland cement and 1.5 pt of 12.5 percent solution with water of neutralized vinsol resin as air entraining agent. Min avg air dry density 27 pcf, and min avg compressive strength 150 psi.

See Perlite Aggregate* (CFFX) category for names of manufacturers.

B. **Cellular Concrete — Roof Topping Mixture*** — Foam concentrate mixed with water and Portland cement per manufacturer's specifications. Cast dry density and 28-day compressive strength of min 190 psi as determined in accordance with ASTM C495-66.

CELCORE INC — Cast dry density of 31 (+ or -) 3.0 pcf.

CELLULAR CONCRETE L L C — Cast dry density 37 (+ or -) 3.0 pcf.

CONCRECEL INTERNATIONAL INC — Cast dry density 38 (+ or -) 3.0 pcf.

ELASTIZELL CORP OF AMERICA — Type II. Mix #1 of cast dry density 39 (+ or -) 3.0 pcf, Mix #2 of cast dry density 40 (+ or -) 3.0 pcf, Mix #3 of cast dry density 47 (+ or -) 3.0 pcf.

LITE-CRETE INC — Cast dry density of 29 (+ or -) 3.0 pcf.

CELLULAR CONCRETE L L C — Cast dry density 37 (+ or -) 3.0 pcf.

SIPLAST INC — Mix #2. Cast dry density of 36 (+ or -) 3.0 pcf.

C. **Cellular Concrete — Roof Topping Mixture*** — Foam Concentrate mixed with water, Portland Cement and UL Classified Vermiculite Aggregate per manufacturer's application instructions. Cast dry density of 33 (+ or -) 3.0 pcf and 28-day compressive strength of min 250 psi as determined in accordance with ASTM C495-86.

CELLULAR CONCRETE L L C — Mix #3.

SIPLAST INC — Mix #3

4. **Wire Reinforcement** — No. 19 SWG galv steel wire twisted to form hexagons 2 in. wide, weighing 1.5 lb/sq yd. In addition straight 16 SWG galv wire woven into the mesh and spaced 3 in. apart as stiffeners. Mesh installed without attachment, lapped 8 in. at the edges, with stiffeners installed parallel to deck corrugations.

5. **Steel Floor and Form Units*** — Noncomposite design. Corrugated 28 MSG min galv steel. When 9/16, 15/16 or 1 in. deep units are used, their loadings shall be limited to produce a 75 percent max bending stresses in the steel, and the **Restrained Assembly Rating shall not exceed 1-1/2 H.** Welded to supports 12 in. O.C. with weld washers. Adjacent units overlapped one corrugation. Supports spaced not over 8 ft 0 in. O.C. for 24 gauge units and not over 6 ft O.C. for 26 gauge units, for **2 Hr. Restrained Assembly Rating;** 9 ft 0 in. O.C. for 24 gauge units and not over 6 ft O.C. for 26 gauge units, for **1 Hr. Restrained Assembly Rating. For corrugated steel floor units less than or equal to 1-5/16 in. deep, the concrete (Item 2) thickness shall be 3-1/2 in. as measured from the surface of the concrete to the valley of the units. For corrugated steel floor units greater than 1-5/16 in. deep, the concrete thickness shall be 2-3/16 in. as measured from the surface of the concrete to the top plane of the units.**

Fluted galv steel form units, 1-1/2 or 3 in. deep, 22 MSG min thickness, 24 in. wide or wider. Welded to supports at each side and not to exceed 12 in. O.C. between sides. Adjacent units button-punched or welded together 36 in. O.C. along side joints. Supports spaced not over 8 ft 0 in. O.C. for 2 Hr. Restrained Assembly Rating, 9 ft 0 in. O.C. for 1 Hr. Restrained Assembly Rating.

For 1-1/2 or 3 in. deep fluted steel form units, the concrete (Item 2) thickness shall be 2-7/16 in. as measured from the surface of the concrete to the top plane of the units. Joint cover shall be 2 in. wide cloth adhesive tape applied following the contour of the steel form units. For 1-5/16 in. deep 24 MSG corrugated units with clear spans not more than 7 ft 6 in. the Unrestrained Assembly Rating is 1 Hr.

CANAM STEEL CORP — Type P-3606, P-3615, P-2436, P-2404, and P-3012.

CENTRIA — Types 3, 21, 3 in. QL-99.

CANAM STEEL CORP — Type UFX-36.

CONSOLIDATED SYSTEMS INC — Consoliform Types EHD, HD, S, SD.

VERCO DECKING INC - A NUCOR CO — Type "Vercor."

VULCRAFT, DIV OF NUCOR CORP — Types 0.6C, 0.6CPR, 1.0C, 1.3C, 1.5C, 2C, 3C, 1.5B, 1.5BI, 3N, 3NI.

Alternate Construction — Composite units of the same type listed above may be used provided allowable loading is calculated on the basis of noncomposite design.

6. **Spray-Applied Fire Resistive Materials — *** — Applied by mixing with water and spraying in one or more coats to final thickness as shown in table below to **beam** surfaces which are free of dirt, oil and scale. Min avg and min ind density of 15/14 pcf respectively for the Type 15 and 15-High Yield , 22/18 pcf, respectively for the Type 22, 40/37 respectively for the Type 40, 28/25 respectively for the Type 239, 44.5/42 respectively for the Type 240-High Yield and 55/50 respectively for the Type 241 or Type 241 HD. For method of density determination see Design Information Section.

Restrained Assembly Rating Hr	Unrestrained Beam Rating Hr	Min Mtl Thkns on Beam In	
		W6x16	W8x10
1	1	1	1-3/8
1-1/2	1-1/2	1-1/4	1-3/4
2	1-1/2	1-3/8	1-7/8
2	2	1-5/8	2-1/4

CARBOLINE CO — Types 15, 15-High Yield, 22, 40, 239, 240-High Yield, 241, 241 HD.

CARBOLINE KOREA LTD — Types 15, 15-High Yield, 22, 40, 239, 240-High Yield, 241, 241 HD.

CARBOLINE SOUTHEAST ASIA PTE LTD — Types 15, 15-High Yield, 22, 40, 239, 240-High Yield, 241, 241 HD.

CARBOLINE (INDIA) PVT LTD — Types 15, 15-High Yield, 22, 40, 239, 240-High Yield, 241, 241 HD.

STONCOR MIDDLE EAST L L C — Types 15, 15-High Yield, 22, 40, 239, 240-High Yield, 241, 241 HD.

STONCOR SOUTH CONE S A — Types 15, 15-High Yield, 22, 40, 239, 240-High Yield, 241, 241 HD.

7. **Bridging Angles** — (Not shown) — 1-1/4 by 1-1/4 by 1/8 in. thick steel angles for use with 12J4 joists. Angles welded to top and bottom chords of the joists.

8. **Foamed Plastic*** — Optional — (Not Shown). Rigid foamed plastic insulation boards placed on top of roof covering. See **Foamed Plastic** (BRYX) Category in Building Materials Directory or **Foamed Plastic***(CCVW) Category in Fire Resistance Directory for list of manufacturers. Density of 2.5 pcf max, polystyrene foamed plastic insulation boards bearing the UL Classification Marking. Covered with gravel, crushed stone or concrete pavers at a rate of 10 psf min.

9. **Metal Lath** — Optional — (Not Shown) — Metal lath may be used to facilitate the spray application of Spray-Applied Fire Resistive Materials on steel bar joists and trusses. The diamond mesh, 3/8 in. expanded steel lath, 1.7 to 3.4 lb/sq yd is secured to one side of each steel joist with 18 SWG galv steel wire at joist web and bottom chord members, spaced 15 in. OC max. When used, the metal lath is to be fully covered with Spray-Applied Fire Resistive Materials with no min thickness requirements.

9A. **Non-Metallic Fabric Mesh** — Optional — (Not Shown) — As an alternate to metal lath, glass fiber fabric mesh, weighing approximately 2.5 oz/sq yd, polypropylene fabric mesh, weighing approximately 1.25 oz/sq yd or equivalent, may be used to facilitate the spray application. The mesh is secured to one side of each joist web member. The method of attaching the mesh must be sufficient to hold the mesh and the spray-applied Spray-Applied Fire Resistive Materials material in place during application until it has cured. An acceptable method to attach the mesh is by embedding the mesh in minimum 1/4 in. long beads of hot melted glue. The beads of glue shall be spaced a maximum of 12 in. OC along the top chord of the bar joist. Another method to secure the mesh is by 1-1/4 in. long by 1/2 in. wide hairpin clips formed from No. 18 SWG or heavier steel wire.

10. **Mineral and Fiber Boards*** — (Not shown) — Optional — Applied in one or more layers over the Perlite Concrete (Item 2). To be applied with adhesive between layers or laid loosely.

OWENS CORNING

11. **Adhesive** — Optional — Applied in approx 1/2 in. wide ribbons 6 in. OC, at the rate of 1 gal per 250 sq ft. See Adhesive (BYWR) category for names of manufacturers.

*Bearing the UL Classification Mark

Design No. D916

Design No. D916

Restrained Assembly Ratings — 3/4, 1, 1-1/2, 2 or 3 Hr.

(See Items 1, 6, 7, 8 and 11)

Unrestrained Assembly Rating — 0 Hr. (See Items 3, 4 and 4A)

Unrestrained Beam Ratings — 1, 1-1/2, 2 and 3 Hr.

(See Items 4, 4A, 7 and 11)

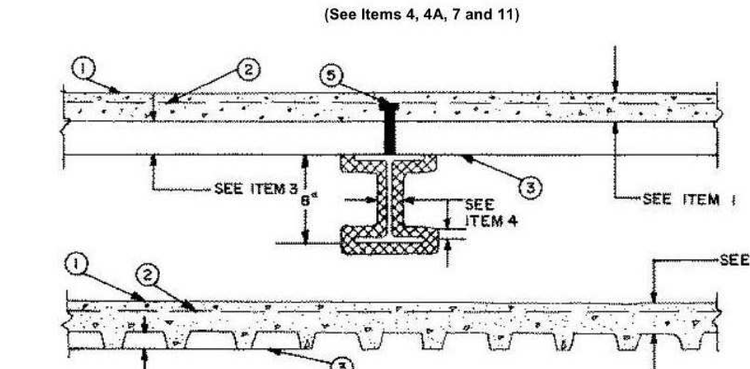

Supports — 8x28 min size steel beams. Or steel joists or joist girders (not shown), composite or noncomposite. Welded or bolted to end supports. Designed per S.J.I. specifications for a max tensile stress of 30 ksi. May be either uncoated or provided with a shop coat of paint. For the 2 h or less Restrained or Unrestrained Beam Ratings, top and bottom chords shall each consist of two angles with a min total area of 0.96 and 0.77 sq in., respectively. Web members shall be either round bars or angles. Min area of the end diagonal web shall be 0.444 sq in. Min area of each of the first six interior diagonal webs shall be 0.406 sq in. All other interior webs shall have a min area of 0.196 sq in. For the 3 h Restrained or Unrestrained Beam Ratings, each of the top and bottom chords shall each consist of two angles with a min total area of 1.74 sq in. Web members shall be either round bars or angles. Min area of each of the first five end diagonal webs shall be 0.886 sq in. All other interior webs shall have a min area of 0.441 sq in. Bridging per S.J.I. specifications is required when noncomposite joists are used. For noncomposite joists, steel filler pieces of proper size, 1 to 2 in. long shall be welded to and between the top chord angles at midway between all top chord panel points.

1. **Normal Weight or Lightweight Concrete —** Normal weight concrete carbonate or siliceous aggregate, 3500 psi compressive strength, vibrated. Lightweight concrete, expanded shale, or slate aggregate by rotary-kiln method, or expanded clay aggregate by rotary-kiln or sintered-grate method, 3000 psi compressive strength, vibrated, 4 to 7 percent entrained air.

Restrained Assembly Rating Hr	Concrete (Type)	Concrete Unit Weight pcf	Concrete Thkns In.
1	Normal Weight	147-153	3-1/2
1-1/2	Normal Weight	147-153	4
2	Normal Weight	147-153	4-1/2
3	Normal Weight	147-153	5-1/4
3/4 or 1 (See Item 6)	Lightweight	107-113	2-1/2
1	Lightweight	107-120	2-5/8
1-1/2	Lightweight	107-113	3
2	Lightweight	107-113	3-1/4
2	Lightweight	107-116	3-1/4*
2	Lightweight	114-120	3-1/2
3	Lightweight	107-113	4-3/16
3	Lightweight	114-120	4-7/16

*For use with 2 or 3 in. steel floor and form units only.

2. **Welded Wire Fabric —** 6 x 6, 10 x 10 SWG.
3. **Steel Floor and Form Units* —** Composite 1-1/2, 1-5/8, 2 or 3 in. deep galv units or 4-1/2 in. deep noncomposite galvanized units. Fluted units may be uncoated or phosphatized/painted. Min gauges are 22 MSG for fluted and 20/20 MSG for cellular units. The following combinations of units may be used:
   (1) all 18, 24, 26, 28 or 36 in. wide cellular.
   (2) all fluted.
   (3) one or two 3 in. deep, 12 in. wide, 18/18 MSG min cellular units, alternating with 3 in. deep fluted or other cellular.
   (4) any blend of fluted and 18, 24, 26, 28, or 36 in. wide cellular.
   (5) 3 in. deep, 30 in. wide cellular with 8-1/8 in. wide valley along side joints may be used when 3/8 in. diam reinforcing bars are placed 1-1/2 in. to each side of side joints and 1 in. above bottom of unit.
   (6) Corrugated, 1-5/16 in. deep, 30 in. wide, 24 MSG min galv units with shear wires factory welded to deck corrugations. Welded to supports 12 in. OC. through welding washers. For shear wire spacing of 8 in. or less the steel deck stress shall not exceed 20 KSI. For shear wire spacing greater than 8 in. OC. but less than or equal to 12 in. OC., steel deck stress shall not exceed 12 KSI.

ASC STEEL DECK, DIV OF ASC PROFILES

INC — 24, 30, or 36 in. wide, Types B Hi-Form, BF Hi-Form, N Hi-Form, NF Hi-Form, 2W Hi-Form, 2WF Hi-Form, 3W Hi-Form, 3WF Hi-Form BR Hi-Form, BMOD Hi-Form, BRMOD Hi-Form, DGB Hi-Form, DGBF Hi-Form, DGN Hi-Form, DGN32 Hi-Form, DGNF Hi-Form, DGNF32 Hi-Form, DG2W Hi-Form, DG2WF Hi-Form, DG3W Hi-Form, and DG3WF Hi-Form; 32 in. wide Type N-32, NF32, DGN-32, DGNF32; 24 or 30 in. wide Types ASC2 or ASC3. All units may be galvanized or Prime Shield.

CANAM STEEL CORP — 36 in. wide Type P-3623, P-3606, P-3615 and 24 in wide Type P-2432 composite.

CENTRIA — QL Types, 24 in. wide 3 or 3 inverted, UKX, UKX-3, 2 in. 99, AKX, 21 or 21 inverted, 121, NKX, TKX; 24 or 30 in. wide GKX, GKXH, GKX-A; 36 in. wide 99, AKX, WKX; 24, 26, or 36 in. wide NKX; 1.5NKC, NKC, AKX, 2 or 3 in. TKC; 12 in. wide noncomposite Sec. 12; 17 in. wide 21; 26 or 28 in. wide UKX, 87.5 cm wide. Side joints of QL, 99, 121, WKX, TKX, TKC, and Metric units - QL-77-900; QLC-78-900 may be welded together 60 in. OC. Side joints of 99, AKX, WKX, GKX, GKX-A, TKX and Metric units - QL-77-900 and QLC-78-900 may be fastened together with min 1 in. long No. 12x14 self-drilling, self-tapping steel screws 36 in. OC.

CHIA TEH CONSTRUCTION MATERIAL CO LTD — 24 or 36 in. wide Mac-Lok 3; 24 in. wide CFD-3.

CANAM STEEL CORP — 24 in. wide, Types 1-1/2 , 2 or 3 in. LOK-Floor and LOK-Floor Cell; 36 in. wide, Types 2 or 3 in. LOK-Floor and LOK-Floor Cell; 24 in. wide, Types N-LOK and N-LOK Cell; 24, 30 or 36 in. wide, Type 1-1/2 in. B-LOK and B-LOK Cell.

CONSOLIDATED SYSTEMS INC — 24 in. wide Types CFD-2, CFD-3; 24, 30 or 36 in. wide Type CFD-1.5; 24 or 36 in. wide Types Mac-Lok 2, Mac-Lok 3; 24 in. wide, Types B2C, B2FC, NC, NFC; 30 in. wide Type B3C; 12 in. wide Mac-Way cellular 45 MOW, 2-633 MTWA, 3-633 MTWA, 2-633MTWV, 3-633MTWV+, 24 in. wide Type Versa-Dek.

DECK WEST INC — 36 in. wide Type B-DW, Inverted B-DW, BA-DW, Inverted BA-DW, 2-DW or 3-DW. Side joints of Type 2-DW and 3-DW may be fastened together with min 1 in. long No. 12 x 14 self-drilling, self-tapping steel screws 36 in. OC.

EPIC METALS CORP — 24 in. wide Types EC150, ECP150, EC300, ECP300, EC366, ECP366, EC150, EC300 inverted, ECA, 30 in. wide Types ECB150, ECBR150; 36 in. wide Type EC266.

GENS METALS INC — 24 or 36 in. wide Types LF2, LF3.

MARLYN STEEL DECKS INC — Type 1.5 CF, 2.0 CF or 3.0 CF.

HAMBRO STRUCTURAL SYSTEMS, DIV OF

CANAM STEEL CORP — 36 in. wide, 1-1/2 in. Type P3615HB. The max superimposed loadings for Type P3615HB units shall not exceed 250 PSF. For single spans, the use of the units shall be limited to 5 ft 6 in., 6 ft 0 in. and 6 ft 6 in. max spans for the 22, 20 and 18 gauge units, respectively. For multiple spans, 18 gauge units may be used on a max 7 ft 6 in. spans with a max total superimposed loading of 240 PSF.

MORIN CORP — 24, 30 or 36 in. wide Types LXR-B, LXR-B inverted; 24 or 36 in. wide Type LXR-3W; 36 in. wide Type LXR-2W.

NEW MILLENNIUM BUILDING SYSTEMS L L C — Type 1.5CD, 2.0CD, or 3.0CD. Units may be phos/painted or galvanized.

Design No. D916 (CONT.)

Design No. D916

ROOF DECK INC — 36 in. wide Types LOK 1 1/2, LOK 1 1/2 R; 24 in. wide Types LOK-2, LOK-3.

VALLEY JOIST — 24 or 36 in. wide Types WVC 1-1/2 or WVC 2.

VERCO DECKING INC - A NUCOR CO — 24, 30 or 36 in. wide Types PLB, B, BR; 24 or 36 in. wide Types PLW2, W2, PLW3, W3; 24 in. wide Types PLN, N. 12 in. wide PLW2, W2, PLW3 or W3 units may be blended with 24 or in. wide PLW2, W2, PLW3 or W3 units, respectively. Units may be phos/ptd.

VICWEST CORP — 24 in. wide Type HB306; 32 in. wide Types HB308-INV and HB30V; 36 in. wide Types HB938, HB938CL and HB938-INV.

VULCRAFT, DIV OF NUCOR CORP — 24, 30 or 36 in. wide, Types 1.5VL, 1.5VLI, 1.5VLP, 1.5VLR; 24 or 36 in. wide, Types 2VLI, 3VLI, 2VLP, 3VLP. Side joints of Type 1.5VL may be fastened together with min 1 in. long No. 12x14 self-drilling, self-tapping steel screws 36 in. OC max.

WIREMOLD CO — 24 in. wide, Types 2 or 3 in. WDR.

WHEELING-PITTSBURGH STEEL CORP, DIV

OF WHEELING CORRUGATING CO — 30 in. wide Types SB-150, -150N, -150NR, -150R; 30 or 36 in. wide Types SB-B16LF, -B16LFR; 24 or 36 in. wide Types SB-P21LF, -P31LF; 24 in. wide Types SB-200, -300. Type SB-B16LFR may be phos/ptd. Lock Form Type, 24, 30 or 36 in. Types B16LF, B16LFNV; 24 in. wide Types C34LF, N34LF, P34LF, P34LFNV; 12, 24 or 36 in. wide Types C20LF, C30LF, C31LF, P20LF, P30LF, P31LF; 36 in. wide Types 1.5 SB, 1.5 SBR; 24 or 36 in wide Types 2.0 SB, 3.0 SB, 36 in. wide Type High Strength 1.5 SBI, 36 in. wide Type High Strength 1.5 SBN; 30 in wide, Types 1-1/2 in. V-Grip, 1-1/2 in. RV-Grip; 24 or 36 in. wide Types 212V-Grip, 312 V-Grip; 36 in. wide Types 212VW3-Wireway, 312VW3-Wireway.

Components for field — assembled cellular metal raceway units:

Raceway bottom — 24 or 36 in. wide Types 212VS, 312VS.

Raceway cover plate — Types CP-12, CP-16.

Raceway divider — Types DC-20, DC-25.

Raceway isolation trough — Types T-20, T-25, T-30.

Spacing of welds attaching units to supports shall be 12 in. OC for 12, 24, and 36 in. wide units, four welds per sheet for 30 in. wide units, 6 in. OC for 18 in. wide and Sec. 12 units. Unless noted otherwise, adjacent units button-punched or welded together 36 in. OC along side joints. Adjacent 18 in. wide units welded together 30 in. OC along side joints. For **3 Hr. Rating,** units with overlapping type side joints welded together 24 in. OC max.

When a superimposed load of 250 PSF is desired the spacing of welds or button-punches shall not exceed 24 in. OC along side joints.

+12 in. wide, 1-1/2 in. deep Mac-Way units may be blended with 24 in. wide B2C or 30 in. wide B3C units in a blend of one cell to one or more fluted units. 12 in. wide, 2 in. deep Mac-Way units may be blended with 36 in. wide Mac-Lock 2 units in a blend of one cell to one or more fluted units. 12 in. wide, 3 in. deep Mac-Way units may be blended with 36 in. wide Mac-Lock3 units in a blend of one cell to one or more fluted units. The side edge of the fluted unit is placed on the top of the side edge of the Mac-Way unit and the two are welded together with welding washers spaced a max. of 32 in. OC for Mac-Lock 2 or 3 units and a max. of 24 in. OC for the B2C or B3C units.

The Unrestrained Assembly Rating is equal to the Unrestrained Beam Rating for a max of 3 Hr. and is limited to the following units and limitations:

(a) 1-1/2 in. deep, 24 in. wide, 22 MSG or thicker fluted with clear spans not more than 7 ft 8 in.

(b) 1-1/2 in. deep, 24 in. wide, 20 MSG or thicker fluted with clear spans not more than 8 ft 8 in.

(c) 1-1/2 in. deep, 24 in. wide, 16 MSG or thicker fluted and 18/18 MSG or thicker cellular with clear spans not more than 9 ft 11 in.

(d) 3 in. deep, 36 in. wide, 18 MSG or thicker fluted and 24 in. wide, 20/18 MSG or thicker cellular with clear spans not more than 13 ft 2 in.

4. **Spray-Applied Fire Resistive Materials* —** Applied by mixing with water and spraying in one or more coats to a final thickness as shown in the tables below, in the tables below to steel beam surfaces which must be clean and free of dirt, loose scale and oil. Min avg and min ind density of 15/14 pcf respectively. Min avg and min ind density of 19/18 pcf respectively for Type 7GP and 7HD. For method of density determination, refer to Design Information Section.

Restrained Assembly Rating Hr	Unrestrained Assembly Rating Hr	Unrestrained Beam Rating Hr	Spray Applied Fire Resistive Mtl Thkns on Beam In.
1	1	1	1/2
1-1/2	1	1	1/2
1-1/2	1-1/2	1-1/2	13/16
2	1	1	1/2
2	2	2	1-1/16
3	1-1/2	1-1/2	13/16
3	3	3	1-9/16

The thicknesses of Spray-Applied Fire Resistive Materials shown in the table below are applicable when the thickness applied to the beams' lower flange edges is reduced by 1/2 that shown in the table:

Restrained Assembly Rating Hr	Unrestrained Assembly Rating Hr	Unrestrained Beam Rating Hr	Spray Applied Fire Resistive Mtl Thkns on Beam In.
1	1	1	9/16
1-1/2	1	1	9/16
1-1/2	1-1/2	1-1/2	7/8
2	1	1	9/16
2	2	2	1-3/16
3	1-1/2	1-1/2	7/8
3	3	3	1-3/4

The thicknesses of Spray-Applied Fire Resistive Materials shown in the table below are applicable when the thickness applied to the beams' lower flange edges is reduced by 1/2 that shown in the table and the beams are supporting all fluted floor or form units w/lightweight concrete only:

Restrained Assembly Rating Hr	Unrestrained Assembly Rating Hr	Unrestrained Beam Rating Hr	Spray Applied Fire Resistive Mtl Thkns on Beam In.
1	1	1	7/16+
1-1/2	1	1	7/16+
1-1/2	1-1/2	1-1/2	3/4
2	1	1	7/16+
2	2	2	1
3	1-1/2	1-1/2	3/4
3	3	3	1-9/16

+Thickness applied to beams' lower flange edge to be 1/4 in. min.

The thickness of material required on the steel joist for the various ratings are shown in the following table:

Restrained or Unrestrained Assembly Rating Hr	Unrestrained Beam Rating Hr	Spray Applied Fire Resistive Mtl Thkns on Joist & Bridging In.
1	1	1-1/8
1-1/2	1-1/2	1-3/4

Design No. D916 (CONT.)

Design No. D916

2	2	2-1/4
3	3	2-7/8

ARABIAN VERMICULITE INDUSTRIES — Type MK-5.

W R GRACE & CO - CONN — Types MK-4, MK-5, MK-6/HY, MK-6s, RG, Monokote Acoustic 1.

GRACE KOREA INC — Types MK-6/CBF, MK-6/ED, MK-6/HY, MK-6s, Monokote Acoustic 1.

PYROK INC — Type LD.

SOUTHWEST FIREPROOFING PRODUCTS CO — Types 4, 5, 5EF, 5GP, 5MD, 7GP, 7HD, 8EF, 8GP, 8MD, 9EF, 9GP, 9MD.

4A. **Alternate Spray-Applied Fire Resistive Materials* —** Applied by mixing with water and spraying in one or more coats to a final thickness as shown in the tables below to steel beam surfaces which must be clean and free of dirt, loose scale and oil. When fluted steel deck is used the area between the steel deck and the beams top flange shall be sprayed min avg and min ind density of 19/18 pcf, respectively for Types 7GP, 7HD, 105. Min avg and min ind density of 22/19 pcf, respectively for Types Z-106, Z-106/G, Z-106/HY. For method of density determination, refer to Design Information Section.

Restrained Assembly Rating Hr	Unrestrained Assembly Rating Hr	Unrestrained Beam Rating Hr	Spray Applied Fire Resistive Mtl Thkns on Beam In.
1	1	1	1/2
1-1/2	1	1	1/2
1-1/2	1-1/2	1-1/2	13/16
2	1	1	1/2
2	2	2	1-1/16
3	1-1/2	1-1/2	13/16
3	3	3	1-9/16

The thicknesses of Spray-Applied Fire Resistive Materials shown in the table below are applicable when the beams are supporting all fluted floor or form units w/lightweight concrete only:

Restrained Assembly Rating Hr	Unrestrained Assembly Rating Hr	Unrestrained Beam Rating Hr	Spray Applied Fire Resistive Mtl Thkns on Beam In.
1	1	1	7/16
1-1/2	1	1	7/16
1-1/2	1-1/2	1-1/2	3/4
2	1	1	7/16
2	2	2	1
3	1-1/2	1-1/2	3/4
3	3	3	1-5/16

+Thickness applied to beams lower flange edge to be 1/4 in. min.

The thickness of material required on the steel joist for the various Ratings are shown in the following table:

Restrained or Unrestrained Assembly Rating Hr	Unrestrained Beam Rating Hr	Type of Concrete Slab	Spray Applied Fire Resistive Mtl Thkns In. Joist & Bridging
1	1	NW or LW	1-1/8
1-1/2	1-1/2	NW or LW	1-3/4
2	2	NW or LW	2-1/4
3	3	NW or LW	2-7/8

W R GRACE & CO - CONN — Types Z- 105, Z-106, Z-106/G, Z-106/HY, Monokote Acoustic 5.

GRACE KOREA INC — Types Z-106, Z-106/G, Z-106/HY, Monokote Acoustic 5.

SOUTHWEST FIREPROOFING PRODUCTS CO — Types 7GP, 7HD.

4B. **Alternate Spray-Applied Fire Resistive Materials —** Applied by mixing with water and spraying in one or more coats to a final thickness as shown in the tables below to steel beam surfaces which must be clean and free of dirt, loose scale and oil. The thicknesses shown in the table below are applicable to beams supporting all fluted floor or form units. Min avg and min ind density of 40/36 pcf, respectively. Min avg and min ind density of 40/36 pcf respectively for Types Z-146, Z-146PC and Z-146T cementitious mixture. Min avg and min ind density of 50/45 pcf respectively for Types Z-156, Z-156T and Z-156PC.

For density determination refer to Design Information Section.

Unrestrained			Spray Applied Fire Resistive
Beam Rating Hr	Restrained Assembly Rating Hr	Concrete Type	Mtl Thkns on Beam In.
1	1, 1-1/2, 2	LW	9/16
1-1/2	1, 1-1/2, 2, 3	LW	7/8
1	1, 1-1/2, 2	LW	3/4
1-1/2	1, 1-1/2, 2, 3	LW	1

GRACE KOREA INC — Type Z-146 investigated for exterior use

W R GRACE & CO - CONN — Types Z-146, Z-146T, Z146PC, Z-156, Z-156T and Z-156PC investigated for exterior use

5. **Shear-Connector Studs — Optional —** Studs 3/4 in. diam by 3 in. long, for 1-1/2 in. deep form units to 5-1/4 in. long for 3 in. deep form units, headed type or equivalent per AISC specifications. Welded to the top flange of the beam through the steel form units.

6. **Electrical Inserts —** (Not shown) Classified as **"Outlet Boxes and Fittings Classified for Fire Resistance."**

CENTRIA — Preset Inserts

For use with 2-1/2 in. lightweight concrete topping over QL-WKX steel floor units. Installed over factory-punched holes in floor units per accompanying installation instructions.

Spacing shall not be more than one insert in each 14 sq ft. of floor area with spacing along floor units not less than 48 in. OC. The holes cut in insert cover for passage of wires shall be no more than 1/8 in. larger diam. than wire. Restrained Assembly Rating is 3/4 hr with Tapmate II-FS-1 and 1 hr with Tapmate II-FS-2 inserts.

CENTRIA — Tapmate II-FS-1, II-FS-2; Series KEB.

(2) **Wiremold Co.** — After set Inserts.

Single-service after set inserts installed per accompanying installation instructions in 2-1/2 in. diam hole core-drilled through min 3-1/4 in. thick concrete topping to top of cell of any min 3 in. deep cellular steel floor unit specified under Item 3. Spacing shall be no more than one insert in each 10 sq ft of floor area in each span with a min center to center spacing of 16 in. If the high potential and low potential raceways of the cellular steel floor unit are separated by a valley filled with concrete, the center to center spacing of the high potential and low potential single-service after set inserts may be reduced to a min of 7-1/2 in. Restrained Assembly Rating is 2 hr or less with internally protected type 436 after set insert with Type M4-, M6- or M8- Series single-service activation fitting.

WIREMOLD CO — Internally protected Type 436 after set insert with Type M4-, M6- or M8- Series single-service activation fitting.

Design No. D916 (CONT.)

Design No. D916

7. **Mineral and Fiber Boards* —** (Optional, not shown). Applied over concrete floor with no restriction on board thickness. When mineral and fiber boards are used, the unrestrained beam rating shall be increased by a minimum of 1/2 hr.

See Mineral and Fiber Board (CERZ) category for names of manufacturers.

8. **Roof Covering Materials* —** (Optional, not shown)Consisting of materials compatible with insulations described herein which provide Class A, B or C coverings. See Built-Up Roof Covering Materials in Building Materials Directory.

9. **Insulating Concrete —** (not shown) Optional. Various types of insulating concrete prepared and applied in the thickness indicated:

A. **Vermiculite Concrete —** (not shown) Optional.

1. Blend 6 to 8 cu. ft. of Vermiculite Aggregate* to 94 lb. Portland Cement and air entraining agent. Min thickness of 2 in. as measured to the top surface of the structural concrete or foamed plastic (Item 10) when it is used.

ELASTIZELL CORP OF AMERICA

SIPLAST INC

VERMICULITE PRODUCTS INC

2. Blend 3.5 cu. ft. of Type NVC Concrete Aggregate* or Type NVS Vermiculite Aggregate* coat, 1/8 in. thickness beneath foamed plastic (Item 10) when used, 1 in. min topping thickness.

SIPLAST INC

VERMICULITE PRODUCTS INC

Vermiculite concrete may be covered with Roof Covering Materials (Item 8).

B. **Cellular Concrete — Roof Topping Mixture* —** concentrate mixed with water and Portland cement per manufacturers specifications. Cast dry density and 28—day min. compressive strength of 190 psi as determined with ASTM C495— 66.

CELCORE INC — Type Celcore with cast dry density of 31 (+ or - 3.0) pcf or Type Celcore MF with cast dry density of 29 (+ or - 3.0) pcf.

CELLULAR CONCRETE L L C — Cast dry density of 37 (+ or -) 3.0 pcf.

ELASTIZELL CORP OF AMERICA — Type II. Mix #1 of cast dry density 39 (+ or -) 3.0 pcf, Mix #2 of cast dry density 40 (+ or -) 3.0 pcf, Mix #3 of cast dry density 47 (+ or -) 3.0 pcf.

C. **Cellular Concrete-Roof Topping Mixture* —** Concentrate mixed with water and Portland cement per manufacturers specifications. 28-day min. compressive strength of 190 psi as determined with ASTM C495-66.

LITE-CRETE INC — Cast dry density of 29 (+ or -) 3.0 pcf.

SIPLAST INC — Mix No. 1 or 2. Cast dry density of 32+3 (Mix No. 1) or 36+3 (Mix No. 2) pcf.

D. **Perlite Concrete —** 6 cu ft. of Perlite Aggregate* to 94 lb of Portland Cement and 1-1/2 pt air entraining agent. Min. thickness 2 in. as measured to the top surface of structural concrete or foamed plastic (Item 10A) when it is used.

See Perlite Aggregate (CFFX) in Fire Resistance Directory for names of manufacturers.

E. **Cellular Concrete — Roof Topping Mixture* —** Foam Concentrate mixed with water, Portland Cement and UL Classified Vermiculite Aggregate per manufacturer's application instructions. Cast dry density of 33 (+ or -) 3.0 pcf and 28-day compressive strength of min 250 psi as determined in accordance with ASTM C495-86.

CELLULAR CONCRETE L L C — Mix No. 3.

SIPLAST INC — Mix No. 3.

F. **Floor Topping Mixture* —** (Optional, not shown) — Approx 4.5 gal of water to 41 lbs of NVS Premix floor topping mixture. Slurry coat 1/8 in. thickness beneath foamed plastic (Item 10) when used , 1 in. min topping thickness.

SIPLAST INC

Floor Topping Mixture may be covered with Built-Up or Single Membrane Roof Covering.

10. **Foamed Plastic* —** (optional — Not Shown) For use only with vermiculite (Item 9A) or cellular (Item 9C) concretes — Rigid polystyrene foamed plastic insulation having slots and/or holes sandwiched between vermiculite concrete slurry which is applied to the normal or lightweight concrete surface and vermiculite concrete topping (Item 9A). Max. Thickness to be 8 in.

SIPLAST INC

VERMICULITE PRODUCTS INC

10A. **Foamed Plastic* —** For use only with cellular concrete. Nominal 24 by 48 by max. 8 in. thick polystyrene foamed plastic insulation boards having a density of 1.0 + 0.1 pcf encapsulated within cellular concrete topping (Item 98). Each insulation board shall contain six nominal 3 in. diameter holes oriented in two rows of three holes each with the holes spaced 12 in. OC, transversely and 16 in. OC longitudinally.

See Foamed Plastic* (BRYX) category in Building Materials Directory or Foamed Plastic* (CCVW) category in Fire Resistance Directory for list of manufacturers.

11. **Foamed Plastic* —** (Optional, not shown). Polyisocyanurate roof insulation, applied over concrete floor with no restriction on insulation thickness. When polyisocyanurate insulation is used, the unrestrained beam rating shall be increased by a minimum of 1/2 hr.

12. **Metal Lath —** (Not Shown) — (Required with Z-146, Z-146T, Z146PC, Z-156, Z-156T and Z-156PC, otherwise optional) - Metal lath may be used to facilitate the spray application of Spray-Applied Fire Resistive Materials on steel bar joist and trusses. The diamond mesh, 3/8 in. expanded steel lath, 1.7 to 3.4 lb per sq yd is secured to both sides of each steel joist with No. 18 SWG galv steel wire at joist web and bottom chord members spaced 15 in. OC max. When used, the metal lath is to be fully covered with Spray-Applied Fire Resistive.

See **Foamed Plastic** (CCVW) category for list of manufacturers.

*Bearing the UL Classification Mark

Last Updated on 2010-10-05

Design No. X771 Rating - 3/4, 1, 1 1/2, 2, 3 AND 4 HR COL. PROTECTION

Design No. X771

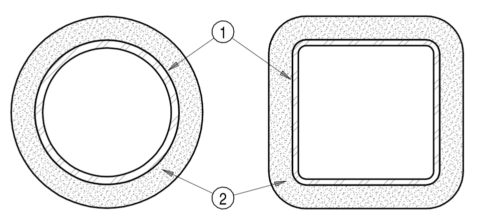

Ratings — 3/4, 1, 1-1/2, 2, 3 and 4 hr

1. Steel Pipe or Tube Column — Steel circular pipe with diameter (OD) ranging from a minimum of 3 in. to a maximum of 32 in. with a minimum wall thickness of 3/16 in.
Steel square or rectangular tube with outside wall dimensions ranging from a minimum 3 in. to a maximum of 32 in. and a minimum wall thickness of 3/16 in.
The A/P ratio of the steel pipe or tube (see Item 2) shall range from 0.18 to 2.0.
2. Spray-Applied Fire Resistive Materials* — Applied by mixing with water and spraying in one or more coats to steel surfaces which must be clean and free of dirt, loose scale and oil. Min avg and ind density of 15/14 pcf respectively. Min avg and min ind density of 22/19 pcf respectively for Types Z-106, Z-106/G. Min avg and min ind density of 19/18 pcf respectively for Types 7GP and 7HD. For method of density determination, see Design Information Section, preceding these designs.
The hourly rating of the structural member is dependent upon the ratio of A/P and the thickness of Spray-Applied Fire Resistive Materials, where A is the cross sectional area of the pipe or tube and P is the heated perimeter.
The A/P ratio of a circular pipe is determined by:

$$A/P\ pipe = \frac{t(d-t)}{d}$$

Where:
d = the outer diameter of the pipe (in.)
t = the wall thickness of the pipe (in.)

The A/P ratio of a rectangular or square tube is determined by:

$$A/P\ tube = \frac{t(a+b-2t)}{a+b}$$

Where:
a = the outer width of the tube (in.)
b = the outer length of the tube (in.)
t = the wall thickness of the tube (in.)

The thickness of Spray-Applied Fire Resistive Materials for ratings of 3/4, 1, 1-1/2, 2, 3 and 4 h of a steel pipe or tube can be determined by the equation:

$$h = \frac{R - 0.20}{4.43\ (A/P)}$$

Where:
R = the hourly rating (hrs).
h = the thickness of Spray-Applied Fire Resistive Materials, minimum 1/4 in., maximum 3-7/8 in.
ARABIAN VERMICULITE INDUSTRIES — Types MK-5, MK-6/CBF, MK-6/ED, MK-6/HY, MK-6s, Sonophone 1, Sonophone 5, Z-106, Z-106/G.
GRACE KOREA INC — Types MK-6/CBF, MK-6/ED, MK-6/HY, MK-6s, Monokote Acoustic 1, Monokote Acoustic 5, Z-106, Z-106/G.
PYROK INC — Type LD.
SOUTHWEST FIREPROOFING PRODUCTS CO — Types 4, 5, 5EF, 5GP, 5MD, 7GP, 7HD, 8EF, 8GP, 8MD, 9EF, 9GP, 9MD.
VERMICULITE PRODUCTS INC — Types MK-4, MK-5.
W R GRACE & CO - CONN — Types MK-4, MK-5, MK-6/HY, MK-6s, Monokote Acoustic 1, Monokote Acoustic 5, RG, Z-106, Z-106/G.

***Bearing the UL Classification Mark** — **Last Updated on 2007-03-13**

Design No. X772 Rating - 1, 1 1/2, 2, 3 AND 4 HR COL. PROTECTION

Design No. X772

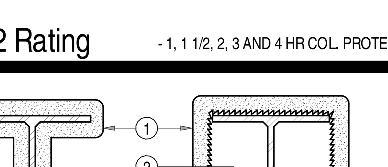

Ratings — 1, 1-1/2, 2, 3 and 4 hr.
1. Spray-Applied Fire Resistive Materials* — Applied by mixing with water and spraying in more than one coat to the thicknesses shown below, to steel surfaces which are clean and free of dirt, loose scale, and oil. Min avg and min ind density of 15/14 pcf respectively. Min avg and min ind density of 22/19 pcf respectively for Types Z-106, Z-106/G. Min avg and min ind density of 19/18 pcf respectively for Types 7GP and 7HD. Min avg and min ind density of 40/36 pcf respectively for Types Z-146, Z-146PC and Z-146T cementitious mixture. Min avg and min ind density of 50/45 pcf respectively for Types Z-156, Z-156T and Z-156PC. For method of density determination, see Design Information Section, Sprayed Material.
The thickness of Spray-Applied Fire Resistive Materials to be applied to all surfaces of the column (Item 1) required for rating periods of 1 h, 1-1/2 h, 2 h, 3 h, 4 h may be determined by the equation:

$$h = \frac{R}{1.05\ (W/D) + 0.61}$$

Where:
h = Spray-Applied Fire Resistive Materials thickness in the range 0.25-3.875 in.
R = Fire resistance rating in hours (1 - 4 h)
D = Heated perimeter of steel column in inches
W = Weight of steel column in lbs per foot
W/D = 0.33 to 6.62

As an alternate to the equation, the minimum thickness of Spray-Applied Fire Resistive Materials required for various fire resistance ratings of contour sprayed or boxed columns may be determined from the table below:

Col Size	W/D	1 Hr	1-1/2 Hr	2 Hr	3 Hr	4 Hr
		Min Min Thk In.				
W6X9	0.33	1-1/8	1-1/2	2	2-1/2	3-13/16
W6x16	0.57	13/16	1-1/4	1-11/16	2-1/2	3-5/16
W8x28	0.67	3/4	1-3/16	1-3/8	2	2-11/16
W10x49	0.83	11/16	7/8	1-1/8	1-11/16	2-1/2
W14x228	2.49	5/16	1/2	9/16	7/8	1-1/4
W14x730	6.62	5/16	5/16	5/16	3/8	9/16

The thicknesses contained in the table below are applicable when the Spray-Applied Fire Resistive Materials applied to columns' flange tips are reduced to one-half that shown in the table below:

Min Col Size	W/D	1 Hr	1-1/2 Hr	2 Hr	3 Hr	4 Hr
		Min Thk In.				
W6x9	0.33	1-1/8	1-5/8	2-1/16	2-15/16	3-13/16
W6x16	0.57	7/8	1-5/16	1-3/4	2-9/16	3-3/8
W8x28	0.67	13/16	1-3/16	1-1/2	2-1/4	2-15/16
W10x49	0.83	3/4	1-1/16	1-3/8	2-1/16	2-3/4
W14x233	2.49	5/16	1/2	11/16	1-3/16	1-5/8
W14x730	6.62	5/16	5/16	5/16	9/16	3/4

As an alternate to the equation, the min thickness of Spray-Applied Fire Resistive Materials Types Z-146, Z-146PC, Z-146T, Z-156, Z-156T and Z-156PC required for various fire resistance ratings of contours sprayed or boxed wide flange columns are shown in the table below:

Column Size In.	1 Hr	1-1/2 Hr	2 Hr	3 Hr	4 Hr
	Min Thkns In.				
W6x9	1-1/16	1-7/16	1-1/2	2-1/4	3
W6x12	1	1-3/8	1-1/2	2-1/4	3
W6x16	13/16	1-1/4	1-1/2	2-1/4	2-15/16
W8x28	3/4	1-3/16	1-3/8	2	2-1/2
W10x49	11/16	7/8	1-1/8	1-9/16	1-15/16
W21x73	11/16	7/8	1-1/8	1-9/16	1-15/16
W12x106	9/16	7/8	1-1/8	1-9/16	1-15/16
W14x233	5/16	1/2	9/16	7/8	1-1/4
W14x730	5/16	5/16	5/16	3/8	9/16

ARABIAN VERMICULITE INDUSTRIES — Types MK-5, MK-6/CBF, MK-6/ED, MK-6/HY, MK-6/HY Extended Set, MK-6s, Sonophone 1, Sonophone 5, Z-106, Z-106/G.
W R GRACE & CO - CONN — Types MK-4, MK-5, MK-6/HY, MK-6/HY Extended Set, MK-6s, RG, Monokote Acoustic 1, Monokote Acoustic 5, Z-106, Z-106/G, Z-146, Z-146PC, Z-146T, Z-156, Z-156T and Z-156PC (Types Z-146, Z-146PC, Z-146T, Z-156, Z-156PC, Z-156T also investigated for exterior use).
GRACE KOREA INC — Types MK-6/CBF, MK-6/ED, MK-6/HY, MK-6/HY Extended Set, MK-6s, Monokote Acoustic 1, Monokote Acoustic 5, Z-106, Z-106/G.
PYROK INC — Type LD.
SOUTHWEST FIREPROOFING PRODUCTS CO — Types 4, 5, 5EF, 5GP, 5MD, 7GP, 7HD, 8EF, 8GP, 8MD, 9EF, 9GP, 9MD.
VERMICULITE PRODUCTS INC — Type MK-4 or MK-5.
2. Metal Lath — (Optional for contour application) — 3.4 lb/sq yd galvanized or painted expanded steel lath. Lath shall be lapped 1 in. and tied together with No. 18 SWG galvanized steel; wire spaced vertically 6 in. O.C.
3. Steel Column — Wide flange steel column, min/max sizes as specified above.
***Bearing the UL Classification Mark** — **Last Updated on 2008-10-22**

VCBO ARCHITECTURE

VCBO ARCHITECTURE
524 SOUTH 600 EAST
SALT LAKE CITY, UT 84102
Phone: (801) 575-8800
Fax: (801) 531-9850
Web: vcbo.com

LICENSED ARCHITECT
No. 133912
BRENT R. TIPPETS
8.15.13
STATE OF UTAH

2nd District Juvenile Courthouse

Utah State Courts
08284150
165 West 20th Street, Ogden, Utah
BID DOCUMENTS

Rev #	Date	Description

Job # 12500
Date August 15, 2013
Owner # 08284150
Ins. #

UL LISTINGS

G201

8/14/2013 10:09:48 AM

Design No. X642 Ratings - 3/4, 1, 1 1/2, AND 2 HR (SEE ITEM 2)

Design No. X642

Design No. X642
February 18, 2010

Ratings - 3/4, 1, 1-1/2 and 2 Hr (See Item 2)

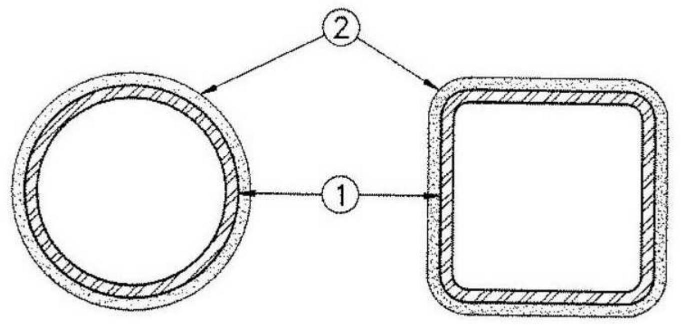

1. **Steel Column —** Square, rectangular or circular tubular steel columns with the minimum sizes shown in the table below. Steel columns shall be free of dirt, loose scale and oil. Column shall be primed with metal alkyd primer.
2. **Mastic Coating* —** Coating applied in accordance with manufacturer's instructions to the minimum dry film thickness shown below:

		Column	Required Min
Rating, hr	**Steel Column Size**	**A/P**	**Thickness, In.**
3/4	SP 4 diam x 3/16 in.	0.18	0.102
3/4	ST 5 x 3 x 1/4 in.	0.22	0.130
3/4	ST 8 x 6 x 5/16 in.	0.29	0.065
3/4	ST 10 x 10 x 1/2 in.	0.46	0.035
1	ST 5 x 3 x 5/16 in.	0.27	0.130
1	ST 12 x 12 x 1/2 in.	0.47	0.045
1	SP 10 in. diam x 5/16 in.	0.30	0.111
1-1/2	SP 10 in. diam x 5/16 in.	0.30	0.130
1-1/2	ST 12 x 12 x 1/2 in.	0.47	0.095
2	SP 8 in. diam x 1/2 in.	0.47	0.191
2	ST 8 x 8 x 1/2 in.	0.47	0.186

A/D FIRE PROTECTION SYSTEMS INC — Types "A/D FIREFILM II"or "A/D FIREFILM III" or "A/D FIREFILM III C" investigated for Interior Conditioned Space Purpose and Interior General Purpose.

3. **Top Coat —** (Not shown) — For Interior General Purpose, Type "A/D COLORCOAT", silicone alkyd paint applied at an approximate 0.002 in. dry film thickness. For Interior Conditioned Space Purpose and Interior General Purpose, Type "A/D COLORCOAT" or "Carbocoat 30R", silicone alkyd paint or acrylic paint, Type "Carbocrylic 3350" or Type "Sanitile 155". Top coat applied at an approximate 0.002 in. dry film thickness.

*Bearing the UL Classification Mark

System No. F-A-2136

System No. F-A-2136
August 2008
F Rating – 2 Hr
T Rating – 2 Hr
(UL/cUL)

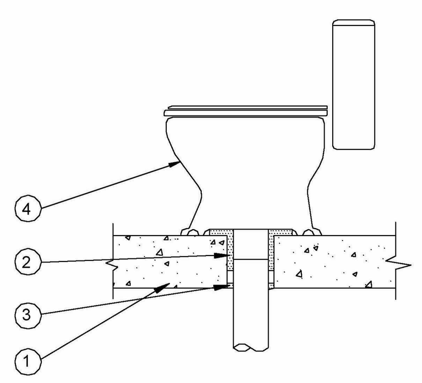

1. **Floor Assembly** – Min 4-1/2 in. (114 mm) thick lightweight or normal weight concrete (100-150 pcf (1600-2400 kg/cu meter)). Max diam of opening is 6 in. (152 mm).
2. **Nonmetallic Pipe** – One nonmetallic drain pipe with max 4 in. (102 mm) diam toilet flange installed either concentrically or eccentrically within the firestop system. The annular space between drain pipe and periphery of opening shall be min 0 in. (point contact) to max 1-1/2 in. (38 mm). Pipe to be rigidly supported on lower side of floor assembly. The following types and sizes of nonmetallic pipes, fittings and flanges may be used:
   - A. **Polyvinyl Chloride (PVC) Pipe** – Nom 4 in. (102 mm) diam (or smaller) Schedule 40 solid core or cellular core PVC pipe for use in vented (drain, waste or vent) piping system.
   - B. **Acrylonitrile Butadiene Styrene (ABS) Pipe** – Nom 4 in. (102 mm) diam (or smaller) Schedule 40 cellular core or solid core ABS pipe for use in vented (drain, waste or vent) piping systems.
3. **Fill, Void or Cavity Material* - Sealant** – Min 1 in. (25 mm) thickness of fill material applied within the annulus, flush with bottom surface of floor. At point contact location between concrete and pipe, a min 1/2 in. (13 mm) diam bead of fill material shall be applied at the pipe/concrete interface on bottom surface of floor assembly. A min 1/2 in. (13 mm) diam bead of fill material shall also be applied around top edge of toilet flange. Prior to placement of water closet, a min 1/2 in. (13 mm) diam bead of fill material shall be applied to the bottom surface of the outer rim of the water closet.

   TREMCO INC – TREMstop Intumescent Acrylic, FyreCaulk, or TREMstop IA+
4. **Water Closet** – Floor mounted vitreous china water closet.

*Bearing the UL Classification Mark

ENGINEERING JUDGMENT FIRESTOP DETAILS

DS

ENGINEERING JUDGMENT FIRESTOP DETAIL
PROJECT : SECOND DISTRICT JUVENILE COURTHOUSE
ARCHITECT : VCBO ARCHITECTURE
F-RATING = 2-HR. (SEE NOTE NO. 2 BELOW)
CROSS-SECTIONAL VIEW

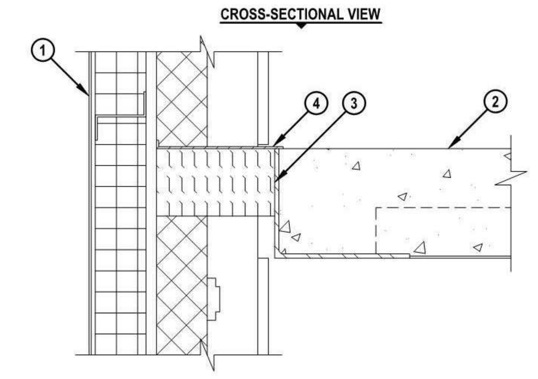

1. EXTERIOR GYPSUM WITH STEEL STUD FRAMING CURTAIN WALL ASSEMBLY (NON FIRE-RATED).
2. CONCRETE FLOOR OVER METAL DECKING ASSEMBLY (MINIMUM 3-1/2" THICK) (2-HR. FIRE-RATING).
3. MINIMUM 4" THICKNESS MINERAL WOOL SAFING (MIN. 4 PCF DENSITY) COMPRESSED 33%.
4. MINIMUM 1/8" (WET) THICKNESS HILTI CFS-SP WB FIRESTOP JOINT SPRAY TO COMPLETELY COVER MINERAL WOOL, OVERLAPPING MINIMUM 1/2" ONTO CONCRETE FLOOR AND CURTAIN WALL.

NOTES : 1. MAXIMUM WIDTH OF JOINT = 7".
2. FIRE-RATING OF ASSEMBLY IS DEPENDENT UPON THE PERFORMANCE OF CURTAIN WALL ASSEMBLY UNDER FIRE CONDITIONS.

THIS ENGINEERING JUDGMENT REPRESENTS A FIRESTOP SYSTEM THAT WOULD BE EXPECTED TO PASS THE STATED RATINGS IF TESTED.
(REFERENCE : INTERTEK SYSTEM NO. CEJ 421 P)

HILTI | Hilti Firestop Systems | HILTI, Inc. Tulsa, Oklahoma USA (800) 879-8000 | Designed by | Sheet 1 of 1 | Scale 3/16" = 1" | Date Mar. 25, 2013 | Drawing No. 171300a

Saving Lives through Innovation and Education

DS

ENGINEERING JUDGMENT FIRESTOP DETAIL
PROJECT : SECOND DISTRICT JUVENILE COURTHOUSE
CONTRACTOR : VCBO ARCHITECTURE
F-RATING = 2-HR. (SEE NOTE NO. 2 BELOW)
CROSS-SECTIONAL VIEW

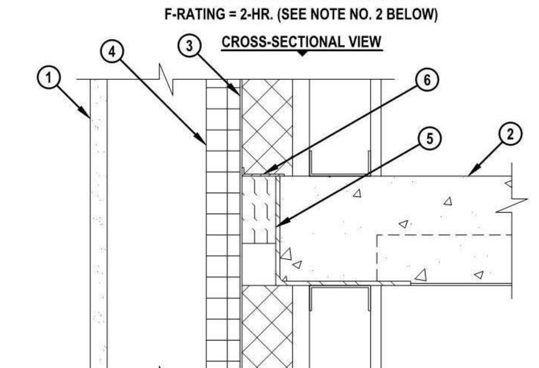

1. EXTERIOR GFRC PANEL WITH STEEL FRAMING CURTAIN WALL ASSEMBLY (NON FIRE-RATED).
2. CONCRETE FLOOR OVER METAL DECKING ASSEMBLY (MINIMUM 3-1/2" THICK) (2-HR. FIRE-RATING).
3. METAL BACK PAN.
4. MINIMUM 2" THICK FOIL FACED CURTAIN WALL INSULATION (MINERAL WOOL MIN. 8 PCF DENSITY) SECURELY ATTACHED TO FRAMING MEMBERS PER METHODS DESCRIBED IN ANY UL OR INTERTEK APPROVED PERIMETER JOINT SYSTEM. CURTAIN WALL INSULATION TO COMPLETELY FILL SPANDREL AT FLOOR LEVEL AND COVER VERTICAL MULLIONS.
5. MINIMUM 4" THICKNESS MINERAL WOOL SAFING (MIN. 4 PCF DENSITY) COMPRESSED 33%.
6. MINIMUM 1/8" (WET) THICKNESS HILTI CFS-SP WB FIRESTOP JOINT SPRAY TO COMPLETELY COVER MINERAL WOOL, OVERLAPPING MINIMUM 1/2" ONTO CONCRETE FLOOR AND CURTAIN WALL.

NOTES : 1. MAXIMUM WIDTH OF JOINT = 2".
2. FIRE-RATING OF ASSEMBLY IS DEPENDENT UPON THE PERFORMANCE OF CURTAIN WALL ASSEMBLY UNDER FIRE CONDITIONS.

THIS ENGINEERING JUDGMENT REPRESENTS A FIRESTOP SYSTEM THAT WOULD BE EXPECTED TO PASS THE STATED RATINGS IF TESTED.
(REFERENCE : INTERTEK SYSTEM NO. CEJ 400 P & CEJ 307 P)

HILTI | Hilti Firestop Systems | HILTI, Inc. Tulsa, Oklahoma USA (800) 879-8000 | Designed by | Sheet 1 of 1 | Scale 3/16" = 1" | Date Mar. 25, 2013 | Drawing No. 171349a

Saving Lives through Innovation and Education

System No. CW-S=2061

System No. CW-S-2061

January 28, 2008
F Rating — 2 Hr
T Rating — 1/4 Hr
Linear Opening Width — 8 In. Max
L Rating At Ambient - Less Than 1 CFM/Lin Ft
L Rating At 400°F - Less Than 1 CFM/Lin Ft

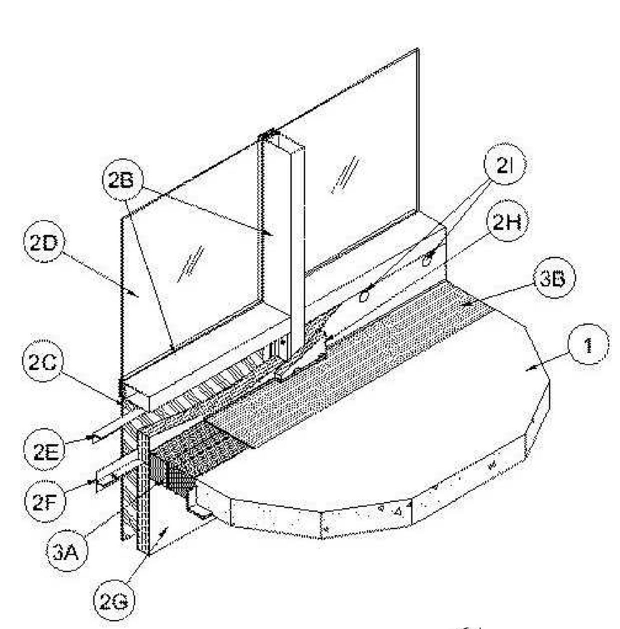

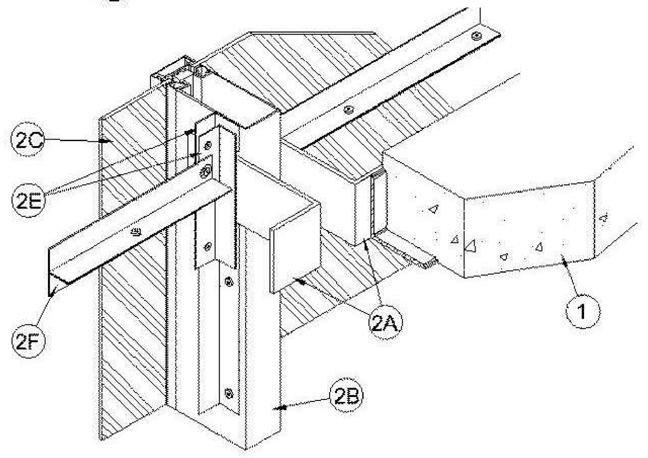

1. **Floor Assembly —** Min 4-1/2 in. (114 mm) thick reinforced lightweight or normal weight (100-150 pcf (1600-2400 kg/m3) structural concrete. Perimeter of floor assembly to be provided with min 3 by 3 by 1/4 in. (76 by 76 by 6 mm) thick cast-in-place structural steel angle for weld-attachment of mullion mounting clips (Item 2A).
2. **Curtain Wall Assembly —** The curtain wall assembly shall incorporate the following construction features:
A. **Mullion Mounting Clips —** Min 4 in. (102 mm) long angles with one nom 4 in. (102 mm) leg for attachment to edge of floor assembly and with one leg approx 4 in. (102 mm) longer than distance to nearest face of mullion. Clips to be formed of min 1/4 in. (6 mm) thick steel. Clips welded to steel angle at edge of floor assembly (Item 1) on each side of vertical mullion (Item 2B) at each floor level. Top edge of each clip to be recessed min 1/2 in. (13 mm) below top surface of floor.
B. **Framing —** The rectangular tubing mullions (vertical members) and transoms (horizontal members) shall be min 2-1/2 in. (64 mm) wide by 5 in. (127 mm) deep and shall be formed from min 0.085 in. (2.2 mm) thick aluminum. Mullions spaced max 60 in. (152 cm) OC and secured to mullion mounting clips (Item 2A) at each floor level with two 3/8-16 by 4 in. (102 mm) long hex head steel bolts in conjunction with Steel nuts and washers. Interior face of mullions to be max 8 in. (204 mm) from edge of floor assembly. Transoms to be spaced min 36 in. (91 cm) OC. The minimum height from the top of the floor to the bottom of the vision panel sill is 6 in. (152 mm).
C. **Spandrel Panels —** The spandrel panels shall consist of one of the following types:
a. **Glass Panels —** Nom 1/4 in. (6 mm) thick opaque heat-strengthened glass. Each panel secured in position with aluminum pressure plates in conjunction with glazing gaskets and steel screws.
b. **Aluminum Panels —** Nom 1/8 in. (3 mm) thick aluminum panels with 1/4 in. (6 mm) thick edges. Each panel secured in position with aluminum pressure plates in conjunction with gaskets and steel screws.
c. **Stone Panels —** Nom 1-3/16 in. (46 mm) thick polished granite spandrel panels with 1 in. (25 mm) thick gauged edges. Each panel secured in position with aluminum pressure plates in conjunction with gaskets and steel screws.
D. **Vision Panels —** Nom 1/4 in. (6 mm) thick transparent heat-strengthened glass or nom 1 in. (25 mm) thick insulated glass units with two layers of nom 1/4 in. (6 mm) thick transparent heat-strengthened glass separated by a 1/2 in. (25 mm) air space. Each panel secured in position with aluminum pressure plates in conjunction with glazing gaskets and steel screws.
E. **Spandrel Panel Perimeter Angles —** Nom 1-1/2 by 1-1/2 in. (38 by 38 mm) No. 22 gauge (0.031 in. or 0.79 mm thick) galvanized steel angles installed around entire perimeter of each spandrel panel. Angles recessed from interior face of framing as necessary to accommodate thickness of curtain wall insulation (Item 2G). Angles cut to be discontinuous at mullion mounting clips (Item 2A). Angles screw-attached to mullions and transom along sides and top of each spandrel panel with No. 8 by 1 in. (25 mm) long self-drilling, self-tapping steel screws spaced max 12 in. (305 mm) OC. Angle along bottom of each spandrel panel to be screw-attached to leg of angle on mullion at each end without any direct attachment to transom. At mullion mounting clips, a length of steel angle shall be installed to bridge between the perimeter angles over the mullion mounting clip. The "bridge" shall be cut approx 6 in. (152 mm) longer than the clear space between angles and shall be secured to the perimeter angles with one No. 8 by 1 in. (25 mm) long steel screw at each end.
F. **Stiffener Tee —** Two nom 1-1/2 by 1-1/2 in. (38 by 38 mm) No. 20 gauge (0.038 in. or 0.97 mm thick) galv steel angles secured together, back-to-back, to form stiffener tee for installation in each horizontal seam of the curtain wall insulation (Item 2G). The angle legs forming the stem of the tee shall be secured together using No. 8 by 1/2 in. (13 mm) long self-drilling, self-tapping steel screws spaced max 8 in. (204 mm) OC. The tee shall be installed with a clearance of 1/8 to 1/4 in. (3 to 6 mm) at each end and shall be screw-attached to the spandrel panel perimeter angles (Item 2E) with No. 10 by 3/4 in. (19 mm) long self-drilling, self-tapping steel screws, with steel washers, through two predrilled 1/4 in. (6 mm) diam holes at each end. One stiffener tee shall be located with its stem at an elevation 2 in. (51 mm) below the top plane of the floor at each floor level.
G. **Curtain Wall Insulation* —** Min 2 in. (51 mm) thick mineral wool batt insulation faced on one side with aluminum foil/scrim vapor retarder, supplied in min 36 in. (914 cm) wide batts. Insulation batts to be installed with no vertical seams. Insulation panels tightly-fitted between vertical mullions and between the stem of the stiffener tee (Item 2F) and the transom, flush with the interior surface of framing. Insulation panels secured to spandrel panel perimeter angles and to each stiffener tee with cup head weld pins (Item 2I) or 2-1/2 in. (64 mm) long steel screws with min 1-1/2 in. (38 mm) diameter galv steel clinch shields spaced max 12 in. (305 mm) OC. The horizontal seam between insulation panels shall be located 2 in. (51 mm) below the top plane of the floor at each floor level.
THERMAFIBER INC — FIRESPAN 90
H. **Framing Covers - Curtain Wall Insulation* —** Min 8 in. (204 mm) wide strips cut from the same min 2 in. (51 mm) thick mineral wool batt insulation used for the curtain wall insulation (Item 2G). Framing covers to be centered over mullions and secured to the spandrel panel perimeter angles with cup head weld pins (Item 2I) or 4-1/2 in. (114 mm) long steel screws with min 1-1/2 in. (38 mm) diameter galv steel clinch shields spaced max 12 in. (305 mm) OC. Where more than one spandrel panel (Item 2C) occurs between vertically separated vision panels, the horizontal transom between spandrel panels shall also be covered with an 8 in. (204 mm) wide framing cover in the same manner as on the vertical mullions. Framing covers on mullions to abut the mineral wool batt safing material (Item 3A) above and below floor.
THERMAFIBER INC — FIRESPAN 90
I. **Weld Pin —** In lieu of steel screws, No. 12 gauge (2 mm) galv steel weld pin with nom 1-3/16 in. (30 mm) diam galv steel cup head. Cup head weld pins provided in two lengths. One length to be equal to thickness of curtain wall insulation (Item 2G) and second length to be equal to thickness of curtain wall insulation plus thickness of framing cover (Item 2H). Cup head weld pins inserted through curtain wall insulation and mullion covers and welded to spandrel panel perimeter angles max 12 in. (305 mm) OC.
J. **Light Gauge Framing* - Spiral Anchor —** (Not Shown) - As an alternate to the weld pins (Item 2I), galv steel wire spiral anchors may be used to secure the framing covers (Item 2H) to the curtain wall insulation (Item 2G) on each side of the mullion. Nom length of spiral anchors to be equal to thickness of curtain wall insulation plus thickness of framing cover. Spiral anchors driven through mullion covers and into curtain wall insulation and spaced max 12 in. OC.
THERMAFIBER INC
3. **Safing System —** The safing system shall incorporate the following construction features:
A. **Forming Material* —** Nom 4 pcf (64 kg/m3) density mineral wool batt insulation. Batt sections cut to a min 4 in. (102 mm) width and stacked to a thickness which is min 25 percent greater than the width of linear gap between the curtain wall insulation and the edge of the concrete floor slab. The stacked forming material is compressed 20 percent in the thickness direction and inserted cut-edge-first into linear gap such that its top surface is flush with the top surface of the floor assembly. A max of one tightly-butted seam is permitted between mullions. Additional pieces of forming material to be friction-fit into spaces between mullion mounting clips at each mullion location.
THERMAFIBER INC — SAF
B. **Fill, Void or Cavity Material* —** Min 1/8 in. (3 mm) wet thickness (min 1/16 in. or 1.6 mm dry thickness) of fill material spray-applied over top of forming material and lapping min 1/2 in. (13 mm) onto the top surface of the floor and onto the curtain wall insulation and framing covers.
SPECIFIED TECHNOLOGIES INC — SpecSeal AS200 Elastomeric Spray or SpecSeal Fast Tack Spray
*Bearing the UL Classification Mark

Design No. P701

Design No. P701

Restrained Assembly Rating — 3/4, 1, 1-1/2 or 2 Hr.

(See Item 6)

Unrestrained Assembly Rating — 3/4, 1, 1-1/2 or 2 Hr.

(See Item 6)

Unrestrained Beam Rating — 1, 1-1/2 or 2 Hr.

(See Item 6)

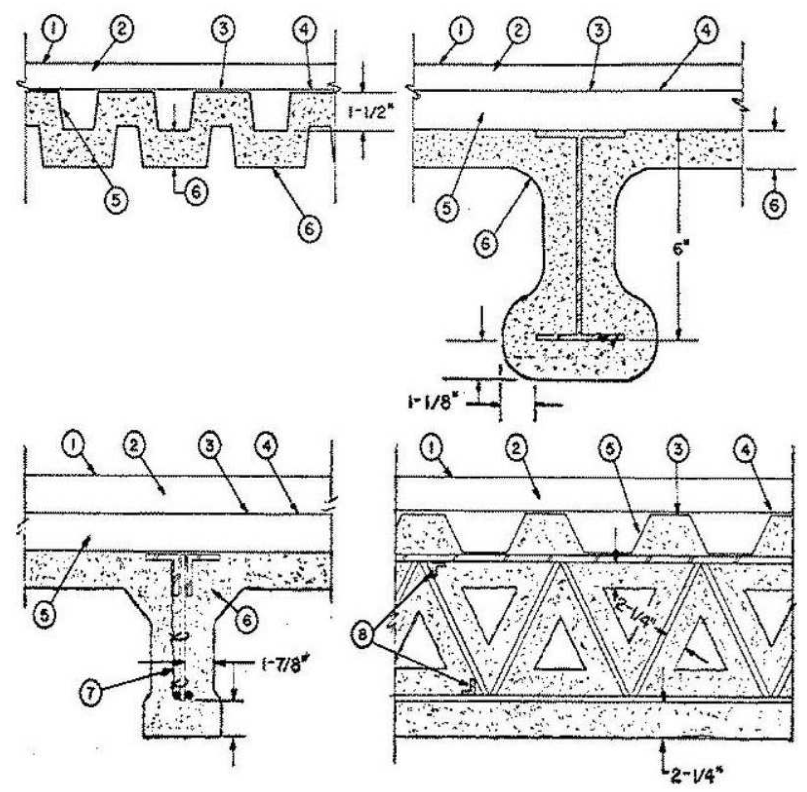

Beam — W6x16, min size or **Steel Joist** — 12J4, 14J7 or 14K4 min sizes (See Item 6). As alternate to steel beam or steel joists, Joist girders (Not shown)-20 in. min depth and 13 lb/lin ft min weight. As an alternate to steel beam or steel joists, any LH-Series joist may be used.

1. **Roof Covering* —** Consisting of hot mopped or cold application materials compatible with insulation(s) described herein which provide Class A, B or C coverings. See Roofing Materials and Systems Directory-Roof Covering Materials (TEVT).
   1A. **In lieu of Item 1, roof covering consisting of single-ply Roofing Membrane* —** that is either ballasted, adhered or mechanically attached as permitted under the respective manufacturer's Classification. See Fire Resistance Directory-Roofing Membranes (CHCI).
   1B. **Metal Roof Deck Panels (Not shown) —** In addition to or in lieu of Items 1 or 1A, the roof covering may consist of a mechanically fastened metal roof deck panel assembly. See Fire Resistance Directory-Metal Roof Deck Panels (CETW).
2. **Roof Insulation —**
   A) **Mineral and Fiber Boards* —** To be applied in one or more layers with or without adhesive applied between vapor barrier and roof deck units, vapor barrier and board, and each layer of board. When more than one layer is required, each layer of board to be offset in both directions from layer below a min of 6 in. in order to lap all joints. Min thickness is 2 in. when Item 1A or 1B is used. Min thickness is 1 in. otherwise.

   BMCA INSULATION PRODUCTS INC — Permalite.

   GAF MATERIALS CORP — GAFTEMP Perlite.

   JOHNS MANVILLE

   ROXUL INC — TopRock®MD, MonoBoard™, TopRock®MD Plus, MonoBoard™ Plus, TopRock®DD and TopRock®DD Plus.

   SOPREMA INC — SopraRock®MD, SopraRock®MD Plus, SopraRock®DD and SopraRock®DD Plus.

   B) Or, 5/8 in. **Gypsum Board** (Classified or Unclassified), supplied in 4 ft wide sheets. Installed perpendicular to steel roof deck with end joints staggered a min of 1 ft in adjacent rows and occurring over crests of steel roof deck. May be secured to crests of steel roof deck with **Adhesive*** applied at a rate of 0.4 gal per 100 sq ft.

   See **Gypsum Board** (CKNX) category for names of manufacturers.

   See **Adhesives** (BYWR) category for names of manufacturers.

   a). And, **Foamed Plastic*,** min 1 in. thick, max 2.5 pcf, polystyrene foamed plastic insulation boards secured with asphalt glaze coat, or laid loosely on gypsum wallboard. No max overall thickness. **Note:** Adhesives and/or asphalt glaze coat may be omitted when Item 1 is used. See **Foamed Plastic*** (BRYX) category in Building Materials Directory or **Foamed Plastic*** (CCVW) category in Fire Resistance Directory for list of manufacturers.
   b). Or, **Foamed Plastic*,** min. 1 in. thick, may be laid loosely over roof covering or bonded to the single-ply membrane with adhesive or laid into the asphalt glaze coat. When applied in more than one layer, successive layers shall be installed over preceding layer without attachment. Covered with stone or masonry ballast at a min. rate of 10 psf.

   OWENS CORNING SPECIALTY & FOAM PRODUCTS

   c). Or, **Building Units*** — Applied in one or more layers with or without adhesive. When more than one layer is required, the joints of each layer shall be staggered 6 in. (min). Min thickness is 2 in. when Item 1A is used. Min thickness 1-1/2 in. otherwise. Max thickness is 3-1/2 in.

   PITTSBURGH CORNING CORP

   THE DOW CHEMICAL CO — Type RM.

   d). Or **Foamed Plastic***, polyisocyanurate foamed plastic insulation boards, nominal 48 by 48 in, applied in one or more layers over the gypsum wallboard. Min thickness is 1.3 in. with no max overall thickness. When applied in more than one layer, each layer to be offset in both directions from layer below a min of 6 in. in order to lap all joints. Adhesive (Item 3 or 3A) may be applied between layers of insulation and to vapor retarder (or gypsum wallboard if vapor retarder is not used).

   ATLAS ROOFING CORP — ACFoam II, ACFoam III, ACFoam IV.

   CARLISLE SYNTEC INCORPORATED — Types HP, HP-H, HP-N, HP-W.

   DYPLAST PRODUCTS L L C

   FIRESTONE BUILDING PRODUCTS CO L L C — " IS0 95+ GL", "ISO 95+ FK", "ISO 95+ GW", "ISO 300", "ISO 95+ CAN" or "RISISTA".

   GAF MATERIALS CORP — Isotherm R.

   HUNTER PANELS — H Shield.

   JOHNS MANVILLE — ENRGY 3, ISO-1, PSI 25.

   LOADMASTER SYSTEMS INC — Loadmaster Polyisocyanurate Insulation.

   RMAX OPERATING L L C — Multi-Max-3, Multi-Max FA-3, Ultra-Max, Tapered Thermaroof-3, Tapered Thermaroof FA-3, Tapered Ultra-Max.

   DOW ROOFING SYSTEMS L L C — "Dow Termico Polyisocyanurate Insulation", "Dow Termico ISO 3000 Insulation", "Dow Termico ISO HP-FR" .

   GENFLEX ROOFING SYSTEMS L L C — "GenFlex ISO"

   e). Or **Building Units***, Polyisocyanurate foamed plastic insulation boards faced on underside (or both sides) with mineral fiber board. Min thickness of the polyisocyanurate core is 1.3 in. No limit on max overall thickness. Boards

Design No. P701 (CONT.)

Design No. P701

to be installed with end joints staggered a min of 6 in. in adjacent rows. Adhesive (Item 3) may be applied between the building units and the vapor retarder (or gypsum wallboard if vapor retarder is not used).

FIRESTONE BUILDING PRODUCTS CO L L C — "ISO 95+ Composite" .

JOHNS MANVILLE — Fesco-Foam.

f). Or **Building Units*** — Polyisocyanurate foamed plastic insulation boards, nom. 48 by 48 or 96 in., faced on the top surface with oriented strand board or plywood. Min. thickness of the polyisocyanurate core is 1.3 in. No limit on max overall thickness. Boards to be installed with end joints staggered a min. of 6 in. in adjacent rows. Adhesive (Item 3) may be applied between the building units and the vapor retarder (or gypsum wallboard if vapor retarder is not used).

ATLAS ROOFING CORP — ACFoam NailBase Insulation, Vented-R.

FIRESTONE BUILDING PRODUCTS CO L L C — Hailgard.

JOHNS MANVILLE — Type Nailboard.

g). or **Building Units***— Polyisocyanurate foamed plastic insulation boards faced on the underside with wood fiber board. Min thickness of the polyisocyanurate core is 1.3 in. No limit on max overall thickness. Boards to be installed with end joints staggered a min of 6 in. in adjacent rows.

FIRESTONE BUILDING PRODUCTS CO L L C — "ISO 95 Wood Fiberboard Composite".

JOHNS MANVILLE — "ENRGY-2 Plus.

h). or **Building Units*** — Not Shown — Composite polyisocyanurate foamed plastic insulation board with an adhered nailing surface, nom 48 by 48 or 96 in. may be used with the following limitations. These composite building units have ventilation slots internal to the panels. The building units are applied over gypsum wallboard. The thickness of the panel depends upon the thinnest portion of the polyisocyanurate insulation. The following dimensions apply to the polyisocyanurate insulation, min 1.3 in. thick. There is no limit on the max insulation thickness.

GAF MATERIALS CORP — Type INSUL-AIR.

JOHNS MANVILLE — Type ISO-VENT.

i). or **Building Units*** — Polyisocyanurate foamed plastic insulation boards, nom 48 by 48 or 96 in., faced on the top surface with gypsum board. Min thickness of the polyisocyanurate core is 1.3 in. No limit on overall thickness. Boards to be installed with end joints staggered a min of 6 in. in adjacent rows.

JOHNS MANVILLE — ENRGY 2 Gypsum Composite.

j. **Or Mineral and Fiber Boards* —** (Not Shown - Optional) — Applied in one or more layers over Foamed Plastic (item d.) or Building Units* (Items 2B. e, f, g, h, i). 1/2 in. minimum thickness.

JOHNS MANVILLE Fesco Board, RetroFit Board, DuraBoard

k. **or Roof Insulation - Foamed Plastic* —** Not Shown - Optional, 1/4 in. thick. Placed over minimum 1-1/2 in. thick polyisocyanurate Foamed Plastic (Item 2, d) may be applied with adhesive (Item 3). Boards to be installed with end joints to be offset in both directions from layer below a min of 6 in. in order to lap all joints.

JOHNS MANVILLE Invinsa Roof Board

2A. **Foamed Plastic* —** Optional - (Not Shown) - Maximum 1 in. thick polyisocyanurate foamed plastic insulation boards, nom 48 by 48 or 96 in. Boards may be applied as the top layer in addition to the specified minimum thickness of any roofing system described herein, as long as the roofing system states that there is no limit on maximum thickness. Joints offset in both directions from layer below.

FIRESTONE BUILDING PRODUCTS CO L L C — "ISOGARD HD"

3. **Adhesive* —** Optional — May be used with board insulation. Applied in 1/2 in. wide ribbons, approx 6 in. OC at 0.4 gal/100 sq ft
3A. **Adhesive* -(Optional) —** (Bearing the UL Classification Marking for Roof Systems (TGFU)) - The vapor retarder, the gypsum wallboard or the first layer of roof insulation may be secured with adhesive to the steel crest surfaces. Also used to attach the vapor retarder to gypsum wallboard, the first layer of insulation to vapor retarder or gypsum wallboard and each additional layer of insulation. Applied at a max rate of 19.8 g/ft^2. When FAST 100 adhesive is used, additional **Spray-Applied Fire Resistance Materials* (CHPX)** is required on the deck for the 1-1/2 and 2 hr Unrestrained Assembly Ratings. The thickness specified for the deck shall be increased by 1/16 in. for 1-1/2 hr Unrestrained Assembly Rating and 1/4 in. for 2 hr Unrestrained Assembly Rating.

CARLISLE SYNTEC INCORPORATED — FAST 100

4. **Sheathing Material* —** Optional. Vinyl film or paper scrim vapor barrier applied with adhesive or laid loosely on the steel roof deck, overlapped approx 2 in. at sides.
4A. **Sheathing Material* —** (Optional) — A self-adhered rubberized asphalt roofing underlayment membrane which may be placed on top of the gypsum wallboard (Item 2B) or on roof insulation (Item 2 or any nonpolystyrene foamed plastic insulation covered as an alternate to Item 2).

W R GRACE & CO - CONN — Grace Ice and Water Shield, Grace Ice and Water Shield-HT®, Grace Select, Grace Ultra, and Grace Basik.

5. **Steel Roof Deck —** (Unclassified) — Min 1-1/2 in. deep, 18 in. wide, galv, fluted steel deck. Flutes 6 in. OC, crest width ranging from 3-1/2 to 5 in. Min gauge is 22 MSG. Ends overlapped at supports min 1-1/2 in. and welded to supports approx 9 in. OC. Adjacent units button-punched or welded together 36 in. OC along side joints; or,

Classified Steel Floor and Form Units* — 1-1/2 or 3 in. deep 24, 30 or 36 in. wide, galv steel units. Min gauge is 22 MSG. Spacing of welds attaching units to supports shall not exceed 12 in. OC. Adjacent units button-punched or welded together 36 in. OC along side joints.

ASC STEEL DECK, DIV OF ASC PROFILES

INC — 24 through 36 in. wide, Types DGB Hi-Form, B Hi-Form, DGB, B, DGN Hi-Form, N Hi-Form, DGN, and N. All units may be galvanized or Prime Shield™.

CANAM STEEL CORP — 36 in. wide Type P-3606 and P-3615 noncomposite; 24 in. wide Type P-2436, P-2404, P-2403, and P-2438 noncomposite.

CONSOLIDATED SYSTEMS INC — 24 or 30 in. wide Type A; 30 or 36 in. wide Types B, BI, F; 24 in. wide Types N, NI. Units may be ptd/ptd.

DECK WEST INC — 36 in. wide Types B-DW, BA-DW; 24 in. wide Type NDW.

LOADMASTER SYSTEMS INC — Types PS and SS-300. Type PS may be ptd/ptd.

MARLYN STEEL DECKS INC — Types B, F, N, NV

NEW MILLENNIUM BUILDING SYSTEMS L L C — 30 in. or 36 in. wide Type B; 24 in. wide Type N. For 1 and 1-1/2 h Assembly and Beam Ratings only, units may be phos/painted or galvanized.

ROOF DECK INC — Types A, B-1, B-2 or F.

CANAM STEEL CORP — Types B, BI, F, NS and NI. Units may be ptd/ptd.

VERCO DECKING INC - A NUCOR CO — Types PLB, B, PLN or N Formlok. Units may be phos./ptd. Types PLB, HSB, PLN or N Formlock. Units may be ptd/ptd.

VULCRAFT, DIV OF NUCOR CORP — 24, 30 or 36 in. wide Types 1.5A, 1.5B, 1.5BI, 1.5F; 24 in. wide Types 3N, 3NI. For 1 and 1-1/2 h Assembly and Beam Ratings only, the Types 1.5A, 1.5B, 1.5BI, 1.5F, 3N, 3NI units may be ptd/ptd.

WHEELING-PITTSBURGH STEEL CORP, DIV

OF WHEELING CORRUGATING CO — Types A, BW, F, High Strength B, High Strength BW or N. Types BW, F, High Strength B, High Strength BW units may be ptd/ptd.

6. **Spray-Applied Fire Resistive Materials* —** Applied by mixing with water and spraying in more than one coat to a final thickness as shown on the above illustration and in the table below, to steel surfaces which must be clean and free of dirt, loose scale and

Design No. P701 (CONT.)

Design No. P701

oil. Min avg and min ind density of 15/14 pcf respectively. Min avg and min ind density of 19/18 pcf respectively for Type 7GP and 7HD. For method of density determination, refer to Design Information Section.

Note: When metal lath is used on joist, full thickness Spray-Applied Fire Resistive Materials is to be applied over the entire joist, including the lath. For method of density determination, refer to Design Information Section.

			Spray Applied Fire					
					12J4, 14K4 or LH Joist		Resistive Mtl Thk In. 14J7 Joist	
Restrained Assembly Rating Hr	**Unrestrained Assembly Rating Hr**	**Unrestrained Beam Rating Hr**	**Deck**	**Beam**	**w/ Lath**	**No. Lath**	**w/ Lath**	**No. Lath**
1	3/4	1	7/8	7/8	—	—	1-1/2	1-1/2
1	1	1	1-1/4	1-1/8	1-3/4	1-7/8	1-1/2	1-1/2

When metal lath is required, as indicated below, full thickness Spray-Applied Fire Resistive Materials is to be applied over the entire support including the lath.

			Spray Applied Fire Resistive Mtl Thk In					
					12J4 or 14K4 Joist		14J7 Joist	
Restrained Assembly Rating Hr	**Un restrained Assembly Rating Hr**	**Un restrained Beam Rating Hr**	**Deck#**	**Beam**	**w/ Lath**	**No. Lath**	**w/ Lath**	**No. Lath**
1-1/2	1-1/2	1-1/2	1-5/8	1-3/8	1-3/4	2-1/8	—	—
2	2	2	2-1/4	1-1/2	1-7/8	2-3/8	—	—

#The required minimum thickness of Spray-Applied Fire Resistive Materials on the steel deck is increased by 1/16 in. for 1-1/2 hr Unrestrained Assembly Rating and 1/4 in. for 2 hr Unrestrained Assembly Rating when Item 3A is used.

Restrained Assembly Rating Hr	Unrestrained Assembly Rating Hr	Unrestrained Beam Rating Hr	Spray Applied Fire Resistive Mtl Thk In. Joist Girder	
			w/Lath	**No. Lath**
1	3/4	1	1-1/2	1-1/2
1	1	1	1-1/2	1-1/2
1-1/2	1-1/2	1-1/2	1-3/4	2-1/4
2	2	2	1-7/8	2-3/8

ARABIAN VERMICULITE INDUSTRIES — Model MK-5.

W R GRACE & CO - CONN — Types MK-4, MK-5, MK-6/HY, MK-6s, RG, Monokote Acoustic 1.

GRACE KOREA INC — Types MK-6/CBF, MK-6/ED, MK-6/HY, MK-6s, Monokote Acoustic 1.

PYROK INC — Type LD.

SOUTHWEST FIREPROOFING PRODUCTS CO — Types 4, 5, 5EF, 5GP, 5MD, 7GP, 7HD, 8EF, 8GP, 8MD, 9EF, 9GP, 9MD.

6A. **Alternate Spray-Applied Fire Resistive Materials* —** Applied by mixing with water and spraying in more than one coat to a final thickness as shown on the above illustration and in the table below, to steel surfaces which must be clean and free of dirt, loose scale and oil. Min avg and min ind density of 22/19 pcf respectively. For method of density determination, refer to Design Information Section, Sprayed Materials.

			Spray Applied Fire Resistive Mtl Thk In.					
					12J4, 14K4 or LH Joist		14J7 Joist	
Restrained Assembly Rating Hr	**Un restrained Assembly Rating Hr**	**Un restrained Beam Rating Hr**	**Deck**#**	**Beam**	**w/ Lath**	**No. Lath**	**w/ Lath**	**No. Lath**
1	3/4	1	7/8	7/8	1-3/4	1-7/8	1-1/2	1-1/2
1	1	1	1-1/4	1-1/8	1-3/4	1-7/8	1-1/2	1-1/2
1-1/2	1-1/2	1-1/2+	1-5/8	1-3/8	1-3/4	2-1/8	—	—
2	2	2	1-7/8*	1-5/8	1-7/8	2-3/8	—	—
2	2	2	2-1/4	1-5/8	1-7/8	2-3/8	—	—

*Requires the use of 5/8 in. gypsum wallboard (Item 2B).

**Galvanized steel roof units only.

#The required minimum thickness of Spray-Applied Fire Resistive Materials on the steel deck is increased by 1/16 in. for 1-1/2 hr Unrestrained Assembly Rating and 1/4 in. for 2 hr Unrestrained Assembly Rating when Item 3A is used.

W R GRACE & CO - CONN — Types Monokote Acoustic 5, Z-106, Z-106/G, Z-106/HY.

GRACE KOREA INC — Types Monokote Acoustic 5, Z-106, Z-106/G, Z-106/HY.

7. **Metal Lath —** Where required — The diamond mesh, 3/8 in. expanded steel lath, 1.7 to 3.4 lb/sq yd is secured to one side of each steel joist with No. 18 SWG galv steel wire at joist web and bottom chord members, spaced 15 in. OC max. Where not required, the optional use of metal lath described, fastened as above, may be used to facilitate the spray application of spray-applied resistive material on steel bar joists and trusses. In this application, the metal lath is to be fully covered with spray-applied resistive material with no minimum thickness required.

7A. **Nonmetallic fabric mesh —** (Optional, not shown) — As an alternate to the optional use of metal lath, glass fiber fabric mesh, weighing approximately 2.5 oz/sq yd, polypropylene fabric mesh, weighing approximately 1.25 oz/sq yd or equivalent, may be used to facilitate the spray application. The mesh is secured to one side of each joist web member. The method of attaching the mesh must be sufficient to hold the mesh and the spray-applied spray-applied resistive material in place during application until it has cured. An acceptable method to attach the mesh is by embedding the mesh in minimum 1/4 in. long beads of hot melted glue. The beads of glue shall be spaced a maximum of 12 in. OC along the top chord of the bar joist. Another method to secure the mesh is by 1-1/4 in. long by 1/2 in. wide hairpin clips formed from No. 18 SWG or heavier steel wire.

8. **Bridging —** In accordance with Specifications adopted by the Steel Joist Institute and revised to November 15, 1989. Continuous steel angles, min. size 1-1/4 by 1-1/4 by 1/8 in. welded to top and bottom chords. Bridging coated with 2-1/4 in. thickness of Spray-Applied Fire Resistive Materials for the 1 or 1-1/2 h Assembly and Beam Ratings and 2-7/16 in. for the 2 h Assembly and Beam Ratings.

9. **Metal Lath —** (Not Shown) — Where Type 7HD is applied to steel deck, 3/8 in. metal ribbed lath weighing 3.4 lb/yd^2 shall be secured to the underside of the steel deck (ribs upward) with S-12 by 3/8 in. long pan head, self-tapping steel screws spaced 12 in. OC in all directions. Steel screws shall be fitted with 1/2 in. diameter steel washers. Adjacent pieces of lath shall be overlapped 1 in. min.

*Bearing the UL Classification Mark — Last Updated on 2010-09-21

VCBO ARCHITECTURE
VCBO ARCHITECTURE
524 SOUTH 600 EAST
SALT LAKE CITY, UT 84102
Phone: (801) 575-8800
Fax: (801) 531-9850
Web: vcbo.com

LICENSED ARCHITECT No. 133912 BRENT R. TIPPETS 8-15-13 STATE OF UTAH

2nd District Juvenile Courthouse

Utah State Courts
08284150
165 West 20th Street, Ogden, Utah
BID DOCUMENTS

Rev #	Date	Description

Job # 12500
Date August 15, 2013
Owner # 08284150
Ins. #

UL LISTINGS

G202

8/14/2013 10:09:55 AM

SYSTEM NO. F-A-8020

Through-penetration Firestop Systems

See General Information for Through-penetration Firestop Systems

System No. F-A-8012

June 29, 2004

F Rating — 2 Hr

T Rating — 0 Hr

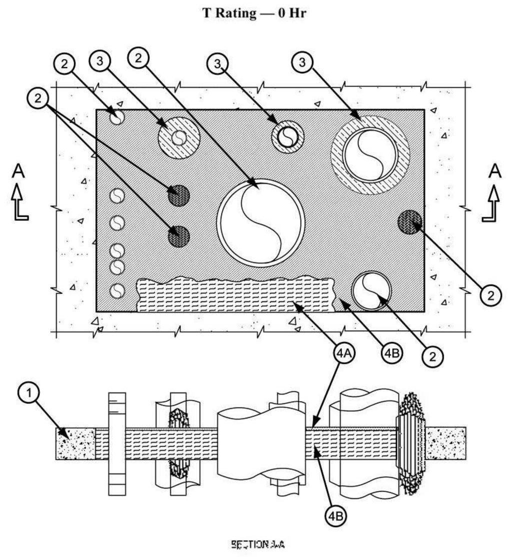

1. **Floor Assembly —** Min 4-1/2 in. (114 mm) thick reinforced lightweight or normal weight (100-150 pcf or 1600-2400 kg/m^3) concrete. Max size of opening is 1440 in.2 (9,290 cm^2) with a max dimension of 48 in. (1219 mm).

2. **Through-Penetrants —** One or more pipes, tubes or cable bundles to be installed within the opening. The total number of through-penetrants is dependent on the size of the opening and types and sizes of the penetrants. Any combination of the penetrants described below may be used provided that the following parameters relative to the annular spaces are maintained. The annular space between cable bundles and other penetrants shall be a min 6 in. (152 mm). The annular space between metallic pipes, conduit and tubes and insulated pipes and tubes shall be a min 2 in. (51 mm). The annular space between nom 2 in. (51 mm) diam (and smaller) metallic pipes, conduit and tubes shall be a min 0 in. (0 mm). The annular space between insulated penetrants and the periphery of opening shall be a min 1/2 in. (13 mm). The annular space between all other penetrants and the periphery of opening shall be a min 0 in. (0 mm) (point contact). A max annular space in the system shall be 12 in. (305 mm). Penetrants to be rigidly supported on both sides of floor assembly. The following types and sizes of penetrants may be used.

A. **Metallic Penetrants —** The following types of metallic pipes, tubes or conduits may be used:

1. **Copper Tubing —** Nom 6 in. (152 mm) diam (or smaller) Type L (or heavier) copper tube.

2. **Copper Pipe —** Nom 6 in. (152 mm) diam (or smaller) Regular (or heavier) copper pipe.

3. **Steel Pipe —** Nom 24 in. (610 mm) diam (or smaller) Schedule 40 (or heavier) steel pipe.

4. **Iron Pipe —** Nom 24 in. (610 mm) diam (or smaller) cast or ductile iron pipe.

5. **Conduit —** Nom 4 in. (102 mm) diam (or smaller) steel electric metallic tubing (EMT) or nom 6 in. (152 mm) diam (or smaller) rigid steel conduit.

B. **Cables Bundles —** Max 4 in. (102 mm) diam tightly bundled cables. Any combination of the following types and sizes of cables may be used:

1. Max 500 kcmil single copper or aluminum conductor power cable with thermoplastic insulation and polyvinyl chloride (PVC) jacket.

2. Max 300 pair No. 24 AWG copper conductor telecommunication cables with PVC insulation and jacket material.

3. Max 7/C copper conductor No. 12 AWG multi-conductor power and control cables with PVC or cross-linked polyethylene (XLPE) insulation and PVC jacket.

4. Multiple fiber optical communication cables jacketed with PVC and having a max outside diam of 1/2 in.

5. Max 3/C No. 12 AWG steel clad cable with copper conductors and PVC insulation material.

C. **Individual Cables —** Any of the following types and sizes of individual (non-bundled) cables may be used:

1. Max 3/C No. 2/0 AWG (or smaller) copper conductor PVC jacketed aluminum clad or steel clad TECK 90 cable.

2. **Through Penetrating Product* —** Any cables, **Armored Cable+** or **Metal Clad Cable+** currently Classified under the **Through Penetrating Product** category.

See **Through Penetrating Product** (XHLY) category in the Fire Resistance Directory for names of manufacturers.

3. Max 500 kcmil single copper or aluminum conductor power cable with thermoplastic insulation and polyvinyl chloride (PVC) jacket.

4. Max 300 pair No. 24 AWG copper conductor telecommunication cables with PVC insulation and jacket material.

5. Max 7/C copper conductor No. 12 AWG multi-conductor power and control cables with PVC or cross-linked polyethylene (XLPE) insulation and PVC jacket.

6. Multiple fiber optical communication cables jacketed with PVC and having a max outside diam of 1/2 in.

7. Max 3/C No. 12 AWG steel clad cable with copper conductors and PVC insulation material.

8. Max 4C/750 kcmil (or smaller) aluminum or copper conductor metal clad cable with aluminum or steel armor, with or without PVC jacket.

3. **Pipe Insulation —** (Optional) - Pipes and tubes of the sizes noted below may be provided with one of the following types of pipe insulations:

A. **Pipe Covering* —** Nom 1-1/2 in. (38 mm) thick (or thinner) hollow cylindrical heavy density glass fiber units jacketed on the outside with an all service jacket for pipes with a nom diam of 8 in. (203 mm) (or smaller) or tubes with a nom diam of 4 in. (102 mm) (or smaller). Longitudinal joints sealed with metal fasteners or factory-applied self-sealing lap tape. Transverse joints secured with metal fasteners or with butt tape supplied with the product.

See **Pipe and Equipment Covering - Materials** (BRGU) category in the Building Materials Directory for names of manufacturers. Any pipe covering material meeting the above specifications and bearing the UL Classifica tion Marking with a Flame Spread Index of 25 or less and a Smoke Developed Index of 50 or less may be used.

B. **Tube Insulation-Plastics+ —** Nom 1 in. (25 mm) thick (or thinner) acrylonitrile butadiene/polyvinyl chloride (AB/PVC) flexible foam furnished in the form of tubing for pipes or tubes with a nom diam of 2 in. (51 mm) (or smaller).

See **Plastics** (QMFZ2) category in the Plastics Recognized Component Directory for names of manufacturers. Any Recognized Component tube insulation material meeting the above specifications and having a UL 94 Flammability Classification of 94-5VA may be used.

4. **Firestop System —** The firestop system shall consist of the following:

A. **Packing Material —** Min 4 in. (102 mm) thickness of 4 pcf (64 kg/m^3) mineral wool batt insulation tightly packed into the opening as a permanent form. Packing material to be recessed from top surface of floor to accommodate the required thickness of fill material.

B. **Fill, Void or Cavity Material - Sealant* —** Min 1/2 in. (13 mm) thickness of fill material applied within the annulus flush with the top surface of the floor.

HILTI CONSTRUCTION CHEMICALS, DIV OF

HILTI INC — CP604 Sealant

*Bearing the UL Classification Mark

Last Updated on 2004-06-29

SYSTEM NO. W-L-8065

Through-penetration Firestop Systems

See General Information for Through-penetration Firestop Systems

System No. W-L-8065

October 08, 2007

F Ratings — 1 and 2 Hr (See Item 1)

T Rating — 0 Hr

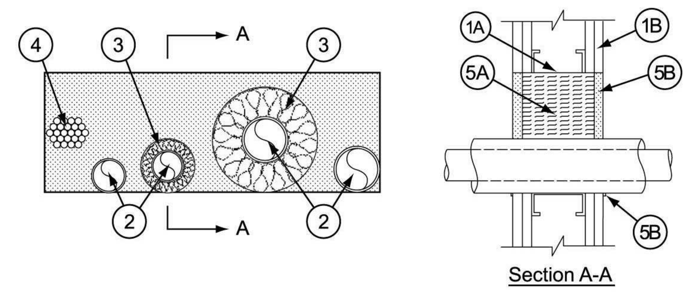

1. **Wall Assembly —** The 1 or 2 hr fire-rated gypsum board/stud wall assembly shall be constructed of the materials and in the manner specified in the individual U300, U400 or V400 Series Wall and Partition Designs in the UL Fire Resistance Directory and shall include the following construction features:

A. **Studs —** Wall framing may consist of either wood studs or channel shaped steel studs. Wood studs to consist of nom 2 by 4 in. (51 by 102 mm) lumber spaced max 16 in. (406 mm) OC. Steel studs to be min 3-1/2 in. (89 mm) wide and spaced max 24 in. (610 mm) OC. Additional framing members shall be installed in stud cavity containing through-penetrating item to form a rectangular box around the penetrants.

B. **Gypsum Board* —** 5/8 in. (16 mm) thick with square or tapered edges. The gypsum board type, thickness, number of layers, fastener type and sheet orientation shall be as specified in the individual U300, U400 or V400 Wall and Partition Design. If the through penetrants are installed in a wood stud/gypsum board assembly, the max area of opening is 116 in.2 (748 cm^2). with max dimension of 14-1/2 in. (368 mm). If the through penetrants are installed in a steel stud/gypsum board assembly, max area of opening is 182 in2. (1174 cm^2) with max dimension of 22-3/4 in. (578 mm) wide.

The hourly F Rating of the firestop system is equal to the hourly fire rating of the wall assembly in which it is installed.

2. **Through-Penetrant —** One or more pipes, conduit or tubes to be installed within the opening. The total number of through-penetrants is dependent on the size of the opening and the types and sizes of the penetrants. Any combination of the penetrants described below may be used provided that the following parameters relative to the annular spaces and the spacing between the through penetrants are maintained. The separation between the penetrants shall be min 1 in. (25 mm) to max 22 in. (560 mm). The annular space between penetrants and the periphery of opening shall be min 0 in. (0 mm, point contact) to max 22 in. (560 mm). Pipes, conduit or tubes to be rigidly supported on both sides of wall assembly. The following types and sizes of pipes, conduit or tubes may be used.

A. **Copper Tubing —** Nom 3 in. (76 mm) diam (or smaller) Type L (or heavier) copper tube.

B. **Copper Pipe —** Nom 3 in. (76 mm) diam (or smaller) Regular (or heavier) copper pipe.

C. **Steel Pipe —** Nom 3 in. (76 mm) diam (or smaller) Schedule 10 (or heavier) steel pipe.

D. **Iron Pipe —** Nom 3 in. (76 mm) diam (or smaller) cast or ductile iron pipe.

E. **Conduit —** Nom 3 in. (76 mm) diam (or smaller) electric metallic tubing (EMT) or rigid steel conduit.

F. **Polyvinyl Chloride (PVC) Pipe —** Nom 2 in. (51 mm) diam (or smaller) Schedule 40 cellular or solid core PVC pipe for use in closed (process or supply) or vented (drain, waste, or vent) piping systems.

G. **Chlorinated Polyvinyl Chloride (CPVC) Pipe —** Nom 2 in. (51 mm) diam (or smaller) SDR 13.5 CPVC pipe for use in closed (process or supply) piping systems.

H. **Rigid Nonmetallic Conduit (RNC)+ —** Nom 2 in. (51 mm) diam (or smaller) Schedule 40 PVC conduit installed in accordance with Articles 347 and 710 of the National Electrical Code (NFPA No. 70).

I. **Cross Linked Polyethylene Tubing —** Nom 1 in. (25 mm) diam (or smaller) cross-linked polyethylene tubing for use in closed (process or supply) piping systems.

3. **Pipe Insulation —** One or more metallic penetrants (pipe or tubing) may be insulated with the following types of pipe coverings:

A. **Pipe Covering* —** Min 1 in. (25 mm) to max 2 in. (51 mm) thick hollow cylindrical heavy density min 3.5 pcf (56 kg/m^3) glass fiber units jacketed on the outside with an all service jacket. Longitudinal joints sealed with metal fasteners or factory-applied self-sealing lap tape. Transverse joints secured with metal fasteners or with butt tape supplied with the product.

See **Pipe and Equipment Covering - Materials** (BRGU) category in the Building Materials Directory for names of manufacturers. Any pipe covering material meeting the above specifications and bearing the UL Classification Marking with a Flame Spread Index of 25 or less and a Smoke Developed Index of 50 or less may be used.

B. **Tube Insulation-Plastics+ —** Min 1/2 in. (13 mm) to max 3/4 in. (19 mm) thick acrylonitrile butadiene/polyvinyl chloride (AB/PVC) flexible foam furnished in the form of tubing.

See **Plastics**+ (QMFZ2) category in the Plastics Recognized Component Directory for names of manufacturers. Any Recognized Component tube insulation material meeting the above specifications and having a UL 94 Flammability Classification of 94-5VA may be used.

C. **Pipe Covering Materials* —** Min 1 in. (25 mm) to max 2 in. (51 mm) thick unfaced mineral fiber pipe insulation having a nom density of 3.5 pcf (56 kg/m^3) or heavier and sized to fit the outside diam of pipe or tube. Pipe insulation secured with min 18 SWG steel wire spaced 12 in. (305 mm) OC.

IIG MINWOOL L L C — High Temperature Pipe Insulation 1200, High Temperature Pipe Insulation BWT and High Temperature Pipe Insulation Thermaloc

C1. **Sheathing Material —** (Not shown) — Optional, used in conjunction with Item 3C. Foil-scrim-kraft or all service jacket material shall be wrapped around the outer circumference of the pipe covering material (Item 3B) with the kraft side exposed. Longitudinal joints sealed with metal fasteners.

See **Sheathing Materials** (BVDV) category in the Building Materials Directory for names of manufacturers. Any sheathing material meeting the above specifications and bearing the UL Classification Marking with a Flame Spread value of 25 or less and a Smoke Developed value of 50 or less may be used.

The annular space between the insulated penetrants and the periphery of the opening shall be min 0 in. (0 mm, point contact) to max 5 in. (127 mm). The separation between the insulated penetrants and the other penetrants shall be a min 1 in. (25 mm) to max 22 in. (560 mm).

4. **Cables —** One max 3 in. (76 mm) diam bundle of cables installed within the opening and rigidly supported on both surfaces of wall. The annular space between the tightly-bundled cables and the periphery of the opening shall be min 0 in. (0 mm, point contact) to max 5 in. (127 mm). The separation between the cable bundle and the other penetrants shall be min 1 in. (25 mm) to max 22 in. (560 mm). Any combination of the following types and sizes of cables may be used:

A. Max 25 pair No. 24 AWG telephone cable with polyvinyl chloride (PVC) insulation and jacket.

B. Max 7/C No. 12 AWG copper conductor power and control cable with PVC or cross-linked polyethylene (XLPE) insulation and PVC jacket.

C. Multiple fiber optical communication cable jacketed with PVC and having a max outside diam of 1/2 in. (13 mm).

D. Max 3/C No. 8 AWG with bare aluminum ground, PVC insulated steel Metal-Clad+ Cable currently Classified under the **Through Penetrating Product*** (XHLY) category.

E. Max 3/C (with ground) No. 12 AWG (or smaller) nonmetallic sheathed (Romex) cable with PVC insulation and jacket materials.

F. RG/U coaxial cable with polyethylene (PE) insulation and polyvinyl chloride (PVC) jacket having a max outside diam of 1/2 in. (13 mm).

5. **Firestop System —** The firestop system shall consist of the following:

A. **Packing Material —** In 2 hr fire rated wall assemblies, min 4-3/4 in. (121 mm) thickness of min 4 pcf (64 kg/m^3) mineral wool batt insulation firmly packed into opening as a permanent form. In 1 hr fire rated wall assemblies, min 3-1/2 in. (89 mm) thickness of min 4 pcf (64 kg/m^3) mineral wool batt insulation firmly packed into opening as a permanent form. Packing material recessed from both surfaces of the wall to accommodate the required thickness of fill material.

B. **Fill, Void or Cavity Material* — Sealant —** Min 5/8 in. (16 mm) thickness of fill material applied within annulus, flush with both surfaces of wall. At the point contact location between through penetrants and gypsum board, a min 1/4 in. (6 mm) diam bead of fill material shall be applied at the gypsum board/through penetrant interface on both surfaces of wall.

HILTI CONSTRUCTION CHEMICALS, DIV OF

HILTI INC — FS-ONE Sealant

*Bearing the UL Classification Mark

+ Bearing the UL Listing Mark

Bearing the UL Recognized Component Mark

Last Updated on 2007-10-08

SYSTEM NO. W-L-5029

Through-penetration Firestop Systems

See General Information for Through-penetration Firestop Systems

System No. W-L-5029

February 08, 2006

F Ratings — 1 and 2 Hr (See Item 1)

T Ratings — 1/2, 3/4, 1, 1-1/2 and 1-3/4 Hr (See Item 3)

L Rating At Ambient — 4 CFM/Sq Ft

L Rating At 400 F — Less Than 1 CFM/Sq Ft

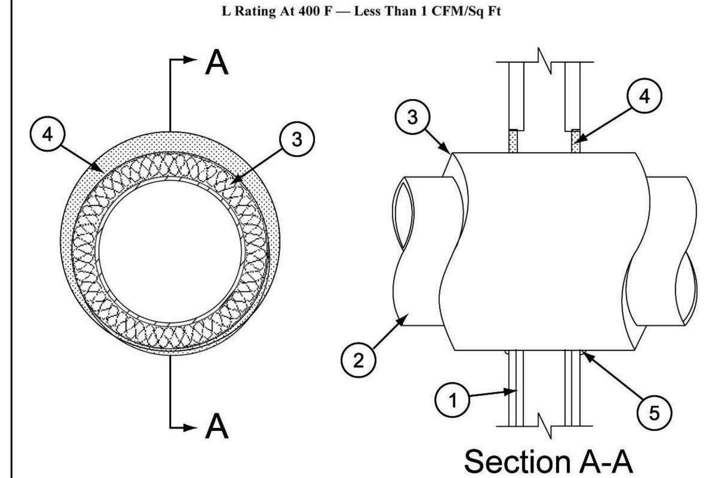

1. **Wall Assembly —** The 1 or 2 hr fire-rated gypsum board/stud wall assembly shall be constructed of the materials and in the manner specified in the individual U300 or U400 Series Wall and Partition Designs in the UL Fire Resistance Directory and shall include the following construction features:

A. **Studs —** Wall framing may consist of either wood studs or steel channel studs. Wood studs to consist of nom 2 by 4 in. lumber spaced 16 in. OC. Steel studs to be min 2-1/2 in. wide and spaced max 24 in. OC.

B. **Gypsum Board* —** 5/8 in. thick, 4 ft wide, with square or tapered edges. The gypsum board type, thickness, number of layers, fastener type and sheet orientation shall be as specified in the individual Wall and Partition Design. Max diam of opening is 18-5/8 in.

The hourly F Rating of the firestop system is equal to the hourly fire rating of the wall assembly in which it is installed.

2. **Through Penetrants —** One metallic pipe or tubing to be centered within the firestop system. Pipe or tubing to be rigidly supported on both sides of wall assembly. The following types and sizes of metallic pipes or tubing may be used:

A. **Steel Pipe —** Nom 12 in. diam (or smaller) Schedule 10 (or heavier) steel pipe.

B. **Iron Pipe —** Nom 12 in. diam (or smaller) cast or ductile iron pipe.

C. **Copper Tubing —** Nom 6 in. diam (or smaller) Type L (or heavier) copper tubing.

D. **Copper Pipe —** Nom 6 in. diam (or smaller) Regular (or heavier) copper pipe.

3. **Pipe Covering* —** Nom 1, 1-1/2 or 2 in. thick hollow cylindrical heavy density (min 3.5 pcf) glass fiber units jacketed on the outside with an all service jacket. Longitudinal joints sealed with metal fasteners or factory-applied self-sealing lap tape. Transverse joints secured with metal fasteners or with butt tape supplied with the product.

See **Pipe and Equipment Covering — Materials** (BRGU) category in the Building Material Directory for the names of manufacturers. Any pipe covering material meeting the above specifications and bearing the UL Classification Marking with a Flame Spread Index of 25 or less and a Smoke Developed Index of 50 or less may be used.

The hourly T Rating of the firestop system is dependent on the hourly fire rating of the wall assembly in which it is installed, the size and type of through penetrant and the pipe covering thickness, as shown in the table below:

Wall Assembly Rating Hr	Through Penetrant		Pipe Covering Thkns In.	Annular Space		T Rating Hr
	Type +	Max Diam In.		Min In.	Max In.	
1	A, B	4	1	0	1-1/2	1/2
1	C or D	2	1 or 1-1/2	0	1-1/2	1/2
1	A, B	4	1-1/2	0	1-1/2	1
1	A, B	12	2	0	1-7/8	3/4
1	C or D	6	2	0	1-7/8	1
2	A, B	4	1	0	1-1/2	1
2	C or D	4	1 or 1-1/2	0	1-1/2	1
2	C or D	6	2	0	1-7/8	1
2	A, B	4	1-1/2	0	1-1/2	1-3/4
2	A, B	12	2	0	1-7/8	1-1/2
2	C or D	6	2	0	1-7/8	1

+Indicates penetrant type as itemized in Item 2.

3A. **Pipe Covering* —** (Not Shown) — As an alternate to Item 3, max 2 in. thick cylindrical calcium silicate (min 14 pcf) units sized to the outside diam of the pipe or tube may be used. Pipe insulation secured with stainless steel bands or min 8 AWG stainless steel wire spaced max 12 in. OC. When the alternate pipe covering is used, the T Rating shall be determined from the table above.

See **Pipe and Equipment Covering — Materials** (BRGU) category in the Building Materials Directory for names of manufacturers. Any pipe covering material meeting the above specifications and bearing the UL Classification Marking with a Flame Spread Index of 25 or less and a Smoke Developed Index of 50 or less may be used.

4. **Fill, Void or Cavity Material* — Sealant —** Min 5/8 in. thickness of fill material applied within the annulus, flush with both surfaces of wall . At the point contact location between pipe covering and gypsum board, a min 1/2 in. diam bead of fill material shall be applied at the pipe covering/gypsum board interface on both surfaces of wall.

HILTI CONSTRUCTION CHEMICALS, DIV OF

HILTI INC — FS-One Sealant

*Bearing the UL Classification Mark

Last Updated on 2006-02-08

SYSTEM NO. W-L-5240

Through-penetration Firestop Systems

See General Information for Through-penetration Firestop Systems

System No. W-L-5240

February 16, 2005

F Rating — 2 Hr

T Rating — 0 and 1-1/4 Hr (See Item 3)

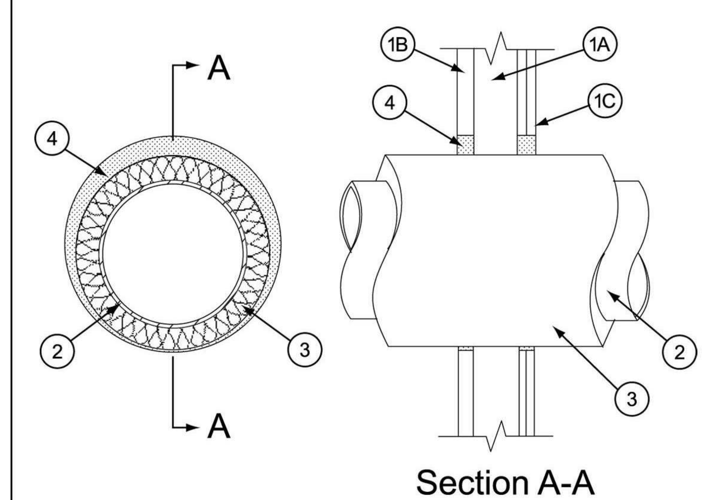

1. **Wall Assembly —** The 2 hr fire-rated gypsum board/stud shaft wall assembly shall be constructed of the materials and in the manner specified in the individual U400 or V400 Series Wall and Partition Designs in the UL Fire Resistance Directory and shall incorporate the following construction features:

A. **Steel Studs —** "C-H" or "C-T" shaped studs, min 2-1/2 in. wide by 1-1/2 in. deep, fabricated from min No. 25 gauge galv steel, spaced max 24 in. OC.

B. **Gypsum Board* —** 1 in. thick, 24 in. wide gypsum liner panels installed vertically. Max diam of circular cutout in gypsum liner panel is 13 in.

C. **Gypsum Board* —** 1/2 in. or 5/8 in. thick, 48 in. wide gypsum boards. The gypsum board type, thickness, number of layers, fastener type and sheet orientation shall be as specified in the individual Wall and Partition Design. Max diam of circular cutout in gypsum board is 13 in.

2. **Through-Penetrants —** One metallic pipe, conduit or tubing to be installed either concentrically or eccentrically within the firestop system. Pipe, conduit or tubing to be rigidly supported on both sides of wall assembly. The following types and sizes of metallic pipes, conduits or tubing may be used:

A. **Steel Pipe —** Nom 8 in diam (or smaller) Schedule 10 (or heavier) steel pipe.

B. **Iron Pipe —** Nom 8 in. diam (or smaller) cast or ductile iron pipe.

C. **Copper Tubing —** Nom 4 in. diam (or smaller) Type L (or heavier) copper tubing.

D. **Copper Pipe —** Nom 4 in. diam (or smaller) regular (or heavier) copper pipe.

3. **Pipe Covering* —** Nom 1 or 1-1/2 in. thick hollow cylindrical heavy density (min. 3.5 pcf) glass fiber units, jacketed on the outside with an all service jacket. Longitudinal joints sealed with metal fasteners or factory-applied SSL tape. Transverse joints secured with metal fasteners or with butt tape supplied with the product. The annular space between the insulated pipe and the periphery of the opening shall be min 1/4 in. to max 1-1/8 in. When 1 in. thick insulation is used, T Rating is 1/2 hr. When 1-1/2 in. insulation is used, T Rating is 1-1/4 hr.

See **Pipe and Equipment Covering — Materials** (BRGU) category in the Building Materials Directory for names of manufacturers. Any pipe covering material meeting the above specifications and bearing the UL Classification Marking with a Flame Spread Index of 25 or less and a Smoke Developed Index of 50 or less may be used.

4. **Fill, Void or Cavity Material* — Sealant —** Min 1 in. thickness of fill material applied within the annulus, flush with each surface of wall.

HILTI CONSTRUCTION CHEMICALS, DIV OF

HILTI INC — FS-One Sealant

*Bearing the UL Classification Mark

Last Updated on 2005-02-16

SYSTEM NO. W-L-1380

Through-penetration Firestop Systems

See General Information for Through-penetration Firestop Systems

System No. W-L-1380

October 07, 2005

F Rating — 2 Hr

T Rating — 0 Hr

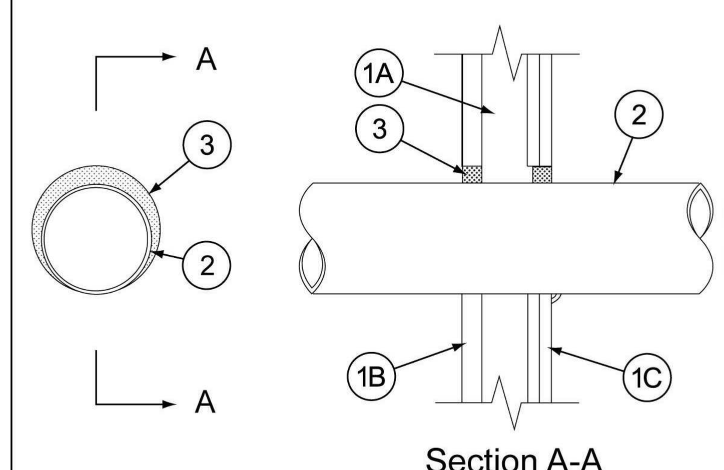

1. **Wall Assembly —** The 2 hr fire-rated gypsum board/stud shaft wall assembly shall be constructed of the materials and in the manner specified in the individual U400 or V400 Series Wall and Partition Designs in the UL Fire Resistance Directory and shall incorporate the following construction features:

A. **Steel Studs —** "C-H" or "C-T" shaped studs, min 2-1/2 in. wide by 1-1/2 in. deep, fabricated from min No. 25 gauge galv steel, spaced max 24 in. OC.

B. **Gypsum Board* —** 1 in. thick, 24 in. wide gypsum liner panels installed vertically. Max diam of circular cutout in gypsum liner panel is 9-1/2 in.

C. **Gypsum Board* —** 1/2 in. or 5/8 in. thick, 48 in. wide gypsum boards. The gypsum board type, thickness, number of layers, fastener type and sheet orientation shall be as specified in the individual Wall and Partition Design. Max diam of circular cutout in gypsum board is 9-1/2 in.

2. **Through-Penetrants —** One metallic pipe, conduit or tubing to be installed either concentrically or eccentrically within the firestop system. The annular space shall be min 0 in. (point contact) to max 7/8 in. Pipe, conduit or tubing to be rigidly supported on both sides of wall assembly. The following types and sizes of metallic pipes, conduits or tubing may be used:

A. **Steel Pipe —** Nom 8 in diam (or smaller) Schedule 10 (or heavier) steel pipe.

B. **Iron Pipe —** Nom 8 in. diam (or smaller) cast or ductile iron pipe.

C. **Conduit —** Nom 4 in diam (or smaller) steel electrical metallic tubing or 6 in. diam steel conduit.

D. **Copper Tubing —** Nom 6 in. diam (or smaller) Type L (or heavier) copper tubing.

E. **Copper Pipe —** Nom 6 in. diam (or smaller) regular (or heavier) copper pipe.

3. **Fill, Void or Cavity Material* - Sealant —** Min 1 in. thickness of fill material applied within the annulus, flush with each surface of wall. A min 1/2 in. diam bead of fill material shall be applied at the point contact location between pipe and wall on the finished side of wall.

HILTI CONSTRUCTION CHEMICALS, DIV OF

HILTI INC — FS-One Sealant

*Bearing the UL Classification Mark

Last Updated on 2005-10-07

SYSTEM NO. C-AJ-4071

Through-penetration Firestop Systems

See General Information for Through-penetration Firestop Systems

System No. C-AJ-4071

April 26, 2004

F Rating — 2 Hr

T Rating — 0 Hr

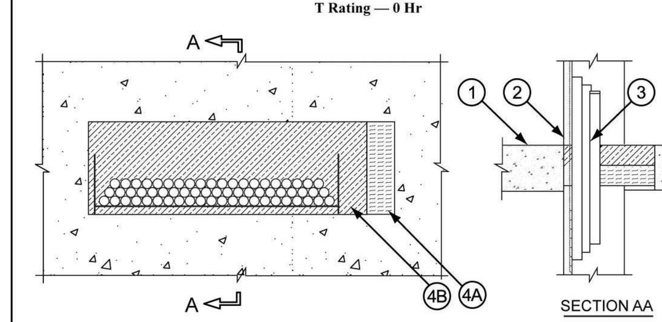

1. **Floor or Wall Assembly** — Min 4-1/2 in. (114 mm) thick reinforced lightweight or normal weight (100-150 pcf or 1600-2400 kg/m^3) concrete floor. Min 5 in. (127 mm) thick reinforced lightweight or normal weight (100-150 pcf or 1600-2400 kg/m^3) concrete wall. Wall may also be constructed of any UL Classified **Concrete Blocks***. Max size of opening is 30 by 9 in. (762 by 229 mm).

See **Concrete Blocks** (CAZT) category in the Fire Resistance Directory for names of manufacturers.

2. **Cable Tray*** — Max 24 in. (610 mm) wide by 6 in. (152 mm) deep open-ladder steel or aluminum cable tray. The annular space between cable tray and periphery of opening shall be min 0 in. (0 mm) (point contact) to max 6 in. (152 mm). Cable tray to be rigidly supported on both sides of floor or wall assembly.

3. **Cables** — Aggregate cross-sectional area of cable tray to be max 67 percent of the cross-sectional area of the cable tray. Any combination of the following types and sizes of cables may be used:

A. Max 300 pair No. 24 AWG telephone cable with polyvinyl chloride (PVC) insulation and jacket.

B. Max 500 kcmil single conductor copper or aluminum power cable with PVC jacket material.

C. Multiple fiber optical communication cable with PVC jacket and having a max OD of 1/2 in. (12 mm).

D. Max 3/C No. 12 AWG copper conductor steel clad cable with PVC insulation.

E. Max 7/C No. 12 AWG copper conductor cable jacket with PVC.

4. **Firestop System** — The firestop system shall consist of the following:

A. **Packing Material** — Min 4 in. (102 mm) thickness of 4 pcf (64 kg/m^3) mineral wool batt insulation tightly packed into the opening as a permanent form. Packing material to be recessed from top surface of floor or both surfaces of wall to accommodate the required thickness of fill material.

B. **Fill, Void or Cavity Material - Sealant*** — Min 1/2 in. (13 mm) thickness of fill material applied within the annulus flush with the top surface of the floor or both surfaces of the wall.

HILTI CONSTRUCTION CHEMICALS, DIV OF

HILTI INC — FS-ONE Sealant

*Bearing the UL Classification Mark

Last Updated on 2004-04-26

SYSTEM NO. W-L-4060

Through-penetration Firestop Systems

See General Information for Through-penetration Firestop Systems

System No. W-L-4060

October 29, 2004

F Ratings — 1 and 2 Hr (See Item 1)

T Rating — 1/2 Hr

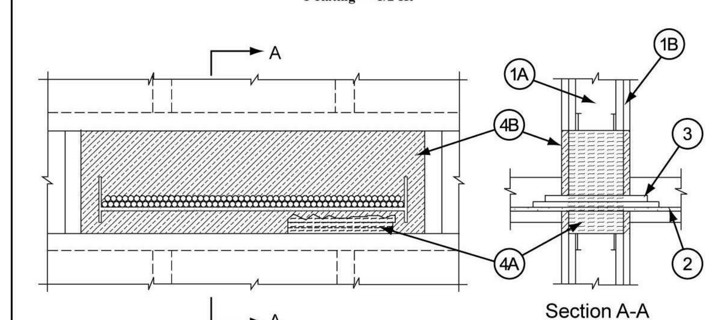

1. **Wall Assembly —** The 1 or 2 hr fire-rated gypsum board/stud wall assembly shall be constructed of the materials and in the manner specified in the individual U300, U400 or V400 Series Wall and Partition Designs in the UL Fire Resistance Directory and shall include the following construction features:

A. **Studs —** Wall framing may consist of either wood studs or channel shaped steel studs. Wood studs to consist of nom 2 by 4 in. (51 by 102 mm) lumber spaced max 16 in. (406 mm) OC. Steel studs to be min 3-1/2 in. (89 mm) wide and spaced max 24 in. (610 mm) OC. Additional framing members shall be installed in stud cavity to form a rectangular box around the penetrants.

B. **Gypsum Board* —** 5/8 in. (16 mm) thick with square or tapered edges. The gypsum board type, thickness, number of layers, fastener type and sheet orientation shall be as specified in the individual U300, U400 or V400 Wall and Partition Design. If the cable tray is installed in a wood stud/gypsum board assembly, the max area of opening is 130 in.2 (842 cm^2) with max dimension of 14-1/2 in. (368 mm). If the cable tray is installed in a steel stud/gypsum board assembly, max area of opening is 270 in2. (1742 cm^2) with max dimension of 30 in. (762 mm) wide.

The hourly F Rating of the firestop system is equal to the hourly fire rating of the wall assembly in which it is installed.

2. **Cable Tray —** For wall assemblies consisting of steel studs, max 24 in. (610 mm) wide by max 6 in. (152 mm) deep open ladder cable tray with channel-shaped side rails formed of min 0.060 in. (1.5 mm) thick galv steel or aluminum with nom 1 in. (25 mm) diam rungs spaced 9 in. (229 mm) OC. For wall assemblies consisting of wood studs, max 12 in. (305 mm) wide by max 6 in. (152 mm) deep open ladder cable tray with channel-shaped side rails formed of min 0.060 in. (1.5 mm) thick galv steel or aluminum with nom 1 in. (25 mm) diam rungs spaced 9 in. (229 mm) OC. The annular space between the cable tray and the periphery of the opening will be min 0 in. (0 mm, point contact) to max 3 in. (76 mm). Cable tray to be rigidly supported on both sides of wall assembly.

3. **Cables —** Aggregate cross-sectional area of cable tray to be max 40 percent of the cross-sectional area of the cable tray based on a max 5 in. (127 mm) loading depth. Any combination of the following types and sizes of cables may be used:

A. Max 300 pair No. 24 AWG telephone cable with polyvinyl chloride (PVC) insulation and jacket.

B. Max 750 kcmil single conductor copper power cable with PVC jacket material.

C. Multiple fiber optical communication cable with PVC jacket and having a max OD of 1/2 in. (12 mm).

D. **Through Penetrating Product* —** Max 3/C No. 12 AWG (or smaller) Metal-Clad Cable+ currently Classified under the Through Penetrating Product category.

See **Through Penetrating Product** (XHLY) category in the Fire Resistance Directory for names of manufacturers.

4. **Firestop System —** The firestop system shall consist of the following:

A. **Packing Material —** In 2 hr fire rated wall assemblies, min 5 in. (127 mm) thickness of min 4 pcf (64 kg/m^3) mineral wool batt insulation firmly packed into opening as a permanent form. In 1 hr fire rated wall assemblies, min 3-3/4 in. (95 mm) thickness of min 4 pcf (64 kg/m^3) mineral wool batt insulation firmly packed into opening as a permanent form. Packing material recessed from both surfaces of the wall to accommodate the required thickness of fill material.

B. **Fill, Void or Cavity Material* — Sealant —** Min 1/2 in. (13 mm) thickness of fill material applied within annulus, flush with both surfaces of wall. A min 1/2 in. (13 mm) diam bead of fill material shall be applied at the gypsum board/through penetrant interface at point contact location on both surfaces of wall.

HILTI CONSTRUCTION CHEMICALS, DIV OF

HILTI INC — FS-ONE Sealant

*Bearing the UL Classification Mark

+ Bearing the UL Listing Mark

Last Updated on 2004-10-29

SYSTEM NO. C-AJ-1226

System No. C-AJ-1226

June 27, 2007

F Rating — 3 Hr

T Rating — 0 Hr

L Rating At Ambient — Less Than 1 CFM/Sq Ft

L Rating At 400 F — 4 CFM/Sq Ft

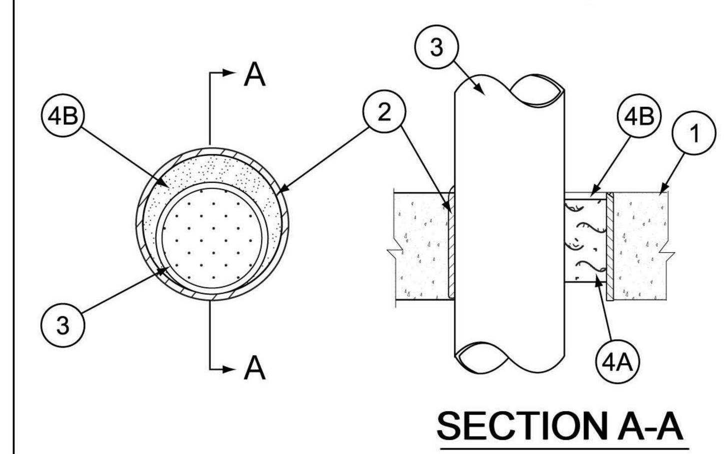

1. **Floor or Wall Assembly** — Min 4-1/2 in. thick reinforced lightweight or normal weight (100-150 pcf) concrete. Wall may also be constructed of any UL Classified **Concrete Blocks***. Max diam of opening is 32 in.

2. **Metallic Sleeve** — (Optional) Nom 32 in. diam (or smaller) Schedule 40 (or heavier) steel sleeve cast or grouted into floor or wall assembly, flush with floor or wall surfaces or extending a max of 3 in. above floor or beyond both surfaces of wall.

2A. **Sheet Metal Sleeve** — (Optional) Max 6 in. diam, min 26 ga galv steel provided with a 26 ga galv steel square flange spot welded to the sleeve at approx mid-height, or flush with bottom of sleeve in floors, and sized to be a min of 2 in. larger than the sleeve diam. The sleeve is to be cast in place and may extend a max of 4 in. below the bottom of the deck and a max of 1 in. above the top surface of the concrete floor.

2B. **Sheet Metal Sleeve** — (Optional) - Max 12 in. diam, min 24 ga galv steel provided with a 24 ga galv steel square flange spot welded to the sleeve at approx mid-height, or flush with bottom of sleeve in floors, and sized to be a min of 2 in. larger than the sleeve diam. The sleeve is to be cast in place and may extend a max of 4 in. below the bottom of the deck and a max of 1 in. above the top surface of the concrete floor.

3. **Through-Penetrant** — One metallic pipe, tube or conduit to be installed either concentrically or eccentrically within the firestop system. The annular space between penetrant and periphery of opening shall be min 0 in. (point contact) to max 1-7/8 in. Penetrant may be installed with continuous point contact. Penetrant to be rigidly supported on both sides of floor or wall assembly. The following types and sizes of metallic penetrants may be used:

A. **Steel Pipe** — Nom 30 in. diam (or smaller) Schedule 10 (or heavier) steel pipe.

B. **Iron Pipe** — Nom 30 in. diam (or smaller) cast or ductile iron pipe.

C. **Copper Pipe** — Nom 6 in. diam (or smaller) Regular (or heavier) copper pipe.

D. **Copper Tubing** — Nom 6 in. diam (or smaller) Type L (or heavier) copper tubing.

E. **Conduit** — Nom 6 in. diam (or smaller) steel conduit.

F. **Conduit** — Nom 4 in. diam (or smaller) steel electrical metallic tubing (EMT).

4. **Firestop System** — The firestop system shall consist of the following:

A. **Packing Material** — Min 4 in. thickness of min 4 pcf mineral wool batt insulation firmly packed into opening as a permanent form. Packing material to be recessed from top surface of floor or sleeve or from both surfaces of wall or sleeve as required to accommodate the required thickness of fill material.

B. **Fill, Void or Cavity Material* — Sealant** — Min 1/4 in. thickness of fill material applied within the annulus, flush with top surface of floor or sleeve or with both surfaces of wall or sleeve. At the point or continuous contact locations between penetrant and concrete or sleeve, a min 1/4 in. diam bead of fill material shall be applied at the concrete or sleeve/ pipe penetrant interface on the top surface of floor and on both surfaces of wall.

HILTI CONSTRUCTION CHEMICALS, DIV OF

HILTI INC — FS-One Sealant

*Bearing the UL Classification Mark

Last Updated on 2007-06-27

SYSTEM NO. C-AJ-1421

System No. C-AJ-1421

April 26, 2004

F Rating — 2 and 3 Hr (See Item 4B)

T Rating — 0 Hr

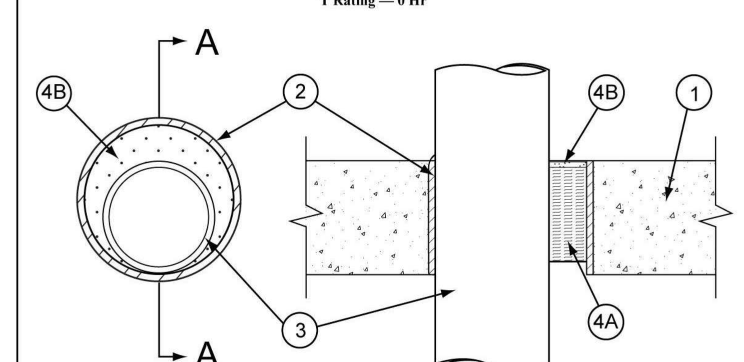

1. **Floor or Wall Assembly** — Min 4-1/2 in. (114 mm) thick reinforced lightweight or normal weight (100-150 pcf or 1600-2400 kg/m^3) concrete. Wall may also be constructed of any UL Classified **Concrete Blocks***. Max diam of opening is 6 in. (152 mm).

See **Concrete Blocks** (CAZT) category in the Fire Resistance Directory for names of manufacturers.

2. **Metallic Sleeve** — (Optional) Nom 6 in. (152 mm) diam (or smaller) Schedule 40 (or heavier) steel sleeve cast or grouted into floor or wall assembly, flush with floor or wall surfaces.

3. **Through-Penetrant** — One metallic pipe or conduit to be installed either concentrically or eccentrically within the firestop system. The annular space between pipe, tube or conduit and periphery of opening shall be min 0 in. (0 mm) (point contact) to max 5-3/8 in. (137 mm). Pipe or conduit to be rigidly supported on both sides of floor or wall assembly. The following types and sizes of metallic pipes or conduits may be used:

A. **Steel Pipe** — Nom 4 in. (102 mm) diam (or smaller) Schedule 10 (or heavier) steel pipe.

B. **Iron Pipe** — Nom 4 in. (102 mm) diam (or smaller) cast or ductile iron pipe.

C. **Copper Pipe** — Nom 4 in. (102 mm) diam (or smaller) Regular (or heavier) copper pipe.

D. **Copper Tubing** — Nom 4 in. (102 mm) diam (or smaller) Type L (or heavier) copper tubing.

E. **Conduit** — Nom 4 in. (102 mm) diam (or smaller) steel conduit.

F. **Conduit** — Nom 4 in. (102 mm) diam (or smaller) steel electrical metallic tubing (EMT).

4. **Firestop System** — The firestop system shall consist of the following:

A. **Packing Material** — Min 4 in. (102 mm) thickness of min 4 pcf (64 kg/m^3) mineral wool batt insulation firmly packed into opening as a permanent form. Packing material to be recessed from top surface of floor or from both surfaces of wall as required to accommodate the required thickness of fill material.

B. **Fill, Void or Cavity Material* - Sealant** — Min 1/4 in. (6 mm) thickness of fill material applied within the annulus, flush with top surface of floor or with both surfaces of wall. For 3 Hr rated assemblies, a min 1/4 in. (6 mm) diam bead of fill material shall be applied at the concrete/pipe interface at the point contact location on the top surface of floor and on both surfaces of wall.

HILTI CONSTRUCTION CHEMICALS, DIV OF

HILTI INC — FS-ONE Sealant or CP604 Self-Leveling Firestop Sealant. CP604 shall be used in floor applications only.

When CP604 is used, F Rating is 2 Hr.

*Bearing the UL Classification Mark

Last Updated on 2004-04-26

VCBO ARCHITECTURE

VCBO ARCHITECTURE
524 SOUTH 600 EAST
SALT LAKE CITY, UT 84102
Phone: (801) 575-8800
Fax: (801) 531-9850
Web: vcbo.com

LICENSED ARCHITECT No. 133912 BRENT R. TIPPETS 8.15.13 STATE OF UTAH

2nd District Juvenile Courthouse

Utah State Courts

08284150

165 West 20th Street, Ogden, Utah

BID DOCUMENTS

Rev #	Date	Description

Job # 12500
Date August 15, 2013
Owner # 08284150
Ins. #

UL LISTINGS

G203

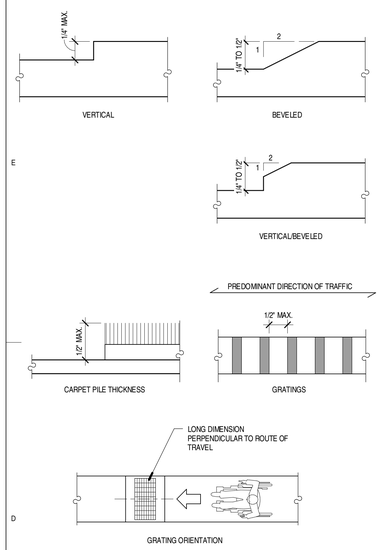

303. CHANGES IN LEVEL

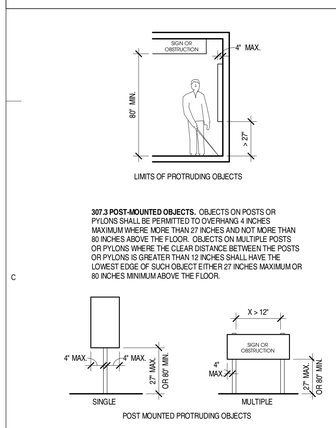

307. PROTRUDING OBJECTS

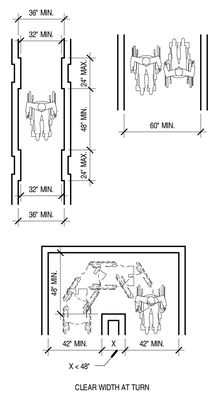

403. ACCESSIBLE ROUTES

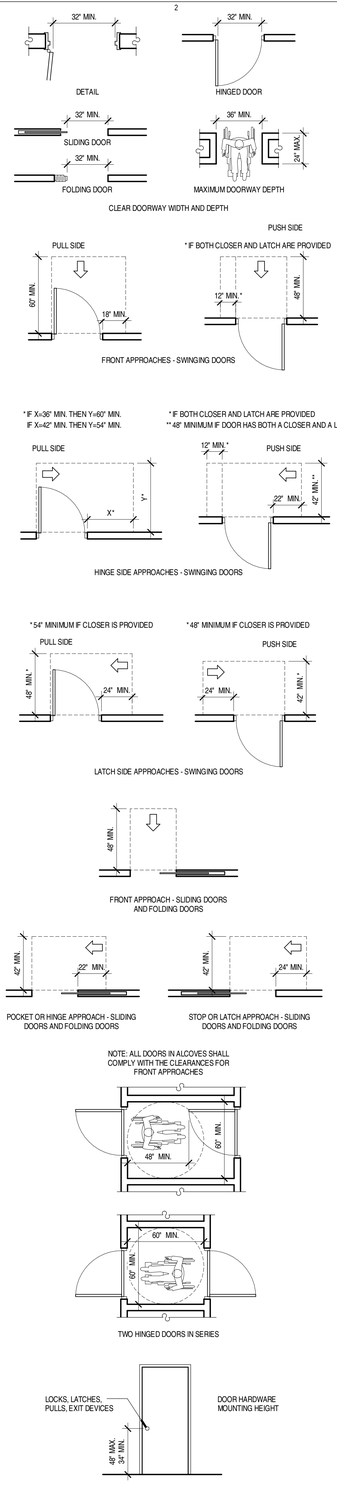

404. DOORS AND DOORWAYS

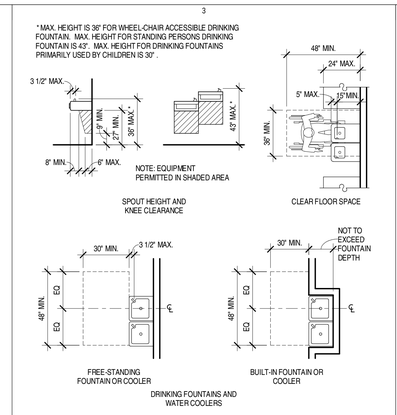

602 DRINKING FOUNTAINS

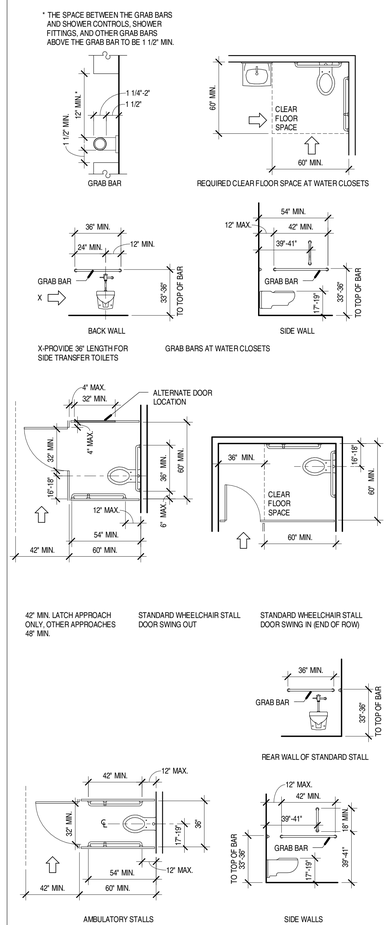

604 TOILETS AND TOILET COMPARTMENTS

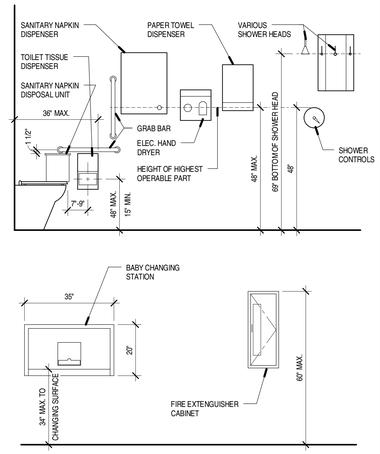

604.7 ACCESSORIES AND EQUIPMENT

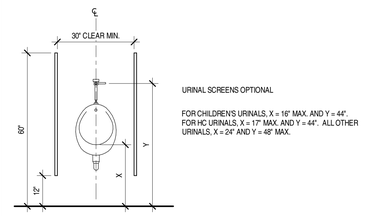

605 URINALS

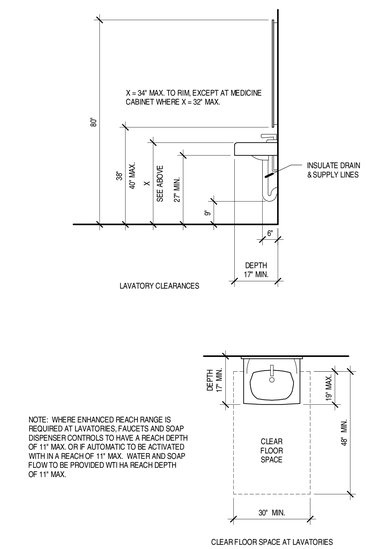

606. LAVATORIES AND SINKS

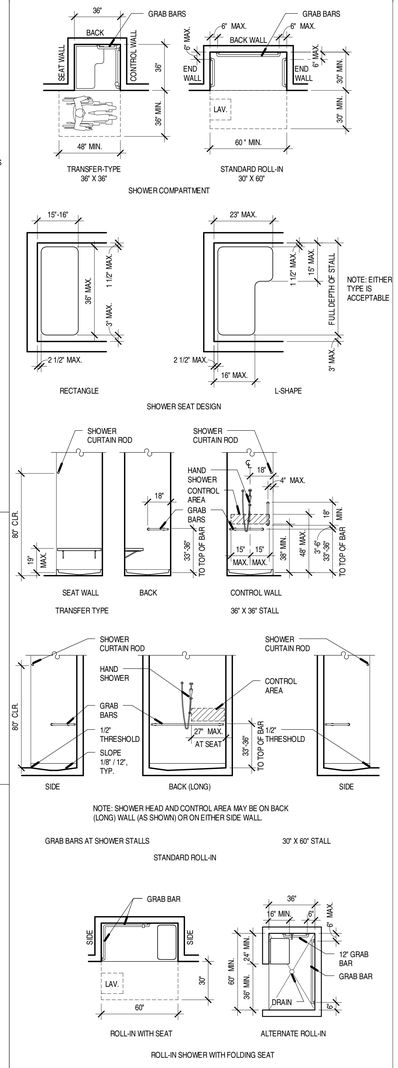

608. SHOWER COMPARTMENTS

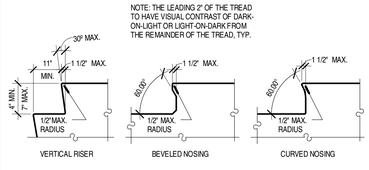

504.5 STAIR NOSINGS

VCBO ARCHITECTURE
524 SOUTH 600 EAST
SALT LAKE CITY, UT 84102
Phone: (801) 575-8800
Fax: (801) 531-9850
Web: vcbo.com

LICENSED ARCHITECT No. 133012 BRENT R. TIPPETS 8-15-13 STATE OF UTAH

2nd District Juvenile Courthouse

Utah State Courts

08284150

165 West 20th Street, Ogden, Utah

BID DOCUMENTS

Rev #	Date	Description
1	4/30/2013	Fire Marshal Response

Job # 12500
Date August 15, 2013
Owner # 08284150
Ins. #

TYPICAL ANSI ACCESSIBILITY STANDARDS

G300

8/14/2013 10:10:12 AM

KEYED NOTES

301	REINFORCED CONCRETE FOUNDATION WALL	717	SINGLE PLY MEMBRANE ROOFING, ROOFING INSULATION AND ROOFING VAPOR BARRIER
302	REINFORCED CONCRETE SLAB ON METAL DECK	718	PRE-FINISHED PROFILE METAL, RANDOM VERTICAL PATTERN, SEE DETAIL ELEVATION
303	REINFORCED CONCRETE SLAB	726	PRE-FINISHED PROFILE METAL PANEL, HORZONTAL RIB
308	GFRC INSULATED WALL ASSEMBLY WITH VAPOR BARRIER	800	SCHEDULED DOOR & FRAME
314	GFRC NON-INSULATED WALL ASSEMBLY	801	WINDOW SYSTEM
501	STEEL BEAM PAINTED WHERE EXPOSED	810	EXTERIOR SUN CONTROL DEVICES
503	STEEL DECK PAINTED WHERE EXPOSED	901	METAL STUD FRAMING
507	STEEL COLUMN PAINTED WHERE EXPOSED	905	5/8" TYPE 'X' GYP. BD. PAINTED WHERE EXPOSED
515	COLD ROLLED METAL STUD FRAMING	906	5/8" GYP. SHEATHING
704	FLUID APPLIED AIR AND VAPOR BARRIER	2203	ROOF DRAIN
708	R-20 ROOF RIGID INSULATION BOARD SYSTEM OVER VAPOR BARRIER	3100	ENGINEERED FILL
710	2". R-8 MIN. SPRAYED ON THERMAL INSULATION SYSTEM	3101	FREE DRAINING GRAVEL BASE
712	PRE-FINISHED CONT. METAL CAP & CLEAT OVER	3102	FINISH GRADE
715	ACM METAL PANEL OVER 3" THERMALLY BROKEN Z GIRTS		
716	PRE-FINISHED EXTERIOR METAL SOFFIT		

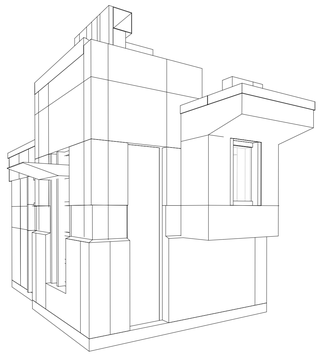

E1 MOCKUP VIEW EAST
SCALE:

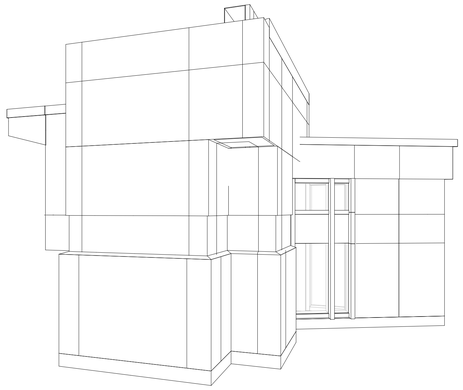

E2 MOCKUP VIEW NORTH
SCALE:

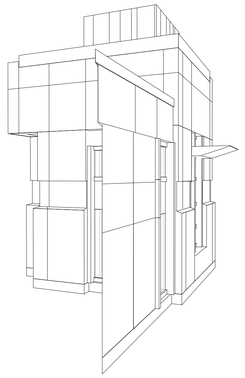

E4 MOCKUP VIEW WEST
SCALE:

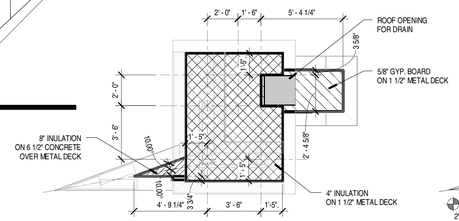

D5 MOCKUP ROOF DECK PLAN
SCALE: 1/4" = 1'-0"

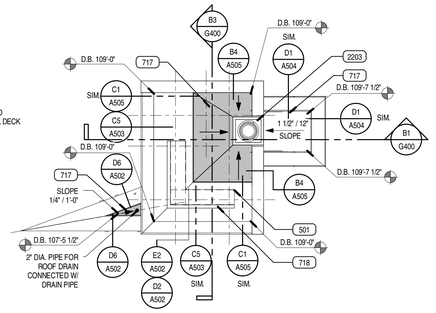

D6 MOCKUP ROOF PLAN
SCALE: 1/4" = 1'-0"

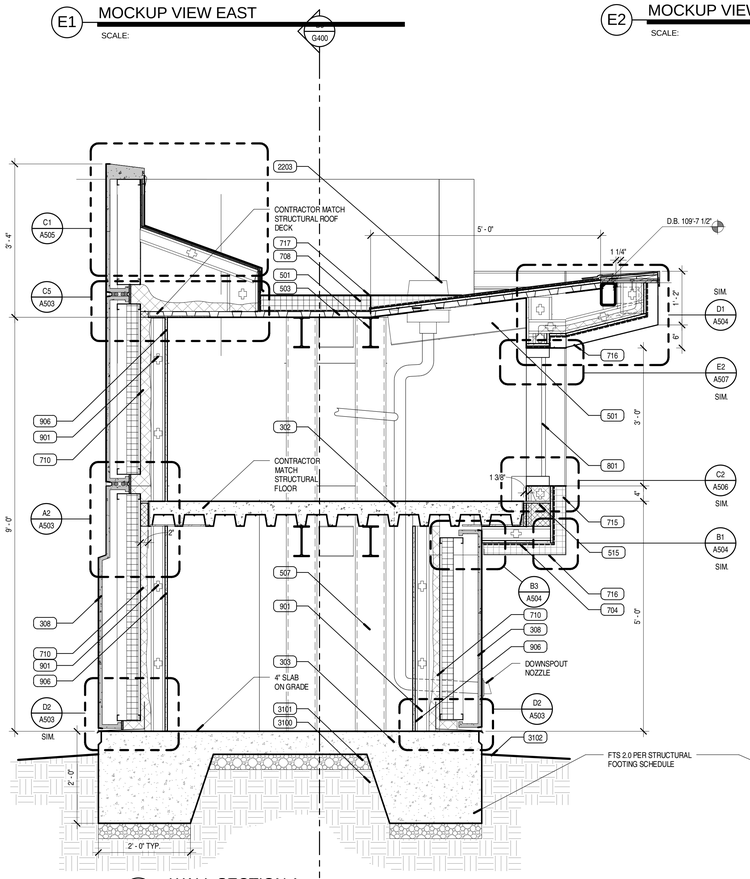

B1 WALL SECTION 1
SCALE: 3/4" = 1'-0"

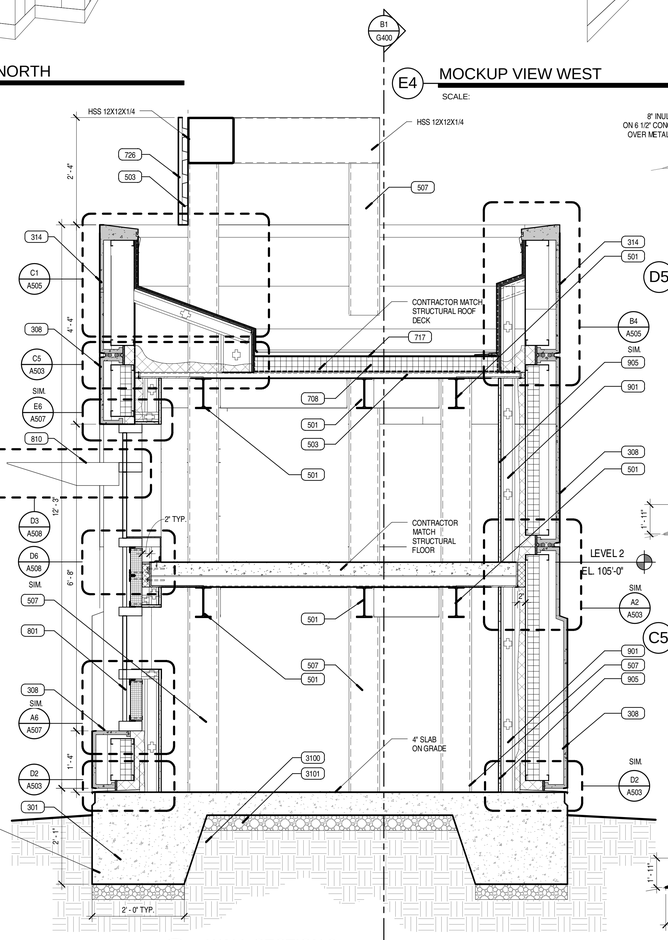

B3 WALL SECTION 2
SCALE: 3/4" = 1'-0"

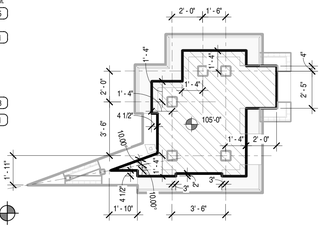

C5 MOCKUP PLAN LEVEL 2 SLAB PLAN
SCALE: 1/4" = 1'-0"

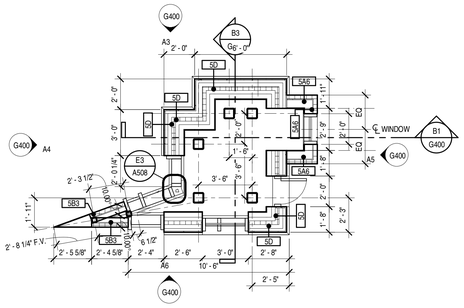

C6 MOCKUP PLAN LEVEL 2
SCALE: 1/4" = 1'-0"

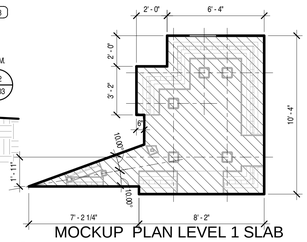

B5 MOCKUP PLAN LEVEL 1 SLAB PLAN
SCALE: 1/4" = 1'-0"

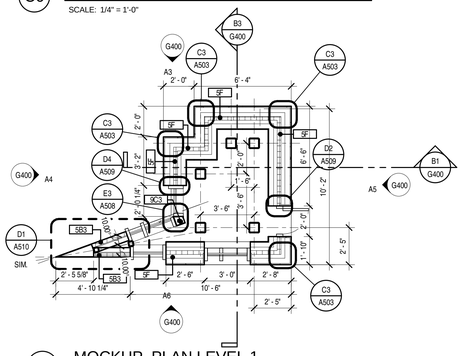

B6 MOCKUP PLAN LEVEL 1
SCALE: 1/4" = 1'-0"

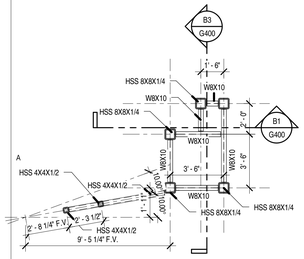

A1 LEVEL 1 MOCKUP STRUCTURAL FRAMING PLAN
SCALE: 1/4" = 1'-0"

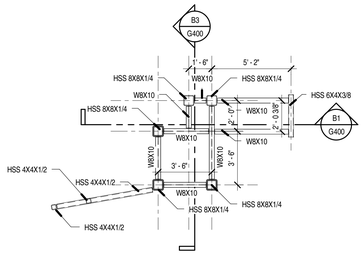

A2 LEVEL 2 MOCKUP STRUCTURAL FRAMING PLAN
SCALE: 1/4" = 1'-0"

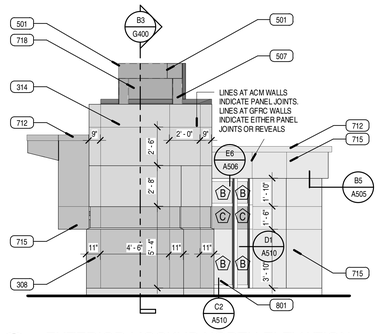

A3 EXTERIOR MOCKUP NORTH ELEVATION
SCALE: 1/4" = 1'-0"

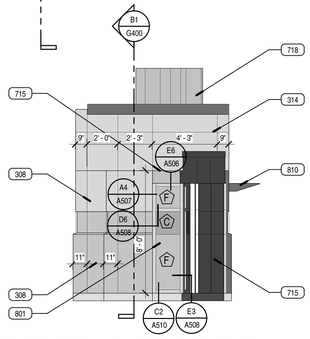

A4 EXTERIOR MOCKUP WEST ELEVATION
SCALE: 1/4" = 1'-0"

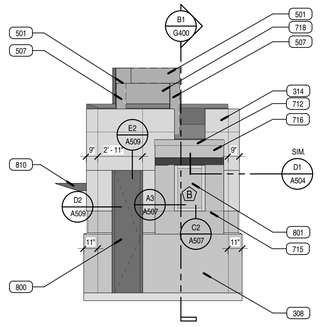

A5 EXTERIOR MOCKUP EAST ELEVATION
SCALE: 1/4" = 1'-0"

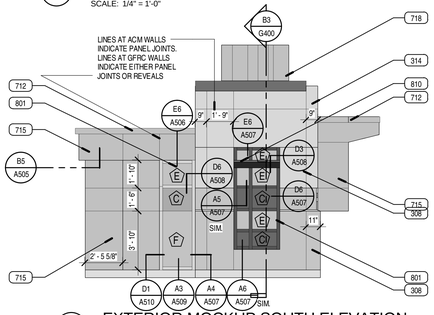

A6 EXTERIOR MOCKUP SOUTH ELEVATION
SCALE: 1/4" = 1'-0"

8/14/2013 10:10:53 AM

VCBO ARCHITECTURE
524 SOUTH 600 EAST
SALT LAKE CITY, UT 84102
Phone: (801) 575-8800
Fax: (801) 531-9850
Web: vcbo.com

LICENSED ARCHITECT No. 133912 BRENT R. TIPPETS 8-15-13 STATE OF UTAH

2nd District Juvenile Courthouse

Utah State Courts
08284150
165 West 20th Street, Ogden, Utah
BID DOCUMENTS

Rev #	Date	Description

Job # 12500
Date August 15, 2013
Owner # 08284150
Ins. #

MOCKUP

G400

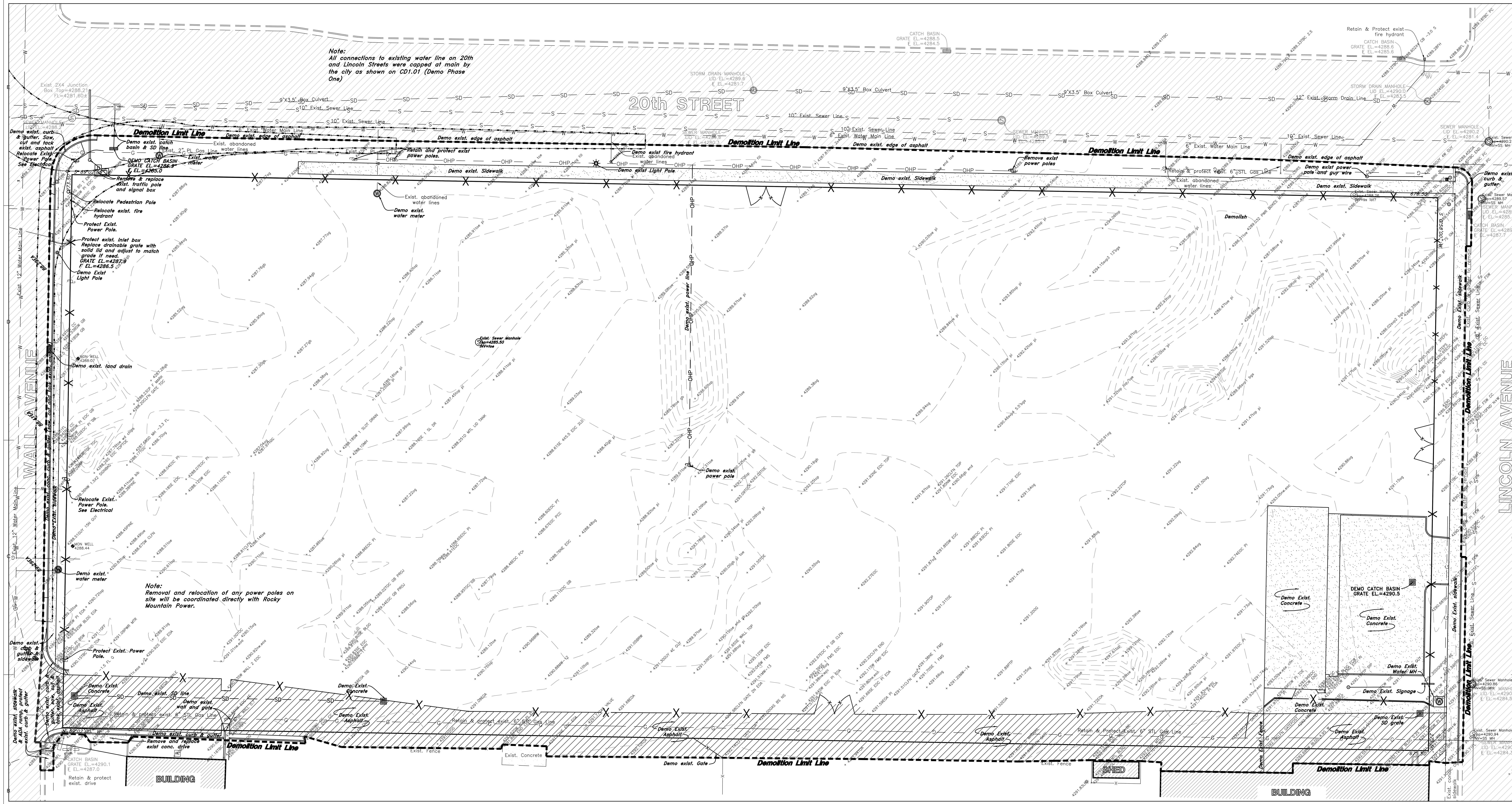

General Demolition Notes:

1. Demolition and site clearing for this contract are to include all areas shown within demolition limits or by note.
2. Refer to site improvement plans for more details on limits of removal.
3. Demolish existing buildings and clear from site. (Including removal of all footings and foundations.)
4. All curbs, gutters, walks, slabs, walls, fences, flatwork, asphalt, waterlines and meters, gas lines, sewer lines, light poles, buried cables, storm drain piping and structures to be cleared from site unless otherwise shown.
5. All utilities, sewer, water, gas, telephone and electrical services to be disconnected and capped According to city, county and utility company requirements, unless otherwise shown.
6. Basements and other excavated areas to be left open surrounded by safety fencing.
7. Clear and grub trees, shrubs, and vegetation within construction limits, disposal to be off-site Except where noted otherwise.
8. DO NOT interrupt any services or disrupt the operation of any businesses shown outside the demolition limits.
9. If ASBESTOS is found in existing structures, the Asbestos must be removed in a legal manner by a contractor licensed to handle asbestos materials. (Not a part of contract)
10. Remove debris, rubbish, and other materials resulting from the demolition and site clearing operations from the site. 75% of demolished material will be recycled. Contractor shall retain paper work to show proof of recycling. Demolition shall meet LEED 'Gold' Standards.
11. The location and/or elevation of existing utilities as shown on these plans is based on records of the various utility companies and, where possible, measurements taken in the field. The information is not to be relied upon as being exact or complete. Contractor shall contact authorities having jurisdiction for field locations. Contractor shall be responsible for protection of in place and relocated utilities during construction.
12. Stockpiles shall be graded to maintain slopes not greater than 3 horizontal to 1 vertical. Provide erosion control as needed to prevent sediment transport to adjacent drainage ways.
13. Contractor shall be responsible for disposal of all waste material. Disposal shall be at an approved site for such material. Burning onsite is not permitted.
14. Contractor shall verify with city any street removal, curb cuts, and any restoration required for utility line removal.
15. Install traffic warning devices as needed in accordance with local standards.
16. Contractor shall obtain all permits necessary for demolition from City, County, State or Federal Agencies as required.
17. Contractor must contact city water dept. before beginning demolition, to request written conformation that all water lines have been capped at the main line by the city water dept.
18. Contractor will construct a 6' chain link safety fence around site as indicated by plan. Three 20' access gates will be constructed in locations indicated for construction circulation

SURVEY DISCLAIMER

Francom Engineering Company provided the the Topographical Survey Information used in preparing this drawing, "Ogden Juvenile Courts ALTA Survey", dated 08/01/2013. Great Basin Engineering makes no claims to the accuracy of the information provided by Francom Engineering Company.

CAUTION NOTICE TO CONTRACTOR

The contractor is specifically cautioned that the location and/or elevation of existing utilities as shown on these plans are based on records of the various utility companies and, where possible, measurements taken in the field. The information is not to be relied on as being exact or complete. The contractor must call the appropriate utility company at least 48 hours before any excavation to request exact field location of utilities. It shall be the responsibility of the contractor to relocate all existing utilities which conflict with the propose improvements shown on the plans.

PRIVATE ENGINEER'S NOTICE TO CONTRACTORS

The Contractor agrees that he shall assume sole and complete responsibility for job site conditions during the course of construction of this project, including safety of all persons and property: that this requirement shall apply continuously and not be limited to normal working hours; and that the contractor shall defend, indemnify, and hold the owner and the engineer harmless from any and all liability, real or alleged, in connection with the performance of work on this project, excepting for liability arising from the sole negligence of the owner or the engineer.

ALL CONSTRUCTION TO CONFORM TO CITY STANDARDS AND SPECIFICATIONS IN RIGHT OF WAY

BLUE STAKES
CALL BEFORE YOU DIG
Call: TOLL FREE
1-800
662-4111
TWO WORKING DAYS BEFORE YOU DIG

20 0 10 20 30 40
Graphic Scale *Scale: 1" = 20'*

N

VCBO ARCHITECTURE
524 SOUTH 600 EAST
SALT LAKE CITY, UT 84102
Phone: (801) 575-8800
Fax: (801) 531-9850
Web: vcbo.com

LICENSED PROFESSIONAL ENGINEER No. 166484 MARK EUGENE BABBITT 8-15-13 STATE OF UTAH

GREAT BASIN ENGINEERING INC
5746 South 1475 East - Suite 200
Ogden, Utah 84403 Main (801)394-4515
S.L.C (801)521-0222 Fax 801-392-7544
WWW.GREATBASINENGINEERING.COM

2nd District Juvenile Courthouse

Utah State Courts
08284150
165 West 20th Street, Ogden, Utah
BID DOCUMENTS

Rev #	Date	Description

Job # 12500
Date August 15, 2013
Owner # 08284150
Ins. #

PHASE TWO CIVIL
DEMOLITION PLAN

CD1.02

3/18/2013 9:25:16 AM

W:\12N223 Ogden Juvenile Court\Drawings\12N223_S13.dwg, 8/14/2013 9:07:09 AM, brianb, 1:1

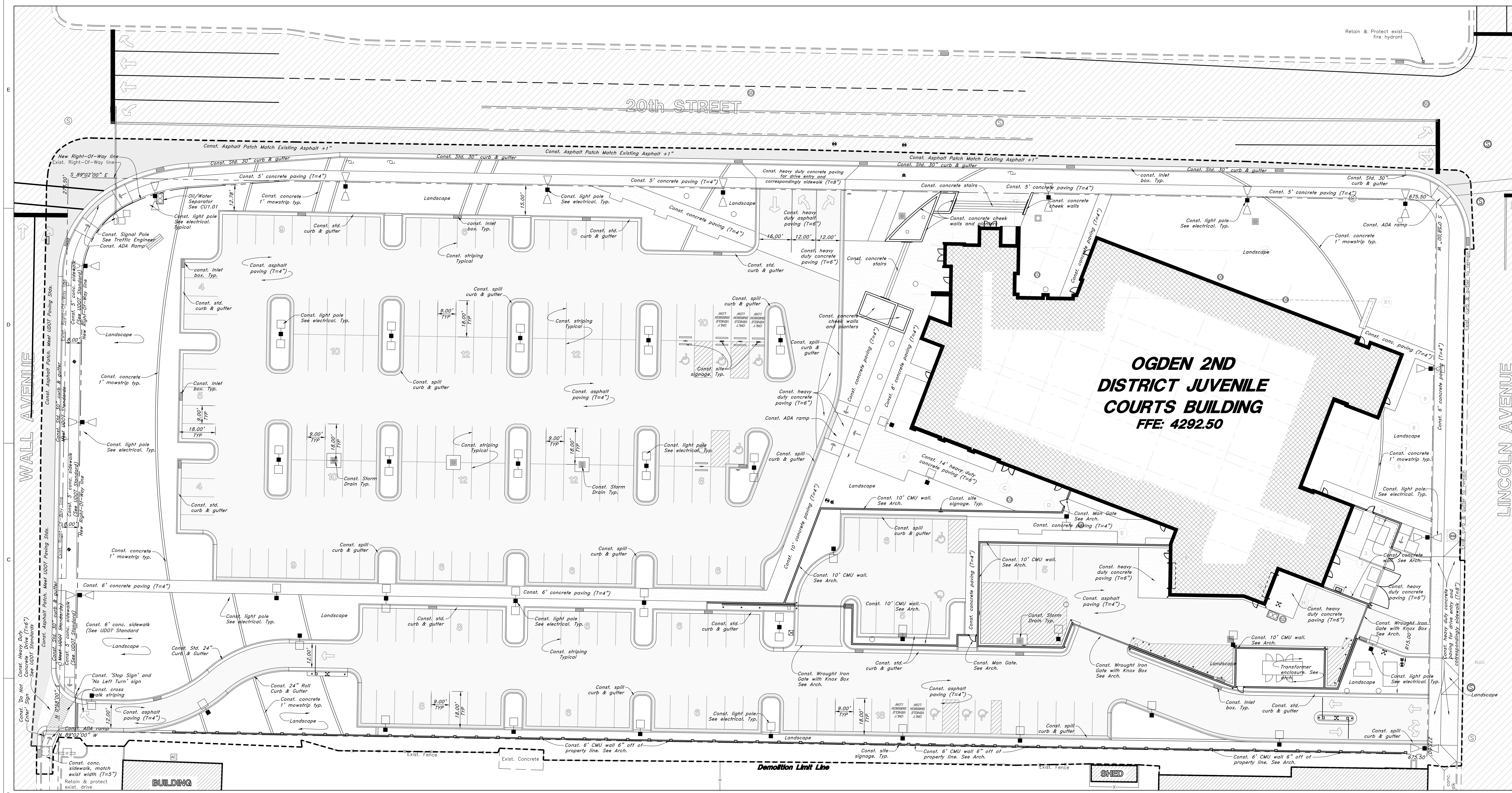

Site Plan Requirements:
Total Parcel Area – 4.23 ACRES
Total Const. Area – 4.82 ACRES
Asphalt Area – 80582.74 SQ.FT
Concrete Area – 24042.12 SQ.FT
Landscape Area – 49678.02 SQ.FT
Parking Stalls Req'd – (1 per 500 SQ.FT)
Parking Stalls Shown – 217

Existing Elevations (by contours & points)
Proposed Elevations (by contours & points)

Current Zoning Type: Commercial Business District (CBD)
Adjacent Zoning: Mixed Use(MU)

SURVEY DISCLAIMER
Francom Engineering Company provided the the Topographical Survey Information used in preparing this drawing, "Ogden Juvenile Courts ALTA Survey", dated 08/01/2013. Great Basin Engineering makes no claims to the accuracy of the information provided by Francom Engineering Company.

CAUTION NOTICE TO CONTRACTOR
The contractor is specifically cautioned that the location and/or elevation of existing utilities as shown on these plans are based on records of the various utility companies and, where possible, measurements taken in the field. The information is not to be relied on as being exact or complete. The contractor must call the appropriate utility company at least 48 hours before any excavation to request exact field location of utilities. It shall be the responsibility of the contractor to relocate all existing utilities which conflict with the propose improvements shown on the plans.

PRIVATE ENGINEER'S NOTICE TO CONTRACTORS
The Contractor agrees that he shall assume sole and complete responsibility for job site conditions during the course of construction of this project, including safety of all persons and property: that this requirement shall apply continuously and not be limited to normal working hours; and that the contractor shall defend, indemnify, and hold the owner and the engineer harmless from any and all liability, real or alleged, in connection with the performance of work on this project, excepting for liability arising from the sole negligence of the owner or the engineer.

ALL CONSTRUCTION TO CONFORM TO CITY STANDARDS AND SPECIFICATIONS IN RIGHT OF WAY

General Site Notes:
1. Stalls designated as handicap will require a painted handicap symbol and sign. (See Details)
2. Fire lane markings and signs to be installed as directed by the Fire Marshall.
3. Aisle markings, directional arrows and stop bars will be painted at each driveway as shown on the plans.
4. See Horizontal Control plan for coordinates, radiuses and detailed dimensions of site improvements.
5. Building sidewalks, ramps, and bollards are building contractor responsible items. See architectural plans.
6. All dimensions are to back of curb unless otherwise noted.
7. All construction within the UDOT Right–of–Way shall conform to the most current UDOT standard drawings and specifications, found at udot.utah.gov/go/2012standards
8. Asphalt construction in the UDOT Right–of–Way will conform to the following standards:
   A. 11 inches of UDOT approved hot mix asphalt PG–grade 64–34 asphalt binder, 1/2" nominal max 7–75–115 gyration per UDOT standard specification 02741 over;
   B. 8" of untreated base course per UDOT specification 02721 over;
   C. 18" of granular borrow per UDOT specification 02056

Curb and Gutter Construction Notes:
1. Open face gutter shall be constructed where drainage is directed away from curb.
2. Open face gutter locations are indicated by shading and notes on site and grading plan.
3. It is the responsibility of the surveyor to adjust top of curb grades at the time construction staking.
4. Refer to the typical details for a standard and open face curb and gutter for dimensions.
5. Transitions between open face and standard curb and gutter are to be smooth. Hand form these areas if necessary.

BLUE STAKES
CALL BEFORE YOU DIG
Call: TOLL FREE
1–800 662–4111
TWO WORKING DAYS BEFORE YOU DIG

Graphic Scale — Scale: 1" = 20'

VCBO ARCHITECTURE
VCBO ARCHITECTURE
524 SOUTH 600 EAST
SALT LAKE CITY, UT 84102
Phone: (801) 575-8800
Fax: (801) 531-9850
Web: vcbo.com

No. 166484 MARK EUGENE BABBITT STATE OF UTAH 8-15-13

GREAT BASIN ENGINEERING INC
5746 South 1475 East · Suite 200
Ogden, Utah 84403 Main (801)394-4515
S.L.C (801)521-0222 Fax 801-392-7544
WWW.GREATBASINENGINEERING.COM

2nd District Juvenile Courthouse
Utah State Courts
08284150
165 West 20th Street, Ogden, Utah
BID DOCUMENTS

Rev #	Date	Description

Job # 12500
Date August 15, 2013
Owner # 08284150
Ins. #

SITE PLAN

CS1.01

3/18/2013 9:25:16 AM

W:\12N223 Ogden Juvenile Court\Drawings\12N223_S13.dwg, 8/14/2013 9:07:19 AM, brianb, 1:1

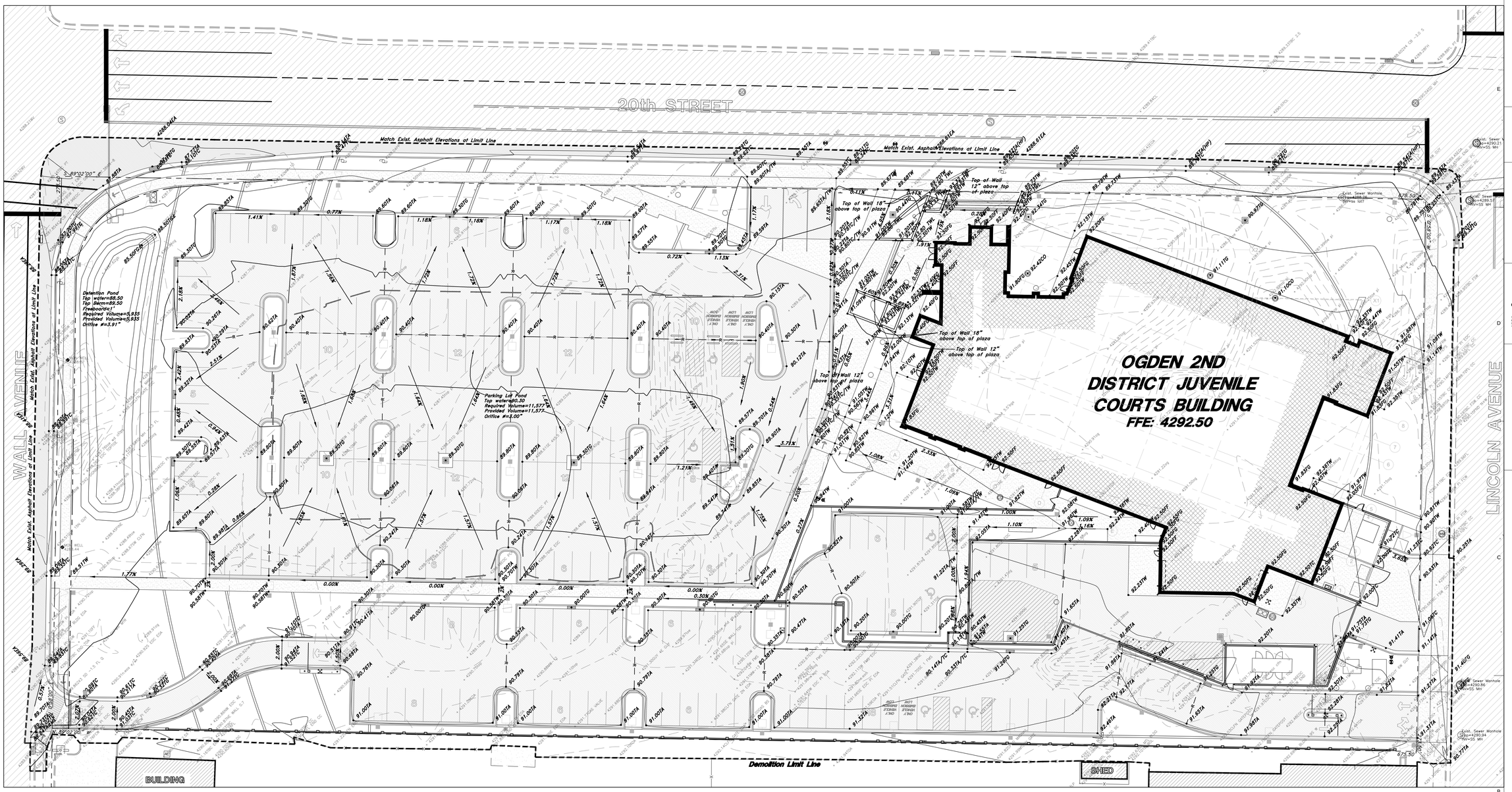

SURVEY DISCLAIMER

Francom Engineering Company provided the the Topographical Survey Information used in preparing this drawing, "Ogden Juvenile Courts ALTA Survey", dated 08/01/2013. Great Basin Engineering makes no claims to the accuracy of the information provided by Francom Engineering Company.

CAUTION NOTICE TO CONTRACTOR

The contractor is specifically cautioned that the location and/or elevation of existing utilities as shown on these plans are based on records of the various utility companies and, where possible, measurements taken in the field. The information is not to be relied on as being exact or complete. The contractor must call the appropriate utility company at least 48 hours before any excavation to request exact field location of utilities. It shall be the responsibility of the contractor to relocate all existing utilities which conflict with the propose improvements shown on the plans.

PRIVATE ENGINEER'S NOTICE TO CONTRACTORS

The Contractor agrees that he shall assume sole and complete responsibility for job site conditions during the course of construction of this project, including safety of all persons and property; that this requirement shall apply continuously and not be limited to normal working hours; and that the contractor shall defend, indemnify, and hold the owner and the engineer harmless from any and all liability, real or alleged, in connection with the performance of work on this project, excepting for liability arising from the sole negligence of the owner or the engineer.

ALL CONSTRUCTION TO CONFORM TO CITY STANDARDS AND SPECIFICATIONS IN RIGHT OF WAY

General Grading Notes:

1. All work shall be in accordance with the City Public Works Standard.
2. Cut slopes shall be no steeper than 2 horizontal to 1 vertical.
3. Fill slopes shall be no steeper than 2 horizontal to 1 vertical.
4. Fills shall be compacted per the recommendations of the geotechnical report prepared for the project and shall be certified by the geotechnical engineer.
5. Areas to receive fill shall be properly prepared and approved by the City inspector and geotechnical Engineer prior to placing fill.
6. Fills shall be benched into competent material as per specifications and geotechnical report.
7. All trench backfill shall be tested and certified by the site geotechnical engineer per the grading code.
8. A geotechnical engineer shall perform periodic inspections and submit a complete report and map upon completion of the rough grading.
9. The final compaction report and certification from the geotechnical engineer shall contain the type of field testing performed. Each test shall be identified with the method of obtaining the in-place density, whether sand cone or drive ring and shall be so noted for each test. Sufficient maximum density determinations shall be performed to verify the accuracy of the maximum density curves used by the field technician.
10. Dust shall be controlled by watering.
11. The location and protection of all utilities is the responsibility of the permitee.
12. Approved protective measures and temporary drainage provisions must be used to protect adjoining properties during the grading project.
13. All public roadways must be cleared daily of all dirt, mud and debris deposited on them as a result of the grading operation. Cleaning is to be done to the satisfaction of the city engineer.
14. The site shall be cleared and grubbed of all vegetation and deleterious matter prior to grading.
15. The contractor shall provide shoring in accordance with OSHA requirements for trench walls.
16. Aggregate base shall be compacted per the geotechnical report prepared for the project.
17. Elevations shown on this plan are finish grades. Rough grades are the subgrades of the improvements shown hereon.
18. The recommendations in the following Geotechnical Engineering Report by AGEC, Inc. are included in the requirements of grading and site preparation.
    The report is titled "Geo-technical Investigation, Ogden 2nd District Juvenile Court"
    Job No.: 1120669
    Address: Lincoln Ave. and 20th Street, Ogden Utah
    Dated: October 8th 2012
19. As part of the construction documents, owner has provided contractor with a topographic survey performed by manual or aerial means. Such survey was prepared for project design purposes and is provided to the contractor as a courtesy. It is expressly understood that such survey may not accurately reflect existing topographic conditions.
20. Erosion Control: Protect all inlet boxes, catch basins, etc. with straw bales or other approved method to strain the storm water during construction. Protect surrounding properties and streets from site runoff with sandbags and earth berms.

Curb and Gutter Construction Notes:

1. Open face gutter shall be constructed where drainage is directed away from curb.
2. Open face gutter locations are indicated by shading and notes on site and grading plan.
3. It is the responsibility of the surveyor to adjust top of curb grades at the time construction staking.
4. Refer to the typical details for a standard and open face curb and gutter for dimensions.
5. Transitions between open face and standard curb and gutter are to be smooth. Hand form these areas if necessary.

ADA Notes:

Contractor must maintain a running slope on all sidewalks no steeper than 5.0% (1:20). The cross slope for all sidewalks must be no steeper than 2.0% (1:50). All sidewalks must have a minimum clear width of 36". All ADA ramps shall have a slope no steeper than 8.33% (1:12). If grades on plans do not meet this requirement notify Consultants immediately.

The Client, Contractor, and Subcontractor should immediately notify the Consultant of any conditions of the project that they believe do not comply with the current state of the ADA and/or FHAA.

BLUE STAKES
Call: TOLL FREE
1-800
662-4111
TWO WORKING DAYS BEFORE YOU DIG

20 0 10 20 30 40
Graphic Scale Scale: 1" = 20'

VCBO ARCHITECTURE

VCBO ARCHITECTURE
524 SOUTH 600 EAST
SALT LAKE CITY, UT 84102
Phone: (801) 575-8800
Fax: (801) 531-9850
Web: vcbo.com

No. 166484 MARK EUGENE BABBITT STATE OF UTAH
8-15-13

GREAT BASIN ENGINEERING
5746 SOUTH 1075 EAST, SUITE 200
OGDEN, UTAH 84403 FAX: (801) 394-8515
O.: (801) 621-3232 FAX: (801) 392-7944
WWW.GREATBASINENGINEERING.COM

2nd District Juvenile Courthouse

Utah State Courts
08284150
165 West 20th Street, Ogden, Utah
BID DOCUMENTS

Rev #	Date	Description

Job # 12500
Date August 15, 2013
Owner # 08284150
Ins. #

GRADING PLAN

CG1.01

3/18/2013 9:25:16 AM

W:\12N223 Ogden Juvenile Court\Drawings\12N223_S13.dwg, 8/14/2013 9:07:30 AM, brianb, 1:1

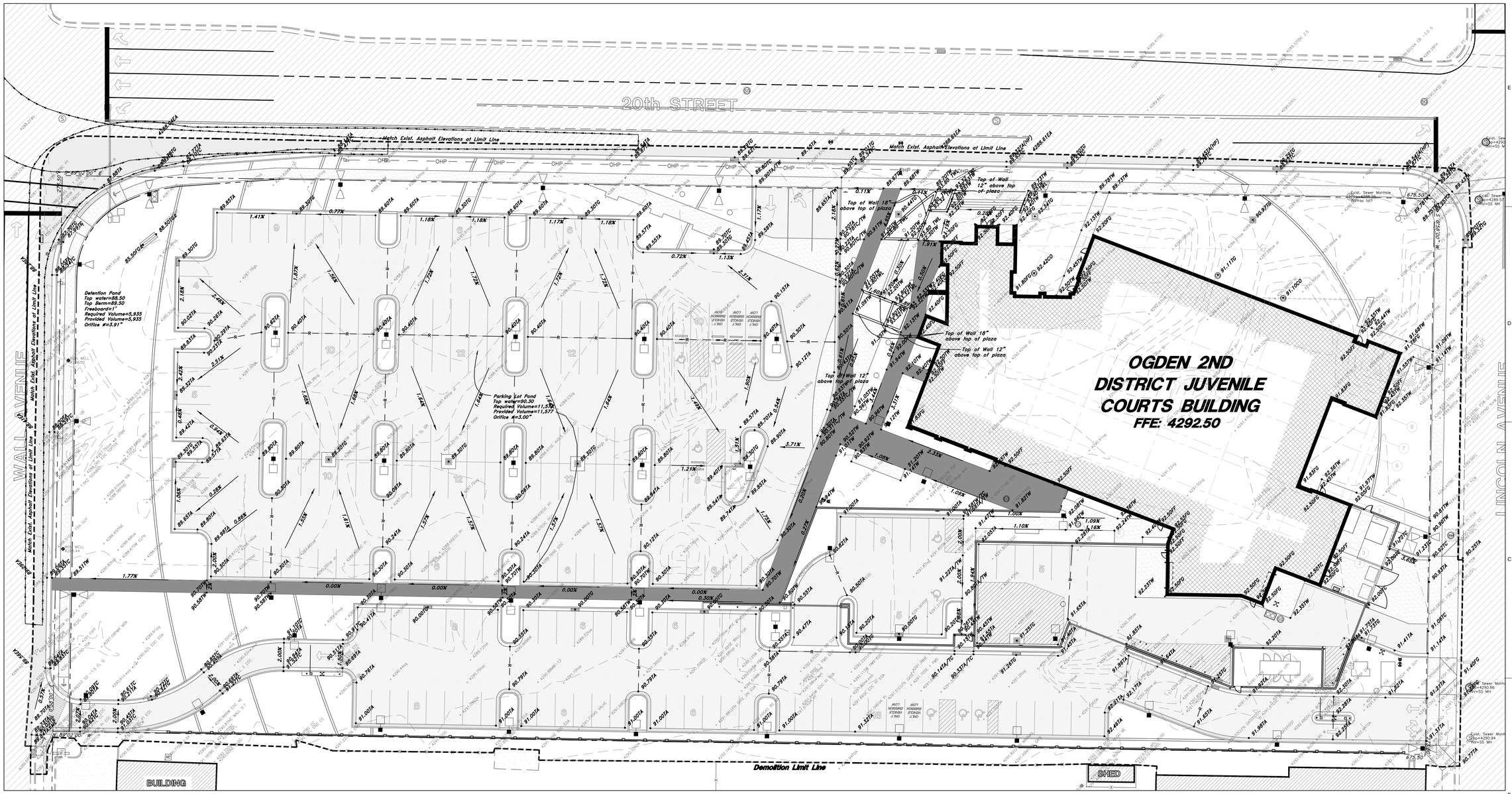

SURVEY DISCLAIMER

Francom Engineering Company provided the the Topographical Survey Information used in preparing this drawing, "Ogden Juvenile Courts ALTA Survey", dated 08/01/2013. Great Basin Engineering makes no claims to the accuracy of the information provided by Francom Engineering Company.

CAUTION NOTICE TO CONTRACTOR

The contractor is specifically cautioned that the location and/or elevation of existing utilities as shown on these plans are based on records of the various utility companies and, where possible, measurements taken in the field. The information is not to be relied on as being exact or complete. The contractor must call the appropriate utility company at least 48 hours before any excavation to request exact field location of utilities. It shall be the responsibility of the contractor to relocate all existing utilities which conflict with the propose improvements shown on the plans.

PRIVATE ENGINEER'S NOTICE TO CONTRACTORS

The Contractor agrees that he shall assume sole and complete responsibility for job site conditions during the course of construction of this project, including safety of all persons and property; that this requirement shall apply continuously and not be limited to normal working hours; and that the contractor shall defend, indemnify, and hold the owner and the engineer harmless from any and all liability, real or alleged, in connection with the performance of work on this project, excepting for liability arising from the sole negligence of the owner or the engineer.

ALL CONSTRUCTION TO CONFORM TO CITY STANDARDS AND SPECIFICATIONS IN RIGHT OF WAY

General Grading Notes:

1. All work shall be in accordance with the City Public Works Standard.
2. Cut slopes shall be no steeper than 2 horizontal to 1 vertical.
3. Fill slopes shall be no steeper than 2 horizontal to 1 vertical.
4. Fills shall be compacted per the recommendations of the geotechnical report prepared for the project and shall be certified by the geotechnical engineer.
5. Areas to receive fill shall be properly prepared and approved by the City inspector and geotechnical Engineer prior to placing fill.
6. Fills shall be benched into competent material as per specifications and geotechnical report.
7. All trench backfill shall be tested and certified by the site geotechnical engineer per the grading code.
8. A geotechnical engineer shall perform periodic inspections and submit a complete report and map upon completion of the rough grading.
9. The final compaction report and certification from the geotechnical engineer shall contain the type of field testing performed. Each test shall be identified with the method of obtaining the in-place density, whether sand cone or drive ring and shall be so noted for each test. Sufficient maximum density determinations shall be performed to verify the accuracy of the maximum density curves used by the field technician.
10. Dust shall be controlled by watering.
11. The location and protection of all utilities is the responsibility of the permitee.
12. Approved protective measures and temporary drainage provisions must be used to protect adjoining properties during the grading project.
13. All public roadways must be cleared daily of all dirt, mud and debris deposited on them as a result of the grading operation. Cleaning is to be done to the satisfaction of the city engineer.
14. The site shall be cleared and grubbed of all vegetation and deleterious matter prior to grading.
15. The contractor shall provide shoring in accordance with OSHA requirements for trench walls.
16. Aggregate base shall be compacted per the geotechnical report prepared for the project.
17. Elevations shown on this plan are finish grades. Rough grades are the subgrades of the improvements shown hereon.
18. The recommendations in the following Geotechnical Engineering Report by AGEC, Inc. are included in the requirements of grading and site preparation.
    The report is titled "Geotechnical Study Proposed High School"
    Job No.: 4171 Address: 12690 South 2700 West Riverton, Utah
    Dated: April 28th, 1997
19. As part of the construction documents, owner has provided contractor with a topographic survey performed by manual or aerial means. Such survey was prepared for project design purposes and is provided to the contractor as a courtesy. It is expressly understood that such survey may not accurately reflect existing topographic conditions.
20. Erosion Control: Protect all inlet boxes, catch basins, etc. with straw bales or other approved method to strain the strom water during construction. Protect surrounding properties and streets from site runoff with sandbags and earth berms.

Curb and Gutter Construction Notes:

1. Open face gutter shall be constructed where drainage is directed away from curb.
2. Open face gutter locations are indicated by shading and notes on site and grading plan.
3. It is the responsibility of the surveyor to adjust top of curb grades at the time construction staking.
4. Refer to the typical details for a standard and open face curb and gutter for dimensions.
5. Transitions between open face and standard curb and gutter are to be smooth. Hand form these areas if necessary.

ADA Notes:

Contractor must maintain a running slope on all sidewalks no steeper than 5.0% (1:20). The cross slope for all sidewalks must be no steeper than 2.0% (1:50). All sidewalks must have a minimum clear width of 36". All ADA ramps shall have a slope no steeper than 8.33% (1:12). If grades on plans do not meet this requirement notify Consultants immediately.

The Client, Contractor, and Subcontractor should immediately notify the Consultant of any conditions of the project that they believe do not comply with the current state of the ADA and/or FHAA.

BLUE STAKES
Call: TOLL FREE
1-800
662-4111
TWO WORKING DAYS BEFORE YOU DIG

20 0 10 20 30 40
Graphic Scale Scale: 1" = 20'

VCBO ARCHITECTURE
524 SOUTH 600 EAST
SALT LAKE CITY, UT 84102
Phone: (801) 575-8800
Fax: (801) 531-9850
Web: vcbo.com

GREAT BASIN ENGINEERING

2nd District Juvenile Courthouse

Utah State Courts
08284150
165 West 20th Street, Ogden, Utah
BID DOCUMENTS

Rev #	Date	Description

Job # 12500
Date August 15, 2013
Owner # 08284150
Ins. #

GRADING PLAN

ADA1.01

3/18/2013 9:25:16 AM

W:\12N223 Ogden Juvenile Court\Drawings\12N223_S13.dwg, 8/14/2013 9:07:42 AM, brianb, 1:1

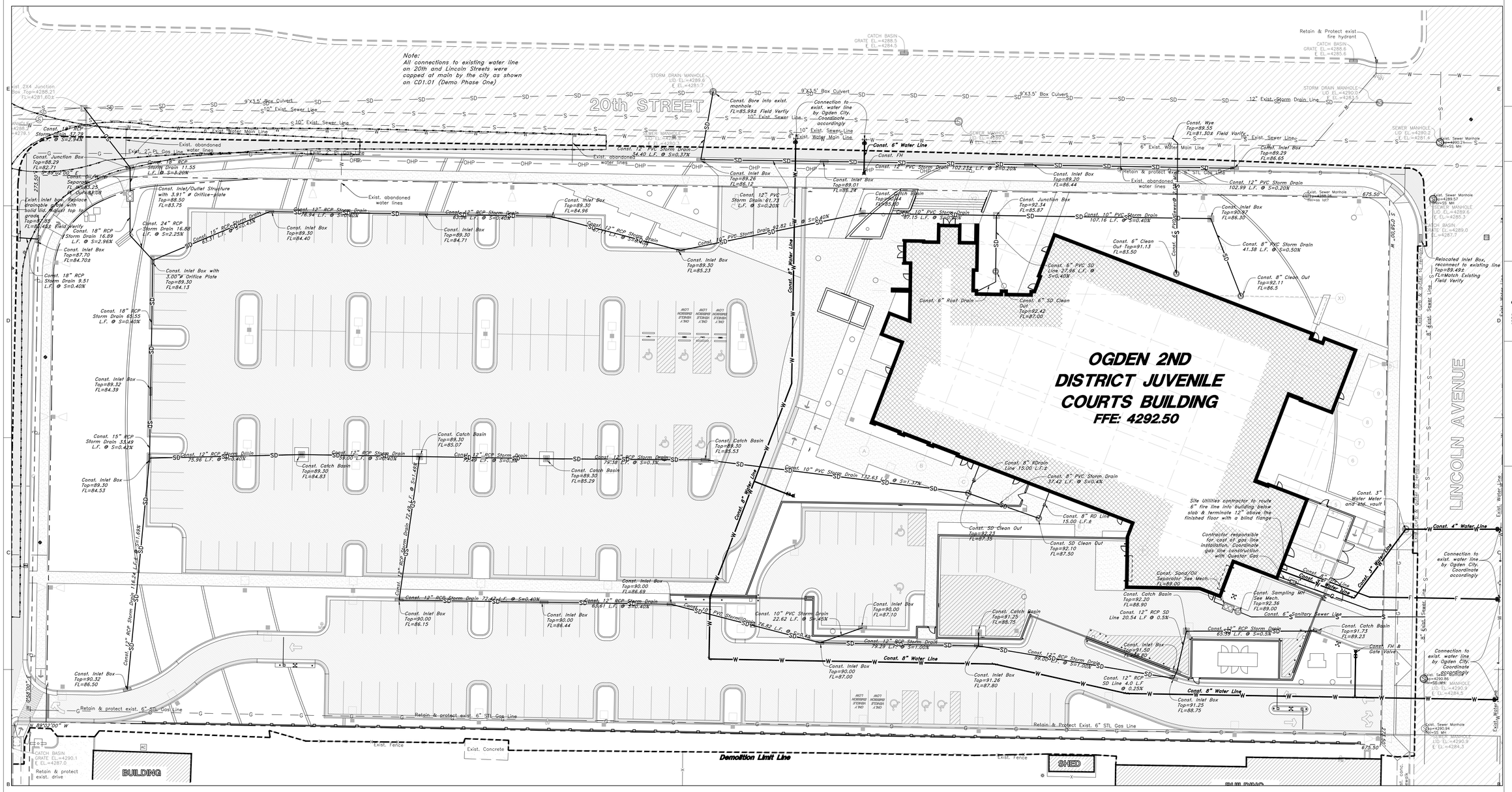

SURVEY DISCLAIMER

Francom Engineering Company provided the the Topographical Survey Information used in preparing this drawing, "Ogden Juvenile Courts ALTA Survey", dated 08/01/2013. Great Basin Engineering makes no claims to the accuracy of the information provided by Francom Engineering Company.

CAUTION NOTICE TO CONTRACTOR

The contractor is specifically cautioned that the location and/or elevation of existing utilities as shown on these plans are based on records of the various utility companies and, where possible, measurements taken in the field. The information is not to be relied on as being exact or complete. The contractor must call the appropriate utility company at least 48 hours before any excavation to request exact field location of utilities. It shall be the responsibility of the contractor to relocate all existing utilities which conflict with the propose improvements shown on the plans.

PRIVATE ENGINEER'S NOTICE TO CONTRACTORS

The Contractor agrees that he shall assume sole and complete responsibility for job site conditions during the course of construction of this project, including safety of all persons and property; that this requirement shall apply continuously and not be limited to normal working hours; and that the contractor shall defend, indemnify, and hold the owner and the engineer harmless from any and all liability, real or alleged, in connection with the performance of work on this project, excepting for liability arising from the sole negligence of the owner or the engineer.

ALL CONSTRUCTION TO CONFORM TO CITY STANDARDS AND SPECIFICATIONS IN RIGHT OF WAY

General Utility Notes:

1. Coordinate all utility connections to building with plumbing plans and building contractor.
2. Verify depth and location of all existing utilities prior to constructing any new utility lines. Notify Civil Engineer of any discrepancies or conflicts prior to any connections being made.
3. All catch basin and inlet box grates are to be bicycle proof.
4. All inlet boxes located in curb and gutter are to be placed parallel to the curb and gutter and set under the frame and grate. Improperly placed boxes will be removed and replaced at no additional cost to the owner. Precast or cast in place boxes are acceptable.
5. Refer to the site electrical plan for details and locations of electrical lines, transformers and light poles.
6. Gas lines, telephone lines, and cable TV lines are not a part of these plans unless otherwise noted.
7. Water meters, lines and valves are to be installed per city standards and specifications. It will be the contractor's responsibility to install all items required and meet city specification for patching and repairing the coinciding paving.
8. Water lines, valves, fire hydrants, fittings etc. are to be constructed as shown. Contractor is responsible to construct any vertical adjustments necessary to clear sewer, storm drain or other utilities as necessary including valve boxes and hydrant spools to proper grade.
9. Field verify all existing and/or proposed Roof Drain/Roof Drain down spout connections to Storm Water System with Civil, Plumbing & Architectural plans. Notify Engineer of any discrepancies.
10. The contractor will pressure test, disinfect, flush and have passing Bac-T sample on all fire lines before connecting to the existing water main. All fire hydrants and fire lines will be maintained and repaired by the property owner.

BLUE STAKES
Call: TOLL FREE
1-800
662-4111
TWO WORKING DAYS BEFORE YOU DIG

20 0 10 20 30 40
Graphic Scale
Scale: 1" = 20'

VCBO ARCHITECTURE

VCBO ARCHITECTURE
524 SOUTH 600 EAST
SALT LAKE CITY, UT 84102
Phone: (801) 575-8800
Fax: (801) 531-9850
Web: vcbo.com

No. 166484 MARK EUGENE BABBITT 8-15-13 STATE OF UTAH

GREAT BASIN ENGINEERING
GREAT BASIN ENGINEERING, INC.
5964 S. SOUTH RIDGE DRIVE
OGDEN, UTAH 84403 FAX: (801) 394-8515
S.L.C: (801) 521-0222 FAX: (801) 392-7944
WWW.GREATBASINENGINEERING.COM

2nd District Juvenile Courthouse

Utah State Courts
08284150
165 West 20th Street, Ogden, Utah
BID DOCUMENTS

Rev #	Date	Description

Job # 12500
Date August 15, 2013
Owner # 08284150
Ins. #

UTILITY PLAN

CU1.01

3/18/2013 9:25:16 AM

W:\12N223 Ogden Juvenile Court\Drawings\12N223_S13.dwg, 8/14/2013 9:07:53 AM, brianb, 1:1

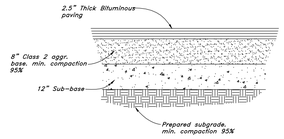

12 Typical Bituminous Pavement Section Light Traffic Areas

Not to Scale

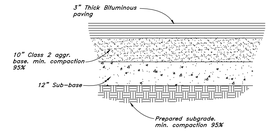

13 Typical Bituminous Pavement Section Heavy Duty Drives

Not to Scale

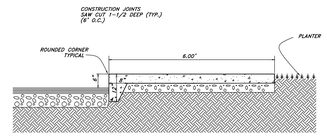

14 Thickened Edge Walk

Not to Scale

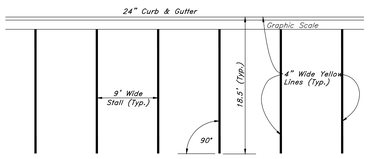

8 Typical Parking Lot Striping Plan

Not to Scale

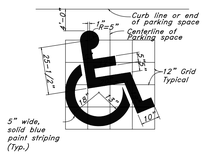

9 Handicap Symbol

Not to Scale

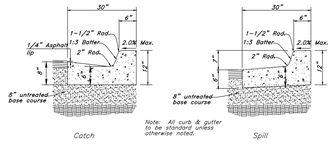

10 Typical Section - 30" Curb & Gutter (20th Street)

Not to Scale

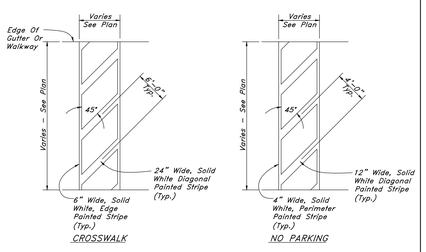

5 Striping

Not to Scale

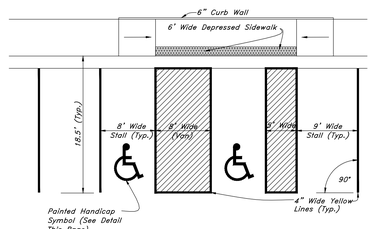

6 Typical ADA Parking Striping Plan

Not to Scale

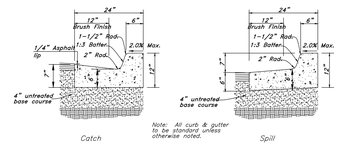

7 Typical Section - 24" Curb & Gutter

Not to Scale

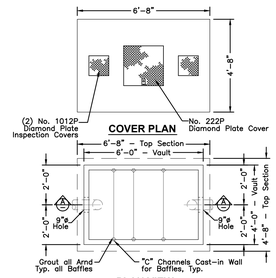

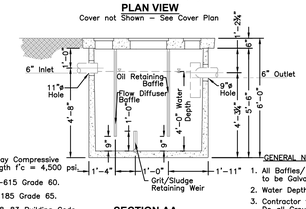

SPECIFICATIONS:

1. Concrete: 28 Day Compressive Strength f'c = 4,500 psi.
2. Rebar: ASTM A-615 Grade 60.
3. Mesh: ASTM A-185 Grade 65.
4. Design: ACI-318-83 Building Code ASTM C-857 "Minimum Structural Design Loading for Underground Precast Concrete Utility Structures".
5. Loads: H-20 Truck Wheel with 30% Impact Per AASHTO. SCALE: = N.T.S.

GENERAL NOTES:

1. All Baffles/ Weir Plates to be Galvanized Steel.
2. Water Depth = 4'-0".
3. Contractor to: Do all Grouting Supply & Install all Piping & Sampling Tees Fill with Clean Water Prior to "Start Up" of System Verify Bikout Sizes & Locations.

11 Oil/Water Seperator

Not to Scale

SHALLOW EXCAVATION

(LESS THAN 48 INCHES FROM PAVEMENT SURFACE TO BOTTOM OF EXCAVATION)

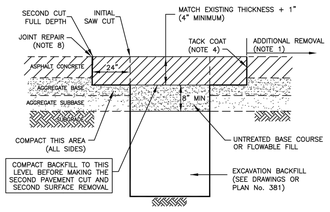

EXAMPLE 1
(ASPHALT RESTORATION)

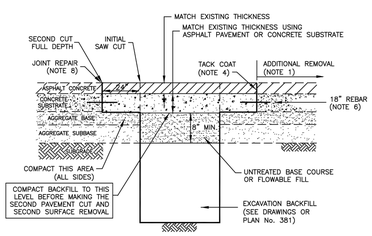

EXAMPLE 2
(COMPOSITE RESTORATION)

Asphalt concrete "T" patch

March 2006 | 83 | Plan No. 255 | Drawing 1 of 2

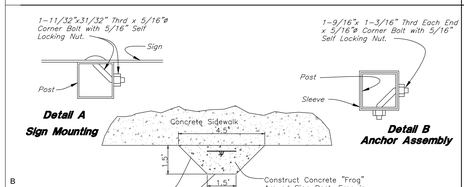

"Detail C"
Concrete "Frog"

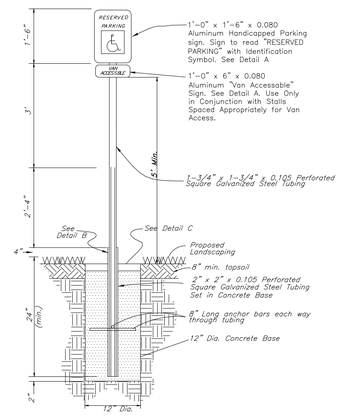

1 Handicapped Parking Sign

Not to Scale

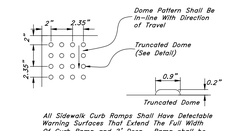

All Sidewalk Curb Ramps Shall Have Detectable Warning Surfaces That Extend The Full Width Of Curb Ramp and 2" Deep. Ramp shall be different color, 20% minimum different shade, than rest of sidewalk. Use Cast Iron for Truncated Domes.

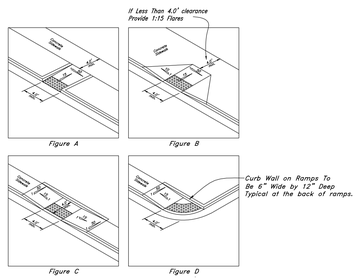

Truncated Domes Texture @ All Hazardous Routes.

Note: Curb Height Varies, See Civil Plans For Elevations.

2 Typical ADA Ramp Detail

Not to Scale

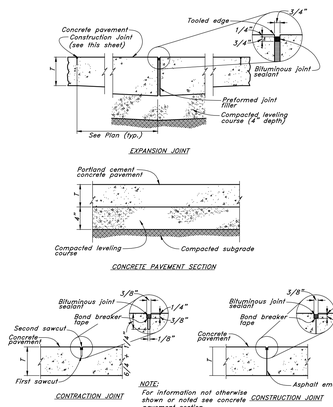

3 Portland Cement Concrete Pavement

Not to Scale

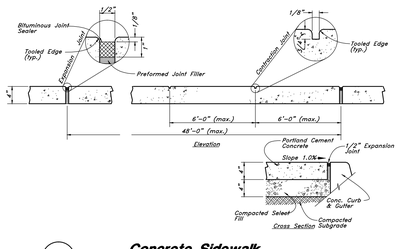

4 Concrete Sidewalk

Not to Scale

VCBO ARCHITECTURE
524 SOUTH 600 EAST
SALT LAKE CITY, UT 84102
Phone: (801) 575-8800
Fax: (801) 531-9850
Web: vcbo.com

LICENSED PROFESSIONAL ENGINEER No. 166484 MARK EUGENE BABBITT 8-15-13 STATE OF UTAH

GREAT BASIN ENGINEERING
CIVIL ENGINEERS • LAND SURVEYORS
Ogden, Utah 84403 Main (801)394-8515
S.L.C (801)521-0222 FAX 801-392-7944
WWW.GREATBASINENGINEERING.COM

2nd District Juvenile Courthouse

Utah State Courts
08284150
165 West 20th Street, Ogden, Utah
BID DOCUMENTS

Rev #	Date	Description

Job # 12500
Date August 15, 2013
Owner # 08284150
Ins. #

DETAILS

CD5.01

3/18/2013 9:25:16 AM

W:\12N223 Ogden Juvenile Court\Drawings\12N223_S13.dwg, 8/14/2013 9:08:03 AM, brianb, 1:1

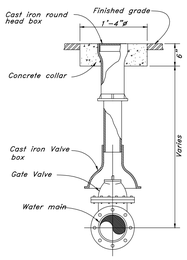

9 Typical Gate Valve

Not to Scale

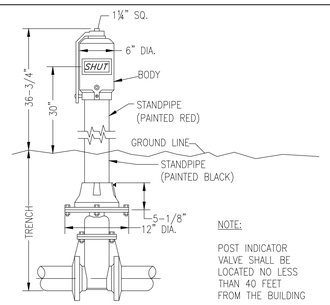

NOTE:

POST INDICATOR VALVE SHALL BE LOCATED NO LESS THAN 40 FEET FROM THE BUILDING

10 Tapping Sleeve/Post Indicator Valve

Not to Scale

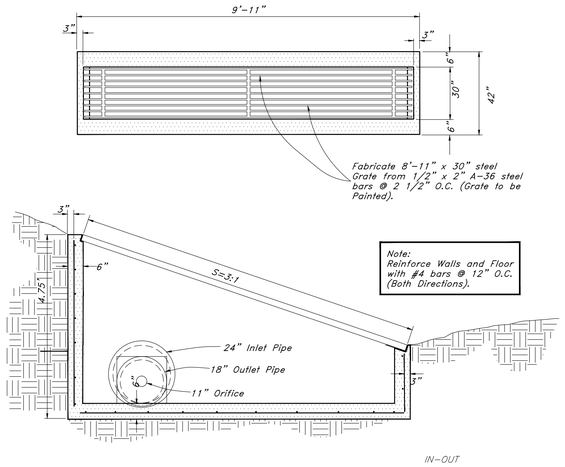

11 Detail of Inlet / Outlet Structure

Not to Scale

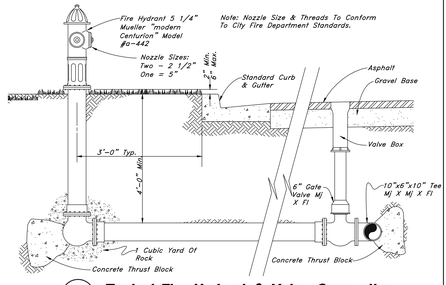

5 Typical Fire Hydrant & Valve Connection

Not to Scale

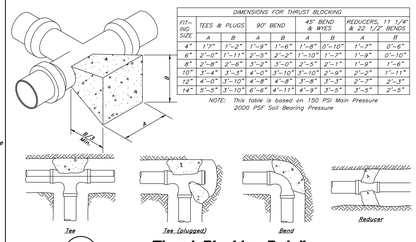

FIT-TING SIZE	DIMENSIONS FOR THRUST BLOCKING							
	TEES & PLUGS		90° BEND		45° BEND & WYES		REDUCERS, 11 1/4° & 22 1/2° BENDS	
	A	B	A	B	A	B	A	B
4"	1'7"	1'-2"	1'-9"	1'-6"	1'-8"	0'-10"	1'-3"	0'-8"
6"	2'-0"	1'-11"	2'-5"	2'-3"	1'-10"	1'-7"	1'-9"	0'-10"
8"	2'-6"	2'-6"	3'-2"	3'-0"	2'-0"	2'-1"	1'-9"	1'-6"
10"	3'-0"	3'-3"	4'-0"	3'-10"	2'-10"	2'-9"	2'-2"	1'-11"
12"	4'-0"	3'-10"	4'-8"	4'-8"	3'-8"	3'-3"	2'-7"	2'-3"
14"	5'-5"	3'-10"	6'-6"	4'-11"	4'-9"	3'-3"	3'-5"	2'-5"

NOTE: This table is based on 150 PSI Main Pressure 2000 PSF Soil Bearing Pressure

6 Thrust Blocking Details

Not to Scale

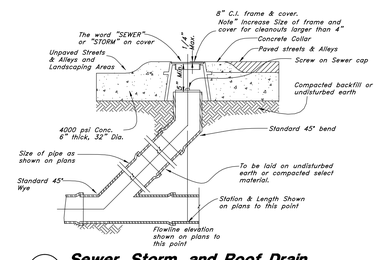

7 Sewer, Storm, and Roof Drain Cleanout Detail

Not to Scale

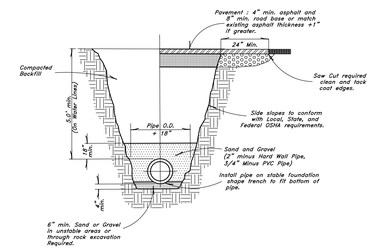

8 Typical Trench Detail

Not to Scale

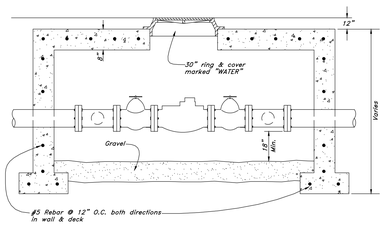

ELEVATION VIEW

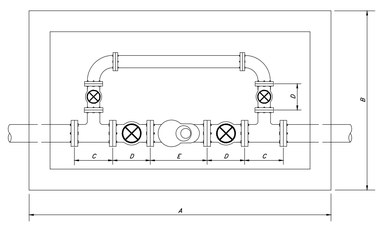

TOP VIEW

	ITEM	SIZE	LENGTH	SIZE	LENGTH
A	Box (Length)	4"	100"	6"	106"
B	Box (Width)	4"	76"	6"	78"
C	Tee	4"	13"	6"	16"
D	Gate Valve	4"	9"	6"	11"
E	Compound Meter	4"	20"	6"	24"

METERSTA

1 Meter Station Detail

Not to Scale

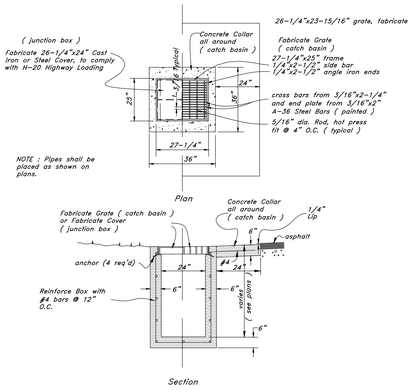

2 Catch Basin/Junction Box

Not to Scale

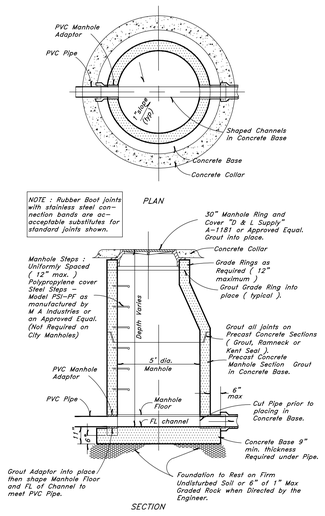

3 Typical Manhole Detail

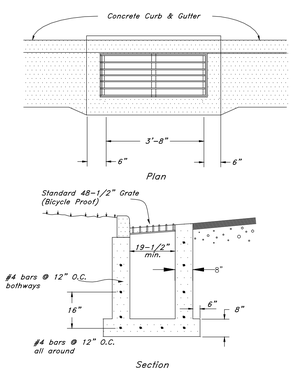

4 Typical Inlet Box

in curb & gutter

Not to Scale

VCBO ARCHITECTURE

VCBO ARCHITECTURE
524 SOUTH 600 EAST
SALT LAKE CITY, UT 84102
Phone: (801) 575-8800
Fax: (801) 531-9850
Web: vcbo.com

No. 166484 MARK EUGENE BABBITT STATE OF ILLINOIS 8-15-13

GREAT BASIN ENGINEERING

2nd District Juvenile Courthouse

Utah State Courts

08284150

165 West 20th Street, Ogden, Utah

BID DOCUMENTS

Rev #	Date	Description

Job # 12500
Date August 15, 2013
Owner # 08284150
Ins. #

DETAILS

CD5.02

3/18/2013 9:25:16 AM

W:\12N223 Ogden Juvenile Court\Drawings\12N223_S13.dwg, 8/14/2013 9:08:12 AM, brianb, 1:1

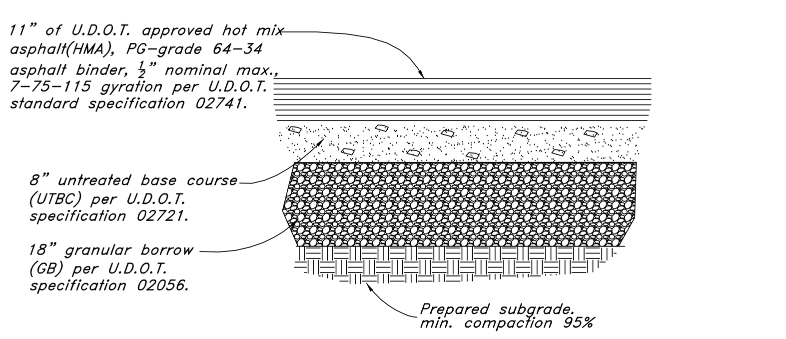

Note: This pavement section applies only to paving in the U.D.O.T. R.O.W. along SR-97 and SR-108. Submittal of pavement mix design to U.D.O.T. prior to paving required. Asphalt binder to be PG-grade 64-34 or better.

6 Typical Bituminous Pavement Section
SR-97 (5600 South) & SR-108 (3500 West)
Not to Scale

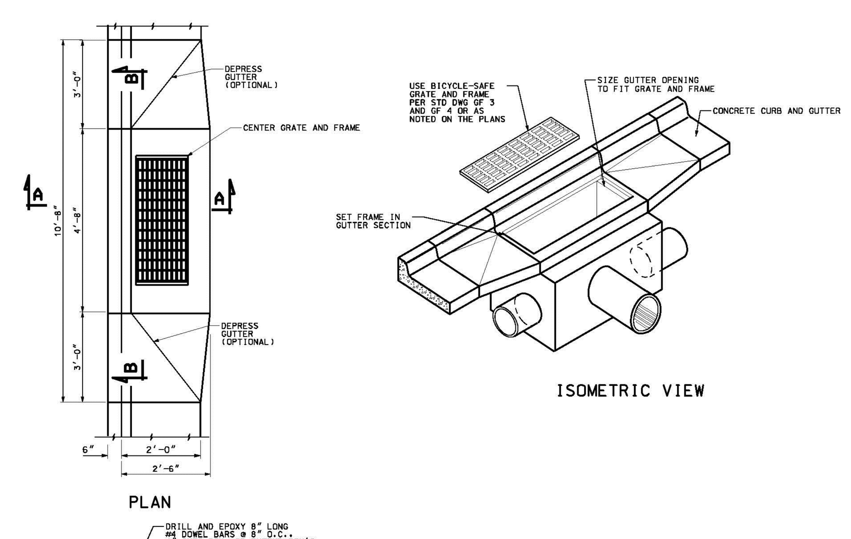

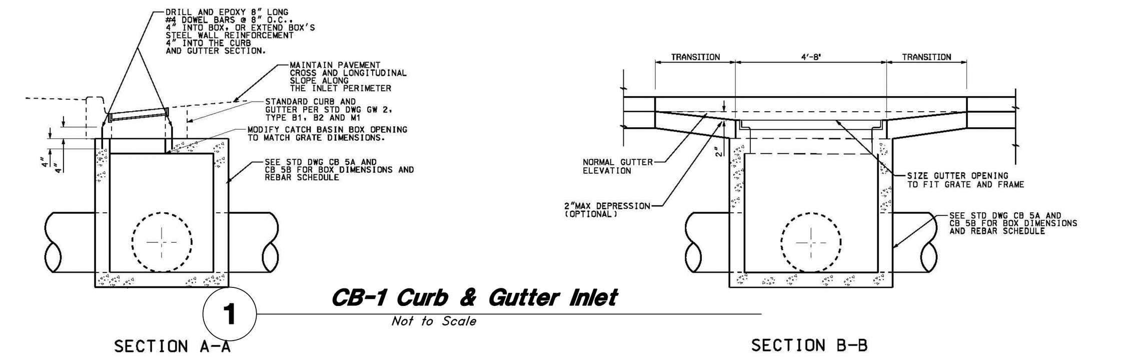

NOTES:

1. USE COATED DEFORMED REINFORCING STEEL BARS CONFORMING TO AASHTO M 284 OR M 111 AND M 31 GRADE 60 RESPECTIVELY.
2. FIELD CUT AND BEND REINFORCING STEEL AS NECESSARY TO CLEAR PIPES AND MAINTAIN 2" COVER. REPAIR ANY DAMAGE OR CUTS TO THE EPOXY COATING ON REINFORCING BARS.
3. USE CLASS AA (AE) CONCRETE.
4. USE TYPE II CEMENT (LOW ALKALI).
5. PROVIDE 2" CONCRETE COVER TO REINFORCING STEEL.
6. FOR NUMBER, LOCATION, AND SIZE OF PIPE SEE ROADWAY PLANS.
7. PROVIDE ¾" CHAMFER ON ALL EXPOSED CONCRETE CORNERS.
8. FOR GRATE AND FRAME SEE STD DWG GF 3 OR GF 4.

DESIGN DATA

HS 20 STANDARD SPECIFICATION FOR HIGHWAY BRIDGES 17TH EDITION.

STRUCTURAL STEEL Fy = 36,000 psi
STRUCTURAL CONCRETE f'c = 4,000 psi, Fy = 60,000 psi, n = 8

1 CB-1 Curb & Gutter Inlet
Not to Scale

UTAH DEPARTMENT OF TRANSPORTATION — STANDARD DRAWINGS FOR ROAD AND BRIDGE CONSTRUCTION, SALT LAKE CITY, UTAH — RECOMMENDED FOR APPROVAL JAN.01,2008 — CHAIRMAN STANDARDS COMMITTEE APPROVED JAN.01,2008 — DEPUTY DIRECTOR — REVISIONS — NO. DATE APPR. REMARKS

CURB AND GUTTER INLET — STD DWG CB 1

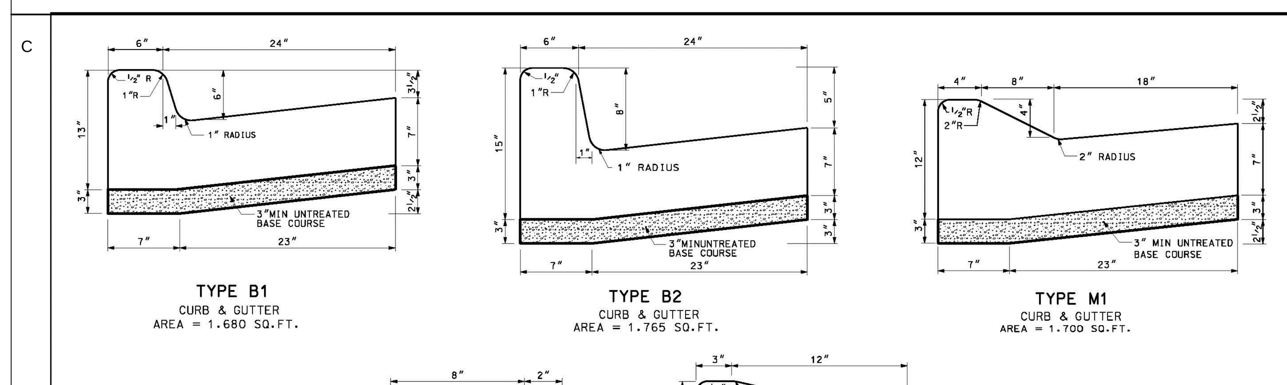

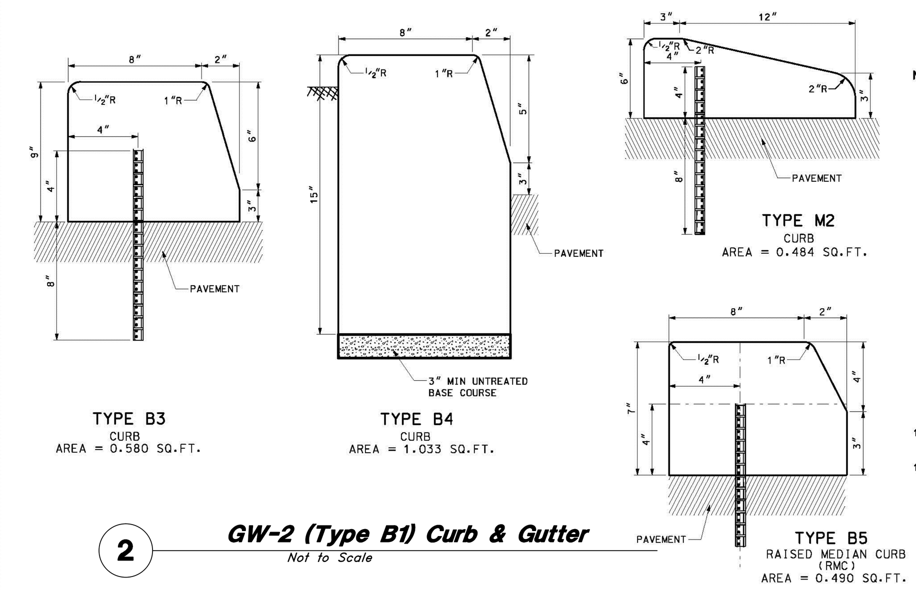

NOTES:

1. DRAINAGE CURBS: TYPE B1, B2 & M1
2. MOUNTABLE CURBS: TYPES M1 & M2 FOR APPLICATION REFER TO THE AASHTO POLICY ON GEOMETRIC DESIGN OF HIGHWAYS AND STREETS.
3. CURBS TYPES B1, B2, B3, B4 & B5 USED WITH DESIGN SPEED UP TO 40 MPH EXCEPT IN PREDOMINATELY URBAN OR RAPIDLY DEVELOPING RURAL AREAS WHERE CURB MAY BE USED WITH DESIGN SPEEDS UP TO 50 MPH.
4. DOWELS: ¾" DEFORMED BARS ON 5' MAX.CENTERS.
5. PRECAST CURBS:
   A. MINIMUM OF 10' IN LENGTH.
   B. DOWELS AT A MINIMUM OF 3 PER 10' LENGTH.
   C. INCLUDE ADEQUATE REINFORCING STEEL TO WITH STAND HANDLING STRESSES.
6. CONCRETE CLASS AA "AE"
7. USE TYPE B4 ONLY AS BORDER CURB.
8. CURB HEIGHT IS MEASURED VERTICALLY FROM THE FLOW LINE OF THE GUTTER TO TOP BACK OF CURB.
9. REFER TO ROADWAY PLANS FOR UNTREATED BASE COURSE SIZE.
10. ADJUST CURB FACE TO 4" MAXIMUM HEIGHT WHEN USED IN CONJUNCTION WITH GUARDRAIL BARRIER.
11. REFER TO STD DWG GW 3 FOR CURB AND GUTTER AT ADA RAMPS.

2 GW-2 (Type B1) Curb & Gutter
Not to Scale

UTAH DEPARTMENT OF TRANSPORTATION — STANDARD DRAWINGS FOR ROAD AND BRIDGE CONSTRUCTION — JAN.01,2008

CONCRETE CURB AND GUTTER — STD DWG GW 2

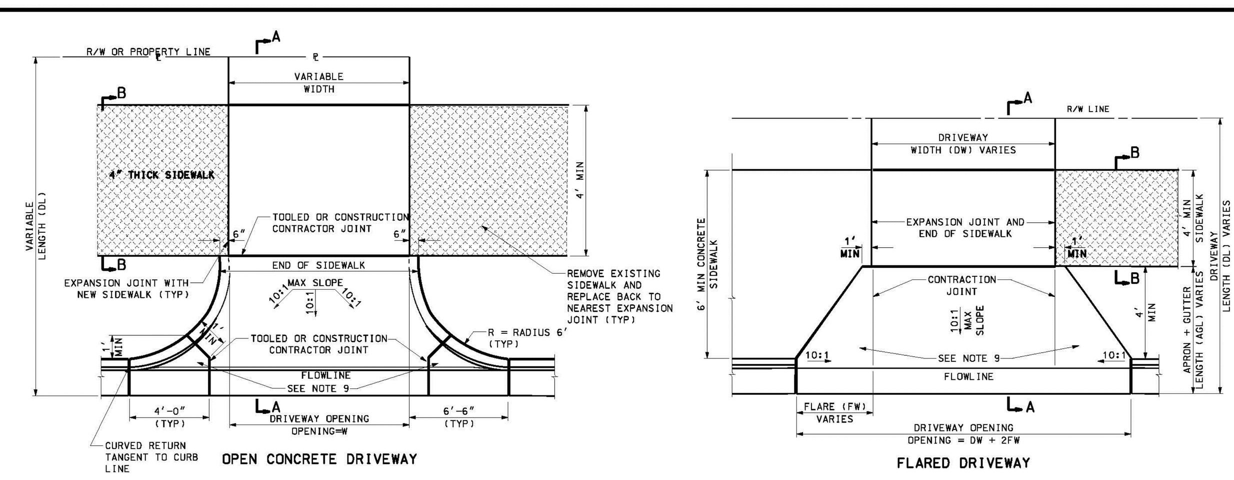

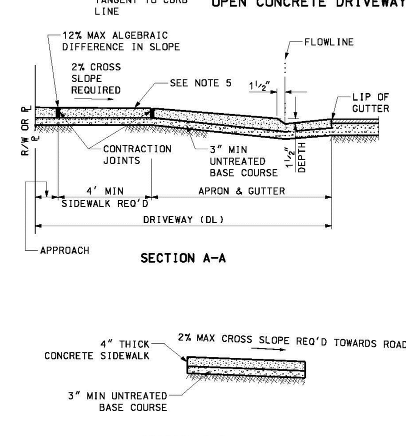

DRIVEWAY RADIUS AND FLARE AREA CHART			
OPEN CONCRETE DRIVEWAY	ft²	FLARED DRIVEWAY	
6' RADIUS	44.13	DISTANCE FROM BACK OF CURB TO SIDEWALK	FLARE AREA
NOTE:		4'	49 ft²
ft² QUANTITY = BOTH SIDES OF		6'	61 ft²
DRIVEWAY ROUNDED TO THE		8'	89 ft²
NEAREST 0.5 ft²		10'	105 ft²
		ADD (DL)(DW) FOR TOTAL QUANTITY	

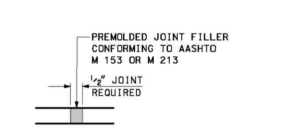

EXPANSION-CONTRACTION JOINT DETAIL

NOTES:

1. DRIVEWAY DIMENSIONS (MAX.& MIN.) ARE LOCATED IN UDOT ADMINISTRATIVE RULE R930-6 ACCOMMODATION OF UTILITIES AND THE CONTROL AND PROTECTION OF STATE HIGHWAY RIGHTS OF WAY" CURRENT EDITION.
2. MAXIMUM DISTANCE BETWEEN TOOLED OR CONSTRUCTION JOINTS 10' LATERALLY AND LONGITUDINALLY SPACED EQUALLY.
3. PROVIDE EXPANSION JOINTS WHERE CONCRETE SIDEWALK BUTTS AGAINST CONCRETE DRIVEWAYS AND IN CONCRETE SIDEWALK AT 30 FEET INTERVALS.
4. SIDEWALK INSIDE THE DRIVEWAY LIMITS IS PAID AS PART OF DRIVEWAY, NOT AS PART OF SIDEWALK.
5. OPEN CONCRETE DRIVEWAY - FLARED DRIVEWAY
   A: RESIDENTIAL = 6 Inch THICK, COMMERCIAL = 7 Inch THICK USE THESE THICKNESSES FOR APRON, SIDEWALK, APPROACH, FLARE, AND RADII.
   B: EXTEND DRIVEWAY APPROACH TO R/W - PROPERTY LINE OR 25' WHICHEVER IS LESS.
   C: IF THE GRADES SHOWN ON THE SLOPE DETAIL CANNOT BE MET, DEPRESS THE LONGITUDINAL SLOPE OF THE SIDEWALK AT A MAXIMUM RATE OF 5 PERCENT TO MEET THE APRON - APPROACH ELEVATION.
6. USE CLASS AA(AE) CONCRETE FOR SIDEWALK AND DRIVEWAYS
7. USE UNTREATED BASE COURSE UNDER ALL SIDEWALKS AND DRIVEWAYS.
8. 10:1 = 10% SLOPE.
9. QUANTITIES FOR DRIVEWAYS INCLUDE RADIUS AND FLARES TO LIP OF GUTTER.

3 GW 4 Concrete Driveways
Not to Scale

UTAH DEPARTMENT OF TRANSPORTATION — STANDARD DRAWINGS FOR ROAD AND BRIDGE CONSTRUCTION — JAN.01,2008

CONCRETE DRIVEWAYS AND SIDEWALKS — STD DWG GW 4

Note: Provide Pedestrian Ramp for Drive Approach Crossing Only. Pedestrian Traffic Across Mario Capecchi Drive Shall be Via Sky Bridge.

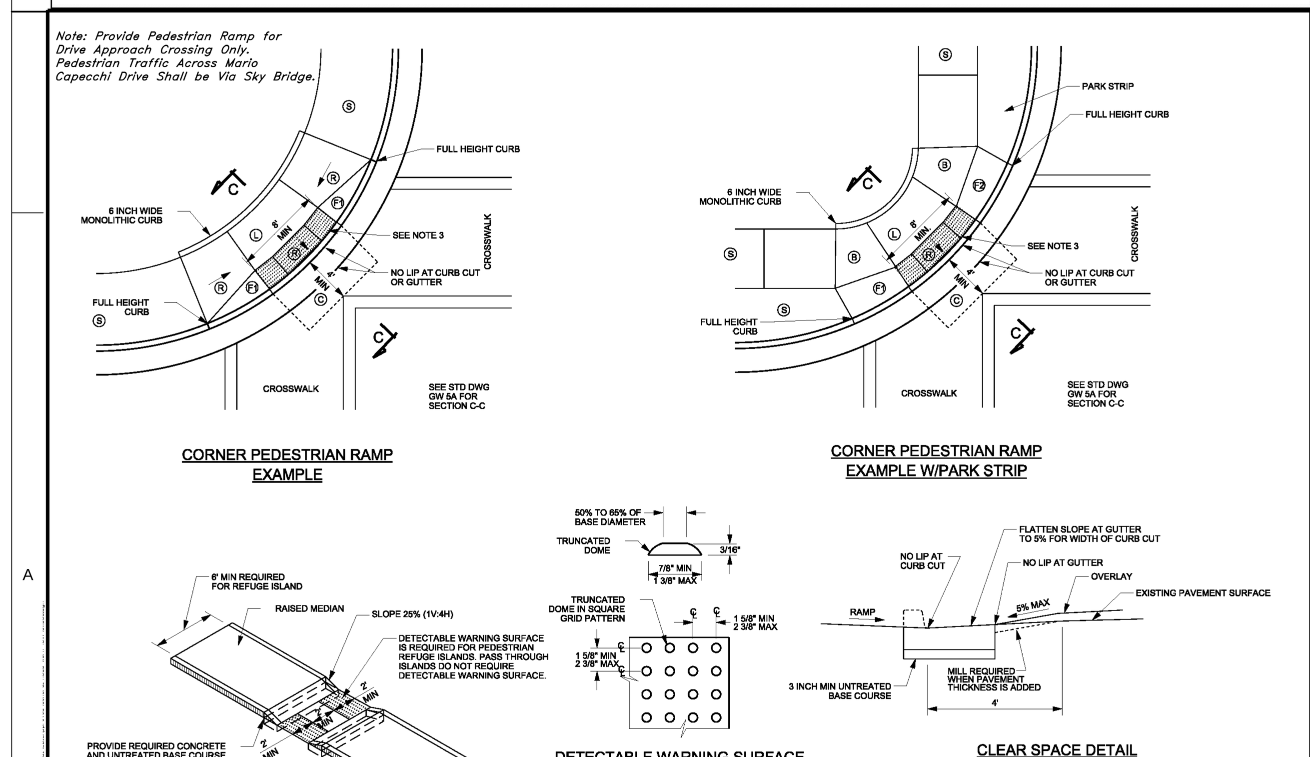

NOTES:

1. REFER TO STD DWG GW 5A FOR GENERAL NOTES, SLOPE TABLES, AND SECTION CUTS.
2. PROVIDE DETECTABLE WARNING SURFACE FOR FULL WIDTH OF CURB CUT.
3. LOCATE DETECTABLE WARNING SURFACE SO THE CORNERS NEAREST THE STREET ARE WITHIN 1 INCH OF THE BACK OF CURB.
4. RAMP GRADE BREAK MUST BE PERPENDICULAR TO THE RUNNING SLOPE.

4 GW 5C Pedestrian Access
Not to Scale

UTAH DEPARTMENT OF TRANSPORTATION — STANDARD DRAWINGS FOR ROAD AND BRIDGE CONSTRUCTION, SALT LAKE CITY, UTAH — JAN.01,2012

PEDESTRIAN ACCESS — STD. DWG. NO. GW 5C

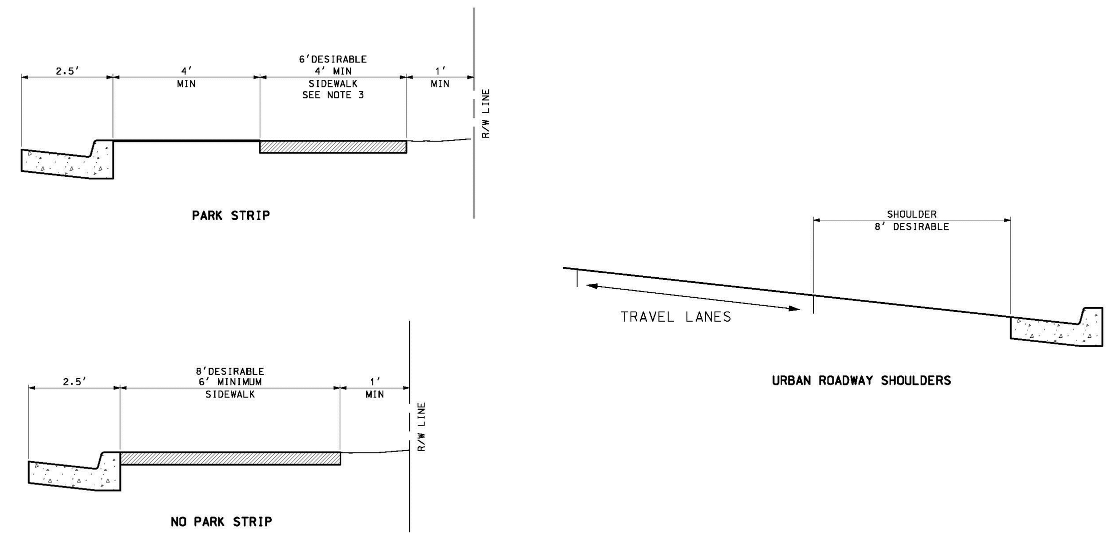

NOTES:

1. USE CURRENT EDITION OF THE AASHTO A POLICY ON GEOMETRIC DESIGN OF HIGHWAYS AND STREETS FOR DESIGN OF ROADWAY ELEMENTS NOT SHOWN ON THIS STANDARD DRAWING.
2. USE CURRENT EDITION OF THE AASHTO ROADSIDE DESIGN GUIDE FOR CLEAR ZONE REQUIREMENTS.
3. PROVIDE A 5' x 5' PASSING AREA ON SIDEWALKS OF LESS THAN 5' WIDE WHEN THERE IS NOT A HARD SURFACE PASSING AREA OF 5' MINIMUM WIDTH IN A 200' SEGMENT.

5 GW 11 Sidewalks & Shoulders
Not to Scale

UTAH DEPARTMENT OF TRANSPORTATION — STANDARD DRAWINGS FOR ROAD AND BRIDGE CONSTRUCTION — JAN.01,2008

SIDEWALKS AND SHOULDERS ON URBAN ROADWAYS — STD DWG GW 11

VCBO ARCHITECTURE
524 SOUTH 600 EAST
SALT LAKE CITY, UT 84102
Phone: (801) 575-8800
Fax: (801) 531-9850
Web: vcbo.com

LICENSED PROFESSIONAL ENGINEER No. 166484 MARK EUGENE BABBITT 8-15-13 STATE OF UTAH

GREAT BASIN ENGINEERING INC
5746 South 1475 East - Suite 200
Ogden, Utah 84403 Main (801)394-4515
S.L.C (801)521-0222 FAX 801-392-7544
WWW.GREATBASINENGINEERING.COM

2nd District Juvenile Courthouse

Utah State Courts
08284150
165 West 20th Street, Ogden, Utah
BID DOCUMENTS

Rev #	Date	Description

Job # 12500
Date August 15, 2013
Owner # 08284150
Ins. #

UDOT DETAILS

CD5.03

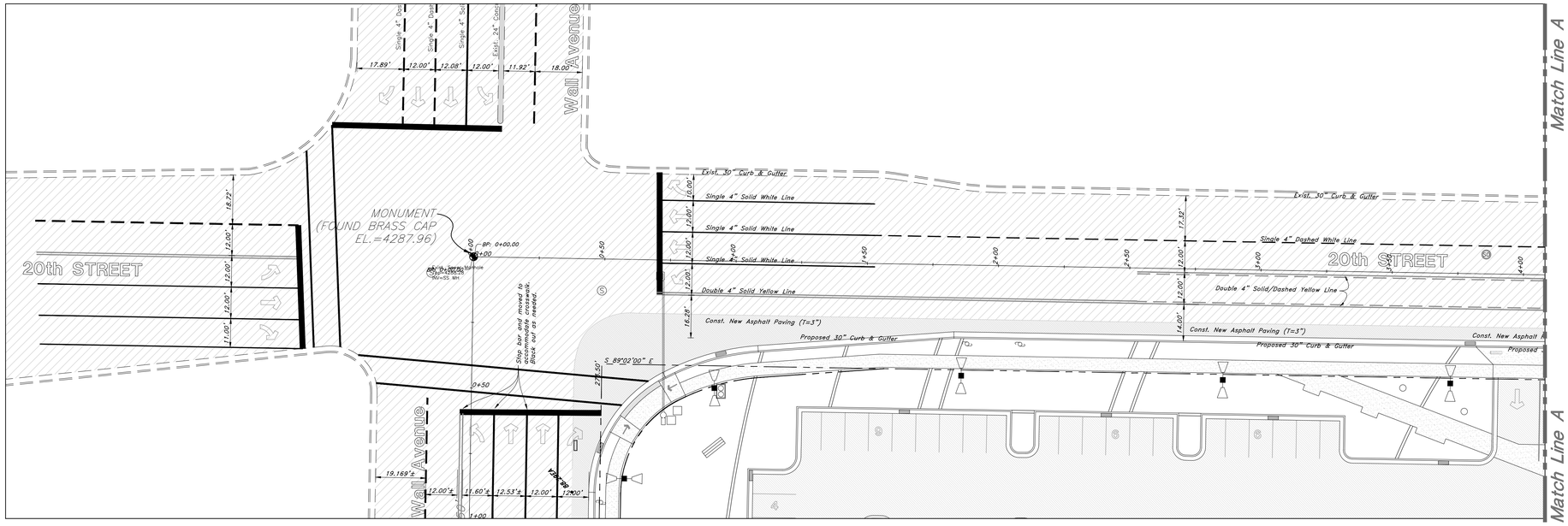

20TH STREET WEST

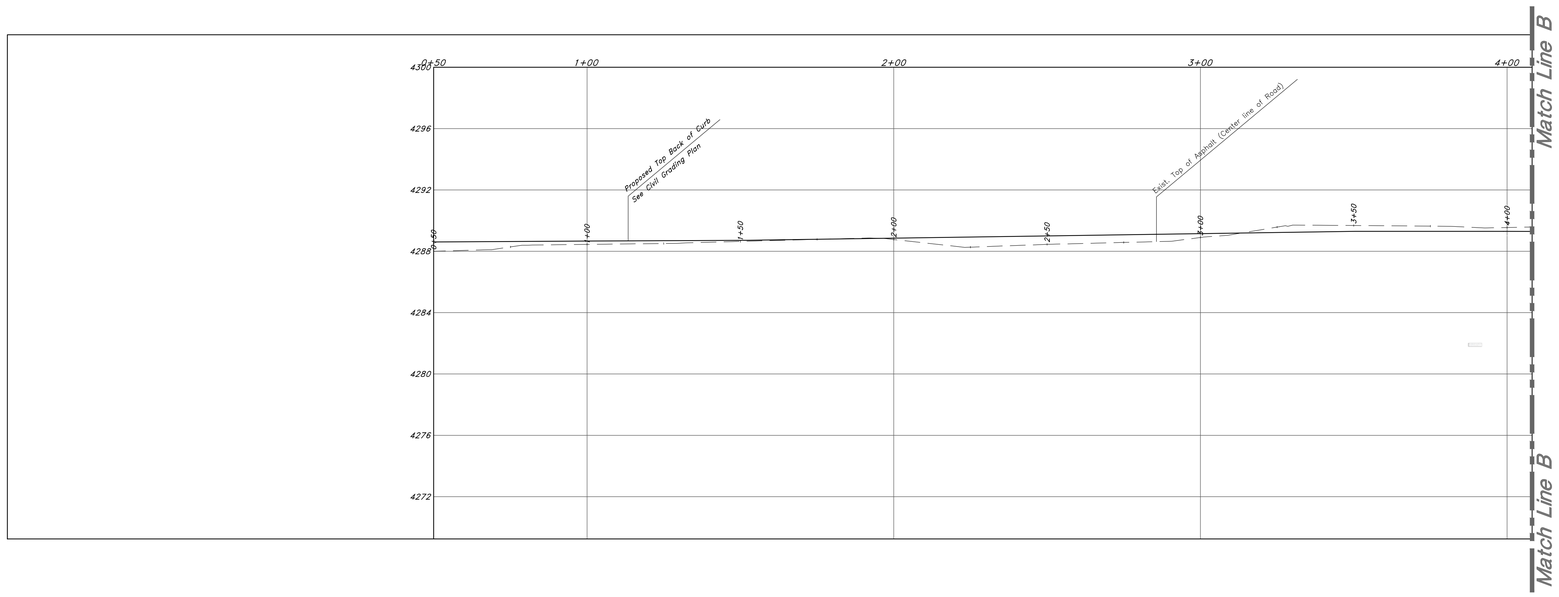

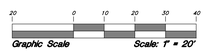

STRIPING PLAN

VCBO ARCHITECTURE
524 SOUTH 600 EAST
SALT LAKE CITY, UT 84102
Phone: (801) 575-8800
Fax: (801) 531-9850
Web: vcbo.com

LICENSED PROFESSIONAL ENGINEER
No. 166484
MARK EUGENE BABBITT
STATE OF UTAH
8-15-13

GREAT BASIN ENGINEERING
SALT LAKE CITY, UTAH 84123
S.L.C. (801)521-0222 FAX 801-392-7944
WWW.GREATBASINENGINEERING.COM

2nd District Juvenile Courthouse

Utah State Courts
08284150
165 West 20th Street, Ogden, Utah
BID DOCUMENTS

Rev #	Date	Description

Job # 12500
Date August 15, 2013
Owner # 08284150
Ins. #

20TH STREET
PLAN & PROFILE

PP1.01

3/18/2013 9:25:16 AM

W:\12N223 Ogden Juvenile Court\Drawings\12N223_S13.dwg, 8/14/2013 9:08:33 AM, brianb, 1:1

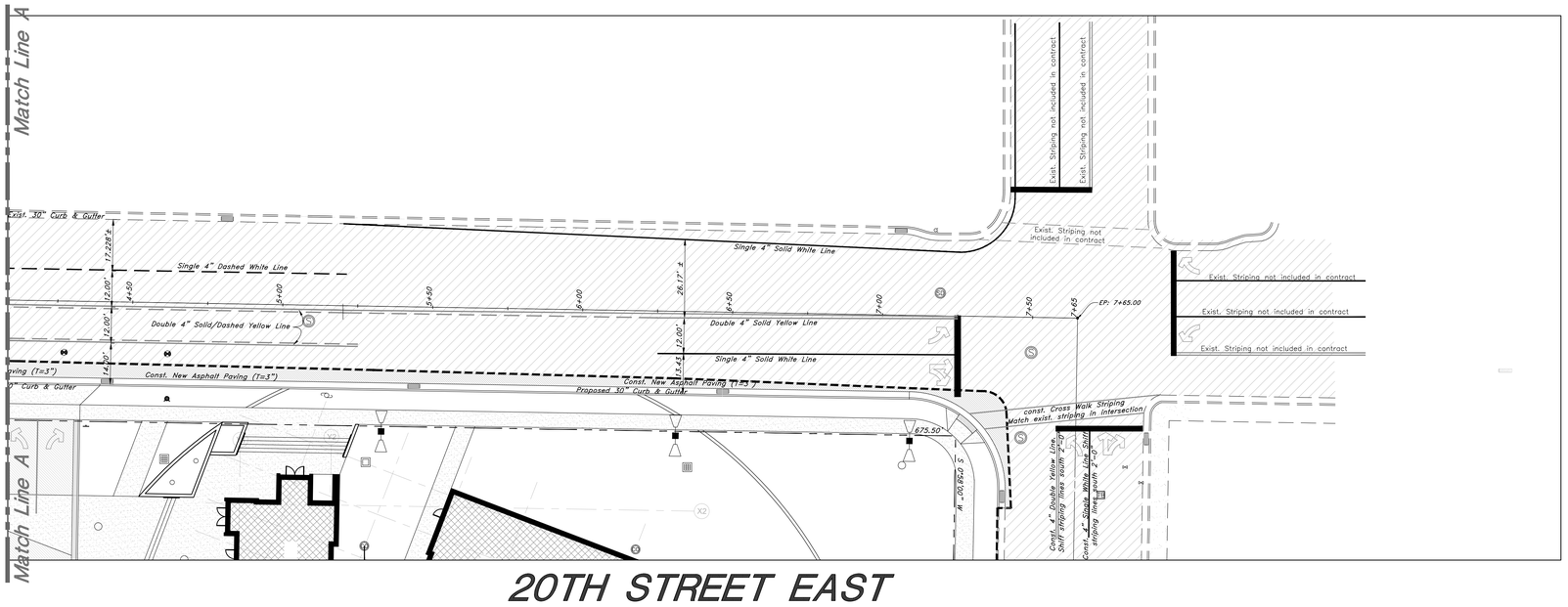

20TH STREET EAST

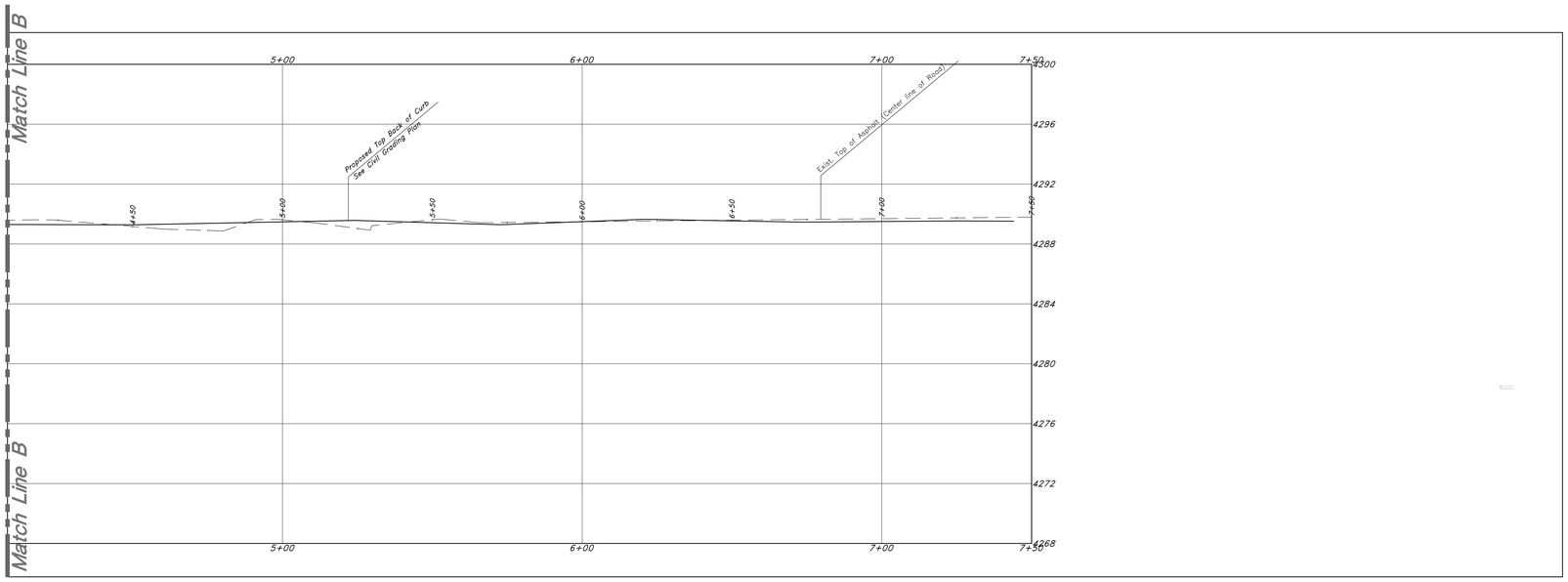

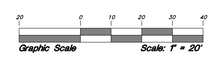

STRIPING PLAN

VCBO ARCHITECTURE
524 SOUTH 600 EAST
SALT LAKE CITY, UT 84102
Phone: (801) 575-8800
Fax: (801) 531-9850
Web: vcbo.com

LICENSED PROFESSIONAL ENGINEER No. 166484 MARK EUGENE BABBITT STATE OF UTAH 8-15-13

GREAT BASIN ENGINEERING
CIVIL ENGINEERS • LAND SURVEYORS
5746 S. 1475 E. OGDEN, UTAH 84403 MAIN: (801) 394-4515
S.L.C: (801) 521-0222 FAX: 801-394-7944
WWW.GREATBASINENGINEERING.COM

2nd District Juvenile Courthouse

Utah State Courts
08284150
165 West 20th Street, Ogden, Utah
BID DOCUMENTS

Rev #	Date	Description

Job # 12500
Date August 15, 2013
Owner # 08284150
Ins. #

20TH STREET
PLAN & PROFILE

PP1.02

3/18/2013 9:25:16 AM

W:\12N223 Ogden Juvenile Court\Drawings\12N223_S13.dwg, 8/14/2013 9:08:41 AM, brianb, 1:1

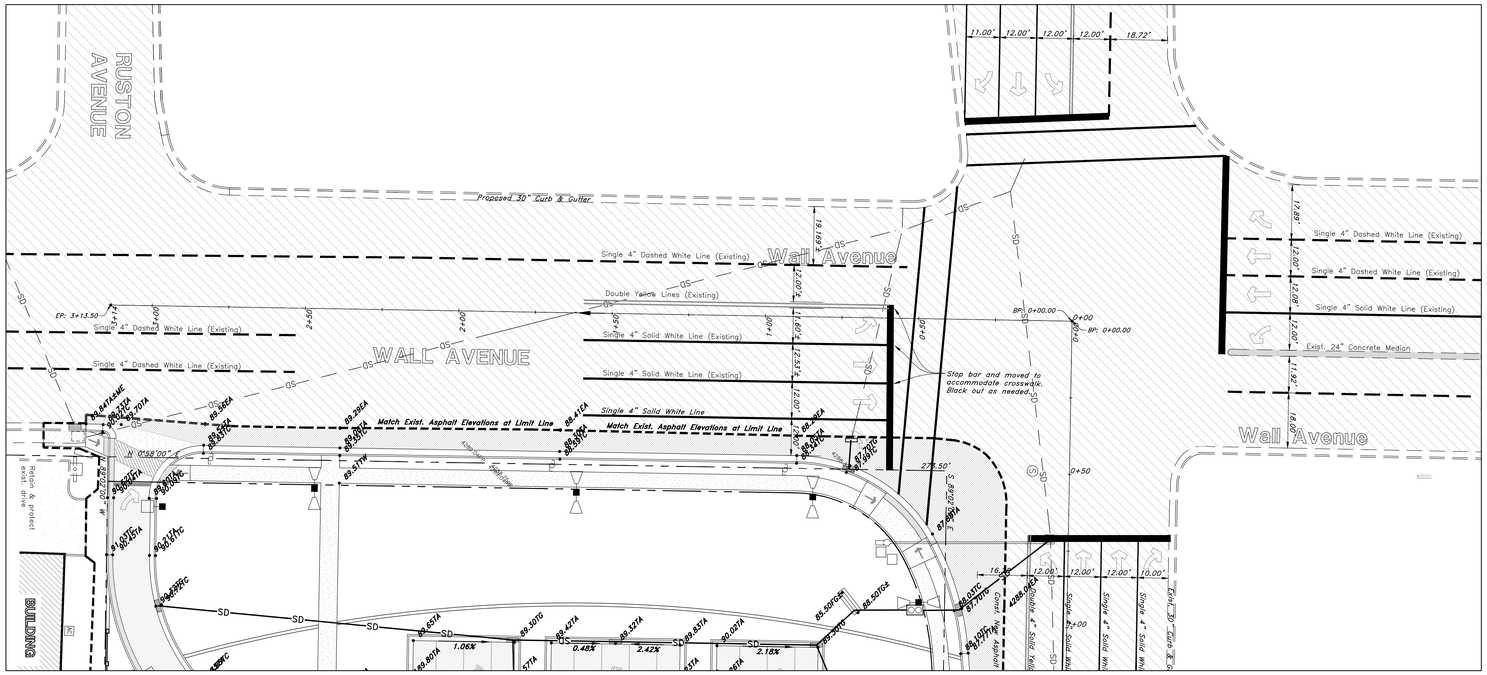

WALL AVENUE

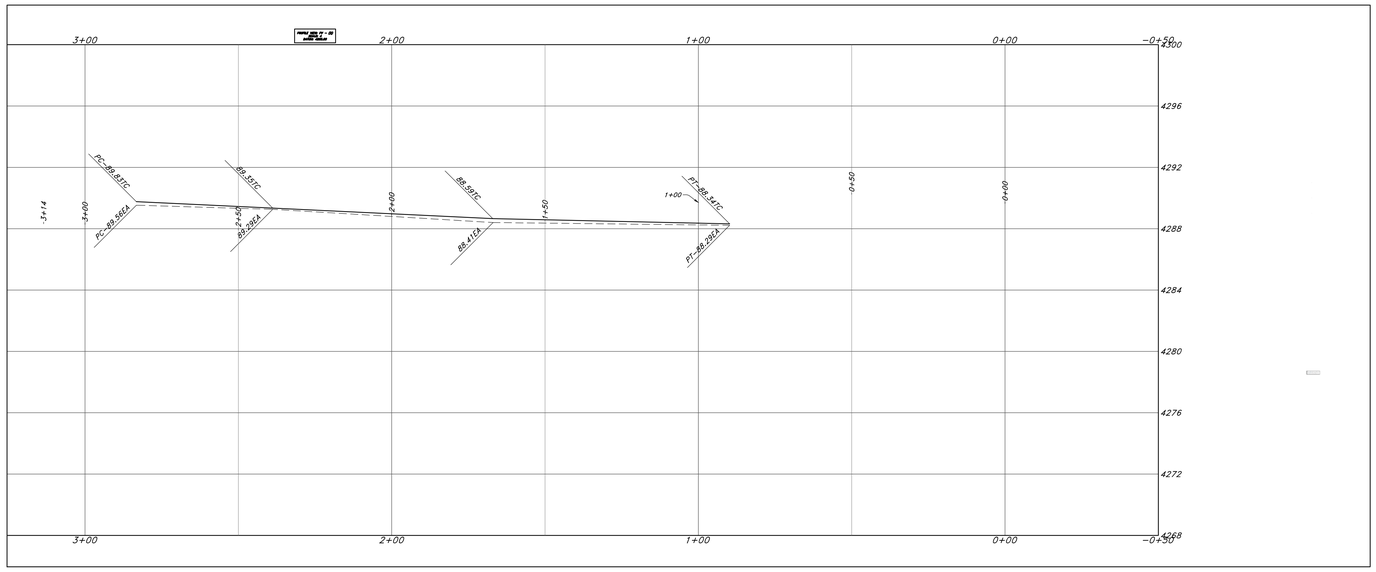

Graphic Scale — Scale: 1" = 20'

STRIPING PLAN

VCBO ARCHITECTURE
524 SOUTH 600 EAST
SALT LAKE CITY, UT 84102
Phone: (801) 575-8800
Fax: (801) 531-9850
Web: vcbo.com

GREAT BASIN ENGINEERING

2nd District Juvenile Courthouse

Utah State Courts
08284150
165 West 20th Street, Ogden, Utah
BID DOCUMENTS

Rev #	Date	Description

Job # 12500
Date August 15, 2013
Owner # 08284150
Iris. #

WALL STREET
PLAN & PROFILE

PP1.03

3/18/2013 9:25:16 AM

W:\12N223 Ogden Juvenile Court\Drawings\12N223_S13.dwg, 8/14/2013 9:08:49 AM, brianb, 1:1

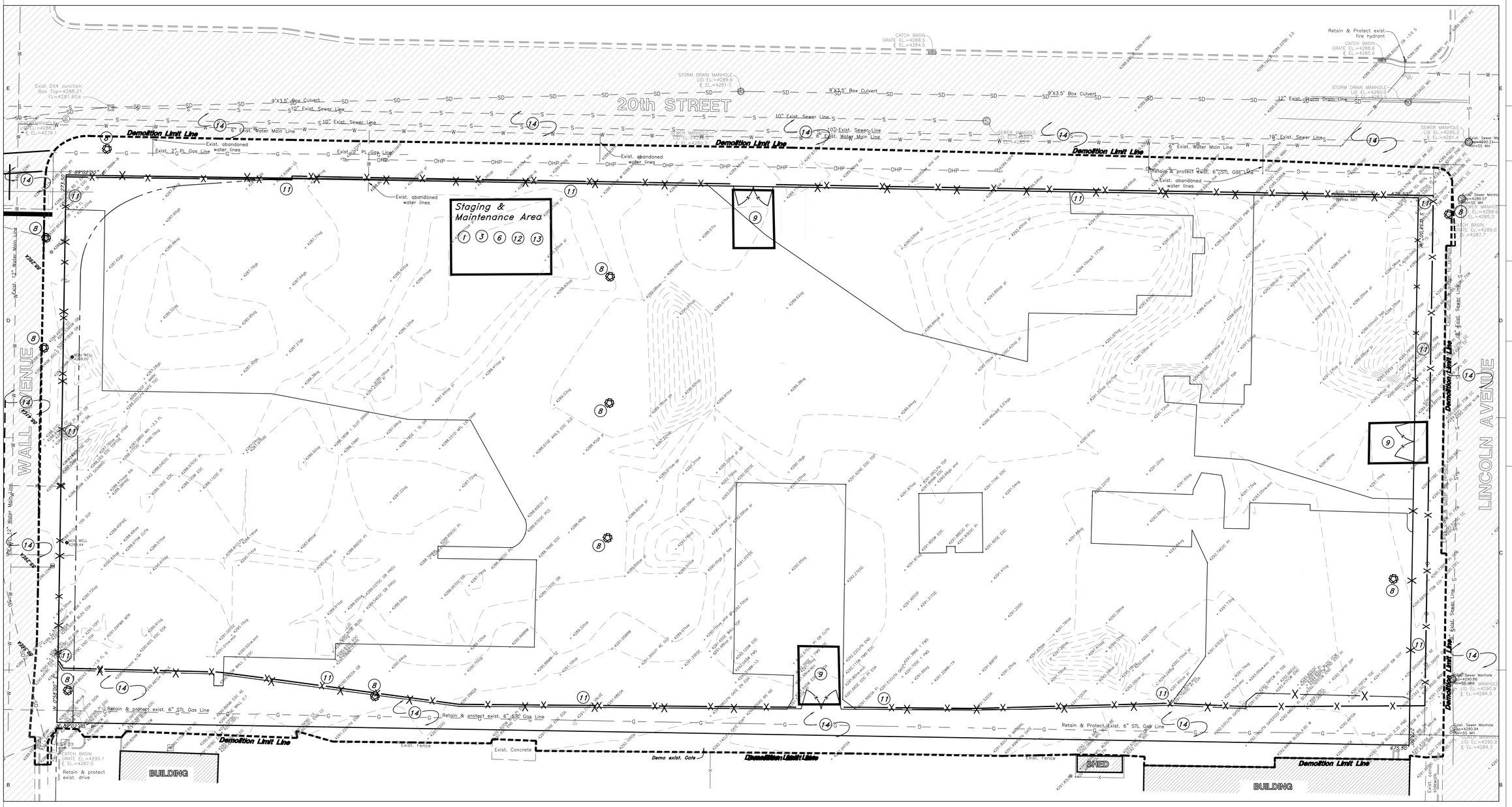

SWPPP BMP's Demo Phase

1. Utilize BMP CWM: Concrete Waste Management
2. Utilize BMP DC: Dust Control
3. Construct BMP EVWA: Equipment & Vehicle Wash Down Area
4. Utilize BMP HWM: Hazardous Waste Management
5. Construct BMP IP: Inlet Protection – Concrete Block or Gravel
6. Construct BMP MS: Materials Storage
7. Utilize BMP MU: Material Use
8. Construct BMP PT: Portable Toilets
9. Construct BMP SCE: Stabilized Construction Entrance
10. Utilize BMP SCU: Spill Clean-Up
11. Construct BMP SF: Silt Fence
12. Utilize BMP VEC: Vehicle & Equipment Cleaning
13. Utilize BMP VEF: Vehicle & Equipment Fueling
14. Utilize BMP SS: Street Sweeping
15. Utilize BMP CP: Compaction

SURVEY DISCLAIMER

Francom Engineering Company provided the the Topographical Survey Information used in preparing this drawing, "Ogden Juvenile Courts ALTA Survey", dated 08/01/2013. Great Basin Engineering makes no claims to the accuracy of the information provided by Francom Engineering Company.

CAUTION NOTICE TO CONTRACTOR

The contractor is specifically cautioned that the location and/or elevation of existing utilities as shown on these plans are based on records of the various utility companies and, where possible, measurements taken in the field. The information is not to be relied on as being exact or complete. The contractor must call the appropriate utility company at least 48 hours before any excavation to request exact field location of utilities. It shall be the responsibility of the contractor to relocate all existing utilities which conflict with the propose improvements shown on the plans.

PRIVATE ENGINEER'S NOTICE TO CONTRACTORS

The Contractor agrees that he shall assume sole and complete responsibility for job site conditions during the course of construction of this project, including safety of all persons and property; that this requirement shall apply continuously and not be limited to normal working hours; and that the contractor shall defend, indemnify, and hold the owner and the engineer harmless from any and all liability, real or alleged, in connection with the performance of work on this project, excepting for liability arising from the sole negligence of the owner or the engineer.

ALL CONSTRUCTION TO CONFORM TO CITY STANDARDS AND SPECIFICATIONS IN RIGHT OF WAY

General Demolition Notes:

1. Demolition and site clearing for this contract are to include all areas shown within demolition limits or by note.
2. Refer to site improvement plans for more details on limits of removal.
3. Demolish existing buildings and clear from site. (Including removal of all footings and foundations.)
4. All curbs, gutters, walks, slabs, walls, fences, flatwork, asphalt, waterlines and meters, gas lines, sewer lines, light poles, buried cables, storm drain piping and structures to be cleared from site unless otherwise shown.
5. All utilities, sewer, water, gas, telephone and electrical services to be disconnected and capped According to city, county and utility company requirements, unless otherwise shown.
6. Basements and other excavated areas to be left open surrounded by safety fencing.
7. Clear and grub trees, shrubs, and vegetation within construction limits, disposal to be off-site Except where noted otherwise.
8. DO NOT interrupt any services or disrupt the operation of any businesses shown outside the demolition limits.
9. If ASBESTOS is found in existing structures, the Asbestos must be removed in a legal manner by a contractor licensed to handle asbestos materials. (Not a part of contract)
10. Remove debris, rubbish, and other materials resulting from the demolition and site clearing operations from the site. 75% of demolished material will be recycled. Contractor shall retain paper work to show proof of recycling. Demolition shall meet LEED "Gold" Standards.
11. The location and/or elevation of existing utilities as shown on these plans is based on records of the various utility companies and, where possible, measurements taken in the field. The information is not to be relied upon as being exact or complete. Contractor shall contact authorities having jurisdiction for field locations. Contractor shall be responsible for protection of in place and relocated utilities during construction.
12. Stockpiles shall be graded to maintain slopes not greater than 3 horizontal to 1 vertical. Provide erosion control as needed to prevent sediment transport to adjacent drainage ways.
13. Contractor shall be responsible for disposal of all waste material. Disposal shall be at an approved site for such material. Burning onsite is not permitted.
14. Contractor shall verify with city any street removal, curb cuts, and any restoration required for utility line removal.
15. Install traffic warning devices as needed in accordance with local standards.
16. Contractor shall obtain all permits necessary for demolition from City, County, State or Federal Agencies as required.
17. Contractor must contact city water dept. before beginning demolition, to request written conformation that all water lines have been capped at the main line by the city water dept.

BLUE STAKES

Call: TOLL FREE

1-800 662-4111

TWO WORKING DAYS BEFORE YOU DIG

20 0 10 20 30 40

Graphic Scale Scale: 1" = 20'

VCBO ARCHITECTURE

ARCHITECTURE

VCBO ARCHITECTURE
524 SOUTH 600 EAST
SALT LAKE CITY, UT 84102
Phone: (801) 575-8800
Fax: (801) 531-9850
Web: vcbo.com

LICENSED PROFESSIONAL ENGINEER No. 166484 MARK EUGENE BABBITT STATE OF UTAH 8-15-13

GREAT BASIN ENGINEERING

2nd District Juvenile Courthouse

Utah State Courts
08284150
165 West 20th Street, Ogden, Utah
BID DOCUMENTS

Rev #	Date	Description

Job # 12500
Date August 15, 2013
Owner # 08284150
Ins. #

DEMOLITION SWPP PLAN

CW1.01

3/18/2013 9:25:16 AM

W:\12N223 Ogden Juvenile Court\Drawings\12N223_S13.dwg, 8/14/2013 9:08:57 AM, brianb, 1:1

SHEET NO.
1

OGDEN, UTAH

WALL AND 20TH STREET SIGNAL

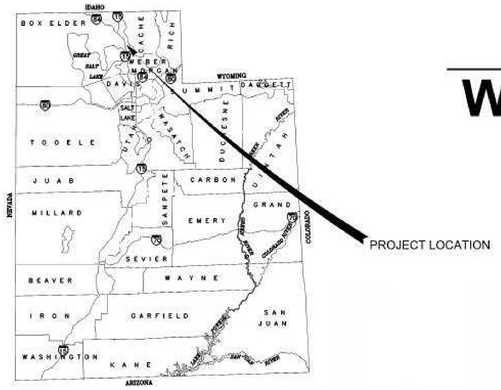

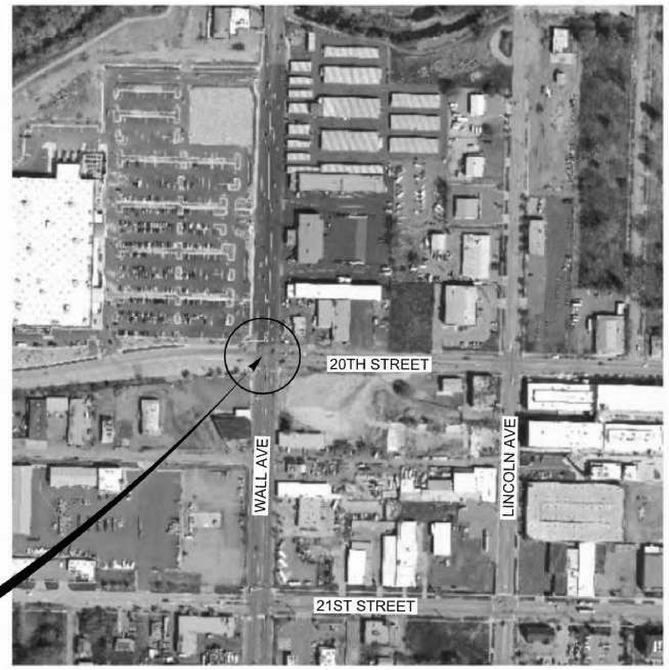

VICINITY MAP

HORROCKS ENGINEERS

INDEX TO SHEETS

SHEET #	DRAWING #	DESCRIPTION
1	1	TITLE SHEET
2	SG-1A	EXISTING LAYOUT
3	SG-2A	REMOVAL PLAN
4	SG-3A	PROPOSED SIGNAL
5	SG-4A	PROPOSED DETECTION
6	SG-5A	SIGNAL CIRCUITS
7	SL 1A	UDOT STD DWG SL SERIES
8	SL 1B	UDOT STD DWG SL SERIES
9	SL 2	UDOT STD DWG SL SERIES
10	SL 4	UDOT STD DWG SL SERIES
11	SL 5	UDOT STD DWG SL SERIES
12	SL 6	UDOT STD DWG SL SERIES
13	SL 7	UDOT STD DWG SL SERIES

PROFESSIONAL ENGINEER
ELECTRONIC SEAL
No. 8689076
MICHAEL CHARLES MERKLEY
ELECTRONIC SEAL
STATE OF UTAH

08/07/2013

CLIENT APPROVAL SIGNATURE DATE

HORROCKS PROJECT MANAGER 08/07/2013 DATE

HORROCKS ENGINEERS

8/8/2013 10:10:09 AM Print Organizer G:\2013\Gc-721-1303 Wall and 20th Street Signal\Project Data\Sheet & Plan\Cover\Gc-721-1303_Coversheet.dgn

8/14/2013 10:41:50 AM

VCBO ARCHITECTURE

VCBO ARCHITECTURE
524 SOUTH 600 EAST
SALT LAKE CITY, UT 84102
Phone: (801) 575-8800
Fax: (801) 531-9850
Web: vcbo.com

LICENSED ARCHITECT No. 133012 BRENT R. TIPPETS 8-15-13 STATE OF UTAH

2nd District Juvenile Courthouse

Utah State Courts
08284150
165 West 20th Street, Ogden, Utah
BID DOCUMENTS

Rev #	Date	Description

Job # 12500
Date August 15, 2013
Owner # 08284150
Ins. #

TRAFFIC SIGNAL COVER

SG-00

LEGEND:

- P1 — SIGNAL POLE IDENTIFICATION
- EXISTING UNDERGROUND SERVICE PEDESTAL
- EXISTING TYPE I - PC JUNCTION BOX (STREET LIGHTING)
- EXISTING TYPE I - PC JUNCTION BOX
- EXISTING TYPE III - PC JUNCTION BOX
- EXISTING MAST ARM SIGNAL POLE
- EXISTING TRAFFIC SIGNAL CONTROLLER
- EXISTING SIGNAL POLE LUMINAIRE EXTENSION W/ ARM
- EXISTING TYPE I, 12'-3 SECTION SIGNAL HEAD ASSEMBLY W/ LOUVERED BACK PLATE
- EXISTING TYPE VI, 12'-4 SECTION W/ ALL ARROWS & LOUVERED BACK PLATE
- EXISTING WAVETRONIX MATRIX RADAR DETECTOR
- EXISTING WAVETRONIX ADVANCE RADAR DETECTOR
- EXISTING PEDESTRIAN SIGNAL HEAD
- EXISTING PEDESTRIAN SIGNAL POLE W/ PUSH BUTTON
- EXISTING SIGNAL AND LIGHTING CONDUIT

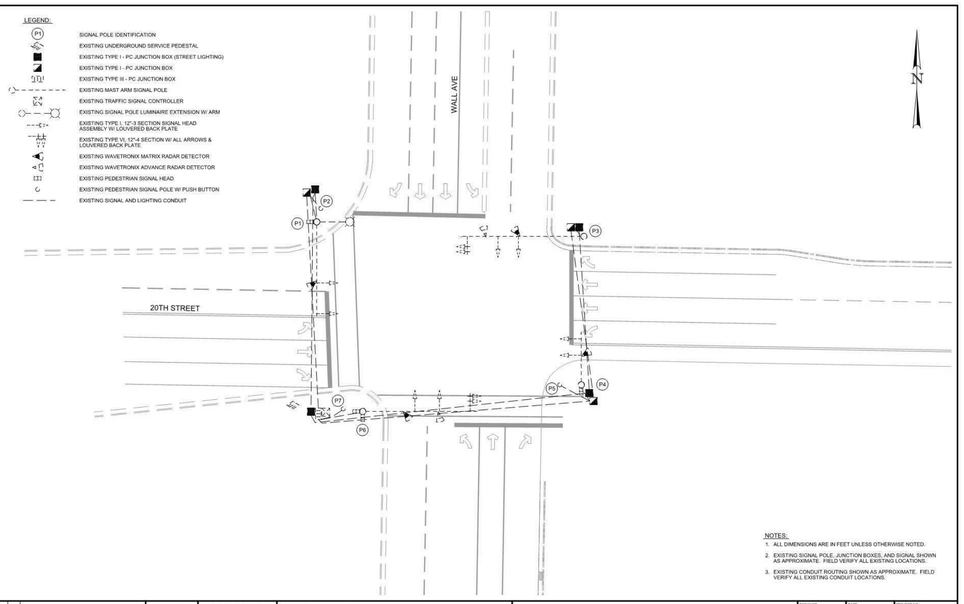

NOTES:

1. ALL DIMENSIONS ARE IN FEET UNLESS OTHERWISE NOTED.
2. EXISTING SIGNAL POLE, JUNCTION BOXES, AND SIGNAL SHOWN AS APPROXIMATE. FIELD VERIFY ALL EXISTING LOCATIONS.
3. EXISTING CONDUIT ROUTING SHOWN AS APPROXIMATE. FIELD VERIFY ALL EXISTING CONDUIT LOCATIONS.

REVISIONS				SCALE	WARNING	HORROCKS ENGINEERS	2162 West Grove Parkway Suite 450 Pleasant Grove, UT 84062 (801) 763-5100	WALL AND 20TH STREET SIGNAL	DESIGNED MCM	DATE 08/07/13	PROJECT NO.
REV.	DATE	BY	DESCRIPTION	HORIZONTAL 1" = 30'	0 1/2 1 IF THIS BAR DOES NOT MEASURE 1" THEN DRAWING IS NOT TO SCALE			EXISTING LAYOUT	DRAWN KKH	DATE 08/07/13	SHEET NO. 2 of 13
				VERTICAL					CHECKED BOC	DATE 08/07/13	DRAWING NO. SG-1A

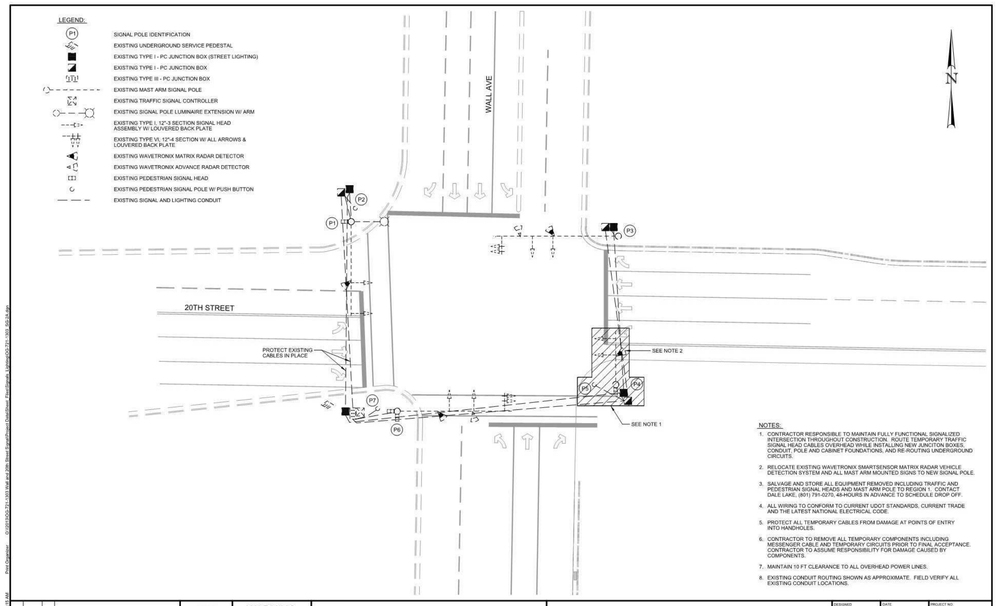

NOTES:

1. CONTRACTOR RESPONSIBLE TO MAINTAIN FULLY FUNCTIONAL SIGNALIZED INTERSECTION THROUGHOUT CONSTRUCTION. ROUTE TEMPORARY TRAFFIC SIGNAL HEAD CABLES OVERHEAD WHILE INSTALLING NEW JUNCITON BOXES, SIGNAL POLE AND CABINET FOUNDATIONS, AND RE-ROUTING UNDERGROUND CIRCUITS.
2. RELOCATE EXISTING WAVETRONIX SMARTSENSOR MATRIX RADAR VEHICLE DETECTION SYSTEM AND ALL MAST ARM MOUNTED SIGNS TO NEW SIGNAL POLE.
3. SALVAGE AND STORE ALL EQUIPMENT REMOVED INCLUDING TRAFFIC AND PEDESTRIAN SIGNAL HEADS AND MAST ARM POLE TO REGION 1. CONTACT DALE LAKE, (801) 791-0275, 48-HOURS IN ADVANCE TO SCHEDULE DROP OFF.
4. ALL WIRING TO CONFORM TO CURRENT UDOT STANDARDS, CURRENT TRADE AND THE LATEST NATIONAL ELECTRICAL CODE.
5. PROTECT ALL TEMPORARY CABLES FROM DAMAGE AT POINTS OF ENTRY INTO HANDHOLES.
6. CONTRACTOR TO REMOVE ALL TEMPORARY COMPONENTS INCLUDING MESSENGER CABLE AND TEMPORARY CIRCUITS PRIOR TO FINAL ACCEPTANCE. CONTRACTOR TO ASSUME RESPONSIBILITY FOR DAMAGE CAUSED BY COMPONENTS.
7. MAINTAIN 10 FT CLEARANCE TO ALL OVERHEAD POWER LINES.
8. EXISTING CONDUIT ROUTING SHOWN AS APPROXIMATE. FIELD VERIFY ALL EXISTING CONDUIT LOCATIONS.

REVISIONS				SCALE	WARNING	HORROCKS ENGINEERS	2162 West Grove Parkway Suite 450 Pleasant Grove, UT 84062 (801) 763-5100	WALL AND 20TH STREET SIGNAL	DESIGNED MCM	DATE 08/07/13	PROJECT NO.
REV.	DATE	BY	DESCRIPTION	HORIZONTAL 1" = 30'	0 1/2 1 IF THIS BAR DOES NOT MEASURE 1" THEN DRAWING IS NOT TO SCALE			REMOVAL PLAN	DRAWN KKH	DATE 08/07/13	SHEET NO. 3 of 13
				VERTICAL					CHECKED BOC	DATE 08/07/13	DRAWING NO. SG-2A

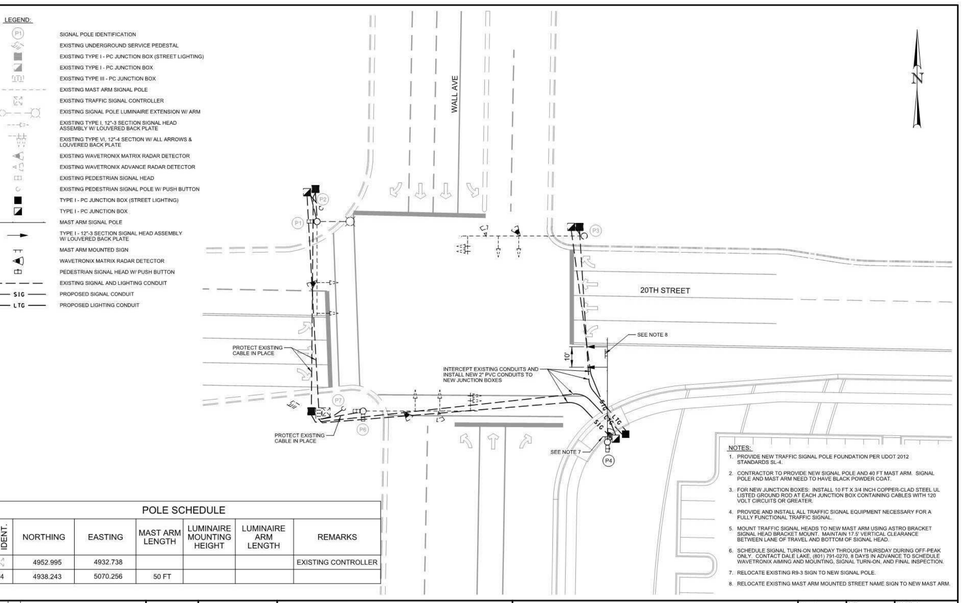

POLE IDENT.	NORTHING	EASTING	MAST ARM LENGTH	LUMINAIRE MOUNTING HEIGHT	LUMINAIRE ARM LENGTH	REMARKS
	4952.995	4932.738				EXISTING CONTROLLER
P4	4938.243	5070.256	50 FT			

NOTES:

1. PROVIDE NEW TRAFFIC SIGNAL POLE FOUNDATION PER UDOT 2012 STANDARDS SL-4.
2. CONTRACTOR TO PROVIDE NEW SIGNAL POLE AND 40 FT MAST ARM. SIGNAL POLE AND MAST ARM NEED TO HAVE BLACK POWDER COAT.
3. FOR NEW JUNCTION BOXES: INSTALL 10 FT X 3/4 INCH COPPER-CLAD STEEL UL LISTED GROUND ROD AT EACH JUNCTION BOX CONTAINING CABLES WITH 120 VOLT CIRCUITS OR GREATER.
4. PROVIDE AND INSTALL ALL TRAFFIC SIGNAL EQUIPMENT NECESSARY FOR A FULLY FUNCTIONAL TRAFFIC SIGNAL.
5. MOUNT TRAFFIC SIGNAL HEADS TO NEW MAST ARM USING ASTRO BRACKET SIGNAL HEAD BRACKET MOUNT. MAINTAIN 17.5' VERTICAL CLEARANCE BETWEEN LANE OF TRAVEL AND BOTTOM OF SIGNAL HEAD.
6. SCHEDULE SIGNAL TURN-ON MONDAY THROUGH THURSDAY DURING OFF-PEAK ONLY. CONTACT DALE LAKE, (801) 791-0270, 8 DAYS IN ADVANCE TO SCHEDULE WAVETRONIX AIMING AND MOUNTING, SIGNAL TURN-ON, AND FINAL INSPECTION.
7. RELOCATE EXISTING RS-3 SIGN TO NEW SIGNAL POLE.
8. RELOCATE EXISTING MAST ARM MOUNTED STREET NAME SIGN TO NEW MAST ARM.

REVISIONS				SCALE	WARNING	HORROCKS ENGINEERS	2162 West Grove Parkway Suite 450 Pleasant Grove, UT 84062 (801) 763-5100	WALL AND 20TH STREET SIGNAL	DESIGNED MCM	DATE 08/07/13	PROJECT NO.
REV.	DATE	BY	DESCRIPTION	HORIZONTAL 1" = 30'	0 1/2 1 IF THIS BAR DOES NOT MEASURE 1" THEN DRAWING IS NOT TO SCALE			PROPOSED SIGNAL	DRAWN KKH	DATE 08/07/13	SHEET NO. 4 of 13
				VERTICAL					CHECKED BOC	DATE 08/07/13	DRAWING NO. SG-3A

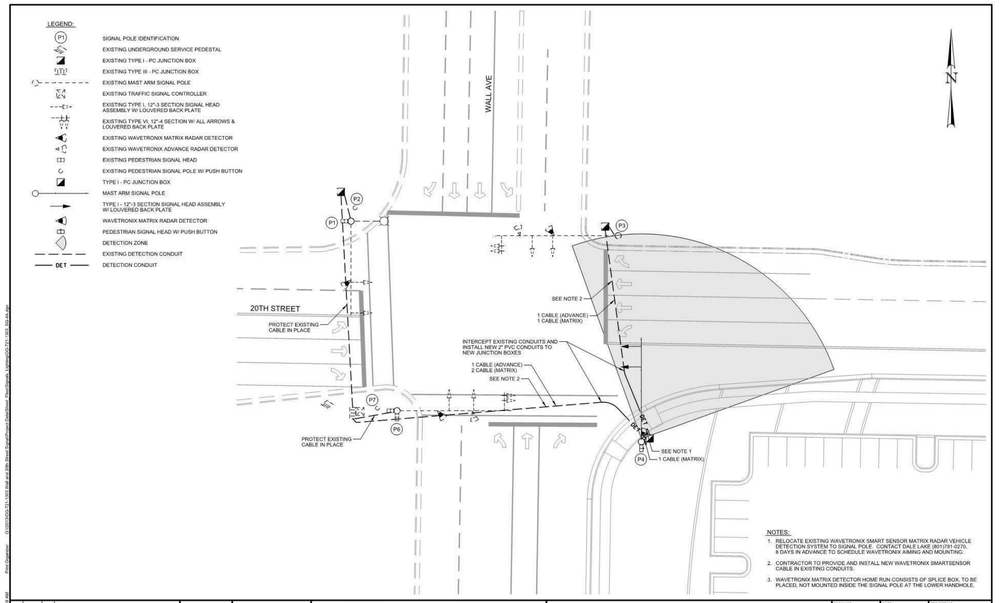

NOTES:

1. RELOCATE EXISTING WAVETRONIX SMART SENSOR MATRIX RADAR VEHICLE DETECTION SYSTEM TO SIGNAL POLE. CONTACT DALE LAKE, (801) 791-0275, 8 DAYS IN ADVANCE TO SCHEDULE WAVETRONIX AIMING AND MOUNTING.
2. CONTRACTOR TO PROVIDE AND INSTALL NEW WAVETRONIX SMARTSENSOR CABLE IN EXISTING CONDUITS.
3. WAVETRONIX MATRIX DETECTOR HOME RUN CONSISTS OF SPLICE BOX. TO BE PLACED, NOT MOUNTED INSIDE THE SIGNAL POLE AT THE LOWER HANDHOLE.

REVISIONS				SCALE	WARNING	HORROCKS ENGINEERS	2162 West Grove Parkway Suite 450 Pleasant Grove, UT 84062 (801) 763-5100	WALL AND 20TH STREET SIGNAL	DESIGNED MCM	DATE 08/07/13	PROJECT NO.
REV.	DATE	BY	DESCRIPTION	HORIZONTAL 1" = 30'	0 1/2 1 IF THIS BAR DOES NOT MEASURE 1" THEN DRAWING IS NOT TO SCALE			PROPOSED DETECTION	DRAWN KKH	DATE 08/07/13	SHEET NO. 5 of 13
				VERTICAL					CHECKED BOC	DATE 08/07/13	DRAWING NO. SG-4A

VCBO ARCHITECTURE

VCBO ARCHITECTURE
524 SOUTH 600 EAST
SALT LAKE CITY, UT 84102
Phone: (801) 575-8800
Fax: (801) 531-9850
Web: vcbo.com

LICENSED ARCHITECT No. 133012 BRENT R. TIPPETS 8-15-13 STATE OF UTAH

2nd District Juvenile Courthouse

Utah State Courts
08284150
165 West 20th Street, Ogden, Utah
BID DOCUMENTS

Rev #	Date	Description

Job # 12500
Date August 15, 2013
Owner # 08284150
Ins. #

TRAFFIC SIGNAL PLANS

SG-1A

8/14/2013 10:41:55 AM

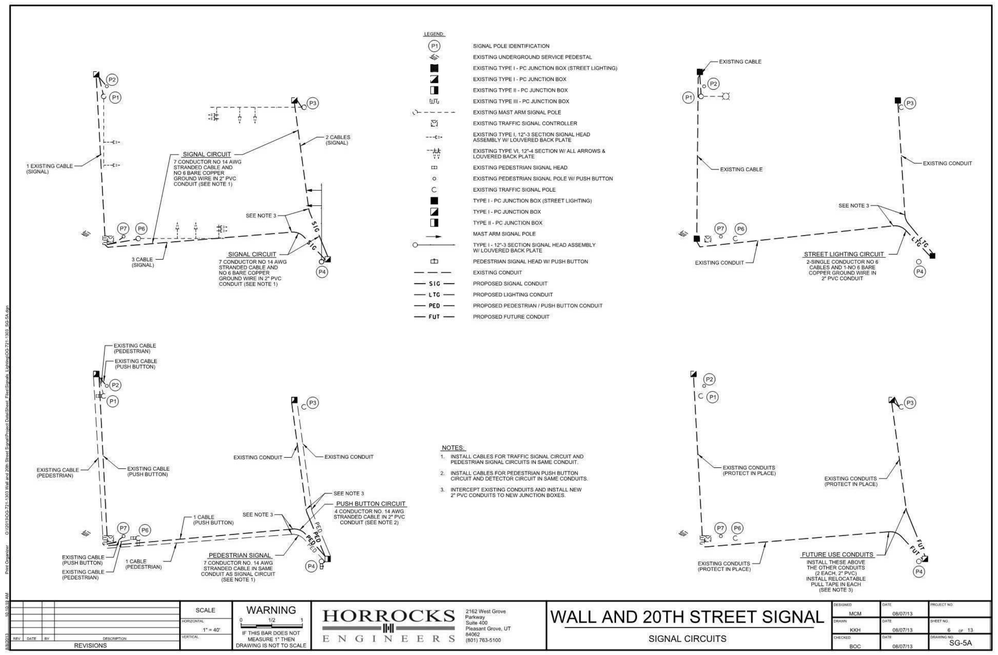

NOTES:

1. INSTALL CABLES FOR TRAFFIC SIGNAL CIRCUIT AND PEDESTRIAN SIGNAL CIRCUITS IN SAME CONDUIT.
2. INSTALL CABLES FOR PEDESTRIAN PUSH BUTTON CIRCUIT AND DETECTOR CIRCUIT IN SAME CONDUITS.
3. INTERCEPT EXISTING CONDUITS AND INSTALL NEW 2" PVC CONDUITS TO NEW JUNCTION BOXES.

SCALE	WARNING	HORROCKS ENGINEERS	WALL AND 20TH STREET SIGNAL
HORIZONTAL 1"= 40'	0 1/2 1 IF THIS BAR DOES NOT MEASURE 1" THEN DRAWING IS NOT TO SCALE	2162 West Grove Parkway Suite 450 Pleasant Grove, UT 84062 (801) 763-5100	SIGNAL CIRCUITS
VERTICAL			

DESIGNED	DATE	PROJECT NO.
MCM	08/07/13	
DRAWN	DATE	SHEET NO.
KKH	08/07/13	8 of 13
CHECKED	DATE	DRAWING NO.
BOC	08/07/13	SG-5A

REVISIONS

NO.	DATE	BY	DESCRIPTION

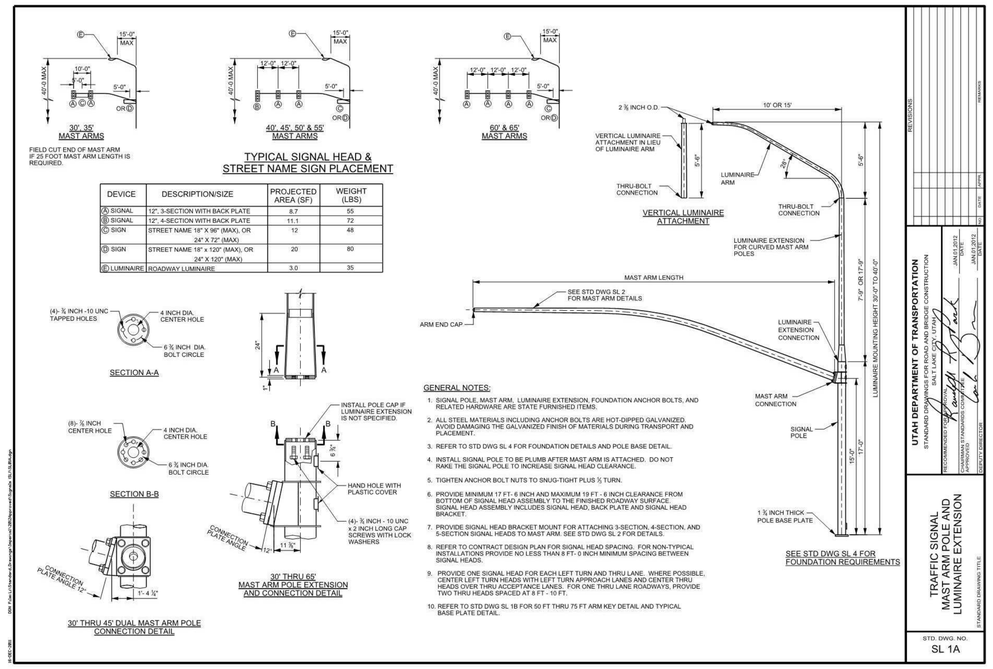

DEVICE	DESCRIPTION/SIZE	PROJECTED AREA (SF)	WEIGHT (LBS)
Ⓐ SIGNAL	12", 3-SECTION WITH BACK PLATE	8.7	55
Ⓑ SIGNAL	12", 4-SECTION WITH BACK PLATE	11.1	72
Ⓒ SIGN	STREET NAME 18" X 96" (MAX), OR 24" X 72" (MAX)	12	48
Ⓓ SIGN	STREET NAME 18" x 120" (MAX), OR 24" X 120" (MAX)	20	80
Ⓔ LUMINAIRE	ROADWAY LUMINAIRE	3.0	35

GENERAL NOTES:

1. SIGNAL POLE, MAST ARM, LUMINAIRE EXTENSION, FOUNDATION ANCHOR BOLTS, AND RELATED HARDWARE ARE STATE FURNISHED ITEMS.
2. ALL STEEL MATERIALS INCLUDING ANCHOR BOLTS ARE HOT-DIPPED GALVANIZED. AVOID DAMAGING THE GALVANIZED FINISH OF MATERIALS DURING TRANSPORT AND PLACEMENT.
3. REFER TO STD DWG SL 4 FOR FOUNDATION DETAILS AND POLE BASE DETAIL.
4. INSTALL SIGNAL POLE TO BE PLUMB AFTER MAST ARM IS ATTACHED. DO NOT RAKE THE SIGNAL POLE TO INCREASE SIGNAL HEAD CLEARANCE.
5. TIGHTEN ANCHOR BOLT NUTS TO SNUG-TIGHT PLUS ½ TURN.
6. PROVIDE MINIMUM 17 FT - 6 INCH AND MAXIMUM 19 FT - 6 INCH CLEARANCE FROM BOTTOM OF SIGNAL HEAD ASSEMBLY TO THE FINISHED ROADWAY SURFACE. SIGNAL HEAD ASSEMBLY INCLUDES SIGNAL HEAD, BACK PLATE AND SIGNAL HEAD BRACKET.
7. PROVIDE SIGNAL HEAD BRACKET MOUNT FOR ATTACHING 3-SECTION, 4-SECTION, AND 5-SECTION SIGNAL HEADS TO MAST ARM. SEE STD DWG SL 2 FOR DETAILS.
8. REFER TO CONTRACT DESIGN PLAN FOR SIGNAL HEAD SPACING. FOR NON-TYPICAL INSTALLATIONS PROVIDE NO LESS THAN 8 FT - 0 INCH MINIMUM SPACING BETWEEN SIGNAL HEADS.
9. PROVIDE ONE SIGNAL HEAD FOR EACH LEFT TURN AND THRU LANE. WHERE POSSIBLE, CENTER LEFT TURN HEADS WITH LEFT TURN APPROACH LANES AND CENTER THRU HEADS OVER THRU ACCEPTANCE LANES. FOR ONE THRU LANE ROADWAYS, PROVIDE TWO THRU HEADS SPACED AT 8 FT - 10 FT.
10. REFER TO STD DWG SL 1B FOR 50 FT THRU 75 FT ARM KEY DETAIL AND TYPICAL BASE PLATE DETAIL.

REVISIONS

NO.	DATE	BY	DESCRIPTION

UTAH DEPARTMENT OF TRANSPORTATION
STANDARD DRAWINGS FOR ROAD AND BRIDGE CONSTRUCTION
SALT LAKE CITY, UTAH

RECOMMENDED FOR ADOPTION: JAN 01 2012
CHAIRMAN STANDARDS COMMITTEE: JAN 01 2012
APPROVED: JAN 01 2012
DEPUTY DIRECTOR

TRAFFIC SIGNAL MAST ARM POLE AND LUMINAIRE EXTENSION

STANDARD DRAWING TITLE

STD. DWG. NO.
SL 1A

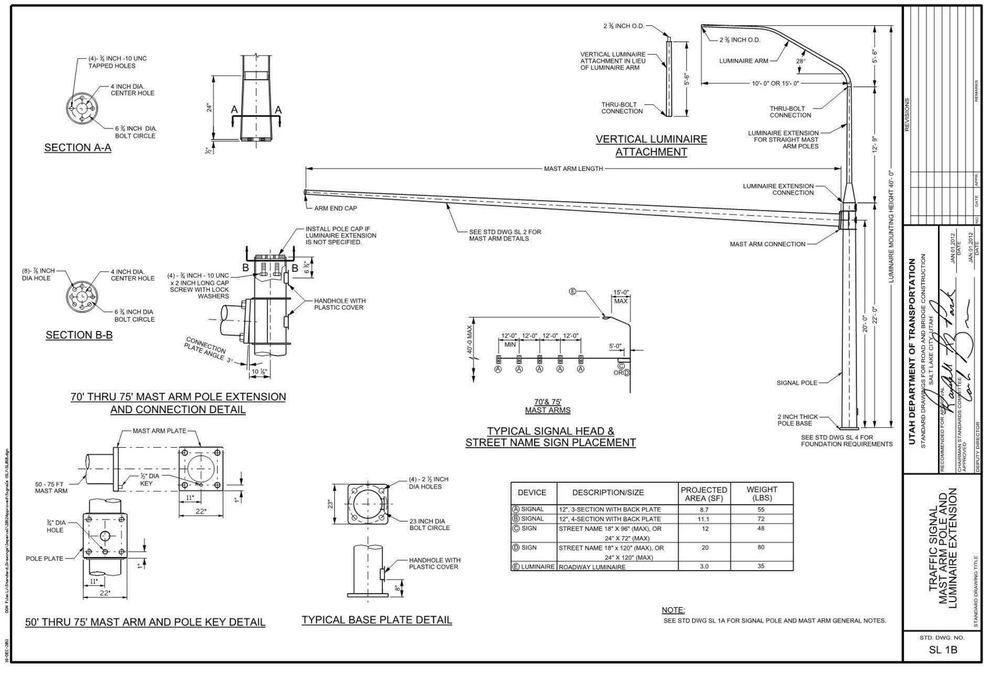

DEVICE	DESCRIPTION/SIZE	PROJECTED AREA (SF)	WEIGHT (LBS)
Ⓐ SIGNAL	12", 3-SECTION WITH BACK PLATE	8.7	55
Ⓑ SIGNAL	12", 4-SECTION WITH BACK PLATE	11.1	72
Ⓒ SIGN	STREET NAME 18" X 96" (MAX), OR 24" X 72" (MAX)	12	48
Ⓓ SIGN	STREET NAME 18" x 120" (MAX), OR 24" X 120" (MAX)	20	80
Ⓔ LUMINAIRE	ROADWAY LUMINAIRE	3.0	35

NOTE:
SEE STD DWG SL 1A FOR SIGNAL POLE AND MAST ARM GENERAL NOTES.

REVISIONS

NO.	DATE	BY	DESCRIPTION

UTAH DEPARTMENT OF TRANSPORTATION
STANDARD DRAWINGS FOR ROAD AND BRIDGE CONSTRUCTION
SALT LAKE CITY, UTAH

RECOMMENDED FOR ADOPTION: JAN 01 2012
CHAIRMAN STANDARDS COMMITTEE: JAN 01 2012
APPROVED: JAN 01 2012
DEPUTY DIRECTOR

TRAFFIC SIGNAL MAST ARM POLE AND LUMINAIRE EXTENSION

STANDARD DRAWING TITLE

STD. DWG. NO.
SL 1B

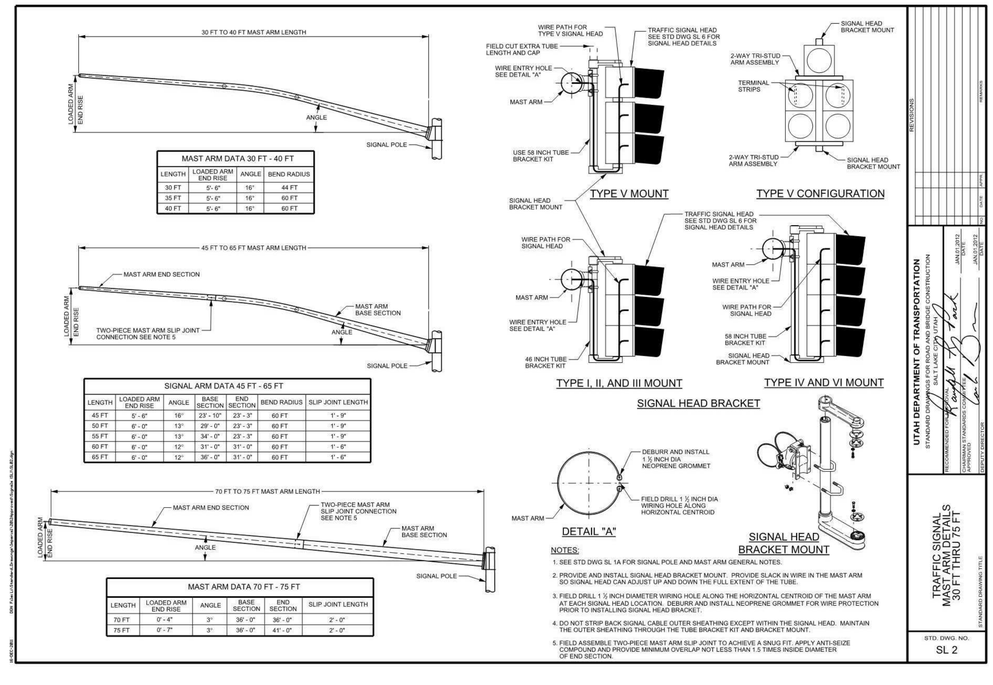

MAST ARM DATA 30 FT - 40 FT			
LENGTH	LOADED ARM END RISE	ANGLE	BEND RADIUS
30 FT	5'- 6"	16°	44 FT
35 FT	5'- 6"	16°	60 FT
40 FT	5'- 6"	16°	60 FT

SIGNAL ARM DATA 45 FT - 65 FT							
LENGTH	LOADED ARM END RISE	ANGLE	BASE SECTION	END SECTION	BEND RADIUS	SLIP JOINT LENGTH
45 FT	5'- 6"	16°	23'- 10"	23'- 3"	60 FT	1'- 9"
50 FT	6'- 0"	13°	29'- 0"	23'- 3"	60 FT	1'- 9"
55 FT	6'- 0"	13°	34'- 0"	23'- 3"	60 FT	1'- 9"
60 FT	6'- 0"	12°	31'- 0"	31'- 0"	60 FT	1'- 6"
65 FT	6'- 0"	12°	36'- 0"	31'- 0"	60 FT	1'- 6"

MAST ARM DATA 70 FT - 75 FT					
LENGTH	LOADED ARM END RISE	ANGLE	BASE SECTION	END SECTION	SLIP JOINT LENGTH
70 FT	0'- 4"	3°	36'- 0"	36'- 0"	2'- 0"
75 FT	0'- 7"	3°	36'- 0"	41'- 0"	2'- 0"

NOTES:

1. SEE STD DWG SL 1A FOR SIGNAL POLE AND MAST ARM GENERAL NOTES.
2. PROVIDE AND INSTALL SIGNAL HEAD BRACKET MOUNT. PROVIDE SLACK IN WIRE IN THE MAST ARM SO SIGNAL HEAD CAN ADJUST UP AND DOWN THE FULL EXTENT OF THE TUBE.
3. FIELD DRILL 1 ¾ INCH DIAMETER WIRING HOLE ALONG THE HORIZONTAL CENTROID OF THE MAST ARM AT EACH SIGNAL HEAD LOCATION. DEBURR AND INSTALL NEOPRENE GROMMET FOR WIRE PROTECTION PRIOR TO INSTALLING SIGNAL HEAD BRACKET.
4. DO NOT STRIP BACK SIGNAL CABLE OUTER SHEATHING EXCEPT WITHIN THE SIGNAL HEAD. MAINTAIN THE OUTER SHEATHING THROUGH THE TUBE BRACKET KIT AND BRACKET MOUNT.
5. FIELD ASSEMBLE TWO-PIECE MAST ARM SLIP JOINT TO ACHIEVE A SNUG FIT. APPLY ANTI-SEIZE COMPOUND AND PROVIDE MINIMUM OVERLAP NOT LESS THAN 1.5 TIMES INSIDE DIAMETER OF END SECTION.

REVISIONS

NO.	DATE	BY	DESCRIPTION

UTAH DEPARTMENT OF TRANSPORTATION
STANDARD DRAWINGS FOR ROAD AND BRIDGE CONSTRUCTION
SALT LAKE CITY, UTAH

RECOMMENDED FOR ADOPTION: JAN 01 2012
CHAIRMAN STANDARDS COMMITTEE: JAN 01 2012
APPROVED: JAN 01 2012
DEPUTY DIRECTOR

TRAFFIC SIGNAL MAST ARM DETAILS 30 FT THRU 75 FT

STANDARD DRAWING TITLE

STD. DWG. NO.
SL 2

VCBO ARCHITECTURE
VCBO ARCHITECTURE
524 SOUTH 600 EAST
SALT LAKE CITY, UT 84102
Phone: (801) 575-8800
Fax: (801) 531-9850
Web: vcbo.com

LICENSED ARCHITECT No. 133012 BRENT R. TIPPETS 8-15-13 STATE OF UTAH

2nd District Juvenile Courthouse

Utah State Courts
08284150
165 West 20th Street, Ogden, Utah
BID DOCUMENTS

Rev #	Date	Description

Job # 12500
Date August 15, 2013
Owner # 08284150
Ins. #

TRAFFIC SIGNAL DETAILS

SG-2A

8/14/2013 10:42:00 AM

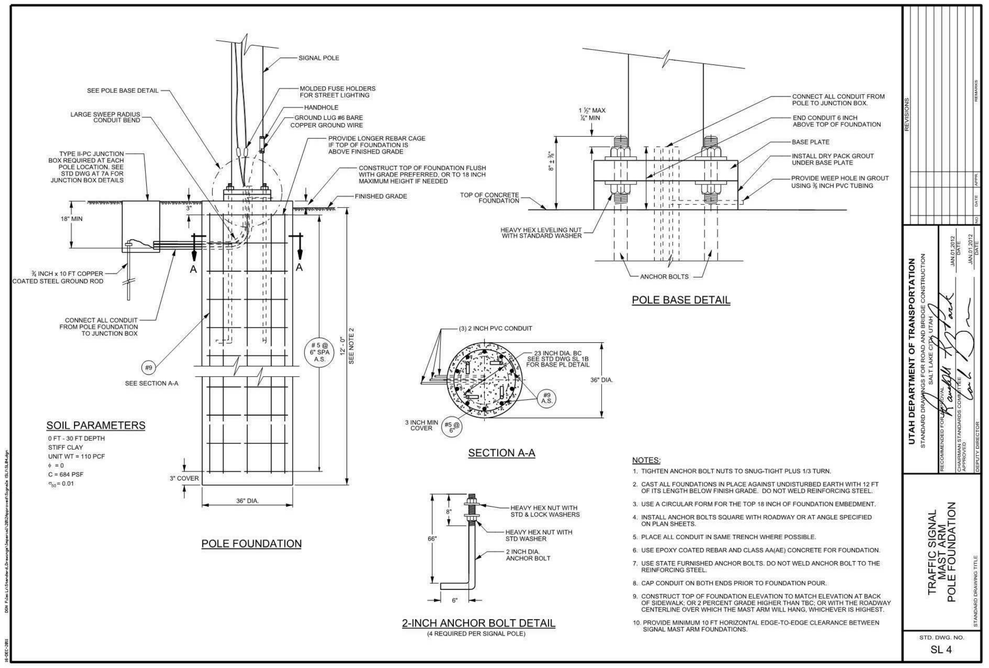

NOTES:

1. TIGHTEN ANCHOR BOLT NUTS TO SNUG-TIGHT PLUS 1/3 TURN.
2. CAST ALL FOUNDATIONS IN PLACE AGAINST UNDISTURBED EARTH WITH 12 FT OF ITS LENGTH BELOW FINISH GRADE. DO NOT WELD REINFORCING STEEL.
3. USE A CIRCULAR FORM FOR THE TOP 18 INCH OF FOUNDATION EMBEDMENT.
4. INSTALL ANCHOR BOLTS SQUARE WITH ROADWAY OR AT ANGLE SPECIFIED ON PLAN SHEETS.
5. PLACE ALL CONDUIT IN SAME TRENCH WHERE POSSIBLE.
6. USE EPOXY COATED REBAR AND CLASS AA(AE) CONCRETE FOR FOUNDATION.
7. USE STATE FURNISHED ANCHOR BOLTS. DO NOT WELD ANCHOR BOLT TO THE REINFORCING STEEL.
8. CAP CONDUIT ON BOTH ENDS PRIOR TO FOUNDATION POUR.
9. CONSTRUCT TOP OF FOUNDATION ELEVATION TO MATCH ELEVATION AT BACK OF SIDEWALK, OR 2 PERCENT GRADE HIGHER THAN TBC; OR WITH THE ROADWAY CENTERLINE OVER WHICH THE MAST ARM WILL HANG, WHICHEVER IS HIGHEST.
10. PROVIDE MINIMUM 10 FT HORIZONTAL EDGE-TO-EDGE CLEARANCE BETWEEN SIGNAL MAST ARM FOUNDATIONS.

REVISIONS

UTAH DEPARTMENT OF TRANSPORTATION
STANDARD DRAWINGS FOR ROAD AND BRIDGE CONSTRUCTION
SALT LAKE CITY, UTAH
RECOMMENDED FOR APPROVAL — JAN 01 2013 DATE
CHAIRMAN, STANDARDS COMMITTEE — JAN 01 2013 DATE
APPROVED — JAN 01 2013 DATE
DEPUTY DIRECTOR — DEPUTY DIRECTOR

TRAFFIC SIGNAL MAST ARM POLE FOUNDATION

STANDARD DRAWING TITLE

STD. DWG. NO. SL 4

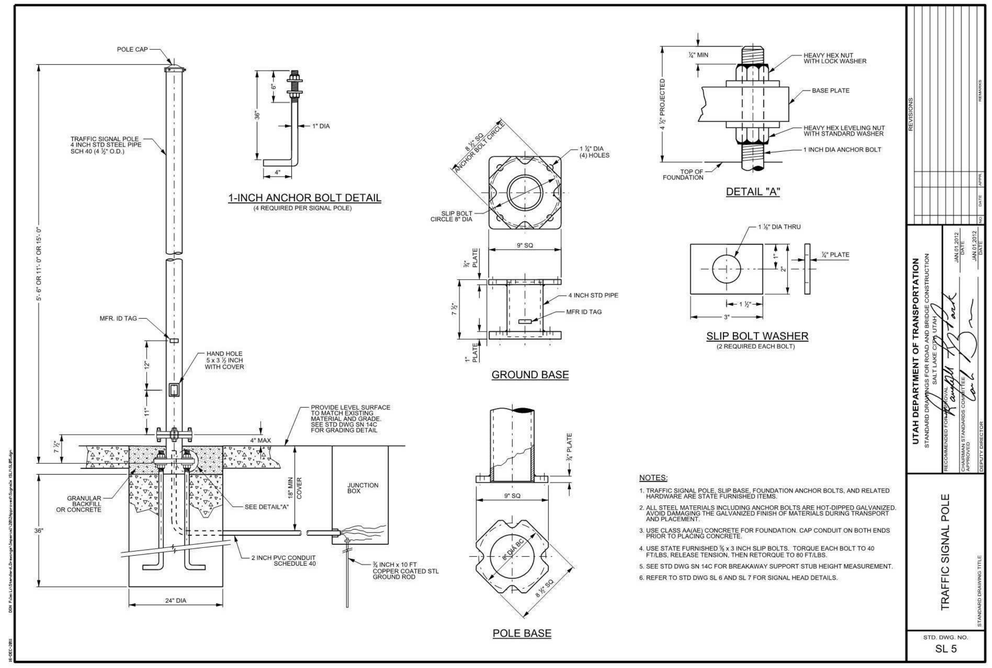

NOTES:

1. TRAFFIC SIGNAL POLE, SLIP BASE, FOUNDATION ANCHOR BOLTS, AND RELATED HARDWARE ARE STATE FURNISHED ITEMS.
2. ALL STEEL MATERIALS INCLUDING ANCHOR BOLTS ARE HOT-DIPPED GALVANIZED. AVOID DAMAGING THE GALVANIZED FINISH OF MATERIALS DURING TRANSPORT AND PLACEMENT.
3. USE CLASS AA(AE) CONCRETE FOR FOUNDATION. CAP CONDUIT ON BOTH ENDS PRIOR TO PLACING CONCRETE.
4. USE STATE FURNISHED ¾ x 3 INCH SLIP BOLTS. TORQUE EACH BOLT TO 40 FT-LBS, RELEASE TENSION, THEN RETORQUE TO 80 FT-LBS.
5. SEE STD DWG SN 14C FOR BREAKAWAY SUPPORT STUB HEIGHT MEASUREMENT.
6. REFER TO STD DWG SL 6 AND SL 7 FOR SIGNAL HEAD DETAILS.

REVISIONS

UTAH DEPARTMENT OF TRANSPORTATION
STANDARD DRAWINGS FOR ROAD AND BRIDGE CONSTRUCTION
SALT LAKE CITY, UTAH
RECOMMENDED FOR APPROVAL — JAN 01 2013 DATE
CHAIRMAN, STANDARDS COMMITTEE — JAN 01 2013 DATE
APPROVED — JAN 01 2013 DATE
DEPUTY DIRECTOR — DEPUTY DIRECTOR

TRAFFIC SIGNAL POLE

STANDARD DRAWING TITLE

STD. DWG. NO. SL 5

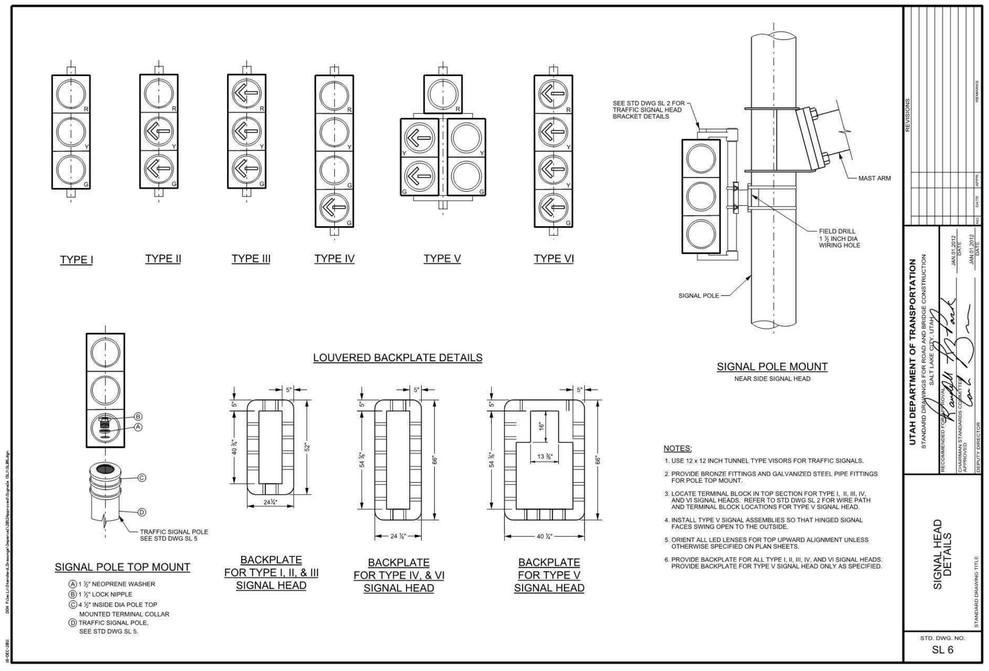

NOTES:

1. USE 12 x 12 INCH TUNNEL TYPE VISORS FOR TRAFFIC SIGNALS.
2. PROVIDE BRONZE FITTINGS AND GALVANIZED STEEL PIPE FITTINGS FOR POLE TOP MOUNT.
3. LOCATE TERMINAL BLOCK IN TOP SECTION FOR TYPE I, II, III, IV, AND VI SIGNAL HEADS. REFER TO STD DWG SL 2 FOR WIRE PATH AND TERMINAL BLOCK LOCATIONS FOR TYPE V SIGNAL HEAD.
4. INSTALL TYPE V SIGNAL ASSEMBLIES SO THAT HINGED SIGNAL FACES SWING OPEN TO THE OUTSIDE.
5. ORIENT ALL LED LENSES FOR TOP UPWARD ALIGNMENT UNLESS OTHERWISE SPECIFIED ON PLAN SHEETS.
6. PROVIDE BACKPLATE FOR ALL TYPE I, II, III, IV, AND VI SIGNAL HEADS. PROVIDE BACKPLATE FOR TYPE V SIGNAL HEAD ONLY AS SPECIFIED.

REVISIONS

UTAH DEPARTMENT OF TRANSPORTATION
STANDARD DRAWINGS FOR ROAD AND BRIDGE CONSTRUCTION
SALT LAKE CITY, UTAH
RECOMMENDED FOR APPROVAL — JAN 01 2013 DATE
CHAIRMAN, STANDARDS COMMITTEE — JAN 01 2013 DATE
APPROVED — JAN 01 2013 DATE
DEPUTY DIRECTOR — DEPUTY DIRECTOR

SIGNAL HEAD DETAILS

STANDARD DRAWING TITLE

STD. DWG. NO. SL 6

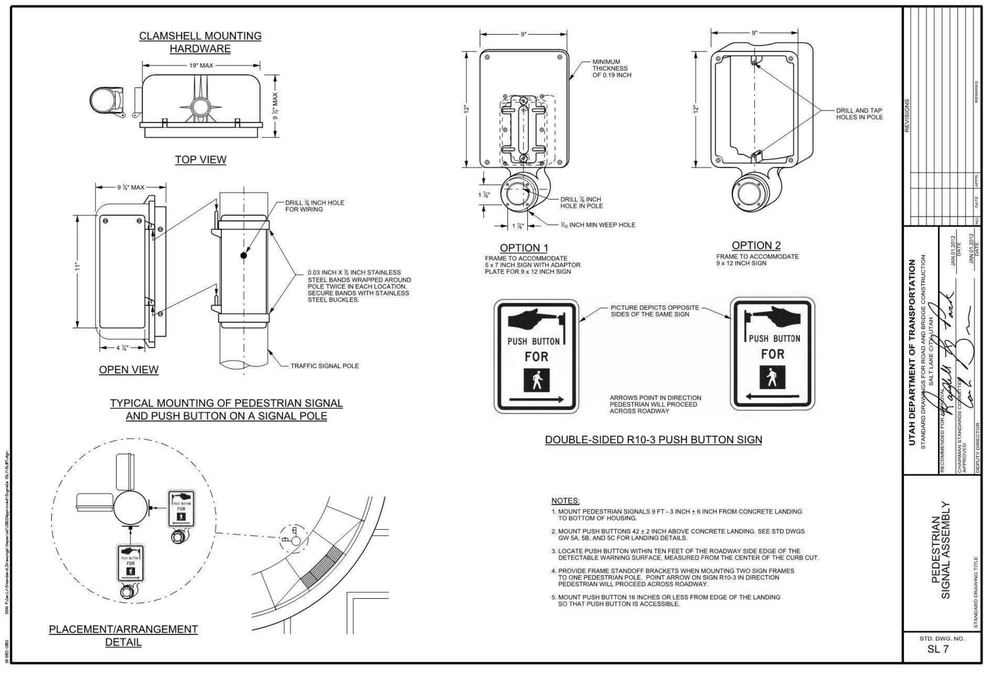

NOTES:

1. MOUNT PEDESTRIAN SIGNALS 9 FT - 3 INCH ± 6 INCH FROM CONCRETE LANDING TO BOTTOM OF HOUSING.
2. MOUNT PUSH BUTTONS 42 ± 2 INCH ABOVE CONCRETE LANDING. SEE STD DWGS GW 5A, 5B, AND 5C FOR LANDING DETAILS.
3. LOCATE PUSH BUTTON WITHIN TEN FEET OF THE ROADWAY SIDE EDGE OF THE DETECTABLE WARNING SURFACE, MEASURED FROM THE CENTER OF THE CURB CUT.
4. PROVIDE FRAME STANDOFF BRACKETS WHEN MOUNTING TWO SIGN FRAMES TO ONE PEDESTRIAN POLE. POINT ARROW ON SIGN R10-3 IN DIRECTION PEDESTRIAN WILL PROCEED ACROSS ROADWAY.
5. MOUNT PUSH BUTTON 16 INCHES OR LESS FROM EDGE OF THE LANDING SO THAT PUSH BUTTON IS ACCESSIBLE.

REVISIONS

UTAH DEPARTMENT OF TRANSPORTATION
STANDARD DRAWINGS FOR ROAD AND BRIDGE CONSTRUCTION
SALT LAKE CITY, UTAH
RECOMMENDED FOR APPROVAL — JAN 01 2013 DATE
CHAIRMAN, STANDARDS COMMITTEE — JAN 01 2013 DATE
APPROVED — JAN 01 2013 DATE
DEPUTY DIRECTOR — DEPUTY DIRECTOR

PEDESTRIAN SIGNAL ASSEMBLY

STANDARD DRAWING TITLE

STD. DWG. NO. SL 7

VCBO ARCHITECTURE
VCBO ARCHITECTURE
524 SOUTH 600 EAST
SALT LAKE CITY, UT 84102
Phone: (801) 575-8800
Fax: (801) 531-9850
Web: vcbo.com

LICENSED ARCHITECT No. 133012 BRENT R. TIPPETS 8-15-13 STATE OF UTAH

2nd District Juvenile Courthouse

Utah State Courts
08284150
165 West 20th Street, Ogden, Utah
BID DOCUMENTS

Rev #	Date	Description

Job # 12500
Date August 15, 2013
Owner # 08284150
Ins. #

TRAFFIC SIGNAL DETAILS

SG-3A

8/14/2013 10:42:05 AM

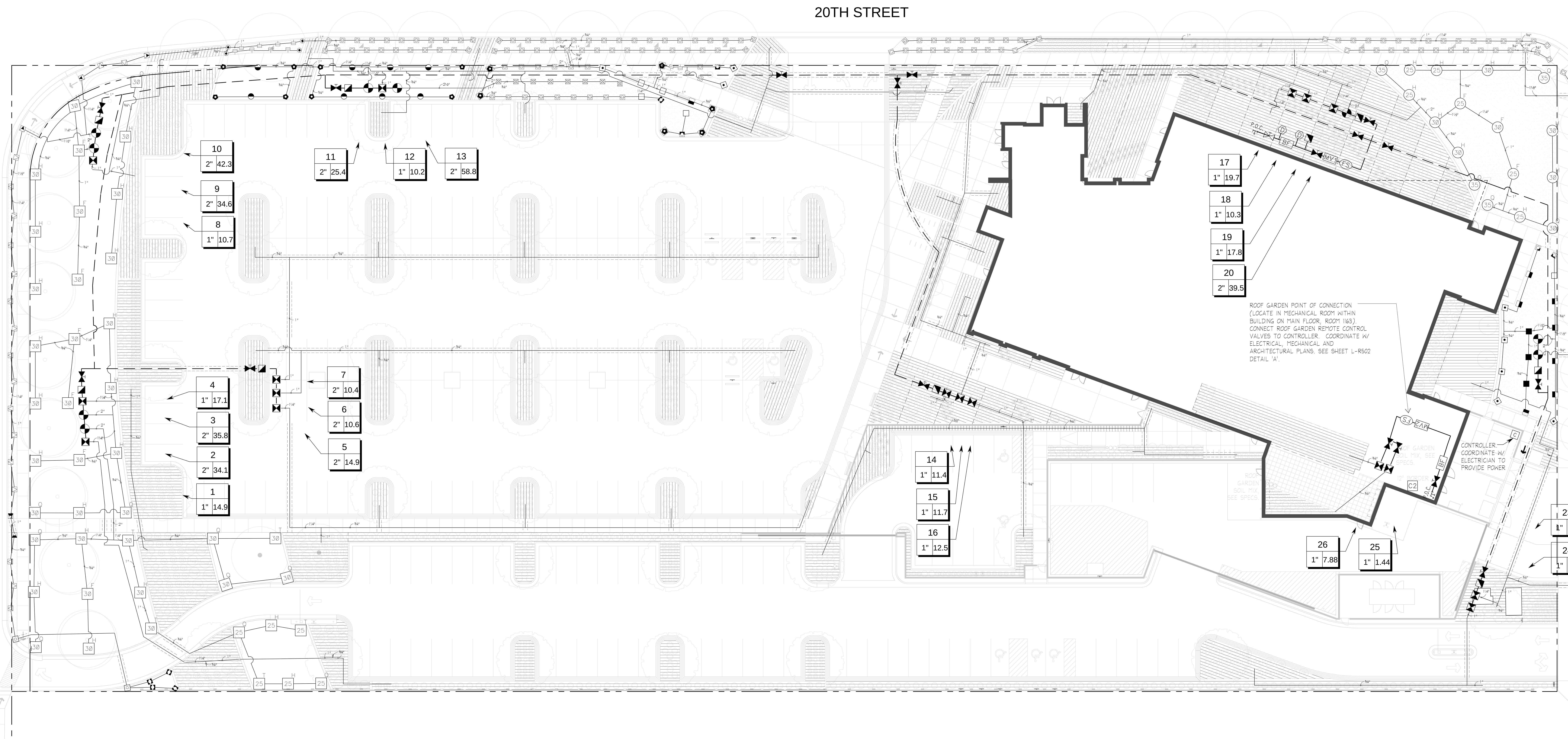

IRRIGATION SCHEDULE

SYMBOL	MANUFACTURER/MODEL/DESCRIPTION	QTY	PSI
EST LCS RCS CST SST	Rain Bird 1804-SAM-PRS 15 Strip Series Turf Spray 4.0" Pop-Up Sprinkler with Co-Molded Wiper Seal. 1/2" NPT Female Threaded Inlet. With Seal-A-Matic Check Valve. Pressure Regulating.	23	30
Q H F	Rain Bird 1804-SAM-PRS 5 Series MPR Turf Spray 4.0" Pop-Up Sprinkler with Co-Molded Wiper Seal. 1/2" NPT Female Threaded Inlet. With Seal-A-Matic Check Valve. Pressure Regulating.	11	30
Q T H F	Rain Bird 1804-SAM-PRS 8 Series MPR Turf Spray 4.0" Pop-Up Sprinkler with Co-Molded Wiper Seal. 1/2" NPT Female Threaded Inlet. With Seal-A-Matic Check Valve. Pressure Regulating.	170	30
Q T H F	Rain Bird 1804-SAM-PRS 10 Series MPR Turf Spray 4.0" Pop-Up Sprinkler with Co-Molded Wiper Seal. 1/2" NPT Female Threaded Inlet. With Seal-A-Matic Check Valve. Pressure Regulating.	4	30
Q T H TQ F	Rain Bird 1804-SAM-PRS 12 Series MPR Turf Spray 4.0" Pop-Up Sprinkler with Co-Molded Wiper Seal. 1/2" NPT Female Threaded Inlet. With Seal-A-Matic Check Valve. Pressure Regulating.	4	30
Q T H TQ F	Rain Bird 1804-SAM-PRS 15 Series MPR Turf Spray 4.0" Pop-Up Sprinkler with Co-Molded Wiper Seal. 1/2" NPT Female Threaded Inlet. With Seal-A-Matic Check Valve. Pressure Regulating.	8	30
4 6 8 10 12 15 17	Rain Bird 1804-SAM-PRS ADJ Turf Spray 4.0" Pop-Up Sprinkler with Co-Molded Wiper Seal. 1/2" NPT Female Threaded Inlet. With Seal-A-Matic Check Valve. Pressure Regulating.	24	30
12 HE-VAN-V 12 HE-VAN-F	Rain Bird 1804-SAM-PRS 12 Series HE-VAN Turf Spray 4.0" Pop-Up Sprinkler with Co-Molded Wiper Seal. 1/2" NPT Female Threaded Inlet. With Seal-A-Matic Check Valve. Pressure Regulating.	4	30
15 HE-VAN-V 15 HE-VAN-F	Rain Bird 1804-SAM-PRS 15 Series HE-VAN Turf Spray 4.0" Pop-Up Sprinkler with Co-Molded Wiper Seal. 1/2" NPT Female Threaded Inlet. With Seal-A-Matic Check Valve. Pressure Regulating.	11	30
Q T H TQ F	Rain Bird 1812-SAM-PRS 15 Series MPR Shrub Spray 12.0" Pop-Up Sprinkler with Co-Molded Wiper Seal. 1/2" NPT Female Threaded Inlet. With Seal-A-Matic Check Valve, and Pressure Regulating Device.	8	30
4 6 8 10 18	Rain Bird 1812-SAM-PRS ADJ Shrub Spray 12.0" Pop-Up Sprinkler with Co-Molded Wiper Seal. 1/2" NPT Female Threaded Inlet. With Seal-A-Matic Check Valve, and Pressure Regulating Device.	8	30

SYMBOL	MANUFACTURER/MODEL/DESCRIPTION	QTY	PSI	GPM	RADIUS
ARC 25	Rain Bird 5004-PL-SAM-R-MPR Turf Rotor, 4.0" Pop-Up, Plastic Riser, with Flow Shut-Off Device. Matched Precipitation Rotor (MPR Nozzle), Arc and Radius as per Symbol. 25 ft=red, 30 ft=green, 35ft=beige. With Seal-A-Matic Check Valve, and In-Stem Pressure Regulator.	6	35		24'
ARC 30	Rain Bird 5004-PL-SAM-R-MPR Turf Rotor, 4.0" Pop-Up, Plastic Riser, with Flow Shut-Off Device. Matched Precipitation Rotor (MPR Nozzle), Arc and Radius as per Symbol. 25 ft=red, 30 ft=green, 35ft=beige. With Seal-A-Matic Check Valve, and In-Stem Pressure Regulator.	7	35		30'
ARC 35	Rain Bird 5004-PL-SAM-R-MPR Turf Rotor, 4.0" Pop-Up, Plastic Riser, with Flow Shut-Off Device. Matched Precipitation Rotor (MPR Nozzle), Arc and Radius as per Symbol. 25 ft=red, 30 ft=green, 35ft=beige. With Seal-A-Matic Check Valve, and In-Stem Pressure Regulator.	4	35		34'
ARC 25	Rain Bird 5006-PL-SAM-R-MPR Shrub rotor, 6.0" Pop-Up, Plastic Riser, with Flow Shut-Off Device. Matched Precipitation Rotor (MPR Nozzle), Arc and Radius as per Symbol. 25 ft=red, 30 ft=green, 35ft=beige. With Seal-A-Matic Check Valve, and In-Stem Pressure Regulator.	6	35		24'
ARC 30	Rain Bird 5006-PL-SAM-R-MPR Shrub rotor, 6.0" Pop-Up, Plastic Riser, with Flow Shut-Off Device. Matched Precipitation Rotor (MPR Nozzle), Arc and Radius as per Symbol. 25 ft=red, 30 ft=green, 35ft=beige. With Seal-A-Matic Check Valve, and In-Stem Pressure Regulator.	36	35		30'

SYMBOL	MANUFACTURER/MODEL/DESCRIPTION	QTY
	Rain Bird XCZ-100-PRB-COM Drip Control Kit, 1" PESB valve, 1" Basket Filter, and 40psi Pressure Regulator, 1" Ball Valve.	17
	Area to Receive Dripline Netafim TLCV9-18(18) Landscape Dripperline with 0.9gph emitters at 18" o.c. with check valve, pressure compensation, 14.7psi min. to 50psi max. Dripperline laterals spaced at 18" apart, with emitters offset for triangular pattern.	30,174 s.f.

SYMBOL	MANUFACTURER/MODEL/DESCRIPTION	QTY
	Rain Bird PEB-PRS-D Electric Remote Control Valve with Pressure Regulator.	9
	Rain Bird 44LRC 1" Quick Coupler Valve, two piece body, locking cover	9
	NIBCO T-FP-600 Isolation valve. Sized equal to pipe size. Isolation valves shall be used at all vavle manifolds and isolation points.	17

SYMBOL	DESCRIPTION	QTY
	Matco-Norca 200RTD 2" to 12" Ductile Iron Epoxy Coated & Resilient Wedge Isolation Shut Off Valve. Same size as mainline pipe. Ring-Tite option.	1
MV2	Rain Bird PESB-PRS-D 1" 1", 1-1/2", 2" Plastic Industrial Valves. Low Flow Operating Capability, Globe Configuration. With Pressure Regulating Module, and Scrubber Technology for Reliable Performance in Dirty Water Irrigation Applications.	1
MV1	Rain Bird PESB-PRS-D 2" 1", 1-1/2", 2" Plastic Industrial Valves. Low Flow Operating Capability, Globe Configuration. With Pressure Regulating Module, and Scrubber Technology for Reliable Performance in Dirty Water Irrigation Applications.	1
D	Ford Manual Drain B11-333	2
BF	Febco 825YA 1" Reduced Pressure Backflow Preventer	1
BF	Febco 825YA 2" Reduced Pressure Backflow Preventer	1
C2	Rain Bird ESP4MEi 4 Station, Hybrid Modular Indoor Controller. For Residential or Light Commercial Applications.	1
C	Rain Bird ESP8LXMEF with (07) ESPLXMSM4 and IQNCC 36 Station Commercial Controller. Mounted on a Plastic Wall Mount. Flow Sensing and Water Management Capabilities. Install the IQ NCC communication cartridge.	1
FS	Rain Bird FS-150-B 1-1/2" Flow Sensor for use with Rain Bird Maxicom, SiteControl, and ESP-LXD Central Control Systems. Brass Model. Suggested Operating Range of 2.0 GPM to 82.6 GPM. Sensors should be sized for flow rather than pipe size.	1
FS	Rain Bird FS-100-B (2) 1" Flow Sensor for use with Rain Bird Maxicom, SiteControl, and ESP-LXD Central Control Systems. Brass Model. Suggested Operating Range of 2.0 GPM to 40.0 GPM. Sensors should be sized for flow rather than pipe size.	1
P.O.C.	Point of Connection 1" Roof Garden point of connection - coordinate with architectural & mechanical dwgs. Ogden Water provided information that 95PSI was available.	1
P.O.C.	Point of Connection 3" Connect to 3" service line feeding building - coordinate with civil dwgs.	1

SYMBOL	DESCRIPTION	QTY
	Irrigation Lateral Line: PVC Schedule 40 PVC Schedule 40 irrigation pipe.	6,934 l.f.
	Irrigation Mainline: PVC Schedule 40	1,624 l.f.
	Irrigation Mainline: PVC Schedule 80	98.1 l.f.
	Pipe Sleeve: PVC Class 200 SDR 21 Typical pipe sleeve for irrigation pipe. Pipe sleeve size shall allow for irrigation piping and their related couplings to easily slide through sleeving material. Extend sleeves 18 inches beyond edges of paving or construction.	1,094 l.f.

Valve Callout

- \# — Valve Number
- \# — Valve GPM
- #" — Valve Size

C

IRRIGATION NOTES

A

1. IT IS THE INTENT OF THESE IRRIGATION PLANS TO PROVIDE THE CONTRACTOR WITH CONSTRUCTION INFORMATION THAT WILL ENABLE HIM TO PROVIDE AND INSTALL A COMPLETE AND OPERATIONAL IRRIGATION SYSTEM. THE CONTRACTOR SHALL PROVIDE ALL LABOR, PARTS AND MATERIALS REQUIRED.
2. THE SYSTEM IS DESIGNED FOR AN OPERATING PRESSURE OF 30-40 PSI AND A MAX. DEMAND OF 110 GPM. THE CONTRACTOR SHALL VERIFY THE AVAILABLE WATER PRESSURE ON SITE PRIOR TO CONSTRUCTION AND REPORT ANY DISCREPANCIES TO THE OWNER'S REPRESENTATIVE. IN THE EVENT THE PRESSURE DIFFERENCES ARE NOT REPORTED PRIOR TO THE START OF CONSTRUCTION, THE CONTRACTOR SHALL ASSUME FULL RESPONSIBILITY FOR ANY REVISIONS NECESSARY. CONTRACTOR TO MAINTAIN OPERATING PRESSURE FOR EACH ZONE TO THE LAST HEAD.
3. IT IS THE RESPONSIBILITY OF THE CONTRACTOR TO FAMILIARIZE HIMSELF WITH ALL GRADE DIFFERENCES, LOCATION OF WALLS, STRUCTURES, WALKS, AND UTILITIES. THE IRRIGATION CONTRACTOR SHALL REPAIR OR REPLACE ALL ITEMS DAMAGED BY HIS WORK, HE SHALL COORDINATE HIS WORK WITH OTHER CONTRACTORS FOR THE LOCATION AND INSTALLATION OF PIPE SLEEVES AND LATERALS THROUGH WALLS AND UNDER PAVING.
4. DO NOT WILLFULLY INSTALL THE IRRIGATION SYSTEM AS SHOWN ON THE PLANS WHEN IT IS OBVIOUS IN THE FIELD THAT UNKNOWN OBSTRUCTIONS OR GRADING DIFFERENCES MAY NOT HAVE BEEN CONSIDERED IN THE ENGINEERING. SUCH OBSTRUCTIONS OR DIFFERENCES SHOULD BE BROUGHT TO THE ATTENTION OF THE LANDSCAPE ARCHITECT. IN THE EVENT THAT THIS NOTIFICATION IS NOT PERFORMED, THE CONTRACTOR SHALL ASSUME FULL RESPONSIBILITY FOR ANY REVISIONS NECESSARY.
5. THIS DESIGN IS DIAGRAMMATIC, ALL IRRIGATION EQUIPMENT, PIPING, VALVES, ETC., SHOWN WITHIN PAVED AREAS ARE FOR DESIGN CLARIFICATION ONLY AND SHALL BE INSTALLED IN SHRUB BEDS WHEREVER POSSIBLE. AVOID PLACING VALVE BOXES IN TURF OR GROUND COVER AREAS. LOCATION OF VALVE BOXES SHALL BE APPROVED BY THE LANDSCAPE ARCHITECT PRIOR TO INSTALLATION.
6. IRRIGATION SYSTEM IS TO BE INSTALLED AS SHOWN ON THE PLANS AND IN ACCORDANCE WITH ALL APPLICABLE CODES AND REGULATIONS.
7. THE CONTRACTOR SHALL FLUSH AND ADJUST ALL SPRINKLER HEADS AND VALVES FOR OPTIMUM COVERAGE. INSTALL NOZZLES OF THE APPROPRIATE DEGREE AND RADIUS FOR THE AREA TO BE COVERED. ADJUST ALL NOZZLES TO MINIMIZE SPRAYING ONTO WALKS, BUILDINGS, ETC.
8. ALL IRRIGATION EQUIPMENT NOT OTHERWISE DETAILED OR SPECIFIED SHALL BE INSTALLED AS PER MANUFACTURES SPECS.
9. ALL PIPE INSTALLED IN PAVING SHALL BE SLEEVED (SEE LEGEND AND DETAILS).
10. VALVE BOXES AND LID COVERS SHALL MATCH COLOR OF SURROUND MULCH OR GROUNDCOVER (TAN OR GREEN).

SCALE

B

0 10 20 40
SCALE: 1" = 20'
NORTH

VCBO

VCBO ARCHITECTURE
524 SOUTH 600 EAST
SALT LAKE CITY, UT 84102
Phone: (801) 575-8800
Fax: (801) 531-9850
Web: vcbo.com

LICENSED LANDSCAPE ARCHITECT
Richard L. Gilbert
No. 5734299
Aug 15, 2013
STATE OF UTAH

Arc Sitio Design, Inc
Landscape Architecture & Architectural Site Design
1058 East 2100 South
Salt Lake City, Utah 84106
office 801 . 487 . 4923
fax 801 . 466 . 3046
www.arcsitiodesign.com

2nd District Juvenile Courthouse

Utah State Courts
08284150
165 West 20th Street, Ogden, Utah
BID DOCUMENTS

Rev #	Date	Description

Job # 12500
Date August 15, 2013
Owner # 08284150
Ins. #

IRRIGATION PLAN

L-R101

12/17/2012 4:48:20 PM

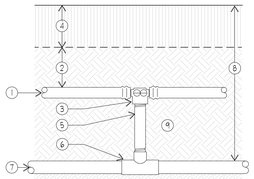

1. DRIPLINE TUBING
2. BURY DRIPPERLINE 2 TO 4" BELOW THE MULCH
3. DRIPLINE 180 2-WAY TEE
4. MULCH AS SPECIFIED
5. 3/4" SCH 80 PVC NIPPLE FOR PVC PIPE OR BLANK DRIPLINE PIPE WITH POLY PIPE
6. USE COMPRESSION TEE OR ELL FOR POLY PIPE OR PVC TEE (5x5x1) FOR PVC PIPE
7. LATERAL PIPING
8. SEE TRENCHING AND SLEEVING DETAIL (F / L-L501)
9. TOPSOIL AS SPECIFIED

N DRIPLINE START CONNECTION

SCALE: NTS — SECTION

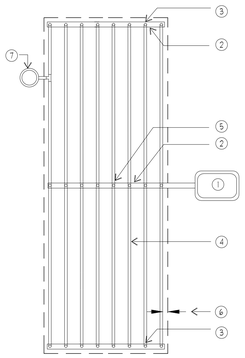

1. ELECTRIC REMOTE CONTROL VALVE WITH DISC FILTER AND PRV - REFER TO IRRIGATION SCHEDULE
2. DRIPLINE START CONNECTION MALE ADAPTER - SEE DETAIL
3. 1" PVC EXHAUST HEADER OR FOOTER, NO SMALLER THAN 1"
4. DRIPLINE TUBING - REFER TO IRRIGATION SCHEDULE TYPE AND SPACING
5. 1" PVC SUPPLY EXHAUST PIPE, NO SMALLER THAN 1"
6. PERIMETER LATERALS 2" TO 4" FROM EDGE
7. MANUAL LINE FLUSHING VALVE (NETAFIM TLSOV). INSTALL IN 10-INCH ROUND VALVE BOX. PLACE FLUSHING VALVES AT EACH DEAD END, AND LOW POINTS IN THE SYSTEM.

NOTES:
1. SOIL STAPLES: ANCHOR THE DRIP TUBING WITH STAINLESS STEEL SOIL STAPLES EVERY 4 FEET. USE TWO SOIL STAPLES AT EACH TEE, ELBOW OR CROSS.

O DRIPLINE TYPICAL PLANTER LAYOUT

SCALE: NTS — PLAN

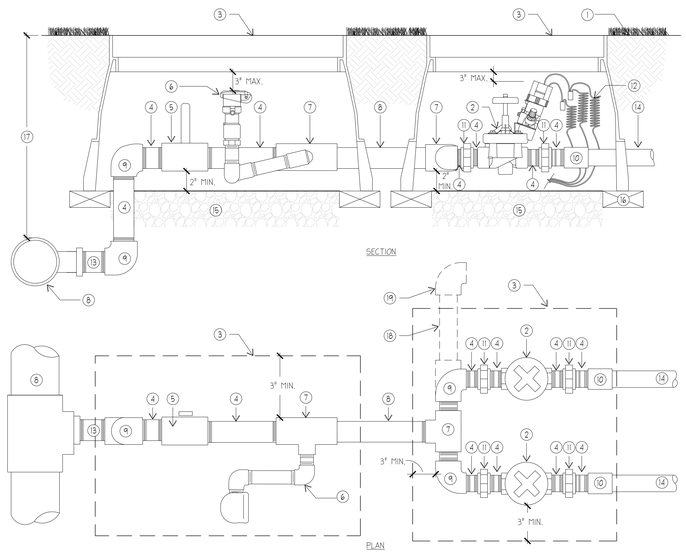

NOTES:
1. LOCATE ALL VALVE BOXES IN PLANTER BEDS UNLESS OTHERWISE INDICATED.
2. ALL FITTINGS AND NIPPLES IN MANIFOLD SHALL BE SCH. 80 THREADED PVC USING TEFLON TAPE.
3. VALVE MANIFOLD TO BE INSTALLED GOING AWAY FROM MAIN SUPPLY LINE. MINIMUM OF 1 FOOT BEFORE CHANGE IN DIRECTION.
4. CUT ALL VALVE BOXES AS REQUIRED SO BOXES DO NOT SIT ON PIPING.

1. SET FLUSH TO FINISH GRADE/TOP OF MULCH
2. ELECTRIC REMOTE-CONTROL VALVE (SEE IRRIGATION LEGEND)
3. CARSON BROOKS 1419-12 STANDARD OR JUMBO VALVE BOX WITH 1220 EXTENSIONS, IF NEEDED (LOCATION MUST BE APPROVED BY OWNER'S REPRESENTATIVE PRIOR TO INSTALLATION).
4. PVC SCH 80 NIPPLE (LENGTH AS REQUIRED)
5. ISOLATION BALL VALVE WITH HANDLE TURNED UPWARDS (SEE IRRIGATION LEGEND)
6. QUICK COUPLER VALVE (SEE IRRIGATION LEGEND AND DETAIL)
7. PVC SCH 80 TEE T X T X S (SAME SIZE AS MAINLINE PIPING)
8. MAINLINE PIPING (SIZE AS PER PLAN)
9. PVC SCH. 80 T X T ELBOW
10. PVC SCH. 80 T X S COUPLING
11. PVC SCH. 80 ACTION UNION
12. CONTROL WIRES- 30-INCH LINEAR LENGTH OF WIRE, COILED
13. PVC SCH 80 NIPPLE WITH BUSHING (LENGTH AS REQUIRED)
14. LATERAL PIPING (SIZE AS PER PLAN)
15. 6-INCH MINIMUM DEPTH OF 3/4-INCH WASHED AGGREGATE
16. BRICK FOUNDATION, TYP.
17. FOR TRENCH DEPTHS (SEE TRENCHING AND SLEEVING DETAIL)
18. PVC SCH 80 PIPE (LENGTH AS REQUIRED)
19. EXTEND FOR NUMBER OF VALVES REQUIRED

K ELECTRIC REMOTE-CONTROL VALVE ASSEMBLY

SCALE: NTS — SECTION/PLAN

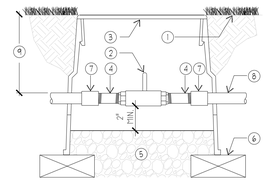

1. SET FLUSH TO FINISH GRADE / TOP OF MULCH
2. ISOLATION BALL VALVE W/ HANDLE TURNED UPWARD (SEE IRRIGATION SCHEDULE)
3. VALVE BOX (LOCATION MUST BE APPROVED BY OWNER'S REP. PRIOR TO INSTALL).
4. PVC SCH 80 NIPPLE
5. 6-INCH MINIMUM DEPTH OF 3/4-INCH WASHED AGGREGATE
6. BRICK FOUNDATION
7. PVC SCH 80 SLIP X THREAD COUPLING (SAME SIZE AS MAINLINE PIPING)
8. MAINLINE PIPING
9. FOR TRENCH DEPTHS (SEE TRENCHING AND SLEEVING DETAIL)

E ISOLATION BALL VALVE ASSEMBLY

SCALE: NTS — SECTION

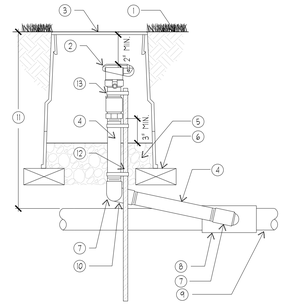

1. SET FLUSH TO FINISH GRADE/TOP OF MULCH
2. QUICK-COUPLING VALVE (SEE IRRIGATION SCEDULE)
3. 10" ROUND VALVE BOX (LOCATION MUST BE APPROVED BY OWNER'S REPRESENTATIVE PRIOR TO INSTALLATION).
4. PVC SCH 80 NIPPLE (LENGTH AS REQUIRED)
5. 6-INCH MINIMUM DEPTH OF 3/4-INCH WASHED AGGREGATE
6. BRICK FOUNDATION
7. PVC SCH 80 STREET ELL
8. PVC SCH 80 TEE OR ELL (SAME SIZE AS MAINLINE PIPING)
9. MAINLINE PIPING (SIZE AS PER PLAN)
10. PVC SCH 80 ELL
11. FOR TRENCH DEPTHS (SEE TRENCHING AND SLEEVING DETAIL)
12. #4 REBAR - 24" MIN. LENGTH
13. STAINLESS STEEL SCREW CLAMP

NOTE:
1. FURNISH FITTINGS AND PIPING NOMINALLY SIZED IDENTICAL TO NOMINAL QUICK COUPLING VALVE INLET SIZE.

F QUICK COUPLER VALVE ASSEMBLY

SCALE: NTS — SECTION

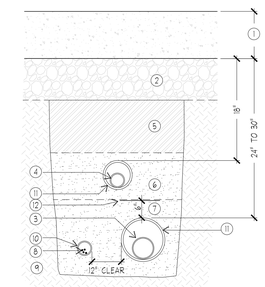

1. HARDSCAPE PAVING
2. COMPACTED AGGREGATE SUB-BASE
3. MAINLINE PIPING
4. LATERAL PIPING
5. CLEAN BACKFILL FREE OF ROCKS 1" DIA. AND LARGER - SEE SPECS.
6. BEDDING SAND- IN CASES WHERE LATERAL PIPING IS INSTALLED IN MAINLINE TRENCH, USE SAND TO BACKFILL TRENCH
7. BEDDING SAND- USE SAND TO A DEPTH OF 2" BELOW AND TO THE EITHER SIDE OF SLEEVING
8. ELECTRICAL WIRES
9. COMPACTED SUBGRADE
10. ELECTRICAL CONDUIT- SEE SPECS.
11. SLEEVING:
    -SLEEVES SHALL BE 2" LARGER THAN THE PIPE OR WIRES WITHIN -1" TO 2 1/2" =PVC SCH 80
    -4" AND LARGER = PVC CLASS 200
12. USE DETECTABLE WARNING TAPE W/ MAINLINE - PLACE 6" ABOVE - SEE SPECS.

NOTE.
1. SETTLE ALL TRENCHES WITH WATER PRIOR TO INSTALLATION OF TOPSOIL.
2. WHEN MULTIPLE PIPES OCCUR IN ONE TRENCH, ADD REQUIRED SLEEVE SIZES TOGETHER FOR 1 SLEEVE SIZE.
3. EXTEND ALL SLEEVING 18" MIN. BEYOND EDGE OF PAVING.

A SLEEVING

SCALE: NTS — SECTION

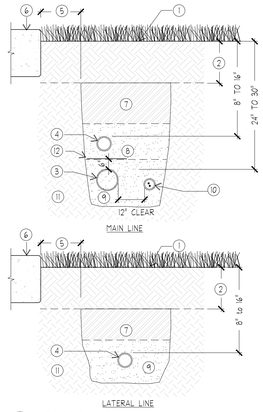

1. FINISH GRADE/TOP OF MULCH
2. TOPSOIL LAYER
3. MAINLINE PIPING (SIZE AS PER PLAN)
4. LATERAL PIPING (SIZE AS PER PLAN)
5. LOCATE ALL TRENCHES 12" AWAY FROM ALL BUILDINGS, SIDEWALKS OR ANY HARD SURFACES
6. TOP OF HARDSCAPE
7. CLEAN BACKFILL- SEE SPECS.
8. BEDDING SAND- IN CASES WHERE LATERAL PIPING IS INSTALLED IN MAINLINE TRENCH, USE SAND TO BACKFILL TRENCH
9. BEDDING SAND- USE SAND TO A DEPTH OF 2" BELOW AND TO THE EITHER SIDE OF PIPING TO BED ALL PVC PIPING AND ELECTRICAL WIRES
10. INSTALL ELECTRICAL WIRING IN 1" ELECTRICAL CONDUIT, SEE SPECS.
11. COMPACTED SUBGRADE
12. USE DETECTABLE WARNING TAPE W/ MAINLINE - PLACE 6" ABOVE - SEE SPECS.

NOTE:
1. SETTLE ALL TRENCHES WITH WATER PRIOR TO INSTALLATION OF TOPSOIL.

B TRENCHING

SCALE: NTS — SECTION

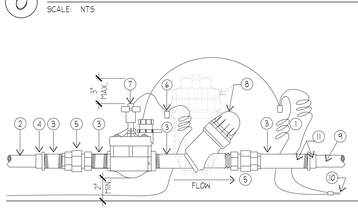

NOTES:
1. LOCATE ALL VALVE BOXES IN PLANTER BEDS UNLESS OTHERWISE INDICATED.
2. ALL FITTINGS AND NIPPLES IN MANIFOLD SHALL BE SCH. 80 THREADED PVC USING TEFLON TAPE.
3. VALVE MANIFOLD TO BE INSTALLED GOING AWAY FROM MAIN SUPPLY LINE. MINIMUM OF 1 FOOT BEFORE CHANGE IN DIRECTION.
4. CUT ALL VALVE BOXES AS REQUIRED SO BOXES DO NOT SIT ON PIPING.

1. CONTROL WIRES- 30-INCH LINEAR LENGTH OF WIRE, COILED
2. MAINLINE PIPING (SIZE AS PER PLAN)
3. PVC SCH. 80 NIPPLE; LENGTH AS REQUIRED (TYP.)
4. THREADED NIPPLE WITH BUSHING
5. PVC SCH. 80 UNION
6. WATER TIGHT CONNECTORS (3M DBY ONLY)
7. ELECTRIC REMOTE-CONTROL VALVE W/ FILTER AND PRV (SEE IRRIGATION LEGEND)
8. FILTER (SEE IRRIGATION LEGEND)
9. LATERAL PIPING (SIZE AS PER PLAN)
10. CONTROL WIRES

P ELECTRIC REMOTE CONTROL VALVE W/ DISC FILTER

SCALE: NTS — SECTION

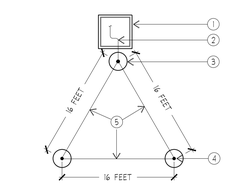

GROUND ROD LAYOUT

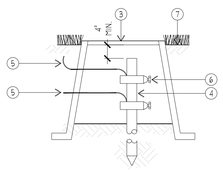

GROUND ROD ASSEMBLY

1. PEDESTAL-MOUNTED IRRIGATION CONTROLLER (SEE IRRIGATION SCHEDULE)
2. SOLID BARE COPPER WIRE (#10 AWG) FROM GROUNDING ROD TO CONTROLLER ASSEMBLY. MAKE WIRE AS SHORT AND STRAIGHT AS POSSIBLE
3. COVER GROUNDING ROD WITH #10 ROUND VALVE BOX AS SHOWN
4. 5/8-INCH X 8 FT COPPER CLAD GROUNDING ROD OR GROUNDING PLATE. INSTALL RODS IN SOIL IN A TRIAGULAR PATTERN SPACED A MINIMUM OF 16 FT APART FROM EACH OTHER. GROUNDING GRID TO HAVE A RESISTANCE OF TEN (10) OHMS OR LESS
5. BARE COPPER WIRE (#10 AWG MIN.) BETWEEN GROUNDING RODS
6. GROUND ROD CLAMP OR WELDS
7. FINISH GRADE

NOTE:
1. INSTALL PER CONTROLLER MANUFACTURER'S SPECIFICATIONS.

L GROUNDING GRID Y DESIGN LAYOUT

SCALE: NTS — PLAN/SECTION

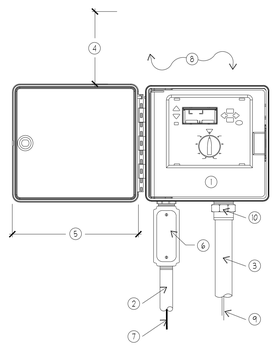

1. WALL MOUNTED IRRIGATION CONTROLLER (SEE IRRIGATION SCHEDULE)
2. 1-INCH GALV. SCH. 40 CONDUIT AND FITTINGS TO POWER SUPPLY
3. 1-1/4", 1-1/2" OR 2" GALV. SCH. 40 CONDUIT AND FITTINGS FOR VALVE WIRES
4. MAINTAIN HINGE PIN CLEARANCE FOR DOOR REMOVAL
5. MAINTAIN CLEARANCE FOR DOOR
6. JUNCTION BOX
7. 120V POWER SUPPLY BY OTHERS
8. MOUNT TO BUILDING WALL BEYOND OR APPROVED STRUCTURE (LOCATION MUST BE APPROVED BY OWNER'S REPRESENTATIVE PRIOR TO INSTALLATION)
9. REMOTE CONTROL VALVE WIRES. INSTALL WIRING IN 3/4" CONDUIT BETWEEN VALVE BOXES.
10. LOCK NUT

NOTE:
1. INSTALL PER MANUFACTURE'S SPECIFICATIONS.
2. ALL CONDUIT ABOVE GROUND SHALL GALV. SCH. 40 PIPE.
3. PROVIDE UL APPROVED 5/8" X 8' GROUND ROD. GROUND WIRE SHALL BE #8 WIRE CONNECTING WITHIN THE TOP 4" OF GROUND ROD WITH UL APPROVED GROUND CLAMPS (NO SCREW CLAMPS)

I IRRIGATION CONTROLLER-WALL MOUNTED

SCALE: NTS — ELEVATION

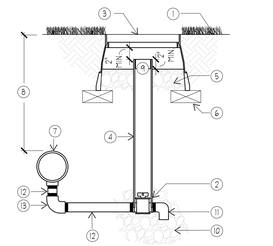

1. SET FLUSH TO FINISH GRADE/TOP OF MULCH
2. 3/4" MAINLINE DRAIN VALVE (SEE IRRIGATION SCHEDULE)
3. VALVE BOX (LOCATION MUST BE APPROVED BY OWNER'S REPRESENTATIVE PRIOR TO INSTALLATION).
4. 4" SCH 40 PVC SLEEVE (LENGTH AS REQUIRED). NOTCH OVER VALVE FOR STABILITY.
5. 6-INCH MINIMUM DEPTH OF 3/4-INCH WASHED AGGREGATE
6. BRICK FOUNDATION
7. MAINLINE PIPING (SIZE AS PER PLAN)
8. FOR TRENCH DEPTHS (SEE TRENCHING AND SLEEVING DETAIL)
9. WEATHERMATIC 906L LOCKING VALVE CAP WITH A RLK-1 KEY OR EQUAL
10. GRAVEL SUMP- 18" DIA. X 12" DEEP
11. SCH. 80 PVC STREET ELL TURNED DOWNWARDS
12. PVC SCH 80 NIPPLE (LENGTH AS REQUIRED)
13. PVC SCH 80 ELL

NOTES:
1. ALL LINES SHALL SLOPE TO MANUAL DRAIN. IF FIELD CONDITIONS NECESSITATE ADDITIONAL DRAINS, THESE DRAINS SHALL BE INSTALLED FOR COMPLETE DRAINAGE OF THE ENTIRE SYSTEM.

G MAINLINE DRAIN ASSEMBLY

SCALE: NTS — SECTION

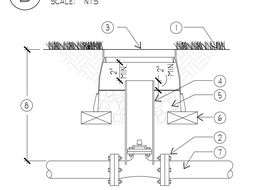

1. SET FLUSH TO FINISH GRADE/TOP OF MULCH
2. GATE VALVE OR STOP & WASTE VALVE (SEE IRRIGATION SCHEDULE)
3. 10" ROUND VALVE BOX (LOCATION MUST BE APPROVED BY OWNER'S REPRESENTATIVE PRIOR TO INSTALLATION).
4. 6" SCH 40 PVC SLEEVE (LENGTH AS REQUIRED). NOTCH OVER VALVE FOR STABILITY.
5. 6-INCH MINIMUM DEPTH OF 3/4-INCH WASHED AGGREGATE
6. BRICK FOUNDATION
7. MAINLINE PIPING (SIZE AS PER PLAN)
8. FOR TRENCH DEPTHS (SEE TRENCHING AND SLEEVING DETAIL)

C GATE VALVE/STOP & WASTE VALVE

SCALE: NTS — SECTION

1. STRIP WIRES AND APPLY SCOTCHLOK Y ELECTRICAL SPRING CONNECTOR IN A CLOCKWISE DIRECTION.
2. INSERT SPLICE TO BOTTOM OF GEL FILLED TUBE. VISUALLY CHECK TO MAKE SURE SCOTCHLOK CONNECTOR HAS BEEN PUSHED PAST THE LOCKING FINGERS AND IS SEATED ON THE BOTTOM OF THE TUBE.
3. POSITION WIRES IN WIRE CHANNELS AND CLOSE INSULATOR TUBE COVER.

M 3M DBY DIRECT BURY SPLICE KIT

SCALE: NTS — SECTION

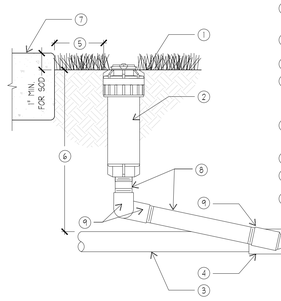

1. SET HEAD FLUSH WITH FINISH GRADE/TOP OF MULCH
2. POP-UP ROTOR HEAD (SEE IRRIGATION SCHEDULE)
3. LATERAL PIPING (SIZE AS PER PLAN)
4. PVC SCH 40 TEE OR ELL
5. ALL ROTOR HEADS TO BE PLACED 2" CLEAR OF ALL HARDSCAPE SURFACES AND 2'-0" FROM BUILDINGS
6. FOR TRENCH DEPTHS (TRENCHING AND SLEEVING DETAIL)
7. TOP OF HARDSCAPE
8. PVC SCH 80 NIPPLE (LENGTH AS REQUIRED)
9. PVC SCH 40 STREET ELL

NOTE:
1. SWING PIPE SHALL SLOPE TOWARDS LATERAL PIPE FOR COMPLETE DRAINAGE.

J POP-UP ROTOR HEAD

SCALE: NTS — SECTION

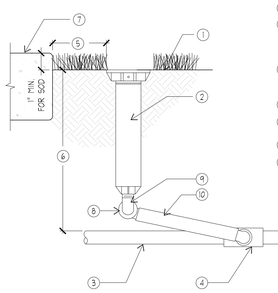

1. SET HEAD FLUSH WITH FINISH GRADE/TOP OF MULCH
2. POP-UP SPRAY HEAD (SEE IRRIGATION SCHEDULE)
3. LATERAL PIPING (SIZE AS PER PLAN)
4. PVC SCH 40 TEE OR ELL
5. ALL SPRAY HEADS TO BE PLACED 1" CLEAR OF ALL HARDSCAPE SURFACES AND 2'-0" FROM BUILDINGS
6. FOR TRENCH DEPTHS (SEE TRENCHING AND SLEEVING DETAIL)
7. TOP OF HARDSCAPE
8. 1/2" BARB 90°
9. 1/2" MARLEX 90° ELL
10. SWING ASSEMBLY: FLEX TUBE 24" MAX. LENGTH

NOTE:
1. SWING PIPE SHALL SLOPE TOWARDS LATERAL PIPE FOR COMPLETE DRAINAGE.

H POP-UP SPRAY HEAD

SCALE: NTS — SECTION

NOTE:
1. INSTALL BACKFLOW PREVENTION PER MANUFACTURERS SPECIFICATIONS.
2. ALL BURIED BOLTS SHALL BE STAINLESS STEEL.
3. ALL BACKFLOW ARE TO MEET ALL JURISDICTIONAL CODES.
4. CONTRACTOR TO FIELD VERIFY REQUIRED SPATIAL DISTANCES PRIOR TO INSTALLATION.
5. PROVIDE WINTERIZATION OF THE MAINLINE BACKFLOW AS REQUIRED WITH THE MANUAL DRAIN AND QUICK COUPLER FOR COMPRESSED AIR
6. ALL MAINLINE PIPE ABOVE GRADE SHALL BE SCH. 40 GALVANIZED PIPE

6. POURED CONCRETE BASE, 6" MIN. THICKNESS OVER 6" OF ROAD BASE, EXTEND 12" BEYOND OUTSIDE DIMENSIONS OF ENCLOSURE WITH 0.5% MIN. SLOPE FOR DRAINAGE
7. MAINLINE PIPING (SIZE AS PER PLANS)
8. BACKFLOW ENCLOSURE - SEE IRRIGATION SCHEDULE

1. REDUCED PRESSURE BACKFLOW PREVENTION DEVICE (SEE IRRIGATION SCHEDULE)
2. MAINLINE DRAIN VALVE ASSEMBLY - SEE DETAIL
3. FINISH GRADE
4. 1 CU. FT. CONCRETE THRUST BLOCKS (TYP.). WRAP PIPES W/ 10 MIL TAPE. COMPACT SUBGRADE TO 95% PRIOR TO POUR. SEE DETAIL.
5. FOR TRENCH DEPTHS (SEE TRENCHING AND SLEEVING DETAIL)

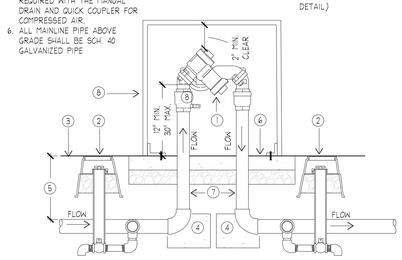

D REDUCED PRESSURE BACKFLOW PREVENTION ASSEMBLY

SCALE: NTS — SECTION

12/17/2012 4:48:20 PM

VCBO

VCBO ARCHITECTURE
524 SOUTH 600 EAST
SALT LAKE CITY, UT 84102
Phone: (801) 575-8800
Fax: (801) 531-9850
Web: vcbo.com

LICENSED LANDSCAPE ARCHITECT — Richard L. Gilbert — No. 5734299 — Aug 15, 2013 — STATE OF UTAH

Arc Sitio Design, Inc
Landscape Architecture & Architectural Site Design
1058 East 2100 South
Salt Lake City, Utah 84106
office 801.487.4923
fax 801.466.3046
www.arcsitodesign.com

2nd District Juvenile Courthouse

Utah State Courts
08284150
165 West 20th Street, Ogden, Utah
BID DOCUMENTS

Rev #	Date	Description

Job # 12500
Date August 15, 2013
Owner # 08284150
Ins. #

IRRIGATION DETAILS

L-R501

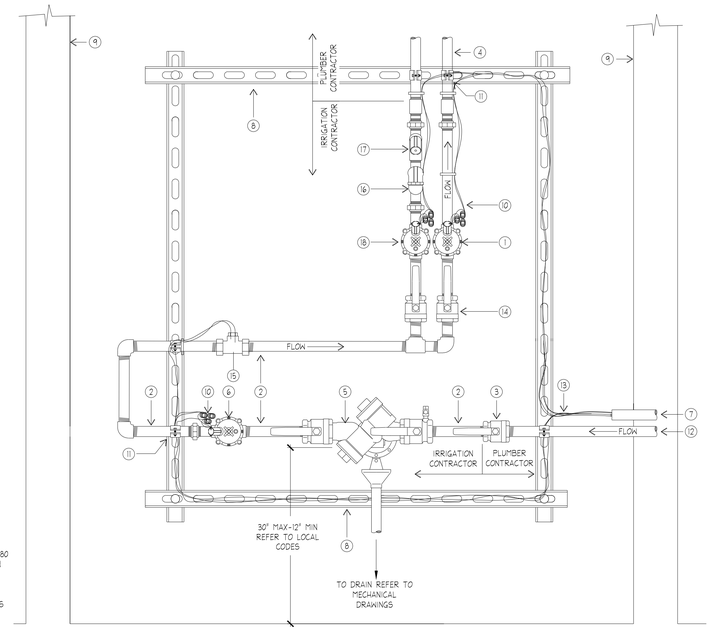

NOTES:
1. ALL FITTINGS AND NIPPLES INSTALLED BY IRRIGATION CONTRACTOR SHALL BE SCH. 80 THREADED PVC USING TEFLON TAPE.
2. USE PLASTIC WIRE TIES TO NEATLY & SECURELY ROUTE WIRES, AND WIRE CONNECTORS ALONG UNI-STRUT SYSTEM.

1. ELECTRIC REMOTE-CONTROL VALVE (SEE IRRIGATION SCHEDULE). SET PRS DIAL TO 35 PSI.
2. PVC SCH 80 NIPPLE (LENGTH AS REQUIRED)
3. SHUT OFF VALVE - COORDINATE WITH MECHANICAL AND INSTALLED BY PLUMBER CONTRACTOR
4. 1" COPPER LATERAL PIPING - COORDINATE WITH MECHANICAL AND INSTALLED BY PLUMBER CONTRACTOR
5. BACKFLOW PREVENTER (SEE IRRIGATION SCHEDULE)
6. HYDROMETER (SEE IRRIGATION SCHEDULE)
7. 2" SLEEVE FOR CONTROLLER WIRE (CONTROLLER LOCATED IN MECHANICAL ROOM) - COORDINATE WITH ELECTRICAL PLANS , TYP.
8. USE UNI-STRUT SYSTEM OR EQUAL TO SUPPORT MANIFOLD - RUN WIRES IN UNISTRUT CHANNEL
9. BUILDING WALL
10. CONTROL WIRES: 30-INCH LINEAR LENGTH OF WIRE, COILED, TYP.
11. USE PIPE CLAMP WHERE PIPES CROSS UNISTRUT SYSTEM OR EQUAL FOR SUPPORT, TYP.
12. 1" COPPER MAINLINE PIPING - COORDINATE WITH MECHANICAL AND INSTALLED BY PLUMBER CONTRACTOR
13. CONTROL WIRES TO IRRIGATION CONTROLLER - COORDINATE WITH ELECTRICAL PLANS , TYP.
14. ISOLATION VALVE (SEE IRRIGATION SCHEDULE)
15. FLOW SENSOR (SEE IRRIGATION SCHEDULE) MAINTAIN MANUFACTURE'S RECOMMENDED LENGTHS UP/DOWNSTREAM OF SENSOR WITHOUT FITTINGS
16. DISK FILTER (SEE IRRIGATION SCHEDULE)
17. INLINE PRESSURE REGULATOR VALVE (SEE IRRIGATION LEGEND)
18. DRIP VALVE ASSEMBLY, SEE SHEET LLS502 DTL. D AND IRRIGATION SCHEDULE

A ROOF GARDEN POINT OF CONNECTION AND ELECTRIC REMOTE-CONTROL VALVE ASSEMBLY

SCALE: NTS

ELEVATION

NUMBER	MODEL	SIZE	TYPE	PSI	PSI @ POC	GPM	PREC/IP
1	Rain Bird XCZ-100-PRB-COM	1"	Area for Dripline	48.26	69.05	14.93	0.67 in/h
2	Rain Bird PEB-PRS-D	2"	Shrub Rotor	45.27	74.35	34.09	0.77 in/h
3	Rain Bird PEB-PRS-D	2"	Shrub Rotor	42.41	72.30	35.83	0.65 in/h
4	Rain Bird XCZ-100-PRB-COM	1"	Area for Dripline	51.21	72.55	17.08	0.67 in/h
5	Rain Bird XCZ-100-PRB-COM	1"	Area for Dripline	45.31	71.18	14.88	0.67 in/h
6	Rain Bird XCZ-100-PRB-COM	1"	Area for Dripline	44.23	66.41	10.59	0.67 in/h
7	Rain Bird XCZ-100-PRB-COM	1"	Area for Dripline	46.45	68.33	10.34	0.67 in/h
8	Rain Bird XCZ-100-PRB-COM	1"	Area for Dripline	34.26	58.54	10.12	0.67 in/h
9	Rain Bird PEB-PRS-D	2"	Shrub Rotor	44.16	68.99	34.60	0.66 in/h
10	Rain Bird PEB-PRS-D	2"	Turf Spray	44.08	71.58	42.34	2.23 in/h
11	Rain Bird PEB-PRS-D	2"	Shrub Spray	38.48	54.96	25.44	1.63 in/h
12	Rain Bird XCZ-100-PRB-COM	1"	Area for Dripline	47.42	66.41	10.17	0.67 in/h
13	Rain Bird PEB-PRS-D	2"	Turf Spray	34.10	72.85	58.80	1.92 in/h
14	Rain Bird XCZ-100-PRB-COM	1"	Area for Dripline	34.67	63.85	11.38	0.67 in/h
15	Rain Bird XCZ-100-PRB-COM	1"	Area for Dripline	44.69	69.42	11.72	0.67 in/h
16	Rain Bird XCZ-100-PRB-COM	1"	Area for Dripline	44.90	70.64	12.49	0.67 in/h
17	Rain Bird XCZ-100-PRB-COM	1"	Area for Dripline	52.91	72.40	14.74	0.67 in/h
18	Rain Bird XCZ-100-PRB-COM	1"	Area for Dripline	41.01	59.83	10.27	0.67 in/h
19	Rain Bird XCZ-100-PRB-COM	1"	Area for Dripline	48.56	67.11	11.79	0.67 in/h
20	Rain Bird PEB-PRS-D	2"	Turf Rotor	45.28	64.99	38.54	0.76 in/h
21	Rain Bird PEB-PRS-D	2"	Turf Spray	36.64	51.25	33.54	1.87 in/h
22	Rain Bird PEB-PRS-D	2"	Turf Spray	45.37	68.48	50.62	1.91 in/h
23	Rain Bird XCZ-100-PRB-COM	1"	Area for Dripline	46.50	70.56	14.89	0.67 in/h
24	Rain Bird XCZ-100-PRB-COM	1"	Area for Dripline	42.83	65.24	12.02	0.67 in/h
25	Rain Bird XCZ-100-PRB-COM	1"	Area for Dripline	32.51	46.23	1.44	0.67 in/h
26	Rain Bird XCZ-100-PRB-COM	1"	Area for Dripline	37.17	53.00	1.88	0.67 in/h

B VALVE SCHEDULE

SCALE: NTS

SITE CRITICAL ANALYSIS

Generated:	2013-08-13 17:09
P.O.C. NUMBER:01	
Water Source Information:	Connect to 3" service line feeding building - coordinate with civil dwgs.
FLOW AVAILABLE	
Point of Connection Size:	3"
Flow Available:	181.61 gpm
PRESSURE AVAILABLE	
Static Pressure at POC:	75.00 psi
Pressure Available:	75.00 psi
DESIGN ANALYSIS	
Maximum Station Flow:	58.80 gpm
Flow Available at POC:	181.61 gpm
Residual Flow Available:	122.81 gpm
Critical Station:	2
Design Pressure:	35.00 psi
Loss Elev. high head to valve:	0.43 psi
Pipe Loss Critical Head:	4.20 psi
Loss Fitting Factor:	0.84 psi
Loss through Valve:	4.80 psi
Pressure Req. at Critical Station:	45.27 psi
Loss for Fittings:	1.00 psi
Loss for Main Line:	4.96 psi
Loss for POC to Valve Elevation:	1.30 psi
Loss for Backflow:	12.02 psi
Loss for Master Valve:	4.80 psi
Critical Station Pressure at POC:	74.35 psi
Pressure Available:	75.00 psi
Residual Pressure Available:	0.65 psi

ROOF GARDEN CRITICAL ANALYSIS

Generated:	2013-08-13 17:09
P.O.C. NUMBER:02	
Water Source Information:	Roof Garden point of connection - coordinate with architectural & mechanical dwgs. Ogden Water provided information that 45PSI was available.
FLOW AVAILABLE	
Point of Connection Size:	1"
Flow Available:	20.24 gpm
PRESSURE AVAILABLE	
Static Pressure at POC:	45.00 psi
Pressure Available:	45.00 psi
DESIGN ANALYSIS	
Maximum Station Flow:	7.88 gpm
Flow Available at POC:	20.24 gpm
Residual Flow Available:	12.36 gpm
Critical Station:	26
Design Pressure:	30.00 psi
Loss Elev. high head to valve:	0.43 psi
Pipe Loss Critical Head:	0.72 psi
Loss Fitting Factor:	0.14 psi
Loss through Valve:	5.90 psi
Pressure Req. at Critical Station:	31.17 psi
Loss for Fittings:	0.17 psi
Loss for Main Line:	1.66 psi
Loss for POC to Valve Elevation:	1.30 psi
Loss for Backflow:	10.94 psi
Loss for Master Valve:	1.76 psi
Critical Station Pressure at POC:	53.00 psi
Pressure Available:	45.00 psi
Residual Pressure Available:	42.00 psi

C CRITICAL ANALYSIS

SCALE: NTS

VCBO

VCBO ARCHITECTURE
524 SOUTH 600 EAST
SALT LAKE CITY, UT 84102
Phone: (801) 575-8800
Fax: (801) 531-9850
Web: vcbo.com

LICENSED LANDSCAPE ARCHITECT
Richard L. Gilbert
No. 5734299
Aug 15, 2013
STATE OF UTAH

Arc Sitio Design, Inc
Landscape Architecture & Architectural Site Design
1058 East 2100 South
Salt Lake City, Utah 84106
office 801 . 487 . 4923
fax 801 . 466 . 3046
www.arcsitiodesign.com

2nd District Juvenile Courthouse

Utah State Courts
165 West 20th Street, Ogden, Utah
08284150
BID DOCUMENTS

Rev #	Date	Description

Job # 12500
Date August 15, 2013
Owner # 08284150
Ins. #

IRRIGATION DETAILS

L-R502

12/17/2012 4:48:20 PM

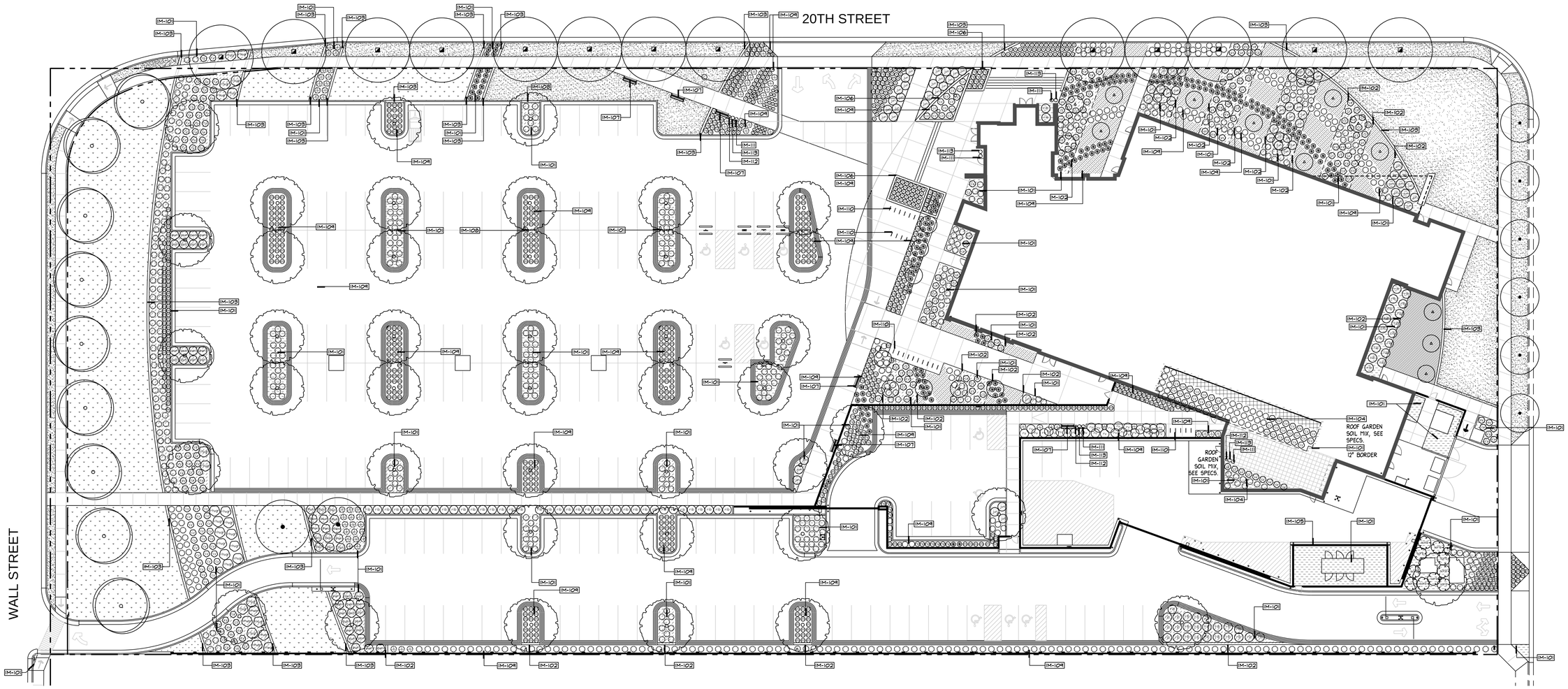

PLANTING SCHEDULE (D)

DECIDUOUS TREES	BOTANICAL NAME	COMMON NAME	CONT	CAL	QTY *
	Crataegus x lavallei	Hawthorn	B & B	2"	6
	Fraxinus pennsylvanica 'Patmore'	'Patmore' Ash	B & B	3" Cal.	42
	Gleditsia triacanthos 'Shademaster' TM	Shademaster Locust	B & B	3" Cal.	9
	Malus hybrid 'Red Barron'	Red Barron Crab	B & B	3" Cal.	25
	Ulmus parvifolia 'Allee'	Allee Lacebark Elm	B & B	2"	13

SHRUBS	BOTANICAL NAME	COMMON NAME	SIZE	FIELD2	QTY *
	Hesperaloe parviflora	Red Yucca	5 gal		275
	Juniperus sabina 'Buffalo'	Buffalo Juniper	5 gal		70
	Prunus besseyi 'Pawnee Buttes'	Sand Cherry	5 gal		49
	Rhus aromatica 'Gro-Low'	Gro-Low Fragrant Sumac	5 gal		28
	Rhus typhina 'Tiger Eyes'	Tiger Eyes Sumac	5 gal		29
	Ribes alpinum	Alpine Currant	5 gal		81
	Sorbaria sorbifolia	Ash Leaf Spirea	5 gal		10

ANNUALS/PERENNIALS	BOTANICAL NAME	COMMON NAME	SIZE	FIELD2	QTY *
	Hemerocallis hybrid 'Elaine Strutt'	Elaine Strutt Daylily	1 gal		510
	Hemerocallis x 'Happy Returns'	Happy Returns Daylily	1 gal		149
	Nepeta x faassenii 'Dropmore'	Catmint	1 gal		180
	Zauschneria garettii	Orange Carpet	Flat		26

GRASSES	BOTANICAL NAME	COMMON NAME	SIZE	FIELD2	QTY *
	Calamagrostis acu. 'Karl Foerster'	Foerster's Reed Grass	5 gal		62
	Miscanthus sinensis 'Gracillimus'	Maiden Grass	5 gal		704
	Panicum virgatum 'Heavy Metal'	Blue Switch Grass	5 gal		200

GROUND COVERS	BOTANICAL NAME	COMMON NAME	CONT	FIELD2	SPACING	QTY *
	Chanshare Desert Green	Chanshare Desert Green	sod			13,495 sf
	Hypericum calycinum	Creeping St. John's Wort	flat		6" o.c.	3,266 sf
	Sedum x 'Angelina'	Angelina Sedum	flat		6" o.c.	286 sf
	Turf-Grass REPAIR TURF AS NEEDED	Turf-Grass	sod			11,407 sf

* QUANTITIES ARE FOR REFERENCE ONLY, CONTRACTOR TO VERIFY QUANTITIES.

REFERENCE SCHEDULE NOTES (C)

SYMBOL	SITE IMPROVEMENTS DESCRIPTION	QTY *
IM-101	ROCK MULCH, SEE SHEET L-L501 DTLS. F, G, H, I	15,222 sf
IM-102	STEEL LANDSCAPE EDGING, SEE SHEET L-L501 DTL. G	
IM-103	MOW CURB, SEE SHEET L-L501 DTL. F	
IM-104	ROOF GARDEN SYSTEM, SEE ARCHITECTS PLANS	
IM-105	SITE WALL, SEE ARCHITECTURAL PLANS	
IM-106	PLANTERS, SEE ARCHITECTURAL PLANS	
IM-107	BENCH, SEE SHEET L-L501 DTL. M	
IM-108	SITE LIGHTING, COORDINATE PLANTING WITH LIGHT PLACEMENT, SEE ELECTRIAL PLANS	
IM-109	BARK MULCH, TYP.	
IM-110	BIKE RACK , SEE SHEET L-L501 DTL. N	
IM-111	TRASH RECEPTACLE , SEE SHEET L-L501 DTL. K	
IM-112	ASH URN , SEE SHEET L-L501 DTL. J	
IM-113	TRASH RECYCLE RECEPTACLE , SEE SHEET L-L501 DTL. L	

* QUANTITIES ARE FOR REFERENCE ONLY, CONTRACTOR TO VERIFY QUANTITIES.

PLANTING NOTES (A)

1. CONTRACTOR SHALL BE RESPONSIBLE FOR MAKING HIMSELF FAMILIAR WITH ALL UNDERGROUND UTILITIES, PIPES AND STRUCTURES. CONTRACTOR SHALL TAKE SOLE RESPONSIBILITY FOR ANY COSTS INCURRED DUE TO DAMAGE OF SAID UTILITIES.
2. CONTRACTOR SHALL NOT WILLFULLY PROCEED WITH CONSTRUCTION AS DESIGNED WHEN IT IS OBVIOUS THAT UNKNOWN OBSTRUCTIONS AND/OR GRADE DIFFERENCES EXIST THAT MAY NOT HAVE BEEN KNOWN DURING DESIGN. SUCH CONDITIONS SHALL BE IMMEDIATELY BROUGHT TO THE ATTENTION OF THE OWNERS REPRESENTATIVE AND ARCHITECT. THE CONTRACTOR SHALL ASSUME FULL RESPONSIBILITY FOR ALL NECESSARY REVISIONS DUE TO FAILURE TO GIVE SUCH NOTIFICATION.
3. CONTRACTOR SHALL BE RESPONSIBLE FOR ANY COORDINATION WITH SUBCONTRACTORS AS REQUIRED TO ACCOMPLISH THE LANDSCAPE CONSTRUCTION FOR THIS PROJECT.
4. SEE SPECIFICATIONS FOR PLANTING REQUIREMENTS, MATERIALS, EXECUTIONS AND MAINTENANCE.
5. ALL PLANT MATERIAL SHALL BE APPROVED BY THE OWNER'S REPRESENTATIVE UPON DELIVERY TO THE SITE, AND PRIOR TO INSTALLATION.
6. IF DISCREPANCIES ARISE BETWEEN ACTUAL PLANTING AREA SIZES IN THE FIELD AND THOSE SHOWN ON THE PLANS, CONTRACTOR SHALL CONTACT THE OWNER'S REPRESENTATIVE FOR RESOLUTION. FAILURE TO MAKE SUCH CONFLICTS KNOWN WILL RESULT IN CONTRACTOR'S LIABILITY FOR MATERIALS RELOCATION.
7. FINAL LOCATIONS OF ALL PLANT MATERIALS SHALL BE SUBJECT TO APPROVAL OF THE OWNER'S REPRESENTATIVE.
8. TREES SHALL NOT BE PLANTED LESS THAN 5'-0" FROM CURBS OR HARD SURFACE AREAS UNLESS A ROOT BARRIER IS INSTALLED.
9. CONTRACTOR SHALL PROVIDE AN AGRICULTURAL TOPSOIL ANALYSIS AND AMEND SOIL AS RECOMMENDED - REFER TO SPECIFICATIONS..
10. THE CONTRACTOR SHALL SUPPLY ALL PLANT MATERIAL IN QUANTITIES SUFFICIENT TO COMPLETE THE PLANTING SHOWN ON THE DRAWINGS.
11. SEE DETAILS AND TOPSOIL MIX NOTES - SEE SPECIFICATIONS.
12. PRUNE TREES IN ACCORDANCE WITH SPECIFICATIONS.
13. ANY PROPOSED SUBSTITUTIONS OF PLANT SPECIES SHALL BE MADE WITH PLANTS OF EQUIVALENT OVERALL FORM, HEIGHT, BRANCHING HABIT, FLOWER, LEAF, COLOR, FRUIT AND CULTURE ONLY AS APPROVED BY THE OWNER'S REPRESENTATIVE.
14. LANDSCAPE CONTRACTOR IS RESPONSIBLE FOR THE LAST 7 INCHES OF GRADE IN TURF SOD AREAS (6 INCHES OF TOPSOIL AND 1 INCH FOR SOD), AND 15 to 16 INCHES IN SHRUB BED AREAS (3 INCHES OF BARK MULCH OR 3 INCHES OF ROCK MULCH AND 12" OF AMENDED TOPSOIL). IF NECESSARY DIG SUBGRADE IN SHRUB BEDS, TURF, AND GRASS SEED MIX AREAS DOWN AS SPECIFIED BEFORE PLACING AMENDED TOPSOIL. THE PLANTING ISLANDS IN THE PARKING LOTS SHALL HAVE ALL ROAD BASE REMOVED PRIOR TO PLACEMENT OF TOPSOIL. REFER TO GRADING PLAN FOR FINISH GRADE AND DRAINAGE. REFER TO TOPSOIL MIX NOTES IN WRITTEN SPECIFICATIONS FOR GRADING, PLACEMENT AND COMPACTED SOILS.

SCALE (B)

0 10 20 40

SCALE: 1" = 20'

NORTH

VCBO

VCBO ARCHITECTURE
524 SOUTH 600 EAST
SALT LAKE CITY, UT 84102
Phone: (801) 575-8800
Fax: (801) 531-9850
Web: vcbo.com

LICENSED LANDSCAPE ARCHITECT
Richard L. Gilbert
No. 5734299
Aug 15, 2013
STATE OF UTAH

Arc Sitio Design, Inc
Landscape Architecture & Architectural Site Design
1058 East 2100 South
Salt Lake City, Utah 84106
office 801 . 487 . 4923
fax 801 . 466 . 3046
www.arcsitiodesign.com

2nd District Juvenile Courthouse

Utah State Courts
165 West 20th Street, Ogden, Utah
08284150
BID DOCUMENTS

Rev #	Date	Description

Job # 12500
Date August 15, 2013
Owner # 08284150
Ins. #

LANDSCAPE PLAN

L-L101

12/17/2012 4:48:20 PM

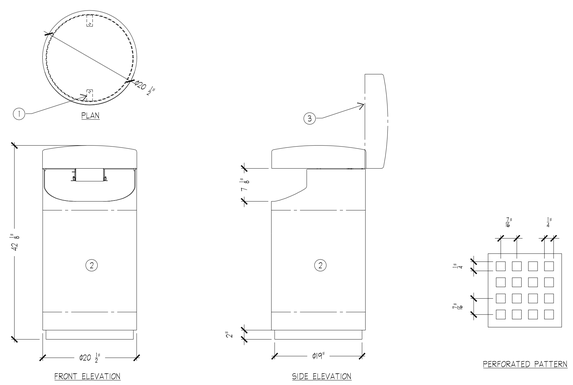

1. ANCHOR TABS WITH ø3/8" (11MM) HOLE FOR OPTIONAL SURFACE MOUNTING, NON-CORROSIVE HARDWARE SUPPLIED BY OTHERS - SEE SPECS.
2. PERFORATION NOT SHOWN FOR CLARITY
3. LID LIFTS FOR TRASH REMOVAL

MAKE/MODEL:
1.1. LANDSCAPEFORMS 'PETOSKEY' LITTER RECEPTACLE
1.2. 30 GALLON
1.3. HINGED LID
1.4. SURFACE MOUNT

K LANDSCAPEFORMS 'PETOSKEY' LITTER RECEPTACLE
SCALE: NTS

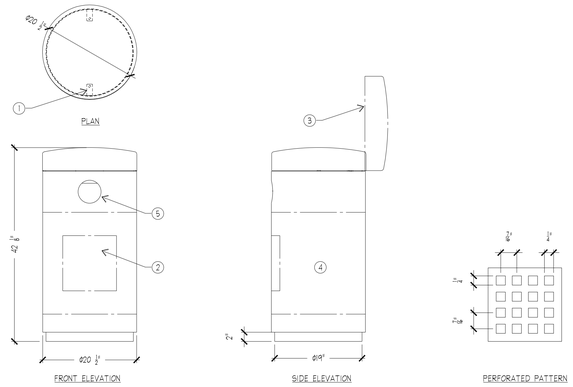

1. ANCHOR TABS WITH ø3/8" (11MM) HOLE FOR OPTIONAL SURFACE MOUNTING, NON-CORROSIVE HARDWARE SUPPLIED BY OTHERS - SEE SPECS.
2. 10" X 10" VINYL SIGN
3. LID LIFTS FOR TRASH REMOVAL
4. PERFORATION NOT SHOWN FOR CLARITY
5. SINGLE 5" DIA. OPENING

MAKE/MODEL:
1.1. LANDSCAPEFORMS 'PETOSKEY' RECYCLING RECEPTACLE
1.2. 30 GALLON
1.3. HINGED LID
1.4. SURFACE MOUNT

L LANDSCAPEFORMS 'PETOSKEY' RECYCLING RECEPTACLE
SCALE: NTS

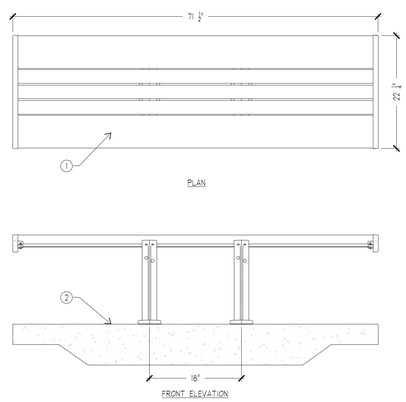

1. ALUMINUM SEATING SURFACE
2. REINFORCED CONCRETE REQUIRED (3,000 PSI MIN.) - SEE NOTE
3. ø 3/8" (14) HOLES FOR ANCHORING, NON-CORROSIVE MOUNTING HARDWARE NOT INCLUDED - SEE SPECS

NOTES:
SEE INSTALLATION GUIDE FOR FOOTING AND ANCHORING RECOMMENDATIONS

MAKE/MODEL:
1. LANDSCAPEFORMS 'AUSTIN' BENCH
1.1. BACKLESS
1.2. CANTILEVERED
1.3. NO ARMS
1.4. ALUMINUM

M LANDSCAPEFORMS 'AUSTIN' BENCH
SCALE: NTS

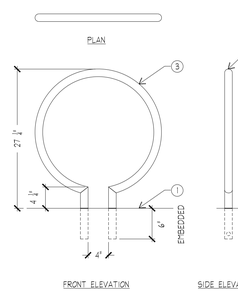

1. GRADE
2. ø 1 1/2" TUBING
3. ø 24 3/4" BIKE RING

MAKE/MODEL:
1.1. LANDSCAPEFORMS 'RING' BIKE RACK
1.2. EMBEDDED

N LANDSCAPEFORMS 'RING' BIKE RACK
SCALE: NTS

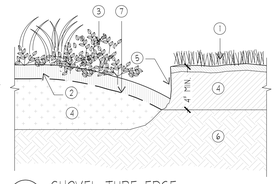

1. GRASS OR TURF
2. MULCH - SEE SPECS
3. SHRUB BED/TREE WELL
4. AMENDED TOPSOIL - SEE SPECS
5. SHOVEL EDGE - USE AROUND TREE WELLS IN TURF
6. UNDISTURBED SUBGRADE
7. WEED BARRIER FABRIC - SEE SPECS

NOTES
1. TO BE USED WITH TREES LOCATED IN AREAS RECEIVING SOD, I.E.

E SHOVEL TURF EDGE
SCALE: NTS — SECTION

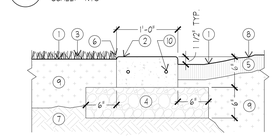

NOTE:
1. WHEN MOW CURB IS ADJACENT TO BUILDING OR WALL, USE EXPANSION JOINT AND SLOPE 2% AWAY FROM BUILDING.
2. EXPANSION JOINTS AT 20' O.C. AND A TOOLED JOINT AT 10' O.C.

1. FINISH GRADE
2. CONCRETE MOW CURB. FINISH W/ MED. BROOM PERPENDICULAR TO HEADER RUN.
3. TURF
4. COMPACTED ROAD BASE
5. MULCH - SEE SPECS.
6. 1/4" RADIUS, TYPICAL
7. COMPACTED SUBGRADE
8. SHRUB BED
9. AMENDED TOPSOIL - SEE SPECS
10. 12" MOWCURB - REBAR (2) #4 CONTINUOUS. 2" CLEARANCE @ SIDES, TYP.

F CONCRETE MOW CURB - 12" WIDE
SCALE: NTS — SECTION

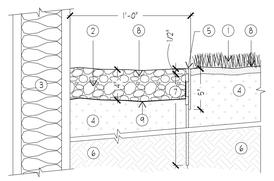

1. TURF
2. ROCK MULCH - SEE SPECS
3. BUILDING, WHEN APPLICABLE
4. AMENDED TOPSOIL - SEE SPECS
5. STEEL LANDSCAPE EDGING - SEE SPECS.
6. COMPACTED SUBGRADE
7. 14" SPIKE
8. FINISH GRADE
9. WEED BARRIER FABRIC- SEE SPECS.

NOTES:
1. INSTALL PER MANUFACTURER'S SPECIFICATIONS.

G STEEL LANDSCAPE EDGING AT ROCK MULCH
SCALE: NTS — SECTION

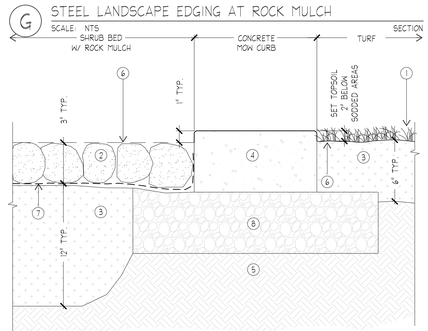

5. COMPACTED SUBGRADE
6. FINISH GRADE, TOP OF MULCH TO BE LEVEL
7. WEED BARRIER FABRIC - SEE SPECS.
8. COMPACTED ROAD BASE

1. TURF
2. ROCK MULCH - SEE SPECS.
3. AMENDED TOPSOIL - SEE SPECS
4. CONCRETE MOW CURB - REFER TO SITE PLANS

H ROCK MULCH IN SHRUB BEDS
SCALE: NTS — SECTION

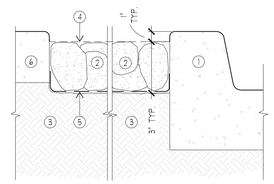

1. CURB - SEE CIVIL PLANS
2. ROCK MULCH - SEE SPECS.
3. COMPACTED SUBGRADE - 4" BELOW CURB AND SIDEWALK
4. FINISH GRADE. TOP OF MULCH SHALL BE LEVEL.
5. WEED BARRIER FABRIC - SEE SPECS.
6. SIDEWALK - SEE CIVIL PLANS

I ROCK MULCH IN PARK STRIP
SCALE: NTS — SECTION

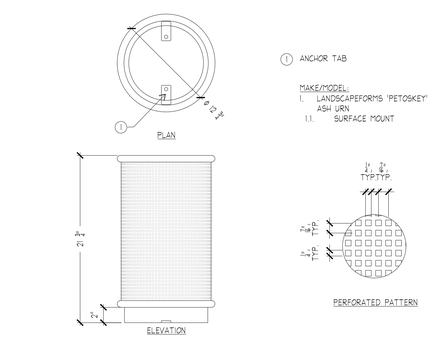

1. ANCHOR TAB

MAKE/MODEL:
1. LANDSCAPEFORMS 'PETOSKEY' ASH URN
1.1. SURFACE MOUNT

J LANDSCAPEFORMS 'PETOSKEY' ASH URN
SCALE: NTS

NOTES:
1. PLANT TREE PLUMB.
2. REMOVE ALL LABELS, WIRES, ETC. FROM THE TREE'S STEM.
3. DO NOT USE AN AUGAR FOR TREE HOLES.

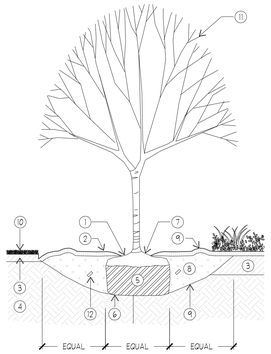

1. MULCH 1" TO 2" BACK FROM TRUNK
2. MULCH - SEE SPECS.
3. AMENDED TOPSOIL- SEE SPECS.
4. UNDISTURBED SUBGRADE
5. IF THE TREE IS BALLED AND BURLAPPED (OR CONTAINED IN A WIRE BASKET), CUT AND REMOVE THE ROPE, STRING, WIRE, AND/OR WIRE BASKET FROM AROUND THE TRUNK AND TOP 1/3 OF THE ROOT BALL
6. SET ROOTBALL ON FIRMLY PACKED TOPSOIL TO PREVENT SETTLING
7. TRUNK FLAIR- SET 1" TO 2" ABOVE FINISH GRADE
8. MAKE THE HOLE WIDE, AS MUCH AS THREE TIMES THE DIAMETER OF THE ROOT BALL, BUT ONLY AS DEEP AS THE ROOT BALL. BACKFILL TOPSOIL BORROW - SEE SPECS. BACKFILL IN 12 INCH LIFTS.
9. ROUGHEN SIDES PRIOR TO BACKFILLING. SETTLE W/ WATER IN 12" LIFTS
10. DO NOT PLANT LAWN IN TREE PIT
11. PRUNE DEAD, DISEASED, DAMAGED, OR RUBBING BRANCHES AT PLANTING TIME. DO NOT PRUNE LEADER. IMPROPER PRUNING SHALL BE CAUSE FOR REJECTION OF THE PLANT MATERIAL.
12. FERTILIZER TABLET - SEE SPECS.

A DECIDUOUS TREE WITH STAKING
SCALE: NTS — SECTION

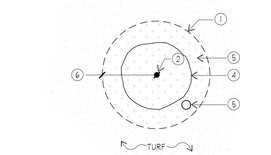

1. TURF EDGE
2. TREE TRUNK
3. ROOTBALL
4. MULCH - SEE SPECS
5. ACCENT LIGHTING- IF USED, LOCATE ACCENT LIGHTS WITHIN THE TURF EDGE
6. REMOVE SOD AT DRIPLINE OF TREE- MIN. WIDTH OF 3'-0" DIA.

B TREE IN TURF
SCALE: NTS — PLAN

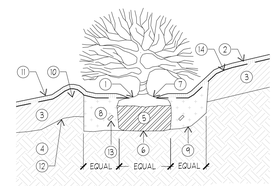

NOTES:
1. PLANT SHRUB PLUMB.
2. PRUNE DEAD, DISEASED, DAMAGED, OR RUBBING BRANCHES AT PLANTING TIME. DO NOT PRUNE LEADER.
3. REMOVE ALL LABELS, WIRES, ETC. FROM SHRUB.
4. DO NOT USE AN AUGAR FOR SHRUB HOLES.
5. DEEP WATER WITH HOSE ALL PLANTS.
6. WATER PLANT IN POT PRIOR TO REMOVING PLANT FROM POT. DO NOT PLANT DRY PLANTS. ALL POTTED PLANTS MUST HAVE A MOIST ROOT SYSTEM.

1. MULCH 1" TO 2" BACK FROM TRUNK
2. MULCH - SEE SPECS.
3. AMENDED TOPSOIL- SEE SPECS.
4. UNDISTURBED SUBGRADE
5. IF THE SHRUB IS BALLED AND BURLAPPED (OR CONTAINED IN A WIRE BASKET), CUT AND REMOVE THE ROPE, STRING, WIRE, AND/OR WIRE BASKET FROM AROUND THE TRUNK AND TOP 1/3 OF THE ROOT BALL
6. SET ROOTBALL ON FIRMLY PACKED TOPSOIL TO PREVENT SETTLING
7. TRUNK FLAIR- SET 1" TO 2" ABOVE FINISH GRADE
8. MAKE THE HOLE WIDE, AS MUCH AS THREE TIMES THE DIAMETER OF THE ROOT BALL, BUT ONLY AS DEEP AS THE ROOT BALL. BACKFILL TOPSOIL BORROW - SEE SPECS. BACKFILL IN 12 INCH LIFTS.
9. ROUGHEN SIDES PRIOR TO BACKFILLING. SETTLE W/ WATER IN 12" LIFTS
10. CONSTRUCT WATERING DISH AT EACH PLANT USING TOPSOIL
11. FINISH GRADE
12. EXISTING GRADE
13. FERTILIZER TABLET - SEE SPECS.
14. WEED BARRIER FABRIC - SEE SPECS.

C SHRUB
SCALE: NTS — SECTION

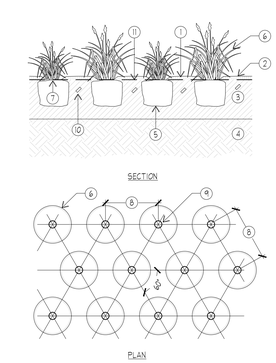

1. MULCH BACK FROM PLANT
2. MULCH - SEE SPECS.
3. AMENDED TOPSOIL - SEE SPECS.
4. UNDISTURBED SUBGRADE
5. IF PLANTS ARE POT-BOUND AT PLANTING TIME, LOOSEN THE ROOTS AROUND THE BOTTOM AND SIDES OF THE ROOT BALL
6. PLANT
7. BE SURE THE CROWN OF THE PLANT (THE POINT WHERE ROOTS AND TOP JOIN) IS EVEN WITH THE SOIL SURFACE
8. PLANT SPACING VARIES - REFER TO PLANT SCHEDULE OR PLAN
9. CENTER OF PLANT
10. FERTILIZER TABLET - SEE SPECS.
11. WEED BARRIER FABRIC - SEE SPECS.

NOTES:
1. PRUNE DEAD, DISEASED, DAMAGED, OR RUBBING BRANCHES AT PLANTING TIME.
2. REMOVE ALL LABELS, WIRES, ETC. FROM PLANT.
3. WATER PLANTS THOROUGHLY FOLLOWING PLANTING TO SETTLE THE SOIL AROUND THE ROOTS.

D PERENNIAL / GROUNDCOVER
SCALE: NTS — SECTION/PLAN

VCBO

VCBO ARCHITECTURE
524 SOUTH 600 EAST
SALT LAKE CITY, UT 84102
Phone: (801) 575-8800
Fax: (801) 531-9850
Web: vcbo.com

LICENSED LANDSCAPE ARCHITECT
Richard L. Gilbert
No. 5734299
Aug 15, 2013
STATE OF UTAH

Arc Sitio Design, Inc
Landscape Architecture & Architectural Site Design
1058 East 2100 South
Salt Lake City, Utah 84106
office 801 . 487 . 4923
fax 801 . 466 . 3046
www.arcsitiodesign.com

2nd District Juvenile Courthouse

Utah State Courts
08284150
165 West 20th Street, Ogden, Utah
BID DOCUMENTS

Rev #	Date	Description

Job # 12500
Date August 15, 2013
Owner # 08284150
Ins. #

LANDSCAPE DETAILS

L-L501

12/17/2012 4:48:20 PM

GENERAL SITE PLAN NOTES

1. GRADING AT THE BUILDING SHALL HAVE A 5% MINIMUM SLOPE AWAY FROM THE BUILDING FOR A MINIMUM OF 10'-0", UNO. CONCRETE SHALL BE SLOPED 2% AWAY FROM BUILDING.
2. FOUNDATION TO BE 8" ABOVE FINISHED GRADE U.N.O., ALSO REVIEW IBC 1808.7.4
3. ALL CONNECTIONS FROM CITY STREETS TO THE BUILDING ARE TO BE PROVIDED UNDER THIS CONTRACT. CONTRACTOR TO VERIFY CITY STANDARDS FOR ROAD, CURB, UTILITY AND SIGNAGE REQUIREMENTS.
4. ALL EXTERIOR SIDEWALKS, STAIRS AND LANDINGS TO HAVE POSITIVE DRAINAGE BUT NO MORE THAN A MAXIMUM OF 1/4" SLOPE PER FOOT TO ALLOW POSITIVE DRAINAGE. ALL STAIRS AND RAMPS TO HAVE A LANDING OF 48 INCHES LONG AT THE TOP AND BOTTOM WITH A MAXIMUM SLOPE OF 1/4" PER FOOT. ALL REBAR IN EXTERIOR APPLICATIONS TO BE EPOXY COATED.
5. ALL HARDSCAPE TO BE A MINIMUM OF 4" THICK CONCRETE OVER 4" FREE-DRAINING GRAVEL BASE
6. FINISH GRADE OF SOFTSCAPE SHALL BE 2" UNIFORMLY BELOW PAVING SURFACES UNLESS NOTED OTHERWISE.
7. 12" X 4" X CONTINUOUS MINIMUM CONCRETE MOW STRIP, TO BE PROVIDED AROUND ENTIRE BUILDING EXCEPT WHERE CONCRETE SIDEWALKS OR PLANTERS OCCUR, TYP, SEE DETAIL A4/A0.02.
8. LIGHT POLE BASE IN ALL LANDSCAPE LOCATIONS TO BE 6" ABOVE FINISHED GRADE. BE LOCATED AT LEAST 36" FROM FACE OF POLE BASE TO BACK OF CURB AND HAVE A CONCRETE MOW STRIP PER DETAIL B3/AS500. VERIFY LOCATION ON SITE WITH ARCHITECT PRIOR TO ANY INSTALLATION.
9. LIGHT POLE BASE IN ALL PAVED LOCATIONS TO BE 36" ABOVE FINISHED GRADE. VERIFY LOCATION ON SITE WITH ARCHITECT PRIOR TO ANY INSTALLATION.
10. REMOTE FDC TO HAVE VAULT FOR DRAINAGE, SEE DETAIL C6/AS500.
11. COORDINATE ORIENTATION OF FIRE HYDRANT OUTLETS WITH THE FIRE MARSHALL'S OFFICE PRIOR TO THE FINAL INSTALLATION OF THE HYDRANT ASSEMBLY.

SITE MATERIAL LEGEND

HATCH	DESCRIPTION
	INDICATES EXTENTS OF PROPOSED BUILDING
	INDICATES AREAS TO HAVE PLANTINGS OR OTHER LANDSCAPE MATERIAL. SEE LANDSCAPE DRAWINGS FOR FURTHER INFORMATION.
	INDICATES AREAS TO HAVE GRAVEL OTHER LANDSCAPE MATERIAL. SEE LANDSCAPE DRAWINGS FOR FURTHER INFORMATION.
	INDICATES AREA OF ASPHALT PAVEMENT
	INDICATES AREA OF CONCRETE PAVEMENT, SEE CIVIL DRAWINGS FOR ELEVATIONS
	INDICATES AREA OF 6" THICK CONCRETE PAVEMENT OVER 6" THICK SUBBASE, SEE CIVIL DRAWINGS FOR ELEVATIONS
	INDICATES APPROXIMATE AREA OF SITE WHICH WILL BE IMPACTED BY THE NEIGHBORING SOILS REMEDIATION PROJECT. CONTRACTOR TO COORDINATE AND RELINQUISH THIS PORTION OF THE SITE FOR THE DURATION OF THIS REMEDIATION WORK.

KEYED NOTES

200	EXG CONCRETE CURB AND GUTTER
203	APPROXIMATE LOCATION OF EXISTING POWER LINE
519	STEEL PIPE BOLLARD, PAINTED, SEE DETAIL A2/AS500
2605	LIGHT POLE AND CONCRETE BASE
2609	LIGHT BOLLARD
2610	FLAG POLE/ MONUMENT SIGNAGE LIGHTING
2807	PEDESTAL MOUNTED CARD READER
3200	CONC CURB AND GUTTER W/ SUBBASE
3201	ASPHALT PAVING W/ SUBBASE
3202	CONCRETE PAVING W/ SUBBASE W/ CONTROL JOINTS SEE CIVIL DRAWINGS
3203	PAINTED PARKING STRIPE OR GRAPHIC - PAINT COLOR TO BE WHITE
3204	4" THICK CONCRETE SIDEWALK W/ SUBBASE AND CONTROL JOINTS SEE CIVIL DRAWINGS
3205	6" THICK CONCRETE PAVING W/ 6" THICK SUBBASE AND CONTROL JOINTS SEE CIVIL DRAWINGS
3206	ADA ACCESSIBLE CONCRETE SIDEWALK RAMP - SEE CIVIL DRAWINGS FOR DETAILS
3207	LANDSCAPING AND IRRIGATION SYSTEM - SEE LANDSCAPE DRAWINGS
3208	CONCRETE MOW STRIP - SEE LANDSCAPE DRAWINGS FOR LAYOUT
3209	12" WIDE CONCRETE POUR STRIP - SEE DETAIL A4/AS500
3211	INTEGRAL COLOR HONED SINGLE SCORE CMU FENCE WALL W/ PRECAST CONC. CAP SEE DETAIL D1/AS500
3212	INTEGRAL COLOR HONED SINGLE SCORE CMU WALL W/ PRECAST CONC. CAP - SEE DETAIL E4/AS500
3214	30' WIDE OPENING x 10' TALL MOTORIZED CANTILEVERED SLIDING DECORATIVE IRON GATE
3215	24' WIDE OPENING x 10' TALL MOTORIZED CANTILEVERED SLIDING DECORATIVE IRON GATE
3218	3' WIDE x 10' TALL GATE SYSTEM WITH GATE CLOSER
3220	3' WIDE x 10' TALL GATE SYSTEM WITH KNOX BOX AND GATE CLOSER LOCATED IN ADJACENT CMU WALL
3222	PEDESTAL MOUNTED CARD READER
3223	RECESSED WALL MOUNTED CARD READER
3224	RECESSED WALL MOUNTED INTERCOM
3225	TRAFFIC CONTROL ARMS & LOOP
3231	PRISONER REFUGE AREA - PROVIDE STRIPED PAINTED AREA OF 1200 S.F.
3232	DRIVE APPROACH
3236	RAISED CONCRETE SIDEWALK - SEE CIVIL FOR DETAILS
3237	BIKE RACK
3240	CONCRETE WHEEL STOP
3242	BENCH
3243	TRASH RECEPTACLE
3244	RECYCLING RECEPTACLE
3245	ASHTRAY RECEPTACLE

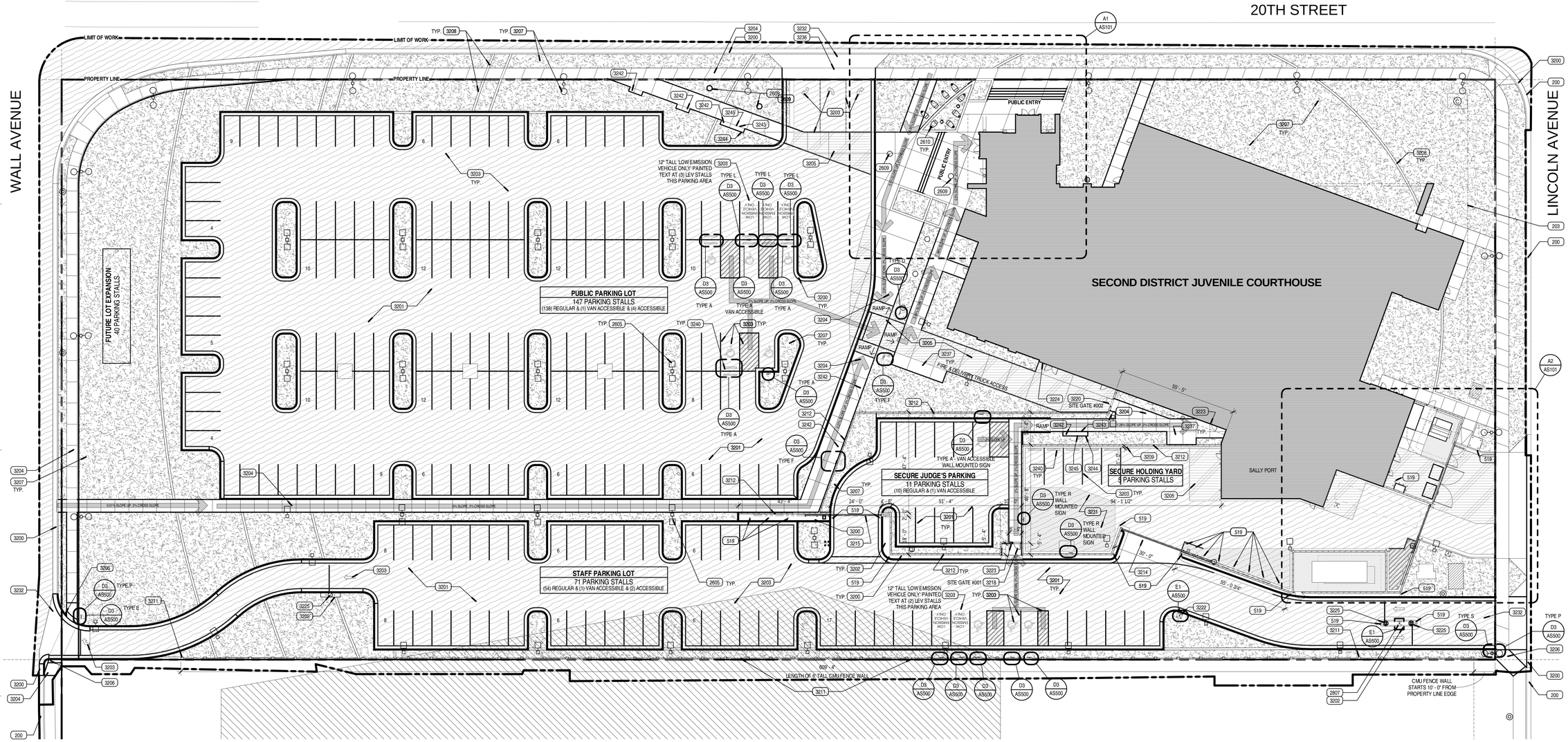

A5 OVERALL SITE PLAN
SCALE: 1" = 20'-0"
0' 20' 40' 60'

PLAN NORTH
TRUE NORTH

GAS VAPOR BARRIER GENERAL N

1. THE GAS VAPOR BARRIER IS TO BE INSTALLED UNDER ALL SLA AND IS TO BE INSTALLED UNDER AND AROUND ALL ELEVATOR [redacted]
2. GAS VAPOR VENTS ARE TO BE INSTALLED PER THE LAYOUT AN REFERENCED ON DRAWING C1/A030 AND AS RECOMMENDED B MANUFACTURER. [redacted]
3. THE TYPICAL THICKNESS OF THE GAS VAPOR BARRIER IS TO B 100 MILS APPLIED UNDER AND AROUND ALL ELEVATOR PITS [redacted]
4. ALL UNDERGROUND VENT PIPING TO BE ABS, PVC OR A PIPING WITH THE MANUFACTURE'S VENTING SYSTEM. ALL VENT RISER GRADE, CONCEALED IN WALLS AND CEILING SPACES, ARE TO E
5. THE GAS VAPOR BARRIER IS TO WRAP UP ONTO AND SEAL AG FOUNDATION WALLS. [redacted]
6. WHERE THE GAS VAPOR VENT RISER PENETRATES THE SLAB WALL, THE PENETRATION IS TO BE TREATED AND SEALED PER MANUFACTURER'S DETAILS. [redacted]
7. AT ALL OBJECTS PENETRATING THE BARRIER, SUCH AS UNDER PLUMBING, UNDERGROUND DUCTS, ETC., THE GAS VAPOR BAR FULLY SEALED TO THAT OBJECT PER THE BARRIER MANUFACT

VCBO ARCHITECTS
324 SOUTH 400 EAST
SALT LAKE CITY, UT 84102
Phone: (801) 575-8800
Fax: (801) 531-9850
Web: vcbo.com

LICENSED ARCHITECT
No. 133912
BRENT R. TIPPETS
8-15-13
STATE OF UTAH

2nd District Juvenile Courthouse

Utah State Courts
08284150
165 West 20th Street, Ogden, Utah
BID DOCUMENTS

Rev #	Date	Description

Job # 12500
Date August 15, 2013
Owner # 08284150
Ins. #

OVERALL SITE PLAN

AS100

8/14/2013 11:23:41 AM

GENERAL SITE PLAN NOTES

1. GRADING AT THE BUILDING SHALL HAVE A 5% MINIMUM SLOPE AWAY FROM THE BUILDING FOR A MINIMUM OF 10'-0", UNO. CONCRETE SHALL BE SLOPED 2% AWAY FROM BUILDING.
2. FOUNDATION TO BE 8" ABOVE FINISHED GRADE U.N.O., ALSO REVIEW IBC 1808.7.4
3. ALL CONNECTIONS FROM CITY STREETS TO THE BUILDING ARE TO BE PROVIDED UNDER THIS CONTRACT. CONTRACTOR TO VERIFY CITY STANDARDS FOR ROAD, CURB, UTILITY AND SIGNAGE REQUIREMENTS.
4. ALL EXTERIOR SIDEWALKS, STAIRS AND LANDINGS TO HAVE POSITIVE DRAINAGE BUT NO MORE THAN A MAXIMUM OF 1/4" SLOPE PER FOOT TO ALLOW POSITIVE DRAINAGE. ALL STAIRS AND RAMPS TO HAVE A LANDING OF 48 INCHES LONG AT THE TOP AND BOTTOM WITH A MAXIMUM SLOPE OF 1/4" PER FOOT. ALL REBAR IN EXTERIOR APPLICATIONS TO BE EPOXY COATED.
5. ALL HARDSCAPE TO BE A MINIMUM OF 4" THICK CONCRETE OVER 4" FREE-DRAINING GRAVEL BASE
6. FINISH GRADE OF SOFTSCAPE SHALL BE 2" UNIFORMLY BELOW PAVING SURFACES UNLESS NOTED OTHERWISE.
7. 12" X 4" X CONTINUOUS MINIMUM CONCRETE MOW STRIP, TO BE PROVIDED AROUND ENTIRE BUILDING EXCEPT WHERE CONCRETE SIDEWALKS OR PLANTERS OCCUR, TYP, SEE DETAIL A4/A0.02.
8. LIGHT POLE BASE IN ALL LANDSCAPE LOCATIONS TO BE 6" ABOVE FINISHED GRADE, BE LOCATED AT LEAST 36" FROM FACE OF POLE BASE TO BACK OF CURB AND HAVE A CONCRETE MOW STRIP PER DETAIL B3/AS500. VERIFY LOCATION ON SITE WITH ARCHITECT PRIOR TO ANY INSTALLATION.
9. LIGHT POLE BASE IN ALL PAVED LOCATIONS TO BE 36" ABOVE FINISHED GRADE. VERIFY LOCATION ON SITE WITH ARCHITECT PRIOR TO ANY INSTALLATION.
10. REMOTE FDC TO HAVE VAULT FOR DRAINAGE, SEE DETAIL C6/AS500.
11. COORDINATE ORIENTATION OF FIRE HYDRANT OUTLETS WITH THE FIRE MARSHALL'S OFFICE PRIOR TO THE FINAL INSTALLATION OF THE HYDRANT ASSEMBLY.

SITE MATERIAL LEGEND

HATCH	DESCRIPTION
	INDICATES EXTENTS OF PROPOSED BUILDING
	INDICATES AREAS TO HAVE PLANTINGS OR OTHER LANDSCAPE MATERIAL. SEE LANDSCAPE DRAWINGS FOR FURTHER INFORMATION.
	INDICATES AREAS TO HAVE GRAVEL OTHER LANDSCAPE MATERIAL. SEE LANDSCAPE DRAWINGS FOR FURTHER INFORMATION.
	INDICATES AREA OF ASPHALT PAVEMENT
	INDICATES AREA OF CONCRETE PAVEMENT, SEE CIVIL DRAWINGS FOR ELEVATIONS
	INDICATES AREA OF 6" THICK CONCRETE PAVEMENT OVER 6" THICK SUBBASE, SEE CIVIL DRAWINGS FOR ELEVATIONS
	INDICATES APPROXIMATE AREA OF SITE WHICH WILL BE IMPACTED BY THE NEIGHBORING SOILS REMEDIATION PROJECT. CONTRACTOR TO COORDINATE AND RELINQUISH THIS PORTION OF THE SITE FOR THE DURATION OF THIS REMEDIATION WORK.

KEYED NOTES

514 1 1/2" DIA. STAINLESS STEEL HANDRAIL
518 STEEL LADDER, PAINTED
521 10' WIDE X 10' TALL CUSTOM FABRICATED GATE
522 19' WIDE X 10' TALL CUSTOM FABRICATED GATE
523 PIPE BOLLARD, SEE DETAIL A2/AS500
1023 SIGNAGE, SEE SCHEDULE
2102 REMOTE FIRE DEPARTMENT CONNECTION
2209 GAS METER AND 4" THICK CONCRETE PAD AS PER UTILITY COMPANY
2602 ADA DOOR ACUATOR
2606 TRANSFORMER WITH CONCRETE PAD
2607 CT CAN WITH CONCRETE PAD
2608 HIGH VOLTAGE SWITCH
2609 LIGHT BOLLARD
2610 FLAG POLE/ MONUMENT SIGNAGE LIGHTING
3200 CONC CURB AND GUTTER W/ SUBBASE
3201 ASPHALT PAVING W/ SUBBASE
3203 PAINTED PARKING STRIPE OR GRAPHIC - PAINT COLOR TO BE WHITE
3204 4" THICK CONCRETE SIDEWALK W/ SUBBASE AND CONTROL JOINTS SEE CIVIL DRAWINGS
3205 6" THICK CONCRETE PAVING W/ 6" THICK SUBBASE AND CONTROL JOINTS SEE CIVIL DRAWINGS
3206 ADA ACCESSIBLE CONCRETE SIDEWALK RAMP - SEE CIVIL DRAWINGS FOR DETAILS
3207 LANDSCAPING AND IRRIGATION SYSTEM - SEE LANDSCAPE DRAWINGS
3209 12" WIDE CONCRETE POUR STRIP - SEE DETAIL A4/AS500
3210 RAISED CONCRETE PLANTER RETAINING WALL
3212 INTEGRAL COLOR HONED SINGLE SCORE CMU WALL W/ PRECAST CONC. CAP - SEE DETAIL E4/AS500
3213 16' WIDE OPENING x 10' TALL MOTORIZED CANTILEVERED SLIDING DECORATIVE IRON GATE SYSTEM WITH KNOX BOX AND PEDESTAL MOUNTED CARD READER
3218 3' WIDE x 10' TALL GATE SYSTEM WITH GATE CLOSER
3221 PEDESTAL MOUNTED CALL BOX
3227 40' TALL FLAG POLE, SEE DETAIL A3/AS500
3228 6' DEEP GENERATOR PIT
3229 DUMPSTER N.I.C.
3230 SITE SIGNAGE - SEE DETAIL B1/AS500
3234 6" TALL CONCRETE CURB WALL
3237 BIKE RACK
3238 ROCK MULCH - SEE LANDSCAPE DRAWINGS
3239 REINFORCED CONCRETE STAIR SYSTEM
3241 CONCRETE RETAINING WALL SYSTEM
3243 TRASH RECEPTACLE
3244 RECYCLING RECEPTACLE

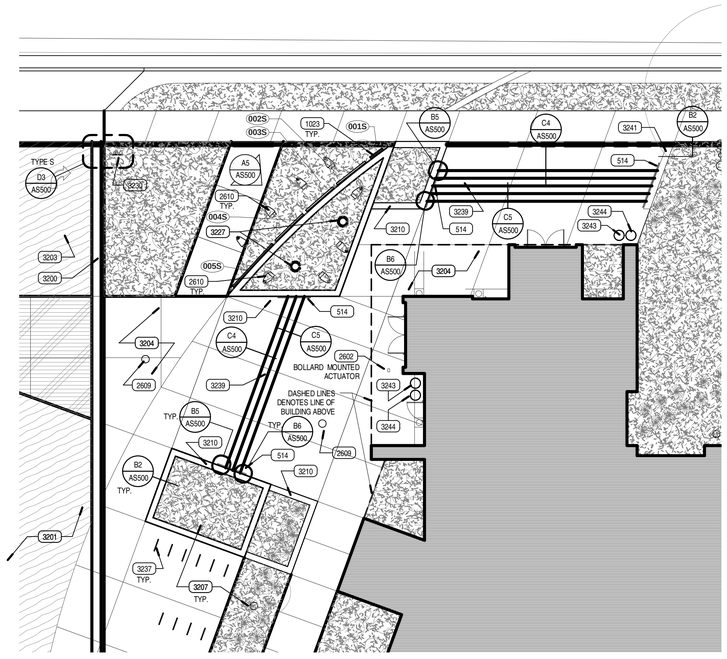

A1 ENLARGED SITE PLAZA PLAN
SCALE: 1" = 10'-0"
0' 5' 10' 20'
PLAN NORTH
TRUE NORTH

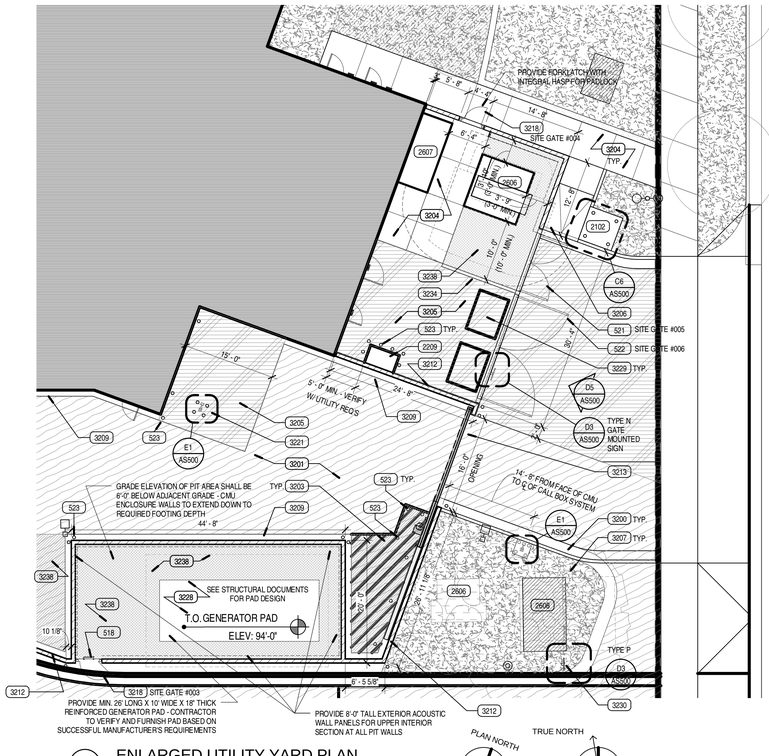

A2 ENLARGED UTILITY YARD PLAN
SCALE: 1" = 10'-0"
0' 5' 10' 20'
PLAN NORTH
TRUE NORTH

VCBO ARCHITECTURE
524 SOUTH 600 EAST
SALT LAKE CITY, UT 84102
Phone: (801) 575-8800
Fax: (801) 531-9850
Web: vcbo.com

LICENSED ARCHITECT No. 133912 BRENT R. TIPPETS 8-15-13 STATE OF UTAH

2nd District Juvenile Courthouse

Utah State Courts
08284150
165 West 20th Street, Ogden, Utah
BID DOCUMENTS

Rev #	Date	Description

Job # 12500
Date August 15, 2013
Owner # 08284150
Ins. #

ENLARGED SITE PLANS

AS101

8/14/2013 11:23:45 AM

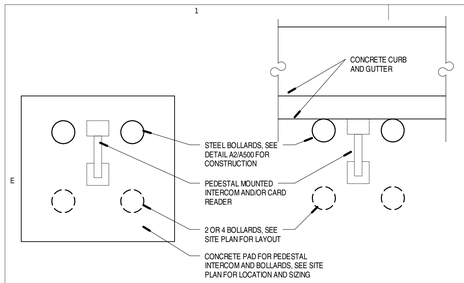

E1 TYPICAL PEDESTAL DETAIL
SCALE: 3/4" = 1'-0"

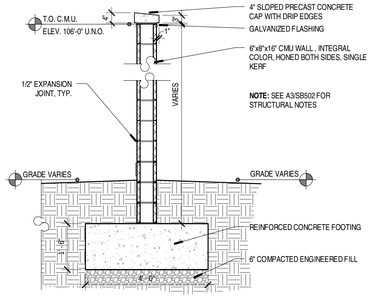

D1 C.M.U. SITE FENCE
SCALE: 1/2" = 1'-0"

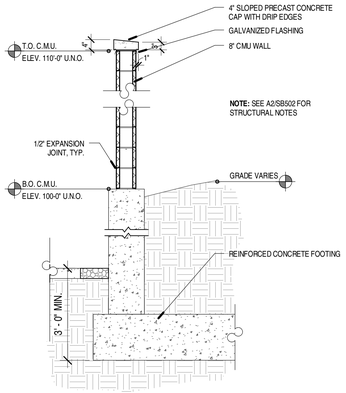

D2 C.M.U. ENCLOSURE RETAINING WALL
SCALE: 1/2" = 1'-0"

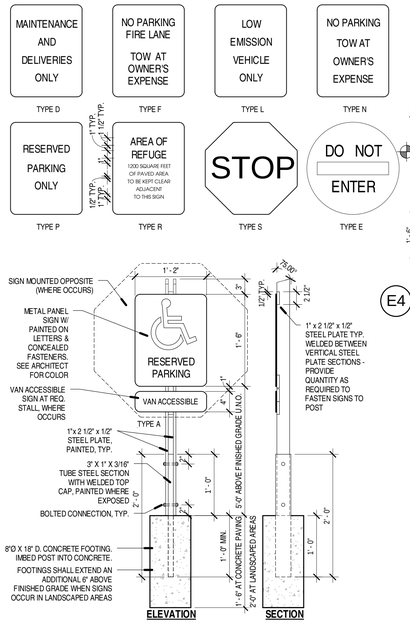

D3 SITE SIGNAGE DETAIL
SCALE: 1" = 1'-0"

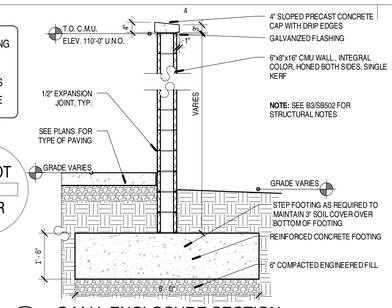

E4 C.M.U. ENCLOSURE SECTION
SCALE: 1/2" = 1'-0"

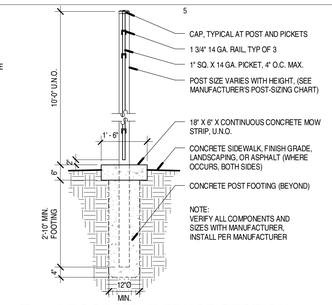

E5 DECORATIVE FENCE SECTION
SCALE: 1/2" = 1'-0"

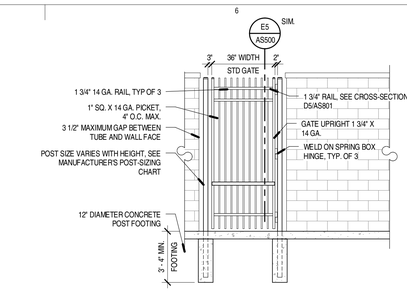

E6 DECORATIVE GATE ELEVATION
SCALE: 1/4" = 1'-0"

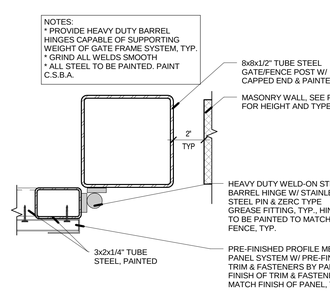

D4 ENCLOSURE GATE JAMB, TYP.
SCALE: 3" = 1'-0"

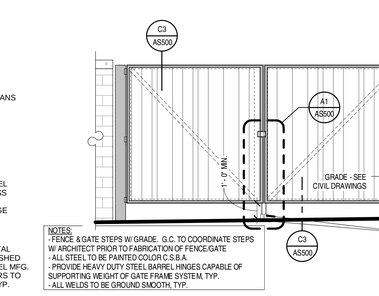

D5 ENCLOSURE GATE DETAIL
SCALE: 1/4" = 1'-0"

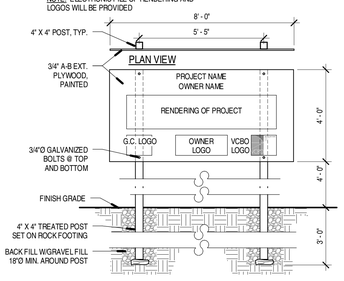

C2 CONSTRUCTION SIGN DETAIL, TYP.
SCALE: 3/8" = 1'-0"

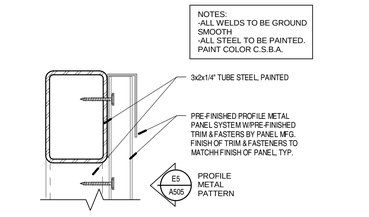

C3 ENCLOSURE GATE SECTION, TYP.
SCALE: 6" = 1'-0"

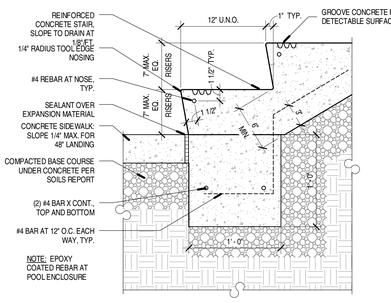

C4 CONCRETE STAIR - BASE DETAIL
SCALE: 1 1/2" = 1'-0"

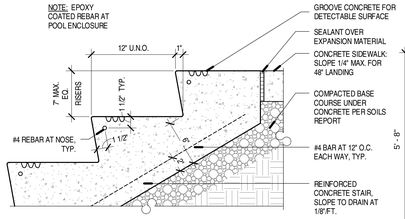

C5 CONC. STAIR - TOP ON GRADE DETAIL
SCALE: 1 1/2" = 1'-0"

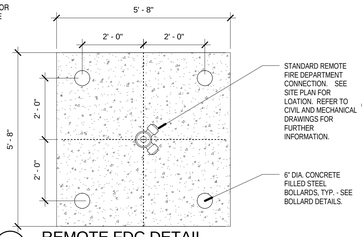

C6 REMOTE FDC DETAIL
SCALE: 1/2" = 1'-0"

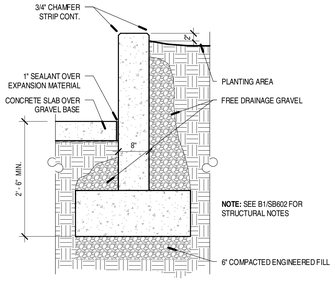

B2 CONC. RETAINING WALL DETAIL
SCALE: 3/4" = 1'-0"

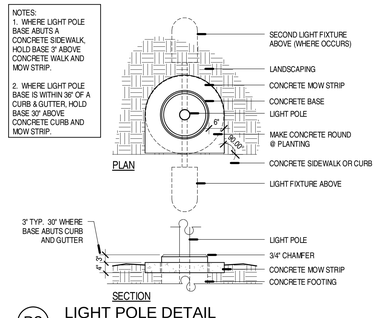

B3 LIGHT POLE DETAIL
SCALE: 1/2" = 1'-0"

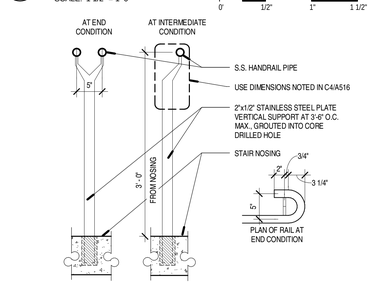

B4 FREE-STANDING HANDRAIL SUPPORT DETAIL
SCALE: 1" = 1'-0"

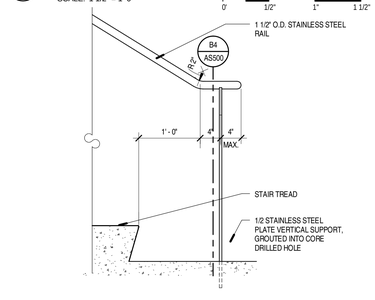

B5 FREE-STANDING HANDRAIL @ BOTTOM
SCALE: 1" = 1'-0"

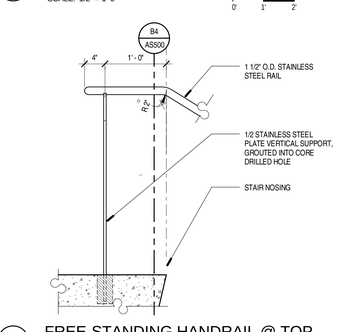

B6 FREE-STANDING HANDRAIL @ TOP
SCALE: 1" = 1'-0"

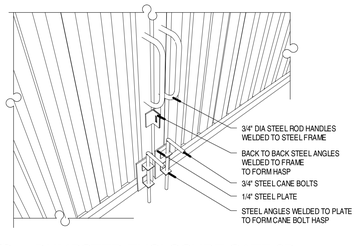

A1 DUMPSTER ENCLOSURE GATE 3D
SCALE: NOT TO SCALE

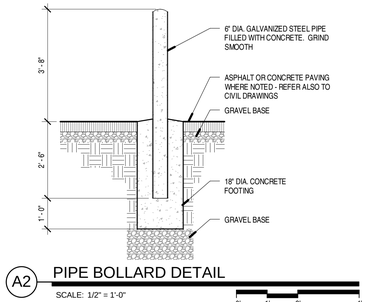

A2 PIPE BOLLARD DETAIL
SCALE: 1/2" = 1'-0"

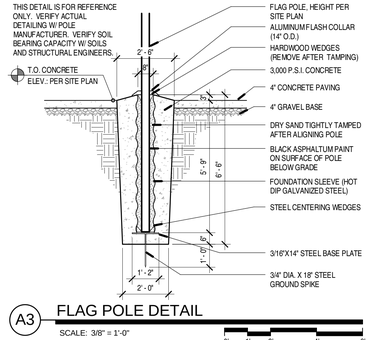

A3 FLAG POLE DETAIL
SCALE: 3/8" = 1'-0"

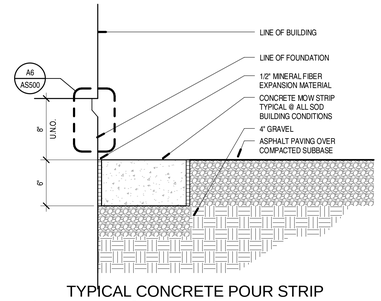

A4 TYPICAL CONCRETE POUR STRIP DETAIL @ SALLY PORT YARD
SCALE: 1 1/2" = 1'-0"

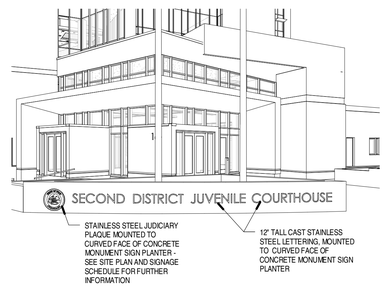

A5 SITE VIEW - MONUMENT SIGN
SCALE:

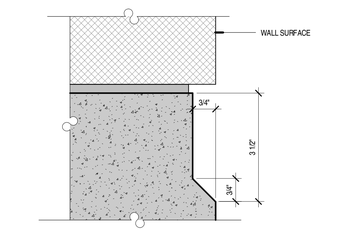

A6 FOUNDATION REVEAL1
SCALE: 6" = 1'-0"

8/14/2013 11:24:01 AM

VCBO ARCHITECTURE
ARCHITECTURE
VCBO ARCHITECTURE
524 SOUTH 600 EAST
SALT LAKE CITY, UT 84102
Phone: (801) 575-8800
Fax: (801) 531-9850
Web: vcbo.com

LICENSED ARCHITECT No. 133012 BRENT R. TIPPETS 8-15-13 STATE OF UTAH

2nd District Juvenile Courthouse

Utah State Courts
08284150
165 West 20th Street, Ogden, Utah
BID DOCUMENTS

Rev #	Date	Description

Job # 12500
Date August 15, 2013
Owner # 08284150
Ins. #

SITE DETAILS

AS500

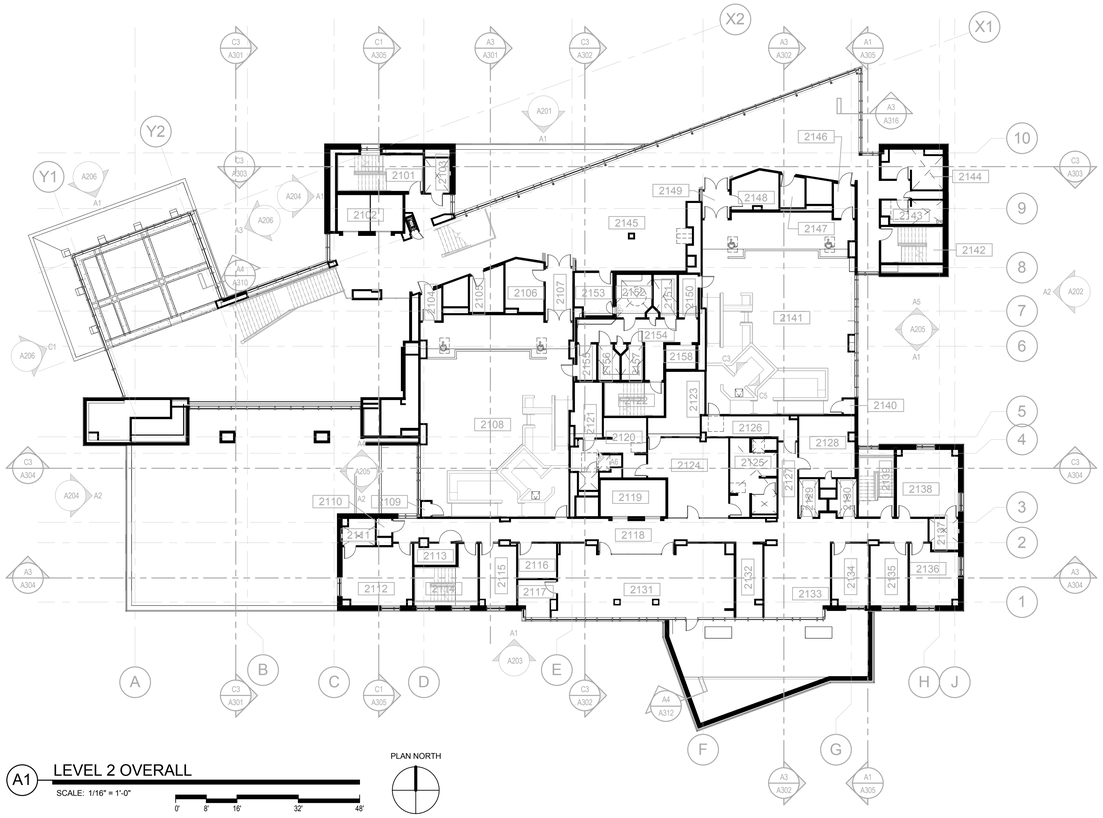

A1 LEVEL 2 OVERALL

SCALE: 1/16" = 1'-0"

0' 8' 16' 32' 48'

PLAN NORTH

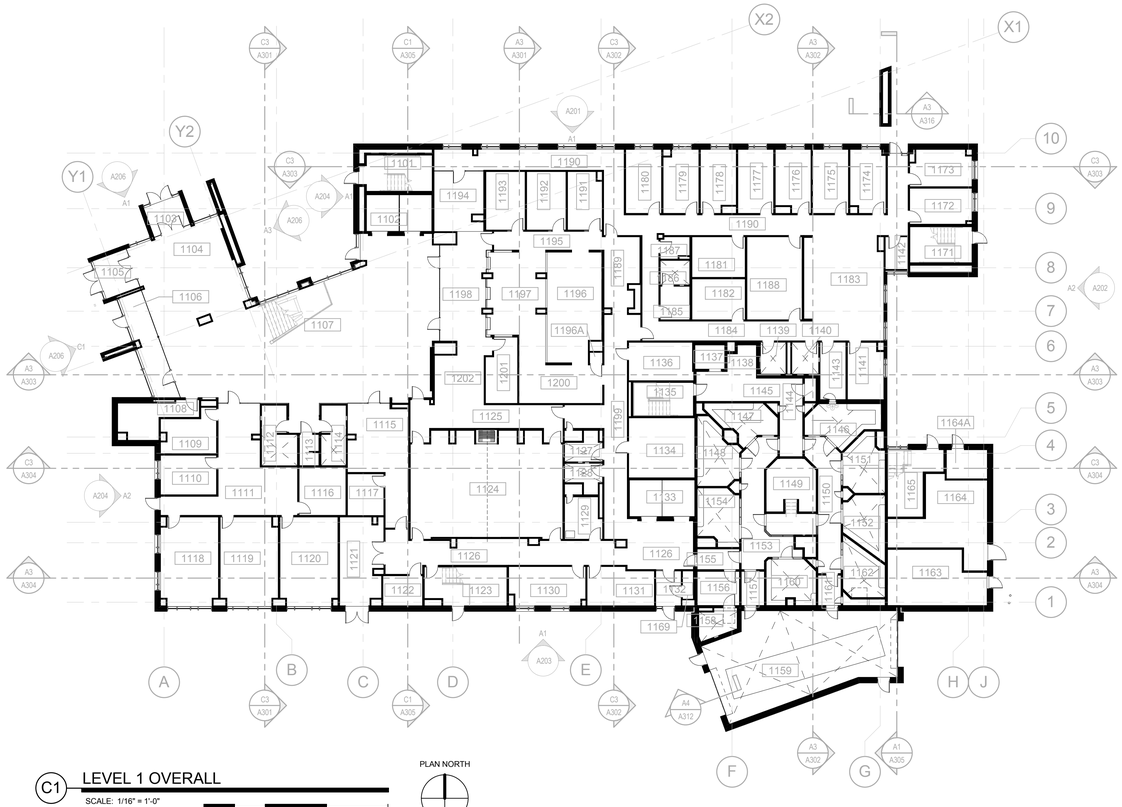

C1 LEVEL 1 OVERALL

SCALE: 1/16" = 1'-0"

0' 8' 16' 32' 48'

PLAN NORTH

ROOM NUMBER	ROOM NAME
1101	STAIR A
1102	ELEVATOR 1
1103	VESTIBULE
1104	BUILDING ENTRY
1105	VESTIBULE
1106	EXIT VESTIBULE
1107	LOBBY
1108	MEDIATION ORIENTATION VIDEO ROOM
1109	CAUCUS
1110	CAUCUS
1111	WAITING ROOM
1112	WOMEN'S TOILET
1113	HOUSEKEEPING CLOSET
1114	MEN'S TOILET
1115	SECURITY OFFICE
1116	CAUCUS
1117	SECURITY OFFICE
1118	MEDIATION ROOM
1119	MEDIATION ROOM
1120	MEDIATION ROOM
1121	RECEIVING AREA
1122	MAIL ROOM AND RECEIVING
1123	STAIR D
1124	COURT CONFERENCE ROOM
1125	HALL
1126	CORRIDOR
1127	STAFF TOILET
1128	STAFF TOILET
1129	DFCM / CUSTODIAL OFFICE
1130	DFCM / CUSTODIAL WORKROOM
1131	GENERAL STORAGE
1132	VESTIBULE
1133	ELEVATOR2
1134	COMMUNICATION CLOSET
1135	STAIR E
1136	ELECTRICAL
1137	ELEVATOR3
1138	PROCESSING AREA
1139	PROBATION TOILET ROOM
1140	PROBATION TOILET ROOM
1141	PROBATION OFFICER
1142	SUPPLY STORAGE
1143	PROBATION INTERVIEW ROOM
1144	SECURITY EQUIPMENT CLOSET
1145	CORRIDOR
1146	JUVENILE FEMALE HOLDING CELL
1147	ADULT MALE HOLDING CELL
1148	GROUP HOLDING CELL
1149	CONTROL ROOM-SECURITY MONITORS
1150	JUVENILE HALL
1151	GROUP HOLDING CELL
1152	GROUP HOLDING CELL
1153	ADULT HALL
1154	GROUP HOLDING CELL
1155	SECURITY VESTIBULE
1156	BREAK ROOM
1157	SECURE VESTIBULE
1158	STAFF TOILET
1159	VEHICULAR SALLY PORT
1160	ADULT FEMALE HOLDING CELL
1161	SECURE VESTIBULE
1162	JUVENILE MALE HOLDING CELL
1163	MECHANICAL
1164	ELECTRICAL
1164A	ELECTRICAL
1165	STAIR C
1166	PROBATION OFFICER
1167	PROBATION OFFICER
1168	PROBATION OFFICER
1169	CLOSET
1170	PROBATION SUPPORT
1171	STAIR B
1172	PROBATION SUPERVISOR
1173	PROBATION SUPERVISOR
1174	PROBATION OFFICER
1175	PROBATION OFFICER
1176	PROBATION OFFICER
1177	PROBATION OFFICER
1178	PROBATION OFFICER
1179	PROBATION OFFICER
1180	PROBATION OFFICER

ROOM NUMBER	ROOM NAME
1181	PROBATION OFFICER
1182	PROBATION OFFICER
1183	DEPUTY PROBATION OFFICERS
1184	CORRIDOR
1185	DRUG TESTING LAB
1186	URINALYSIS TOILET ROOM
1187	HOUSEKEEPING CLOSET
1188	CONFERENCE ROOM
1189	SMALL BREAKROOM AREA
1190	CORRIDOR
1191	JUDICIAL SUPPORT SERVICE MANAGER
1192	JUDICIAL TEAM MANAGER
1193	JUDICIAL TEAM MANAGER
1194	PROBATION WAITING
1195	CORRIDOR
1196	JUDICIAL ASSISTANTS/ JUDICIAL SERVICE
1196A	SAFE
1197	COUNTER WORKSTATION
1198	COUNTER QUEUING
1199	CORRIDOR
1200	FILE STORAGE
1201	PUBLIC TERMINALS
1202	PUBLIC RECEPTION AND WATING
1203	ENTRY VESTIBULE
2101	STAIR A
2102	ELEVATOR 1
2103	FAMILY TOILET ROOM
2104	COURT ROOM SOUND VESTIBULE
2105	PROBATION SUPERVISION SUPPORT
2106	ATTORNEY/ CLIENT CONFERENCE ROOM
2107	COURT ROOM SOUND VESTIBULE
2108	COURTROOM
2109	STORAGE
2110	STORAGE
2111	JUDGES TOILET/ ROBING CLOSET
2112	JUDGES CHAMBERS
2113	HOUSEKEEPING CLOSET
2114	STAIR D
2115	JUDICIAL CASE MANAGER
2116	GENERAL STORAGE
2117	PERSONAL HEALTH
2118	CORRIDOR
2119	ELEVATOR2
2120	MEN'S LOCKER
2121	ELECTRICAL
2122	STAIR E
2123	COMMUNICATION CLOSET
2124	FITNESS AREA
2125	WOMEN'S LOCKER
2126	VESTIBULE
2127	CORRIDOR
2128	SECURE EVIDENCE STORAGE
2129	STAFF TOILET
2130	STAFF TOILET
2131	STAFF LOUNGE / FOOD SERVICE / VENDING
2132	FILE STORAGE/ WORKROOM
2133	JUDICIAL ASSISTANTS/ JUDICIAL SERVICE
2134	JUDICIAL CASE MANAGER
2135	FUTURE OFFICE
2136	COURT CONFERENCE ROOM
2137	JUDGES TOILET/ ROBING CLOSET
2138	JUDGES CHAMBERS
2139	STAIR C
2140	STORAGE
2141	COURTROOM
2142	STAIR B
2143	MEN'S TOILET
2144	WOMEN'S TOILET
2145	LOBBY
2146	COURT ROOM SOUND VESTIBULE
2147	HOUSEKEEPING CLOSET
2148	ATTORNEY/ CLIENT CONFERENCE ROOM
2149	COURT ROOM SOUND VESTIBULE
2150	SECURE SOUND VESTIBULE
2151	HOLDING CELL-SINGLE
2152	HOLDING CELL-SINGLE
2153	ATTORNEY/ CLIENT CONFERENCE ROOM
2154	CORRIDOR
2155	SECURE SOUND VESTIBULE
2156	HOLDING CELL-SINGLE
2157	HOLDING CELL-SINGLE
2158	ELEVATOR3

PLAN NOTES

1. WHERE FLOOR DRAINS ARE INSTALLED, THE FLOOR IS **NOT** TO SLOPE TOWARD THE DRAIN (REMAINS FLAT) EXCEPT AT THE FOLLOWING LOCATIONS:
   A. THICK SET TILE LOCATED IN CONJUCTION WITH SHOWERS.
   B. FLOORS NOT TILED AT SLAB-ON-GRADE LOCATIONS (LEVEL 1 HOLDING AND MECHANICAL ROOMS).
   WHERE FLOORS SLOPE, THE MAXIMUM FLOOR SLOPE IS NOT TO EXCEED 2% WHILE THE MINIMUM SLOPE IS NOT TO BE LESS THAN 1%.
2. WHERE CONCRETE PADS ARE CALLED TO BE CONSTRUCTED UNDER EQUIPMENT THE SLAB IS TO BE 8" THICK, U.N.O., AND IS TO HAVE #4 BARS AT 18" O.C. EACH WAY. COORDINATE DIMENSIONS OF PAD WITH ACTUAL EQUIPMENT SPEC
3. THE CONTRACTOR IS TO ENSURE THAT BETWEEN ANY FINISH FLOOR ELEVATION TO 42" A.F.F. ALL GUARDRAILS ARE TO BE CONSTRUCTED AND INSTALLED SO THAT A 4" SPHERE WILL NOT PASS BETWEEN ANY TWO ADJACENT GUARDRAIL COMPONENTS OR BETWEEN THE EDGE OF A GUARDRAIL AND ALL ADJACENT BUILDING ELEMENT SUCH AS A WALL OR FLOOR.

VCBO ARCHITECTURE

VCBO ARCHITECTURE
524 SOUTH 600 EAST
SALT LAKE CITY, UT 84102
Phone: (801) 575-8800
Fax: (801) 531-9850
Web: vcbo.com

LICENSED ARCHITECT
No. 153912
BRENT R. TIPPETS
8-15-13
STATE OF UTAH

2nd District Juvenile Courthouse

Utah State Courts
08284150
165 West 20th Street, Ogden, Utah
BID DOCUMENTS

Rev #	Date	Description

Job # 12500
Date August 15, 2013
Owner # 08284150
Ins. #

LEVEL 1 AND 2
OVERALL PLANS

A010

8/14/2013 2:22:56 PM

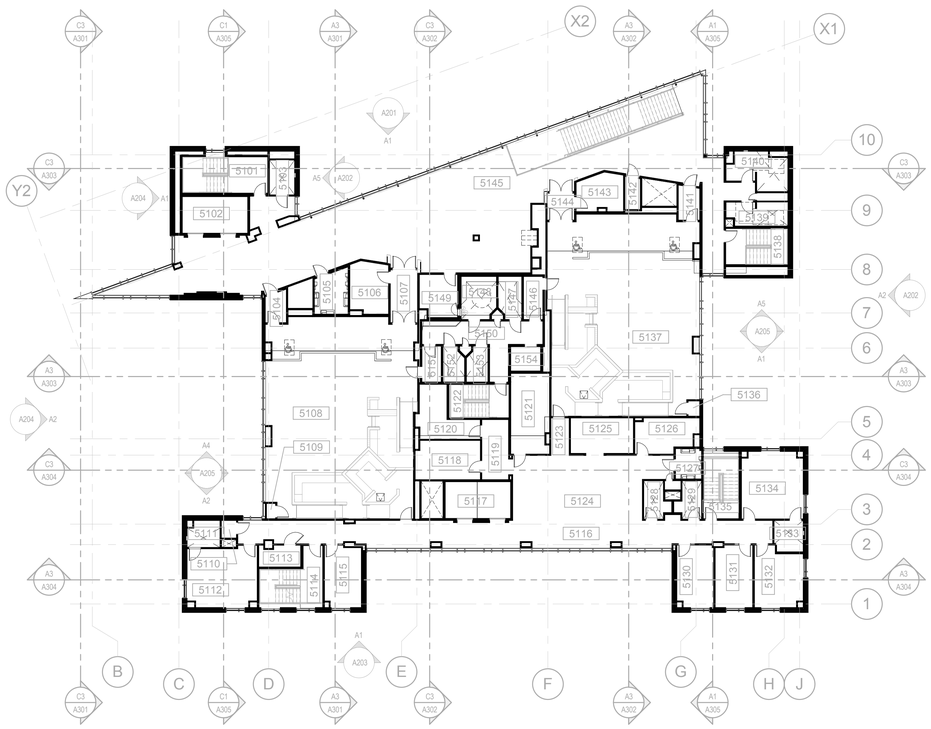

A3 LEVEL 5 OVERALL

SCALE: 1/16" = 1'-0"

0' 8' 16' 32' 48'

PLAN NORTH

ROOM NUMBER	ROOM NAME
3101	STAIR A
3102	ELEVATOR 1
3103	STORAGE
3104	COURT ROOM SOUND VESTIBULE
3105	PROBATION SUPERVISION SUPPORT
3106	ATTORNEY/ CLIENT CONFERENCE ROOM
3107	COURT ROOM SOUND VESTIBULE
3108	COURTROOM
3109	STORAGE
3110	STORAGE
3111	JUDGES TOILET/ ROBING CLOSET
3112	JUDGES CHAMBERS
3113	HOUSEKEEPING CLOSET
3114	STAIR D
3115	JUDICIAL CASE MANAGER
3116	CLERK OF COURT / DEPARTMENT ADMINISTRATION
3117	CHIEF PROBATION OFFICER
3118	CORRIDOR
3119	ELEVATOR2
3120	GENERAL STORAGE
3121	ELECTRICAL
3122	STAIR E
3122A	SMALL BREAKROOM
3123	COMMUNICATION CLOSET
3124	CORRIDOR
3125	SUPPORT SERVICE COORDINATOR
3126	FILE STORAGE/ WORKROOM
3127	STAFF TOILET
3128	STAFF TOILET
3129	CONFERENCE ROOM
3130	EXECUTIVE ADMINISTRATIVE ASSISTANT
3131	COURT EXECUTIVE OFFICE
3132	TOILET ROOM
3133	JUDICIAL ASSISTANTS/ JUDICIAL SERVICE
3134	JUDICIAL CASE MANAGER
3135	JUVENILE COURT PROGRAM COORDINATOR
3136	COURT CONFERENCE ROOM
3137	JUDGES TOILET/ ROBING CLOSET
3138	JUDGES CHAMBERS
3139	STAIR C
3140	STORAGE
3141	LARGE COURTROOM
3142	STAIR B
3143	MEN'S TOILET
3144	WOMEN'S TOILET
3145	LOBBY
3146	COURT ROOM SOUND VESTIBULE
3147	HOUSEKEEPING CLOSET
3148	ATTORNEY/ CLIENT CONFERENCE ROOM
3149	COURT ROOM SOUND VESTIBULE
3150	SECURE SOUND VESTIBULE
3151	HOLDING CELL-SINGLE
3152	HOLDING CELL-SINGLE
3153	ATTORNEY/ CLIENT CONFERENCE ROOM
3154	CORRIDOR
3155	SECURE SOUND VESTIBULE

ROOM NUMBER	ROOM NAME
3156	HOLDING CELL-SINGLE
3157	HOLDING CELL-SINGLE
3158	ELEVATOR3
4101	STAIR A
4102	ELEVATOR 1
4103	PROBATION SUPERVISION SUPPORT
4104	COURT ROOM SOUND VESTIBULE
4105	STORAGE
4106	ATTORNEY/ CLIENT CONFERENCE ROOM
4107	COURT ROOM SOUND VESTIBULE
4108	COURTROOM
4109	STORAGE
4110	STORAGE
4111	JUDGES TOILET/ ROBING CLOSET
4112	JUDGES CHAMBERS
4113	HOUSEKEEPING CLOSET
4114	STAIR D
4115	JUDICIAL CASE MANAGER
4116	CORRIDOR
4117	ELEVATOR2
4118	GENERAL STORAGE
4119	SMALL BREAKROOM
4120	ELECTRICAL
4121	COMMUNICATION CLOSET
4122	STAIR E
4123	CORRIDOR
4124	JUDICIAL ASSISTANTS/ JUDICIAL SERVICE
4125	FILE STORAGE/ WORKROOM
4126	VICTIM/ WITNESS SEQUESTERED ROOM
4127	STORAGE
4128	STAFF TOILET
4129	STAFF TOILET
4130	JUDICIAL CASE MANAGER
4131	FUTURE OFFICE
4132	COURT CONFERENCE ROOM
4133	JUDGES TOILET/ ROBING CLOSET
4134	JUDGES CHAMBERS
4135	STAIR C
4136	STORAGE
4137	COURTROOM
4138	STAIR B
4139	MEN'S TOILET
4140	WOMEN'S TOILET
4141	COURT ROOM SOUND VESTIBULE
4142	HOUSEKEEPING CLOSET
4143	ATTORNEY/ CLIENT CONFERENCE ROOM
4144	COURT ROOM SOUND VESTIBULE
4145	LOBBY
4146	SECURE SOUND VESTIBULE
4147	HOLDING CELL-SINGLE
4148	HOLDING CELL-SINGLE
4149	ATTORNEY/ CLIENT CONFERENCE ROOM
4150	CORRIDOR
4151	SECURE SOUND VESTIBULE
4152	HOLDING CELL-SINGLE
4153	HOLDING CELL-SINGLE

ROOM NUMBER	ROOM NAME
4154	ELEVATOR3
5101	STAIR A
5102	ELEVATOR 1
5103	PROBATION SUPERVISION SUPPORT
5103	FAMILY TOILET ROOM
5104	COURT ROOM SOUND VESTIBULE
5105	ELEVATOR EQUIPMENT
5106	ATTORNEY/ CLIENT CONFERENCE
5107	COURT ROOM SOUND VESTIBULE
5108	COURTROOM
5109	STORAGE
5110	STORAGE
5111	JUDGES TOILET/ ROBING CLOSET
5112	JUDGES CHAMBERS
5113	HOUSEKEEPING CLOSET
5114	STAIR D
5115	JUDICIAL CASE MANAGER
5116	CORRIDOR
5117	ELEVATOR2
5118	GENERAL STORAGE
5119	SMALL BREAKROOM
5120	ELECTRICAL
5121	COMMUNICATION CLOSET
5122	STAIR E
5123	CORRIDOR
5124	JUDICIAL ASSISTANTS/ JUDICIAL SERVICE
5125	FILE STORAGE/ WORKROOM
5126	VICTIM/ WITNESS SEQUESTERED ROOM
5127	ELEVATOR EQUIPMENT
5128	STAFF TOILET
5129	STAFF TOILET
5130	JUDICIAL CASE MANAGER
5131	FUTURE OFFICE
5132	COURT CONFERENCE ROOM
5133	JUDGES TOILET/ ROBING CLOSET
5134	JUDGES CHAMBERS
5135	STAIR C
5136	STORAGE
5137	COURTROOM
5138	STAIR B
5139	MEN'S TOILET
5140	WOMEN'S TOILET
5141	COURT ROOM SOUND VESTIBULE
5142	HOUSEKEEPING CLOSET
5143	ATTORNEY/ CLIENT CONFERENCE ROOM
5144	COURT ROOM SOUND VESTIBULE
5145	LOBBY
5146	SECURE SOUND VESTIBULE
5147	HOLDING CELL-SINGLE
5148	HOLDING CELL-SINGLE
5149	ATTORNEY/ CLIENT CONFERENCE
5150	CORRIDOR
5151	SECURE SOUND VESTIBULE
5152	HOLDING CELL-SINGLE
5153	HOLDING CELL-SINGLE
5154	ELEVATOR3
6114	STAIR D

PLAN NOTES

1. WHERE FLOOR DRAINS ARE INSTALLED, THE FLOOR IS **NOT** TO SLOPE TOWARD THE DRAIN (REMAINS FLAT) EXCEPT AT THE FOLLOWING LOCATIONS:
   A. THICK SET TILE LOCATED IN CONJUCTION WITH SHOWERS.
   B. FLOORS NOT TILED AT SLAB-ON-GRADE LOCATIONS (LEVEL 1 HOLDING AND MECHANICAL ROOMS).
   WHERE FLOORS SLOPE, THE MAXIMUM FLOOR SLOPE IS NOT TO EXCEED 2% WHILE THE MINIMUM SLOPE IS NOT TO BE LESS THAN 1%.
2. WHERE CONCRETE PADS ARE CALLED TO BE CONSTRUCTED UNDER EQUIPMENT THE SLAB IS TO BE 8" THICK, U.N.O., AND IS TO HAVE #4 BARS AT 18" O.C. EACH WAY. COORDINATE DIMENSIONS OF PAD WITH ACTUAL EQUIPMENT SPEC
3. THE CONTRACTOR IS TO ENSURE THAT BETWEEN ANY FINISH FLOOR ELEVATION TO 42" A.F.F. ALL GUARDRAILS ARE TO BE CONSTRUCTED AND INSTALLED SO THAT A 4" SPHERE WILL NOT PASS BETWEEN ANY TWO ADJACENT GUARDRAIL COMPONENTS OR BETWEEN THE EDGE OF A GUARDRAIL AND ALL ADJACENT BUILDING ELEMENT SUCH AS A WALL OR FLOOR.

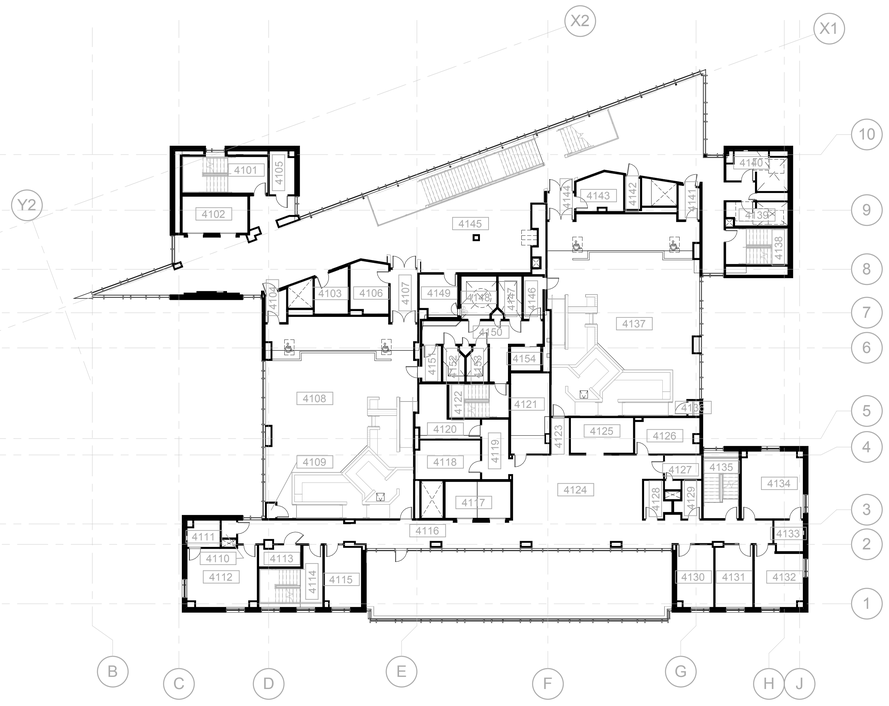

A1 LEVEL 4 OVERALL ALTERNATE

SCALE: 1/16" = 1'-0"

0' 8' 16' 32' 48'

PLAN NORTH

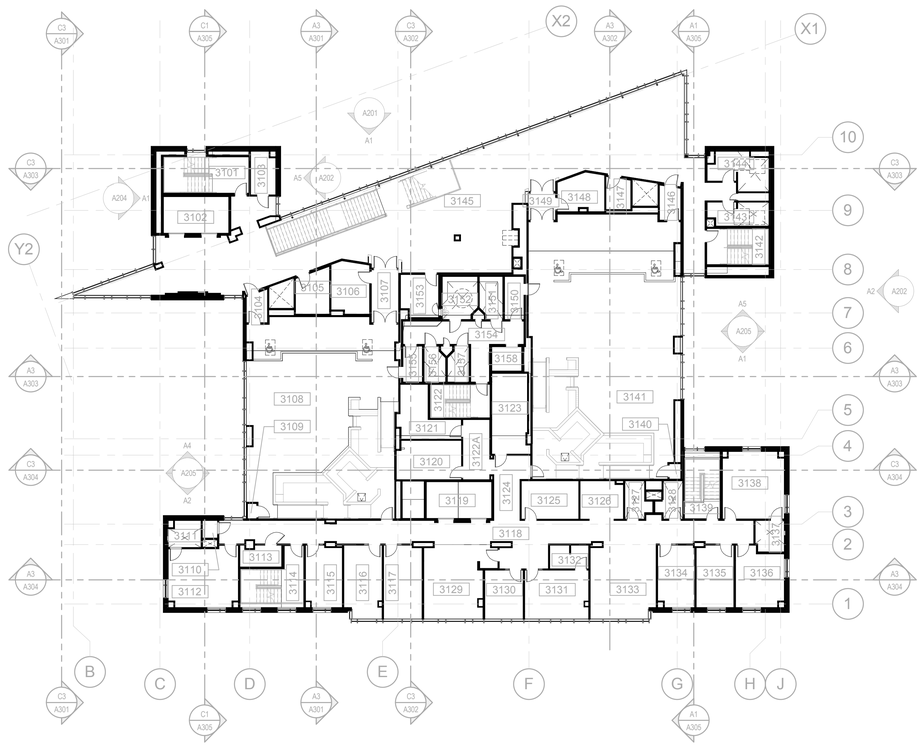

C1 LEVEL 3 OVERALL

SCALE: 1/16" = 1'-0"

0' 8' 16' 32' 48'

PLAN NORTH

VCBO ARCHITECTURE

VCBO ARCHITECTURE
524 SOUTH 600 EAST
SALT LAKE CITY, UT 84102
Phone: (801) 575-8800
Fax: (801) 531-9850
Web: vcbo.com

LICENSED ARCHITECT No. 153912 BRENT R. TIPPETS 8-15-13 STATE OF UTAH

2nd District Juvenile Courthouse

Utah State Courts
08284150
165 West 20th Street, Ogden, Utah
BID DOCUMENTS

Rev #	Date	Description

Job # 12500
Date August 15, 2013
Owner # 08284150
Ins. #

LEVEL 3, 4 AND FIVE OVERALL PLANS

A020

8/14/2013 2:23:23 PM

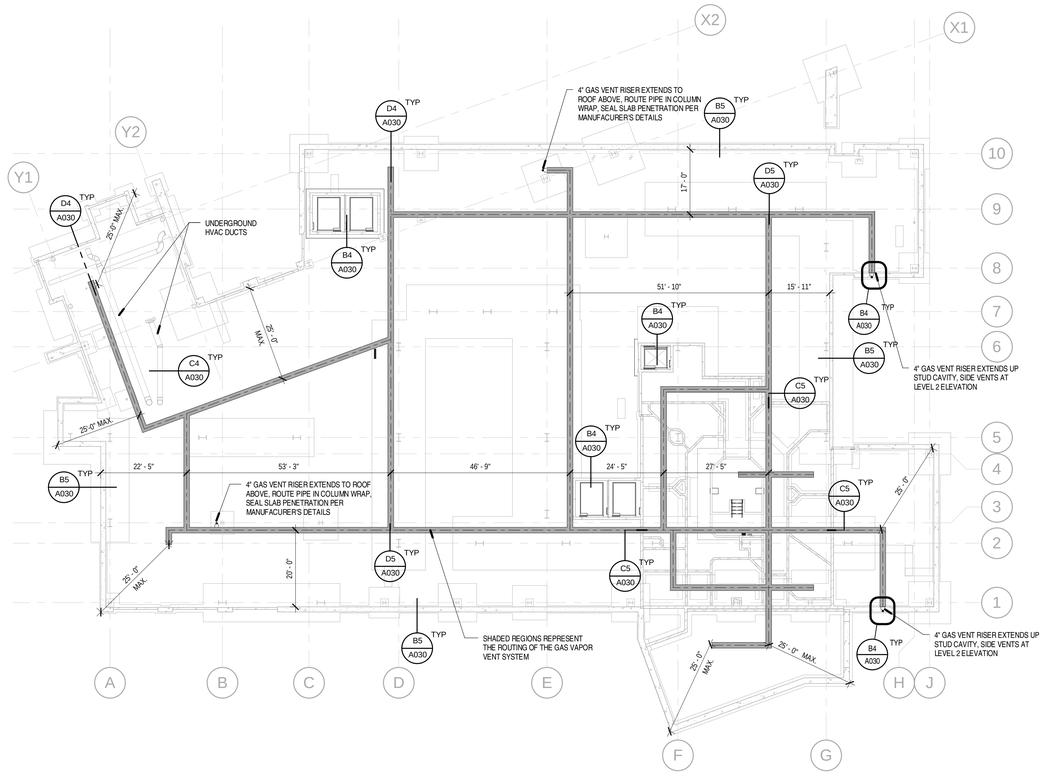

C1 GAS VAPOR VENT LAYOUT PLAN

SCALE: 1/16" = 1'-0"

0' 8' 16' 32' 48'

PLAN NORTH

GAS VAPOR BARRIER GENERAL NOTES

1. THE GAS VAPOR BARRIER IS TO BE INSTALLED UNDER ALL SLABS ON GRADE AND IS TO BE INSTALLED UNDER AND AROUND ALL ELEVATOR PITS.
2. GAS VAPOR VENTS ARE TO BE INSTALLED PER THE LAYOUT AND DETAILS REFERENCED ON DRAWING C1/A030 AND AS RECOMMENDED BY THE BARRIER MANUFACTURER.
3. THE TYPICAL THICKNESS OF THE GAS VAPOR BARRIER IS TO BE 60MILS WITH 100 MILS APPLIED UNDER AND AROUND ALL ELEVATOR PITS
4. ALL UNDERGROUND VENT PIPING TO BE ABS, PVC OR A PIPING COMPATIBLE WITH THE MANUFACTURE'S VENTING SYSTEM. ALL VENT RISER PIPES ABOVE GRADE, CONCEALED IN WALLS AND CEILING SPACES, ARE TO BE CAST IRON.
5. THE GAS VAPOR BARRIER IS TO WRAP UP ONTO AND SEAL AGAINST ALL FOUNDATION WALLS.
6. WHERE THE GAS VAPOR VENT RISER PENETRATES THE SLAB OR FOUNDATION WALL, THE PENETRATION IS TO BE TREATED AND SEALED PER THE MANUFACTURER'S DETAILS
7. AT ALL OBJECTS PENETRATING THE BARRIER, SUCH AS UNDERGROUND PLUMBING, UNDERGROUND DUCTS, ETC., THE GAS VAPOR BARRIER IS TO BE FULLY SEALED TO THAT OBJECT PER THE BARRIER MANUFACTURER'S DETAILS

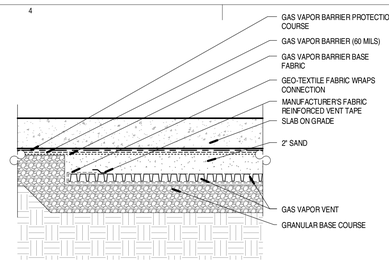

D4 TYP. GAS VAPOR BARRIER TERMINATION

SCALE: 1 1/2" = 1'-0"

0' 1/2" 1" 1 1/2"

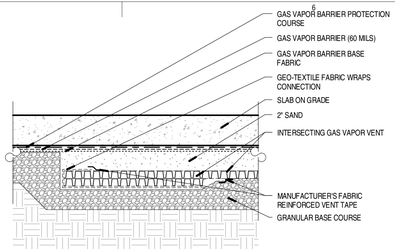

D5 TYP. GAS VAPOR BARRIER INTERSECTION

SCALE: 1 1/2" = 1'-0"

0' 1/2" 1" 1 1/2"

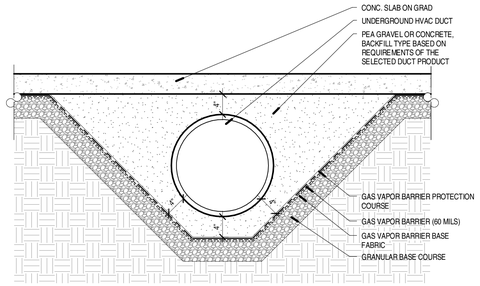

C4 TYP. GAS VAPOR BARRIER AT UNDERGROUND DUCT

SCALE: 1" = 1'-0"

0' 6" 1' 2'

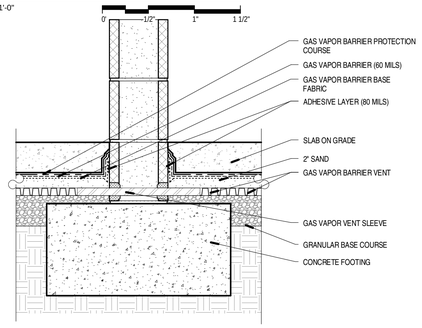

C5 TYP. GAS VAPOR BARRIER VENT AT CMU WALL

SCALE: 1 1/2" = 1'-0"

0' 1/2" 1" 1 1/2"

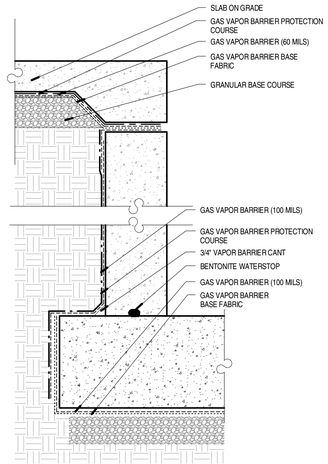

B4 TYP. DETAIL AT ELEVATOR PIT

SCALE: 1 1/2" = 1'-0"

0' 1/2" 1" 1 1/2"

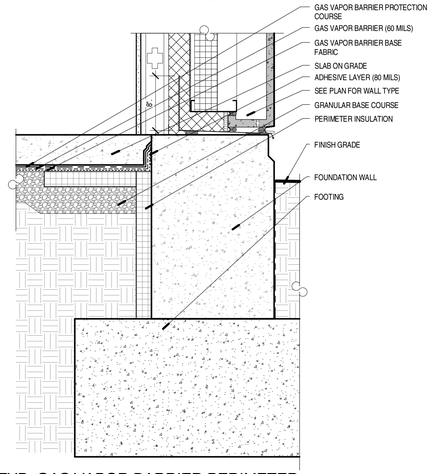

B5 TYP. GAS VAPOR BARRIER PERIMETER

SCALE: 1 1/2" = 1'-0"

0' 1/2" 1" 1 1/2"

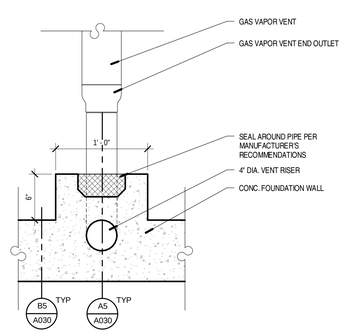

A4 TYP. GAS VAPOR VENT PLAN AT FOUNDATION WALL

SCALE: 1 1/2" = 1'-0"

0' 1/2" 1" 1 1/2"

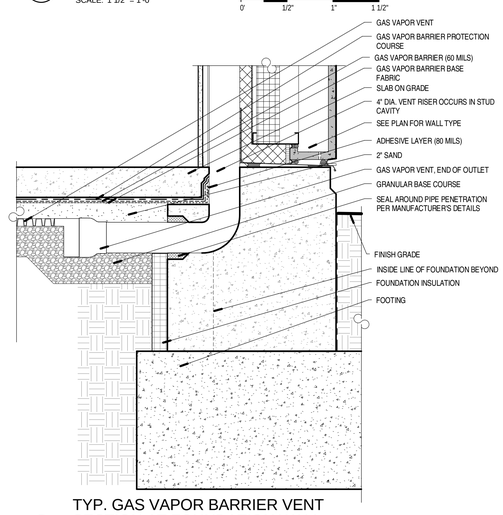

A5 TYP. GAS VAPOR BARRIER VENT SECTION AT FOUNDATION WALL

SCALE: 1 1/2" = 1'-0"

0' 1/2" 1" 1 1/2"

VCBO ARCHITECTURE
524 SOUTH 600 EAST
SALT LAKE CITY, UT 84102
Phone: (801) 575-8800
Fax: (801) 531-9850
Web: vcbo.com

LICENSED ARCHITECT No. 133012 BRENT R. TIPPETS 8-15-13 STATE OF UTAH

2nd District Juvenile Courthouse

Utah State Courts
08284150
165 West 20th Street, Ogden, Utah
BID DOCUMENTS

Rev #	Date	Description

Job # 12500
Date August 15, 2013
Owner # 08284150
Ins. #

GAS VAPOR BARRIER PLAN AND DETAILS

A030

8/15/2013 9:09:52 AM

SLAB TYPE LEGEND

HATCH	DESCRIPTION
	TYPE A - CONCRETE SLAB OVER METAL DECK, 6 1/2" TOTAL THICKNESS. TOP OF SLAB IS AT THE NOTED BUILDING ELEVATION
	TYPE B - CONCRETE SLAB OVER METAL DECK, 6 1/2" TOTAL THICKNESS. TOP OF SLAB IS 18" ABOVE IS THE NOTED BUILDING ELEVATION
	TYPE C - CONCRETE SLAB OVER METAL DECK, 6 1/2" TOTAL THICKNESS. TOP OF SLAB IS 8" BELOW THE NOTED BUILDING ELEVATION TO RECEIVE OVERBUILT FLOORING. SEE THE ACCESS FLOORING PLANS
	TYPE D - 4" CONCRETE SLAB, OVER 4" OF STRUCTURAL FOAM FILL BEARING ON THE TYPE C FLOOR BELOW. TOP OF SLAB IS THE NOTED BUILDING ELEVATION
	TYPE E - 4" CONCRETE SLAB OVER VAPOR BARRIER OVER FREE DRAINING GRAVEL COURSE. TOP OF SLAB IS AT THE NOTED BUILDING ELEVATION
	TYPE F- CONCRETE SLAB OVER METAL DECK WITH 1" RECESS FOR THICK-SET TILE AT SHOWER FLOOR, 5 1/2" TOTAL THICKNESS
	TYPE G - 4" CONCRETE SLAB OVER 20" OF STRUCTURAL FOAM FILL BEARING ON THE TYPE E SLAB BELOW. TOP OF SLAB ELEVATION IS 24" ABOVE THE NOTED BUILDING ELEVATION

(BUILDING ELEVATION IS THE ELEVATION NOTED FOR EACH OF THE FIVE LEVELS, SEE THE ELEVATION AND SECTION DRAWINGS FOR THESE ELEVATION NUMBERS.)

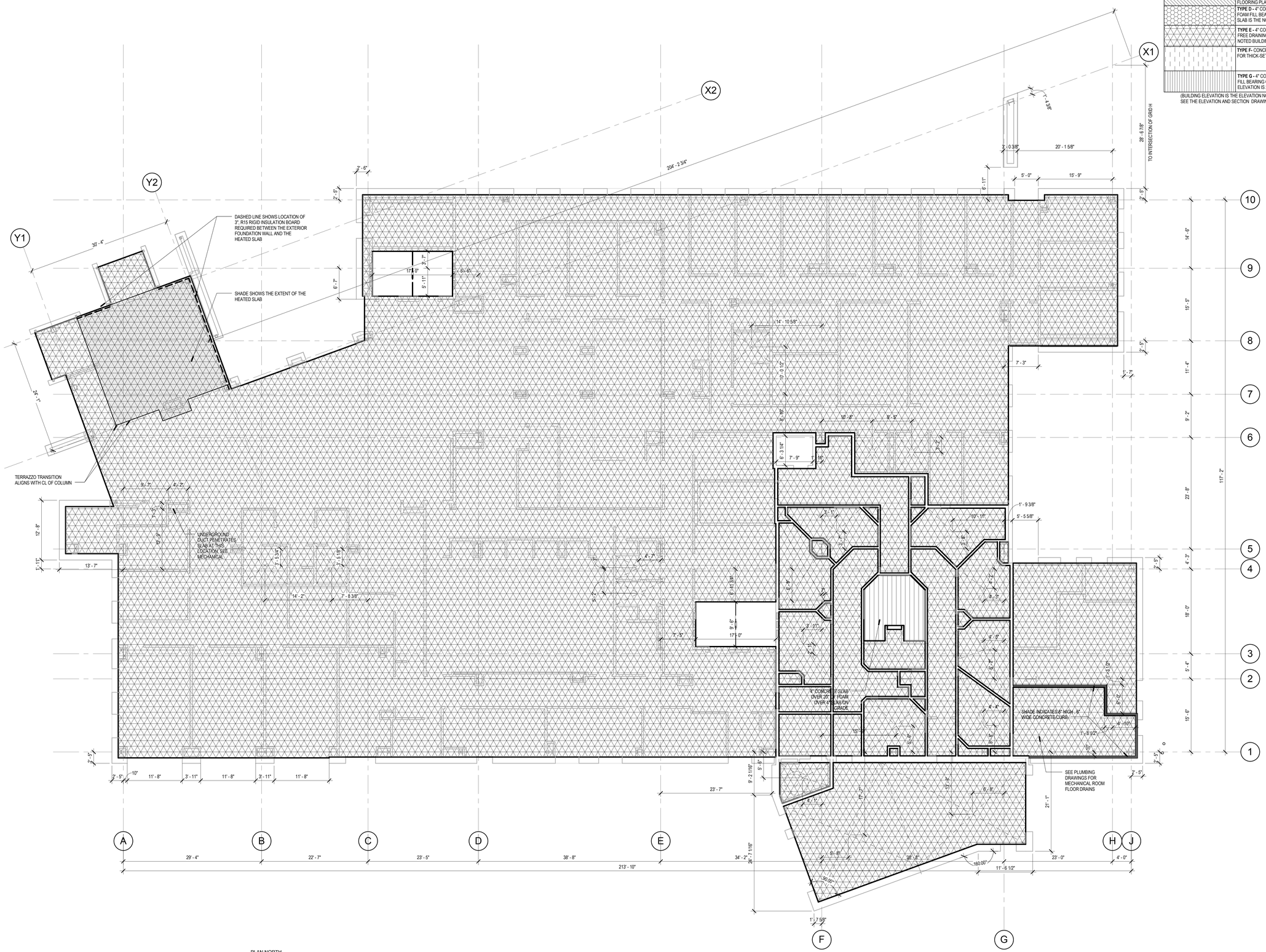

A1 LEVEL 1 AREA B SLAB PLAN

SCALE: 1/8" = 1'-0"

PLAN NORTH

8/14/2013 2:23:35 PM

VCBO ARCHITECTURE

VCBO ARCHITECTURE
524 SOUTH 600 EAST
SALT LAKE CITY, UT 84102
Phone: (801) 575-8800
Fax: (801) 531-9850
Web: vcbo.com

LICENSED ARCHITECT No. 153912 BRENT R. TIPPETS 8-15-13 STATE OF UTAH

2nd District Juvenile Courthouse

Utah State Courts
08284150
165 West 20th Street, Ogden, Utah
BID DOCUMENTS

Rev #	Date	Description

Job # 12500
Date August 15, 2013
Owner # 08284150
Ins. #

LEVEL 1 SLAB EDGE PLAN

A031

SLAB TYPE LEGEND

HATCH	DESCRIPTION
	TYPE A - CONCRETE SLAB OVER METAL DECK, 6 1/2" TOTAL THICKNESS. TOP OF SLAB IS AT THE NOTED BUILDING ELEVATION
	TYPE B - CONCRETE SLAB OVER METAL DECK, 6 1/2" TOTAL THICKNESS. TOP OF SLAB IS 18" ABOVE IS THE NOTED BUILDING ELEVATION
	TYPE C - CONCRETE SLAB OVER METAL DECK, 6 1/2" TOTAL THICKNESS. TOP OF SLAB IS 8" BELOW THE NOTED BUILDING ELEVATION TO RECEIVE OVERBUILT FLOORING. SEE THE ACCESS FLOORING PLANS
	TYPE D - 4" CONCRETE SLAB, OVER 4" OF STRUCTURAL FOAM FILL BEARING ON THE TYPE C FLOOR BELOW. TOP OF SLAB IS THE NOTED BUILDING ELEVATION
	TYPE E - 4" CONCRETE SLAB OVER VAPOR BARRIER OVER FREE DRAINING GRAVEL COURSE. TOP OF SLAB IS AT THE NOTED BUILDING ELEVATION
	TYPE F- CONCRETE SLAB OVER METAL DECK WITH 1" RECESS FOR THICK-SET TILE AT SHOWER FLOOR, 5 1/2" TOTAL THICKNESS
	TYPE G - 4" CONCRETE SLAB OVER 20" OF STRUCTURAL FOAM FILL BEARING ON THE TYPE E SLAB BELOW. TOP OF SLAB ELEVATION IS 24" ABOVE THE NOTED BUILDING ELEVATION

(BUILDING ELEVATION IS THE ELEVATION NOTED FOR EACH OF THE FIVE LEVELS, SEE THE ELEVATION AND SECTION DRAWINGS FOR THESE ELEVATION NUMBERS.)

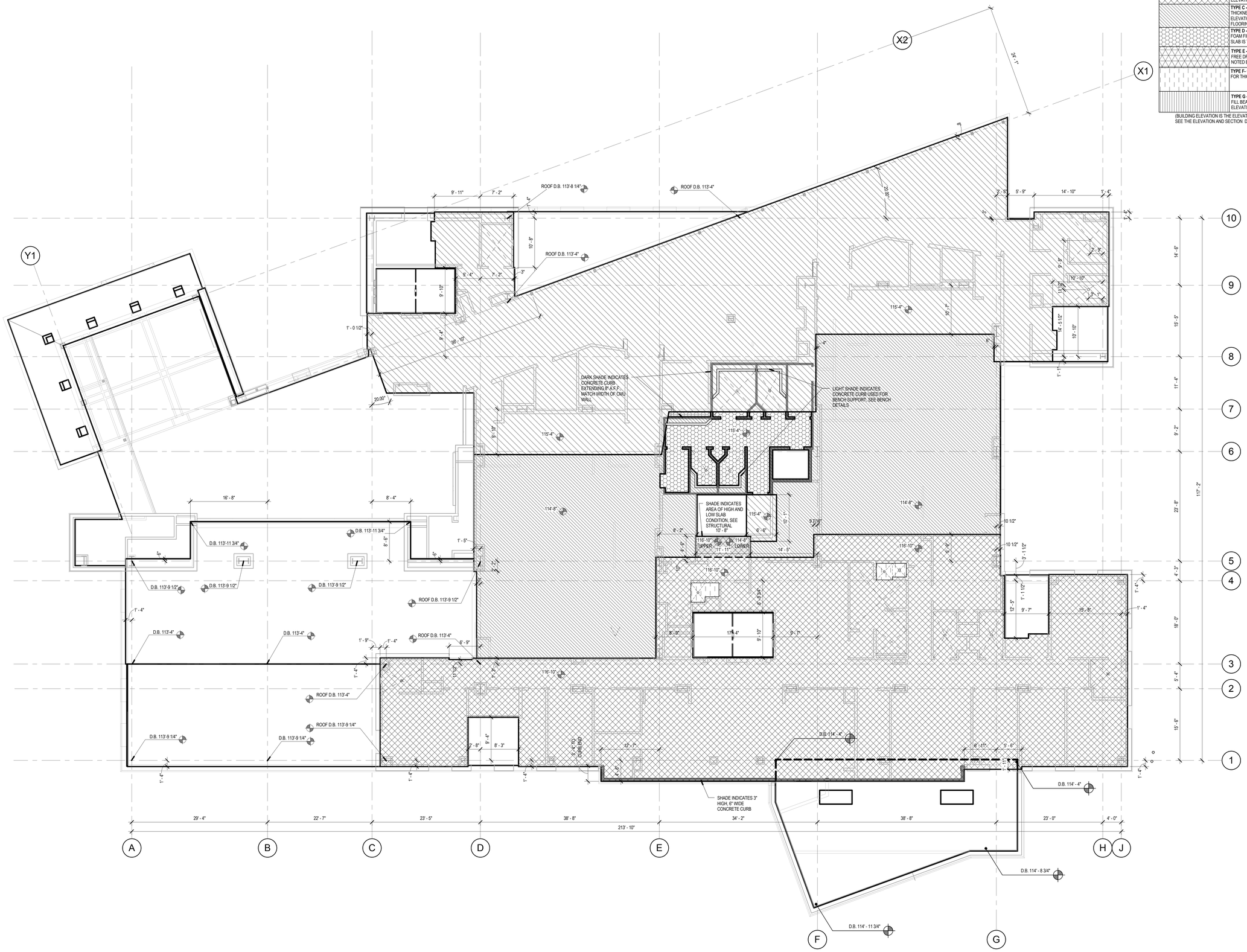

A1 LEVEL 2 SLAB PLAN

SCALE: 1/8" = 1'-0"

PLAN NORTH

8/14/2013 2:23:48 PM

VCBO ARCHITECTURE
524 SOUTH 600 EAST
SALT LAKE CITY, UT 84102
Phone: (801) 575-8800
Fax: (801) 531-9850
Web: vcbo.com

LICENSED ARCHITECT No. 153912 BRENT R. TIPPETS 8-15-13 STATE OF UTAH

2nd District Juvenile Courthouse

Utah State Courts
08284150
165 West 20th Street, Ogden, Utah
BID DOCUMENTS

Rev #	Date	Description

Job # 12500
Date August 15, 2013
Owner # 08284150
Ins. #

LEVEL 2 SLAB EDGE PLAN

A032

SLAB TYPE LEGEND

HATCH	DESCRIPTION
	TYPE A - CONCRETE SLAB OVER METAL DECK, 6 1/2" TOTAL THICKNESS. TOP OF SLAB IS AT THE NOTED BUILDING ELEVATION
	TYPE B - CONCRETE SLAB OVER METAL DECK, 6 1/2" TOTAL THICKNESS. TOP OF SLAB IS 18" ABOVE IS THE NOTED BUILDING ELEVATION
	TYPE C - CONCRETE SLAB OVER METAL DECK, 6 1/2" TOTAL THICKNESS. TOP OF SLAB IS 8" BELOW THE NOTED BUILDING ELEVATION TO RECEIVE OVERBUILT FLOORING. SEE THE ACCESS FLOORING PLANS
	TYPE D - 4" CONCRETE SLAB, OVER 4" OF STRUCTURAL FOAM FILL BEARING ON THE TYPE C FLOOR BELOW. TOP OF SLAB IS THE NOTED BUILDING ELEVATION
	TYPE E - 4" CONCRETE SLAB OVER VAPOR BARRIER OVER FREE DRAINING GRAVEL COURSE. TOP OF SLAB IS AT THE NOTED BUILDING ELEVATION
	TYPE F- CONCRETE SLAB OVER METAL DECK WITH 1" RECESS FOR THICK-SET TILE AT SHOWER FLOOR, 5 1/2" TOTAL THICKNESS
	TYPE G - 4" CONCRETE SLAB OVER 20" OF STRUCTURAL FOAM FILL BEARING ON THE TYPE E SLAB BELOW. TOP OF SLAB ELEVATION IS 24" ABOVE THE NOTED BUILDING ELEVATION

(BUILDING ELEVATION IS THE ELEVATION NOTED FOR EACH OF THE FIVE LEVELS. SEE THE ELEVATION AND SECTION DRAWINGS FOR THESE ELEVATION NUMBERS.)

A1 LEVEL 3 SLAB PLAN

SCALE: 1/8" = 1'-0"

PLAN NORTH

8/14/2013 2:24:00 PM

VCBO ARCHITECTURE

VCBO ARCHITECTURE
524 SOUTH 600 EAST
SALT LAKE CITY, UT 84102
Phone: (801) 575-8800
Fax: (801) 531-9850
Web: vcbo.com

LICENSED ARCHITECT No. 153912 BRENT R. TIPPETS 8-15-13 STATE OF UTAH

2nd District Juvenile Courthouse

Utah State Courts
08284150
165 West 20th Street, Ogden, Utah
BID DOCUMENTS

Rev #	Date	Description

Job # 12500
Date August 15, 2013
Owner # 08284150
Ins. #

LEVEL 3 SLAB EDGE PLAN

A033

SLAB TYPE LEGEND

HATCH	DESCRIPTION
	TYPE A - CONCRETE SLAB OVER METAL DECK, 6 1/2" TOTAL THICKNESS. TOP OF SLAB IS AT THE NOTED BUILDING ELEVATION
	TYPE B - CONCRETE SLAB OVER METAL DECK, 6 1/2" TOTAL THICKNESS. TOP OF SLAB IS 18" ABOVE IS THE NOTED BUILDING ELEVATION
	TYPE C - CONCRETE SLAB OVER METAL DECK, 6 1/2" TOTAL THICKNESS. TOP OF SLAB IS 8" BELOW THE NOTED BUILDING ELEVATION TO RECEIVE OVERBUILT FLOORING. SEE THE ACCESS FLOORING PLANS
	TYPE D - 4" CONCRETE SLAB, OVER 4" OF STRUCTURAL FOAM FILL BEARING ON THE TYPE C FLOOR BELOW. TOP OF SLAB IS THE NOTED BUILDING ELEVATION
	TYPE E - 4" CONCRETE SLAB OVER VAPOR BARRIER OVER FREE DRAINING GRAVEL COURSE. TOP OF SLAB IS AT THE NOTED BUILDING ELEVATION
	TYPE F- CONCRETE SLAB OVER METAL DECK WITH 1" RECESS FOR THICK-SET TILE AT SHOWER FLOOR, 5 1/2" TOTAL THICKNESS
	TYPE G - 4" CONCRETE SLAB OVER 20" OF STRUCTURAL FOAM FILL BEARING ON THE TYPE E SLAB BELOW. TOP OF SLAB ELEVATION IS 24" ABOVE THE NOTED BUILDING ELEVATION

(BUILDING ELEVATION IS THE ELEVATION NOTED FOR EACH OF THE FIVE LEVELS, SEE THE ELEVATION AND SECTION DRAWINGS FOR THESE ELEVATION NUMBERS.)

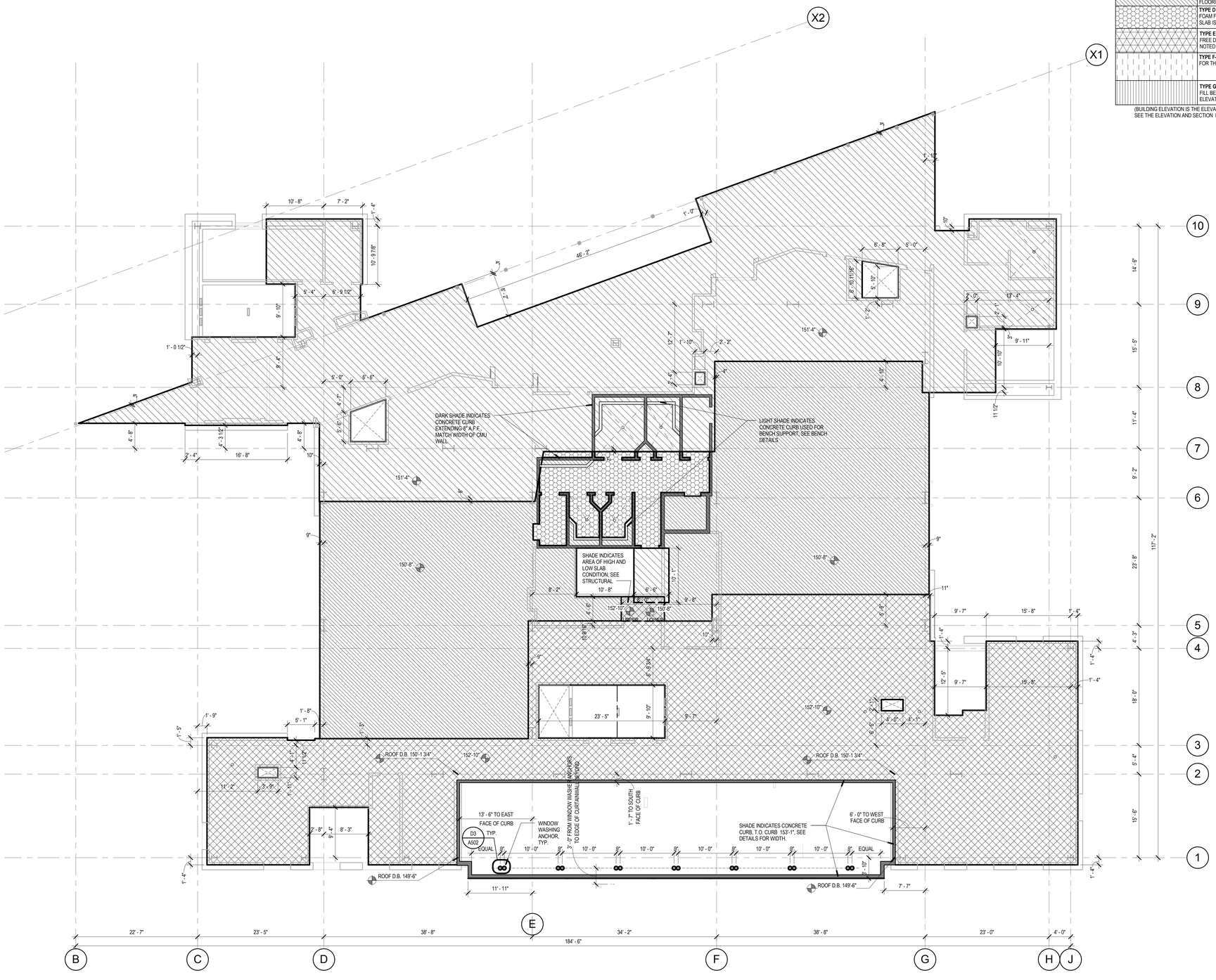

A1 LEVEL 4 SLAB PLAN

SCALE: 1/8" = 1'-0"

PLAN NORTH

8/14/2013 2:24:09 PM

VCBO ARCHITECTURE

VCBO ARCHITECTURE
524 SOUTH 600 EAST
SALT LAKE CITY, UT 84102
Phone: (801) 575-8800
Fax: (801) 531-9850
Web: vcbo.com

LICENSED ARCHITECT No. 153912 BRENT R. TIPPETS 8-15-13 STATE OF UTAH

2nd District Juvenile Courthouse

Utah State Courts
08284150
165 West 20th Street, Ogden, Utah
BID DOCUMENTS

Rev #	Date	Description

Job # 12500
Date August 15, 2013
Owner # 08284150
Ins. #

LEVEL 4 SLAB EDGE PLAN

A034

SLAB TYPE LEGEND

HATCH	DESCRIPTION
	TYPE A - CONCRETE SLAB OVER METAL DECK, 6 1/2" TOTAL THICKNESS. TOP OF SLAB IS AT THE NOTED BUILDING ELEVATION
	TYPE B - CONCRETE SLAB OVER METAL DECK, 6 1/2" TOTAL THICKNESS. TOP OF SLAB IS 18" ABOVE IS THE NOTED BUILDING ELEVATION
	TYPE C - CONCRETE SLAB OVER METAL DECK, 6 1/2" TOTAL THICKNESS. TOP OF SLAB IS 8" BELOW THE NOTED BUILDING ELEVATION TO RECEIVE OVERBUILT FLOORING. SEE THE ACCESS FLOORING PLANS
	TYPE D - 4" CONCRETE SLAB, OVER 4" OF STRUCTURAL FOAM FILL BEARING ON THE TYPE C FLOOR BELOW. TOP OF SLAB IS THE NOTED BUILDING ELEVATION
	TYPE E - 4" CONCRETE SLAB OVER VAPOR BARRIER OVER FREE DRAINING GRAVEL COURSE. TOP OF SLAB IS AT THE NOTED BUILDING ELEVATION
	TYPE F - CONCRETE SLAB OVER METAL DECK WITH 1" RECESS FOR THICK-SET TILE AT SHOWER FLOOR, 5 1/2" TOTAL THICKNESS
	TYPE G - 4" CONCRETE SLAB OVER 20" OF STRUCTURAL FOAM FILL BEARING ON THE TYPE E SLAB BELOW. TOP OF SLAB ELEVATION IS 24" ABOVE THE NOTED BUILDING ELEVATION

(BUILDING ELEVATION IS THE ELEVATION NOTED FOR EACH OF THE FIVE LEVELS, SEE THE ELEVATION AND SECTION DRAWINGS FOR THESE ELEVATION NUMBERS.)

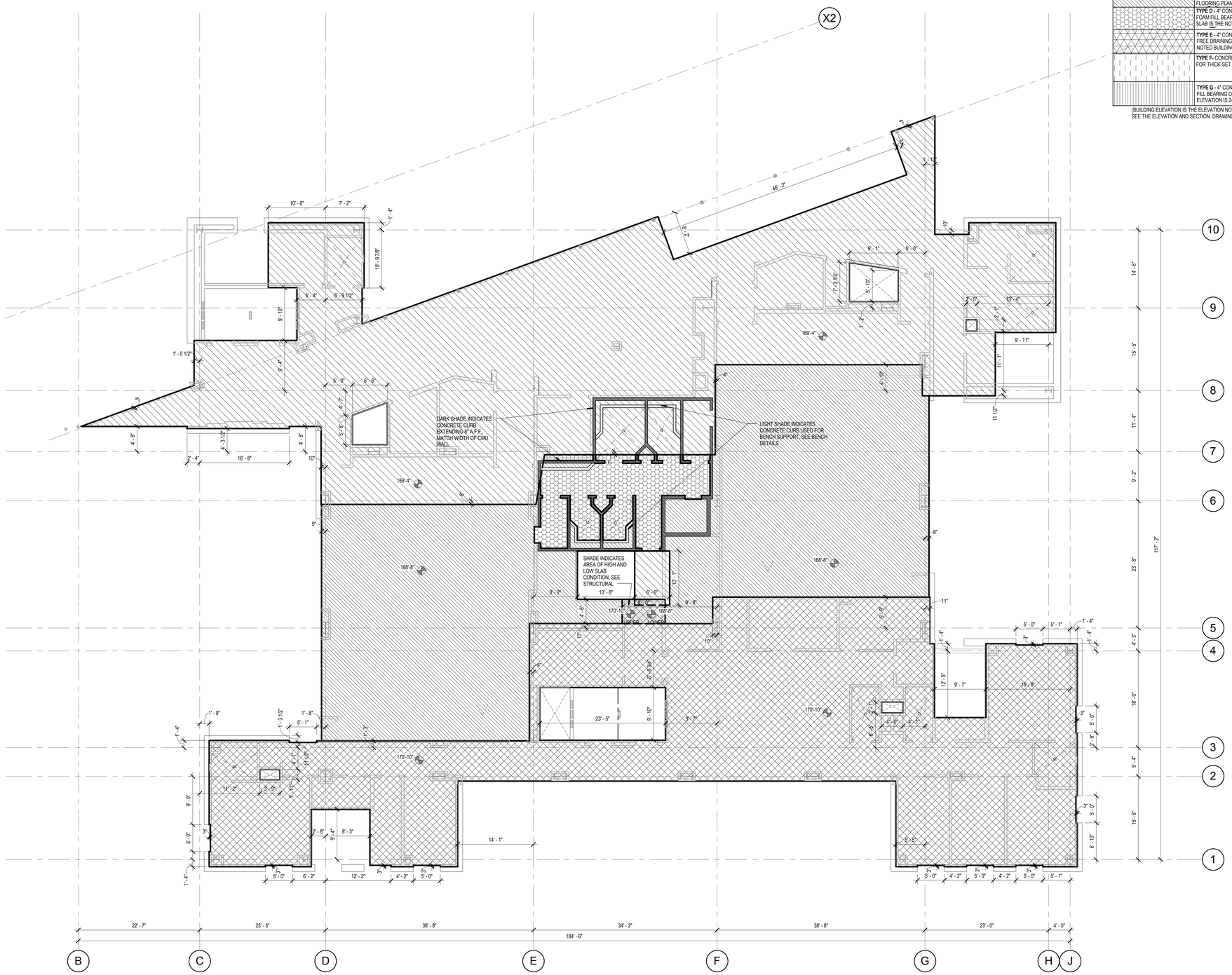

A1 LEVEL 5 SLAB PLAN

SCALE: 1/8" = 1'-0"

PLAN NORTH

8/14/2013 2:24:18 PM

VCBO ARCHITECTURE

VCBO ARCHITECTURE
524 SOUTH 600 EAST
SALT LAKE CITY, UT 84102
Phone: (801) 575-8800
Fax: (801) 531-9850
Web: vcbo.com

LICENSED ARCHITECT No. 153912 BRENT R. TIPPETS 8-15-13 STATE OF UTAH

2nd District Juvenile Courthouse

Utah State Courts
08284150
165 West 20th Street, Ogden, Utah
BID DOCUMENTS

Rev #	Date	Description

Job # 12500
Date August 15, 2013
Owner # 08284150
Ins. #

LEVEL 5 SLAB EDGE PLAN

A035

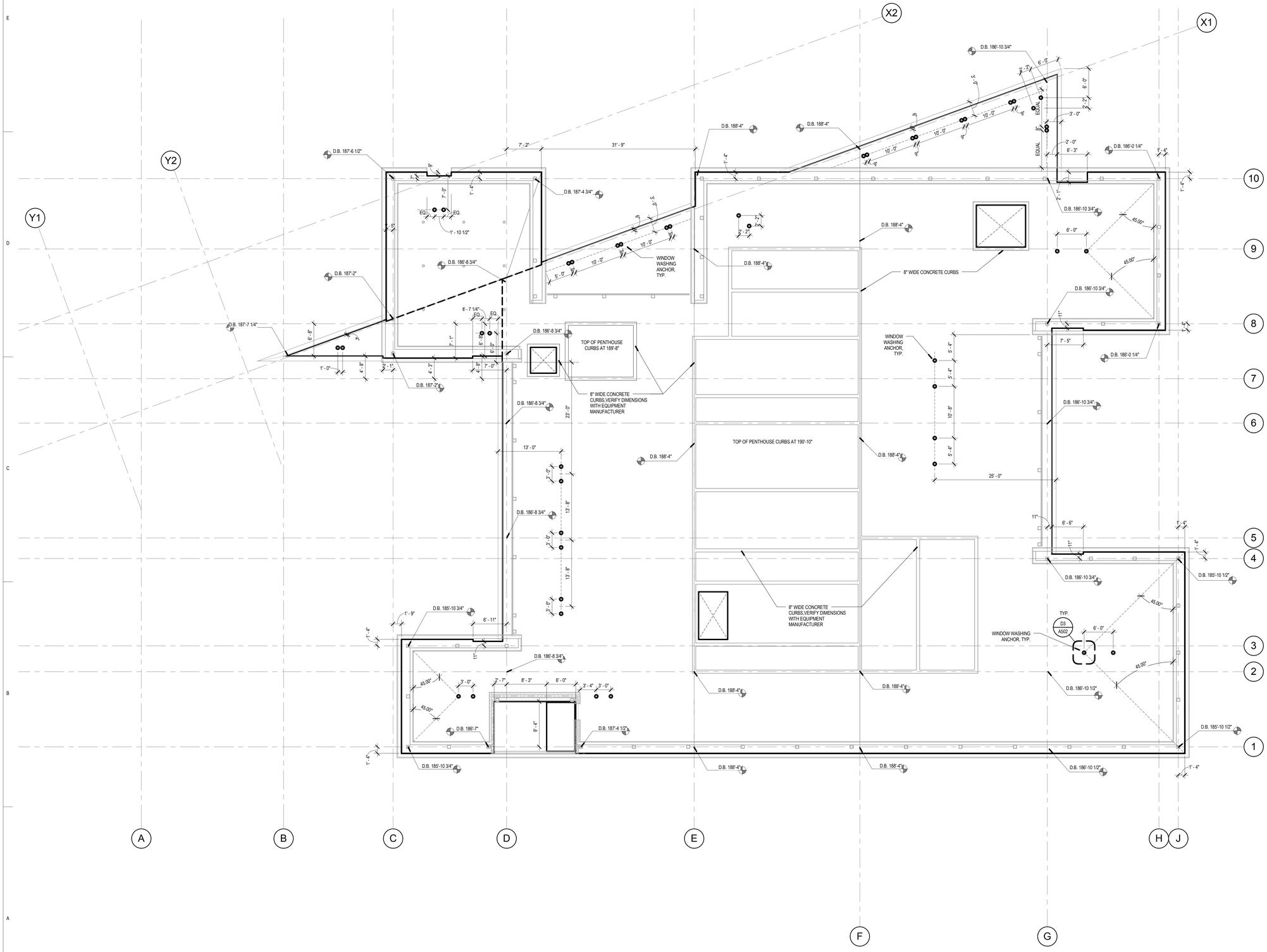

A1 ROOF DECK PLAN

SCALE: 1/8" = 1'-0"

PLAN NORTH

8/14/2013 2:24:29 PM

VCBO ARCHITECTURE

VCBO ARCHITECTURE
524 SOUTH 600 EAST
SALT LAKE CITY, UT 84102
Phone: (801) 575-8800
Fax: (801) 531-9850
Web: vcbo.com

LICENSED ARCHITECT
No. 153912
BRENT R. TIPPETS
8-15-13
STATE OF UTAH

2nd District Juvenile Courthouse

Utah State Courts
08284150
165 West 20th Street, Ogden, Utah
BID DOCUMENTS

Rev #	Date	Description

Job # 12500
Date August 15, 2013
Owner # 08284150
Ins. #

ROOF DECK EDGE PLAN

A036

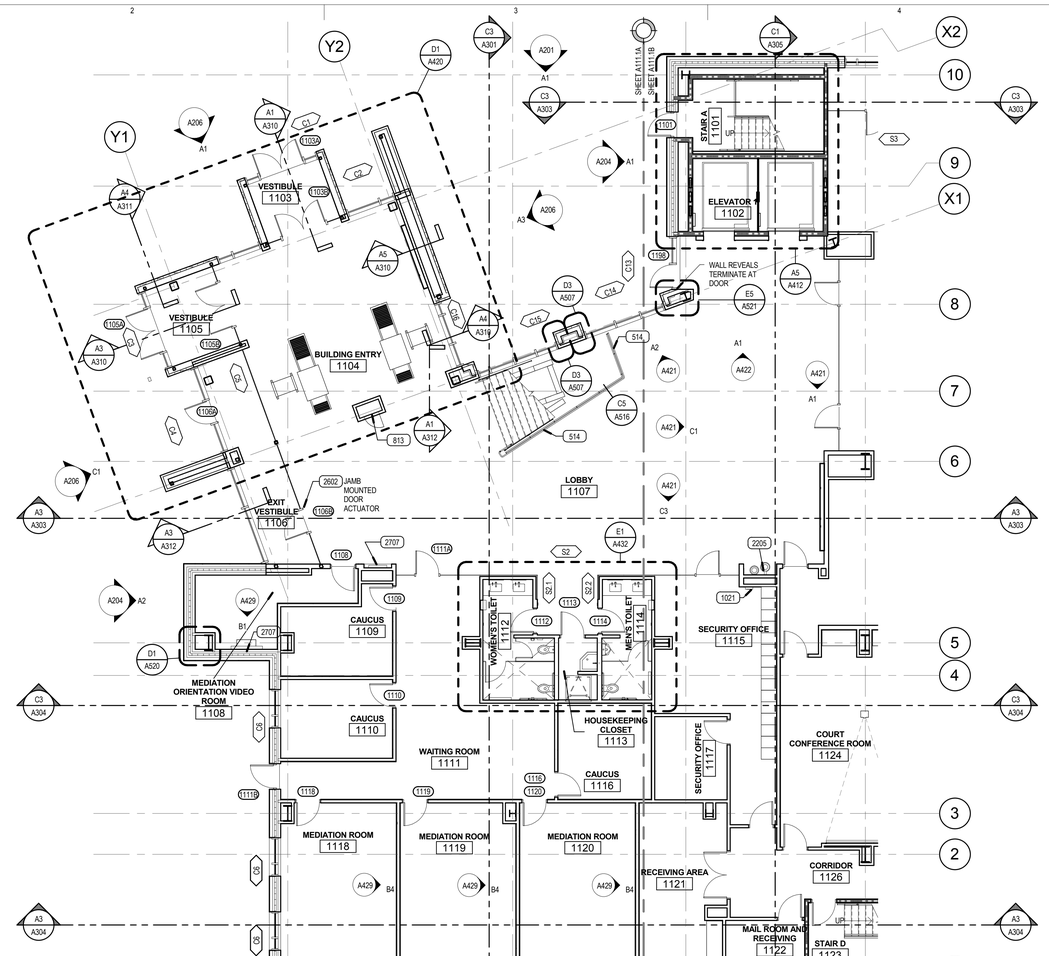

C1 LEVEL 1 AREA A ANNOTATED PLAN

SCALE: 1/8" = 1'-0"

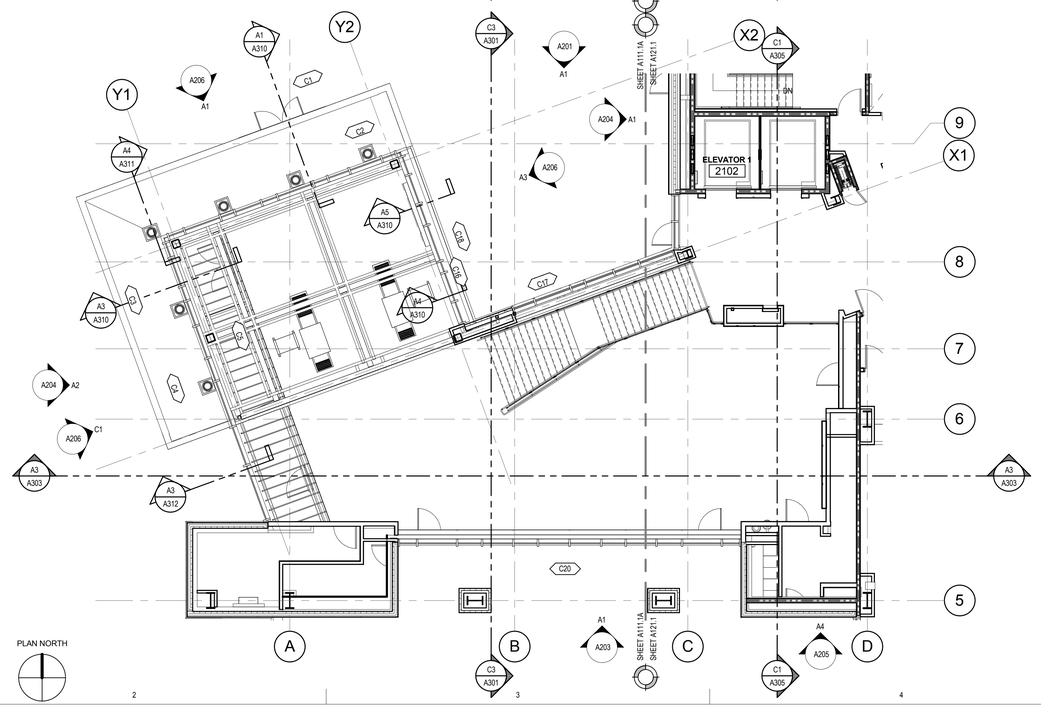

A1 LEVEL 1 AREA A UPPER LOBBY ANNOTATED

SCALE: 1/8" = 1'-0"

KEYED NOTES

514	1 1/2" DIA. STAINLESS STEEL HANDRAIL
813	24"x 24" FIRE RATED ACCESS DOOR WITH WALL BOARD BEAD
1021	SEMI-RECESSED FIRE EXTINGUISHER CABINET W/ EXTINGUISHER
2205	ELECTRIC WATER COOLER
2602	ADA DOOR ACUATOR
2707	WALL MOUNTED VIDEO MONITOR

PLAN NOTES

1. WHERE FLOOR DRAINS ARE INSTALLED, THE FLOOR IS **NOT** TO SLOPE TOWARD THE DRAIN (REMAINS FLAT) EXCEPT AT THE FOLLOWING LOCATIONS:
   A. THICK SET TILE LOCATED IN CONJUCTION WITH SHOWERS.
   B. FLOORS NOT TILED AT SLAB-ON-GRADE LOCATIONS (LEVEL 1 HOLDING AND MECHANICAL ROOMS)

   WHERE FLOORS SLOPE, THE MAXIMUM FLOOR SLOPE IS NOT TO EXCEED 2% WHILE THE MINIMUM SLOPE IS NOT TO BE LESS THAN 1%.

2. WHERE CONCRETE PADS ARE CALLED TO BE CONSTRUCTED UNDER EQUIPMENT THE SLAB IS TO BE 6" THICK, U.N.O., AND IS TO HAVE #4 BARS AT 18" O.C. EACH WAY. COORDINATE DIMENSIONS OF PAD WITH ACTUAL EQUIPMENT SPEC

3. THE CONTRACTOR IS TO ENSURE THAT BETWEEN ANY FINISH FLOOR ELEVATION TO 42" A.F.F. ALL GUARDRAILS ARE TO BE CONSTRUCTED AND INSTALLED SO THAT A 4" SPHERE WILL NOT PASS BETWEEN ANY TWO ADJACENT GUARDRAIL COMPONENTS OR BETWEEN THE EDGE OF A GUARDRAIL AND ALL ADJACENT BUILDING ELEMENT SUCH AS A WALL OR FLOOR.

WALL NOTES

1. SEE SHEETS A500 AND A501 FOR ALL WALL TYPE DEFINITIONS

2. PARTITION TYPE INDICATIONS ARE INDEPENDENT OF APPLIED FINISHES, SUCH AS TILE OR WOOD PANELING. SEE THE FINISH SHEETS AND INTERIOR ELEVATIONS FOR WALL FINISHES INCLUDING COURSING AND PANEL LAYOUT AND/OR THE DESIGNATIONS ON THE PLANS FOR ADDITIONAL INFORMATION REGARDING APPLIED FINISHES.

3. WHERE PARTITION TYPE DESIGNATION ON FLOOR PLANS IS INTERRUPTED BY DOOR OPENING, GLAZED PARTITION, ETC., CONSTRUCTION ABOVE INTERRUPTION (AND WHERE APPLICABLE BELOW) IS TO BE THE SAME AS THAT DESIGNATED FOR THE PARTITION IN WHICH THE INTERRUPTION OCCURRED.

4. THE MINIMUM REQUIREMENTS FOR CONSTRUCTION OF EACH PARTITION TYPE AS EXPRESSED BY THE INDICATED REFERENCE ARE INCORPORATED BY REFERENCE AND ARE APPLICABLE TO THE WORK OF THIS PROJECT. HOWEVER, ADDITIONAL AND/OR MORE RESTRICTIVE REQUIREMENTS MAY BE INDICATED BY THE SPECIFICATIONS AND DRAWINGS. SUCH REQUIREMENTS ALSO APPLY AND SHALL GOVERN. SUCH REQUIREMENTS INCLUDE BUT ARE NOT LIMITED TO:

   A. USE 5/8" THICK GYPSUM BOARD THROUGHOUT UNLESS NOTED OTHERWISE.

   B. USE 16" OC MAX STUD SPACING UNLESS NOTED OTHERWISE IN THESE DOCUMENTS. THE SPACING STATED BY THE REFERENCED APPROVAL OR TEST REPORT IS THE MAX SPACING IF ALLOWED IN THESEDOCUMENTS.

   C. USE STUDS OF GAGE INDICATED ON THE DRAWINGS OR IN THE SPECIFICATIONS. THE GAGE STATED BY THE REFERENCED APPROVAL OR TEST REPORT IS THE MINIMUM GAGE TESTED, 20 GA (30 MILS) IS THE MINIMUM ALLOWED IN THESE DOCUMENTS.

5. USE STUDS OF DEPTH INDICATED BY THIS SET OF DOCUMENTS. THE DEPTH STATED BY THE REFERENCED APPROVAL OR TEST REPORT IS THE MINIMUM DEPTH ALLOWED IN THESE DOCUMENTS.

6. AT INTERIOR STUD WALLS, THE CONTRACTOR IS RESPONSIBLE FOR SELECTING THE STUD GAUGE BASED ON THE HEIGHT OF WALL BEING CONSTRUCTED USING THE REQUIRMENTS FOUND IN THE "NON-BEARING METAL STUD GAUGE SIZING" CHART LOCATED ON SHEET A501.

7. PROVIDE FIRE RATED CONSTRUCTION ASSEMBLIES WHERE INDICATED ON SHEET G200 AND FLOOR PLAN DRAWINGS.

8. ALL DIMENSIONS ARE CENTER OF STUD OR FACE OF CONCRETE, MASONRY OR ROUGH OPENING UNLESS NOTED OTHERWISE.

9. AT ALL WALLS, STUDS, INSULATION AND GYPSUM BOARD ARE TO EXTEND TO THE DECK ABOVE. UNLESS NOTED OTHERWISE.

10. WALL TYPES NOT NOTED ARE ASSUMED TO MATCH ADJACENT ROOMS. NOTIFY ARCHITECT OF ANY DISCREPANCIES.

11. ALL METAL STUD PARTITIONS ARE CONSIDERED ACOUSTIC PARTITIONS AND ARE TO RECEIVE A TYPE 1 SOUND ATTENUATION BLANKET. THICKNESS TO MATCH STUD DEPTH, UNLESS NOTED OTHERWISE.

12. REFER TO SHEET A511 FOR TYPICAL INTERIOR WALL CONDITIONS ASSOCIATED WITH ALL METAL STUD AND CMU PARTITIONS.

13. SEE DETAIL B4/A511 FOR THE TYPICAL TOP OF WALL CONDITION TO BE USED AT ALL INTERIOR STUD WALLS.

14. PROVIDE CONTROL JOINTS IN METAL FRAMED WALLS AT APPROXIMATELY 30 FEET ON CENTER. LOCATE AT CORNER ABOVE DOORS OR INSIDE CORNER OF PILASTERS OR OTHER INCONSPICUOUS LOCATION WHERE POSSIBLE. **CONSULT WITH ARCHITECT PRIOR TO COMMENCING FRAMING.**

15. AT WALL OPENINGS FOR PENETRATION OF PIPES, DUCTS, DEVICES, ETC., GYPSUM BOARD IS TO BE CUT TO MATCH THE SHAPE AND DIMENSION OF THE PENETRATING OBJECT AND THE GAP BETWEEN THE OBJECT AND THE WALL IS TO BE SEALED W/ ACOUSTICAL OR FIRE SEALANT ON ALL SIDES WITH A 3/4" JOINT AT ALL SIDES, MAXIMUM. THE OPENING FOR DUCTS OR LARGE PENETRATIONS SHALL BE FRAMED WITH A HEADER, ADD AN ANGLED CORNER BRACE IF THE GAP EXCEEDS 3" FROM FRAMING TO THE OPENING, SEE DETAIL D5/511.

16. CONTRACTOR TO PROVIDE BLOCKING / BACKING FOR ALL WALL MOUNTED EQUIPMENT. SEE FLOOR PLANS AND INTERIOR ELEVATIONS FOR CABINETS, GRAB BARS ETC. INSTALL BLOCKING AS DETAILED OR AS REQUIRED TO MOUNT SUCH DEVICES. ALL BLOCKING IS TO BE FIRE RETARDANT TREATED OR 20 GA METAL PER DETAIL C4/A511.

17. WHERE THERE IS LIMITED WATER EXPOSURE: INSTALL ONE LAYER OF 5/8" TYPE X WATER RESISTANT GYPSUM BOARD PER ASTM C1396 (WHERE GYPSUM BOARD OCCURS) OF BASIC PARTITION AT THE FOLLOWING LOCATIONS:

   A. WITHIN 2 FEET HORIZONTALLY AND 4 FEET VERTICALLY OF JANITORS SINKS

   B. AT OTHER LOCATIONS, I.E. TOILET ROOMS AND KITCHENS, AND AS INDICATED ON THE ARCHITECTURAL FINISH PLANS AND ELEVATIONS.

18. WHERE CERAMIC TILE FINISHES ARE INDICATED PER THE FINISH PLANS AND ELEVATIONS, INSTALL ONE LAYER OF 5/8" GLASS MAT TILE BACKER BOARD IN LIEU OF GYPSUM BOARD (WHERE GYPSUM BOARD OCCURS) OF BASIC PARTITION WHERE THERE IS NO FIRE RATING AND OVER GYPSUM BOARD FACE LAYER AT FIRE RATED PARTITIONS AT THE FOLLOWING LOCATIONS.

19. ALL EXTERIOR WALLS TO HAVE 2" OF SPRAY FOAM INSULATION APPLIED TO THE INTERIOR FACE OF SHEATHING OR TO THE BACK OF THE GFRC PANEL (UNLESS NOTED OTHERWISE).

20. AT WALLS HOLDING EXTERIOR METAL PANELS, A FLUID APPLIED MEMBRANE IS TO BE APPLIED TO THE EXTERIOR FACE OF THE GYP SHEATHING FOR THE FULL HEIGHT AND LENGTH OF THE WALL, SEAL ALL PENETRATIONS. **PLEASE NOTE THAT TWO MEMBRANE TYPES ARE TO BE USED (VAPOR PERMEABLE AND VAPOR BARRIER)**; SEE WALL TYPES, SPECIFICATIONS AND DETAILS FOR LOCATION OF EACH TYPE.

21. AT EXTERIOR METAL PANELS, 3" OF MINERAL WOOL CAVITY INSULATION IS TO BE PROVIDED.

22. THE FLUID APPLIED MEMBRANE SYSTEMS (PERMEABLE AND VAPOR BARRIER) ARE TO WRAP INTO ALL WINDOW AND DOOR OPENINGS PER THE MEMBRANE MANUFACTURER'S APPROVED DETAILS.

23. SEE STRUCTURAL PLANS FOR ADDITIONAL CONCRETE AND MASONRY WALL INFORMATION.

24. SEE EXTERIOR ELEVATIONS FOR G.F.R.C., ACM AND PROFILE METAL PANEL ORIENTATION AND JOINT PLACEMENT.

25. ALL MASONRY WALLS ARE TO BE REINFORCED AND ARE TO BE SET ON REINFORCED FOOTINGS. CONTROL JOINTS TO BE LOCATED AS PER THE REQUIREMENTS FOUND IN THE STRUCTURAL DOCUMENTS BUT ARE NOT TO EXCEED 30' OC. SEE THE STRUCTURAL DRAWINGS FOR REINFORCING AND OTHER DETAILS PERTAINING TO MASONRY WALLS. IF NOT OTHERWISE NOTED, LOCATE CONTROL JOINTS AT CORNER ABOVE DOORS, INSIDE CORNER OF PILASTERS OR OTHER INCONSPICUOUS LOCATION WHERE POSSIBLE. CONSULT WITH ARCHITECT PRIOR TO INSTALLING.

26. SEE IBC 2009, CHAPTER 7 FOR FIRE RESISTIVE REQUIREMENTS ON NEW CONCRETE AND CONCRETE MASONRY UNIT WALLS.
-CMU WALLS (IBC TABLE 720.1(2), ITEM 3)
-CAST IN PLACE CONCRETE WALLS (IBC TABLE 721.2.1.2(1))

27. AT WALL OPENINGS FOR PENETRATION OF PIPES, DUCTS, DEVICES, ETC., MASONRY IS TO BE CUT TO MATCH THE SHAPE AND DIMENSION OF THE PENETRATING OBJECT AND THE GAP BETWEEN THE OBJECT AND THE WALL IS TO BE SEALED W/ ACOUSTICAL OR FIRE SEALANT ON ALL SIDES WITH A 3/4" JOINT AT ALL SIDES, MAXIMUM.

28. PROTECTION OF MASONRY: DURING CONSTRUCTION, COVER TOPS OF WALLS, PROJECTIONS, AND SILLS WITH WATERPROOF SHEETING AT END OF EACH DAY'S WORK. EXCEPT WHEN THE AMBIENT TEMPERATURE IS EXPECTED TO REMAIN ABOVE 65 DEG F AND NO PRECIPITATION IS FORECAST FOR THE NEXT 24 HOURS. (THIS IS TO PREVENT CONDENSATION FROM COVERED WALLS CAUSING A MOISTURE PROBLEM.) COVER PARTIALLY COMPLETED MASONRY EACH DAY THAT CONSTRUCTION IS NOT IN PROGRESS. WALLS ARE TO BE PROTECTED UNTIL THEY ARE PERMANENTLY PROTECTED BY THE ROOFING MEMBRANE OVER THE CAP PLATE. THE GENERAL CONTRACTOR IS TO PROVIDE TEMPORARY PROTECTION IMMEDIATELY FOLLOWING THE TOPPING OUT OF EACH SECTION OF WALL BY INSTALLING WATERPROOF SHEETING OVER A CONTINUOUS CAP PLATE UNTIL THE ROOFING MEMBRANE IS INSTALLED. **A SOLID GROUTED TOP BOND BEAM SHALL NOT BE CONSIDERED ADEQUATE PROTECTION FOR THE WALL.**

29. AT PAINTED CMU THE HORIZONTAL AND VERTICAL MORTAR JOINTS ARE TO BE CONCAVE. AT ALL HONED BLOCK SITE WALLS THE HORIZONTAL MORTAR JOINT IS TO BE A WEATHERED JOINT AND ALL VERTICAL JOINTS ARE TO BE RAKED.

30. ALL VERTICAL MASONRY CORNERS WHICH FALL WITHIN THE INTERIOR OF THE BUILDING, INCLUDING CORNERS AT DOOR AND WINDOW OPENINGS ARE TO HAVE A 3/4" CHAMFER EXTENDING FROM 4" A.F.F. TO THE DECK ABOVE OR THE BOTTOM OF THE HEADER. SEE DETAIL D6/A512.

31. PROVIDE SPECIAL SHAPES, SUCH AS "U" SHAPED CHANNEL FOR LINTELS OR HEADERS AND CAPPING UNITS FOR SASH AND OTHER SPECIAL CONDITIONS. U SHAPED BLOCKS ARE TO BE 16"x8"X THE WIDTH OF THE WALL.

32. WHERE A FLUID APPLIED MEMBRANES ARE TO BE APPLIED OVER CMU, THE MORTAR JOINTS ARE TO BE STRUCK FLUSH AND SMOOTH.

33. ALL WALL COMPONENTS (GYP. BOARD, VAPOR BARRIER, INSULATION, ETC...) ARE TO EXTEND TO THE DECK ABOVE OR TO TOP OF PARAPET UNLESS NOTED OTHERWISE.

VCBO ARCHITECTURE
524 SOUTH 600 EAST
SALT LAKE CITY, UT 84102
Phone: (801) 575-8800
Fax: (801) 531-9850
Web: vcbo.com

LICENSED ARCHITECT No. 153912 BRENT R. TIPPETS 8-15-13 STATE OF UTAH

2nd District Juvenile Courthouse

Utah State Courts
08284150
165 West 20th Street, Ogden, Utah
BID DOCUMENTS

Rev #	Date	Description

Job # 12500
Date August 15, 2013
Owner # 08284150
Ins. #

LEVEL 1, ANNOTATED

A111.1A

8/14/2013 2:24:49 PM

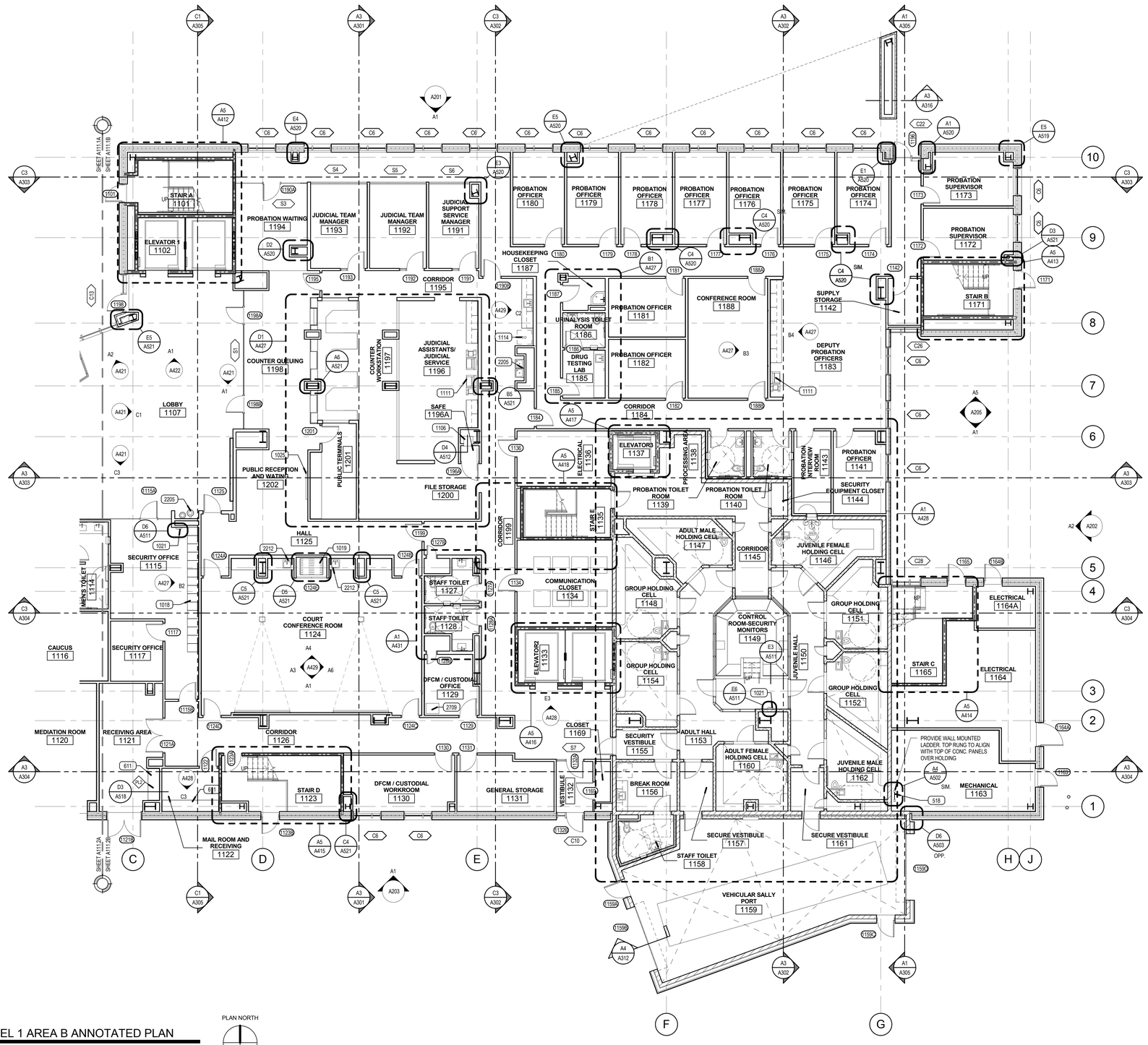

A1 LEVEL 1 AREA B ANNOTATED PLAN

SCALE: 1/8" = 1'-0"

PLAN NORTH

KEYED NOTES

518	STEEL LADDER, PAINTED
611	PLASTIC LAMINATE COUNTERTOP
1018	SINGLE TIER 18"X 24"X 72" METAL LAW ENFORCEMENT LOCKERS, SEE ELEVATIONS
1019	FOLDING PANEL PARTITION WITH POCKET DOOR
1021	SEMI-RECESSED FIRE EXTINGUISHER CABINET W/ EXTINGUISHER
1025	60"X40" WALL MOUNTED GLASS ENCLOSED DISPLAY CASE
1106	RECESSED WALL SAFE, OWNER PROVIDED, INSTALLED BY CONTRACTOR
1111	COPIER, NIC
1114	REFRIGERATOR, NIC
2205	ELECTRIC WATER COOLER
2212	UNDERMOUNT COUNTER SINK AND FAUCET
2709	AUDIO / VIDEO EQUIPMENT RACK

PLAN NOTES

1. WHERE FLOOR DRAINS ARE INSTALLED, THE FLOOR IS **NOT** TO SLOPE TOWARD THE DRAIN (REMAINS FLAT) EXCEPT AT THE FOLLOWING LOCATIONS:
   A. THICK SET TILE LOCATED IN CONJUCTION WITH SHOWERS.
   B. FLOORS NOT TILED AT SLAB-ON-GRADE LOCATIONS (LEVEL 1 HOLDING AND MECHANICAL ROOMS)
   WHERE FLOORS SLOPE, THE MAXIMUM FLOOR SLOPE IS NOT TO EXCEED 2% WHILE THE MINIMUM SLOPE IS NOT TO BE LESS THAN 1%.

2. WHERE CONCRETE PADS ARE CALLED TO BE CONSTRUCTED UNDER EQUIPMENT THE SLAB IS TO BE 8" THICK U.N.O., AND IS TO HAVE #4 BARS AT 18" O.C. EACH WAY. COORDINATE DIMENSIONS OF PAD WITH ACTUAL EQUIPMENT SPEC

3. THE CONTRACTOR IS TO ENSURE THAT BETWEEN ANY FINISH FLOOR ELEVATION TO 42" A.F.F. ALL GUARDRAILS ARE TO BE CONSTRUCTED AND INSTALLED SO THAT A 4" SPHERE WILL NOT PASS BETWEEN ANY TWO ADJACENT GUARDRAIL COMPONENTS OR BETWEEN THE EDGE OF A GUARDRAIL AND ALL ADJACENT BUILDING ELEMENT SUCH AS A WALL OR FLOOR.

WALL NOTES

1. SEE SHEETS A500 AND A501 FOR ALL WALL TYPE DEFINITIONS

2. PARTITION TYPE INDICATIONS ARE INDEPENDENT OF APPLIED FINISHES, SUCH AS TILE OR WOOD PANELING. SEE THE FINISH SHEETS AND INTERIOR ELEVATIONS FOR WALL FINISHES INCLUDING COURSING AND PANEL LAYOUT AND/OR THE DESIGNATIONS ON THE PLANS FOR ADDITIONAL INFORMATION REGARDING APPLIED FINISHES.

3. WHERE PARTITION TYPE DESIGNATION ON FLOOR PLANS IS INTERRUPTED BY DOOR OPENING, GLAZED PARTITION, ETC., CONSTRUCTION ABOVE INTERRUPTION (AND WHERE APPLICABLE BELOW) IS TO BE THE SAME AS THAT DESIGNATED FOR THE PARTITION IN WHICH THE INTERRUPTION OCCURRED.

4. THE MINIMUM REQUIREMENTS FOR CONSTRUCTION OF EACH PARTITION TYPE AS EXPRESSED BY THE INDICATED REFERENCE ARE INCORPORATED BY REFERENCE AND ARE APPLICABLE TO THE WORK OF THIS PROJECT. HOWEVER, ADDITIONAL AND/OR MORE RESTRICTIVE REQUIREMENTS MAY BE INDICATED BY THE SPECIFICATIONS AND DRAWINGS. SUCH REQUIREMENTS ALSO APPLY AND SHALL GOVERN. SUCH REQUIREMENTS INCLUDE BUT ARE NOT LIMITED TO:

   A. USE 5/8" THICK GYPSUM BOARD THROUGHOUT UNLESS NOTED OTHERWISE.

   B. USE 16" OC MAX STUD SPACING UNLESS NOTED OTHERWISE IN THESE DOCUMENTS. THE SPACING STATED BY THE REFERENCED APPROVAL OR TEST REPORT IS THE MAX SPACING IF ALLOWED IN THESEDOCUMENTS.

   C. USE STUDS OF GAGE INDICATED ON THE DRAWINGS OR IN THE SPECIFICATIONS. THE GAGE STATED BY THE REFERENCED APPROVAL OR TEST REPORT IS THE MINIMUM GAGE TESTED, 20 GA (30 MILS) IS THE MINIMUM ALLOWED IN THESE DOCUMENTS.

5. USE STUDS OF DEPTH INDICATED BY THIS SET OF DOCUMENTS. THE DEPTH STATED BY THE REFERENCED APPROVAL OR TEST REPORT IS THE MINIMUM DEPTH ALLOWED IN THESE DOCUMENTS.

6. AT INTERIOR STUD WALLS, THE CONTRACTOR IS RESPONSIBLE FOR SELECTING THE STUD GAUGE BASED ON THE HEIGHT OF WALL BEING CONSTRUCTED USING THE REQUIRMENTS FOUND IN THE "NON-BEARING METAL STUD GAUGE SIZING" CHART LOCATED ON SHEET A501.

7. PROVIDE FIRE RATED CONSTRUCTION ASSEMBLIES WHERE INDICATED ON SHEET G200 AND FLOOR PLAN DRAWINGS.

8. ALL DIMENSIONS ARE CENTER OF STUD OR FACE OF CONCRETE, MASONRY OR ROUGH OPENING UNLESS NOTED OTHERWISE.

9. AT ALL WALLS, STUDS, INSULATION AND GYPSUM BOARD ARE TO EXTEND TO THE DECK ABOVE. UNLESS NOTED OTHERWISE.

10. WALL TYPES NOT NOTED ARE ASSUMED TO MATCH ADJACENT ROOMS. NOTIFY ARCHITECT OF ANY DISCREPANCIES.

11. ALL METAL STUD PARTITIONS ARE CONSIDERED ACOUSTIC PARTITIONS AND ARE TO RECEIVE A TYPE 1 SOUND ATTENUATION BLANKET. THICKNESS TO MATCH STUD DEPTH, UNLESS NOTED OTHERWISE.

12. REFER TO SHEET A511 FOR TYPICAL INTERIOR WALL CONDITIONS ASSOCIATED WITH ALL METAL STUD AND CMU PARTITIONS.

13. SEE DETAIL B4/A511 FOR THE TYPICAL TOP OF WALL CONDITION TO BE USED AT ALL INTERIOR STUD WALLS.

14. PROVIDE CONTROL JOINTS IN METAL FRAMED WALLS AT APPROXIMATELY 30 FEET ON CENTER. LOCATE AT CORNER ABOVE DOORS OR INSIDE CORNER OF PILASTERS OR OTHER INCONSPICUOUS LOCATION WHERE POSSIBLE. **CONSULT WITH ARCHITECT PRIOR TO COMMENCING FRAMING.**

15. AT WALL OPENINGS FOR PENETRATION OF PIPES, DUCTS, DEVICES, ETC., GYPSUM BOARD IS TO BE CUT TO MATCH THE SHAPE AND DIMENSION OF THE PENETRATING OBJECT AND THE GAP BETWEEN THE OBJECT AND THE WALL IS TO BE SEALED W/ ACOUSTICAL OR FIRE SEALANT ON ALL SIDES WITH A 3/4" JOINT AT ALL SIDES, MAXIMUM. THE OPENING FOR DUCTS OR LARGE PENETRATIONS SHALL BE FRAMED WITH A HEADER, ADD AN ANGLED CORNER BRACE IF THE GAP EXCEEDS 3" FROM FRAMING TO THE OPENING, SEE DETAIL D5/511.

16. CONTRACTOR TO PROVIDE BLOCKING / BACKING FOR ALL WALL MOUNTED EQUIPMENT. SEE FLOOR PLANS AND INTERIOR ELEVATIONS FOR CABINETS, GRAB BARS ETC. INSTALL BLOCKING AS DETAILED OR AS REQUIRED TO MOUNT SUCH DEVICES. ALL BLOCKING IS TO BE FIRE RETARDANT TREATED OR 20 GA METAL PER DETAIL C4/A511.

17. WHERE THERE IS LIMITED WATER EXPOSURE: INSTALL ONE LAYER OF 5/8" TYPE X WATER RESISTANT GYPSUM BOARD PER ASTM C1396 (WHERE GYPSUM BOARD OCCURS) OF BASIC PARTITION AT THE FOLLOWING LOCATIONS:

   A. WITHIN 2 FEET HORIZONTALLY AND 4 FEET VERTICALLY OF JANITORS SINKS

   B. AT OTHER LOCATIONS, I.E. TOILET ROOMS AND KITCHENS, AND AS INDICATED ON THE ARCHITECTURAL FINISH PLANS AND ELEVATIONS.

18. WHERE CERAMIC TILE FINISHES ARE INDICATED PER THE FINISH PLANS AND ELEVATIONS, INSTALL ONE LAYER OF 5/8" GLASS MAT TILE BACKER BOARD IN LIEU OF GYPSUM BOARD (WHERE GYPSUM BOARD OCCURS) OF BASIC PARTITION WHERE THERE IS NO FIRE RATING AND OVER GYPSUM BOARD FACE LAYER AT FIRE RATED PARTITIONS AT THE FOLLOWING LOCATIONS.

19. ALL EXTERIOR WALLS TO HAVE 2" OF SPRAY FOAM INSULATION APPLIED TO THE INTERIOR FACE OF SHEATHING OR TO THE BACK OF THE GFRC PANEL (UNLESS NOTED OTHERWISE).

20. AT WALLS HOLDING EXTERIOR METAL PANELS, A FLUID APPLIED MEMBRANE IS TO BE APPLIED TO THE EXTERIOR FACE OF THE GYP SHEATHING FOR THE FULL HEIGHT AND LENGTH OF THE WALL, SEAL ALL PENETRATIONS. **PLEASE NOTE THAT TWO MEMBRANE TYPES ARE TO BE USED (VAPOR PERMEABLE AND VAPOR BARRIER).** SEE WALL TYPES, SPECIFICATIONS AND DETAILS FOR LOCATION OF EACH TYPE.

21. AT EXTERIOR METAL PANELS, 3" OF MINERAL WOOL CAVITY INSULATION IS TO BE PROVIDED.

22. THE FLUID APPLIED MEMBRANE SYSTEMS (PERMEABLE AND VAPOR BARRIER) ARE TO WRAP INTO ALL WINDOW AND DOOR OPENINGS PER THE MEMBRANE MANUFACTURER'S APPROVED DETAILS.

23. SEE STRUCTURAL PLANS FOR ADDITIONAL CONCRETE AND MASONRY WALL INFORMATION.

24. SEE EXTERIOR ELEVATIONS FOR G.F.R.C., ACM AND PROFILE METAL PANEL ORIENTATION AND JOINT PLACEMENT.

25. ALL MASONRY WALLS ARE TO BE REINFORCED AND ARE TO BE SET ON REINFORCED FOOTINGS. CONTROL JOINTS TO BE LOCATED AS PER THE REQUIREMENTS FOUND IN THE STRUCTURAL DOCUMENTS BUT ARE NOT TO EXCEED 30' OC. SEE THE STRUCTURAL DRAWINGS FOR REINFORCING AND OTHER DETAILS PERTAINING TO MASONRY WALLS. IF NOT OTHERWISE NOTED, LOCATE CONTROL JOINTS AT CORNER ABOVE DOORS, INSIDE CORNER OF PILASTERS OR OTHER INCONSPICUOUS LOCATION WHERE POSSIBLE. CONSULT WITH ARCHITECT PRIOR TO INSTALLING.

26. SEE IBC 2009, CHAPTER 7 FOR FIRE RESISTIVE REQUIREMENTS ON NEW CONCRETE AND CONCRETE MASONRY UNIT WALLS.
-CMU WALLS (IBC TABLE 720.1(2), ITEM 3)
-CAST IN PLACE CONCRETE WALLS (IBC TABLE 721.2.1.2(1))

27. AT WALL OPENINGS FOR PENETRATION OF PIPES, DUCTS, DEVICES, ETC., MASONRY IS TO BE CUT TO MATCH THE SHAPE AND DIMENSION OF THE PENETRATING OBJECT AND THE GAP BETWEEN THE OBJECT AND THE WALL IS TO BE SEALED W/ ACOUSTICAL OR FIRE SEALANT ON ALL SIDES WITH A 3/4" JOINT AT ALL SIDES, MAXIMUM.

28. PROTECTION OF MASONRY: DURING CONSTRUCTION, COVER TOPS OF WALLS, PROJECTIONS, AND SILLS WITH WATERPROOF SHEETING AT END OF EACH DAY'S WORK. EXCEPT WHEN THE AMBIENT TEMPERATURE IS EXPECTED TO REMAIN ABOVE 65 DEG F AND NO PRECIPITATION IS FORECAST FOR THE NEXT 24 HOURS. (THIS IS TO PREVENT CONDENSATION FROM COVERED WALLS CAUSING A MOISTURE PROBLEM.) COVER PARTIALLY COMPLETED MASONRY EACH DAY THAT CONSTRUCTION IS NOT IN PROGRESS. WALLS ARE TO BE PROTECTED UNTIL THEY ARE PERMANENTLY PROTECTED BY THE ROOFING MEMBRANE OVER THE CAP PLATE. THE GENERAL CONTRACTOR IS TO PROVIDE TEMPORARY PROTECTION IMMEDIATELY FOLLOWING THE TOPPING OUT OF EACH SECTION OF WALL BY INSTALLING WATERPROOF SHEETING OVER A CONTINUOUS CAP PLATE UNTIL THE ROOFING MEMBRANE IS INSTALLED. **A SOLID GROUTED TOP BOND BEAM SHALL NOT BE CONSIDERED ADEQUATE PROTECTION FOR THE WALL.**

29. AT PAINTED CMU THE HORIZONTAL AND VERTICAL MORTAR JOINTS ARE TO BE CONCAVE. AT ALL HONED BLOCK SITE WALLS THE HORIZONTAL MORTAR JOINT IS TO BE A WEATHERED JOINT AND ALL VERTICAL JOINTS ARE TO BE RAKED.

30. ALL VERTICAL MASONRY CORNERS WHICH FALL WITHIN THE INTERIOR OF THE BUILDING, INCLUDING CORNERS AT DOOR AND WINDOW OPENINGS ARE TO HAVE A 3/4" CHAMFER EXTENDING FROM 4" A.F.F. TO THE DECK ABOVE OR THE BOTTOM OF THE HEADER. SEE DETAIL D6/A512.

31. PROVIDE SPECIAL SHAPES, SUCH AS "U" SHAPED CHANNEL FOR LINTELS OR HEADERS AND CAPPING UNITS FOR SASH AND OTHER SPECIAL CONDITIONS. U SHAPED BLOCKS ARE TO BE 16"X8"X THE WIDTH OF THE WALL.

32. WHERE A FLUID APPLIED MEMBRANES ARE TO BE APPLIED OVER CMU, THE MORTAR JOINTS ARE TO BE STRUCK FLUSH AND SMOOTH.

33. ALL WALL COMPONENTS (GYP. BOARD, VAPOR BARRIER, INSULATION, ETC...) ARE TO EXTEND TO THE DECK ABOVE OR TO TOP OF PARAPET UNLESS NOTED OTHERWISE.

VCBO ARCHITECTURE
524 SOUTH 600 EAST
SALT LAKE CITY, UT 84102
Phone: (801) 575-8800
Fax: (801) 531-9850
Web: vcbo.com

LICENSED ARCHITECT No. 153912 BRENT R. TIPPETS 8-15-12 STATE OF UTAH

2nd District Juvenile Courthouse

Utah State Courts
08284150
165 West 20th Street, Ogden, Utah
BID DOCUMENTS

Rev #	Date	Description

Job # 12500
Date August 15, 2013
Owner # 08284150
Ins. #

LEVEL 1, ANNOTATED

A111.1B

8/14/2013 2:25:08 PM

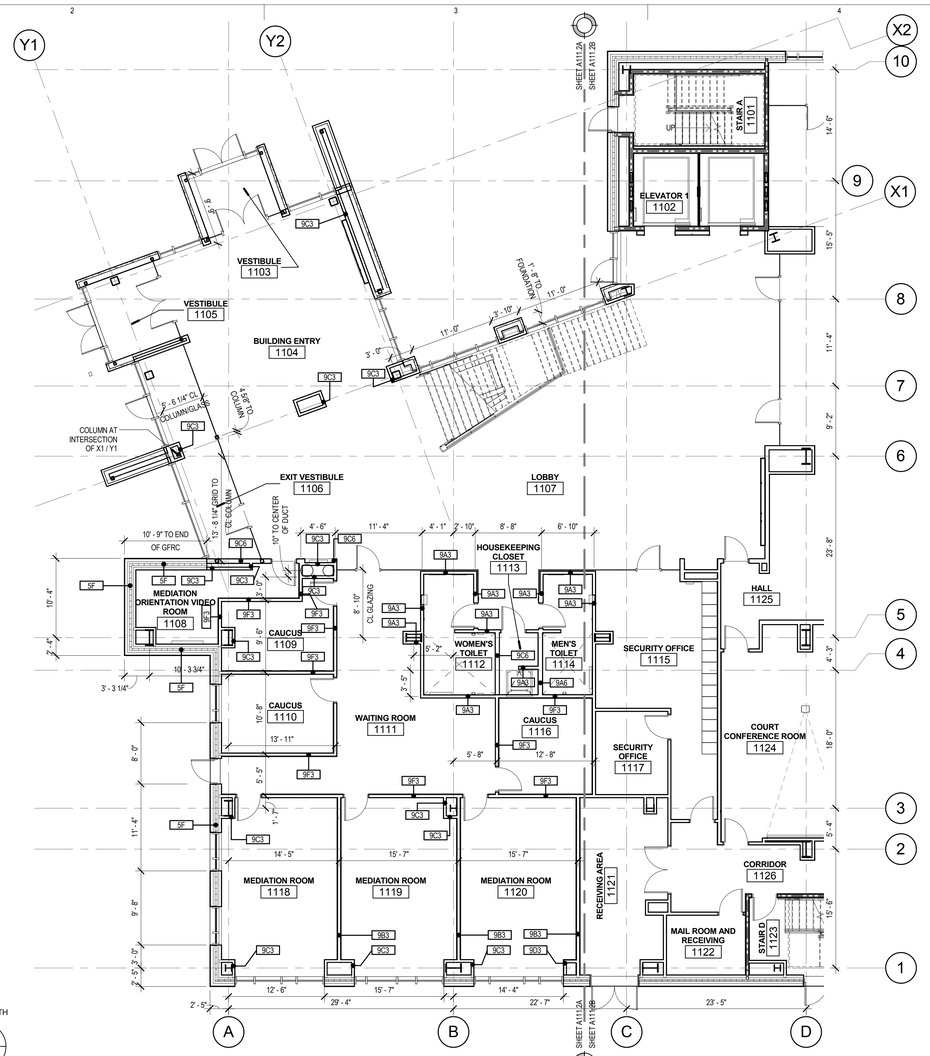

LEVEL 1 AREA A DIMENSION AND WALL TYPE PLAN

C1 SCALE: 1/8" = 1'-0"

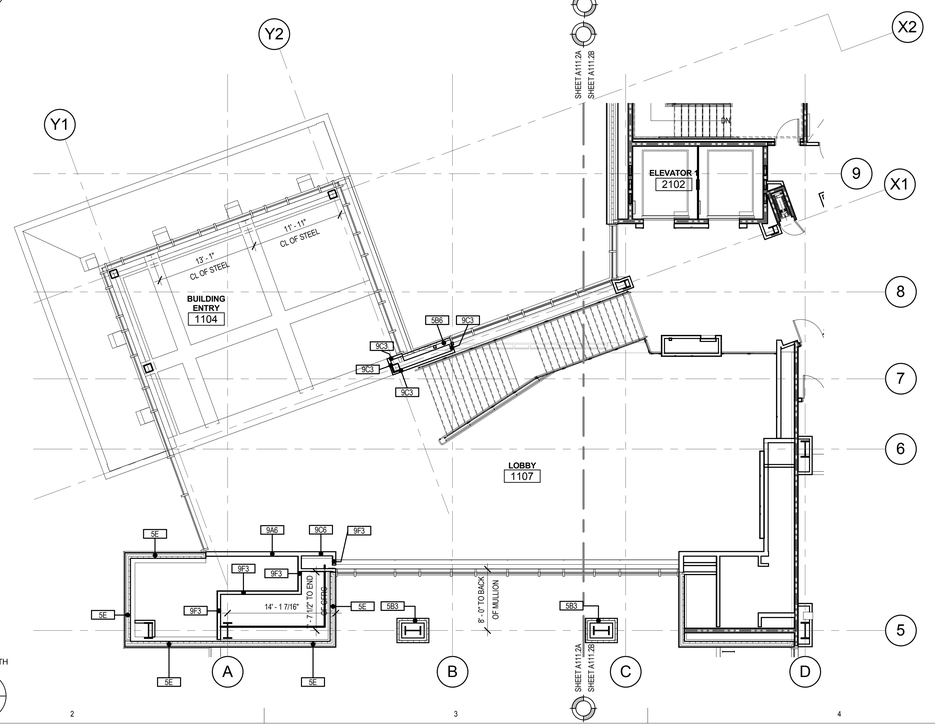

LEVEL 1 AREA A UPPER LOBBY DIMENSION AND WALL TYPES

A1 SCALE: 1/8" = 1'-0"

DIMENSION NOTES

1. ALL DIMENSIONS ARE TO CENTER OF STUD WALL OR FACE OF CONCRETE, MASONRY OR ROUGH OPENING UNLESS NOTED OTHERWISE. WHERE THE END OF A WALL IS INDICATED THE DIMENSION IS TO THE FINISH SURFACE OF THE WALL END.
2. UNLESS DIMENSIONED OTHERWISE, THE DIMENSION FROM THE BUCK OF A DOOR FRAME IS TO BE 4" TO THE WALL CORNER.
3. EXCEPT WHERE DIRECTED TO PLACE ITEMS OF WORK AT THE APPROXIMATE LOCATION SHOWN, DO NOT SCALE DRAWINGS FOR DIMENSIONAL INFORMATION. ALL ELEMENTS OF THE DRAWINGS MAY NOT BE DRAWN TO EXACT SCALE. ALL DIMENSIONS REQUIRED ARE SHOWN OR MAY BE DERIVED FROM THOSE SHOWN ON THE FLOOR PLANS, DETAIL PLANS, ELEVATIONS, SECTIONS, DETAILS, SCHEDULES AND SPECIFICATIONS. IF DIMENSIONS ARE NOT PRESENT, THE ARCHITECT IS TO BE NOTIFIED SO THAT A CLARIFICATION CAN BE ISSUED

KEY FOR PARTITION TYPES

DENOTES TYPE OF CONSTRUCTION (SPEC. DIVISION) — WALL

3X 0 SERIES	CONCRETE
4X 0 SERIES	MASONRY
5X 0 SERIES	COLD FORMED METAL STUDS, 16ga MIN.
9X 0 SERIES	METAL STUDS

NOMINAL SIZES: V = VARIABLE/MATCHEXISTING
1 = 1 5/8" STUDS
2 = 2 1/2" STUDS
3 = 3 5/8" STUDS
4 = 4" STUDS / 4" (NOM.) C.M.U.
6 = 6" STUDS / 6" (NOM.) C.M.U.
8 = 8" STUDS / 8" (NOM.) C.M.U.
10 = 10" (NOM.) C.M.U. OR CONC.
12 = 12" (NOM.) C.M.U. OR CONC.

EXAMPLE: WALL TYPE 9A3 IS A 3 5/8" METAL STUD WITH 5/8" GYPSUM BOARD ON BOTH SIDES.

NOTE: SEE GENERAL NOTES BELOW FOR ADDITIONAL ELEMENTS IN THE INDIVIDUAL WALL TYPES AND SPECIFIC DETAILS, INCLUDING UL RATINGS.

RATED WALL LEGEND

1 HOUR SEPARATION

2 HOUR SEPARATION

EXAMPLE: WALL TYPE 9A3-1 IS A ONE HOUR RATED, 3 5/8" METAL STUD WALL WITH 5/8" GYPSUM BOARD ON BOTH SIDES, PER ASSEMBLY REQUIREMENTS.

90X-R SERIES
FIRE RATING (ONLY WHEN NOTED):
1 = 1 HOUR RATED ASSEMBLY
2 = 2 HOUR RATED ASSEMBLY
3 = 3 HOUR RATED ASSEMBLY

NON-BEARING METAL HEADER SCHEDULE

MAXIMUM SPAN	HEADER	FY
4'-0"	(2) 400S137-43	33 ksi
6'-0"	(2) 600S162-43	33 ksi
8'-0"	(2) 800S162-43	33 ksi

METAL STUD HEADER NOTES:

1. SCHEDULE TO BE USED FOR NON-BEARING WALLS.
2. HEADERS TO BE CONSTRUCTED AS BOX HEADERS PER SSMA STANDARDS.
3. SEE TYPICAL DETAIL FOR MORE INFORMATION.

NON-BEARING METAL STUD GAUGE SIZING

MEMBER DEPTH IN 1/100 INCHES — FLANGE WIDTH IN 1/100 INCHES

400S137-43

STYLE (S=STUD OR JOIST) — MATERIAL THICKNESS IN MILS

MEMBER DEPTH	MAX STUD HEIGHT	MIN. GA. & SPACING
2 1/2" (250S125-33)	10'-0"	20@16" O.C.
3 5/8" (362S125-33)	14'-0"	20@16" O.C.
3 5/8" (362S162-33)	16'-0"	20@16" O.C.
3 5/8" (362S162-43)	18'-0"	18@16" O.C.
6" (600S162-33)	24'-0"	20@16" O.C.
6" (600S162-43)	26'-0"	18@16" O.C.
6" (600S162-54-50KSI)	28'-0"	16@16" O.C.

METAL STUD NOTES:

1. STEEL STUDS SHALL MEET ICC REPORT ER-4943P AND THE SSMA STANDARDS. HEIGHT BASED ON SSMA 2001 CATALOG AND PROJECT REQUIREMENTS.
2. SEE SCHEDULE FOR STUD SPACING AND GAUGE. ALL STUDS AND BRACES SHALL BE 33 KSI UNLESS NOTED OTHERWISE IN THESE DRAWINGS.
3. AT ALL DOORS PROVIDE TWO TABBED 18 GAUGE STUDS AT BOTH SIDES OF JAMB.
4. PLEASE NOTE THAT DUE TO THE LARGE FLOOR TO FLOOR HEIGHT 18 GAUGE STUDS WILL BE NECESSARY IN MOST INTERIOR NON LOAD BEARING WALLS. REFER TO THE CHART ABOVE.

VCBO ARCHITECTURE
524 SOUTH 600 EAST
SALT LAKE CITY, UT 84102
Phone: (801) 575-8800
Fax: (801) 531-9850
Web: vcbo.com

LICENSED ARCHITECT No. 153912 BRENT R. TIPPETS 8-15-13 STATE OF UTAH

2nd District Juvenile Courthouse

Utah State Courts
08284150
165 West 20th Street, Ogden, Utah
BID DOCUMENTS

Rev #	Date	Description

Job # 12500
Date August 15, 2013
Owner # 08284150
Ins. #

LEVEL 1, DIMENSION AND WALL TYPES

A111.2A

8/15/2013 9:11:44 AM

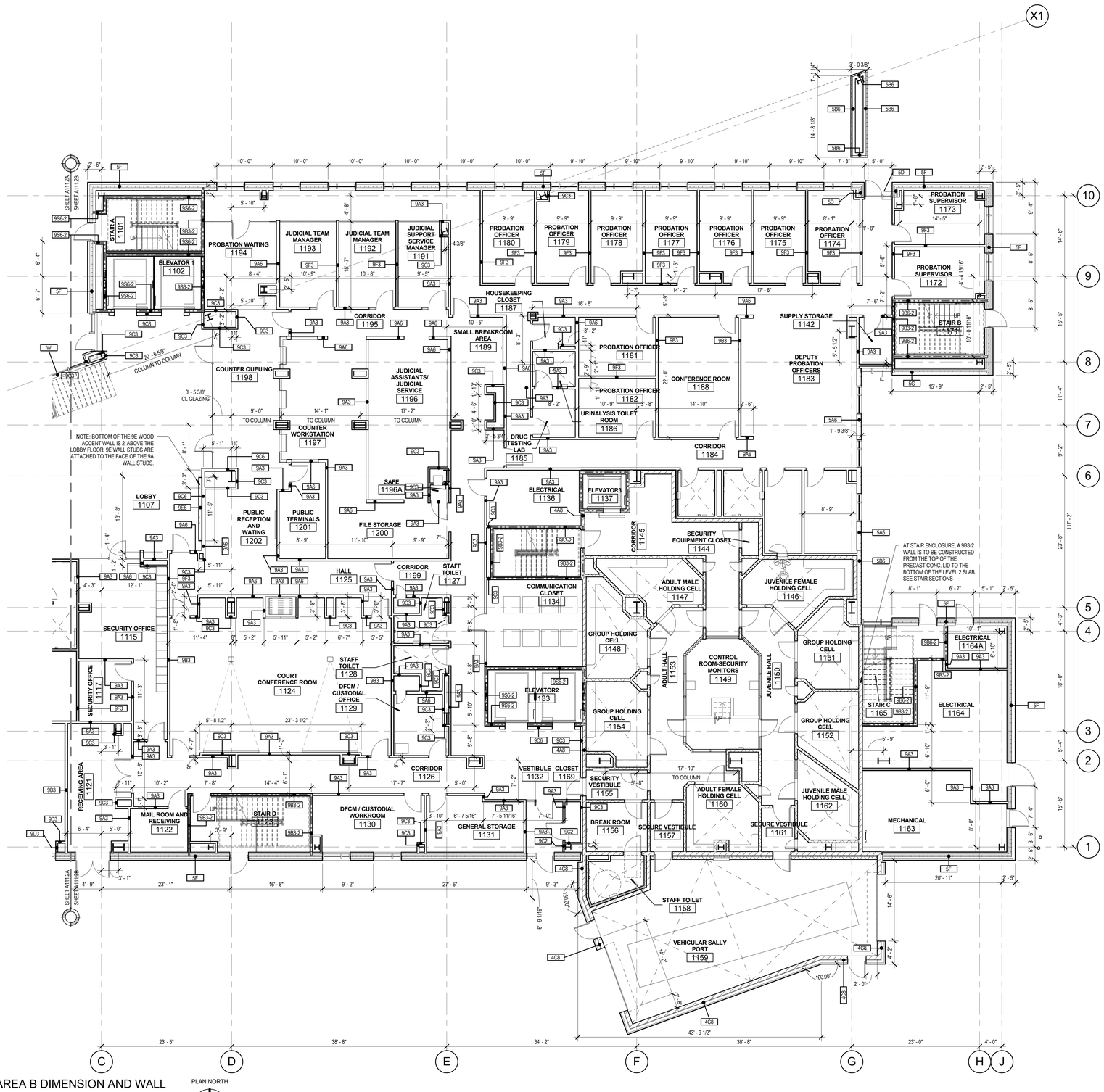

LEVEL 1 AREA B DIMENSION AND WALL TYPE PLAN

A1

SCALE: 1/8" = 1'-0"

DIMENSION NOTES

1. ALL DIMENSIONS ARE TO CENTER OF STUD WALL OR FACE OF CONCRETE, MASONRY OR ROUGH OPENING UNLESS NOTED OTHERWISE. WHERE THE END OF A WALL IS INDICATED THE DIMENSION IS TO THE FINISH SURFACE OF THE WALL END.
2. UNLESS DIMENSIONED OTHERWISE, THE DIMENSION FROM THE BUCK OF A DOOR FRAME IS TO BE 4" TO THE WALL CORNER.
3. EXCEPT WHERE DIRECTED TO PLACE ITEMS OF WORK AT THE APPROXIMATE LOCATION SHOWN, DO NOT SCALE DRAWINGS FOR DIMENSIONAL INFORMATION. ALL ELEMENTS OF THE DRAWINGS MAY NOT BE DRAWN TO EXACT SCALE. ALL DIMENSIONS REQUIRED ARE SHOWN OR MAY BE DERIVED FROM THOSE SHOWN ON THE FLOOR PLANS, DETAIL PLANS, ELEVATIONS, SECTIONS, DETAILS, SCHEDULES AND SPECIFICATIONS. IF DIMENSIONS ARE NOT PRESENT, THE ARCHITECT IS TO BE NOTIFIED SO THAT A CLARIFICATION CAN BE ISSUED

KEY FOR PARTITION TYPES

DENOTES TYPE OF CONSTRUCTION (SPEC. DIVISION) — WALL

3X 0 SERIES	CONCRETE
4X 0 SERIES	MASONRY
5X 0 SERIES	COLD FORMED METAL STUDS, 16ga MIN.
9X 0 SERIES	METAL STUDS

NOMINAL SIZES: V = VARIABLE/MATCHEXISTING
1 = 1 5/8" STUDS
2 = 2 1/2" STUDS
3 = 3 5/8" STUDS
4 = 4" STUDS / 4" (NOM.) C.M.U.
6 = 6" STUDS / 6" (NOM.) C.M.U.
8 = 8" STUDS / 8" (NOM.) C.M.U.
10 = 10" (NOM.) C.M.U. OR CONC.
12 = 12" (NOM.) C.M.U. OR CONC.

EXAMPLE: WALL TYPE 9A3 IS A 3 5/8" METAL STUD WITH 5/8" GYPSUM BOARD ON BOTH SIDES.

NOTE: SEE GENERAL NOTES BELOW FOR ADDITIONAL ELEMENTS IN THE INDIVIDUAL WALL TYPES AND SPECIFIC DETAILS, INCLUDING UL RATINGS.

RATED WALL LEGEND

1 HOUR SEPARATION

2 HOUR SEPARATION

EXAMPLE: WALL TYPE 9A3-1 IS A ONE HOUR RATED, 3 5/8" METAL STUD WALL WITH 5/8" GYPSUM BOARD ON BOTH SIDES, PER ASSEMBLY REQUIREMENTS.

90X-R SERIES
FIRE RATING (ONLY WHEN NOTED):
1 = 1 HOUR RATED ASSEMBLY
2 = 2 HOUR RATED ASSEMBLY
3 = 3 HOUR RATED ASSEMBLY

NON-BEARING METAL HEADER SCHEDULE

MAXIMUM SPAN	HEADER	FY
4'-0"	(2) 400S137-43	33 ksi
6'-0"	(2) 600S162-43	33 ksi
8'-0"	(2) 800S162-43	33 ksi

METAL STUD HEADER NOTES:

1. SCHEDULE TO BE USED FOR NON-BEARING WALLS.
2. HEADERS TO BE CONSTRUCTED AS BOX HEADERS PER SSMA STANDARDS.
3. SEE TYPICAL DETAIL FOR MORE INFORMATION.

NON-BEARING METAL STUD GAUGE SIZING

MEMBER DEPTH IN 1/100 INCHES — FLANGE WIDTH IN 1/100 INCHES

400S137-43

STYLE (S=STUD OR JOIST) — MATERIAL THICKNESS IN MILS

MEMBER DEPTH	MAX STUD HEIGHT	MIN. GA. & SPACING
2 1/2" (250S125-33)	10'-0"	20@16" O.C.
3 5/8" (362S125-33)	14'-0"	20@16" O.C.
3 5/8" (362S162-33)	16'-0"	20@16" O.C.
3 5/8" (362S162-43)	18'-0"	18@16" O.C.
6" (600S162-33)	24'-0"	20@16" O.C.
6" (600S162-43)	26'-0"	18@16" O.C.
6" (600S162-54-50KSI)	28'-0"	16@16" O.C.

METAL STUD NOTES:

1. STEEL STUDS SHALL MEET ICC REPORT ER-4943P AND THE SSMA STANDARDS. HEIGHT BASED ON SSMA 2001 CATALOG AND PROJECT REQUIREMENTS.
2. SEE SCHEDULE FOR STUD SPACING AND GAUGE. ALL STUDS AND BRACES SHALL BE 33 KSI UNLESS NOTED OTHERWISE IN THESE DRAWINGS.
3. AT ALL DOORS PROVIDE TWO TABBED 18 GAUGE STUDS AT BOTH SIDES OF JAMB.
4. PLEASE NOTE THAT DUE TO THE LARGE FLOOR TO FLOOR HEIGHT 18 GAUGE STUDS WILL BE NECESSARY IN MOST INTERIOR NON LOAD BEARING WALLS. REFER TO THE CHART ABOVE.

VCBO ARCHITECTURE
VCBO ARCHITECTURE
524 SOUTH 600 EAST
SALT LAKE CITY, UT 84102
Phone: (801) 575-8800
Fax: (801) 531-9850
Web: vcbo.com

LICENSED ARCHITECT No. 153912 BRENT R. TIPPETS 8-15-13 STATE OF UTAH

2nd District Juvenile Courthouse

Utah State Courts
08284150
165 West 20th Street, Ogden, Utah
BID DOCUMENTS

Rev #	Date	Description
1	4/30/2013	Fire Marshal Response

Job # 12500
Date August 15, 2013
Owner # 08284150
Ins. #

LEVEL 1, DIMENSION AND WALL TYPES

A111.2B

8/15/2013 9:11:45 AM

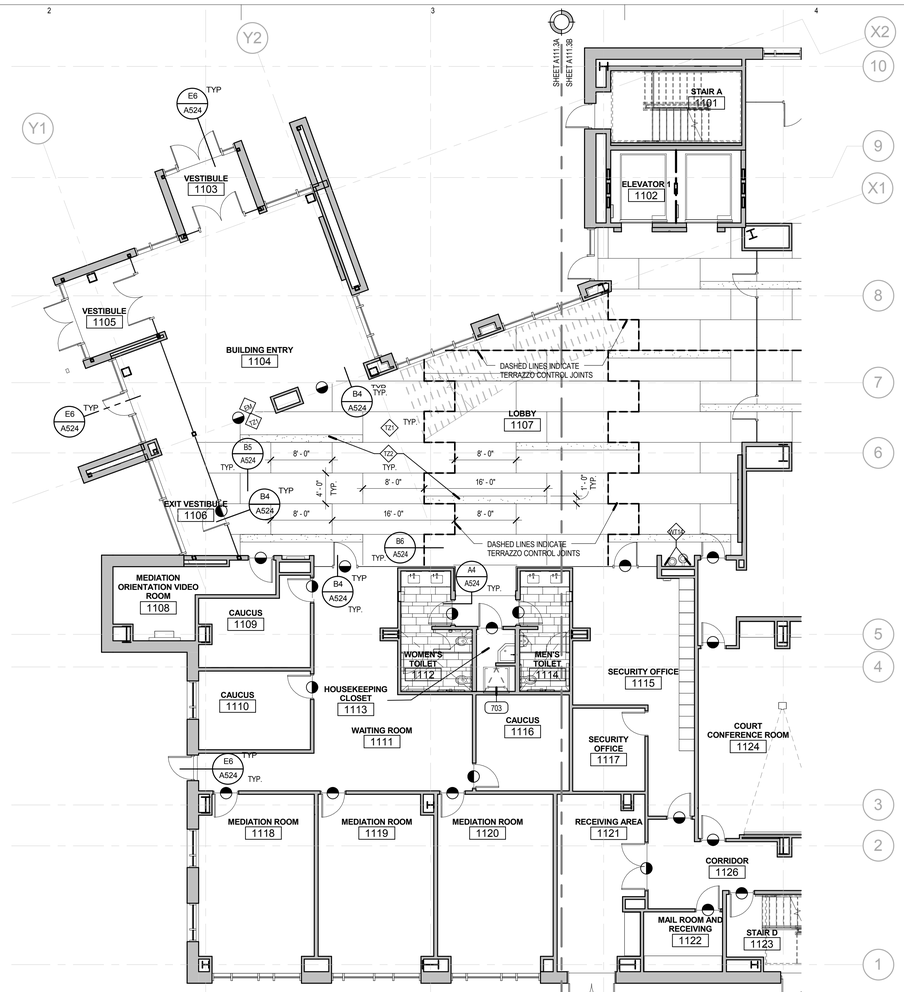

C1 LEVEL 1 AREA A FINISH AND SIGNAGE PLAN

SCALE: 1/8" = 1'-0"

PLAN NORTH

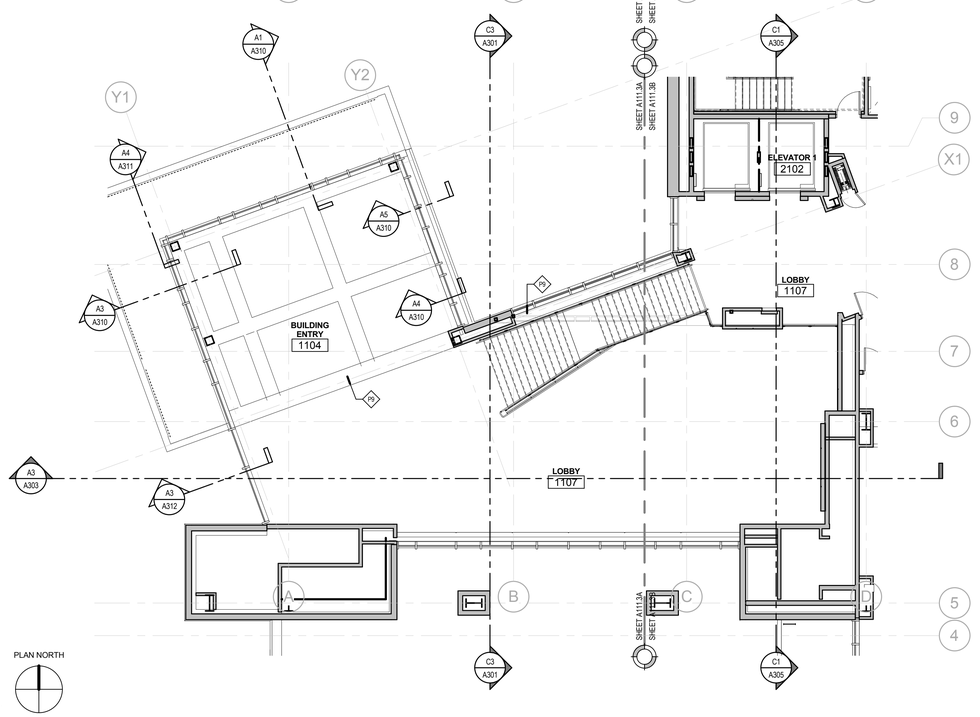

A1 LEVEL 1 AREA A UPPER LOBBY FINISH PLAN

SCALE: 1/8" = 1'-0"

PLAN NORTH

LEVEL 1A ROOM FINISH SCHEDULE							
				Wall Finishes			
Room Name	Room Number	Floor Finish	Base Finish	Wall Finish Top	Wall Finish Right	Wall Finish Bottom	Wall Finish Left
VESTIBULE	1103	EM	B3	P9	P9	P9	P9
BUILDING ENTRY	1104	EM	B3	P2	P2	P9	P2
VESTIBULE	1105	EM	B3	P9	P9	P9	P9
EXIT VESTIBULE	1106	EM	B3	P9	-	P2	P9
LOBBY	1107	TZ1,2	B3	P2/P9	WV,P2	WV/P2	P2
MEDIATION ORIENTATION VIDEO ROOM	1108	C2	B4	P2	P2	P2	P2
CAUCUS	1109	C2	B4	P2	P2	P2	P2
CAUCUS	1110	C2	B4	P2	P2	P2	P2
WAITING ROOM	1111	C5	B4	P2	P2	P2	P2
WOMEN'S TOILET	1112	FT1,2	B6	WT1,2,3,4,5,7	WT1,2,3,4,5	WT1,2,3,4,5	WT1,2,3,4,5
HOUSEKEEPING CLOSET	1113	L2	B10	P1	P1/WT 13	P1/WT 13	P1
MEN'S TOILET	1114	FT1,2	B6	WT1,2,3,4,5,7	WT1,2,3,4,5	WT1,2,3,4,5	WT1,2,3,4,5
CAUCUS	1116	C2	B4	P2	P2	P2	P2
MEDIATION ROOM	1118	C2	B4	P2	P2/F1	P2	P2
MEDIATION ROOM	1119	C2	B4	P2	P2/F1	P2	P2
MEDIATION ROOM	1120	C2	B4	P2	P2/F1	P2	P2

GENERAL FINISH NOTES

1. PROVIDE EPOXY PAINT AT ALL RESTROOMS, SHOWERS, LOCKER ROOMS AND JANITOR CLOSETS.
2. ALL FLOOR TRANSITIONS TO BE LOCATED AT CENTER OF DOOR, U.N.O.
3. ALL EXPOSED STEEL COLUMNS AND GIRTS ARE TO BE PAINTED WITH INTUMESCENT PAINT P10, UNLESS NOTED OTHERWISE. SEE G SHEETS FOR LOCATIONS OF SUCH MEMBERS.
4. ALL GROUT JOINTS TO BE NO LARGER THAN 1/8".
5. FIELD VERIFY ALL DIMENSIONS BEFORE FABRICATION OF MILLWORK.
6. COORDINATE ALL MILLWORK WITH APPLIANCES BEFORE FABRICATION.
7. SEE ELEVATION SHEETS FOR ALL WALL TILE PATTERNS.
8. AT SOFFITS RECEIVING COLOR- PAINT ALL SIDES OF SOFFIT.
9. ALL WOOD DOORS TO BE FINISHED BY THE MILLWORK CONTRACTOR TO MATCH TRIM AND VENEERED MILLWORK.
10. ALL COUNTERTOP, BACKSPLASHES, AND EDGE BANDING TO HAVE COORDINATING FINISHES.
11. WHERE STAIRS CALL FOR "RB2: RUBBER FLOORING TILES", PROVIDE RUBBER FLOORING COVERING STAIR TREADS, RISERS AND LANDINGS.
12. PROVIDE A SMOOTH TRANSITION AT ALL FLOOR MATERIALS - CONTRACTOR TO INSTALL ALL FLOOR FINISHES AT SAME LEVEL, DESPITE DIFFERENT THICKNESS. PROVIDE FLOOR TRANSITION WHERE OCCURS. SEE TYPICAL TRANSITIONS ON SHEET A524.
13. PROVIDE TILE 'WT13: 4"X4" CERAMIC WALL TILE' AT ALL JANITOR SINKS. PROVIDE TILE BULLNOSE TO FINISH OFF ALL EXPOSED EDGES.
14. ALL WALLS RECEIVING TILE WAINSCOT TO RECEIVE PAINT P1 ABOVE, U.N.O. SEE FINISH PLANS AND INTERIOR ELEVATIONS FOR ACCENT WALL LOCATIONS.
15. SEE SHEET A524 FOR TYPICAL FLOORING TRANSITION DETAILS.
16. UNLESS NOTED AS STAINLESS STEEL, ALL METAL GUARDRAILS, STAIR STRINGERS, HANDRAILS AND DOOR FRAMES ARE TO BE PAINTED. SEE FINISH SCHEDULE FOR COLOR SELECTIONS.
17. ALL SPACES THAT HAVE NO CEILING ARE TO HAVE THE EXPOSED STRUCTURE, DUCTWORK, PIPING, CONDUIT, ETC PAINTED P5. REFER TO REFLECTED CEILING PLANS.
18. ALL RESTROOM WALL TILE ENDING BELOW THE CEILING LINE TO START AND END WITH A FULL SIZE TILE. VERTICAL HEIGHTS OF TILE DIMENSIONED ON ELEVATIONS ARE APPROXIMATE.

FINISH PLAN SYMBOLS

SINGLE FINISH SYMBOLS INDICATE WHERE FINISHES ARE DIFFERENT FROM GENERAL ROOM FINISHES, OR PROVIDE ADDITIONAL FINISH INFORMATION

CHANGE AT FLOOR MATERIAL

FINISH PLAN LEGEND

FLOOR MATERIALS

EM	ENTRY MAT
C1	CARPET TILE
C2	CARPET TILE
C3	NOT USED
C4	CARPET TILE
C5	CARPET TILE
C6	CARPET TILE
C7	NOT USED
L1	LINOLEUM SHEET
L2	LINOLEUM TILE - MCT
FT1	PORCELAIN FLOOR TILE 12x24
FT2	PORCELAIN FLOOR TILE 6x24
FT3	PORCELAIN FLOOR TILE 12x12
FT4	FLOOR TILE 1X2
VT2	STATIC DISSIPATIVE ACCESS FLOOR PANEL
RB1	RUBBER FLOOR TILES
RB2	RUBBER FLOORING (STAIRS, LANDINGS)
SC	SEALED CONCRETE
TZ1	TERRAZZO FLOORING
TZ2	TERRAZZO FLOORING ACCENT
EP1	EPOXY FLOORING - OPAQUE
G1	GROUT
G2	GROUT
PT	ALUMINUM DIAMOND PLATE

BASE MATERIALS

B1	RUBBER BASE
B2	RUBBER BASE
B3	ANODIZED ALUMINUM BASE - SEE C2 AND C4/A513
B4	SOLID HARDWOOD BASE - 3/4" THICK, 4" HIGH
B5	TILE BASE
B6	ALUMINUM COVE BASE
B7	TILE COVE BASE
B8	NO BASE - SEAL SEAM
B9	NO BASE - CAULK BETWEEN FLOOR AND WALL
B10	COVED RUBBER BASE
B11	COVED EPOXY FLOORING

WALL MATERIALS

F1	ACOUSTIC FABRIC WALL PANELS
F2	PEW SEAT FABRIC
P1	PRIMED & PAINTED WALL SURFACE - GENERAL
P2	PRIMED & PAINTED WALL SURFACE - GENERAL
P3	PRIMED & PAINTED WALL SURFACE - ACCENT
P4	PRIMED & PAINTED WALL SURFACE - ACCENT
P5	CEILING PAINT
P6	RAILING PAINT
P7	H.M. DOOR FRAME PAINT
P8	H.M. DOOR FRAME PAINT
P9	PRIMED & PAINTED WALL SURFACE - ACCENT
P10	INTUMESCENT PAINT SYSTEM
WT1	PORCELAIN WALL TILE 6X24
WT2	PORCELAIN WALL TILE 4X24
WT3	PORCELAIN WILL TILE 2X24
WT4	PORCELAIN WALL TILE 6X24
WT5	PORCELAIN WALL TILE 2X24
WT6	NOT USED
WT7	GLAZED WALL TILE 3x6
WT8	GLAZED WALL TILE 3x6
WT9	GLAZED WALL TILE 3x6
WT10	NOT USED
WT11	NOT USED
WT12	NOT USED
WT13	GLAZED WALL TILE 4x4
WT14	GLASS WALL TILE - SIZES VARY
WC1	VINYL WALLCOVERING
WC3	DRY ERASE WALLCOVERING

SURFACE MATERIALS

PL1	PLASTIC LAMINATE - VERTICAL SURFACES
PL2	PLASTIC LAMINATE - COUNTERTOPS
PL3	PHENOLIC CORE PARTITIONS - PARTITION COLOR
WV	WOOD VENEER - SEE A513 FOR TYPICAL DETAILS
QZ1	QUARTZ COUNTERTOP SURFACE
QZ2	QUARTZ COUNTERTOP SURFACE
QZ3	QUARTZ COUNTERTOP SURFACE
SS1	SOLID SURFACE COUNTERTOP
SS2	SOLID SURFACE COUNTERTOP
SS3	SOLID SURFACE THRESHOLD

VCBO ARCHITECTURE
524 SOUTH 600 EAST
SALT LAKE CITY, UT 84102
Phone: (801) 575-8800
Fax: (801) 531-9850
Web: vcbo.com

REGISTERED ARCHITECT No. 153912 BRENT R. TIPPETS 8-15-13 STATE OF UTAH

2nd District Juvenile Courthouse

Utah State Courts
08284150
165 West 20th Street, Ogden, Utah
BID DOCUMENTS

Rev #	Date	Description

Job # 12500
Date August 15, 2013
Owner # 08284150
Ins. #

LEVEL 1, AREA A
FINISH PLAN

A111.3A

8/14/2013 2:26:17 PM

LEVEL 1B ROOM FINISH SCHEDULE							
				Wall Finishes			
Room Name	Room Number	Floor Finish	Base Finish	Wall Finish Top	Wall Finish Right	Wall Finish Bottom	Wall Finish Left
STAIR A	1101	RB2	B1	P1	P1	P1	P1
ELEVATOR 1	1102	FT1.2	-	-	-	-	-
SECURITY OFFICE	1115	C1	B1	P2	P2	P2	P2
SECURITY OFFICE	1117	C1	B1	P2	P2	P2	P2
RECEIVING AREA	1121	L2	B10	P1	P1	P1	P1
MAIL ROOM AND RECEIVING	1122	L1	B1	P1	P1	P1	P1
STAIR D	1123	RB2	B1	P4	P1	P1	P1
COURT CONFERENCE ROOM	1124	C2/C4	B4	P2/P4	P2/F1	P2/WC3	P2/F1
HALL	1125	C5	B3	P2	P2	P2	P2
CORRIDOR	1126	C5	B1	P2	P2	P2	P2
STAFF TOILET	1127	FT3	B7	WT7,8,9/P1	WT7,8,9/P1	WT7,8,9/P1	WT7,8,9/P1
STAFF TOILET	1128	FT3	B7	WT7,8,9/P1	WT7,8,9/P1	WT7,8,9/P1	WT7,8,9/P1
DFCM / CUSTODIAL OFFICE	1129	L2	B10	P2	P2	P2	P2
DFCM / CUSTODIAL WORKROOM	1130	L2	B10	P1	P1	P1	P1
GENERAL STORAGE	1131	L2	B10	P1	P1	P1	P1
VESTIBULE	1132	EM	B1	P2	P2	P2	P2
ELEVATOR2	1133	FT1.2	-	-	-	-	-
COMMUNICATION CLOSET	1134	SC	B10	P1	P1	P1	P1
STAIR E	1135	SC	B10	P1	P1	P1	P1
ELECTRICAL	1136	SC	B10	P1	P1	P1	P1
ELEVATOR3	1137	PT	-	-	-	-	-
PROCESSING AREA	1138	EP1	B11	P1	P1	P1	P1
PROBATION TOILET ROOM	1139	FT3	B7	WT7,8,9/P1	WT7,8,9/P1	WT7,8,9/P1	WT7,8,9/P1
PROBATION TOILET ROOM	1140	FT3	B7	WT7,8,9/P1	WT7,8,9/P1	WT7,8,9/P1	WT7,8,9/P1
PROBATION OFFICER	1141	C1	B1	P2	P2	P2	P2
SUPPLY STORAGE	1142	L2	B10	P1	P1	P1	P1
PROBATION INTERVIEW ROOM	1143	C1	B1	P2	P2	P2	P2
SECURITY EQUIPMENT CLOSET	1144	EP1	B11	P1	P1	P1	P1
CORRIDOR	1145	EP1	B11	P1	P1	P1	P1

LEVEL 1B ROOM FINISH SCHEDULE							
				Wall Finishes			
Room Name	Room Number	Floor Finish	Base Finish	Wall Finish Top	Wall Finish Right	Wall Finish Bottom	Wall Finish Left
JUVENILE FEMALE HOLDING CELL	1146	EP1	B11	P1	P1	P1	P1
ADULT MALE HOLDING CELL	1147	EP1	B11	P1	P1	P1	P1
GROUP HOLDING CELL	1148	EP1	B11	P1	P1	P1	P1
CONTROL ROOM-SECURITY MONITORS	1149	L2	B10	P1	P1	P1	P1
JUVENILE HALL	1150	EP1	B11	P1	P1	P1	P1
GROUP HOLDING CELL	1151	EP1	B11	P1	P1	P1	P1
GROUP HOLDING CELL	1152	EP1	B11	P1	P1	P1	P1
ADULT HALL	1153	EP1	B11	P1	P1	P1	P1
GROUP HOLDING CELL	1154	EP1	B11	P1	P1	P1	P1
SECURITY VESTIBULE	1155	EP1	B11	P1	P1	P1	P1
BREAK ROOM	1156	L1	B1	P2	P2	P2	P2
SECURE VESTIBULE	1157	EP1	B11	P1	P1	P1	P1
STAFF TOILET	1158	FT3	B7	WT13/P1	WT13/P1	WT13/P1	WT13/P1
VEHICULAR SALLY PORT	1159	SC	B9	P1	P1	P1	P1
ADULT FEMALE HOLDING CELL	1160	EP1	B11	P1	P1	P1	P1
SECURE VESTIBULE	1161	EP1	B11	P1	P1	P1	P1
JUVENILE MALE HOLDING CELL	1162	EP1	B11	P1	P1	P1	P1
MECHANICAL	1163	SC	B9	P1	P1	P1	P1
ELECTRICAL	1164	SC	B10	P1	P1	P1	P1
STAIR C	1165	RB2	B1	P1	P1	P1	P9
PROBATION OFFICER	1166	C1	B1	P2	P2	P2	P2
PROBATION OFFICER	1167	C1	B1	P2	P2	P2	P2
PROBATION OFFICER	1168	C1	B1	P2	P2	P2	P2
PROBATION SUPPORT	1170	C1	B1	P2	P2	P2	P2
STAIR B	1171	RB2	B1	P1	P1	P1	P1
PROBATION SUPERVISOR	1172	C1	B1	P2	P2	P2	P2
PROBATION SUPERVISOR	1173	C1	B1	P2	P2	P2	P2
PROBATION OFFICER	1174	C1	B1	P2	P2	P2	P2
PROBATION OFFICER	1175	C1	B1	P2	P2	P2	P2

LEVEL 1B ROOM FINISH SCHEDULE							
				Wall Finishes			
Room Name	Room Number	Floor Finish	Base Finish	Wall Finish Top	Wall Finish Right	Wall Finish Bottom	Wall Finish Left
PROBATION OFFICER	1176	C1	B1	P2	P2	P2	P2
PROBATION OFFICER	1177	C1	B1	P2	P2	P2	P2
PROBATION OFFICER	1178	C1	B1	P2	P2	P2	P2
PROBATION OFFICER	1179	C1	B1	P2	P2	P2	P2
PROBATION OFFICER	1180	C1	B1	P2	P2	P2	P2
PROBATION OFFICER	1181	C1	B1	P2	P2	P2	P2
PROBATION OFFICER	1182	C1	B1	P2	P2	P2	P2
DEPUTY PROBATION OFFICERS	1183	C1	B1	P2	P2	P2	P2
CORRIDOR	1184	C5	B1	P2	P2	P2	P2
DRUG TESTING LAB	1185	L1	B1	P1	P1	P1	P1
URINALYSIS TOILET ROOM	1186	FT3	B7	WT13/P1	WT13/P1	WT13/P1	WT13/P1
HOUSEKEEPING CLOSET	1187	L2	B10	P1	P1/WT 13	P1/WT 13	P1
CONFERENCE ROOM	1188	C2	B4	P2	P2/WC3	P2	P2
SMALL BREAKROOM AREA	1189	L1	B1	P2	P2	P2	P2
CORRIDOR	1190	C5	B1	P2	P2	P2	P2
JUDICIAL SUPPORT SERVICE MANAGER	1191	C1	B1	P2	P2	P2	P2
JUDICIAL TEAM MANAGER	1192	C1	B1	P2	P2	P2	P2
JUDICIAL TEAM MANAGER	1193	C1	B1	P2	P2	P2	P2
PROBATION WAITING	1194	C5	B3	P2	P2	P2	P2
CORRIDOR	1195	C5	B1	P2	P2	P2	P2
JUDICIAL ASSISTANTS/ JUDICIAL SERVICE	1196	C1	B1	P2	P2	P2	P2
COUNTER WORKSTATION	1197	C1	B1	P2	P2	P2	P2
COUNTER QUEUING	1198	TZ1.2	B3	P2	WV/P2/4	P2	-
CORRIDOR	1199	C5	B1	P2	P2	P2	P2
FILE STORAGE	1200	C1	B1	P2	P2	P2	P2
PUBLIC TERMINALS	1201	C2	B4	P2	P2	P2	P2
PUBLIC RECEPTION AND WATING	1202	C5	B3	P2	P2	P2	P2

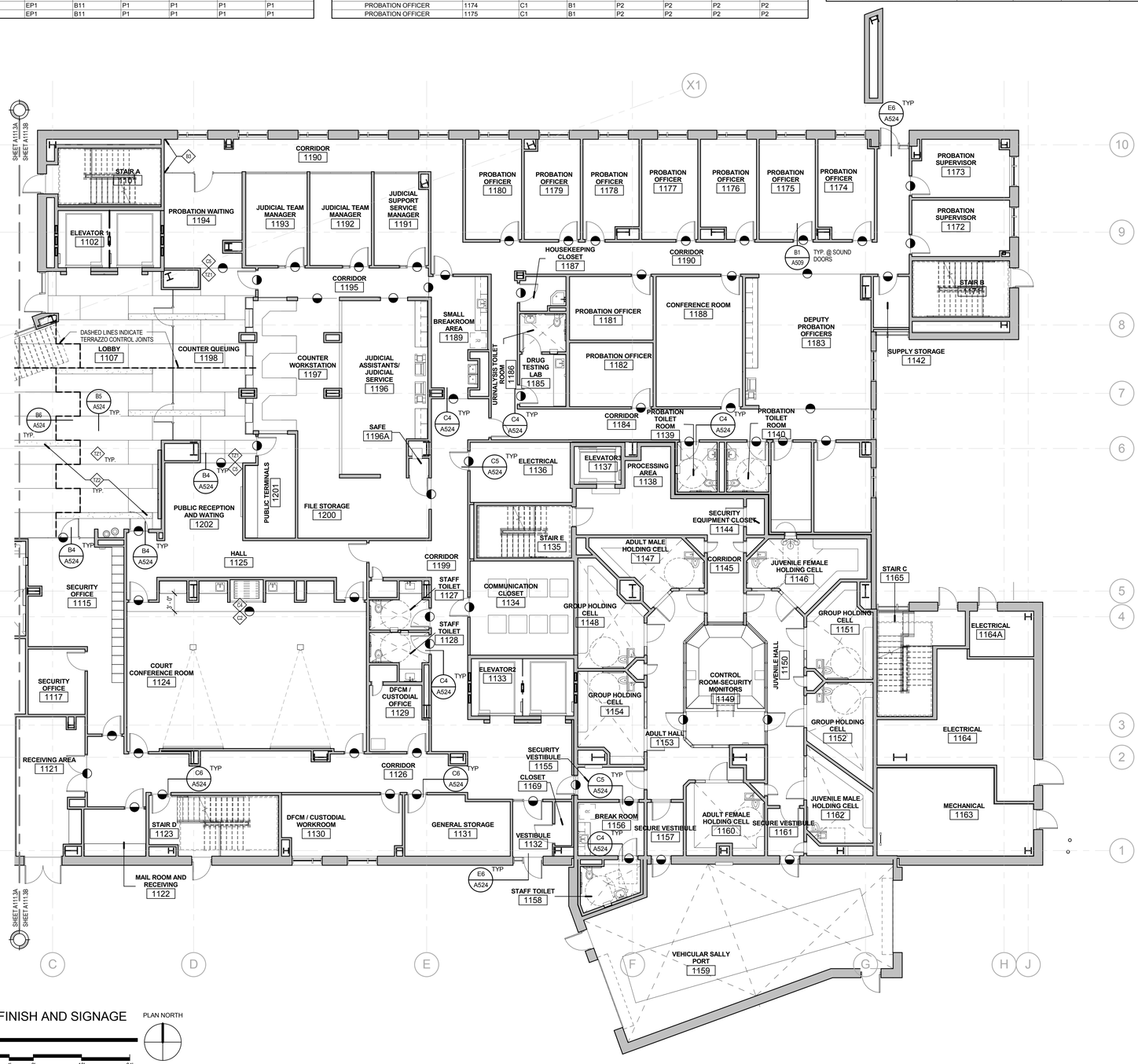

A1 LEVEL 1 AREA B FINISH AND SIGNAGE PLAN

SCALE: 1/8" = 1'-0"

0' 4' 8' 16' 24'

PLAN NORTH

GENERAL FINISH NOTES

1. PROVIDE EPOXY PAINT AT ALL RESTROOMS, SHOWERS, LOCKER ROOMS AND JANITOR CLOSETS.
2. ALL FLOOR TRANSITIONS TO BE LOCATED AT CENTER OF DOOR, U.N.O.
3. ALL EXPOSED STEEL COLUMNS AND GIRTS ARE TO BE PAINTED WITH INTUMESCENT PAINT P10, UNLESS NOTED OTHERWISE. SEE G SHEETS FOR LOCATIONS OF SUCH MEMBERS.
4. ALL GROUT JOINTS TO BE NO LARGER THAN 1/8".
5. FIELD VERIFY ALL DIMENSIONS BEFORE FABRICATION OF MILLWORK.
6. COORDINATE ALL MILLWORK WITH APPLIANCES BEFORE FABRICATION.
7. SEE ELEVATION SHEETS FOR ALL WALL TILE PATTERNS.
8. AT SOFFITS RECEIVING COLOR- PAINT ALL SIDES OF SOFFIT.
9. ALL WOOD DOORS TO BE FINISHED BY THE MILLWORK CONTRACTOR TO MATCH TRIM AND VENEERED MILLWORK.
10. ALL COUNTERTOP, BACKSPLASHES, AND EDGE BANDING TO HAVE COORDINATING FINISHES.
11. WHERE STAIRS CALL FOR "RB2: RUBBER FLOORING TILES", PROVIDE RUBBER FLOORING COVERING STAIR TREADS, RISERS AND LANDINGS.
12. PROVIDE A SMOOTH TRANSITION AT ALL FLOOR MATERIALS - CONTRACTOR TO INSTALL ALL FLOOR FINISHES AT SAME LEVEL, DESPITE DIFFERENT THICKNESS. PROVIDE FLOOR TRANSITION WHERE OCCURS. SEE TYPICAL TRANSITIONS ON SHEET A524.
13. PROVIDE TILE 'WT13: 4"X4" CERAMIC WALL TILE' AT ALL JANITOR SINKS. PROVIDE TILE BULLNOSE TO FINISH OFF ALL EXPOSED EDGES.
14. ALL WALLS RECEIVING TILE WAINSCOT TO RECEIVE PAINT P1 ABOVE, U.N.O. SEE FINISH PLANS AND INTERIOR ELEVATIONS FOR ACCENT WALL LOCATIONS.
15. SEE SHEET A524 FOR TYPICAL FLOORING TRANSITION DETAILS.
16. UNLESS NOTED AS STAINLESS STEEL, ALL METAL GUARDRAILS, STAIR STRINGERS, HANDRAILS AND DOOR FRAMES ARE TO BE PAINTED. SEE FINISH SCHEDULE FOR COLOR SELECTIONS.
17. ALL SPACES THAT HAVE NO CEILING ARE TO HAVE THE EXPOSED STRUCTURE, DUCTWORK, PIPING, CONDUIT, ETC PAINTED PS. REFER TO REFLECTED CEILING PLANS.
18. ALL RESTROOM WALL TILE ENDING BELOW THE CEILING LINE TO START AND END WITH A FULL SIZE TILE. VERTICAL HEIGHTS OF TILE DIMENSIONED ON ELEVATIONS ARE APPROXIMATE.

FINISH PLAN SYMBOLS

SINGLE FINISH SYMBOLS INDICATE WHERE FINISHES ARE DIFFERENT FROM GENERAL ROOM FINISHES, OR PROVIDE ADDITIONAL FINISH INFORMATION

CHANGE AT FLOOR MATERIAL

FINISH PLAN LEGEND

FLOOR MATERIALS

EM	ENTRY MAT
C1	CARPET TILE
C2	CARPET TILE
C3	NOT USED
C4	CARPET TILE
C5	CARPET TILE
C6	CARPET TILE
C7	NOT USED
L1	LINOLEUM SHEET
L2	LINOLEUM TILE - MCT
FT1	PORCELAIN FLOOR TILE 12x24
FT2	PORCELAIN FLOOR TILE 6x24
FT3	PORCELAIN FLOOR TILE 12x12
FT4	FLOOR TILE 1X2
VT2	STATIC DISSIPATIVE ACCESS FLOOR PANEL
RB1	RUBBER FLOOR TILES
RB2	RUBBER FLOORING (STAIRS, LANDINGS)
SC	SEALED CONCRETE
TZ1	TERRAZZO FLOORING
TZ2	TERRAZZO FLOORING ACCENT
EP1	EPOXY FLOORING - OPAQUE
G1	GROUT
G2	GROUT
PT	ALUMINUM DIAMOND PLATE

BASE MATERIALS

B1	RUBBER BASE
B2	RUBBER BASE
B3	ANODIZED ALUMINUM BASE - SEE C2 AND C4/A513
B4	SOLID HARDWOOD BASE - 3/4" THICK, 4" HIGH
B5	TILE BASE
B6	ALUMINUM COVE BASE
B7	TILE COVE BASE
B8	NO BASE - SEAL SEAM
B9	NO BASE - CAULK BETWEEN FLOOR AND WALL
B10	COVED RUBBER BASE
B11	COVED EPOXY FLOORING

WALL MATERIALS

F1	ACOUSTIC FABRIC WALL PANELS
F2	PEW SEAT FABRIC
P1	PRIMED & PAINTED WALL SURFACE - GENERAL
P2	PRIMED & PAINTED WALL SURFACE - GENERAL
P3	PRIMED & PAINTED WALL SURFACE - ACCENT
P4	PRIMED & PAINTED WALL SURFACE - ACCENT
P5	CEILING PAINT
P6	RAILING PAINT
P7	H.M. DOOR FRAME PAINT
P8	H.M. DOOR FRAME PAINT
P9	PRIMED & PAINTED WALL SURFACE - ACCENT
P10	INTUMESCENT PAINT SYSTEM
WT1	PORCELAIN WALL TILE 6X24
WT2	PORCELAIN WALL TILE 4X24
WT3	PORCELAIN WILL TILE 2X24
WT4	PORCELAIN WALL TILE 8X24
WT5	PORCELAIN WALL TILE 2X24
WT6	NOT USED
WT7	GLAZED WALL TILE 3x6
WT8	GLAZED WALL TILE 3x6
WT9	GLAZED WALL TILE 3x6
WT10	NOT USED
WT11	NOT USED
WT12	NOT USED
WT13	GLAZED WALL TILE 4x4
WT14	GLASS WALL TILE - SIZES VARY
WC1	VINYL WALLCOVERING
WC3	DRY ERASE WALLCOVERING

SURFACE MATERIALS

PL1	PLASTIC LAMINATE - VERTICAL SURFACES
PL2	PLASTIC LAMINATE - COUNTERTOPS
PL3	PHENOLIC CORE PARTITIONS - PARTITION COLOR
WV	WOOD VENEER - SEE A513 FOR TYPICAL DETAILS
QZ1	QUARTZ COUNTERTOP SURFACE
QZ2	QUARTZ COUNTERTOP SURFACE
QZ3	QUARTZ COUNTERTOP SURFACE
SS1	SOLID SURFACE COUNTERTOP
SS2	SOLID SURFACE COUNTERTOP
SS3	SOLID SURFACE THRESHOLD

VCBO ARCHITECTURE
VCBO ARCHITECTURE
524 SOUTH 600 EAST
SALT LAKE CITY, UT 84102
Phone: (801) 575-8800
Fax: (801) 531-9850
Web: vcbo.com

LICENSED ARCHITECT No. 153912 BRENT R. TIPPETS 8-15-13 STATE OF UTAH

2nd District Juvenile Courthouse

Utah State Courts
08284150
165 West 20th Street, Ogden, Utah
BID DOCUMENTS

Rev #	Date	Description

Job # 12500
Date August 15, 2013
Owner # 08284150
Ins. #

LEVEL 1, AREA B
FINISH PLAN

A111.3B

8/14/2013 2:26:36 PM

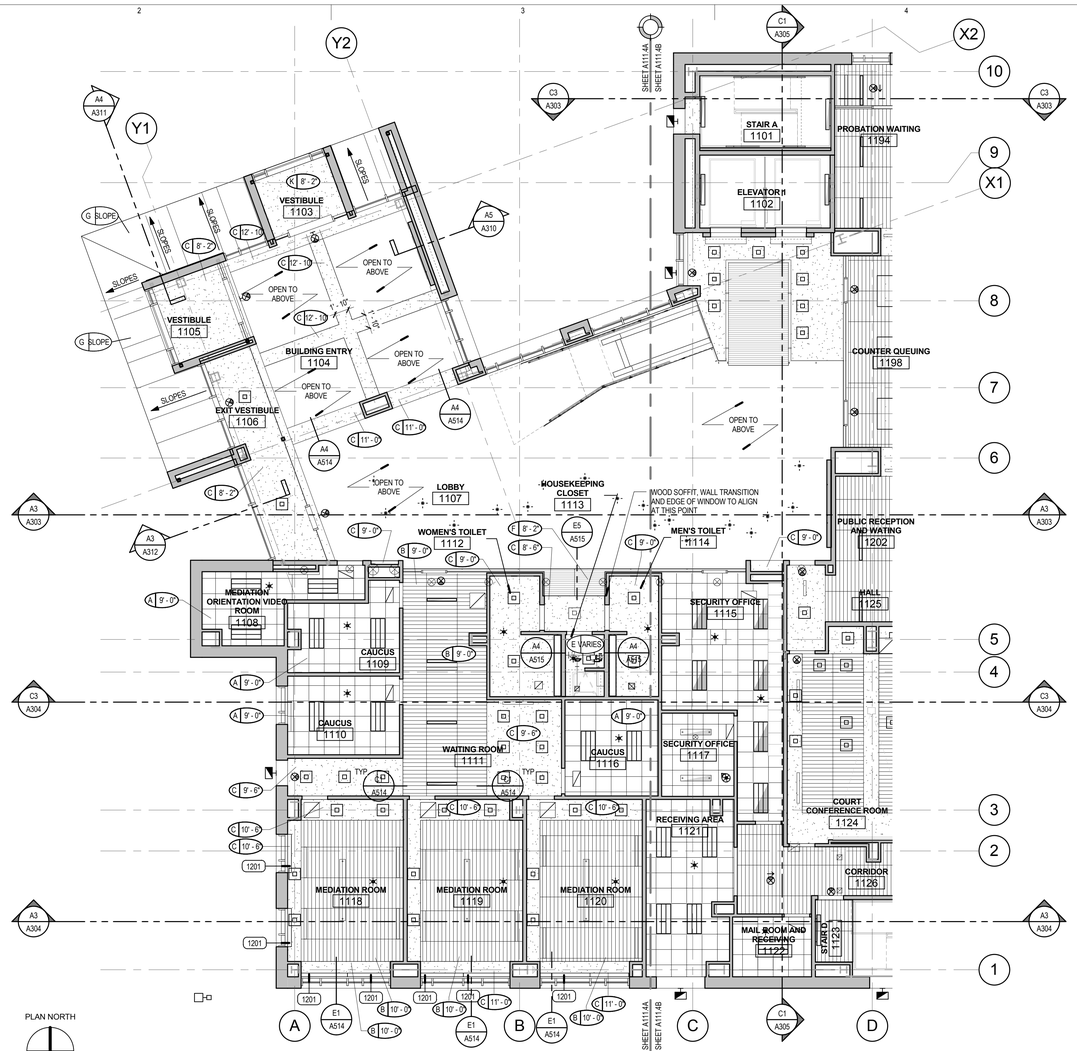

FIRST FLOOR PLAN, REFLECTED CEILING

C1 SCALE: 1/8" = 1'-0"

PLAN NORTH

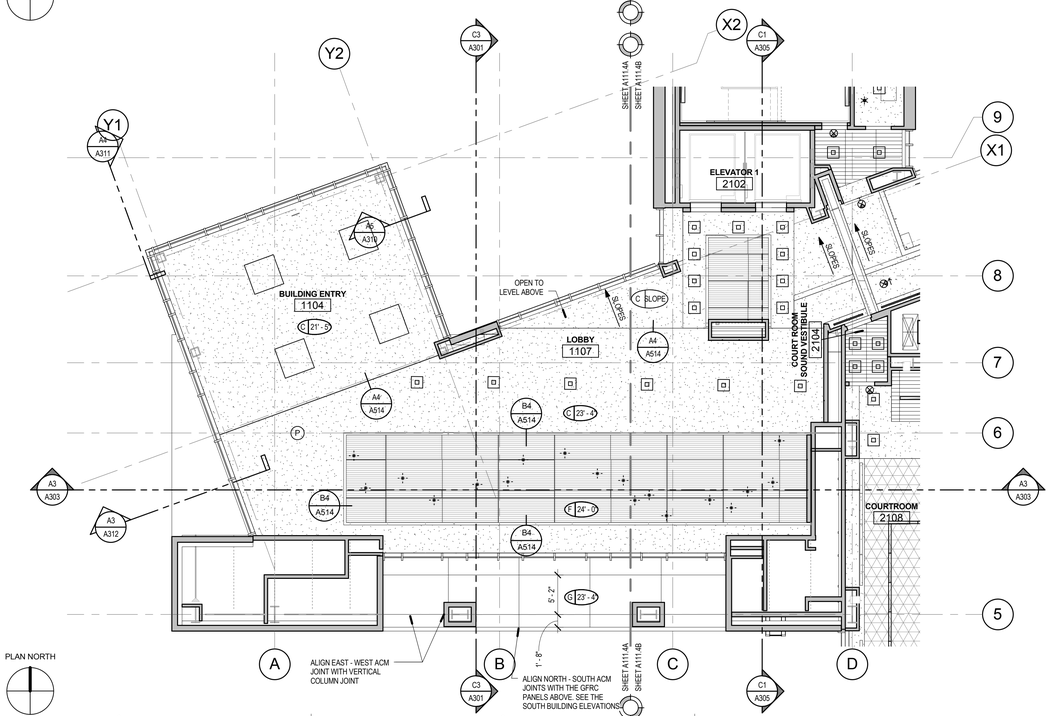

LEVEL 1 AREA A UPPER LOBBY REFLECTED CEILING

A1 SCALE: 1/8" = 1'-0"

PLAN NORTH

CEILING LEGEND

	A-	SUSPENDED 2' X 4' ACOUSTICAL LAY-IN TILE CEILING WITH SINGLE KERF (2x2 LOOK)
	B-	SUSPENDED 2' X 4' ACOUSTICAL LAY-IN TILE CEILING WITH 3 KERFS (6"x4' LOOK), 6" HIGH PRE-FINISHED METAL PERIMETER TRIM AT EDGES NOT TOUCHING A WALL
	C-	SUSPENDED 5/8" GYP. BD. CEILING SYSTEM - (1 LAYER) PAINTED
	D-	PRECAST CONCRETE CEILING, PAINTED
	E-	OPEN TO STRUCTURE ABOVE, ALL SURFACES PAINTED: STRUCTURE, MECHANICAL, ELECTRICAL, ETC.
	F-	WOOD VENEERED 1/4" SUBSTRATE ADHEARED TO 1/2" MDF. 1/2" MDF PAINTED BLACK AND SECURED TO 2-1/2" METAL STUDS @ 16" OC. 2-1/2" STUDS ARE ATTACHED TO 6" METAL STUDS @16"O.C., SEE ASSOCIATED DETAILS
	G-	ACM METAL PANEL ATTACHED TO THERMALLY BROKEN 3" Z-FURRING @16" O.C. OVER AIR AND MOISTURE BARRIER WITH 3" MINERAL WOOL INSULATION. Z FURRING ATTACHED TO SUSPENDED 5/8" GYP. SHEATHING SOFFIT SYSTEM
	H-	SUSPENDED ACOUSTICAL LAY-IN CEILING AS DESCRIBED IN CEILING TYPE 'B', SUSPENDED 12" BELOW A SUSPENDED 5/8" GYP BOARD CEILING, GYP BOARD JOINTS ARE TO BE FINISHED BUT BOARD IS NOT PAINTED
	J-	STRETCHED FABRIC CEILING SYSTEM OVER 1" FIBERGLASS BATT INSULATION MOUNTED TO 5/8" GYP BOARD CEILING SYSTEM. GYP BOARD JOINTS TO BE FINISHED BUT BOARD IS NOT PAINTED
	K-	SUSPENDED 5/8" GYP. BD. CEILING SYSTEM - OVER HAT CHANNEL FURRING, PAINTED

CEILING SYMBOLS

ELECTRICAL

- 2'X4' FLUORESCENT FIXTURE
- 2'X2' FLUORESCENT FIXTURE
- 6"X4' FLUORESCENT FIXTURE
- FLUORESCENT STRIP FIXTURE
- RECESSED SQUARE DOWN LIGHT
- WALL WASH
- 1'X4' FLUORESCENT FIXTURE
- EXIT SIGN, SINGLE-SIDED
- EXIT SIGN, DOUBLE-SIDED
- F — FIRE ALARM
- S — SPEAKER
- P — SMOKE DETECTOR
- W — WIRELESS INTERNET

MECHANICAL

- SUPPLY GRILLE
- RETURN GRILLE
- EXHAUST GRILLE
- LINEAR DIFFUSER
- SPRINKLER HEAD - CEILING MOUNT
- SPRINKLER HEAD - WALL MOUNT

GENERAL CEILING NOTES

1. REFER TO DETAIL A5/A514 FOR TYPICAL ACOUSTICAL LAY-IN CEILING SUSPENSION & SEISMIC BRACING
2. REFER TO DETAIL A6/A514 FOR TYPICAL SUSPENDED GYP. BOARD CEILINGS
3. ALL UNIDENTIFIED CEILING TYPES ON THE PLANS SHALL BE BID AS TYPE " A"
4. GRID SUSPENSION SYSTEMS SHALL BE CENTERED WITHIN AREAS INDICATED, UNLESS NOTED OTHERWISE
5. PAINT ALL EXPOSED STRUCTURE, MECHANICAL, DUCTS, ELECTRICAL WORK, PIPING, ETC. ALL VISIBLE ELEMENTS TO BE PAINTED AT TYPE "B" & TYPE "E"
6. REFER TO ARCHITECTURAL DRAWINGS FOR LOCATION OF MECHANICAL GRILLES, AND TO MECHANICAL DRAWINGS FOR QUANTITIES AND TYPES
7. REFER TO ARCHITECTURAL DRAWINGS FOR LOCATIONS OF LIGHT FIXTURES AND TO ELECTRICAL DRAWINGS FOR QUANTITY AND TYPES
8. MECHANICAL AND ELECTRICAL CONTRACTORS TO COORDINATE WORK WITH SPRINKLER CONTRACTOR TO AVOID CONFLICTS IN FIELD
9. ALL CEILING HEIGHTS ARE ELEVATION ABOVE FINISH FLOOR
10. ALL TYPE C CEILINGS IN RESTROOMS, LOCKER ROOMS, SHOWERS, AND WET AREAS TO BE EPOXY PAINTED
11. SEE DETAIL C5/A514 FOR TYPICAL SPRINKLER HEAD LAYOUT REQUIREMENTS
12. SEE DETAIL C6/A514 FOR TYPICAL DEVICE ALIGNMENT REQUIREMENTS

KEYED NOTES

1201 MANUAL ROLLER WINDOW SHADES FULL LENGTH OF WINDOW, SHADE BREAKS TO ALIGN WITH MULLION

VCBO ARCHITECTURE
524 SOUTH 600 EAST
SALT LAKE CITY, UT 84102
Phone: (801) 575-8800
Fax: (801) 531-9850
Web: vcbo.com

LICENSED ARCHITECT No. 153912 BRENT R. TIPPETS 8-15-13 STATE OF UTAH

2nd District Juvenile Courthouse

Utah State Courts
08284150
165 West 20th Street, Ogden, Utah
BID DOCUMENTS

Rev #	Date	Description

Job # 12500
Date August 15, 2013
Owner # 08284150
Ins. #

LEVEL 1, REFLECTED CEILING

A111.4A

8/14/2013 2:27:05 PM

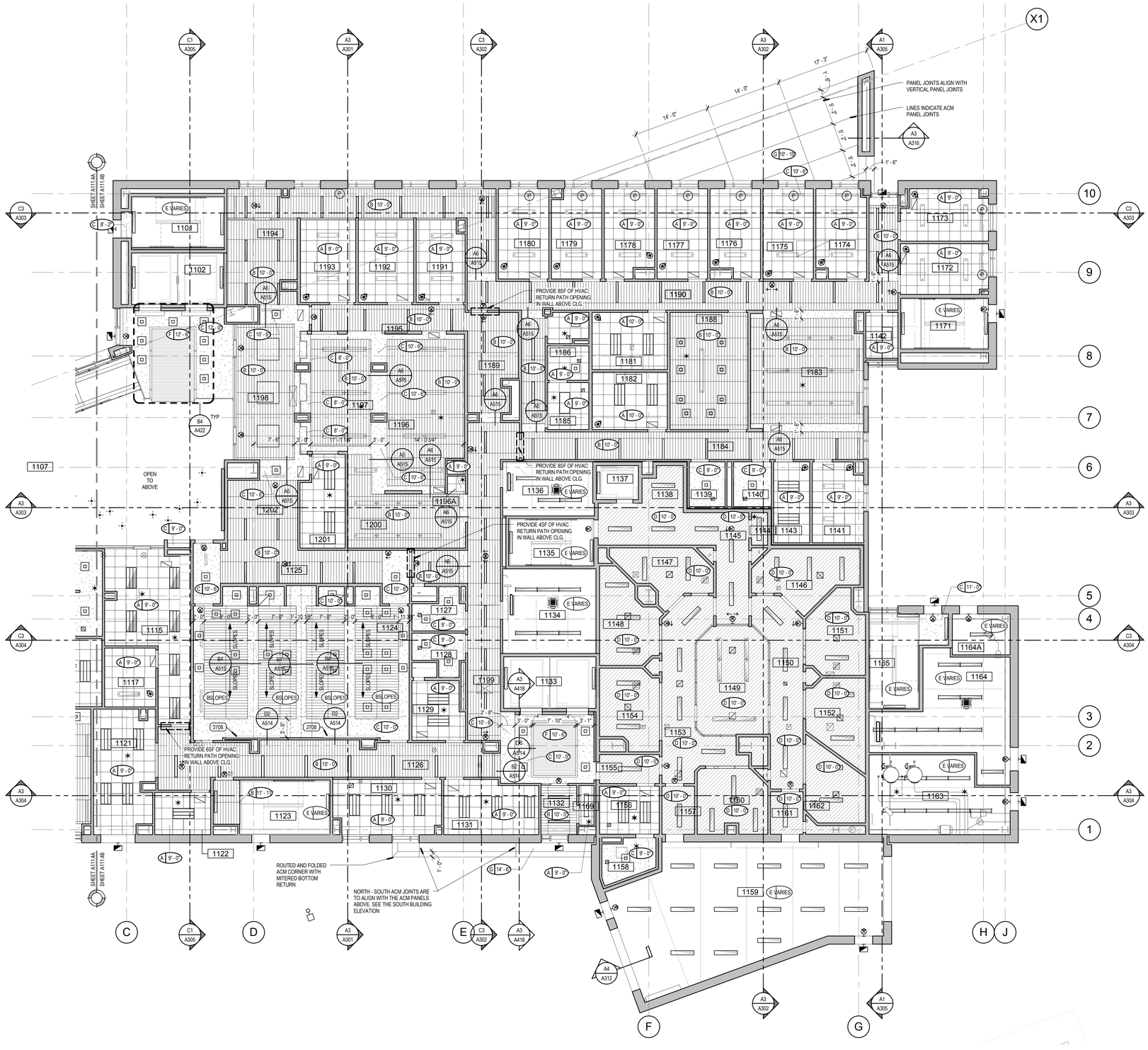

A1 FIRST FLOOR PLAN, REFLECTED CEILING

SCALE: 1/8" = 1'-0"

PLAN NORTH

CEILING LEGEND

	A-	SUSPENDED 2' X 4' ACOUSTICAL LAY-IN TILE CEILING WITH SINGLE KERF (2x2 LOOK)
	B-	SUSPENDED 2' X 4' ACOUSTICAL LAY-IN TILE CEILING WITH 3 KERFS (6"x4' LOOK), 6" HIGH PRE-FINISHED METAL PERIMETER TRIM AT EDGES NOT TOUCHING A WALL
	C-	SUSPENDED 5/8" GYP. BD. CEILING SYSTEM - (1 LAYER) PAINTED
	D-	PRECAST CONCRETE CEILING, PAINTED
	E-	OPEN TO STRUCTURE ABOVE, ALL SURFACES PAINTED: STRUCTURE, MECHANICAL, ELECTRICAL, ETC.
	F-	WOOD VENEERED 1/4" SUBSTRATE ADHEARED TO 1/2" MDF. 1/2" MDF PAINTED BLACK AND SECURED TO 2-1/2" METAL STUDS @ 16" OC. 2-1/2" STUDS ARE ATTACHED TO 6" METAL STUDS @16"O.C., SEE ASSOCIATED DETAILS
	G-	ACM METAL PANEL ATTACHED TO THERMALLY BROKEN 3" Z-FURRING @16" O.C. OVER AIR AND MOISTURE BARRIER WITH 3" MINERAL WOOL INSULATION. Z FURRING ATTACHED TO SUSPENDED 5/8" GYP. SHEATHING SOFFIT SYSTEM
	H-	SUSPENDED ACOUSTICAL LAY-IN CEILING AS DESCRIBED IN CEILING TYPE 'B', SUSPENDED 12" BELOW A SUSPENDED 5/8" GYP BOARD CEILING, GYP BOARD JOINTS ARE TO BE FINISHED BUT BOARD IS NOT PAINTED
	J-	STRETCHED FABRIC CEILING SYSTEM OVER 1" FIBERGLASS BATT INSULATION MOUNTED TO 5/8" GYP BOARD CEILING SYSTEM, GYP BOARD JOINTS TO BE FINISHED BUT BOARD IS NOT PAINTED
	K-	SUSPENDED 5/8" GYP. BD. CEILING SYSTEM - OVER HAT CHANNEL FURRING, PAINTED

CEILING SYMBOLS

ELECTRICAL

- 2'X4' FLUORESCENT FIXTURE
- 2'X2' FLUORESCENT FIXTURE
- 6"X4' FLUORESCENT FIXTURE
- FLUORESCENT STRIP FIXTURE
- RECESSED SQUARE DOWN LIGHT
- WALL WASH
- 1'X4' FLUORESCENT FIXTURE
- EXIT SIGN, SINGLE-SIDED
- EXIT SIGN, DOUBLE-SIDED
- F — FIRE ALARM
- S — SPEAKER
- P — SMOKE DETECTOR
- W — WIRELESS INTERNET

MECHANICAL

- SUPPLY GRILLE
- RETURN GRILLE
- EXHAUST GRILLE
- LINEAR DIFFUSER
- SPRINKLER HEAD - CEILING MOUNT
- SPRINKLER HEAD - WALL MOUNT

GENERAL CEILING NOTES

1. REFER TO DETAIL A5/A514 FOR TYPICAL ACOUSTICAL LAY-IN CEILING SUSPENSION & SEISMIC BRACING
2. REFER TO DETAIL A6/A514 FOR TYPICAL SUSPENDED GYP. BOARD CEILINGS
3. ALL UNIDENTIFIED CEILING TYPES ON THE PLANS SHALL BE BID AS TYPE " A"
4. GRID SUSPENSION SYSTEMS SHALL BE CENTERED WITHIN AREAS INDICATED, UNLESS NOTED OTHERWISE
5. PAINT ALL EXPOSED STRUCTURE, MECHANICAL, DUCTS, ELECTRICAL WORK, PIPING, ETC. ALL VISIBLE ELEMENTS TO BE PAINTED AT TYPE "B" & TYPE "E"
6. REFER TO ARCHITECTURAL DRAWINGS FOR LOCATION OF MECHANICAL GRILLES, AND TO MECHANICAL DRAWINGS FOR QUANTITIES AND TYPES
7. REFER TO ARCHITECTURAL DRAWINGS FOR LOCATIONS OF LIGHT FIXTURES AND TO ELECTRICAL DRAWINGS FOR QUANTITY AND TYPES
8. MECHANICAL AND ELECTRICAL CONTRACTORS TO COORDINATE WORK WITH SPRINKLER CONTRACTOR TO AVOID CONFLICTS IN FIELD
9. ALL CEILING HEIGHTS ARE ELEVATION ABOVE FINISH FLOOR
10. ALL TYPE C CEILINGS IN RESTROOMS, LOCKER ROOMS, SHOWERS, AND WET AREAS TO BE EPOXY PAINTED

KEYED NOTES

11. SEE DETAIL C/A514 FOR TYPICAL SPRINKLER HEAD LAYOUT REQUIREMENTS
12. SEE DETAIL C/A514 FOR TYPICAL DEVICE ALIGNMENT REQUIREMENTS

2708 RECESSED CEILING MOUNTED PROJECTION SCREEN

VCBO ARCHITECTURE

VCBO ARCHITECTURE
524 SOUTH 600 EAST
SALT LAKE CITY, UT 84102
Phone: (801) 575-8800
Fax: (801) 531-9850
Web: vcbo.com

LICENSED ARCHITECT No. 153912 BRENT R. TIPPETS 8-15-13 STATE OF UTAH

2nd District Juvenile Courthouse

Utah State Courts
08284150
165 West 20th Street, Ogden, Utah
BID DOCUMENTS

Rev #	Date	Description

Job # 12500
Date August 15, 2013
Owner # 08284150
Ins. #

LEVEL 1, REFLECTED CEILING

A111.4B

8/14/2013 2:27:28 PM

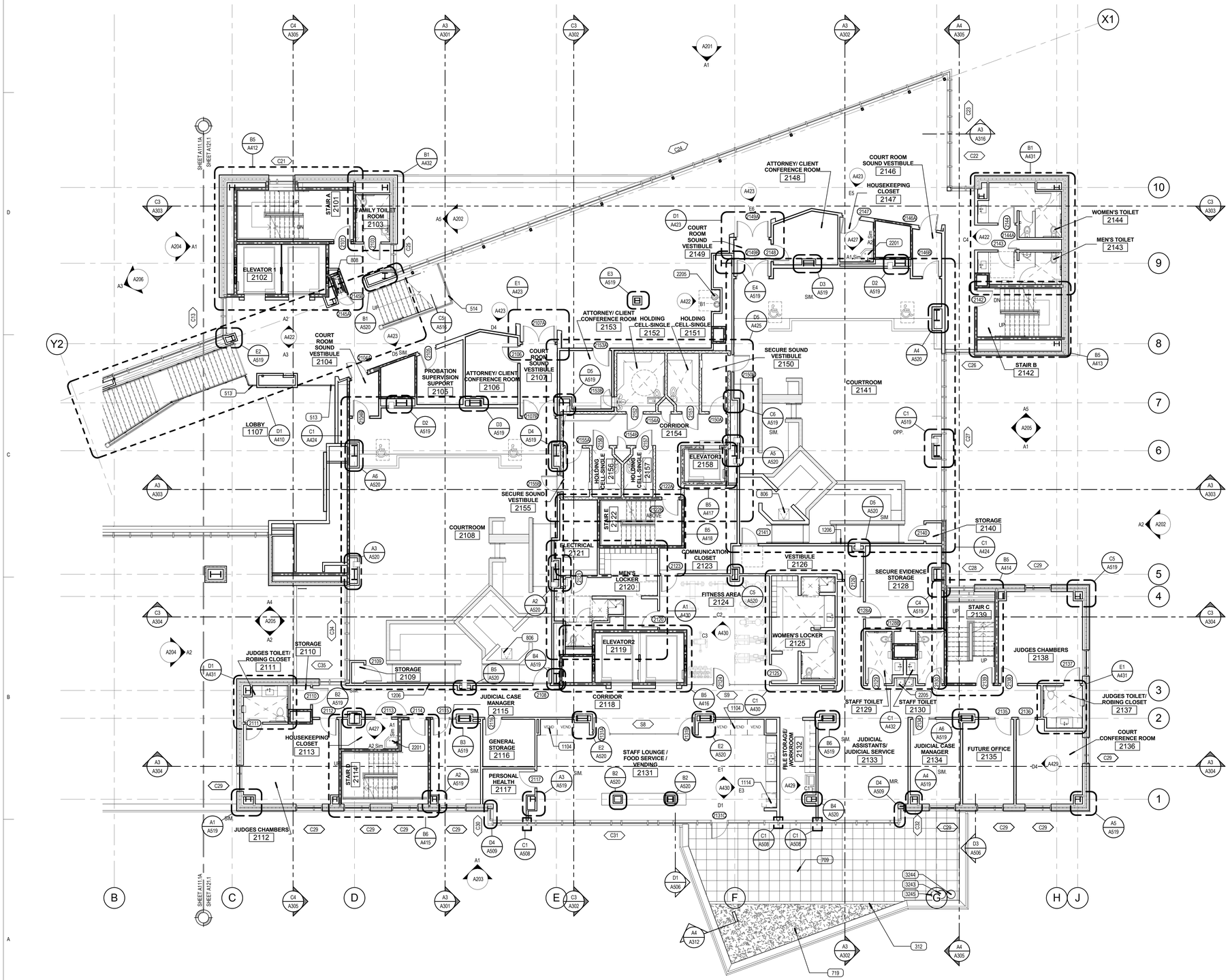

A1 LEVEL 2 ANNOTATED

SCALE: 1/8" = 1'-0"

KEYED NOTES

312	CONCRETE CURB
513	DECORATIVE GLASS RAILING
514	1 1/2" DIA. STAINLESS STEEL HANDRAIL
709	PLAZA TILE SYSTEM
719	ROOF GARDEN SYSTEM - SEE LANDSCAPE PLANS FOR SOIL TYPE
806	24"X 24" FLOOR ACCESS DOOR WITH CARPET INSERT
808	ACCORDIAN FIRE DOOR
1104	VENDING MACHINE, NIC
1114	REFRIGERATOR, NIC
1206	THRU-WALL PEEP HOLE
2201	JANITOR'S SINK
2205	ELECTRIC WATER COOLER
3243	TRASH RECEPTACLE
3244	RECYCLING RECEPTACLE
3245	ASHTRAY RECEPTACLE

PLAN NOTES

1. WHERE FLOOR DRAINS ARE INSTALLED, THE FLOOR IS **NOT** TO SLOPE TOWARD THE DRAIN (REMAINS FLAT) EXCEPT AT THE FOLLOWING LOCATIONS:
   A. THICK SET TILE LOCATED IN CONJUCTION WITH SHOWERS.
   B. FLOORS NOT TILED AT SLAB-ON-GRADE LOCATIONS (LEVEL 1 HOLDING AND MECHANICAL ROOMS)
   WHERE FLOORS SLOPE, THE MAXIMUM FLOOR SLOPE IS NOT TO EXCEED 2% WHILE THE MINIMUM SLOPE IS NOT TO BE LESS THAN 1%.

2. WHERE CONCRETE PADS ARE CALLED TO BE CONSTRUCTED UNDER EQUIPMENT THE SLAB IS TO BE 8" THICK U.N.O., AND IS TO HAVE #4 BARS AT 16" O.C. EACH WAY. COORDINATE DIMENSIONS OF PAD WITH ACTUAL EQUIPMENT SPEC

3. THE CONTRACTOR IS TO ENSURE THAT BETWEEN ANY FINISH FLOOR ELEVATION TO 42" A.F.F. ALL GUARDRAILS ARE TO BE CONSTRUCTED AND INSTALLED SO THAT A 4" SPHERE WILL NOT PASS BETWEEN ANY TWO ADJACENT GUARDRAIL COMPONENTS OR BETWEEN THE EDGE OF A GUARDRAIL AND ALL ADJACENT BUILDING ELEMENT SUCH AS A WALL OR FLOOR.

WALL NOTES

1. SEE SHEETS A500 AND A501 FOR ALL WALL TYPE DEFINITIONS

2. PARTITION TYPE INDICATIONS ARE INDEPENDENT OF APPLIED FINISHES, SUCH AS TILE OR WOOD PANELING. SEE THE FINISH SHEETS AND INTERIOR ELEVATIONS FOR WALL FINISHES INCLUDING COURSING AND PANEL LAYOUT AND/OR THE DESIGNATIONS ON THE PLANS FOR ADDITIONAL INFORMATION REGARDING APPLIED FINISHES.

3. WHERE PARTITION TYPE DESIGNATION ON FLOOR PLANS IS INTERRUPTED BY DOOR OPENING, GLAZED PARTITION, ETC., CONSTRUCTION ABOVE INTERRUPTION (AND WHERE APPLICABLE BELOW) IS TO BE THE SAME AS THAT DESIGNATED FOR THE PARTITION IN WHICH THE INTERRUPTION OCCURRED.

4. THE MINIMUM REQUIREMENTS FOR CONSTRUCTION OF EACH PARTITION TYPE AS EXPRESSED BY THE INDICATED REFERENCE ARE INCORPORATED BY REFERENCE AND ARE APPLICABLE TO THE WORK OF THIS PROJECT. HOWEVER, ADDITIONAL AND/OR MORE RESTRICTIVE REQUIREMENTS MAY BE INDICATED BY THE SPECIFICATIONS AND DRAWINGS. SUCH REQUIREMENTS ALSO APPLY AND SHALL GOVERN. SUCH REQUIREMENTS INCLUDE BUT ARE NOT LIMITED TO:

   A. USE 5/8" THICK GYPSUM BOARD THROUGHOUT UNLESS NOTED OTHERWISE.

   B. USE 16" OC MAX STUD SPACING UNLESS NOTED OTHERWISE IN THESE DOCUMENTS. THE SPACING STATED BY THE REFERENCED APPROVAL OR TEST REPORT IS THE MAX SPACING IF ALLOWED IN THESEDOCUMENTS.

   C. USE STUDS OF GAGE INDICATED ON THE DRAWINGS OR IN THE SPECIFICATIONS. THE GAGE STATED BY THE REFERENCED APPROVAL OR TEST REPORT IS THE MINIMUM GAGE TESTED, 20 GA (30 MILS) IS THE MINIMUM ALLOWED IN THESE DOCUMENTS.

5. USE STUDS OF DEPTH INDICATED BY THIS SET OF DOCUMENTS. THE DEPTH STATED BY THE REFERENCED APPROVAL OR TEST REPORT IS THE MINIMUM DEPTH ALLOWED IN THESE DOCUMENTS.

6. AT INTERIOR STUD WALLS, THE CONTRACTOR IS RESPONSIBLE FOR SELECTING THE STUD GAUGE BASED ON THE HEIGHT OF WALL BEING CONSTRUCTED USING THE REQUIRMENTS FOUND IN THE "NON-BEARING METAL STUD GAUGE SIZING" CHART LOCATED ON SHEET A501.

7. PROVIDE FIRE RATED CONSTRUCTION ASSEMBLIES WHERE INDICATED ON SHEET G200 AND FLOOR PLAN DRAWINGS.

8. ALL DIMENSIONS ARE CENTER OF STUD OR FACE OF CONCRETE, MASONRY OR ROUGH OPENING UNLESS NOTED OTHERWISE.

9. AT ALL WALLS, STUDS, INSULATION AND GYPSUM BOARD ARE TO EXTEND TO THE DECK ABOVE. UNLESS NOTED OTHERWISE.

10. WALL TYPES NOT NOTED ARE ASSUMED TO MATCH ADJACENT ROOMS. NOTIFY ARCHITECT OF ANY DISCREPANCIES.

11. ALL METAL STUD PARTITIONS ARE CONSIDERED ACOUSTIC PARTITIONS AND ARE TO RECEIVE A TYPE 1 SOUND ATTENUATION BLANKET. THICKNESS TO MATCH STUD DEPTH, UNLESS NOTED OTHERWISE.

12. REFER TO SHEET A511 FOR TYPICAL INTERIOR WALL CONDITIONS ASSOCIATED WITH ALL METAL STUD AND CMU PARTITIONS.

13. SEE DETAIL B4/A511 FOR THE TYPICAL TOP OF WALL CONDITION TO BE USED AT ALL INTERIOR STUD WALLS.

14. PROVIDE CONTROL JOINTS IN METAL FRAMED WALLS AT APPROXIMATELY 30 FEET ON CENTER. LOCATE AT CORNER ABOVE DOORS OR INSIDE CORNER OF PILASTERS OR OTHER INCONSPICUOUS LOCATION WHERE POSSIBLE. **CONSULT WITH ARCHITECT PRIOR TO COMMENCING FRAMING.**

15. AT WALL OPENINGS FOR PENETRATION OF PIPES, DUCTS, DEVICES, ETC., GYPSUM BOARD IS TO BE CUT TO MATCH THE SHAPE AND DIMENSION OF THE PENETRATING OBJECT AND THE GAP BETWEEN THE OBJECT AND THE WALL IS TO BE SEALED W/ ACOUSTICAL OR FIRE SEALANT ON ALL SIDES WITH A 3/4" JOINT AT ALL SIDES, MAXIMUM. THE OPENING FOR DUCTS OR LARGE PENETRATIONS SHALL BE FRAMED WITH A HEADER, ADD AN ANGLED CORNER BRACE IF THE GAP EXCEEDS 3" FROM FRAMING TO THE OPENING, SEE DETAIL D5/511.

16. CONTRACTOR TO PROVIDE BLOCKING / BACKING FOR ALL WALL MOUNTED EQUIPMENT. SEE FLOOR PLANS AND INTERIOR ELEVATIONS FOR CABINETS, GRAB BARS ETC. INSTALL BLOCKING AS DETAILED OR AS REQUIRED TO MOUNT SUCH DEVICES. ALL BLOCKING IS TO BE FIRE RETARDANT TREATED OR 20 GA METAL PER DETAIL C4/A511.

17. WHERE THERE IS LIMITED WATER EXPOSURE: INSTALL ONE LAYER OF 5/8" TYPE X WATER RESISTANT GYPSUM BOARD PER ASTM C1396 (WHERE GYPSUM BOARD OCCURS) OF BASIC PARTITION AT THE FOLLOWING LOCATIONS:

   A. WITHIN 2 FEET HORIZONTALLY AND 4 FEET VERTICALLY OF JANITORS SINKS

   B. AT OTHER LOCATIONS, I.E. TOILET ROOMS AND KITCHENS, AND AS INDICATED ON THE ARCHITECTURAL FINISH PLANS AND ELEVATIONS.

18. WHERE CERAMIC TILE FINISHES ARE INDICATED PER THE FINISH PLANS AND ELEVATIONS, INSTALL ONE LAYER OF 5/8" GLASS MAT TILE BACKER BOARD IN LIEU OF GYPSUM BOARD (WHERE GYPSUM BOARD OCCURS) OF BASIC PARTITION WHERE THERE IS NO FIRE RATING AND OVER GYPSUM BOARD FACE LAYER AT FIRE RATED PARTITIONS AT THE FOLLOWING LOCATIONS.

19. ALL EXTERIOR WALLS TO HAVE 2" OF SPRAY FOAM INSULATION APPLIED TO THE INTERIOR FACE OF SHEATHING OR TO THE BACK OF THE GFRC PANEL (UNLESS NOTED OTHERWISE).

20. AT WALLS HOLDING EXTERIOR METAL PANELS, A FLUID APPLIED MEMBRANE IS TO BE APPLIED TO THE EXTERIOR FACE OF THE GYP SHEATHING FOR THE FULL HEIGHT AND LENGTH OF THE WALL, SEAL ALL PENETRATIONS. **PLEASE NOTE THAT TWO MEMBRANE TYPES ARE TO BE USED (VAPOR PERMEABLE AND VAPOR BARRIER)**. SEE WALL TYPES, SPECIFICATIONS AND DETAILS FOR LOCATION OF EACH TYPE.

21. AT EXTERIOR METAL PANELS, 3" OF MINERAL WOOL CAVITY INSULATION IS TO BE PROVIDED.

22. THE FLUID APPLIED MEMBRANE SYSTEMS (PERMEABLE AND VAPOR BARRIER) ARE TO WRAP INTO ALL WINDOW AND DOOR OPENINGS PER THE MEMBRANE MANUFACTURER'S APPROVED DETAILS.

23. SEE STRUCTURAL PLANS FOR ADDITIONAL CONCRETE AND MASONRY WALL INFORMATION.

24. SEE EXTERIOR ELEVATIONS FOR G.F.R.C., ACM AND PROFILE METAL PANEL ORIENTATION AND JOINT PLACEMENT.

25. ALL MASONRY WALLS ARE TO BE REINFORCED AND ARE TO BE SET ON REINFORCED FOOTINGS. CONTROL JOINTS TO BE LOCATED AS PER THE REQUIREMENTS FOUND IN THE STRUCTURAL DOCUMENTS BUT ARE NOT TO EXCEED 30' OC. SEE THE STRUCTURAL DRAWINGS FOR REINFORCING AND OTHER DETAILS PERTAINING TO MASONRY WALLS. IF NOT OTHERWISE NOTED, LOCATE CONTROL JOINTS AT CORNER ABOVE DOORS, INSIDE CORNER OF PILASTERS OR OTHER INCONSPICUOUS LOCATION WHERE POSSIBLE. CONSULT WITH ARCHITECT PRIOR TO INSTALLING.

26. SEE IBC 2009, CHAPTER 7 FOR FIRE RESISTIVE REQUIREMENTS ON NEW CONCRETE AND CONCRETE MASONRY UNIT WALLS.
-CMU WALLS (IBC TABLE 720.1(2), ITEM 3)
-CAST IN PLACE CONCRETE WALLS (IBC TABLE 721.2.1.2(1))

27. AT WALL OPENINGS FOR PENETRATION OF PIPES, DUCTS, DEVICES, ETC., MASONRY IS TO BE CUT TO MATCH THE SHAPE AND DIMENSION OF THE PENETRATING OBJECT AND THE GAP BETWEEN THE OBJECT AND THE WALL IS TO BE SEALED W/ ACOUSTICAL OR FIRE SEALANT ON ALL SIDES WITH A 3/4" JOINT AT ALL SIDES, MAXIMUM.

28. PROTECTION OF MASONRY: DURING CONSTRUCTION, COVER TOPS OF WALLS, PROJECTIONS, AND SILLS WITH WATERPROOF SHEETING AT END OF EACH DAY'S WORK, EXCEPT WHEN THE AMBIENT TEMPERATURE IS EXPECTED TO REMAIN ABOVE 65 DEG F AND NO PRECIPITATION IS FORECAST FOR THE NEXT 24 HOURS. (THIS IS TO PREVENT CONDENSATION FROM COVERED WALLS CAUSING A MOISTURE PROBLEM.) COVER PARTIALLY COMPLETED MASONRY EACH DAY THAT CONSTRUCTION IS NOT IN PROGRESS. WALLS ARE TO BE PROTECTED UNTIL THEY ARE PERMANENTLY PROTECTED BY THE ROOFING MEMBRANE OVER THE CAP PLATE. THE GENERAL CONTRACTOR IS TO PROVIDE TEMPORARY PROTECTION IMMEDIATELY FOLLOWING THE TOPPING OUT OF EACH SECTION OF WALL BY INSTALLING WATERPROOF SHEETING OVER A CONTINUOUS CAP PLATE UNTIL THE ROOFING MEMBRANE IS INSTALLED. **A SOLID GROUTED TOP BOND BEAM SHALL NOT BE CONSIDERED ADEQUATE PROTECTION FOR THE WALL.**

29. AT PAINTED CMU THE HORIZONTAL AND VERTICAL MORTAR JOINTS ARE TO BE CONCAVE. AT ALL HONED BLOCK SITE WALLS THE HORIZONTAL MORTAR JOINT IS TO BE A WEATHERED JOINT AND ALL VERTICAL JOINTS ARE TO BE RAKED.

30. ALL VERTICAL MASONRY CORNERS WHICH FALL WITHIN THE INTERIOR OF THE BUILDING, INCLUDING CORNERS AT DOOR AND WINDOW OPENINGS ARE TO HAVE A 3/4" CHAMFER EXTENDING FROM 4" A.F.F. TO THE DECK ABOVE OR THE BOTTOM OF THE HEADER. SEE DETAIL D6/A512.

31. PROVIDE SPECIAL SHAPES, SUCH AS "U" SHAPED CHANNEL FOR LINTELS OR HEADERS AND CAPPING UNITS FOR SASH AND OTHER SPECIAL CONDITIONS. U SHAPED BLOCKS ARE TO BE 16"X8"X THE WIDTH OF THE WALL.

32. WHERE A FLUID APPLIED MEMBRANES ARE TO BE APPLIED OVER CMU, THE MORTAR JOINTS ARE TO BE STRUCK FLUSH AND SMOOTH.

33. ALL WALL COMPONENTS (GYP. BOARD, VAPOR BARRIER, INSULATION, ETC...) ARE TO EXTEND TO THE DECK ABOVE OR TO TOP OF PARAPET UNLESS NOTED OTHERWISE.

VCBO ARCHITECTURE

VCBO ARCHITECTURE
524 SOUTH 600 EAST
SALT LAKE CITY, UT 84102
Phone: (801) 575-8800
Fax: (801) 531-9850
Web: vcbo.com

2nd District Juvenile Courthouse

Utah State Courts
08284150
165 West 20th Street, Ogden, Utah
BID DOCUMENTS

Rev #	Date	Description

Job # 12500
Date August 15, 2013
Owner # 08284150
Ins. #

LEVEL 2, ANNOTATED

A121.1

8/15/2013 9:21:06 AM

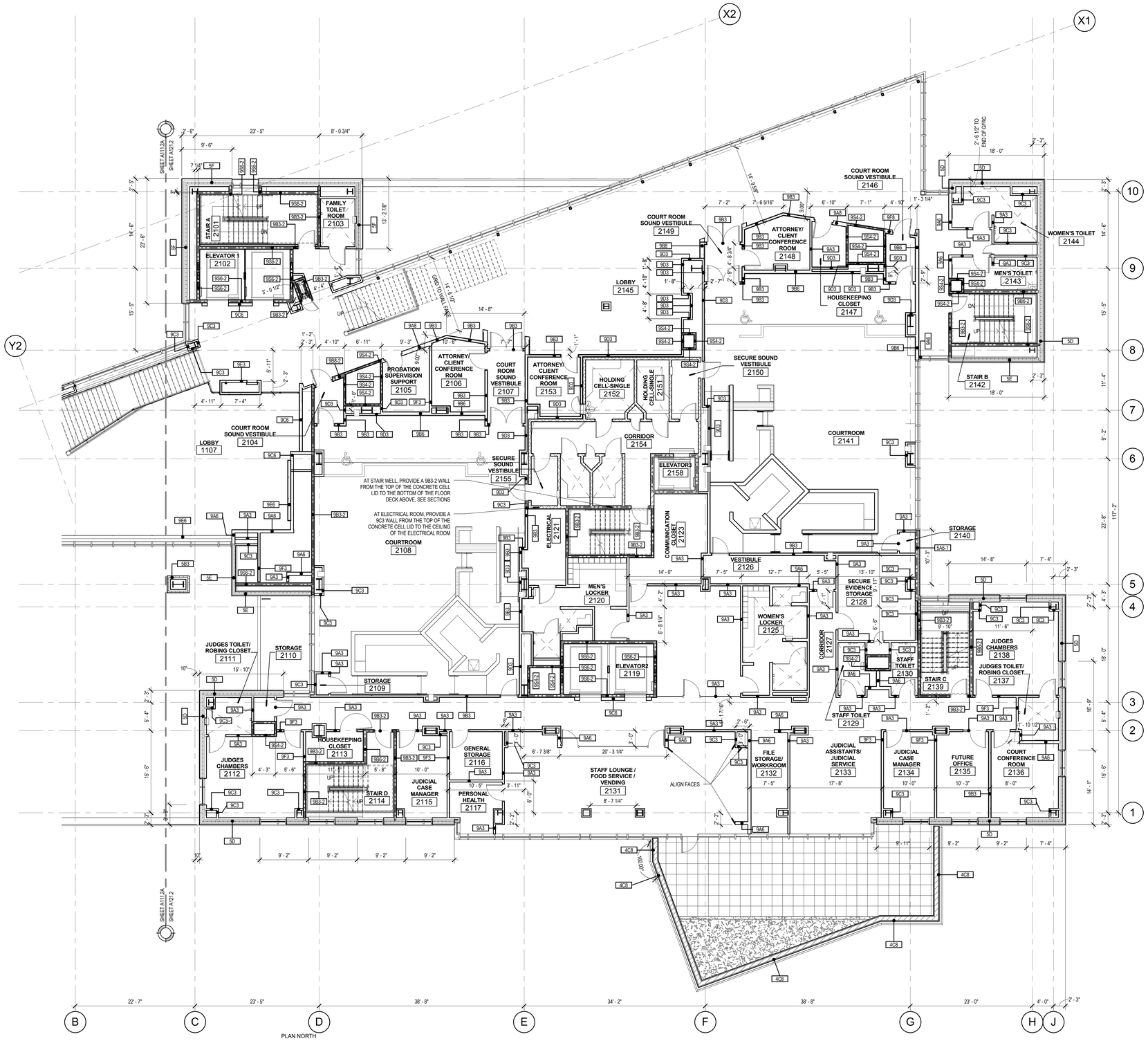

A1 LEVEL 2 DIMENSION AND WALL TYPES

SCALE: 1/8" = 1'-0"

DIMENSION NOTES

1. ALL DIMENSIONS ARE TO CENTER OF STUD WALL OR FACE OF CONCRETE, MASONRY OR ROUGH OPENING UNLESS NOTED OTHERWISE. WHERE THE END OF A WALL IS INDICATED THE DIMENSION IS TO THE FINISH SURFACE OF THE WALL END.
2. UNLESS DIMENSIONED OTHERWISE, THE DIMENSION FROM THE BUCK OF A DOOR FRAME IS TO BE 4" TO THE WALL CORNER.
3. EXCEPT WHERE DIRECTED TO PLACE ITEMS OF WORK AT THE APPROXIMATE LOCATION SHOWN, DO NOT SCALE DRAWINGS FOR DIMENSIONAL INFORMATION. ALL ELEMENTS OF THE DRAWINGS MAY NOT BE DRAWN TO EXACT SCALE. ALL DIMENSIONS REQUIRED ARE SHOWN OR MAY BE DERIVED FROM THOSE SHOWN ON THE FLOOR PLANS, DETAIL PLANS, ELEVATIONS, SECTIONS, DETAILS, SCHEDULES AND SPECIFICATIONS. IF DIMENSIONS ARE NOT PRESENT, THE ARCHITECT IS TO BE NOTIFIED SO THAT A CLARIFICATION CAN BE ISSUED

KEY FOR PARTITION TYPES

DENOTES TYPE OF CONSTRUCTION (SPEC. DIVISION) — WALL

3X 0 SERIES	CONCRETE
4X 0 SERIES	MASONRY
5X 0 SERIES	COLD FORMED METAL STUDS, 16ga MIN.
9X 0 SERIES	METAL STUDS

NOMINAL SIZES: V = VARIABLE/MATCHEXISTING
1 = 1 5/8" STUDS
2 = 2 1/2" STUDS
3 = 3 5/8" STUDS
4 = 4" STUDS / 4" (NOM.) C.M.U.
6 = 6" STUDS / 6" (NOM.) C.M.U.
8 = 8" STUDS / 8" (NOM.) C.M.U.
10 = 10" (NOM.) C.M.U. OR CONC.
12 = 12" (NOM.) C.M.U. OR CONC.

EXAMPLE: WALL TYPE 9A3 IS A 3 5/8" METAL STUD WITH 5/8" GYPSUM BOARD ON BOTH SIDES.

NOTE: SEE GENERAL NOTES BELOW FOR ADDITIONAL ELEMENTS IN THE INDIVIDUAL WALL TYPES AND SPECIFIC DETAILS, INCLUDING UL RATINGS.

RATED WALL LEGEND

1 HOUR SEPARATION

2 HOUR SEPARATION

EXAMPLE: WALL TYPE 9A3-1 IS A ONE HOUR RATED, 3 5/8" METAL STUD WALL WITH 5/8" GYPSUM BOARD ON BOTH SIDES, PER ASSEMBLY REQUIREMENTS.

90X-R SERIES
FIRE RATING (ONLY WHEN NOTED):
1 = 1 HOUR RATED ASSEMBLY
2 = 2 HOUR RATED ASSEMBLY
3 = 3 HOUR RATED ASSEMBLY

NON-BEARING METAL HEADER SCHEDULE

MAXIMUM SPAN	HEADER	FY
4'-0"	(2) 400S137-43	33 ksi
6'-0"	(2) 600S162-43	33 ksi
8'-0"	(2) 800S162-43	33 ksi

METAL STUD HEADER NOTES:

1. SCHEDULE TO BE USED FOR NON-BEARING WALLS.
2. HEADERS TO BE CONSTRUCTED AS BOX HEADERS PER SSMA STANDARDS.
3. SEE TYPICAL DETAIL FOR MORE INFORMATION.

NON-BEARING METAL STUD GAUGE SIZING

400S137-43

MEMBER DEPTH IN 1/100 INCHES — FLANGE WIDTH IN 1/100 INCHES — STYLE (S=STUD OR JOIST) — MATERIAL THICKNESS IN MILS

MEMBER DEPTH	MAX STUD HEIGHT	MIN. GA. & SPACING
2 1/2" (250S125-33)	10'-0"	20@16" O.C.
3 5/8" (362S125-33)	14'-0"	20@16" O.C.
3 5/8" (362S162-33)	16'-0"	20@16" O.C.
3 5/8" (362S162-43)	18'-0"	18@16" O.C.
6" (600S162-33)	24'-0"	20@16" O.C.
6" (600S162-43)	26'-0"	18@16" O.C.
6" (600S162-54-50KSI)	28'-0"	16@16" O.C.

METAL STUD NOTES:

1. STEEL STUDS SHALL MEET ICC REPORT ER-4943P AND THE SSMA STANDARDS. HEIGHT BASED ON SSMA 2001 CATALOG AND PROJECT REQUIREMENTS.
2. SEE SCHEDULE FOR STUD SPACING AND GAUGE. ALL STUDS AND BRACES SHALL BE 33 KSI UNLESS NOTED OTHERWISE IN THESE DRAWINGS.
3. AT ALL DOORS PROVIDE TWO TABBED 18 GAUGE STUDS AT BOTH SIDES OF JAMB.
4. PLEASE NOTE THAT DUE TO THE LARGE FLOOR TO FLOOR HEIGHT 18 GAUGE STUDS WILL BE NECESSARY IN MOST INTERIOR NON LOAD BEARING WALLS. REFER TO THE CHART ABOVE.

VCBO ARCHITECTURE
524 SOUTH 600 EAST
SALT LAKE CITY, UT 84102
Phone: (801) 575-8800
Fax: (801) 531-9850
Web: vcbo.com

LICENSED ARCHITECT No. 153912 BRENT R. TIPPETS 8-15-13 STATE OF UTAH

2nd District Juvenile Courthouse

Utah State Courts
08284150
165 West 20th Street, Ogden, Utah
BID DOCUMENTS

Rev #	Date	Description

Job # 12500
Date August 15, 2013
Owner # 08284150
Ins. #

LEVEL 2, DIMENSION AND WALL TYPES

A121.2

8/15/2013 9:11:48 AM

LEVEL 2 ROOM FINISH SCHEDULE

Room Name	Room Number	Floor Finish	Base Finish	Wall Finishes: Wall Finish Top	Wall Finish Right	Wall Finish Bottom	Wall Finish Left
STAIR A	2101	RB2	B1	P1	P1	P4	P1
ELEVATOR 1	2102	FT1,2	-	-	-	-	-
FAMILY TOILET ROOM	2103	FT1,2	B6	WT1,2,3,4,5	WT1,2,3,4,5	WT1,2,3,4,5	WT1,2,3,4,5
COURT ROOM SOUND VESTIBULE	2104	C6	B4	P2	P2	P2	P2
PROBATION SUPERVISION SUPPORT	2105	C1	B1	P2	P2	P2	P2
ATTORNEY/ CLIENT CONFERENCE ROOM	2106	C2	B4	P2	P2	P2	P2
COURT ROOM SOUND VESTIBULE	2107	C6	B4	P2	P2	P2	P2
COURTROOM	2108	C6	B4	WV/F1/P2	WV/F1/P2	WV/F1/P2	WV/F1/P2
STORAGE	2109	C6	B4	P2	P2	P2	P2
STORAGE	2110	L2	B10	P1	P1	P1	P1
JUDGES TOILET/ ROBING CLOSET	2111	FT3	B8	WT9/P2	WT9/P2	WT9/P2	WT9/P2
JUDGES CHAMBERS	2112	C4	B4	P2	P2	WC1	WC1
HOUSEKEEPING CLOSET	2113	L2	B10	P1	P1/WT 13	P1/WT 13	P1
STAIR D	2114	RB2	B1	P4	P1	P1	P1
JUDICIAL CASE MANAGER	2115	C1	B1	P2	P2	P2	P2
GENERAL STORAGE	2116	L2	B10	P1	P1	P1	P1
PERSONAL HEALTH	2117	C1	B1	P2	P2	P2	P2
CORRIDOR	2118	C5	B1	P2	P2	P2	P2
ELEVATOR2	2119	FT1,2	-	-	-	-	-
MEN'S LOCKER	2120	FT4	B7	WT13/P1,4	WT13/P1	WT13/P1	WT13/P1,4

LEVEL 2 ROOM FINISH SCHEDULE

Room Name	Room Number	Floor Finish	Base Finish	Wall Finishes: Wall Finish Top	Wall Finish Right	Wall Finish Bottom	Wall Finish Left
ELECTRICAL	2121	VT2	B10	P1	P1	P1	P1
STAIR E	2122	SC	B10	P1	P1	P1	P1
COMMUNICATION CLOSET	2123	VT2	B10	P1	P1	P1	P1
FITNESS AREA	2124	RB1	B2	P1	P1	P1	P1
WOMEN'S LOCKER	2125	FT4	B7	WT13/P1,4	WT13/P1	WT13/P1	WT13/P1,4
VESTIBULE	2126	C5	B1	P2	P2	P2	P2
CORRIDOR	2127	C5	B1	P2	P2	P2	P2
SECURE EVIDENCE STORAGE	2128	L2	B10	P1	P1	P1	P1
STAFF TOILET	2129	FT3	B7	WT7,8,9/P1	WT7,8,9/P1	WT7,8,9/P1	WT7,8,9/P1
STAFF TOILET	2130	FT3	B7	WT7,8,9/P1	WT7,8,9/P1	WT7,8,9/P1	WT7,8,9/P1
STAFF LOUNGE / FOOD SERVICE / VENDING	2131	L1	B1	P2	P2	P2	P2
FILE STORAGE/ WORKROOM	2132	C1	B1	P2	P2	P2	P2
JUDICIAL ASSISTANTS/ JUDICIAL SERVICE	2133	C1	B1	P2	P2	P2	P2
JUDICIAL CASE MANAGER	2134	C1	B1	P2	P2	P2	P2
FUTURE OFFICE	2135	C1	B1	P2	P2	P2	P2
COURT CONFERENCE ROOM	2136	C2	B4	P2	P2	P2	P2/WC3
JUDGES TOILET/ ROBING CLOSET	2137	FT3	B8	WT9/P2	WT9/P2	WT9/P2	WT9/P2
JUDGES CHAMBERS	2138	C4	B4	WC 1	WC 1	P2	P2
STAIR C	2139	RB2	B1	P1	P1	P1	P9

LEVEL 2 ROOM FINISH SCHEDULE

Room Name	Room Number	Floor Finish	Base Finish	Wall Finishes: Wall Finish Top	Wall Finish Right	Wall Finish Bottom	Wall Finish Left
STORAGE	2140	C6	B4	P2	P2	P2	P2
COURTROOM	2141	C6	B4	WV/F1/P2	WV/F1/P2	WV/F1/P2	WV/F1/P2
STAIR B	2142	RB2	B1	P1	P1	P1	P1
MEN'S TOILET	2143	FT1,2	B6	WT1,2,3,4,5	WT1,2,3,4,5	WT1,2,3,4,5	WT1,2,3,4,5,7
WOMEN'S TOILET	2144	FT1,2	B6	WT1,2,3,4,5	WT1,2,3,4,5	WT1,2,3,4,5	WT1,2,3,4,5,7
LOBBY	2145	FT1,2	B3	P2	P2	WT14/P2,9	P2
COURT ROOM SOUND VESTIBULE	2146	C6	B4	P2	P2	P2	P2
HOUSEKEEPING CLOSET	2147	L2	B10	P1	P1/WT 13	P1/WT 13	P1
ATTORNEY/ CLIENT CONFERENCE ROOM	2148	C2	B4	P2	P2	P2	P2
COURT ROOM SOUND VESTIBULE	2149	C6	B4	P2	P2	P2	P2
SECURE SOUND VESTIBULE	2150	EP1	B11	P1	P1	P1	P1
HOLDING CELL-SINGLE	2151	EP1	B11	P1	P1	P1	P1
HOLDING CELL-SINGLE	2152	EP1	B11	P1	P1	P1	P1
ATTORNEY/ CLIENT CONFERENCE ROOM	2153	C2	B4	P2	P2	P2	P2
CORRIDOR	2154	EP1	B11	P1	P1	P1	P1
SECURE SOUND VESTIBULE	2155	EP1	B11	P1	P1	P1	P1
HOLDING CELL-SINGLE	2156	EP1	B11	P1	P1	P1	P1
HOLDING CELL-SINGLE	2157	EP1	B11	P1	P1	P1	P1
ELEVATOR3	2158	PT	-	-	-	-	-

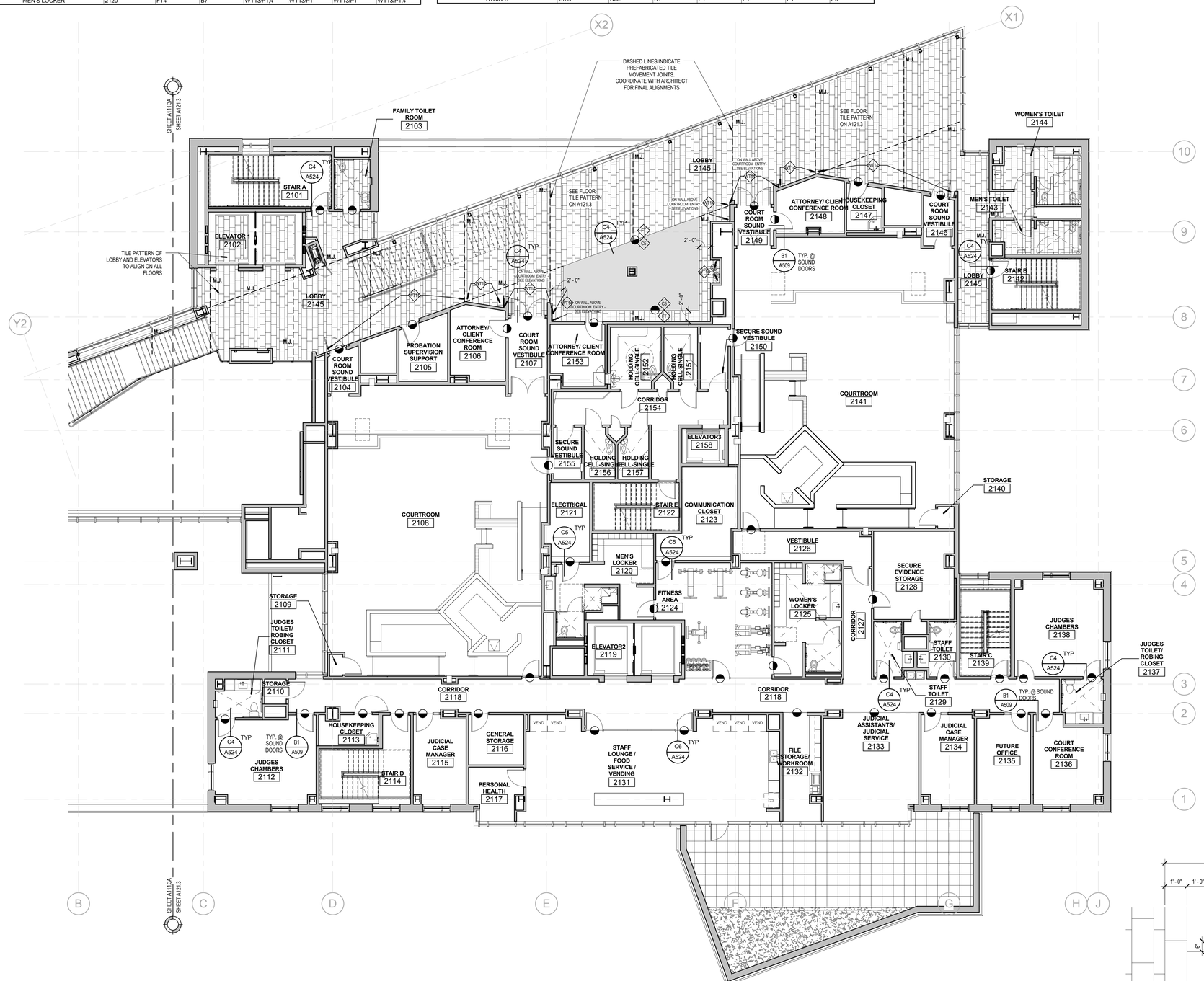

A1 LEVEL 2 FINISH PLAN

SCALE: 1/8" = 1'-0"

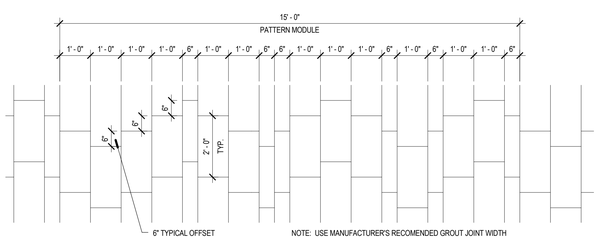

A5 TYPICAL FLOOR TILE PATTERN

SCALE: 1/2" = 1'-0"

GENERAL FINISH NOTES

1. PROVIDE EPOXY PAINT AT ALL RESTROOMS, SHOWERS, LOCKER ROOMS AND JANITOR CLOSETS.
2. ALL FLOOR TRANSITIONS TO BE LOCATED AT CENTER OF DOOR, U.N.O.
3. ALL EXPOSED STEEL COLUMNS AND GIRTS ARE TO BE PAINTED WITH INTUMESCENT PAINT P10, UNLESS NOTED OTHERWISE. SEE G SHEETS FOR LOCATIONS OF SUCH MEMBERS.
4. ALL GROUT JOINTS TO BE NO LARGER THAN 1/8".
5. FIELD VERIFY ALL DIMENSIONS BEFORE FABRICATION OF MILLWORK.
6. COORDINATE ALL MILLWORK WITH APPLIANCES BEFORE FABRICATION.
7. SEE ELEVATION SHEETS FOR ALL WALL TILE PATTERNS.
8. AT SOFFITS RECEIVING COLOR- PAINT ALL SIDES OF SOFFIT.
9. ALL WOOD DOORS TO BE FINISHED BY THE MILLWORK CONTRACTOR TO MATCH TRIM AND VENEERED MILLWORK.
10. ALL COUNTERTOP, BACKSPLASHES, AND EDGE BANDING TO HAVE COORDINATING FINISHES.
11. WHERE STAIRS CALL FOR "RB2: RUBBER FLOORING TILES", PROVIDE RUBBER FLOORING COVERING STAIR TREADS, RISERS AND LANDINGS.
12. PROVIDE A SMOOTH TRANSITION AT ALL FLOOR MATERIALS - CONTRACTOR TO INSTALL ALL FLOOR FINISHES AT SAME LEVEL, DESPITE DIFFERENT THICKNESS. PROVIDE FLOOR TRANSITION WHERE OCCURS. SEE TYPICAL TRANSITIONS ON SHEET A524.
13. PROVIDE TILE 'WT13: 4"X4" CERAMIC WALL TILE' AT ALL JANITOR SINKS. PROVIDE TILE BULLNOSE TO FINISH OFF ALL EXPOSED EDGES.
14. ALL WALLS RECEIVING TILE WAINSCOT TO RECEIVE PAINT P1 ABOVE, U.N.O. SEE FINISH PLANS AND INTERIOR ELEVATIONS FOR ACCENT WALL LOCATIONS.
15. SEE SHEET A524 FOR TYPICAL FLOORING TRANSITION DETAILS.
16. UNLESS NOTED AS STAINLESS STEEL, ALL METAL GUARDRAILS, STAIR STRINGERS, HANDRAILS AND DOOR FRAMES ARE TO BE PAINTED. SEE FINISH SCHEDULE FOR COLOR SELECTIONS.
17. ALL SPACES THAT HAVE NO CEILING ARE TO HAVE THE EXPOSED STRUCTURE, DUCTWORK, PIPING, CONDUIT, ETC PAINTED P5. REFER TO REFLECTED CEILING PLANS.
18. ALL RESTROOM WALL TILE ENDING BELOW THE CEILING LINE TO START AND END WITH A FULL SIZE TILE. VERTICAL HEIGHTS OF TILE DIMENSIONED ON ELEVATIONS ARE APPROXIMATE.

FINISH PLAN SYMBOLS

SINGLE FINISH SYMBOLS INDICATE WHERE FINISHES ARE DIFFERENT FROM GENERAL ROOM FINISHES, OR PROVIDE ADDITIONAL FINISH INFORMATION

CHANGE AT FLOOR MATERIAL

FINISH PLAN LEGEND

FLOOR MATERIALS

EM	ENTRY MAT
C1	CARPET TILE
C2	CARPET TILE
C3	NOT USED
C4	CARPET TILE
C5	CARPET TILE
C6	CARPET TILE
C7	NOT USED
L1	LINOLEUM SHEET
L2	LINOLEUM TILE - MCT
FT1	PORCELAIN FLOOR TILE 12x24
FT2	PORCELAIN FLOOR TILE 6x24
FT3	PORCELAIN FLOOR TILE 12x12
FT4	FLOOR TILE 1X2
VT2	STATIC DISSIPATIVE ACCESS FLOOR PANEL
RB1	RUBBER FLOOR TILES
RB2	RUBBER FLOORING (STAIRS, LANDINGS)
SC	SEALED CONCRETE
TZ1	TERRAZZO FLOORING
TZ2	TERRAZZO FLOORING ACCENT
EP1	EPOXY FLOORING - OPAQUE
G1	GROUT
G2	GROUT
PT	ALUMINUM DIAMOND PLATE

BASE MATERIALS

B1	RUBBER BASE
B2	RUBBER BASE
B3	ANODIZED ALUMINUM BASE - SEE C2 AND C4/A513
B4	SOLID HARDWOOD BASE - 3/4" THICK, 4" HIGH
B5	TILE BASE
B6	ALUMINUM COVE BASE
B7	TILE COVE BASE
B8	NO BASE - SEAL SEAM
B9	NO BASE - CAULK BETWEEN FLOOR AND WALL
B10	COVED RUBBER BASE
B11	COVED EPOXY FLOORING

WALL MATERIALS

F1	ACOUSTIC FABRIC WALL PANELS
F2	PEW SEAT FABRIC
P1	PRIMED & PAINTED WALL SURFACE - GENERAL
P2	PRIMED & PAINTED WALL SURFACE - GENERAL
P3	PRIMED & PAINTED WALL SURFACE - ACCENT
P4	PRIMED & PAINTED WALL SURFACE - ACCENT
P5	CEILING PAINT
P6	RAILING PAINT
P7	H.M. DOOR FRAME PAINT
P8	H.M. DOOR FRAME PAINT
P9	PRIMED & PAINTED WALL SURFACE - ACCENT
P10	INTUMESCENT PAINT SYSTEM
WT1	PORCELAIN WALL TILE 6X24
WT2	PORCELAIN WALL TILE 4X24
WT3	PORCELAIN WILL TILE 2X24
WT4	PORCELAIN WALL TILE 6X24
WT5	PORCELAIN WALL TILE 2X24
WT6	NOT USED
WT7	GLAZED WALL TILE 3x6
WT8	GLAZED WALL TILE 3x6
WT9	GLAZED WALL TILE 3x6
WT10	NOT USED
WT11	NOT USED
WT12	NOT USED
WT13	GLAZED WALL TILE 4x4
WT14	GLASS WALL TILE - SIZES VARY
WC1	VINYL WALLCOVERING
WC3	DRY ERASE WALLCOVERING

SURFACE MATERIALS

PL1	PLASTIC LAMINATE - VERTICAL SURFACES
PL2	PLASTIC LAMINATE - COUNTERTOPS
PL3	PHENOLIC CORE PARTITIONS - PARTITION COLOR
WV	WOOD VENEER - SEE A513 FOR TYPICAL DETAILS
QZ1	QUARTZ COUNTERTOP SURFACE
QZ2	QUARTZ COUNTERTOP SURFACE
QZ3	QUARTZ COUNTERTOP SURFACE
SS1	SOLID SURFACE COUNTERTOP
SS2	SOLID SURFACE COUNTERTOP
SS3	SOLID SURFACE THRESHOLD

VCBO ARCHITECTURE
VCBO ARCHITECTURE
524 SOUTH 600 EAST
SALT LAKE CITY, UT 84102
Phone: (801) 575-8800
Fax: (801) 531-9850
Web: vcbo.com

LICENSED ARCHITECT No. 153912 BRENT R. TIPPETS 8-15-13 STATE OF UTAH

2nd District Juvenile Courthouse

Utah State Courts
08284150
165 West 20th Street, Ogden, Utah
BID DOCUMENTS

Rev #	Date	Description

Job # 12500
Date August 15, 2013
Owner # 08284150
Ins. #

LEVEL 2, FINISH PLAN

A121.3

8/14/2013 2:28:25 PM

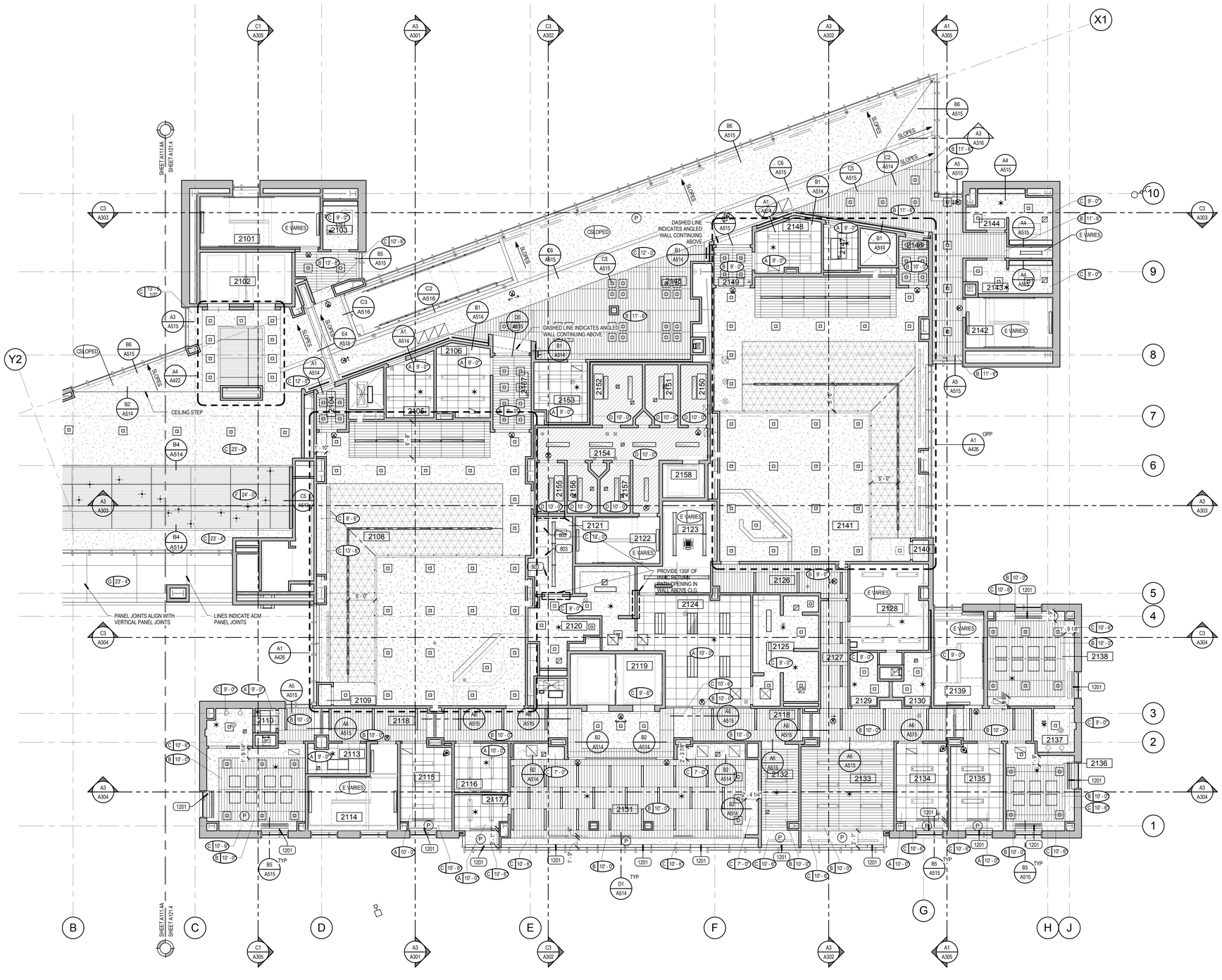

A1 LEVEL 2 REFLECTED CEILING

SCALE: 1/8" = 1'-0"

CEILING LEGEND

A-	SUSPENDED 2' X 4' ACOUSTICAL LAY-IN TILE CEILING WITH SINGLE KERF (2x2 LOOK)
B-	SUSPENDED 2' X 4' ACOUSTICAL LAY-IN TILE CEILING WITH 3 KERFS (6"x4" LOOK), 6" HIGH PRE-FINISHED METAL PERIMETER TRIM AT EDGES NOT TOUCHING A WALL
C-	SUSPENDED 5/8" GYP. BD. CEILING SYSTEM - (1 LAYER) PAINTED
D-	PRECAST CONCRETE CEILING, PAINTED
E-	OPEN TO STRUCTURE ABOVE, ALL SURFACES PAINTED: STRUCTURE, MECHANICAL, ELECTRICAL, ETC.
F-	WOOD VENEERED 1/4" SUBSTRATE ADHEARED TO 1/2" MDF. 1/2" MDF PAINTED BLACK AND SECURED TO 2-1/2" METAL STUDS @ 16" OC. 2-1/2" STUDS ARE ATTACHED TO 6" METAL STUDS @16"O.C., SEE ASSOCIATED DETAILS
G-	ACM METAL PANEL ATTACHED TO THERMALLY BROKEN 3" Z-FURRING @16" O.C. OVER AIR AND MOISTURE BARRIER WITH 3" MINERAL WOOL INSULATION. Z FURRING ATTACHED TO SUSPENDED 5/8" GYP. SHEATHING SOFFIT SYSTEM
H-	SUSPENDED ACOUSTICAL LAY-IN CEILING AS DESCRIBED IN CEILING TYPE 'B', SUSPENDED 12" BELOW A SUSPENDED 5/8" GYP BOARD CEILING, GYP BOARD JOINTS ARE TO BE FINISHED BUT BOARD IS NOT PAINTED
J-	STRETCHED FABRIC CEILING SYSTEM OVER 1" FIBERGLASS BATT INSULATION MOUNTED TO 5/8" GYP BOARD CEILING SYSTEM, GYP BOARD JOINTS TO BE FINISHED BUT BOARD IS NOT PAINTED
K-	SUSPENDED 5/8" GYP. BD. CEILING SYSTEM - OVER HAT CHANNEL FURRING, PAINTED

CEILING SYMBOLS

ELECTRICAL

- 2'X4' FLUORESCENT FIXTURE
- 2'X2' FLUORESCENT FIXTURE
- 6"X4' FLUORESCENT FIXTURE
- FLUORESCENT STRIP FIXTURE
- RECESSED SQUARE DOWN LIGHT
- WALL WASH
- 1'X4' FLUORESCENT FIXTURE
- EXIT SIGN, SINGLE-SIDED
- EXIT SIGN, DOUBLE-SIDED
- F — FIRE ALARM
- S — SPEAKER
- P — SMOKE DETECTOR
- W — WIRELESS INTERNET

MECHANICAL

- SUPPLY GRILLE
- RETURN GRILLE
- EXHAUST GRILLE
- LINEAR DIFFUSER
- SPRINKLER HEAD - CEILING MOUNT
- SPRINKLER HEAD - WALL MOUNT

GENERAL CEILING NOTES

1. REFER TO DETAIL A5/A514 FOR TYPICAL ACOUSTICAL LAY-IN CEILING SUSPENSION & SEISMIC BRACING
2. REFER TO DETAIL A6/A514 FOR TYPICAL SUSPENDED GYP. BOARD CEILINGS
3. ALL UNIDENTIFIED CEILING TYPES ON THE PLANS SHALL BE BID AS TYPE " A"
4. GRID SUSPENSION SYSTEMS SHALL BE CENTERED WITHIN AREAS INDICATED, UNLESS NOTED OTHERWISE
5. PAINT ALL EXPOSED STRUCTURE, MECHANICAL, DUCTS, ELECTRICAL WORK, PIPING, ETC. ALL VISIBLE ELEMENTS TO BE PAINTED AT TYPE "B" & TYPE "E"
6. REFER TO ARCHITECTURAL DRAWINGS FOR LOCATION OF MECHANICAL GRILLES, AND TO MECHANICAL DRAWINGS FOR QUANTITIES AND TYPES
7. REFER TO ARCHITECTURAL DRAWINGS FOR LOCATIONS OF LIGHT FIXTURES AND TO ELECTRICAL DRAWINGS FOR QUANTITY AND TYPES
8. MECHANICAL AND ELECTRICAL CONTRACTORS TO COORDINATE WORK WITH SPRINKLER CONTRACTOR TO AVOID CONFLICTS IN FIELD
9. ALL CEILING HEIGHTS ARE ELEVATION ABOVE FINISH FLOOR
10. ALL TYPE C CEILINGS IN RESTROOMS, LOCKER ROOMS, SHOWERS, AND WET AREAS TO BE EPOXY PAINTED
11. SEE DETAIL C5/A514 FOR TYPICAL SPRINKLER HEAD LAYOUT REQUIREMENTS
12. SEE DETAIL C6/A514 FOR TYPICAL DEVICE ALIGNMENT REQUIREMENTS

KEYED NOTES

803	24"X 24" ACCESS DOOR
1201	MANUAL ROLLER WINDOW SHADES FULL LENGTH OF WINDOW, SHADE BREAKS TO ALIGN WITH MULLION

VCBO ARCHITECTURE

VCBO ARCHITECTURE
524 SOUTH 600 EAST
SALT LAKE CITY, UT 84102
Phone: (801) 575-8800
Fax: (801) 531-9850
Web: vcbo.com

LICENSED ARCHITECT No. 153912 BRENT R. TIPPETS 8-15-13 STATE OF UTAH

2nd District Juvenile Courthouse

Utah State Courts
08284150
165 West 20th Street, Ogden, Utah
BID DOCUMENTS

Rev #	Date	Description

Job # 12500
Date August 15, 2013
Owner # 08284150
Ins. #

LEVEL 2, REFLECTED CEILING

A121.4

8/14/2013 2:28:53 PM

KEYED NOTES

514	1 1/2" DIA. STAINLESS STEEL HANDRAIL
806	24"X 24" FLOOR ACCESS DOOR WITH CARPET INSERT
1114	REFRIGERATOR, NIC
1206	THRU-WALL PEEP HOLE
2201	JANITOR'S SINK
2205	ELECTRIC WATER COOLER

PLAN NOTES

1. WHERE FLOOR DRAINS ARE INSTALLED, THE FLOOR IS **NOT** TO SLOPE TOWARD THE DRAIN (REMAINS FLAT) EXCEPT AT THE FOLLOWING LOCATIONS:
   A. THICK SET TILE LOCATED IN CONJUCTION WITH SHOWERS.
   B. FLOORS NOT TILED AT SLAB-ON-GRADE LOCATIONS (LEVEL 1 HOLDING AND MECHANICAL ROOMS).
   WHERE FLOORS SLOPE, THE MAXIMUM FLOOR SLOPE IS NOT TO EXCEED 2% WHILE THE MINIMUM SLOPE IS NOT TO BE LESS THAN 1%.

2. WHERE CONCRETE PADS ARE CALLED TO BE CONSTRUCTED UNDER EQUIPMENT THE SLAB IS TO BE 8" THICK, U.N.O., AND IS TO HAVE #4 BARS AT 18" O.C. EACH WAY. COORDINATE DIMENSIONS OF PAD WITH ACTUAL EQUIPMENT SPEC

3. THE CONTRACTOR IS TO ENSURE THAT BETWEEN ANY FINISH FLOOR ELEVATION TO 42" A.F.F. ALL GUARDRAILS ARE TO BE CONSTRUCTED AND INSTALLED SO THAT A 4" SPHERE WILL NOT PASS BETWEEN ANY TWO ADJACENT GUARDRAIL COMPONENTS OR BETWEEN THE EDGE OF A GUARDRAIL AND ALL ADJACENT BUILDING ELEMENT SUCH AS A WALL OR FLOOR.

WALL NOTES

1. SEE SHEETS A500 AND A501 FOR ALL WALL TYPE DEFINITIONS

2. PARTITION TYPE INDICATIONS ARE INDEPENDENT OF APPLIED FINISHES, SUCH AS TILE OR WOOD PANELING. SEE THE FINISH SHEETS AND INTERIOR ELEVATIONS FOR WALL FINISHES INCLUDING COURSING AND PANEL LAYOUT AND/OR THE DESIGNATIONS ON THE PLANS FOR ADDITIONAL INFORMATION REGARDING APPLIED FINISHES.

3. WHERE PARTITION TYPE DESIGNATION ON FLOOR PLANS IS INTERRUPTED BY DOOR OPENING, GLAZED PARTITION, ETC., CONSTRUCTION ABOVE INTERRUPTION (AND WHERE APPLICABLE BELOW) IS TO BE THE SAME AS THAT DESIGNATED FOR THE PARTITION IN WHICH THE INTERRUPTION OCCURRED.

4. THE MINIMUM REQUIREMENTS FOR CONSTRUCTION OF EACH PARTITION TYPE AS EXPRESSED BY THE INDICATED REFERENCE ARE INCORPORATED BY REFERENCE AND ARE APPLICABLE TO THE WORK OF THIS PROJECT. HOWEVER, ADDITIONAL AND/OR MORE RESTRICTIVE REQUIREMENTS MAY BE INDICATED BY THE SPECIFICATIONS AND DRAWINGS. SUCH REQUIREMENTS ALSO APPLY AND SHALL GOVERN. SUCH REQUIREMENTS INCLUDE BUT ARE NOT LIMITED TO:

   A. USE 5/8" THICK GYPSUM BOARD THROUGHOUT UNLESS NOTED OTHERWISE.

   B. USE 16" OC MAX STUD SPACING UNLESS NOTED OTHERWISE IN THESE DOCUMENTS. THE SPACING STATED BY THE REFERENCED APPROVAL OR TEST REPORT IS THE MAX SPACING IF ALLOWED IN THESEDOCUMENTS.

   C. USE STUDS OF GAGE INDICATED ON THE DRAWINGS OR IN THE SPECIFICATIONS. THE GAGE STATED BY THE REFERENCED APPROVAL OR TEST REPORT IS THE MINIMUM GAGE TESTED, 20 GA (30 MILS) IS THE MINIMUM ALLOWED IN THESE DOCUMENTS.

5. USE STUDS OF DEPTH INDICATED BY THIS SET OF DOCUMENTS. THE DEPTH STATED BY THE REFERENCED APPROVAL OR TEST REPORT IS THE MINIMUM DEPTH ALLOWED IN THESE DOCUMENTS.

6. AT INTERIOR STUD WALLS, THE CONTRACTOR IS RESPONSIBLE FOR SELECTING THE STUD GAUGE BASED ON THE HEIGHT OF WALL BEING CONSTRUCTED USING THE REQUIRMENTS FOUND IN THE "NON-BEARING METAL STUD GAUGE SIZING" CHART LOCATED ON SHEET A501.

7. PROVIDE FIRE RATED CONSTRUCTION ASSEMBLIES WHERE INDICATED ON SHEET G200 AND FLOOR PLAN DRAWINGS.

8. ALL DIMENSIONS ARE CENTER OF STUD OR FACE OF CONCRETE, MASONRY OR ROUGH OPENING UNLESS NOTED OTHERWISE.

9. AT ALL WALLS, STUDS, INSULATION AND GYPSUM BOARD ARE TO EXTEND TO THE DECK ABOVE. UNLESS NOTED OTHERWISE.

10. WALL TYPES NOT NOTED ARE ASSUMED TO MATCH ADJACENT ROOMS. NOTIFY ARCHITECT OF ANY DISCREPANCIES.

11. ALL METAL STUD PARTITIONS ARE CONSIDERED ACOUSTIC PARTITIONS AND ARE TO RECEIVE A TYPE 1 SOUND ATTENUATION BLANKET. THICKNESS TO MATCH STUD DEPTH, UNLESS NOTED OTHERWISE.

12. REFER TO SHEET A511 FOR TYPICAL INTERIOR WALL CONDITIONS ASSOCIATED WITH ALL METAL STUD AND CMU PARTITIONS.

13. SEE DETAIL B4/A511 FOR THE TYPICAL TOP OF WALL CONDITION TO BE USED AT ALL INTERIOR STUD WALLS.

14. PROVIDE CONTROL JOINTS IN METAL FRAMED WALLS AT APPROXIMATELY 30 FEET ON CENTER. LOCATE AT CORNER ABOVE DOORS OR INSIDE CORNER OF PILASTERS OR OTHER INCONSPICUOUS LOCATION WHERE POSSIBLE. **CONSULT WITH ARCHITECT PRIOR TO COMMENCING FRAMING.**

15. AT WALL OPENINGS FOR PENETRATION OF PIPES, DUCTS, DEVICES, ETC., GYPSUM BOARD IS TO BE CUT TO MATCH THE SHAPE AND DIMENSION OF THE PENETRATING OBJECT AND THE GAP BETWEEN THE OBJECT AND THE WALL IS TO BE SEALED W/ ACOUSTICAL OR FIRE SEALANT ON ALL SIDES WITH A 3/4" JOINT AT ALL SIDES, MAXIMUM. THE OPENING FOR DUCTS OR LARGE PENETRATIONS SHALL BE FRAMED WITH A HEADER, ADD AN ANGLED CORNER BRACE IF THE GAP EXCEEDS 3" FROM FRAMING TO THE OPENING. SEE DETAIL D5/511.

16. CONTRACTOR TO PROVIDE BLOCKING / BACKING FOR ALL WALL MOUNTED EQUIPMENT. SEE FLOOR PLANS AND INTERIOR ELEVATIONS FOR CABINETS, GRAB BARS ETC. INSTALL BLOCKING AS DETAILED OR AS REQUIRED TO MOUNT SUCH DEVICES. ALL BLOCKING IS TO BE FIRE RETARDANT TREATED OR 20 GA METAL PER DETAIL C4/A511.

17. WHERE THERE IS LIMITED WATER EXPOSURE: INSTALL ONE LAYER OF 5/8" TYPE X WATER RESISTANT GYPSUM BOARD PER ASTM C1396 (WHERE GYPSUM BOARD OCCURS) OF BASIC PARTITION AT THE FOLLOWING LOCATIONS:

   A. WITHIN 2 FEET HORIZONTALLY AND 4 FEET VERTICALLY OF JANITORS SINKS

   B. AT OTHER LOCATIONS, I.E. TOILET ROOMS AND KITCHENS, AND AS INDICATED ON THE ARCHITECTURAL FINISH PLANS AND ELEVATIONS.

18. WHERE CERAMIC TILE FINISHES ARE INDICATED PER THE FINISH PLANS AND ELEVATIONS, INSTALL ONE LAYER OF 5/8" GLASS MAT TILE BACKER BOARD IN LIEU OF GYPSUM BOARD (WHERE GYPSUM BOARD OCCURS) OF BASIC PARTITION WHERE THERE IS NO FIRE RATING AND OVER GYPSUM BOARD FACE LAYER AT FIRE RATED PARTITIONS AT THE FOLLOWING LOCATIONS.

19. ALL EXTERIOR WALLS TO HAVE 2" OF SPRAY FOAM INSULATION APPLIED TO THE INTERIOR FACE OF SHEATHING OR TO THE BACK OF THE GFRC PANEL (UNLESS NOTED OTHERWISE).

20. AT WALLS HOLDING EXTERIOR METAL PANELS, A FLUID APPLIED MEMBRANE IS TO BE APPLIED TO THE EXTERIOR FACE OF THE GYP SHEATHING FOR THE FULL HEIGHT AND LENGTH OF THE WALL, SEAL ALL PENETRATIONS. **PLEASE NOTE THAT TWO MEMBRANE TYPES ARE TO BE USED (VAPOR PERMEABLE AND VAPOR BARRIER)**. SEE WALL TYPES, SPECIFICATIONS AND DETAILS FOR LOCATION OF EACH TYPE.

21. AT EXTERIOR METAL PANELS, 3" OF MINERAL WOOL CAVITY INSULATION IS TO BE PROVIDED.

22. THE FLUID APPLIED MEMBRANE SYSTEMS (PERMEABLE AND VAPOR BARRIER) ARE TO WRAP INTO ALL WINDOW AND DOOR OPENINGS PER THE MEMBRANE MANUFACTURER'S APPROVED DETAILS.

23. SEE STRUCTURAL PLANS FOR ADDITIONAL CONCRETE AND MASONRY WALL INFORMATION.

24. SEE EXTERIOR ELEVATIONS FOR G.F.R.C., ACM AND PROFILE METAL PANEL ORIENTATION AND JOINT PLACEMENT.

25. ALL MASONRY WALLS ARE TO BE REINFORCED AND ARE TO BE SET ON REINFORCED FOOTINGS. CONTROL JOINTS TO BE LOCATED AS PER THE REQUIREMENTS FOUND IN THE STRUCTURAL DOCUMENTS BUT ARE NOT TO EXCEED 30' OC. SEE THE STRUCTURAL DRAWINGS FOR REINFORCING AND OTHER DETAILS PERTAINING TO MASONRY WALLS. IF NOT OTHERWISE NOTED: LOCATE CONTROL JOINTS AT CORNER ABOVE DOORS, INSIDE CORNER OF PILASTERS OR OTHER INCONSPICUOUS LOCATION WHERE POSSIBLE. CONSULT WITH ARCHITECT PRIOR TO INSTALLING.

26. SEE IBC 2009, CHAPTER 7 FOR FIRE RESISTIVE REQUIREMENTS ON NEW CONCRETE AND CONCRETE MASONRY UNIT WALLS.
-CMU WALLS (IBC TABLE 720.1(2), ITEM 3)
-CAST IN PLACE CONCRETE WALLS (IBC TABLE 721.2.1.2(1))

27. AT WALL OPENINGS FOR PENETRATION OF PIPES, DUCTS, DEVICES, ETC., MASONRY IS TO BE CUT TO MATCH THE SHAPE AND DIMENSION OF THE PENETRATING OBJECT AND THE GAP BETWEEN THE OBJECT AND THE WALL IS TO BE SEALED W/ ACOUSTICAL OR FIRE SEALANT ON ALL SIDES WITH A 3/4" JOINT AT ALL SIDES, MAXIMUM.

28. PROTECTION OF MASONRY: DURING CONSTRUCTION, COVER TOPS OF WALLS, PROJECTIONS, AND SILLS WITH WATERPROOF SHEETING AT END OF EACH DAY'S WORK. EXCEPT WHEN THE AMBIENT TEMPERATURE IS EXPECTED TO REMAIN ABOVE 65 DEG F AND NO PRECIPITATION IS FORECAST FOR THE NEXT 24 HOURS. (THIS IS TO PREVENT CONDENSATION FROM COVERED WALLS CAUSING A MOISTURE PROBLEM.) COVER PARTIALLY COMPLETED MASONRY EACH DAY THAT CONSTRUCTION IS NOT IN PROGRESS. WALLS ARE TO BE PROTECTED UNTIL THEY ARE PERMANENTLY PROTECTED BY THE ROOFING MEMBRANE OVER THE CAP PLATE. THE GENERAL CONTRACTOR IS TO PROVIDE TEMPORARY PROTECTION IMMEDIATELY FOLLOWING THE TOPPING OUT OF EACH SECTION OF WALL BY INSTALLING WATERPROOF SHEETING OVER A CONTINUOUS CAP PLATE UNTIL THE ROOFING MEMBRANE IS INSTALLED. **A SOLID GROUTED TOP BOND BEAM SHALL NOT BE CONSIDERED ADEQUATE PROTECTION FOR THE WALL.**

29. AT PAINTED CMU THE HORIZONTAL AND VERTICAL MORTAR JOINTS ARE TO BE CONCAVE. AT ALL HONED BLOCK SITE WALLS THE HORIZONTAL MORTAR JOINT IS TO BE A WEATHERED JOINT AND ALL VERTICAL JOINTS ARE TO BE RAKED.

30. ALL VERTICAL MASONRY CORNERS WHICH FALL WITHIN THE INTERIOR OF THE BUILDING, INCLUDING CORNERS AT DOOR AND WINDOW OPENINGS ARE TO HAVE A 3/4" CHAMFER EXTENDING FROM 4" A.F.F. TO THE DECK ABOVE OR THE BOTTOM OF THE HEADER. SEE DETAIL D6/A512.

31. PROVIDE SPECIAL SHAPES, SUCH AS "U" SHAPED CHANNEL FOR LINTELS OR HEADERS AND CAPPING UNITS FOR SASH AND OTHER SPECIAL CONDITIONS. U SHAPED BLOCKS ARE TO BE 16"X8"X THE WIDTH OF THE WALL.

32. WHERE A FLUID APPLIED MEMBRANES ARE TO BE APPLIED OVER CMU, THE MORTAR JOINTS ARE TO BE STRUCK FLUSH AND SMOOTH.

33. ALL WALL COMPONENTS (GYP. BOARD, VAPOR BARRIER, INSULATION, ETC...) ARE TO EXTEND TO THE DECK ABOVE OR TO TOP OF PARAPET UNLESS NOTED OTHERWISE.

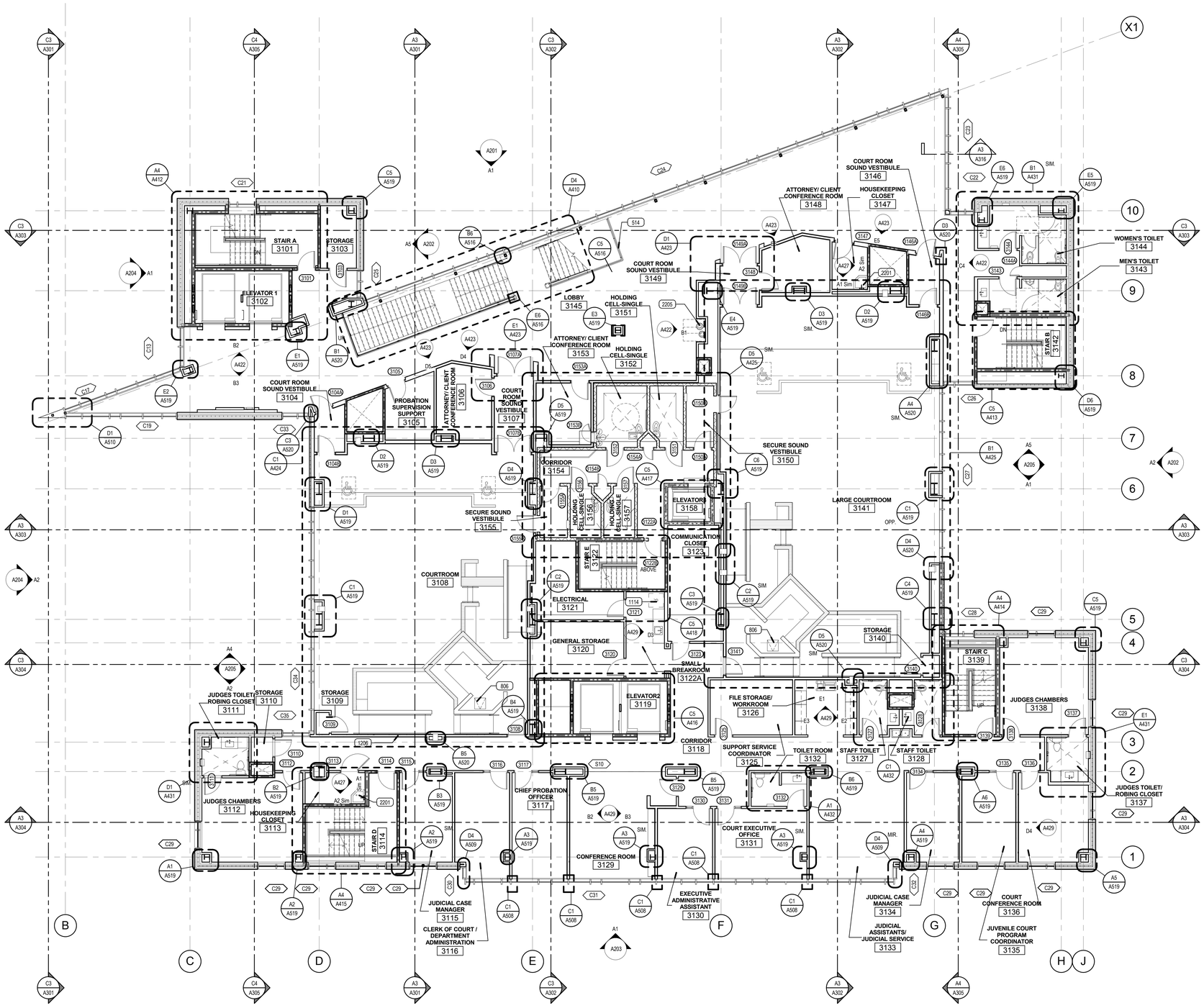

A1 LEVEL 3 ANNOTATED
SCALE: 1/8" = 1'-0"

8/15/2013 9:21:07 AM

VCBO ARCHITECTURE
VCBO ARCHITECTURE
524 SOUTH 600 EAST
SALT LAKE CITY, UT 84102
Phone: (801) 575-8800
Fax: (801) 531-9850
Web: vcbo.com

LICENSED ARCHITECT No. 139912 BRENT R. TIPPETS STATE OF UTAH

2nd District Juvenile Courthouse

Utah State Courts
165 West 20th Street, Ogden, Utah
BID DOCUMENTS

08284150

Rev #	Date	Description

Job # 12500
Date August 15, 2013
Owner # 08284150
Ins. #

LEVEL 3, ANNOTATED

A131.1

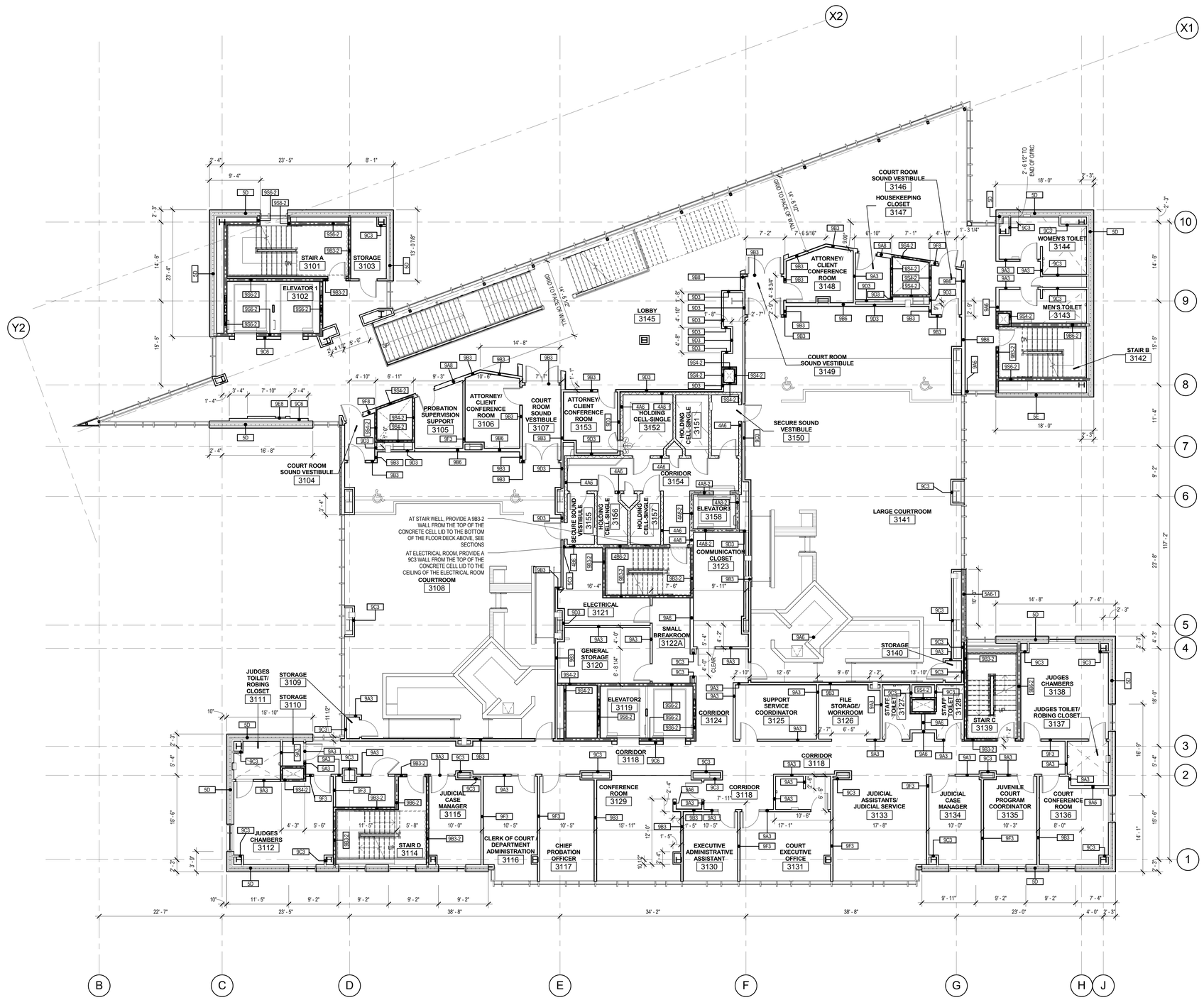

A1 LEVEL 3 DIMENSION AND WALL TYPES

SCALE: 1/8" = 1'-0"

PLAN NORTH

DIMENSION NOTES

1. ALL DIMENSIONS ARE TO CENTER OF STUD WALL OR FACE OF CONCRETE, MASONRY OR ROUGH OPENING UNLESS NOTED OTHERWISE. WHERE THE END OF A WALL IS INDICATED THE DIMENSION IS TO THE FINISH SURFACE OF THE WALL END.
2. UNLESS DIMENSIONED OTHERWISE, THE DIMENSION FROM THE BUCK OF A DOOR FRAME IS TO BE 4" TO THE WALL CORNER.
3. EXCEPT WHERE DIRECTED TO PLACE ITEMS OF WORK AT THE APPROXIMATE LOCATION SHOWN, DO NOT SCALE DRAWINGS FOR DIMENSIONAL INFORMATION. ALL ELEMENTS OF THE DRAWINGS MAY NOT BE DRAWN TO EXACT SCALE. ALL DIMENSIONS REQUIRED ARE SHOWN OR MAY BE DERIVED FROM THOSE SHOWN ON THE FLOOR PLANS, DETAIL PLANS, ELEVATIONS, SECTIONS, DETAILS, SCHEDULES AND SPECIFICATIONS. IF DIMENSIONS ARE NOT PRESENT, THE ARCHITECT IS TO BE NOTIFIED SO THAT A CLARIFICATION CAN BE ISSUED

KEY FOR PARTITION TYPES

DENOTES TYPE OF CONSTRUCTION (SPEC. DIVISION) — WALL

3X 0 SERIES	CONCRETE
4X 0 SERIES	MASONRY
5X 0 SERIES	COLD FORMED METAL STUDS, 16ga MIN.
9X 0 SERIES	METAL STUDS

NOMINAL SIZES: V = VARIABLE/MATCHEXISTING
1 = 1 5/8" STUDS
2 = 2 1/2" STUDS
3 = 3 5/8" STUDS
4 = 4" STUDS / 4" (NOM.) C.M.U.
6 = 6" STUDS / 6" (NOM.) C.M.U.
8 = 8" STUDS / 8" (NOM.) C.M.U.
10 = 10" (NOM.) C.M.U. OR CONC.
12 = 12" (NOM.) C.M.U. OR CONC.

EXAMPLE: WALL TYPE 9A3 IS A 3 5/8" METAL STUD WITH 5/8" GYPSUM BOARD ON BOTH SIDES.

NOTE: SEE GENERAL NOTES BELOW FOR ADDITIONAL ELEMENTS IN THE INDIVIDUAL WALL TYPES AND SPECIFIC DETAILS, INCLUDING UL RATINGS.

RATED WALL LEGEND

1 HOUR SEPARATION

2 HOUR SEPARATION

EXAMPLE: WALL TYPE 9A3-1 IS A ONE HOUR RATED, 3 5/8" METAL STUD WALL WITH 5/8" GYPSUM BOARD ON BOTH SIDES, PER ASSEMBLY REQUIREMENTS.

90X-R SERIES
FIRE RATING (ONLY WHEN NOTED):
1 = 1 HOUR RATED ASSEMBLY
2 = 2 HOUR RATED ASSEMBLY
3 = 3 HOUR RATED ASSEMBLY

NON-BEARING METAL HEADER SCHEDULE

MAXIMUM SPAN	HEADER	FY
4'-0"	(2) 400S137-43	33 ksi
6'-0"	(2) 600S162-43	33 ksi
8'-0"	(2) 800S162-43	33 ksi

METAL STUD HEADER NOTES:

1. SCHEDULE TO BE USED FOR NON-BEARING WALLS.
2. HEADERS TO BE CONSTRUCTED AS BOX HEADERS PER SSMA STANDARDS.
3. SEE TYPICAL DETAIL FOR MORE INFORMATION.

NON-BEARING METAL STUD GAUGE SIZING

MEMBER DEPTH IN 1/100 INCHES — FLANGE WIDTH IN 1/100 INCHES

400S137-43

STYLE (S=STUD OR JOIST) — MATERIAL THICKNESS IN MILS

MEMBER DEPTH	MAX STUD HEIGHT	MIN. GA. & SPACING
2 1/2" (250S125-33)	10'-0"	20@16" O.C.
3 5/8" (362S125-33)	14'-0"	20@16" O.C.
3 5/8" (362S162-33)	16'-0"	20@16" O.C.
3 5/8" (362S162-43)	18'-0"	18@16" O.C.
6" (600S162-33)	24'-0"	20@16" O.C.
6" (600S162-43)	26'-0"	18@16" O.C.
6" (600S162-54-50KSI)	28'-0"	16@16" O.C.

METAL STUD NOTES:

1. STEEL STUDS SHALL MEET ICC REPORT ER-4943P AND THE SSMA STANDARDS. HEIGHT BASED ON SSMA 2001 CATALOG AND PROJECT REQUIREMENTS.
2. SEE SCHEDULE FOR STUD SPACING AND GAUGE. ALL STUDS AND BRACES SHALL BE 33 KSI UNLESS NOTED OTHERWISE IN THESE DRAWINGS.
3. AT ALL DOORS PROVIDE TWO TABBED 18 GAUGE STUDS AT BOTH SIDES OF JAMB.
4. PLEASE NOTE THAT DUE TO THE LARGE FLOOR TO FLOOR HEIGHT 18 GAUGE STUDS WILL BE NECESSARY IN MOST INTERIOR NON LOAD BEARING WALLS. REFER TO THE CHART ABOVE.

VCBO ARCHITECTURE

VCBO ARCHITECTURE
524 SOUTH 600 EAST
SALT LAKE CITY, UT 84102
Phone: (801) 575-8800
Fax: (801) 531-9850
Web: vcbo.com

LICENSED ARCHITECT No. 153912 BRENT R. TIPPETS 8-15-13 STATE OF UTAH

2nd District Juvenile Courthouse

Utah State Courts
08284150
165 West 20th Street, Ogden, Utah
BID DOCUMENTS

Rev #	Date	Description

Job # 12500
Date August 15, 2013
Owner # 08284150
Ins. #

LEVEL 3, DIMENSION AND WALL TYPES

A131.2

8/15/2013 9:11:49 AM

LEVEL 3 ROOM FINISH SCHEDULE							
				Wall Finishes			
Room Name	Room Number	Floor Finish	Base Finish	Wall Finish Top	Wall Finish Right	Wall Finish Bottom	Wall Finish Left
STAIR A	3101	RB2	B1	P1	P1	P4	P1
ELEVATOR 1	3102	FT1,2	-	-	-	-	-
STORAGE	3103	L2	B10	P1	P1	P1	P1
COURT ROOM SOUND VESTIBULE	3104	C6	B4	P2	P2	P2	P2
PROBATION SUPERVISION SUPPORT	3105	C1	B1	P2	P2	P2	P2
ATTORNEY/ CLIENT CONFERENCE ROOM	3106	C2	B4	P2	P2	P2	P2
COURT ROOM SOUND VESTIBULE	3107	C6	B4	P2	P2	P2	P2
COURTROOM	3108	C6	B4	WV/F1/P2	WV/F1/P2	WV/F1/P2	WV/F1/P2
STORAGE	3109	C6	B4	P2	P2	P2	P2
STORAGE	3110	C5	B1	P1	P1	P1	P1
JUDGES TOILET/ ROBING CLOSET	3111	FT3	B8	WT9/P2	WT9/P2	WT9/P2	WT9/P2
JUDGES CHAMBERS	3112	C4	B4	P2	P2	WC1	WC1
HOUSEKEEPING CLOSET	3113	L2	B10	P1	P1/WT 13	P1/WT 13	P1
STAIR D	3114	RB2	B1	P4	P1	P1	P1
JUDICIAL CASE MANAGER	3115	C1	B1	P2	P2	P2	P2
CLERK OF COURT / DEPARTMENT ADMINISTRATION	3116	C1	B1	P2	P2	P2	P2
CHIEF PROBATION OFFICER	3117	C1	B1	P2	P2	P2	P2
CORRIDOR	3118	C5	B1	P2	P2	P2	P2
ELEVATOR2	3119	FT1,2	-	-	-	-	-
GENERAL STORAGE	3120	L2	B10	P1	P1	P1	P1

LEVEL 3 ROOM FINISH SCHEDULE							
				Wall Finishes			
Room Name	Room Number	Floor Finish	Base Finish	Wall Finish Top	Wall Finish Right	Wall Finish Bottom	Wall Finish Left
ELECTRICAL	3121	VT2	B10	P1	P1	P1	P1
STAIR E	3122	SC	B10	P1	P1	P1	P1
SMALL BREAKROOM	3122A	L1	B1	P2	P2	P2	P2
COMMUNICATION CLOSET	3123	VT2	B10	P1	P1	P1	P1
CORRIDOR	3124	C5	B1	P2	P2	P2	P2
SUPPORT SERVICE COORDINATOR	3125	C1	B1	P2	P2	P2	P2
FILE STORAGE/ WORKROOM	3126	C1	B1	P2	P2	P2	P2
STAFF TOILET	3127	FT3	B7	WT7,8,9/P1	WT7,8,9/P1	WT7,8,9/P1	WT7,8,9/P1
STAFF TOILET	3128	FT3	B7	WT7,8,9/P1	WT7,8,9/P1	WT7,8,9/P1	WT7,8,9/P1
CONFERENCE ROOM	3129	C2	B4	P2	P2/F1	P2	P2/F1
EXECUTIVE ADMINISTRATIVE ASSISTANT	3130	C1	B1	P2	P2	P2	P2
COURT EXECUTIVE OFFICE	3131	C1	B4	P2	P2	P2	P2
TOILET ROOM	3132	FT3	B8	WT9/P1	WT9/P1	WT9/P1	WT9/P1
JUDICIAL ASSISTANTS/ JUDICIAL SERVICE	3133	C1	B1	P2	P2	P2	P2
JUDICIAL CASE MANAGER	3134	C1	B1	P2	P2	P2	P2
JUVENILE COURT PROGRAM COORDINATOR	3135	C1	B1	P2	P2	P2	P2
COURT CONFERENCE ROOM	3136	C2	B4	P2	P2	P2	P2/WC3
JUDGES TOILET/ ROBING CLOSET	3137	FT3	B8	WT9/P2	WT9/P2	WT9/P2	WT9/P2
JUDGES CHAMBERS	3138	C4	B4	WC 1	WC 1	P2	P2

LEVEL 3 ROOM FINISH SCHEDULE							
				Wall Finishes			
Room Name	Room Number	Floor Finish	Base Finish	Wall Finish Top	Wall Finish Right	Wall Finish Bottom	Wall Finish Left
STAIR C	3139	RB2	B1	P1	P1	P1	P9
STORAGE	3140	C6	B4	P2	P2	P2	P2
LARGE COURTROOM	3141	C6	B4	WV/F1/P2	WV/F1/P2	WV/F1/P2	WV/F1/P2
STAIR B	3142	RB2	B1	P1	P1	P1	P1
MEN'S TOILET	3143	FT1,2	B6	WT1,2,3,4,5	WT1,2,3,4,5	WT1,2,3,4,5	WT1,2,3,4,5,7
WOMEN'S TOILET	3144	FT1,2	B6	WT1,2,3,4,5	WT1,2,3,4,5	WT1,2,3,4,5	WT1,2,3,4,5,7
LOBBY	3145	FT1,2	B3	P2	P2	WT14/P2,9	P2
COURT ROOM SOUND VESTIBULE	3146	C6	B4	P2	P2	P2	P2
HOUSEKEEPING CLOSET	3147	L2	B10	P1	P1/WT 13	P1/WT 13	P1
ATTORNEY/ CLIENT CONFERENCE ROOM	3148	C2	B4	P2	P2	P2	P2
COURT ROOM SOUND VESTIBULE	3149	C6	B4	P2	P2	P2	P2
SECURE SOUND VESTIBULE	3150	EP1	B11	P1	P1	P1	P1
HOLDING CELL-SINGLE	3151	EP1	B11	P1	P1	P1	P1
HOLDING CELL-SINGLE	3152	EP1	B11	P1	P1	P1	P1
ATTORNEY/ CLIENT CONFERENCE ROOM	3153	C2	B4	P2	P2	P2	P2
CORRIDOR	3154	EP1	B11	P1	P1	P1	P1
SECURE SOUND VESTIBULE	3155	EP1	B11	P1	P1	P1	P1
HOLDING CELL-SINGLE	3156	EP1	B11	P1	P1	P1	P1
HOLDING CELL-SINGLE	3157	EP1	B11	P1	P1	P1	P1
ELEVATOR3	3158	PT	-	-	-	-	-

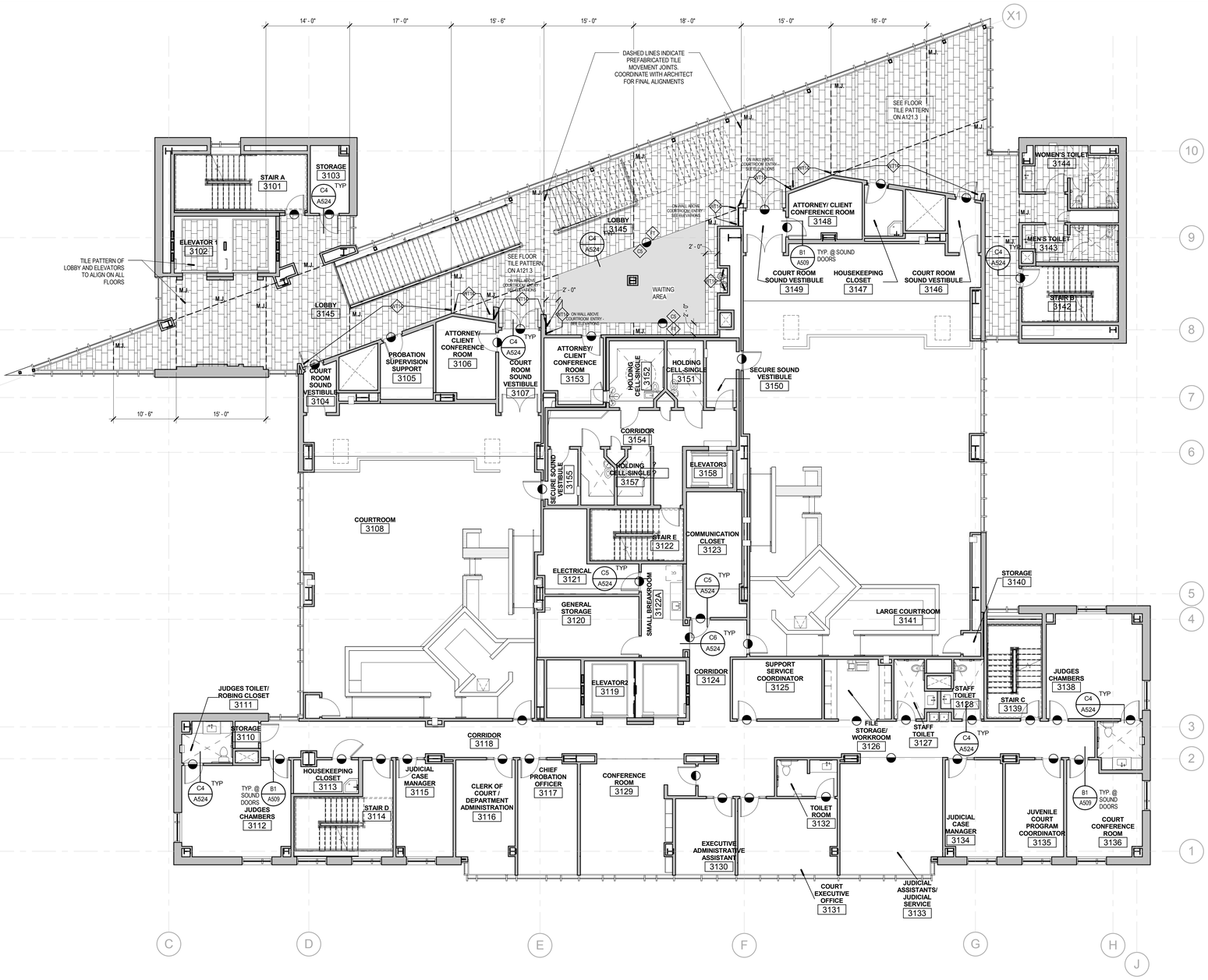

A1 LEVEL 3 FINISH PLAN

SCALE: 1/8" = 1'-0"

PLAN NORTH

GENERAL FINISH NOTES

1. PROVIDE EPOXY PAINT AT ALL RESTROOMS, SHOWERS, LOCKER ROOMS AND JANITOR CLOSETS.
2. ALL FLOOR TRANSITIONS TO BE LOCATED AT CENTER OF DOOR, U.N.O.
3. ALL EXPOSED STEEL COLUMNS AND GIRTS ARE TO BE PAINTED WITH INTUMESCENT PAINT P10, UNLESS NOTED OTHERWISE. SEE G SHEETS FOR LOCATIONS OF SUCH MEMBERS.
4. ALL GROUT JOINTS TO BE NO LARGER THAN 1/8".
5. FIELD VERIFY ALL DIMENSIONS BEFORE FABRICATION OF MILLWORK.
6. COORDINATE ALL MILLWORK WITH APPLIANCES BEFORE FABRICATION.
7. SEE ELEVATION SHEETS FOR ALL WALL TILE PATTERNS.
8. AT SOFFITS RECEIVING COLOR- PAINT ALL SIDES OF SOFFIT.
9. ALL WOOD DOORS TO BE FINISHED BY THE MILLWORK CONTRACTOR TO MATCH TRIM AND VENEERED MILLWORK.
10. ALL COUNTERTOP, BACKSPLASHES, AND EDGE BANDING TO HAVE COORDINATING FINISHES.
11. WHERE STAIRS CALL FOR "RB2: RUBBER FLOORING TILES", PROVIDE RUBBER FLOORING COVERING STAIR TREADS, RISERS AND LANDINGS.
12. PROVIDE A SMOOTH TRANSITION AT ALL FLOOR MATERIALS - CONTRACTOR TO INSTALL ALL FLOOR FINISHES AT SAME LEVEL, DESPITE DIFFERENT THICKNESS. PROVIDE FLOOR TRANSITION WHERE OCCURS. SEE TYPICAL TRANSITIONS ON SHEET A524.
13. PROVIDE TILE 'WT13: 4"X4" CERAMIC WALL TILE' AT ALL JANITOR SINKS. PROVIDE TILE BULLNOSE TO FINISH OFF ALL EXPOSED EDGES.
14. ALL WALLS RECEIVING TILE WAINSCOT TO RECEIVE PAINT P1 ABOVE, U.N.O. SEE FINISH PLANS AND INTERIOR ELEVATIONS FOR ACCENT WALL LOCATIONS.
15. SEE SHEET A524 FOR TYPICAL FLOORING TRANSITION DETAILS.
16. UNLESS NOTED AS STAINLESS STEEL, ALL METAL GUARDRAILS, STAIR STRINGERS, HANDRAILS AND DOOR FRAMES ARE TO BE PAINTED. SEE FINISH SCHEDULE FOR COLOR SELECTIONS.
17. ALL SPACES THAT HAVE NO CEILING ARE TO HAVE THE EXPOSED STRUCTURE, DUCTWORK, PIPING, CONDUIT, ETC PAINTED P5. REFER TO REFLECTED CEILING PLANS.
18. ALL RESTROOM WALL TILE ENDING BELOW THE CEILING LINE TO START AND END WITH A FULL SIZE TILE. VERTICAL HEIGHTS OF TILE DIMENSIONED ON ELEVATIONS ARE APPROXIMATE.

FINISH PLAN SYMBOLS

SINGLE FINISH SYMBOLS INDICATE WHERE FINISHES ARE DIFFERENT FROM GENERAL ROOM FINISHES, OR PROVIDE ADDITIONAL FINISH INFORMATION

CHANGE AT FLOOR MATERIAL

FINISH PLAN LEGEND

FLOOR MATERIALS

EM	ENTRY MAT
C1	CARPET TILE
C2	CARPET TILE
C3	NOT USED
C4	CARPET TILE
C5	CARPET TILE
C6	CARPET TILE
C7	NOT USED
L1	LINOLEUM SHEET
L2	LINOLEUM TILE - MCT
FT1	PORCELAIN FLOOR TILE 12x24
FT2	PORCELAIN FLOOR TILE 6x24
FT3	PORCELAIN FLOOR TILE 12x12
FT4	FLOOR TILE 1X2
VT2	STATIC DISSIPATIVE ACCESS FLOOR PANEL
RB1	RUBBER FLOOR TILES
RB2	RUBBER FLOORING (STAIRS, LANDINGS)
SC	SEALED CONCRETE
TZ1	TERRAZZO FLOORING
TZ2	TERRAZZO FLOORING ACCENT
EP1	EPOXY FLOORING - OPAQUE
G1	GROUT
G2	GROUT
PT	ALUMINUM DIAMOND PLATE

BASE MATERIALS

B1	RUBBER BASE
B2	RUBBER BASE
B3	ANODIZED ALUMINUM BASE - SEE C2 AND C4/A513
B4	SOLID HARDWOOD BASE - 3/4" THICK, 4" HIGH
B5	TILE BASE
B6	ALUMINUM COVE BASE
B7	TILE COVE BASE
B8	NO BASE - SEAL SEAM
B9	NO BASE - CAULK BETWEEN FLOOR AND WALL
B10	COVED RUBBER BASE
B11	COVED EPOXY FLOORING

WALL MATERIALS

F1	ACOUSTIC FABRIC WALL PANELS
F2	PEW SEAT FABRIC
P1	PRIMED & PAINTED WALL SURFACE - GENERAL
P2	PRIMED & PAINTED WALL SURFACE - GENERAL
P3	PRIMED & PAINTED WALL SURFACE - ACCENT
P4	PRIMED & PAINTED WALL SURFACE - ACCENT
P5	CEILING PAINT
P6	RAILING PAINT
P7	H.M. DOOR FRAME PAINT
P8	H.M. DOOR FRAME PAINT
P9	PRIMED & PAINTED WALL SURFACE - ACCENT
P10	INTUMESCENT PAINT SYSTEM
WT1	PORCELAIN WALL TILE 6X24
WT2	PORCELAIN WALL TILE 4X24
WT3	PORCELAIN WILL TILE 2X24
WT4	PORCELAIN WALL TILE 6X24
WT5	PORCELAIN WALL TILE 2X24
WT6	NOT USED
WT7	GLAZED WALL TILE 3x6
WT8	GLAZED WALL TILE 3x6
WT9	GLAZED WALL TILE 3x6
WT10	NOT USED
WT11	NOT USED
WT12	NOT USED
WT13	GLAZED WALL TILE 4x4
WT14	GLASS WALL TILE - SIZES VARY
WC1	VINYL WALLCOVERING
WC3	DRY ERASE WALLCOVERING

SURFACE MATERIALS

PL1	PLASTIC LAMINATE - VERTICAL SURFACES
PL2	PLASTIC LAMINATE - COUNTERTOPS
PL3	PHENOLIC CORE PARTITIONS - PARTITION COLOR
WV	WOOD VENEER - SEE A513 FOR TYPICAL DETAILS
QZ1	QUARTZ COUNTERTOP SURFACE
QZ2	QUARTZ COUNTERTOP SURFACE
QZ3	QUARTZ COUNTERTOP SURFACE
SS1	SOLID SURFACE COUNTERTOP
SS2	SOLID SURFACE COUNTERTOP
SS3	SOLID SURFACE THRESHOLD

VCBO ARCHITECTURE

VCBO ARCHITECTURE
524 SOUTH 600 EAST
SALT LAKE CITY, UT 84102
Phone: (801) 575-8800
Fax: (801) 531-9850
Web: vcbo.com

LICENSED ARCHITECT No. 153912 BRENT R. TIPPETS 8-15-13 STATE OF UTAH

2nd District Juvenile Courthouse

Utah State Courts
08284150
165 West 20th Street, Ogden, Utah
BID DOCUMENTS

Rev #	Date	Description

Job # 12500
Date August 15, 2013
Owner # 08284150
Ins. #

LEVEL 3, FINISH PLAN

A131.3

8/14/2013 2:29:48 PM

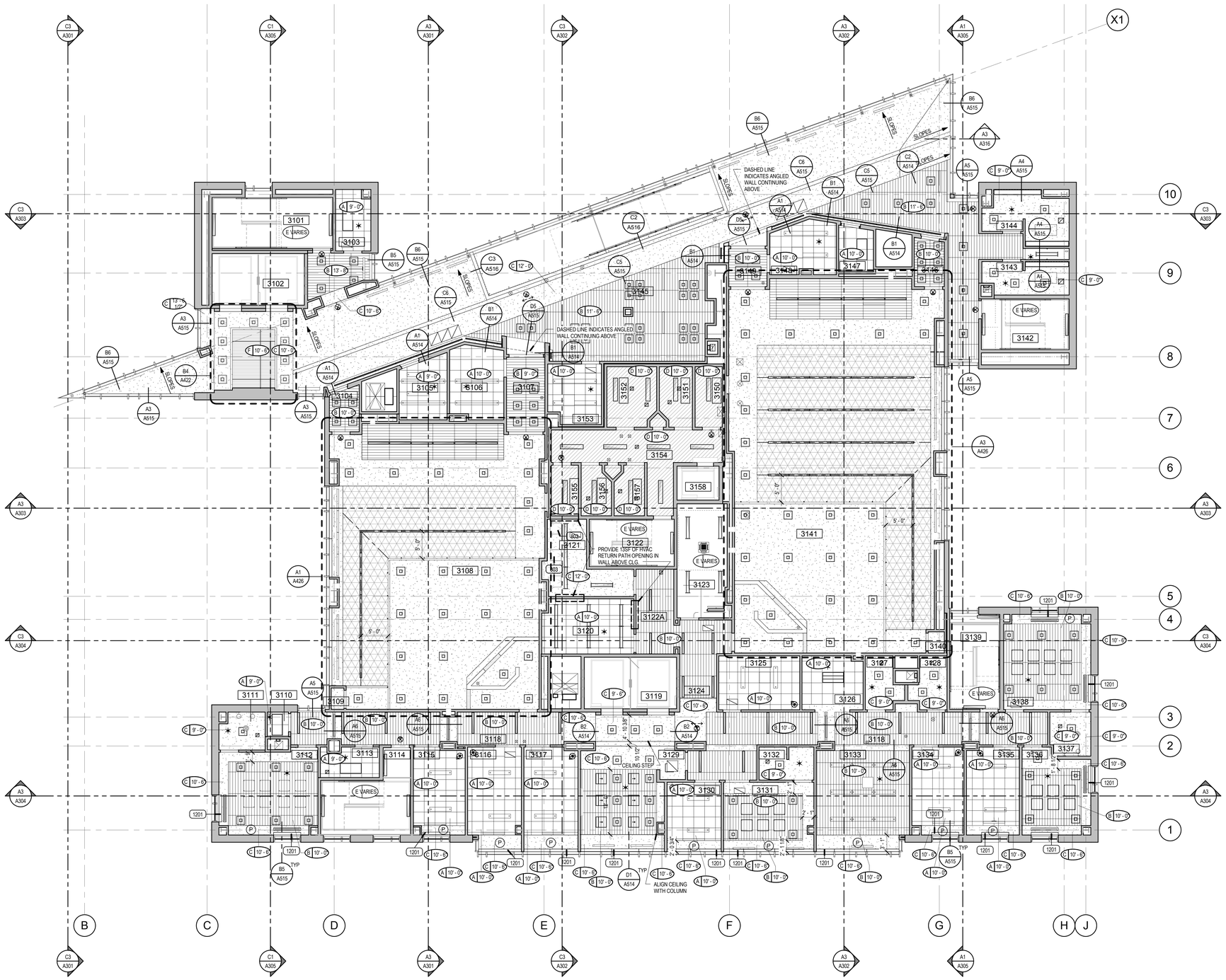

CEILING LEGEND

	A-	SUSPENDED 2' X 4' ACOUSTICAL LAY-IN TILE CEILING WITH SINGLE KERF (2x2 LOOK)
	B-	SUSPENDED 2' X 4' ACOUSTICAL LAY-IN TILE CEILING WITH 3 KERFS (6"x4" LOOK), 6" HIGH PRE-FINISHED METAL PERIMETER TRIM AT EDGES NOT TOUCHING A WALL
	C-	SUSPENDED 5/8" GYP. BD. CEILING SYSTEM - (1 LAYER) PAINTED
	D-	PRECAST CONCRETE CEILING, PAINTED
	E-	OPEN TO STRUCTURE ABOVE, ALL SURFACES PAINTED: STRUCTURE, MECHANICAL, ELECTRICAL, ETC.
	F-	WOOD VENEERED 1/4" SUBSTRATE ADHEARED TO 1/2" MDF. 1/2" MDF PAINTED BLACK AND SECURED TO 2-1/2" METAL STUDS @ 16" OC. 2-1/2" STUDS ARE ATTACHED TO 6" METAL STUDS @16"O.C., SEE ASSOCIATED DETAILS
	G-	ACM METAL PANEL ATTACHED TO THERMALLY BROKEN 3" Z-FURRING @16" O.C. OVER AIR AND MOISTURE BARRIER WITH 3" MINERAL WOOL INSULATION. Z FURRING ATTACHED TO SUSPENDED 5/8" GYP. SHEATHING SOFFIT SYSTEM
	H-	SUSPENDED ACOUSTICAL LAY-IN CEILING AS DESCRIBED IN CEILING TYPE 'B', SUSPENDED 12" BELOW A SUSPENDED 5/8" GYP BOARD CEILING, GYP BOARD JOINTS ARE TO BE FINISHED BUT BOARD IS NOT PAINTED
	J-	STRETCHED FABRIC CEILING SYSTEM OVER 1" FIBERGLASS BATT INSULATION MOUNTED TO 5/8" GYP BOARD CEILING SYSTEM. GYP BOARD JOINTS TO BE FINISHED BUT BOARD IS NOT PAINTED
	K-	SUSPENDED 5/8" GYP. BD. CEILING SYSTEM - OVER HAT CHANNEL FURRING, PAINTED

CEILING SYMBOLS

ELECTRICAL

- 2'X4' FLUORESCENT FIXTURE
- 2'X2' FLUORESCENT FIXTURE
- 6"X4' FLUORESCENT FIXTURE
- FLUORESCENT STRIP FIXTURE
- RECESSED SQUARE DOWN LIGHT
- WALL WASH
- 1'X4' FLUORESCENT FIXTURE
- EXIT SIGN, SINGLE-SIDED
- EXIT SIGN, DOUBLE-SIDED
- F — FIRE ALARM
- S — SPEAKER
- P — SMOKE DETECTOR
- W — WIRELESS INTERNET

MECHANICAL

- SUPPLY GRILLE
- RETURN GRILLE
- EXHAUST GRILLE
- LINEAR DIFFUSER
- SPRINKLER HEAD - CEILING MOUNT
- SPRINKLER HEAD - WALL MOUNT

GENERAL CEILING NOTES

1. REFER TO DETAIL A5/A514 FOR TYPICAL ACOUSTICAL LAY-IN CEILING SUSPENSION & SEISMIC BRACING
2. REFER TO DETAIL A6/A514 FOR TYPICAL SUSPENDED GYP. BOARD CEILINGS
3. ALL UNIDENTIFIED CEILING TYPES ON THE PLANS SHALL BE BID AS TYPE " A"
4. GRID SUSPENSION SYSTEMS SHALL BE CENTERED WITHIN AREAS INDICATED, UNLESS NOTED OTHERWISE
5. PAINT ALL EXPOSED STRUCTURE, MECHANICAL, DUCTS, ELECTRICAL WORK, PIPING, ETC. ALL VISIBLE ELEMENTS TO BE PAINTED AT TYPE "B" & TYPE "E"
6. REFER TO ARCHITECTURAL DRAWINGS FOR LOCATION OF MECHANICAL GRILLES, AND TO MECHANICAL DRAWINGS FOR QUANTITIES AND TYPES
7. REFER TO ARCHITECTURAL DRAWINGS FOR LOCATIONS OF LIGHT FIXTURES AND TO ELECTRICAL DRAWINGS FOR QUANTITY AND TYPES
8. MECHANICAL AND ELECTRICAL CONTRACTORS TO COORDINATE WORK WITH SPRINKLER CONTRACTOR TO AVOID CONFLICTS IN FIELD
9. ALL CEILING HEIGHTS ARE ELEVATION ABOVE FINISH FLOOR
10. ALL TYPE C CEILINGS IN RESTROOMS, LOCKER ROOMS, SHOWERS, AND WET AREAS TO BE EPOXY PAINTED
11. SEE DETAIL C5/A514 FOR TYPICAL SPRINKLER HEAD LAYOUT REQUIREMENTS
12. 3 SEE DETAIL C6/A514 FOR TYPICAL DEVICE ALIGNMENT REQUIREMENTS
1201 MANUAL ROLLER WINDOW SHADES FULL LENGTH OF WINDOW, SHADE BREAKS TO ALIGN WITH MULLION

A1 LEVEL 3 REFLECTED CEILING

SCALE: 1/8" = 1'-0"

PLAN NORTH

VCBO ARCHITECTURE
524 SOUTH 600 EAST
SALT LAKE CITY, UT 84102
Phone: (801) 575-8800
Fax: (801) 531-9850
Web: vcbo.com

LICENSED ARCHITECT No. 153912 BRENT R. TIPPETS 8-15-13 STATE OF UTAH

2nd District Juvenile Courthouse

Utah State Courts
08284150
165 West 20th Street, Ogden, Utah
BID DOCUMENTS

Rev #	Date	Description

Job # 12500
Date August 15, 2013
Owner # 08284150
Ins. #

LEVEL 3, REFLECTED CEILING

A131.4

8/14/2013 2:30:16 PM

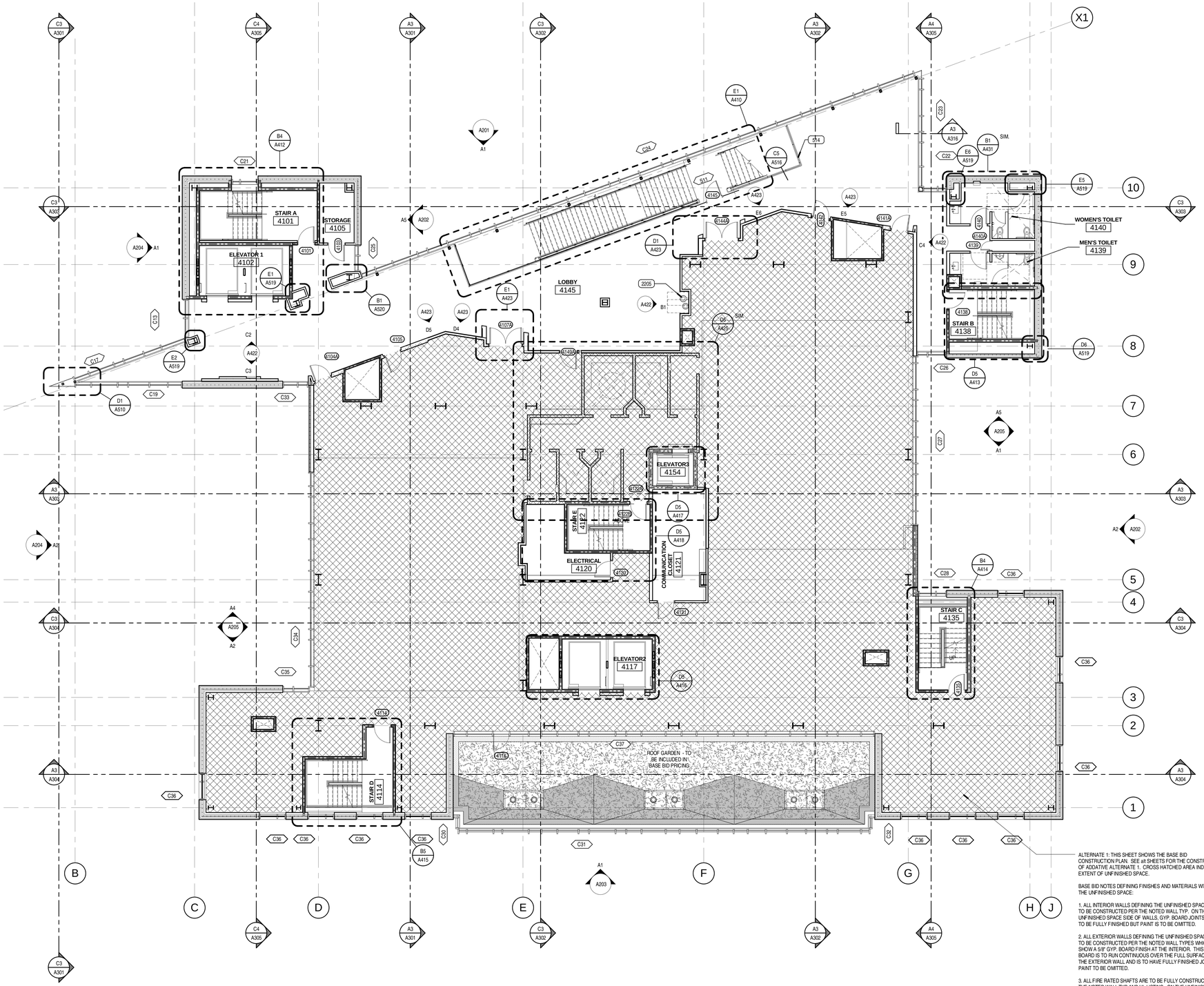

KEYED NOTES

514	1 1/2" DIA. STAINLESS STEEL HANDRAIL
2205	ELECTRIC WATER COOLER

PLAN NOTES

1. WHERE FLOOR DRAINS ARE INSTALLED, THE FLOOR IS **NOT** TO SLOPE TOWARD THE DRAIN (REMAINS FLAT) EXCEPT AT THE FOLLOWING LOCATIONS:
   A. THICK SET TILE LOCATED IN CONJUCTION WITH SHOWERS.
   B. FLOORS NOT TILED AT SLAB-ON-GRADE LOCATIONS (LEVEL 1 HOLDING AND MECHANICAL ROOMS)
   WHERE FLOORS SLOPE, THE MAXIMUM FLOOR SLOPE IS NOT TO EXCEED 2% WHILE THE MINIMUM SLOPE IS NOT TO BE LESS THAN 1%.

2. WHERE CONCRETE PADS ARE CALLED TO BE CONSTRUCTED UNDER EQUIPMENT THE SLAB IS TO BE 8" THICK, U.N.O., AND IS TO HAVE #4 BARS AT 18" O.C. EACH WAY. COORDINATE DIMENSIONS OF PAD WITH ACTUAL EQUIPMENT SPEC

3. THE CONTRACTOR IS TO ENSURE THAT BETWEEN ANY FINISH FLOOR ELEVATION TO 42" A.F.F. ALL GUARDRAILS ARE TO BE CONSTRUCTED AND INSTALLED SO THAT A 4" SPHERE WILL NOT PASS BETWEEN ANY TWO ADJACENT GUARDRAIL COMPONENTS OR BETWEEN THE EDGE OF A GUARDRAIL AND ALL ADJACENT BUILDING ELEMENT SUCH AS A WALL OR FLOOR.

WALL NOTES

1. SEE SHEETS A500 AND A501 FOR ALL WALL TYPE DEFINITIONS

2. PARTITION TYPE INDICATIONS ARE INDEPENDENT OF APPLIED FINISHES, SUCH AS TILE OR WOOD PANELING. SEE THE FINISH SHEETS AND INTERIOR ELEVATIONS FOR WALL FINISHES INCLUDING COURSING AND PANEL LAYOUT AND/OR THE DESIGNATIONS ON THE PLANS FOR ADDITIONAL INFORMATION REGARDING APPLIED FINISHES.

3. WHERE PARTITION TYPE DESIGNATION ON FLOOR PLANS IS INTERRUPTED BY DOOR OPENING, GLAZED PARTITION, ETC.. CONSTRUCTION ABOVE INTERRUPTION (AND WHERE APPLICABLE BELOW) IS TO BE THE SAME AS THAT DESIGNATED FOR THE PARTITION IN WHICH THE INTERRUPTION OCCURRED.

4. THE MINIMUM REQUIREMENTS FOR CONSTRUCTION OF EACH PARTITION TYPE AS EXPRESSED BY THE INDICATED REFERENCE ARE INCORPORATED BY REFERENCE AND ARE APPLICABLE TO THE WORK OF THIS PROJECT. HOWEVER, ADDITIONAL AND/OR MORE RESTRICTIVE REQUIREMENTS MAY BE INDICATED BY THE SPECIFICATIONS AND DRAWINGS. SUCH REQUIREMENTS ALSO APPLY AND SHALL GOVERN. SUCH REQUIREMENTS INCLUDE BUT ARE NOT LIMITED TO:

   A. USE 5/8" THICK GYPSUM BOARD THROUGHOUT UNLESS NOTED OTHERWISE.

   B. USE 16" OC MAX STUD SPACING UNLESS NOTED OTHERWISE IN THESE DOCUMENTS. THE SPACING STATED BY THE REFERENCED APPROVAL OR TEST REPORT IS THE MAX SPACING IF ALLOWED IN THESEDOCUMENTS.

   C. USE STUDS OF GAGE INDICATED ON THE DRAWINGS OR IN THE SPECIFICATIONS. THE GAGE STATED BY THE REFERENCED APPROVAL OR TEST REPORT IS THE MINIMUM GAGE TESTED, 20 GA (30 MILS) IS THE MINIMUM ALLOWED IN THESE DOCUMENTS.

5. USE STUDS OF DEPTH INDICATED BY THIS SET OF DOCUMENTS. THE DEPTH STATED BY THE REFERENCED APPROVAL OR TEST REPORT IS THE MINIMUM DEPTH ALLOWED IN THESE DOCUMENTS.

6. AT INTERIOR STUD WALLS, THE CONTRACTOR IS RESPONSIBLE FOR SELECTING THE STUD GAUGE BASED ON THE HEIGHT OF WALL BEING CONSTRUCTED USING THE REQUIRMENTS FOUND IN THE "NON-BEARING METAL STUD GAUGE SIZING" CHART LOCATED ON SHEET A501.

7. PROVIDE FIRE RATED CONSTRUCTION ASSEMBLIES WHERE INDICATED ON SHEET G200 AND FLOOR PLAN DRAWINGS.

8. ALL DIMENSIONS ARE CENTER OF STUD OR FACE OF CONCRETE, MASONRY OR ROUGH OPENING UNLESS NOTED OTHERWISE.

9. AT ALL WALLS, STUDS, INSULATION AND GYPSUM BOARD ARE TO EXTEND TO THE DECK ABOVE. UNLESS NOTED OTHERWISE.

10. WALL TYPES NOT NOTED ARE ASSUMED TO MATCH ADJACENT ROOMS. NOTIFY ARCHITECT OF ANY DISCREPANCIES.

11. ALL METAL STUD PARTITIONS ARE CONSIDERED ACOUSTIC PARTITIONS AND ARE TO RECEIVE A TYPE 1 SOUND ATTENUATION BLANKET. THICKNESS TO MATCH STUD DEPTH, UNLESS NOTED OTHERWISE.

12. REFER TO SHEET A511 FOR TYPICAL INTERIOR WALL CONDITIONS ASSOCIATED WITH ALL METAL STUD AND CMU PARTITIONS.

13. SEE DETAIL B4/A511 FOR THE TYPICAL TOP OF WALL CONDITION TO BE USED AT ALL INTERIOR STUD WALLS.

14. PROVIDE CONTROL JOINTS IN METAL FRAMED WALLS AT APPROXIMATELY 30 FEET ON CENTER. LOCATE AT CORNER ABOVE DOORS OR INSIDE CORNER OF PILASTERS OR OTHER INCONSPICUOUS LOCATION WHERE POSSIBLE. **CONSULT WITH ARCHITECT PRIOR TO COMMENCING FRAMING.**

15. AT WALL OPENINGS FOR PENETRATION OF PIPES, DUCTS, DEVICES, ETC.,. GYPSUM BOARD IS TO BE CUT TO MATCH THE SHAPE AND DIMENSION OF THE PENETRATING OBJECT AND THE GAP BETWEEN THE OBJECT AND THE WALL IS TO BE SEALED W/ ACOUSTICAL OR FIRE SEALANT ON ALL SIDES WITH A 3/4" JOINT AT ALL SIDES, MAXIMUM. THE OPENING FOR DUCTS OR LARGE PENETRATIONS SHALL BE FRAMED WITH A HEADER, ADD AN ANGLED CORNER BRACE IF THE GAP EXCEEDS 3" FROM FRAMING TO THE OPENING, SEE DETAIL D5/511.

16. CONTRACTOR TO PROVIDE BLOCKING / BACKING FOR ALL WALL MOUNTED EQUIPMENT. SEE FLOOR PLANS AND INTERIOR ELEVATIONS FOR CABINETS, GRAB BARS ETC. INSTALL BLOCKING AS DETAILED OR AS REQUIRED TO MOUNT SUCH DEVICES. ALL BLOCKING IS TO BE FIRE RETARDANT TREATED OR 20 GA METAL PER DETAIL C4/A511.

17. WHERE THERE IS LIMITED WATER EXPOSURE: INSTALL ONE LAYER OF 5/8" TYPE X WATER RESISTANT GYPSUM BOARD PER ASTM C1396 (WHERE GYPSUM BOARD OCCURS) OF BASIC PARTITION AT THE FOLLOWING LOCATIONS:

   A. WITHIN 2 FEET HORIZONTALLY AND 4 FEET VERTICALLY OF JANITORS SINKS

   B. AT OTHER LOCATIONS, I.E. TOILET ROOMS AND KITCHENS, AND AS INDICATED ON THE ARCHITECTURAL FINISH PLANS AND ELEVATIONS.

18. WHERE CERAMIC TILE FINISHES ARE INDICATED PER THE FINISH PLANS AND ELEVATIONS, INSTALL ONE LAYER OF 5/8" GLASS MAT TILE BACKER BOARD IN LIEU OF GYPSUM BOARD (WHERE GYPSUM BOARD OCCURS) OF BASIC PARTITION WHERE THERE IS NO FIRE RATING AND OVER GYPSUM BOARD FACE LAYER AT FIRE RATED PARTITIONS AT THE FOLLOWING LOCATIONS.

19. ALL EXTERIOR WALLS TO HAVE 2" OF SPRAY FOAM INSULATION APPLIED TO THE INTERIOR FACE OF SHEATHING OR TO THE BACK OF THE GFRC PANEL (UNLESS NOTED OTHERWISE).

20. AT WALLS HOLDING EXTERIOR METAL PANELS, A FLUID APPLIED MEMBRANE IS TO BE APPLIED TO THE EXTERIOR FACE OF THE GYP SHEATHING FOR THE FULL HEIGHT AND LENGTH OF THE WALL, SEAL ALL PENETRATIONS. **PLEASE NOTE THAT TWO MEMBRANE TYPES ARE TO BE USED (VAPOR REMEABLE AND VAPOR BARRIER).** SEE WALL TYPES, SPECIFICATIONS AND DETAILS FOR LOCATION OF EACH TYPE.

21. AT EXTERIOR METAL PANELS, 3" OF MINERAL WOOL CAVITY INSULATION IS TO BE PROVIDED.

22. THE FLUID APPLIED MEMBRANE SYSTEMS (PERMEABLE AND VAPOR BARRIER) ARE TO WRAP INTO ALL WINDOW AND DOOR OPENINGS PER THE MEMBRANE MANUFACTURER'S APPROVED DETAILS.

23. SEE STRUCTURAL PLANS FOR ADDITIONAL CONCRETE AND MASONRY WALL INFORMATION.

24. SEE EXTERIOR ELEVATIONS FOR G.F.R.C., ACM AND PROFILE METAL PANEL ORIENTATION AND JOINT PLACEMENT.

25. ALL MASONRY WALLS ARE TO BE REINFORCED AND ARE TO BE SET ON REINFORCED FOOTINGS. CONTROL JOINTS TO BE LOCATED AS PER THE REQUIREMENTS FOUND IN THE STRUCTURAL DOCUMENTS BUT ARE NOT TO EXCEED 30' OC.. SEE THE STRUCTURAL DRAWINGS FOR REINFORCING AND OTHER DETAILS PERTAINING TO MASONRY WALLS. IF NOT OTHERWISE NOTED, LOCATE CONTROL JOINTS AT CORNER ABOVE DOORS, INSIDE CORNER OF PILASTERS OR OTHER INCONSPICUOUS LOCATION WHERE POSSIBLE. CONSULT WITH ARCHITECT PRIOR TO INSTALLING.

26. SEE IBC 2009, CHAPTER 7 FOR FIRE RESISTIVE REQUIREMENTS ON NEW CONCRETE AND CONCRETE MASONRY UNIT WALLS.
-CMU WALLS (IBC TABLE 720.1(2), ITEM 3)
-CAST IN PLACE CONCRETE WALLS (IBC TABLE 721.2.1.2(1))

27. AT WALL OPENINGS FOR PENETRATION OF PIPES, DUCTS, DEVICES, ETC., MASONRY IS TO BE CUT TO MATCH THE SHAPE AND DIMENSION OF THE PENETRATING OBJECT AND THE GAP BETWEEN THE OBJECT AND THE WALL IS TO BE SEALED W/ ACOUSTICAL OR FIRE SEALANT ON ALL SIDES WITH A 3/4" JOINT AT ALL SIDES, MAXIMUM.

28. PROTECTION OF MASONRY: DURING CONSTRUCTION, COVER TOPS OF WALLS, PROJECTIONS, AND SILLS WITH WATERPROOF SHEETING AT END OF EACH DAY'S WORK. EXCEPT WHEN THE AMBIENT TEMPERATURE IS EXPECTED TO REMAIN ABOVE 65 DEG F AND NO PRECIPITATION IS FORECAST FOR THE NEXT 24 HOURS. (THIS IS TO PREVENT CONDENSATION FROM COVERED WALLS CAUSING A MOISTURE PROBLEM.) COVER PARTIALLY COMPLETED MASONRY EACH DAY THAT CONSTRUCTION IS NOT IN PROGRESS. WALLS ARE TO BE PROTECTED UNTIL THEY ARE PERMANENTLY PROTECTED BY THE ROOFING MEMBRANE OVER THE CAP PLATE. THE GENERAL CONTRACTOR IS TO PROVIDE TEMPORARY PROTECTION IMMEDIATELY FOLLOWING THE TOPPING OUT OF EACH SECTION OF WALL BY INSTALLING WATERPROOF SHEETING OVER A CONTINUOUS CAP PLATE UNTIL THE ROOFING MEMBRANE IS INSTALLED. **A SOLID GROUTED TOP BOND BEAM SHALL NOT BE CONSIDERED ADEQUATE PROTECTION FOR THE WALL.**

29. AT PAINTED CMU THE HORIZONTAL AND VERTICAL MORTAR JOINTS ARE TO BE CONCAVE. AT ALL HONED BLOCK SITE WALLS THE HORIZONTAL MORTAR JOINT IS TO BE A WEATHERED JOINT AND ALL VERTICAL JOINTS ARE TO BE RAKED.

30. ALL VERTICAL MASONRY CORNERS WHICH FALL WITHIN THE INTERIOR OF THE BUILDING, INCLUDING CORNERS AT DOOR AND WINDOW OPENINGS ARE TO HAVE A 3/4" CHAMFER EXTENDING FROM 4" A.F.F. TO THE DECK ABOVE OR THE BOTTOM OF THE HEADER. SEE DETAIL D6/A512.

31. PROVIDE SPECIAL SHAPES, SUCH AS "U" SHAPED CHANNEL FOR LINTELS OR HEADERS AND CAPPING UNITS FOR SASH AND OTHER SPECIAL CONDITIONS. U SHAPED BLOCKS ARE TO BE 16"X8"X THE WIDTH OF THE WALL.

32. WHERE A FLUID APPLIED MEMBRANES ARE TO BE APPLIED OVER CMU, THE MORTAR JOINTS ARE TO BE STRUCK FLUSH AND SMOOTH.

33. ALL WALL COMPONENTS (GYP. BOARD, VAPOR BARRIER, INSULATION, ETC..) ARE TO EXTEND TO THE DECK ABOVE OR TO TOP OF PARAPET UNLESS NOTED OTHERWISE.

ALTERNATE 1: THIS SHEET SHOWS THE BASE BID CONSTRUCTION PLAN. SEE alt SHEETS FOR THE CONSTRUCTION OF ADDATIVE ALTERNATE 1. CROSS HATCHED AREA INDICATES EXTENT OF UNFINISHED SPACE.

BASE BID NOTES DEFINING FINISHES AND MATERIALS WITHIN THE UNFINISHED SPACE:

1. ALL INTERIOR WALLS DEFINING THE UNFINISHED SPACE ARE TO BE CONSTRUCTED PER THE NOTED WALL TYP. ON THE UNFINISHED SPACE SIDE OF WALLS, GYP. BOARD JOINTS ARE TO BE FULLY FINISHED BUT PAINT IS TO BE OMITTED.

2. ALL EXTERIOR WALLS DEFINING THE UNFINISHED SPACE ARE TO BE CONSTRUCTED PER THE NOTED WALL TYPES WHICH SHOW A 5/8" GYP. BOARD FINISH AT THE INTERIOR. THIS GYP. BOARD IS TO RUN CONTINUOUS OVER THE FULL SURFACE OF THE EXTERIOR WALL AND IS TO HAVE FULLY FINISHED JOINTS. PAINT TO BE OMITTED.

3. ALL FIRE RATED SHAFTS ARE TO BE FULLY CONSTRUCTED TO THE NOTED WALL TYP AND UL LISTING. ON THE UNFINISHED SPACE SIDE OF WALLS, GYP. BOARD JOINTS ARE TO BE FULLY FINISHED BUT PAINT IS TO BE OMITTED.

4. ALL CURTAIN WALL AND MINERAL WOOL SPADREL INSULATION IS TO BE FURNISHED IN THE BASE BID. STUD AND GYP BOARD WHICH CONCEALS THE SPADREL INSULATION IS TO BE FURNISHED IN THE BASE BID.

A2 LEVEL 4 ANNOTATED
SCALE: 1/8" = 1'-0"

PLAN NORTH

8/15/2013 9:25:58 AM

VCBO ARCHITECTURE
524 SOUTH 600 EAST
SALT LAKE CITY, UT 84102
Phone: (801) 575-8800
Fax: (801) 531-9850
Web: vcbo.com

LICENSED ARCHITECT No. 139912 BRENT R. TIPPETS 8-15-13 STATE OF UTAH

2nd District Juvenile Courthouse

Utah State Courts
08284150
165 West 20th Street, Ogden, Utah
BID DOCUMENTS

Rev #	Date	Description

Job # 12500
Date August 15, 2013
Owner # 08284150
Ins. #

LEVEL 4, ANNOTATED

A141.1

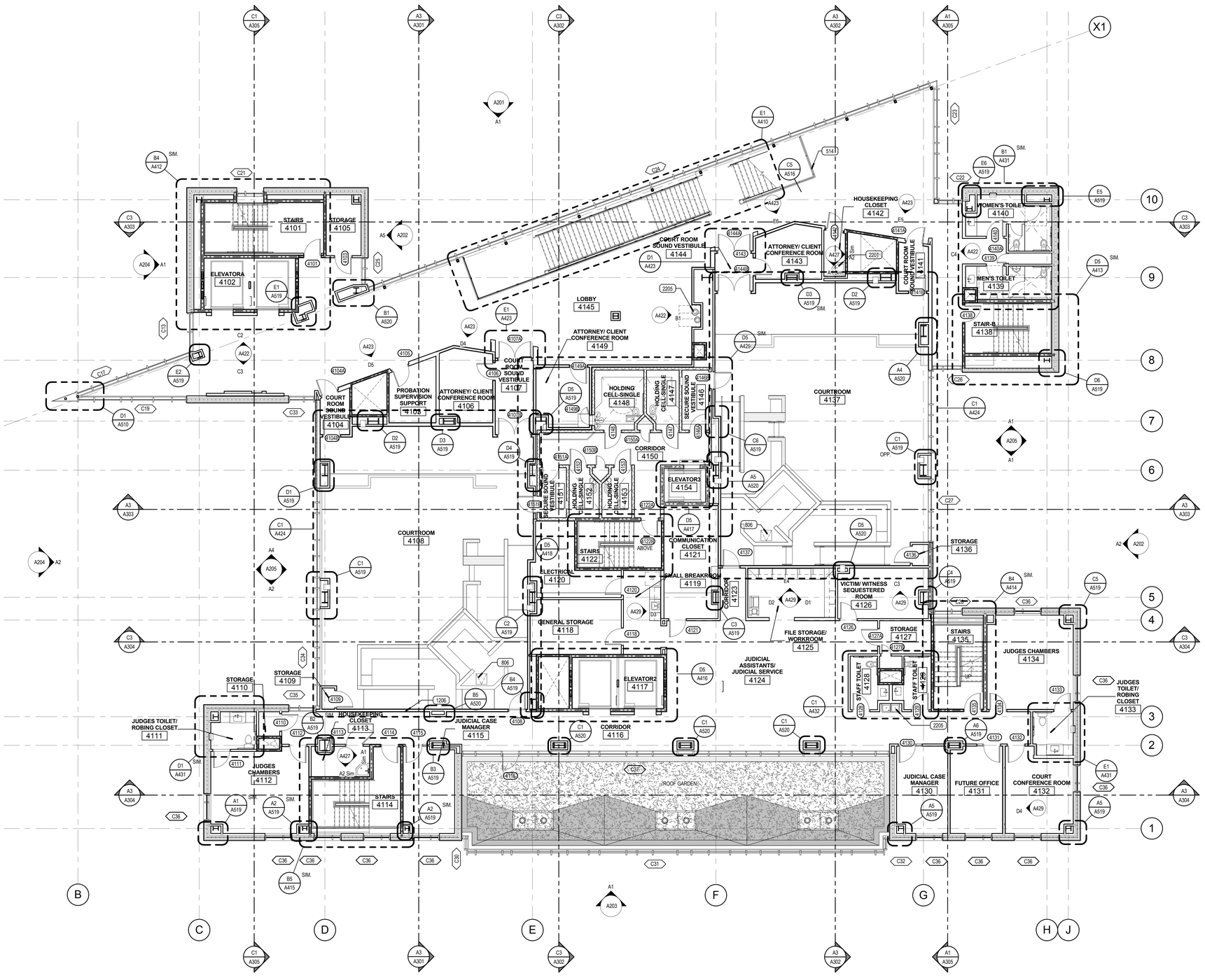

A1 LEVEL 4 ANNOTATED ALTERNATE

SCALE: 1/8" = 1'-0"

KEYED NOTES

514	1 1/2" DIA. STAINLESS STEEL HANDRAIL
806	24"X 24" FLOOR ACCESS DOOR WITH CARPET INSERT
1206	THRU-WALL PEEP HOLE
2201	JANITOR'S SINK
2205	ELECTRIC WATER COOLER

PLAN NOTES

1. WHERE FLOOR DRAINS ARE INSTALLED, THE FLOOR IS **NOT** TO SLOPE TOWARD THE DRAIN (REMAINS FLAT) EXCEPT AT THE FOLLOWING LOCATIONS:
   A. THICK SET TILE LOCATED IN CONJUCTION WITH SHOWERS.
   B. FLOORS NOT TILED AT SLAB-ON-GRADE LOCATIONS (LEVEL 1 HOLDING AND MECHANICAL ROOMS)
   WHERE FLOORS SLOPE, THE MAXIMUM FLOOR SLOPE IS NOT TO EXCEED 2% WHILE THE MINIMUM SLOPE IS NOT TO BE LESS THAN 1%.

2. WHERE CONCRETE PADS ARE CALLED TO BE CONSTRUCTED UNDER EQUIPMENT THE SLAB IS TO BE 6" THICK, U.N.O., AND IS TO HAVE #4 BARS AT 18" O.C. EACH WAY. COORDINATE DIMENSIONS OF PAD WITH ACTUAL EQUIPMENT SPEC

3. THE CONTRACTOR IS TO ENSURE THAT BETWEEN ANY FINISH FLOOR ELEVATION TO 42" A.F.F. ALL GUARDRAILS ARE TO BE CONSTRUCTED AND INSTALLED SO THAT A 4" SPHERE WILL NOT PASS BETWEEN ANY TWO ADJACENT GUARDRAIL COMPONENTS OR BETWEEN THE EDGE OF A GUARDRAIL AND ALL ADJACENT BUILDING ELEMENT SUCH AS A WALL OR FLOOR.

WALL NOTES

1. SEE SHEETS A500 AND A501 FOR ALL WALL TYPE DEFINITIONS

2. PARTITION TYPE INDICATIONS ARE INDEPENDENT OF APPLIED FINISHES, SUCH AS TILE OR WOOD PANELING. SEE THE FINISH SHEETS AND INTERIOR ELEVATIONS FOR WALL FINISHES INCLUDING COURSING AND PANEL LAYOUT AND/OR THE DESIGNATIONS ON THE PLANS FOR ADDITIONAL INFORMATION REGARDING APPLIED FINISHES.

3. WHERE PARTITION TYPE DESIGNATION ON FLOOR PLANS IS INTERRUPTED BY DOOR OPENING, GLAZED PARTITION, ETC., CONSTRUCTION ABOVE INTERRUPTION (AND WHERE APPLICABLE BELOW) IS TO BE THE SAME AS THAT DESIGNATED FOR THE PARTITION IN WHICH THE INTERRUPTION OCCURRED.

4. THE MINIMUM REQUIREMENTS FOR CONSTRUCTION OF EACH PARTITION TYPE AS EXPRESSED BY THE INDICATED REFERENCE ARE INCORPORATED BY REFERENCE AND ARE APPLICABLE TO THE WORK OF THIS PROJECT. HOWEVER, ADDITIONAL AND/OR MORE RESTRICTIVE REQUIREMENTS MAY BE INDICATED BY THE SPECIFICATIONS AND DRAWINGS. SUCH REQUIREMENTS ALSO APPLY AND SHALL GOVERN. SUCH REQUIREMENTS INCLUDE BUT ARE NOT LIMITED TO:

   A. USE 5/8" THICK GYPSUM BOARD THROUGHOUT UNLESS NOTED OTHERWISE.

   B. USE 16" OC MAX STUD SPACING UNLESS NOTED OTHERWISE IN THESE DOCUMENTS. THE SPACING STATED BY THE REFERENCED APPROVAL OR TEST REPORT IS THE MAX SPACING IF ALLOWED IN THESEDOCUMENTS.

   C. USE STUDS OF GAGE INDICATED ON THE DRAWINGS OR IN THE SPECIFICATIONS. THE GAGE STATED BY THE REFERENCED APPROVAL OR TEST REPORT IS THE MINIMUM GAGE TESTED, 20 GA (30 MILS) IS THE MINIMUM ALLOWED IN THESE DOCUMENTS.

5. USE STUDS OF DEPTH INDICATED BY THIS SET OF DOCUMENTS. THE DEPTH STATED BY THE REFERENCED APPROVAL OR TEST REPORT IS THE MINIMUM DEPTH ALLOWED IN THESE DOCUMENTS.

6. AT INTERIOR STUD WALLS, THE CONTRACTOR IS RESPONSIBLE FOR SELECTING THE STUD GAUGE BASED ON THE HEIGHT OF WALL BEING CONSTRUCTED USING THE REQUIRMENTS FOUND IN THE "NON-BEARING METAL STUD GAUGE SIZING" CHART LOCATED ON SHEET A501.

7. PROVIDE FIRE RATED CONSTRUCTION ASSEMBLIES WHERE INDICATED ON SHEET G200 AND FLOOR PLAN DRAWINGS.

8. ALL DIMENSIONS ARE CENTER OF STUD OR FACE OF CONCRETE, MASONRY OR ROUGH OPENING UNLESS NOTED OTHERWISE.

9. AT ALL WALLS, STUDS, INSULATION AND GYPSUM BOARD ARE TO EXTEND TO THE DECK ABOVE. UNLESS NOTED OTHERWISE.

10. WALL TYPES NOT NOTED ARE ASSUMED TO MATCH ADJACENT ROOMS. NOTIFY ARCHITECT OF ANY DISCREPANCIES.

11. ALL METAL STUD PARTITIONS ARE CONSIDERED ACOUSTIC PARTITIONS AND ARE TO RECEIVE A TYPE 1 SOUND ATTENUATION BLANKET. THICKNESS TO MATCH STUD DEPTH, UNLESS NOTED OTHERWISE.

12. REFER TO SHEET A511 FOR TYPICAL INTERIOR WALL CONDITIONS ASSOCIATED WITH ALL METAL STUD AND CMU PARTITIONS.

13. SEE DETAIL B4/A511 FOR THE TYPICAL TOP OF WALL CONDITION TO BE USED AT ALL INTERIOR STUD WALLS.

14. PROVIDE CONTROL JOINTS IN METAL FRAMED WALLS AT APPROXIMATELY 30 FEET ON CENTER. LOCATE AT CORNER ABOVE DOORS OR INSIDE CORNER OF PILASTERS OR OTHER INCONSPICUOUS LOCATION WHERE POSSIBLE. **CONSULT WITH ARCHITECT PRIOR TO COMMENCING FRAMING.**

15. AT WALL OPENINGS FOR PENETRATION OF PIPES, DUCTS, DEVICES, ETC., GYPSUM BOARD IS TO BE CUT TO MATCH THE SHAPE AND DIMENSION OF THE PENETRATING OBJECT AND THE GAP BETWEEN THE OBJECT AND THE WALL IS TO BE SEALED W/ ACOUSTICAL OR FIRE SEALANT ON ALL SIDES WITH A 3/4" JOINT AT ALL SIDES, MAXIMUM. THE OPENING FOR DUCTS OR LARGE PENETRATIONS SHALL BE FRAMED WITH A HEADER, ADD AN ANGLED CORNER BRACE IF THE GAP EXCEEDS 3" FROM FRAMING TO THE OPENING, SEE DETAIL D5/511.

16. CONTRACTOR TO PROVIDE BLOCKING / BACKING FOR ALL WALL MOUNTED EQUIPMENT. SEE FLOOR PLANS AND INTERIOR ELEVATIONS FOR CABINETS, GRAB BARS ETC. INSTALL BLOCKING AS DETAILED OR AS REQUIRED TO MOUNT SUCH DEVICES. ALL BLOCKING IS TO BE FIRE RETARDANT TREATED OR 20 GA METAL PER DETAIL C4/A511.

17. WHERE THERE IS LIMITED WATER EXPOSURE: INSTALL ONE LAYER OF 5/8" TYPE X WATER RESISTANT GYPSUM BOARD PER ASTM C1396 (WHERE GYPSUM BOARD OCCURS) OF BASIC PARTITION AT THE FOLLOWING LOCATIONS:

   A. WITHIN 2 FEET HORIZONTALLY AND 4 FEET VERTICALLY OF JANITORS SINKS

   B. AT OTHER LOCATIONS, I.E. TOILET ROOMS AND KITCHENS, AND AS INDICATED ON THE ARCHITECTURAL FINISH PLANS AND ELEVATIONS.

18. WHERE CERAMIC TILE FINISHES ARE INDICATED PER THE FINISH PLANS AND ELEVATIONS, INSTALL ONE LAYER OF 5/8" GLASS MAT TILE BACKER BOARD IN LIEU OF GYPSUM BOARD (WHERE GYPSUM BOARD OCCURS) OF BASIC PARTITION WHERE THERE IS NO FIRE RATING AND OVER GYPSUM BOARD FACE LAYER AT FIRE RATED PARTITIONS AT THE FOLLOWING LOCATIONS.

19. ALL EXTERIOR WALLS TO HAVE 2" OF SPRAY FOAM INSULATION APPLIED TO THE INTERIOR FACE OF SHEATHING OR TO THE BACK OF THE GFRC PANEL (UNLESS NOTED OTHERWISE).

20. AT WALLS HOLDING EXTERIOR METAL PANELS, A FLUID APPLIED MEMBRANE IS TO BE APPLIED TO THE EXTERIOR FACE OF THE GYP SHEATHING FOR THE FULL HEIGHT AND LENGTH OF THE WALL, SEAL ALL PENETRATIONS. **PLEASE NOTE THAT TWO MEMBRANE TYPES ARE TO BE USED (VAPOR PERMEABLE AND VAPOR BARRIER)**. SEE WALL TYPES, SPECIFICATIONS AND DETAILS FOR LOCATION OF EACH TYPE.

21. AT EXTERIOR METAL PANELS, 3" OF MINERAL WOOL CAVITY INSULATION IS TO BE PROVIDED.

22. THE FLUID APPLIED MEMBRANE SYSTEMS (PERMEABLE AND VAPOR BARRIER) ARE TO WRAP INTO ALL WINDOW AND DOOR OPENINGS PER THE MEMBRANE MANUFACTURER'S APPROVED DETAILS.

23. SEE STRUCTURAL PLANS FOR ADDITIONAL CONCRETE AND MASONRY WALL INFORMATION.

24. SEE EXTERIOR ELEVATIONS FOR G.F.R.C., ACM AND PROFILE METAL PANEL ORIENTATION AND JOINT PLACEMENT.

25. ALL MASONRY WALLS ARE TO BE REINFORCED AND ARE TO BE SET ON REINFORCED FOOTINGS. CONTROL JOINTS TO BE LOCATED AS PER THE REQUIREMENTS FOUND IN THE STRUCTURAL DOCUMENTS BUT ARE NOT TO EXCEED 30' OC. SEE THE STRUCTURAL DRAWINGS FOR REINFORCING AND OTHER DETAILS PERTAINING TO MASONRY WALLS. IF NOT OTHERWISE NOTED, LOCATE CONTROL JOINTS AT CORNER ABOVE DOORS, INSIDE CORNER OF PILASTERS OR OTHER INCONSPICUOUS LOCATION WHERE POSSIBLE. CONSULT WITH ARCHITECT PRIOR TO INSTALLING.

26. SEE IBC 2009, CHAPTER 7 FOR FIRE RESISTIVE REQUIREMENTS ON NEW CONCRETE AND CONCRETE MASONRY UNIT WALLS.
-CMU WALLS (IBC TABLE 720.1(2), ITEM 3)
-CAST IN PLACE CONCRETE WALLS (IBC TABLE 721.2.1.2(1))

27. AT WALL OPENINGS FOR PENETRATION OF PIPES, DUCTS, DEVICES, ETC., MASONRY IS TO BE CUT TO MATCH THE SHAPE AND DIMENSION OF THE PENETRATING OBJECT AND THE GAP BETWEEN THE OBJECT AND THE WALL IS TO BE SEALED W/ ACOUSTICAL OR FIRE SEALANT ON ALL SIDES WITH A 3/4" JOINT AT ALL SIDES, MAXIMUM.

28. PROTECTION OF MASONRY: DURING CONSTRUCTION, COVER TOPS OF WALLS, PROJECTIONS, AND SILLS WITH WATERPROOF SHEETING AT END OF EACH DAY'S WORK, EXCEPT WHEN THE AMBIENT TEMPERATURE IS EXPECTED TO REMAIN ABOVE 65 DEG F AND NO PRECIPITATION IS FORECAST FOR THE NEXT 24 HOURS. (THIS IS TO PREVENT CONDENSATION FROM COVERED WALLS CAUSING A MOISTURE PROBLEM.) COVER PARTIALLY COMPLETED MASONRY EACH DAY THAT CONSTRUCTION IS NOT IN PROGRESS. WALLS ARE TO BE PROTECTED UNTIL THEY ARE PERMANENTLY PROTECTED BY THE ROOFING MEMBRANE OVER THE CAP PLATE. THE GENERAL CONTRACTOR IS TO PROVIDE TEMPORARY PROTECTION IMMEDIATELY FOLLOWING THE TOPPING OUT OF EACH SECTION OF WALL BY INSTALLING WATERPROOF SHEETING OVER A CONTINUOUS CAP PLATE UNTIL THE ROOFING MEMBRANE IS INSTALLED. **A SOLID GROUTED TOP BOND BEAM SHALL NOT BE CONSIDERED ADEQUATE PROTECTION FOR THE WALL.**

29. AT PAINTED CMU THE HORIZONTAL AND VERTICAL MORTAR JOINTS ARE TO BE CONCAVE. AT ALL HONED BLOCK SITE WALLS THE HORIZONTAL MORTAR JOINT IS TO BE A WEATHERED JOINT AND ALL VERTICAL JOINTS ARE TO BE RAKED.

30. ALL VERTICAL MASONRY CORNERS WHICH FALL WITHIN THE INTERIOR OF THE BUILDING, INCLUDING CORNERS AT DOOR AND WINDOW OPENINGS ARE TO HAVE A 3/4" CHAMFER EXTENDING FROM 4" A.F.F. TO THE DECK ABOVE OR THE BOTTOM OF THE HEADER. SEE DETAIL D6/A512.

31. PROVIDE SPECIAL SHAPES, SUCH AS "U" SHAPED CHANNEL FOR LINTELS OR HEADERS AND CAPPING UNITS FOR SASH AND OTHER SPECIAL CONDITIONS. U SHAPED BLOCKS ARE TO BE 16"X8"X THE WIDTH OF THE WALL.

32. WHERE A FLUID APPLIED MEMBRANES ARE TO BE APPLIED OVER CMU, THE MORTAR JOINTS ARE TO BE STRUCK FLUSH AND SMOOTH.

33. ALL WALL COMPONENTS (GYP. BOARD, VAPOR BARRIER, INSULATION, ETC...) ARE TO EXTEND TO THE DECK ABOVE OR TO TOP OF PARAPET UNLESS NOTED OTHERWISE.

VCBO ARCHITECTURE
524 SOUTH 600 EAST
SALT LAKE CITY, UT 84102
Phone: (801) 575-8800
Fax: (801) 531-9850
Web: vcbo.com

LICENSED ARCHITECT No. 159912 BRENT R. TIPPETS 8-15-13 STATE OF UTAH

2nd District Juvenile Courthouse

Utah State Courts
08284150
165 West 20th Street, Ogden, Utah
BID DOCUMENTS

Rev #	Date	Description

Job # 12500
Date August 15, 2013
Owner # 08284150
Ins. #

LEVEL 4, ANNOTATED ALT.

A141.1alt

8/14/2013 2:30:59 PM

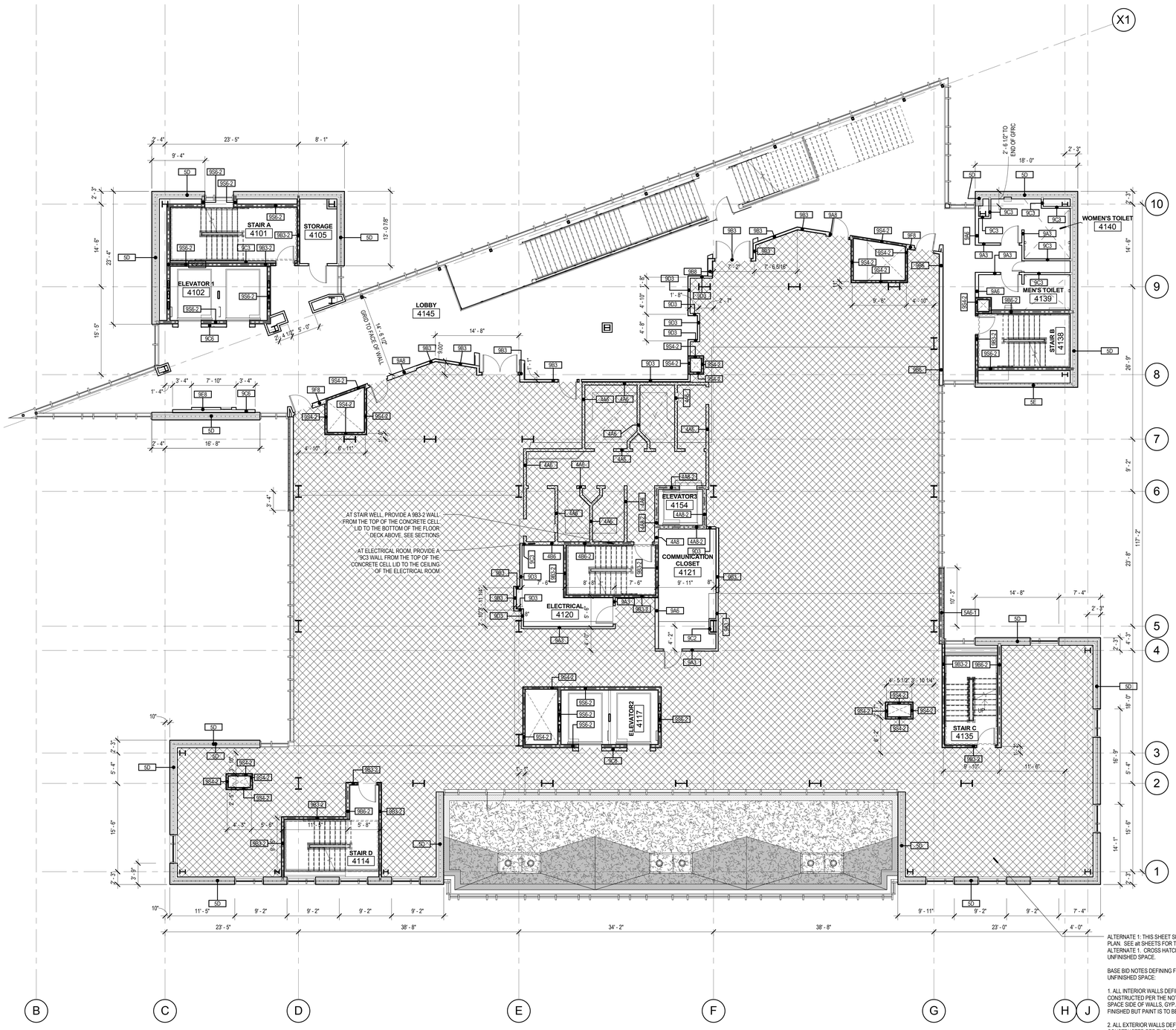

A1 LEVEL 4 DIMENSION AND WALL TYPES

SCALE: 1/8" = 1'-0"

PLAN NORTH

DIMENSION NOTES

1. ALL DIMENSIONS ARE TO CENTER OF STUD WALL OR FACE OF CONCRETE, MASONRY OR ROUGH OPENING UNLESS NOTED OTHERWISE. WHERE THE END OF A WALL IS INDICATED THE DIMENSION IS TO THE FINISH SURFACE OF THE WALL END.
2. UNLESS DIMENSIONED OTHERWISE, THE DIMENSION FROM THE BUCK OF A DOOR FRAME IS TO BE 4" TO THE WALL CORNER.
3. EXCEPT WHERE DIRECTED TO PLACE ITEMS OF WORK AT THE APPROXIMATE LOCATION SHOWN, DO NOT SCALE DRAWINGS FOR DIMENSIONAL INFORMATION. ALL ELEMENTS OF THE DRAWINGS MAY NOT BE DRAWN TO EXACT SCALE. ALL DIMENSIONS REQUIRED ARE SHOWN OR MAY BE DERIVED FROM THOSE SHOWN ON THE FLOOR PLANS, DETAIL PLANS, ELEVATIONS, SECTIONS, DETAILS, SCHEDULES AND SPECIFICATIONS. IF DIMENSIONS ARE NOT PRESENT, THE ARCHITECT IS TO BE NOTIFIED SO THAT A CLARIFICATION CAN BE ISSUED

KEY FOR PARTITION TYPES

DENOTES TYPE OF CONSTRUCTION (SPEC. DIVISION)

3X 0 SERIES	CONCRETE
4X 0 SERIES	MASONRY
5X 0 SERIES	COLD FORMED METAL STUDS, 16ga MIN.
9X 0 SERIES	METAL STUDS

WALL

NOMINAL SIZES: V = VARIABLE/MATCHEXISTING
1 = 1 5/8" STUDS
2 = 2 1/2" STUDS
3 = 3 5/8" STUDS
4 = 4" STUDS / 4" (NOM.) C.M.U.
6 = 6" STUDS / 6" (NOM.) C.M.U.
8 = 8" STUDS / 8" (NOM.) C.M.U.
10 = 10" (NOM.) C.M.U. OR CONC.
12 = 12" (NOM.) C.M.U. OR CONC.

EXAMPLE: WALL TYPE 9A3 IS A 3 5/8" METAL STUD WITH 5/8" GYPSUM BOARD ON BOTH SIDES.

NOTE: SEE GENERAL NOTES BELOW FOR ADDITIONAL ELEMENTS IN THE INDIVIDUAL WALL TYPES AND SPECIFIC DETAILS, INCLUDING UL RATINGS.

RATED WALL LEGEND

1 HOUR SEPARATION

2 HOUR SEPARATION

EXAMPLE: WALL TYPE 9A3-1 IS A ONE HOUR RATED, 3 5/8" METAL STUD WALL WITH 5/8" GYPSUM BOARD ON BOTH SIDES, PER ASSEMBLY REQUIREMENTS.

90X-R SERIES

FIRE RATING (ONLY WHEN NOTED):
1 = 1 HOUR RATED ASSEMBLY
2 = 2 HOUR RATED ASSEMBLY
3 = 3 HOUR RATED ASSEMBLY

NON-BEARING METAL HEADER SCHEDULE

MAXIMUM SPAN	HEADER	FY
4'-0"	(2) 400S137-43	33 ksi
6'-0"	(2) 600S162-43	33 ksi
8'-0"	(2) 800S162-43	33 ksi

METAL STUD HEADER NOTES:

1. SCHEDULE TO BE USED FOR NON-BEARING WALLS.
2. HEADERS TO BE CONSTRUCTED AS BOX HEADERS PER SSMA STANDARDS.
3. SEE TYPICAL DETAIL FOR MORE INFORMATION.

NON-BEARING METAL STUD GAUGE SIZING

MEMBER DEPTH IN 1/100 INCHES — FLANGE WIDTH IN 1/100 INCHES

400S137-43

STYLE (S=STUD OR JOIST) — MATERIAL THICKNESS IN MILS

MEMBER DEPTH	MAX STUD HEIGHT	MIN. GA. & SPACING
2 1/2" (250S125-33)	10'-0"	20@16" O.C.
3 5/8" (362S125-33)	14'-0"	20@16" O.C.
3 5/8" (362S162-33)	16'-0"	20@16" O.C.
3 5/8" (362S162-43)	18'-0"	18@16" O.C.
6" (600S162-33)	24'-0"	20@16" O.C.
6" (600S162-43)	26'-0"	18@16" O.C.
6" (600S162-54-50KSI)	28'-0"	16@16" O.C.

METAL STUD NOTES:

1. STEEL STUDS SHALL MEET ICC REPORT ER-4943P AND THE SSMA STANDARDS. HEIGHT BASED ON SSMA 2001 CATALOG AND PROJECT REQUIREMENTS.
2. SEE SCHEDULE FOR STUD SPACING AND GAUGE. ALL STUDS AND BRACES SHALL BE 33 KSI UNLESS NOTED OTHERWISE IN THESE DRAWINGS.
3. AT ALL DOORS PROVIDE TWO TABBED 18 GAUGE STUDS AT BOTH SIDES OF JAMB.
4. PLEASE NOTE THAT DUE TO THE LARGE FLOOR TO FLOOR HEIGHT 18 GAUGE STUDS WILL BE NECESSARY IN MOST INTERIOR NON LOAD BEARING WALLS. REFER TO THE CHART ABOVE.

ALTERNATE 1: THIS SHEET SHOWS THE BASE BID CONSTRUCTION PLAN. SEE alt SHEETS FOR THE CONSTRUCTION OF ADDATIVE ALTERNATE 1. CROSS HATCHED AREA INDICATES EXTENT OF UNFINISHED SPACE.

BASE BID NOTES DEFINING FINISHES AND MATERIALS WITHIN THE UNFINISHED SPACE:

1. ALL INTERIOR WALLS DEFINING THE UNFINISHED SPACE ARE TO BE CONSTRUCTED PER THE NOTED WALL TYPE ON THE UNFINISHED SPACE SIDE OF WALLS. GYP. BOARD JOINTS ARE TO BE FULLY FINISHED BUT PAINT IS TO BE OMITTED.

2. ALL EXTERIOR WALLS DEFINING THE UNFINISHED SPACE ARE TO BE CONSTRUCTED PER THE NOTED WALL TYPES WHICH SHOW A 5/8" GYP. BOARD FINISH AT THE INTERIOR. THIS GYP. BOARD IS TO RUN CONTINUOUS OVER THE FULL SURFACE OF THE EXTERIOR WALL AND IS TO HAVE FULLY FINISHED JOINTS. PAINT TO BE OMITTED.

3. ALL FIRE RATED SHAFTS ARE TO BE FULLY CONSTRUCTED TO THE NOTED WALL TYP AND UL LISTING. ON THE UNFINISHED SPACE SIDE OF WALLS, GYP. BOARD JOINTS ARE TO BE FULLY FINISHED BUT PAINT IS TO BE OMITTED.

4. ALL CURTAIN WALL AND MINERAL WOOL SPADREL INSULATION IS TO BE FURNISHED IN THE BASE BID. STUD AND GYP BOARD WHICH CONCEALS THE SPADREL INSULATION IS TO BE FURNISHED IN THE BASE BID.

VCBO ARCHITECTURE

VCBO ARCHITECTURE
524 SOUTH 600 EAST
SALT LAKE CITY, UT 84102
Phone: (801) 575-8800
Fax: (801) 531-9850
Web: vcbo.com

LICENSED ARCHITECT No. 153912 BRENT R. TIPPETS 8-15-13 STATE OF UTAH

2nd District Juvenile Courthouse

Utah State Courts
08284150
165 West 20th Street, Ogden, Utah
BID DOCUMENTS

Rev #	Date	Description

Job # 12500
Date August 15, 2013
Owner # 08284150
Ins. #

LEVEL 4, DIMENSION AND WALL TYPES

A141.2

8/15/2013 9:11:54 AM

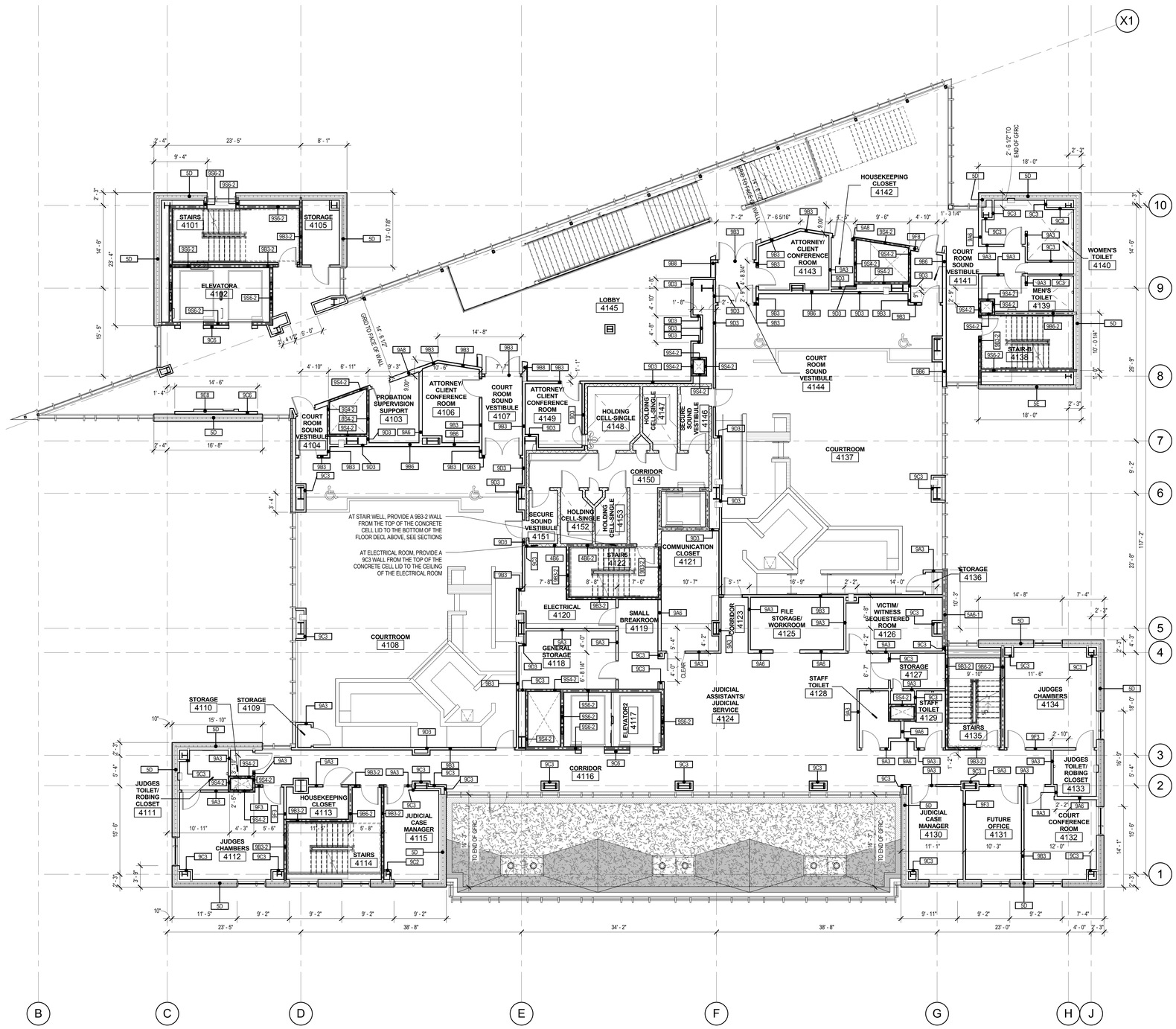

LEVEL 4 DIMENSION AND WALL TYPES ALTERNATE

A1

SCALE: 1/8" = 1'-0"

DIMENSION NOTES

1. ALL DIMENSIONS ARE TO CENTER OF STUD WALL OR FACE OF CONCRETE, MASONRY OR ROUGH OPENING UNLESS NOTED OTHERWISE. WHERE THE END OF A WALL IS INDICATED THE DIMENSION IS TO THE FINISH SURFACE OF THE WALL END.
2. UNLESS DIMENSIONED OTHERWISE, THE DIMENSION FROM THE BUCK OF A DOOR FRAME IS TO BE 4" TO THE WALL CORNER.
3. EXCEPT WHERE DIRECTED TO PLACE ITEMS OF WORK AT THE APPROXIMATE LOCATION SHOWN, DO NOT SCALE DRAWINGS FOR DIMENSIONAL INFORMATION. ALL ELEMENTS OF THE DRAWINGS MAY NOT BE DRAWN TO EXACT SCALE. ALL DIMENSIONS REQUIRED ARE SHOWN OR MAY BE DERIVED FROM THOSE SHOWN ON THE FLOOR PLANS, DETAIL PLANS, ELEVATIONS, SECTIONS, DETAILS, SCHEDULES AND SPECIFICATIONS. IF DIMENSIONS ARE NOT PRESENT, THE ARCHITECT IS TO BE NOTIFIED SO THAT A CLARIFICATION CAN BE ISSUED

KEY FOR PARTITION TYPES

DENOTES TYPE OF CONSTRUCTION (SPEC. DIVISION) — WALL

3X 0 SERIES	CONCRETE
4X 0 SERIES	MASONRY
5X 0 SERIES	COLD FORMED METAL STUDS, 16ga MIN.
9X 0 SERIES	METAL STUDS

NOMINAL SIZES: V = VARIABLE/MATCHEXISTING
1 = 1 5/8" STUDS
2 = 2 1/2" STUDS
3 = 3 5/8" STUDS
4 = 4" STUDS / 4" (NOM.) C.M.U.
6 = 6" STUDS / 6" (NOM.) C.M.U.
8 = 8" STUDS / 8" (NOM.) C.M.U.
10 = 10" (NOM.) C.M.U. OR CONC.
12 = 12" (NOM.) C.M.U. OR CONC.

EXAMPLE: WALL TYPE 9A3 IS A 3 5/8" METAL STUD WITH 5/8" GYPSUM BOARD ON BOTH SIDES.

NOTE: SEE GENERAL NOTES BELOW FOR ADDITIONAL ELEMENTS IN THE INDIVIDUAL WALL TYPES AND SPECIFIC DETAILS, INCLUDING UL RATINGS.

RATED WALL LEGEND

1 HOUR SEPARATION

2 HOUR SEPARATION

EXAMPLE: WALL TYPE 9A3-1 IS A ONE HOUR RATED, 3 5/8" METAL STUD WALL WITH 5/8" GYPSUM BOARD ON BOTH SIDES, PER ASSEMBLY REQUIREMENTS.

90X-R SERIES
FIRE RATING (ONLY WHEN NOTED):
1 = 1 HOUR RATED ASSEMBLY
2 = 2 HOUR RATED ASSEMBLY
3 = 3 HOUR RATED ASSEMBLY

NON-BEARING METAL HEADER SCHEDULE

MAXIMUM SPAN	HEADER	FY
4'-0"	(2) 400S137-43	33 ksi
6'-0"	(2) 600S162-43	33 ksi
8'-0"	(2) 800S162-43	33 ksi

METAL STUD HEADER NOTES:

1. SCHEDULE TO BE USED FOR NON-BEARING WALLS.
2. HEADERS TO BE CONSTRUCTED AS BOX HEADERS PER SSMA STANDARDS.
3. SEE TYPICAL DETAIL FOR MORE INFORMATION.

NON-BEARING METAL STUD GAUGE SIZING

MEMBER DEPTH IN 1/100 INCHES — FLANGE WIDTH IN 1/100 INCHES

400S137-43

STYLE (S=STUD OR JOIST) — MATERIAL THICKNESS IN MILS

MEMBER DEPTH	MAX STUD HEIGHT	MIN. GA. & SPACING
2 1/2" (250S125-33)	10'-0"	20@16" O.C.
3 5/8" (362S125-33)	14'-0"	20@16" O.C.
3 5/8" (362S162-33)	16'-0"	20@16" O.C.
3 5/8" (362S162-43)	18'-0"	18@16" O.C.
6" (600S162-33)	24'-0"	20@16" O.C.
6" (600S162-43)	26'-0"	18@16" O.C.
6" (600S162-54-50KSI)	28'-0"	16@16" O.C.

METAL STUD NOTES:

1. STEEL STUDS SHALL MEET ICC REPORT ER-4943P AND THE SSMA STANDARDS. HEIGHT BASED ON SSMA 2001 CATALOG AND PROJECT REQUIREMENTS.
2. SEE SCHEDULE FOR STUD SPACING AND GAUGE. ALL STUDS AND BRACES SHALL BE 33 KSI UNLESS NOTED OTHERWISE IN THESE DRAWINGS.
3. AT ALL DOORS PROVIDE TWO TABBED 18 GAUGE STUDS AT BOTH SIDES OF JAMB.
4. PLEASE NOTE THAT DUE TO THE LARGE FLOOR TO FLOOR HEIGHT 18 GAUGE STUDS WILL BE NECESSARY IN MOST INTERIOR NON LOAD BEARING WALLS. REFER TO THE CHART ABOVE.

VCBO ARCHITECTURE

VCBO ARCHITECTURE
524 SOUTH 600 EAST
SALT LAKE CITY, UT 84102
Phone: (801) 575-8800
Fax: (801) 531-9850
Web: vcbo.com

LICENSED ARCHITECT No. 153912 BRENT R. TIPPETS 8-15-13 STATE OF UTAH

2nd District Juvenile Courthouse

Utah State Courts
08284150
165 West 20th Street, Ogden, Utah
BID DOCUMENTS

Rev #	Date	Description

Job # 12500
Date August 15, 2013
Owner # 08284150
Ins. #

LEVEL 4, DIMENSION AND WALL TYPES ALT.

A141.2alt

8/15/2013 9:11:57 AM

LEVEL 4 ROOM FINISH SCHEDULE								
				Wall Finishes				
Room Name	Room Number	Floor Finish	Base Finish	Wall Finish Top	Wall Finish Right	Wall Finish Bottom	Wall Finish Left	ALTERNATE
STAIR A	4101	RB2	B1	P1	P1	P4	P1	
ELEVATOR 1	4102	FT1,2	-	-	-	-	-	
STORAGE	4105	L2	B10	P1	P1	P1	P1	
STAIR D	4114	RB2	B1	P4	P1	P1	P1	
ELEVATOR2	4117	FT1,2	-	-	-	-	-	
ELECTRICAL	4120	VT2	B10	P1	P1	P1	P1	
COMMUNICATION CLOSET	4121	VT2	B10	P1	P1	P1	P1	
STAIR E	4122	SC	B10	P1	P1	P1	P1	
STAIR C	4135	RB2	B1	P1	P1	P1	P9	
STAIR B	4138	RB2	B1	P1	P1	P1	P1	
MEN'S TOILET	4139	FT1,2	B6	WT1,2,3,4,5	WT1,2,3,4,5	WT1,2,3,4,5	WT1,2,3,4,5,7	
WOMEN'S TOILET	4140	FT1,2	B6	WT1,2,3,4,5	WT1,2,3,4,5	WT1,2,3,4,5	WT1,2,3,4,5,7	
LOBBY	4145	FT1,2	B3	P2	P2	WT14/P2,9	P2	
ELEVATOR3	4154	PT	-	-	-	-	-	

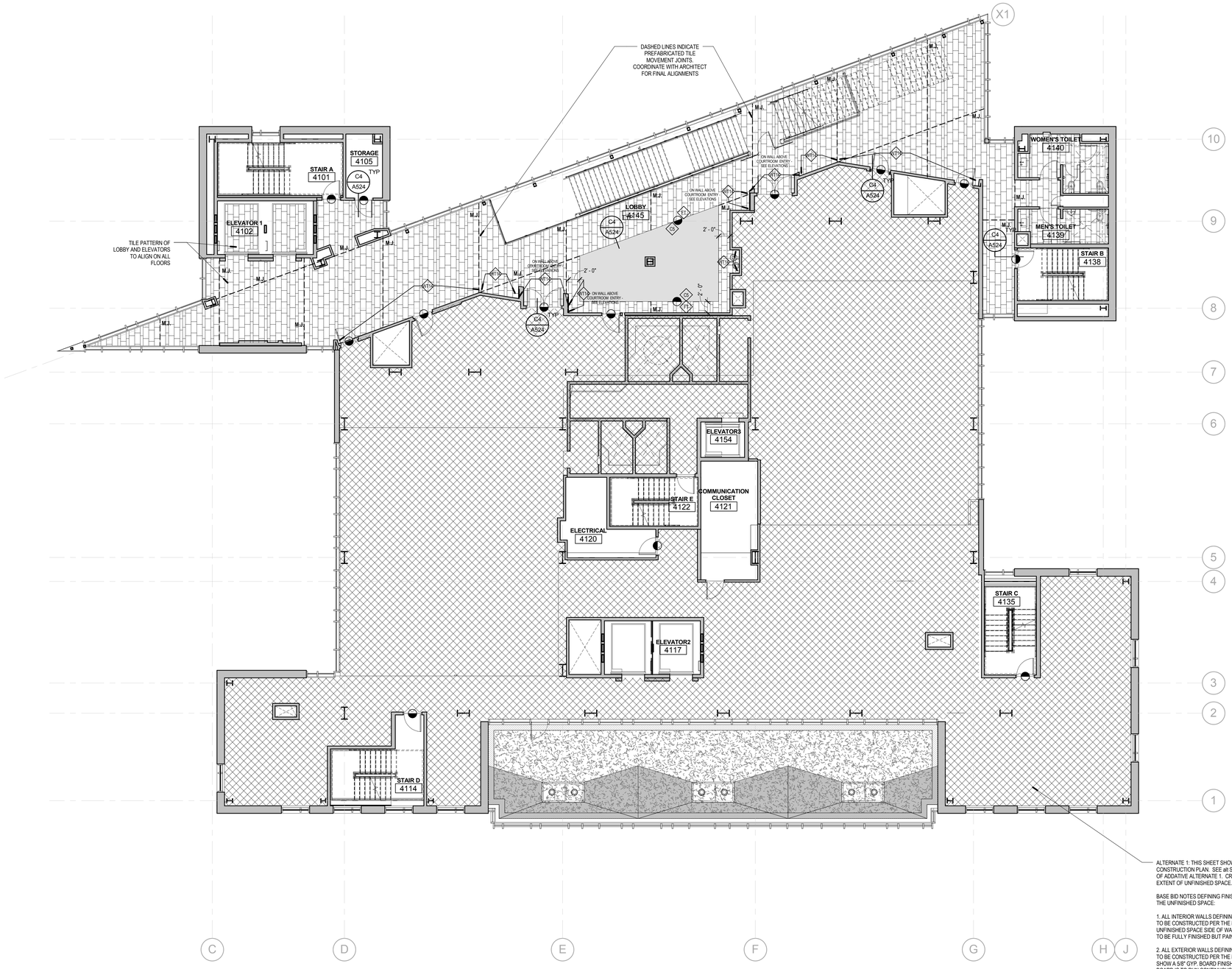

ALTERNATE 1: THIS SHEET SHOWS THE BASE BID CONSTRUCTION PLAN. SEE alt SHEETS FOR THE CONSTRUCTION OF ADDATIVE ALTERNATE 1. CROSS HATCHED AREA INDICATES EXTENT OF UNFINISHED SPACE.

BASE BID NOTES DEFINING FINISHES AND MATERIALS WITHIN THE UNFINISHED SPACE:

1. ALL INTERIOR WALLS DEFINING THE UNFINISHED SPACE ARE TO BE CONSTRUCTED PER THE NOTED WALL TYP. ON THE UNFINISHED SPACE SIDE OF WALLS, GYP. BOARD JOINTS ARE TO BE FULLY FINISHED BUT PAINT IS TO BE OMITTED.

2. ALL EXTERIOR WALLS DEFINING THE UNFINISHED SPACE ARE TO BE CONSTRUCTED PER THE NOTED WALL TYPES WHICH SHOW A 5/8" GYP. BOARD FINISH AT THE INTERIOR. THIS GYP. BOARD IS TO RUN CONTINUOUS OVER THE FULL SURFACE OF THE EXTERIOR WALL AND IS TO HAVE FULLY FINISHED JOINTS. PAINT TO BE OMITTED.

3. ALL FIRE RATED SHAFTS ARE TO BE FULLY CONSTRUCTED TO THE NOTED WALL TYP AND UL LISTING. ON THE UNFINISHED SPACE SIDE OF WALLS, GYP. BOARD JOINTS ARE TO BE FULLY FINISHED BUT PAINT IS TO BE OMITTED.

4. ALL CURTAIN WALL AND MINERAL WOOL SPADREL INSULATION IS TO BE FURNISHED IN THE BASE BID. STUD AND GYP BOARD WHICH CONCEALS THE SPADREL INSULATION IS TO BE FURNISHED IN THE BASE BID.

A1 LEVEL 4 FINISH PLAN

SCALE: 1/8" = 1'-0"

0' 4' 8' 16' 24'

PLAN NORTH

GENERAL FINISH NOTES

1. PROVIDE EPOXY PAINT AT ALL RESTROOMS, SHOWERS, LOCKER ROOMS AND JANITOR CLOSETS.
2. ALL FLOOR TRANSITIONS TO BE LOCATED AT CENTER OF DOOR, U.N.O.
3. ALL EXPOSED STEEL COLUMNS AND GIRTS ARE TO BE PAINTED WITH INTUMESCENT PAINT P10, UNLESS NOTED OTHERWISE. SEE G SHEETS FOR LOCATIONS OF SUCH MEMBERS.
4. ALL GROUT JOINTS TO BE NO LARGER THAN 1/8".
5. FIELD VERIFY ALL DIMENSIONS BEFORE FABRICATION OF MILLWORK.
6. COORDINATE ALL MILLWORK WITH APPLIANCES BEFORE FABRICATION.
7. SEE ELEVATION SHEETS FOR ALL WALL TILE PATTERNS.
8. AT SOFFITS RECEIVING COLOR- PAINT ALL SIDES OF SOFFIT.
9. ALL WOOD DOORS TO BE FINISHED BY THE MILLWORK CONTRACTOR TO MATCH TRIM AND VENEERED MILLWORK.
10. ALL COUNTERTOP, BACKSPLASHES, AND EDGE BANDING TO HAVE COORDINATING FINISHES.
11. WHERE STAIRS CALL FOR "RB2: RUBBER FLOORING TILES", PROVIDE RUBBER FLOORING COVERING STAIR TREADS, RISERS AND LANDINGS.
12. PROVIDE A SMOOTH TRANSITION AT ALL FLOOR MATERIALS - CONTRACTOR TO INSTALL ALL FLOOR FINISHES AT SAME LEVEL, DESPITE DIFFERENT THICKNESS. PROVIDE FLOOR TRANSITION WHERE OCCURS. SEE TYPICAL TRANSITIONS ON SHEET A524.
13. PROVIDE TILE 'WT13: 4"X4" CERAMIC WALL TILE' AT ALL JANITOR SINKS. PROVIDE TILE BULLNOSE TO FINISH OFF ALL EXPOSED EDGES.
14. ALL WALLS RECEIVING TILE WAINSCOT TO RECEIVE PAINT P1 ABOVE, U.N.O. SEE FINISH PLANS AND INTERIOR ELEVATIONS FOR ACCENT WALL LOCATIONS.
15. SEE SHEET A524 FOR TYPICAL FLOORING TRANSITION DETAILS.
16. UNLESS NOTED AS STAINLESS STEEL, ALL METAL GUARDRAILS, STAIR STRINGERS, HANDRAILS AND DOOR FRAMES ARE TO BE PAINTED. SEE FINISH SCHEDULE FOR COLOR SELECTIONS.
17. ALL SPACES THAT HAVE NO CEILING ARE TO HAVE THE EXPOSED STRUCTURE, DUCTWORK, PIPING, CONDUIT, ETC PAINTED P5. REFER TO REFLECTED CEILING PLANS.
18. ALL RESTROOM WALL TILE ENDING BELOW THE CEILING LINE TO START AND END WITH A FULL SIZE TILE. VERTICAL HEIGHTS OF TILE DIMENSIONED ON ELEVATIONS ARE APPROXIMATE.

FINISH PLAN SYMBOLS

SINGLE FINISH SYMBOLS INDICATE WHERE FINISHES ARE DIFFERENT FROM GENERAL ROOM FINISHES, OR PROVIDE ADDITIONAL FINISH INFORMATION

CHANGE AT FLOOR MATERIAL

FINISH PLAN LEGEND

FLOOR MATERIALS

EM	ENTRY MAT
C1	CARPET TILE
C2	CARPET TILE
C3	NOT USED
C4	CARPET TILE
C5	CARPET TILE
C6	CARPET TILE
C7	NOT USED
L1	LINOLEUM SHEET
L2	LINOLEUM TILE - MCT
FT1	PORCELAIN FLOOR TILE 12x24
FT2	PORCELAIN FLOOR TILE 6x24
FT3	PORCELAIN FLOOR TILE 12x12
FT4	FLOOR TILE 1X2
VT2	STATIC DISSIPATIVE ACCESS FLOOR PANEL
RB1	RUBBER FLOOR TILES
RB2	RUBBER FLOORING (STAIRS, LANDINGS)
SC	SEALED CONCRETE
TZ1	TERRAZZO FLOORING
TZ2	TERRAZZO FLOORING ACCENT
EP1	EPOXY FLOORING - OPAQUE
G1	GROUT
G2	GROUT
PT	ALUMINUM DIAMOND PLATE

BASE MATERIALS

B1	RUBBER BASE
B2	RUBBER BASE
B3	ANODIZED ALUMINUM BASE - SEE C2 AND C4/A513
B4	SOLID HARDWOOD BASE - 3/4" THICK, 4" HIGH
B5	TILE BASE
B6	ALUMINUM COVE BASE
B7	TILE COVE BASE
B8	NO BASE - SEAL SEAM
B9	NO BASE - CAULK BETWEEN FLOOR AND WALL
B10	COVED RUBBER BASE
B11	COVED EPOXY FLOORING

WALL MATERIALS

F1	ACOUSTIC FABRIC WALL PANELS
F2	PEW SEAT FABRIC
P1	PRIMED & PAINTED WALL SURFACE - GENERAL
P2	PRIMED & PAINTED WALL SURFACE - GENERAL
P3	PRIMED & PAINTED WALL SURFACE - ACCENT
P4	PRIMED & PAINTED WALL SURFACE - ACCENT
P5	CEILING PAINT
P6	RAILING PAINT
P7	H.M. DOOR FRAME PAINT
P8	H.M. DOOR FRAME PAINT
P9	PRIMED & PAINTED WALL SURFACE - ACCENT
P10	INTUMESCENT PAINT SYSTEM
WT1	PORCELAIN WALL TILE 6X24
WT2	PORCELAIN WALL TILE 4X24
WT3	PORCELAIN WILL TILE 2X24
WT4	PORCELAIN WALL TILE 6X24
WT5	PORCELAIN WALL TILE 2X24
WT6	NOT USED
WT7	GLAZED WALL TILE 3x6
WT8	GLAZED WALL TILE 3x6
WT9	GLAZED WALL TILE 3x6
WT10	NOT USED
WT11	NOT USED
WT12	NOT USED
WT13	GLAZED WALL TILE 4x4
WT14	GLASS WALL TILE - SIZES VARY
WC1	VINYL WALLCOVERING
WC3	DRY ERASE WALLCOVERING

SURFACE MATERIALS

PL1	PLASTIC LAMINATE - VERTICAL SURFACES
PL2	PLASTIC LAMINATE - COUNTERTOPS
PL3	PHENOLIC CORE PARTITIONS - PARTITION COLOR
WV	WOOD VENEER - SEE A513 FOR TYPICAL DETAILS
QZ1	QUARTZ COUNTERTOP SURFACE
QZ2	QUARTZ COUNTERTOP SURFACE
QZ3	QUARTZ COUNTERTOP SURFACE
SS1	SOLID SURFACE COUNTERTOP
SS2	SOLID SURFACE COUNTERTOP
SS3	SOLID SURFACE THRESHOLD

VCBO ARCHITECTURE

VCBO ARCHITECTURE
524 SOUTH 600 EAST
SALT LAKE CITY, UT 84102
Phone: (801) 575-8800
Fax: (801) 531-9850
Web: vcbo.com

LICENSED ARCHITECT No. 153912 BRENT R. TIPPETS 8-15-13 STATE OF UTAH

2nd District Juvenile Courthouse

Utah State Courts
08284150
165 West 20th Street, Ogden, Utah
BID DOCUMENTS

Rev #	Date	Description

Job # 12500
Date August 15, 2013
Owner # 08284150
Ins. #

LEVEL 4, FINISH PLAN

A141.3

8/14/2013 2:31:56 PM

LEVEL 4 ALTERNATE ROOM FINISH SCHEDULE							
				Wall Finishes			
Room Name	Room Number	Floor Finish	Base Finish	Wall Finish Top	Wall Finish Right	Wall Finish Bottom	Wall Finish Left
STAIR A	4101	RB2	B1	P1	P1	P4	P1
ELEVATOR 1	4102	FT1,2	-	-	-	-	-
PROBATION SUPERVISION SUPPORT	4103	C1	B1	P2	P2	P2	P2
COURT ROOM SOUND VESTIBULE	4104	C6	B4	P2	P2	P2	P2
STORAGE	4105	L2	B10	P1	P1	P1	P1
ATTORNEY/ CLIENT CONFERENCE ROOM	4106	C2	B4	P2	P2	P2	P2
COURT ROOM SOUND VESTIBULE	4107	C6	B4	P2	P2	P2	P2
COURTROOM	4108	C6	B4	WV/F1/P2	WV/F1/P2	WV/F1/P2	WV/F1/P2
STORAGE	4109	C6	B4	P2	P2	P2	P2
STORAGE	4110	C5	B1	P1	P1	P1	P1
JUDGES TOILET/ ROBING CLOSET	4111	FT3	B8	WT9/P2	WT9/P2	WT9/P2	WT9/P2
JUDGES CHAMBERS	4112	C4	B4	P2	P2	WC1	WC1
HOUSEKEEPING CLOSET	4113	L2	B10	P1	P1/WT 13	P1/WT 13	P1
STAIR D	4114	RB2	B1	P4	P1	P1	P1
JUDICIAL CASE MANAGER	4115	C1	B1	P2	P2	P2	P2
CORRIDOR	4116	C5	B1	P2	P2	P2	P2
ELEVATOR2	4117	FT1,2	-	-	-	-	-
GENERAL STORAGE	4118	L2	B10	P1	P1	P1	P1

LEVEL 4 ALTERNATE ROOM FINISH SCHEDULE							
				Wall Finishes			
Room Name	Room Number	Floor Finish	Base Finish	Wall Finish Top	Wall Finish Right	Wall Finish Bottom	Wall Finish Left
SMALL BREAKROOM	4119	L1	B1	P2	P2	P2	P2
ELECTRICAL	4120	VT2	B10	P1	P1	P1	P1
COMMUNICATION CLOSET	4121	VT2	B10	P1	P1	P1	P1
STAIR E	4122	SC	B10	P1	P1	P1	P1
CORRIDOR	4123	C1	B1	P2	P2	P2	P2
JUDICIAL ASSISTANTS/ JUDICIAL SERVICE	4124	C1	B1	P2	P2	P2	P2
FILE STORAGE/ WORKROOM	4125	C1	B1	P2	P2	P2	P2
VICTIM/ WITNESS SEQUESTERED ROOM	4126	C1	B1	P2/F1	P2	P2	P2
STORAGE	4127	L2	B10	P1	P1	P1	P1
STAFF TOILET	4128	FT3	B7	WT7,8,9/P1	WT7,8,9/P1	WT7,8,9/P1	WT7,8,9/P1
STAFF TOILET	4129	FT3	B7	WT7,8,9/P1	WT7,8,9/P1	WT7,8,9/P1	WT7,8,9/P1
JUDICIAL CASE MANAGER	4130	C1	B1	P2	P2	P2	P2
FUTURE OFFICE	4131	C1	B1	P2	P2	P2	P2
COURT CONFERENCE ROOM	4132	C2	B4	P2	P2	P2	P2/WC3
JUDGES TOILET/ ROBING CLOSET	4133	FT3	B8	WT9/P2	WT9/P2	WT9/P2	WT9/P2
JUDGES CHAMBERS	4134	C4	B4	WC 1	WC 1	P2	P2
STAIR C	4135	RB2	B1	P1	P1	P1	P9
STORAGE	4136	C6	B4	P2	P2	P2	P2
COURTROOM	4137	C6	B4	WV/F1/P2	WV/F1/P2	WV/F1/P2	WV/F1/P2
STAIR B	4138	RB2	B1	P1	P1	P1	P1

LEVEL 4 ALTERNATE ROOM FINISH SCHEDULE							
				Wall Finishes			
Room Name	Room Number	Floor Finish	Base Finish	Wall Finish Top	Wall Finish Right	Wall Finish Bottom	Wall Finish Left
MEN'S TOILET	4139	FT1,2	B6	WT1,2,3,4,5	WT1,2,3,4,5	WT1,2,3,4,5	WT1,2,3,4,5,7
WOMEN'S TOILET	4140	FT1,2	B6	WT1,2,3,4,5	WT1,2,3,4,5	WT1,2,3,4,5	WT1,2,3,4,5,7
COURT ROOM SOUND VESTIBULE	4141	C6	B4	P2	P2	P2	P2
HOUSEKEEPING CLOSET	4142	L2	B10	P1	P1/WT 13	P1/WT 13	P1
ATTORNEY/ CLIENT CONFERENCE ROOM	4143	C2	B4	P2	P2	P2	P2
COURT ROOM SOUND VESTIBULE	4144	C6	B4	P2	P2	P2	P2
LOBBY	4145	FT1,2	B3	P2	P2	WT14/P2,9	P2
SECURE SOUND VESTIBULE	4146	EP1	B11	P1	P1	P1	P1
HOLDING CELL-SINGLE	4147	EP1	B11	P1	P1	P1	P1
HOLDING CELL-SINGLE	4148	EP1	B11	P1	P1	P1	P1
ATTORNEY/ CLIENT CONFERENCE ROOM	4149	C2	B4	P2	P2	P2	P2
CORRIDOR	4150	EP1	B11	P1	P1	P1	P1
SECURE SOUND VESTIBULE	4151	EP1	B11	P1	P1	P1	P1
HOLDING CELL-SINGLE	4152	EP1	B11	P1	P1	P1	P1
HOLDING CELL-SINGLE	4153	EP1	B11	P1	P1	P1	P1
ELEVATOR3	4154	PT	-	-	-	-	-

A1 LEVEL 4 FINISH PLAN ALTERNATE

SCALE: 1/8" = 1'-0"

GENERAL FINISH NOTES

1. PROVIDE EPOXY PAINT AT ALL RESTROOMS, SHOWERS, LOCKER ROOMS AND JANITOR CLOSETS.
2. ALL FLOOR TRANSITIONS TO BE LOCATED AT CENTER OF DOOR, U.N.O.
3. ALL EXPOSED STEEL COLUMNS AND GIRTS ARE TO BE PAINTED WITH INTUMESCENT PAINT P10, UNLESS NOTED OTHERWISE. SEE G SHEETS FOR LOCATIONS OF SUCH MEMBERS.
4. ALL GROUT JOINTS TO BE NO LARGER THAN 1/8".
5. FIELD VERIFY ALL DIMENSIONS BEFORE FABRICATION OF MILLWORK.
6. COORDINATE ALL MILLWORK WITH APPLIANCES BEFORE FABRICATION.
7. SEE ELEVATION SHEETS FOR ALL WALL TILE PATTERNS.
8. AT SOFFITS RECEIVING COLOR- PAINT ALL SIDES OF SOFFIT.
9. ALL WOOD DOORS TO BE FINISHED BY THE MILLWORK CONTRACTOR TO MATCH TRIM AND VENEERED MILLWORK.
10. ALL COUNTERTOP, BACKSPLASHES, AND EDGE BANDING TO HAVE COORDINATING FINISHES.
11. WHERE STAIRS CALL FOR "RB2: RUBBER FLOORING TILES", PROVIDE RUBBER FLOORING COVERING STAIR TREADS, RISERS AND LANDINGS.
12. PROVIDE A SMOOTH TRANSITION AT ALL FLOOR MATERIALS - CONTRACTOR TO INSTALL ALL FLOOR FINISHES AT SAME LEVEL, DESPITE DIFFERENT THICKNESS. PROVIDE FLOOR TRANSITION WHERE OCCURS. SEE TYPICAL TRANSITIONS ON SHEET A524.
13. PROVIDE TILE 'WT13: 4"X4" CERAMIC WALL TILE' AT ALL JANITOR SINKS. PROVIDE TILE BULLNOSE TO FINISH OFF ALL EXPOSED EDGES.
14. ALL WALLS RECEIVING TILE WAINSCOT TO RECEIVE PAINT P1 ABOVE, U.N.O. SEE FINISH PLANS AND INTERIOR ELEVATIONS FOR ACCENT WALL LOCATIONS.
15. SEE SHEET A524 FOR TYPICAL FLOORING TRANSITION DETAILS.
16. UNLESS NOTED AS STAINLESS STEEL, ALL METAL GUARDRAILS, STAIR STRINGERS, HANDRAILS AND DOOR FRAMES ARE TO BE PAINTED. SEE FINISH SCHEDULE FOR COLOR SELECTIONS.
17. ALL SPACES THAT HAVE NO CEILING ARE TO HAVE THE EXPOSED STRUCTURE, DUCTWORK, PIPING, CONDUIT, ETC PAINTED P5. REFER TO REFLECTED CEILING PLANS.
18. ALL RESTROOM WALL TILE ENDING BELOW THE CEILING LINE TO START AND END WITH A FULL SIZE TILE. VERTICAL HEIGHTS OF TILE DIMENSIONED ON ELEVATIONS ARE APPROXIMATE.

FINISH PLAN SYMBOLS

SINGLE FINISH SYMBOLS INDICATE WHERE FINISHES ARE DIFFERENT FROM GENERAL ROOM FINISHES, OR PROVIDE ADDITIONAL FINISH INFORMATION

CHANGE AT FLOOR MATERIAL

FINISH PLAN LEGEND

FLOOR MATERIALS

EM	ENTRY MAT
C1	CARPET TILE
C2	CARPET TILE
C3	NOT USED
C4	CARPET TILE
C5	CARPET TILE
C6	CARPET TILE
C7	NOT USED
L1	LINOLEUM SHEET
L2	LINOLEUM TILE - MCT
FT1	PORCELAIN FLOOR TILE 12x24
FT2	PORCELAIN FLOOR TILE 6x24
FT3	PORCELAIN FLOOR TILE 12x12
FT4	FLOOR TILE 1X2
VT2	STATIC DISSIPATIVE ACCESS FLOOR PANEL
RB1	RUBBER FLOOR TILES
RB2	RUBBER FLOORING (STAIRS, LANDINGS)
SC	SEALED CONCRETE
TZ1	TERRAZZO FLOORING
TZ2	TERRAZZO FLOORING ACCENT
EP1	EPOXY FLOORING - OPAQUE
G1	GROUT
G2	GROUT
PT	ALUMINUM DIAMOND PLATE

BASE MATERIALS

B1	RUBBER BASE
B2	RUBBER BASE
B3	ANODIZED ALUMINUM BASE - SEE C2 AND C4/A513
B4	SOLID HARDWOOD BASE - 3/4" THICK, 4" HIGH
B5	TILE BASE
B6	ALUMINUM COVE BASE
B7	TILE COVE BASE
B8	NO BASE - SEAL SEAM
B9	NO BASE - CAULK BETWEEN FLOOR AND WALL
B10	COVED RUBBER BASE
B11	COVED EPOXY FLOORING

WALL MATERIALS

F1	ACOUSTIC FABRIC WALL PANELS
F2	PEW SEAT FABRIC
P1	PRIMED & PAINTED WALL SURFACE - GENERAL
P2	PRIMED & PAINTED WALL SURFACE - GENERAL
P3	PRIMED & PAINTED WALL SURFACE - ACCENT
P4	PRIMED & PAINTED WALL SURFACE - ACCENT
P5	CEILING PAINT
P6	RAILING PAINT
P7	H.M. DOOR FRAME PAINT
P8	H.M. DOOR FRAME PAINT
P9	PRIMED & PAINTED WALL SURFACE - ACCENT
P10	INTUMESCENT PAINT SYSTEM
WT1	PORCELAIN WALL TILE 6X24
WT2	PORCELAIN WALL TILE 4X24
WT3	PORCELAIN WILL TILE 2X24
WT4	PORCELAIN WALL TILE 6X24
WT5	PORCELAIN WALL TILE 2X24
WT6	NOT USED
WT7	GLAZED WALL TILE 3x6
WT8	GLAZED WALL TILE 3x6
WT9	GLAZED WALL TILE 3x6
WT10	NOT USED
WT11	NOT USED
WT12	NOT USED
WT13	GLAZED WALL TILE 4x4
WT14	GLASS WALL TILE - SIZES VARY
WC1	VINYL WALLCOVERING
WC3	DRY ERASE WALLCOVERING

SURFACE MATERIALS

PL1	PLASTIC LAMINATE - VERTICAL SURFACES
PL2	PLASTIC LAMINATE - COUNTERTOPS
PL3	PHENOLIC CORE PARTITIONS - PARTITION COLOR
WV	WOOD VENEER - SEE A513 FOR TYPICAL DETAILS
QZ1	QUARTZ COUNTERTOP SURFACE
QZ2	QUARTZ COUNTERTOP SURFACE
QZ3	QUARTZ COUNTERTOP SURFACE
SS1	SOLID SURFACE COUNTERTOP
SS2	SOLID SURFACE COUNTERTOP
SS3	SOLID SURFACE THRESHOLD

VCBO ARCHITECTURE
524 SOUTH 600 EAST
SALT LAKE CITY, UT 84102
Phone: (801) 575-8800
Fax: (801) 531-9850
Web: vcbo.com

LICENSED ARCHITECT No. 153912 BRENT R. TIPPETS 8-15-13 STATE OF UTAH

2nd District Juvenile Courthouse

Utah State Courts
08284150
165 West 20th Street, Ogden, Utah
BID DOCUMENTS

Rev #	Date	Description

Job # 12500
Date August 15, 2013
Owner # 08284150
Ins. #

LEVEL 4, FINISH PLAN ALT.

A141.3alt

8/14/2013 2:32:19 PM

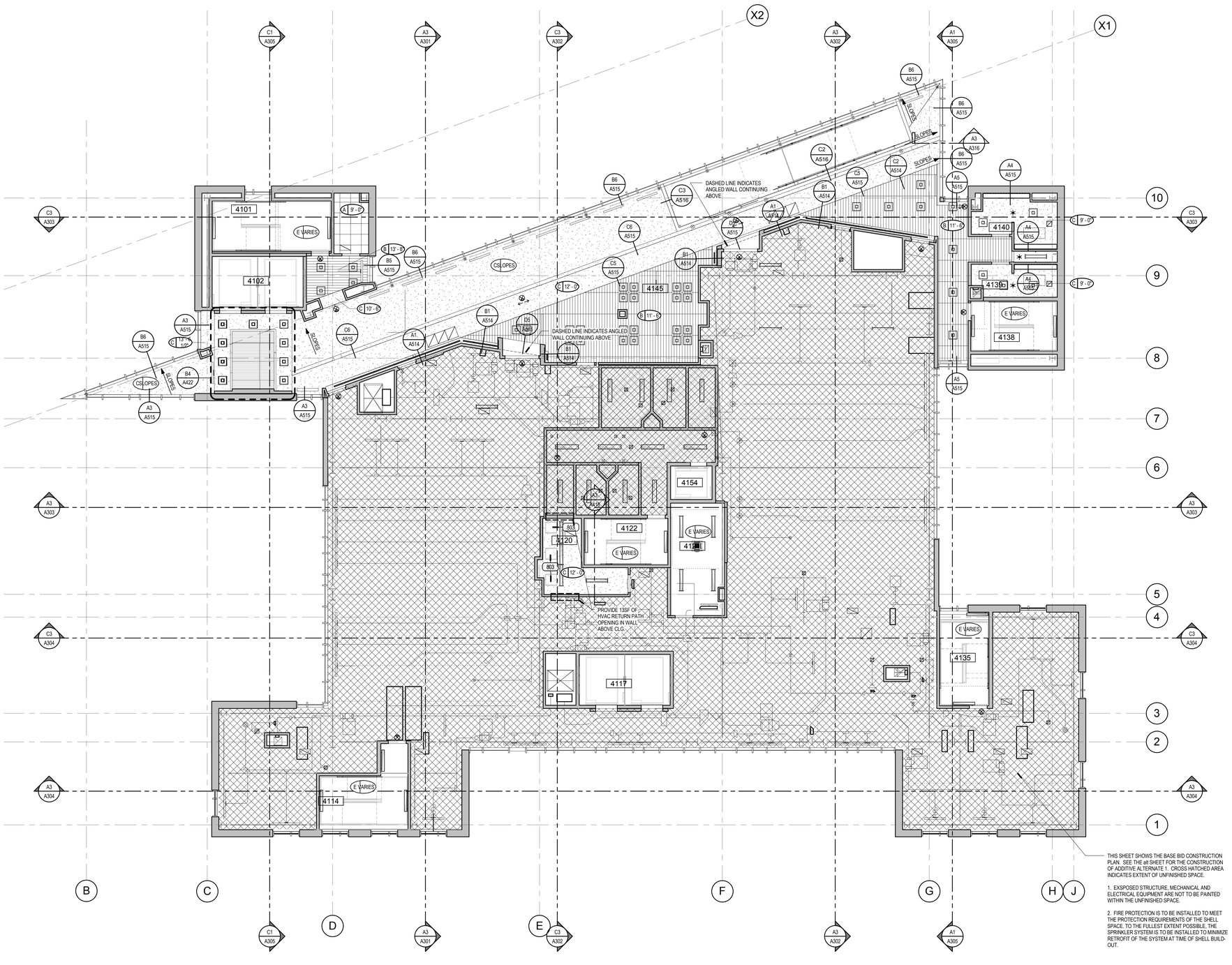

THIS SHEET SHOWS THE BASE BID CONSTRUCTION PLAN. SEE THE alt SHEET FOR THE CONSTRUCTION OF ADDITIVE ALTERNATE 1. CROSS HATCHED AREA INDICATES EXTENT OF UNFINISHED SPACE.

1. EXSPOSED STRUCTURE, MECHANICAL AND ELECTRICAL EQUIPMENT ARE NOT TO BE PAINTED WITHIN THE UNFINISHED SPACE.

2. FIRE PROTECTION IS TO BE INSTALLED TO MEET THE PROTECTION REQUIREMENTS OF THE SHELL SPACE. TO THE FULLEST EXTENT POSSIBLE. THE SPRINKLER SYSTEM IS TO BE INSTALLED TO MINIMIZE RETROFIT OF THE SYSTEM AT TIME OF SHELL BUILD-OUT.

A1 LEVEL 4 REFLECTED CEILING

SCALE: 1/8" = 1'-0"

PLAN NORTH

CEILING LEGEND

A-	SUSPENDED 2' X 4' ACOUSTICAL LAY-IN TILE CEILING WITH SINGLE KERF (2x2 LOOK)
B-	SUSPENDED 2' X 4' ACOUSTICAL LAY-IN TILE CEILING WITH 3 KERFS (6"x4' LOOK), 6" HIGH PRE-FINISHED METAL PERIMETER TRIM AT EDGES NOT TOUCHING A WALL
C-	SUSPENDED 5/8" GYP. BD. CEILING SYSTEM - (1 LAYER) PAINTED
D-	PRECAST CONCRETE CEILING, PAINTED
E-	OPEN TO STRUCTURE ABOVE, ALL SURFACES PAINTED: STRUCTURE, MECHANICAL, ELECTRICAL, ETC.
F-	WOOD VENEERED 1/4" SUBSTRATE ATTACHED TO 1/2" MDF. MDF PAINTED BLACK AND SECURED TO 2 1/2" METAL STUDS @ 16" OC ATTACHED TO 6" METAL STUDS @16"O.C.. SEE ASSOCIATED DETAILS
G-	ACM METAL PANEL ATTACHED TOTHERMALLY BROKEN 3" Z-FURRING @16" O.C. OVER AIR AND MOISTURE BARRIER WITH 3" MINERAL WOOL INSULATION. Z FURRING ATTACHED TO SUSPENDED 5/8" GYP. SHEATHING CEILING SYSTEM
H-	SUSPENDED ACOUSTICAL LAY-IN CEILING AS DESCRIBED IN CEILING TYPE 'B', SUSPENDED 12" BELOW A SUSPENDED 5/8" GYP BOARD CEILING, GYP BOARD JOINTS ARE TO BE FINISHED BUT BOARD IS NOT PAINTED
J-	STRETCHED FABRIC CEILING SYSTEM OVER 1" FIBERGLASS BATT INSULATION MOUNTED TO 5/8" GYP BOARD CEILING SYSTEM. GYP BOARD JOINTS TO BE FINISHED BUT BOARD IS NOT PAINTED
K-	SUSPENDED 5/8" GYP. BD. CEILING SYSTEM - OVER HAT CHANNEL FURRING, PAINTED

CEILING SYMBOLS

ELECTRICAL

- 2'X4' FLUORESCENT FIXTURE
- 2'X2' FLUORESCENT FIXTURE
- 6"X4' FLUORESCENT FIXTURE
- FLUORESCENT STRIP FIXTURE
- RECESSED SQUARE DOWN LIGHT
- WALL WASH
- 1'X4' FLUORESCENT FIXTURE
- EXIT SIGN, SINGLE-SIDED
- EXIT SIGN, DOUBLE-SIDED
- F FIRE ALARM
- S SPEAKER
- P SMOKE DETECTOR
- W WIRELESS INTERNET

MECHANICAL

- SUPPLY GRILLE
- RETURN GRILLE
- EXHAUST GRILLE
- LINEAR DIFFUSER
- SPRINKLER HEAD - CEILING MOUNT
- SPRINKLER HEAD - WALL MOUNT

GENERAL CEILING NOTES

1. REFER TO DETAIL XXXX FOR TYPICAL CEILING SUSPENSION & SEISMIC BRACING
2. REFER TO DETAIL XXXX FOR TYPICAL SUSPENDED GYP. BOARD CEILINGS
3. ALL UNIDENTIFIED CEILING TYPES ON THE PLANS SHALL BE TYPE " A" AT 9'-4" A.F.F.
4. GRID SUSPENSION SYSTEMS SHALL BE CENTERED WITHIN AREAS INDICATED, UNLESS NOTED OTHERWISE
5. PAINT ALL EXPOSED STRUCTURE, MECHANICAL, DUCTS, ELECTRICAL WORK, PIPING, ETC. ALL VISIBLE ELEMENTS TO BE PAINTED AT TYPE "E" & TYPE "F"
6. REFER TO ARCHITECTURAL DRAWINGS FOR LOCATION OF MECHANICAL GRILLES, AND TO MECHANICAL DRAWINGS FOR QUANTITIES AND TYPES
7. REFER TO ARCHITECTURAL DRAWINGS FOR LOCATIONS OF LIGHT FIXTURES AND TO ELECTRICAL DRAWINGS FOR QUANTITY AND TYPES
8. MECHANICAL AND ELECTRICAL CONTRACTORS TO COORDINATE WORK WITH SPRINKLER CONTRACTOR TO AVOID CONFLICTS IN FIELD
9. ALL CEILING HEIGHTS ARE ELEVATION ABOVE FINISH FLOOR
10. ALL TYPE C CEILINGS IN RESTROOMS, LOCKER ROOMS, SHOWERS, AND WET AREAS TO BE EPOXY PAINTED

KEYED NOTES

803 24"X 24" ACCESS DOOR

VCBO ARCHITECTURE

VCBO ARCHITECTURE
524 SOUTH 600 EAST
SALT LAKE CITY, UT 84102
Phone: (801) 575-8800
Fax: (801) 531-9850
Web: vcbo.com

LICENSED ARCHITECT No. 153912 BRENT R. TIPPETS 8-15-13 STATE OF UTAH

2nd District Juvenile Courthouse

Utah State Courts
08284150
165 West 20th Street, Ogden, Utah
BID DOCUMENTS

Rev #	Date	Description

Job # 12500
Date August 15, 2013
Owner # 08284150
Ins. #

LEVEL 4, REFLECTED CEILING

A141.4

8/14/2013 2:32:44 PM

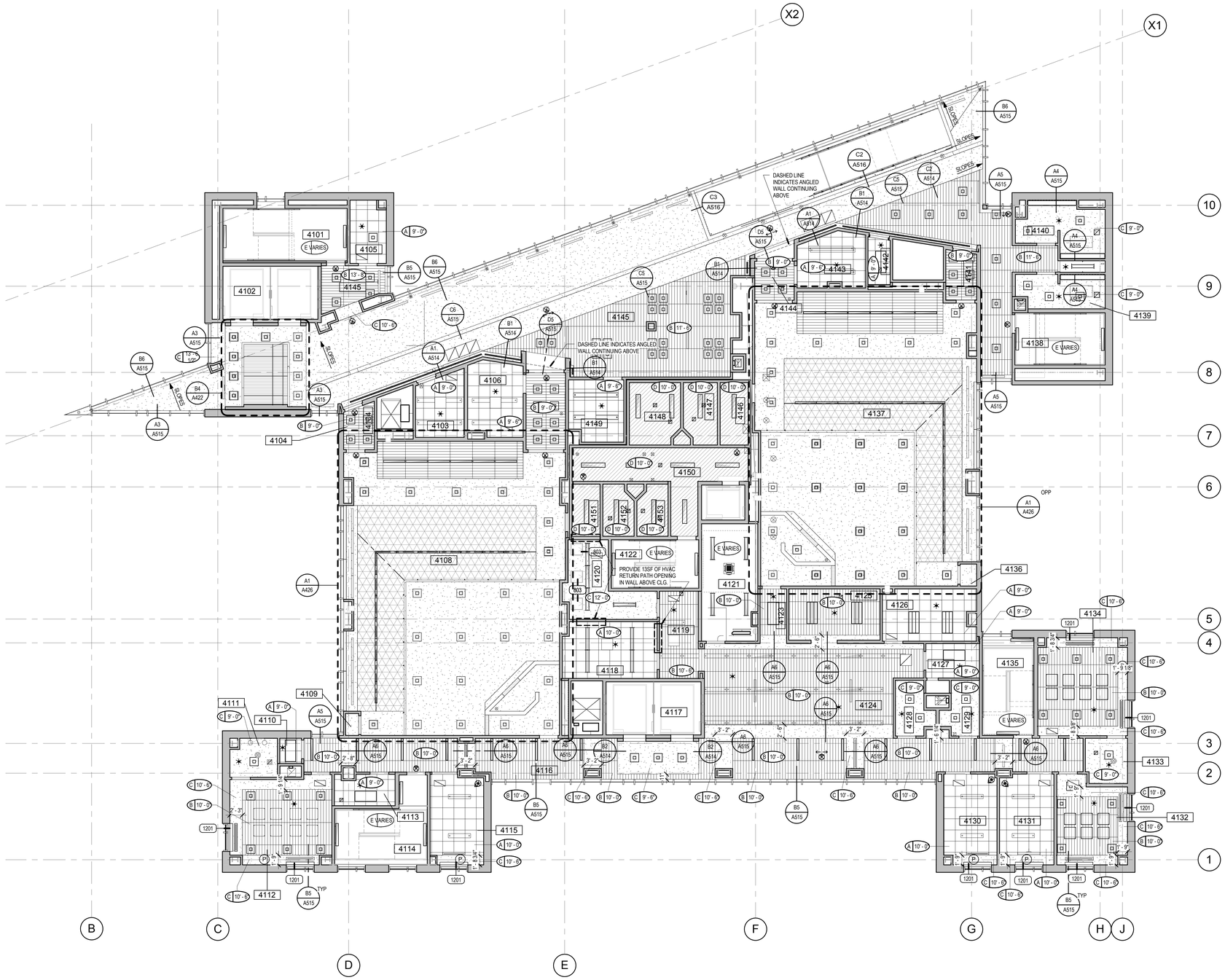

CEILING LEGEND

	A-	SUSPENDED 2' X 4' ACOUSTICAL LAY-IN TILE CEILING WITH SINGLE KERF (2x2 LOOK)
	B-	SUSPENDED 2' X 4' ACOUSTICAL LAY-IN TILE CEILING WITH 3 KERFS (6"x4' LOOK), 6" HIGH PRE-FINISHED METAL PERIMETER TRIM AT EDGES NOT TOUCHING A WALL
	C-	SUSPENDED 5/8" GYP. BD. CEILING SYSTEM - (1 LAYER) PAINTED
	D-	PRECAST CONCRETE CEILING, PAINTED
	E-	OPEN TO STRUCTURE ABOVE, ALL SURFACES PAINTED: STRUCTURE, MECHANICAL, ELECTRICAL, ETC.
	F-	WOOD VENEERED 1/4" SUBSTRATE ATTACHED TO 1/2" MDF. MDF PAINTED BLACK AND SECURED TO 2 1/2" METAL STUDS @ 16" OC ATTACHED TO 6" METAL STUDS @16"O.C.. SEE ASSOCIATED DETAILS
	G-	ACM METAL PANEL ATTACHED TOTHERMALLY BROKEN 3" Z-FURRING @16" O.C. OVER AIR AND MOISTURE BARRIER WITH 3" MINERAL WOOL INSULATION. Z FURRING ATTACHED TO SUSPENDED 5/8" GYP. SHEATHING CEILING SYSTEM
	H-	SUSPENDED ACOUSTICAL LAY-IN CEILING AS DESCRIBED IN CEILING TYPE 'B', SUSPENDED 12" BELOW A SUSPENDED 5/8" GYP BOARD CEILING, GYP BOARD JOINTS ARE TO BE FINISHED BUT BOARD IS NOT PAINTED
	J-	STRETCHED FABRIC CEILING SYSTEM OVER 1" FIBERGLASS BATT INSULATION MOUNTED TO 5/8" GYP BOARD CEILING SYSTEM, GYP BOARD JOINTS TO BE FINISHED BUT BOARD IS NOT PAINTED
	K-	SUSPENDED 5/8" GYP. BD. CEILING SYSTEM - OVER HAT CHANNEL FURRING, PAINTED

CEILING SYMBOLS

ELECTRICAL

- 2'X4' FLUORESCENT FIXTURE
- 2'X2' FLUORESCENT FIXTURE
- 6"X4' FLUORESCENT FIXTURE
- FLUORESCENT STRIP FIXTURE
- RECESSED SQUARE DOWN LIGHT
- WALL WASH
- 1'X4' FLUORESCENT FIXTURE
- EXIT SIGN, SINGLE-SIDED
- EXIT SIGN, DOUBLE-SIDED
- F — FIRE ALARM
- S — SPEAKER
- P — SMOKE DETECTOR
- W — WIRELESS INTERNET

MECHANICAL

- SUPPLY GRILLE
- RETURN GRILLE
- EXHAUST GRILLE
- LINEAR DIFFUSER
- SPRINKLER HEAD - CEILING MOUNT
- SPRINKLER HEAD - WALL MOUNT

GENERAL CEILING NOTES

1. REFER TO DETAIL XXXX FOR TYPICAL CEILING SUSPENSION & SEISMIC BRACING
2. REFER TO DETAIL XXXX FOR TYPICAL SUSPENDED GYP. BOARD CEILINGS
3. ALL UNIDENTIFIED CEILING TYPES ON THE PLANS SHALL BE TYPE " A" AT 9'-4" A.F.F.
4. GRID SUSPENSION SYSTEMS SHALL BE CENTERED WITHIN AREAS INDICATED, UNLESS NOTED OTHERWISE
5. PAINT ALL EXPOSED STRUCTURE, MECHANICAL, DUCTS, ELECTRICAL WORK, PIPING, ETC. ALL VISIBLE ELEMENTS TO BE PAINTED AT TYPE "E" & TYPE "F"
6. REFER TO ARCHITECTURAL DRAWINGS FOR LOCATION OF MECHANICAL GRILLES, AND TO MECHANICAL DRAWINGS FOR QUANTITIES AND TYPES
7. REFER TO ARCHITECTURAL DRAWINGS FOR LOCATIONS OF LIGHT FIXTURES AND TO ELECTRICAL DRAWINGS FOR QUANTITY AND TYPES
8. MECHANICAL AND ELECTRICAL CONTRACTORS TO COORDINATE WORK WITH SPRINKLER CONTRACTOR TO AVOID CONFLICTS IN FIELD
9. ALL CEILING HEIGHTS ARE ELEVATION ABOVE FINISH FLOOR
10. ALL TYPE C CEILINGS IN RESTROOMS, LOCKER ROOMS, SHOWERS, AND WET AREAS TO BE EPOXY PAINTED

KEYED NOTES

803	24"X 24" ACCESS DOOR
1201	MANUAL ROLLER WINDOW SHADES FULL LENGTH OF WINDOW, SHADE BREAKS TO ALIGN WITH MULLION

A1 LEVEL 4 REFLECTED CEILING ALTERNATE

SCALE: 1/8" = 1'-0"

PLAN NORTH

VCBO ARCHITECTURE

VCBO ARCHITECTURE
524 SOUTH 600 EAST
SALT LAKE CITY, UT 84102
Phone: (801) 575-8800
Fax: (801) 531-9850
Web: vcbo.com

LICENSED ARCHITECT No. 153912 BRENT R. TIPPETS 8-15-13 STATE OF UTAH

2nd District Juvenile Courthouse

Utah State Courts
08284150
165 West 20th Street, Ogden, Utah
BID DOCUMENTS

Rev #	Date	Description

Job # 12500
Date August 15, 2013
Owner # 08284150
Ins. #

LEVEL 4, REFLECTED CEILING ALT.

A141.4alt

8/14/2013 2:33:08 PM

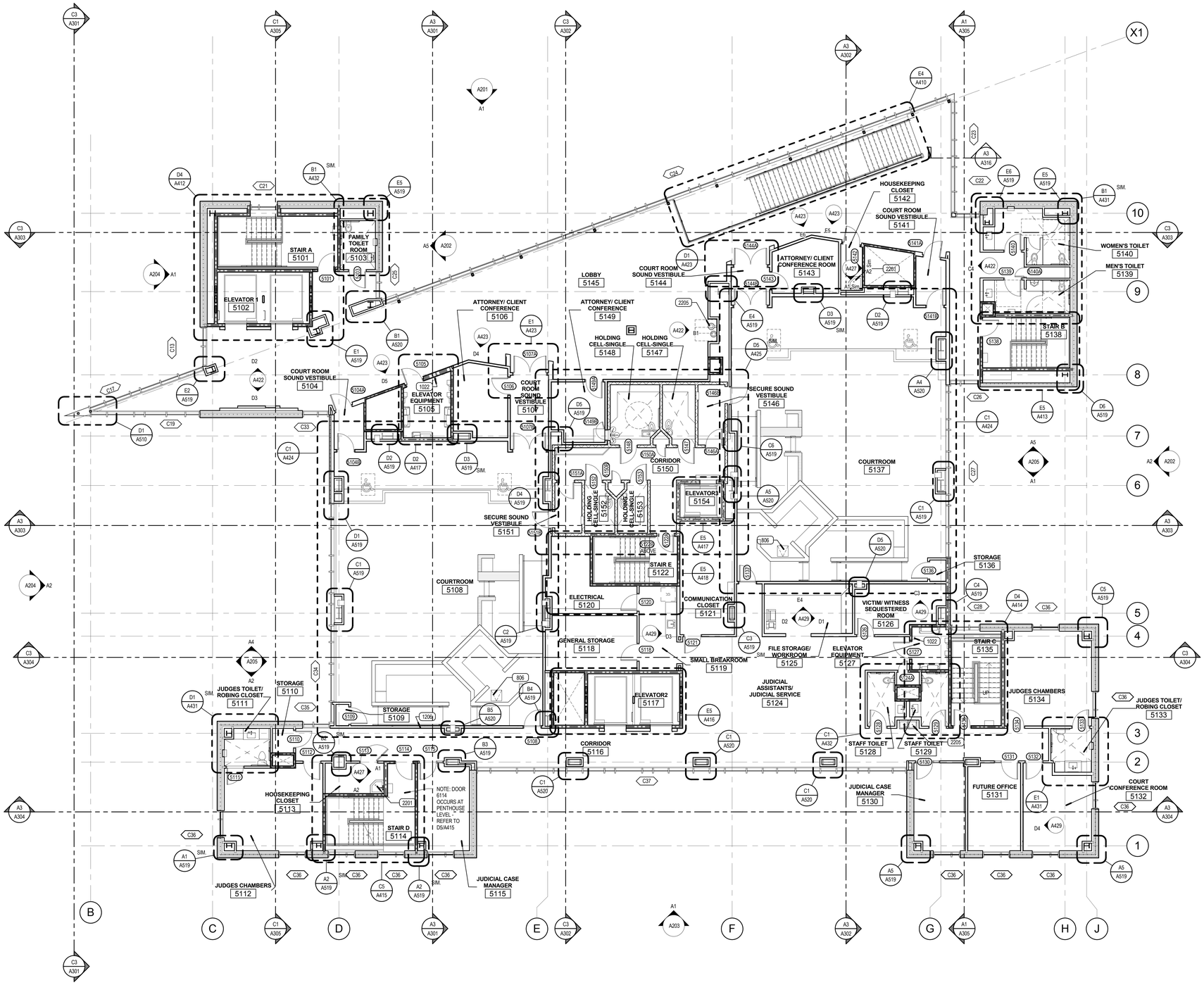

KEYED NOTES

806	24"X 24" FLOOR ACCESS DOOR WITH CARPET INSERT
1022	WALL MOUNTED FIRE EXTINGUISHER
1206	THRU-WALL PEEP HOLE
2201	JANITOR'S SINK
2205	ELECTRIC WATER COOLER

PLAN NOTES

1. WHERE FLOOR DRAINS ARE INSTALLED, THE FLOOR IS **NOT** TO SLOPE TOWARD THE DRAIN (REMAINS FLAT) EXCEPT AT THE FOLLOWING LOCATIONS:
   A. THICK SET TILE LOCATED IN CONJUCTION WITH SHOWERS.
   B. FLOORS NOT TILED AT SLAB-ON-GRADE LOCATIONS (LEVEL 1 HOLDING AND MECHANICAL ROOMS)
   WHERE FLOORS SLOPE, THE MAXIMUM FLOOR SLOPE IS NOT TO EXCEED 2% WHILE THE MINIMUM SLOPE IS NOT TO BE LESS THAN 1%.

2. WHERE CONCRETE PADS ARE CALLED TO BE CONSTRUCTED UNDER EQUIPMENT THE SLAB IS TO BE 8" THICK. U.N.O., AND IS TO HAVE #4 BARS AT 18" O.C. EACH WAY. COORDINATE DIMENSIONS OF PAD WITH ACTUAL EQUIPMENT SPEC

3. THE CONTRACTOR IS TO ENSURE THAT BETWEEN ANY FINISH FLOOR ELEVATION TO 42" A.F.F. ALL GUARDRAILS ARE TO BE CONSTRUCTED AND INSTALLED SO THAT A 4" SPHERE WILL NOT PASS BETWEEN ANY TWO ADJACENT GUARDRAIL COMPONENTS OR BETWEEN THE EDGE OF A GUARDRAIL AND ALL ADJACENT BUILDING ELEMENT SUCH AS A WALL OR FLOOR.

WALL NOTES

1. SEE SHEETS A500 AND A501 FOR ALL WALL TYPE DEFINITIONS

2. PARTITION TYPE INDICATIONS ARE INDEPENDENT OF APPLIED FINISHES, SUCH AS TILE OR WOOD PANELING. SEE THE FINISH SHEETS AND INTERIOR ELEVATIONS FOR WALL FINISHES INCLUDING COURSING AND PANEL LAYOUT AND/OR THE DESIGNATIONS ON THE PLANS FOR ADDITIONAL INFORMATION REGARDING APPLIED FINISHES.

3. WHERE PARTITION TYPE DESIGNATION ON FLOOR PLANS IS INTERRUPTED BY DOOR OPENING, GLAZED PARTITION, ETC., CONSTRUCTION ABOVE INTERRUPTION (AND WHERE APPLICABLE BELOW) IS TO BE THE SAME AS THAT DESIGNATED FOR THE PARTITION IN WHICH THE INTERRUPTION OCCURRED.

4. THE MINIMUM REQUIREMENTS FOR CONSTRUCTION OF EACH PARTITION TYPE AS EXPRESSED BY THE INDICATED REFERENCE ARE INCORPORATED BY REFERENCE AND ARE APPLICABLE TO THE WORK OF THIS PROJECT. HOWEVER, ADDITIONAL AND/OR MORE RESTRICTIVE REQUIREMENTS MAY BE INDICATED BY THE SPECIFICATIONS AND DRAWINGS. SUCH REQUIREMENTS ALSO APPLY AND SHALL GOVERN. SUCH REQUIREMENTS INCLUDE BUT ARE NOT LIMITED TO:

   A. USE 5/8" THICK GYPSUM BOARD THROUGHOUT UNLESS NOTED OTHERWISE.

   B. USE 16" OC MAX STUD SPACING UNLESS NOTED OTHERWISE IN THESE DOCUMENTS. THE SPACING STATED BY THE REFERENCED APPROVAL OR TEST REPORT IS THE MAX SPACING IF ALLOWED IN THESEDOCUMENTS.

   C. USE STUDS OF GAGE INDICATED ON THE DRAWINGS OR IN THE SPECIFICATIONS. THE GAGE STATED BY THE REFERENCED APPROVAL OR TEST REPORT IS THE MINIMUM GAGE TESTED, 20 GA (30 MILS) IS THE MINIMUM ALLOWED IN THESE DOCUMENTS.

5. USE STUDS OF DEPTH INDICATED BY THIS SET OF DOCUMENTS. THE DEPTH STATED BY THE REFERENCED APPROVAL OR TEST REPORT IS THE MINIMUM DEPTH ALLOWED IN THESE DOCUMENTS.

6. AT INTERIOR STUD WALLS, THE CONTRACTOR IS RESPONSIBLE FOR SELECTING THE STUD GAUGE BASED ON THE HEIGHT OF WALL BEING CONSTRUCTED USING THE REQUIRMENTS FOUND IN THE "NON-BEARING METAL STUD GAUGE SIZING" CHART LOCATED ON SHEET A501.

7. PROVIDE FIRE RATED CONSTRUCTION ASSEMBLIES WHERE INDICATED ON SHEET G200 AND FLOOR PLAN DRAWINGS.

8. ALL DIMENSIONS ARE CENTER OF STUD OR FACE OF CONCRETE, MASONRY OR ROUGH OPENING UNLESS NOTED OTHERWISE.

9. AT ALL WALLS, STUDS, INSULATION AND GYPSUM BOARD ARE TO EXTEND TO THE DECK ABOVE. UNLESS NOTED OTHERWISE.

10. WALL TYPES NOT NOTED ARE ASSUMED TO MATCH ADJACENT ROOMS. NOTIFY ARCHITECT OF ANY DISCREPANCIES.

11. ALL METAL STUD PARTITIONS ARE CONSIDERED ACOUSTIC PARTITIONS AND ARE TO RECEIVE A TYPE 1 SOUND ATTENUATION BLANKET. THICKNESS TO MATCH STUD DEPTH, UNLESS NOTED OTHERWISE.

12. REFER TO SHEET A511 FOR TYPICAL INTERIOR WALL CONDITIONS ASSOCIATED WITH ALL METAL STUD AND CMU PARTITIONS.

13. SEE DETAIL B4/A511 FOR THE TYPICAL TOP OF WALL CONDITION TO BE USED AT ALL INTERIOR STUD WALLS.

14. PROVIDE CONTROL JOINTS IN METAL FRAMED WALLS AT APPROXIMATELY 30 FEET ON CENTER. LOCATE AT CORNER ABOVE DOORS OR INSIDE CORNER OF PILASTERS OR OTHER INCONSPICUOUS LOCATION WHERE POSSIBLE. **CONSULT WITH ARCHITECT PRIOR TO COMMENCING FRAMING.**

15. AT WALL OPENINGS FOR PENETRATION OF PIPES, DUCTS, DEVICES, ETC., GYPSUM BOARD IS TO BE CUT TO MATCH THE SHAPE AND DIMENSION OF THE PENETRATING OBJECT AND THE GAP BETWEEN THE OBJECT AND THE WALL IS TO BE SEALED W/ ACOUSTICAL OR FIRE SEALANT ON ALL SIDES WITH A 3/4" JOINT AT ALL SIDES, MAXIMUM. THE OPENING FOR DUCTS OR LARGE PENETRATIONS SHALL BE FRAMED WITH A HEADER, ADD AN ANGLED CORNER BRACE IF THE GAP EXCEEDS 3" FROM FRAMING TO THE OPENING, SEE DETAIL D5/511.

16. CONTRACTOR TO PROVIDE BLOCKING / BACKING FOR ALL WALL MOUNTED EQUIPMENT. SEE FLOOR PLANS AND INTERIOR ELEVATIONS FOR CABINETS, GRAB BARS ETC. INSTALL BLOCKING AS DETAILED OR AS REQUIRED TO MOUNT SUCH DEVICES. ALL BLOCKING IS TO BE FIRE RETARDANT TREATED OR 20 GA METAL PER DETAIL C4/A511.

17. WHERE THERE IS LIMITED WATER EXPOSURE: INSTALL ONE LAYER OF 5/8" TYPE X WATER RESISTANT GYPSUM BOARD PER ASTM C1396 (WHERE GYPSUM BOARD OCCURS) OF BASIC PARTITION AT THE FOLLOWING LOCATIONS:

   A. WITHIN 2 FEET HORIZONTALLY AND 4 FEET VERTICALLY OF JANITORS SINKS

   B. AT OTHER LOCATIONS, I.E. TOILET ROOMS AND KITCHENS, AND AS INDICATED ON THE ARCHITECTURAL FINISH PLANS AND ELEVATIONS.

18. WHERE CERAMIC TILE FINISHES ARE INDICATED PER THE FINISH PLANS AND ELEVATIONS, INSTALL ONE LAYER OF 5/8" GLASS MAT TILE BACKER BOARD IN LIEU OF GYPSUM BOARD (WHERE GYPSUM BOARD OCCURS) OF BASIC PARTITION WHERE THERE IS NO FIRE RATING AND OVER GYPSUM BOARD FACE LAYER AT FIRE RATED PARTITIONS AT THE FOLLOWING LOCATIONS.

19. ALL EXTERIOR WALLS TO HAVE 2" OF SPRAY FOAM INSULATION APPLIED TO THE INTERIOR FACE OF SHEATHING OR TO THE BACK OF THE GFRC PANEL (UNLESS NOTED OTHERWISE).

20. AT WALLS HOLDING EXTERIOR METAL PANELS, A FLUID APPLIED MEMBRANE IS TO BE APPLIED TO THE EXTERIOR FACE OF THE GYP SHEATHING FOR THE FULL HEIGHT AND LENGTH OF THE WALL, SEAL ALL PENETRATIONS. **PLEASE NOTE THAT TWO MEMBRANE TYPES ARE TO BE USED (VAPOR PERMEABLE AND VAPOR BARRIER)**. SEE WALL TYPES, SPECIFICATIONS AND DETAILS FOR LOCATION OF EACH TYPE.

21. AT EXTERIOR METAL PANELS, 3" OF MINERAL WOOL CAVITY INSULATION IS TO BE PROVIDED.

22. THE FLUID APPLIED MEMBRANE SYSTEMS (PERMEABLE AND VAPOR BARRIER) ARE TO WRAP INTO ALL WINDOW AND DOOR OPENINGS PER THE MEMBRANE MANUFACTURER'S APPROVED DETAILS.

23. SEE STRUCTURAL PLANS FOR ADDITIONAL CONCRETE AND MASONRY WALL INFORMATION.

24. SEE EXTERIOR ELEVATIONS FOR G.F.R.C., ACM AND PROFILE METAL PANEL ORIENTATION AND JOINT PLACEMENT.

25. ALL MASONRY WALLS ARE TO BE REINFORCED AND ARE TO BE SET ON REINFORCED FOOTINGS. CONTROL JOINTS TO BE LOCATED AS PER THE REQUIREMENTS FOUND IN THE STRUCTURAL DOCUMENTS BUT ARE NOT TO EXCEED 30' OC. SEE THE STRUCTURAL DRAWINGS FOR REINFORCING AND OTHER DETAILS PERTAINING TO MASONRY WALLS. IF NOT OTHERWISE NOTED, LOCATE CONTROL JOINTS AT CORNER ABOVE DOORS, INSIDE CORNER OF PILASTERS OR OTHER INCONSPICUOUS LOCATION WHERE POSSIBLE. CONSULT WITH ARCHITECT PRIOR TO INSTALLING.

26. SEE IBC 2009, CHAPTER 7 FOR FIRE RESISTIVE REQUIREMENTS ON NEW CONCRETE AND CONCRETE MASONRY UNIT WALLS.
-CMU WALLS (IBC TABLE 720.1(2), ITEM 3)
-CAST IN PLACE CONCRETE WALLS (IBC TABLE 721.2.1.2(1))

27. AT WALL OPENINGS FOR PENETRATION OF PIPES, DUCTS, DEVICES, ETC., MASONRY IS TO BE CUT TO MATCH THE SHAPE AND DIMENSION OF THE PENETRATING OBJECT AND THE GAP BETWEEN THE OBJECT AND THE WALL IS TO BE SEALED W/ ACOUSTICAL OR FIRE SEALANT ON ALL SIDES WITH A 3/4" JOINT AT ALL SIDES, MAXIMUM.

28. PROTECTION OF MASONRY: DURING CONSTRUCTION, COVER TOPS OF WALLS, PROJECTIONS, AND SILLS WITH WATERPROOF SHEETING AT END OF EACH DAY'S WORK, EXCEPT WHEN THE AMBIENT TEMPERATURE IS EXPECTED TO REMAIN ABOVE 65 DEG F AND NO PRECIPITATION IS FORECAST FOR THE NEXT 24 HOURS. (THIS IS TO PREVENT CONDENSATION FROM COVERED WALLS CAUSING A MOISTURE PROBLEM.) COVER PARTIALLY COMPLETED MASONRY EACH DAY THAT CONSTRUCTION IS NOT IN PROGRESS. WALLS ARE TO BE PROTECTED UNTIL THEY ARE PERMANENTLY PROTECTED BY THE ROOFING MEMBRANE OVER THE CAP PLATE. THE GENERAL CONTRACTOR IS TO PROVIDE TEMPORARY PROTECTION IMMEDIATELY FOLLOWING THE TOPPING OUT OF EACH SECTION OF WALL BY INSTALLING WATERPROOF SHEETING OVER A CONTINUOUS CAP PLATE UNTIL THE ROOFING MEMBRANE IS INSTALLED. **A SOLID GROUTED TOP BOND BEAM SHALL NOT BE CONSIDERED ADEQUATE PROTECTION FOR THE WALL.**

29. AT PAINTED CMU THE HORIZONTAL AND VERTICAL MORTAR JOINTS ARE TO BE CONCAVE. AT ALL HONED BLOCK SITE WALLS THE HORIZONTAL MORTAR JOINT IS TO BE A WEATHERED JOINT AND ALL VERTICAL JOINTS ARE TO BE RAKED.

30. ALL VERTICAL MASONRY CORNERS WHICH FALL WITHIN THE INTERIOR OF THE BUILDING, INCLUDING CORNERS AT DOOR AND WINDOW OPENINGS ARE TO HAVE A 3/4" CHAMFER EXTENDING FROM 4" A.F.F. TO THE DECK ABOVE OR THE BOTTOM OF THE HEADER. SEE DETAIL D6/A512.

31. PROVIDE SPECIAL SHAPES, SUCH AS "U" SHAPED CHANNEL FOR LINTELS OR HEADERS AND CAPPING UNITS FOR SASH AND OTHER SPECIAL CONDITIONS. U SHAPED BLOCKS ARE TO BE 16"X8"X THE WIDTH OF THE WALL.

32. WHERE A FLUID APPLIED MEMBRANES ARE TO BE APPLIED OVER CMU, THE MORTAR JOINTS ARE TO BE STRUCK FLUSH AND SMOOTH.

33. ALL WALL COMPONENTS (GYP. BOARD, VAPOR BARRIER, INSULATION, ETC...) ARE TO EXTEND TO THE DECK ABOVE OR TO TOP OF PARAPET UNLESS NOTED OTHERWISE.

A1 LEVEL 5 ANNOTATED
SCALE: 1/8" = 1'-0"

PLAN NORTH

8/14/2013 2:33:26 PM

VCBO ARCHITECTURE
524 SOUTH 600 EAST
SALT LAKE CITY, UT 84102
Phone: (801) 575-8800
Fax: (801) 531-9850
Web: vcbo.com

LICENSED ARCHITECT No. 153912 BRENT R. TIPPETS 8-15-13 STATE OF UTAH

2nd District Juvenile Courthouse

Utah State Courts
08284150
165 West 20th Street, Ogden, Utah
BID DOCUMENTS

Rev #	Date	Description

Job # 12500
Date August 15, 2013
Owner # 08284150
Ins. #

LEVEL 5, ANNOTATED

A151.1

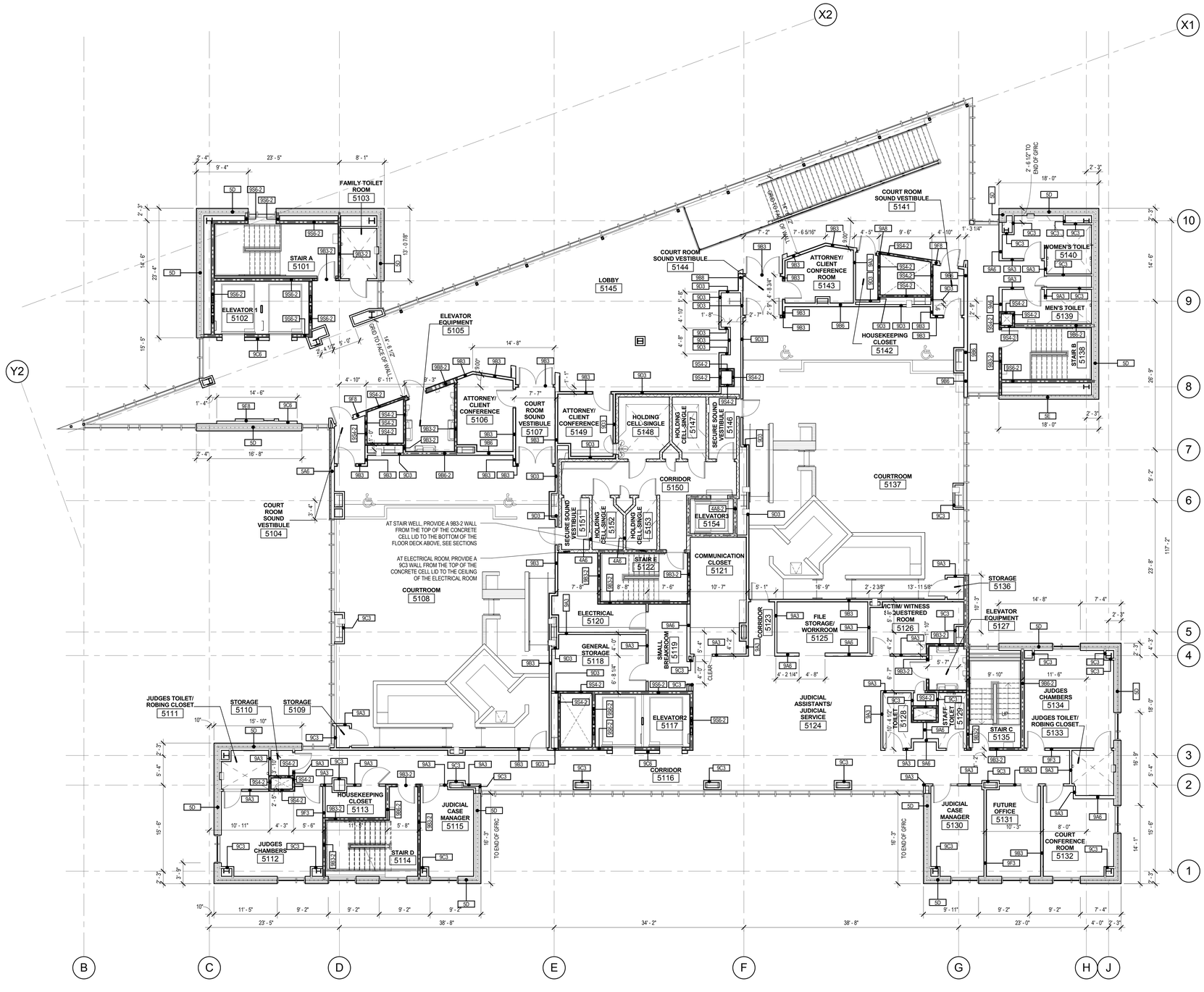

A1 LEVEL 5 DIMENSION AND WALL TYPES

SCALE: 1/8" = 1'-0"

PLAN NORTH

DIMENSION NOTES

1. ALL DIMENSIONS ARE TO CENTER OF STUD WALL OR FACE OF CONCRETE, MASONRY OR ROUGH OPENING UNLESS NOTED OTHERWISE. WHERE THE END OF A WALL IS INDICATED THE DIMENSION IS TO THE FINISH SURFACE OF THE WALL END.
2. UNLESS DIMENSIONED OTHERWISE, THE DIMENSION FROM THE BUCK OF A DOOR FRAME IS TO BE 4" TO THE WALL CORNER.
3. EXCEPT WHERE DIRECTED TO PLACE ITEMS OF WORK AT THE APPROXIMATE LOCATION SHOWN, DO NOT SCALE DRAWINGS FOR DIMENSIONAL INFORMATION. ALL ELEMENTS OF THE DRAWINGS MAY NOT BE DRAWN TO EXACT SCALE. ALL DIMENSIONS REQUIRED ARE SHOWN OR MAY BE DERIVED FROM THOSE SHOWN ON THE FLOOR PLANS, DETAIL PLANS, ELEVATIONS, SECTIONS, DETAILS, SCHEDULES AND SPECIFICATIONS. IF DIMENSIONS ARE NOT PRESENT, THE ARCHITECT IS TO BE NOTIFIED SO THAT A CLARIFICATION CAN BE ISSUED

KEY FOR PARTITION TYPES

DENOTES TYPE OF CONSTRUCTION (SPEC. DIVISION) — WALL

3X 0 SERIES	CONCRETE
4X 0 SERIES	MASONRY
5X 0 SERIES	COLD FORMED METAL STUDS, 16ga MIN.
9X 0 SERIES	METAL STUDS

NOMINAL SIZES: V = VARIABLE/MATCHEXISTING
1 = 1 5/8" STUDS
2 = 2 1/2" STUDS
3 = 3 5/8" STUDS
4 = 4" STUDS / 4" (NOM.) C.M.U.
6 = 6" STUDS / 6" (NOM.) C.M.U.
8 = 8" STUDS / 8" (NOM.) C.M.U.
10 = 10" (NOM.) C.M.U. OR CONC.
12 = 12" (NOM.) C.M.U. OR CONC.

EXAMPLE: WALL TYPE 9A3 IS A 3 5/8" METAL STUD WITH 5/8" GYPSUM BOARD ON BOTH SIDES.

NOTE: SEE GENERAL NOTES BELOW FOR ADDITIONAL ELEMENTS IN THE INDIVIDUAL WALL TYPES AND SPECIFIC DETAILS, INCLUDING UL RATINGS.

RATED WALL LEGEND

1 HOUR SEPARATION
2 HOUR SEPARATION

EXAMPLE: WALL TYPE 9A3-1 IS A ONE HOUR RATED, 3 5/8" METAL STUD WALL WITH 5/8" GYPSUM BOARD ON BOTH SIDES, PER ASSEMBLY REQUIREMENTS.

90X-R SERIES
FIRE RATING (ONLY WHEN NOTED):
1 = 1 HOUR RATED ASSEMBLY
2 = 2 HOUR RATED ASSEMBLY
3 = 3 HOUR RATED ASSEMBLY

NON-BEARING METAL HEADER SCHEDULE

MAXIMUM SPAN	HEADER	FY
4'-0"	(2) 400S137-43	33 ksi
6'-0"	(2) 600S162-43	33 ksi
8'-0"	(2) 800S162-43	33 ksi

METAL STUD HEADER NOTES:

1. SCHEDULE TO BE USED FOR NON-BEARING WALLS.
2. HEADERS TO BE CONSTRUCTED AS BOX HEADERS PER SSMA STANDARDS.
3. SEE TYPICAL DETAIL FOR MORE INFORMATION.

NON-BEARING METAL STUD GAUGE SIZING

MEMBER DEPTH IN 1/100 INCHES — FLANGE WIDTH IN 1/100 INCHES
400S137-43
STYLE (S=STUD OR JOIST) — MATERIAL THICKNESS IN MILS

MEMBER DEPTH	MAX STUD HEIGHT	MIN. GA. & SPACING
2 1/2" (250S125-33)	10'-0"	20@16" O.C.
3 5/8" (362S125-33)	14'-0"	20@16" O.C.
3 5/8" (362S162-33)	16'-0"	20@16" O.C.
3 5/8" (362S162-43)	18'-0"	18@16" O.C.
6" (600S162-33)	24'-0"	20@16" O.C.
6" (600S162-43)	26'-0"	18@16" O.C.
6" (600S162-54-50KSI)	28'-0"	16@16" O.C.

METAL STUD NOTES:

1. STEEL STUDS SHALL MEET ICC REPORT ER-4943P AND THE SSMA STANDARDS. HEIGHT BASED ON SSMA 2001 CATALOG AND PROJECT REQUIREMENTS.
2. SEE SCHEDULE FOR STUD SPACING AND GAUGE. ALL STUDS AND BRACES SHALL BE 33 KSI UNLESS NOTED OTHERWISE IN THESE DRAWINGS.
3. AT ALL DOORS PROVIDE TWO TABBED 18 GAUGE STUDS AT BOTH SIDES OF JAMB.
4. PLEASE NOTE THAT DUE TO THE LARGE FLOOR TO FLOOR HEIGHT 18 GAUGE STUDS WILL BE NECESSARY IN MOST INTERIOR NON LOAD BEARING WALLS. REFER TO THE CHART ABOVE.

VCBO ARCHITECTURE
524 SOUTH 600 EAST
SALT LAKE CITY, UT 84102
Phone: (801) 575-8800
Fax: (801) 531-9850
Web: vcbo.com

LICENSED ARCHITECT No. 153912 BRENT R. TIPPETS 8-15-13 STATE OF UTAH

2nd District Juvenile Courthouse

Utah State Courts
08284150
165 West 20th Street, Ogden, Utah
BID DOCUMENTS

Rev #	Date	Description

Job # 12500
Date August 15, 2013
Owner # 08284150
Ins. #

LEVEL 5, DIMENSION AND WALL TYPES

A151.2

8/15/2013 9:11:59 AM

LEVEL 5 ROOM FINISH SCHEDULE							
				Wall Finishes			
Room Name	Room Number	Floor Finish	Base Finish	Wall Finish Top	Wall Finish Right	Wall Finish Bottom	Wall Finish Left
STAIR A	5101	RB2	B1	P1	P1	P4	P1
ELEVATOR 1	5102	FT1,2	-	-	-	-	-
FAMILY TOILET ROOM	5103	FT1,2	B6	WT1,2,3,4,5	WT1,2,3,4,5	WT1,2,3,4,5	WT1,2,3,4,5
PROBATION SUPERVISION SUPPORT	5103	C1	B1	P2	P2	P2	P2
COURT ROOM SOUND VESTIBULE	5104	C6	B4	P2	P2	P2	P2
ELEVATOR EQUIPMENT	5105	SC	B10	P1	P1	P1	P1
ATTORNEY/ CLIENT CONFERENCE	5106	C2	B4	P2	P2	P2	P2
COURT ROOM SOUND VESTIBULE	5107	C6	B4	P2	P2	P2	P2
COURTROOM	5108	C6	B4	WV/F1/P2	WV/F1/P2	WV/F1/P2	WV/F1/P2
STORAGE	5109	C6	B4	P2	P2	P2	P2
STORAGE	5110	C5	B1	P1	P1	P1	P1
JUDGES TOILET/ ROBING CLOSET	5111	FT3	B8	WT9/P2	WT9/P2	WT9/P2	WT9/P2
JUDGES CHAMBERS	5112	C4	B4	P2	P2	WC1	WC1
HOUSEKEEPING CLOSET	5113	L2	B10	P1	P1/WT 13	P1/WT 13	P1
STAIR D	5114	RB2	B1	P4	P1	P1	P1
JUDICIAL CASE MANAGER	5115	C1	B1	P2	P2	P2	P2
CORRIDOR	5116	C5	B1	P2	P2	P2	P2
ELEVATOR2	5117	FT1,2	-	-	-	-	-

LEVEL 5 ROOM FINISH SCHEDULE							
				Wall Finishes			
Room Name	Room Number	Floor Finish	Base Finish	Wall Finish Top	Wall Finish Right	Wall Finish Bottom	Wall Finish Left
GENERAL STORAGE	5118	L2	B10	P1	P1	P1	P1
SMALL BREAKROOM	5119	L1	B1	P2	P2	P2	P2
ELECTRICAL	5120	VT2	B10	P1	P1	P1	P1
COMMUNICATION CLOSET	5121	VT2	B10	P1	P1	P1	P1
STAIR E	5122	SC	B10	P1	P1	P1	P1
CORRIDOR	5123	C1	B1	P2	P2	P2	P2
JUDICIAL ASSISTANTS/ JUDICIAL SERVICE	5124	C1	B1	P2	P2	P2	P2
FILE STORAGE/ WORKROOM	5125	C1	B1	P2	P2	P2	P2
VICTIM/ WITNESS SEQUESTERED ROOM	5126	C1	B1	P2/F1	P2	P2	P2
ELEVATOR EQUIPMENT	5127	SC	B10	P1	P1	P1	P1
STAFF TOILET	5128	FT3	B7	WT7,8,9/P1	WT7,8,9/P1	WT7,8,9/P1	WT7,8,9/P1
STAFF TOILET	5129	FT3	B7	WT7,8,9/P1	WT7,8,9/P1	WT7,8,9/P1	WT7,8,9/P1
JUDICIAL CASE MANAGER	5130	C1	B1	P2	P2	P2	P2
FUTURE OFFICE	5131	C1	B1	P2	P2	P2	P2
COURT CONFERENCE ROOM	5132	C2	B4	P2	P2	P2	P2/WC3
JUDGES TOILET/ ROBING CLOSET	5133	FT3	B8	WT9/P2	WT9/P2	WT9/P2	WT9/P2
JUDGES CHAMBERS	5134	C4	B4	WC 1	WC 1	P2	P2
STAIR C	5135	RB2	B1	P1	P1	P1	P9
STORAGE	5136	C6	B4	P2	P2	P2	P2
COURTROOM	5137	C6	B4	WV/F1/P2	WV/F1/P2	WV/F1/P2	WV/F1/P2

LEVEL 5 ROOM FINISH SCHEDULE							
				Wall Finishes			
Room Name	Room Number	Floor Finish	Base Finish	Wall Finish Top	Wall Finish Right	Wall Finish Bottom	Wall Finish Left
STAIR B	5138	RB2	B1	P1	P1	P1	P1
MEN'S TOILET	5139	FT1,2	B6	WT1,2,3,4,5	WT1,2,3,4,5	WT1,2,3,4,5	WT1,2,3,4,5,7
WOMEN'S TOILET	5140	FT1,2	B6	WT1,2,3,4,5	WT1,2,3,4,5	WT1,2,3,4,5	WT1,2,3,4,5,7
COURT ROOM SOUND VESTIBULE	5141	C6	B4	P2	P2	P2	P2
HOUSEKEEPING CLOSET	5142	L2	B10	P1	P1/WT 13	P1/WT 13	P1
ATTORNEY/ CLIENT CONFERENCE ROOM	5143	C2	B4	P2	P2	P2	P2
COURT ROOM SOUND VESTIBULE	5144	C6	B4	P2	P2	P2	P2
LOBBY	5145	FT1,2	B3	P2	P2	WT14/P2,9	P2
SECURE SOUND VESTIBULE	5146	EP1	B11	P1	P1	P1	P1
HOLDING CELL-SINGLE	5147	EP1	B11	P1	P1	P1	P1
HOLDING CELL-SINGLE	5148	EP1	B11	P1	P1	P1	P1
ATTORNEY/ CLIENT CONFERENCE	5149	C2	B4	P2	P2	P2	P2
CORRIDOR	5150	EP1	B11	P1	P1	P1	P1
SECURE SOUND VESTIBULE	5151	EP1	B11	P1	P1	P1	P1
HOLDING CELL-SINGLE	5152	EP1	B11	P1	P1	P1	P1
HOLDING CELL-SINGLE	5153	EP1	B11	P1	P1	P1	P1
ELEVATOR3	5154	PT	-	-	-	-	-

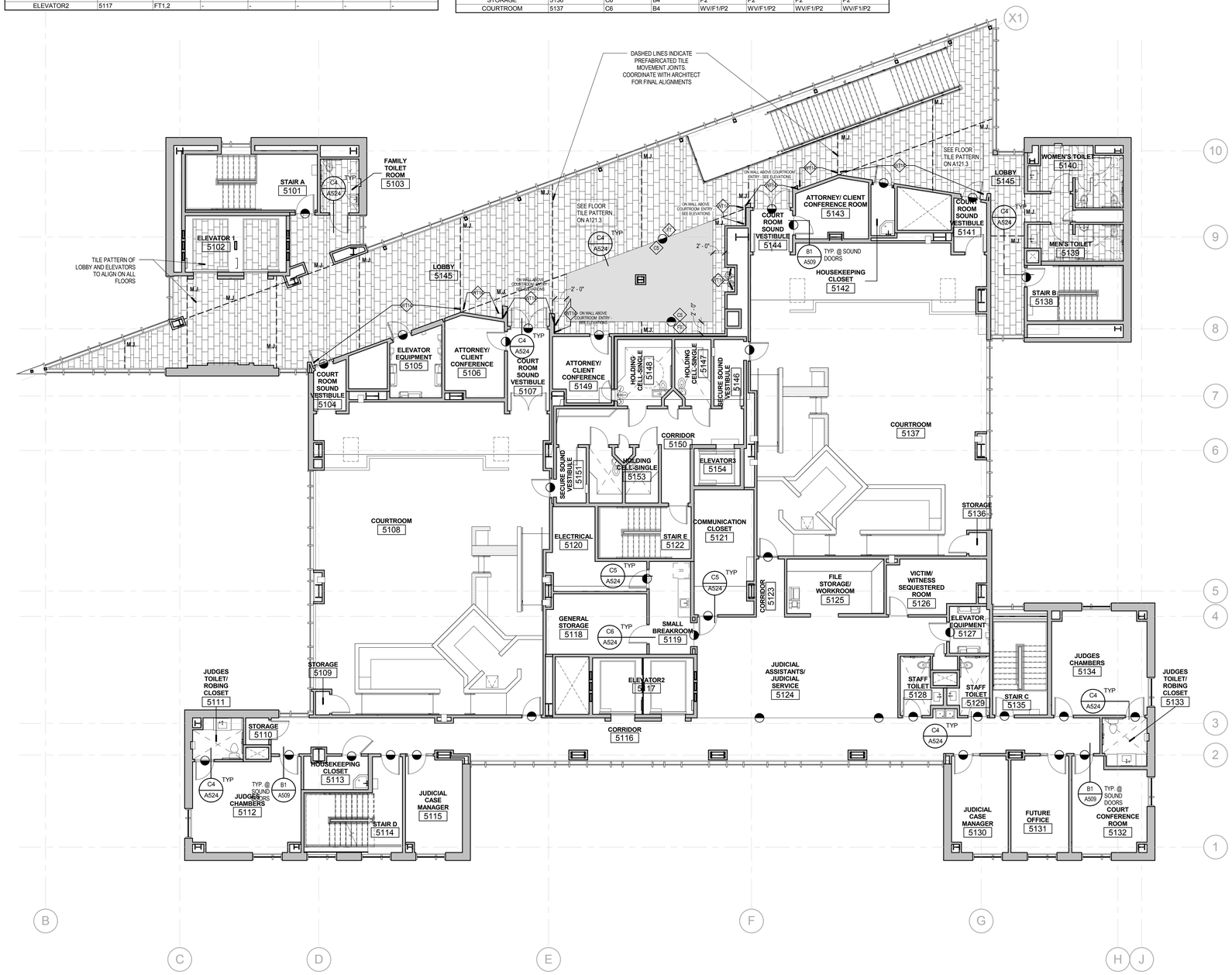

A1 LEVEL 5 FINISH PLAN

SCALE: 1/8" = 1'-0"

PLAN NORTH

GENERAL FINISH NOTES

1. PROVIDE EPOXY PAINT AT ALL RESTROOMS, SHOWERS, LOCKER ROOMS AND JANITOR CLOSETS.
2. ALL FLOOR TRANSITIONS TO BE LOCATED AT CENTER OF DOOR, U.N.O.
3. ALL EXPOSED STEEL COLUMNS AND GIRTS ARE TO BE PAINTED WITH INTUMESCENT PAINT P10, UNLESS NOTED OTHERWISE. SEE G SHEETS FOR LOCATIONS OF SUCH MEMBERS.
4. ALL GROUT JOINTS TO BE NO LARGER THAN 1/8".
5. FIELD VERIFY ALL DIMENSIONS BEFORE FABRICATION OF MILLWORK.
6. COORDINATE ALL MILLWORK WITH APPLIANCES BEFORE FABRICATION.
7. SEE ELEVATION SHEETS FOR ALL WALL TILE PATTERNS.
8. AT SOFFITS RECEIVING COLOR- PAINT ALL SIDES OF SOFFIT.
9. ALL WOOD DOORS TO BE FINISHED BY THE MILLWORK CONTRACTOR TO MATCH TRIM AND VENEERED MILLWORK.
10. ALL COUNTERTOP, BACKSPLASHES, AND EDGE BANDING TO HAVE COORDINATING FINISHES.
11. WHERE STAIRS CALL FOR "RB2: RUBBER FLOORING TILES", PROVIDE RUBBER FLOORING COVERING STAIR TREADS, RISERS AND LANDINGS.
12. PROVIDE A SMOOTH TRANSITION AT ALL FLOOR MATERIALS - CONTRACTOR TO INSTALL ALL FLOOR FINISHES AT SAME LEVEL, DESPITE DIFFERENT THICKNESS. PROVIDE FLOOR TRANSITION WHERE OCCURS. SEE TYPICAL TRANSITIONS ON SHEET A524.
13. PROVIDE TILE 'WT13: 4"X4" CERAMIC WALL TILE' AT ALL JANITOR SINKS. PROVIDE TILE BULLNOSE TO FINISH OFF ALL EXPOSED EDGES.
14. ALL WALLS RECEIVING TILE WAINSCOT TO RECEIVE PAINT P1 ABOVE, U.N.O. SEE FINISH PLANS AND INTERIOR ELEVATIONS FOR ACCENT WALL LOCATIONS.
15. SEE SHEET A524 FOR TYPICAL FLOORING TRANSITION DETAILS.
16. UNLESS NOTED AS STAINLESS STEEL, ALL METAL GUARDRAILS, STAIR STRINGERS, HANDRAILS AND DOOR FRAMES ARE TO BE PAINTED. SEE FINISH SCHEDULE FOR COLOR SELECTIONS.
17. ALL SPACES THAT HAVE NO CEILING ARE TO HAVE THE EXPOSED STRUCTURE, DUCTWORK, PIPING, CONDUIT, ETC PAINTED P5. REFER TO REFLECTED CEILING PLANS.
18. ALL RESTROOM WALL TILE ENDING BELOW THE CEILING LINE TO START AND END WITH A FULL SIZE TILE. VERTICAL HEIGHTS OF TILE DIMENSIONED ON ELEVATIONS ARE APPROXIMATE.

FINISH PLAN SYMBOLS

SINGLE FINISH SYMBOLS INDICATE WHERE FINISHES ARE DIFFERENT FROM GENERAL ROOM FINISHES, OR PROVIDE ADDITIONAL FINISH INFORMATION

CHANGE AT FLOOR MATERIAL

FINISH PLAN LEGEND

FLOOR MATERIALS

EM	ENTRY MAT
C1	CARPET TILE
C2	CARPET TILE
C3	NOT USED
C4	CARPET TILE
C5	CARPET TILE
C6	CARPET TILE
C7	NOT USED
L1	LINOLEUM SHEET
L2	LINOLEUM TILE - MCT
FT1	PORCELAIN FLOOR TILE 12x24
FT2	PORCELAIN FLOOR TILE 6x24
FT3	PORCELAIN FLOOR TILE 12x12
FT4	FLOOR TILE 1X2
VT2	STATIC DISSIPATIVE ACCESS FLOOR PANEL
RB1	RUBBER FLOOR TILES
RB2	RUBBER FLOORING (STAIRS, LANDINGS)
SC	SEALED CONCRETE
TZ1	TERRAZZO FLOORING
TZ2	TERRAZZO FLOORING ACCENT
EP1	EPOXY FLOORING - OPAQUE
G1	GROUT
G2	GROUT
PT	ALUMINUM DIAMOND PLATE

BASE MATERIALS

B1	RUBBER BASE
B2	RUBBER BASE
B3	ANODIZED ALUMINUM BASE - SEE C2 AND C4/A513
B4	SOLID HARDWOOD BASE - 3/4" THICK, 4" HIGH
B5	TILE BASE
B6	ALUMINUM COVE BASE
B7	TILE COVE BASE
B8	NO BASE - SEAL SEAM
B9	NO BASE - CAULK BETWEEN FLOOR AND WALL
B10	COVED RUBBER BASE
B11	COVED EPOXY FLOORING

WALL MATERIALS

F1	ACOUSTIC FABRIC WALL PANELS
F2	PEW SEAT FABRIC
P1	PRIMED & PAINTED WALL SURFACE - GENERAL
P2	PRIMED & PAINTED WALL SURFACE - GENERAL
P3	PRIMED & PAINTED WALL SURFACE - ACCENT
P4	PRIMED & PAINTED WALL SURFACE - ACCENT
P5	CEILING PAINT
P6	RAILING PAINT
P7	H.M. DOOR FRAME PAINT
P8	H.M. DOOR FRAME PAINT
P9	PRIMED & PAINTED WALL SURFACE - ACCENT
P10	INTUMESCENT PAINT SYSTEM
WT1	PORCELAIN WALL TILE 6X24
WT2	PORCELAIN WALL TILE 4X24
WT3	PORCELAIN WILL TILE 2X24
WT4	PORCELAIN WALL TILE 6X24
WT5	PORCELAIN WALL TILE 2X24
WT6	NOT USED
WT7	GLAZED WALL TILE 3x6
WT8	GLAZED WALL TILE 3x6
WT9	GLAZED WALL TILE 3x6
WT10	NOT USED
WT11	NOT USED
WT12	NOT USED
WT13	GLAZED WALL TILE 4x4
WT14	GLASS WALL TILE - SIZES VARY
WC1	VINYL WALLCOVERING
WC3	DRY ERASE WALLCOVERING

SURFACE MATERIALS

PL1	PLASTIC LAMINATE - VERTICAL SURFACES
PL2	PLASTIC LAMINATE - COUNTERTOPS
PL3	PHENOLIC CORE PARTITIONS - PARTITION COLOR
WV	WOOD VENEER - SEE A513 FOR TYPICAL DETAILS
QZ1	QUARTZ COUNTERTOP SURFACE
QZ2	QUARTZ COUNTERTOP SURFACE
QZ3	QUARTZ COUNTERTOP SURFACE
SS1	SOLID SURFACE COUNTERTOP
SS2	SOLID SURFACE COUNTERTOP
SS3	SOLID SURFACE THRESHOLD

VCBO ARCHITECTURE

VCBO ARCHITECTURE
524 SOUTH 600 EAST
SALT LAKE CITY, UT 84102
Phone: (801) 575-8800
Fax: (801) 531-9850
Web: vcbo.com

LICENSED ARCHITECT No. 153912 BRENT R. TIPPETS 8-15-13 STATE OF UTAH

2nd District Juvenile Courthouse

Utah State Courts
08284150
165 West 20th Street, Ogden, Utah
BID DOCUMENTS

Rev #	Date	Description

Job # 12500
Date August 15, 2013
Owner # 08284150
Ins. #

LEVEL 5, FINISH PLAN

A151.3

8/14/2013 2:34:00 PM

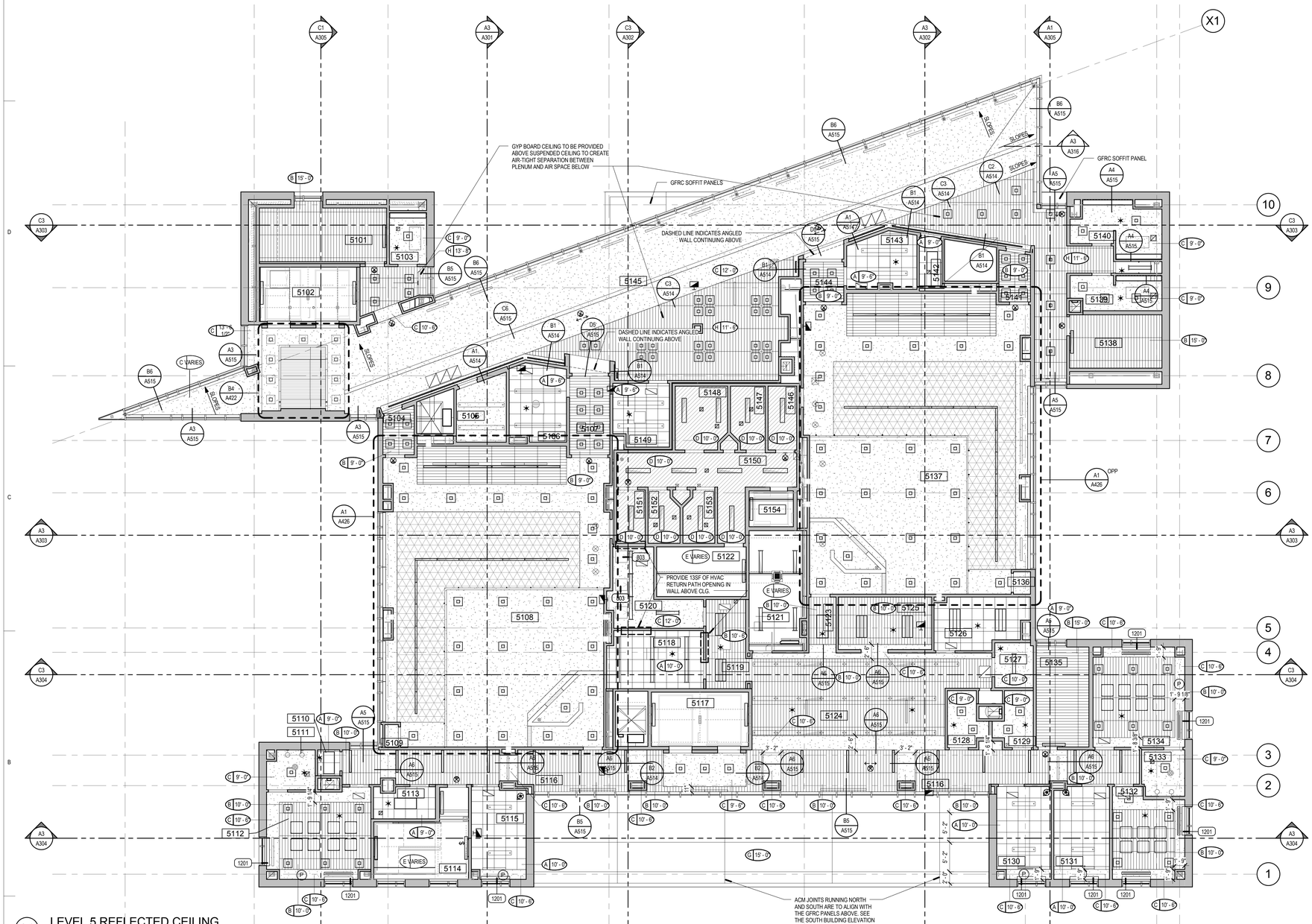

A1 LEVEL 5 REFLECTED CEILING

SCALE: 1/8" = 1'-0"

PLAN NORTH

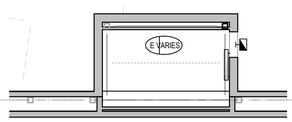

A2 PENTHOUSE REFLECTED CEILING

SCALE: 1/8" = 1'-0"

PLAN NORTH

CEILING LEGEND

	A-	SUSPENDED 2' X 4' ACOUSTICAL LAY-IN TILE CEILING WITH SINGLE KERF (2x2 LOOK)
	B-	SUSPENDED 2' X 4' ACOUSTICAL LAY-IN TILE CEILING WITH 3 KERFS (6"x4' LOOK), 6" HIGH PRE-FINISHED METAL PERIMETER TRIM AT EDGES NOT TOUCHING A WALL
	C-	SUSPENDED 5/8" GYP. BD. CEILING SYSTEM - (1 LAYER) PAINTED
	D-	PRECAST CONCRETE CEILING, PAINTED
	E-	OPEN TO STRUCTURE ABOVE, ALL SURFACES PAINTED: STRUCTURE, MECHANICAL, ELECTRICAL, ETC.
	F-	WOOD VENEERED 1/4" SUBSTRATE ATTACHED TO 1/2" MDF. MDF PAINTED BLACK AND SECURED TO 2 1/2" METAL STUDS @ 16" OC ATTACHED TO 6" METAL STUDS @16"O.C., SEE ASSOCIATED DETAILS
	G-	ACM METAL PANEL ATTACHED TOTHERMALLY BROKEN 3" Z-FURRING @16" O.C. OVER AIR AND MOISTURE BARRIER WITH 3" MINERAL WOOL INSULATION. Z FURRING ATTACHED TO SUSPENDED 5/8" GYP. SHEATHING CEILING SYSTEM
	H-	SUSPENDED ACOUSTICAL LAY-IN CEILING AS DESCRIBED IN CEILING TYPE 'B', SUSPENDED 12" BELOW A SUSPENDED 5/8" GYP BOARD CEILING, GYP BOARD JOINTS ARE TO BE FINISHED BUT BOARD IS NOT PAINTED
	J-	STRETCHED FABRIC CEILING SYSTEM OVER 1" FIBERGLASS BATT INSULATION MOUNTED TO 5/8" GYP BOARD CEILING SYSTEM, GYP BOARD JOINTS TO BE FINISHED BUT BOARD IS NOT PAINTED
	K-	SUSPENDED 5/8" GYP. BD. CEILING SYSTEM - OVER HAT CHANNEL FURRING, PAINTED

CEILING SYMBOLS

ELECTRICAL

- 2'X4' FLUORESCENT FIXTURE
- 2'X2' FLUORESCENT FIXTURE
- 6"X4' FLUORESCENT FIXTURE
- FLUORESCENT STRIP FIXTURE
- RECESSED SQUARE DOWN LIGHT
- WALL WASH
- 1'X4' FLUORESCENT FIXTURE
- EXIT SIGN, SINGLE-SIDED
- EXIT SIGN, DOUBLE-SIDED
- F — FIRE ALARM
- S — SPEAKER
- P — SMOKE DETECTOR
- W — WIRELESS INTERNET

MECHANICAL

- SUPPLY GRILLE
- RETURN GRILLE
- EXHAUST GRILLE
- LINEAR DIFFUSER
- SPRINKLER HEAD - CEILING MOUNT
- SPRINKLER HEAD - WALL MOUNT

GENERAL CEILING NOTES

1. REFER TO DETAIL XXXX FOR TYPICAL CEILING SUSPENSION & SEISMIC BRACING
2. REFER TO DETAIL XXXX FOR TYPICAL SUSPENDED GYP. BOARD CEILINGS
3. ALL UNIDENTIFIED CEILING TYPES ON THE PLANS SHALL BE TYPE " A" AT 9'-4" A.F.F.
4. GRID SUSPENSION SYSTEMS SHALL BE CENTERED WITHIN AREAS INDICATED, UNLESS NOTED OTHERWISE
5. PAINT ALL EXPOSED STRUCTURE, MECHANICAL, DUCTS, ELECTRICAL WORK, PIPING, ETC. ALL VISIBLE ELEMENTS TO BE PAINTED AT TYPE "E" & TYPE "F"
6. REFER TO ARCHITECTURAL DRAWINGS FOR LOCATION OF MECHANICAL GRILLES, AND TO MECHANICAL DRAWINGS FOR QUANTITIES AND TYPES
7. REFER TO ARCHITECTURAL DRAWINGS FOR LOCATIONS OF LIGHT FIXTURES AND TO ELECTRICAL DRAWINGS FOR QUANTITY AND TYPES
8. MECHANICAL AND ELECTRICAL CONTRACTORS TO COORDINATE WORK WITH SPRINKLER CONTRACTOR TO AVOID CONFLICTS IN FIELD
9. ALL CEILING HEIGHTS ARE ELEVATION ABOVE FINISH FLOOR
10. ALL TYPE C CEILINGS IN RESTROOMS, LOCKER ROOMS, SHOWERS, AND WET AREAS TO BE EPOXY PAINTED

KEYED NOTES

803	24"X 24" ACCESS DOOR
1201	MANUAL ROLLER WINDOW SHADES FULL LENGTH OF WINDOW, SHADE BREAKS TO ALIGN WITH MULLION

VCBO ARCHITECTURE

VCBO ARCHITECTURE
524 SOUTH 600 EAST
SALT LAKE CITY, UT 84102
Phone: (801) 575-8800
Fax: (801) 531-9850
Web: vcbo.com

LICENSED ARCHITECT No. 153912 BRENT R. TIPPETS 8-15-13 STATE OF UTAH

2nd District Juvenile Courthouse

Utah State Courts
08284150
165 West 20th Street, Ogden, Utah
BID DOCUMENTS

Rev #	Date	Description

Job # 12500
Date August 15, 2013
Owner # 08284150
Ins. #

LEVEL 5, REFLECTED CEILING

A151.4

8/14/2013 2:34:30 PM

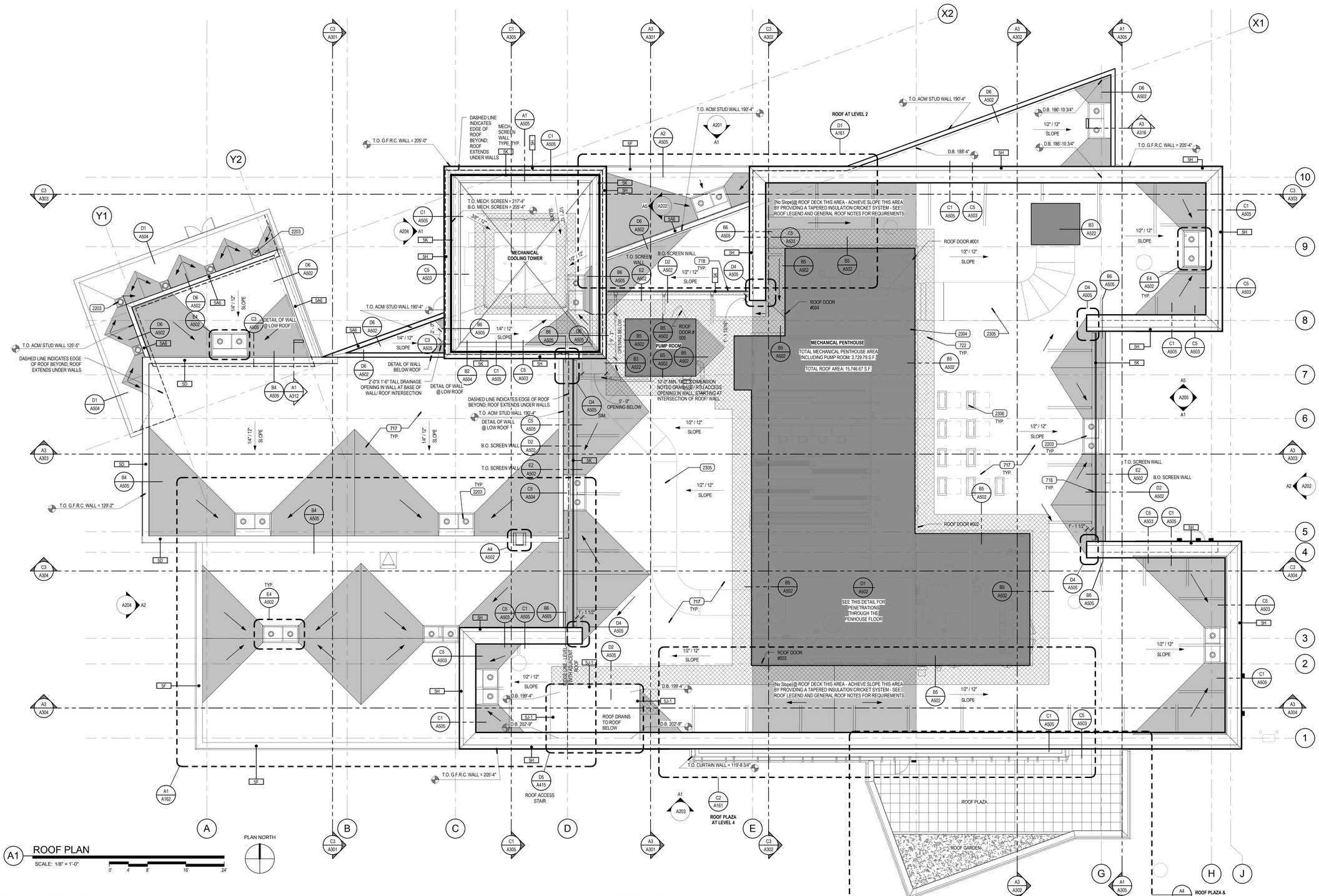

A1 ROOF PLAN

SCALE: 1/8" = 1'-0"

GENERAL ROOF NOTES

1. ALL ROOF DECK IS TO BE COVERED IN R-20 INSULATION OVER CONT. VAPOR BARRIER AND SPECIFIED ROOFING SYSTEM.
2. THE CONTRACTOR IS TO ASSURE THAT THE MINIMUM ROOF SLOPE IS NOT LESS THAN 1/2" PER FOOT. ANY AREA THAT IS LESS THAN 1/2" PER FOOT SLOPE SHALL BE ADJUSTED AT THE CONTRACTORS EXPENSE WITH CRICKETING TO PROVIDE THE REQUIRED SLOPE.
3. DECK BEARING ELEVATIONS SHOWN ON THIS SHEET ARE TO BE INCLUDED FOR ARCHITECT'S REFERENCE ON ALL STEEL SHOP DRAWINGS.
4. ALL ROOFING CRICKETS ARE TO BE CONSTRUCTED OF TAPERED INSULATION. CRICKETS ARE TO BE INSTALLED SO THAT A SLOPE OF 1/4" PER FOOT IS MAINTAINED ACROSS THE FACE OF THE CRICKET.
5. PROVIDE CRICKETS AT **ALL** ROOF TOP MOUNTED EQUIPMENT (I.E. SKYLIGHTS, ROOF HATCHES, ETC.) TO ASSURE POSITIVE DRAINAGE AROUND SUCH ELEMENTS.
6. ALL FLASHING, COUNTER FLASHING AND SHEET METAL WORK TO COMPLY WITH THE MINIMUM STANDARDS PER THE CURRENT EDITION OF SMACNA.
7. NOT ALL ROOF MOUNTED EQUIPMENT AND ROOF PENETRATIONS ARE SHOWN ON THE ARCHITECTURAL ROOF PLAN SHEETS. IN ADDITION TO THE ARCHITECTURAL, THE CONTRACTOR IS RESPONSIBLE FOR REFERENCING THE STRUCTURAL, MECHANICAL AND ELECTRICAL DOCUMENTS FOR ALL SUCH OCCURRENCES. ALL PENETRATIONS OF THE ROOF SHALL MEET WITH THE ROOFING MANUFACTURER'S RECOMMENDATIONS TO MAINTAIN INTEGRITY OF ROOFING SYSTEMS.
8. THE CONTRACTOR IS RESPONSIBLE AT BIDDING, FOR PROVIDING A MANUFACTURER'S APPROVED ROOFING DETAIL FOR ALL ROOFING CONDITIONS SO THAT THE SPECIFIED WARRANTY IS OBTAINED. IF A CONDITION SHOWN IN THESE CONSTRUCTION DOCUMENTS DOES NOT MEET THE REQUIREMENTS OF THE ROOFING MANUFACTURER THESE CONDITIONS ARE TO BE BROUGHT TO THE ATTENTION OF THE ARCHITECT PRIOR TO BIDDING AND INSTALLATION OF THE APPROVED DETAIL.
9. THE CONTRACTOR IS TO CONFIRM THE ROOFING SYSTEM THICKNESS, INCLUDING THE RIGID INSULATION PRIOR TO INSTALLING CURB AND PARAPET BLOCKING. BLOCKING AND CURB HEIGHTS ARE TO BE ADJUSTED AS NEEDED TO CONFORM TO THE ROOFING THICKNESS TO MEET REQUIREMENTS FOR WARRANTY.
10. WHERE ROOFING MEMBRANE IS SHOWN EXTENDING UP TO THE TOP OF THE PARAPET, THE MEMBRANE IS TO WRAP UP, OVER AND DOWN THE WOOD BLOCKING. THE AIR INFILTRATION BARRIER IS TO EXTEND UP EXTERIOR FACE OF WALL AND FULLY OVER THE TOP OF THE PARAPET WALL AND UNDER THE SILL BLOCK FLASHING. VERIFY WALL TYPE FOR PARAPET CAP WIDTH, SEE DETAILS ON SHEET A520. CONTRACTOR TO SEQUENCE WORK TO MEET THIS REQUIREMENT.
11. ALL TOPS OF PARAPETS TO BE PROVIDED WITH 1/2" PER FOOT MINIMUM POSITIVE SLOPE TOWARD THE ROOF FOR ADEQUATE DRAINAGE.
12. ALL PRE-MANUFACTURED MECHANICAL CURBS ARE TO BE MANUFACTURED TO ACCOMMODATE ROOF SLOPE. THEY MUST BE OF ADEQUATE HEIGHT TO ALLOW FOR THE DEPTH OF THE ROOF INSULATION, INCLUDING CRICKETS AND HAVE 8" HEIGHT ABOVE THE ROOF MEMBRANE, SEE DETAIL D5/A520.
13. *ALL REGLETS ARE TO BE PREFINISHED AND ARE TO BE HELD AS LOW TO THE ROOF AS POSSIBLE, BUT HAVE 8" HEIGHT ABOVE THE ROOF MEMBRANE SO THE VISIBILITY OF THE MEMBRANE FROM THE GROUND BELOW IS MINIMIZED. AT CERTAIN LOCATIONS A SHEET METAL COVER SHEET HAS BEEN DETAILED TO COVER THIS EXPOSED VERTICAL MEMBRANE.* ***ALL REGLETS AT MASONRY WALLS ARE TO BE EMBEDDED INTO MORTAR JOINTS****. FOR TYPICAL EMBEDDED MASONRY REGLET, SEE DETAIL B6/A520. FOR TYPICAL SURFACE MOUNTED FLASHING ON A STUD WALL, SEE DETAIL B5/A520.*
14. ROOF DRAINS ARE TO BE INSTALLED IN A TWO LEVEL DRAIN BASIN. THE BASIN IS TO BE CONSTRUCTED USING LAYERS OF ROOFING INSULATION. SEE DETAILS E4, E5 AND E6/A502.
15. FOR TYPICAL ROOF HATCH AND LADDER, SEE DETAILS A4, C4, AND D4/A502.
16. FOR TYPICAL ROOF PIPE PENETRATIONS, SEE DETAIL E3/A502.

ROOF LEGEND

- SINGLE PLY MEMBRANE ROOFING SYSTEM
- TAPERED INSULATION CRICKET MINIMUM SLOPES: 1/8" ALONG VALLEY, 1/4" ACROSS CRICKET
- PROTECTIVE WALKABLE SURFACE
- DECK RIDGE OR VALLEY
- IMAGINARY VALLEY WITH WARPED DECKING

KEYED NOTES

717	SINGLE PLY MEMBRANE ROOFING, ROOFING INSULATION AND ROOFING VAPOR BARRIER
718	PRE-FINISHED PROFILE METAL, RANDOM VERTICAL PATTERN, SEE DETAIL ELEVATION
722	PROTECTIVE WALKABLE ROOF SURFACE, 4'-0" WIDE, U.N.O.
2203	ROOF DRAIN
2304	PRE-MANUFACTURED MECHANICAL PENTHOUSE
2305	MECHANICAL DUCT
2306	MECHANICAL EQUIPMENT

VCBO ARCHITECTURE
VCBO ARCHITECTURE
524 SOUTH 600 EAST
SALT LAKE CITY, UT 84102
Phone: (801) 575-8800
Fax: (801) 531-9850
Web: vcbo.com

LICENSED ARCHITECT No. 153912 BRENT R. TIPPETS 8-15-13 STATE OF UTAH

2nd District Juvenile Courthouse

Utah State Courts
08284150
165 West 20th Street, Ogden, Utah
BID DOCUMENTS

Rev #	Date	Description

Job # 12500
Date August 15, 2013
Owner # 08284150
Ins. #

ROOF PLAN

A160

8/14/2013 2:35:18 PM

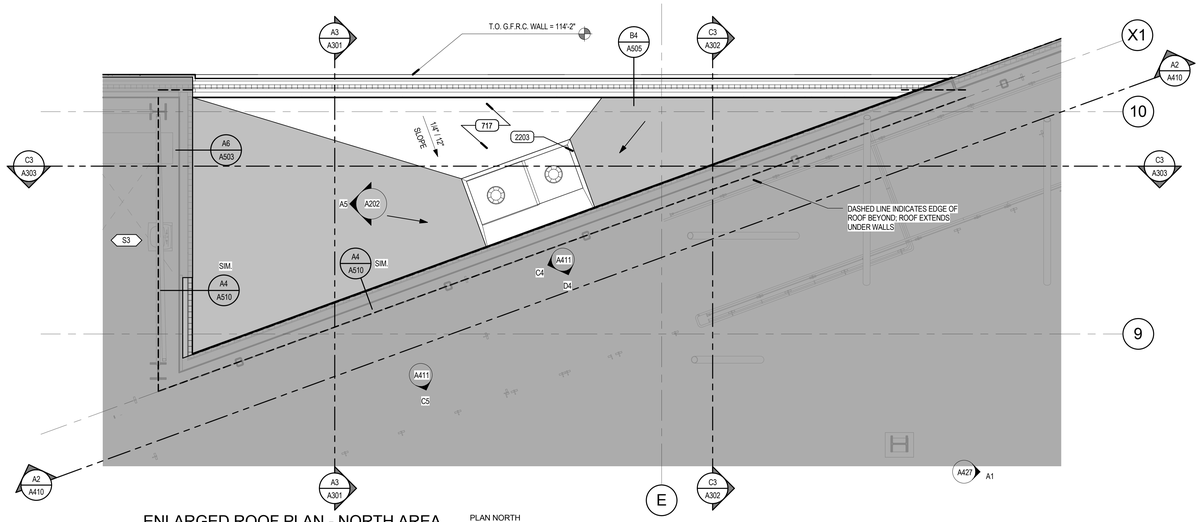

ENLARGED ROOF PLAN - NORTH AREA LEVEL 2

D1 SCALE: 1/4" = 1'-0"

PLAN NORTH

GENERAL ROOF NOTES

1. ALL ROOF DECK IS TO BE COVERED IN R-20 INSULATION OVER CONT. VAPOR BARRIER AND SPECIFIED ROOFING SYSTEM.
2. THE CONTRACTOR IS TO ASSURE THAT THE MINIMUM ROOF SLOPE IS NOT LESS THAN 1/2" PER FOOT. ANY AREA THAT IS LESS THAN 1/2" PER FOOT SLOPE SHALL BE ADJUSTED AT THE CONTRACTORS EXPENSE WITH CRICKETING TO PROVIDE THE REQUIRED SLOPE.
3. DECK BEARING ELEVATIONS SHOWN ON THIS SHEET ARE TO BE INCLUDED FOR ARCHITECT'S REFERENCE ON ALL STEEL SHOP DRAWINGS.
4. ALL ROOFING CRICKETS ARE TO BE CONSTRUCTED OF TAPERED INSULATION. CRICKETS ARE TO BE INSTALLED SO THAT A SLOPE OF 1/4" PER FOOT IS MAINTAINED ACROSS THE FACE OF THE CRICKET.
5. PROVIDE CRICKETS AT **ALL** ROOF TOP MOUNTED EQUIPMENT (I.E. SKYLIGHTS, ROOF HATCHES, ETC.) TO ASSURE POSITIVE DRAINAGE AROUND SUCH ELEMENTS.
6. ALL FLASHING, COUNTER FLASHING AND SHEET METAL WORK TO COMPLY WITH THE MINIMUM STANDARDS PER THE CURRENT EDITION OF SMACNA.
7. NOT ALL ROOF MOUNTED EQUIPMENT AND ROOF PENETRATIONS ARE SHOWN ON THE ARCHITECTURAL ROOF PLAN SHEETS. IN ADDITION TO THE ARCHITECTURAL, THE CONTRACTOR IS RESPONSIBLE FOR REFERENCING THE STRUCTURAL, MECHANICAL AND ELECTRICAL DOCUMENTS FOR ALL SUCH OCCURRENCES. ALL PENETRATIONS OF THE ROOF SHALL MEET WITH THE ROOFING MANUFACTURER'S RECOMMENDATIONS TO MAINTAIN INTEGRITY OF ROOFING SYSTEMS.
8. THE CONTRACTOR IS RESPONSIBLE AT BIDDING, FOR PROVIDING A MANUFACTURER'S APPROVED ROOFING DETAIL FOR ALL ROOFING CONDITIONS SO THAT THE SPECIFIED WARRANTY IS OBTAINED. IF A CONDITION SHOWN IN THESE CONSTRUCTION DOCUMENTS DOES NOT MEET THE REQUIREMENTS OF THE ROOFING MANUFACTURER THESE CONDITIONS ARE TO BE BROUGHT TO THE ATTENTION OF THE ARCHITECT PRIOR TO BIDDING AND INSTALLATION OF THE APPROVED DETAIL.
9. THE CONTRACTOR IS TO CONFIRM THE ROOFING SYSTEM THICKNESS, INCLUDING THE RIGID INSULATION PRIOR TO INSTALLING CURB AND PARAPET BLOCKING. BLOCKING AND CURB HEIGHTS ARE TO BE ADJUSTED AS NEEDED TO CONFORM TO THE ROOFING THICKNESS TO MEET REQUIREMENTS FOR WARRANTY.
10. WHERE ROOFING MEMBRANE IS SHOWN EXTENDING UP TO THE TOP OF THE PARAPET, THE MEMBRANE IS TO WRAP UP, OVER AND DOWN THE WOOD BLOCKING. THE AIR INFILTRATION BARRIER IS TO EXTEND UP EXTERIOR FACE OF WALL AND FULLY OVER THE TOP OF THE PARAPET WALL AND UNDER THE SILL BLOCK FLASHING. VERIFY WALL TYPE FOR PARAPET CAP WIDTH, SEE DETAILS ON SHEET A520. CONTRACTOR TO SEQUENCE WORK TO MEET THIS REQUIREMENT.
11. ALL TOPS OF PARAPETS TO BE PROVIDED WITH 1/2" PER FOOT MINIMUM POSITIVE SLOPE TOWARD THE ROOF FOR ADEQUATE DRAINAGE.
12. ALL PRE-MANUFACTURED MECHANICAL CURBS ARE TO BE MANUFACTURED TO ACCOMMODATE ROOF SLOPE. THEY MUST BE OF ADEQUATE HEIGHT TO ALLOW FOR THE DEPTH OF THE ROOF INSULATION, INCLUDING CRICKETS AND HAVE 8" HEIGHT ABOVE THE ROOF MEMBRANE, SEE DETAIL D5/A520.
13. *ALL REGLETS ARE TO BE PREFINISHED AND ARE TO BE HELD AS LOW TO THE ROOF AS POSSIBLE, BUT HAVE 8" HEIGHT ABOVE THE ROOF MEMBRANE SO THE VISIBILITY OF THE MEMBRANE FROM THE GROUND BELOW IS MINIMIZED. AT CERTAIN LOCATIONS A SHEET METAL COVER SHEET HAS BEEN DETAILED TO COVER THIS EXPOSED VERTICAL MEMBRANE.* ***ALL REGLETS AT MASONRY WALLS ARE TO BE EMBEDDED INTO MORTAR JOINTS.*** *FOR TYPICAL EMBEDDED MASONRY REGLET, SEE DETAIL B6/A520. FOR TYPICAL SURFACE MOUNTED FLASHING ON A STUD WALL, SEE DETAIL B5/A520.*
14. ROOF DRAINS ARE TO BE INSTALLED IN A TWO LEVEL DRAIN BASIN. THE BASIN IS TO BE CONSTRUCTED USING LAYERS OF ROOFING INSULATION. SEE DETAILS E4, E5 AND E6/A502.
15. FOR TYPICAL ROOF HATCH AND LADDER, SEE DETAILS A4, C4, AND D4/A502.
16. FOR TYPICAL ROOF PIPE PENETRATIONS, SEE DETAIL E3/A502.

ROOF LEGEND

- SINGLE PLY MEMBRANE ROOFING SYSTEM
- TAPERED INSULATION CRICKET MINIMUM SLOPES: 1/8" ALONG VALLEY, 1/4" ACROSS CRICKET
- PROTECTIVE WALKABLE SURFACE
- DECK RIDGE OR VALLEY
- IMAGINARY VALLEY WITH WARPED DECKING

KEYED NOTES

702	HOT FLUID-APPLIED WATERPROOFING
709	PLAZA TILE SYSTEM
717	SINGLE PLY MEMBRANE ROOFING, ROOFING INSULATION AND ROOFING VAPOR BARRIER
719	ROOF GARDEN SYSTEM - SEE LANDSCAPE PLANS FOR SOIL TYPE
2203	ROOF DRAIN

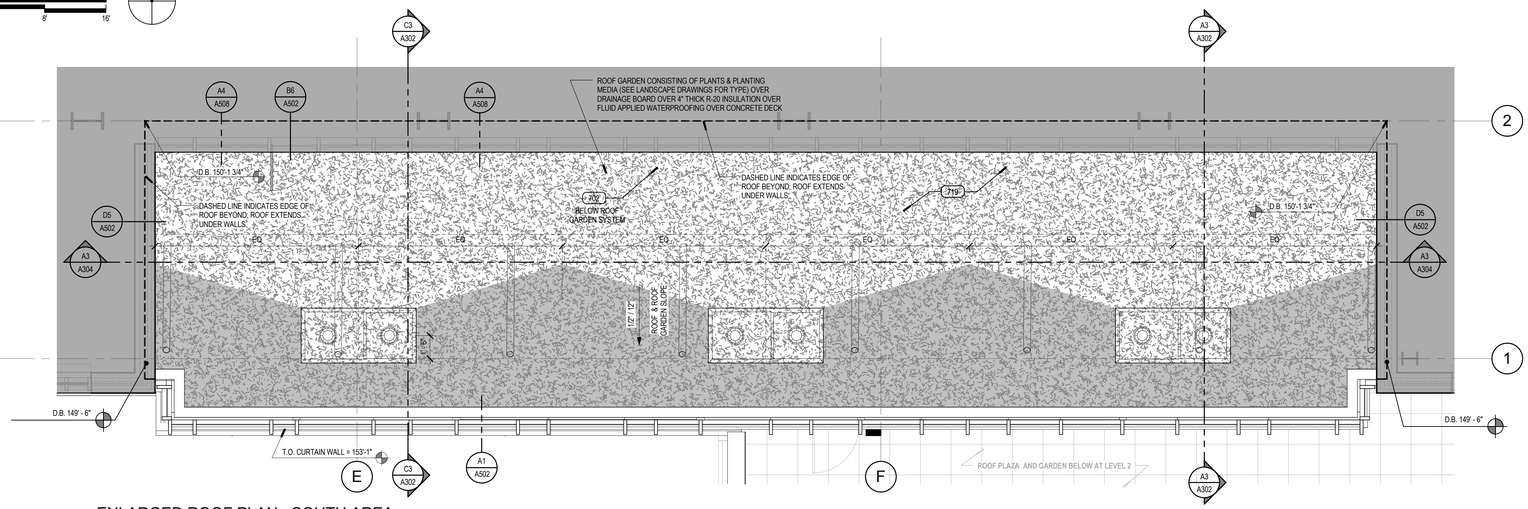

ENLARGED ROOF PLAN - SOUTH AREA LEVEL 4

C2 SCALE: 1/4" = 1'-0"

PLAN NORTH

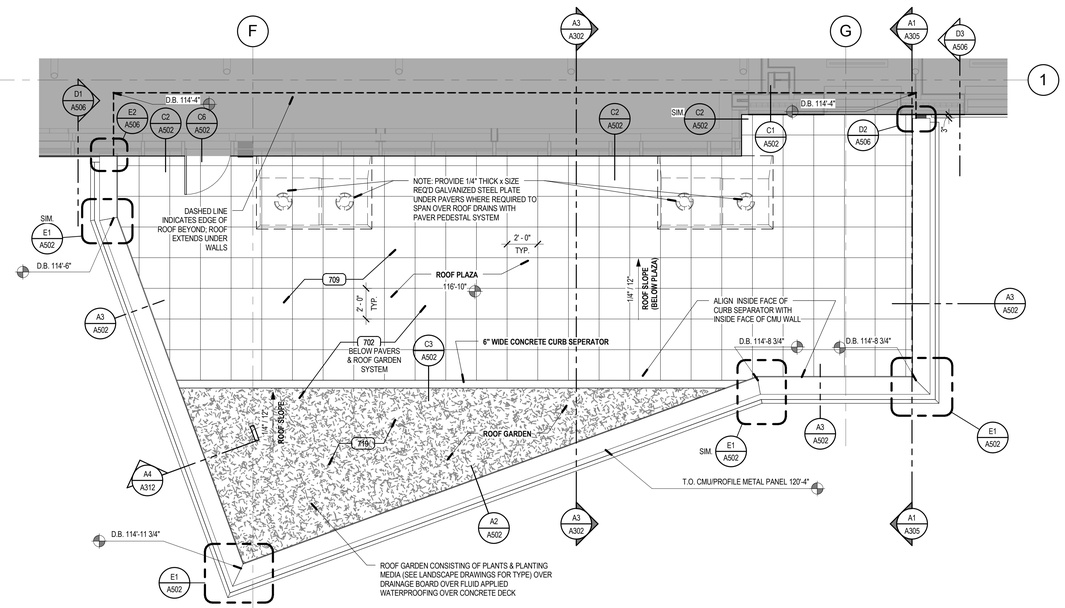

ENLARGED ROOF PLAN - SOUTH AREA LEVEL 2

A4 SCALE: 1/4" = 1'-0"

PLAN NORTH

VCBO ARCHITECTURE
524 SOUTH 600 EAST
SALT LAKE CITY, UT 84102
Phone: (801) 575-8800
Fax: (801) 531-9850
Web: vcbo.com

LICENSED ARCHITECT No. 158912 BRENT R. TIPPETS 8-15-13 STATE OF UTAH

2nd District Juvenile Courthouse

Utah State Courts
08284150
165 West 20th Street, Ogden, Utah
BID DOCUMENTS

Rev #	Date	Description

Job # 12500
Date August 15, 2013
Owner # 08284150
Ins. #

ENLARGED ROOF PLANS

A161

8/14/2013 2:35:40 PM

GENERAL ROOF NOTES

1. ALL ROOF DECK IS TO BE COVERED IN R-20 INSULATION OVER CONT. VAPOR BARRIER AND SPECIFIED ROOFING SYSTEM.
2. THE CONTRACTOR IS TO ASSURE THAT THE MINIMUM ROOF SLOPE IS NOT LESS THAN 1/2" PER FOOT. ANY AREA THAT IS LESS THAN 1/2" PER FOOT SLOPE SHALL BE ADJUSTED AT THE CONTRACTORS EXPENSE WITH CRICKETING TO PROVIDE THE REQUIRED SLOPE.
3. DECK BEARING ELEVATIONS SHOWN ON THIS SHEET ARE TO BE INCLUDED FOR ARCHITECT'S REFERENCE ON ALL STEEL SHOP DRAWINGS.
4. ALL ROOFING CRICKETS ARE TO BE CONSTRUCTED OF TAPERED INSULATION. CRICKETS ARE TO BE INSTALLED SO THAT A SLOPE OF 1/4" PER FOOT IS MAINTAINED ACROSS THE FACE OF THE CRICKET.
5. PROVIDE CRICKETS AT **ALL** ROOF TOP MOUNTED EQUIPMENT (I.E. SKYLIGHTS, ROOF HATCHES, ETC.) TO ASSURE POSITIVE DRAINAGE AROUND SUCH ELEMENTS.
6. ALL FLASHING, COUNTER FLASHING AND SHEET METAL WORK TO COMPLY WITH THE MINIMUM STANDARDS PER THE CURRENT EDITION OF SMACNA.
7. NOT ALL ROOF MOUNTED EQUIPMENT AND ROOF PENETRATIONS ARE SHOWN ON THE ARCHITECTURAL ROOF PLAN SHEETS. IN ADDITION TO THE ARCHITECTURAL, THE CONTRACTOR IS RESPONSIBLE FOR REFERENCING THE STRUCTURAL, MECHANICAL AND ELECTRICAL DOCUMENTS FOR ALL SUCH OCCURRENCES. ALL PENETRATIONS OF THE ROOF SHALL MEET WITH THE ROOFING MANUFACTURER'S RECOMMENDATIONS TO MAINTAIN INTEGRITY OF ROOFING SYSTEMS.
8. THE CONTRACTOR IS RESPONSIBLE AT BIDDING, FOR PROVIDING A MANUFACTURER'S APPROVED ROOFING DETAIL FOR ALL ROOFING CONDITIONS SO THAT THE SPECIFIED WARRANTY IS OBTAINED. IF A CONDITION SHOWN IN THESE CONSTRUCTION DOCUMENTS DOES NOT MEET THE REQUIREMENTS OF THE ROOFING MANUFACTURER THESE CONDITIONS ARE TO BE BROUGHT TO THE ATTENTION OF THE ARCHITECT PRIOR TO BIDDING AND INSTALLATION OF THE APPROVED DETAIL.
9. THE CONTRACTOR IS TO CONFIRM THE ROOFING SYSTEM THICKNESS, INCLUDING THE RIGID INSULATION PRIOR TO INSTALLING CURB AND PARAPET BLOCKING. BLOCKING AND CURB HEIGHTS ARE TO BE ADJUSTED AS NEEDED TO CONFORM TO THE ROOFING THICKNESS TO MEET REQUIREMENTS FOR WARRANTY.
10. WHERE ROOFING MEMBRANE IS SHOWN EXTENDING UP TO THE TOP OF THE PARAPET, THE MEMBRANE IS TO WRAP UP, OVER AND DOWN THE WOOD BLOCKING. THE AIR INFILTRATION BARRIER IS TO EXTEND UP EXTERIOR FACE OF WALL AND FULLY OVER THE TOP OF THE PARAPET WALL AND UNDER THE SILL BLOCK FLASHING. VERIFY WALL TYPE FOR PARAPET CAP WIDTH, SEE DETAILS ON SHEET A520. CONTRACTOR TO SEQUENCE WORK TO MEET THIS REQUIREMENT.
11. ALL TOPS OF PARAPETS TO BE PROVIDED WITH 1/2" PER FOOT MINIMUM POSITIVE SLOPE TOWARD THE ROOF FOR ADEQUATE DRAINAGE.
12. ALL PRE-MANUFACTURED MECHANICAL CURBS ARE TO BE MANUFACTURED TO ACCOMMODATE ROOF SLOPE. THEY MUST BE OF ADEQUATE HEIGHT TO ALLOW FOR THE DEPTH OF THE ROOF INSULATION, INCLUDING CRICKETS AND HAVE 8" HEIGHT ABOVE THE ROOF MEMBRANE, SEE DETAIL D5/A520.
13. *ALL REGLETS ARE TO BE PREFINISHED AND ARE TO BE HELD AS LOW TO THE ROOF AS POSSIBLE, BUT HAVE 8" HEIGHT ABOVE THE ROOF MEMBRANE SO THE VISIBILITY OF THE MEMBRANE FROM THE GROUND BELOW IS MINIMIZED. AT CERTAIN LOCATIONS A SHEET METAL COVER SHEET HAS BEEN DETAILED TO COVER THIS EXPOSED VERTICAL MEMBRANE.* ***ALL REGLETS AT MASONRY WALLS ARE TO BE EMBEDDED INTO MORTAR JOINTS.*** *FOR TYPICAL EMBEDDED MASONRY REGLET, SEE DETAIL B6/A520. FOR TYPICAL SURFACE MOUNTED FLASHING ON A STUD WALL, SEE DETAIL B5/A520.*
14. ROOF DRAINS ARE TO BE INSTALLED IN A TWO LEVEL DRAIN BASIN. THE BASIN IS TO BE CONSTRUCTED USING LAYERS OF ROOFING INSULATION. SEE DETAILS E4, E5 AND E6/A502.
15. FOR TYPICAL ROOF HATCH AND LADDER, SEE DETAILS A4, C4, AND D4/A502.
16. FOR TYPICAL ROOF PIPE PENETRATIONS, SEE DETAIL E3/A502.

ROOF LEGEND

- SINGLE PLY MEMBRANE ROOFING SYSTEM
- TAPERED INSULATION CRICKET MINIMUM SLOPES: 1/8" ALONG VALLEY, 1/4" ACROSS CRICKET
- PROTECTIVE WALKABLE SURFACE
- DECK RIDGE OR VALLEY
- IMAGINARY VALLEY WITH WARPED DECKING

KEYED NOTES

517	ROOF ACCESS LADDER
703	ROOF HATCH AND LADDER
717	SINGLE PLY MEMBRANE ROOFING, ROOFING INSULATION AND ROOFING VAPOR BARRIER
2203	ROOF DRAIN

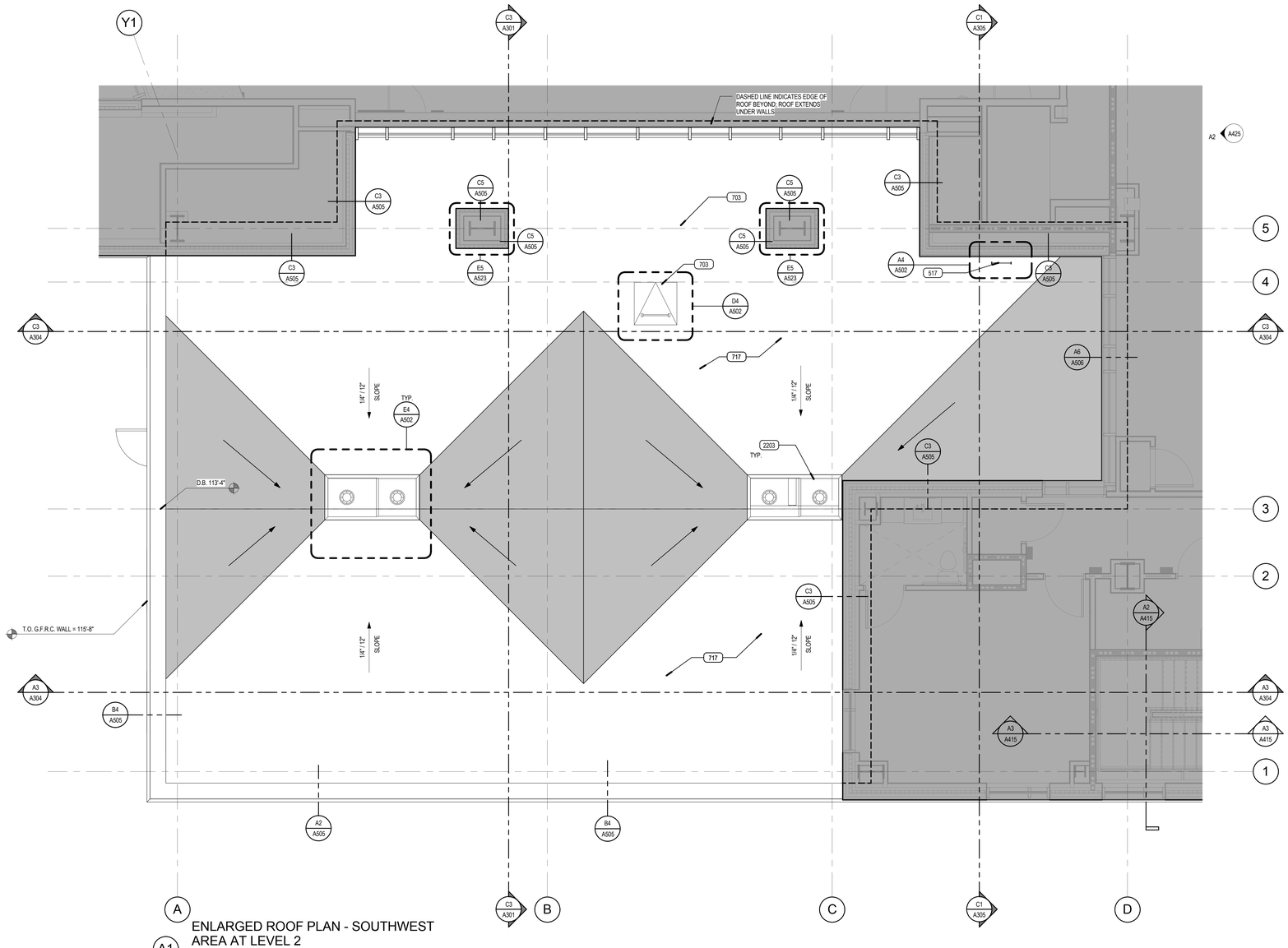

ENLARGED ROOF PLAN - SOUTHWEST AREA AT LEVEL 2

A1

SCALE: 1/4" = 1'-0"

0' 2' 4' 8' 16'

VCBO ARCHITECTURE

VCBO ARCHITECTURE
524 SOUTH 600 EAST
SALT LAKE CITY, UT 84102
Phone: (801) 575-8800
Fax: (801) 531-9850
Web: vcbo.com

LICENSED ARCHITECT No. 153912 BRENT R. TIPPETS 8-15-13 STATE OF UTAH

2nd District Juvenile Courthouse

Utah State Courts
08284150
165 West 20th Street, Ogden, Utah
BID DOCUMENTS

Rev #	Date	Description

Job # 12500
Date August 15, 2013
Owner # 08284150
Ins. #

ENLARGED ROOF PLANS

A162

8/14/2013 2:35:57 PM

ACCESS FLOORING LEGEND

HATCH	DESCRIPTION
	EXTENT OF ACCESS FLOOR SYSTEM, TOP OF PANEL 8" ABOVE SLAB
	EXTENT OF ACCESS FLOOR SYSTEM UTILIZING ANTI-STATIC TILES, TOP OF PANEL 26" ABOVE SLAB
	EXTENT OF FIELD BUILT RAISED FLOOR - FLOOR COMPRISED OF 3/4" PLYWOOD OVER 1/2" RESILIANT BOARD OVER 3/4" PLYWOOD, SEE COURTROOM DETAILS FOR STEEL STUD SUPPORT. ALL PLYWOOD TO BE FIRE RETARDANT TREATED.

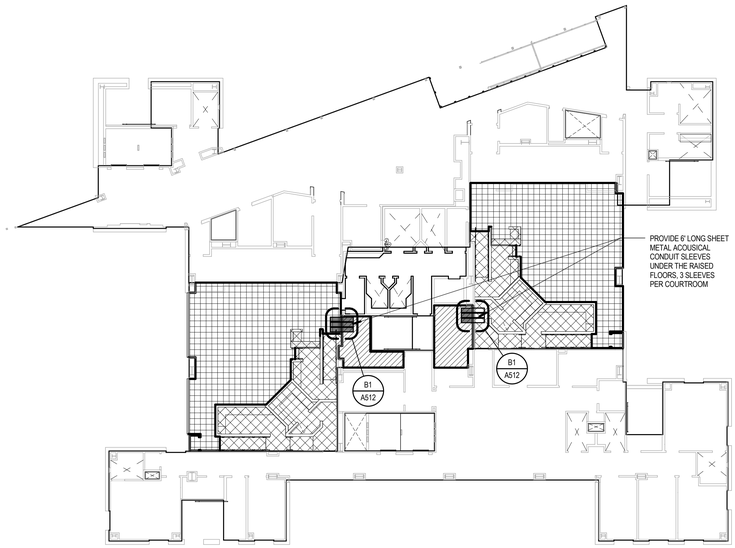

C1 LEVEL 5 ACCESS FLOORING

SCALE: 1/16" = 1'-0"

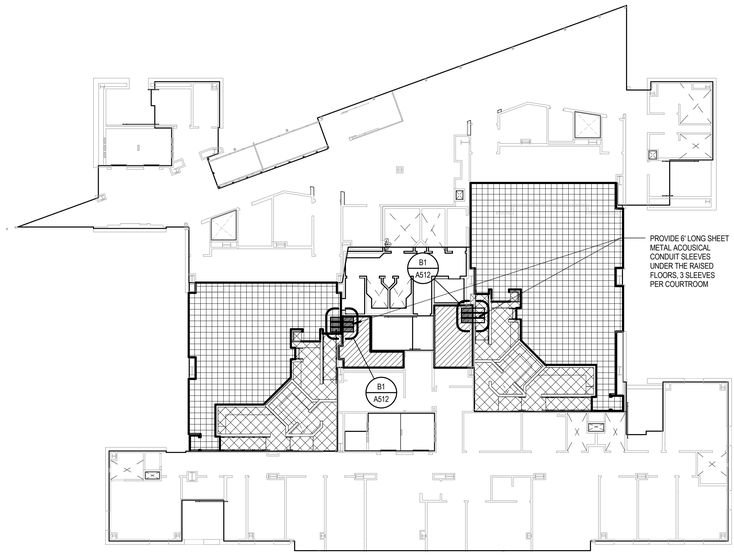

C3 LEVEL 3 ACCESS FLOORING

SCALE: 1/16" = 1'-0"

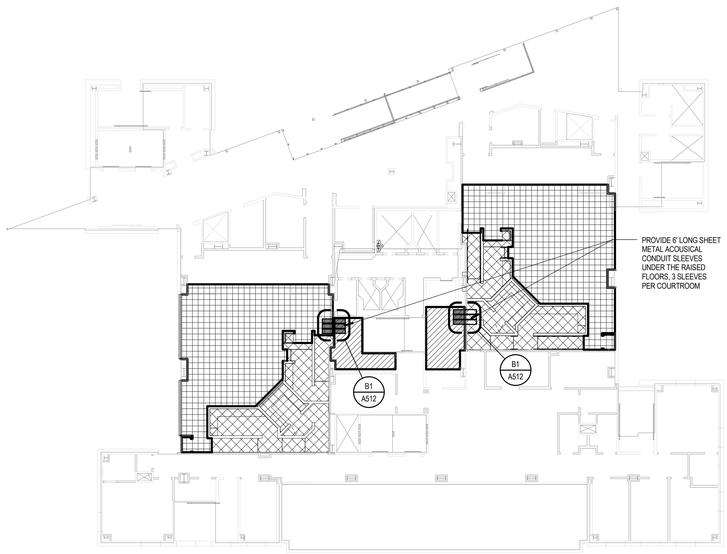

NOTE: ACCESS FLOOR AT LEVEL 4 IS PART OF ADDATIVE ALTERNATE 1

A1 LEVEL 4 ACCESS FLOORING

SCALE: 1/16" = 1'-0"

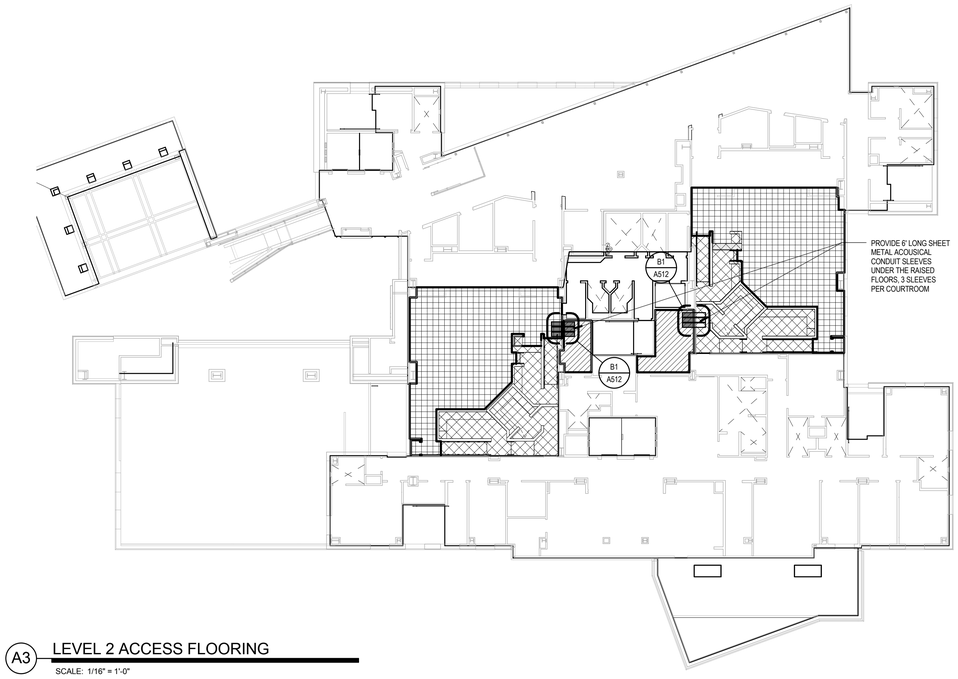

A3 LEVEL 2 ACCESS FLOORING

SCALE: 1/16" = 1'-0"

VCBO ARCHITECTURE

VCBO ARCHITECTURE
524 SOUTH 600 EAST
SALT LAKE CITY, UT 84102
Phone: (801) 575-8800
Fax: (801) 531-9850
Web: vcbo.com

LICENSED ARCHITECT No. 153912 BRENT R. TIPPETS 8-15-13 STATE OF UTAH

2nd District Juvenile Courthouse

Utah State Courts
08284150
165 West 20th Street, Ogden, Utah
BID DOCUMENTS

Rev #	Date	Description

Job # 12500
Date August 15, 2013
Owner # 08284150
Ins. #

ACCESS FLOORING PLANS

A170

8/14/2013 2:36:25 PM

KEYED NOTES

301	REINFORCED CONCRETE FOUNDATION WALL
308	GFRC INSULATED WALL ASSEMBLY WITH VAPOR BARRIER
314	GFRC NON-INSULATED WALL ASSEMBLY
715	ACM METAL PANEL OVER 3" THERMALLY BROKEN Z GIRTS
718	PRE-FINISHED PROFILE METAL, RANDOM VERTICAL PATTERN, SEE DETAIL ELEVATION
800	SCHEDULED DOOR & FRAME
801	WINDOW SYSTEM
1028	

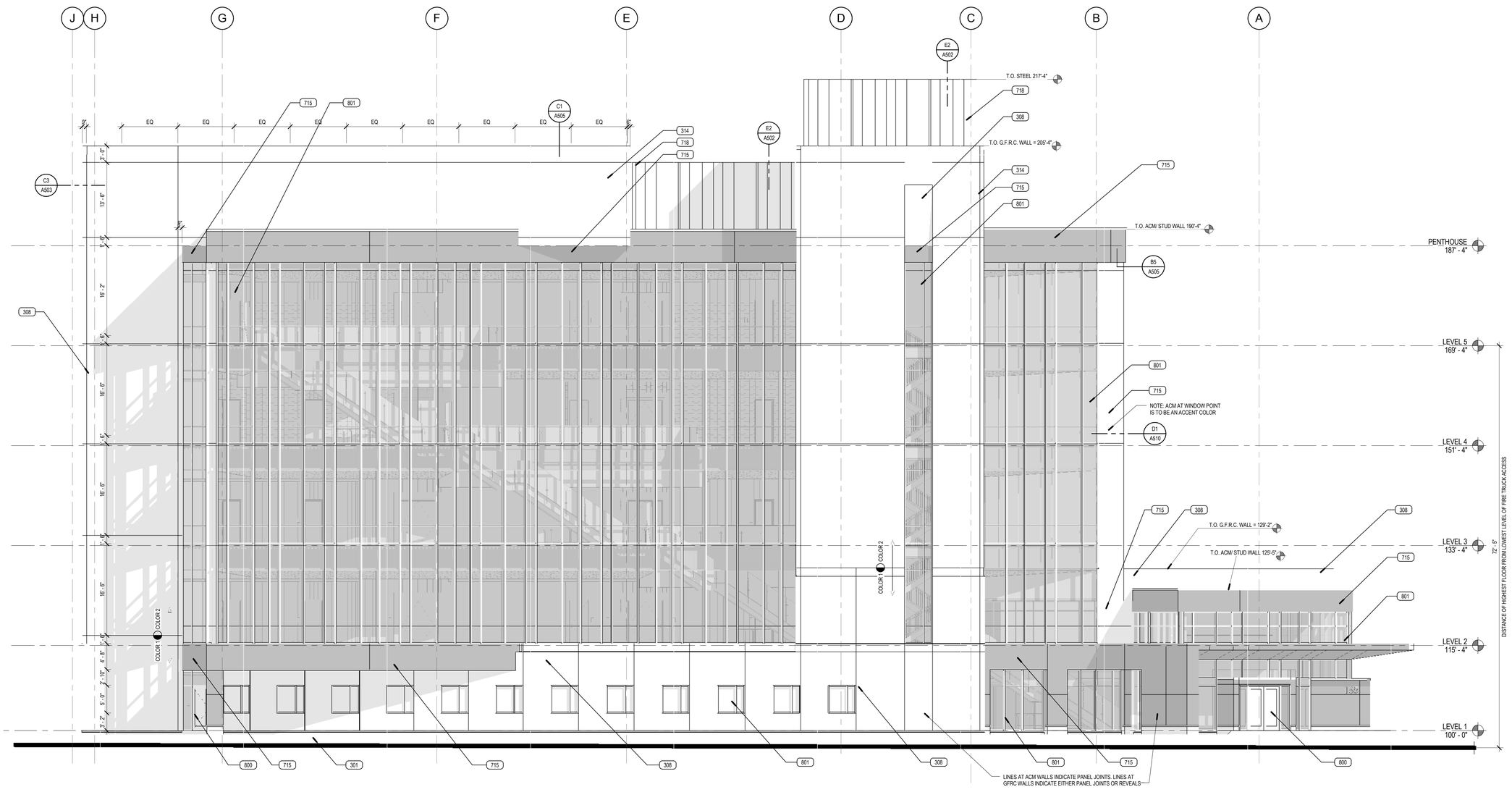

A1 NORTH ELEVATION

SCALE: 1/8" = 1'-0"

1' 0" 4' 8' 16' 24'

8/14/2013 2:19:32 PM

VCBO ARCHITECTURE

VCBO ARCHITECTURE
524 SOUTH 600 EAST
SALT LAKE CITY, UT 84102
Phone: (801) 575-8800
Fax: (801) 531-9850
Web: vcbo.com

LICENSED ARCHITECT No. 153912 BRENT R. TIPPETS 8-15-13 STATE OF UTAH

2nd District Juvenile Courthouse

Utah State Courts
08284150
165 West 20th Street, Ogden, Utah
BID DOCUMENTS

Rev #	Date	Description

Job # 12500
Date August 15, 2013
Owner # 08284150
Ins. #

BUILDING ELEVATIONS

A201

KEYED NOTES

308	GFRC INSULATED WALL ASSEMBLY WITH VAPOR BARRIER
314	GFRC NON-INSULATED WALL ASSEMBLY
715	ACM METAL PANEL OVER 3" THERMALLY BROKEN Z GIRTS
717	SINGLE PLY MEMBRANE ROOFING, ROOFING INSULATION AND ROOFING VAPOR BARRIER
718	PRE-FINISHED PROFILE METAL, RANDOM VERTICAL PATTERN, SEE DETAIL ELEVATION
800	SCHEDULED DOOR & FRAME
801	WINDOW SYSTEM
804	OVERHEAD COILING DOOR
810	EXTERIOR SUN CONTROL DEVICES
901	
2301	PRE-FINISHED MECHANICAL LOUVER

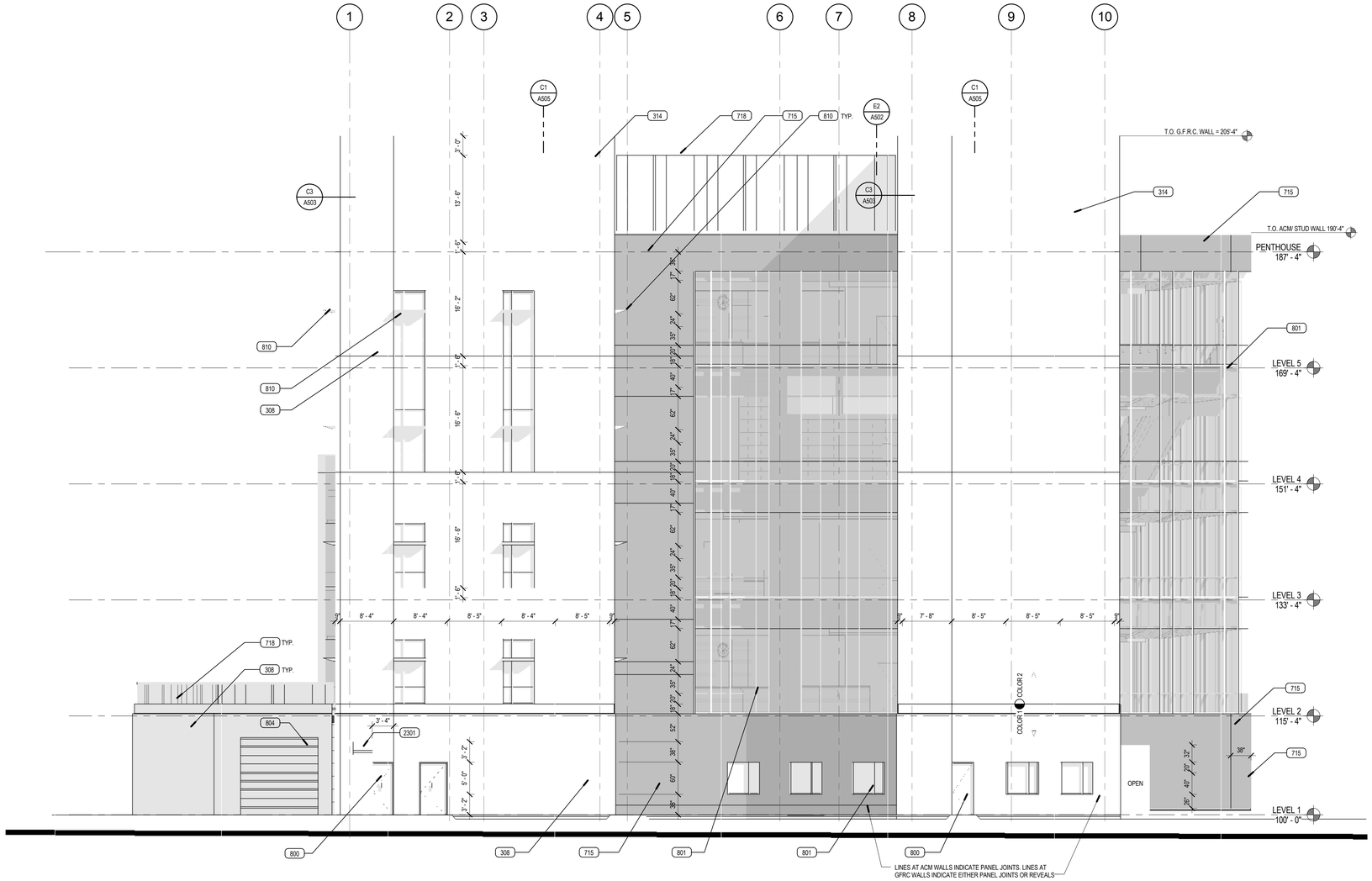

A2 EAST ELEVATION

SCALE: 1/8" = 1'-0"

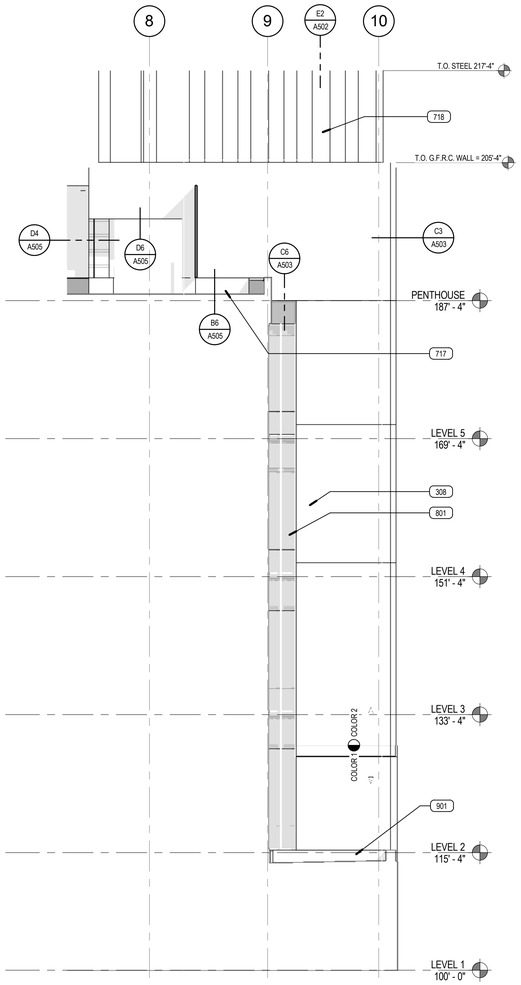

A5 PARTIAL EAST ELEVATION

SCALE: 1/8" = 1'-0"

VCBO ARCHITECTURE

VCBO ARCHITECTURE
524 SOUTH 600 EAST
SALT LAKE CITY, UT 84102
Phone: (801) 575-8800
Fax: (801) 531-9850
Web: vcbo.com

LICENSED ARCHITECT No. 153912 BRENT R. TIPPETS 8-15-13 STATE OF UTAH

2nd District Juvenile Courthouse

Utah State Courts
08284150
165 West 20th Street, Ogden, Utah
BID DOCUMENTS

Rev #	Date	Description

Job # 12500
Date August 15, 2013
Owner # 08284150
Ins. #

BUILDING ELEVATIONS

A202

8/14/2013 2:20:32 PM

KEYED NOTES

308	GFRC INSULATED WALL ASSEMBLY WITH VAPOR BARRIER
314	GFRC NON-INSULATED WALL ASSEMBLY
513	DECORATIVE GLASS RAILING
715	ACM METAL PANEL OVER 3" THERMALLY BROKEN Z GIRTS
718	PRE-FINISHED PROFILE METAL, RANDOM VERTICAL PATTERN, SEE DETAIL ELEVATION
800	SCHEDULED DOOR & FRAME
801	WINDOW SYSTEM
804	OVERHEAD COILING DOOR
810	EXTERIOR SUN CONTROL DEVICES

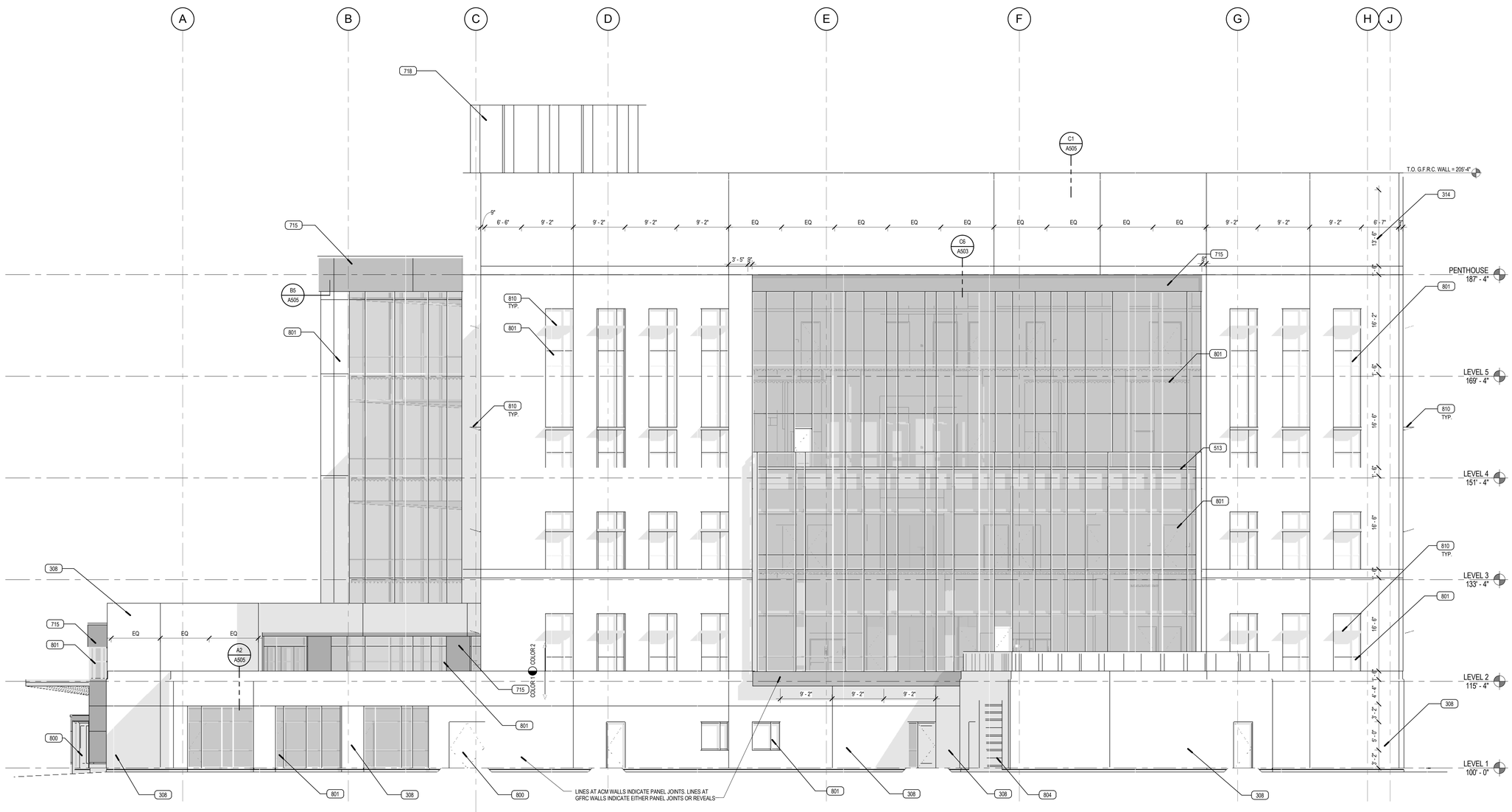

A1 SOUTH ELEVATION

SCALE: 1/8" = 1'-0"

0' 4' 8' 16' 24'

VCBO ARCHITECTURE

VCBO ARCHITECTURE
524 SOUTH 600 EAST
SALT LAKE CITY, UT 84102
Phone: (801) 575-8800
Fax: (801) 531-9850
Web: vcbo.com

2nd District Juvenile Courthouse

Utah State Courts
08284150
165 West 20th Street, Ogden, Utah
BID DOCUMENTS

Rev #	Date	Description

Job # 12500
Date August 15, 2013
Owner # 08284150
Ins. #

BUILDING ELEVATIONS

A203

8/14/2013 2:21:51 PM

KEYED NOTES

308	GFRC INSULATED WALL ASSEMBLY WITH VAPOR BARRIER
314	GFRC NON-INSULATED WALL ASSEMBLY
715	ACM METAL PANEL OVER 3" THERMALLY BROKEN Z GIRTS
718	PRE-FINISHED PROFILE METAL, RANDOM VERTICAL PATTERN, SEE DETAIL ELEVATION
800	SCHEDULED DOOR & FRAME
801	WINDOW SYSTEM
804	OVERHEAD COILING DOOR
810	EXTERIOR SUN CONTROL DEVICES

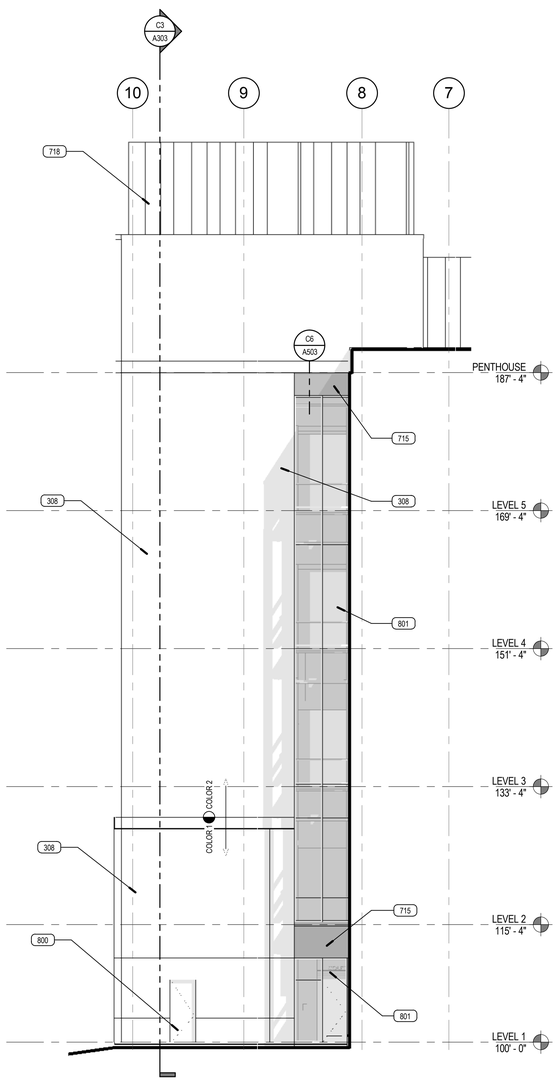

A1 PARTIAL WEST ELEVATION

SCALE: 1/8" = 1'-0"

0' 4' 8' 16' 24'

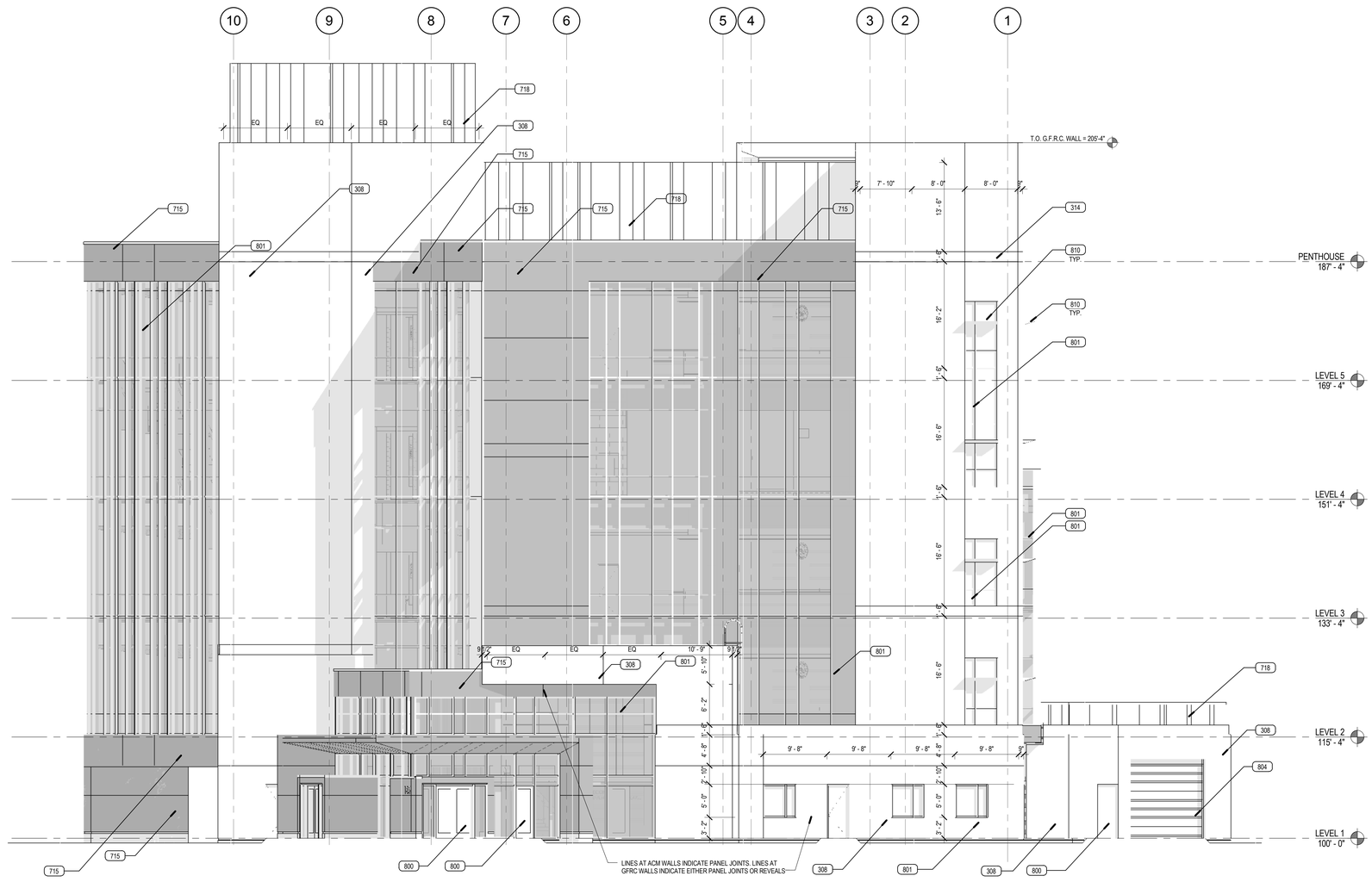

A2 WEST ELEVATION

SCALE: 1/8" = 1'-0"

0' 4' 8' 16' 24'

8/14/2013 2:23:07 PM

VCBO ARCHITECTURE

VCBO ARCHITECTURE
524 SOUTH 600 EAST
SALT LAKE CITY, UT 84102
Phone: (801) 575-8800
Fax: (801) 531-9850
Web: vcbo.com

LICENSED ARCHITECT No. 153912 BRENT R. TIPPETS 8-15-13 STATE OF UTAH

2nd District Juvenile Courthouse

Utah State Courts
08284150
165 West 20th Street, Ogden, Utah
BID DOCUMENTS

Rev #	Date	Description

Job # 12500
Date August 15, 2013
Owner # 08284150
Ins. #

BUILDING ELEVATIONS

A204

KEYED NOTES

301	REINFORCED CONCRETE FOUNDATION WALL
308	GFRC INSULATED WALL ASSEMBLY WITH VAPOR BARRIER
314	GFRC NON-INSULATED WALL ASSEMBLY
517	ROOF ACCESS LADDER
715	ACM METAL PANEL OVER 3" THERMALLY BROKEN Z GIRTS
717	SINGLE PLY MEMBRANE ROOFING, ROOFING INSULATION AND ROOFING VAPOR BARRIER
718	PRE-FINISHED PROFILE METAL, RANDOM VERTICAL PATTERN, SEE DETAIL ELEVATION
801	WINDOW SYSTEM
810	EXTERIOR SUN CONTROL DEVICES

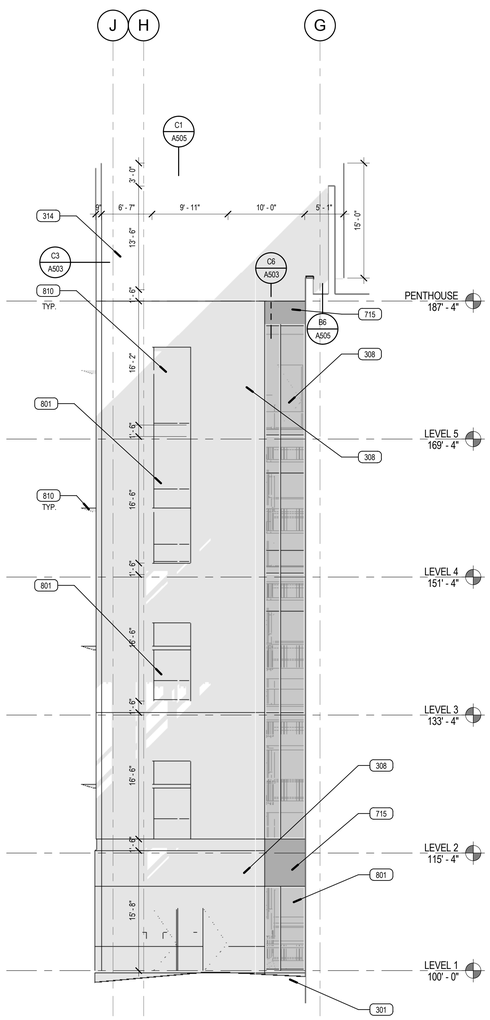

A1 PARTIAL NORTH ELEVATION B

SCALE: 1/8" = 1'-0"

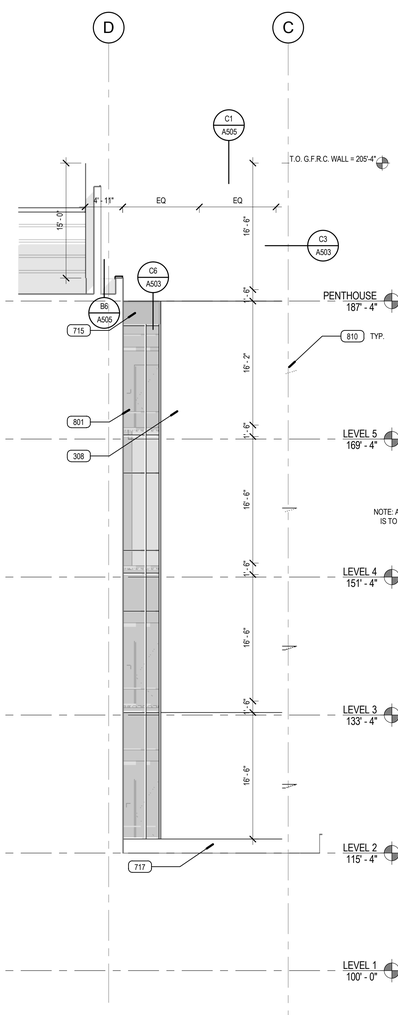

A2 PARTIAL NORTH ELEVATION A

SCALE: 1/8" = 1'-0"

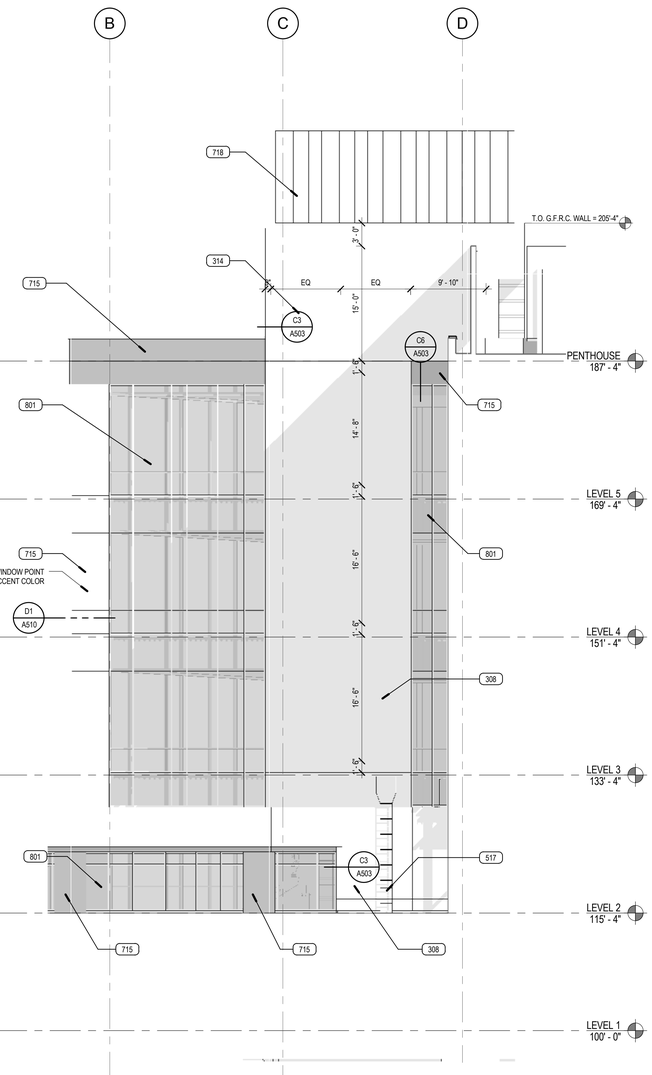

A4 PARTIAL SOUTH ELEVATION A

SCALE: 1/8" = 1'-0"

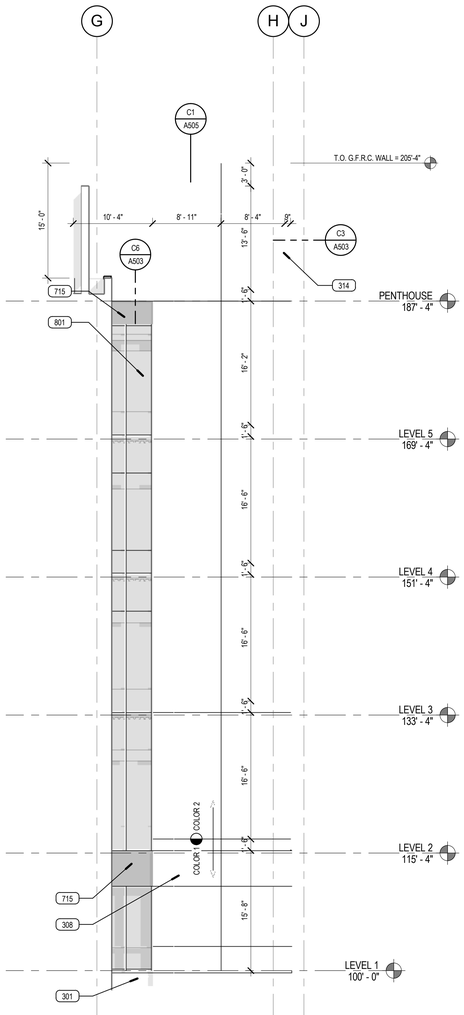

A5 PARTIAL SOUTH ELEVATION B

SCALE: 1/8" = 1'-0"

8/14/2013 2:23:39 PM

VCBO ARCHITECTURE

VCBO ARCHITECTURE
524 SOUTH 600 EAST
SALT LAKE CITY, UT 84102
Phone: (801) 575-8800
Fax: (801) 531-9850
Web: vcbo.com

2nd District Juvenile Courthouse

Utah State Courts
08284150
165 West 20th Street, Ogden, Utah
BID DOCUMENTS

Rev #	Date	Description

Job # 12500
Date August 15, 2013
Owner # 08284150
Ins. #

PARTIAL BUILDING ELEVATIONS

A205

KEYED NOTES

308	GFRC INSULATED WALL ASSEMBLY WITH VAPOR BARRIER
715	ACM METAL PANEL OVER 3" THERMALLY BROKEN Z GIRTS
800	SCHEDULED DOOR & FRAME
801	WINDOW SYSTEM
1023	SIGNAGE, SEE SCHEDULE

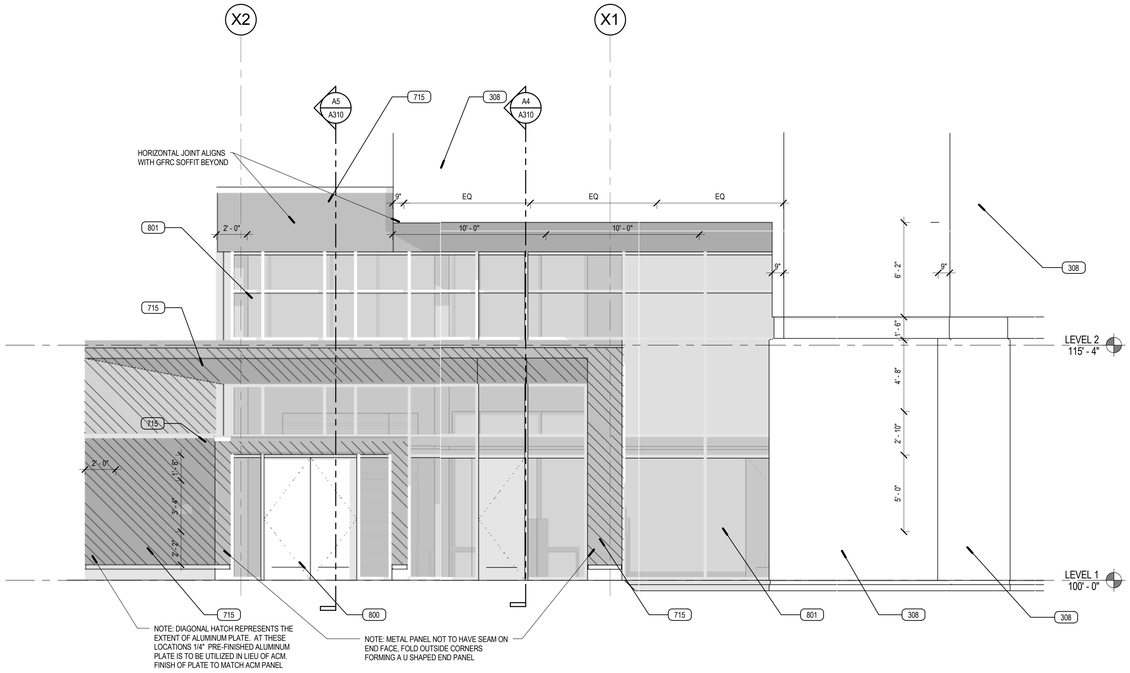

C1 WEST ENTRY ELEVATION

SCALE: 1/4" = 1'-0"

0' 2' 4' 8' 16'

C4 FRONT VESTIBULE

SCALE:

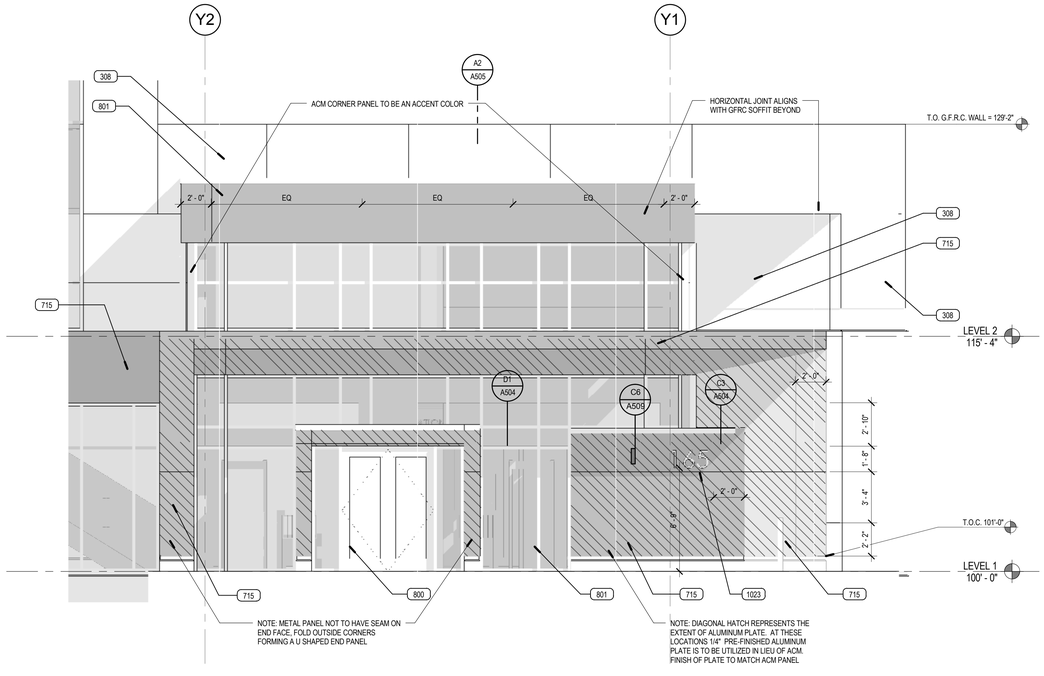

A1 NORTH ENTRY ELEVATION

SCALE: 1/4" = 1'-0"

0' 2' 4' 8' 16'

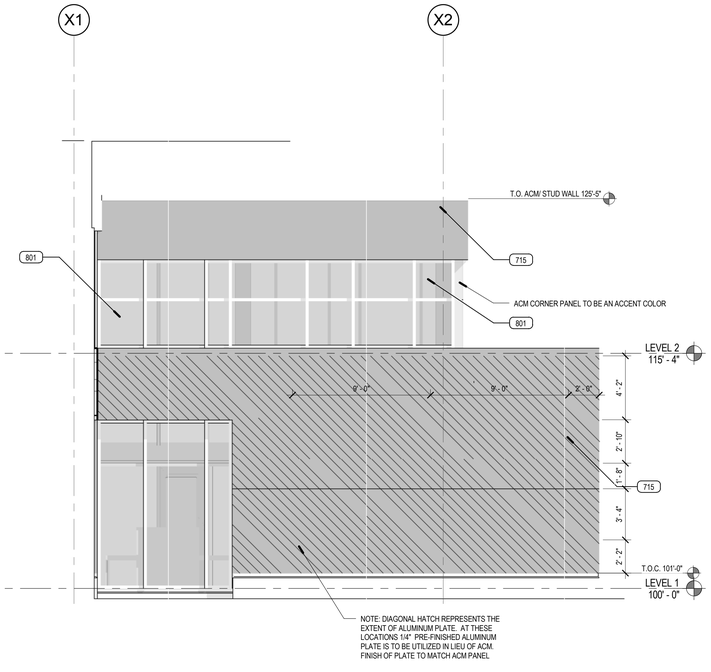

A3 EAST ENTRY ELEVATION

SCALE: 1/4" = 1'-0"

0' 2' 4' 8' 16'

VCBO ARCHITECTURE

VCBO ARCHITECTURE
524 SOUTH 600 EAST
SALT LAKE CITY, UT 84102
Phone: (801) 575-8800
Fax: (801) 531-9850
Web: vcbo.com

LICENSED ARCHITECT No. 153912 BRENT R. TIPPETS 8-15-13 STATE OF UTAH

2nd District Juvenile Courthouse

Utah State Courts
08284150
165 West 20th Street, Ogden, Utah
BID DOCUMENTS

Rev #	Date	Description

Job # 12500
Date August 15, 2013
Owner # 08284150
Ins. #

PARTIAL BUILDING ELEVATIONS

A206

8/14/2013 2:24:20 PM

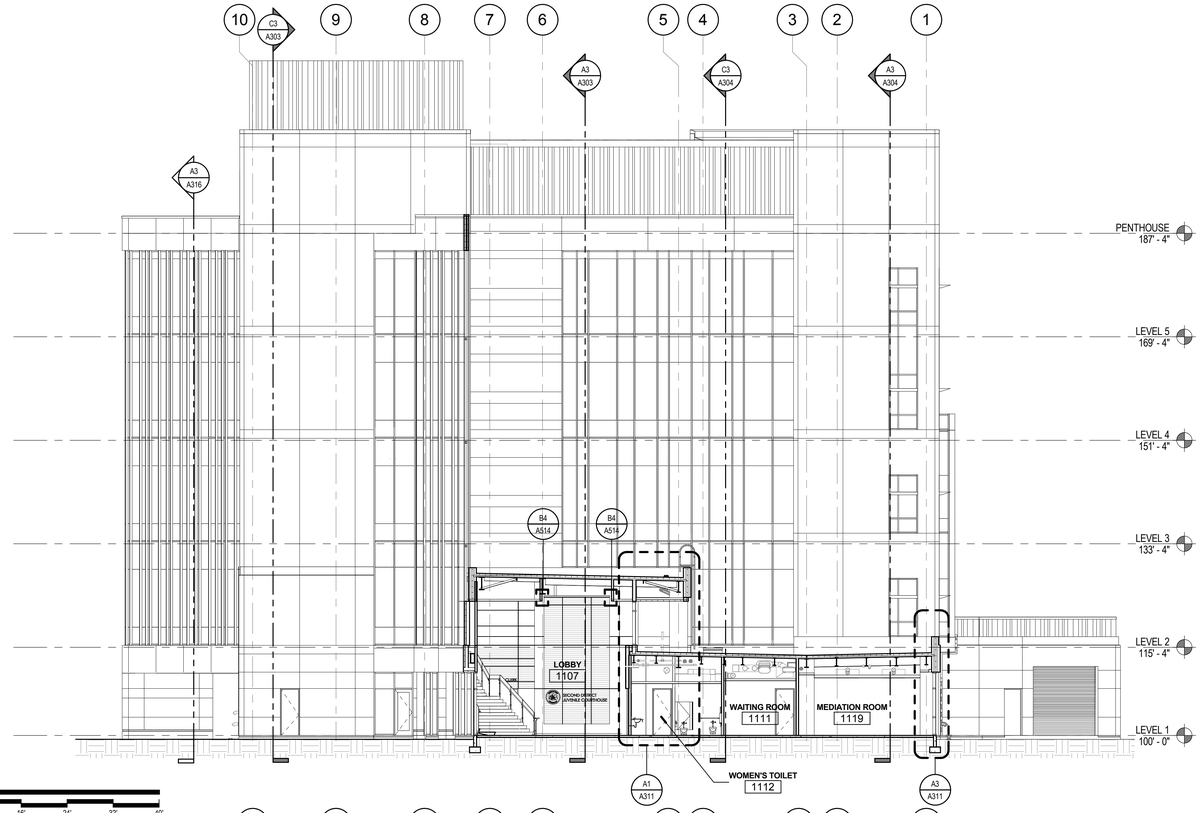

C3 SECTION 1B

SCALE: 3/32" = 1'-0"

0' 4' 8' 16' 24' 32' 40'

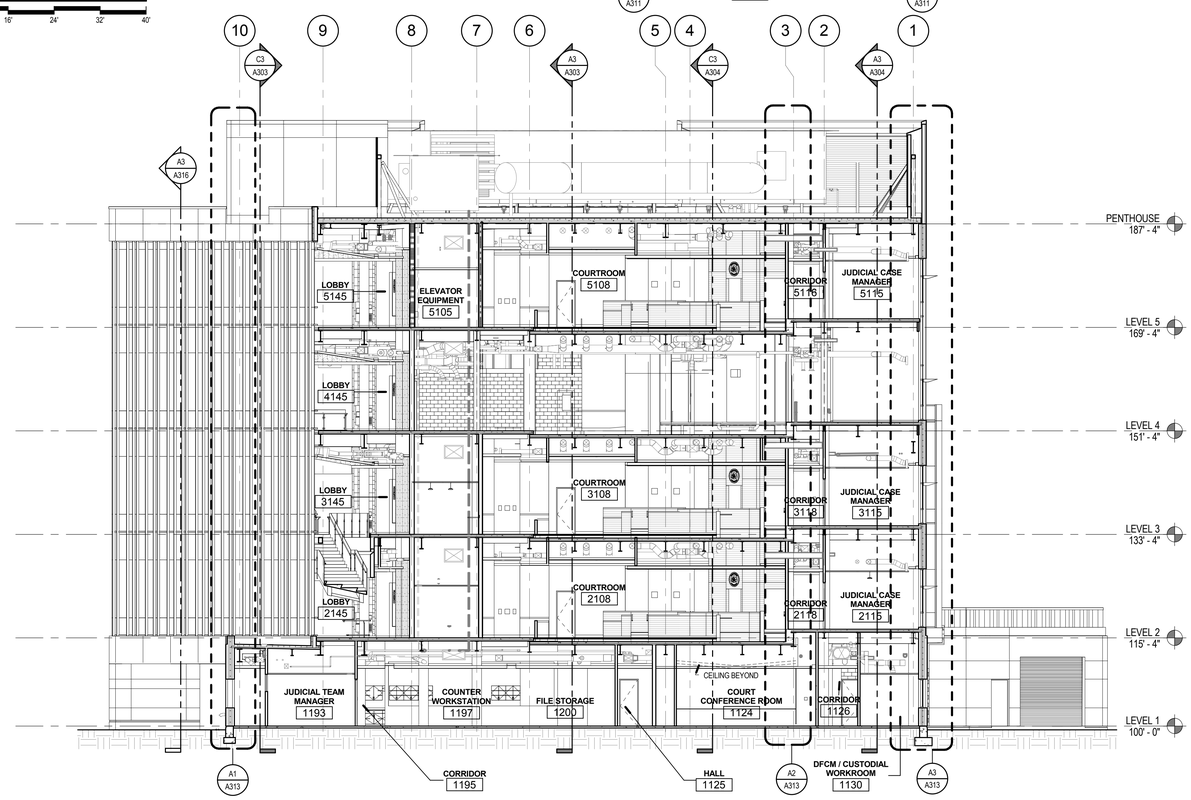

A3 SECTION 1A

SCALE: 3/32" = 1'-0"

0' 4' 8' 16' 24' 32' 40'

8/14/2013 2:25:16 PM

VCBO ARCHITECTURE

VCBO ARCHITECTURE
524 SOUTH 600 EAST
SALT LAKE CITY, UT 84102
Phone: (801) 575-8800
Fax: (801) 531-9850
Web: vcbo.com

2nd District Juvenile Courthouse

Utah State Courts
08284150
165 West 20th Street, Ogden, Utah
BID DOCUMENTS

Rev #	Date	Description

Job # 12500
Date August 15, 2013
Owner # 08284150
Ins. #

BUILDING SECTIONS

A301

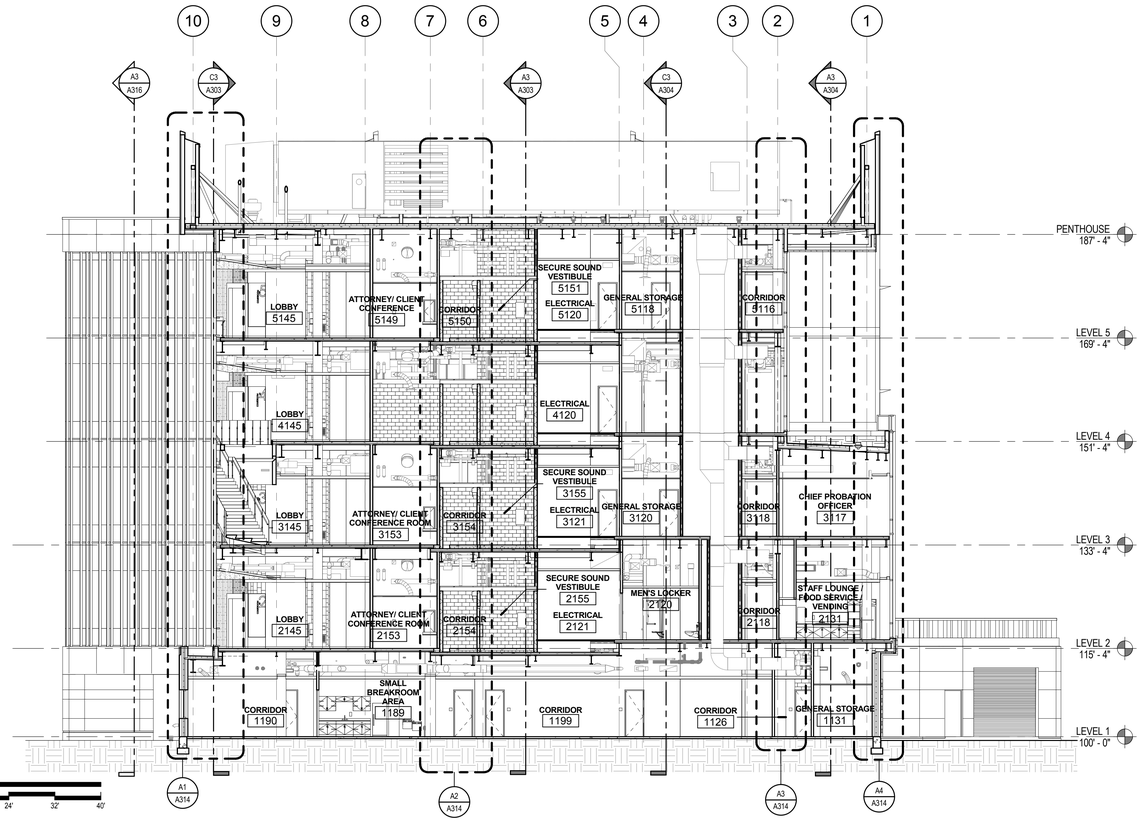

C3 SECTION 2B

SCALE: 3/32" = 1'-0"

0' 4' 8' 16' 24' 32' 40'

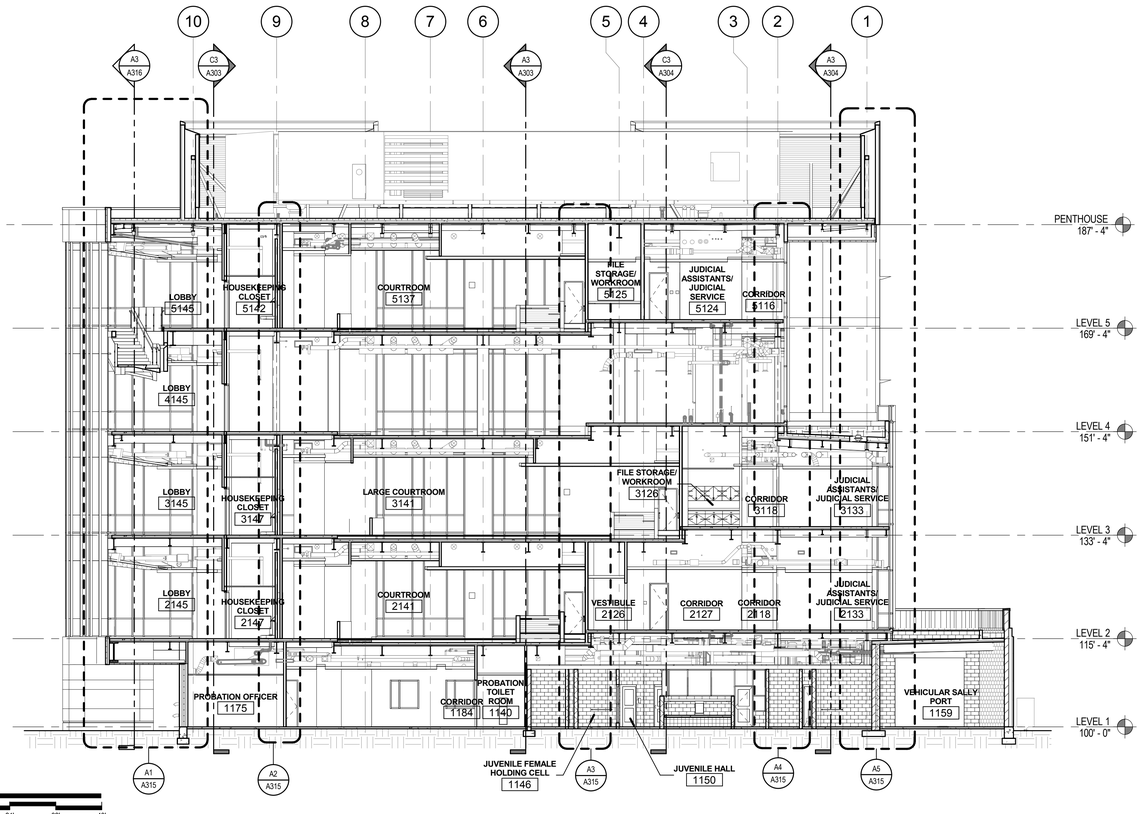

A3 SECTION 2A

SCALE: 3/32" = 1'-0"

0' 4' 8' 16' 24' 32' 40'

8/14/2013 2:25:47 PM

VCBO ARCHITECTURE

VCBO ARCHITECTURE
524 SOUTH 600 EAST
SALT LAKE CITY, UT 84102
Phone: (801) 575-8800
Fax: (801) 531-9850
Web: vcbo.com

LICENSED ARCHITECT No. 153912 BRENT R. TIPPETS 8-15-13 STATE OF UTAH

2nd District Juvenile Courthouse

Utah State Courts
08284150
165 West 20th Street, Ogden, Utah
BID DOCUMENTS

Rev #	Date	Description

Job # 12500
Date August 15, 2013
Owner # 08284150
Ins. #

BUILDING SECTIONS

A302

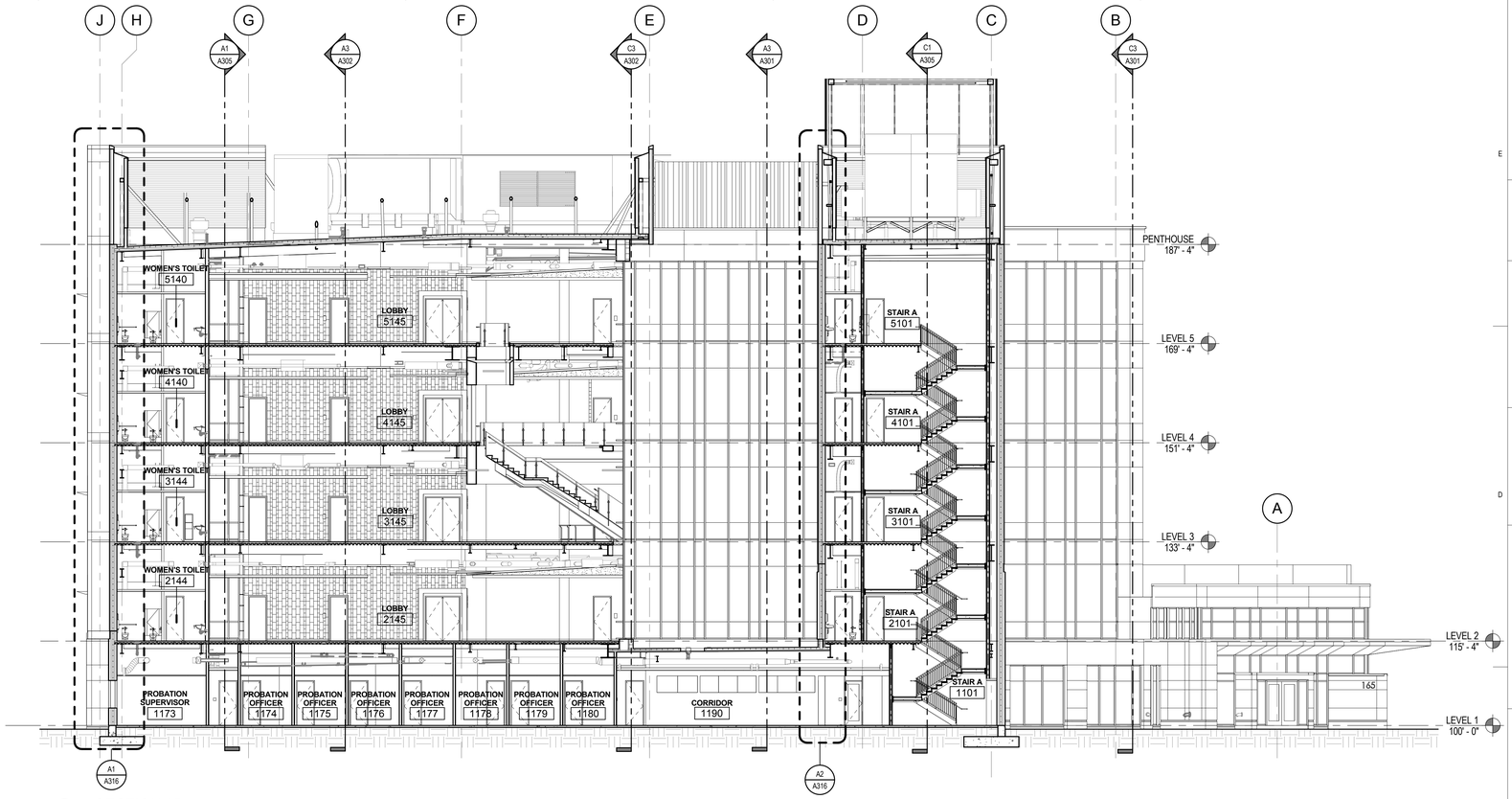

C3 SECTION 3B

SCALE: 3/32" = 1'-0"

0' 4' 8' 16' 24' 32' 40'

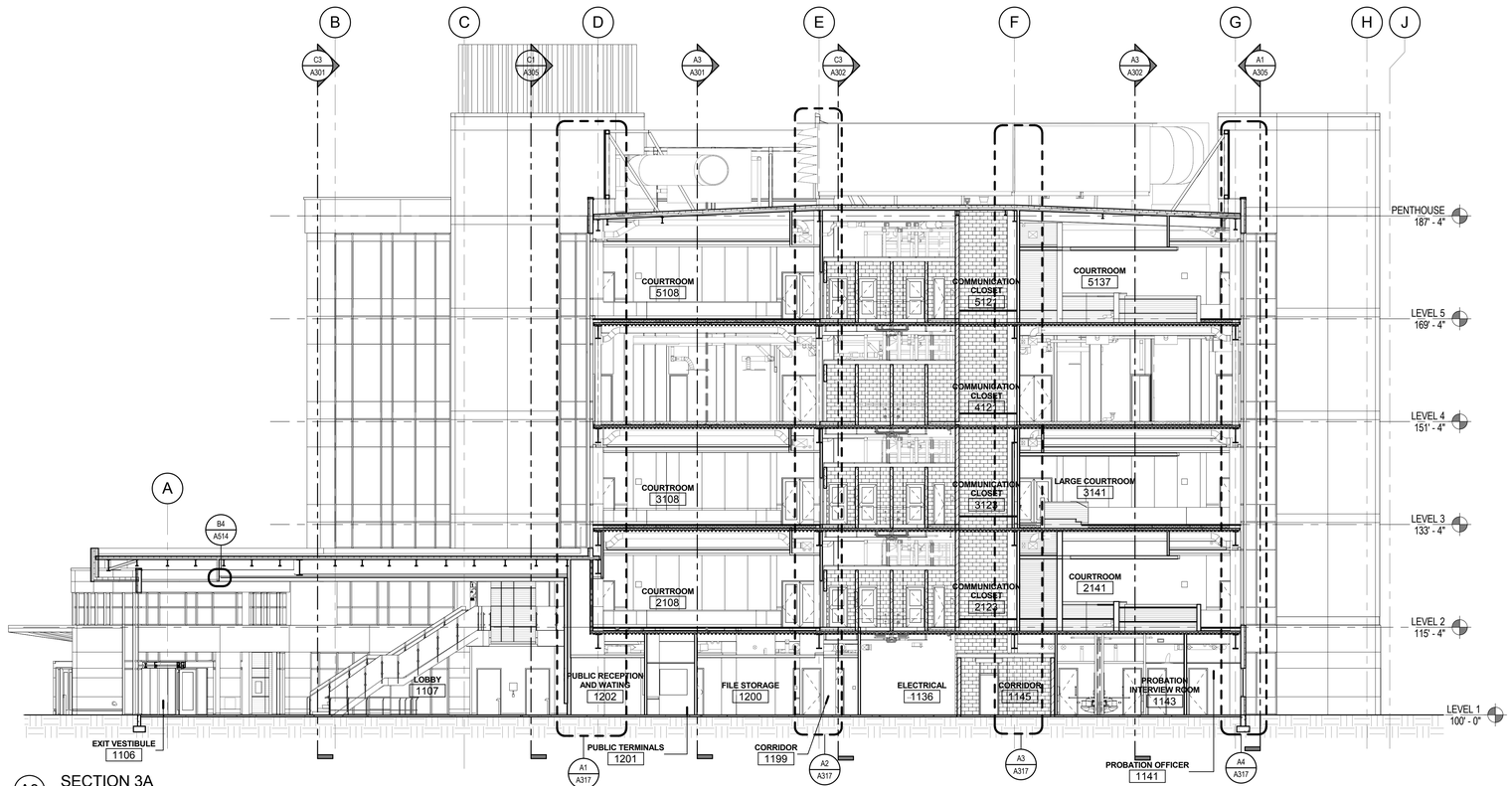

A3 SECTION 3A

SCALE: 3/32" = 1'-0"

0' 4' 8' 16' 24' 32' 40'

VCBO ARCHITECTURE

VCBO ARCHITECTURE
524 SOUTH 600 EAST
SALT LAKE CITY, UT 84102
Phone: (801) 575-8800
Fax: (801) 531-9850
Web: vcbo.com

LICENSED ARCHITECT No. 153912 BRENT R. TIPPETS 8-15-13 STATE OF UTAH

2nd District Juvenile Courthouse

Utah State Courts
08284150
165 West 20th Street, Ogden, Utah
BID DOCUMENTS

Rev #	Date	Description

Job # 12500
Date August 15, 2013
Owner # 08284150
Ins. #

BUILDING SECTIONS

A303

8/14/2013 2:26:44 PM

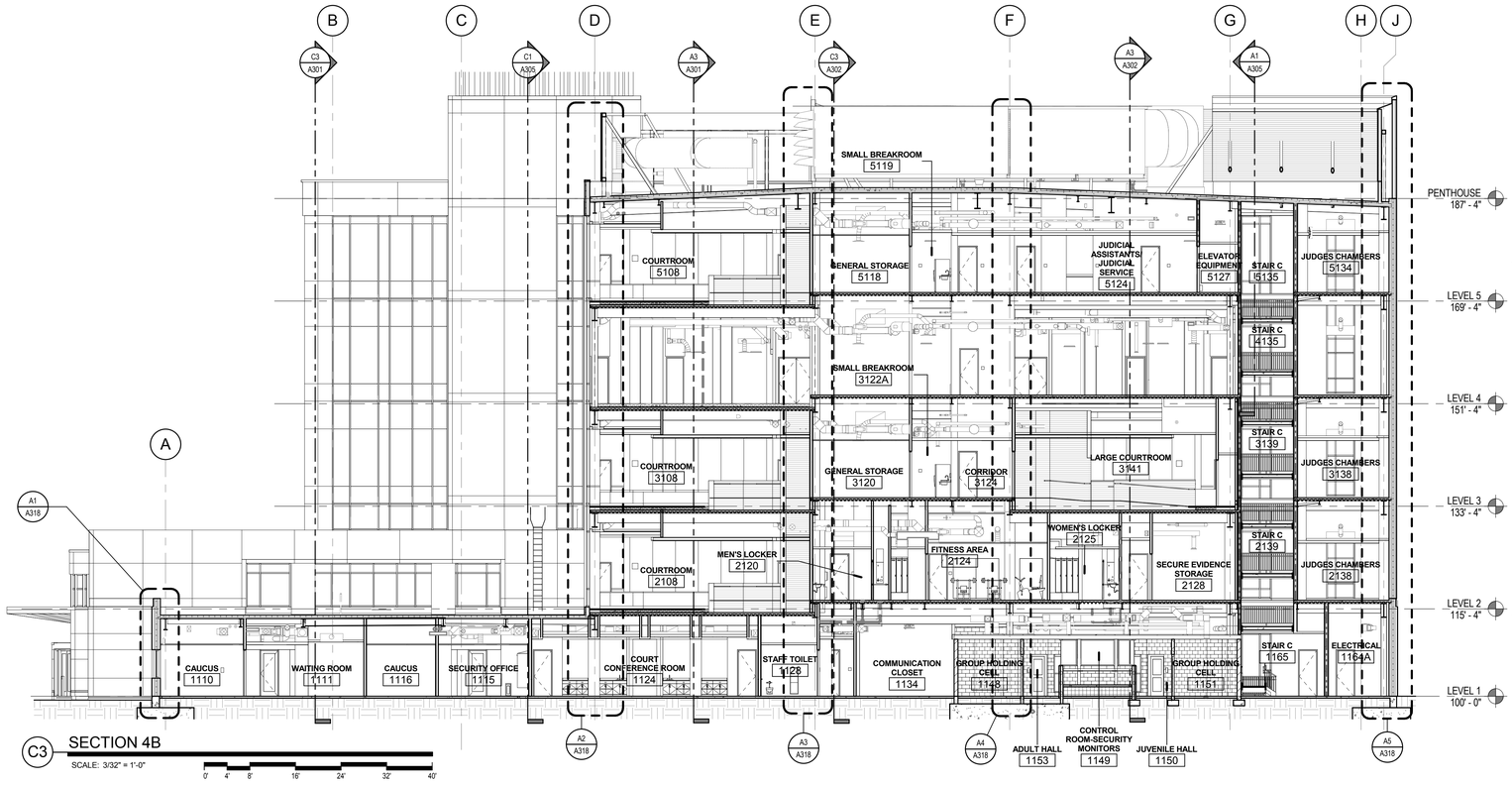

C3 SECTION 4B

SCALE: 3/32" = 1'-0"

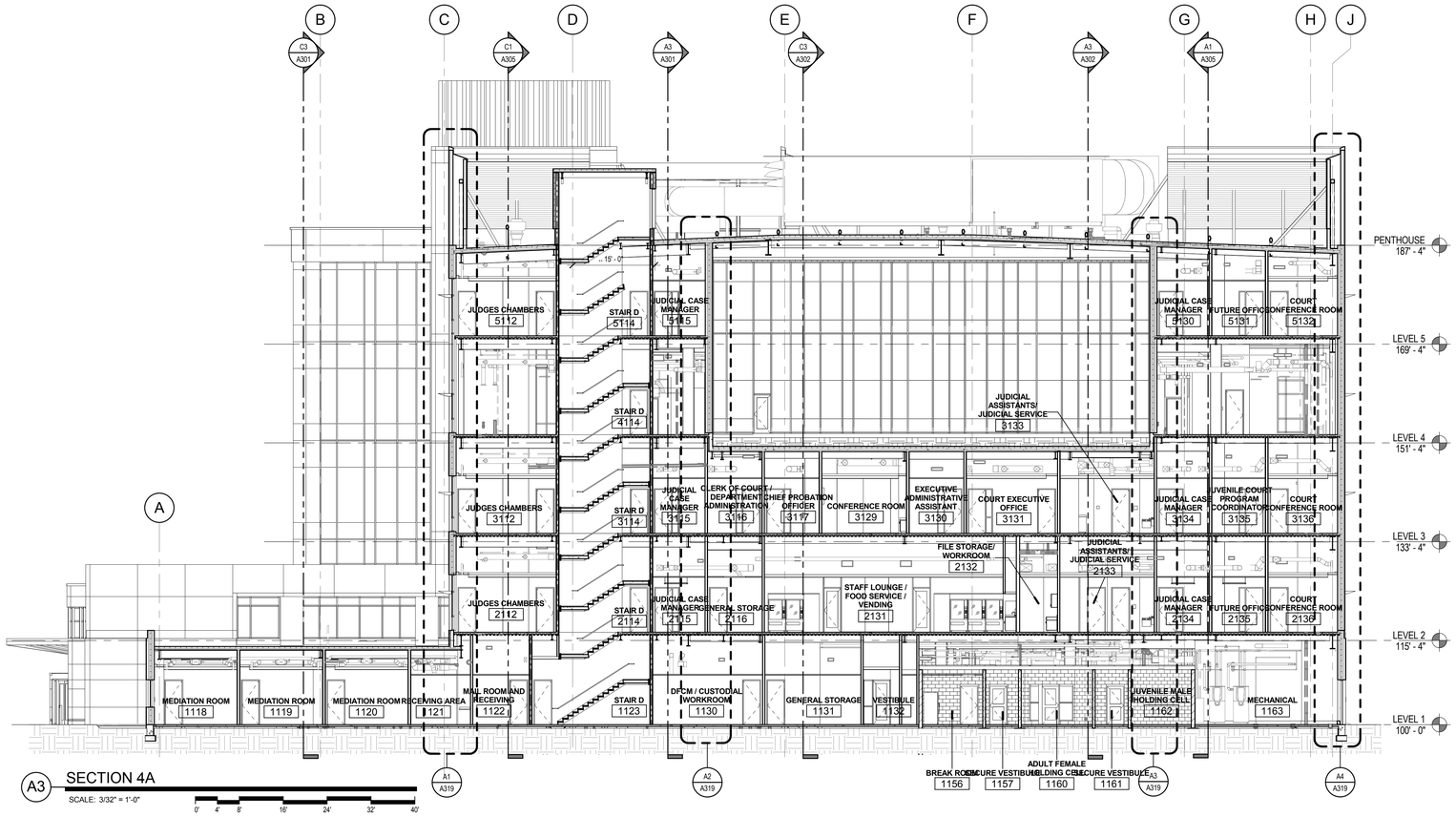

A3 SECTION 4A

SCALE: 3/32" = 1'-0"

8/14/2013 2:27:37 PM

VCBO ARCHITECTURE

VCBO ARCHITECTURE
524 SOUTH 600 EAST
SALT LAKE CITY, UT 84102
Phone: (801) 575-8800
Fax: (801) 531-9850
Web: vcbo.com

LICENSED ARCHITECT No. 153912 BRENT R. TIPPETS 8-15-13 STATE OF UTAH

2nd District Juvenile Courthouse

Utah State Courts
08284150
165 West 20th Street, Ogden, Utah
BID DOCUMENTS

Rev #	Date	Description

Job # 12500
Date August 15, 2013
Owner # 08284150
Ins. #

BUILDING SECTIONS

A304

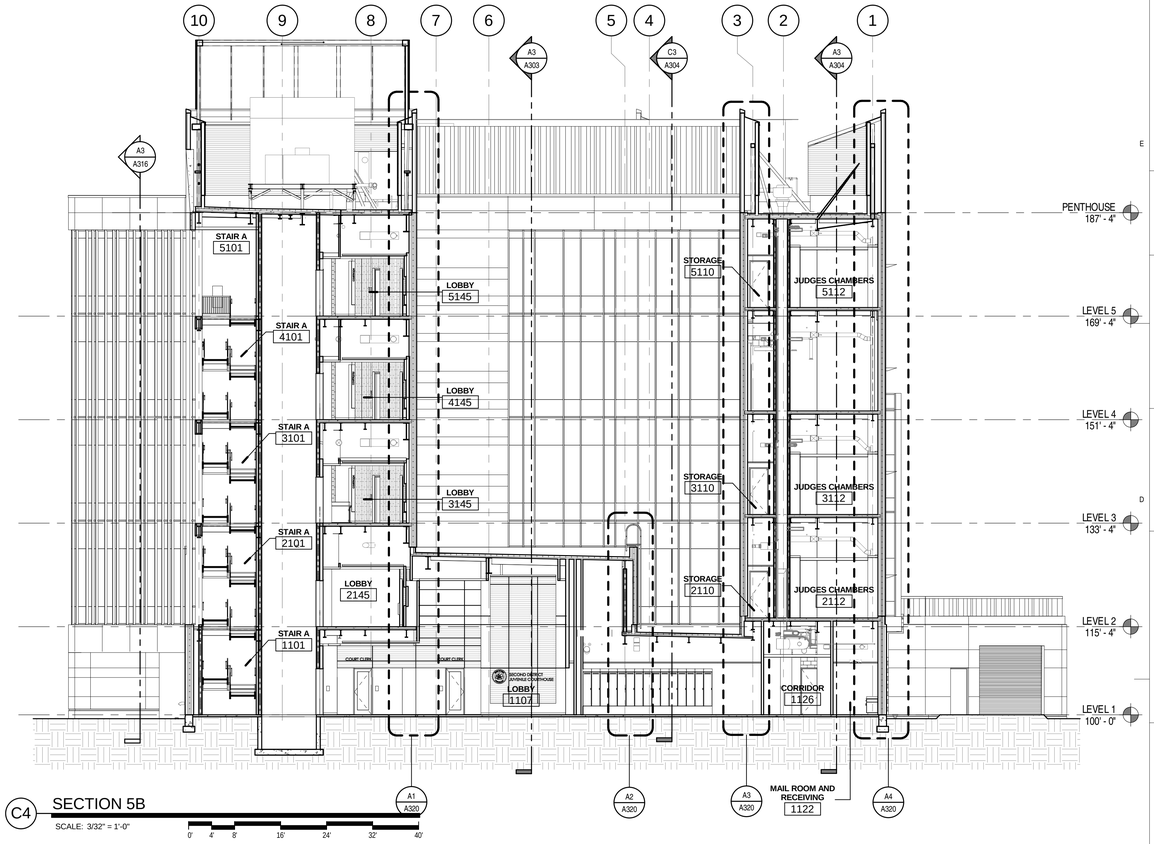

C4 SECTION 5B

SCALE: 3/32" = 1'-0"

0' 4' 8' 16' 24' 32' 40'

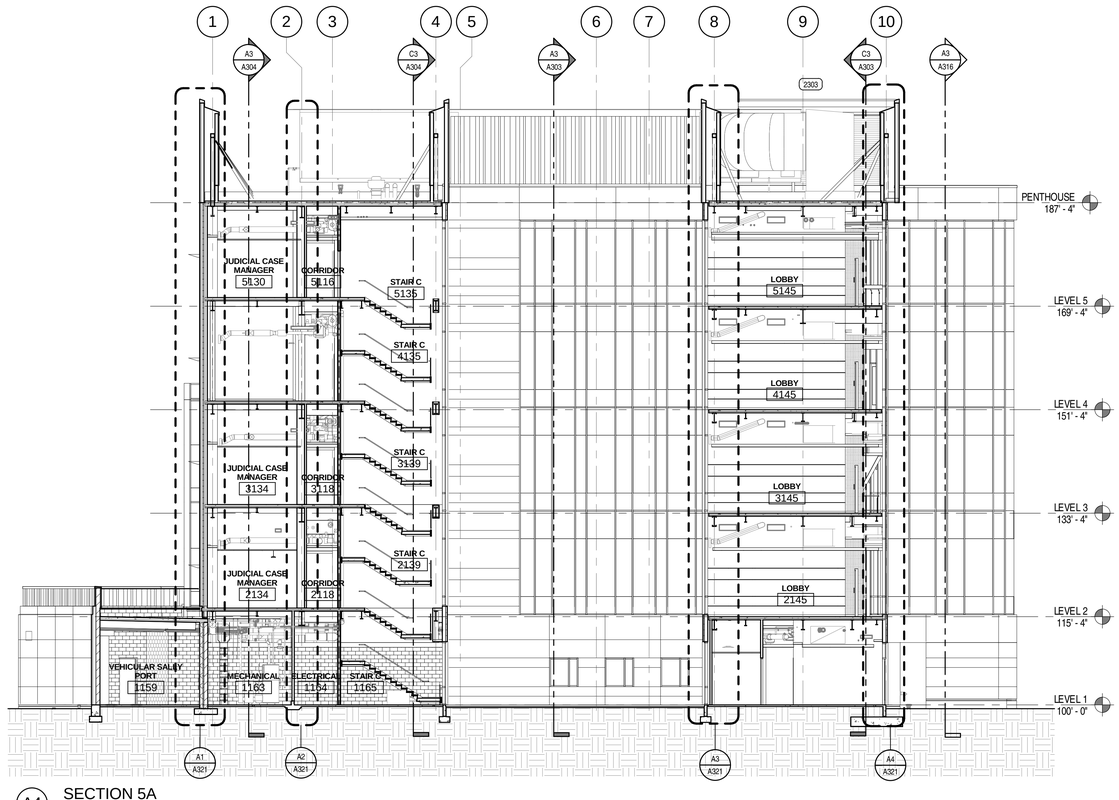

A4 SECTION 5A

SCALE: 3/32" = 1'-0"

0' 4' 8' 16' 24' 32' 40'

VCBO ARCHITECTURE

VCBO ARCHITECTURE
524 SOUTH 600 EAST
SALT LAKE CITY, UT 84102
Phone: (801) 575-8800
Fax: (801) 531-9850
Web: vcbo.com

LICENSED ARCHITECT No. 133912 BRENT R. TIPPETS 8-15-13 STATE OF UTAH

2nd District Juvenile Courthouse

Utah State Courts
08284150
165 West 20th Street, Ogden, Utah
BID DOCUMENTS

Rev #	Date	Description

Job # 12500
Date August 15, 2013
Owner # 08284150
Ins. #

BUILDING SECTIONS

A305

8/14/2013 3:01:10 PM

KEYED NOTES

300	REINFORCED CONCRETE FOOTING
301	REINFORCED CONCRETE FOUNDATION WALL
303	REINFORCED CONCRETE SLAB
312	CONCRETE CURB
501	STEEL BEAM PAINTED WHERE EXPOSED
503	STEEL DECK PAINTED WHERE EXPOSED
507	STEEL COLUMN PAINTED WHERE EXPOSED
515	COLD ROLLED METAL STUD FRAMING
617	VENEERED 1/4" MDF WOOD PANELS OVER 1/2" MDF SUBSTRATE
705	2" RIGID BOARD INSULATION CONTINUOUS, 2' VERTICAL AND 2' HORIZONTAL AT EXTERIOR FOUNDATION WALL
707	R-20 RIGID INSULATION BOARD SYSTEM
708	R-20 ROOF RIGID INSULATION BOARD SYSTEM OVER VAPOR BARRIER
710	2", R-8 MIN. SPRAYED ON THERMAL INSULATION SYSTEM
711	FIRE SAFING INSULATION
712	PRE-FINISHED CONT. METAL CAP & CLEAT OVER
715	ACM METAL PANEL OVER 3" THERMALLY BROKEN Z GIRTS
716	PRE-FINISHED EXTERIOR METAL SOFFIT
717	SINGLE PLY MEMBRANE ROOFING, ROOFING INSULATION AND ROOFING VAPOR BARRIER
725	INTUMESCENT PAINTED STEEL STRUCTURE
727	SINGLE PLY MEMBRANE ROOFING, AND ROOFING VAPOR BARRIER OVER 5/8" SHEATHING ON METAL DECK
800	SCHEDULED DOOR & FRAME
801	WINDOW SYSTEM
901	METAL STUD FRAMING
905	5/8" TYPE 'X' GYP. BD. PAINTED WHERE EXPOSED
910	SUSPENDED GYP. BD. CEILING SYSTEM
1026	WALL MOUNTED MONUMENT
2203	ROOF DRAIN
3100	ENGINEERED FILL
3101	FREE DRAINING GRAVEL BASE
3102	FINISH GRADE
3202	CONCRETE PAVING W/ SUBBASE W/ CONTROL JOINTS SEE CIVIL DRAWINGS

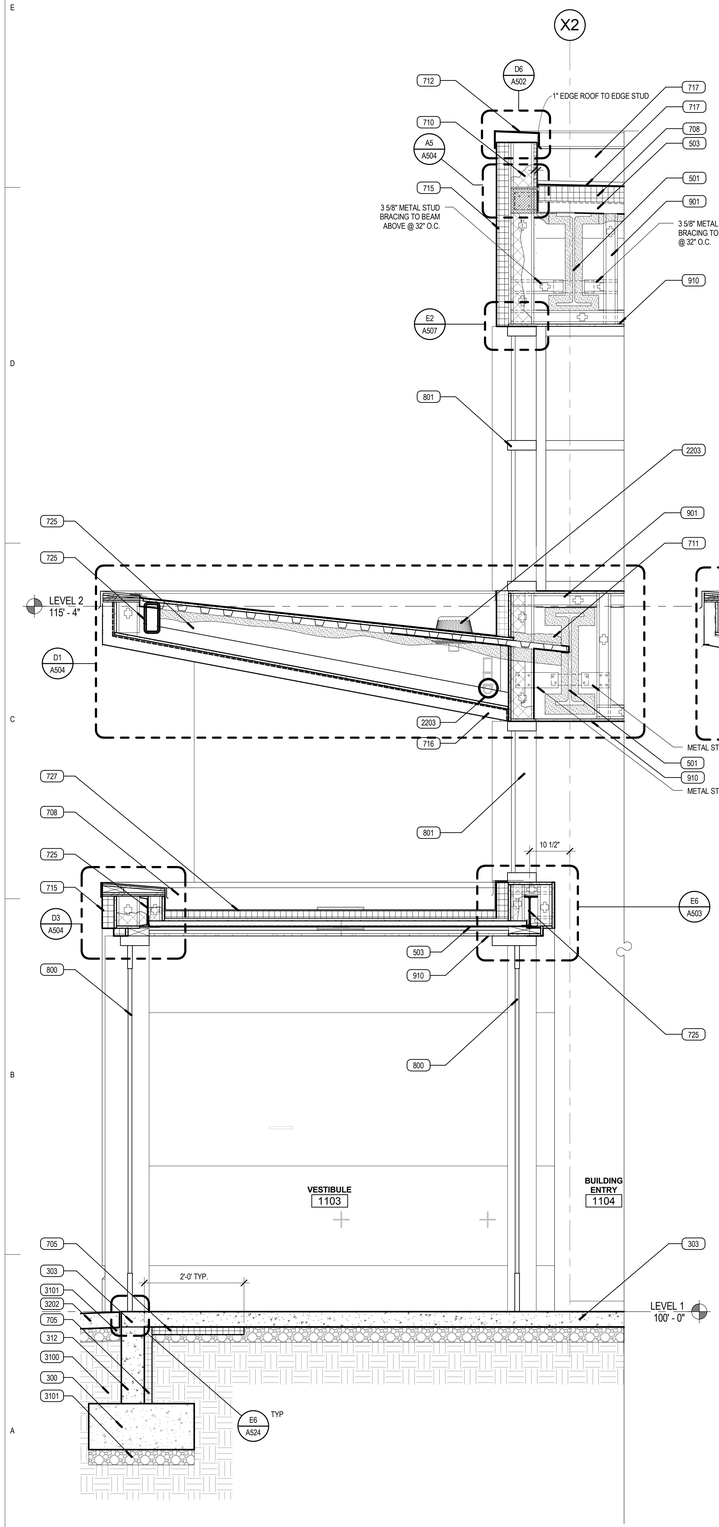

A1 WALL SECTION A
SCALE: 3/4" = 1'-0"

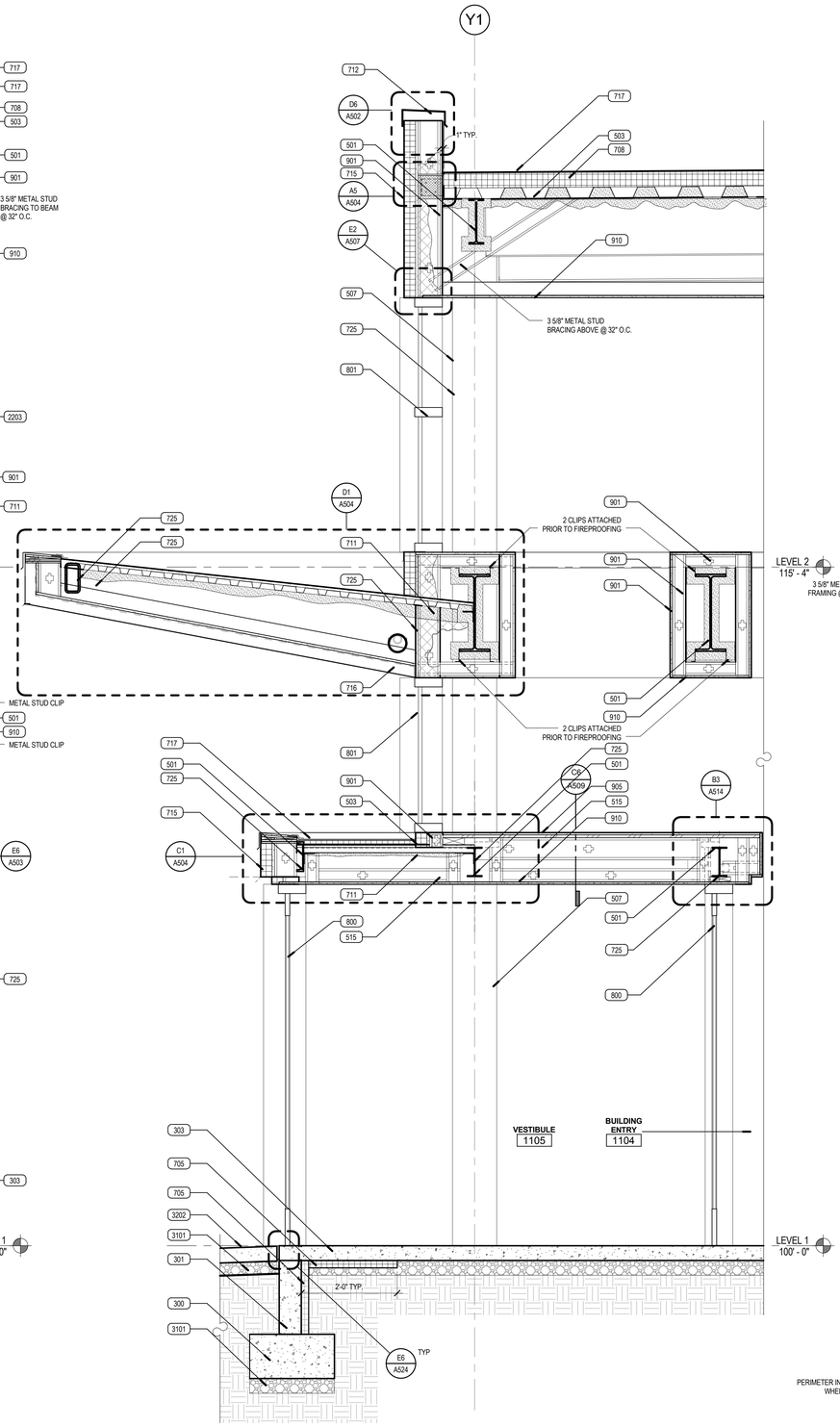

A3 WALL SECTION B
SCALE: 3/4" = 1'-0"

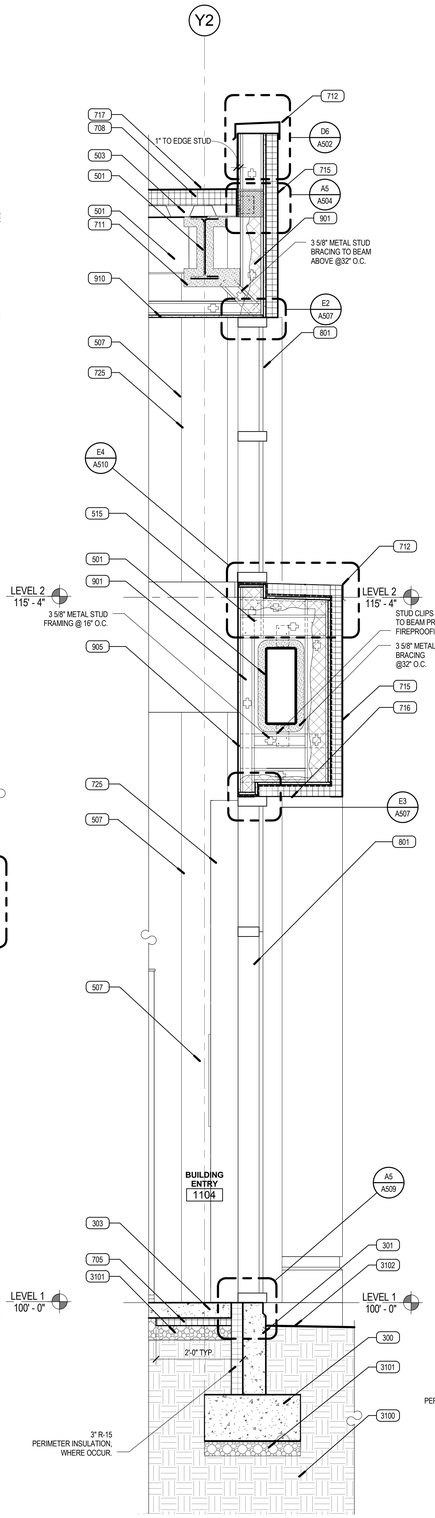

A4 WALL SECTION C
SCALE: 3/4" = 1'-0"

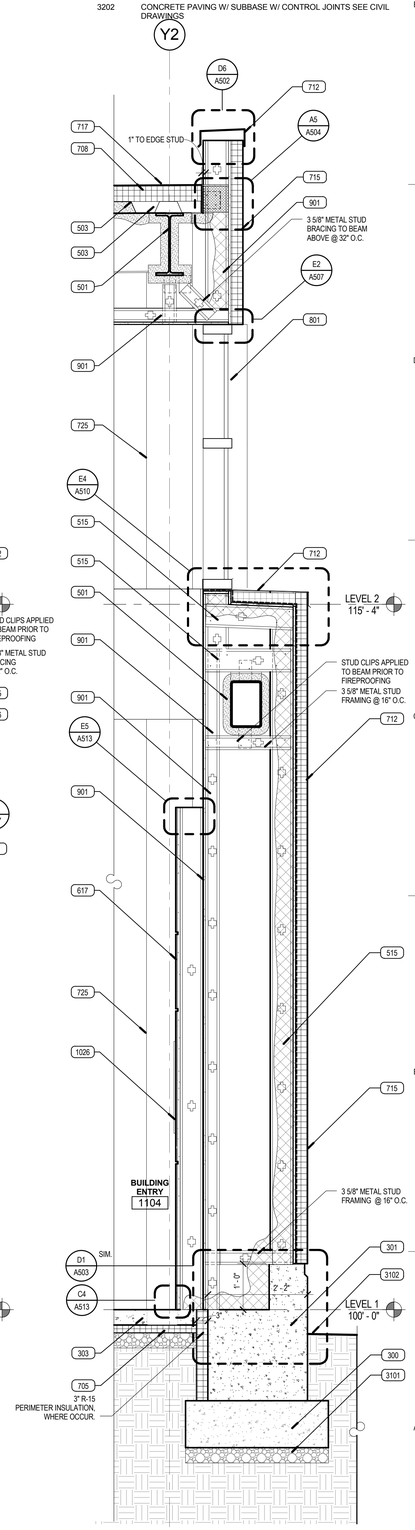

A5 WALL SECTION D
SCALE: 3/4" = 1'-0"

VCBO ARCHITECTURE

VCBO ARCHITECTURE
524 SOUTH 600 EAST
SALT LAKE CITY, UT 84102
Phone: (801) 575-8800
Fax: (801) 531-9850
Web: vcbo.com

LICENSED ARCHITECT No. 153912 BRENT R. TIPPETS 8-15-13 STATE OF UTAH

2nd District Juvenile Courthouse

Utah State Courts
08284150
165 West 20th Street, Ogden, Utah
BID DOCUMENTS

Rev #	Date	Description

Job # 12500
Date August 15, 2013
Owner # 08284150
Ins. #

WALL SECTIONS

A310

8/14/2013 2:28:31 PM

KEYED NOTES

300	REINFORCED CONCRETE FOOTING
301	REINFORCED CONCRETE FOUNDATION WALL
303	REINFORCED CONCRETE SLAB
308	GFRC INSULATED WALL ASSEMBLY WITH VAPOR BARRIER
501	STEEL BEAM PAINTED WHERE EXPOSED
503	STEEL DECK PAINTED WHERE EXPOSED
504	STEEL ANGLE PAINTED WHERE EXPOSED
507	STEEL COLUMN PAINTED WHERE EXPOSED
515	COLD ROLLED METAL STUD FRAMING
617	VENEERED 1/4" MDF WOOD PANELS OVER 1/2" MDF SUBSTRATE
705	2" RIGID BOARD INSULATION CONTINUOUS, 2' VERTICAL AND 2' HORIZONTAL AT EXTERIOR FOUNDATION WALL
708	R-20 ROOF RIGID INSULATION BOARD SYSTEM OVER VAPOR BARRIER
710	2", R-8 MIN, SPRAYED ON THERMAL INSULATION SYSTEM
711	FIRE SAFING INSULATION
712	PRE-FINISHED CONT. METAL CAP & CLEAT OVER
715	ACM METAL PANEL OVER 3" THERMALLY BROKEN Z GIRTS
716	PRE-FINISHED EXTERIOR METAL SOFFIT
717	SINGLE PLY MEMBRANE ROOFING, ROOFING INSULATION AND ROOFING VAPOR BARRIER
721	PERIMETER FIRE STOP SYSTEM
725	INTUMESCENT PAINTED STEEL STRUCTURE
800	SCHEDULED DOOR & FRAME
801	WINDOW SYSTEM
901	METAL STUD FRAMING
905	5/8" TYPE 'X' GYP. BD. PAINTED WHERE EXPOSED
909	SUSPENDED ACOUSTICAL TILE CEILING SYSTEM
910	SUSPENDED GYP. BD. CEILING SYSTEM
1010	TOILET PAPER DISPENSER
2202	FLOOR DRAIN SEE DETAIL
2203	ROOF DRAIN
2300	MECHANICAL DUCT PAINTED WHERE EXPOSED
2301	PRE-FINISHED MECHANICAL LOUVER
3100	ENGINEERED FILL
3101	FREE DRAINING GRAVEL BASE
3102	FINISH GRADE

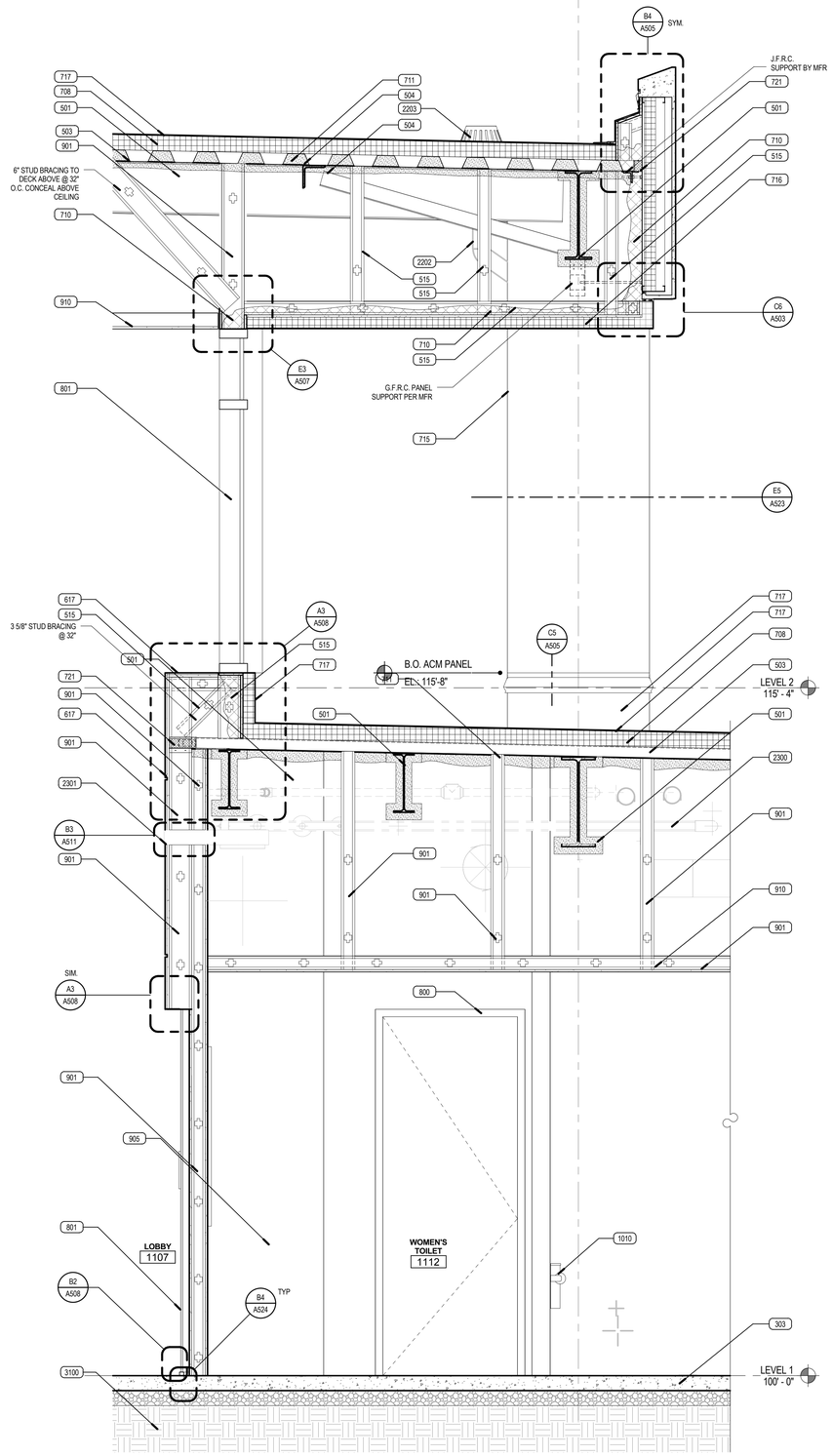

A1 WALL SECTION 1A
SCALE: 3/4" = 1'-0"

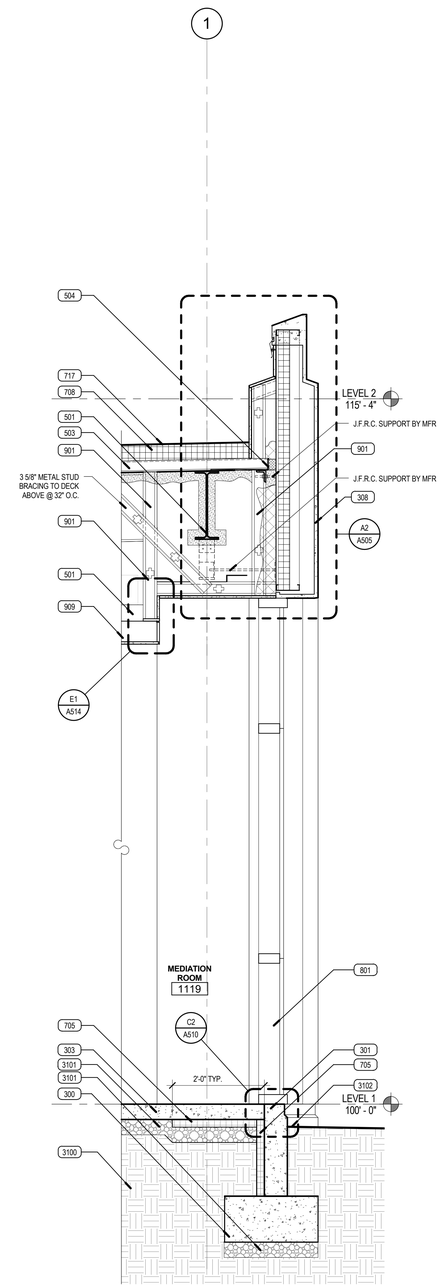

A3 WALL SECTION 1B
SCALE: 3/4" = 1'-0"

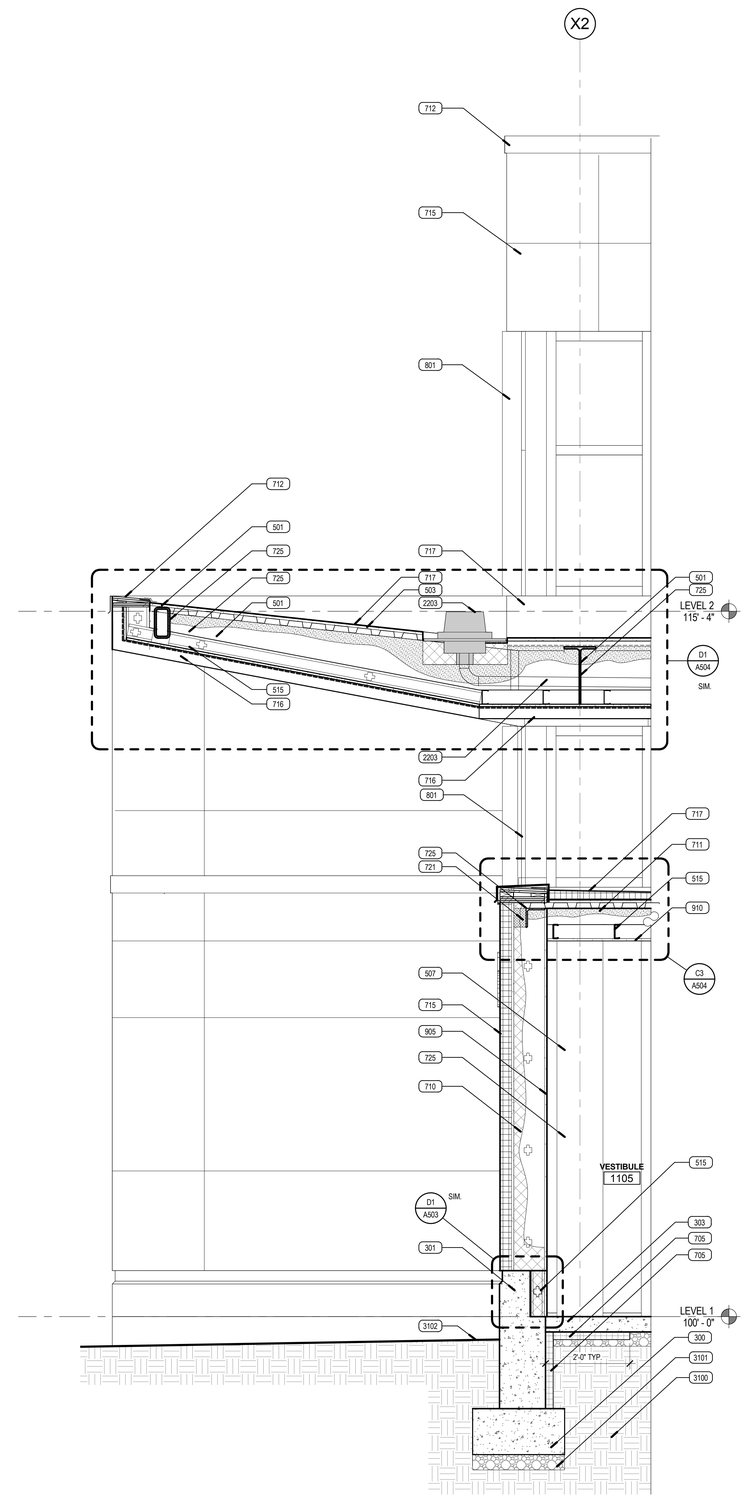

A4 WALL SECTION 1C
SCALE: 3/4" = 1'-0"

VCBO ARCHITECTURE
524 SOUTH 600 EAST
SALT LAKE CITY, UT 84102
Phone: (801) 575-8800
Fax: (801) 531-9850
Web: vcbo.com

LICENSED ARCHITECT No. 153912 BRENT R. TIPPETS 8-15-13 STATE OF UTAH

2nd District Juvenile Courthouse

Utah State Courts
08284150
165 West 20th Street, Ogden, Utah
BID DOCUMENTS

Rev #	Date	Description

Job # 12500
Date August 15, 2013
Owner # 08284150
Ins. #

WALL SECTIONS

A311

8/14/2013 2:28:49 PM

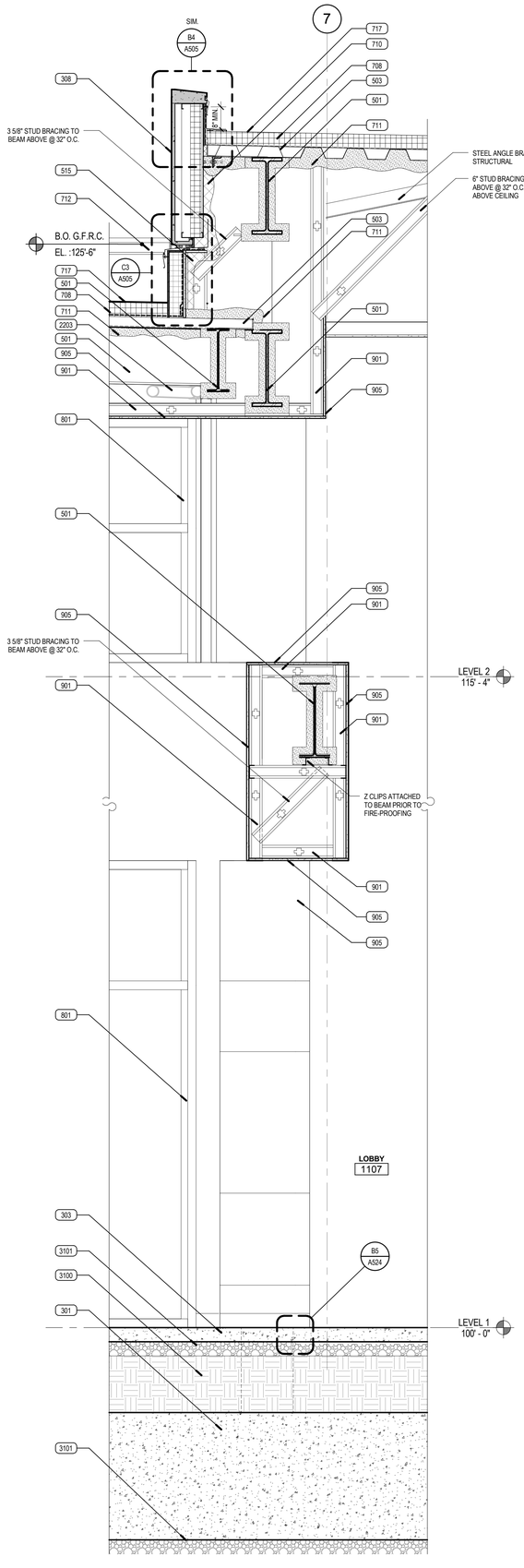

A1 WALL SECTION 2A

SCALE: 3/4" = 1'-0"

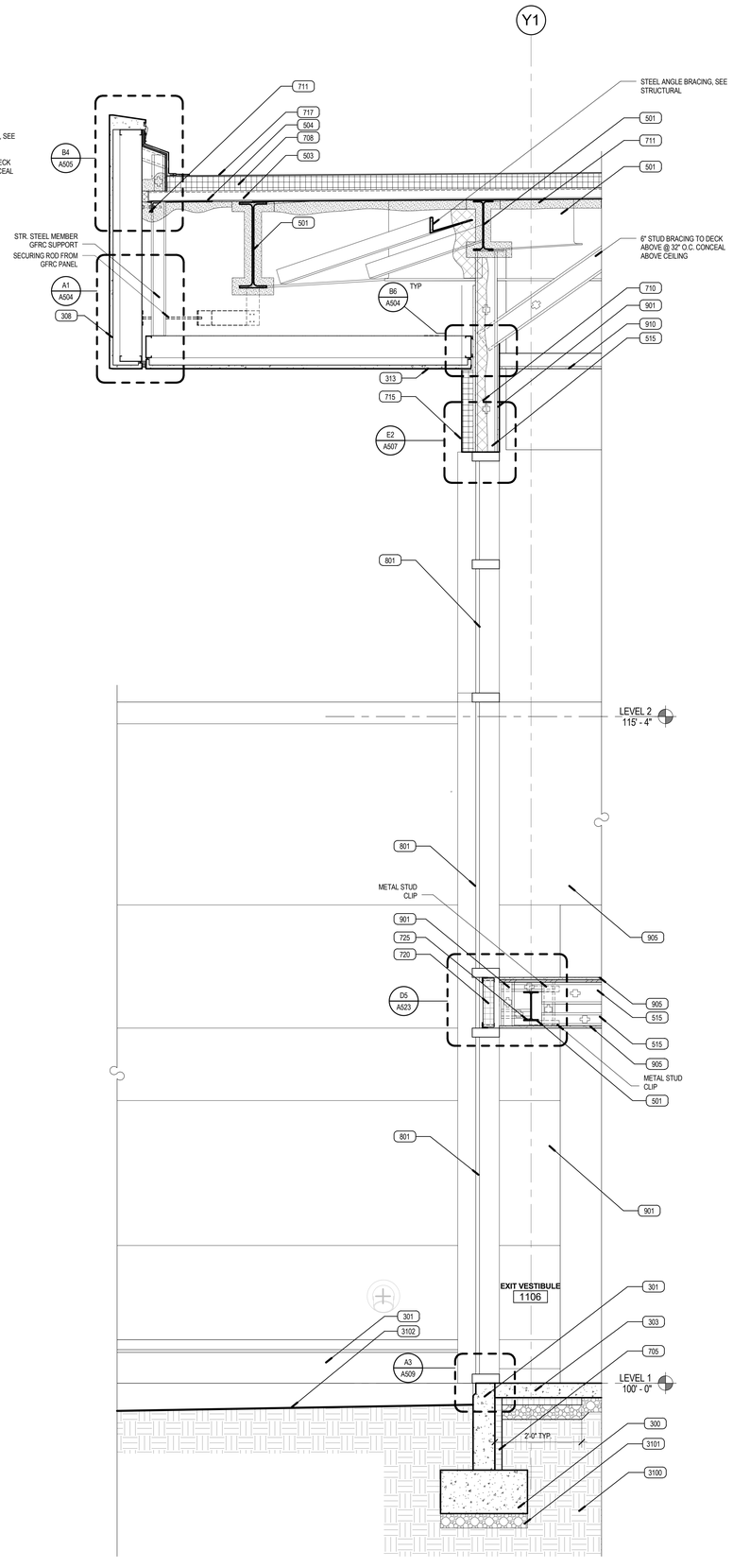

A3 WALL SECTION 2B

SCALE: 3/4" = 1'-0"

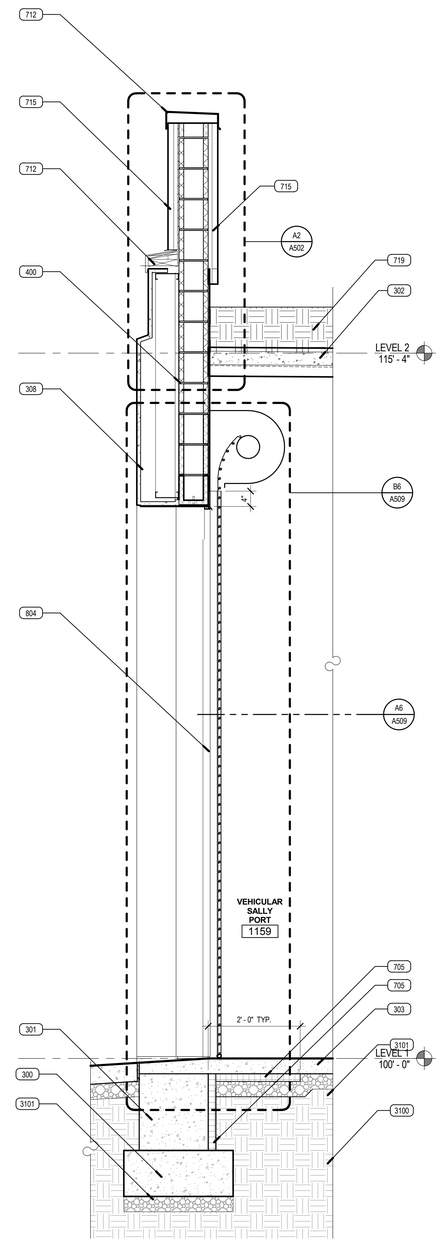

A4 WALL SECTION 2C

SCALE: 3/4" = 1'-0"

KEYED NOTES

300	REINFORCED CONCRETE FOOTING
301	REINFORCED CONCRETE FOUNDATION WALL
302	REINFORCED CONCRETE SLAB ON METAL DECK
303	REINFORCED CONCRETE SLAB
308	GFRC INSULATED WALL ASSEMBLY WITH VAPOR BARRIER
313	GFRC SOFFIT PANEL
400	CMU
501	STEEL BEAM PAINTED WHERE EXPOSED
503	STEEL DECK PAINTED WHERE EXPOSED
504	STEEL ANGLE PAINTED WHERE EXPOSED
515	COLD ROLLED METAL STUD FRAMING
705	2" RIGID BOARD INSULATION CONTINUOUS, 2' VERTICAL AND 2' HORIZONTAL AT EXTERIOR FOUNDATION WALL
708	R-20 ROOF RIGID INSULATION BOARD SYSTEM OVER VAPOR BARRIER
710	2", R-8 MIN, SPRAYED ON THERMAL INSULATION SYSTEM
711	FIRE SAFING INSULATION
712	PRE-FINISHED CONT. METAL CAP & CLEAT OVER
715	ACM METAL PANEL OVER 3" THERMALLY BROKEN Z GIRTS
717	SINGLE PLY MEMBRANE ROOFING, ROOFING INSULATION AND ROOFING VAPOR BARRIER
719	ROOF GARDEN SYSTEM - SEE LANDSCAPE PLANS FOR SOIL TYPE
720	MINERAL WOOL SPANDREL INSULATION SYSTEM
725	INTUMESCENT PAINTED STEEL STRUCTURE
801	WINDOW SYSTEM
804	OVERHEAD COILING DOOR
901	METAL STUD FRAMING
905	5/8" TYPE 'X' GYP. BD. PAINTED WHERE EXPOSED
910	SUSPENDED GYP. BD. CEILING SYSTEM
2203	ROOF DRAIN
3100	ENGINEERED FILL
3101	FREE DRAINING GRAVEL BASE
3102	FINISH GRADE

VCBO ARCHITECTURE

VCBO ARCHITECTURE
524 SOUTH 600 EAST
SALT LAKE CITY, UT 84102
Phone: (801) 575-8800
Fax: (801) 531-9850
Web: vcbo.com

LICENSED ARCHITECT
No. 153912
BRENT R. TIPPETS
8-15-13
STATE OF UTAH

2nd District Juvenile Courthouse

Utah State Courts
08284150
165 West 20th Street, Ogden, Utah
BID DOCUMENTS

Rev #	Date	Description

Job # 12500
Date August 15, 2013
Owner # 08284150
Ins. #

WALL SECTIONS

A312

8/14/2013 2:29:05 PM

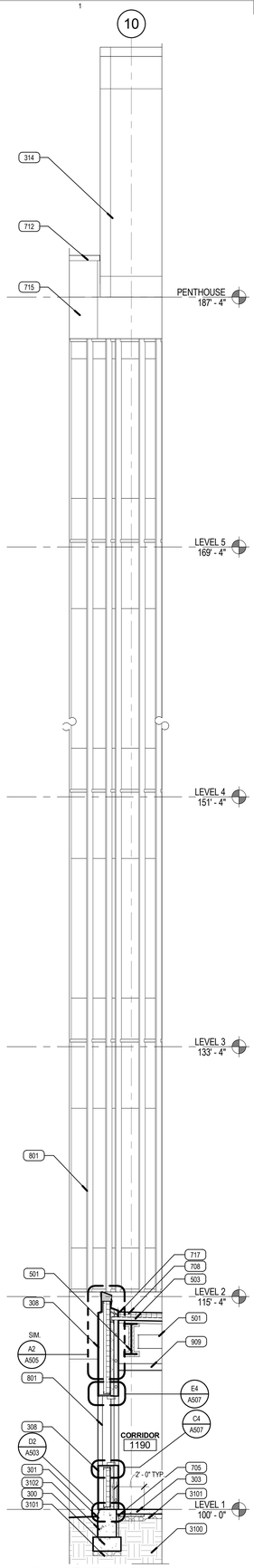

A1 WALL SECTION 3A

SCALE: 1/4" = 1'-0"

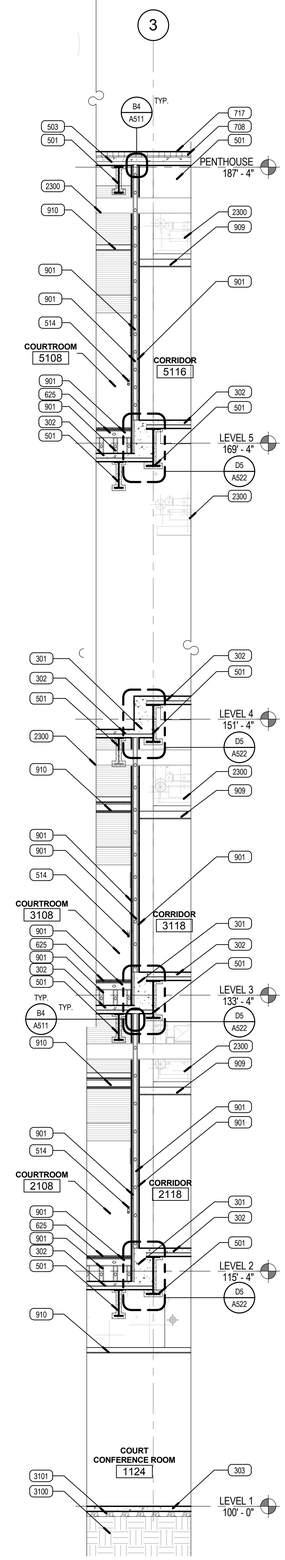

A2 WALL SECTION 3B

SCALE: 1/4" = 1'-0"

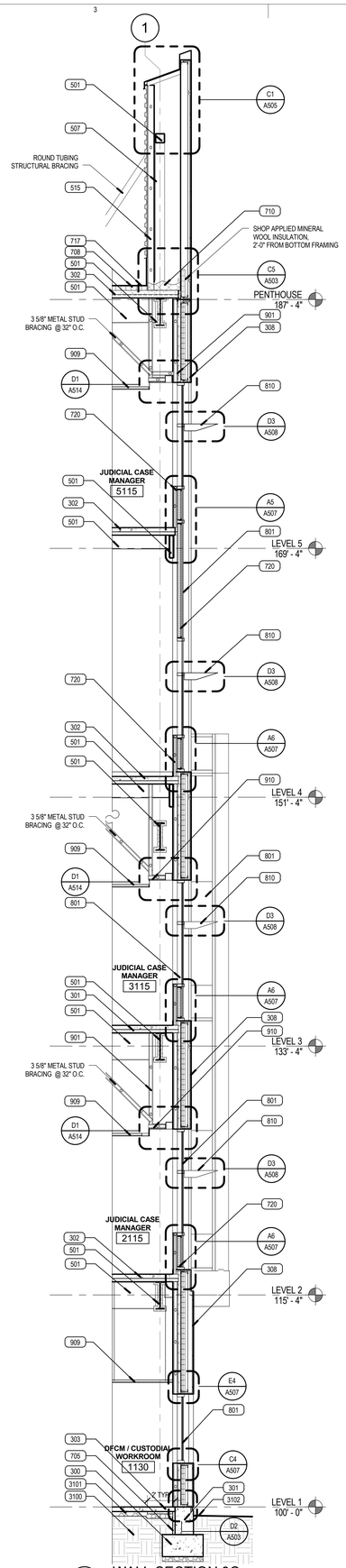

A3 WALL SECTION 3C

SCALE: 1/4" = 1'-0"

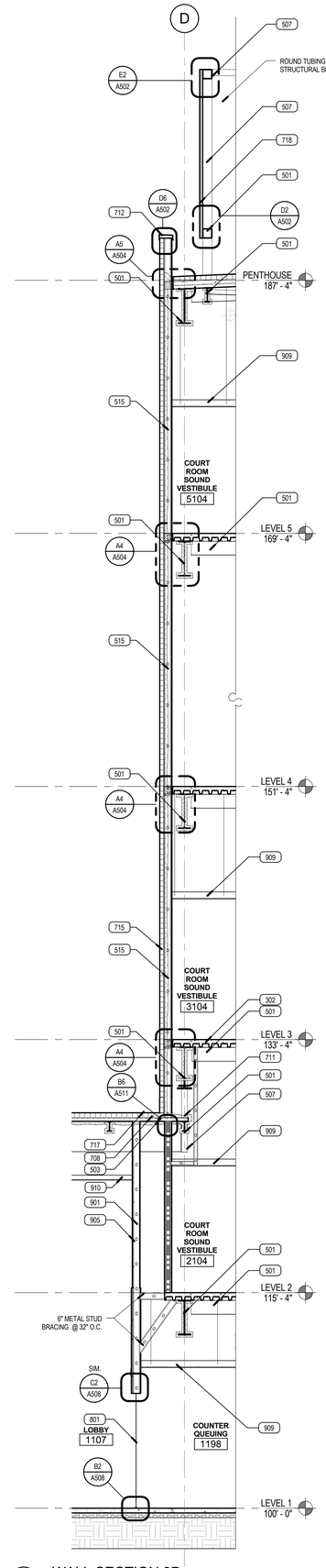

A4 WALL SECTION 3D

SCALE: 1/4" = 1'-0"

KEYED NOTES

300	REINFORCED CONCRETE FOOTING
301	REINFORCED CONCRETE FOUNDATION WALL
302	REINFORCED CONCRETE SLAB ON METAL DECK
303	REINFORCED CONCRETE SLAB
308	GFRC INSULATED WALL ASSEMBLY WITH VAPOR BARRIER
314	GFRC NON-INSULATED WALL ASSEMBLY
501	STEEL BEAM PAINTED WHERE EXPOSED
503	STEEL DECK PAINTED WHERE EXPOSED
507	STEEL COLUMN PAINTED WHERE EXPOSED
511	1 1/2" DIA. STEEL PIPE HANDRAIL PAINTED
514	1 1/2" DIA. STAINLESS STEEL HANDRAIL
515	COLD ROLLED METAL STUD FRAMING
625	WOOD OVERBUILT FLOOR
705	2" RIGID BOARD INSULATION CONTINUOUS, 2' VERTICAL AND 2' HORIZONTAL AT EXTERIOR FOUNDATION WALL
708	R-20 ROOF RIGID INSULATION BOARD SYSTEM OVER VAPOR BARRIER
710	2", R-8 MIN, SPRAYED ON THERMAL INSULATION SYSTEM
711	FIRE SAFING INSULATION
712	PRE-FINISHED CONT. METAL CAP & CLEAT OVER
715	ACM METAL PANEL OVER 3" THERMALLY BROKEN Z GIRTS
717	SINGLE PLY MEMBRANE ROOFING, ROOFING INSULATION AND ROOFING VAPOR BARRIER
718	PRE-FINISHED PROFILE METAL, RANDOM VERTICAL PATTERN, SEE DETAIL ELEVATION
720	MINERAL WOOL SPANDREL INSULATION SYSTEM
801	WINDOW SYSTEM
810	EXTERIOR SUN CONTROL DEVICES
901	METAL STUD FRAMING
905	5/8" TYPE 'X' GYP. BD. PAINTED WHERE EXPOSED
909	SUSPENDED ACOUSTICAL TILE CEILING SYSTEM
910	SUSPENDED GYP. BD. CEILING SYSTEM
2300	MECHANICAL DUCT PAINTED WHERE EXPOSED
3100	ENGINEERED FILL
3101	FREE DRAINING GRAVEL BASE
3102	FINISH GRADE

VCBO ARCHITECTURE
524 SOUTH 600 EAST
SALT LAKE CITY, UT 84102
Phone: (801) 575-8800
Fax: (801) 531-9850
Web: vcbo.com

LICENSED ARCHITECT
No. 153912
BRENT R. TIPPETS
8-15-13
STATE OF UTAH

2nd District Juvenile Courthouse

Utah State Courts
08284150
165 West 20th Street, Ogden, Utah
BID DOCUMENTS

Rev #	Date	Description

Job # 12500
Date August 15, 2013
Owner # 08284150
Ins. #

WALL SECTIONS

A313

8/14/2013 2:29:23 PM

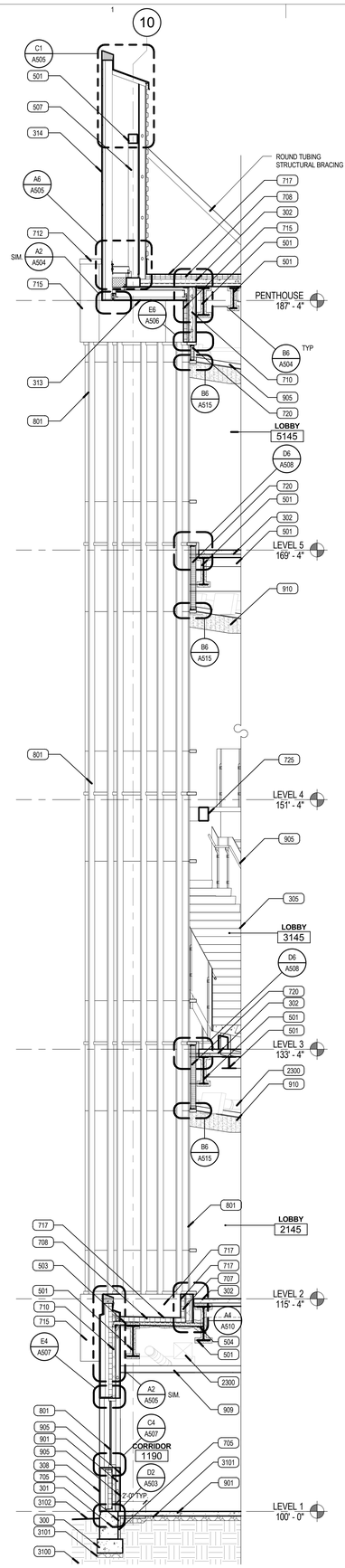

A1 WALL SECTION 4A

SCALE: 1/4" = 1'-0"

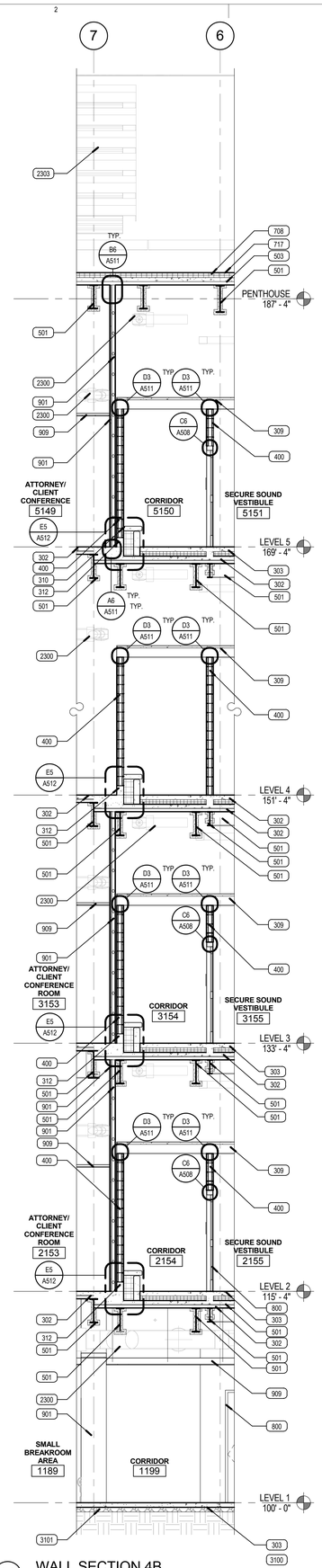

A2 WALL SECTION 4B

SCALE: 1/4" = 1'-0"

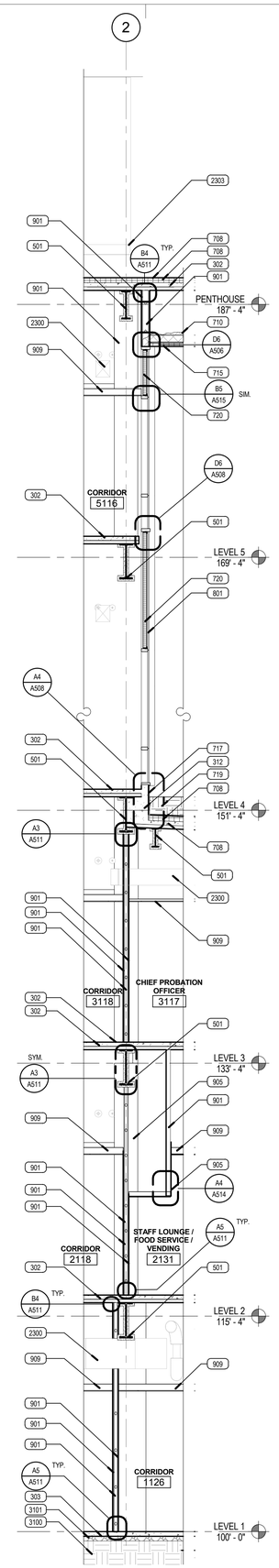

A3 WALLSECTION 4C

SCALE: 1/4" = 1'-0"

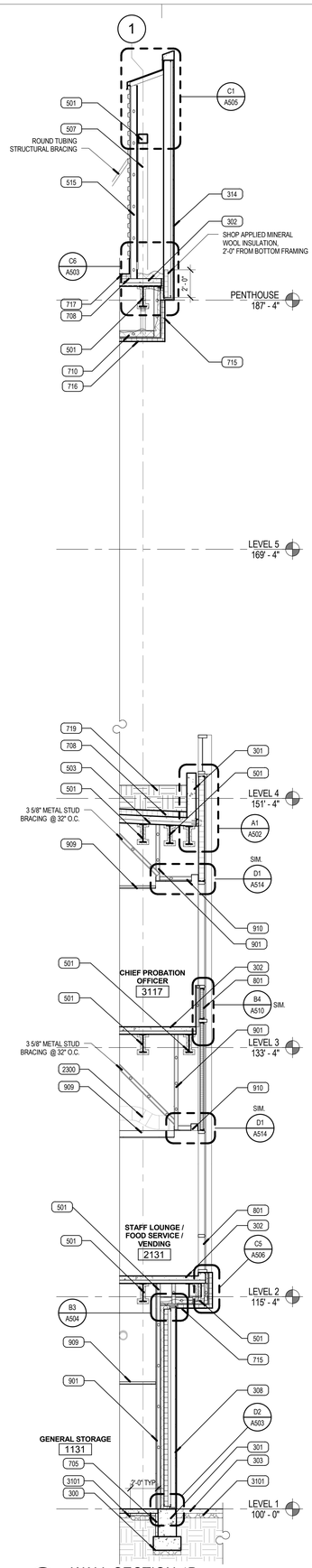

A4 WALL SECTION 4D

SCALE: 1/4" = 1'-0"

KEYED NOTES

300	REINFORCED CONCRETE FOOTING
301	REINFORCED CONCRETE FOUNDATION WALL
302	REINFORCED CONCRETE SLAB ON METAL DECK
303	REINFORCED CONCRETE SLAB
305	REINFORCED CONCRETE STAIRS
308	GFRC INSULATED WALL ASSEMBLY WITH VAPOR BARRIER
309	PRESTRESED CONCRETE FLOOR PANEL
310	REINFORCED CONCRETE BENCH
312	CONCRETE CURB
313	GFRC SOFFIT PANEL
314	GFRC NON-INSULATED WALL ASSEMBLY
400	CMU
501	STEEL BEAM PAINTED WHERE EXPOSED
503	STEEL DECK PAINTED WHERE EXPOSED
504	STEEL ANGLE PAINTED WHERE EXPOSED
507	STEEL COLUMN PAINTED WHERE EXPOSED
515	COLD ROLLED METAL STUD FRAMING
705	2" RIGID BOARD INSULATION CONTINUOUS, 2' VERTICAL AND 2' HORIZONTAL AT EXTERIOR FOUNDATION WALL
707	R-20 RIGID INSULATION BOARD SYSTEM
708	R-20 ROOF RIGID INSULATION BOARD SYSTEM OVER VAPOR BARRIER
710	2", R-8 MIN, SPRAYED ON THERMAL INSULATION SYSTEM
712	PRE-FINISHED CONT. METAL CAP & CLEAT OVER
715	ACM METAL PANEL OVER 3" THERMALLY BROKEN Z GIRTS
716	PRE-FINISHED EXTERIOR METAL SOFFIT
717	SINGLE PLY MEMBRANE ROOFING, ROOFING INSULATION AND ROOFING VAPOR BARRIER
719	ROOF GARDEN SYSTEM - SEE LANDSCAPE PLANS FOR SOIL TYPE
720	MINERAL WOOL SPANDREL INSULATION SYSTEM
725	INTUMESCENT PAINTED STEEL STRUCTURE
800	SCHEDULED DOOR & FRAME
801	WINDOW SYSTEM
901	
901	METAL STUD FRAMING
905	5/8" TYPE 'X' GYP. BD. PAINTED WHERE EXPOSED
909	SUSPENDED ACOUSTICAL TILE CEILING SYSTEM
910	SUSPENDED GYP. BD. CEILING SYSTEM
2300	MECHANICAL DUCT PAINTED WHERE EXPOSED
2303	FAN COIL UNIT
3100	ENGINEERED FILL
3101	FREE DRAINING GRAVEL BASE
3102	FINISH GRADE

VCBO ARCHITECTURE

VCBO ARCHITECTURE
524 SOUTH 600 EAST
SALT LAKE CITY, UT 84102
Phone: (801) 575-8800
Fax: (801) 531-9850
Web: vcbo.com

LICENSED ARCHITECT No. 153912 BRENT R. TIPPETS 8-15-13 STATE OF UTAH

2nd District Juvenile Courthouse

Utah State Courts
08284150
165 West 20th Street, Ogden, Utah
BID DOCUMENTS

Rev #	Date	Description

Job # 12500
Date August 15, 2013
Owner # 08284150
Ins. #

WALL SECTIONS

A314

8/14/2013 2:29:44 PM

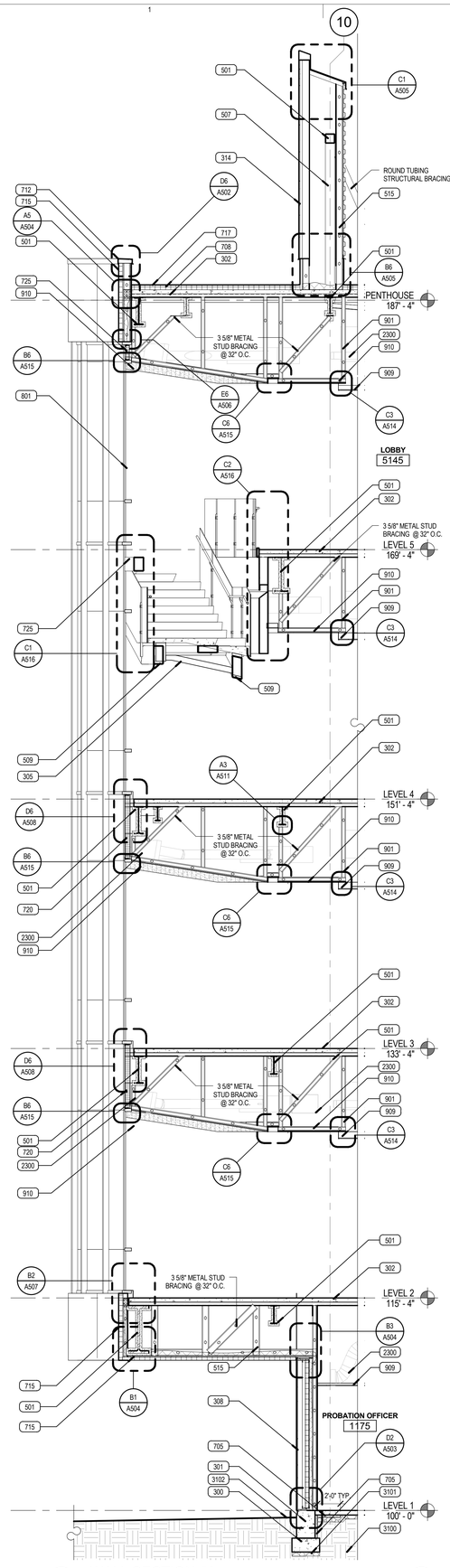

A1 WALL SECTION 5A

SCALE: 1/4" = 1'-0"

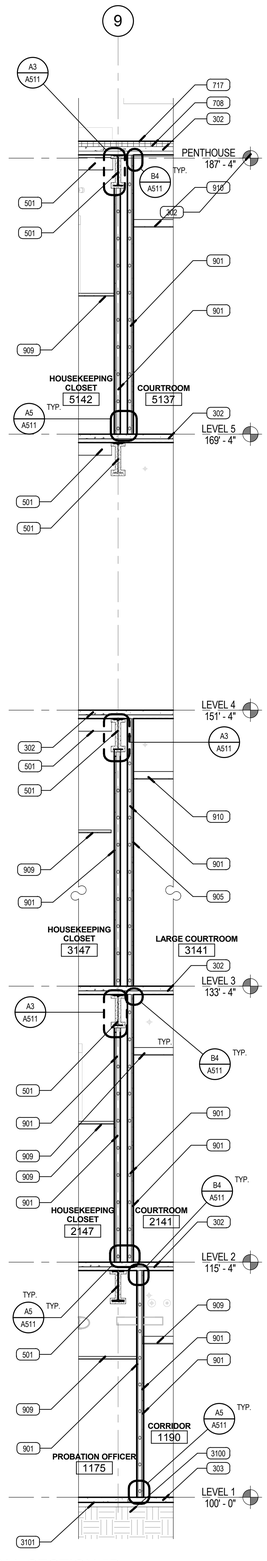

A2 WALL SECTION 5B

SCALE: 1/4" = 1'-0"

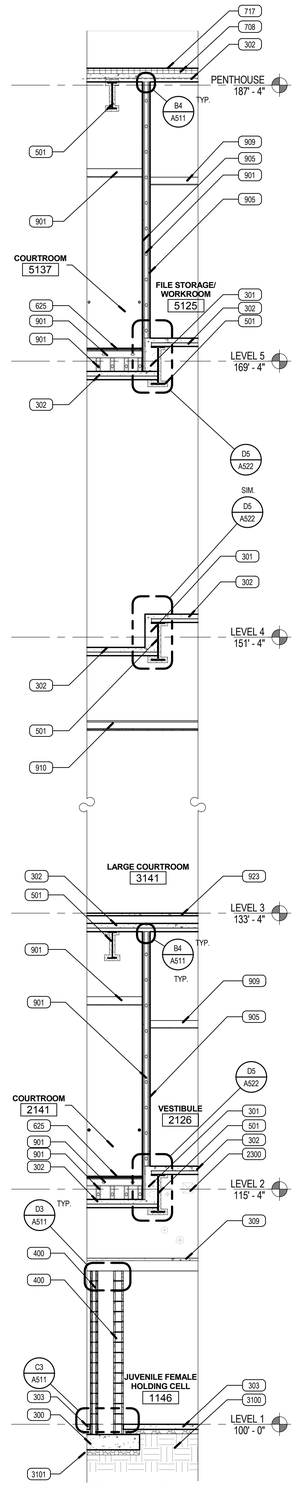

A3 WALL SECTION 5C

SCALE: 1/4" = 1'-0"

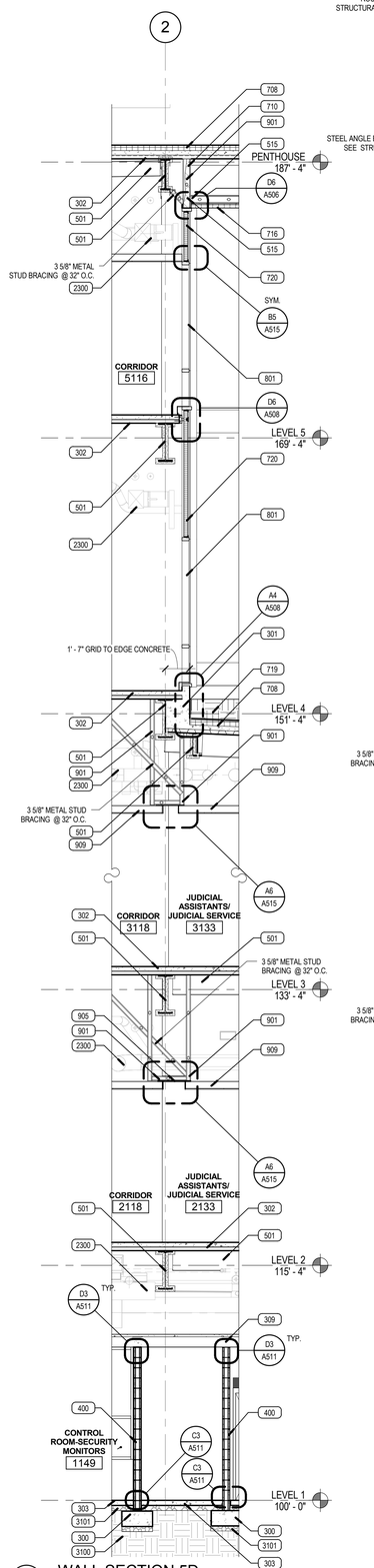

A4 WALL SECTION 5D

SCALE: 1/4" = 1'-0"

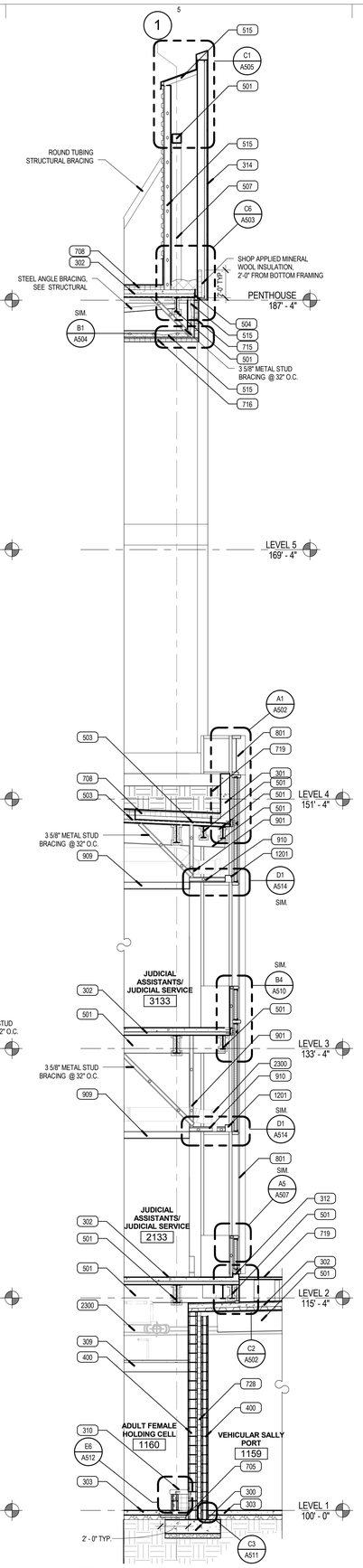

A5 WALL SECTION 5E

SCALE: 1/4" = 1'-0"

KEYED NOTES

300	REINFORCED CONCRETE FOOTING
301	REINFORCED CONCRETE FOUNDATION WALL
302	REINFORCED CONCRETE SLAB ON METAL DECK
303	REINFORCED CONCRETE SLAB
305	REINFORCED CONCRETE STAIRS
308	GFRC INSULATED WALL ASSEMBLY WITH VAPOR BARRIER
309	PRESTRESED CONCRETE FLOOR PANEL
310	REINFORCED CONCRETE BENCH
312	CONCRETE CURB
314	GFRC NON-INSULATED WALL ASSEMBLY
400	CMU
501	STEEL BEAM PAINTED WHERE EXPOSED
503	STEEL DECK PAINTED WHERE EXPOSED
504	STEEL ANGLE PAINTED WHERE EXPOSED
507	STEEL COLUMN PAINTED WHERE EXPOSED
509	STEEL STAIR STRINGER, PAINTED
515	COLD ROLLED METAL STUD FRAMING
625	WOOD OVERBUILT FLOOR
705	2" RIGID BOARD INSULATION CONTINUOUS, 2' VERTICAL AND 2' HORIZONTAL AT EXTERIOR FOUNDATION WALL
708	R-20 ROOF RIGID INSULATION BOARD SYSTEM OVER VAPOR BARRIER
710	2", R-8 MIN, SPRAYED ON THERMAL INSULATION SYSTEM
712	PRE-FINISHED CONT. METAL CAP & CLEAT OVER
715	ACM METAL PANEL OVER 3" THERMALLY BROKEN Z GIRTS
716	PRE-FINISHED EXTERIOR METAL SOFFIT
717	SINGLE PLY MEMBRANE ROOFING, ROOFING INSULATION AND ROOFING VAPOR BARRIER
719	ROOF GARDEN SYSTEM - SEE LANDSCAPE PLANS FOR SOIL TYPE
720	MINERAL WOOL SPANDREL INSULATION SYSTEM
722	PROTECTIVE WALKABLE ROOF SURFACE, 4'-0" WIDE, U.N.O.
724	ROOF EXPANSION JOINT
725	INTUMESCENT PAINTED STEEL STRUCTURE
728	3", R-12 MIN, MINERAL WOOL INSULATION
801	WINDOW SYSTEM
804	OVERHEAD COILING DOOR
810	EXTERIOR SUN CONTROL DEVICES
901	
901	METAL STUD FRAMING
905	5/8" TYPE 'X' GYP. BD. PAINTED WHERE EXPOSED
909	SUSPENDED ACOUSTICAL TILE CEILING SYSTEM
910	SUSPENDED GYP. BD. CEILING SYSTEM
923	ACCESS FLOORING SYSTEM
1201	MANUAL ROLLER WINDOW SHADES FULL LENGTH OF WINDOW, SHADE BREAKS TO ALIGN WITH MULLION
2206	HOSE BIB/ WALL HYDRANT
2300	MECHANICAL DUCT PAINTED WHERE EXPOSED
3100	ENGINEERED FILL
3101	FREE DRAINING GRAVEL BASE
3102	FINISH GRADE

VCBO ARCHITECTURE

VCBO ARCHITECTURE
524 SOUTH 600 EAST
SALT LAKE CITY, UT 84102
Phone: (801) 575-8800
Fax: (801) 531-9850
Web: vcbo.com

LICENSED ARCHITECT No. 153912 BRENT R. TIPPETS 8-15-13 STATE OF UTAH

2nd District Juvenile Courthouse

Utah State Courts
08284150
165 West 20th Street, Ogden, Utah
BID DOCUMENTS

Rev #	Date	Description

Job # 12500
Date August 15, 2013
Owner # 08284150
Ins. #

WALL SECTIONS

A315

8/14/2013 2:30:03 PM

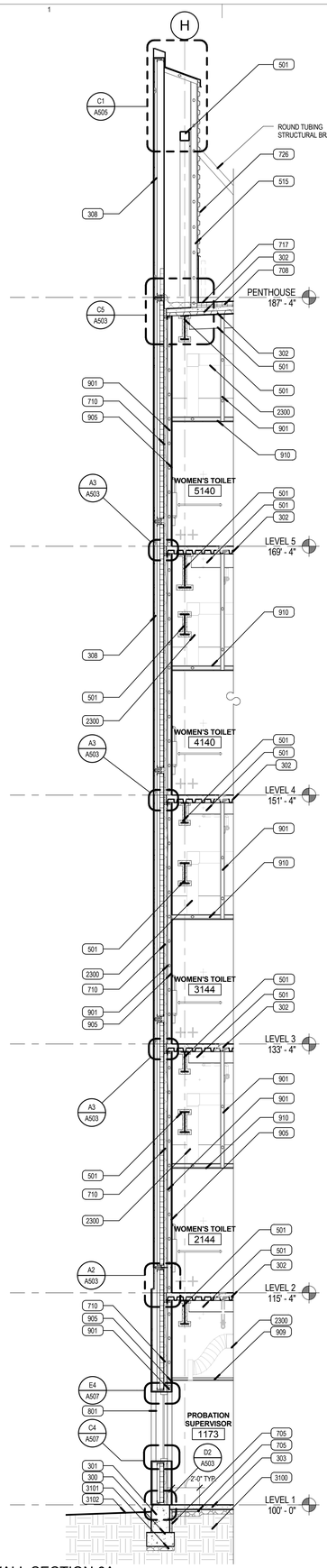

A1 WALL SECTION 6A

SCALE: 1/4" = 1'-0"

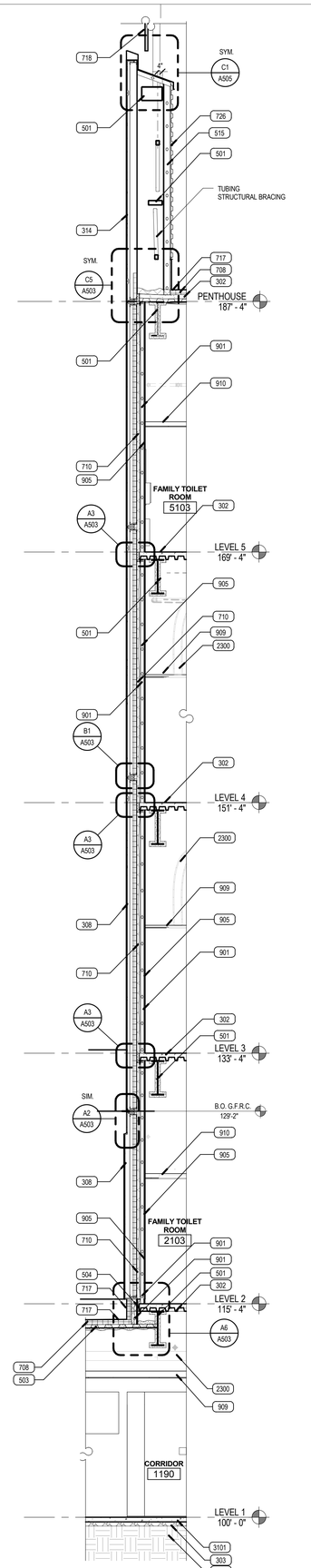

A2 WALL SECTION 6B

SCALE: 1/4" = 1'-0"

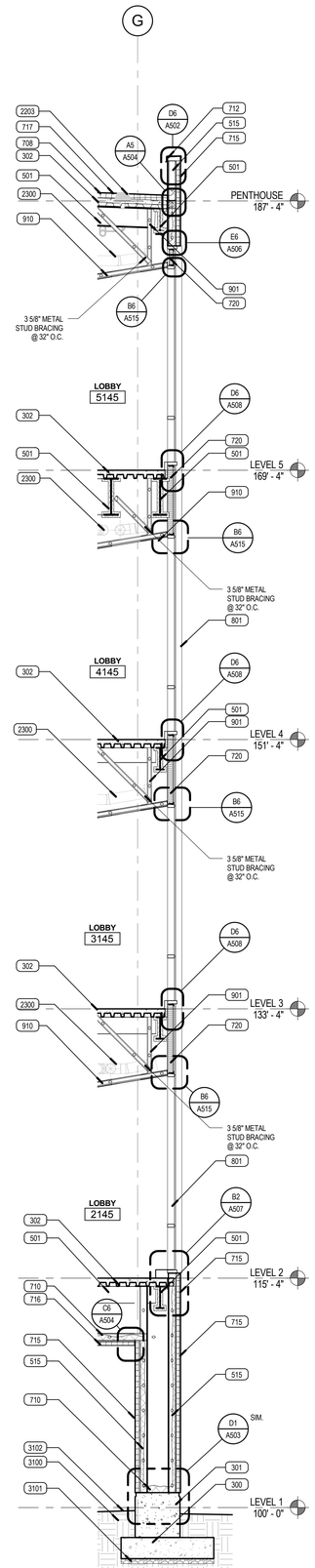

A3 WALL SECTION 6C

SCALE: 1/4" = 1'-0"

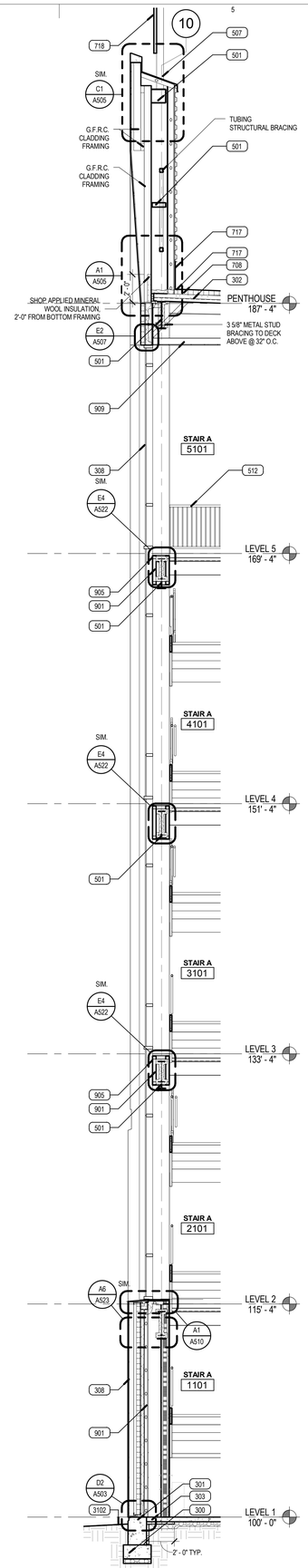

A4 WALL SECTION 6D

SCALE: 1/4" = 1'-0"

KEYED NOTES

300	REINFORCED CONCRETE FOOTING
301	REINFORCED CONCRETE FOUNDATION WALL
302	REINFORCED CONCRETE SLAB ON METAL DECK
303	REINFORCED CONCRETE SLAB
308	GFRC INSULATED WALL ASSEMBLY WITH VAPOR BARRIER
314	GFRC NON-INSULATED WALL ASSEMBLY
501	STEEL BEAM PAINTED WHERE EXPOSED
503	STEEL DECK PAINTED WHERE EXPOSED
504	STEEL ANGLE PAINTED WHERE EXPOSED
507	STEEL COLUMN PAINTED WHERE EXPOSED
512	STEEL GUARDRAIL, PAINTED
515	COLD ROLLED METAL STUD FRAMING
705	2" RIGID BOARD INSULATION CONTINUOUS, 2' VERTICAL AND 2' HORIZONTAL AT EXTERIOR FOUNDATION WALL
708	R-20 ROOF RIGID INSULATION BOARD SYSTEM OVER VAPOR BARRIER
710	2", R-8 MIN, SPRAYED ON THERMAL INSULATION SYSTEM
712	PRE-FINISHED CONT. METAL CAP & CLEAT OVER
715	ACM METAL PANEL OVER 3" THERMALLY BROKEN Z GIRTS
716	PRE-FINISHED EXTERIOR METAL SOFFIT
717	SINGLE PLY MEMBRANE ROOFING, ROOFING INSULATION AND ROOFING VAPOR BARRIER
718	PRE-FINISHED PROFILE METAL, RANDOM VERTICAL PATTERN, SEE DETAIL ELEVATION
720	MINERAL WOOL SPANDREL INSULATION SYSTEM
726	PRE-FINISHED PROFILE METAL PANEL, HORZONTAL RIB
801	WINDOW SYSTEM
901	METAL STUD FRAMING
905	5/8" TYPE 'X' GYP. BD. PAINTED WHERE EXPOSED
909	SUSPENDED ACOUSTICAL TILE CEILING SYSTEM
910	SUSPENDED GYP. BD. CEILING SYSTEM
2203	ROOF DRAIN
2300	MECHANICAL DUCT PAINTED WHERE EXPOSED
3100	ENGINEERED FILL
3101	FREE DRAINING GRAVEL BASE
3102	FINISH GRADE

VCBO ARCHITECTURE

VCBO ARCHITECTURE
524 SOUTH 600 EAST
SALT LAKE CITY, UT 84102
Phone: (801) 575-8800
Fax: (801) 531-9850
Web: vcbo.com

LICENSED ARCHITECT No. 153912 BRENT R. TIPPETS 8-15-13 STATE OF UTAH

2nd District Juvenile Courthouse

Utah State Courts
08284150
165 West 20th Street, Ogden, Utah
BID DOCUMENTS

Rev #	Date	Description

Job # 12500
Date August 15, 2013
Owner # 08284150
Ins. #

WALL SECTIONS

A316

8/14/2013 2:30:22 PM

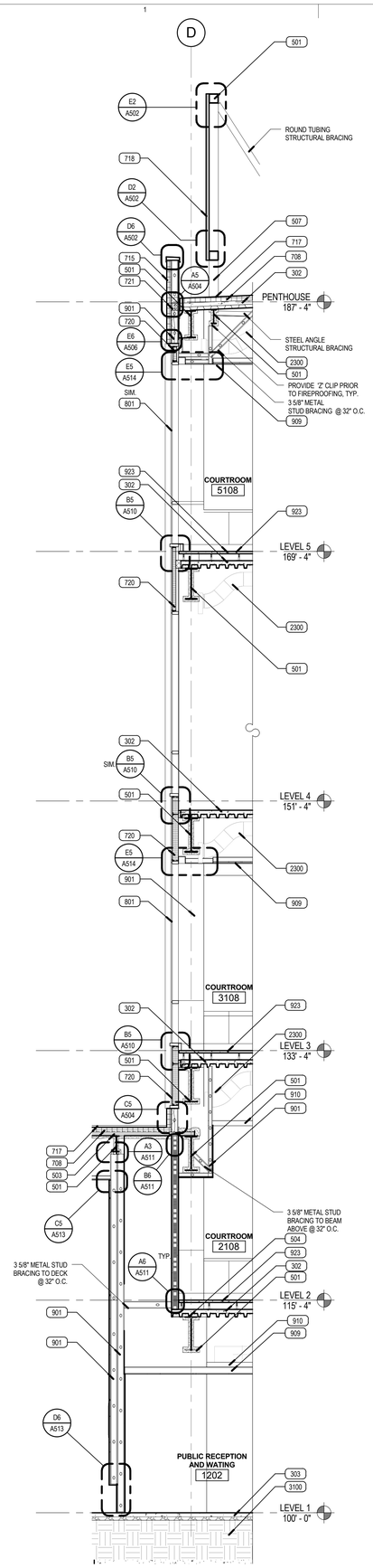

A1 WALL SECTION 7A

SCALE: 1/4" = 1'-0"

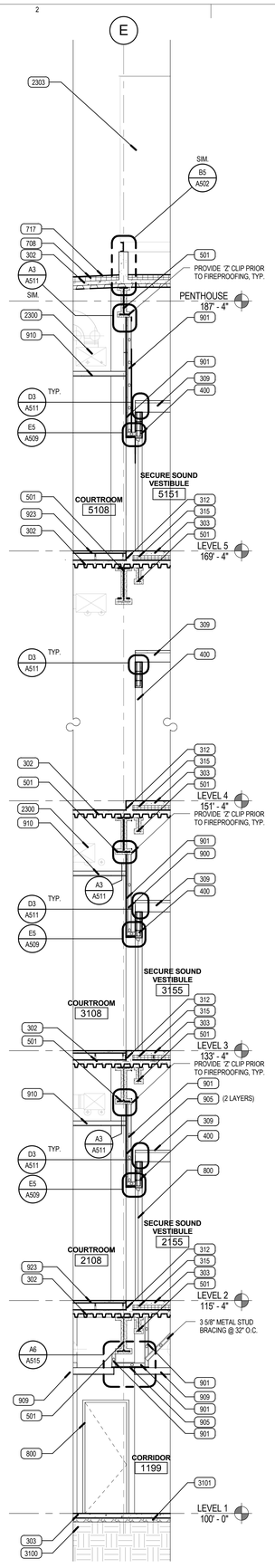

A2 WALL SECTION 7B

SCALE: 1/4" = 1'-0"

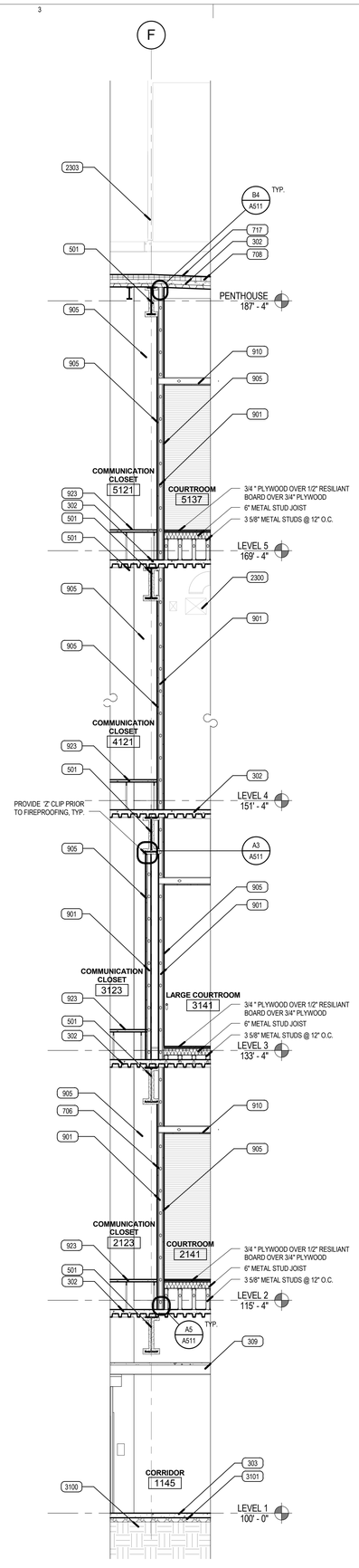

A3 WALL SECTION 7C

SCALE: 1/4" = 1'-0"

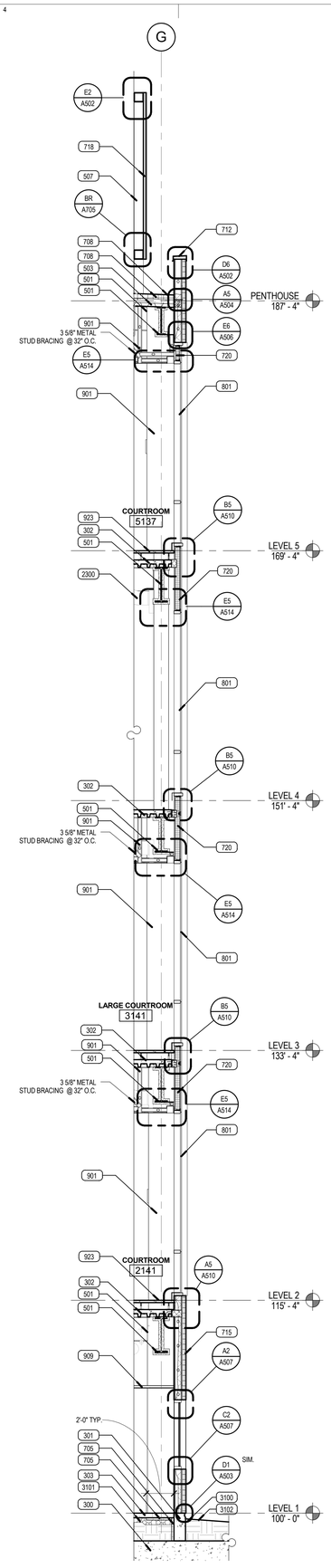

A4 WALL SECTION 7D

SCALE: 1/4" = 1'-0"

KEYED NOTES

300	REINFORCED CONCRETE FOOTING
301	REINFORCED CONCRETE FOUNDATION WALL
302	REINFORCED CONCRETE SLAB ON METAL DECK
303	REINFORCED CONCRETE SLAB
309	PRESTRESED CONCRETE FLOOR PANEL
312	CONCRETE CURB
315	STRUCTURAL FOAM FILL
400	CMU
501	STEEL BEAM PAINTED WHERE EXPOSED
503	STEEL DECK PAINTED WHERE EXPOSED
504	STEEL ANGLE PAINTED WHERE EXPOSED
507	STEEL COLUMN PAINTED WHERE EXPOSED
705	2" RIGID BOARD INSULATION CONTINUOUS, 2' VERTICAL AND 2' HORIZONTAL AT EXTERIOR FOUNDATION WALL
706	BATT INSULATION FULL THICKNESS
708	R-20 ROOF RIGID INSULATION BOARD SYSTEM OVER VAPOR BARRIER
712	PRE-FINISHED CONT. METAL CAP & CLEAT OVER
715	ACM METAL PANEL OVER 3" THERMALLY BROKEN Z GIRTS
717	SINGLE PLY MEMBRANE ROOFING, ROOFING INSULATION AND ROOFING VAPOR BARRIER
718	PRE-FINISHED PROFILE METAL, RANDOM VERTICAL PATTERN, SEE DETAIL ELEVATION
720	MINERAL WOOL SPANDREL INSULATION SYSTEM
721	PERIMETER FIRE STOP SYSTEM
800	SCHEDULED DOOR & FRAME
801	WINDOW SYSTEM
900	METAL STUD FURRING
901	METAL STUD FRAMING
905	5/8" TYPE 'X' GYP. BD. PAINTED WHERE EXPOSED
909	SUSPENDED ACOUSTICAL TILE CEILING SYSTEM
910	SUSPENDED GYP. BD. CEILING SYSTEM
923	ACCESS FLOORING SYSTEM
2300	MECHANICAL DUCT PAINTED WHERE EXPOSED
2303	FAN COIL UNIT
3100	ENGINEERED FILL
3101	FREE DRAINING GRAVEL BASE
3102	FINISH GRADE

VCBO ARCHITECTURE

VCBO ARCHITECTURE
524 SOUTH 600 EAST
SALT LAKE CITY, UT 84102
Phone: (801) 575-8800
Fax: (801) 531-9850
Web: vcbo.com

LICENSED ARCHITECT
No. 153912
BRENT R. TIPPETS
8-15-13
STATE OF UTAH

2nd District Juvenile Courthouse

Utah State Courts
08284150
165 West 20th Street, Ogden, Utah
BID DOCUMENTS

Rev #	Date	Description

Job # 12500
Date August 15, 2013
Owner # 08284150
Ins. #

WALL SECTIONS

A317

8/14/2013 2:30:49 PM

A1 WALL SECTION 8A

SCALE: 1/4" = 1'-0"

A2 WALL SECTION 8B

SCALE: 1/4" = 1'-0"

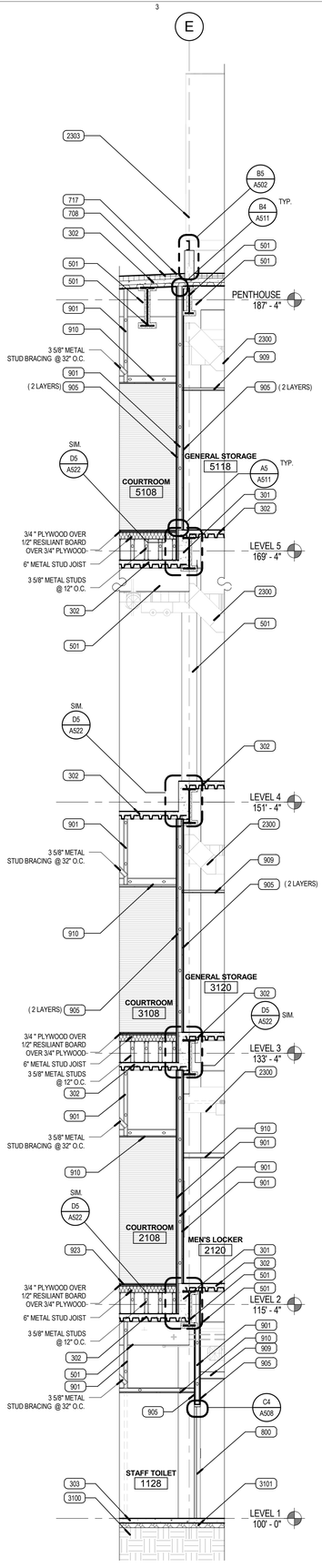

A3 WALL SECTION 8C

SCALE: 1/4" = 1'-0"

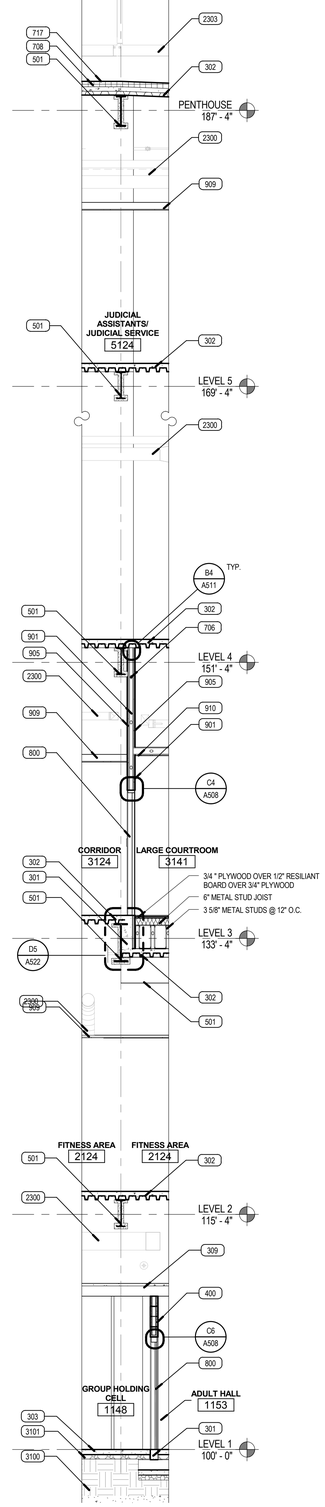

A4 WALL SECTION 8D

SCALE: 1/4" = 1'-0"

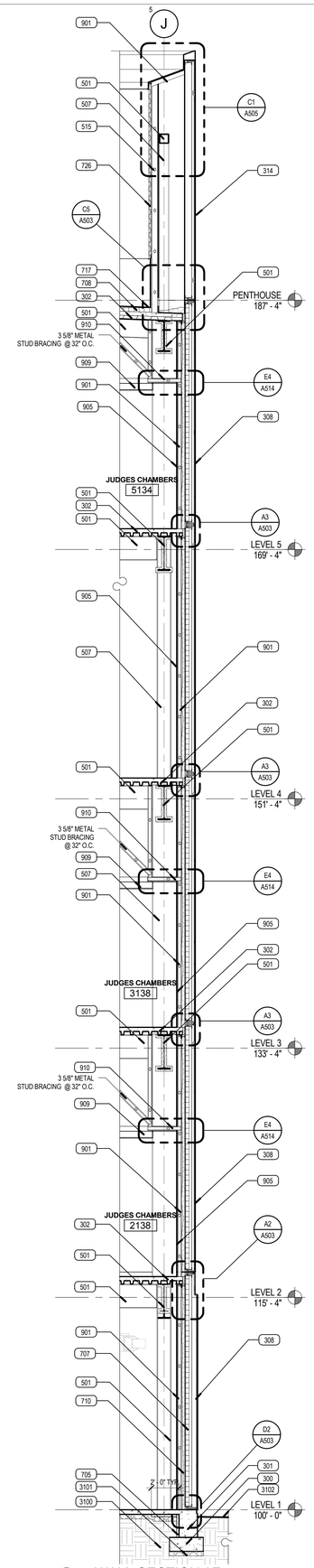

A5 WALL SECTION 8E

SCALE: 1/4" = 1'-0"

KEYED NOTES

300	REINFORCED CONCRETE FOOTING
301	REINFORCED CONCRETE FOUNDATION WALL
302	REINFORCED CONCRETE SLAB ON METAL DECK
303	REINFORCED CONCRETE SLAB
308	GFRC INSULATED WALL ASSEMBLY WITH VAPOR BARRIER
309	PRESTRESED CONCRETE FLOOR PANEL
314	GFRC NON-INSULATED WALL ASSEMBLY
400	CMU
501	STEEL BEAM PAINTED WHERE EXPOSED
503	STEEL DECK PAINTED WHERE EXPOSED
507	STEEL COLUMN PAINTED WHERE EXPOSED
515	COLD ROLLED METAL STUD FRAMING
705	2" RIGID BOARD INSULATION CONTINUOUS, 2" VERTICAL AND 2" HORIZONTAL AT EXTERIOR FOUNDATION WALL
706	BATT INSULATION FULL THICKNESS
707	R-20 RIGID INSULATION BOARD SYSTEM
708	R-20 ROOF RIGID INSULATION BOARD SYSTEM OVER VAPOR BARRIER
710	2", R-8 MIN, SPRAYED ON THERMAL INSULATION SYSTEM
715	ACM METAL PANEL OVER 3" THERMALLY BROKEN Z GIRTS
717	SINGLE PLY MEMBRANE ROOFING, ROOFING INSULATION AND ROOFING VAPOR BARRIER
718	PRE-FINISHED PROFILE METAL, RANDOM VERTICAL PATTERN, SEE DETAIL ELEVATION
720	MINERAL WOOL SPANDREL INSULATION SYSTEM
726	PRE-FINISHED PROFILE METAL PANEL, HORZONTAL RIB
728	3", R-12 MIN, MINERAL WOOL INSULATION
800	SCHEDULED DOOR & FRAME
801	WINDOW SYSTEM
901	
901	METAL STUD FRAMING
905	5/8" TYPE 'X' GYP. BD. PAINTED WHERE EXPOSED
909	SUSPENDED ACOUSTICAL TILE CEILING SYSTEM
910	SUSPENDED GYP. BD. CEILING SYSTEM
923	ACCESS FLOORING SYSTEM
2203	ROOF DRAIN
2300	MECHANICAL DUCT PAINTED WHERE EXPOSED
2303	FAN COIL UNIT
3100	ENGINEERED FILL
3101	FREE DRAINING GRAVEL BASE
3102	FINISH GRADE

VCBO ARCHITECTURE

VCBO ARCHITECTURE
524 SOUTH 600 EAST
SALT LAKE CITY, UT 84102
Phone: (801) 575-8800
Fax: (801) 531-9850
Web: vcbo.com

LICENSED ARCHITECT
No. 153912
BRENT R. TIPPETS
8-15-13
STATE OF UTAH

2nd District Juvenile Courthouse

Utah State Courts
08284150
165 West 20th Street, Ogden, Utah
BID DOCUMENTS

Rev #	Date	Description

Job # 12500
Date August 15, 2013
Owner # 08284150
Ins. #

WALL SECTIONS

A318

8/14/2013 2:31:13 PM

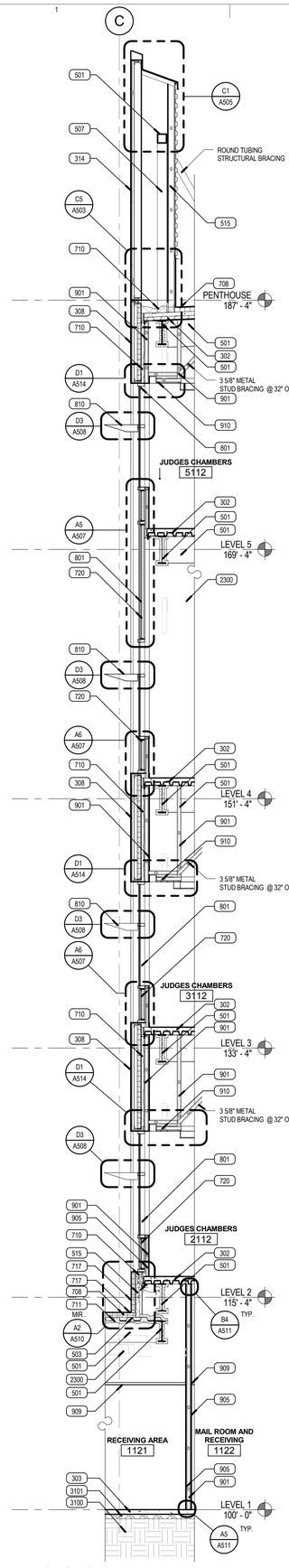

A1 WALL SECTION 9A

SCALE: 1/4" = 1'-0"

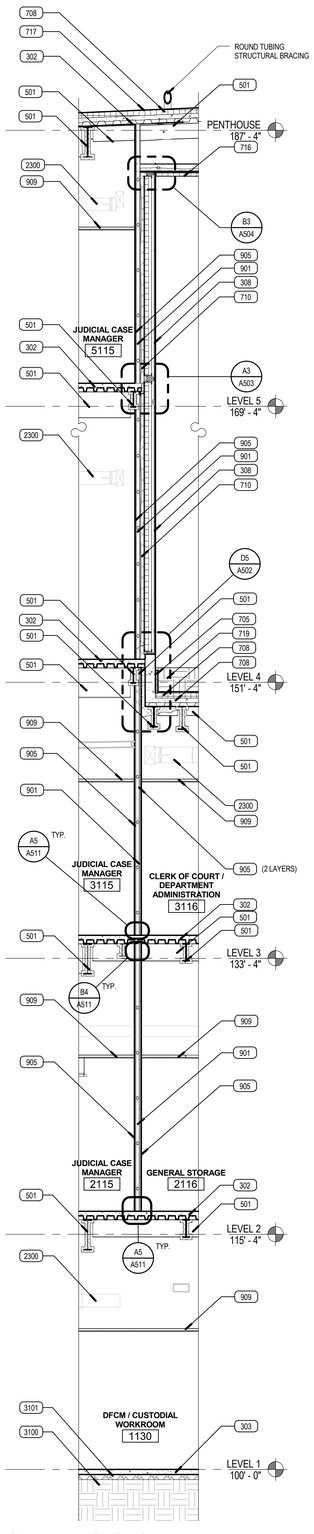

A2 WALL SECTION 9B

SCALE: 1/4" = 1'-0"

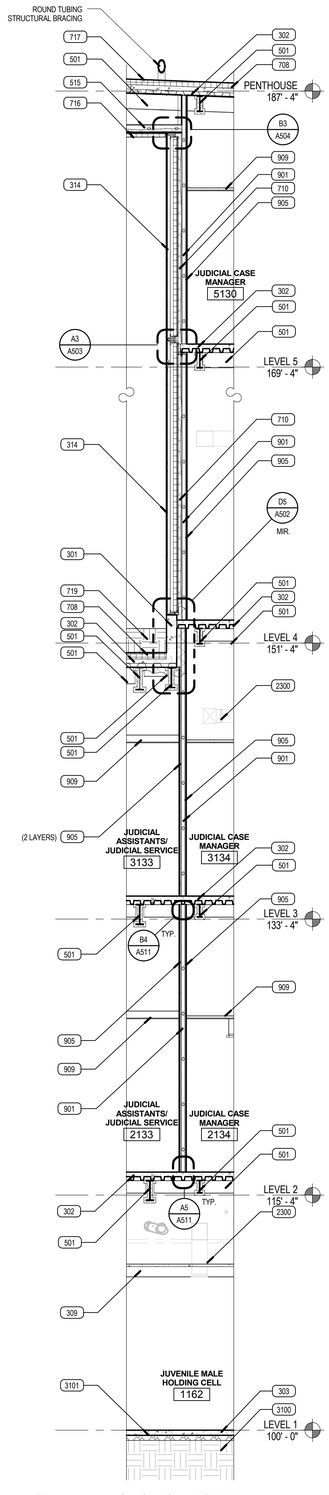

A3 WALL SECTION 9C

SCALE: 1/4" = 1'-0"

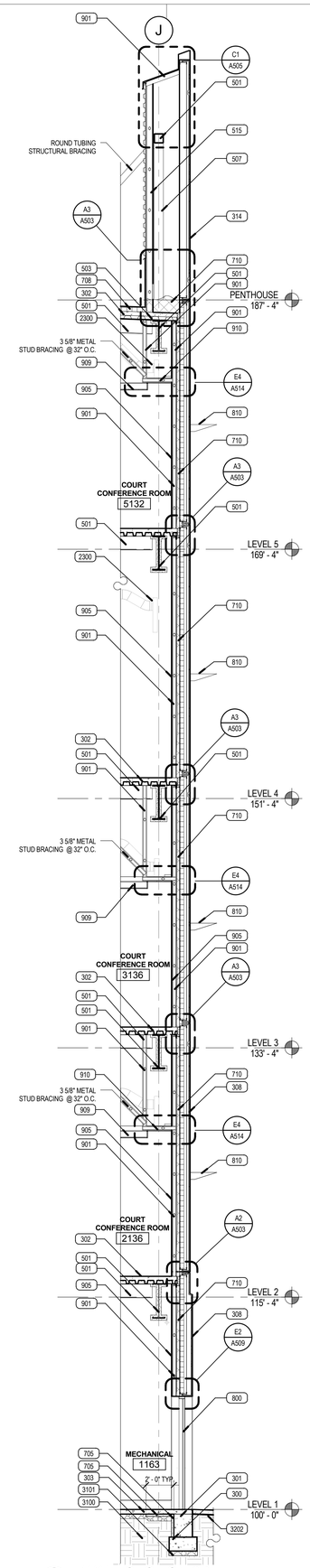

A4 WALL SECTION 9D

SCALE: 1/4" = 1'-0"

KEYED NOTES

300	REINFORCED CONCRETE FOOTING
301	REINFORCED CONCRETE FOUNDATION WALL
302	REINFORCED CONCRETE SLAB ON METAL DECK
303	REINFORCED CONCRETE SLAB
308	GFRC INSULATED WALL ASSEMBLY WITH VAPOR BARRIER
309	PRESTRESSED CONCRETE FLOOR PANEL
314	GFRC NON-INSULATED WALL ASSEMBLY
501	STEEL BEAM PAINTED WHERE EXPOSED
503	STEEL DECK PAINTED WHERE EXPOSED
507	STEEL COLUMN PAINTED WHERE EXPOSED
515	COLD ROLLED METAL STUD FRAMING
705	2" RIGID BOARD INSULATION CONTINUOUS, 2' VERTICAL AND 2' HORIZONTAL AT EXTERIOR FOUNDATION WALL
708	R-20 ROOF RIGID INSULATION BOARD SYSTEM OVER VAPOR BARRIER
710	2", R-8 MIN, SPRAYED ON THERMAL INSULATION SYSTEM
711	FIRE SAFING INSULATION
716	PRE-FINISHED EXTERIOR METAL SOFFIT
717	SINGLE PLY MEMBRANE ROOFING, ROOFING INSULATION AND ROOFING VAPOR BARRIER
719	ROOF GARDEN SYSTEM - SEE LANDSCAPE PLANS FOR SOIL TYPE
720	MINERAL WOOL SPANDREL INSULATION SYSTEM
800	SCHEDULED DOOR & FRAME
801	WINDOW SYSTEM
810	EXTERIOR SUN CONTROL DEVICES
901	METAL STUD FRAMING
905	5/8" TYPE 'X' GYP. BD. PAINTED WHERE EXPOSED
909	SUSPENDED ACOUSTICAL TILE CEILING SYSTEM
910	SUSPENDED GYP. BD. CEILING SYSTEM
2300	MECHANICAL DUCT PAINTED WHERE EXPOSED
3100	ENGINEERED FILL
3101	FREE DRAINING GRAVEL BASE
3202	CONCRETE PAVING W/ SUBBASE W/ CONTROL JOINTS SEE CIVIL DRAWINGS

VCBO ARCHITECTURE

VCBO ARCHITECTURE
524 SOUTH 600 EAST
SALT LAKE CITY, UT 84102
Phone: (801) 575-8800
Fax: (801) 531-9850
Web: vcbo.com

LICENSED ARCHITECT No. 153912 BRENT R. TIPPETS 8-15-13 STATE OF UTAH

2nd District Juvenile Courthouse

Utah State Courts

08284150

165 West 20th Street, Ogden, Utah

BID DOCUMENTS

Rev #	Date	Description

Job # 12500
Date August 15, 2013
Owner # 08284150
Ins. #

WALL SECTIONS

A319

8/14/2013 2:31:37 PM

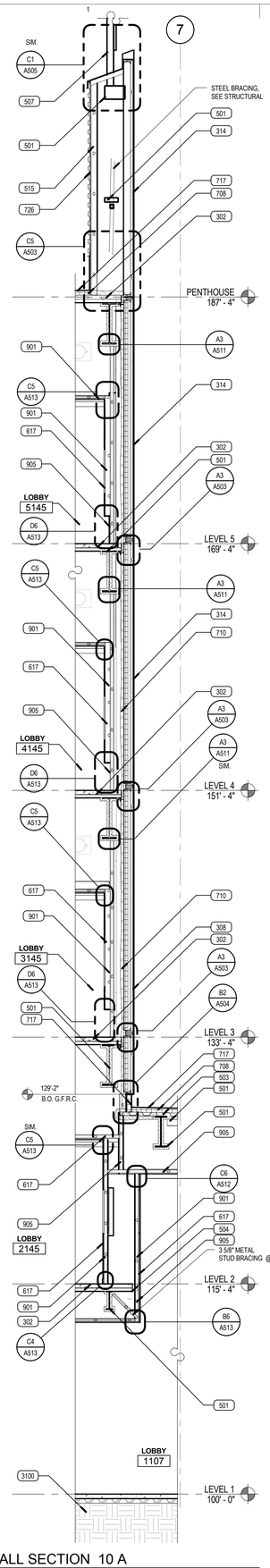

A1 WALL SECTION 10 A

SCALE: 1/4" = 1'-0"

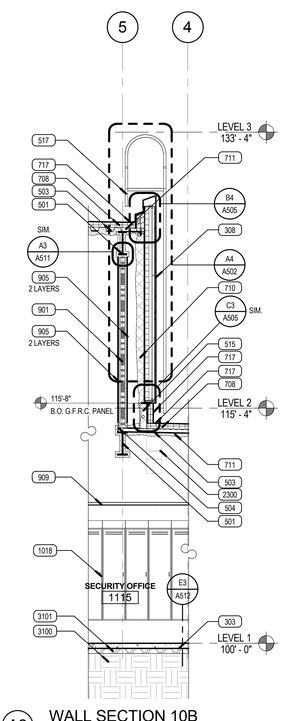

A2 WALL SECTION 10B

SCALE: 1/4" = 1'-0"

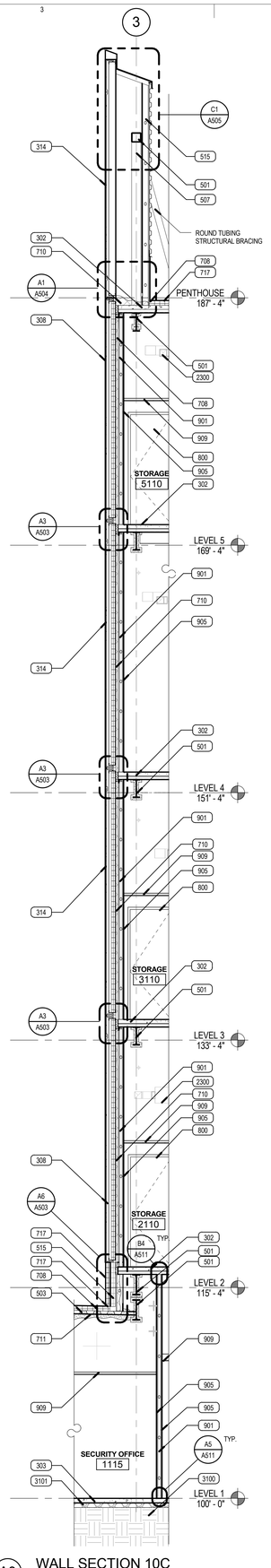

A3 WALL SECTION 10C

SCALE: 1/4" = 1'-0"

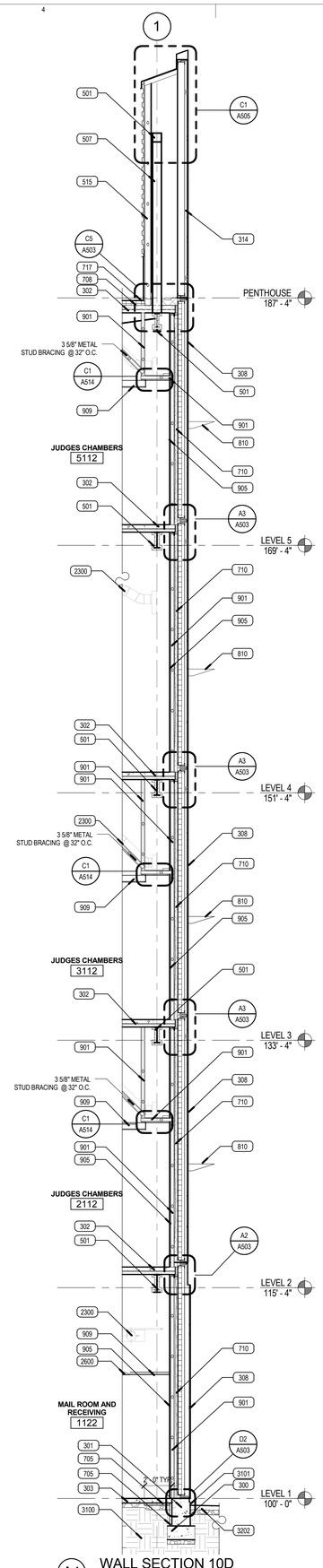

A4 WALL SECTION 10D

SCALE: 1/4" = 1'-0"

KEYED NOTES

300	REINFORCED CONCRETE FOOTING
301	REINFORCED CONCRETE FOUNDATION WALL
302	REINFORCED CONCRETE SLAB ON METAL DECK
303	REINFORCED CONCRETE SLAB
308	GFRC INSULATED WALL ASSEMBLY WITH VAPOR BARRIER
314	GFRC NON-INSULATED WALL ASSEMBLY
501	STEEL BEAM PAINTED WHERE EXPOSED
503	STEEL DECK PAINTED WHERE EXPOSED
504	STEEL ANGLE PAINTED WHERE EXPOSED
507	STEEL COLUMN PAINTED WHERE EXPOSED
515	COLD ROLLED METAL STUD FRAMING
517	ROOF ACCESS LADDER
617	VENEERED 1/4" MDF WOOD PANELS OVER 1/2" MDF SUBSTRATE
705	2" RIGID BOARD INSULATION CONTINUOUS, 2' VERTICAL AND 2' HORIZONTAL AT EXTERIOR FOUNDATION WALL
708	R-20 ROOF RIGID INSULATION BOARD SYSTEM OVER VAPOR BARRIER
710	2", R-8 MIN, SPRAYED ON THERMAL INSULATION SYSTEM
711	FIRE SAFING INSULATION
715	ACM METAL PANEL OVER 3" THERMALLY BROKEN Z GIRTS
717	SINGLE PLY MEMBRANE ROOFING, ROOFING INSULATION AND ROOFING VAPOR BARRIER
718	PRE-FINISHED PROFILE METAL, RANDOM VERTICAL PATTERN, SEE DETAIL ELEVATION
726	PRE-FINISHED PROFILE METAL PANEL, HORZONTAL RIB
800	SCHEDULED DOOR & FRAME
801	WINDOW SYSTEM
810	EXTERIOR SUN CONTROL DEVICES
901	METAL STUD FRAMING
905	5/8" TYPE 'X' GYP. BD. PAINTED WHERE EXPOSED
909	SUSPENDED ACOUSTICAL TILE CEILING SYSTEM
1018	SINGLE TIER 18"X 24"X 72" METAL LAW ENFORCEMENT LOCKERS, SEE ELEVATIONS
2300	MECHANICAL DUCT PAINTED WHERE EXPOSED
2600	LIGHT FIXTURE
3100	ENGINEERED FILL
3101	FREE DRAINING GRAVEL BASE
3202	CONCRETE PAVING W/ SUBBASE W/ CONTROL JOINTS SEE CIVIL DRAWINGS
3203	PAINTED PARKING STRIPE OR GRAPHIC - PAINT COLOR TO BE WHITE

VCBO ARCHITECTURE

VCBO ARCHITECTURE
524 SOUTH 600 EAST
SALT LAKE CITY, UT 84102
Phone: (801) 575-8800
Fax: (801) 531-9850
Web: vcbo.com

LICENSED ARCHITECT
No. 153912
BRENT R. TIPPETS
8-15-13
STATE OF UTAH

2nd District Juvenile Courthouse

Utah State Courts
08284150
165 West 20th Street, Ogden, Utah
BID DOCUMENTS

Rev #	Date	Description

Job # 12500
Date August 15, 2013
Owner # 08284150
Ins. #

WALL SECTIONS

A320

8/14/2013 2:31:54 PM

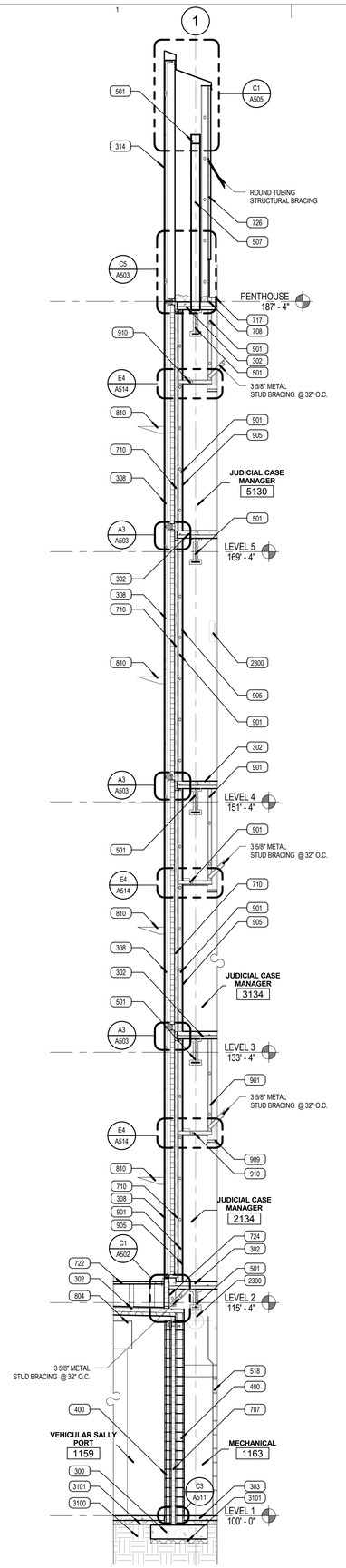

A1 WALL SECTION 11 A

SCALE: 1/4" = 1'-0"

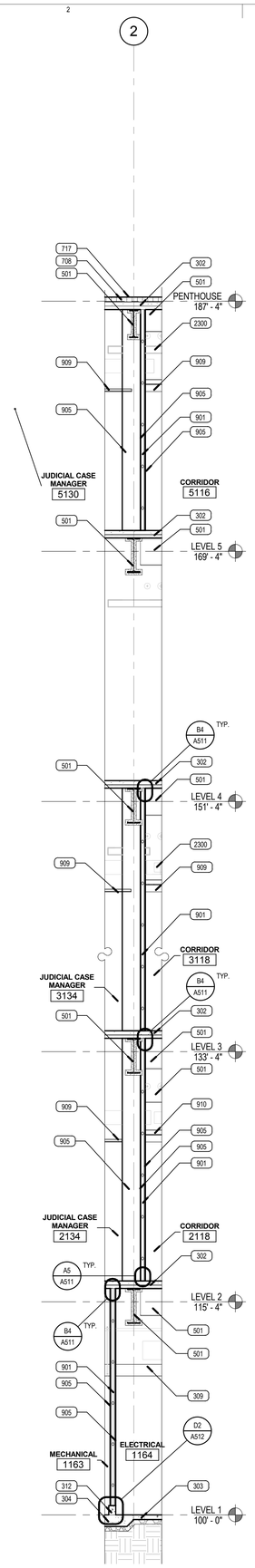

A2 WALL SECTION 11B

SCALE: 1/4" = 1'-0"

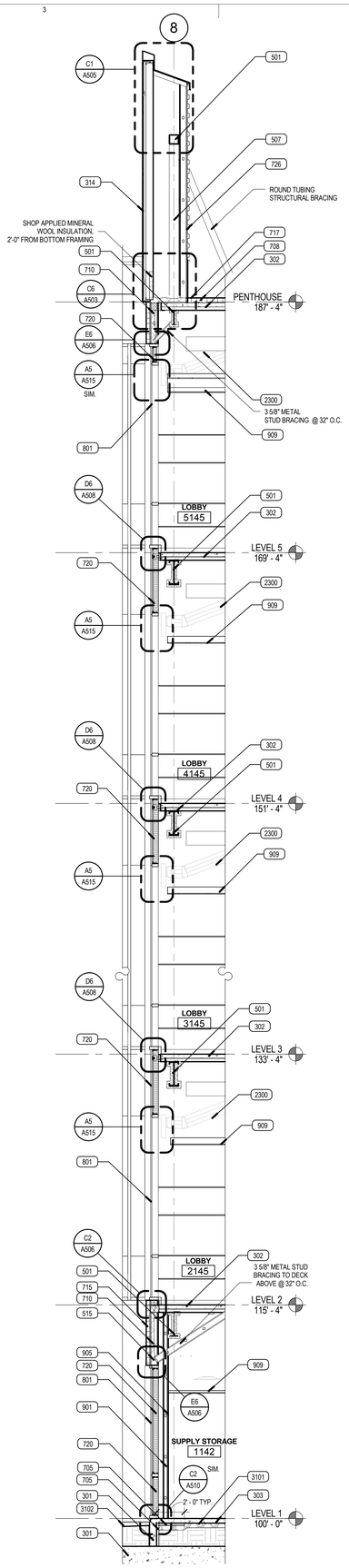

A3 WALL SECTION 11C

SCALE: 1/4" = 1'-0"

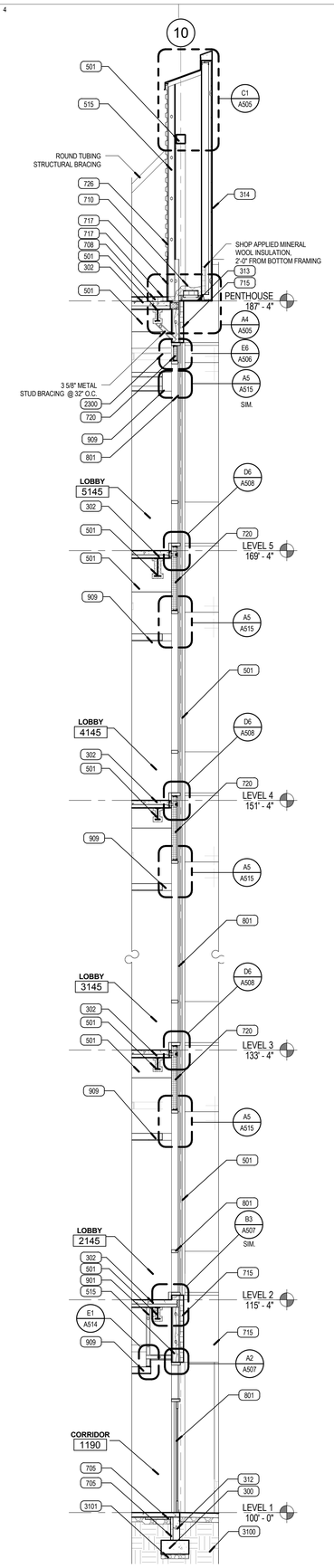

A4 WALL SECTION 11D

SCALE: 1/4" = 1'-0"

KEYED NOTES

300	REINFORCED CONCRETE FOOTING
301	REINFORCED CONCRETE FOUNDATION WALL
302	REINFORCED CONCRETE SLAB ON METAL DECK
303	REINFORCED CONCRETE SLAB
304	THICKENED REINFORCED SLAB
308	GFRC INSULATED WALL ASSEMBLY WITH VAPOR BARRIER
309	PRESTRESED CONCRETE FLOOR PANEL
312	CONCRETE CURB
313	GFRC SOFFIT PANEL
314	GFRC NON-INSULATED WALL ASSEMBLY
400	CMU
501	STEEL BEAM PAINTED WHERE EXPOSED
507	STEEL COLUMN PAINTED WHERE EXPOSED
515	COLD ROLLED METAL STUD FRAMING
518	STEEL LADDER, PAINTED
705	2" RIGID BOARD INSULATION CONTINUOUS, 2' VERTICAL AND 2' HORIZONTAL AT EXTERIOR FOUNDATION WALL
707	R-20 RIGID INSULATION BOARD SYSTEM
708	R-20 ROOF RIGID INSULATION BOARD SYSTEM OVER VAPOR BARRIER
710	2", R-8 MIN, SPRAYED ON THERMAL INSULATION SYSTEM
715	ACM METAL PANEL OVER 3" THERMALLY BROKEN Z GIRTS
717	SINGLE PLY MEMBRANE ROOFING, ROOFING INSULATION AND ROOFING VAPOR BARRIER
720	MINERAL WOOL SPANDREL INSULATION SYSTEM
722	PROTECTIVE WALKABLE ROOF SURFACE, 4'-0" WIDE, U.N.O.
724	ROOF EXPANSION JOINT
726	PRE-FINISHED PROFILE METAL PANEL, HORZONTAL RIB
801	WINDOW SYSTEM
804	OVERHEAD COILING DOOR
810	EXTERIOR SUN CONTROL DEVICES
901	METAL STUD FRAMING
905	5/8" TYPE 'X' GYP. BD. PAINTED WHERE EXPOSED
909	SUSPENDED ACOUSTICAL TILE CEILING SYSTEM
910	SUSPENDED GYP. BD. CEILING SYSTEM
2300	MECHANICAL DUCT PAINTED WHERE EXPOSED
2303	FAN COIL UNIT
3100	ENGINEERED FILL
3101	FREE DRAINING GRAVEL BASE
3102	FINISH GRADE

VCBO ARCHITECTURE

VCBO ARCHITECTURE
524 SOUTH 600 EAST
SALT LAKE CITY, UT 84102
Phone: (801) 575-8800
Fax: (801) 531-9850
Web: vcbo.com

2nd District Juvenile Courthouse

Utah State Courts
08284150
165 West 20th Street, Ogden, Utah
BID DOCUMENTS

Rev #	Date	Description

Job # 12500
Date August 15, 2013
Owner # 08284150
Ins. #

WALL SECTIONS

A321

8/14/2013 2:32:09 PM

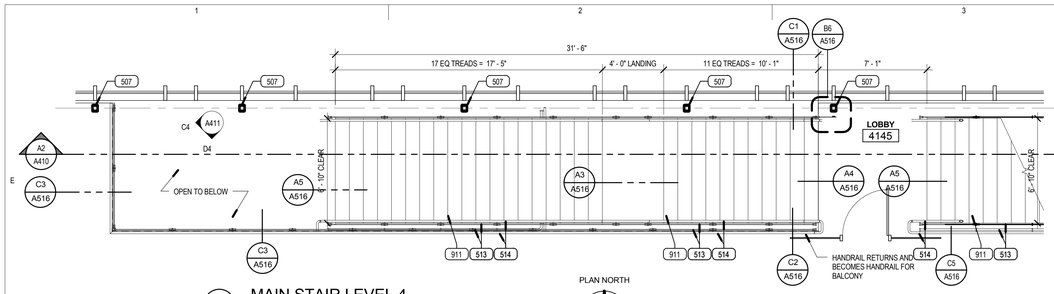

E1 MAIN STAIR LEVEL 4

SCALE: 1/4" = 1'-0"

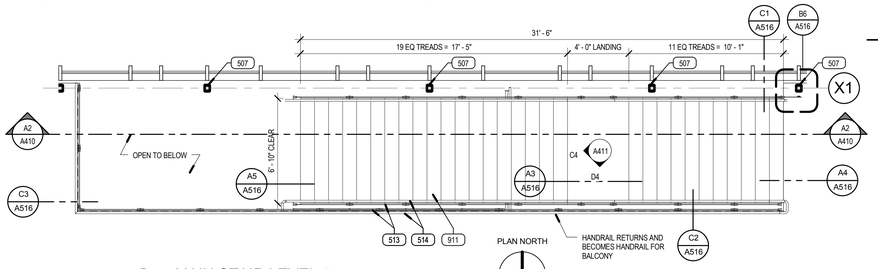

E4 MAIN STAIR LEVEL 5

SCALE: 1/4" = 1'-0"

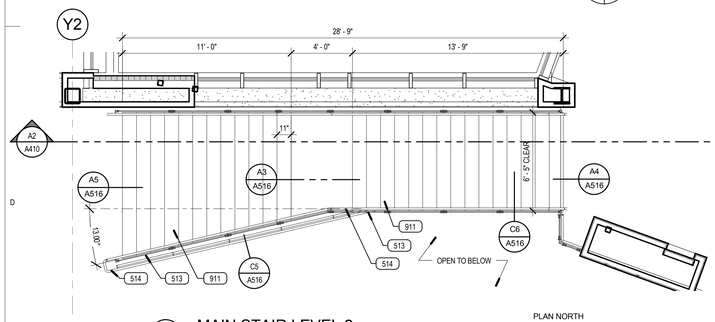

D1 MAIN STAIR LEVEL 2

SCALE: 1/4" = 1'-0"

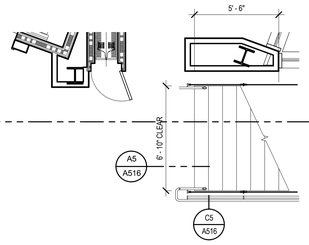

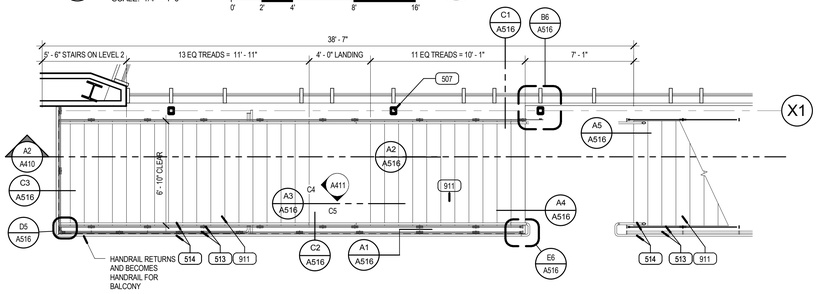

D4 MAIN STAIR LEVEL 3

SCALE: 1/4" = 1'-0"

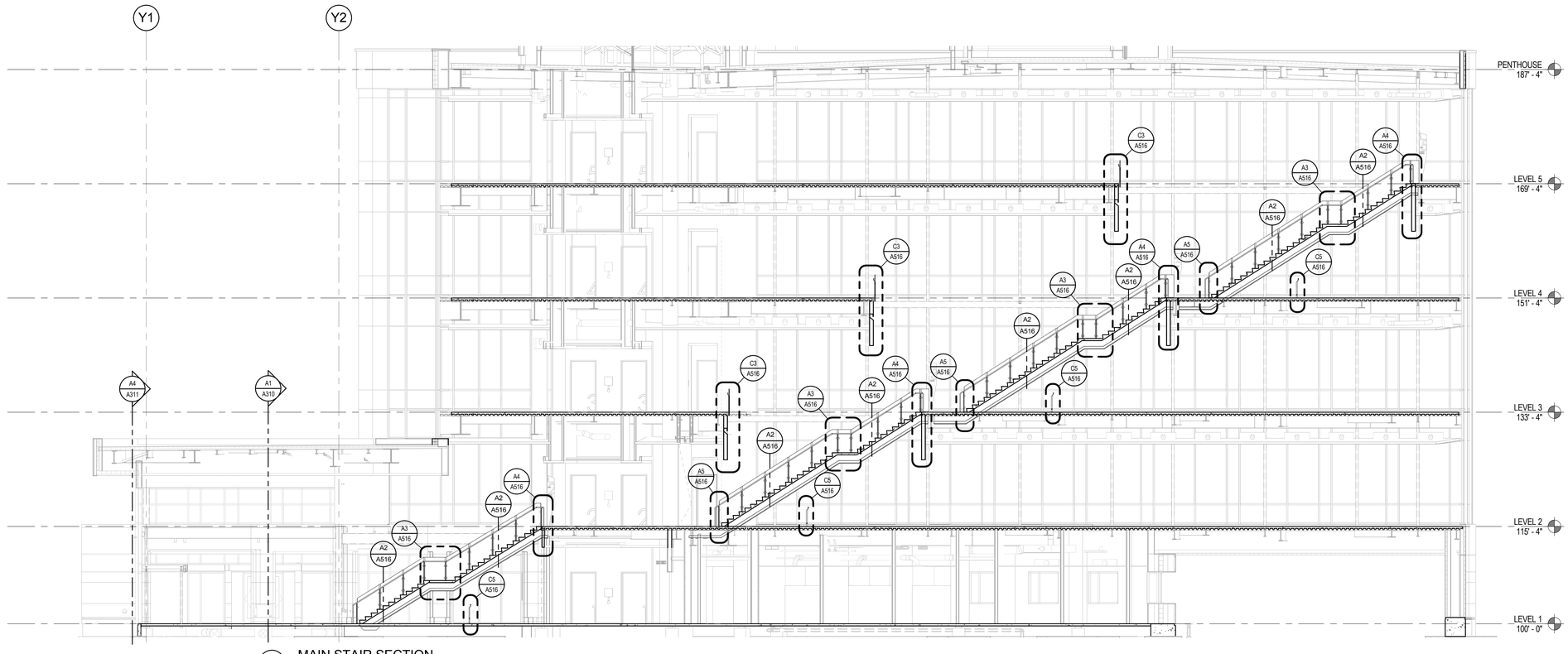

A2 MAIN STAIR SECTION

SCALE: 1/8" = 1'-0"

KEYED NOTES

507	STEEL COLUMN PAINTED WHERE EXPOSED
513	DECORATIVE GLASS RAILING
514	1 1/2" DIA. STAINLESS STEEL HANDRAIL
911	PRE-MANUFACTURED TERRAZZO STAIR TREAD

NOTE:
DIMENSIONS SHOWN FOR THE ELEVATOR HOISTWAY ARE BASED ON MINIMUM DIMENSIONS OF SEVERAL ELEVATOR MANUFACTURERS

THE ACTUAL DIMENSIONS OF THE ELEVATOR SHAFT, DEPTH OF THE PIT AND OVERHEAD CLEAR HEIGHT SHALL BE VERIFIED BY THE CONTRACTOR BEFORE FOUNDATIONS ARE CONSTRUCTED.

BID NOTE: CONTRACTOR SHALL CERTIFY THAT ANY OTHER ELEVATOR BID WILL FIT INTO THE SHAFTS AS DESIGNED AND ALL COSTS ASSOCIATED WITH ADJUSTMENTS ARE CAPTURED INTO THE BASE BID AND WILL NOT BE A CHANGE ORDER FOR THE OWNER. **THIS INCLUDES ANY ADDITIONAL STEEL NEEDED FOR RAIL ATTACHMENTS AND HOIST BEAM CONFIGURATIONS INCLUDING STEEL RAIL SUPPORTS INSIDE THE SHAFT WALL.**

AT ALL ELEVATOR SHAFT LOCATIONS AND EQUIPMENT CLOSETS THERE SHALL BE NO CONDUIT, PIPING, DUCTWORK, ETC. THAT IS NOT ASSOCIATED WITH THE ELEVATOR SYSTEM.

VCBO ARCHITECTURE
VCBO ARCHITECTURE
524 SOUTH 600 EAST
SALT LAKE CITY, UT 84102
Phone: (801) 575-8800
Fax: (801) 531-9850
Web: vcbo.com

LICENSED ARCHITECT
No. 153912
BRENT R. TIPPETS
8-15-13
STATE OF UTAH

2nd District Juvenile Courthouse

Utah State Courts
08284150
165 West 20th Street, Ogden, Utah
BID DOCUMENTS

Rev #	Date	Description

Job # 12500
Date August 15, 2013
Owner # 08284150
Ins. #

STAIR PLANS, ELEVATIONS & SECTIONS

A410

8/14/2013 2:32:40 PM

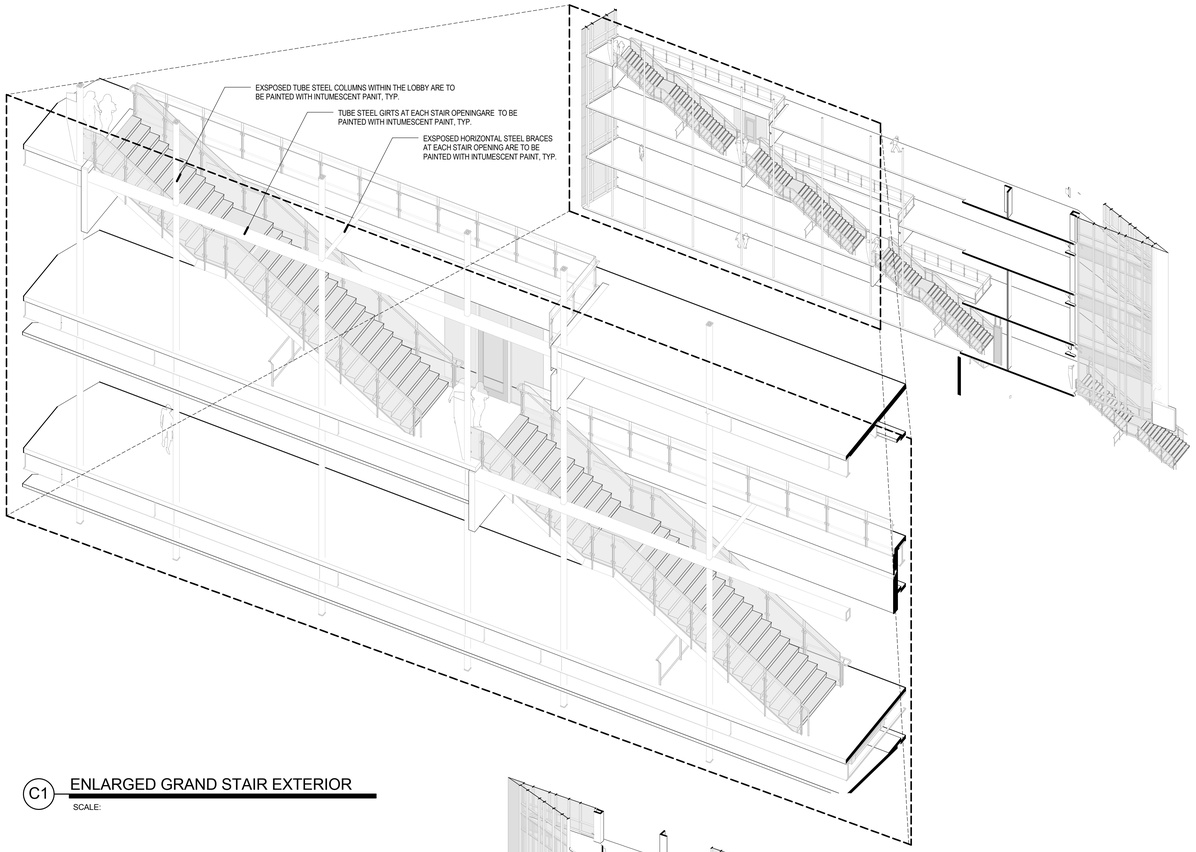

C1 ENLARGED GRAND STAIR EXTERIOR

SCALE:

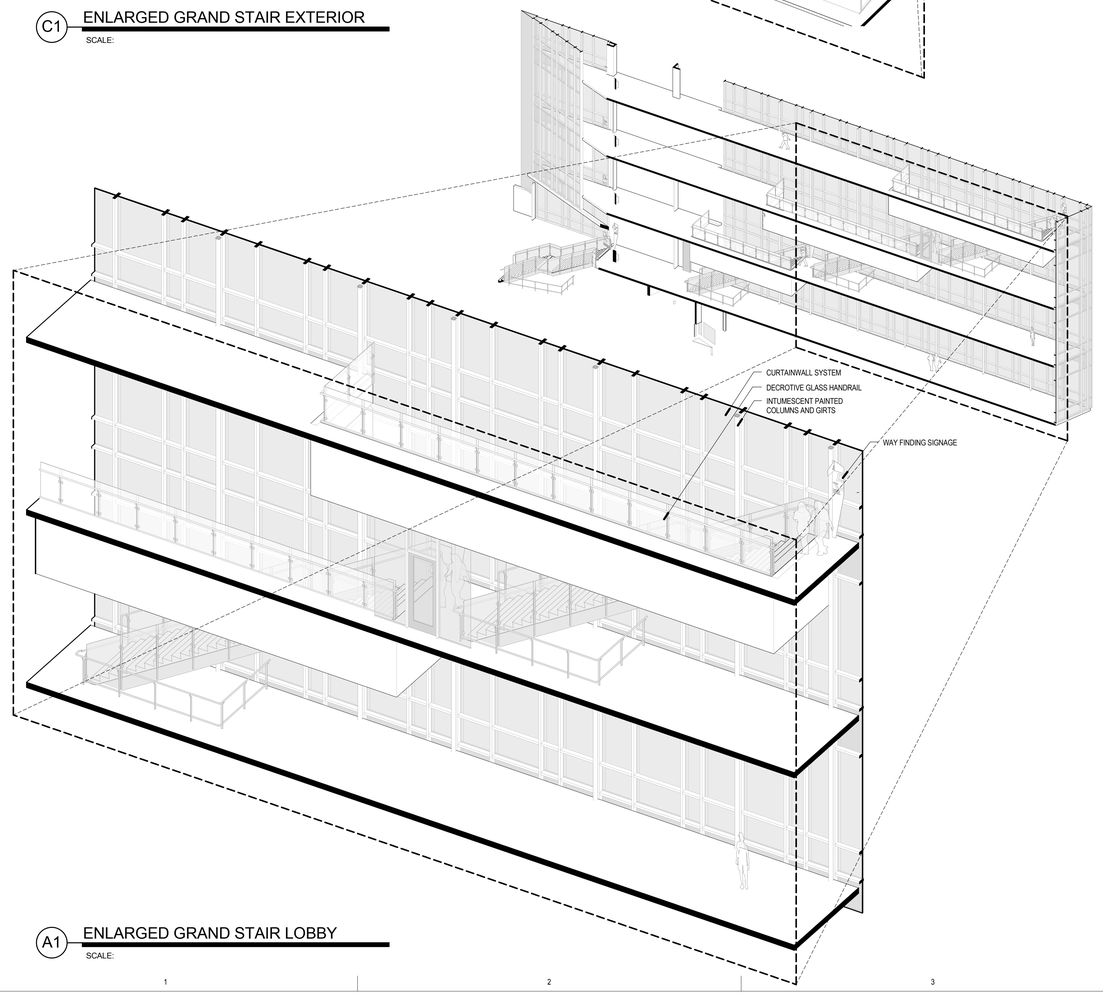

A1 ENLARGED GRAND STAIR LOBBY

SCALE:

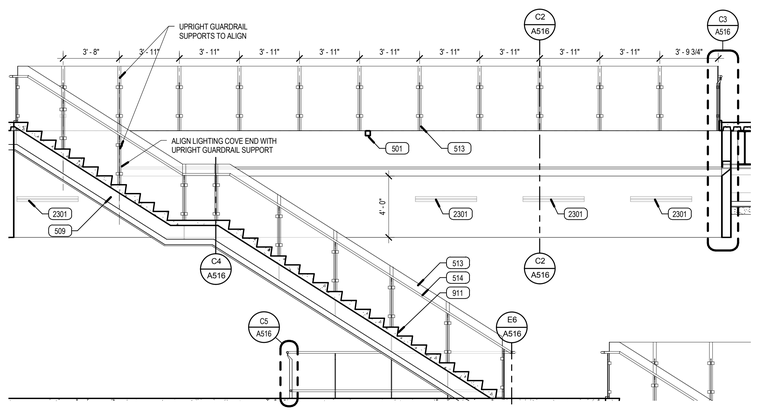

D4 SMOKE BAFFLE STAIR ELEVATION
LEVEL 4 AND LEVEL 5

SCALE: 1/4" = 1'-0"

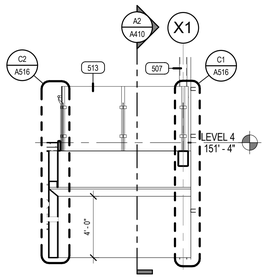

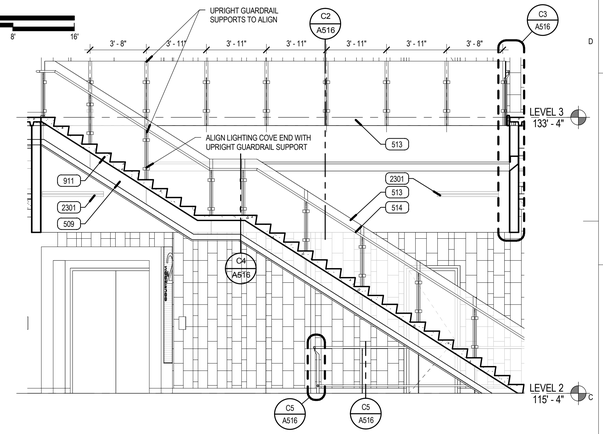

C4 SMOKE BAFFLE END ELEVATION

SCALE: 1/4" = 1'-0"

C5 LEVEL 3 SMOKE BAFFLE ELEVATION

SCALE: 1/4" = 1'-0"

VCBO ARCHITECTURE

VCBO ARCHITECTURE
524 SOUTH 600 EAST
SALT LAKE CITY, UT 84102
Phone: (801) 575-8800
Fax: (801) 531-9850
Web: vcbo.com

2nd District Juvenile Courthouse

Utah State Courts
08284150
165 West 20th Street, Ogden, Utah
BID DOCUMENTS

Rev #	Date	Description

Job # 12500
Date August 15, 2013
Owner # 08284150
Ins. #

STAIR PLANS, ELEVATIONS & SECTIONS

A411

8/14/2013 2:33:12 PM

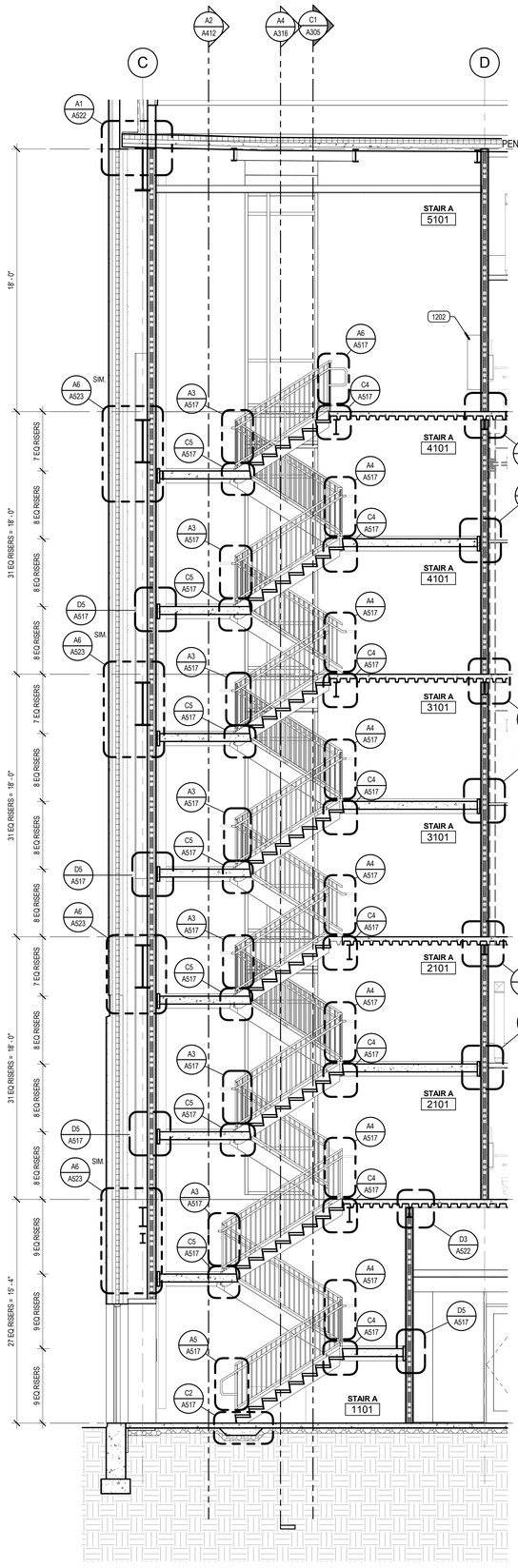

A1 STAIR A SECTION A

SCALE: 1/4" = 1'-0"

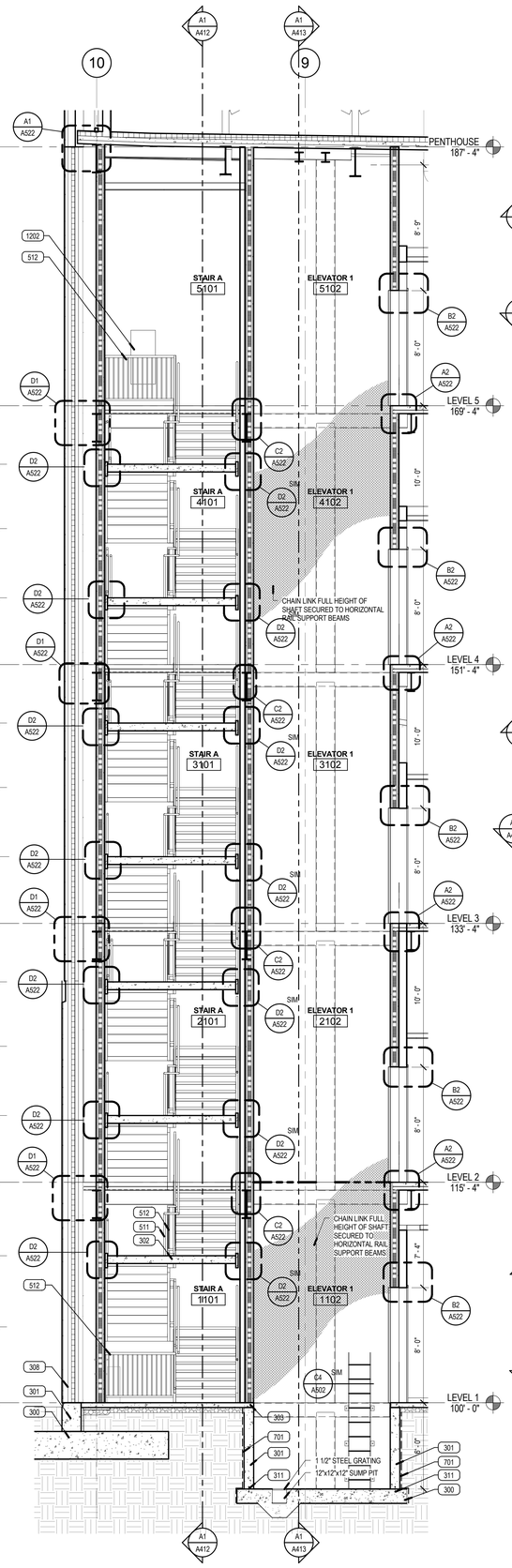

A2 STAIR A SECTION B

SCALE: 1/4" = 1'-0"

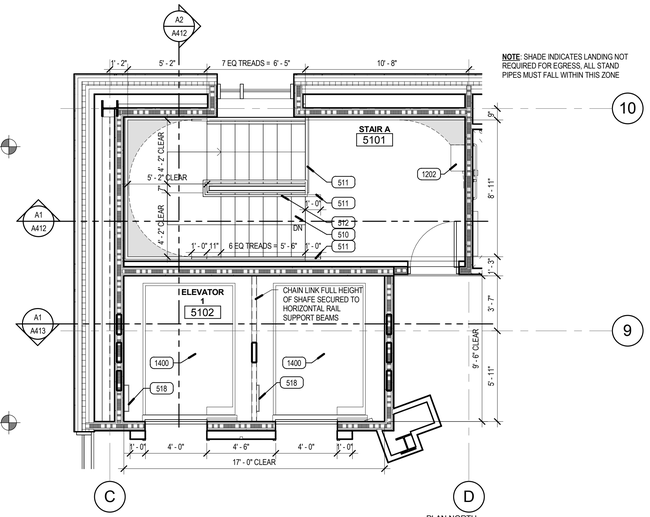

D4 STAIR A ELEVATOR1 LEVEL 5

SCALE: 1/4" = 1'-0"

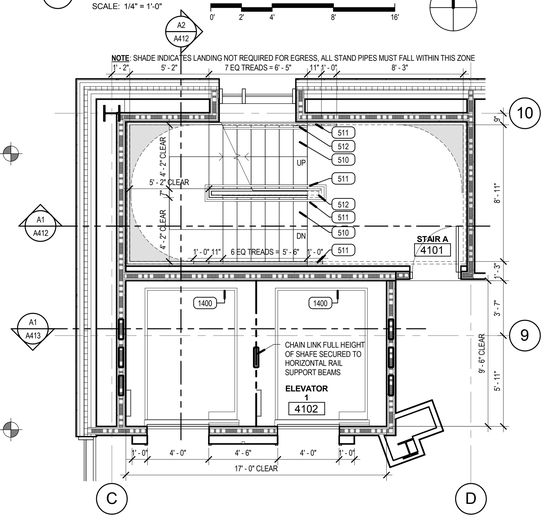

B4 STAIR A ELEVATOR1 LEVEL 4

SCALE: 1/4" = 1'-0"

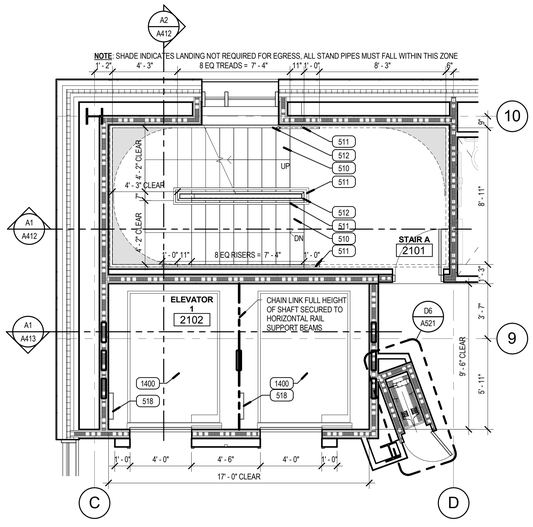

B5 STAIR A ELEVATOR1 LEVEL 2

SCALE: 1/4" = 1'-0"

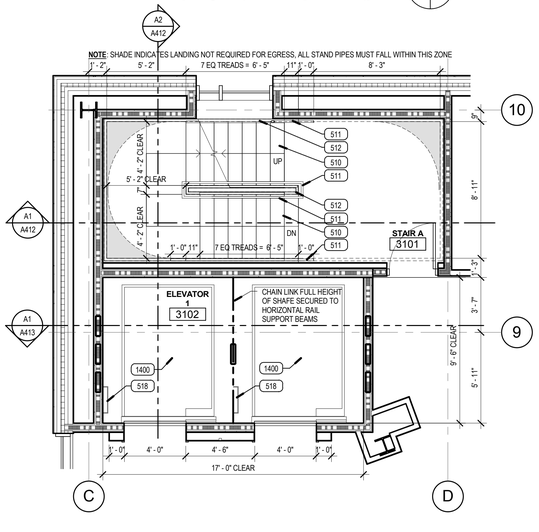

A4 STAIR A ELEVATOR1 LEVEL 3

SCALE: 1/4" = 1'-0"

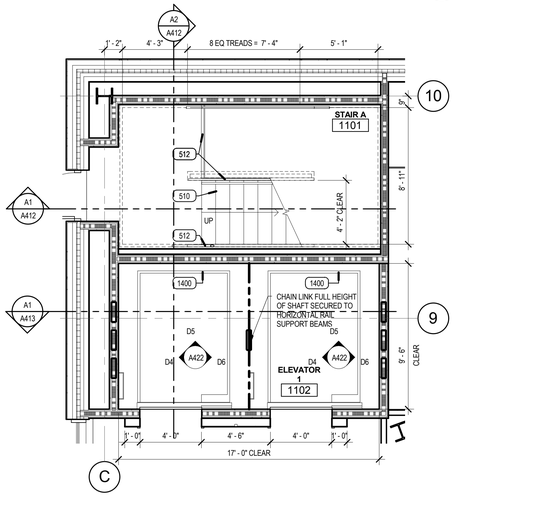

A5 STAIR A ELEVATOR1 LEVEL 1

SCALE: 1/4" = 1'-0"

KEYED NOTES

300	REINFORCED CONCRETE FOOTING
301	REINFORCED CONCRETE FOUNDATION WALL
302	REINFORCED CONCRETE SLAB ON METAL DECK
303	REINFORCED CONCRETE SLAB
308	GFRC INSULATED WALL ASSEMBLY WITH VAPOR BARRIER
311	BENTONITE WATER STOP
510	CONCRETE FILLED METAL PAN STAIRS
511	1 1/2" DIA. STEEL PIPE HANDRAIL PAINTED
512	STEEL GUARDRAIL, PAINTED
518	STEEL LADDER, PAINTED
701	DAMP PROOFING WITH PROTECTION BOARD
1202	WALL MOUNTED EVACUATION CHAIR AND CABINET
1400	ELEVATORS

NOTE:
DIMENSIONS SHOWN FOR THE ELEVATOR HOISTWAY ARE BASED ON MINIMUM DIMENSIONS OF SEVERAL ELEVATOR MANUFACTURERS

THE ACTUAL DIMENSIONS OF THE ELEVATOR SHAFT, DEPTH OF THE PIT AND OVERHEAD CLEAR HEIGHT SHALL BE VERIFIED BY THE CONTRACTOR BEFORE FOUNDATIONS ARE CONSTRUCTED.

BID NOTE: CONTRACTOR SHALL CERTIFY THAT ANY OTHER ELEVATOR BID WILL FIT INTO THE SHAFTS AS DESIGNED AND ALL COSTS ASSOCIATED WITH ADJUSTMENTS ARE CAPTURED INTO THE BASE BID AND WILL NOT BE A CHANGE ORDER FOR THE OWNER. **THIS INCLUDES ANY ADDITIONAL STEEL NEEDED FOR RAIL ATTACHMENTS AND HOIST BEAM CONFIGURATIONS INCLUDING STEEL RAIL SUPPORTS INSIDE THE SHAFT WALL.**

AT ALL ELEVATOR SHAFT LOCATIONS AND EQUIPMENT CLOSETS THERE SHALL BE NO CONDUIT, PIPING, DUCTWORK, ETC. THAT IS NOT ASSOCIATED WITH THE ELEVATOR SYSTEM.

VCBO ARCHITECTURE
524 SOUTH 600 EAST
SALT LAKE CITY, UT 84102
Phone: (801) 575-8800
Fax: (801) 531-9850
Web: vcbo.com

LICENSED ARCHITECT No. 153912 BRENT R. TIPPETS 8-15-12 STATE OF UTAH

2nd District Juvenile Courthouse

Utah State Courts
08284150
165 West 20th Street, Ogden, Utah
BID DOCUMENTS

Rev #	Date	Description

Job # 12500
Date August 15, 2013
Owner # 08284150
Ins. #

STAIR PLANS, ELEVATIONS & SECTIONS

A412

8/14/2013 2:33:36 PM

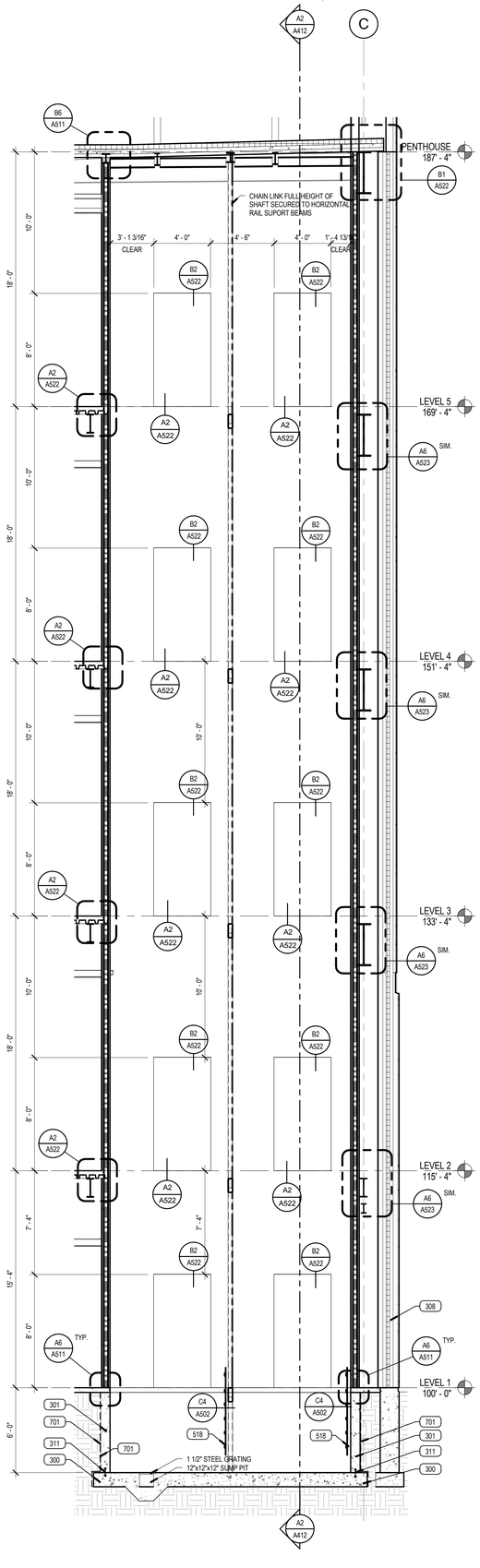

A1 ELEVATOR1 SECTION A

SCALE: 1/4" = 1'-0"

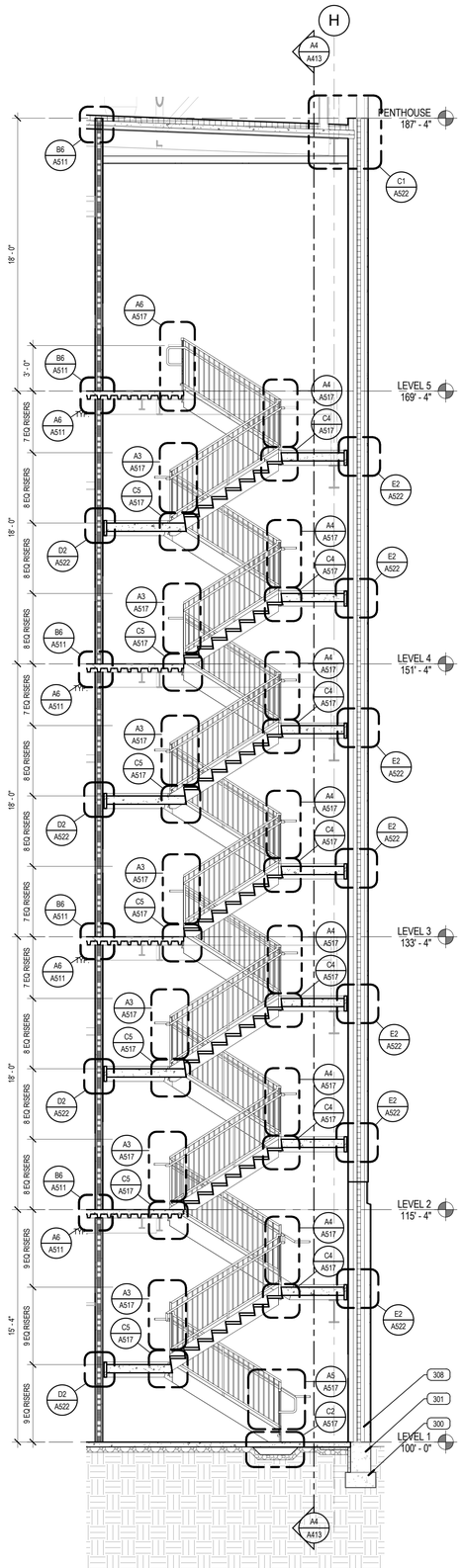

A2 STAIR B SECTION A

SCALE: 1/4" = 1'-0"

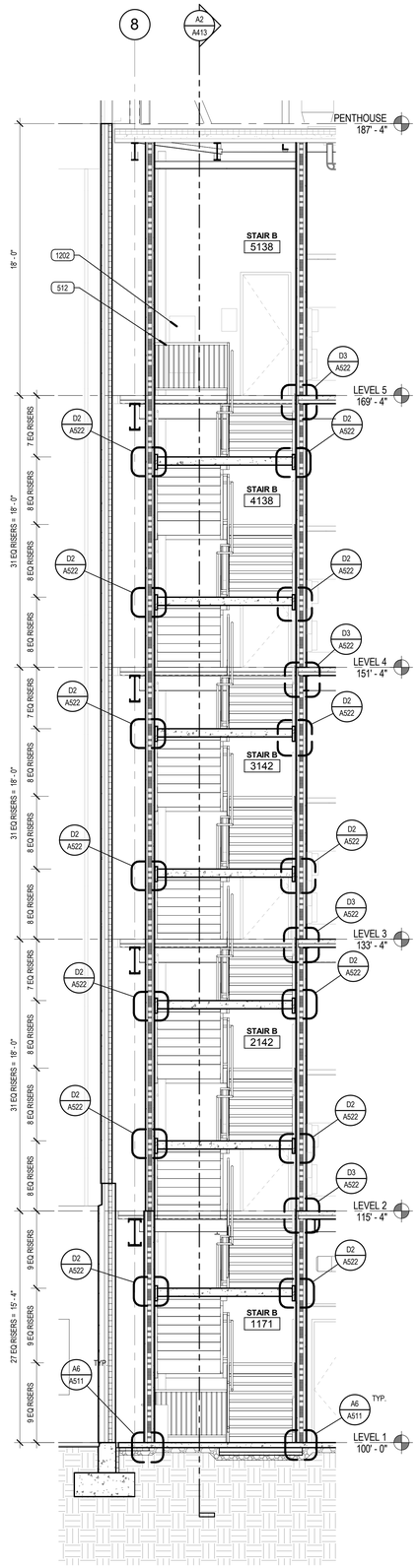

A4 STAIR B SECTION C

SCALE: 1/4" = 1'-0"

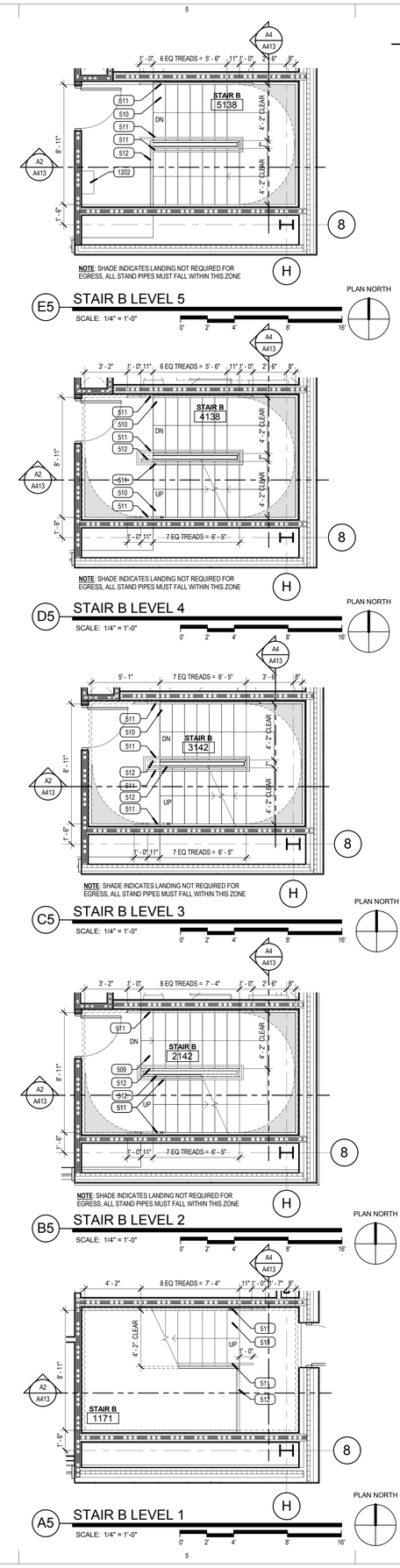

E5 STAIR B LEVEL 5

SCALE: 1/4" = 1'-0"

D5 STAIR B LEVEL 4

SCALE: 1/4" = 1'-0"

C5 STAIR B LEVEL 3

SCALE: 1/4" = 1'-0"

B5 STAIR B LEVEL 2

SCALE: 1/4" = 1'-0"

A5 STAIR B LEVEL 1

SCALE: 1/4" = 1'-0"

PLAN NORTH

KEYED NOTES

300	REINFORCED CONCRETE FOOTING
301	REINFORCED CONCRETE FOUNDATION WALL
308	GFRC INSULATED WALL ASSEMBLY WITH VAPOR BARRIER
311	BENTONITE WATER STOP
509	STEEL STAIR STRINGER, PAINTED
510	CONCRETE FILLED METAL PAN STAIRS
511	1 1/2" DIA. STEEL PIPE HANDRAIL PAINTED
512	STEEL GUARDRAIL, PAINTED
518	STEEL LADDER, PAINTED
701	DAMP PROOFING WITH PROTECTION BOARD
1202	WALL MOUNTED EVACUATION CHAIR AND CABINET

NOTE:
DIMENSIONS SHOWN FOR THE ELEVATOR HOISTWAY ARE BASED ON MINIMUM DIMENSIONS OF SEVERAL ELEVATOR MANUFACTURERS

THE ACTUAL DIMENSIONS OF THE ELEVATOR SHAFT, DEPTH OF THE PIT AND OVERHEAD CLEAR HEIGHT SHALL BE VERIFIED BY THE CONTRACTOR BEFORE FOUNDATIONS ARE CONSTRUCTED.

BID NOTE: CONTRACTOR SHALL CERTIFY THAT ANY OTHER ELEVATOR BID WILL FIT INTO THE SHAFTS AS DESIGNED AND ALL COSTS ASSOCIATED WITH ADJUSTMENTS ARE CAPTURED INTO THE BASE BID AND WILL NOT BE A CHANGE ORDER FOR THE OWNER. **THIS INCLUDES ANY ADDITIONAL STEEL NEEDED FOR RAIL ATTACHMENTS AND HOIST BEAM CONFIGURATIONS INCLUDING STEEL RAIL SUPPORTS INSIDE THE SHAFT WALL.**

AT ALL ELEVATOR SHAFT LOCATIONS AND EQUIPMENT CLOSETS THERE SHALL BE NO CONDUIT, PIPING, DUCTWORK, ETC. THAT IS NOT ASSOCIATED WITH THE ELEVATOR SYSTEM.

VCBO ARCHITECTURE
VCBO ARCHITECTURE
524 SOUTH 600 EAST
SALT LAKE CITY, UT 84102
Phone: (801) 575-8800
Fax: (801) 531-9850
Web: vcbo.com

LICENSED ARCHITECT No. 153912 BRENT R. TIPPETS 8-15-13 STATE OF UTAH

2nd District Juvenile Courthouse

Utah State Courts
08284150
165 West 20th Street, Ogden, Utah
BID DOCUMENTS

Rev #	Date	Description

Job # 12500
Date August 15, 2013
Owner # 08284150
Ins. #

STAIR PLANS, ELEVATIONS & SECTIONS

A413

8/14/2013 2:33:58 PM

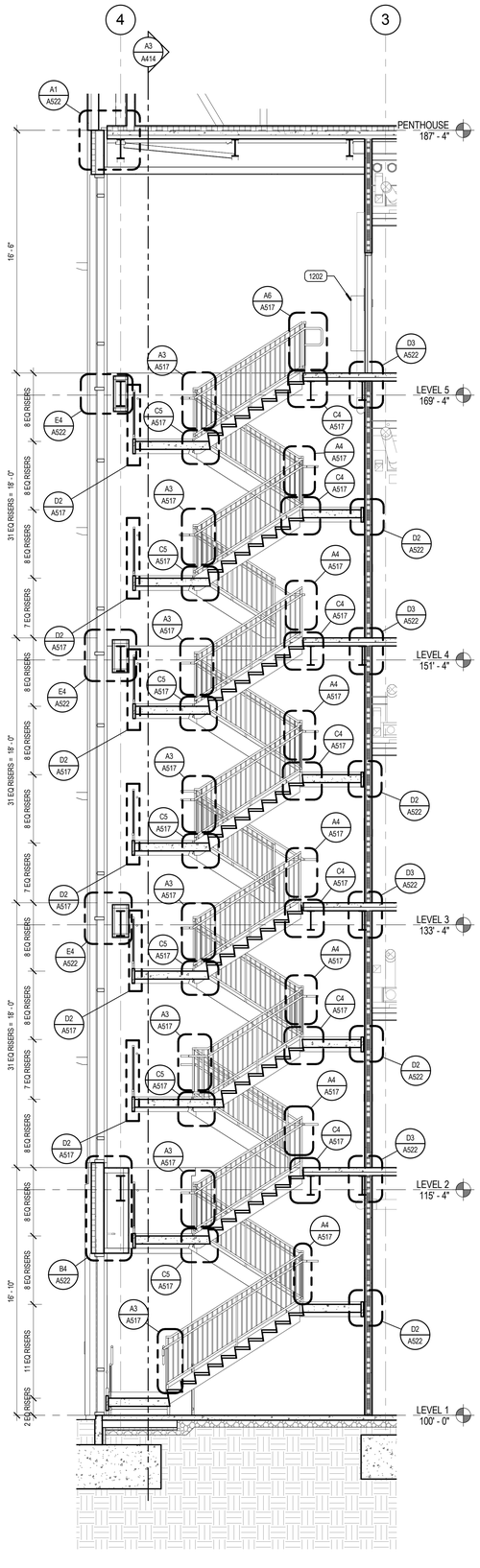

A1 STAIR C SECTION A
SCALE: 1/4" = 1'-0"

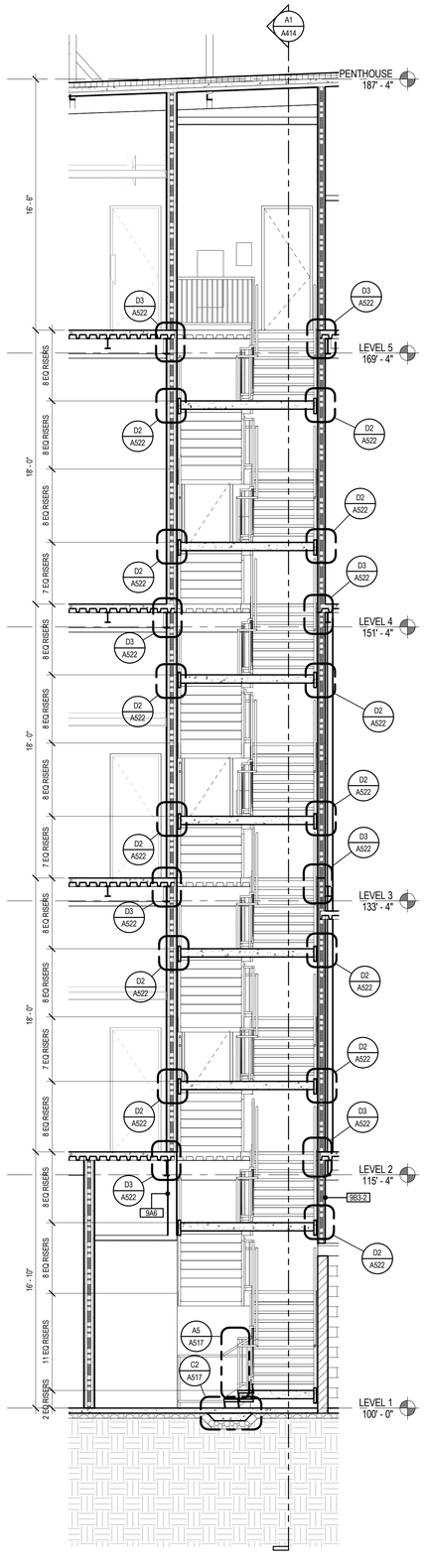

A3 STAIR C SECTION B
SCALE: 1/4" = 1'-0"

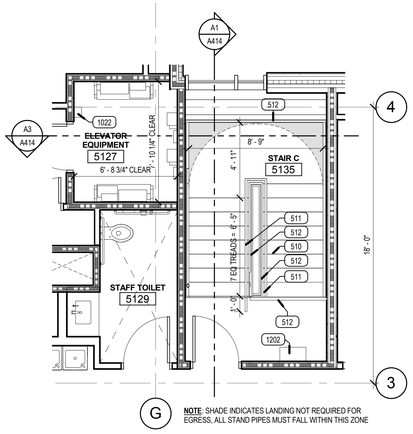

G NOTE: SHADE INDICATES LANDING NOT REQUIRED FOR EGRESS, ALL STAND PIPES MUST FALL WITHIN THIS ZONE

D4 STAIR C LEVEL 5
SCALE: 1/4" = 1'-0"

PLAN NORTH

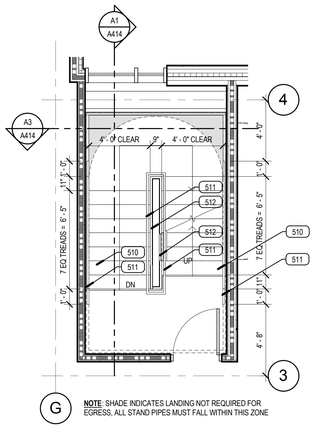

G NOTE: SHADE INDICATES LANDING NOT REQUIRED FOR EGRESS, ALL STAND PIPES MUST FALL WITHIN THIS ZONE

B4 STAIR C LEVEL 4
SCALE: 1/4" = 1'-0"

PLAN NORTH

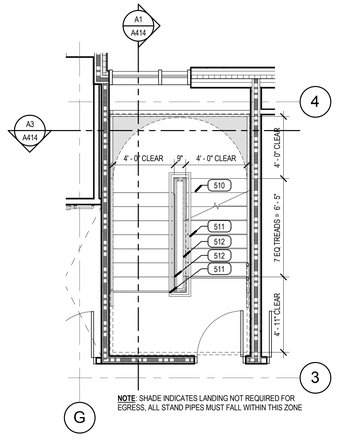

G NOTE: SHADE INDICATES LANDING NOT REQUIRED FOR EGRESS, ALL STAND PIPES MUST FALL WITHIN THIS ZONE

B5 STAIR C LEVEL 2
SCALE: 1/4" = 1'-0"

PLAN NORTH

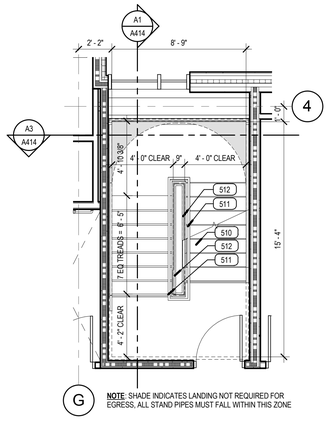

G NOTE: SHADE INDICATES LANDING NOT REQUIRED FOR EGRESS, ALL STAND PIPES MUST FALL WITHIN THIS ZONE

A4 STAIR C LEVEL 3
SCALE: 1/4" = 1'-0"

PLAN NORTH

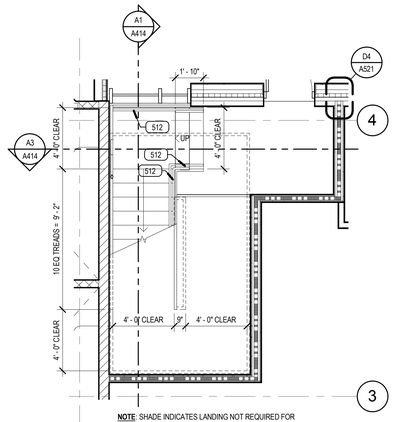

G NOTE: SHADE INDICATES LANDING NOT REQUIRED FOR EGRESS, ALL STAND PIPES MUST FALL WITHIN THIS ZONE

A5 STAIR C LEVEL 1
SCALE: 1/4" = 1'-0"

PLAN NORTH

KEYED NOTES

510	CONCRETE FILLED METAL PAN STAIRS
511	1 1/2" DIA. STEEL PIPE HANDRAIL PAINTED
512	STEEL GUARDRAIL, PAINTED
1022	WALL MOUNTED FIRE EXTINGUISHER
1202	WALL MOUNTED EVACUATION CHAIR AND CABINET

NOTE:
DIMENSIONS SHOWN FOR THE ELEVATOR HOISTWAY ARE BASED ON MINIMUM DIMENSIONS OF SEVERAL ELEVATOR MANUFACTURERS

THE ACTUAL DIMENSIONS OF THE ELEVATOR SHAFT, DEPTH OF THE PIT, AND OVERHEAD CLEAR HEIGHT SHALL BE VERIFIED BY THE CONTRACTOR BEFORE FOUNDATIONS ARE CONSTRUCTED.

BID NOTE: CONTRACTOR SHALL CERTIFY THAT ANY OTHER ELEVATOR BID WILL FIT INTO THE SHAFTS AS DESIGNED AND ALL COSTS ASSOCIATED WITH ADJUSTMENTS ARE CAPTURED INTO THE BASE BID AND WILL NOT BE A CHANGE ORDER FOR THE OWNER. **THIS INCLUDES ANY ADDITIONAL STEEL NEEDED FOR RAIL ATTACHMENTS AND HOIST BEAM CONFIGURATIONS INCLUDING STEEL RAIL SUPPORTS INSIDE THE SHAFT WALL.**

AT ALL ELEVATOR SHAFT LOCATIONS AND EQUIPMENT CLOSETS THERE SHALL BE NO CONDUIT, PIPING, DUCTWORK, ETC. THAT IS NOT ASSOCIATED WITH THE ELEVATOR SYSTEM.

VCBO ARCHITECTURE
524 SOUTH 600 EAST
SALT LAKE CITY, UT 84102
Phone: (801) 575-8800
Fax: (801) 531-9850
Web: vcbo.com

2nd District Juvenile Courthouse

Utah State Courts
08284150
165 West 20th Street, Ogden, Utah
BID DOCUMENTS

Rev #	Date	Description

Job # 12500
Date August 15, 2013
Owner # 08284150
Ins. #

STAIR PLANS, ELEVATIONS & SECTIONS

A414

8/14/2013 2:34:18 PM

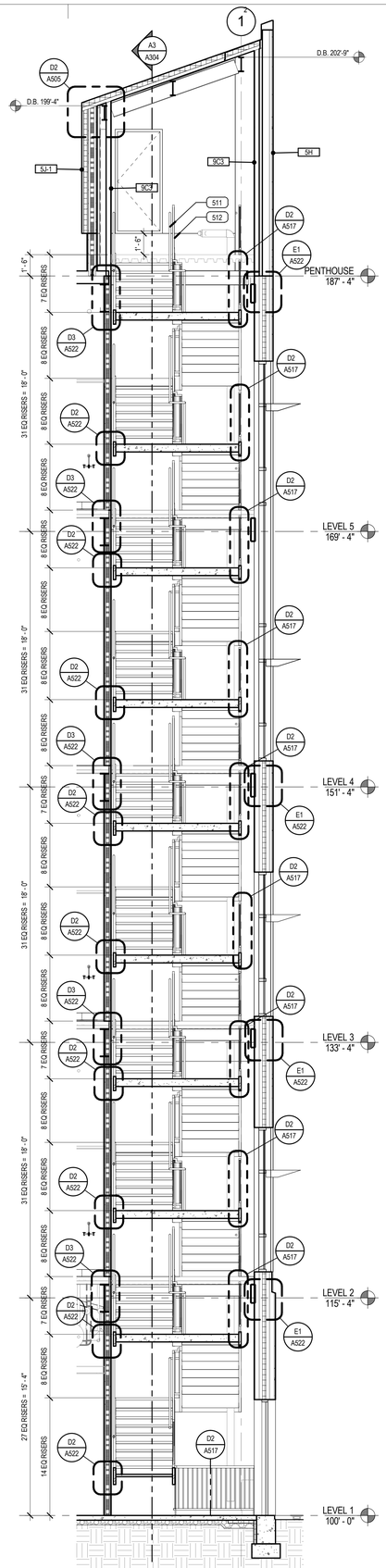

A2 STAIR D SECTION B
SCALE: 1/4" = 1'-0"

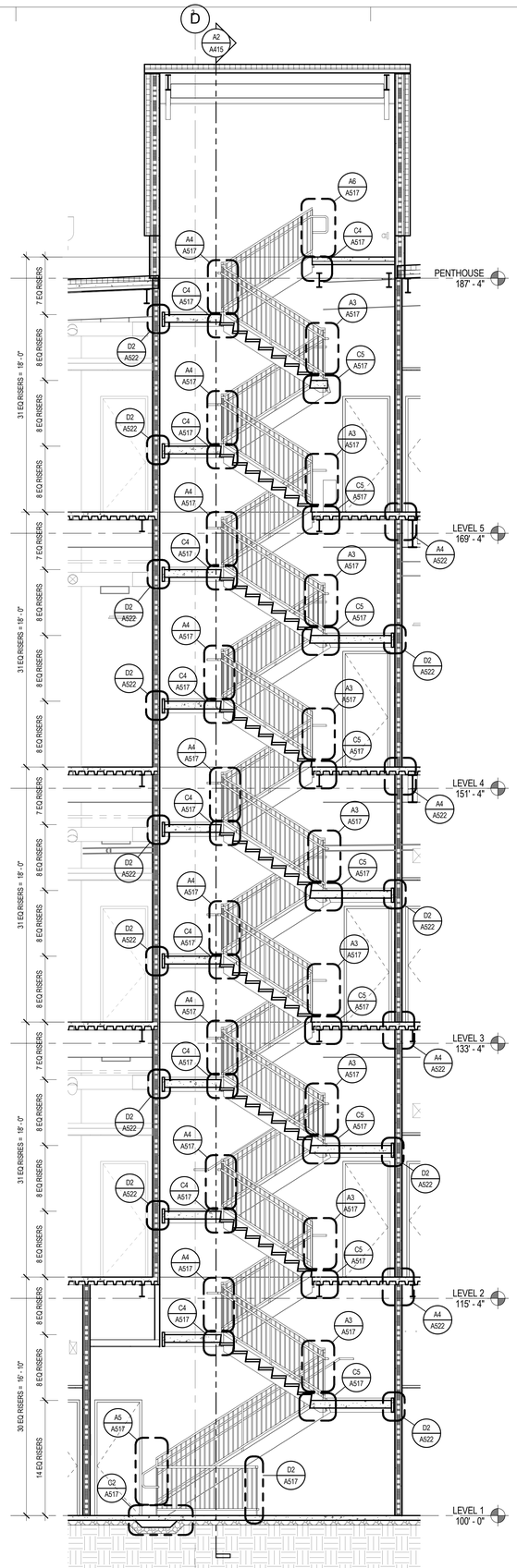

A3 STAIR D SECTION A
SCALE: 1/4" = 1'-0"

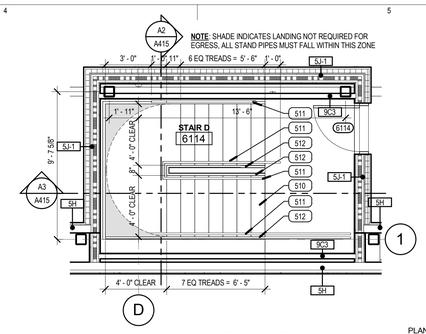

D5 STAIR D LEVEL PENTHOUSE
SCALE: 1/4" = 1'-0"

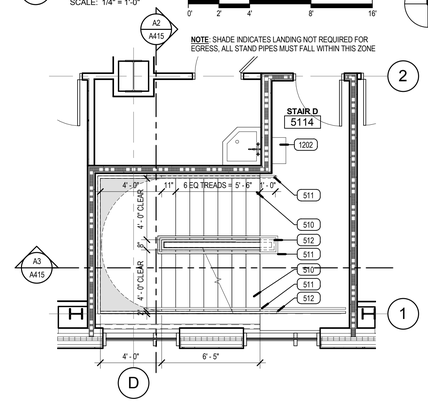

C5 STAIR D LEVEL 5
SCALE: 1/4" = 1'-0"

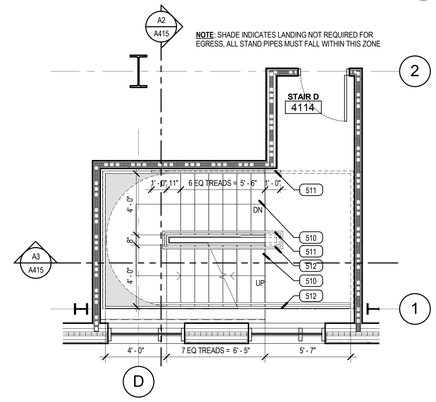

B5 STAIR D LEVEL 4
SCALE: 1/4" = 1'-0"

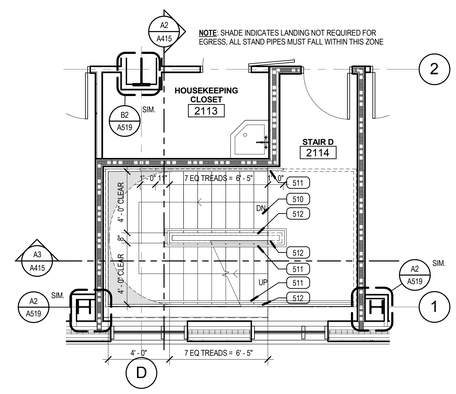

B6 STAIR D LEVEL 2
SCALE: 1/4" = 1'-0"

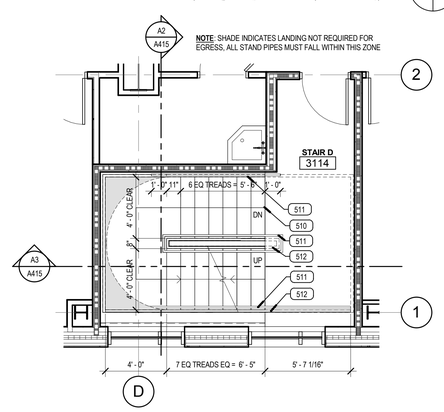

A4 STAIR D LEVEL 3
SCALE: 1/4" = 1'-0"

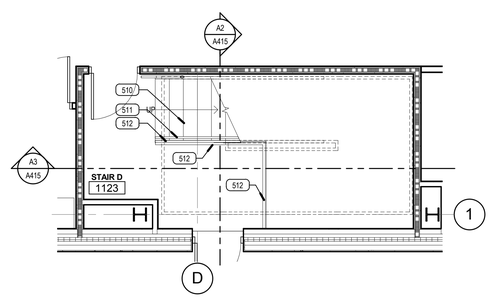

A5 STAIR D LEVEL 1
SCALE: 1/4" = 1'-0"

KEYED NOTES

510	CONCRETE FILLED METAL PAN STAIRS
511	1 1/2" DIA. STEEL PIPE HANDRAIL PAINTED
512	STEEL GUARDRAIL, PAINTED
1202	WALL MOUNTED EVACUATION CHAIR AND CABINET

NOTE:
DIMENSIONS SHOWN FOR THE ELEVATOR HOISTWAY ARE BASED ON MINIMUM DIMENSIONS OF SEVERAL ELEVATOR MANUFACTURERS

THE ACTUAL DIMENSIONS OF THE ELEVATOR SHAFT, DEPTH OF THE PIT AND OVERHEAD CLEAR HEIGHT SHALL BE VERIFIED BY THE CONTRACTOR BEFORE FOUNDATIONS ARE CONSTRUCTED.

BID NOTE: CONTRACTOR SHALL CERTIFY THAT ANY OTHER ELEVATOR BID WILL FIT INTO THE SHAFTS AS DESIGNED AND ALL COSTS ASSOCIATED WITH ADJUSTMENTS ARE CAPTURED INTO THE BASE BID AND WILL NOT BE A CHANGE ORDER FOR THE OWNER. **THIS INCLUDES ANY ADDITIONAL STEEL NEEDED FOR RAIL ATTACHMENTS AND HOIST BEAM CONFIGURATIONS INCLUDING STEEL RAIL SUPPORTS INSIDE THE SHAFT WALL.**

AT ALL ELEVATOR SHAFT LOCATIONS AND EQUIPMENT CLOSETS THERE SHALL BE NO CONDUIT, PIPING, DUCTWORK, ETC. THAT IS NOT ASSOCIATED WITH THE ELEVATOR SYSTEM.

VCBO ARCHITECTURE
VCBO ARCHITECTURE
524 SOUTH 600 EAST
SALT LAKE CITY, UT 84102
Phone: (801) 575-8800
Fax: (801) 531-9850
Web: vcbo.com

LICENSED ARCHITECT No. 153912 BRENT R. TIPPETS 8-15-13 STATE OF UTAH

2nd District Juvenile Courthouse

Utah State Courts
08284150
165 West 20th Street, Ogden, Utah
BID DOCUMENTS

Rev #	Date	Description

Job # 12500
Date August 15, 2013
Owner # 08284150
Ins. #

STAIR PLANS, ELEVATIONS & SECTIONS

A415

8/14/2013 2:34:43 PM

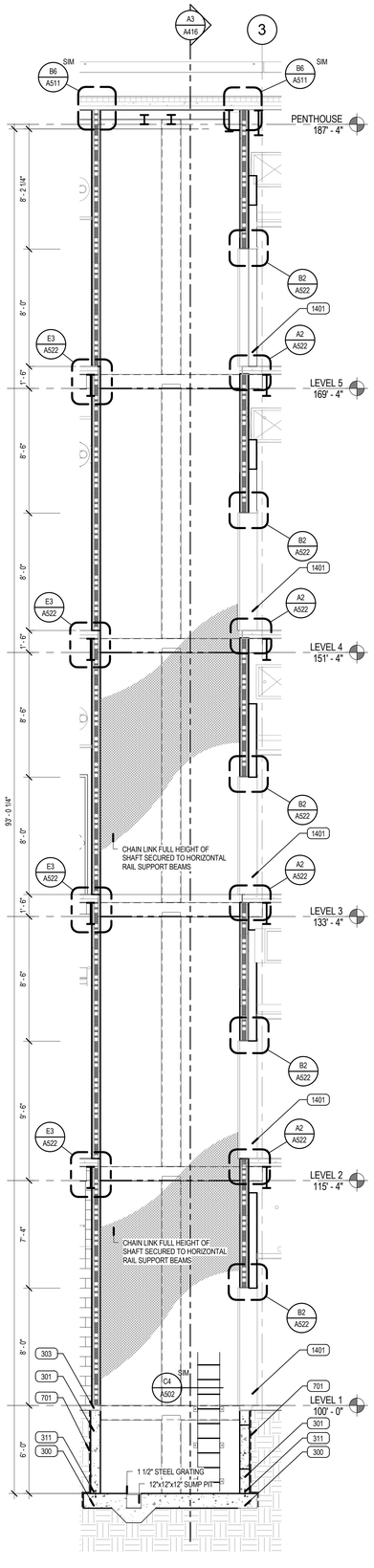

A2 ELEVATOR2 SECTION B

SCALE: 1/4" = 1'-0"

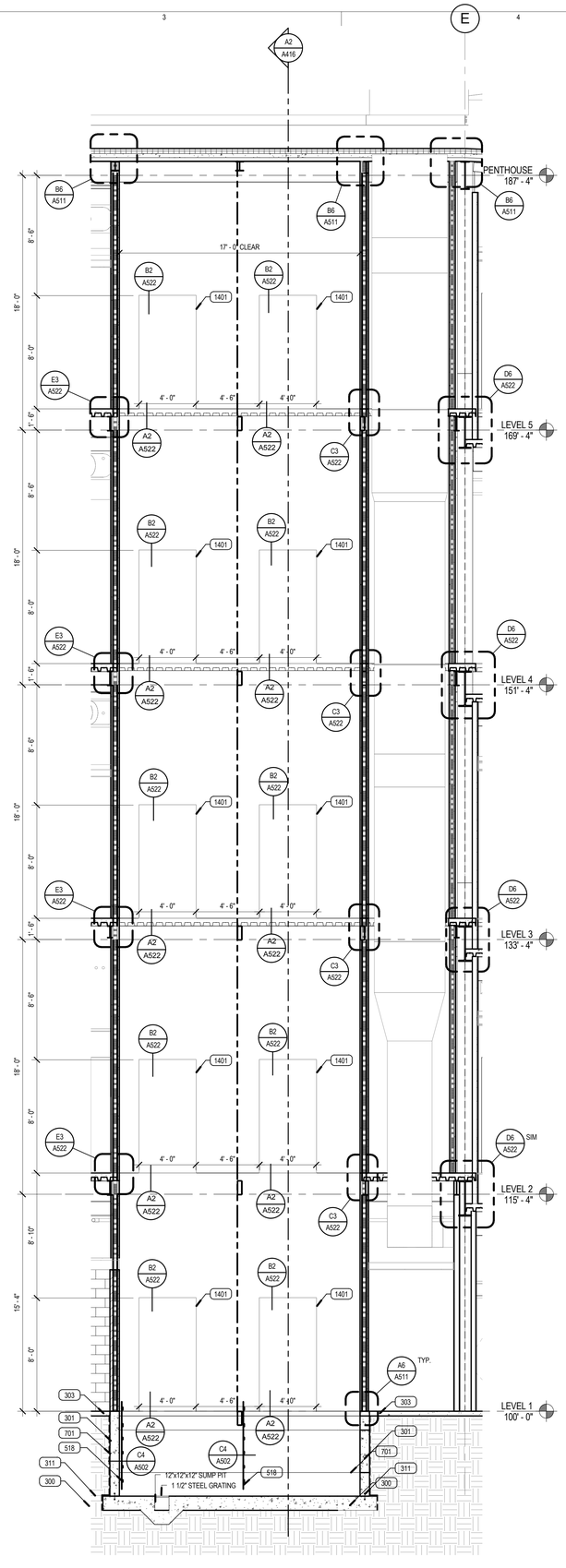

A3 ELEVATOR2 SECTION A

SCALE: 1/4" = 1'-0"

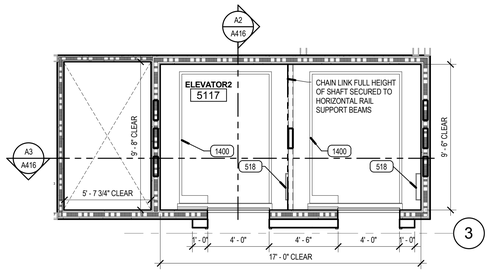

E5 ELEVATOR2 LEVEL 5

SCALE: 1/4" = 1'-0"

PLAN NORTH

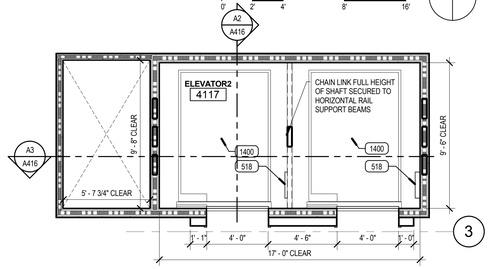

D5 ELEVATOR2 LEVEL 4

SCALE: 1/4" = 1'-0"

PLAN NORTH

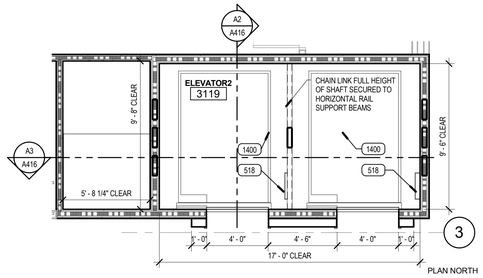

C5 ELEVATOR2 LEVEL 3

SCALE: 1/4" = 1'-0"

PLAN NORTH

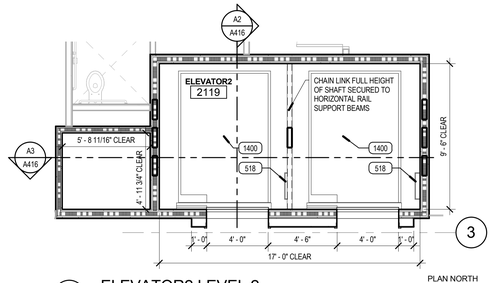

B5 ELEVATOR2 LEVEL 2

SCALE: 1/4" = 1'-0"

PLAN NORTH

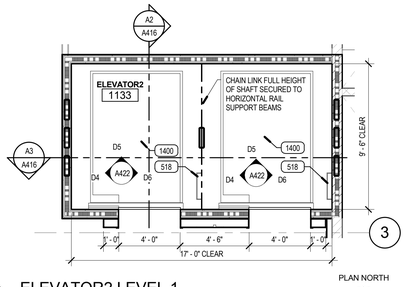

A5 ELEVATOR2 LEVEL 1

SCALE: 1/4" = 1'-0"

PLAN NORTH

KEYED NOTES

300	REINFORCED CONCRETE FOOTING
301	REINFORCED CONCRETE FOUNDATION WALL
303	REINFORCED CONCRETE SLAB
311	BENTONITE WATER STOP
518	STEEL LADDER, PAINTED
701	DAMP PROOFING WITH PROTECTION BOARD
1400	ELEVATORS
1401	S.S. ELEVATOR CAB DOOR

NOTE:
DIMENSIONS SHOWN FOR THE ELEVATOR HOISTWAY ARE BASED ON MINIMUM DIMENSIONS OF SEVERAL ELEVATOR MANUFACTURERS

THE ACTUAL DIMENSIONS OF THE ELEVATOR SHAFT, DEPTH OF THE PIT AND OVERHEAD CLEAR HEIGHT SHALL BE VERIFIED BY THE CONTRACTOR BEFORE FOUNDATIONS ARE CONSTRUCTED.

BID NOTE: CONTRACTOR SHALL CERTIFY THAT ANY OTHER ELEVATOR BID WILL FIT INTO THE SHAFTS AS DESIGNED AND ALL COSTS ASSOCIATED WITH ADJUSTMENTS ARE CAPTURED INTO THE BASE BID AND WILL NOT BE A CHANGE ORDER FOR THE OWNER **THIS INCLUDES ANY ADDITIONAL STEEL NEEDED FOR RAIL ATTACHMENTS AND HOIST BEAM CONFIGURATIONS INCLUDING STEEL RAIL SUPPORTS INSIDE THE SHAFT WALL.**

AT ALL ELEVATOR SHAFT LOCATIONS AND EQUIPMENT CLOSETS THERE SHALL BE NO CONDUIT, PIPING, DUCTWORK, ETC. THAT IS NOT ASSOCIATED WITH THE ELEVATOR SYSTEM.

VCBO ARCHITECTURE
524 SOUTH 600 EAST
SALT LAKE CITY, UT 84102
Phone: (801) 575-8800
Fax: (801) 531-9850
Web: vcbo.com

LICENSED ARCHITECT No. 153912 BRENT R. TIPPETS 8-15-13 STATE OF UTAH

2nd District Juvenile Courthouse

Utah State Courts
08284150
165 West 20th Street, Ogden, Utah
BID DOCUMENTS

Rev #	Date	Description

Job # 12500
Date August 15, 2013
Owner # 08284150
Ins. #

STAIR PLANS, ELEVATIONS & SECTIONS

A416

8/14/2013 2:35:03 PM

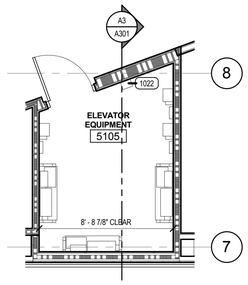

D2 ENLARGED 5105 ELEVATOR EQUIPMENT
SCALE: 1/4" = 1'-0"

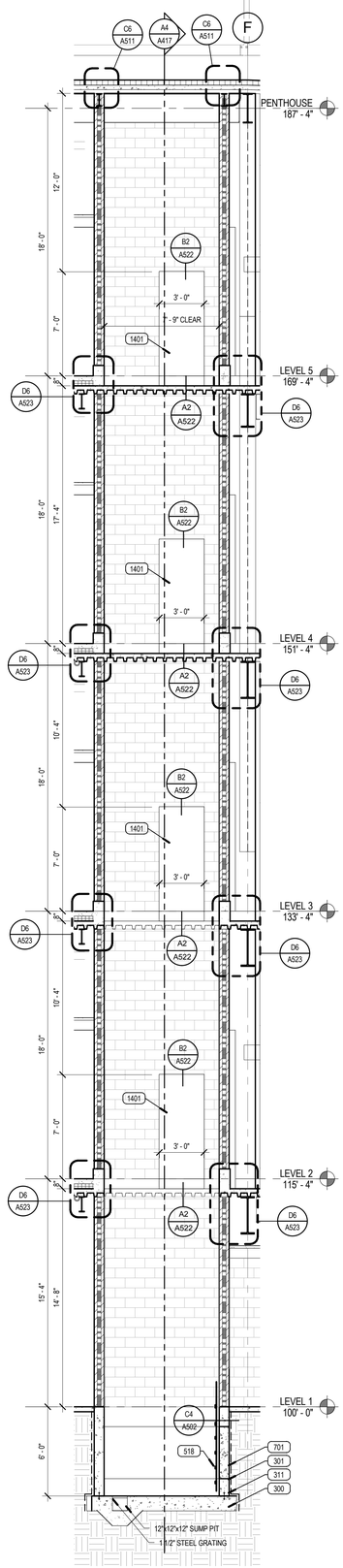

A3 ELEVATOR3 SECTION B
SCALE: 1/4" = 1'-0"

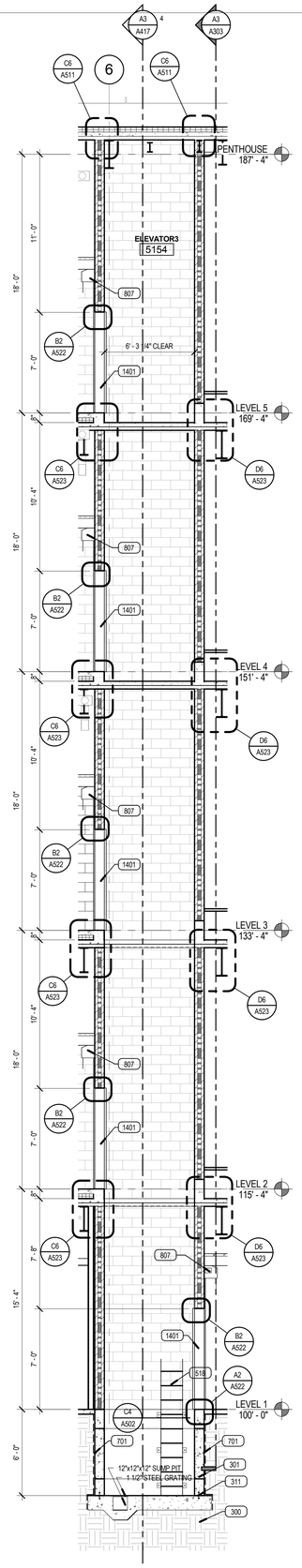

A4 ELEVATOR3 SECTION A
SCALE: 1/4" = 1'-0"

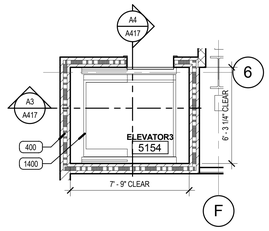

E5 ELEVATOR3 LEVEL 5
SCALE: 1/4" = 1'-0"

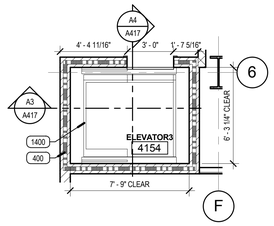

D5 ELEVATOR3 LEVEL 4
SCALE: 1/4" = 1'-0"

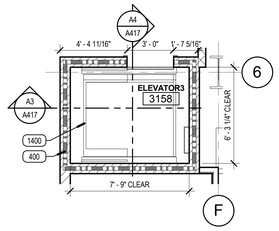

C5 ELEVATOR3 LEVEL 3
SCALE: 1/4" = 1'-0"

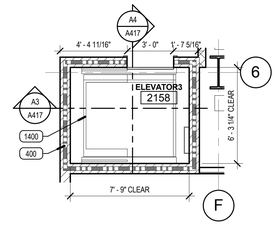

B5 ELEVATOR3 LEVEL 2
SCALE: 1/4" = 1'-0"

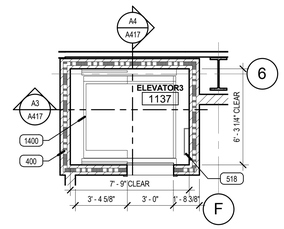

A5 ELEVATOR3 LEVEL 1
SCALE: 1/4" = 1'-0"

KEYED NOTES

300	REINFORCED CONCRETE FOOTING
301	REINFORCED CONCRETE FOUNDATION WALL
311	BENTONITE WATER STOP
400	CMU
518	STEEL LADDER, PAINTED
701	DAMP PROOFING WITH PROTECTION BOARD
807	ROLL DOWN ELEVATOR SMOKE CONTAINMENT DOOR
1022	WALL MOUNTED FIRE EXTINGUISHER
1400	ELEVATORS
1401	S.S. ELEVATOR CAB DOOR

NOTE:
DIMENSIONS SHOWN FOR THE ELEVATOR HOISTWAY ARE BASED ON MINIMUM DIMENSIONS OF SEVERAL ELEVATOR MANUFACTURERS

THE ACTUAL DIMENSIONS OF THE ELEVATOR SHAFT, DEPTH OF THE PIT AND OVERHEAD CLEAR HEIGHT SHALL BE VERIFIED BY THE CONTRACTOR BEFORE FOUNDATIONS ARE CONSTRUCTED.

BID NOTE: CONTRACTOR SHALL CERTIFY THAT ANY OTHER ELEVATOR BID WILL FIT INTO THE SHAFTS AS DESIGNED AND ALL COSTS ASSOCIATED WITH ADJUSTMENTS ARE CAPTURED INTO THE BASE BID AND WILL NOT BE A CHANGE ORDER FOR THE OWNER. **THIS INCLUDES ANY ADDITIONAL STEEL NEEDED FOR RAIL ATTACHMENTS AND HOIST BEAM CONFIGURATIONS INCLUDING STEEL RAIL SUPPORTS INSIDE THE SHAFT WALL.**

AT ALL ELEVATOR SHAFT LOCATIONS AND EQUIPMENT CLOSETS THERE SHALL BE NO CONDUIT, PIPING, DUCTWORK, ETC. THAT IS NOT ASSOCIATED WITH THE ELEVATOR SYSTEM.

VCBO ARCHITECTURE
VCBO ARCHITECTURE
524 SOUTH 600 EAST
SALT LAKE CITY, UT 84102
Phone: (801) 575-8800
Fax: (801) 531-9850
Web: vcbo.com

2nd District Juvenile Courthouse

Utah State Courts
08284150
165 West 20th Street, Ogden, Utah
BID DOCUMENTS

Rev #	Date	Description

Job # 12500
Date August 15, 2013
Owner # 08284150
Ins. #

STAIR PLANS, ELEVATIONS & SECTIONS

A417

8/14/2013 2:35:22 PM

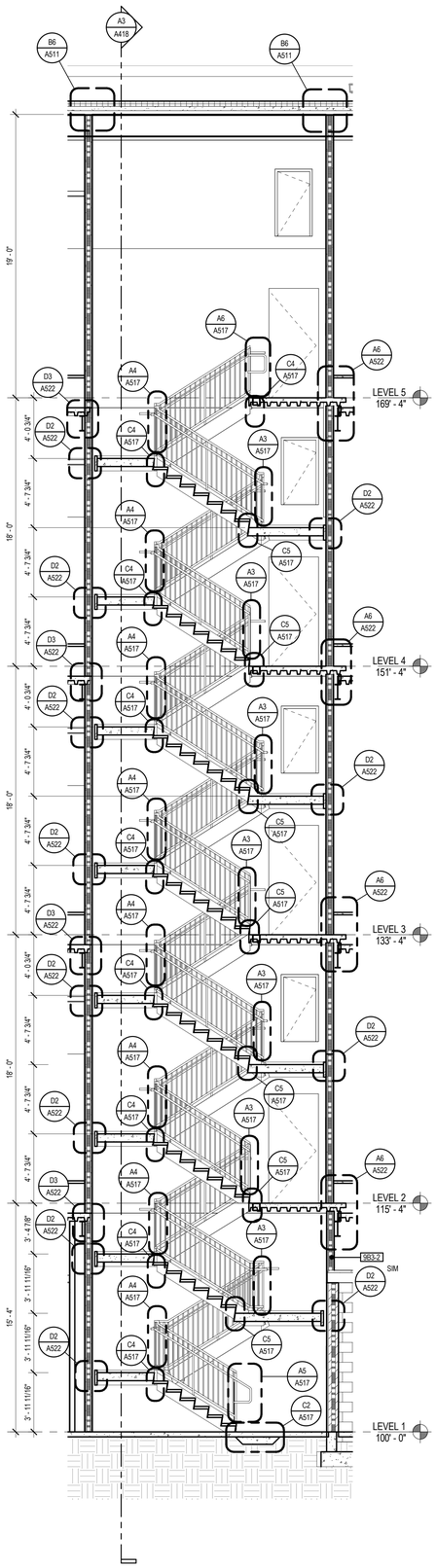

A2 STAIR E SECTION A

SCALE: 1/4" = 1'-0"

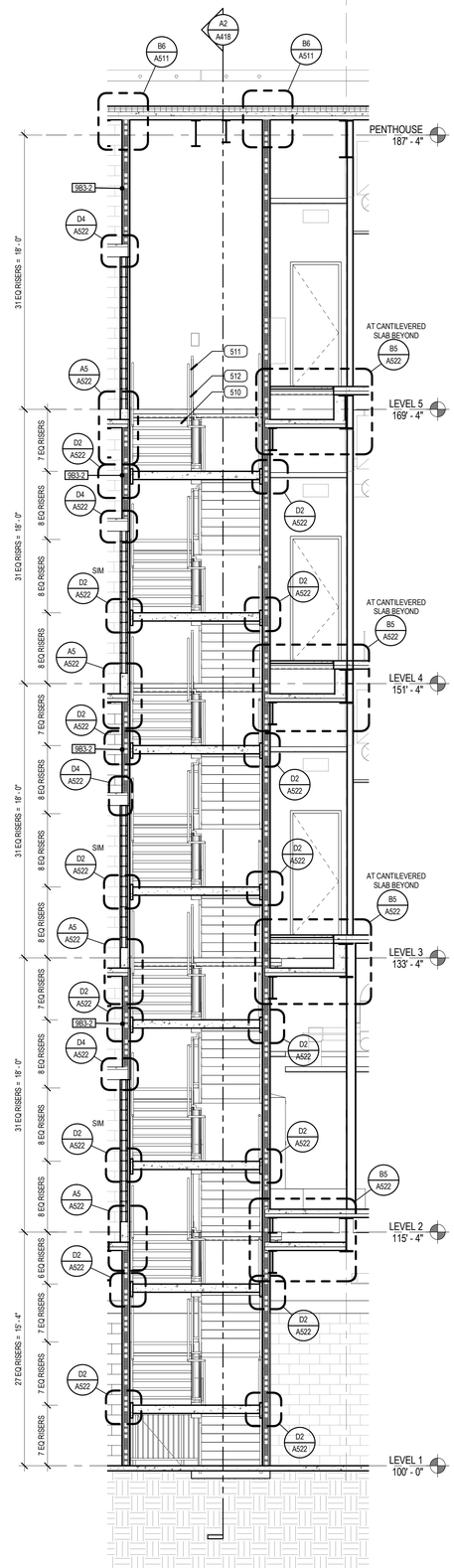

A3 STAIR E SECTION B

SCALE: 1/4" = 1'-0"

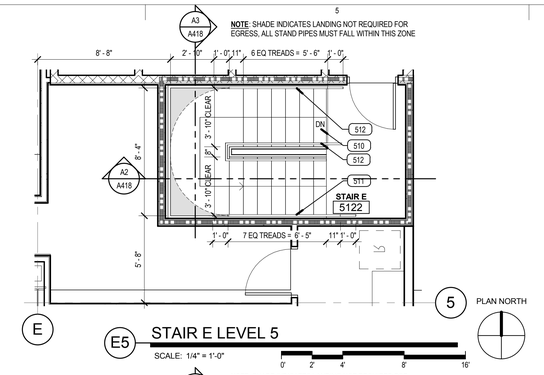

E5 STAIR E LEVEL 5

SCALE: 1/4" = 1'-0"

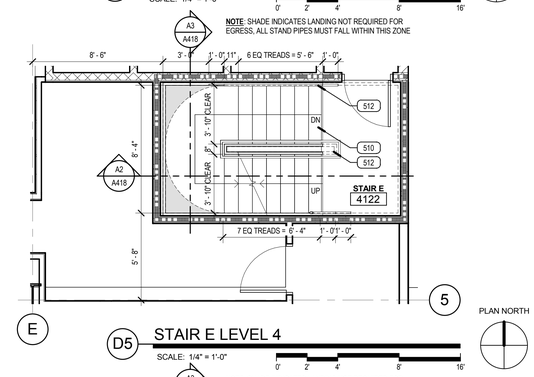

D5 STAIR E LEVEL 4

SCALE: 1/4" = 1'-0"

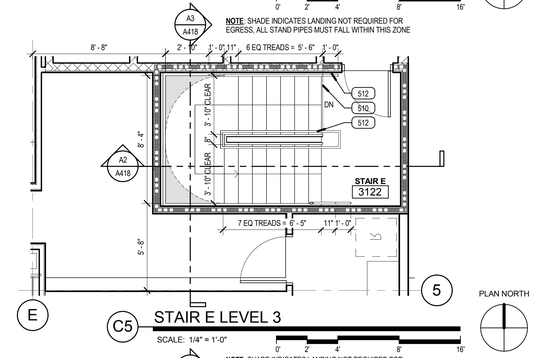

C5 STAIR E LEVEL 3

SCALE: 1/4" = 1'-0"

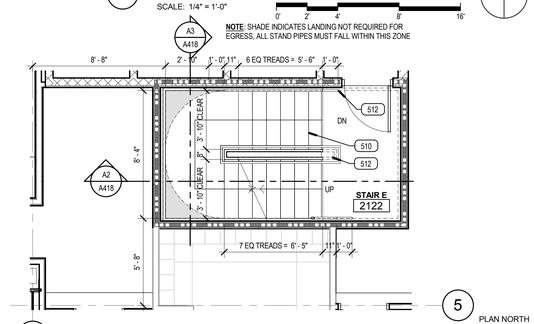

B5 STAIR E LEVEL 2

SCALE: 1/4" = 1'-0"

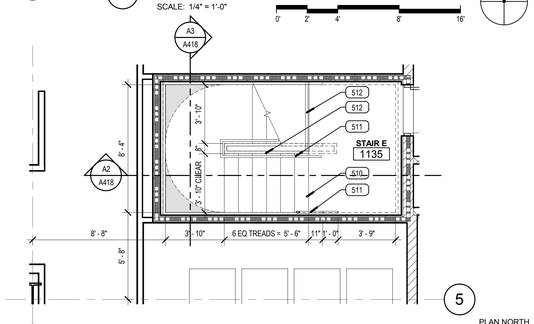

A5 STAIR E LEVEL 1

SCALE: 1/4" = 1'-0"

KEYED NOTES

510	CONCRETE FILLED METAL PAN STAIRS
511	1 1/2" DIA. STEEL PIPE HANDRAIL PAINTED
512	STEEL GUARDRAIL, PAINTED

NOTE:
DIMENSIONS SHOWN FOR THE ELEVATOR HOISTWAY ARE BASED ON MINIMUM DIMENSIONS OF SEVERAL ELEVATOR MANUFACTURERS

THE ACTUAL DIMENSIONS OF THE ELEVATOR SHAFT, DEPTH OF THE PIT AND OVERHEAD CLEAR HEIGHT SHALL BE VERIFIED BY THE CONTRACTOR BEFORE FOUNDATIONS ARE CONSTRUCTED.

BID NOTE: CONTRACTOR SHALL CERTIFY THAT ANY OTHER ELEVATOR BID WILL FIT INTO THE SHAFTS AS DESIGNED AND ALL COSTS ASSOCIATED WITH ADJUSTMENTS ARE CAPTURED INTO THE BASE BID AND WILL NOT BE A CHANGE ORDER FOR THE OWNER. **THIS INCLUDES ANY ADDITIONAL STEEL NEEDED FOR RAIL ATTACHMENTS AND HOIST BEAM CONFIGURATIONS INCLUDING STEEL RAIL SUPPORTS INSIDE THE SHAFT WALL.**

AT ALL ELEVATOR SHAFT LOCATIONS AND EQUIPMENT CLOSETS THERE SHALL BE NO CONDUIT, PIPING, DUCTWORK, ETC. THAT IS NOT ASSOCIATED WITH THE ELEVATOR SYSTEM.

VCBO ARCHITECTURE

VCBO ARCHITECTURE
524 SOUTH 600 EAST
SALT LAKE CITY, UT 84102
Phone: (801) 575-8800
Fax: (801) 531-9850
Web: vcbo.com

LICENSED ARCHITECT No. 153912 BRENT R. TIPPETS 8-15-13 STATE OF UTAH

2nd District Juvenile Courthouse

Utah State Courts
08284150
165 West 20th Street, Ogden, Utah
BID DOCUMENTS

Rev #	Date	Description

Job # 12500
Date August 15, 2013
Owner # 08284150
Ins. #

STAIR PLANS, ELEVATIONS & SECTIONS

A418

8/14/2013 2:35:44 PM

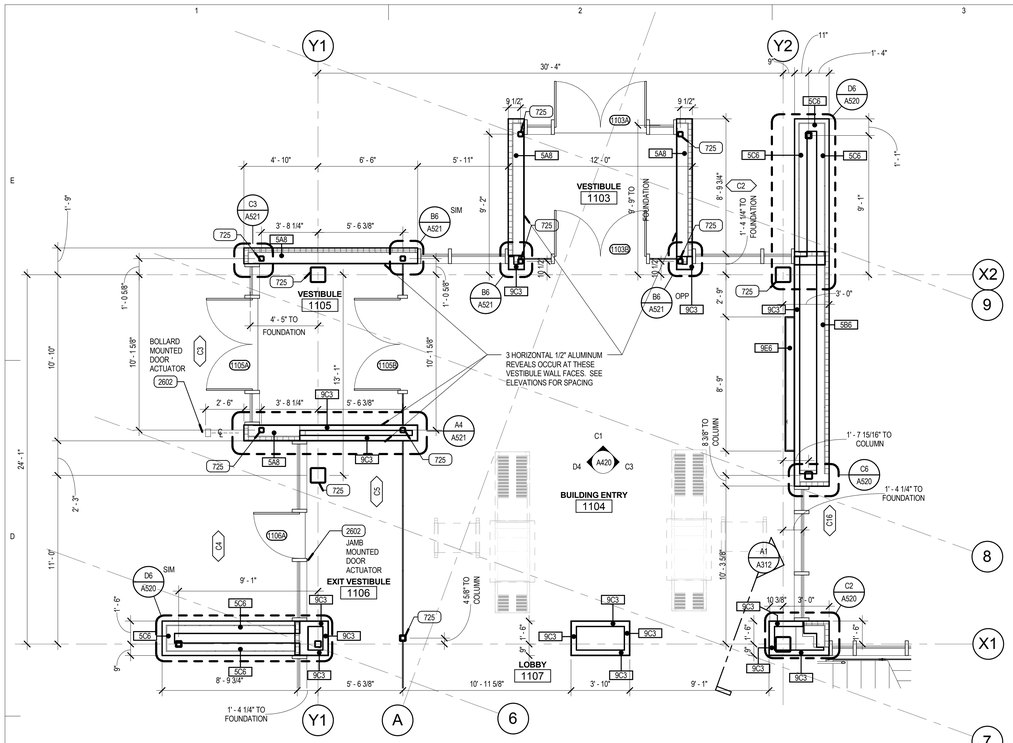

D1 ENLARGED BUILDING ENTRY PLAN

SCALE: 1/4" = 1'-0"

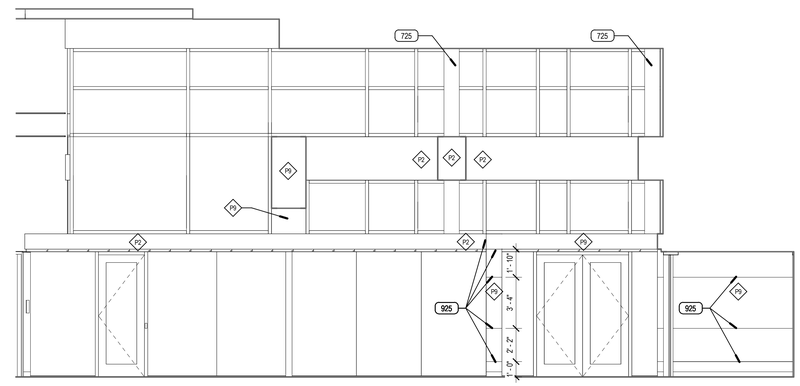

D4 1104-1-BUILDING ENTRY

SCALE: 1/4" = 1'-0"

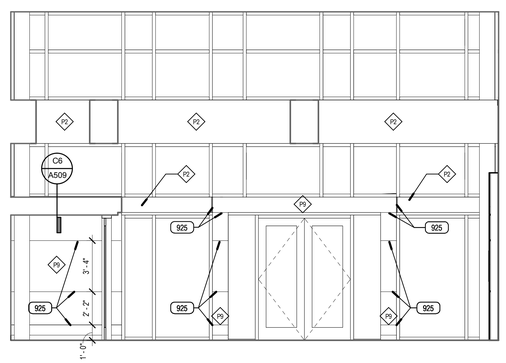

C1 1104-2-BUILDING ENTRY

SCALE: 1/4" = 1'-0"

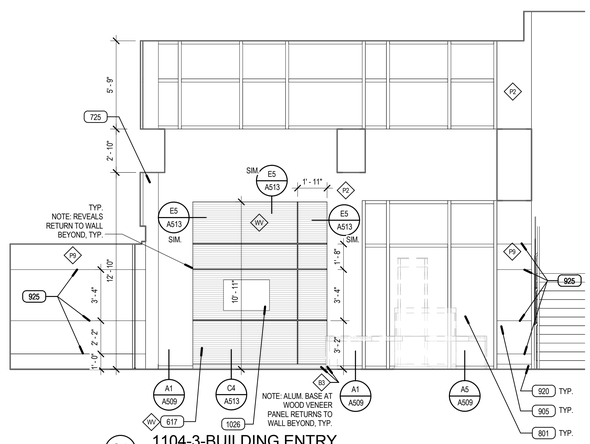

C3 1104-3-BUILDING ENTRY

SCALE: 1/4" = 1'-0"

FINISH PLAN SYMBOLS

SINGLE FINISH SYMBOLS INDICATE WHERE FINISHES ARE DIFFERENT FROM GENERAL ROOM FINISHES, OR PROVIDE ADDITIONAL FINISH INFORMATION

CHANGE AT FLOOR MATERIAL

FINISH PLAN LEGEND

FLOOR MATERIALS

EM	ENTRY MAT
C1	CARPET TILE
C2	CARPET TILE
C3	NOT USED
C4	CARPET TILE
C5	CARPET TILE
C6	CARPET TILE
C7	NOT USED
L1	LINOLEUM SHEET
L2	LINOLEUM TILE - MCT
FT1	PORCELAIN FLOOR TILE 12x24
FT2	PORCELAIN FLOOR TILE 6x24
FT3	PORCELAIN FLOOR TILE 12x12
FT4	FLOOR TILE 1X2
VT2	STATIC DISSIPATIVE ACCESS FLOOR PANEL
RB1	RUBBER FLOOR TILES
RB2	RUBBER FLOORING (STAIRS, LANDINGS)
SC	SEALED CONCRETE
TZ1	TERRAZZO FLOORING
TZ2	TERRAZZO FLOORING ACCENT
EP1	EPOXY FLOORING - OPAQUE
G1	GROUT
G2	GROUT
PT	ALUMINUM DIAMOND PLATE

BASE MATERIALS

B1	RUBBER BASE
B2	RUBBER BASE
B3	ANODIZED ALUMINUM BASE - SEE C2 AND C4/A513
B4	SOLID HARDWOOD BASE - 3/4" THICK, 4" HIGH
B5	TILE BASE
B6	ALUMINUM COVE BASE
B7	TILE COVE BASE
B8	NO BASE - SEAL SEAM
B9	NO BASE - CAULK BETWEEN FLOOR AND WALL
B10	COVED RUBBER BASE
B11	COVED EPOXY FLOORING

WALL MATERIALS

F1	ACOUSTIC FABRIC WALL PANELS
F2	PEW SEAT FABRIC
P1	PRIMED & PAINTED WALL SURFACE - GENERAL
P2	PRIMED & PAINTED WALL SURFACE - GENERAL
P3	PRIMED & PAINTED WALL SURFACE - ACCENT
P4	PRIMED & PAINTED WALL SURFACE - ACCENT
P5	CEILING PAINT
P6	RAILING PAINT
P7	H.M. DOOR FRAME PAINT
P8	H.M. DOOR FRAME PAINT
P9	PRIMED & PAINTED WALL SURFACE - ACCENT
P10	INTUMESCENT PAINT SYSTEM
WT1	PORCELAIN WALL TILE 6X24
WT2	PORCELAIN WALL TILE 4X24
WT3	PORCELAIN WILL TILE 2X24
WT4	PORCELAIN WALL TILE 6X24
WT5	PORCELAIN WALL TILE 2X24
WT6	NOT USED
WT7	GLAZED WALL TILE 3x6
WT8	GLAZED WALL TILE 3x6
WT9	GLAZED WALL TILE 3x6
WT10	NOT USED
WT11	NOT USED
WT12	NOT USED
WT13	GLAZED WALL TILE 4x4
WT14	GLASS WALL TILE - SIZES VARY
WC1	VINYL WALLCOVERING
WC3	DRY ERASE WALLCOVERING

SURFACE MATERIALS

PL1	PLASTIC LAMINATE - VERTICAL SURFACES
PL2	PLASTIC LAMINATE - COUNTERTOPS
PL3	PHENOLIC CORE PARTITIONS - PARTITION COLOR
WV	WOOD VENEER - SEE A513 FOR TYPICAL DETAILS
QZ1	QUARTZ COUNTERTOP SURFACE
QZ2	QUARTZ COUNTERTOP SURFACE
QZ3	QUARTZ COUNTERTOP SURFACE
SS1	SOLID SURFACE COUNTERTOP
SS2	SOLID SURFACE COUNTERTOP
SS3	SOLID SURFACE THRESHOLD

KEYED NOTES

617	VENEERED 1/4" MDF WOOD PANELS OVER 1/2" MDF SUBSTRATE
725	INTUMESCENT PAINTED STEEL STRUCTURE
801	WINDOW SYSTEM
905	5/8" TYPE 'X' GYP. BD. PAINTED WHERE EXPOSED
920	SCHEDULED BASE
925	1/2" ALUMINUM GYP BOARD REVEAL
1026	WALL MOUNTED MONUMENT
2602	ADA DOOR ACUATOR

VCBO ARCHITECTURE

VCBO ARCHITECTURE
524 SOUTH 600 EAST
SALT LAKE CITY, UT 84102
Phone: (801) 575-8800
Fax: (801) 531-9850
Web: vcbo.com

LICENSED ARCHITECT
No. 153912
BRENT R. TIPPETS
8-15-13
STATE OF UTAH

2nd District Juvenile Courthouse

Utah State Courts
08284150
165 West 20th Street, Ogden, Utah
BID DOCUMENTS

Rev #	Date	Description

Job # 12500
Date August 15, 2013
Owner # 08284150
Ins. #

ENLARGED PLANS AND ELEVATIONS

A420

8/14/2013 2:35:58 PM

D1 MAIN LOBBY PERSPECTIVE A

SCALE:

D3 MAIN LOBBY PERSPECTIVE B

SCALE:

D5 MAIN LOBBY PERSPECTIVE C

SCALE:

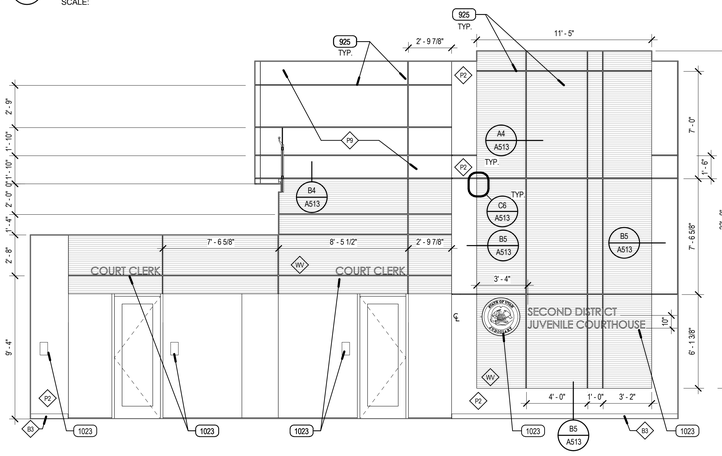

C1 1105-5-LOBBY

SCALE: 1/4" = 1'-0"

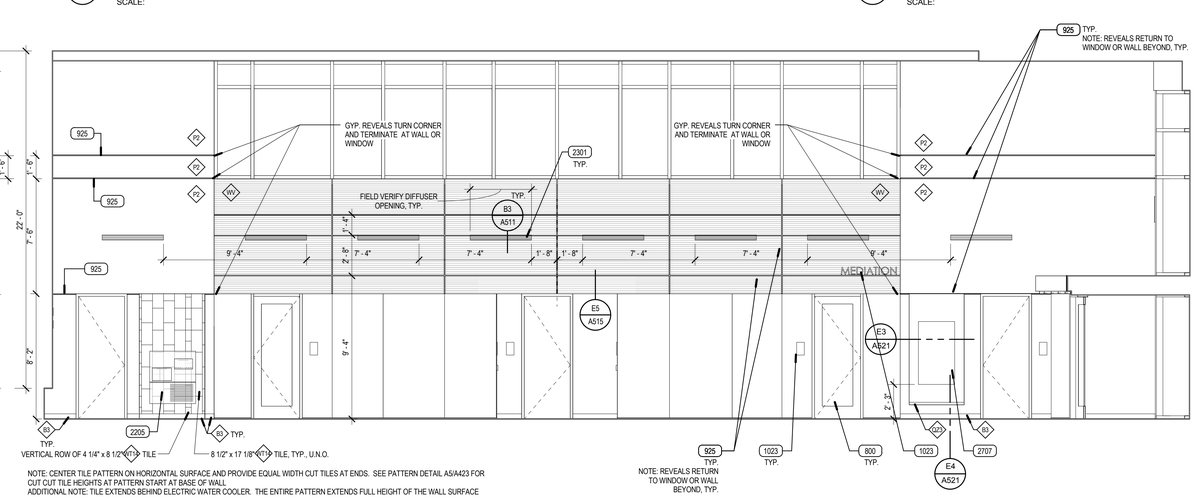

C3 1105-4-LOBBY

SCALE: 1/4" = 1'-0"

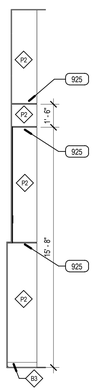

A1 1105-4-1 LOBBY

SCALE: 1/4" = 1'-0"

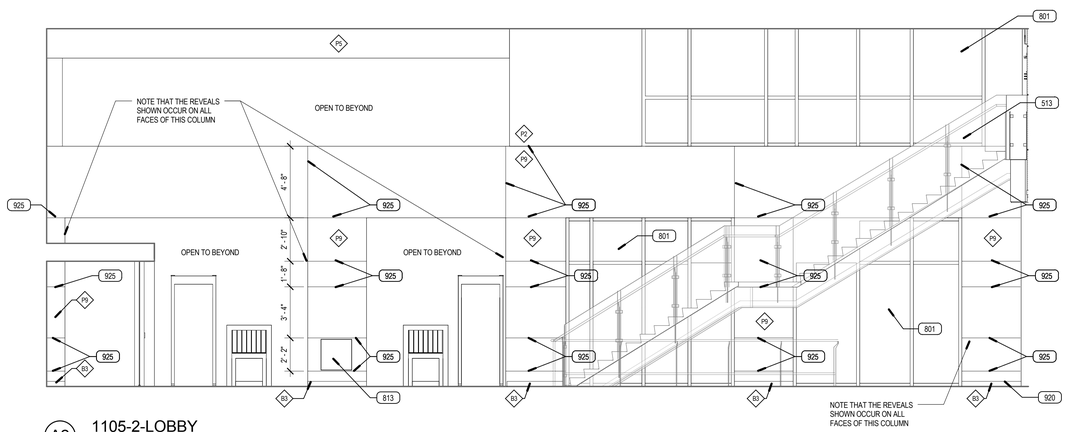

A2 1105-2-LOBBY

SCALE: 1/4" = 1'-0"

FINISH PLAN SYMBOLS

F SINGLE FINISH SYMBOLS INDICATE WHERE FINISHES ARE DIFFERENT FROM GENERAL ROOM FINISHES, OR PROVIDE ADDITIONAL FINISH INFORMATION

CHANGE AT FLOOR MATERIAL

FINISH PLAN LEGEND

FLOOR MATERIALS

EM	ENTRY MAT
C1	CARPET TILE
C2	CARPET TILE
C3	NOT USED
C4	CARPET TILE
C5	CARPET TILE
C6	CARPET TILE
C7	NOT USED
L1	LINOLEUM SHEET
L2	LINOLEUM TILE - MCT
FT1	PORCELAIN FLOOR TILE 12x24
FT2	PORCELAIN FLOOR TILE 6x24
FT3	PORCELAIN FLOOR TILE 12x12
FT4	FLOOR TILE 1X2
VT2	STATIC DISSIPATIVE ACCESS FLOOR PANEL
RB1	RUBBER FLOOR TILES
RB2	RUBBER FLOORING (STAIRS, LANDINGS)
SC	SEALED CONCRETE
TZ1	TERRAZZO FLOORING
TZ2	TERRAZZO FLOORING ACCENT
EP1	EPOXY FLOORING - OPAQUE
G1	GROUT
G2	GROUT
PT	ALUMINUM DIAMOND PLATE

BASE MATERIALS

B1	RUBBER BASE
B2	RUBBER BASE
B3	ANODIZED ALUMINUM BASE - SEE C2 AND C4/A513
B4	SOLID HARDWOOD BASE - 3/4" THICK, 4" HIGH
B5	TILE BASE
B6	ALUMINUM COVE BASE
B7	TILE COVE BASE
B8	NO BASE - SEAL SEAM
B9	NO BASE - CAULK BETWEEN FLOOR AND WALL
B10	COVED RUBBER BASE
B11	COVED EPOXY FLOORING

WALL MATERIALS

F1	ACOUSTIC FABRIC WALL PANELS
F2	PEW SEAT FABRIC
P1	PRIMED & PAINTED WALL SURFACE - GENERAL
P2	PRIMED & PAINTED WALL SURFACE - GENERAL
P3	PRIMED & PAINTED WALL SURFACE - ACCENT
P4	PRIMED & PAINTED WALL SURFACE - ACCENT
P5	CEILING PAINT
P6	RAILING PAINT
P7	H.M. DOOR FRAME PAINT
P8	H.M. DOOR FRAME PAINT
P9	PRIMED & PAINTED WALL SURFACE - ACCENT
P10	INTUMESCENT PAINT SYSTEM
WT1	PORCELAIN WALL TILE 6X24
WT2	PORCELAIN WALL TILE 4X24
WT3	PORCELAIN WILL TILE 2X24
WT4	PORCELAIN WALL TILE 6X24
WT5	PORCELAIN WALL TILE 2X24
WT6	NOT USED
WT7	GLAZED WALL TILE 3x6
WT8	GLAZED WALL TILE 3x6
WT9	GLAZED WALL TILE 3x6
WT10	NOT USED
WT11	NOT USED
WT12	NOT USED
WT13	GLAZED WALL TILE 4x4
WT14	GLASS WALL TILE - SIZES VARY
WC1	VINYL WALLCOVERING
WC3	DRY ERASE WALLCOVERING

SURFACE MATERIALS

PL1	PLASTIC LAMINATE - VERTICAL SURFACES
PL2	PLASTIC LAMINATE - COUNTERTOPS
PL3	PHENOLIC CORE PARTITIONS - PARTITION COLOR
WV	WOOD VENEER - SEE A513 FOR TYPICAL DETAILS
QZ1	QUARTZ COUNTERTOP SURFACE
QZ2	QUARTZ COUNTERTOP SURFACE
QZ3	QUARTZ COUNTERTOP SURFACE
SS1	SOLID SURFACE COUNTERTOP
SS2	SOLID SURFACE COUNTERTOP
SS3	SOLID SURFACE THRESHOLD

KEYED NOTES

513	DECORATIVE GLASS RAILING
800	SCHEDULED DOOR & FRAME
801	WINDOW SYSTEM
813	24"x 24" FIRE RATED ACCESS DOOR WITH WALL BOARD BEAD
920	SCHEDULED BASE
925	1/2" ALUMINUM GYP BOARD REVEAL
1023	SIGNAGE, SEE SCHEDULE
2205	ELECTRIC WATER COOLER
2301	PRE-FINISHED MECHANICAL LOUVER
2707	WALL MOUNTED VIDEO MONITOR

VCBO ARCHITECTURE

VCBO ARCHITECTURE
524 SOUTH 600 EAST
SALT LAKE CITY, UT 84102
Phone: (801) 575-8800
Fax: (801) 531-9850
Web: vcbo.com

LICENSED ARCHITECT
No. 153912
BRENT R. TIPPETS
8-15-13
STATE OF UTAH

2nd District Juvenile Courthouse

Utah State Courts
08284150
165 West 20th Street, Ogden, Utah
BID DOCUMENTS

Rev #	Date	Description

Job # 12500
Date August 15, 2013
Owner # 08284150
Ins. #

ENLARGED PLANS AND ELEVATIONS

A421

8/14/2013 2:36:27 PM

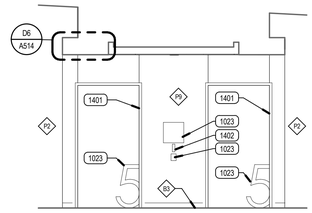

D2 LEVEL 5 ELEVATOR NORTH

SCALE: 1/4" = 1'-0"

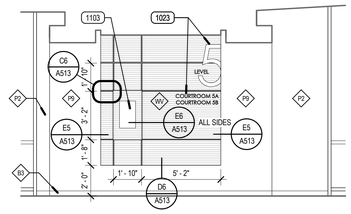

D3 LEVEL 5 ELEVATOR SOUTH

SCALE: 1/4" = 1'-0"

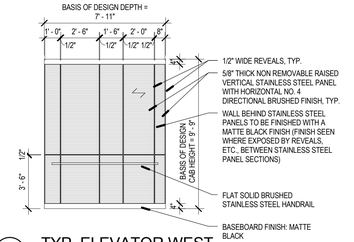

D4 TYP. ELEVATOR WEST

SCALE: 1/4" = 1'-0"

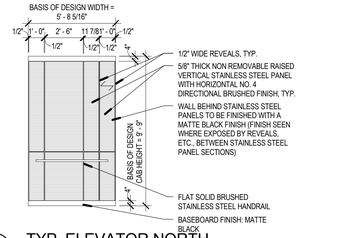

D5 TYP. ELEVATOR NORTH

SCALE: 1/4" = 1'-0"

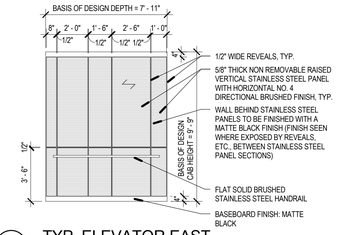

D6 TYP. ELEVATOR EAST

SCALE: 1/4" = 1'-0"

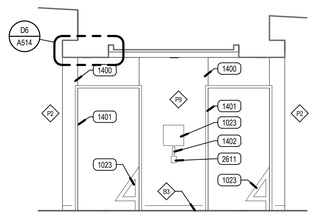

C2 LEVEL 4 ELEVATOR NORTH

SCALE: 1/4" = 1'-0"

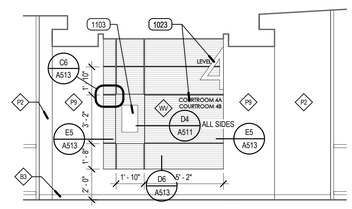

C3 LEVEL 4 ELEVATOR SOUTH

SCALE: 1/4" = 1'-0"

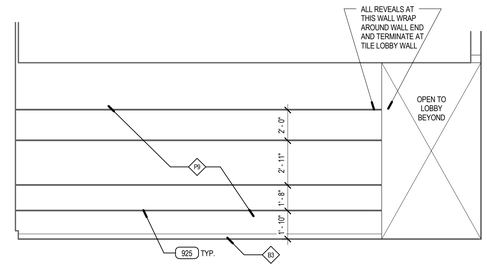

C4 LOBBY WALL

SCALE: 1/4" = 1'-0"

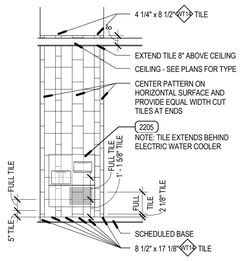

B1 EWC @ COURTROOM LOBBIES LVLS 2-5

SCALE: 1/4" = 1'-0"

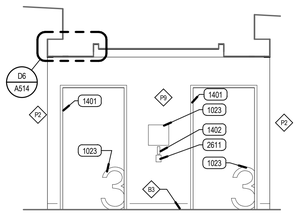

B2 LEVEL 3 ELEVATOR NORTH

SCALE: 1/4" = 1'-0"

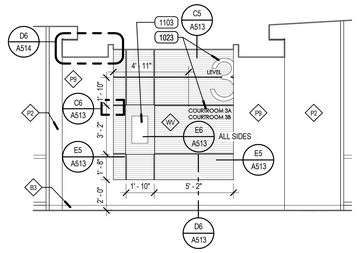

B3 LEVEL 3 ELEVATOR SOUTH

SCALE: 1/4" = 1'-0"

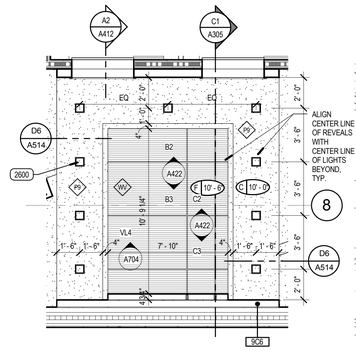

B4 ENLARGED TYP ELEVATOR RCP

SCALE: 1/4" = 1'-0"

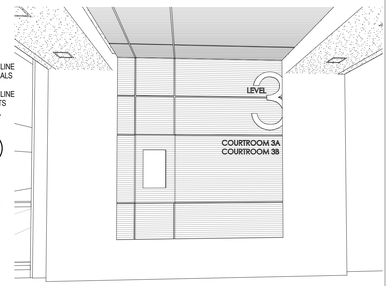

B5 PERSPECTIVE AT WOOD FEATURE WALL @ LVL 3

SCALE: NOT TO SCALE

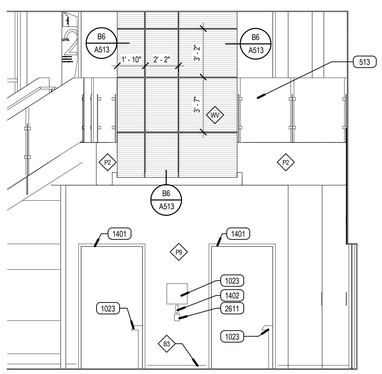

A1 1105-3-LOBBY

SCALE: 1/4" = 1'-0"

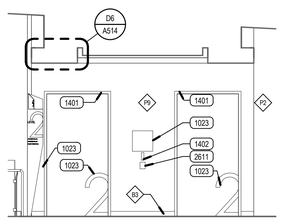

A2 LEVEL 2 ELEVATOR NORTH

SCALE: 1/4" = 1'-0"

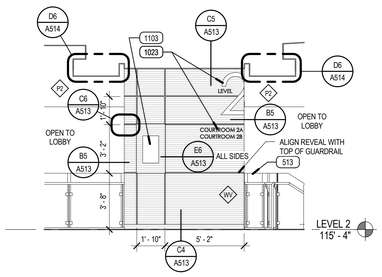

A3 LEVEL 2 ELEVATOR SOUTH

SCALE: 1/4" = 1'-0"

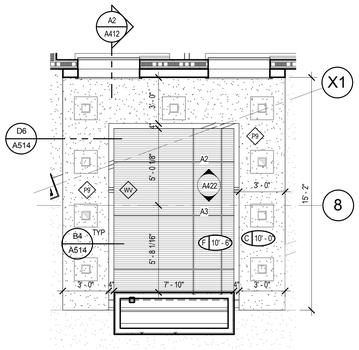

A4 ENLARGED LEVEL 2 ELEVATOR RCP

SCALE: 1/4" = 1'-0"

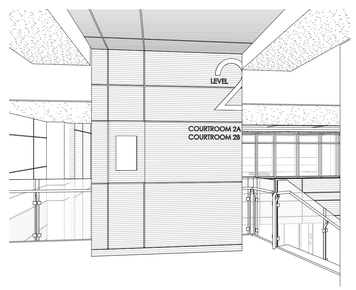

A5 PERSPECTIVE AT WOOD FEATURE WALL @ LVL 2

SCALE: NOT TO SCALE

FINISH PLAN SYMBOLS

F SINGLE FINISH SYMBOLS INDICATE WHERE FINISHES ARE DIFFERENT FROM GENERAL ROOM FINISHES, OR PROVIDE ADDITIONAL FINISH INFORMATION

CHANGE AT FLOOR MATERIAL

FINISH PLAN LEGEND

FLOOR MATERIALS

EM	ENTRY MAT
C1	CARPET TILE
C2	CARPET TILE
C3	NOT USED
C4	CARPET TILE
C5	CARPET TILE
C6	CARPET TILE
C7	NOT USED
L1	LINOLEUM SHEET
L2	LINOLEUM TILE - MCT
FT1	PORCELAIN FLOOR TILE 12x24
FT2	PORCELAIN FLOOR TILE 6x24
FT3	PORCELAIN FLOOR TILE 12x12
FT4	FLOOR TILE 1X2
VT2	STATIC DISSIPATIVE ACCESS FLOOR PANEL
RB1	RUBBER FLOOR TILES
RB2	RUBBER FLOORING (STAIRS, LANDINGS)
SC	SEALED CONCRETE
TZ1	TERRAZZO FLOORING
TZ2	TERRAZZO FLOORING ACCENT
EP1	EPOXY FLOORING - OPAQUE
G1	GROUT
G2	GROUT
PT	ALUMINUM DIAMOND PLATE

BASE MATERIALS

B1	RUBBER BASE
B2	RUBBER BASE
B3	ANODIZED ALUMINUM BASE - SEE C2 AND C4/A513
B4	SOLID HARDWOOD BASE - 3/4" THICK, 4" HIGH
B5	TILE BASE
B6	ALUMINUM COVE BASE
B7	TILE COVE BASE
B8	NO BASE - SEAL SEAM
B9	NO BASE - CAULK BETWEEN FLOOR AND WALL
B10	COVED RUBBER BASE
B11	COVED EPOXY FLOORING

WALL MATERIALS

F1	ACOUSTIC FABRIC WALL PANELS
F2	PEW SEAT FABRIC
P1	PRIMED & PAINTED WALL SURFACE - GENERAL
P2	PRIMED & PAINTED WALL SURFACE - GENERAL
P3	PRIMED & PAINTED WALL SURFACE - ACCENT
P4	PRIMED & PAINTED WALL SURFACE - ACCENT
P5	CEILING PAINT
P6	RAILING PAINT
P7	H.M. DOOR FRAME PAINT
P8	H.M. DOOR FRAME PAINT
P9	PRIMED & PAINTED WALL SURFACE - ACCENT
P10	INTUMESCENT PAINT SYSTEM
WT1	PORCELAIN WALL TILE 6X24
WT2	PORCELAIN WALL TILE 4X24
WT3	PORCELAIN WILL TILE 2X24
WT4	PORCELAIN WALL TILE 6X24
WT5	PORCELAIN WALL TILE 2X24
WT6	NOT USED
WT7	GLAZED WALL TILE 3x6
WT8	GLAZED WALL TILE 3x6
WT9	GLAZED WALL TILE 3x6
WT10	NOT USED
WT11	NOT USED
WT12	NOT USED
WT13	GLAZED WALL TILE 4x4
WT14	GLASS WALL TILE - SIZES VARY
WC1	VINYL WALLCOVERING
WC3	DRY ERASE WALLCOVERING

SURFACE MATERIALS

PL1	PLASTIC LAMINATE - VERTICAL SURFACES
PL2	PLASTIC LAMINATE - COUNTERTOPS
PL3	PHENOLIC CORE PARTITIONS - PARTITION COLOR
WV	WOOD VENEER - SEE A513 FOR TYPICAL DETAILS
QZ1	QUARTZ COUNTERTOP SURFACE
QZ2	QUARTZ COUNTERTOP SURFACE
QZ3	QUARTZ COUNTERTOP SURFACE
SS1	SOLID SURFACE COUNTERTOP
SS2	SOLID SURFACE COUNTERTOP
SS3	SOLID SURFACE THRESHOLD

KEYED NOTES

513	DECORATIVE GLASS RAILING
925	1/2" ALUMINUM GYP BOARD REVEAL
1023	SIGNAGE, SEE SCHEDULE
1103	WALL MOUNTED VIDEO MONITOR AND BRACKET
1400	ELEVATORS
1401	S.S. ELEVATOR CAB DOOR
1402	ELEVATOR CALL BUTTONS
2205	ELECTRIC WATER COOLER
2600	LIGHT FIXTURE
2611	EMERGENCY INTERCOM

VCBO ARCHITECTURE

VCBO ARCHITECTURE
524 SOUTH 600 EAST
SALT LAKE CITY, UT 84102
Phone: (801) 575-8800
Fax: (801) 531-9850
Web: vcbo.com

LICENSED ARCHITECT No. 153912 BRENT R. TIPPETS 8-15-13 STATE OF UTAH

2nd District Juvenile Courthouse

Utah State Courts
08284150
165 West 20th Street, Ogden, Utah
BID DOCUMENTS

Rev #	Date	Description

Job # 12500
Date August 15, 2013
Owner # 08284150
Ins. #

ENLARGED PLANS AND ELEVATIONS

A422

8/14/2013 2:37:14 PM

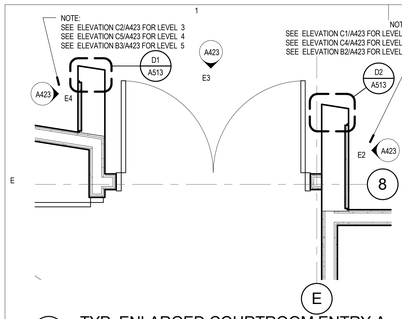

E1 TYP. ENLARGED COURTROOM ENTRY A
SCALE: 1/2" = 1'-0"

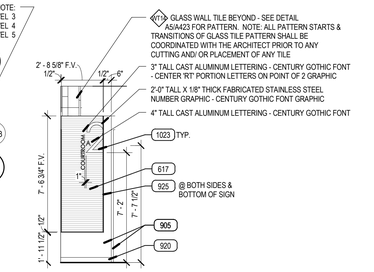

E2 COURTROOM ENTRY A ELEV. L - LVL 2
SCALE: 1/4" = 1'-0"

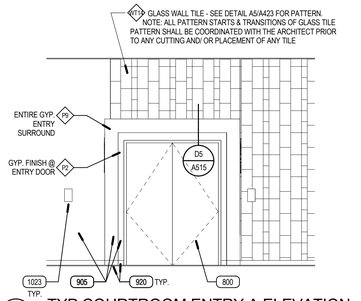

E3 TYP COURTROOM ENTRY A ELEVATION
SCALE: 1/4" = 1'-0"

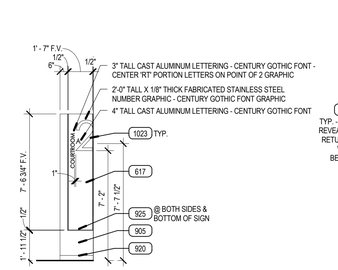

E4 COURTROOM ENTRY A ELEV. R - LVL 2
SCALE: 1/4" = 1'-0"

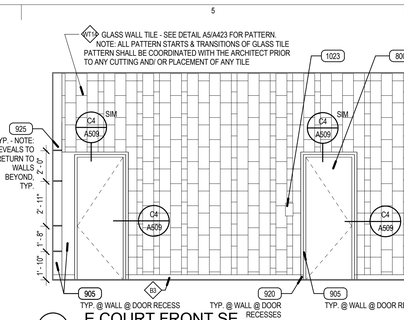

E5 E COURT FRONT SE
SCALE: 1/4" = 1'-0"

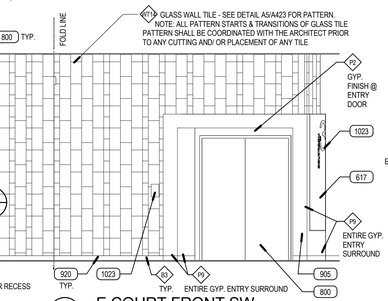

E6 E COURT FRONT SW
SCALE: 1/4" = 1'-0"

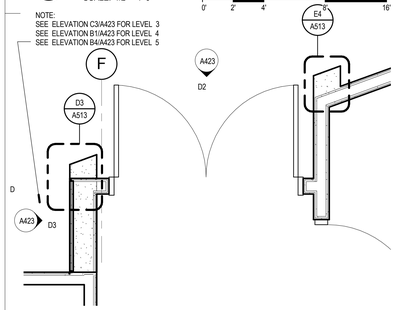

D1 TYP. ENLARGED COURTROOM ENTRY B
SCALE: 1/2" = 1'-0"

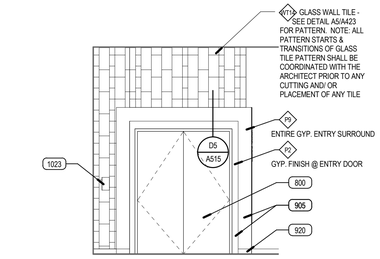

D2 TYP COURTROOM ENTRY B ELEVATION
SCALE: 1/4" = 1'-0"

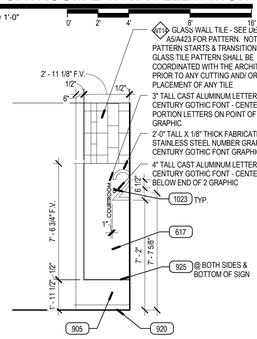

D3 COURTROOM ENTRY B ELEV. R - LVL 2
SCALE: 1/4" = 1'-0"

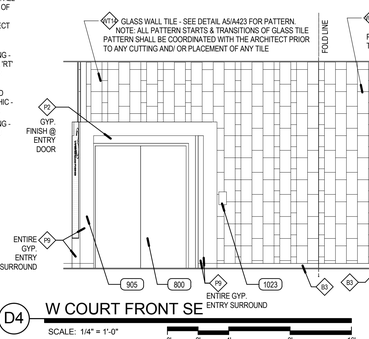

D4 W COURT FRONT SE
SCALE: 1/4" = 1'-0"

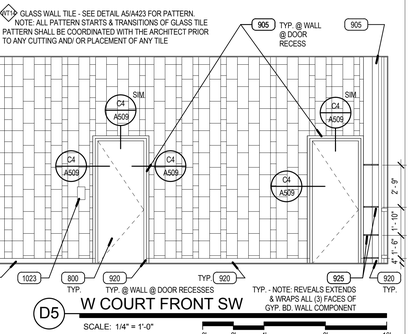

D5 W COURT FRONT SW
SCALE: 1/4" = 1'-0"

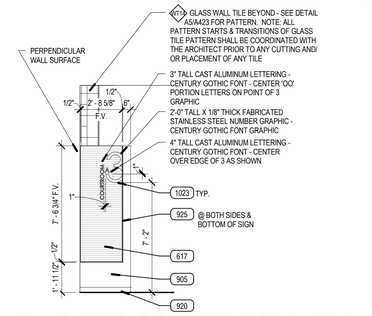

C1 COURTROOM ENTRY A ELEV. L - LVL 3
SCALE: 1/4" = 1'-0"

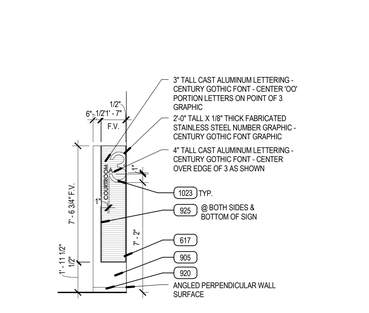

C2 COURTROOM ENTRY A ELEV. R - LVL 3
SCALE: 1/4" = 1'-0"

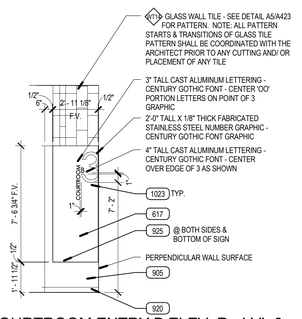

C3 COURTROOM ENTRY B ELEV. R - LVL 3
SCALE: 1/4" = 1'-0"

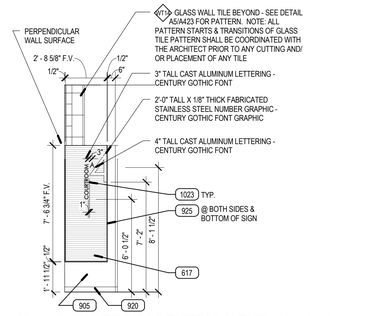

C4 COURTROOM ENTRY A ELEV. L - LVL 4
SCALE: 1/4" = 1'-0"

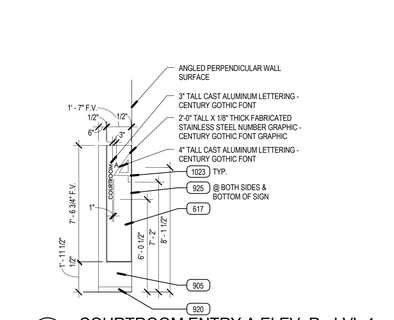

C5 COURTROOM ENTRY A ELEV. R - LVL 4
SCALE: 1/4" = 1'-0"

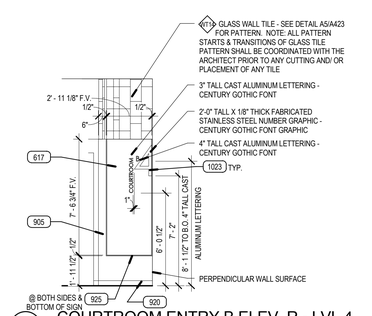

B1 COURTROOM ENTRY B ELEV. R - LVL 4
SCALE: 1/4" = 1'-0"

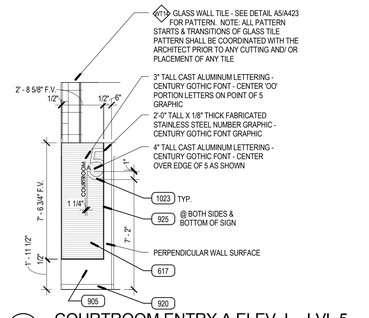

B2 COURTROOM ENTRY A ELEV. L - LVL 5
SCALE: 1/4" = 1'-0"

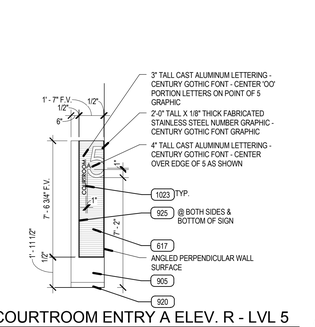

B3 COURTROOM ENTRY A ELEV. R - LVL 5
SCALE: 1/4" = 1'-0"

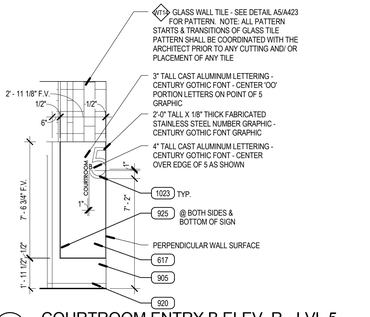

B4 COURTROOM ENTRY B ELEV. R - LVL 5
SCALE: 1/4" = 1'-0"

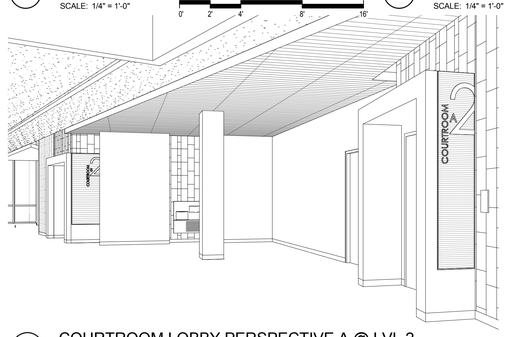

A1 COURTROOM LOBBY PERSPECTIVE A @ LVL 2
SCALE: NOT TO SCALE

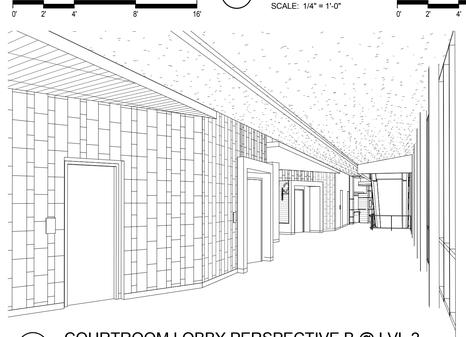

A2 COURTROOM LOBBY PERSPECTIVE B @ LVL 2
SCALE: NOT TO SCALE

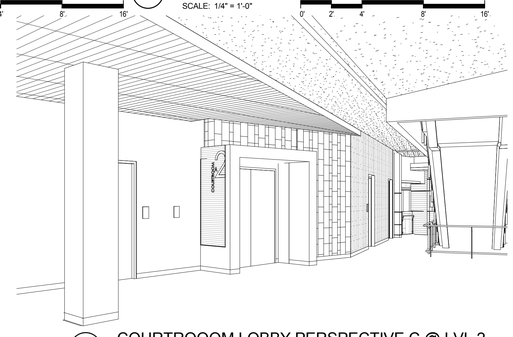

A3 COURTROOOM LOBBY PERSPECTIVE C @ LVL 2
SCALE: NOT TO SCALE

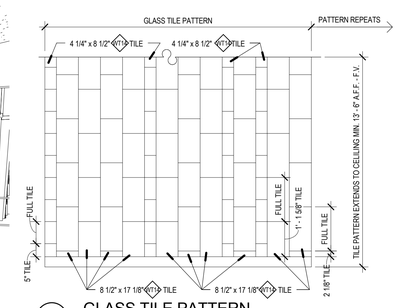

A5 GLASS TILE PATTERN
SCALE: 1/2" = 1'-0"

FINISH PLAN SYMBOLS

SINGLE FINISH SYMBOLS INDICATE WHERE FINISHES ARE DIFFERENT FROM GENERAL ROOM FINISHES, OR PROVIDE ADDITIONAL FINISH INFORMATION

CHANGE AT FLOOR MATERIAL

FINISH PLAN LEGEND

FLOOR MATERIALS

EM	ENTRY MAT
C1	CARPET TILE
C2	CARPET TILE
C3	NOT USED
C4	CARPET TILE
C5	CARPET TILE
C6	CARPET TILE
C7	NOT USED
L1	LINOLEUM SHEET
L2	LINOLEUM TILE - MCT
FT1	PORCELAIN FLOOR TILE 12x24
FT2	PORCELAIN FLOOR TILE 6x24
FT3	PORCELAIN FLOOR TILE 12x12
FT4	FLOOR TILE 1X2
VT2	STATIC DISSIPATIVE ACCESS FLOOR PANEL
RB1	RUBBER FLOOR TILES
RB2	RUBBER FLOORING (STAIRS, LANDINGS)
SC	SEALED CONCRETE
TZ1	TERRAZZO FLOORING
TZ2	TERRAZZO FLOORING ACCENT
EP1	EPOXY FLOORING - OPAQUE
G1	GROUT
G2	GROUT
PT	ALUMINUM DIAMOND PLATE

BASE MATERIALS

B1	RUBBER BASE
B2	RUBBER BASE
B3	ANODIZED ALUMINUM BASE - SEE C2 AND C4/A513
B4	SOLID HARDWOOD BASE - 3/4" THICK, 4" HIGH
B5	TILE BASE
B6	ALUMINUM COVE BASE
B7	TILE COVE BASE
B8	NO BASE - SEAL SEAM
B9	NO BASE - CAULK BETWEEN FLOOR AND WALL
B10	COVED RUBBER BASE
B11	COVED EPOXY FLOORING

WALL MATERIALS

F1	ACOUSTIC FABRIC WALL PANELS
F2	PEW SEAT FABRIC
P1	PRIMED & PAINTED WALL SURFACE - GENERAL
P2	PRIMED & PAINTED WALL SURFACE - GENERAL
P3	PRIMED & PAINTED WALL SURFACE - ACCENT
P4	PRIMED & PAINTED WALL SURFACE - ACCENT
P5	CEILING PAINT
P6	RAILING PAINT
P7	H.M. DOOR FRAME PAINT
P8	H.M. DOOR FRAME PAINT
P9	PRIMED & PAINTED WALL SURFACE - ACCENT
P10	INTUMESCENT PAINT SYSTEM
WT1	PORCELAIN WALL TILE 6X24
WT2	PORCELAIN WALL TILE 4X24
WT3	PORCELAIN WILL TILE 2X24
WT4	PORCELAIN WALL TILE 6X24
WT5	PORCELAIN WALL TILE 2X24
WT6	NOT USED
WT7	GLAZED WALL TILE 3x6
WT8	GLAZED WALL TILE 3x6
WT9	GLAZED WALL TILE 3x6
WT10	NOT USED
WT11	NOT USED
WT12	NOT USED
WT13	GLAZED WALL TILE 4x4
WT14	GLASS WALL TILE - SIZES VARY
WC1	VINYL WALLCOVERING
WC3	DRY ERASE WALLCOVERING

SURFACE MATERIALS

PL1	PLASTIC LAMINATE - VERTICAL SURFACES
PL2	PLASTIC LAMINATE - COUNTERTOPS
PL3	PHENOLIC CORE PARTITIONS - PARTITION COLOR
WV	WOOD VENEER - SEE A513 FOR TYPICAL DETAILS
QZ1	QUARTZ COUNTERTOP SURFACE
QZ2	QUARTZ COUNTERTOP SURFACE
QZ3	QUARTZ COUNTERTOP SURFACE
SS1	SOLID SURFACE COUNTERTOP
SS2	SOLID SURFACE COUNTERTOP
SS3	SOLID SURFACE THRESHOLD

KEYED NOTES

617	VENEERED 1/4" MDF WOOD PANELS OVER 1/2" MDF SUBSTRATE
800	SCHEDULED DOOR & FRAME
905	5/8" TYPE 'X' GYP. BD. PAINTED WHERE EXPOSED
920	SCHEDULED BASE
925	1/2" ALUMINUM GYP BOARD REVEAL
1023	SIGNAGE, SEE SCHEDULE

VCBO ARCHITECTURE
VCBO ARCHITECTURE
524 SOUTH 600 EAST
SALT LAKE CITY, UT 84102
Phone: (801) 575-8800
Fax: (801) 531-9850
Web: vcbo.com

LICENSED ARCHITECT
No. 153912
BRENT R. TIPPETS
8-15-13
STATE OF UTAH

2nd District Juvenile Courthouse

Utah State Courts
08284150
165 West 20th Street, Ogden, Utah
BID DOCUMENTS

Rev #	Date	Description

Job # 12500
Date August 15, 2013
Owner # 08284150
Ins. #

ENLARGED PLANS AND ELEVATIONS

A423

8/14/2013 2:37:59 PM

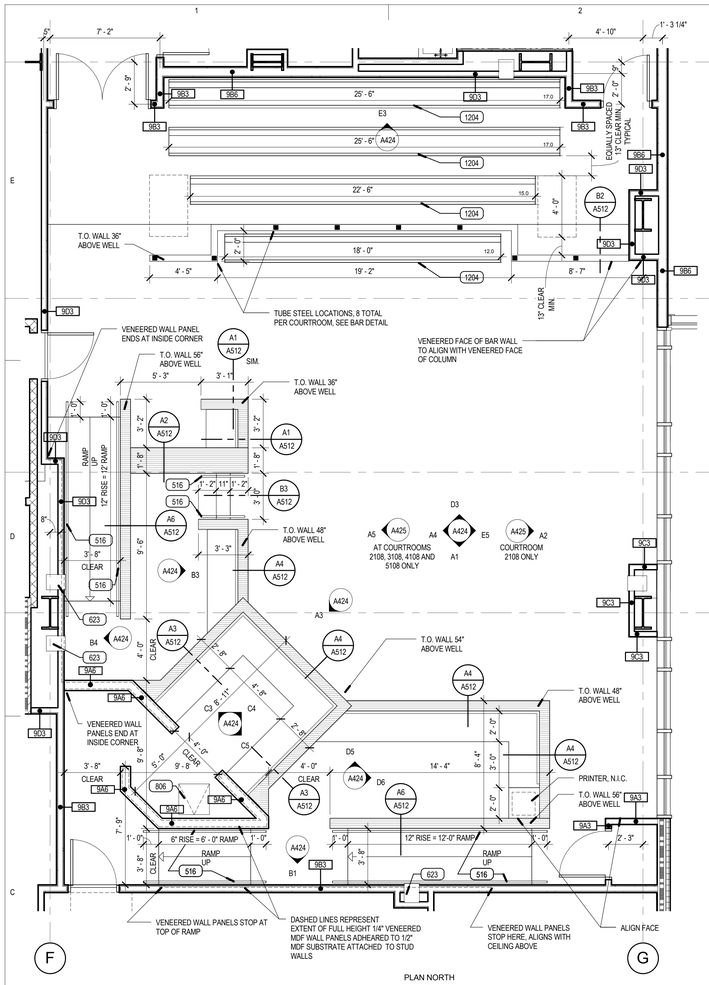

C1 TYPICAL COURTOOM FLOOR PLAN
SCALE: 1/4" = 1'-0"

PLAN NORTH

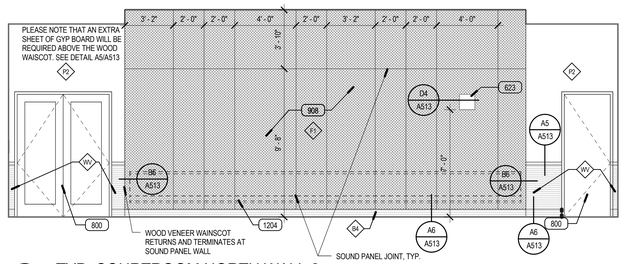

E3 TYP. COURTROOM NORTH WALL 2
SCALE: 1/4" = 1'-0"

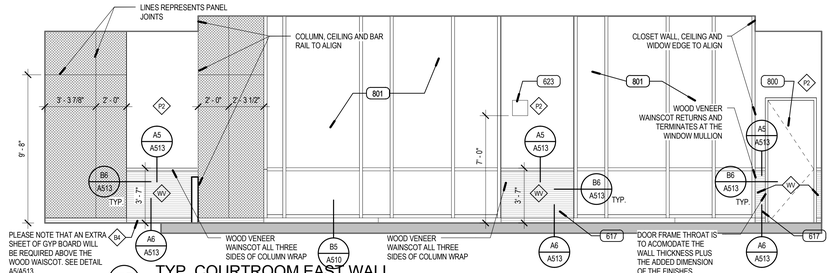

E5 TYP. COURTROOM EAST WALL
SCALE: 1/4" = 1'-0"

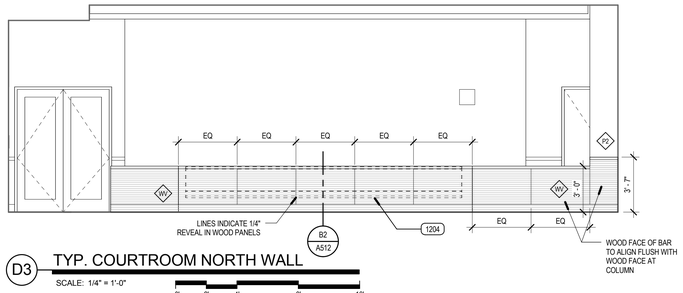

D3 TYP. COURTROOM NORTH WALL
SCALE: 1/4" = 1'-0"

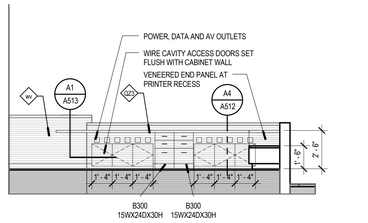

D5 TYP. INT. CLERK'S BOX
SCALE: 1/4" = 1'-0"

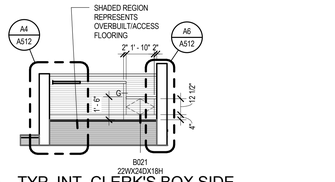

D6 TYP. INT. CLERK'S BOX SIDE
SCALE: 1/4" = 1'-0"

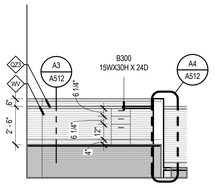

C3 TYP. INT. JUDGE'S BOX LEFT
SCALE: 1/4" = 1'-0"

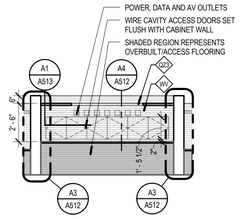

C4 TYP. INT. JUDGE'S BOX CENTER
SCALE: 1/4" = 1'-0"

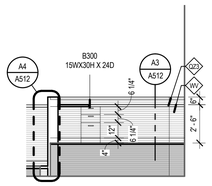

C5 TYP. INT. JUDGE'S BOX RIGHT
SCALE: 1/4" = 1'-0"

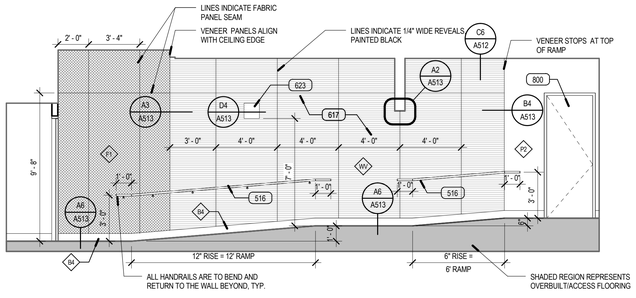

B1 TYP. COURTROOM STAND LEFT
SCALE: 1/4" = 1'-0"

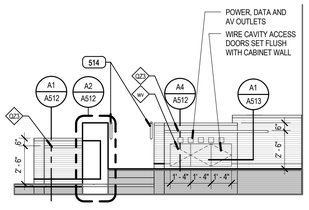

B3 TYP. INT. STAND BOX LEFT
SCALE: 1/4" = 1'-0"

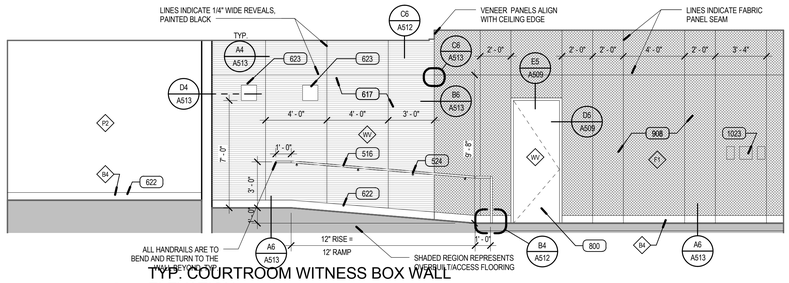

B4 TYP. COURTOOM WITNESS BOX WALL ELEVATION
SCALE: 1/4" = 1'-0"

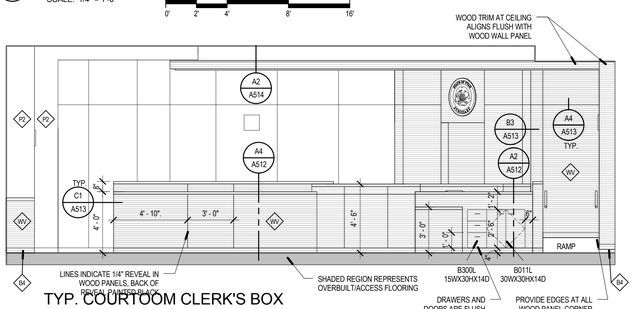

A1 TYP. COURTOOM CLERK'S BOX ELEVATION
SCALE: 1/4" = 1'-0"

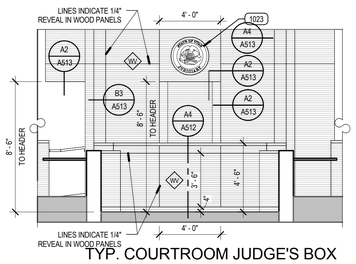

A3 TYP. COURTOOM JUDGE'S BOX ELEVATION
SCALE: 1/4" = 1'-0"

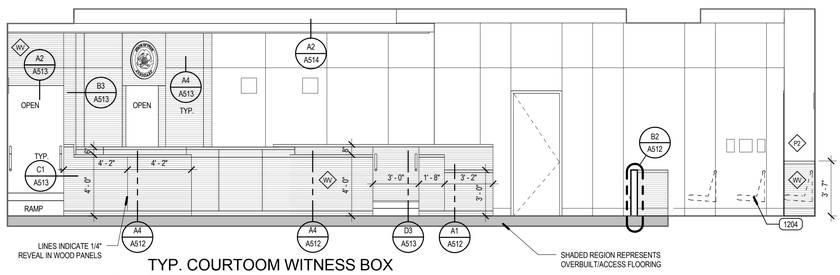

A4 TYP. COURTOOM WITNESS BOX ELEVATION
SCALE: 1/4" = 1'-0"

FINISH PLAN SYMBOLS

SINGLE FINISH SYMBOLS INDICATE WHERE FINISHES ARE DIFFERENT FROM GENERAL ROOM FINISHES, OR PROVIDE ADDITIONAL FINISH INFORMATION

CHANGE AT FLOOR MATERIAL

FINISH PLAN LEGEND

FLOOR MATERIALS

EM	ENTRY MAT
C1	CARPET TILE
C2	CARPET TILE
C3	NOT USED
C4	CARPET TILE
C5	CARPET TILE
C6	CARPET TILE
C7	NOT USED
L1	LINOLEUM SHEET
L2	LINOLEUM TILE - MCT
FT1	PORCELAIN FLOOR TILE 12x24
FT2	PORCELAIN FLOOR TILE 6x24
FT3	PORCELAIN FLOOR TILE 12x12
FT4	FLOOR TILE 1X2
VT2	STATIC DISSIPATIVE ACCESS FLOOR PANEL
RB1	RUBBER FLOOR TILES
RB2	RUBBER FLOORING (STAIRS, LANDINGS)
SC	SEALED CONCRETE
TZ1	TERRAZZO FLOORING
TZ2	TERRAZZO FLOORING ACCENT
EP1	EPOXY FLOORING - OPAQUE
G1	GROUT
G2	GROUT
PT	ALUMINUM DIAMOND PLATE

BASE MATERIALS

B1	RUBBER BASE
B2	RUBBER BASE
B3	ANODIZED ALUMINUM BASE - SEE C2 AND C4/A513
B4	SOLID HARDWOOD BASE - 3/4" THICK, 4" HIGH
B5	TILE BASE
B6	ALUMINUM COVE BASE
B7	TILE COVE BASE
B8	NO BASE - SEAL SEAM
B9	NO BASE - CAULK BETWEEN FLOOR AND WALL
B10	COVED RUBBER BASE
B11	COVED EPOXY FLOORING

WALL MATERIALS

F1	ACOUSTIC FABRIC WALL PANELS
F2	PEW SEAT FABRIC
P1	PRIMED & PAINTED WALL SURFACE - GENERAL
P2	PRIMED & PAINTED WALL SURFACE - GENERAL
P3	PRIMED & PAINTED WALL SURFACE - ACCENT
P4	PRIMED & PAINTED WALL SURFACE - ACCENT
P5	CEILING PAINT
P6	RAILING PAINT
P7	H.M. DOOR FRAME PAINT
P8	H.M. DOOR FRAME PAINT
P9	PRIMED & PAINTED WALL SURFACE - ACCENT
P10	INTUMESCENT PAINT SYSTEM
WT1	PORCELAIN WALL TILE 6X24
WT2	PORCELAIN WALL TILE 4X24
WT3	PORCELAIN WILL TILE 2X24
WT4	PORCELAIN WALL TILE 6X24
WT5	PORCELAIN WALL TILE 2X24
WT6	NOT USED
WT7	GLAZED WALL TILE 3x6
WT8	GLAZED WALL TILE 3x6
WT9	GLAZED WALL TILE 3x6
WT10	NOT USED
WT11	NOT USED
WT12	NOT USED
WT13	GLAZED WALL TILE 4x4
WT14	GLASS WALL TILE - SIZES VARY
WC1	VINYL WALLCOVERING
WC3	DRY ERASE WALLCOVERING

SURFACE MATERIALS

PL1	PLASTIC LAMINATE - VERTICAL SURFACES
PL2	PLASTIC LAMINATE - COUNTERTOPS
PL3	PHENOLIC CORE PARTITIONS - PARTITION COLOR
WV	WOOD VENEER - SEE A513 FOR TYPICAL DETAILS
QZ1	QUARTZ COUNTERTOP SURFACE
QZ2	QUARTZ COUNTERTOP SURFACE
QZ3	QUARTZ COUNTERTOP SURFACE
SS1	SOLID SURFACE COUNTERTOP
SS2	SOLID SURFACE COUNTERTOP
SS3	SOLID SURFACE THRESHOLD

KEYED NOTES

514	1 1/2" DIA. STAINLESS STEEL HANDRAIL
516	WALL MOUNTED 1 1/2" DIA. STAINLESS STEEL HANDRAIL WITH PREMANUFACTURED S.S. WALL BRACKETS @ 4' MAX O.C.
524	PREMANUFACTURED S.S. HANDRAIL WALL BRACKET
617	VENEERED 1/4" MDF WOOD PANELS OVER 1/2" MDF SUBSTRATE
622	4" HIGH 3/4" HARDWOOD BASE
623	CAMERA POCKET ENCLOSURE
800	SCHEDULED DOOR & FRAME
801	WINDOW SYSTEM
806	24"X 24" FLOOR ACCESS DOOR WITH CARPET INSERT
908	FABRIC WRAPPED 3/4" ACOUSTICAL PANELS
1023	SIGNAGE, SEE SCHEDULE
1204	WOOD PEW WITH UPHOLSTERED SEAT

VCBO ARCHITECTURE
VCBO ARCHITECTURE
524 SOUTH 600 EAST
SALT LAKE CITY, UT 84102
Phone: (801) 575-8800
Fax: (801) 531-9850
Web: vcbo.com

LICENSED ARCHITECT No. 153912 BRENT R. TIPPETS 8-15-13 STATE OF UTAH

2nd District Juvenile Courthouse

Utah State Courts
165 West 20th Street, Ogden, Utah
08284150
BID DOCUMENTS

Rev #	Date	Description

Job # 12500
Date August 15, 2013
Owner # 08284150
Ins. #

ENLARGED PLANS AND ELEVATIONS

A424

8/14/2013 2:38:31 PM

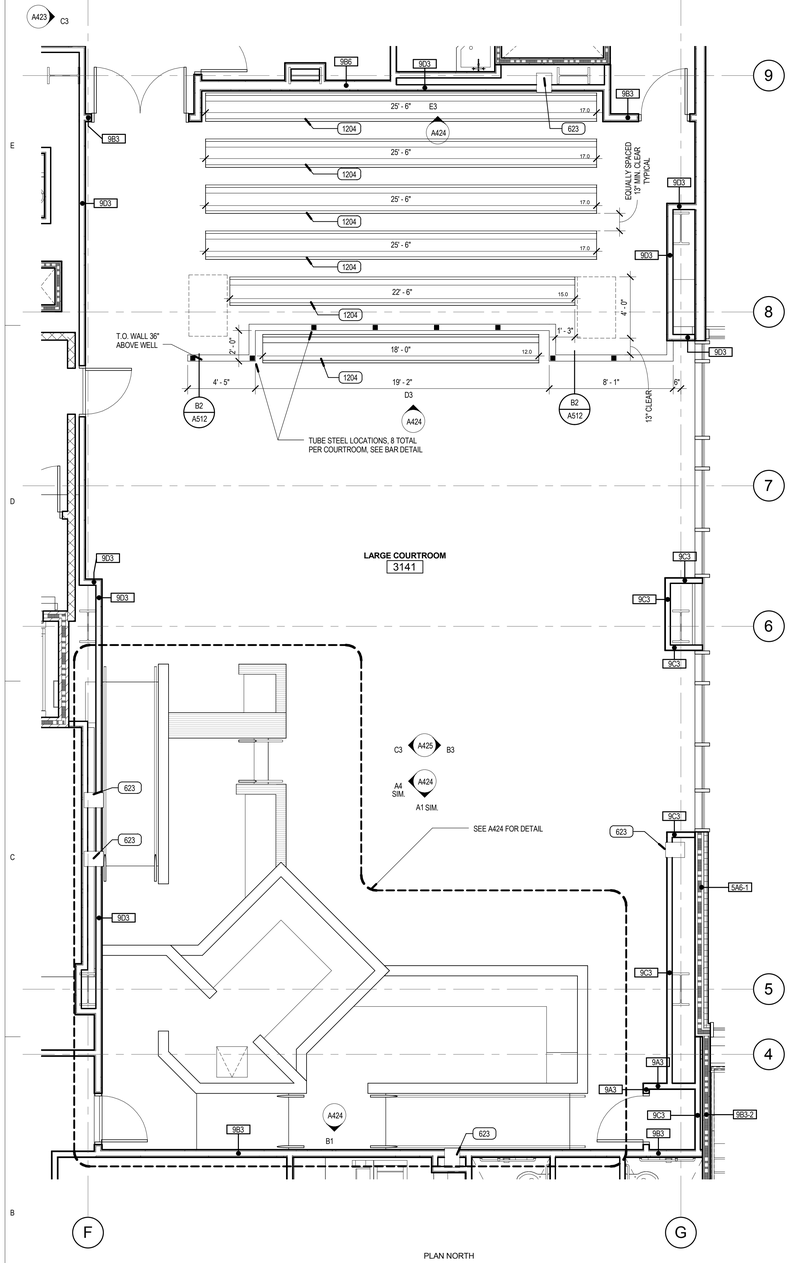

B1 LARGE COURTROOM PLAN

SCALE: 1/4" = 1'-0"

E3 Courtroom From Clerks Desk

SCALE: NOT TO SCALE

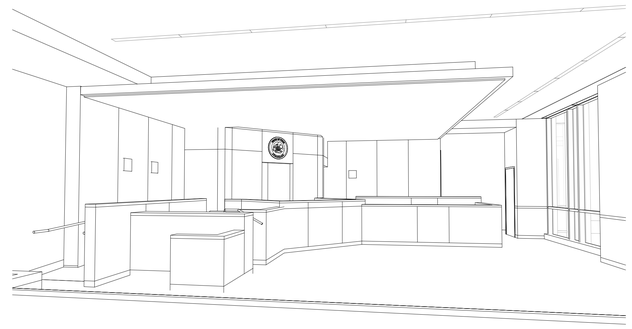

D3 Courtroom From Gallery

SCALE: NOT TO SCALE

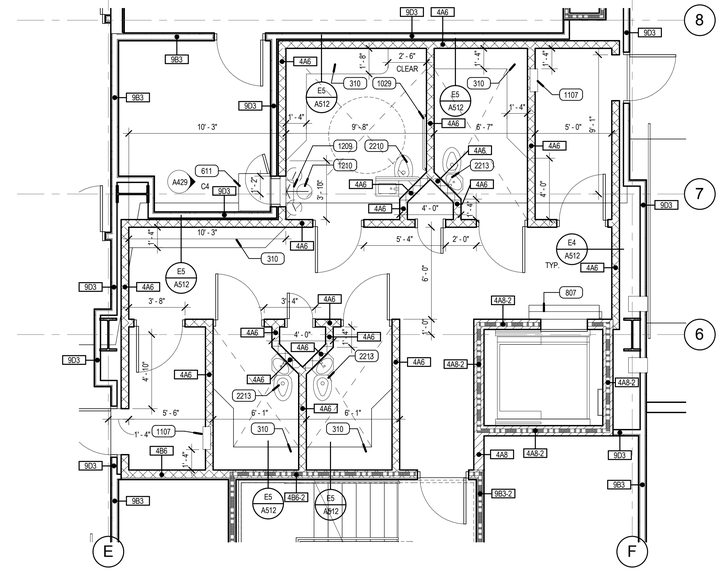

D5 HOLDING AREA, LEVELS 2,3,4,5

SCALE: 1/4" = 1'-0"

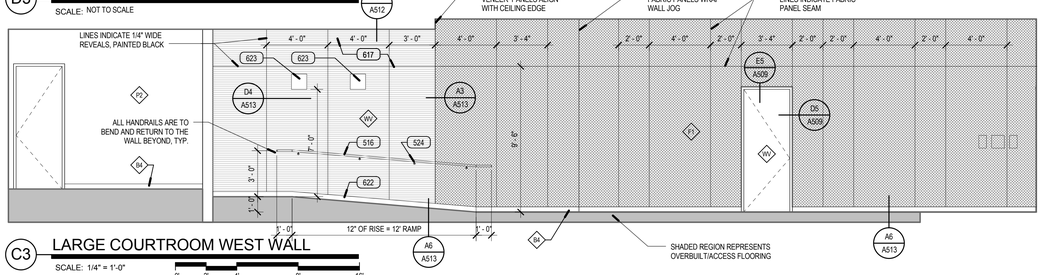

C3 LARGE COURTROOM WEST WALL

SCALE: 1/4" = 1'-0"

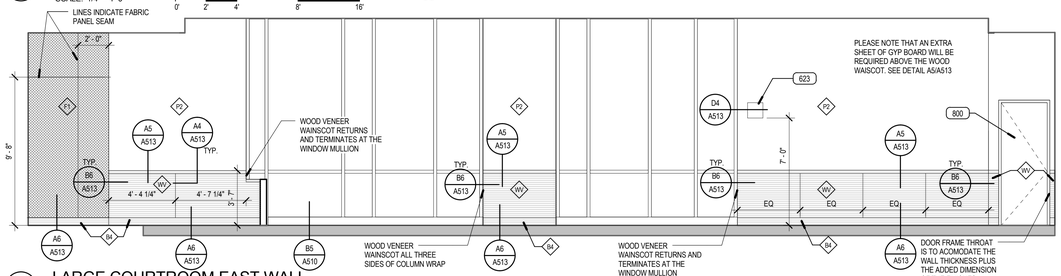

B3 LARGE COURTROOM EAST WALL

SCALE: 1/4" = 1'-0"

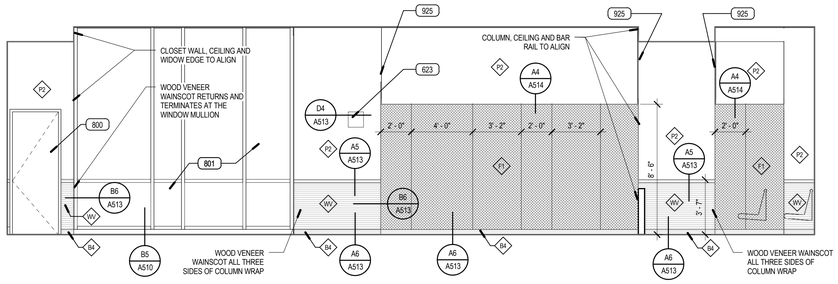

A2 2108-1-COURTROOM WEST WALL

SCALE: 1/4" = 1'-0"

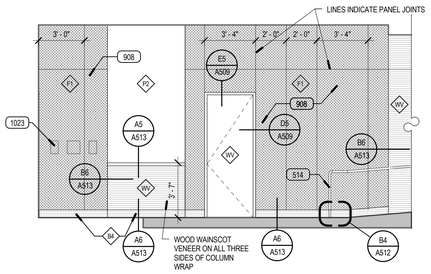

A5 PARTIAL ELEVATION SHOWING COLUMN WRAP AT WESTERN COURTROOMS

SCALE: 1/4" = 1'-0"

FINISH PLAN SYMBOLS

SINGLE FINISH SYMBOLS INDICATE WHERE FINISHES ARE DIFFERENT FROM GENERAL ROOM FINISHES, OR PROVIDE ADDITIONAL FINISH INFORMATION

CHANGE AT FLOOR MATERIAL

FINISH PLAN LEGEND

FLOOR MATERIALS

EM	ENTRY MAT
C1	CARPET TILE
C2	CARPET TILE
C3	NOT USED
C4	CARPET TILE
C5	CARPET TILE
C6	CARPET TILE
C7	NOT USED
L1	LINOLEUM SHEET
L2	LINOLEUM TILE - MCT
FT1	PORCELAIN FLOOR TILE 12x24
FT2	PORCELAIN FLOOR TILE 6x24
FT3	PORCELAIN FLOOR TILE 12x12
FT4	FLOOR TILE 1X2
VT2	STATIC DISSIPATIVE ACCESS FLOOR PANEL
RB1	RUBBER FLOOR TILES
RB2	RUBBER FLOORING (STAIRS, LANDINGS)
SC	SEALED CONCRETE
TZ1	TERRAZZO FLOORING
TZ2	TERRAZZO FLOORING ACCENT
EP1	EPOXY FLOORING - OPAQUE
G1	GROUT
G2	GROUT
PT	ALUMINUM DIAMOND PLATE

BASE MATERIALS

B1	RUBBER BASE
B2	RUBBER BASE
B3	ANODIZED ALUMINUM BASE - SEE C2 AND C4/A513
B4	SOLID HARDWOOD BASE - 3/4" THICK, 4" HIGH
B5	TILE BASE
B6	ALUMINUM COVE BASE
B7	TILE COVE BASE
B8	NO BASE - SEAL SEAM
B9	NO BASE - CAULK BETWEEN FLOOR AND WALL
B10	COVED RUBBER BASE
B11	COVED EPOXY FLOORING

WALL MATERIALS

F1	ACOUSTIC FABRIC WALL PANELS
F2	PEW SEAT FABRIC
P1	PRIMED & PAINTED WALL SURFACE - GENERAL
P2	PRIMED & PAINTED WALL SURFACE - GENERAL
P3	PRIMED & PAINTED WALL SURFACE - ACCENT
P4	PRIMED & PAINTED WALL SURFACE - ACCENT
P5	CEILING PAINT
P6	RAILING PAINT
P7	H.M. DOOR FRAME PAINT
P8	H.M. DOOR FRAME PAINT
P9	PRIMED & PAINTED WALL SURFACE - ACCENT
P10	INTUMESCENT PAINT SYSTEM
WT1	PORCELAIN WALL TILE 6X24
WT2	PORCELAIN WALL TILE 4X24
WT3	PORCELAIN WILL TILE 2X24
WT4	PORCELAIN WALL TILE 6X24
WT5	PORCELAIN WALL TILE 2X24
WT6	NOT USED
WT7	GLAZED WALL TILE 3x6
WT8	GLAZED WALL TILE 3x6
WT9	GLAZED WALL TILE 3x6
WT10	NOT USED
WT11	NOT USED
WT12	NOT USED
WT13	GLAZED WALL TILE 4x4
WT14	GLASS WALL TILE - SIZES VARY
WC1	VINYL WALLCOVERING
WC3	DRY ERASE WALLCOVERING

SURFACE MATERIALS

PL1	PLASTIC LAMINATE - VERTICAL SURFACES
PL2	PLASTIC LAMINATE - COUNTERTOPS
PL3	PHENOLIC CORE PARTITIONS - PARTITION COLOR
WV	WOOD VENEER - SEE A513 FOR TYPICAL DETAILS
QZ1	QUARTZ COUNTERTOP SURFACE
QZ2	QUARTZ COUNTERTOP SURFACE
QZ3	QUARTZ COUNTERTOP SURFACE
SS1	SOLID SURFACE COUNTERTOP
SS2	SOLID SURFACE COUNTERTOP
SS3	SOLID SURFACE THRESHOLD

KEYED NOTES

310	REINFORCED CONCRETE BENCH
514	1 1/2" DIA. STAINLESS STEEL HANDRAIL
516	WALL MOUNTED 1 1/2" DIA. STAINLESS STEEL HANDRAIL WITH PREMANUFACTURED S.S. WALL BRACKETS @ 4' MAX O.C.
524	PREMANUFACTURED S.S. HANDRAIL WALL BRACKET
611	PLASTIC LAMINATE COUNTERTOP
617	VENEERED 1/4" MDF WOOD PANELS OVER 1/2" MDF SUBSTRATE
622	4" HIGH 3/4" HARDWOOD BASE
623	CAMERA POCKET ENCLOSURE
800	SCHEDULED DOOR & FRAME
801	WINDOW SYSTEM
807	ROLL DOWN ELEVATOR SMOKE CONTAINMENT DOOR
908	FABRIC WRAPPED 3/4" ACOUSTICAL PANELS
925	1/2" ALUMINUM GYP BOARD REVEAL
1023	SIGNAGE, SEE SCHEDULE
1029	DETENTION GRADE GRAB BAR
1107	GUN LOCKER, 3 PISTOL CAPACITY
1204	WOOD PEW WITH UPHOLSTERED SEAT
1209	DETENTION GRADE S.S. DESK
1210	DETENTION GRADE S.S. FOLDING STOOL
2210	S.S. WALL MOUNTED TOILET WITH INTEGATED GRAB BAR
2213	S.S. WALL MOUNTED TOILET

VCBO ARCHITECTURE

VCBO ARCHITECTURE
524 SOUTH 600 EAST
SALT LAKE CITY, UT 84102
Phone: (801) 575-8800
Fax: (801) 531-9850
Web: vcbo.com

LICENSED ARCHITECT No. 153912 BRENT R. TIPPETS 8-15-13 STATE OF UTAH

2nd District Juvenile Courthouse

Utah State Courts
08284150
165 West 20th Street, Ogden, Utah
BID DOCUMENTS

Rev #	Date	Description

Job # 12500
Date August 15, 2013
Owner # 08284150
Ins. #

ENLARGED PLANS AND ELEVATIONS

A425

8/14/2013 2:39:00 PM

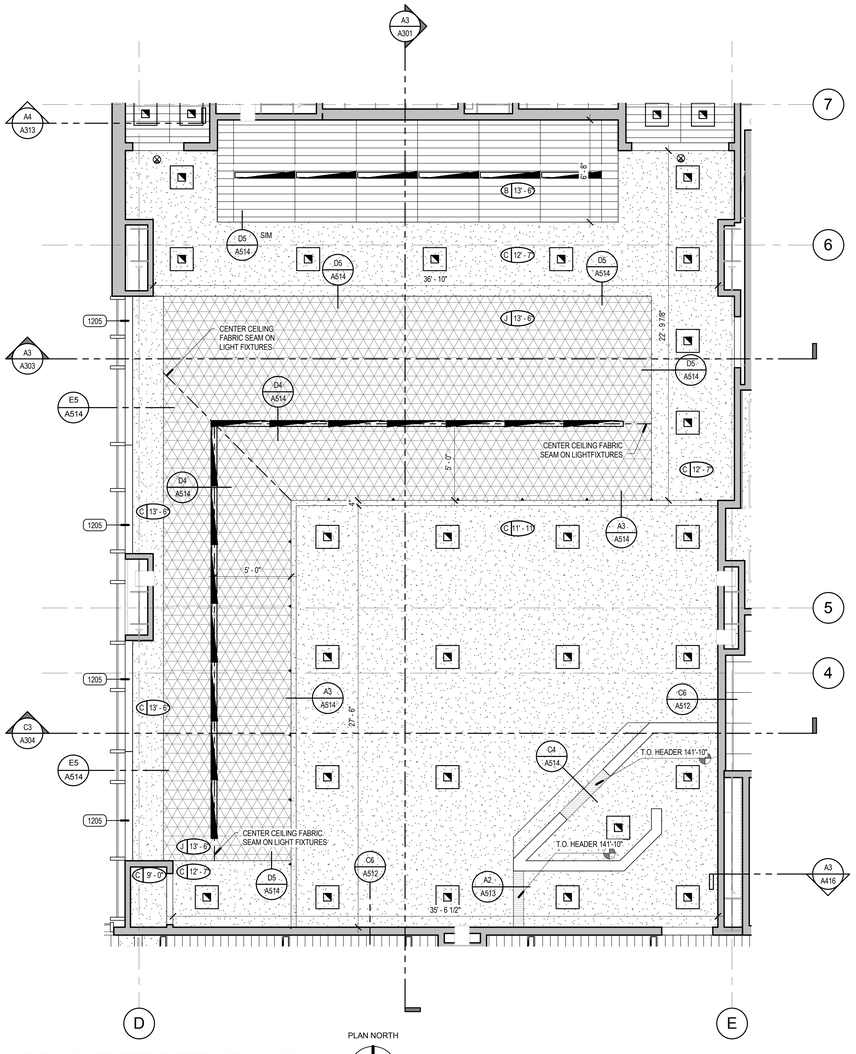

A1 TYP COURT REFLECTED CEILING PLAN

SCALE: 1/4" = 1'-0"

0' 2' 4' 8' 16'

PLAN NORTH

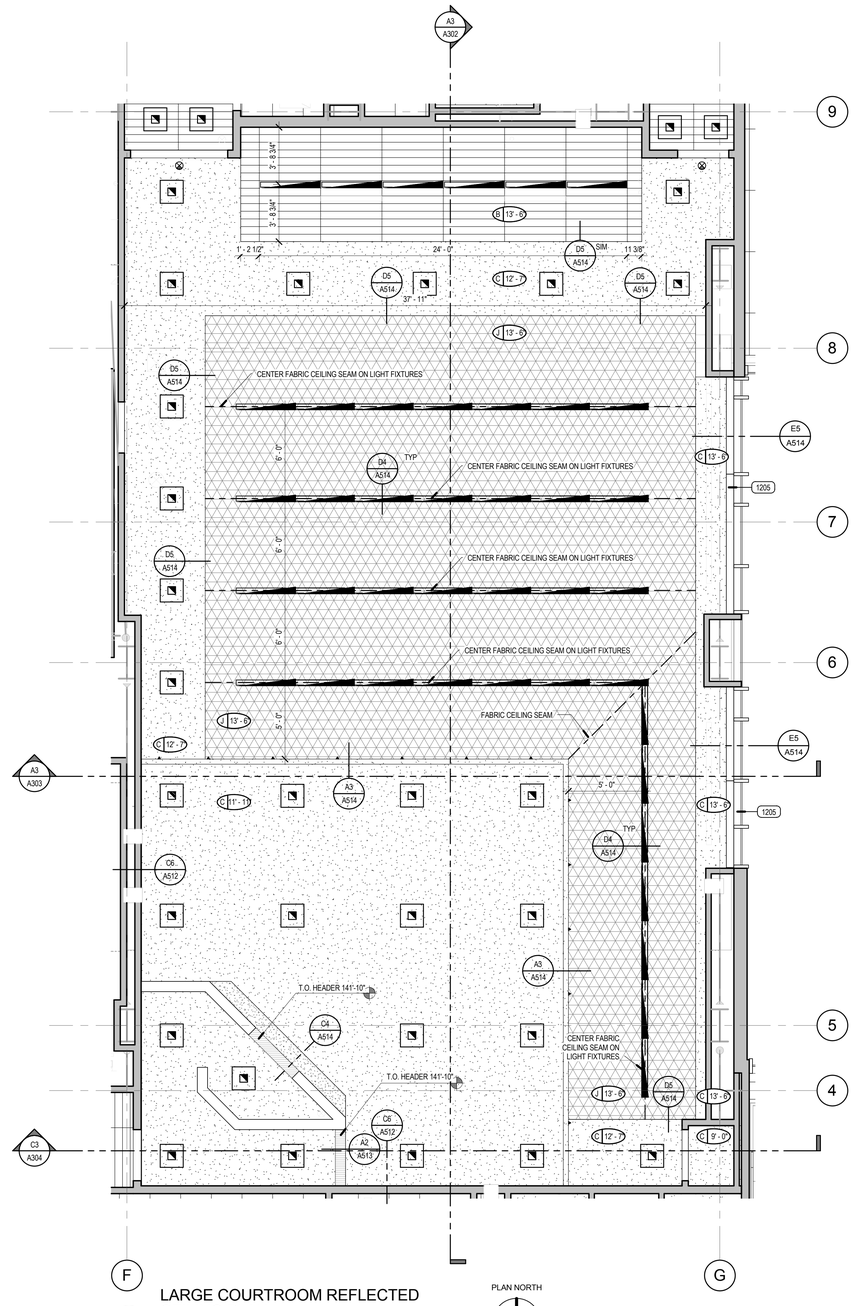

A3 LARGE COURTROOM REFLECTED CEILING PLAN

SCALE: 1/4" = 1'-0"

0' 2' 4' 8' 16'

PLAN NORTH

CEILING LEGEND

A-	SUSPENDED 2' X 4' ACOUSTICAL LAY-IN TILE CEILING WITH SINGLE KERF (2x2 LOOK)
B-	SUSPENDED 2' X 4' ACOUSTICAL LAY-IN TILE CEILING WITH 3 KERFS (6"x4" LOOK), 6" HIGH PRE-FINISHED METAL PERIMETER TRIM AT EDGES NOT TOUCHING A WALL
C-	SUSPENDED 5/8" GYP. BD. CEILING SYSTEM - (1 LAYER) PAINTED
D-	PRECAST CONCRETE CEILING, PAINTED
E-	OPEN TO STRUCTURE ABOVE, ALL SURFACES PAINTED: STRUCTURE, MECHANICAL, ELECTRICAL, ETC.
F-	WOOD VENEERED 1/4" SUBSTRATE ADHEARED TO 1/2" MDF. 1/2" MDF PAINTED BLACK AND SECURED TO 2-1/2" METAL STUDS @ 16" OC. 2-1/2" STUDS ARE ATTACHED TO 6" METAL STUDS @16"O.C., SEE ASSOCIATED DETAILS
G-	ACM METAL PANEL ATTACHED TO THERMALLY BROKEN 3" Z-FURRING @16" O.C. OVER AIR AND MOISTURE BARRIER WITH 3" MINERAL WOOL INSULATION. Z FURRING ATTACHED TO SUSPENDED 5/8" GYP. SHEATHING SOFFIT SYSTEM
H-	SUSPENDED ACOUSTICAL LAY-IN CEILING AS DESCRIBED IN CEILING TYPE 'B', SUSPENDED 12" BELOW A SUSPENDED 5/8" GYP BOARD CEILING, GYP BOARD JOINTS ARE TO BE FINISHED BUT BOARD IS NOT PAINTED
J-	STRETCHED FABRIC CEILING SYSTEM OVER 1" FIBERGLASS BATT INSULATION MOUNTED TO 5/8" GYP BOARD CEILING SYSTEM, GYP BOARD JOINTS TO BE FINISHED BUT BOARD IS NOT PAINTED
K-	SUSPENDED 5/8" GYP. BD. CEILING SYSTEM - OVER HAT CHANNEL FURRING, PAINTED

CEILING SYMBOLS

ELECTRICAL

- 2'X4' FLUORESCENT FIXTURE
- 2'X2' FLUORESCENT FIXTURE
- 6"X4' FLUORESCENT FIXTURE
- FLUORESCENT STRIP FIXTURE
- RECESSED SQUARE DOWN LIGHT
- WALL WASH
- 1'X4' FLUORESCENT FIXTURE
- EXIT SIGN, SINGLE-SIDED
- EXIT SIGN, DOUBLE-SIDED
- F — FIRE ALARM
- S — SPEAKER
- P — SMOKE DETECTOR
- W — WIRELESS INTERNET

MECHANICAL

- SUPPLY GRILLE
- RETURN GRILLE
- EXHAUST GRILLE
- LINEAR DIFFUSER
- SPRINKLER HEAD - CEILING MOUNT
- SPRINKLER HEAD - WALL MOUNT

GENERAL CEILING NOTES

1. REFER TO DETAIL A5/A514 FOR TYPICAL ACOUSTICAL LAY-IN CEILING SUSPENSION & SEISMIC BRACING
2. REFER TO DETAIL A6/A514 FOR TYPICAL SUSPENDED GYP. BOARD CEILINGS
3. ALL UNIDENTIFIED CEILING TYPES ON THE PLANS SHALL BE BID AS TYPE " A"
4. GRID SUSPENSION SYSTEMS SHALL BE CENTERED WITHIN AREAS INDICATED, UNLESS NOTED OTHERWISE
5. PAINT ALL EXPOSED STRUCTURE, MECHANICAL, DUCTS, ELECTRICAL WORK, PIPING, ETC. ALL VISIBLE ELEMENTS TO BE PAINTED AT TYPE "B" & TYPE "E"
6. REFER TO ARCHITECTURAL DRAWINGS FOR LOCATION OF MECHANICAL GRILLES, AND TO MECHANICAL DRAWINGS FOR QUANTITIES AND TYPES
7. REFER TO ARCHITECTURAL DRAWINGS FOR LOCATIONS OF LIGHT FIXTURES AND TO ELECTRICAL DRAWINGS FOR QUANTITY AND TYPES
8. MECHANICAL AND ELECTRICAL CONTRACTORS TO COORDINATE WORK WITH SPRINKLER CONTRACTOR TO AVOID CONFLICTS IN FIELD
9. ALL CEILING HEIGHTS ARE ELEVATION ABOVE FINISH FLOOR
10. ALL TYPE C CEILINGS IN RESTROOMS, LOCKER ROOMS, SHOWERS, AND WET AREAS TO BE EPOXY PAINTED

KEYED NOTES

1205 SEE DETAIL A6/A514 FOR TYPICAL SUSPENDED GYP. BOARD CEILING ALIGNMENT REQUIREMENTS

3 TYPICAL SPRINKLER HEAD LAYOUT

VCBO ARCHITECTURE

VCBO ARCHITECTURE
524 SOUTH 600 EAST
SALT LAKE CITY, UT 84102
Phone: (801) 575-8800
Fax: (801) 531-9850
Web: vcbo.com

LICENSED ARCHITECT No. 153912 BRENT R. TIPPETS 8-15-13 STATE OF UTAH

2nd District Juvenile Courthouse

Utah State Courts
08284150
165 West 20th Street, Ogden, Utah
BID DOCUMENTS

Rev #	Date	Description

Job # 12500
Date August 15, 2013
Owner # 08284150
Ins. #

ENLARGED COURT CEILINGS

A426

8/14/2013 2:39:14 PM

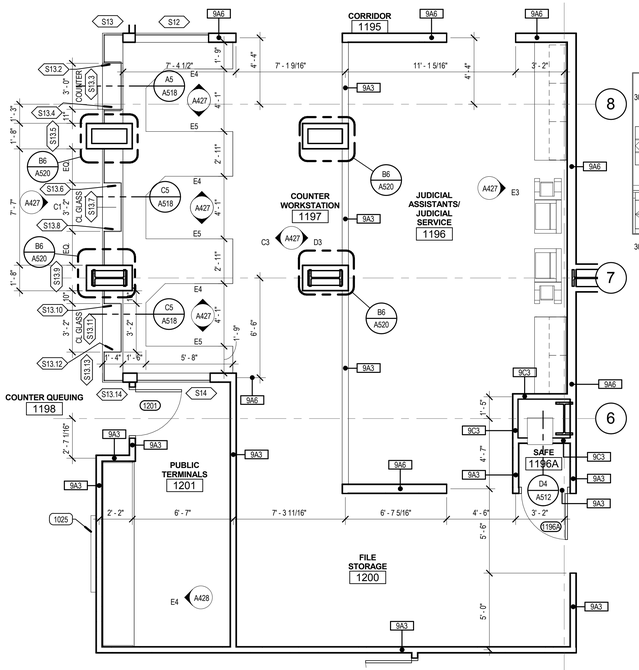

D1 ENLARGED LEVEL 1 AREA B COPY ROOM
SCALE: 1/4" = 1'-0"

PLAN NORTH

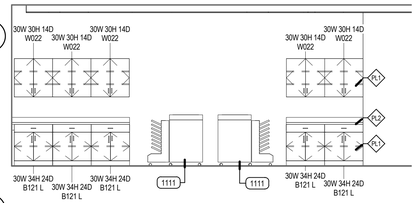

E3 1196-1-JUDICIAL ASST.
SCALE: 1/4" = 1'-0"

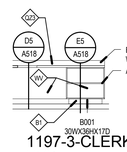

E4 1197-3-CLERK STATION, TYP.
SCALE: 1/4" = 1'-0"

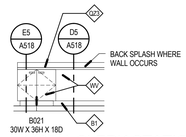

E5 1197-4-CLERK STATION, TYP.
SCALE: 1/4" = 1'-0"

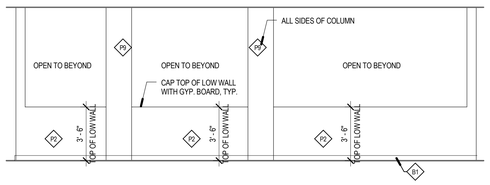

D3 1197-2-COUNTER WORKSTATIONS
SCALE: 1/4" = 1'-0"

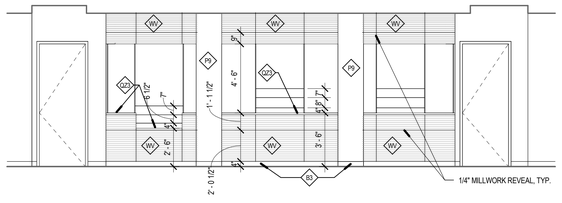

C1 1198-1-COUNTER QUEUING
SCALE: 1/4" = 1'-0"

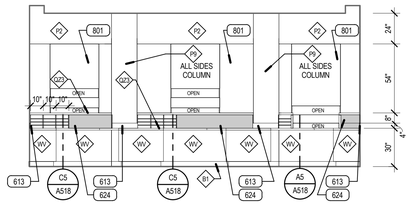

C3 1197-1-COUNTER WORKSTATION
SCALE: 1/4" = 1'-0"

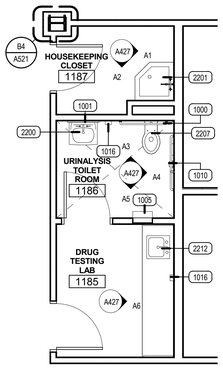

B1 ENLARGED LEVEL 1 AREA B
SCALE: 1/4" = 1'-0"

PLAN NORTH

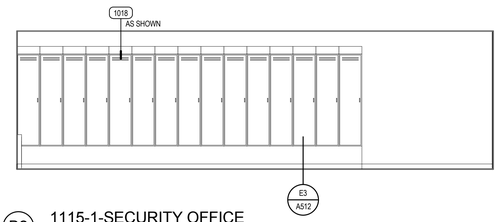

B2 1115-1-SECURITY OFFICE
SCALE: 1/4" = 1'-0"

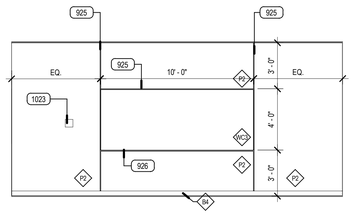

B3 1188-2-CONFERENCE
SCALE: 1/4" = 1'-0"

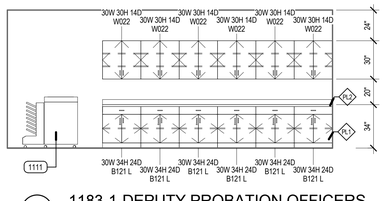

B4 1183-1-DEPUTY PROBATION OFFICERS
SCALE: 1/4" = 1'-0"

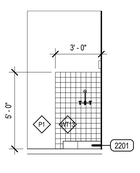

A1 1187-1-HOUSKEEPING
SCALE: 1/4" = 1'-0"

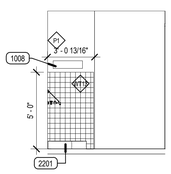

A2 1187-2-HOUSEKEEPING
SCALE: 1/4" = 1'-0"

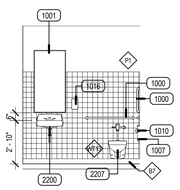

A3 1186-1-URINALYSIS
SCALE: 1/4" = 1'-0"

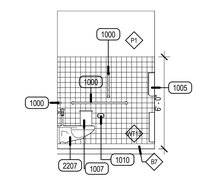

A4 1186-2-URINALYSIS
SCALE: 1/4" = 1'-0"

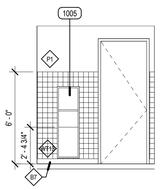

A5 1186-3-URINALYSIS
SCALE: 1/4" = 1'-0"

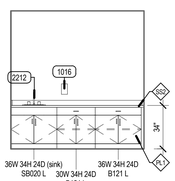

A6 1185-1-DRUG TESTING LAB
SCALE: 1/4" = 1'-0"

ARCHITECTURAL MILLWORK KEY

EXAMPLE:

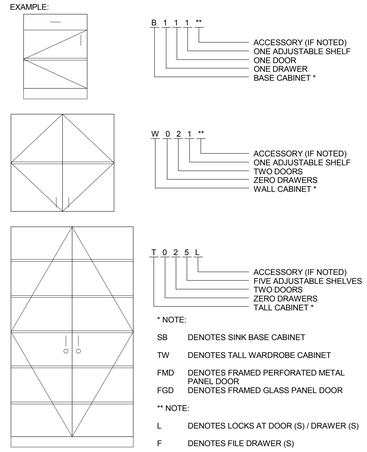

* NOTE:

SB	DENOTES SINK BASE CABINET
TW	DENOTES TALL WARDROBE CABINET
FMD	DENOTES FRAMED PERFORATED METAL PANEL DOOR
FGD	DENOTES FRAMED GLASS PANEL DOOR

** NOTE:

L	DENOTES LOCKS AT DOOR (S) / DRAWER (S)
F	DENOTES FILE DRAWER (S)

MILLWORK NOTES

1. MILLWORK DIMENSION NUMBERS ARE WIDTH X HEIGHT X DEPTH.
2. CABINET MEASUREMENTS SHOWN ARE ACTUAL SIZES. BASE CABINET HEIGHTS ALLOW FOR A COUNTERTOP 1 1/2" THICK.
3. CABINET DEPTHES ARE MEASURED FROM THE WALL TO THE FACE OF THE DOOR OR DRAWER FRONT (WHERE APPLICABLE).
4. PROVIDE BASE AT ALL CABINET TOE SPACE, UNLESS NOTED OTHERWISE.
5. PROVIDE GROMMET WHERE "G" IS LABELED ON PLANS OR ELEVATIONS.
6. ALL COUNTERTOPS TO HAVE A 4" BACKSPLASH, UNLESS NOTED OTHERWISE, TO MATCH COUNTERTOP, ON BACK AND SIDE WALLS.
7. PROVIDE FILLER PANELS TO SEAL SIDES AND TOPS OF ALL CABINETS PLACED AT AN ANGLE TO ADJACENT WALL(S).
8. ALL MILLWORK WITH EXPOSED ENDS TO HAVE A 3/4" FINISHED END PANEL. SEE DETAIL E1/A518
9. CONTRACTOR TO PROVIDE BLOCKING BEHIND ALL CABINETS, COAT RACKS, T.V. BRACKETS, PROJECTION SCREENS, WINDOW SHADES AS WELL AS ALL WALL MOUNTED ACCESSORIES, INCLUDING WHITE BOARDS, TACKBOARDS, DISPLAY BOARDS, TOILET AND URINAL PARTITIONS AND TOILET ROOM ACCESSORIES, ETC.... NOTE: ONLY 2X WOOD BLOCKING IS ACCESPTABLE BEHIND MILLWORK AND TOILET ROOM PARTITIONS.
10. REFER TO THE INTERIOR ELEVATIONS AND THE FINISH SCHEDULE (INCLUDED IN THE SPECIFICATIONS) FOR FINISH COLORS ON ALL MILLWORK AND CASEWORK.
11. ALL CABINET INTERIORS CONCEALED FROM VIEW BY CABINET DOORS ARE TO BE COVERED IN STANDARD MELAMINE LAMINATE AS PER SPECIFICATIONS. ALL CABINET INTERIORS OPEN TO VIEW ARE TO BE COVERED IN THE LAMINATE OR VENEER UTILIZED ON THE EXTERIOR OF THE CABINET.

TYPICAL MILLWORK DETAILS

1. TYPICAL MILLWORK ANCHORING DETAILS, PER DETAIL C1/A518
2. TYPICAL COUNTERTOP WORK SURFACE, PER DETAILS D3/A518, A1/A518
3. TYPICAL RESTROOM COUNTERTOP, PER DETAIL C3/A518
4. TYPICAL BASE CABINET WITH DOOR(S), PER DETAIL A3/A518
5. TYPICAL BASE CABINET WITH DRAWER(S), PER DETAILS A4/A518
6. TYPICAL BASE CABINET WITH DOOR(S) AND DRAWER, PER DTL B4/A518
7. TYPICAL BASE CABINET WITH TWO FILE DRAWERS, PER DTL B3/A518
8. TYPICAL BASE CABINET WITH FILE DRAWER AND PENCIL DRAWERS, PER DTL E4/A518
9. TYPICAL UPPER CABINET WITH DOORS, PER DETAIL B1/A518
10. TYPICAL SINK BASE CABINET, PER DETAIL C4/A518
11. TYPICAL TALL MICROWAVE CABINET, PER DETAIL A2/A518
12. TYPICAL MILLWORK LOCK, PER DETAIL D1/A518
13. TYPICAL TOE KICK, PER DETAIL D2/A518
14. TYPICAL PLAN VIEW BASE CABINETS, PER DETAIL E1/A518
15. TYPICAL BASE CORNER DETAIL, PER E2/A518

FINISH PLAN SYMBOLS

SINGLE FINISH SYMBOLS INDICATE WHERE FINISHES ARE DIFFERENT FROM GENERAL ROOM FINISHES, OR PROVIDE ADDITIONAL FINISH INFORMATION

CHANGE AT FLOOR MATERIAL

FINISH PLAN LEGEND

FLOOR MATERIALS

EM	ENTRY MAT
C1	CARPET TILE
C2	CARPET TILE
C3	NOT USED
C4	CARPET TILE
C5	CARPET TILE
C6	CARPET TILE
C7	NOT USED
L1	LINOLEUM SHEET
L2	LINOLEUM TILE - MCT
FT1	PORCELAIN FLOOR TILE 12x24
FT2	PORCELAIN FLOOR TILE 6x24
FT3	PORCELAIN FLOOR TILE 12x12
FT4	FLOOR TILE 1X2
VT2	STATIC DISSIPATIVE ACCESS FLOOR PANEL
RB1	RUBBER FLOOR TILES
RB2	RUBBER FLOORING (STAIRS, LANDINGS)
SC	SEALED CONCRETE
TZ1	TERRAZZO FLOORING
TZ2	TERRAZZO FLOORING ACCENT
EP1	EPOXY FLOORING - OPAQUE
G1	GROUT
G2	GROUT
PT	ALUMINUM DIAMOND PLATE

BASE MATERIALS

B1	RUBBER BASE
B2	RUBBER BASE
B3	ANODIZED ALUMINUM BASE - SEE C2 AND C4/A513
B4	SOLID HARDWOOD BASE - 3/4" THICK, 4" HIGH
B5	TILE BASE
B6	ALUMINUM COVE BASE
B7	TILE COVE BASE
B8	NO BASE - SEAL SEAM
B9	NO BASE - CAULK BETWEEN FLOOR AND WALL
B10	COVED RUBBER BASE
B11	COVED EPOXY FLOORING

WALL MATERIALS

F1	ACOUSTIC FABRIC WALL PANELS
F2	PEW SEAT FABRIC
P1	PRIMED & PAINTED WALL SURFACE - GENERAL
P2	PRIMED & PAINTED WALL SURFACE - GENERAL
P3	PRIMED & PAINTED WALL SURFACE - ACCENT
P4	PRIMED & PAINTED WALL SURFACE - ACCENT
P5	CEILING PAINT
P6	RAILING PAINT
P7	H.M. DOOR FRAME PAINT
P8	H.M. DOOR FRAME PAINT
P9	PRIMED & PAINTED WALL SURFACE - ACCENT
P10	INTUMESCENT PAINT SYSTEM
WT1	PORCELAIN WALL TILE 6X24
WT2	PORCELAIN WALL TILE 4X24
WT3	PORCELAIN WILL TILE 2X24
WT4	PORCELAIN WALL TILE 6X24
WT5	PORCELAIN WALL TILE 2X24
WT6	NOT USED
WT7	GLAZED WALL TILE 3x6
WT8	GLAZED WALL TILE 3x6
WT9	GLAZED WALL TILE 3x6
WT10	NOT USED
WT11	NOT USED
WT12	NOT USED
WT13	GLAZED WALL TILE 4x4
WT14	GLASS WALL TILE - SIZES VARY
WC1	VINYL WALLCOVERING
WC3	DRY ERASE WALLCOVERING

SURFACE MATERIALS

PL1	PLASTIC LAMINATE - VERTICAL SURFACES
PL2	PLASTIC LAMINATE - COUNTERTOPS
PL3	PHENOLIC CORE PARTITIONS - PARTITION COLOR
WV	WOOD VENEER - SEE A513 FOR TYPICAL DETAILS
QZ1	QUARTZ COUNTERTOP SURFACE
QZ2	QUARTZ COUNTERTOP SURFACE
QZ3	QUARTZ COUNTERTOP SURFACE
SS1	SOLID SURFACE COUNTERTOP
SS2	SOLID SURFACE COUNTERTOP
SS3	SOLID SURFACE THRESHOLD

KEYED NOTES

613	BACK SPLASH, MATCH COUNTERTOP MATERIAL
624	FABRIC WRAPPED TACK BOARD PANEL
801	WINDOW SYSTEM
925	1/2" ALUMINUM GYP BOARD REVEAL
926	INTEGRATED FUNCTION REVEAL WITH TRAY INSERT
1000	GRAB BAR
1001	2'x 4' MIRROR
1005	RECESSED PAPER TOWEL DISPENSER / TRASH CAN UNIT
1007	SANITARY NAPKIN DISPOSAL
1008	MOP RACK
1010	TOILET PAPER DISPENSER
1016	WALL MOUNTED SOAP DISPENSER
1018	SINGLE TIER 18"X 24"X 72" METAL LAW ENFORCEMENT LOCKERS, SEE ELEVATIONS
1023	SIGNAGE, SEE SCHEDULE
1025	60"X40" WALL MOUNTED GLASS ENCLOSED DISPLAY CASE
1111	COPIER, NIC
2200	WALL MOUNTED SINK AND FAUCET
2201	JANITOR'S SINK
2207	TOILET
2212	UNDERMOUNT COUNTER SINK AND FAUCET

VCBO ARCHITECTURE
VCBO ARCHITECTURE
524 SOUTH 600 EAST
SALT LAKE CITY, UT 84102
Phone: (801) 575-8800
Fax: (801) 531-9850
Web: vcbo.com

LICENSED ARCHITECT No. 153912 BRENT R. TIPPETS 8-15-13 STATE OF UTAH

2nd District Juvenile Courthouse

Utah State Courts
08284150
165 West 20th Street, Ogden, Utah
BID DOCUMENTS

Rev #	Date	Description

Job # 12500
Date August 15, 2013
Owner # 08284150
Ins. #

ENLARGED PLANS AND ELEVATIONS

A427

8/14/2013 2:39:40 PM

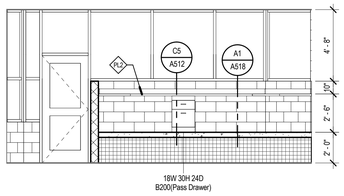

E1 1149-1-CONTROL
SCALE: 1/4" = 1'-0"

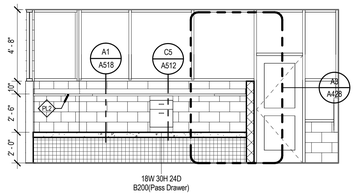

E2 1149-2-CONTROL
SCALE: 1/4" = 1'-0"

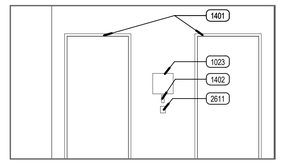

E3 1126-1-CORRIDOR
SCALE: 1/4" = 1'-0"

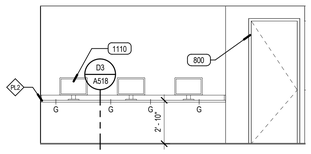

E4 1201-1-TERMINALS
SCALE: 1/4" = 1'-0"

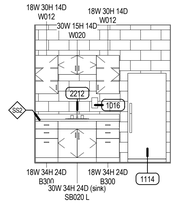

E5 1156-1-BREAKROOM
SCALE: 1/4" = 1'-0"

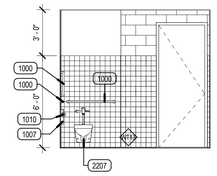

E6 1158-1-TOILET
SCALE: 1/4" = 1'-0"

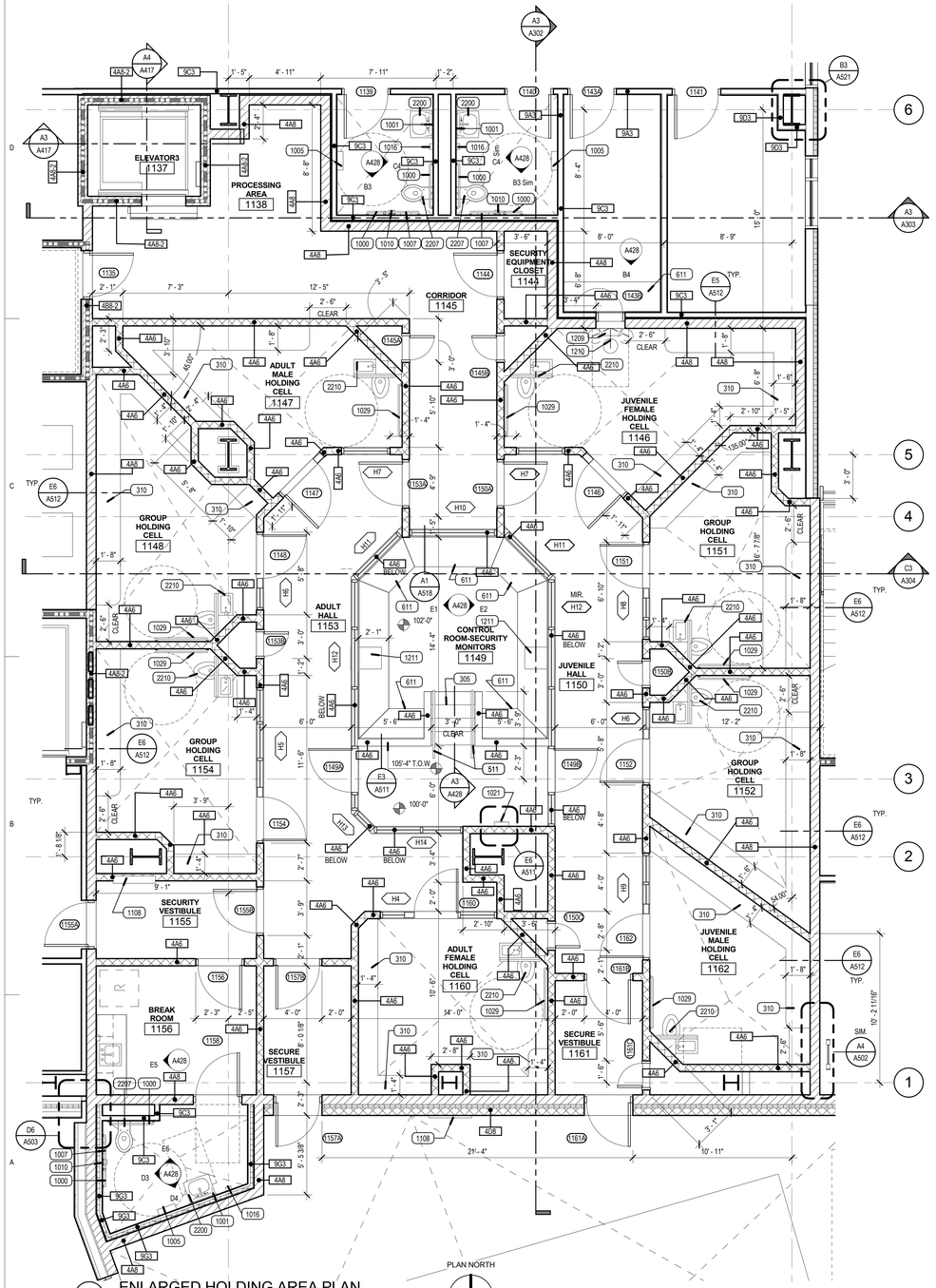

A1 ENLARGED HOLDING AREA PLAN
SCALE: 1/4" = 1'-0"

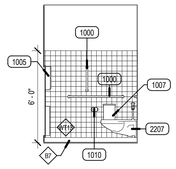

D3 1158-2-TOILET
SCALE: 1/4" = 1'-0"

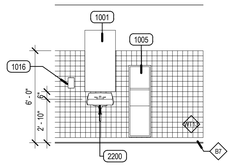

D4 1158-3-TOILET
SCALE: 1/4" = 1'-0"

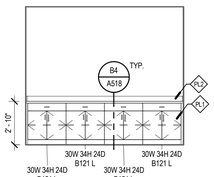

C3 1122-1-MAIL ROOM
SCALE: 1/4" = 1'-0"

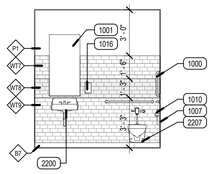

C4 1139-1-PROBATION TOILET
SCALE: 1/4" = 1'-0"

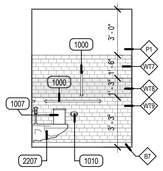

B3 1139-2-PROBATION TOILET
SCALE: 1/4" = 1'-0"

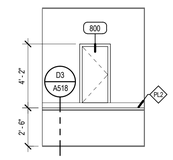

B4 1143-1-INTERVIEW
SCALE: 1/4" = 1'-0"

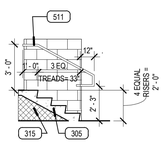

A3 CONTROL ROOM STAIRCASE
SCALE: 1/4" = 1'-0"

ARCHITECTURAL MILLWORK KEY

EXAMPLE:

B 1 1 1 **
- ACCESSORY (IF NOTED)
- ONE ADJUSTABLE SHELF
- ONE DOOR
- ONE DRAWER
- BASE CABINET *

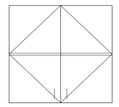

W 0 2 1 **
- ACCESSORY (IF NOTED)
- ONE ADJUSTABLE SHELF
- TWO DOORS
- ZERO DRAWERS
- WALL CABINET *

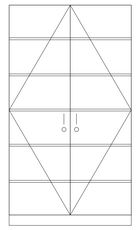

T 0 2 5 L
- ACCESSORY (IF NOTED)
- FIVE ADJUSTABLE SHELVES
- TWO DOORS
- ZERO DRAWERS
- TALL CABINET *

* NOTE:

SB	DENOTES SINK BASE CABINET
TW	DENOTES TALL WARDROBE CABINET
FMD	DENOTES FRAMED PERFORATED METAL PANEL DOOR
FGD	DENOTES FRAMED GLASS PANEL DOOR

** NOTE:

L	DENOTES LOCKS AT DOOR (S) / DRAWER (S)
F	DENOTES FILE DRAWER (S)

MILLWORK NOTES

1. MILLWORK DIMENSION NUMBERS ARE WIDTH X HEIGHT X DEPTH.
2. CABINET MEASUREMENTS SHOWN ARE ACTUAL SIZES. BASE CABINET HEIGHTS ALLOW FOR A COUNTERTOP 1 1/2" THICK.
3. CABINET DEPTHES ARE MEASURED FROM THE WALL TO THE FACE OF THE DOOR OR DRAWER FRONT (WHERE APPLICABLE).
4. PROVIDE BASE AT ALL CABINET TOE SPACE, UNLESS NOTED OTHERWISE.
5. PROVIDE GROMMET WHERE "G" IS LABELED ON PLANS OR ELEVATIONS.
6. ALL COUNTERTOPS TO HAVE A 4" BACKSPLASH, UNLESS NOTED OTHERWISE, TO MATCH COUNTERTOP, ON BACK AND SIDE WALLS.
7. PROVIDE FILLER PANELS TO SEAL SIDES AND TOPS OF ALL CABINETS PLACED AT AN ANGLE TO ADJACENT WALL(S).
8. ALL MILLWORK WITH EXPOSED ENDS TO HAVE A 3/4" FINISHED END PANEL. SEE DETAIL E1/A518
9. CONTRACTOR TO PROVIDE BLOCKING BEHIND ALL CABINETS, COAT RACKS, T.V. BRACKETS, PROJECTION SCREENS, WINDOW SHADES AS WELL AS ALL WALL MOUNTED ACCESSORIES, INCLUDING WHITE BOARDS, TACKBOARDS, DISPLAY BOARDS, TOILET AND URINAL PARTITIONS AND TOILET ROOM ACCESSORIES, ETC.... NOTE: ONLY 2X WOOD BLOCKING IS ACCESPTABLE BEHIND MILLWORK AND TOILET ROOM PARTITIONS.
10. REFER TO THE INTERIOR ELEVATIONS AND THE FINISH SCHEDULE (INCLUDED IN THE SPECIFICATIONS) FOR FINISH COLORS ON ALL MILLWORK AND CASEWORK.
11. ALL CABINET INTERIORS CONCEALED FROM VIEW BY CABINET DOORS ARE TO BE COVERED IN STANDARD MELAMINE LAMINATE AS PER SPECIFICATIONS. ALL CABINET INTERIORS OPEN TO VIEW ARE TO BE COVERED IN THE LAMINATE OR VENEER UTILIZED ON THE EXTERIOR OF THE CABINET.

TYPICAL MILLWORK DETAILS

1. TYPICAL MILLWORK ANCHORING DETAILS, PER DETAIL C1/A518
2. TYPICAL COUNTERTOP WORK SURFACE, PER DETAILS D3/A518, A1/A518
3. TYPICAL RESTROOM COUNTERTOP, PER DETAIL C3/A518
4. TYPICAL BASE CABINET WITH DOOR(S), PER DETAIL A3/A518
5. TYPICAL BASE CABINET WITH DRAWER(S), PER DETAILS A4/A518
6. TYPICAL BASE CABINET WITH DOOR(S) AND DRAWER, PER DTL B4/A518
7. TYPICAL BASE CABINET WITH TWO FILE DRAWERS, PER DTL B3/A518
8. TYPICAL BASE CABINET WITH FILE DRAWER AND PENCIL DRAWERS, PER DTL E4/A518
9. TYPICAL UPPER CABINET WITH DOORS, PER DETAIL B1/A518
10. TYPICAL SINK BASE CABINET, PER DETAIL C4/A518
11. TYPICAL TALL MICROWAVE CABINET, PER DETAIL A2/A518
12. TYPICAL MILLWORK LOCK, PER DETAIL D1/A518
13. TYPICAL TOE KICK, PER DETAIL D2/A518
14. TYPICAL PLAN VIEW BASE CABINETS, PER DETAIL E1/A518
15. TYPICAL BASE CORNER DETAIL, PER E2/A518

FINISH PLAN SYMBOLS

SINGLE FINISH SYMBOLS INDICATE WHERE FINISHES ARE DIFFERENT FROM GENERAL ROOM FINISHES, OR PROVIDE ADDITIONAL FINISH INFORMATION

CHANGE AT FLOOR MATERIAL

FINISH PLAN LEGEND

FLOOR MATERIALS

EM	ENTRY MAT
C1	CARPET TILE
C2	CARPET TILE
C3	NOT USED
C4	CARPET TILE
C5	CARPET TILE
C6	CARPET TILE
C7	NOT USED
L1	LINOLEUM SHEET
L2	LINOLEUM TILE - MCT
FT1	PORCELAIN FLOOR TILE 12x24
FT2	PORCELAIN FLOOR TILE 6x24
FT3	PORCELAIN FLOOR TILE 12x12
FT4	FLOOR TILE 1X2
VT2	STATIC DISSIPATIVE ACCESS FLOOR PANEL
RB1	RUBBER FLOOR TILES
RB2	RUBBER FLOORING (STAIRS, LANDINGS)
SC	SEALED CONCRETE
TZ1	TERRAZZO FLOORING
TZ2	TERRAZZO FLOORING ACCENT
EP1	EPOXY FLOORING - OPAQUE
G1	GROUT
G2	GROUT
PT	ALUMINUM DIAMOND PLATE

BASE MATERIALS

B1	RUBBER BASE
B2	RUBBER BASE
B3	ANODIZED ALUMINUM BASE - SEE C2 AND C4/A513
B4	SOLID HARDWOOD BASE - 3/4" THICK, 4" HIGH
B5	TILE BASE
B6	ALUMINUM COVE BASE
B7	TILE COVE BASE
B8	NO BASE - SEAL SEAM
B9	NO BASE - CAULK BETWEEN FLOOR AND WALL
B10	COVED RUBBER BASE
B11	COVED EPOXY FLOORING

WALL MATERIALS

F1	ACOUSTIC FABRIC WALL PANELS
F2	PEW SEAT FABRIC
P1	PRIMED & PAINTED WALL SURFACE - GENERAL
P2	PRIMED & PAINTED WALL SURFACE - GENERAL
P3	PRIMED & PAINTED WALL SURFACE - ACCENT
P4	PRIMED & PAINTED WALL SURFACE - ACCENT
P5	CEILING PAINT
P6	RAILING PAINT
P7	H.M. DOOR FRAME PAINT
P8	H.M. DOOR FRAME PAINT
P9	PRIMED & PAINTED WALL SURFACE - ACCENT
P10	INTUMESCENT PAINT SYSTEM
WT1	PORCELAIN WALL TILE 6X24
WT2	PORCELAIN WALL TILE 4X24
WT3	PORCELAIN WILL TILE 2X24
WT4	PORCELAIN WALL TILE 6X24
WT5	PORCELAIN WALL TILE 2X24
WT6	NOT USED
WT7	GLAZED WALL TILE 3x6
WT8	GLAZED WALL TILE 3x6
WT9	GLAZED WALL TILE 3x6
WT10	NOT USED
WT11	NOT USED
WT12	NOT USED
WT13	GLAZED WALL TILE 4x4
WT14	GLASS WALL TILE - SIZES VARY
WC1	VINYL WALLCOVERING
WC3	DRY ERASE WALLCOVERING

SURFACE MATERIALS

PL1	PLASTIC LAMINATE - VERTICAL SURFACES
PL2	PLASTIC LAMINATE - COUNTERTOPS
PL3	PHENOLIC CORE PARTITIONS - PARTITION COLOR
WV	WOOD VENEER - SEE A513 FOR TYPICAL DETAILS
QZ1	QUARTZ COUNTERTOP SURFACE
QZ2	QUARTZ COUNTERTOP SURFACE
QZ3	QUARTZ COUNTERTOP SURFACE
SS1	SOLID SURFACE COUNTERTOP
SS2	SOLID SURFACE COUNTERTOP
SS3	SOLID SURFACE THRESHOLD

KEYED NOTES

305	REINFORCED CONCRETE STAIRS
310	REINFORCED CONCRETE BENCH
315	STRUCTURAL FOAM FILL
511	1 1/2" DIA. STEEL PIPE HANDRAIL PAINTED
611	PLASTIC LAMINATE COUNTERTOP
800	
800	SCHEDULED DOOR & FRAME
1000	GRAB BAR
1001	2'x 4' MIRROR
1005	RECESSED PAPER TOWEL DISPENSER / TRASH CAN UNIT
1007	SANITARY NAPKIN DISPOSAL
1010	TOILET PAPER DISPENSER
1016	WALL MOUNTED SOAP DISPENSER
1021	SEMI-RECESSED FIRE EXTINGUISHER CABINET W/ EXTINGUISHER
1023	SIGNAGE, SEE SCHEDULE
1029	DETENTION GRADE GRAB BAR
1108	GUN LOCKER, 6 PISTOL CAPACITY
1110	COMPUTER TERMINAL, NIC
1114	REFRIGERATOR, NIC
1209	DETENTION GRADE S.S. DESK
1210	DETENTION GRADE S.S. FOLDING STOOL
1211	PASS THROUGH DRAWER
1401	S.S. ELEVATOR CAB DOOR
1402	ELEVATOR CALL BUTTONS
2200	WALL MOUNTED SINK AND FAUCET
2207	TOILET
2210	S.S. WALL MOUNTED TOILET WITH INTEGATED GRAB BAR
2212	UNDERMOUNT COUNTER SINK AND FAUCET
2611	EMERGENCY INTERCOM

VCBO ARCHITECTURE
524 SOUTH 600 EAST
SALT LAKE CITY, UT 84102
Phone: (801) 575-8800
Fax: (801) 531-9850
Web: vcbo.com

LICENSED ARCHITECT No. 153912 BRENT R. TIPPETS 8-15-13 STATE OF UTAH

2nd District Juvenile Courthouse

Utah State Courts
08284150
165 West 20th Street, Ogden, Utah
BID DOCUMENTS

Rev #	Date	Description
1	4/30/2013	Fire Marshal Response

Job # 12500
Date August 15, 2013
Owner # 08284150
Ins. #

ENLARGED PLANS AND ELEVATIONS

A428

8/14/2013 2:40:05 PM

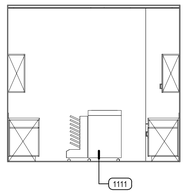

E1 3126-1-WORKROOM
SCALE: 1/4" = 1'-0"

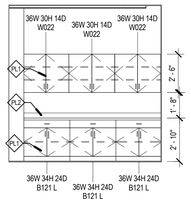

E2 3126-2-WORKROOM
SCALE: 1/4" = 1'-0"

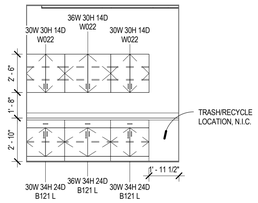

E3 3126-3-WORKROOM
SCALE: 1/4" = 1'-0"

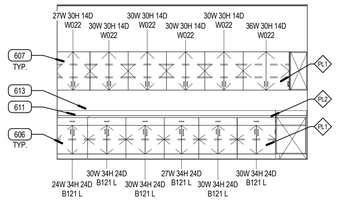

E4 4125-1-WORKROOM
SCALE: 1/4" = 1'-0"

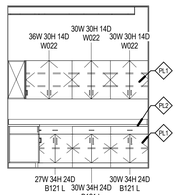

D1 4125-2-WORKROOM
SCALE: 1/4" = 1'-0"

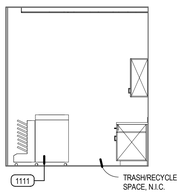

D2 4125-3-WORKROOM
SCALE: 1/4" = 1'-0"

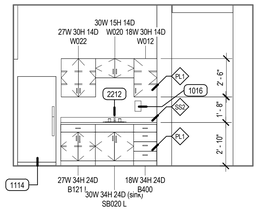

D3 4119-1-BREAKROOM
SCALE: 1/4" = 1'-0"

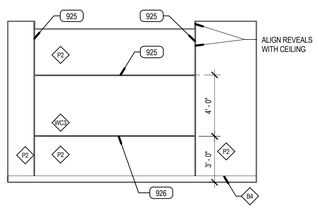

D4 COURT CONFERENCE ROOM
SCALE: 1/4" = 1'-0"

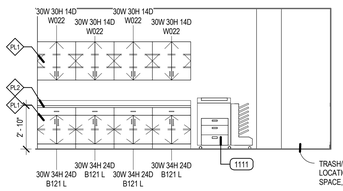

C1 2132-1-WORKROOM
SCALE: 1/4" = 1'-0"

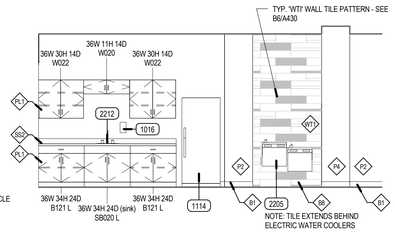

C2 1189-1-CORRIDOR
SCALE: 1/4" = 1'-0"

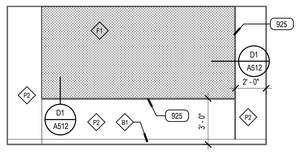

C3 5126-1-VICTIM / WITNESS SEQUESTERED ROOM
SCALE: 1/4" = 1'-0"

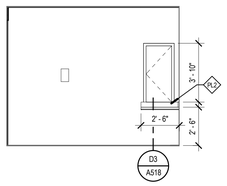

C4 2153-1-CONFERENCE
SCALE: 1/4" = 1'-0"

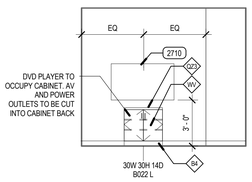

B1 1108-1 MEDIATION VIDEO ROOM
SCALE: 1/4" = 1'-0"

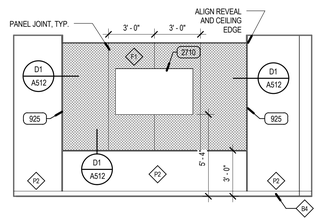

B2 3129-1-CONFERENCE ROOM
SCALE: 1/4" = 1'-0"

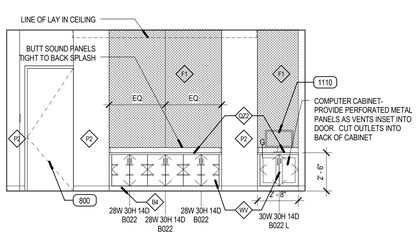

B3 3129-2-CONFERENCE ROOM
SCALE: 1/4" = 1'-0"

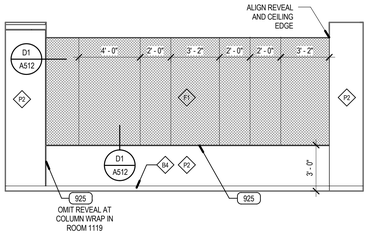

B4 MEDIATION ROOM
SCALE: 1/4" = 1'-0"

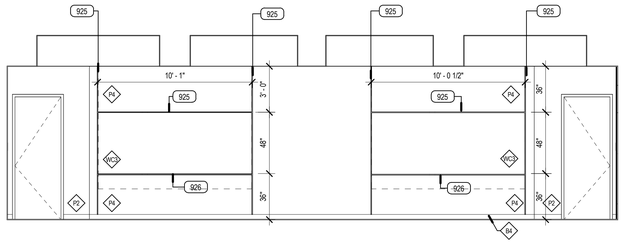

A1 1126-3-COURT CONFERENCE
SCALE: 1/4" = 1'-0"

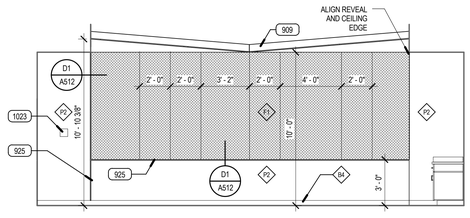

A3 1126-4-COURT CONFERENCE
SCALE: 1/4" = 1'-0"

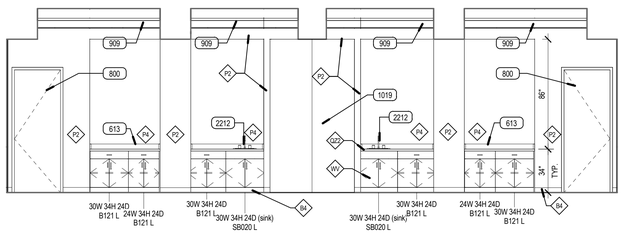

A4 1126-1-COURT CONFERENCE
SCALE: 1/4" = 1'-0"

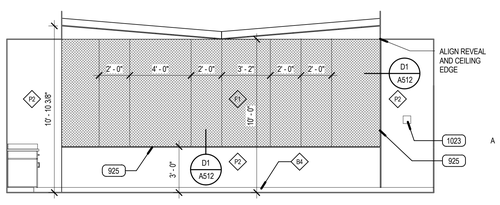

A6 1126-2-COURT CONFERENCE
SCALE: 1/4" = 1'-0"

ARCHITECTURAL MILLWORK KEY

EXAMPLE:

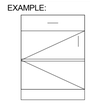

B 1 1 1 **
- ACCESSORY (IF NOTED)
- ONE ADJUSTABLE SHELF
- ONE DOOR
- ONE DRAWER
- BASE CABINET *

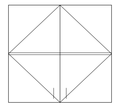

W 0 2 1 **
- ACCESSORY (IF NOTED)
- ONE ADJUSTABLE SHELF
- TWO DOORS
- ZERO DRAWERS
- WALL CABINET *

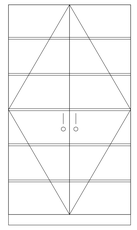

T 0 2 5 L
- ACCESSORY (IF NOTED)
- FIVE ADJUSTABLE SHELVES
- TWO DOORS
- ZERO DRAWERS
- TALL CABINET *

* NOTE:

SB	DENOTES SINK BASE CABINET
TW	DENOTES TALL WARDROBE CABINET
FMD	DENOTES FRAMED PERFORATED METAL PANEL DOOR
FGD	DENOTES FRAMED GLASS PANEL DOOR

** NOTE:

L	DENOTES LOCKS AT DOOR (S) / DRAWER (S)
F	DENOTES FILE DRAWER (S)

MILLWORK NOTES

1. MILLWORK DIMENSION NUMBERS ARE WIDTH X HEIGHT X DEPTH.
2. CABINET MEASUREMENTS SHOWN ARE ACTUAL SIZES. BASE CABINET HEIGHTS ALLOW FOR A COUNTERTOP 1 1/2" THICK.
3. CABINET DEPTHES ARE MEASURED FROM THE WALL TO THE FACE OF THE DOOR OR DRAWER FRONT (WHERE APPLICABLE).
4. PROVIDE BASE AT ALL CABINET TOE SPACE, UNLESS NOTED OTHERWISE.
5. PROVIDE GROMMET WHERE "G" IS LABELED ON PLANS OR ELEVATIONS.
6. ALL COUNTERTOPS TO HAVE A 4" BACKSPLASH, UNLESS NOTED OTHERWISE, TO MATCH COUNTERTOP, ON BACK AND SIDE WALLS.
7. PROVIDE FILLER PANELS TO SEAL SIDES AND TOPS OF ALL CABINETS PLACED AT AN ANGLE TO ADJACENT WALL(S).
8. ALL MILLWORK WITH EXPOSED ENDS TO HAVE A 3/4" FINISHED END PANEL. SEE DETAIL E1/A518
9. CONTRACTOR TO PROVIDE BLOCKING BEHIND ALL CABINETS, COAT RACKS, T.V. BRACKETS, PROJECTION SCREENS, WINDOW SHADES AS WELL AS ALL WALL MOUNTED ACCESSORIES, INCLUDING WHITE BOARDS, TACKBOARDS, DISPLAY BOARDS, TOILET AND URINAL PARTITIONS AND TOILET ROOM ACCESSORIES, ETC.... NOTE: ONLY 2X WOOD BLOCKING IS ACCESPTABLE BEHIND MILLWORK AND TOILET ROOM PARTITIONS.
10. REFER TO THE INTERIOR ELEVATIONS AND THE FINISH SCHEDULE (INCLUDED IN THE SPECIFICATIONS) FOR FINISH COLORS ON ALL MILLWORK AND CASEWORK.
11. ALL CABINET INTERIORS CONCEALED FROM VIEW BY CABINET DOORS ARE TO BE COVERED IN STANDARD MELAMINE LAMINATE AS PER SPECIFICATIONS. ALL CABINET INTERIORS OPEN TO VIEW ARE TO BE COVERED IN THE LAMINATE OR VENEER UTILIZED ON THE EXTERIOR OF THE CABINET.

TYPICAL MILLWORK DETAILS

1. TYPICAL MILLWORK ANCHORING DETAILS, PER DETAIL C1/A518
2. TYPICAL COUNTERTOP WORK SURFACE, PER DETAILS D3/A518, A1/A518
3. TYPICAL RESTROOM COUNTERTOP, PER DETAIL C3/A518
4. TYPICAL BASE CABINET WITH DOOR(S), PER DETAIL A3/A518
5. TYPICAL BASE CABINET WITH DRAWER(S), PER DETAILS A4/A518
6. TYPICAL BASE CABINET WITH DOOR(S) AND DRAWER, PER DTL B4/A518
7. TYPICAL BASE CABINET WITH TWO FILE DRAWERS, PER DTL B3/A518
8. TYPICAL BASE CABINET WITH FILE DRAWER AND PENCIL DRAWERS, PER DTL E4/A518
9. TYPICAL UPPER CABINET WITH DOORS, PER DETAIL B1/A518
10. TYPICAL SINK BASE CABINET, PER DETAIL C4/A518
11. TYPICAL TALL MICROWAVE CABINET, PER DETAIL A2/A518
12. TYPICAL MILLWORK LOCK, PER DETAIL D1/A518
13. TYPICAL TOE KICK, PER DETAIL D2/A518
14. TYPICAL PLAN VIEW BASE CABINETS, PER DETAIL E1/A518
15. TYPICAL BASE CORNER DETAIL, PER E2/A518

FINISH PLAN SYMBOLS

- SINGLE FINISH SYMBOLS INDICATE WHERE FINISHES ARE DIFFERENT FROM GENERAL ROOM FINISHES, OR PROVIDE ADDITIONAL FINISH INFORMATION
- CHANGE AT FLOOR MATERIAL

FINISH PLAN LEGEND

FLOOR MATERIALS

EM	ENTRY MAT
C1	CARPET TILE
C2	CARPET TILE
C3	NOT USED
C4	CARPET TILE
C5	CARPET TILE
C6	CARPET TILE
C7	NOT USED
L1	LINOLEUM SHEET
L2	LINOLEUM TILE - MCT
FT1	PORCELAIN FLOOR TILE 12x24
FT2	PORCELAIN FLOOR TILE 6x24
FT3	PORCELAIN FLOOR TILE 12x12
FT4	FLOOR TILE 1X2
VT2	STATIC DISSIPATIVE ACCESS FLOOR PANEL
RB1	RUBBER FLOOR TILES
RB2	RUBBER FLOORING (STAIRS, LANDINGS)
SC	SEALED CONCRETE
TZ1	TERRAZZO FLOORING
TZ2	TERRAZZO FLOORING ACCENT
EP1	EPOXY FLOORING - OPAQUE
G1	GROUT
G2	GROUT
PT	ALUMINUM DIAMOND PLATE

BASE MATERIALS

B1	RUBBER BASE
B2	RUBBER BASE
B3	ANODIZED ALUMINUM BASE - SEE C2 AND C4/A513
B4	SOLID HARDWOOD BASE - 3/4" THICK, 4" HIGH
B5	TILE BASE
B6	ALUMINUM COVE BASE
B7	TILE COVE BASE
B8	NO BASE - SEAL SEAM
B9	NO BASE - CAULK BETWEEN FLOOR AND WALL
B10	COVED RUBBER BASE
B11	COVED EPOXY FLOORING

WALL MATERIALS

F1	ACOUSTIC FABRIC WALL PANELS
F2	PEW SEAT FABRIC
P1	PRIMED & PAINTED WALL SURFACE - GENERAL
P2	PRIMED & PAINTED WALL SURFACE - GENERAL
P3	PRIMED & PAINTED WALL SURFACE - ACCENT
P4	PRIMED & PAINTED WALL SURFACE - ACCENT
P5	CEILING PAINT
P6	RAILING PAINT
P7	H.M. DOOR FRAME PAINT
P8	H.M. DOOR FRAME PAINT
P9	PRIMED & PAINTED WALL SURFACE - ACCENT
P10	INTUMESCENT PAINT SYSTEM
WT1	PORCELAIN WALL TILE 6X24
WT2	PORCELAIN WALL TILE 4X24
WT3	PORCELAIN WALL TILE 2X24
WT4	PORCELAIN WALL TILE 6X24
WT5	PORCELAIN WALL TILE 2X24
WT6	NOT USED
WT7	GLAZED WALL TILE 3x6
WT8	GLAZED WALL TILE 3x6
WT9	GLAZED WALL TILE 3x6
WT10	NOT USED
WT11	NOT USED
WT12	NOT USED
WT13	GLAZED WALL TILE 4x4
WT14	GLASS WALL TILE - SIZES VARY
WC1	VINYL WALLCOVERING
WC3	DRY ERASE WALLCOVERING

SURFACE MATERIALS

PL1	PLASTIC LAMINATE - VERTICAL SURFACES
PL2	PLASTIC LAMINATE - COUNTERTOPS
PL3	PHENOLIC CORE PARTITIONS - PARTITION COLOR
WV	WOOD VENEER - SEE A513 FOR TYPICAL DETAILS
QZ1	QUARTZ COUNTERTOP SURFACE
QZ2	QUARTZ COUNTERTOP SURFACE
QZ3	QUARTZ COUNTERTOP SURFACE
SS1	SOLID SURFACE COUNTERTOP
SS2	SOLID SURFACE COUNTERTOP
SS3	SOLID SURFACE THRESHOLD

KEYED NOTES

606	WALL MOUNTED BASE CABINET WITH BLOCKING
607	WALL MOUNTED UPPER CABINET WITH BLOCKING
611	PLASTIC LAMINATE COUNTERTOP
613	BACK SPLASH, MATCH COUNTERTOP MATERIAL
800	SCHEDULED DOOR & FRAME
909	SUSPENDED ACOUSTICAL TILE CEILING SYSTEM
925	1/2" ALUMINUM GYP BOARD REVEAL
926	INTEGRATED FUNCTION REVEAL WITH TRAY INSERT
1016	WALL MOUNTED SOAP DISPENSER
1019	FOLDING PANEL PARTITION WITH POCKET DOOR
1023	SIGNAGE, SEE SCHEDULE
1110	COMPUTER TERMINAL, NIC
1111	COPIER, NIC
1114	REFRIGERATOR, NIC
2205	ELECTRIC WATER COOLER
2212	UNDERMOUNT COUNTER SINK AND FAUCET
2710	WALL MOUNTED VIDEO MONITOR

VCBO ARCHITECTURE
VCBO ARCHITECTURE
524 SOUTH 600 EAST
SALT LAKE CITY, UT 84102
Phone: (801) 575-8800
Fax: (801) 531-9850
Web: vcbo.com

LICENSED ARCHITECT No. 153912 BRENT R. TIPPETS 8-15-13 STATE OF UTAH

2nd District Juvenile Courthouse

Utah State Courts
08284150
165 West 20th Street, Ogden, Utah
BID DOCUMENTS

Rev #	Date	Description

Job # 12500
Date August 15, 2013
Owner # 08284150
Ins. #

ENLARGED PLANS AND ELEVATIONS

A429

8/14/2013 2:40:32 PM

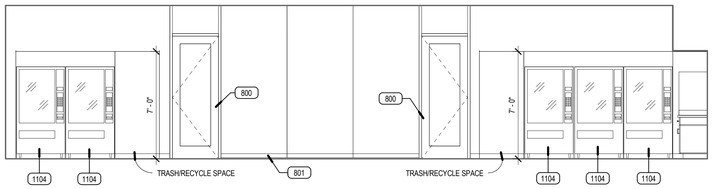

E1 2131-4-BREAKROOM
SCALE: 1/4" = 1'-0"

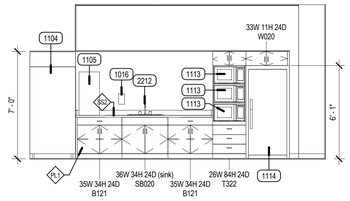

E3 2131-1-BREAKROOM
SCALE: 1/4" = 1'-0"

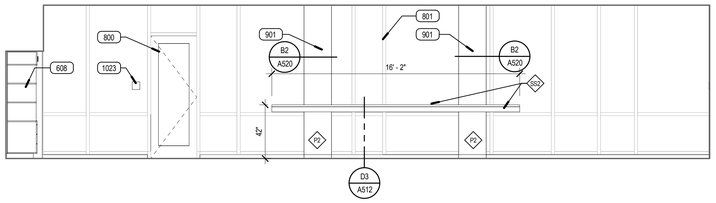

D1 2131-2-BREAKROOM
SCALE: 1/4" = 1'-0"

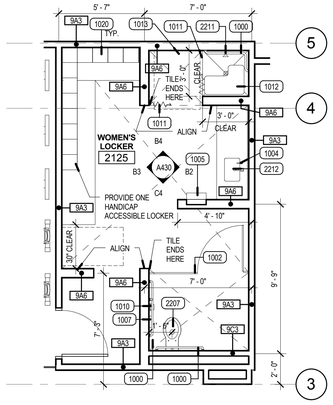

C1 ENLARGED LOCKER/ CHANGING ROOM 2125
SCALE: 1/4" = 1'-0"

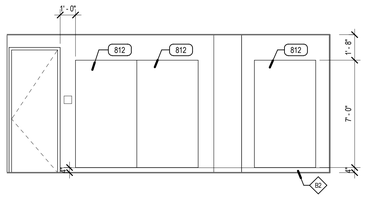

C2 2124-1-FITNESS
SCALE: 1/4" = 1'-0"

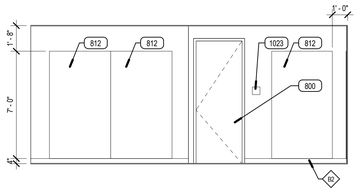

C3 2124-4-FITNESS
SCALE: 1/4" = 1'-0"

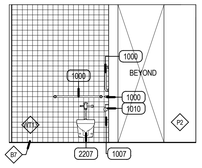

C4 2125 CHANGING ROOM SOUTH
SCALE: 1/4" = 1'-0"

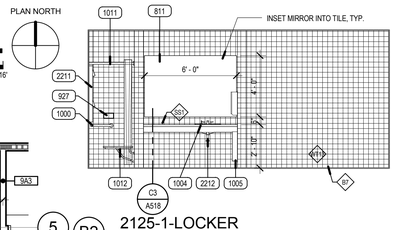

B2 2125-1-LOCKER
SCALE: 1/4" = 1'-0"

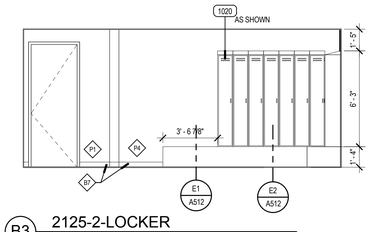

B3 2125-2-LOCKER
SCALE: 1/4" = 1'-0"

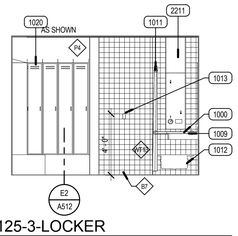

B4 2125-3-LOCKER
SCALE: 1/4" = 1'-0"

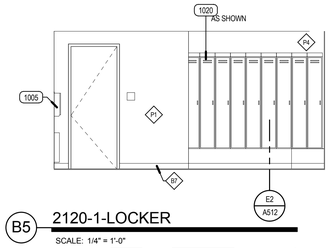

B5 2120-1-LOCKER
SCALE: 1/4" = 1'-0"

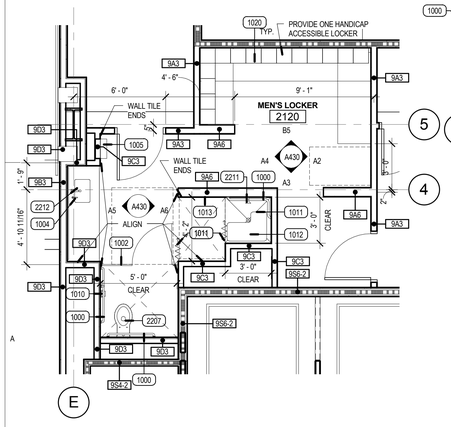

A1 ENLARGED PLAN LOCKER/ CHANGING ROOM 2120
SCALE: 1/4" = 1'-0"

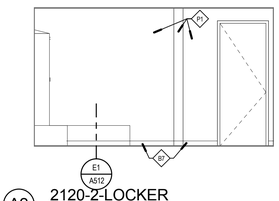

A2 2120-2-LOCKER
SCALE: 1/4" = 1'-0"

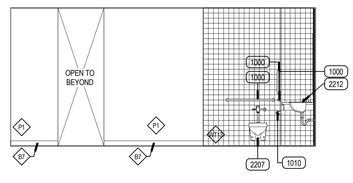

A3 2120-3-LOCKER
SCALE: 1/4" = 1'-0"

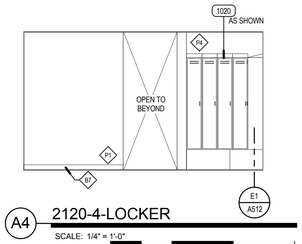

A4 2120-4-LOCKER
SCALE: 1/4" = 1'-0"

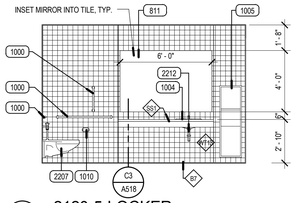

A5 2120-5-LOCKER
SCALE: 1/4" = 1'-0"

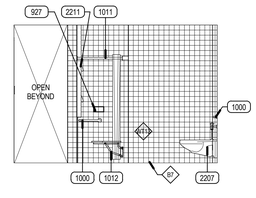

A6 2120-7-LOCKER
SCALE: 1/4" = 1'-0"

ARCHITECTURAL MILLWORK KEY

EXAMPLE:

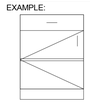

B 1 1 1 **
- ACCESSORY (IF NOTED)
- ONE ADJUSTABLE SHELF
- ONE DOOR
- ONE DRAWER
- BASE CABINET *

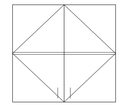

W 0 2 1 **
- ACCESSORY (IF NOTED)
- ONE ADJUSTABLE SHELF
- TWO DOORS
- ZERO DRAWERS
- WALL CABINET *

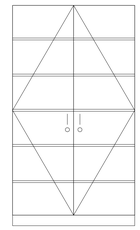

T 0 2 5 L
- ACCESSORY (IF NOTED)
- FIVE ADJUSTABLE SHELVES
- TWO DOORS
- ZERO DRAWERS
- TALL CABINET *

* NOTE:

SB	DENOTES SINK BASE CABINET
TW	DENOTES TALL WARDROBE CABINET
FMD	DENOTES FRAMED PERFORATED METAL PANEL DOOR
FGD	DENOTES FRAMED GLASS PANEL DOOR

** NOTE:

L	DENOTES LOCKS AT DOOR (S) / DRAWER (S)
F	DENOTES FILE DRAWER (S)

MILLWORK NOTES

1. MILLWORK DIMENSION NUMBERS ARE WIDTH X HEIGHT X DEPTH.
2. CABINET MEASUREMENTS SHOWN ARE ACTUAL SIZES. BASE CABINET HEIGHTS ALLOW FOR A COUNTERTOP 1 1/2" THICK.
3. CABINET DEPTHES ARE MEASURED FROM THE WALL TO THE FACE OF THE DOOR OR DRAWER FRONT (WHERE APPLICABLE).
4. PROVIDE BASE AT ALL CABINET TOE SPACE, UNLESS NOTED OTHERWISE.
5. PROVIDE GROMMET WHERE "G" IS LABELED ON PLANS OR ELEVATIONS.
6. ALL COUNTERTOPS TO HAVE A 4" BACKSPLASH, UNLESS NOTED OTHERWISE, TO MATCH COUNTERTOP, ON BACK AND SIDE WALLS.
7. PROVIDE FILLER PANELS TO SEAL SIDES AND TOPS OF ALL CABINETS PLACED AT AN ANGLE TO ADJACENT WALL(S).
8. ALL MILLWORK WITH EXPOSED ENDS TO HAVE A 3/4" FINISHED END PANEL. SEE DETAIL E1/A518
9. CONTRACTOR TO PROVIDE BLOCKING BEHIND ALL CABINETS, COAT RACKS, T.V. BRACKETS, PROJECTION SCREENS, WINDOW SHADES AS WELL AS ALL WALL MOUNTED ACCESSORIES, INCLUDING WHITE BOARDS, TACKBOARDS, DISPLAY BOARDS, TOILET AND URINAL PARTITIONS AND TOILET ROOM ACCESSORIES, ETC... NOTE: ONLY 2X WOOD BLOCKING IS ACCESPTABLE BEHIND MILLWORK AND TOILET ROOM PARTITIONS.
10. REFER TO THE INTERIOR ELEVATIONS AND THE FINISH SCHEDULE (INCLUDED IN THE SPECIFICATIONS) FOR FINISH COLORS ON ALL MILLWORK AND CASEWORK.
11. ALL CABINET INTERIORS CONCEALED FROM VIEW BY CABINET DOORS ARE TO BE COVERED IN STANDARD MELAMINE LAMINATE AS PER SPECIFICATIONS. ALL CABINET INTERIORS OPEN TO VIEW ARE TO BE COVERED IN THE LAMINATE OR VENEER UTILIZED ON THE EXTERIOR OF THE CABINET.

TYPICAL MILLWORK DETAILS

1. TYPICAL MILLWORK ANCHORING DETAILS, PER DETAIL C1/A518
2. TYPICAL COUNTERTOP WORK SURFACE, PER DETAILS D3/A518, A1/A518
3. TYPICAL RESTROOM COUNTERTOP, PER DETAIL C3/A518
4. TYPICAL BASE CABINET WITH DOOR(S), PER DETAIL A3/A518
5. TYPICAL BASE CABINET WITH DRAWER(S), PER DETAILS A4/A518
6. TYPICAL BASE CABINET WITH DOOR(S) AND DRAWER, PER DTL B4/A518
7. TYPICAL BASE CABINET WITH TWO FILE DRAWERS, PER DTL B3/A518
8. TYPICAL BASE CABINET WITH FILE DRAWER AND PENCIL DRAWERS, PER DTL E4/A518
9. TYPICAL UPPER CABINET WITH DOORS, PER DETAIL B1/A518
10. TYPICAL SINK BASE CABINET, PER DETAIL C4/A518
11. TYPICAL TALL MICROWAVE CABINET, PER DETAIL A2/A518
12. TYPICAL MILLWORK LOCK, PER DETAIL D1/A518
13. TYPICAL TOE KICK, PER DETAIL D2/A518
14. TYPICAL PLAN VIEW BASE CABINETS, PER DETAIL E1/A518
15. TYPICAL BASE CORNER DETAIL, PER E2/A518

FINISH PLAN SYMBOLS

SINGLE FINISH SYMBOLS INDICATE WHERE FINISHES ARE DIFFERENT FROM GENERAL ROOM FINISHES, OR PROVIDE ADDITIONAL FINISH INFORMATION

CHANGE AT FLOOR MATERIAL

FINISH PLAN LEGEND

FLOOR MATERIALS

EM	ENTRY MAT
C1	CARPET TILE
C2	CARPET TILE
C3	NOT USED
C4	CARPET TILE
C5	CARPET TILE
C6	CARPET TILE
C7	NOT USED
L1	LINOLEUM SHEET
L2	LINOLEUM TILE - MCT
FT1	PORCELAIN FLOOR TILE 12x24
FT2	PORCELAIN FLOOR TILE 6x24
FT3	PORCELAIN FLOOR TILE 12x12
FT4	FLOOR TILE 1X2
VT2	STATIC DISSIPATIVE ACCESS FLOOR PANEL
RB1	RUBBER FLOOR TILES
RB2	RUBBER FLOORING (STAIRS, LANDINGS)
SC	SEALED CONCRETE
TZ1	TERRAZZO FLOORING
TZ2	TERRAZZO FLOORING ACCENT
EP1	EPOXY FLOORING - OPAQUE
G1	GROUT
G2	GROUT
PT	ALUMINUM DIAMOND PLATE

BASE MATERIALS

B1	RUBBER BASE
B2	RUBBER BASE
B3	ANODIZED ALUMINUM BASE - SEE C2 AND C4/A513
B4	SOLID HARDWOOD BASE - 3/4" THICK, 4" HIGH
B5	TILE BASE
B6	ALUMINUM COVE BASE
B7	TILE COVE BASE
B8	NO BASE - SEAL SEAM
B9	NO BASE - CAULK BETWEEN FLOOR AND WALL
B10	COVED RUBBER BASE
B11	COVED EPOXY FLOORING

WALL MATERIALS

F1	ACOUSTIC FABRIC WALL PANELS
F2	PEW SEAT FABRIC
P1	PRIMED & PAINTED WALL SURFACE - GENERAL
P2	PRIMED & PAINTED WALL SURFACE - GENERAL
P3	PRIMED & PAINTED WALL SURFACE - ACCENT
P4	PRIMED & PAINTED WALL SURFACE - ACCENT
P5	CEILING PAINT
P6	RAILING PAINT
P7	H.M. DOOR FRAME PAINT
P8	H.M. DOOR FRAME PAINT
P9	PRIMED & PAINTED WALL SURFACE - ACCENT
P10	INTUMESCENT PAINT SYSTEM
WT1	PORCELAIN WALL TILE 6X24
WT2	PORCELAIN WALL TILE 4X24
WT3	PORCELAIN WILL TILE 2X24
WT4	PORCELAIN WALL TILE 6X24
WT5	PORCELAIN WALL TILE 2X24
WT6	NOT USED
WT7	GLAZED WALL TILE 3x6
WT8	GLAZED WALL TILE 3x6
WT9	GLAZED WALL TILE 3x6
WT10	NOT USED
WT11	NOT USED
WT12	NOT USED
WT13	GLAZED WALL TILE 4x4
WT14	GLASS WALL TILE - SIZES VARY
WC1	VINYL WALLCOVERING
WC3	DRY ERASE WALLCOVERING

SURFACE MATERIALS

PL1	PLASTIC LAMINATE - VERTICAL SURFACES
PL2	PLASTIC LAMINATE - COUNTERTOPS
PL3	PHENOLIC CORE PARTITIONS - PARTITION COLOR
WV	WOOD VENEER - SEE A513 FOR TYPICAL DETAILS
QZ1	QUARTZ COUNTERTOP SURFACE
QZ2	QUARTZ COUNTERTOP SURFACE
QZ3	QUARTZ COUNTERTOP SURFACE
SS1	SOLID SURFACE COUNTERTOP
SS2	SOLID SURFACE COUNTERTOP
SS3	SOLID SURFACE THRESHOLD

KEYED NOTES

608	WALL MOUNTED TALL CABINET WITH BLOCKING
800	SCHEDULED DOOR & FRAME
801	WINDOW SYSTEM
811	72"X 48" MIRROR ADHEARED TO WALL
812	48"X 64" MIRROR ADHEARED TO WALL
901	METAL STUD FRAMING
927	INTEGRATED CERAMIC SOAP DISH
1000	GRAB BAR
1002	PHENOLIC TOILET PARTITION
1004	COUNTER MOUNTED SOAP DISPENSER
1005	RECESSED PAPER TOWEL DISPENSER / TRASH CAN UNIT
1007	SANITARY NAPKIN DISPOSAL
1009	STAINLESS STEEL SHELF
1010	TOILET PAPER DISPENSER
1011	SHOWER CURTAIN AND ROD
1012	HANDICAP SHOWER SEAT
1013	TOWEL HOOK
1016	WALL MOUNTED SOAP DISPENSER
1020	SINGLE TIER 12"X 12"X 60" METAL LOCKERS WITH PROX CARD LOCK, SEE ELEVATIONS
1023	SIGNAGE, SEE SCHEDULE
1104	VENDING MACHINE, NIC
1105	COUNTER MOUNTED ICE MACHINE, NIC
1113	MICROWAVE, NIC
1114	REFRIGERATOR, NIC
2207	TOILET
2211	SHOWER HEAD AND CONTROL VALVES
2212	UNDERMOUNT COUNTER SINK AND FAUCET

VCBO ARCHITECTURE
524 SOUTH 600 EAST
SALT LAKE CITY, UT 84102
Phone: (801) 575-8800
Fax: (801) 531-9850
Web: vcbo.com

LICENSED ARCHITECT No. 153912 BRENT R. TIPPETS 8-15-13 STATE OF UTAH

2nd District Juvenile Courthouse

Utah State Courts
08284150
165 West 20th Street, Ogden, Utah
BID DOCUMENTS

Rev #	Date	Description

Job # 12500
Date August 15, 2013
Owner # 08284150
Ins. #

ENLARGED PLANS AND ELEVATIONS

A430

8/14/2013 2:40:57 PM

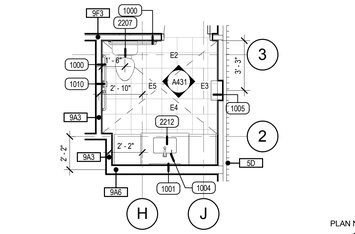

E1 ENLARGED JUDGES TOILET EAST PLAN
SCALE: 1/4" = 1'-0"

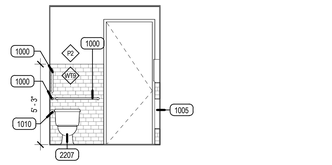

E2 1200-1-ROBING
SCALE: 1/4" = 1'-0"

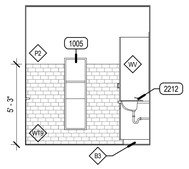

E3 1200-2-ROBING
SCALE: 1/4" = 1'-0"

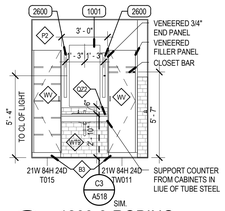

E4 1200-3-ROBING
SCALE: 1/4" = 1'-0"

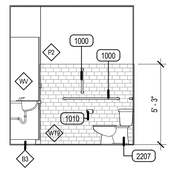

E5 1200-4-ROBING
SCALE: 1/4" = 1'-0"

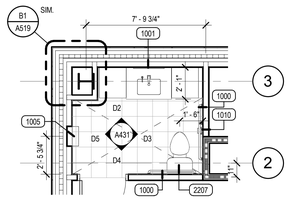

D1 ENLARGED JUDGES TOILET 1200B WEST PLAN
SCALE: 1/4" = 1'-0"

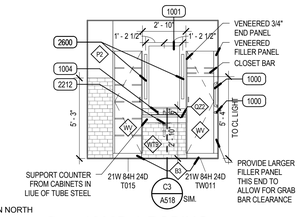

D2 1200B-1-ROBING
SCALE: 1/4" = 1'-0"

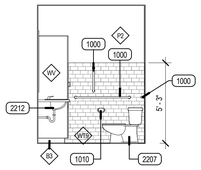

D3 1200B-2-ROBING
SCALE: 1/4" = 1'-0"

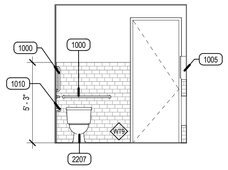

D4 1200B-3-ROBING
SCALE: 1/4" = 1'-0"

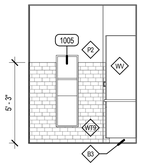

D5 1200B-4-ROBING
SCALE: 1/4" = 1'-0"

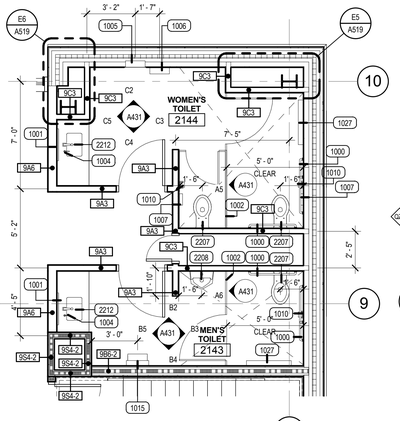

B1 ENLARGED PUBLIC RESTROOM PLAN, LEVELS 2,3,4,5
SCALE: 1/4" = 1'-0"

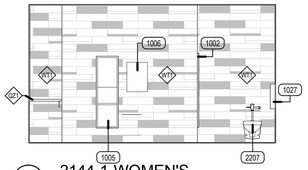

C2 2144-1-WOMEN'S
SCALE: 1/4" = 1'-0"

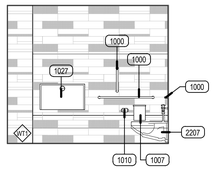

C3 2144-2-WOMEN'S
SCALE: 1/4" = 1'-0"

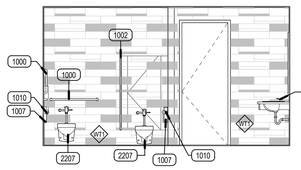

C4 2144-3-WOMEN'S
SCALE: 1/4" = 1'-0"

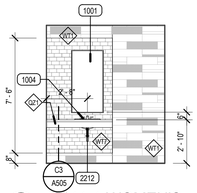

C5 2144-4-WOMEN'S
SCALE: 1/4" = 1'-0"

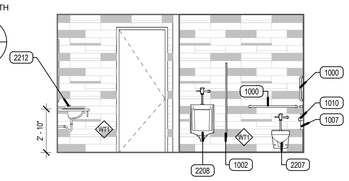

B2 2143-1-MEN'S
SCALE: 1/4" = 1'-0"

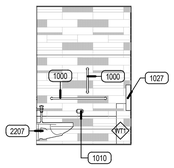

B3 2143-2-MEN'S
SCALE: 1/4" = 1'-0"

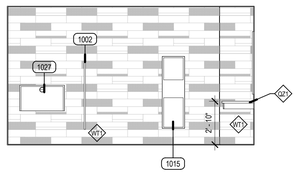

B4 2143-3-MEN'S
SCALE: 1/4" = 1'-0"

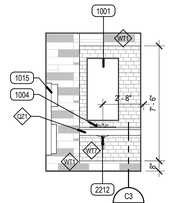

B5 2143-4-MEN'S
SCALE: 1/4" = 1'-0"

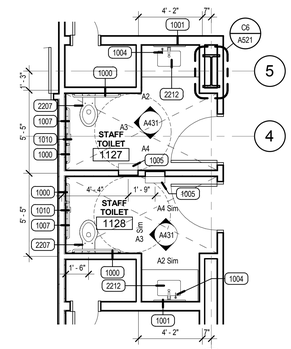

A1 ENLARGED STAFF RESTROOM 1127 & 1128 PLAN
SCALE: 1/4" = 1'-0"

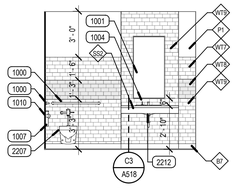

A2 1127-1-STAFF
SCALE: 1/4" = 1'-0"

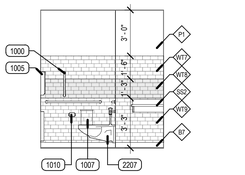

A3 1127-2-STAFF
SCALE: 1/4" = 1'-0"

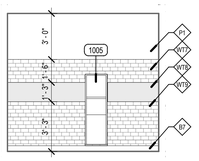

A4 1127-3-STAFF
SCALE: 1/4" = 1'-0"

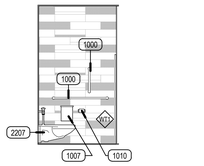

A5 1200-1-WOMEN'S
SCALE: 1/4" = 1'-0"

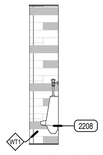

A6 MEN'S RESTROOM 1200 WEST B
SCALE: 1/4" = 1'-0"

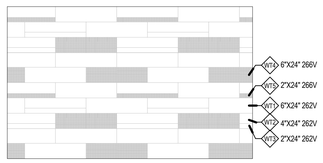

B6 TYPICAL PUBLIC RESTROOM WALL TILE PATTERN "WT1"
SCALE: 1/2" = 1'-0"

FINISH PLAN SYMBOLS

SINGLE FINISH SYMBOLS INDICATE WHERE FINISHES ARE DIFFERENT FROM GENERAL ROOM FINISHES, OR PROVIDE ADDITIONAL FINISH INFORMATION

CHANGE AT FLOOR MATERIAL

FINISH PLAN LEGEND

FLOOR MATERIALS

EM	ENTRY MAT
C1	CARPET TILE
C2	CARPET TILE
C3	NOT USED
C4	CARPET TILE
C5	CARPET TILE
C6	CARPET TILE
C7	NOT USED
L1	LINOLEUM SHEET
L2	LINOLEUM TILE - MCT
FT1	PORCELAIN FLOOR TILE 12x24
FT2	PORCELAIN FLOOR TILE 6x24
FT3	PORCELAIN FLOOR TILE 12x12
FT4	FLOOR TILE 1X2
VT2	STATIC DISSIPATIVE ACCESS FLOOR PANEL
RB1	RUBBER FLOOR TILES
RB2	RUBBER FLOORING (STAIRS, LANDINGS)
SC	SEALED CONCRETE
TZ1	TERRAZZO FLOORING
TZ2	TERRAZZO FLOORING ACCENT
EP1	EPOXY FLOORING - OPAQUE
G1	GROUT
G2	GROUT
PT	ALUMINUM DIAMOND PLATE

BASE MATERIALS

B1	RUBBER BASE
B2	RUBBER BASE
B3	ANODIZED ALUMINUM BASE - SEE C2 AND C4/A513
B4	SOLID HARDWOOD BASE - 3/4" THICK, 4" HIGH
B5	TILE BASE
B6	ALUMINUM COVE BASE
B7	TILE COVE BASE
B8	NO BASE - SEAL SEAM
B9	NO BASE - CAULK BETWEEN FLOOR AND WALL
B10	COVED RUBBER BASE
B11	COVED EPOXY FLOORING

WALL MATERIALS

F1	ACOUSTIC FABRIC WALL PANELS
F2	PEW SEAT FABRIC
P1	PRIMED & PAINTED WALL SURFACE - GENERAL
P2	PRIMED & PAINTED WALL SURFACE - GENERAL
P3	PRIMED & PAINTED WALL SURFACE - ACCENT
P4	PRIMED & PAINTED WALL SURFACE - ACCENT
P5	CEILING PAINT
P6	RAILING PAINT
P7	H.M. DOOR FRAME PAINT
P8	H.M. DOOR FRAME PAINT
P9	PRIMED & PAINTED WALL SURFACE - ACCENT
P10	INTUMESCENT PAINT SYSTEM
WT1	PORCELAIN WALL TILE 6X24
WT2	PORCELAIN WALL TILE 4X24
WT3	PORCELAIN WILL TILE 2X24
WT4	PORCELAIN WALL TILE 6X24
WT5	PORCELAIN WALL TILE 2X24
WT6	NOT USED
WT7	GLAZED WALL TILE 3x6
WT8	GLAZED WALL TILE 3x6
WT9	GLAZED WALL TILE 3x6
WT10	NOT USED
WT11	NOT USED
WT12	NOT USED
WT13	GLAZED WALL TILE 4x4
WT14	GLASS WALL TILE - SIZES VARY
WC1	VINYL WALLCOVERING
WC3	DRY ERASE WALLCOVERING

SURFACE MATERIALS

PL1	PLASTIC LAMINATE - VERTICAL SURFACES
PL2	PLASTIC LAMINATE - COUNTERTOPS
PL3	PHENOLIC CORE PARTITIONS - PARTITION COLOR
WV	WOOD VENEER - SEE A513 FOR TYPICAL DETAILS
QZ1	QUARTZ COUNTERTOP SURFACE
QZ2	QUARTZ COUNTERTOP SURFACE
QZ3	QUARTZ COUNTERTOP SURFACE
SS1	SOLID SURFACE COUNTERTOP
SS2	SOLID SURFACE COUNTERTOP
SS3	SOLID SURFACE THRESHOLD

KEYED NOTES

1000	GRAB BAR
1001	2'x 4' MIRROR
1002	PHENOLIC TOILET PARTITION
1004	COUNTER MOUNTED SOAP DISPENSER
1005	RECESSED PAPER TOWEL DISPENSER / TRASH CAN UNIT
1006	SANITARY NAPKIN DISPENSER
1007	SANITARY NAPKIN DISPOSAL
1010	TOILET PAPER DISPENSER
1015	SURFACE MOUNTED PAPER TOWEL DISPENSER / TRASH CAN UNIT
1027	WALL MOUNTED BABY CHANGING STATION
2207	TOILET
2208	URINAL
2212	UNDERMOUNT COUNTER SINK AND FAUCET
2600	LIGHT FIXTURE

VCBO ARCHITECTURE
524 SOUTH 600 EAST
SALT LAKE CITY, UT 84102
Phone: (801) 575-8800
Fax: (801) 531-9850
Web: vcbo.com

LICENSED ARCHITECT No. 153912 BRENT R. TIPPETS 8-15-13 STATE OF UTAH

2nd District Juvenile Courthouse

Utah State Courts
08284150
165 West 20th Street, Ogden, Utah
BID DOCUMENTS

Rev #	Date	Description

Job # 12500
Date August 15, 2013
Owner # 08284150
Ins. #

ENLARGED PLANS AND ELEVATIONS

A431

8/14/2013 2:41:48 PM

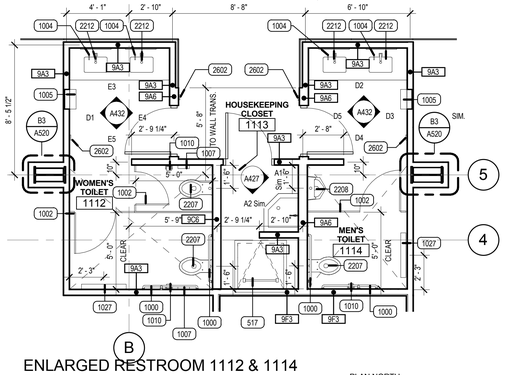

B

ENLARGED RESTROOM 1112 & 1114 PLAN

E1 SCALE: 1/4" = 1'-0"

PLAN NORTH

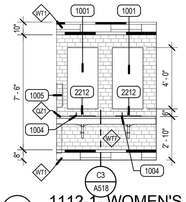

E3 1112-1-WOMEN'S RESTROOM

SCALE: 1/4" = 1'-0"

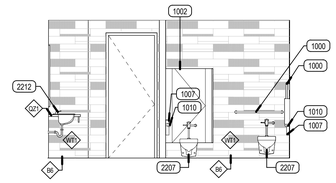

E4 1112-2-WOMEN'S RESTROOM

SCALE: 1/4" = 1'-0"

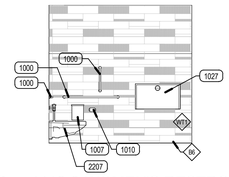

E5 1112-3-WOMEN'S RESTROOM

SCALE: 1/4" = 1'-0"

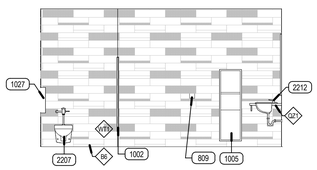

D1 1112-4-WOMEN'S RESTROOM

SCALE: 1/4" = 1'-0"

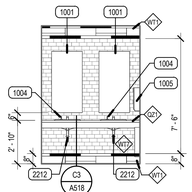

D2 1114-1-MEN'S RESTROOM

SCALE: 1/4" = 1'-0"

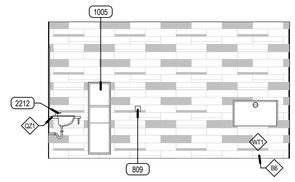

D3 1114-2-MEN'S RESTROOM

SCALE: 1/4" = 1'-0"

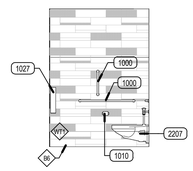

D4 1114-3-MEN'S RESTROOM

SCALE: 1/4" = 1'-0"

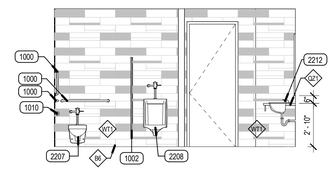

D5 1114-4-MEN'S RESTROOM

SCALE: 1/4" = 1'-0"

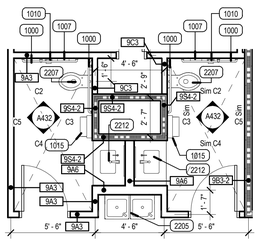

ENLARGED STAFF RESTROOM PLANS
2129 2130

C1 SCALE: 1/4" = 1'-0"

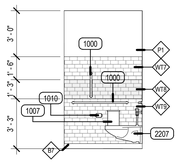

C2 2129-1 STAFF RESTROOM

SCALE: 1/4" = 1'-0"

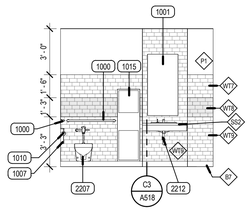

C3 2129-2- STAFF RESTROOM

SCALE: 1/4" = 1'-0"

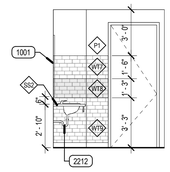

C4 2129-3-STAFF RESTROOM

SCALE: 1/4" = 1'-0"

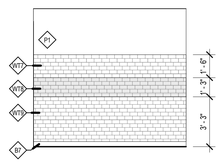

C5 2129-4-STAFF RESTROOM

SCALE: 1/4" = 1'-0"

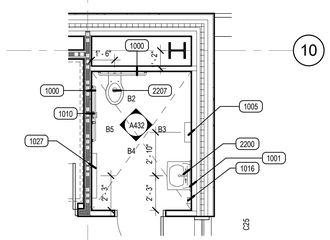

D

B1 ENLARGED FAMILY TOILET 2103

SCALE: 1/4" = 1'-0"

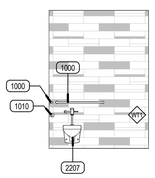

B2 2103-1-FAMILY RR

SCALE: 1/4" = 1'-0"

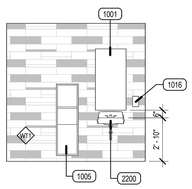

B3 2103-2 FAMILY RR

SCALE: 1/4" = 1'-0"

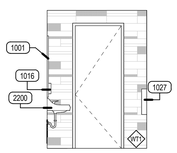

B4 2103-3 FAMILY RR

SCALE: 1/4" = 1'-0"

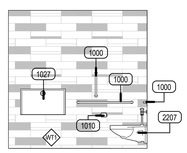

B5 2103-4 FAMILY RR

SCALE: 1/4" = 1'-0"

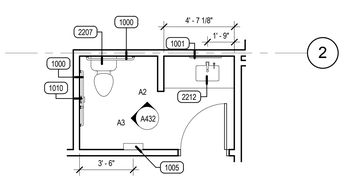

A1 ENLARGED TOILET 3132

SCALE: 1/4" = 1'-0"

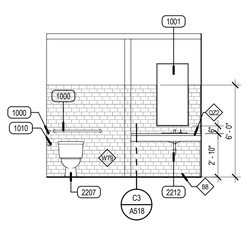

A2 3132-1-TOILET ROOM

SCALE: 1/4" = 1'-0"

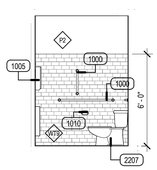

A3 3132-2 TOILET ROOM

SCALE: 1/4" = 1'-0"

FINISH PLAN SYMBOLS

SINGLE FINISH SYMBOLS INDICATE WHERE FINISHES ARE DIFFERENT FROM GENERAL ROOM FINISHES, OR PROVIDE ADDITIONAL FINISH INFORMATION

CHANGE AT FLOOR MATERIAL

FINISH PLAN LEGEND

FLOOR MATERIALS

EM	ENTRY MAT
C1	CARPET TILE
C2	CARPET TILE
C3	NOT USED
C4	CARPET TILE
C5	CARPET TILE
C6	CARPET TILE
C7	NOT USED
L1	LINOLEUM SHEET
L2	LINOLEUM TILE - MCT
FT1	PORCELAIN FLOOR TILE 12x24
FT2	PORCELAIN FLOOR TILE 6x24
FT3	PORCELAIN FLOOR TILE 12x12
FT4	FLOOR TILE 1X2
VT2	STATIC DISSIPATIVE ACCESS FLOOR PANEL
RB1	RUBBER FLOOR TILES
RB2	RUBBER FLOORING (STAIRS, LANDINGS)
SC	SEALED CONCRETE
TZ1	TERRAZZO FLOORING
TZ2	TERRAZZO FLOORING ACCENT
EP1	EPOXY FLOORING - OPAQUE
G1	GROUT
G2	GROUT
PT	ALUMINUM DIAMOND PLATE

BASE MATERIALS

B1	RUBBER BASE
B2	RUBBER BASE
B3	ANODIZED ALUMINUM BASE - SEE C2 AND C4/A513
B4	SOLID HARDWOOD BASE - 3/4" THICK, 4" HIGH
B5	TILE BASE
B6	ALUMINUM COVE BASE
B7	TILE COVE BASE
B8	NO BASE - SEAL SEAM
B9	NO BASE - CAULK BETWEEN FLOOR AND WALL
B10	COVED RUBBER BASE
B11	COVED EPOXY FLOORING

WALL MATERIALS

F1	ACOUSTIC FABRIC WALL PANELS
F2	PEW SEAT FABRIC
P1	PRIMED & PAINTED WALL SURFACE - GENERAL
P2	PRIMED & PAINTED WALL SURFACE - GENERAL
P3	PRIMED & PAINTED WALL SURFACE - ACCENT
P4	PRIMED & PAINTED WALL SURFACE - ACCENT
P5	CEILING PAINT
P6	RAILING PAINT
P7	H.M. DOOR FRAME PAINT
P8	H.M. DOOR FRAME PAINT
P9	PRIMED & PAINTED WALL SURFACE - ACCENT
P10	INTUMESCENT PAINT SYSTEM
WT1	PORCELAIN WALL TILE 6X24
WT2	PORCELAIN WALL TILE 4X24
WT3	PORCELAIN WILL TILE 2X24
WT4	PORCELAIN WALL TILE 8X24
WT5	PORCELAIN WALL TILE 2X24
WT6	NOT USED
WT7	GLAZED WALL TILE 3x6
WT8	GLAZED WALL TILE 3x6
WT9	GLAZED WALL TILE 3x6
WT10	NOT USED
WT11	NOT USED
WT12	NOT USED
WT13	GLAZED WALL TILE 4x4
WT14	GLASS WALL TILE - SIZES VARY
WC1	VINYL WALLCOVERING
WC3	DRY ERASE WALLCOVERING

SURFACE MATERIALS

PL1	PLASTIC LAMINATE - VERTICAL SURFACES
PL2	PLASTIC LAMINATE - COUNTERTOPS
PL3	PHENOLIC CORE PARTITIONS - PARTITION COLOR
WV	WOOD VENEER - SEE A513 FOR TYPICAL DETAILS
QZ1	QUARTZ COUNTERTOP SURFACE
QZ2	QUARTZ COUNTERTOP SURFACE
QZ3	QUARTZ COUNTERTOP SURFACE
SS1	SOLID SURFACE COUNTERTOP
SS2	SOLID SURFACE COUNTERTOP
SS3	SOLID SURFACE THRESHOLD

KEYED NOTES

517	ROOF ACCESS LADDER
809	ADA DOOR OPENER ACTUATOR
1000	GRAB BAR
1001	2'x 4' MIRROR
1002	PHENOLIC TOILET PARTITION
1004	COUNTER MOUNTED SOAP DISPENSER
1005	RECESSED PAPER TOWEL DISPENSER / TRASH CAN UNIT
1007	SANITARY NAPKIN DISPOSAL
1010	TOILET PAPER DISPENSER
1015	SURFACE MOUNTED PAPER TOWEL DISPENSER / TRASH CAN UNIT
1016	WALL MOUNTED SOAP DISPENSER
1027	WALL MOUNTED BABY CHANGING STATION
2200	WALL MOUNTED SINK AND FAUCET
2205	ELECTRIC WATER COOLER
2207	TOILET
2208	URINAL
2212	UNDERMOUNT COUNTER SINK AND FAUCET
2602	ADA DOOR ACUATOR

VCBO ARCHITECTURE

VCBO ARCHITECTURE
524 SOUTH 600 EAST
SALT LAKE CITY, UT 84102
Phone: (801) 575-8800
Fax: (801) 531-9850
Web: vcbo.com

LICENSED ARCHITECT No. 153912 BRENT R. TIPPETS 8-15-13 STATE OF UTAH

2nd District Juvenile Courthouse

Utah State Courts
08284150
165 West 20th Street, Ogden, Utah
BID DOCUMENTS

Rev #	Date	Description

Job # 12500
Date August 15, 2013
Owner # 08284150
Ins. #

ENLARGED PLANS AND ELEVATIONS

A432

8/14/2013 2:42:22 PM

CMU WALLS

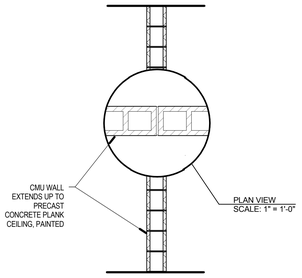

4A_

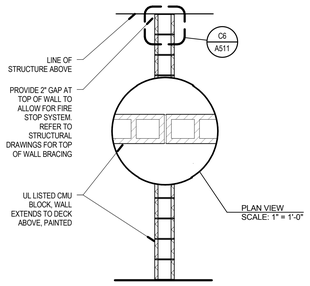

4A_-2
2 HOUR RATED
INSTALL C.M.U. WALL PER IBC 2009 TABLE 720.1 (2) 3

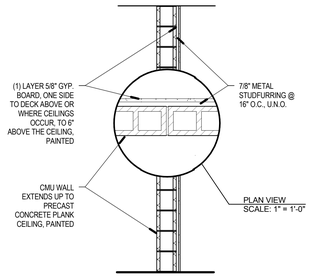

4B_

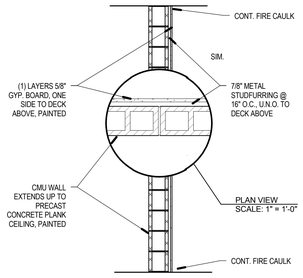

4B_-2
2 HOUR RATED
INSTALL C.M.U. WALL PER IBC 2009 TABLE 720.1 (2) 3

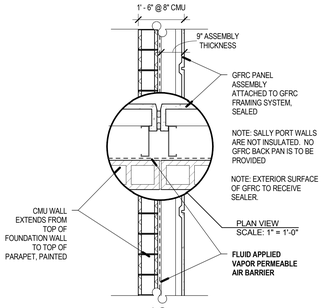

4C_

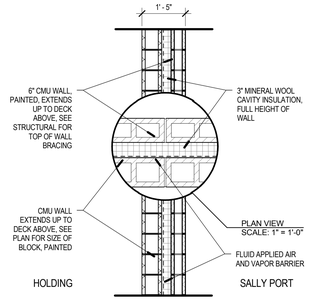

4D_

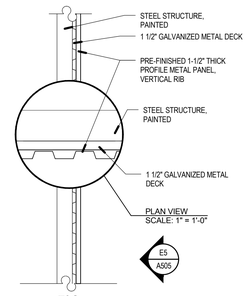

5K_

METAL STUD WALLS

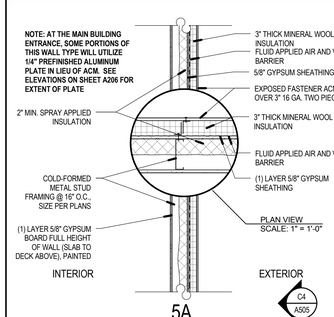

5A_

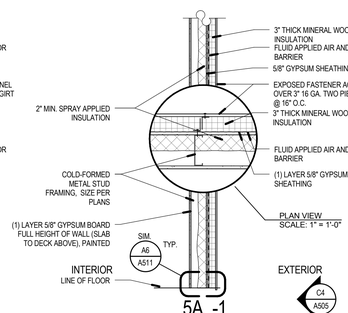

5A_-1
1 HOUR RATED

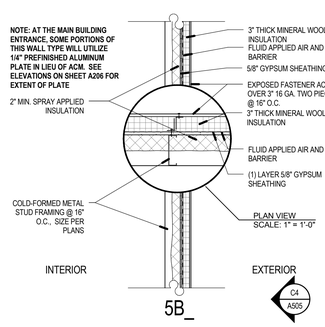

5B_

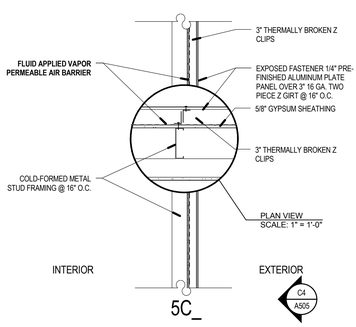

5C_

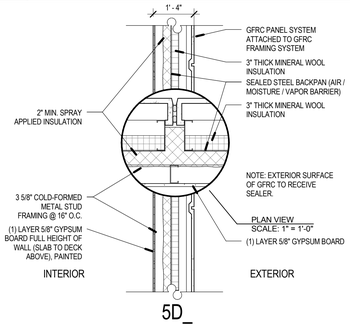

5D_

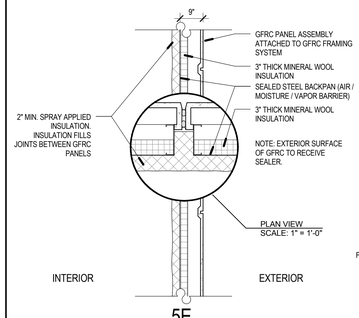

5E_

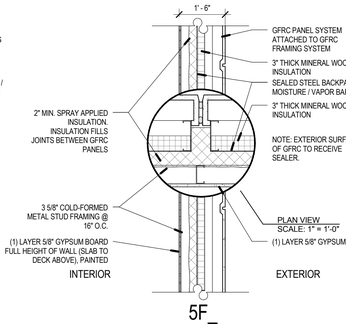

5F_

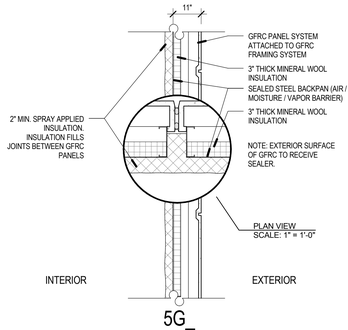

5G_

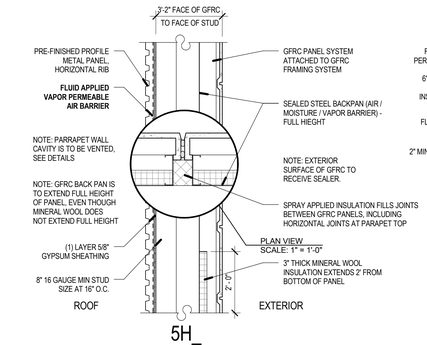

5H_

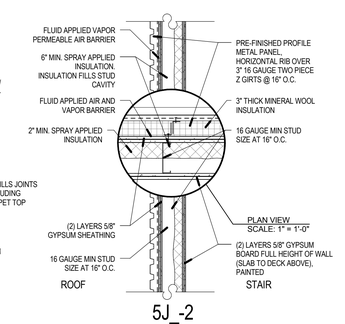

5J_-2
2 HOUR RATED

KEY FOR PARTITION TYPES

DENOTES TYPE OF CONSTRUCTION (SPEC. DIVISION) — WALL

3X 0 SERIES	CONCRETE
4X 0 SERIES	MASONRY
5X 0 SERIES	COLD FORMED METAL STUDS, 16ga MIN.
9X 0 SERIES	METAL STUDS

NOMINAL SIZES: V = VARIABLE/MATCHEXISTING
1 = 1 5/8" STUDS
2 = 2 1/2" STUDS
3 = 3 5/8" STUDS
4 = 4" STUDS / 4" (NOM.) C.M.U.
6 = 6" STUDS / 6" (NOM.) C.M.U.
8 = 8" STUDS / 8" (NOM.) C.M.U.
10 = 10" (NOM.) C.M.U. OR CONC.
12 = 12" (NOM.) C.M.U. OR CONC.

EXAMPLE: WALL TYPE 9A3 IS A 3 5/8" METAL STUD WITH 5/8" GYPSUM BOARD ON BOTH SIDES.

NOTE: SEE GENERAL NOTES BELOW FOR ADDITIONAL ELEMENTS IN THE INDIVIDUAL WALL TYPES AND SPECIFIC DETAILS, INCLUDING UL RATINGS.

RATED WALL LEGEND

1 HOUR SEPARATION

2 HOUR SEPARATION

EXAMPLE: WALL TYPE 9A3-1 IS A ONE HOUR RATED, 3 5/8" METAL STUD WALL WITH 5/8" GYPSUM BOARD ON BOTH SIDES, PER ASSEMBLY REQUIREMENTS.

90X-R SERIES — FIRE RATING (ONLY WHEN NOTED):
1 = 1 HOUR RATED ASSEMBLY
2 = 2 HOUR RATED ASSEMBLY
3 = 3 HOUR RATED ASSEMBLY

NON-BEARING METAL HEADER SCHEDULE

MAXIMUM SPAN	HEADER	FY
4'-0"	(2) 400S137-43	33 ksi
6'-0"	(2) 600S162-43	33 ksi
8'-0"	(2) 800S162-43	33 ksi

METAL STUD HEADER NOTES:

1. SCHEDULE TO BE USED FOR NON-BEARING WALLS.
2. HEADERS TO BE CONSTRUCTED AS BOX HEADERS PER SSMA STANDARDS.
3. SEE TYPICAL DETAIL FOR MORE INFORMATION.

NON-BEARING METAL STUD GAUGE SIZING

MEMBER DEPTH IN 1/100 INCHES — FLANGE WIDTH IN 1/100 INCHES

400S137-43

STYLE (S=STUD OR JOIST) — MATERIAL THICKNESS IN MILS

MEMBER DEPTH	MAX STUD HEIGHT	MIN. GA. & SPACING
2 1/2" (250S125-33)	10'-0"	20@16" O.C.
3 5/8" (362S125-33)	14'-0"	20@16" O.C.
3 5/8" (362S162-33)	16'-0"	20@16" O.C.
3 5/8" (362S162-43)	18'-0"	18@16" O.C.
6" (600S162-33)	24'-0"	20@16" O.C.
6" (600S162-43)	26'-0"	18@16" O.C.
6" (600S162-54-50KSI)	28'-0"	16@16" O.C.

METAL STUD NOTES:

1. STEEL STUDS SHALL MEET ICC REPORT ER-4943P AND THE SSMA STANDARDS. HEIGHT BASED ON SSMA 2001 CATALOG AND PROJECT REQUIREMENTS.
2. SEE SCHEDULE FOR STUD SPACING AND GAUGE. ALL STUDS AND BRACES SHALL BE 33 KSI UNLESS NOTED OTHERWISE IN THESE DRAWINGS.
3. AT ALL DOORS PROVIDE TWO TABBED 18 GAUGE STUDS AT BOTH SIDES OF JAMB.
4. PLEASE NOTE THAT DUE TO THE LARGE FLOOR TO FLOOR HEIGHT 18 GAUGE STUDS WILL BE NECESSARY IN MOST INTERIOR NON LOAD BEARING WALLS. REFER TO THE CHART ABOVE.

WALL NOTES

1. SEE SHEETS A500 AND A501 FOR ALL WALL TYPE DEFINITIONS

2. PARTITION TYPE INDICATIONS ARE INDEPENDENT OF APPLIED FINISHES, SUCH AS TILE OR WOOD PANELING. SEE THE FINISH SHEETS AND INTERIOR ELEVATIONS FOR WALL FINISHES INCLUDING COURSING AND PANEL LAYOUT AND/OR THE DESIGNATIONS ON THE PLANS FOR ADDITIONAL INFORMATION REGARDING APPLIED FINISHES.

3. WHERE PARTITION TYPE DESIGNATION ON FLOOR PLANS IS INTERRUPTED BY DOOR OPENING, GLAZED PARTITION, ETC., CONSTRUCTION ABOVE INTERRUPTION (AND WHERE APPLICABLE BELOW) IS TO BE THE SAME AS THAT DESIGNATED FOR THE PARTITION IN WHICH THE INTERRUPTION OCCURRED.

4. THE MINIMUM REQUIREMENTS FOR CONSTRUCTION OF EACH PARTITION TYPE AS EXPRESSED BY THE INDICATED REFERENCE ARE INCORPORATED BY REFERENCE AND ARE APPLICABLE TO THE WORK OF THIS PROJECT. HOWEVER, ADDITIONAL AND/OR MORE RESTRICTIVE REQUIREMENTS MAY BE INDICATED BY THE SPECIFICATIONS AND DRAWINGS. SUCH REQUIREMENTS ALSO APPLY AND SHALL GOVERN. SUCH REQUIREMENTS INCLUDE BUT ARE NOT LIMITED TO:

   A. USE 5/8" THICK GYPSUM BOARD THROUGHOUT UNLESS NOTED OTHERWISE.

   B. USE 16" OC MAX STUD SPACING UNLESS NOTED OTHERWISE IN THESE DOCUMENTS. THE SPACING STATED BY THE REFERENCED APPROVAL OR TEST REPORT IS THE MAX SPACING IF ALLOWED IN THESEDOCUMENTS.

   C. USE STUDS OF GAGE INDICATED ON THE DRAWINGS OR IN THE SPECIFICATIONS. THE GAGE STATED BY THE REFERENCED APPROVAL OR TEST REPORT IS THE MINIMUM GAGE TESTED, 20 GA (30 MILS) IS THE MINIMUM ALLOWED IN THESE DOCUMENTS.

5. USE STUDS OF DEPTH INDICATED BY THIS SET OF DOCUMENTS. THE DEPTH STATED BY THE REFERENCED APPROVAL OR TEST REPORT IS THE MINIMUM DEPTH ALLOWED IN THESE DOCUMENTS.

6. AT INTERIOR STUD WALLS, THE CONTRACTOR IS RESPONSIBLE FOR SELECTING THE STUD GAUGE BASED ON THE HEIGHT OF WALL BEING CONSTRUCTED USING THE REQUIRMENTS FOUND IN THE "NON-BEARING METAL STUD GAUGE SIZING" CHART LOCATED ON SHEET A501.

7. PROVIDE FIRE RATED CONSTRUCTION ASSEMBLIES WHERE INDICATED ON SHEET G200 AND FLOOR PLAN DRAWINGS.

8. ALL DIMENSIONS ARE CENTER OF STUD OR FACE OF CONCRETE, MASONRY OR ROUGH OPENING UNLESS NOTED OTHERWISE.

9. AT ALL WALLS, STUDS, INSULATION AND GYPSUM BOARD ARE TO EXTEND TO THE DECK ABOVE. UNLESS NOTED OTHERWISE.

10. WALL TYPES NOT NOTED ARE ASSUMED TO MATCH ADJACENT ROOMS. NOTIFY ARCHITECT OF ANY DISCREPANCIES.

11. ALL METAL STUD PARTITIONS ARE CONSIDERED ACOUSTIC PARTITIONS AND ARE TO RECEIVE A TYPE 1 SOUND ATTENUATION BLANKET. THICKNESS TO MATCH STUD DEPTH, UNLESS NOTED OTHERWISE.

12. REFER TO SHEET A511 FOR TYPICAL INTERIOR WALL CONDITIONS ASSOCIATED WITH ALL METAL STUD AND CMU PARTITIONS.

13. SEE DETAIL B4/A511 FOR THE TYPICAL TOP OF WALL CONDITION TO BE USED AT ALL INTERIOR STUD WALLS.

14. PROVIDE CONTROL JOINTS IN METAL FRAMED WALLS AT APPROXIMATELY 30 FEET ON CENTER. LOCATE AT CORNER ABOVE DOORS OR INSIDE CORNER OF PILASTERS OR OTHER INCONSPICUOUS LOCATION WHERE POSSIBLE. **CONSULT WITH ARCHITECT PRIOR TO COMMENCING FRAMING.**

15. AT WALL OPENINGS FOR PENETRATION OF PIPES, DUCTS, DEVICES, ETC., GYPSUM BOARD IS TO BE CUT TO MATCH THE SHAPE AND DIMENSION OF THE PENETRATING OBJECT AND THE GAP BETWEEN THE OBJECT AND THE WALL IS TO BE SEALED W/ ACOUSTICAL OR FIRE SEALANT ON ALL SIDES WITH A 3/4" JOINT AT ALL SIDES, MAXIMUM. THE OPENING FOR DUCTS OR LARGE PENETRATIONS SHALL BE FRAMED WITH A HEADER, ADD AN ANGLED CORNER BRACE IF THE GAP EXCEEDS 3" FROM FRAMING TO THE OPENING, SEE DETAIL D5/511.

16. CONTRACTOR TO PROVIDE BLOCKING / BACKING FOR ALL WALL MOUNTED EQUIPMENT. SEE FLOOR PLANS AND INTERIOR ELEVATIONS FOR CABINETS, GRAB BARS ETC. INSTALL BLOCKING AS DETAILED OR AS REQUIRED TO MOUNT SUCH DEVICES. ALL BLOCKING IS TO BE FIRE RETARDANT TREATED OR 20 GA METAL PER DETAIL C4/A511.

17. WHERE THERE IS LIMITED WATER EXPOSURE: INSTALL ONE LAYER OF 5/8" TYPE X WATER RESISTANT GYPSUM BOARD PER ASTM C1396 (WHERE GYPSUM BOARD OCCURS) OF BASIC PARTITION AT THE FOLLOWING LOCATIONS:

   A. WITHIN 2 FEET HORIZONTALLY AND 4 FEET VERTICALLY OF JANITORS SINKS

   B. AT OTHER LOCATIONS, I.E. TOILET ROOMS AND KITCHENS, AND AS INDICATED ON THE ARCHITECTURAL FINISH PLANS AND ELEVATIONS.

18. WHERE CERAMIC TILE FINISHES ARE INDICATED PER THE FINISH PLANS AND ELEVATIONS, INSTALL ONE LAYER OF 5/8" GLASS MAT TILE BACKER BOARD IN LIEU OF GYPSUM BOARD (WHERE GYPSUM BOARD OCCURS) OF BASIC PARTITION WHERE THERE IS NO FIRE RATING AND OVER GYPSUM BOARD FACE LAYER AT FIRE RATED PARTITIONS AT THE FOLLOWING LOCATIONS.

19. ALL EXTERIOR WALLS TO HAVE 2" OF SPRAY FOAM INSULATION APPLIED TO THE INTERIOR FACE OF SHEATHING OR TO THE BACK OF THE GFRC PANEL (UNLESS NOTED OTHERWISE).

20. AT WALLS HOLDING EXTERIOR METAL PANELS, A FLUID APPLIED MEMBRANE IS TO BE APPLIED TO THE EXTERIOR FACE OF THE GYP SHEATHING FOR THE FULL HEIGHT AND LENGTH OF THE WALL, SEAL ALL PENETRATIONS. **PLEASE NOTE THAT TWO MEMBRANE TYPES ARE TO BE USED (VAPOR PERMEABLE AND VAPOR BARRIER)**. SEE WALL TYPES, SPECIFICATIONS AND DETAILS FOR LOCATION OF EACH TYPE.

21. AT EXTERIOR METAL PANELS, 3" OF MINERAL WOOL CAVITY INSULATION IS TO BE PROVIDED.

22. THE FLUID APPLIED MEMBRANE SYSTEMS (PERMEABLE AND VAPOR BARRIER) ARE TO WRAP INTO ALL WINDOW AND DOOR OPENINGS PER THE MEMBRANE MANUFACTURER'S APPROVED DETAILS.

23. SEE STRUCTURAL PLANS FOR ADDITIONAL CONCRETE AND MASONRY WALL INFORMATION.

24. SEE EXTERIOR ELEVATIONS FOR G.F.R.C., ACM AND PROFILE METAL PANEL ORIENTATION AND JOINT PLACEMENT.

25. ALL MASONRY WALLS ARE TO BE REINFORCED AND ARE TO BE SET ON REINFORCED FOOTINGS. CONTROL JOINTS TO BE LOCATED AS PER THE REQUIREMENTS FOUND IN THE STRUCTURAL DOCUMENTS BUT ARE NOT TO EXCEED 30' OC. SEE THE STRUCTURAL DRAWINGS FOR REINFORCING AND OTHER DETAILS PERTAINING TO MASONRY WALLS. IF NOT OTHERWISE NOTED, LOCATE CONTROL JOINTS AT CORNER ABOVE DOORS, INSIDE CORNER OF PILASTERS OR OTHER INCONSPICUOUS LOCATION WHERE POSSIBLE. CONSULT WITH ARCHITECT PRIOR TO INSTALLING.

26. SEE IBC 2009, CHAPTER 7 FOR FIRE RESISTIVE REQUIREMENTS ON NEW CONCRETE AND CONCRETE MASONRY UNIT WALLS.
-CMU WALLS (IBC TABLE 720.1(2), ITEM 3)
-CAST IN PLACE CONCRETE WALLS (IBC TABLE 721.2.1.2(1))

27. AT WALL OPENINGS FOR PENETRATION OF PIPES, DUCTS, DEVICES, ETC., MASONRY IS TO BE CUT TO MATCH THE SHAPE AND DIMENSION OF THE PENETRATING OBJECT AND THE GAP BETWEEN THE OBJECT AND THE WALL IS TO BE SEALED W/ ACOUSTICAL OR FIRE SEALANT ON ALL SIDES WITH A 3/4" JOINT AT ALL SIDES, MAXIMUM.

28. PROTECTION OF MASONRY: DURING CONSTRUCTION, COVER TOPS OF WALLS, PROJECTIONS, AND SILLS WITH WATERPROOF SHEETING AT END OF EACH DAY'S WORK. EXCEPT WHEN THE AMBIENT TEMPERATURE IS EXPECTED TO REMAIN ABOVE 65 DEG F AND NO PRECIPITATION IS FORECAST FOR THE NEXT 24 HOURS. (THIS IS TO PREVENT CONDENSATION FROM COVERED WALLS CAUSING A MOISTURE PROBLEM.) COVER PARTIALLY COMPLETED MASONRY EACH DAY THAT CONSTRUCTION IS NOT IN PROGRESS. WALLS ARE TO BE PROTECTED UNTIL THEY ARE PERMANENTLY PROTECTED BY THE ROOFING MEMBRANE OVER THE CAP PLATE. THE GENERAL CONTRACTOR IS TO PROVIDE TEMPORARY PROTECTION IMMEDIATELY FOLLOWING THE TOPPING OUT OF EACH SECTION OF WALL BY INSTALLING WATERPROOF SHEETING OVER A CONTINUOUS CAP PLATE UNTIL THE ROOFING MEMBRANE IS INSTALLED. **A SOLID GROUTED TOP BOND BEAM SHALL NOT BE CONSIDERED ADEQUATE PROTECTION FOR THE WALL.**

29. AT PAINTED CMU THE HORIZONTAL AND VERTICAL MORTAR JOINTS ARE TO BE CONCAVE. AT ALL HONED BLOCK SITE WALLS THE HORIZONTAL MORTAR JOINT IS TO BE A WEATHERED JOINT AND ALL VERTICAL JOINTS ARE TO BE RAKED.

30. ALL VERTICAL MASONRY CORNERS WHICH FALL WITHIN THE INTERIOR OF THE BUILDING, INCLUDING CORNERS AT DOOR AND WINDOW OPENINGS ARE TO HAVE A 3/4" CHAMFER EXTENDING FROM 4" A.F.F. TO THE DECK ABOVE OR THE BOTTOM OF THE HEADER. SEE DETAIL D6/A512.

31. PROVIDE SPECIAL SHAPES, SUCH AS "U" SHAPED CHANNEL FOR LINTELS OR HEADERS AND CAPPING UNITS FOR SASH AND OTHER SPECIAL CONDITIONS. U SHAPED BLOCKS ARE TO BE 16"X8"X THE WIDTH OF THE WALL.

32. WHERE A FLUID APPLIED MEMBRANES ARE TO BE APPLIED OVER CMU, THE MORTAR JOINTS ARE TO BE STRUCK FLUSH AND SMOOTH.

33. ALL WALL COMPONENTS (GYP. BOARD, VAPOR BARRIER, INSULATION, ETC...) ARE TO EXTEND TO THE DECK ABOVE OR TO TOP OF PARAPET UNLESS NOTED OTHERWISE.

VCBO ARCHITECTURE
VCBO ARCHITECTURE
524 SOUTH 600 EAST
SALT LAKE CITY, UT 84102
Phone: (801) 575-8800
Fax: (801) 531-9850
Web: vcbo.com

LICENSED ARCHITECT No. 153912 BRENT R. TIPPETS 8-15-13 STATE OF UTAH

2nd District Juvenile Courthouse

Utah State Courts
08284150
165 West 20th Street, Ogden, Utah
BID DOCUMENTS

Rev #	Date	Description

Job # 12500
Date August 15, 2013
Owner # 08284150
Ins. #

WALL TYPES AND GENERAL NOTES

A500

8/14/2013 2:25:53 PM

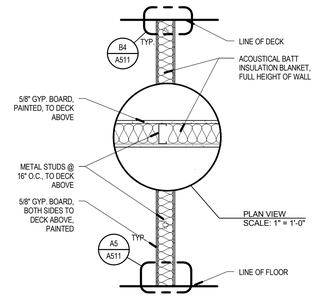

9A_

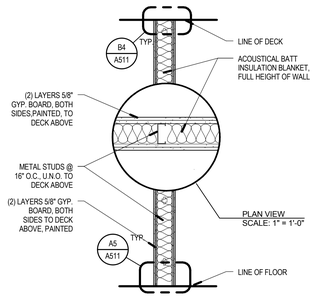

9B_

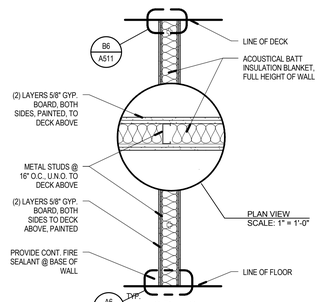

9B_-2
2 HOUR RATED

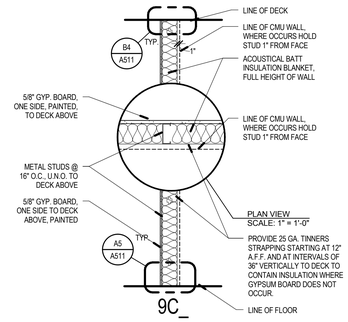

9C_

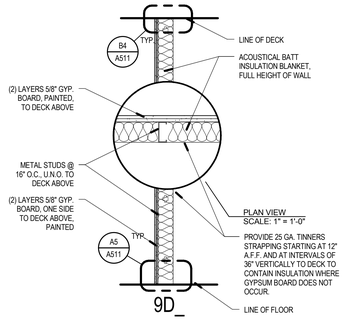

9D_

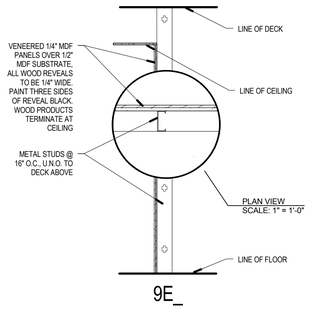

9E_

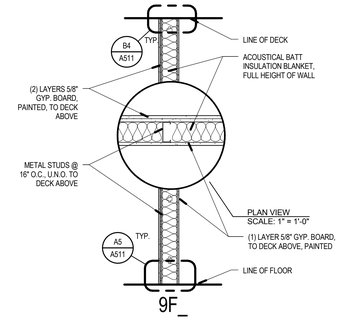

9F_

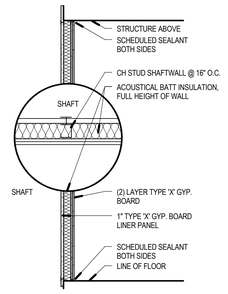

9S_
2 HOUR RATED

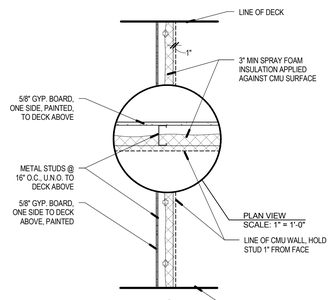

9G_

METAL STUD WALLS

KEY FOR PARTITION TYPES

DENOTES TYPE OF CONSTRUCTION (SPEC. DIVISION) — WALL

3X 0 SERIES	CONCRETE
4X 0 SERIES	MASONRY
5X 0 SERIES	COLD FORMED METAL STUDS, 16ga MIN.
9X 0 SERIES	METAL STUDS

NOMINAL SIZES: V = VARIABLE/MATCHEXISTING
1 = 1 5/8" STUDS
2 = 2 1/2" STUDS
3 = 3 5/8" STUDS
4 = 4" STUDS / 4" (NOM.) C.M.U.
6 = 6" STUDS / 6" (NOM.) C.M.U.
8 = 8" STUDS / 8" (NOM.) C.M.U.
10 = 10" (NOM.) C.M.U. OR CONC.
12 = 12" (NOM.) C.M.U. OR CONC.

EXAMPLE: WALL TYPE 9A3 IS A 3 5/8" METAL STUD WITH 5/8" GYPSUM BOARD ON BOTH SIDES.

NOTE: SEE GENERAL NOTES BELOW FOR ADDITIONAL ELEMENTS IN THE INDIVIDUAL WALL TYPES AND SPECIFIC DETAILS, INCLUDING UL RATINGS.

RATED WALL LEGEND

1 HOUR SEPARATION

2 HOUR SEPARATION

EXAMPLE: WALL TYPE 9A3-1 IS A ONE HOUR RATED, 3 5/8" METAL STUD WALL WITH 5/8" GYPSUM BOARD ON BOTH SIDES, PER ASSEMBLY REQUIREMENTS.

90X-R SERIES
FIRE RATING (ONLY WHEN NOTED):
1 = 1 HOUR RATED ASSEMBLY
2 = 2 HOUR RATED ASSEMBLY
3 = 3 HOUR RATED ASSEMBLY

NON-BEARING METAL HEADER SCHEDULE

MAXIMUM SPAN	HEADER	FY
4'-0"	(2) 400S137-43	33 ksi
6'-0"	(2) 600S162-43	33 ksi
8'-0"	(2) 800S162-43	33 ksi

METAL STUD HEADER NOTES:

1. SCHEDULE TO BE USED FOR NON-BEARING WALLS.
2. HEADERS TO BE CONSTRUCTED AS BOX HEADERS PER SSMA STANDARDS.
3. SEE TYPICAL DETAIL FOR MORE INFORMATION.

NON-BEARING METAL STUD GAUGE SIZING

MEMBER DEPTH IN 1/100 INCHES — FLANGE WIDTH IN 1/100 INCHES

400S137-43

STYLE (S=STUD OR JOIST) — MATERIAL THICKNESS IN MILS

MEMBER DEPTH	MAX STUD HEIGHT	MIN. GA. & SPACING
2 1/2" (250S125-33)	10'-0"	20@16" O.C.
3 5/8" (362S125-33)	14'-0"	20@16" O.C.
3 5/8" (362S162-33)	16'-0"	20@16" O.C.
3 5/8" (362S162-43)	18'-0"	18@16" O.C.
6" (600S162-33)	24'-0"	20@16" O.C.
6" (600S162-43)	26'-0"	18@16" O.C.
6" (600S162-54-50KSI)	28'-0"	16@16" O.C.

METAL STUD NOTES:

1. STEEL STUDS SHALL MEET ICC REPORT ER-4943P AND THE SSMA STANDARDS. HEIGHT BASED ON SSMA 2001 CATALOG AND PROJECT REQUIREMENTS.
2. SEE SCHEDULE FOR STUD SPACING AND GAUGE. ALL STUDS AND BRACES SHALL BE 33 KSI UNLESS NOTED OTHERWISE IN THESE DRAWINGS.
3. AT ALL DOORS PROVIDE TWO TABBED 18 GAUGE STUDS AT BOTH SIDES OF JAMB.
4. PLEASE NOTE THAT DUE TO THE LARGE FLOOR TO FLOOR HEIGHT 18 GAUGE STUDS WILL BE NECESSARY IN MOST INTERIOR NON LOAD BEARING WALLS. REFER TO THE CHART ABOVE.

WALL NOTES

1. SEE SHEETS A500 AND A501 FOR ALL WALL TYPE DEFINITIONS

2. PARTITION TYPE INDICATIONS ARE INDEPENDENT OF APPLIED FINISHES, SUCH AS TILE OR WOOD PANELING. SEE THE FINISH SHEETS AND INTERIOR ELEVATIONS FOR WALL FINISHES INCLUDING COURSING AND PANEL LAYOUT AND/OR THE DESIGNATIONS ON THE PLANS FOR ADDITIONAL INFORMATION REGARDING APPLIED FINISHES.

3. WHERE PARTITION TYPE DESIGNATION ON FLOOR PLANS IS INTERRUPTED BY DOOR OPENING, GLAZED PARTITION, ETC., CONSTRUCTION ABOVE INTERRUPTION (AND WHERE APPLICABLE BELOW) IS TO BE THE SAME AS THAT DESIGNATED FOR THE PARTITION IN WHICH THE INTERRUPTION OCCURRED.

4. THE MINIMUM REQUIREMENTS FOR CONSTRUCTION OF EACH PARTITION TYPE AS EXPRESSED BY THE INDICATED REFERENCE ARE INCORPORATED BY REFERENCE AND ARE APPLICABLE TO THE WORK OF THIS PROJECT. HOWEVER, ADDITIONAL AND/OR MORE RESTRICTIVE REQUIREMENTS MAY BE INDICATED BY THE SPECIFICATIONS AND DRAWINGS. SUCH REQUIREMENTS ALSO APPLY AND SHALL GOVERN. SUCH REQUIREMENTS INCLUDE BUT ARE NOT LIMITED TO:

A. USE 5/8" THICK GYPSUM BOARD THROUGHOUT UNLESS NOTED OTHERWISE.

B. USE 16" OC MAX STUD SPACING UNLESS NOTED OTHERWISE IN THESE DOCUMENTS. THE SPACING STATED BY THE REFERENCED APPROVAL OR TEST REPORT IS THE MAX SPACING IF ALLOWED IN THESEDOCUMENTS.

C. USE STUDS OF GAGE INDICATED ON THE DRAWINGS OR IN THE SPECIFICATIONS. THE GAGE STATED BY THE REFERENCED APPROVAL OR TEST REPORT IS THE MINIMUM GAGE TESTED, 20 GA (30 MILS) IS THE MINIMUM ALLOWED IN THESE DOCUMENTS.

5. USE STUDS OF DEPTH INDICATED BY THIS SET OF DOCUMENTS. THE DEPTH STATED BY THE REFERENCED APPROVAL OR TEST REPORT IS THE MINIMUM DEPTH ALLOWED IN THESE DOCUMENTS.

6. AT INTERIOR STUD WALLS, THE CONTRACTOR IS RESPONSIBLE FOR SELECTING THE STUD GAUGE BASED ON THE HEIGHT OF WALL BEING CONSTRUCTED USING THE REQUIRMENTS FOUND IN THE "NON-BEARING METAL STUD GAUGE SIZING" CHART LOCATED ON SHEET A501.

7. PROVIDE FIRE RATED CONSTRUCTION ASSEMBLIES WHERE INDICATED ON SHEET G200 AND FLOOR PLAN DRAWINGS.

8. ALL DIMENSIONS ARE CENTER OF STUD OR FACE OF CONCRETE, MASONRY OR ROUGH OPENING UNLESS NOTED OTHERWISE.

9. AT ALL WALLS, STUDS, INSULATION AND GYPSUM BOARD ARE TO EXTEND TO THE DECK ABOVE. UNLESS NOTED OTHERWISE.

10. WALL TYPES NOT NOTED ARE ASSUMED TO MATCH ADJACENT ROOMS. NOTIFY ARCHITECT OF ANY DISCREPANCIES.

11. ALL METAL STUD PARTITIONS ARE CONSIDERED ACOUSTIC PARTITIONS AND ARE TO RECEIVE A TYPE 1 SOUND ATTENUATION BLANKET. THICKNESS TO MATCH STUD DEPTH, UNLESS NOTED OTHERWISE.

12. REFER TO SHEET A511 FOR TYPICAL INTERIOR WALL CONDITIONS ASSOCIATED WITH ALL METAL STUD AND CMU PARTITIONS.

13. SEE DETAIL B4/A511 FOR THE TYPICAL TOP OF WALL CONDITION TO BE USED AT ALL INTERIOR STUD WALLS.

14. PROVIDE CONTROL JOINTS IN METAL FRAMED WALLS AT APPROXIMATELY 30 FEET ON CENTER. LOCATE AT CORNER ABOVE DOORS OR INSIDE CORNER OF PILASTERS OR OTHER INCONSPICUOUS LOCATION WHERE POSSIBLE. **CONSULT WITH ARCHITECT PRIOR TO COMMENCING FRAMING.**

15. AT WALL OPENINGS FOR PENETRATION OF PIPES, DUCTS, DEVICES, ETC., GYPSUM BOARD IS TO BE CUT TO MATCH THE SHAPE AND DIMENSION OF THE PENETRATING OBJECT AND THE GAP BETWEEN THE OBJECT AND THE WALL IS TO BE SEALED W/ ACOUSTICAL OR FIRE SEALANT ON ALL SIDES WITH A 3/4" JOINT AT ALL SIDES, MAXIMUM. THE OPENING FOR DUCTS OR LARGE PENETRATIONS SHALL BE FRAMED WITH A HEADER, ADD AN ANGLED CORNER BRACE IF THE GAP EXCEEDS 3" FROM FRAMING TO THE OPENING. SEE DETAIL D5/511.

16. CONTRACTOR TO PROVIDE BLOCKING / BACKING FOR ALL WALL MOUNTED EQUIPMENT. SEE FLOOR PLANS AND INTERIOR ELEVATIONS FOR CABINETS, GRAB BARS ETC. INSTALL BLOCKING AS DETAILED OR AS REQUIRED TO MOUNT SUCH DEVICES. ALL BLOCKING IS TO BE FIRE RETARDANT TREATED OR 20 GA METAL PER DETAIL C4/A511.

17. WHERE THERE IS LIMITED WATER EXPOSURE: INSTALL ONE LAYER OF 5/8" TYPE X WATER RESISTANT GYPSUM BOARD PER ASTM C1396 (WHERE GYPSUM BOARD OCCURS) OF BASIC PARTITION AT THE FOLLOWING LOCATIONS:

A. WITHIN 2 FEET HORIZONTALLY AND 4 FEET VERTICALLY OF JANITORS SINKS

B. AT OTHER LOCATIONS, I.E. TOILET ROOMS AND KITCHENS, AND AS INDICATED ON THE ARCHITECTURAL FINISH PLANS AND ELEVATIONS.

18. WHERE CERAMIC TILE FINISHES ARE INDICATED PER THE FINISH PLANS AND ELEVATIONS, INSTALL ONE LAYER OF 5/8" GLASS MAT TILE BACKER BOARD IN LIEU OF GYPSUM BOARD (WHERE GYPSUM BOARD OCCURS) OF BASIC PARTITION WHERE THERE IS NO FIRE RATING AND OVER GYPSUM BOARD FACE LAYER AT FIRE RATED PARTITIONS AT THE FOLLOWING LOCATIONS.

19. ALL EXTERIOR WALLS TO HAVE 2" OF SPRAY FOAM INSULATION APPLIED TO THE INTERIOR FACE OF SHEATHING OR TO THE BACK OF THE GFRC PANEL (UNLESS NOTED OTHERWISE).

20. AT WALLS HOLDING EXTERIOR METAL PANELS, A FLUID APPLIED MEMBRANE IS TO BE APPLIED TO THE EXTERIOR FACE OF THE GYP SHEATHING FOR THE FULL HEIGHT AND LENGTH OF THE WALL, SEAL ALL PENETRATIONS. **PLEASE NOTE THAT TWO MEMBRANE TYPES ARE TO BE USED (VAPOR PERMEABLE AND VAPOR BARRIER)**. SEE WALL TYPES, SPECIFICATIONS AND DETAILS FOR LOCATION OF EACH TYPE.

21. AT EXTERIOR METAL PANELS, 3" OF MINERAL WOOL CAVITY INSULATION IS TO BE PROVIDED.

22. THE FLUID APPLIED MEMBRANE SYSTEMS (PERMEABLE AND VAPOR BARRIER) ARE TO WRAP INTO ALL WINDOW AND DOOR OPENINGS PER THE MEMBRANE MANUFACTURER'S APPROVED DETAILS.

23. SEE STRUCTURAL PLANS FOR ADDITIONAL CONCRETE AND MASONRY WALL INFORMATION.

24. SEE EXTERIOR ELEVATIONS FOR G.F.R.C., ACM AND PROFILE METAL PANEL ORIENTATION AND JOINT PLACEMENT.

25. ALL MASONRY WALLS ARE TO BE REINFORCED AND ARE TO BE SET ON REINFORCED FOOTINGS. CONTROL JOINTS TO BE LOCATED AS PER THE REQUIREMENTS FOUND IN THE STRUCTURAL DOCUMENTS BUT ARE NOT TO EXCEED 30' OC. SEE THE STRUCTURAL DRAWINGS FOR REINFORCING AND OTHER DETAILS PERTAINING TO MASONRY WALLS. IF NOT OTHERWISE NOTED, LOCATE CONTROL JOINTS AT CORNER ABOVE DOORS, INSIDE CORNER OF PILASTERS OR OTHER INCONSPICUOUS LOCATION WHERE POSSIBLE. CONSULT WITH ARCHITECT PRIOR TO INSTALLING.

26. SEE IBC 2009, CHAPTER 7 FOR FIRE RESISTIVE REQUIREMENTS ON NEW CONCRETE AND CONCRETE MASONRY UNIT WALLS.
-CMU WALLS (IBC TABLE 720.1(2), ITEM 3)
-CAST IN PLACE CONCRETE WALLS (IBC TABLE 721.2.1.2(1))

27. AT WALL OPENINGS FOR PENETRATION OF PIPES, DUCTS, DEVICES, ETC., MASONRY IS TO BE CUT TO MATCH THE SHAPE AND DIMENSION OF THE PENETRATING OBJECT AND THE GAP BETWEEN THE OBJECT AND THE WALL IS TO BE SEALED W/ ACOUSTICAL OR FIRE SEALANT ON ALL SIDES WITH A 3/4" JOINT AT ALL SIDES, MAXIMUM.

28. PROTECTION OF MASONRY: DURING CONSTRUCTION, COVER TOPS OF WALLS, PROJECTIONS, AND SILLS WITH WATERPROOF SHEETING AT END OF EACH DAY'S WORK, EXCEPT WHEN THE AMBIENT TEMPERATURE IS EXPECTED TO REMAIN ABOVE 65 DEG F AND NO PRECIPITATION IS FORECAST FOR THE NEXT 24 HOURS. (THIS IS TO PREVENT CONDENSATION FROM COVERED WALLS CAUSING A MOISTURE PROBLEM.) COVER PARTIALLY COMPLETED MASONRY EACH DAY THAT CONSTRUCTION IS NOT IN PROGRESS. WALLS ARE TO BE PROTECTED UNTIL THEY ARE PERMANENTLY PROTECTED BY THE ROOFING MEMBRANE OVER THE CAP PLATE. THE GENERAL CONTRACTOR IS TO PROVIDE TEMPORARY PROTECTION IMMEDIATELY FOLLOWING THE TOPPING OUT OF EACH SECTION OF WALL BY INSTALLING WATERPROOF SHEETING OVER A CONTINUOUS CAP PLATE UNTIL THE ROOFING MEMBRANE IS INSTALLED. **A SOLID GROUTED TOP BOND BEAM SHALL NOT BE CONSIDERED ADEQUATE PROTECTION FOR THE WALL.**

29. AT PAINTED CMU THE HORIZONTAL AND VERTICAL MORTAR JOINTS ARE TO BE CONCAVE. AT ALL HONED BLOCK SITE WALLS THE HORIZONTAL MORTAR JOINT IS TO BE A WEATHERED JOINT AND ALL VERTICAL JOINTS ARE TO BE RAKED.

30. ALL VERTICAL MASONRY CORNERS WHICH FALL WITHIN THE INTERIOR OF THE BUILDING, INCLUDING CORNERS AT DOOR AND WINDOW OPENINGS ARE TO HAVE A 3/4" CHAMFER EXTENDING FROM 4" A.F.F. TO THE DECK ABOVE OR THE BOTTOM OF THE HEADER. SEE DETAIL D6/A512.

31. PROVIDE SPECIAL SHAPES, SUCH AS "U" SHAPED CHANNEL FOR LINTELS OR HEADERS AND CAPPING UNITS FOR SASH AND OTHER SPECIAL CONDITIONS. U SHAPED BLOCKS ARE TO BE 16"X8"X THE WIDTH OF THE WALL.

32. WHERE A FLUID APPLIED MEMBRANES ARE TO BE APPLIED OVER CMU, THE MORTAR JOINTS ARE TO BE STRUCK FLUSH AND SMOOTH.

33. ALL WALL COMPONENTS (GYP. BOARD, VAPOR BARRIER, INSULATION, ETC...) ARE TO EXTEND TO THE DECK ABOVE OR TO TOP OF PARAPET UNLESS NOTED OTHERWISE.

VCBO ARCHITECTURE
VCBO ARCHITECTURE
524 SOUTH 600 EAST
SALT LAKE CITY, UT 84102
Phone: (801) 575-8800
Fax: (801) 531-9850
Web: vcbo.com

LICENSED ARCHITECT
No. 153912
BRENT R. TIPPETS
8-15-13
STATE OF UTAH

2nd District Juvenile Courthouse

Utah State Courts
08284150
165 West 20th Street, Ogden, Utah
BID DOCUMENTS

Rev #	Date	Description

Job # 12500
Date August 15, 2013
Owner # 08284150
Ins. #

WALL TYPES AND GENERAL NOTES

A501

8/14/2013 2:26:02 PM

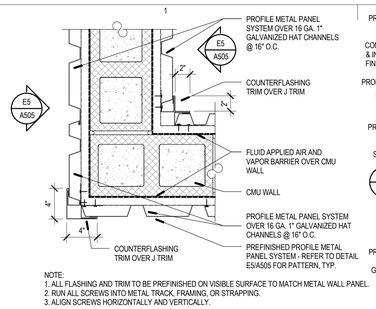

NOTE:
1. ALL FLASHING AND TRIM TO BE PREFINISHED ON VISIBLE SURFACE TO MATCH METAL WALL PANEL.
2. RUN ALL SCREWS INTO METAL TRACK, FRAMING, OR STRAPPING.
3. ALIGN SCREWS HORIZONTALLY AND VERTICALLY.

E1 PROFILE METAL CORNER DETAIL

SCALE: 1 1/2" = 1'-0"

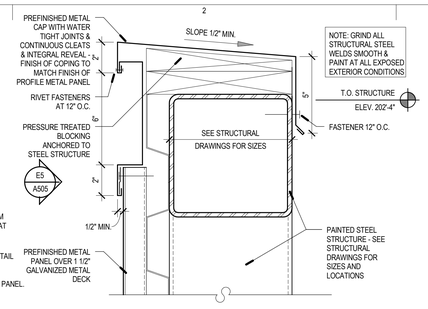

E2 PARAPET CAP @ SCREEN WALL

SCALE: 3" = 1'-0"

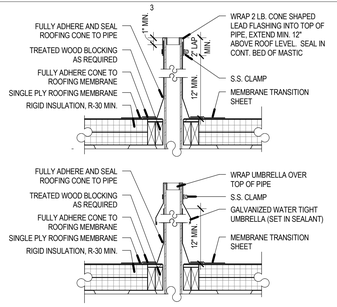

E3 ROOF PENETRATION DETAILS

SCALE: 1" = 1'-0"

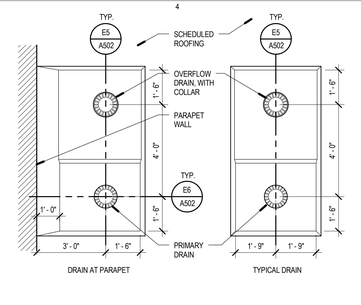

E4 TYP ROOF DRAINS

SCALE: 3/8" = 1'-0"

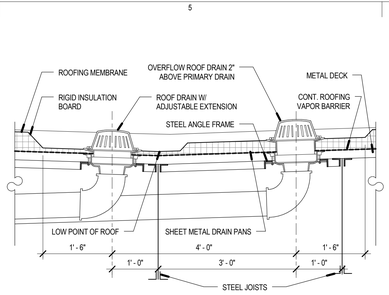

E5 ROOF DRAIN SECTION A-A

SCALE: 3/4" = 1'-0"

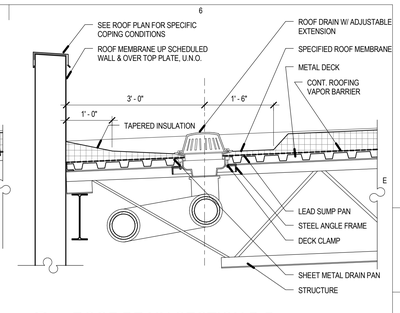

E6 ROOF DRAIN SECTION B-B

SCALE: 3/4" = 1'-0"

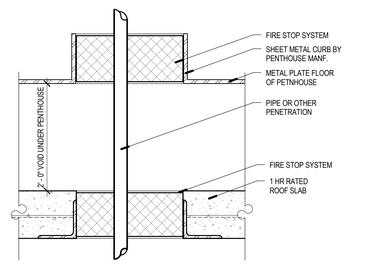

D1 TYP PENTHOUSE / ROOF PENETRATION

SCALE: 1 1/2" = 1'-0"

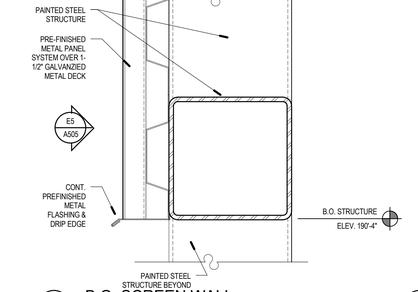

D2 B.O. SCREEN WALL

SCALE: 3" = 1'-0"

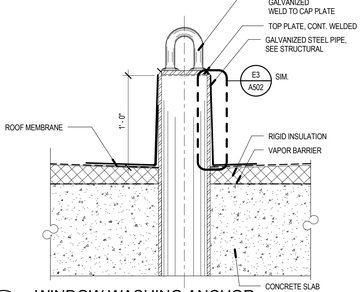

D3 WINDOW WASHING ANCHOR

SCALE: 1 1/2" = 1'-0"

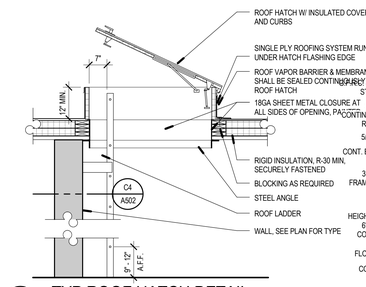

D4 TYP ROOF HATCH DETAIL

SCALE: 1/2" = 1'-0"

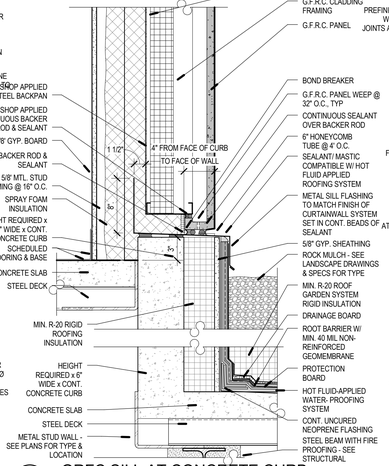

D5 GRFC SILL AT CONCRETE CURB

SCALE: 1 1/2" = 1'-0"

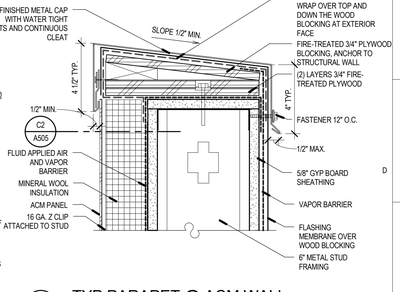

D6 TYP PARAPET @ ACM WALL

SCALE: 3" = 1'-0"

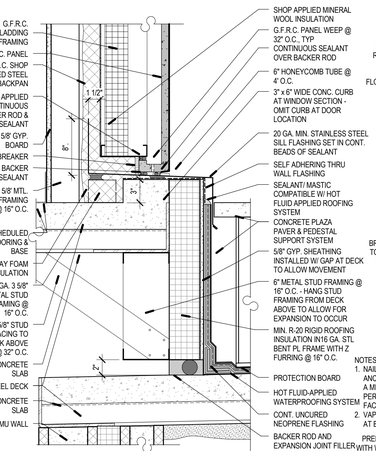

C1 WALL EXPANSION JOINT @ GFRC

SCALE: 1 1/2" = 1'-0"

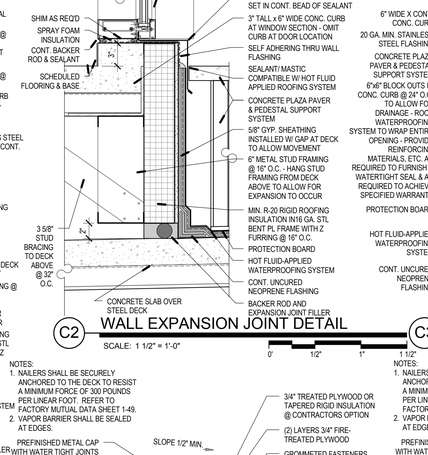

C2 WALL EXPANSION JOINT DETAIL

SCALE: 1 1/2" = 1'-0"

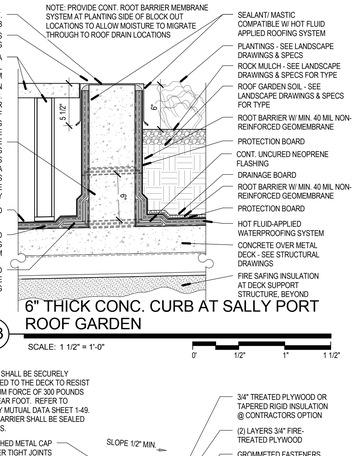

C3 6" THICK CONC. CURB AT SALLY PORT ROOF GARDEN

SCALE: 1 1/2" = 1'-0"

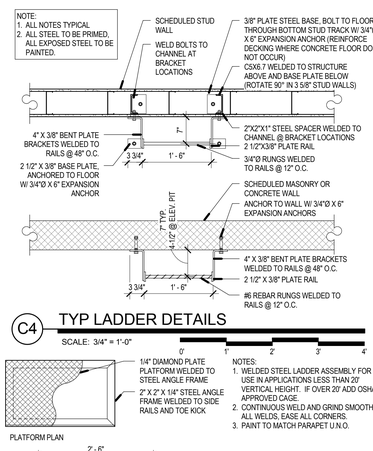

C4 TYP LADDER DETAILS

SCALE: 3/4" = 1'-0"

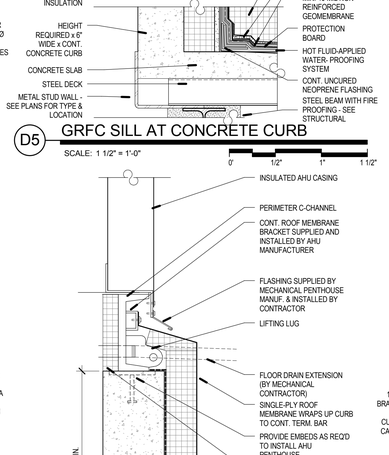

B5 CONCRETE CURB AT MECHANICAL AHU PENTHOUSE & PUMP ROOM

SCALE: 1 1/2" = 1'-0"

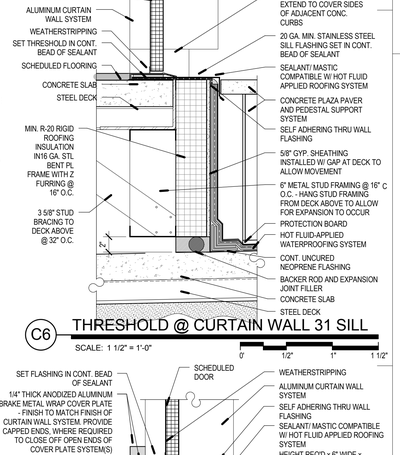

C6 THRESHOLD @ CURTAIN WALL 31 SILL

SCALE: 1 1/2" = 1'-0"

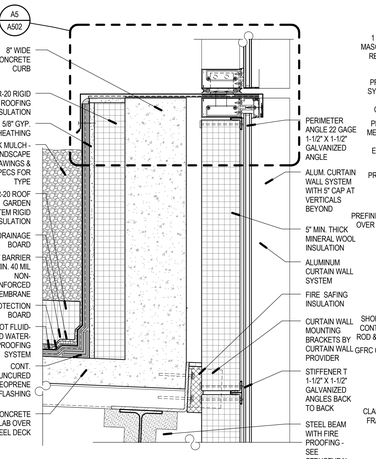

A1 CURTAIN WALL GUARDRAIL AT CONC. CURB AT ROOF

SCALE: 1 1/2" = 1'-0"

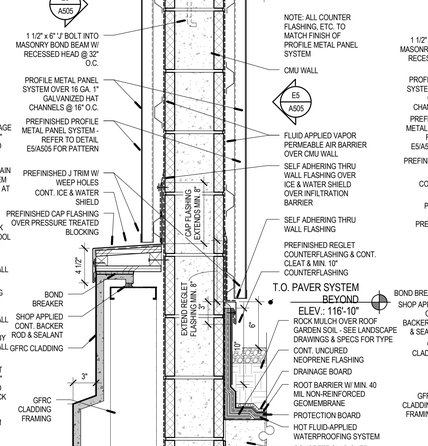

A2 GFRC/ METAL PANEL OVER CMU AT PLANTING

SCALE: 1 1/2" = 1'-0"

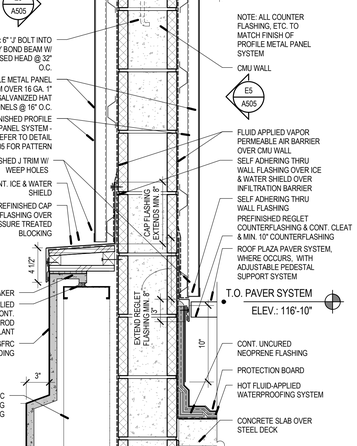

A3 GFRC/ METAL PANEL OVER CMU

SCALE: 1 1/2" = 1'-0"

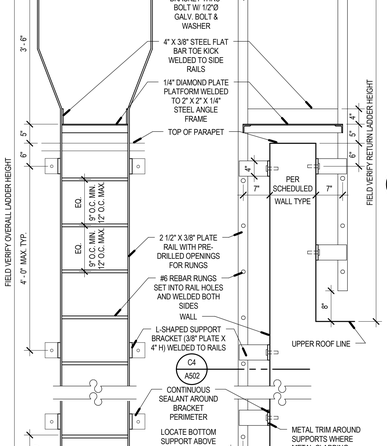

A4 ROOF LADDER

SCALE: 3/4" = 1'-0"

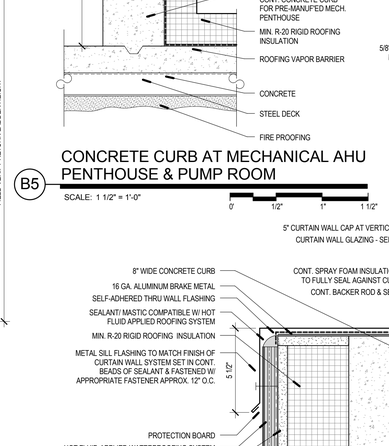

A5 CURTAIN WALL GUARDRAIL AT CONCRETE CURB

SCALE: 3" = 1'-0"

VCBO ARCHITECTURE
VCBO ARCHITECTURE
524 SOUTH 600 EAST
SALT LAKE CITY, UT 84102
Phone: (801) 575-8800
Fax: (801) 531-9850
Web: vcbo.com

LICENSED ARCHITECT No. 153912 BRENT R. TIPPETS 8-15-13 STATE OF UTAH

2nd District Juvenile Courthouse

Utah State Courts
08284150
165 West 20th Street, Ogden, Utah
BID DOCUMENTS

Rev #	Date	Description

Job # 12500
Date August 15, 2013
Owner # 08284150
Ins. #

DETAILS - ROOF

A502

8/14/2013 2:26:19 PM

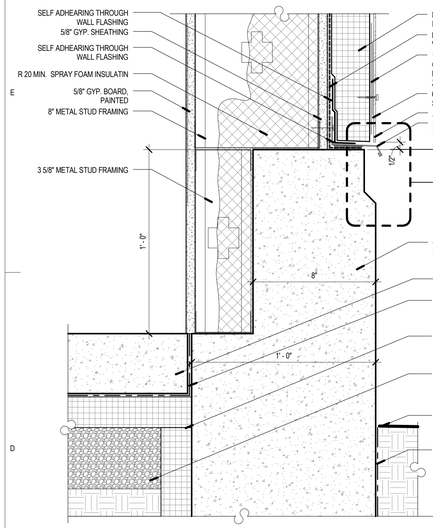

D1 ACM PANEL @ VESTIBULE FOUNDATION

SCALE: 3" = 1'-0"

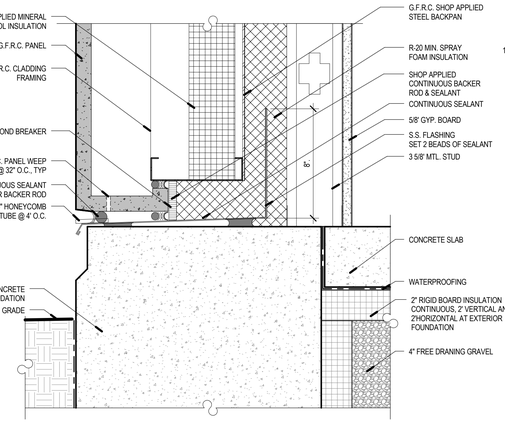

D2 G.F.R.C. PANEL BASE @ STUD WALL

SCALE: 3" = 1'-0"

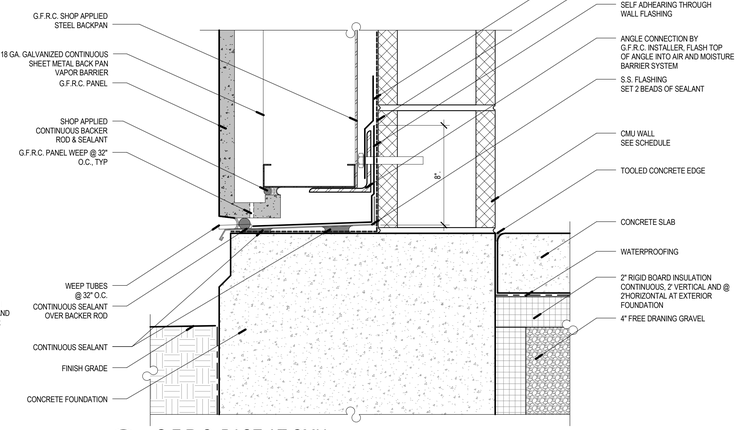

D3 G.F.R.C. BASE AT CMU

SCALE: 3" = 1'-0"

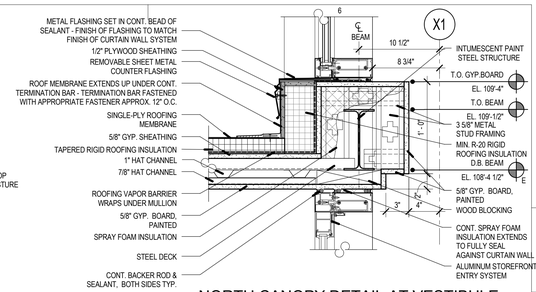

E6 NORTH CANOPY DETAIL AT VESTIBULE 1103

SCALE: 1 1/2" = 1'-0"

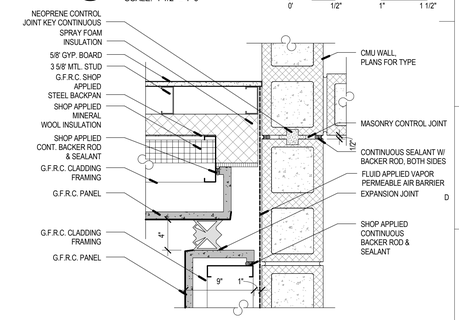

D6 WALL EXPANSION JOINT

SCALE: 1 1/2" = 1'-0"

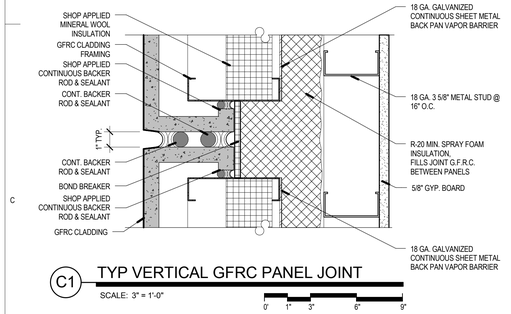

C1 TYP VERTICAL GFRC PANEL JOINT

SCALE: 3" = 1'-0"

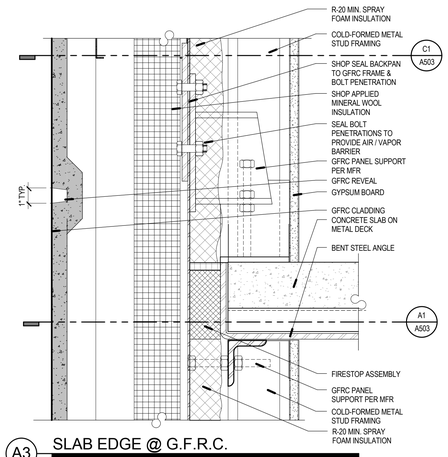

A3 SLAB EDGE @ G.F.R.C.

SCALE: 3" = 1'-0"

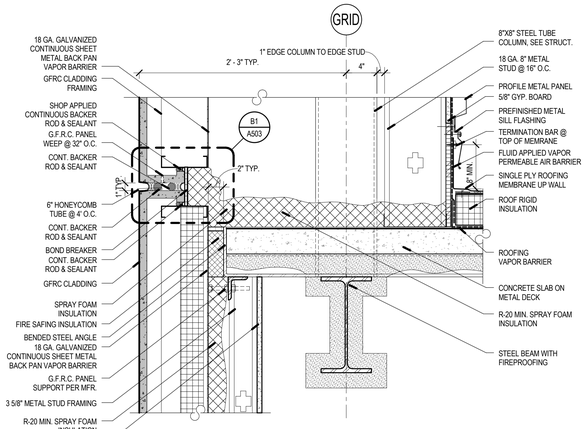

C5 GFRC PANEL @ ROOF

SCALE: 1 1/2" = 1'-0"

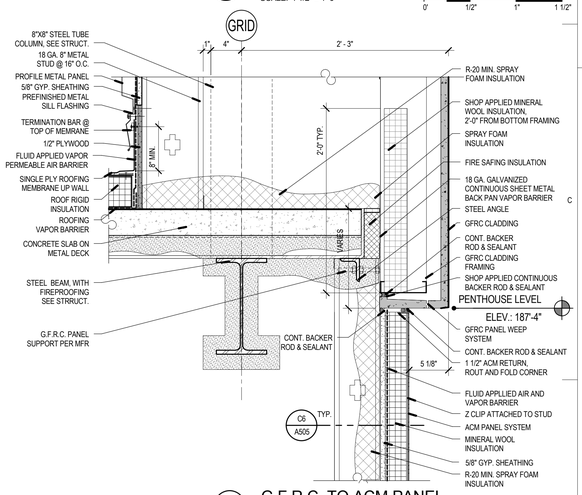

C6 G.F.R.C. TO ACM PANEL

SCALE: 1 1/2" = 1'-0"

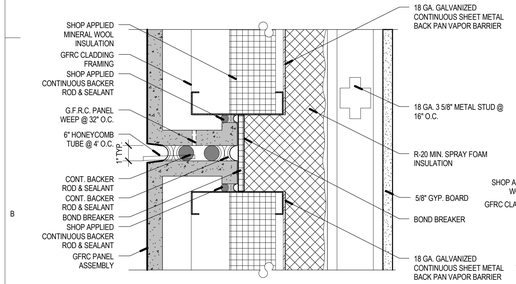

B1 TYP HORIZONTAL GFRC JOINT ASSEMBLY

SCALE: 3" = 1'-0"

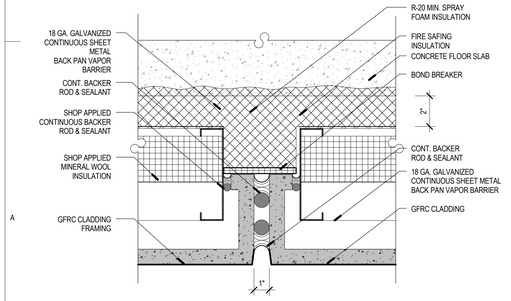

A1 FIRE SAFING INSULATION

SCALE: 3" = 1'-0"

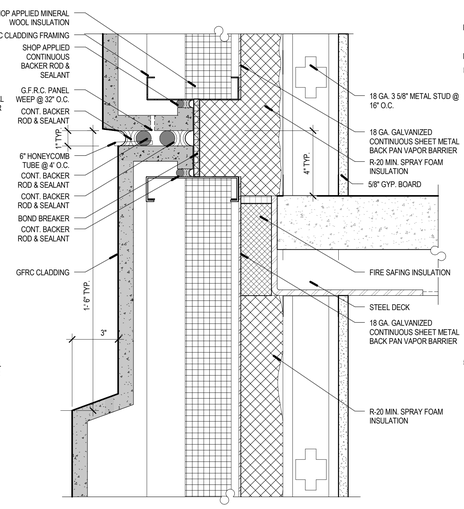

A2 WATER TABLE REVEAL

SCALE: 3" = 1'-0"

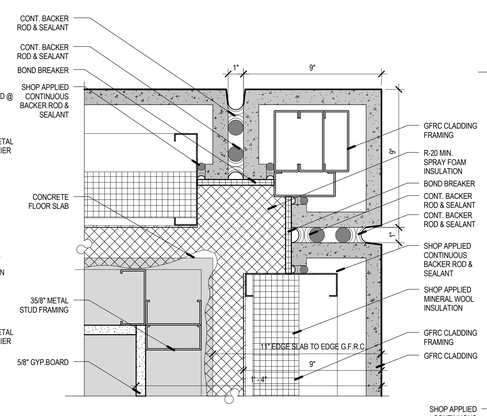

C3 TYP GFRC CORNER

SCALE: 3" = 1'-0"

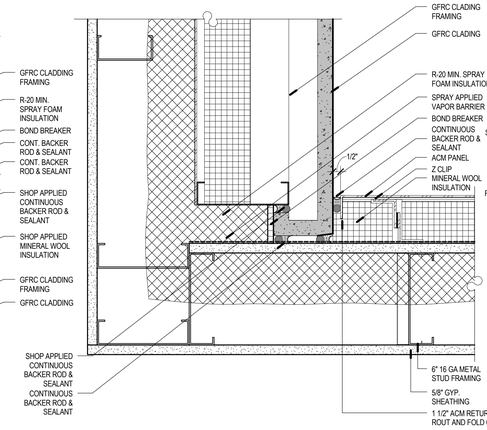

A5 GFRC @ ACM PANEL

SCALE: 3" = 1'-0"

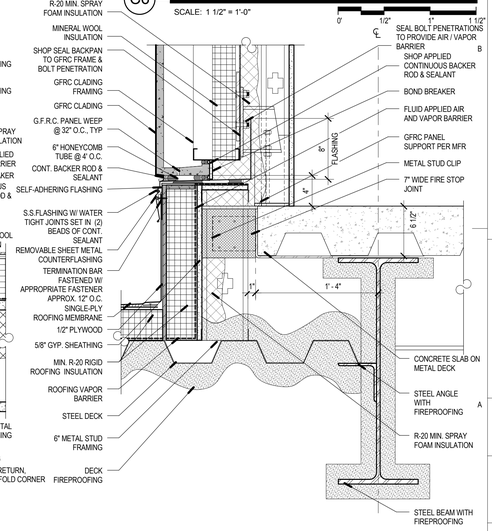

A6 GFRC TO STUD WALL @ ROOF LEVEL 2

SCALE: 1 1/2" = 1'-0"

8/14/2013 2:26:34 PM

VCBO ARCHITECTURE

VCBO ARCHITECTURE
524 SOUTH 600 EAST
SALT LAKE CITY, UT 84102
Phone: (801) 575-8800
Fax: (801) 531-9850
Web: vcbo.com

LICENSED ARCHITECT No. 153912 BRENT R. TIPPETS 8-15-13 STATE OF UTAH

2nd District Juvenile Courthouse

Utah State Courts
08284150
165 West 20th Street, Ogden, Utah
BID DOCUMENTS

Rev #	Date	Description

Job # 12500
Date August 15, 2013
Owner # 08284150
Ins. #

DETAILS - EXTERIOR

A503

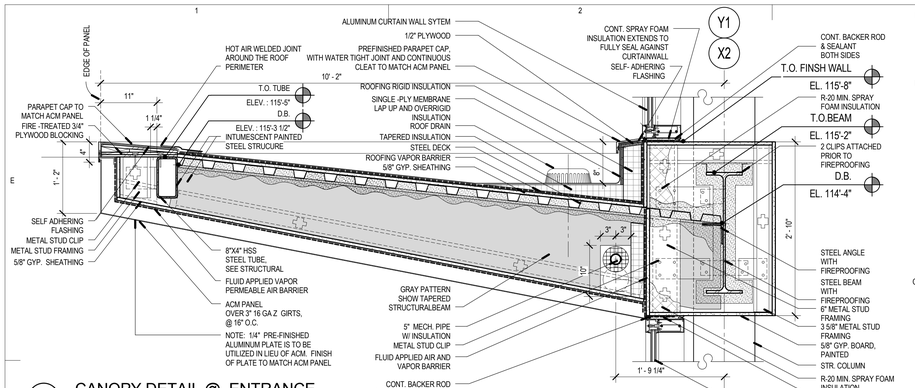

D1 CANOPY DETAIL @ ENTRANCE

SCALE: 1" = 1'-0"

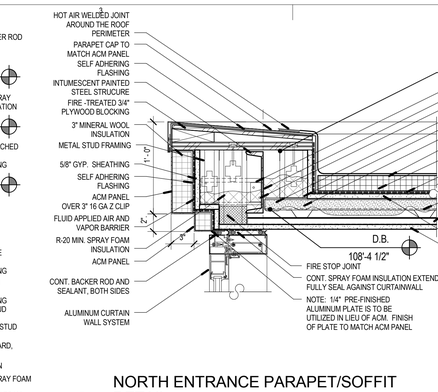

D3 NORTH ENTRANCE PARAPET/SOFFIT DETAIL

SCALE: 1 1/2" = 1'-0"

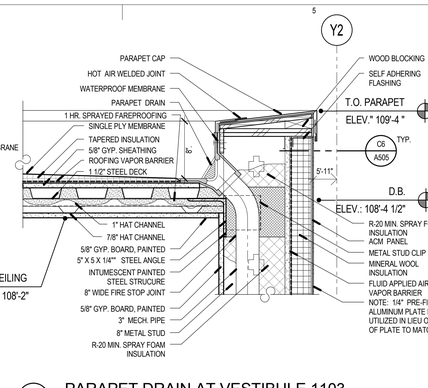

D5 PARAPET DRAIN AT VESTIBULE 1103

SCALE: 1 1/2" = 1'-0"

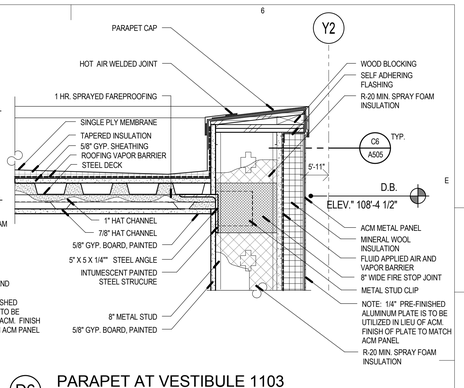

D6 PARAPET AT VESTIBULE 1103

SCALE: 1 1/2" = 1'-0"

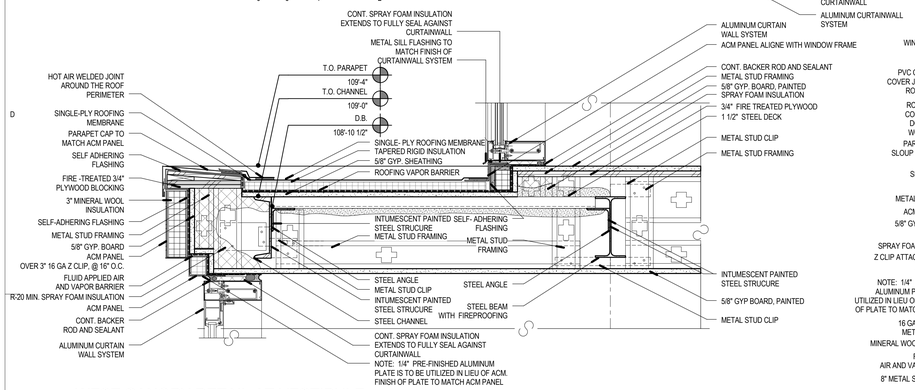

C1 WEST CANOPY DETAIL AT VESTIBULE 1105

SCALE: 1 1/2" = 1'-0"

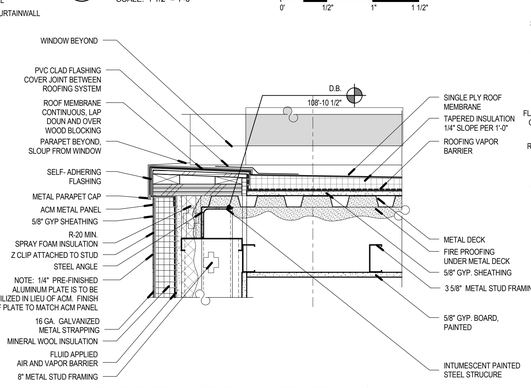

C3 WEST ENTRANCE PARAPET DETAIL @ VESTIBULE 1105

SCALE: 1 1/2" = 1'-0"

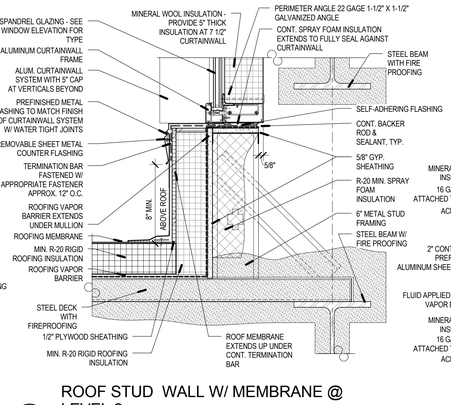

C5 ROOF STUD WALL W/ MEMBRANE @ LEVEL 2

SCALE: 1 1/2" = 1'-0"

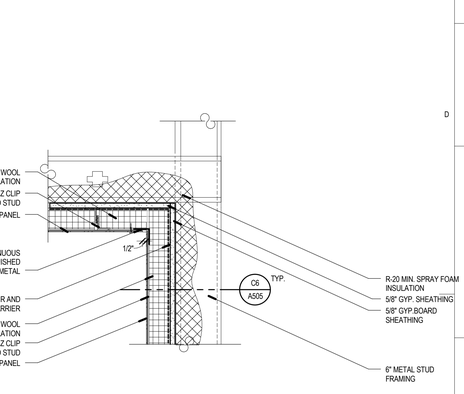

C6 ACM SOFFIT TO ACM WALL

SCALE: 1 1/2" = 1'-0"

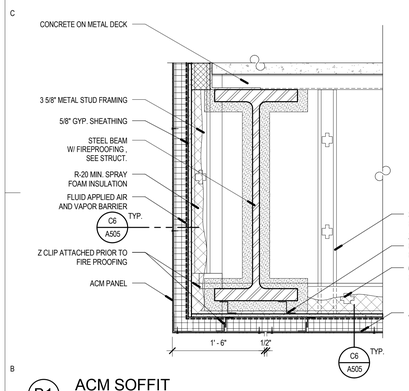

B1 ACM SOFFIT

SCALE: 1" = 1'-0"

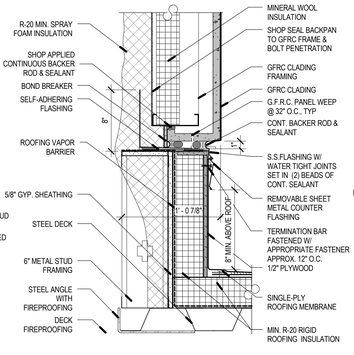

B2 G.F.R.C. TRANSITION TO MEMBRANE WALL @ LEVEL 2

SCALE: 1 1/2" = 1'-0"

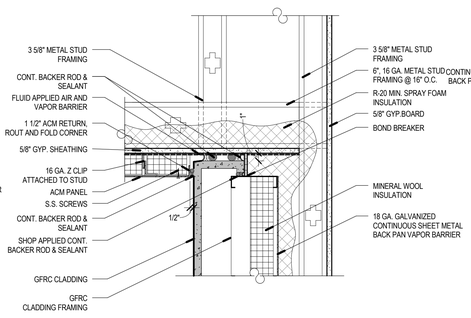

B3 ACM SOFFIT TO G.F.R.C.

SCALE: 1 1/2" = 1'-0"

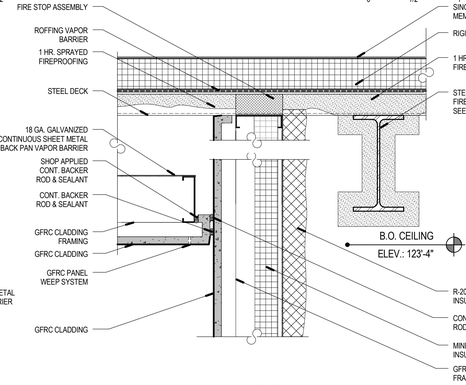

B5 G.F.R.C. SOFFIT TO G.F.R.C.

SCALE: 1 1/2" = 1'-0"

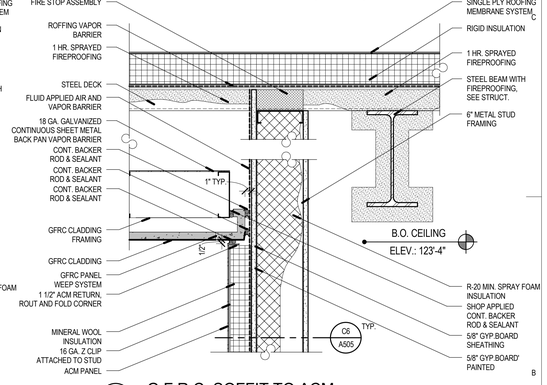

B6 G.F.R.C. SOFFIT TO ACM

SCALE: 1 1/2" = 1'-0"

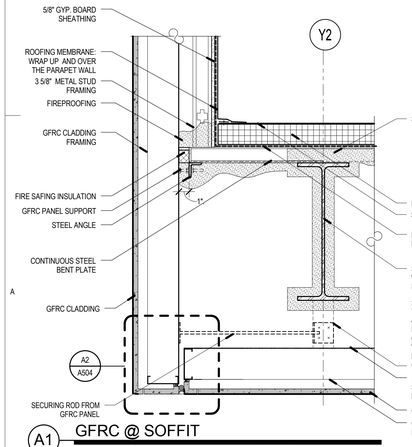

A1 GFRC @ SOFFIT

SCALE: 1" = 1'-0"

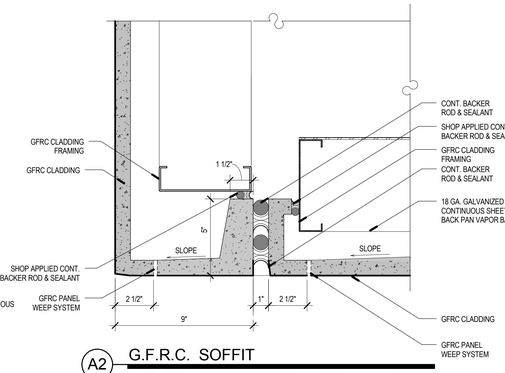

A2 G.F.R.C. SOFFIT

SCALE: 3" = 1'-0"

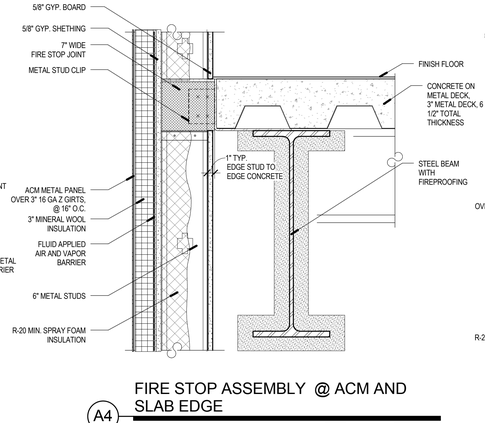

A4 FIRE STOP ASSEMBLY @ ACM AND SLAB EDGE

SCALE: 1 1/2" = 1'-0"

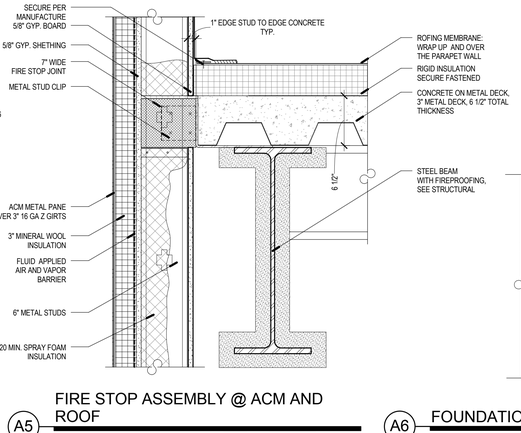

A5 FIRE STOP ASSEMBLY @ ACM AND ROOF

SCALE: 1 1/2" = 1'-0"

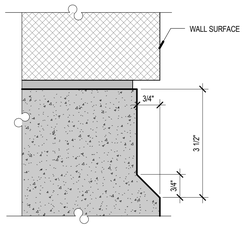

A6 FOUNDATION REVEAL

SCALE: 6" = 1'-0"

8/14/2013 2:26:52 PM

VCBO ARCHITECTURE

VCBO ARCHITECTURE
524 SOUTH 600 EAST
SALT LAKE CITY, UT 84102
Phone: (801) 575-8800
Fax: (801) 531-9850
Web: vcbo.com

LICENSED ARCHITECT No. 153912 BRENT R. TIPPETS 8-15-13 STATE OF UTAH

2nd District Juvenile Courthouse

Utah State Courts
08284150
165 West 20th Street, Ogden, Utah
BID DOCUMENTS

Rev #	Date	Description

Job # 12500
Date August 15, 2013
Owner # 08284150
Ins. #

DETAILS - EXTERIOR

A504

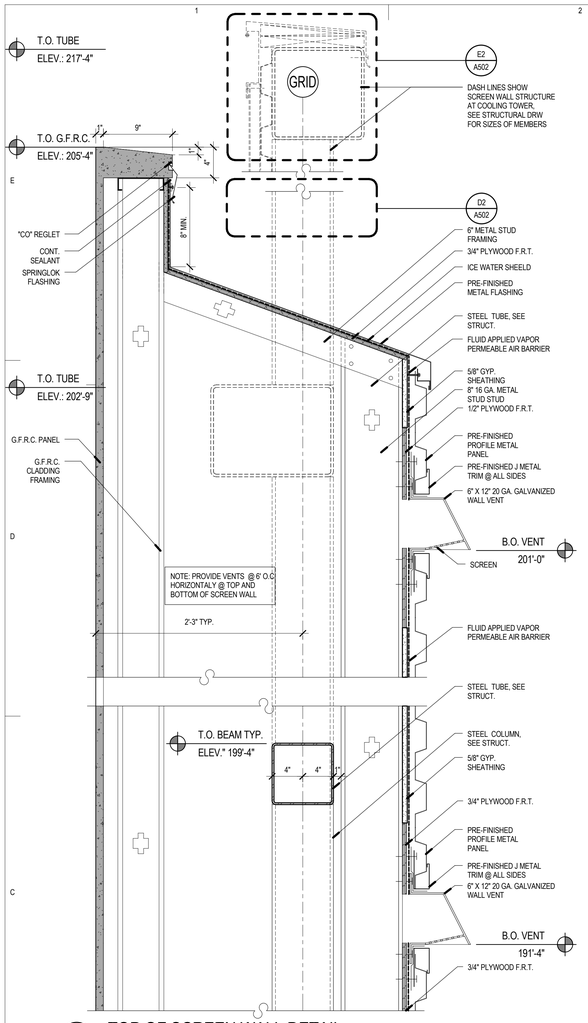

C1 TOP OF SCREEN WALL DETAIL
SCALE: 1 1/2" = 1'-0"

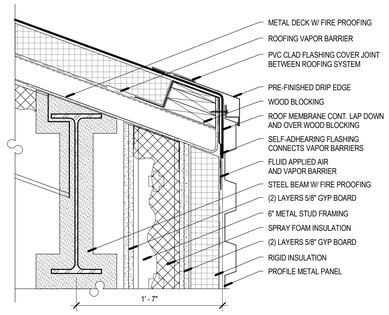

D2 ROOF EDGE @ PENTHOUSE WALL
SCALE: 1 1/2" = 1'-0"

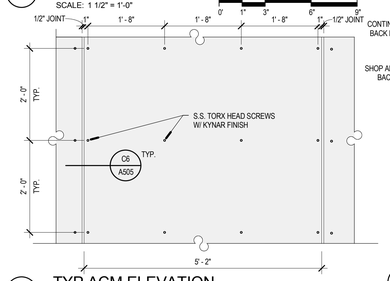

C2 TYP ACM ELEVATION
SCALE: 3/4" = 1'-0"

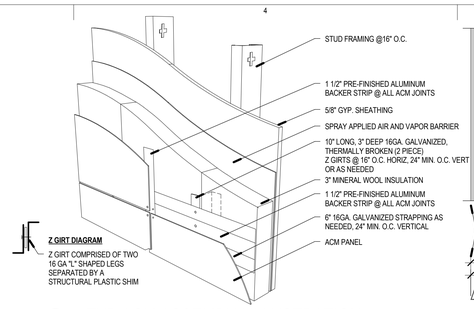

C4 TYP ACM ASSEMBLY ILLUSTRATION
SCALE: 1" = 1'-0"

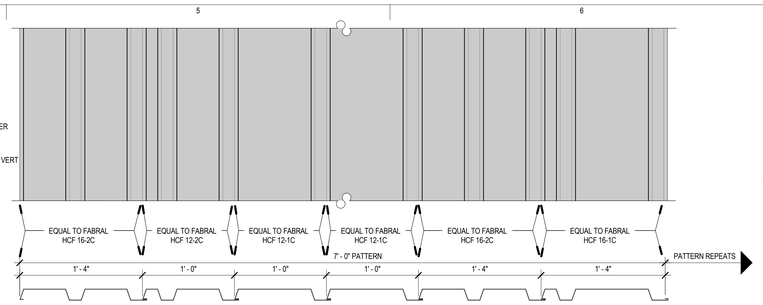

E5 PROFILE METAL PANEL PATTERN
SCALE: 1 1/2" = 1'-0"

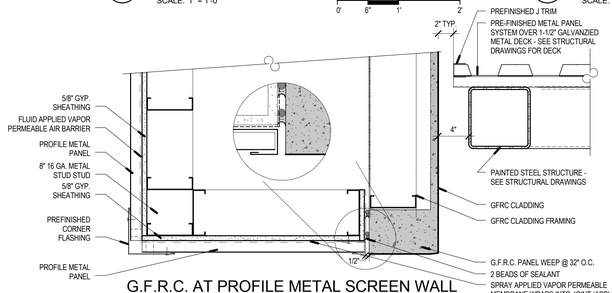

D4 G.F.R.C. AT PROFILE METAL SCREEN WALL (PLAN)
SCALE: 1 1/2" = 1'-0"

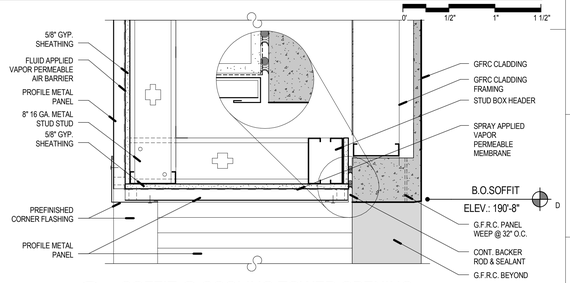

D6 SOFFIT @ COOLING TOWER OPENING
SCALE: 1 1/2" = 1'-0"

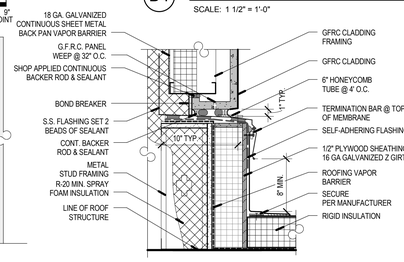

C3 REGLET @ G.F.R.C.
SCALE: 1 1/2" = 1'-0"

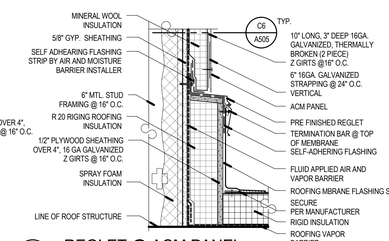

C5 REGLET @ ACM PANEL
SCALE: 1 1/2" = 1'-0"

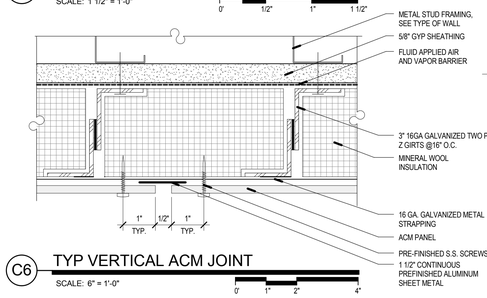

C6 TYP VERTICAL ACM JOINT
SCALE: 6" = 1'-0"

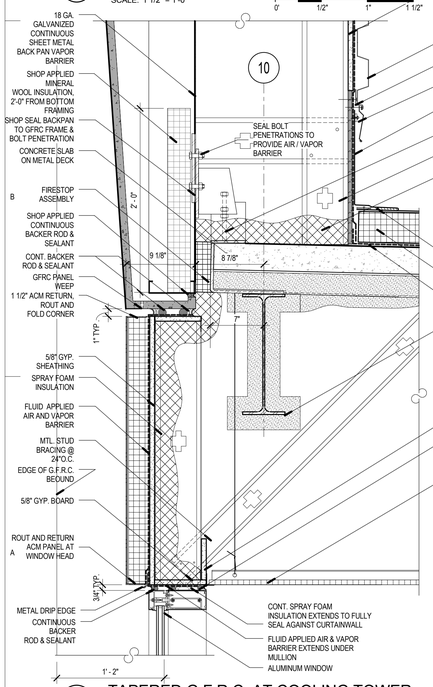

A1 TAPERED G.F.R.C. AT COOLING TOWER
SCALE: 1 1/2" = 1'-0"

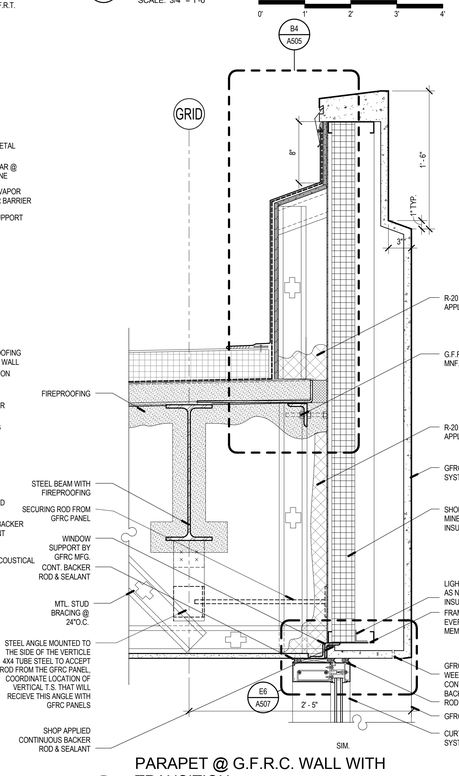

A2 PARAPET @ G.F.R.C. WALL WITH TRANSITION
SCALE: 1 1/2" = 1'-0"

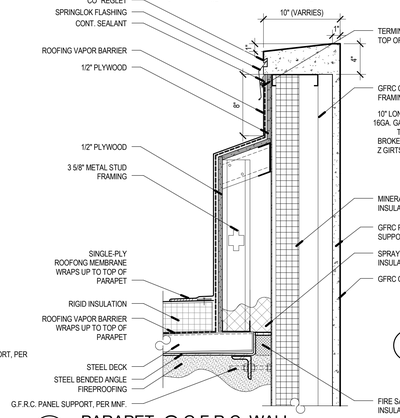

B4 PARAPET @ G.F.R.C. WALL
SCALE: 1 1/2" = 1'-0"

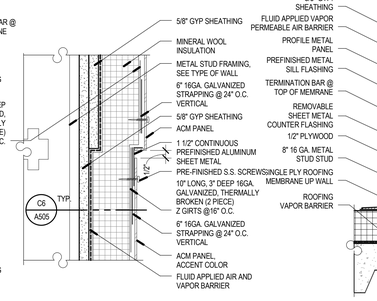

B5 ACM TRANSITION @ WEST POINT
SCALE: 3" = 1'-0"

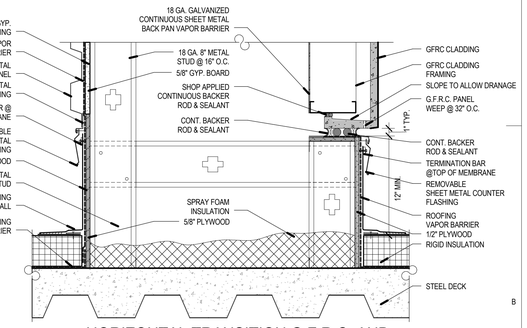

B6 HORIZONTAL TRANSITION G.F.R.C. AND STUD WALL AT ROOF
SCALE: 1 1/2" = 1'-0"

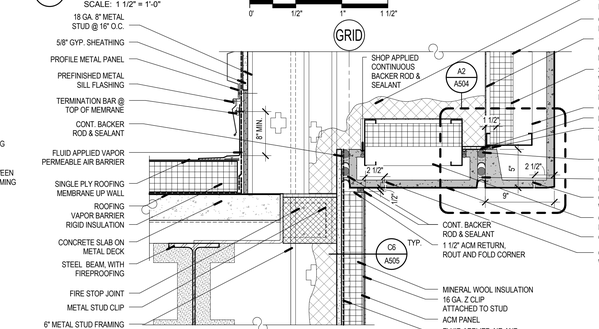

A4 ACM SOFFIT @ G.F.R.C.
SCALE: 1 1/2" = 1'-0"

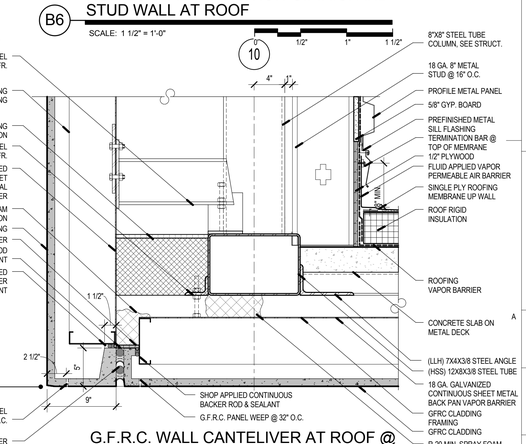

B6 G.F.R.C. WALL CANTELIVER AT ROOF @ GRIDS 10 & E
SCALE: 1 1/2" = 1'-0"

VCBO ARCHITECTURE
524 SOUTH 600 EAST
SALT LAKE CITY, UT 84102
Phone: (801) 575-8800
Fax: (801) 531-9850
Web: vcbo.com

LICENSED ARCHITECT No. 153912 BRENT R. TIPPETS 8-15-13 STATE OF UTAH

2nd District Juvenile Courthouse

Utah State Courts
165 West 20th Street, Ogden, Utah
08284150
BID DOCUMENTS

Rev #	Date	Description

Job # 12500
Date August 15, 2013
Owner # 08284150
Ins. #

DETAILS - EXTERIOR

A505

8/14/2013 2:27:09 PM

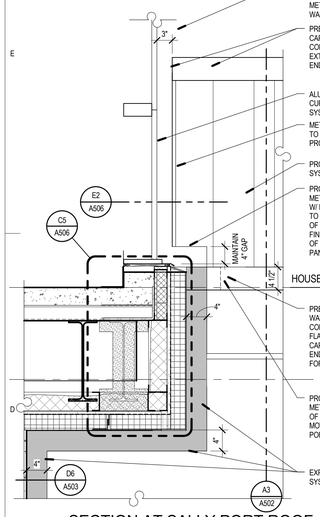

D1 SECTION AT SALLY PORT ROOF GARDEN WALL @ CURTAIN WALL

SCALE: 1" = 1'-0"

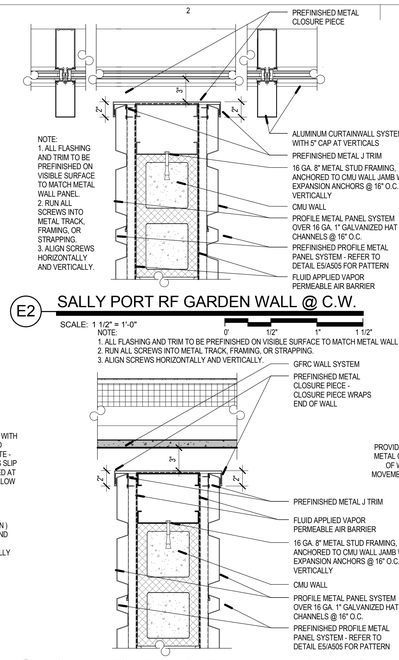

E2 SALLY PORT RF GARDEN WALL @ C.W.

SCALE: 1 1/2" = 1'-0"

D2 SALLY PORT RF GARDEN WALL @ GFRC

SCALE: 1 1/2" = 1'-0"

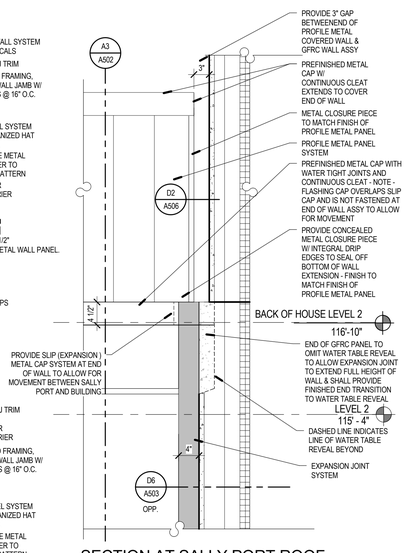

D3 SECTION AT SALLY PORT ROOF GARDEN WALL AT GFRC WALL

SCALE: 1" = 1'-0"

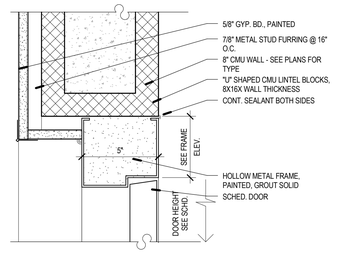

E4 H.M. DOOR HEAD AT FURRED CMU WALL

SCALE: 3" = 1'-0"

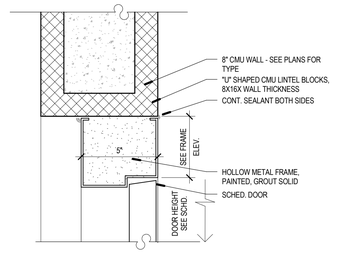

E5 H.M. DOOR HEAD AT 8" CMU WALL

SCALE: 3" = 1'-0"

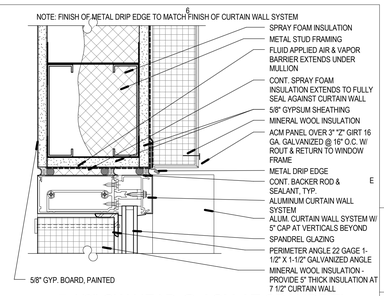

E6 7 1/2" CW HEAD @ ACM AT SPANDREL GLAZING

SCALE: 3" = 1'-0"

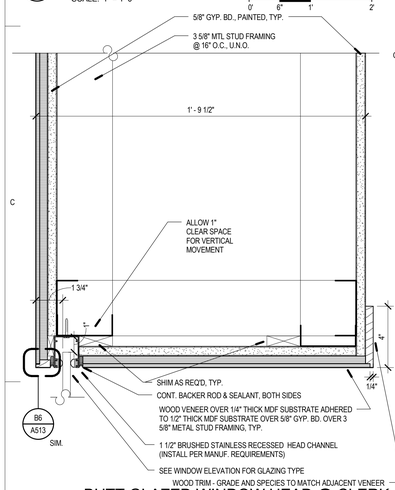

C1 BUTT GLAZED WINDOW HEAD @ CLERK COUNTER

SCALE: 3" = 1'-0"

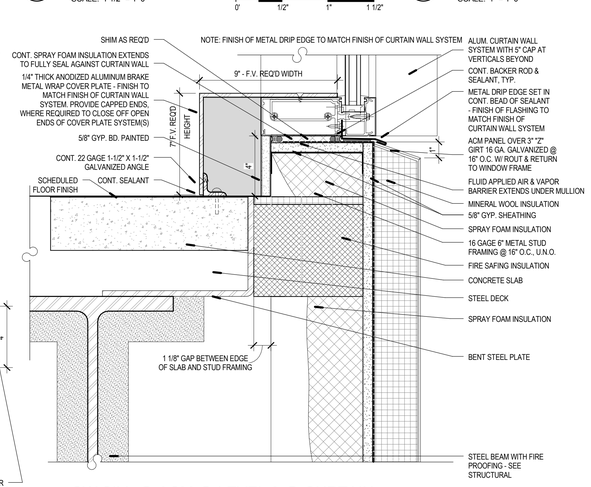

C2 CW SILL @ ACM @ LEVEL 2 @ CURTAIN WALL C26

SCALE: 3" = 1'-0"

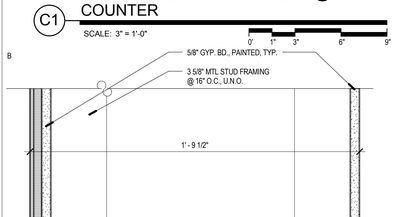

A1 BUTT GLAZED WINDOW HEAD @ CLERK WINDOW

SCALE: 3" = 1'-0"

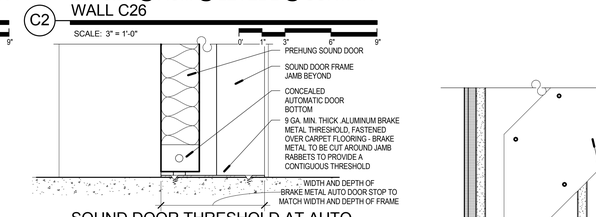

B2 SOUND DOOR THRESHOLD AT AUTO DOOR BOTTOM

SCALE: 3" = 1'-0"

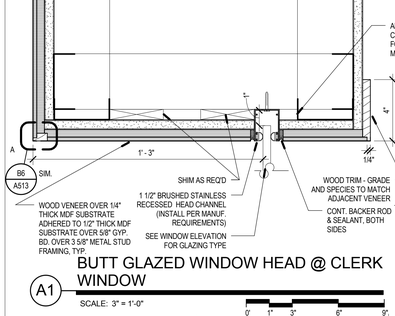

A2 BUTT GLAZED WINDOW HEAD @ CLERK COUNTER PERPENDICULAR WINDOW

SCALE: 3" = 1'-0"

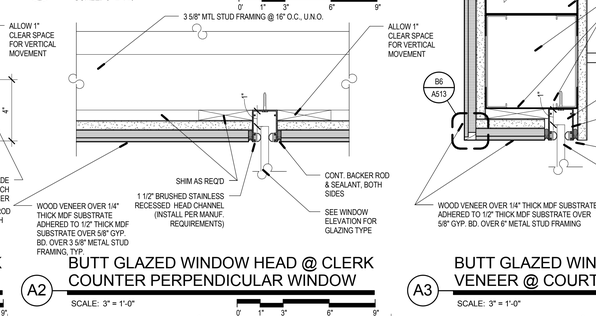

A3 BUTT GLAZED WINDOW HEAD AT WOOD VENEER @ COURTS CLERK ENTRY

SCALE: 3" = 1'-0"

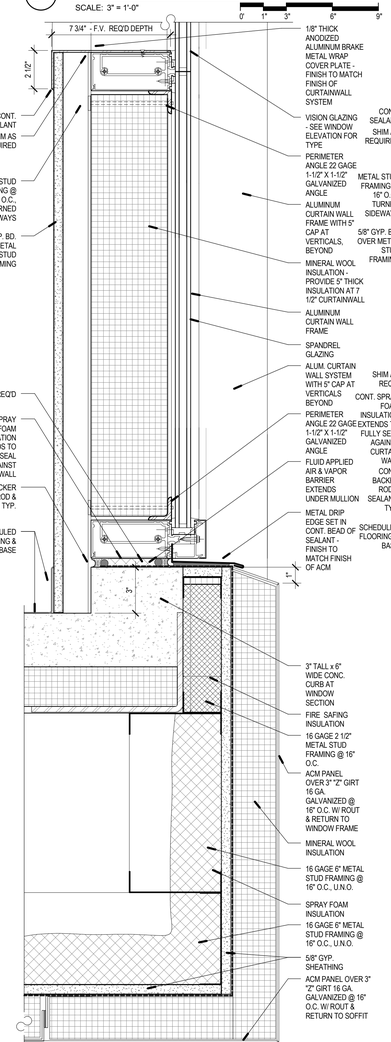

A4 7 1/2" CW SILL @ ACM SOFFIT@OFFICES

SCALE: 3" = 1'-0"

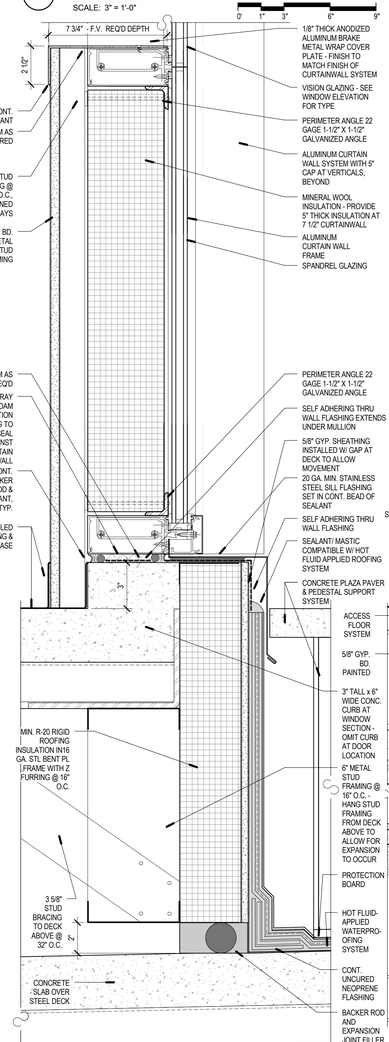

A5 7 1/2" CW SILL @ SALLY PORT &OFFICES

SCALE: 3" = 1'-0"

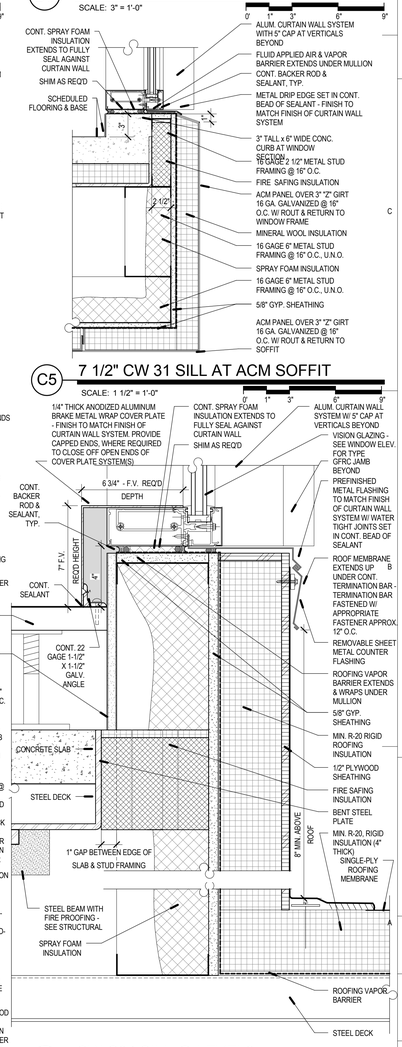

C5 7 1/2" CW 31 SILL AT ACM SOFFIT

SCALE: 1 1/2" = 1'-0"

A6 CW C34 SILL @ LEVEL2

SCALE: 3" = 1'-0"

VCBO ARCHITECTURE
VCBO ARCHITECTURE
524 SOUTH 600 EAST
SALT LAKE CITY, UT 84102
Phone: (801) 575-8800
Fax: (801) 531-9850
Web: vcbo.com

LICENSED ARCHITECT No. 153912 BRENT R. TIPPETS 8-15-13 STATE OF UTAH

2nd District Juvenile Courthouse

Utah State Courts
08284150
165 West 20th Street, Ogden, Utah
BID DOCUMENTS

Rev #	Date	Description

Job # 12500
Date August 15, 2013
Owner # 08284150
Ins. #

DETAILS - DOOR AND WINDOW

A506

8/14/2013 2:27:29 PM

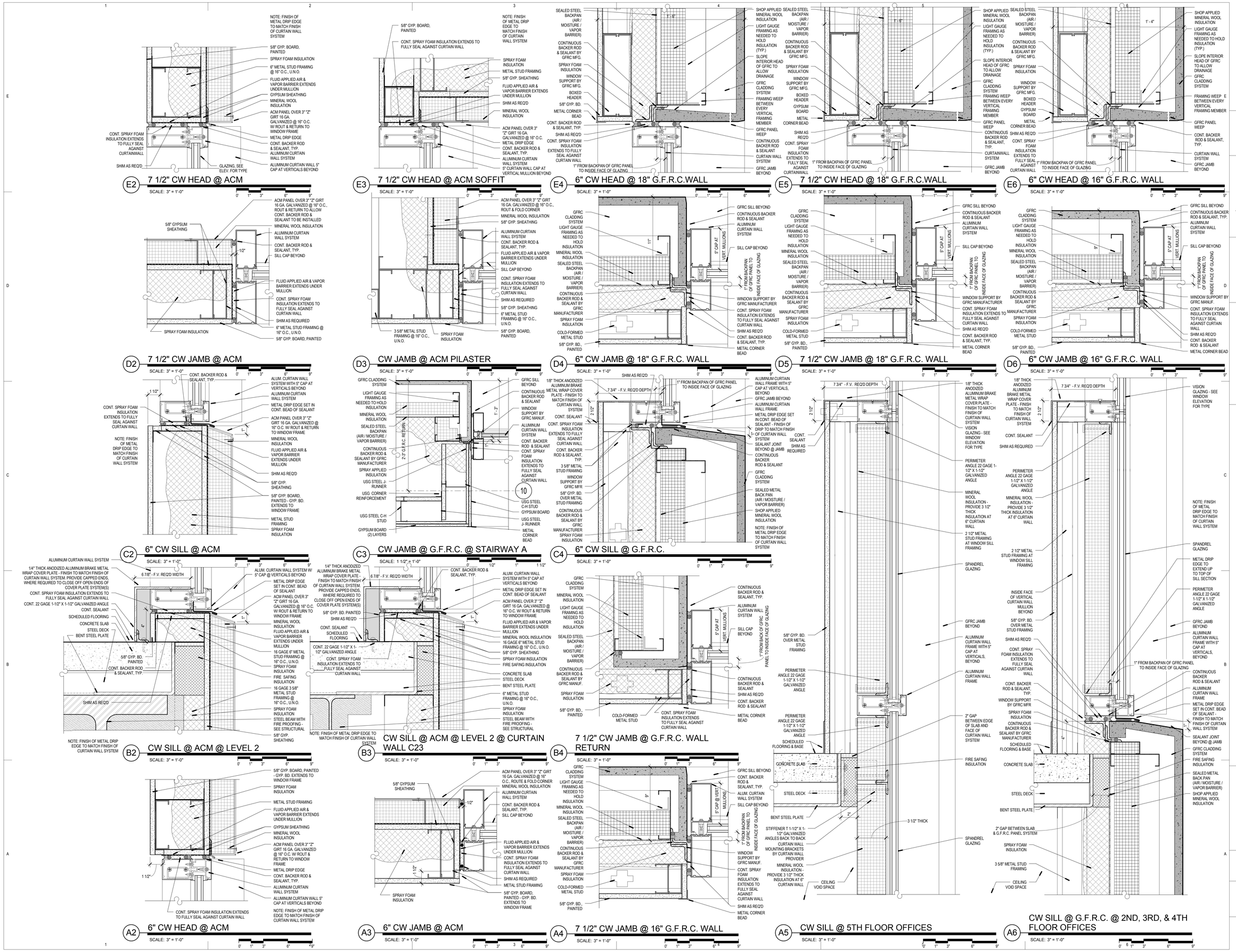

VCBO ARCHITECTURE

VCBO ARCHITECTURE
524 SOUTH 600 EAST
SALT LAKE CITY, UT 84102
Phone: (801) 575-8800
Fax: (801) 531-9850
Web: vcbo.com

LICENSED ARCHITECT No. 153912 BRENT R. TIPPETS 8-15-13 STATE OF UTAH

2nd District Juvenile Courthouse

Utah State Courts
08284150
165 West 20th Street, Ogden, Utah
BID DOCUMENTS

Rev #	Date	Description

Job # 12500
Date August 15, 2013
Owner # 08284150
Ins. #

DETAILS - DOOR AND WINDOW

A507

8/14/2013 2:27:46 PM

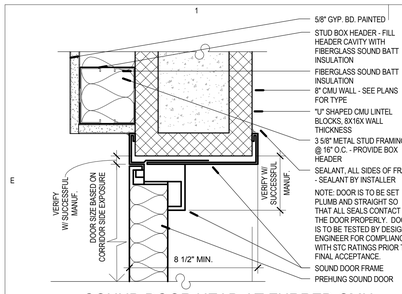

E1 SOUND DOOR HEAD AT FURRED CMU WALL

SCALE: 3" = 1'-0"

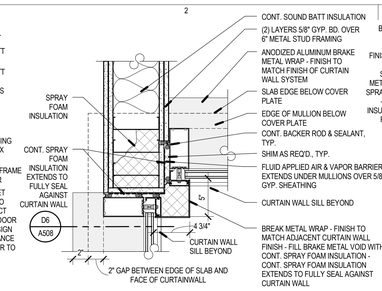

E2 CURTAIN WALL CONNECTION AT INTERSECTION OF C27 AND C26

SCALE: 1 1/2" = 1'-0"

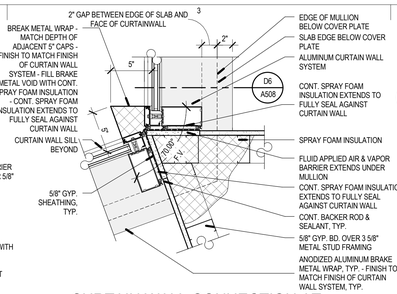

E3 CURTAIN WALL CONNECTION AT INTERSECTION OF C13 AND C17

SCALE: 1 1/2" = 1'-0"

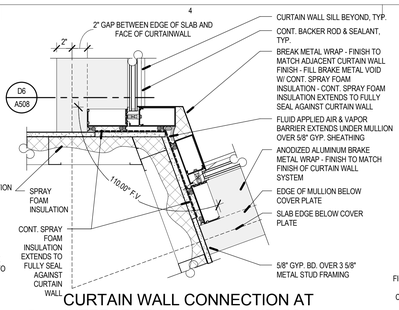

E4 CURTAIN WALL CONNECTION AT INTERSECTION OF C24 AND C25

SCALE: 1 1/2" = 1'-0"

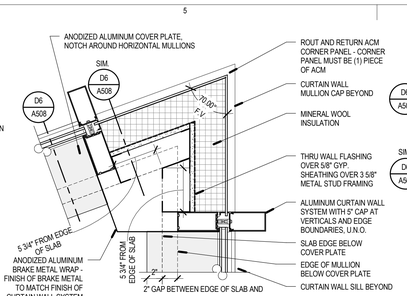

E5 C.W. CONNECTION AT EAST POINT

SCALE: 1 1/2" = 1'-0"

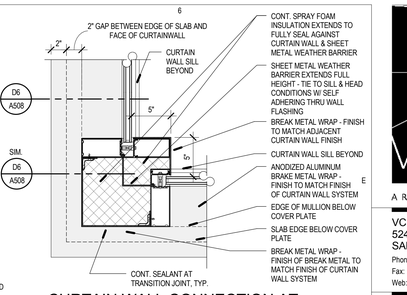

E6 CURTAIN WALL CONNECTION AT INTERSECTION OF C22 AND C23

SCALE: 1 1/2" = 1'-0"

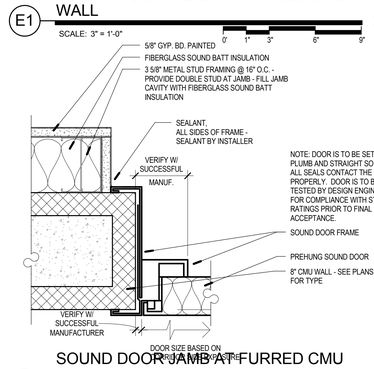

D1 SOUND DOOR JAMB AT FURRED CMU WALL

SCALE: 3" = 1'-0"

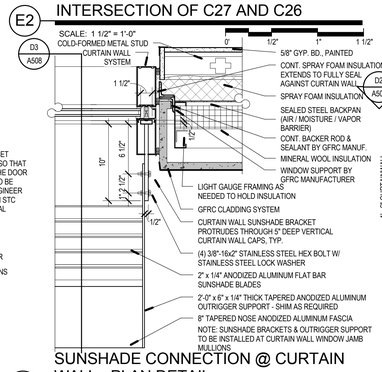

D2 SUNSHADE CONNECTION @ CURTAIN WALL - PLAN DETAIL

SCALE: 1 1/2" = 1'-0"

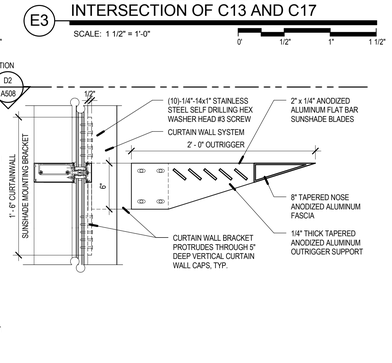

D3 SUNSHADE DETAIL

SCALE: 1 1/2" = 1'-0"

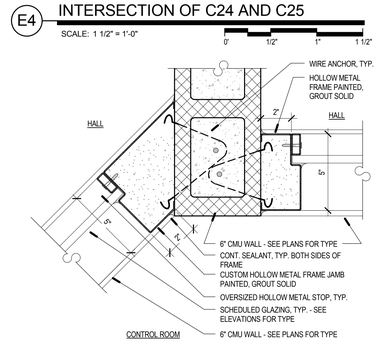

D4 CUSTOM H.M. JAMB @ JAMB

SCALE: 3" = 1'-0"

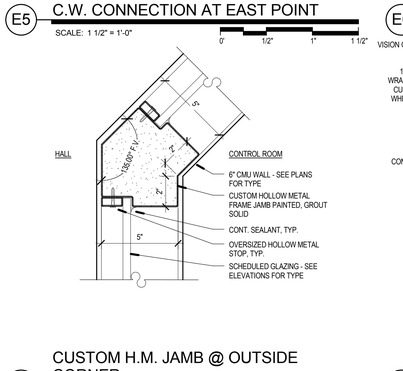

D5 CUSTOM H.M. JAMB @ OUTSIDE CORNER

SCALE: 3" = 1'-0"

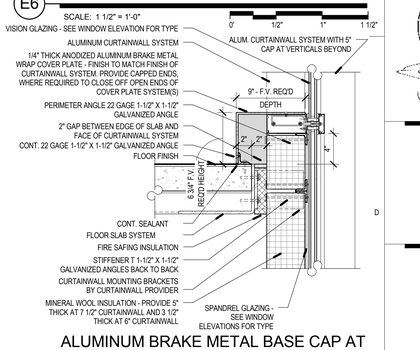

D6 ALUMINUM BRAKE METAL BASE CAP AT CURTAIN WALL SILL

SCALE: 1 1/2" = 1'-0"

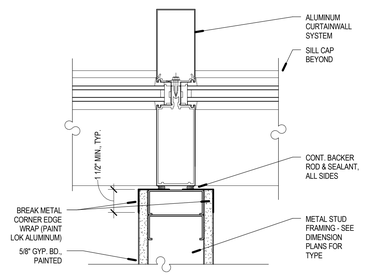

C1 WALL TERMINATION AT MULLION

SCALE: 3" = 1'-0"

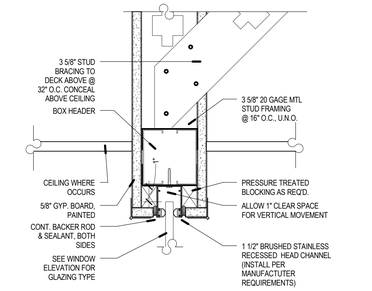

C2 BUTT GLAZED WINDOW HEAD

SCALE: 3" = 1'-0"

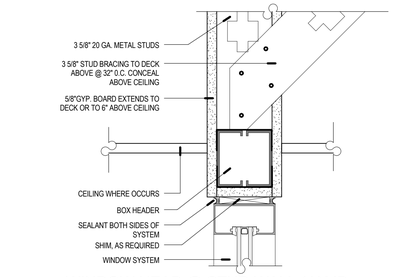

C3 WINDOW HEAD @ STUD WALL (JAMB SIM.)

SCALE: 3" = 1'-0"

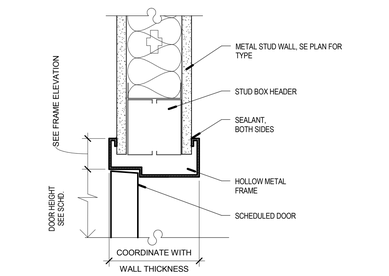

C4 H.M. DOOR HEAD AT STUD WALL

SCALE: 3" = 1'-0"

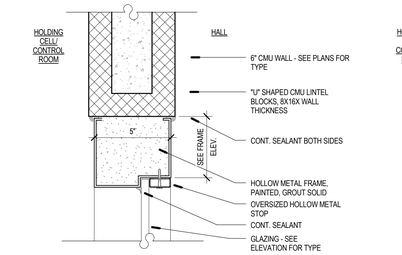

C5 H.M. WINDOW HEAD AT 6" CMU WALL

SCALE: 3" = 1'-0"

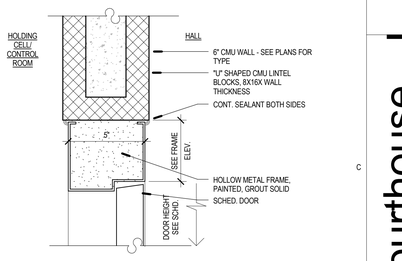

C6 H.M. DOOR HEAD AT 6" CMU WALL

SCALE: 3" = 1'-0"

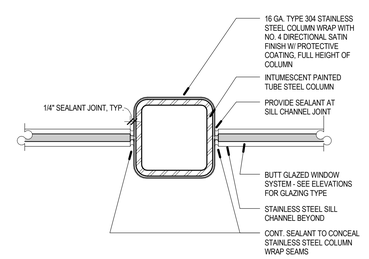

B1 LOBBY COLUMN WRAP

SCALE: 3" = 1'-0"

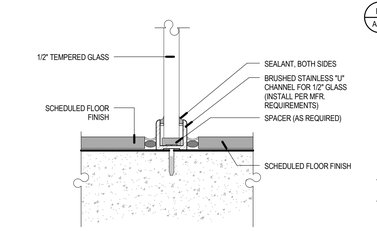

B2 BUTT GLAZED WINDOW BASE

SCALE: 6" = 1'-0"

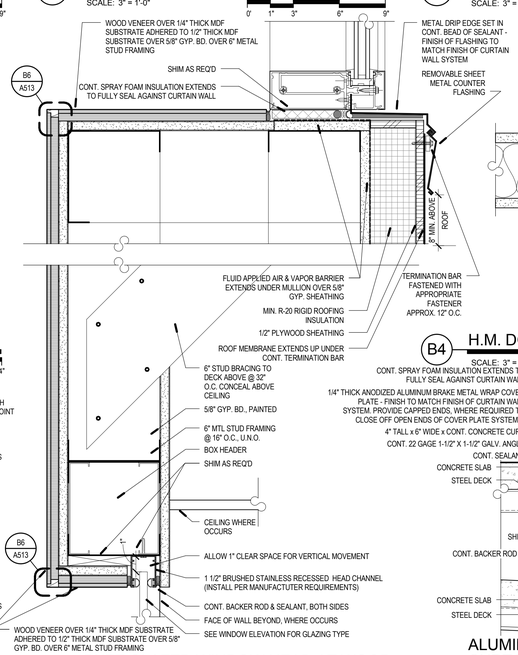

B3 BUTT GLAZED WINDOW HEAD AT WOOD VENEER

SCALE: 3" = 1'-0"

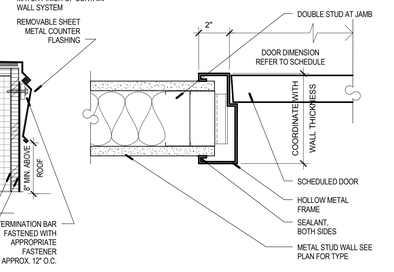

B4 H.M. DOOR JAMB AT STUD WALL

SCALE: 3" = 1'-0"

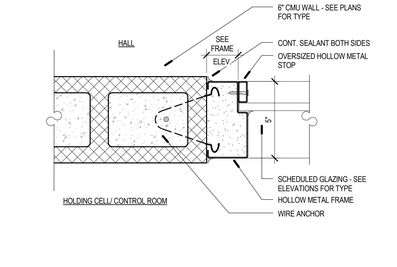

B5 H.M. WINDOW JAMB @ 6" CMU WALL

SCALE: 3" = 1'-0"

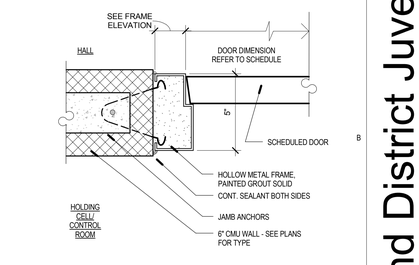

B6 H.M. DOOR JAMB AT 6" CMU WALL

SCALE: 3" = 1'-0"

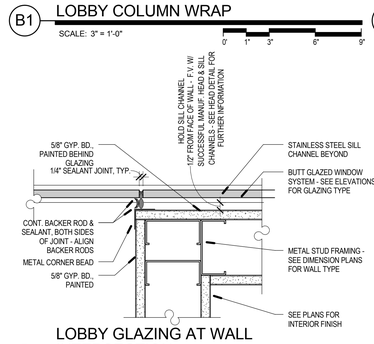

A1 LOBBY GLAZING AT WALL INTERSECTION

SCALE: 3" = 1'-0"

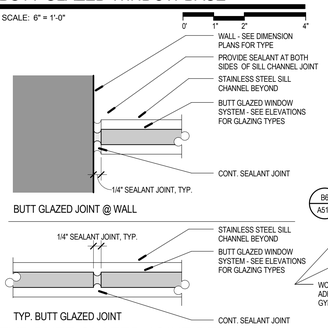

A2 TYP BUTT GLAZED JOINT DETAILS

SCALE: 6" = 1'-0"

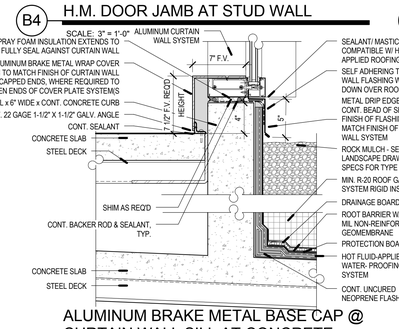

A4 ALUMINUM BRAKE METAL BASE CAP @ CURTAIN WALL SILL AT CONCRETE CURB

SCALE: 1 1/2" = 1'-0"

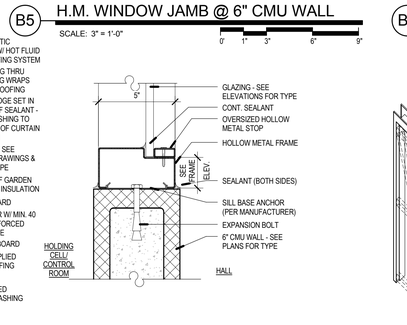

A5 H.M. WINDOW SILL @ 6" CMU WALL

SCALE: 3" = 1'-0"

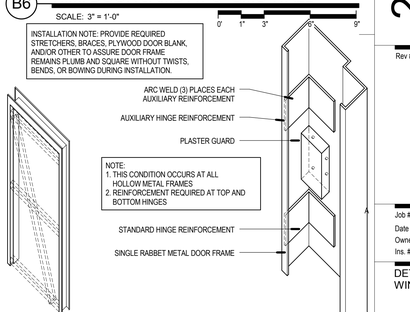

A6 TYP H.M. FRAME DTL.

SCALE: NOT TO SCALE

8/14/2013 2:28:05 PM

VCBO ARCHITECTURE
VCBO ARCHITECTURE
524 SOUTH 600 EAST
SALT LAKE CITY, UT 84102
Phone: (801) 575-8800
Fax: (801) 531-9850
Web: vcbo.com

LICENSED ARCHITECT No. 153912 BRENT R. TIPPETS 8-15-13 STATE OF UTAH

2nd District Juvenile Courthouse

Utah State Courts
08284150
165 West 20th Street, Ogden, Utah
BID DOCUMENTS

Rev #	Date	Description

Job # 12500
Date August 15, 2013
Owner # 08284150
Ins. #

DETAILS - DOOR AND WINDOW

A508

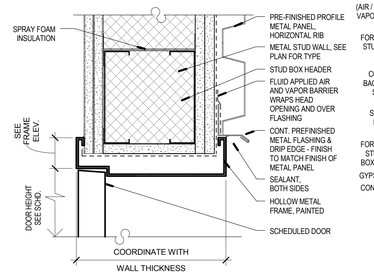

E1 H.M. DOOR HEAD AT 4 SIDED FRAME
SCALE: 3" = 1'-0"

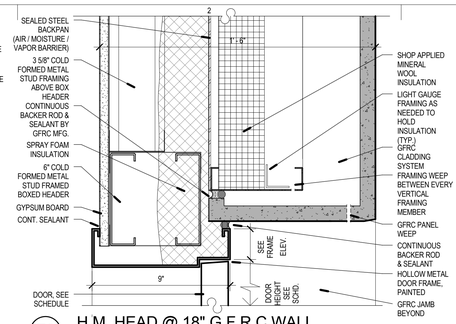

E2 H.M. HEAD @ 18" G.F.R.C.WALL
SCALE: 3" = 1'-0"

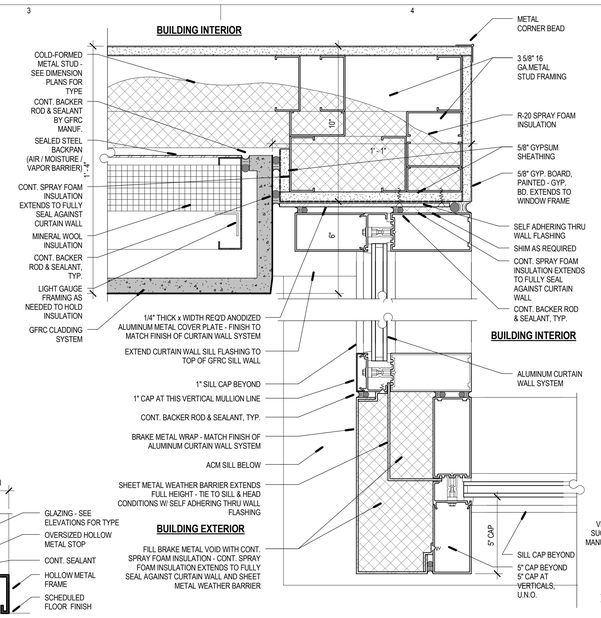

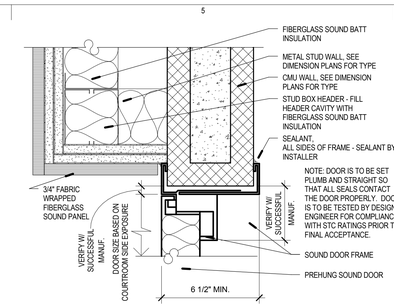

E5 SOUND DOOR FRAME DOOR HEAD
SCALE: 3" = 1'-0"

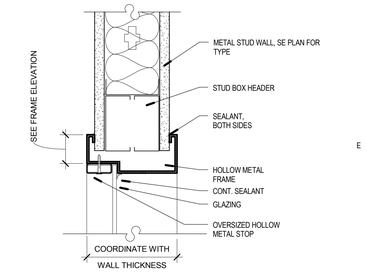

E6 H.M. WINDOW HEAD AT STUD WALL
SCALE: 3" = 1'-0"

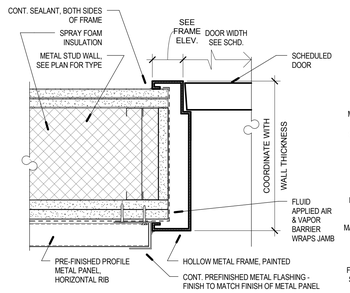

D1 H.M. DOOR JAMB AT 4 SIDED FRAME
SCALE: 3" = 1'-0"

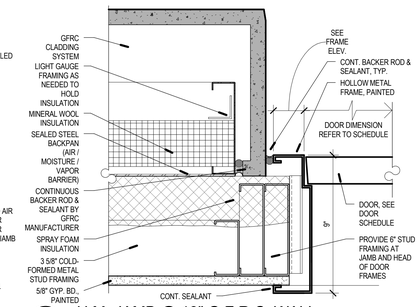

D2 H.M. JAMB @ 18" G.F.R.C. WALL
SCALE: 3" = 1'-0"

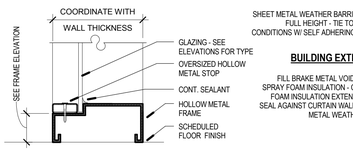

D3 H.M. WINDOW SILL AT STUD WALL
SCALE: 3" = 1'-0"

D4 7 1/2" CW JAMB @ 16" G.F.R.C. WALL REVEAL
SCALE: 1" = 1'-0"

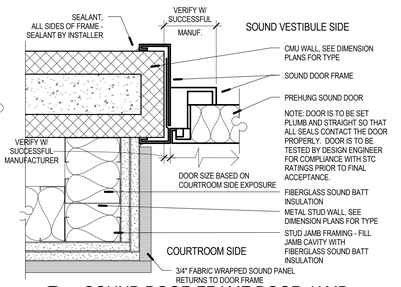

D5 SOUND DOOR FRAME DOOR JAMB
SCALE: 3" = 1'-0"

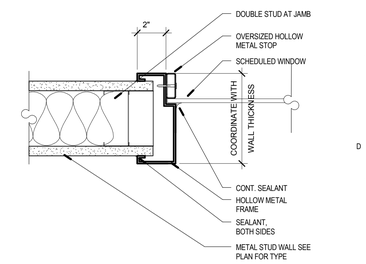

D6 H.M. WINDOW JAMB AT STUD WALL
SCALE: 3" = 1'-0"

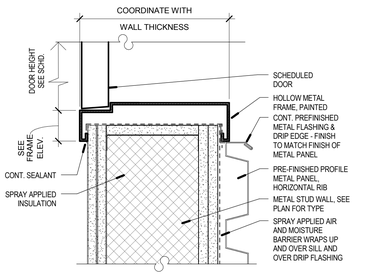

C1 H.M. DOOR SILL AT 4 SIDED FRAME
SCALE: 3" = 1'-0"

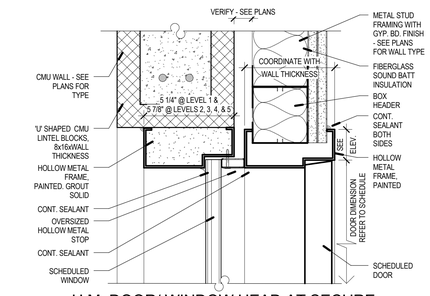

C2 H.M. DOOR/ WINDOW HEAD AT SECURE WINDOW
SCALE: 3" = 1'-0"

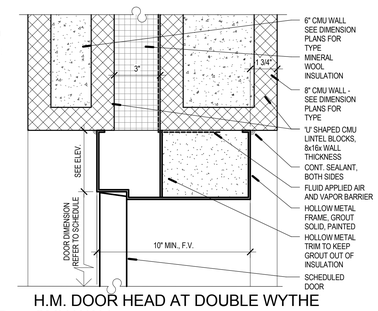

C3 H.M. DOOR HEAD AT DOUBLE WYTHE CMU WALL
SCALE: 3" = 1'-0"

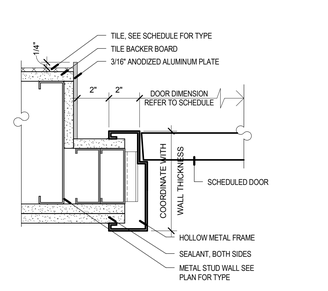

C4 H.M. DOOR JAMB AT WALL REVEAL
SCALE: 3" = 1'-0"

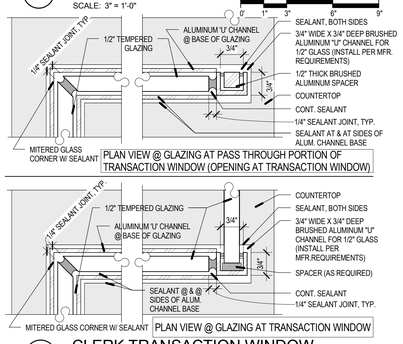

C5 CLERK TRANSACTION WINDOW
SCALE: 6" = 1'-0"

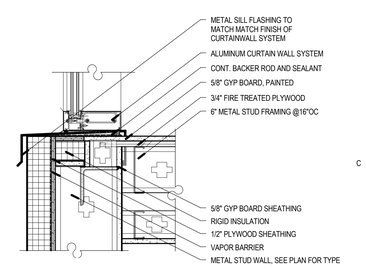

C6 CW DETAIL AT C2
SCALE: 1 1/2" = 1'-0"

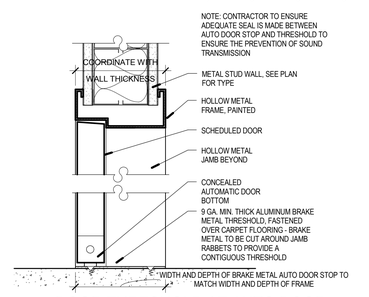

B1 DOOR THRESHOLD AT AUTO DOOR BOTTOM
SCALE: 3" = 1'-0"

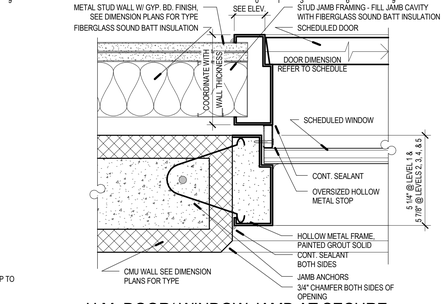

B2 H.M. DOOR/ WINDOW JAMB AT SECURE WINDOW
SCALE: 3" = 1'-0"

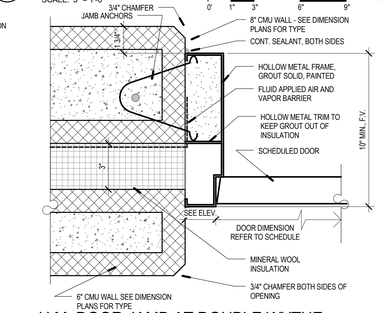

B3 H.M. DOOR JAMB AT DOUBLE WYTHE CMU WALL
SCALE: 3" = 1'-0"

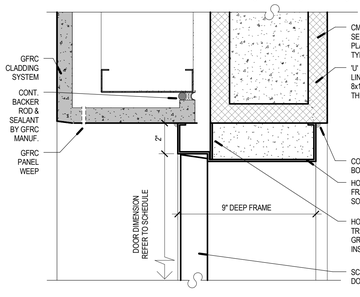

B4 H.M. DOOR HEAD AT SALLY PORT DOORS
SCALE: 3" = 1'-0"

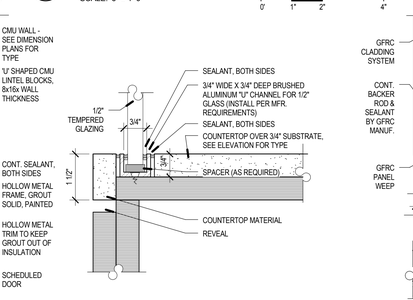

FRONT GLAZING AT CLERK TRANSACTION WINDOW
SCALE: 6" = 1'-0"

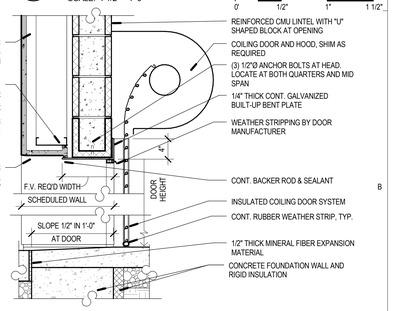

B6 COILING DOOR HEAD
SCALE: 1" = 1'-0"

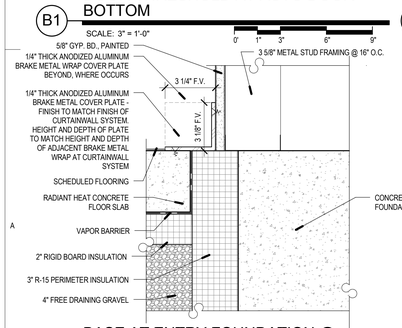

A1 BASE AT ENTRY FOUNDATION @ RADIANT HEAT FLOOR SLAB AREA
SCALE: 3" = 1'-0"

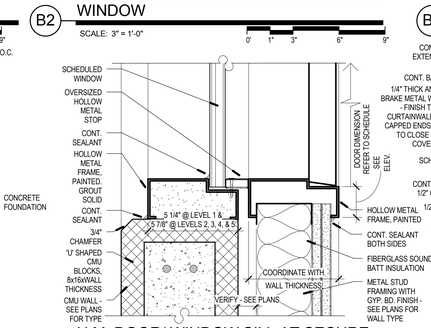

A2 H.M. DOOR/ WINDOW SILL AT SECURE WINDOW
SCALE: 3" = 1'-0"

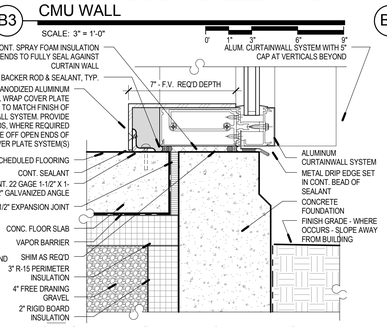

A3 CW SILL AT FOUNDATION WALL @ ENTRY AREA
SCALE: 3" = 1'-0"

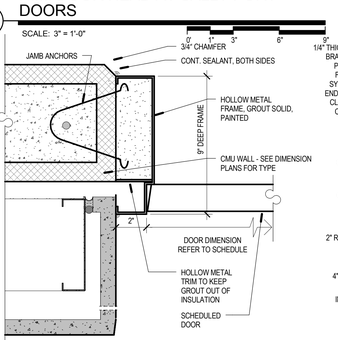

A4 H.M. DOOR JAMB AT SALLY PORT DRS
SCALE: 3" = 1'-0"

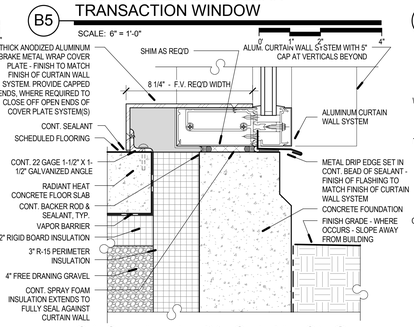

A5 CW SILL AT ENTRY FOUNDATION @ RADIANT HEAT FLOOR SLAB AREA
SCALE: 3" = 1'-0"

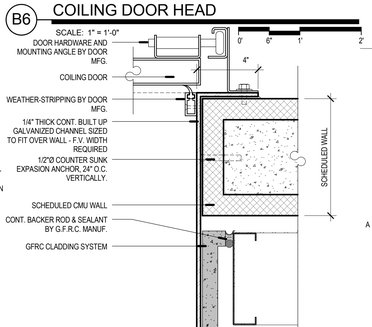

A6 COILING DR. JAMB
SCALE: 3" = 1'-0"

8/14/2013 2:28:25 PM

VCBO ARCHITECTURE
524 SOUTH 600 EAST
SALT LAKE CITY, UT 84102
Phone: (801) 575-8800
Fax: (801) 531-9850
Web: vcbo.com

LICENSED ARCHITECT No. 153912 BRENT R. TIPPETS 8-15-13 STATE OF UTAH

2nd District Juvenile Courthouse

Utah State Courts
08284150
165 West 20th Street, Ogden, Utah
BID DOCUMENTS

Rev #	Date	Description

Job # 12500
Date August 15, 2013
Owner # 08284150
Ins. #

DETAILS - DOOR AND WINDOW

A509

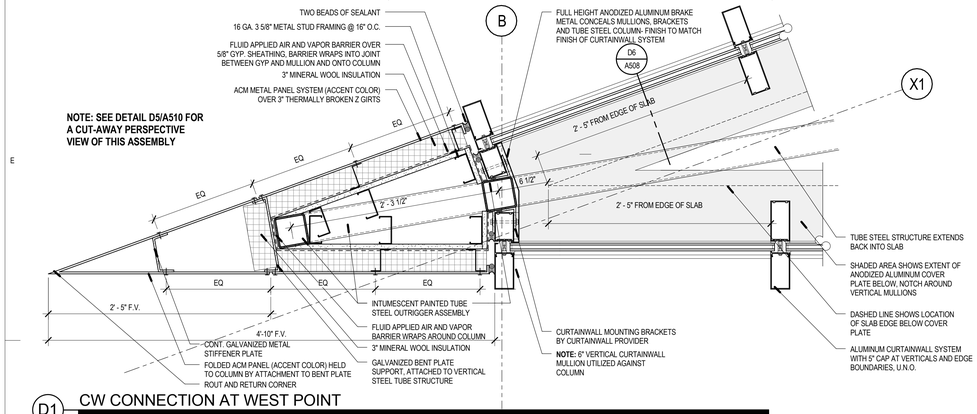

D1 CW CONNECTION AT WEST POINT

SCALE: 1 1/2" = 1'-0"

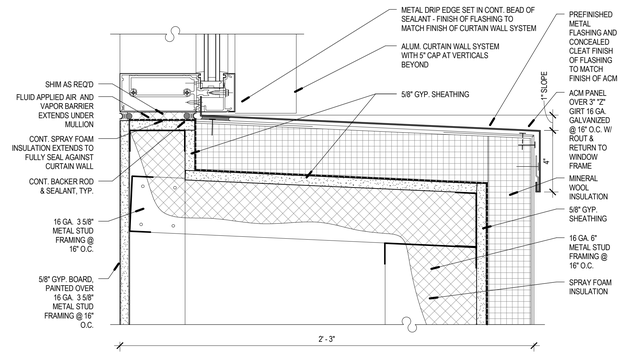

E4 CW SILL @ ACM @ ENTRY

SCALE: 3" = 1'-0"

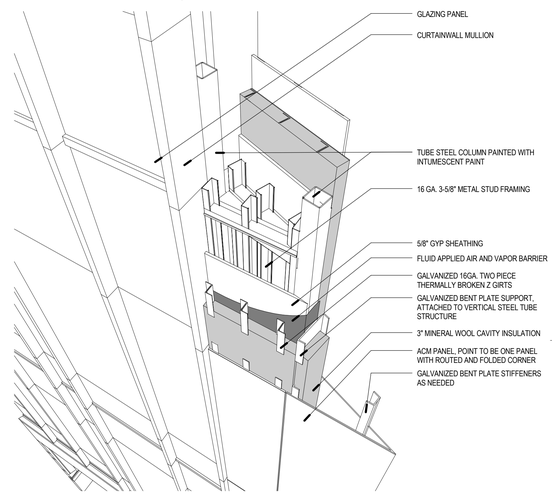

D5 WESTERN POINT CUT-AWAY PERSPECTIVE

SCALE: 1" = 200'-0"

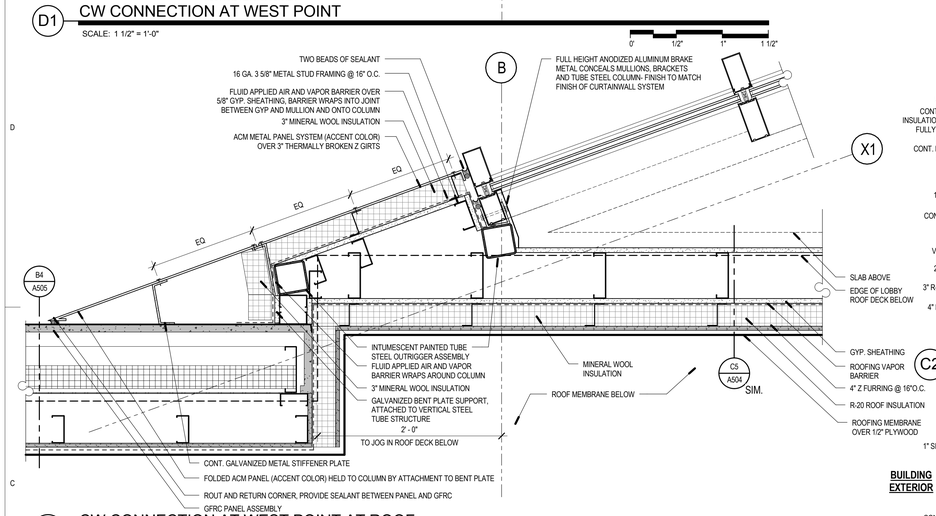

C1 CW CONNECTION AT WEST POINT AT ROOF

SCALE: 1 1/2" = 1'-0"

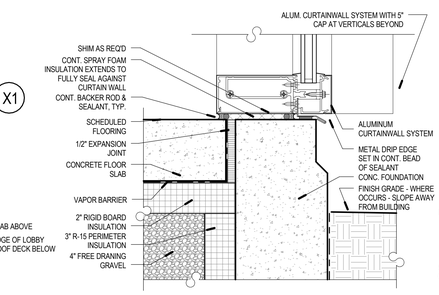

C2 CW SILL AT FOUNDATION WALL

SCALE: 3" = 1'-0"

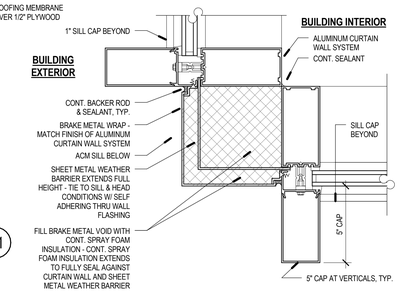

A3 7 1/2" CW JAMB CORNER @ ENTRY

SCALE: 3" = 1'-0"

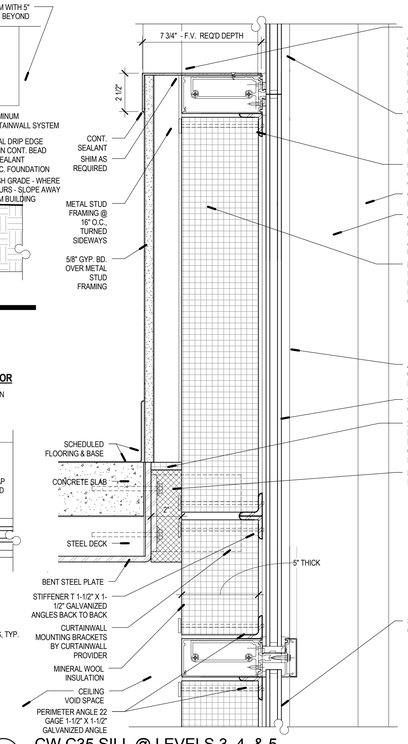

B4 CW C35 SILL @ LEVELS 3, 4, & 5

SCALE: 3" = 1'-0"

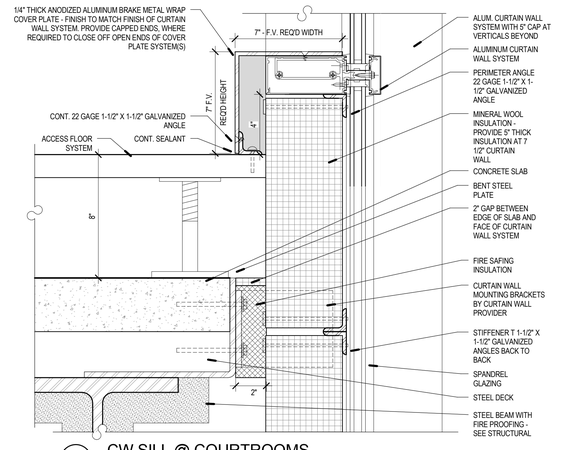

B5 CW SILL @ COURTROOMS

SCALE: 3" = 1'-0"

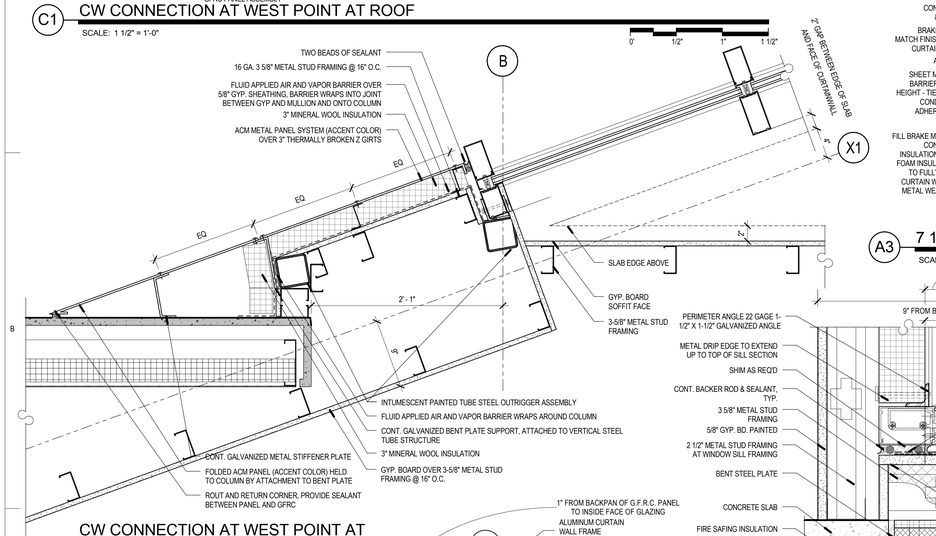

B1 CW CONNECTION AT WEST POINT AT CEILING

SCALE: 1 1/2" = 1'-0"

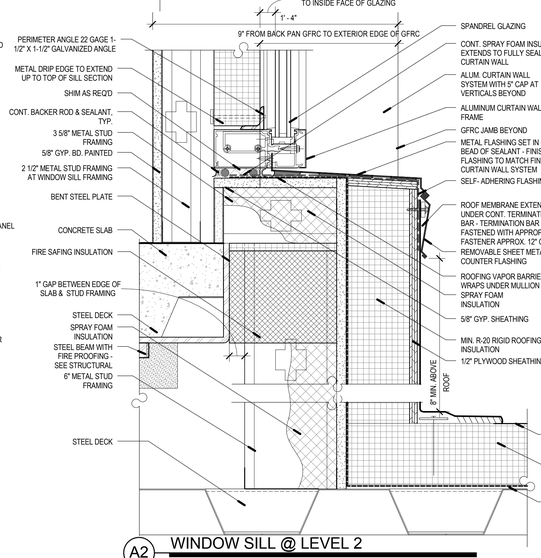

A2 WINDOW SILL @ LEVEL 2

SCALE: 3" = 1'-0"

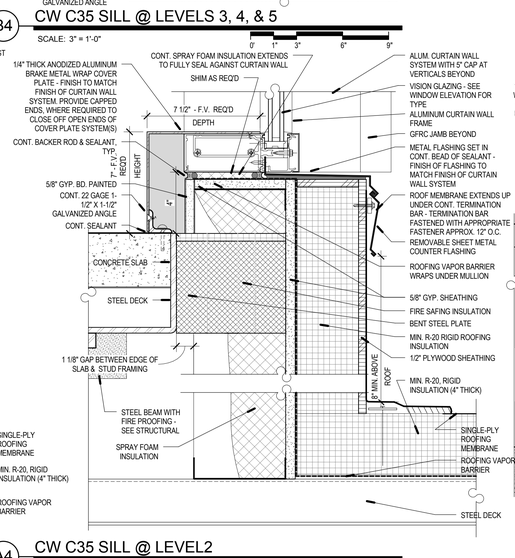

A4 CW C35 SILL @ LEVEL2

SCALE: 3" = 1'-0"

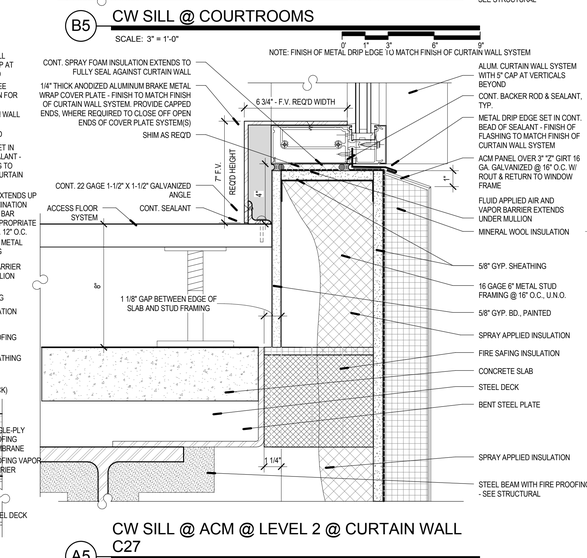

A5 CW SILL @ ACM @ LEVEL 2 @ CURTAIN WALL C27

SCALE: 3" = 1'-0"

VCBO ARCHITECTURE
524 SOUTH 600 EAST
SALT LAKE CITY, UT 84102
Phone: (801) 575-8800
Fax: (801) 531-9850
Web: vcbo.com

LICENSED ARCHITECT No. 153912 BRENT R. TIPPETS 8-15-13 STATE OF UTAH

2nd District Juvenile Courthouse

Utah State Courts
08284150
165 West 20th Street, Ogden, Utah
BID DOCUMENTS

Rev #	Date	Description

Job # 12500
Date August 15, 2013
Owner # 08284150
Ins. #

DETAILS - DOOR AND WINDOW

A510

8/14/2013 2:28:39 PM

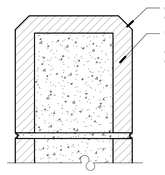

E3 T.O. CMU LOW WALL
SCALE: 3" = 1'-0"

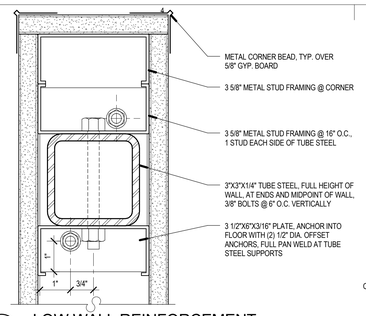

E4 LOW WALL REINFORCEMENT
SCALE: 6" = 1'-0"

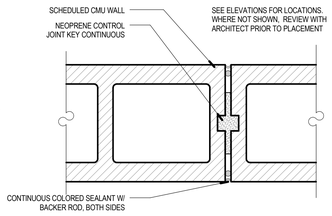

E5 TYP MASONRY CONTROL JOINT
SCALE: 3" = 1'-0"

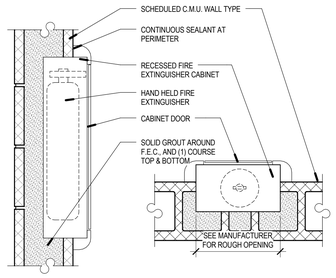

E6 FIRE EXT. CABINET IN C.M.U. WALL
SCALE: 1 1/2" = 1'-0"

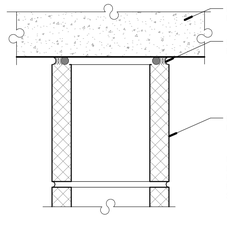

D3 TYP CMU HEAD @ HOLDING AREAS
SCALE: 3" = 1'-0"

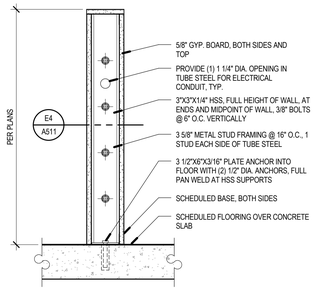

D4 LOW WALL SECTION
SCALE: 1 1/2" = 1'-0"

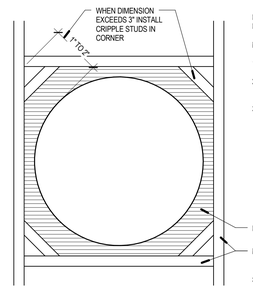

FOR STEEL STUD WALLS USE FC-8019 1 HR. APPLICATION

NOTES:

1. ALL FIRE DAMPERS TO BE INSIDE WALL.
2. CUT GYP. BOARD TIGHT TO DUCT. (MAX. GAP OF 1/4") SEAL AS REQUIRED.
3. IF DUCT IS TO BE INSULATED, DO NOT RUN INSULATION THROUGH WALL. FLARE INSULATION ONTO FACE OF WALL AROUND DUCT ON BOTH SIDES OF WALL AND SEAL TO FACE OF WALL WITH INSULATION MASTIC.

SIMILAR TO UL CAJ8101

D5 TYP DUCT OPENING IN RATED WALL
SCALE: NOT TO SCALE

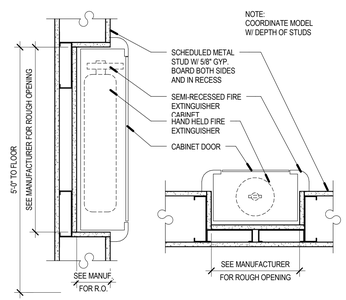

D6 FIRE EXTINGUISHER CABINET
SCALE: 1 1/2" = 1'-0"

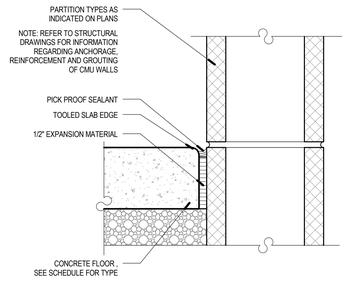

C3 TYP CMU SILL DETAIL @ HOLDING AREAS
SCALE: 3" = 1'-0"

PROVIDE BACKING PLATES AS INDICATED ON THE DRAWINGS OR WHERE NOT INDICATED, ACCORDING TO THE FOLLOWING SCHEDULE. REFER TO DETAILS ELSEWHERE IN THE SET OF DRAWINGS FOR THE SUPPORT OF WALL MOUNTED ITEMS IN EXCESS OF 200 POUNDS

TYPE 'A' BACKING PLATE

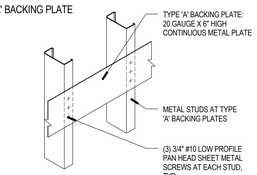

TYPE 'A' BACKING PLATES:

- AT DOOR STOPS AND BUMPER RAILS
- AT TOILET ACCESSORIES, MIRRORS, COAT HOOKS, ETC.
- AT ALL UPPER WALL HUNG CABINETS
- AT ALL BASE CABINETS
- AT ALL FULL HEIGHT CABINETS
- AT WALL MOUNTED ADJUSTABLE SHELVING
- AT ALL WALL MOUNTED HANDRAILS

TYPE 'B' BACKING PLATE

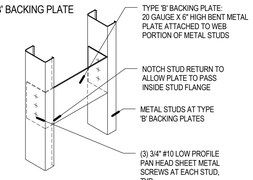

TYPE 'B' BACKING PLATES:

TYPE 'B' BACKING PLATE SHALL SUPPORT THE SAME ITEMS AS TYPE 'A' BACKING PLATE BUT USE WHERE APPEARANCE IS THE MAIN CONCERN SUCH AS LOBBIES AND OTHER HIGH DESIGN AREAS.

C4 TYP BACKING PLATE SCHEDULE
SCALE: NOT TO SCALE

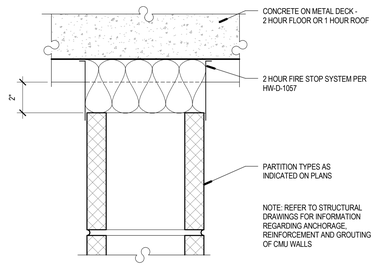

C6 TYP RATED MASONRY HEAD
SCALE: 3" = 1'-0"

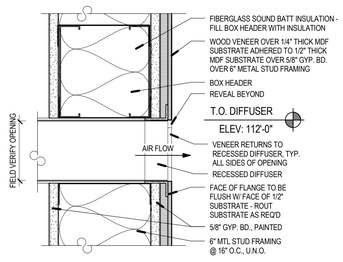

B3 RECESSED DIFFUSER AT LOBBY
SCALE: 3" = 1'-0"

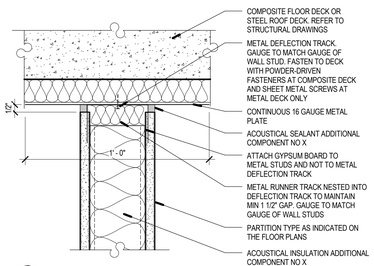

A PERPENDICULAR TO METAL DECK FLUTES

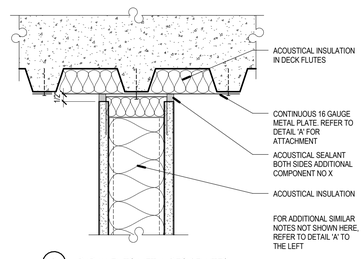

B PARALLEL TO METAL DECK FLUTES

B4 NON-RATED ACOUSTICAL PARTITION HEAD DETAILS
SCALE: 3" = 1'-0"

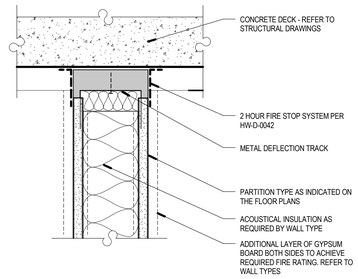

B6 TYP FIRE-RATED PARTITION HEAD
SCALE: 3" = 1'-0"

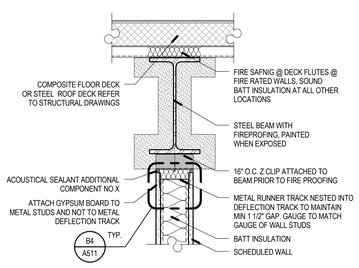

A3 SLIP JOINT AT BEAM
SCALE: 1 1/2" = 1'-0"

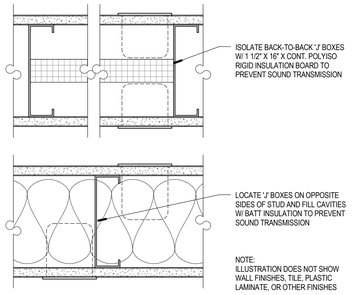

A4 TYP ELECTRICAL DEVICE DETAIL
SCALE: 3" = 1'-0"

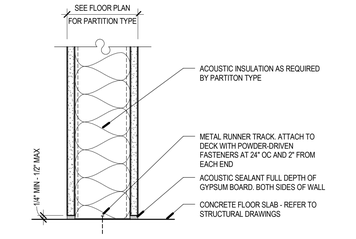

A5 TYP NON-RATED PARTITION BASE DETAIL
SCALE: 3" = 1'-0"

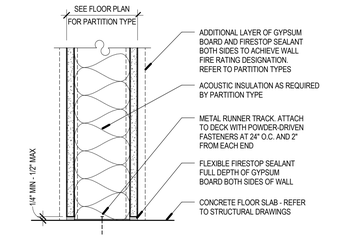

A6 TYP FIRE-RATED PARTITION BASE DETAIL
SCALE: 3" = 1'-0"

VCBO ARCHITECTURE
524 SOUTH 600 EAST
SALT LAKE CITY, UT 84102
Phone: (801) 575-8800
Fax: (801) 531-9850
Web: vcbo.com

2nd District Juvenile Courthouse

Utah State Courts
08284150
165 West 20th Street, Ogden, Utah
BID DOCUMENTS

Rev #	Date	Description

Job # 12500
Date August 15, 2013
Owner # 08284150
Ins. #

DETAILS - INTERIOR - TYPICAL INTERIOR FRAMING DETAILS

A511

8/14/2013 2:28:53 PM

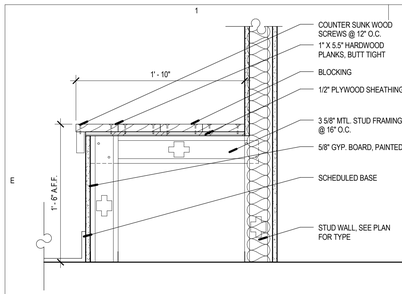

E1 ADA LOCKER BENCH
SCALE: 1 1/2" = 1'-0"

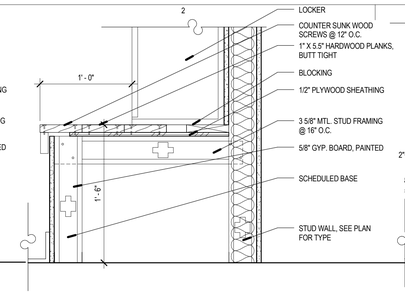

E2 LOCKER BENCH
SCALE: 1 1/2" = 1'-0"

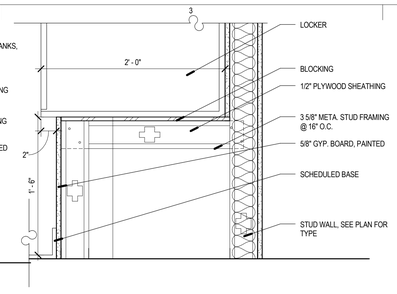

E3 LOCKER PLINTH
SCALE: 1 1/2" = 1'-0"

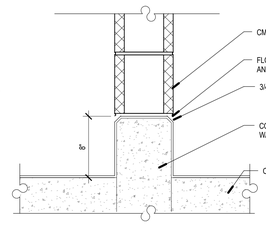

E4 TYP CMU WALL BASE AT SUSPENDED SLABS
SCALE: 1 1/2" = 1'-0"

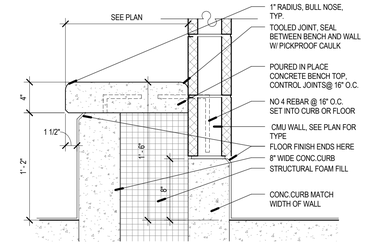

E5 COURTROOM HOLDING BENCH
SCALE: 1 1/2" = 1'-0"

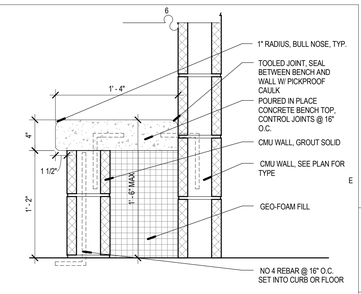

E6 LEVEL 1 HOLDING CELL BENCH
SCALE: 1 1/2" = 1'-0"

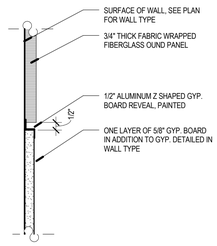

D1 SOUND PANEL / GYP. BOARD TRANSITION
SCALE: 3" = 1'-0"

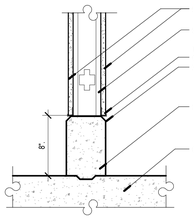

D2 TYP METAL STUD WALL BASE @ CONCRETE CURB
SCALE: 1 1/2" = 1'-0"

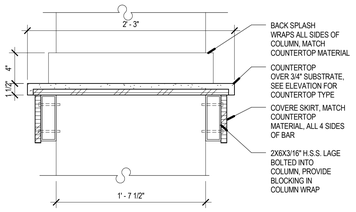

D3 STAFF LOUNGE BAR DETAIL
SCALE: 1 1/2" = 1'-0"

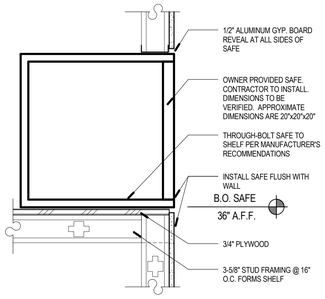

D4 SAFE MOUNTING DETAIL
SCALE: 1 1/2" = 1'-0"

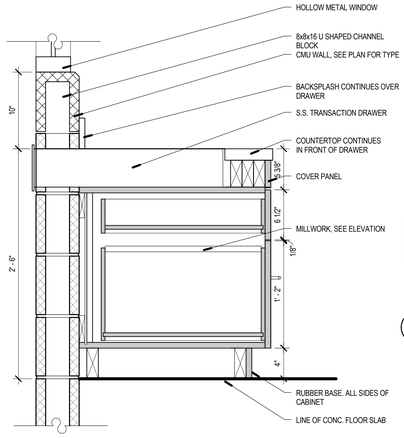

C5 TRANSACTION DRAWER
SCALE: 1 1/2" = 1'-0"

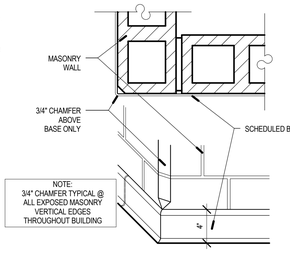

D6 TYP CMU CORNER CHAMFER
SCALE: 1 1/2" = 1'-0"

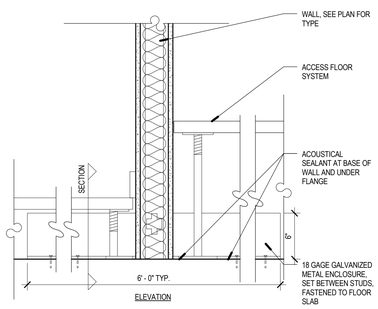

B1 RAISED FLOOR ACOUSTICAL CONDUIT SLEEVE
SCALE: 1 1/2" = 1'-0"

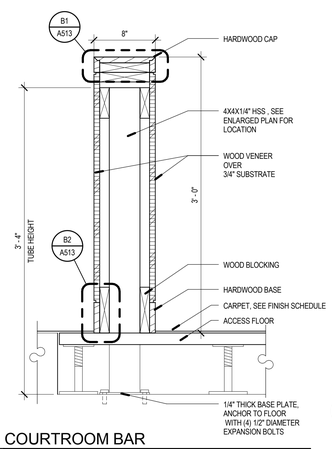

B2 COURTROOM BAR
SCALE: 1 1/2" = 1'-0"

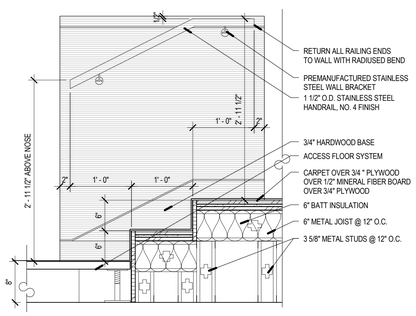

B3 COURTROOM STAIR
SCALE: 1" = 1'-0"

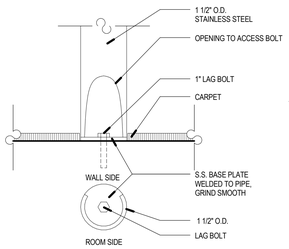

B4 RAILING FLOOR MOUNT
SCALE: 6" = 1'-0"

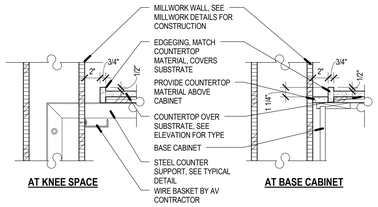

B5 COUNTERTOP WIRE PASS-THRU
SCALE: 1 1/2" = 1'-0"

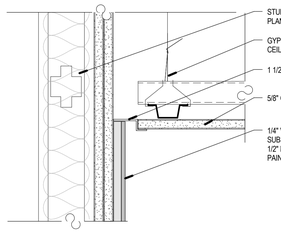

C6 WOOD WALL TO CEILING DETAIL
SCALE: 3" = 1'-0"

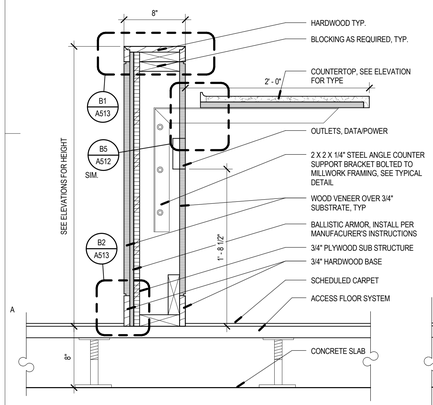

A1 COURTROOM BENCH WALL AT BAILIFF'S DESK
SCALE: 1 1/2" = 1'-0"

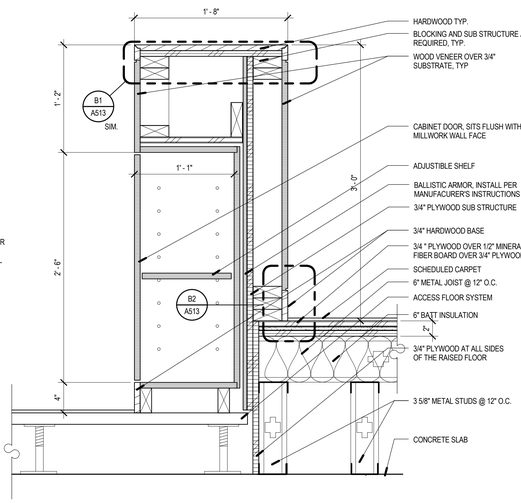

A2 COURTROOM BENCH WALL AT BAILIFF CABINET
SCALE: 1 1/2" = 1'-0"

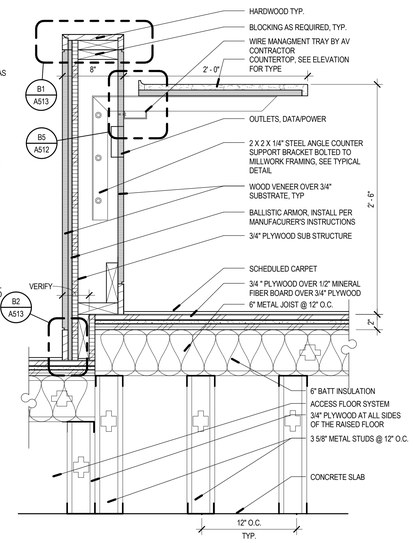

A3 COURTROOM BENCH WALL AT JUDGE'S SIDE DESK
SCALE: 1 1/2" = 1'-0"

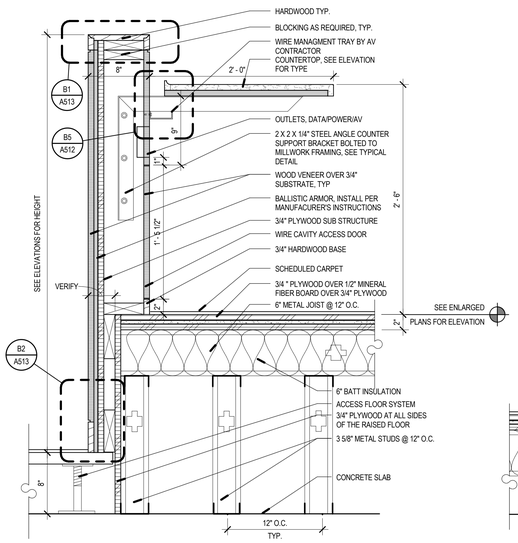

A4 COURTROOM BENCH WALL AT DESK
SCALE: 1 1/2" = 1'-0"

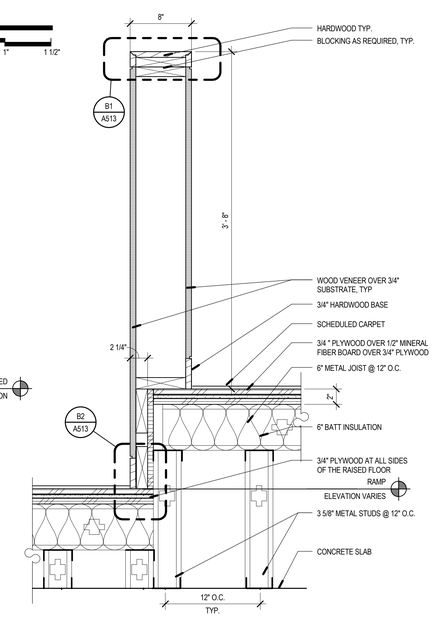

A6 COURTROOM BENCH WALL AT RAMP
SCALE: 1 1/2" = 1'-0"

8/14/2013 2:29:08 PM

VCBO ARCHITECTURE
524 SOUTH 600 EAST
SALT LAKE CITY, UT 84102
Phone: (801) 575-8800
Fax: (801) 531-9850
Web: vcbo.com

LICENSED ARCHITECT No. 153912 BRENT R. TIPPETS 8-15-13 STATE OF UTAH

2nd District Juvenile Courthouse

Utah State Courts
08284150
165 West 20th Street, Ogden, Utah
BID DOCUMENTS

Rev #	Date	Description

Job # 12500
Date August 15, 2013
Owner # 08284150
Ins. #

DETAILS - INTERIOR

A512

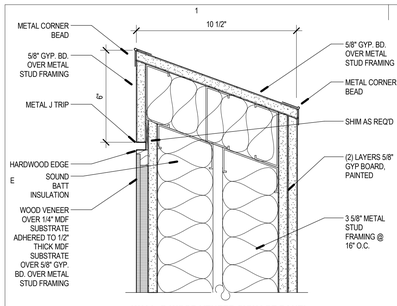

WALL @ WOOD VENEER SIGNAGE PANEL

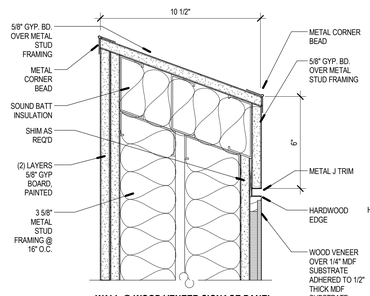

WALL @ WOOD VENEER SIGNAGE PANEL

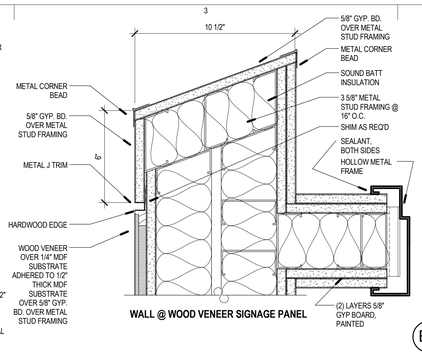

WALL @ WOOD VENEER SIGNAGE PANEL

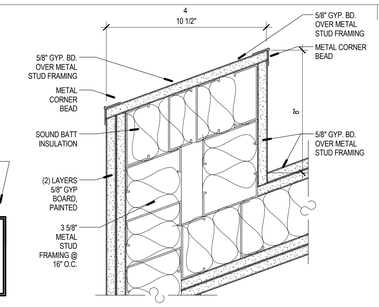

E4 COURTROOM ENTRY FRAMING B2
SCALE: 3" = 1'-0"

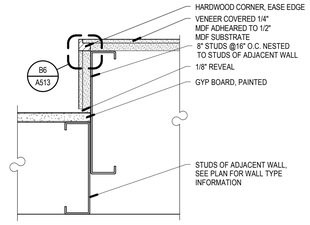

E5 WOOD VENEERED WALL EDGE
SCALE: 3" = 1'-0"

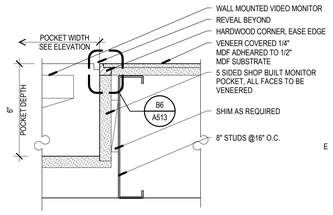

E6 MONITOR POCKET EDGE
SCALE: 3" = 1'-0"

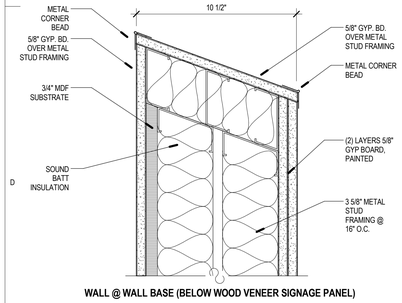

WALL @ WALL BASE (BELOW WOOD VENEER SIGNAGE PANEL)

D1 COURTROOM ENTRY FRAMING A1
SCALE: 3" = 1'-0"

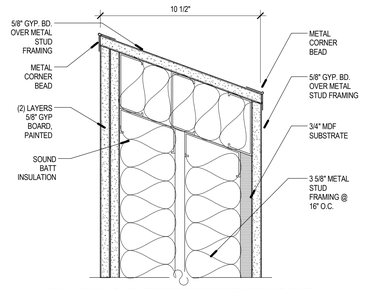

WALL @ WALL BASE (BELOW WOOD VENEER SIGNAGE PANEL)

D2 COURTROOM ENTRY FRAMING A2
SCALE: 3" = 1'-0"

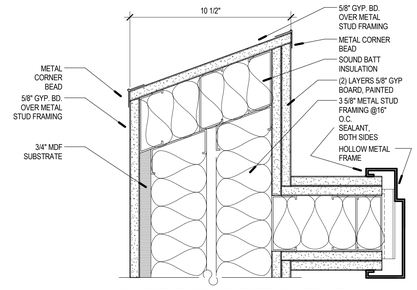

WALL @ WALL BASE (BELOW WOOD VENEER SIGNAGE PANEL)

D3 COURTROOM ENTRY FRAMING B1
SCALE: 3" = 1'-0"

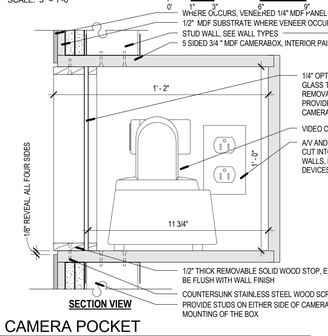

D4 CAMERA POCKET
SCALE: 3" = 1'-0"

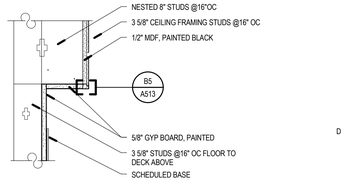

D6 BOTTOM OF ELEVATOR LOBBY SIGN WALL
SCALE: 1 1/2" = 1'-0"

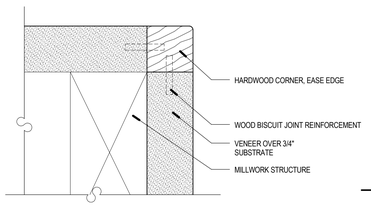

C1 TYP COURTROOM MILLWORK CORNER
SCALE: 12" = 1'-0"

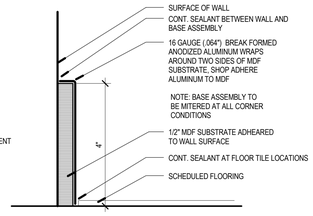

C2 TYP ANODIZED ALUMINUM BASE DETAIL
SCALE: 6" = 1'-0"

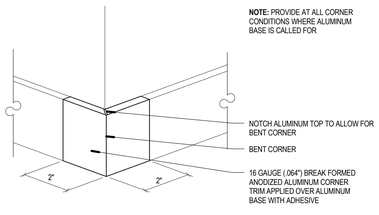

C3 TYP ANODIZED ALUMINUM BASE CORNER
NTS: NOT TO SCALE

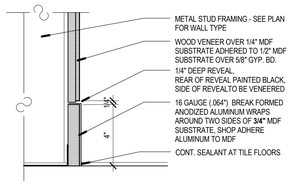

C4 ALUMINUM BASE DETAIL AT VENEERED WALL PANELS
SCALE: 3" = 1'-0"

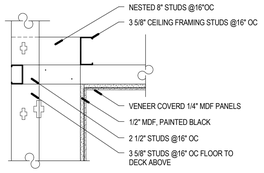

C5 TOP OF LOBBY WOOD FEATURE WALLS
SCALE: 1 1/2" = 1'-0"

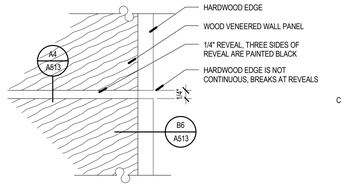

C6 TYP VENEERED WALL PANEL HARDWOOD EDGE ELEVATION
SCALE: 6" = 1'-0"

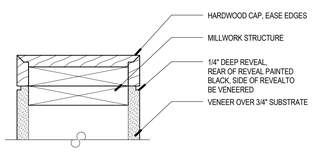

B1 TYP COURTROOM MILLWORK WALL TOP
SCALE: 3" = 1'-0"

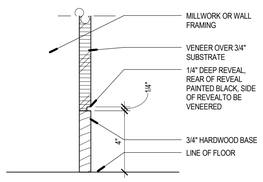

B2 TYP COURTROOM MILLWORK BASE
SCALE: 3" = 1'-0"

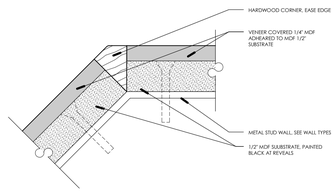

B3 TYP VENEERED WALL PANEL 135 DEGREE CORNER
SCALE: 12" = 1'-0"

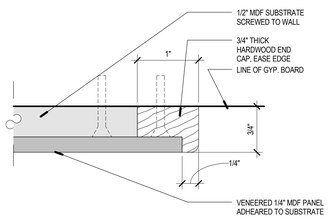

B4 TYP VENEERED WALL PANEL TERMINATION
SCALE: 12" = 1'-0"

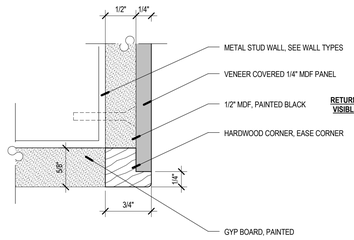

B5 VENEERED WALL PANLE BOTTOM EDGE
SCALE: 12" = 1'-0"

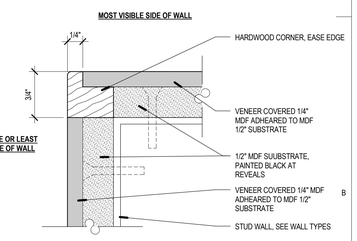

B6 TYP VENEERED WALL PANEL CORNER
SCALE: 12" = 1'-0"

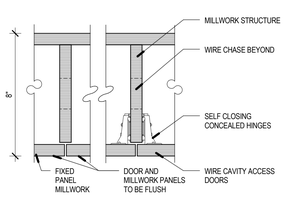

A1 WIRE CAVITY ACCESS DOOR DETAIL
SCALE: 3" = 1'-0"

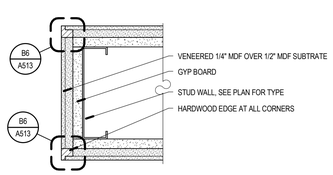

A2 COURTROOM JAMB SIMILAR AT HEADER
SCALE: 3" = 1'-0"

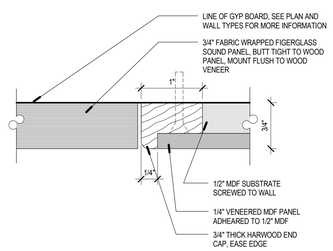

A3 TYP VENEERED WALL PANEL / SOUND PANEL TRANSITION
SCALE: 12" = 1'-0"

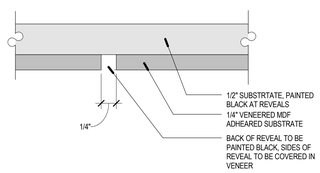

A4 TYP VENEERED PANEL REVEAL
SCALE: 12" = 1'-0"

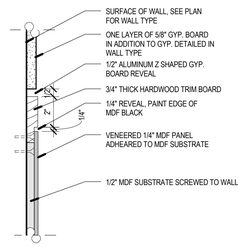

A5 COURTROOM WAINSCOT TOP RAIL
SCALE: 3" = 1'-0"

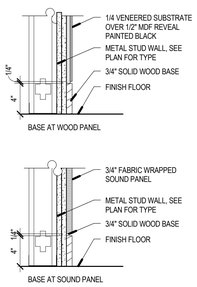

A6 COURTROOM WOOD BASE (B4)
SCALE: 1 1/2" = 1'-0"

8/14/2013 2:29:24 PM

VCBO ARCHITECTURE

VCBO ARCHITECTURE
524 SOUTH 600 EAST
SALT LAKE CITY, UT 84102
Phone: (801) 575-8800
Fax: (801) 531-9850
Web: vcbo.com

LICENSED ARCHITECT
No. 153912
BRENT R. TIPPETS
8-15-13
STATE OF UTAH

2nd District Juvenile Courthouse

Utah State Courts
165 West 20th Street, Ogden, Utah
08284150
BID DOCUMENTS

Rev #	Date	Description

Job # 12500
Date August 15, 2013
Owner # 08284150
Ins. #

DETAILS - INTERIOR

A513

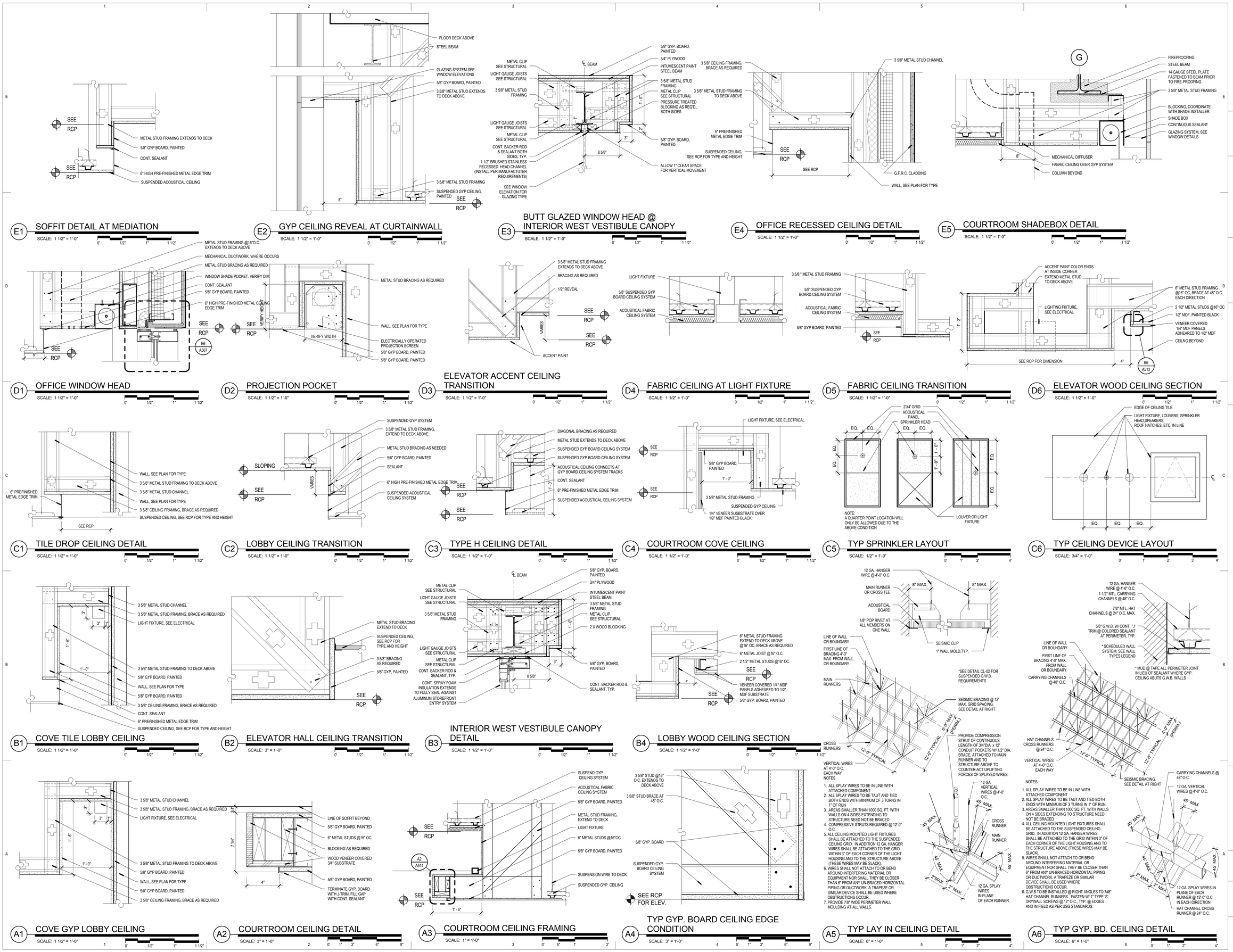

VCBO ARCHITECTURE

VCBO ARCHITECTURE
524 SOUTH 600 EAST
SALT LAKE CITY, UT 84102
Phone: (801) 575-8800
Fax: (801) 531-9850
Web: vcbo.com

LICENSED ARCHITECT No. 153912 BRENT R. TIPPETS 8-15-13 STATE OF UTAH

2nd District Juvenile Courthouse

Utah State Courts
08284150
165 West 20th Street, Ogden, Utah
BID DOCUMENTS

Rev #	Date	Description

Job # 12500
Date August 15, 2013
Owner # 08284150
Ins. #

DETAILS - CEILING

A514

8/14/2013 2:29:48 PM

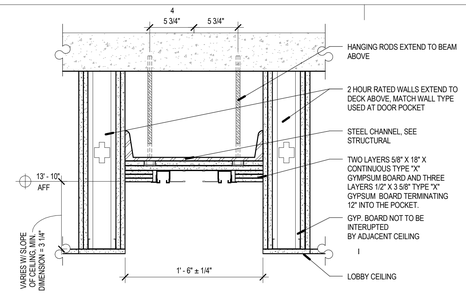

E4 FOLDING FIRE DOOR HEAD DETAIL

SCALE: 1 1/2" = 1'-0"

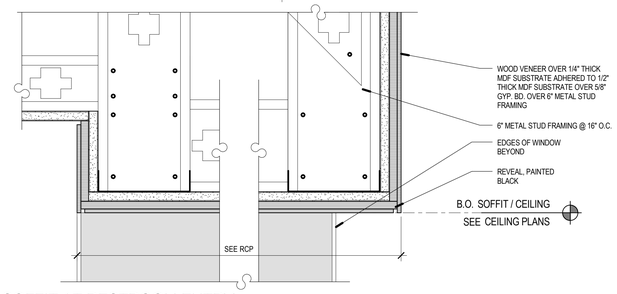

E5 GYP. SOFFIT AT RESTROOM ENTRY

SCALE: 3" = 1'-0"

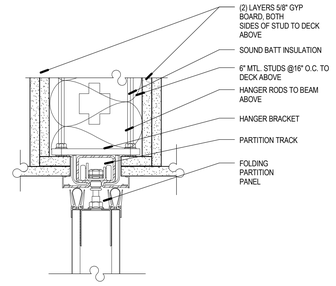

D4 FOLDING PARTITION AT MULTI PURPOSE ROOM

SCALE: 3" = 1'-0"

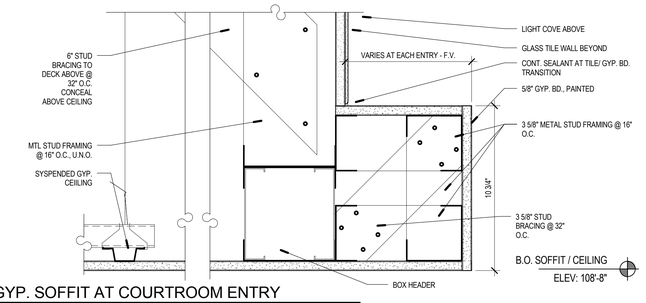

D5 GYP. SOFFIT AT COURTROOM ENTRY

SCALE: 3" = 1'-0"

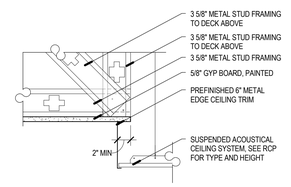

C5 SUSPENDED CEILING GYP TRANSITION

SCALE: 1 1/2" = 1'-0"

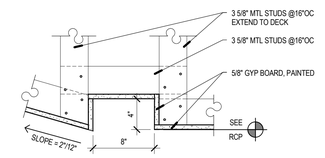

C6 SLOPED CEILING TRANSITION LOBBY

SCALE: 1 1/2" = 1'-0"

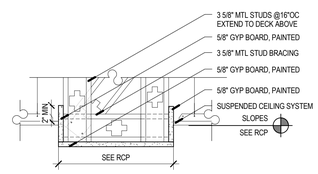

B4 CONFERENCE BEAM CEILING

SCALE: 1 1/2" = 1'-0"

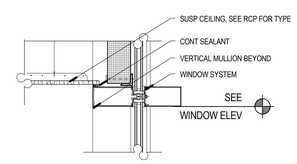

B5 SUSPENDED CEILING ALIGNED AT MULLION

SCALE: 1 1/2" = 1'-0"

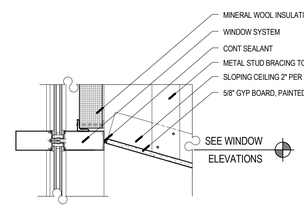

B6 SLOPING CEILING AT MULLION

SCALE: 1 1/2" = 1'-0"

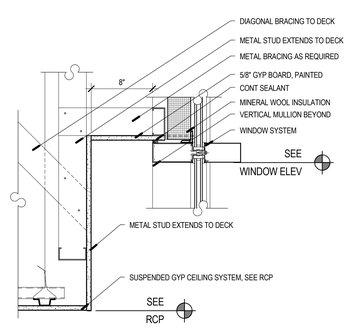

A3 SUSPENDED GYP AT MULLION

SCALE: 1 1/2" = 1'-0"

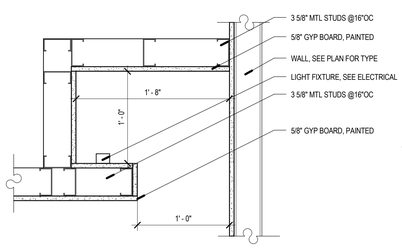

A4 COVE IN RESTROOM

SCALE: 1 1/2" = 1'-0"

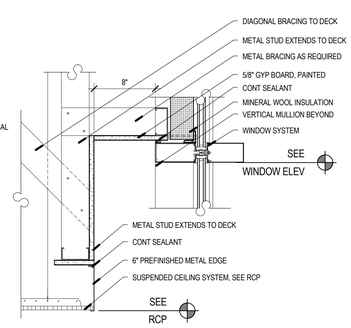

A5 SUSPENDED CEILING AT MULLION

SCALE: 1 1/2" = 1'-0"

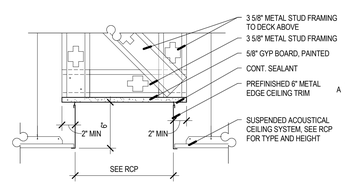

A6 COLUMN CEILING DETAIL

SCALE: 1 1/2" = 1'-0"

VCBO ARCHITECTURE
524 SOUTH 600 EAST
SALT LAKE CITY, UT 84102
Phone: (801) 575-8800
Fax: (801) 531-9850
Web: vcbo.com

2nd District Juvenile Courthouse

Utah State Courts
08284150
165 West 20th Street, Ogden, Utah
BID DOCUMENTS

Rev #	Date	Description

Job # 12500
Date August 15, 2013
Owner # 08284150
Ins. #

DETAILS - CEILING

A515

8/14/2013 2:29:59 PM

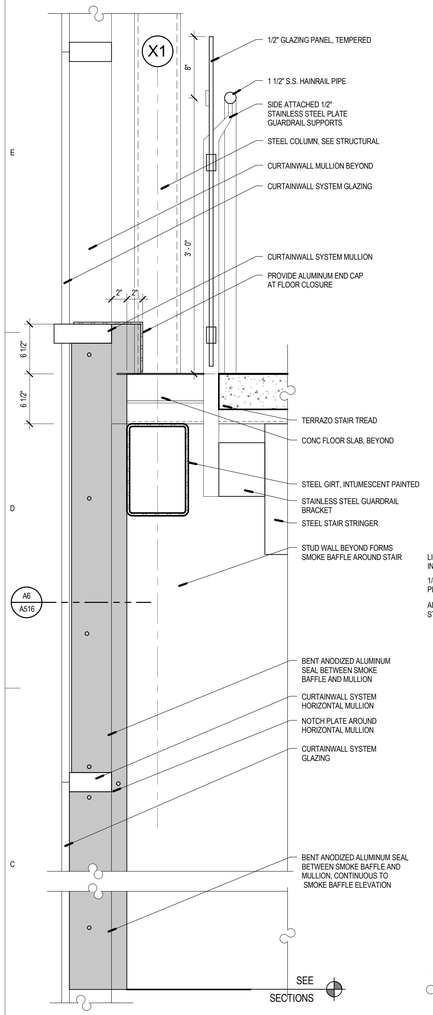

C1 SMOKE BAFFLE ELEVATION AT CURTAINWALL
SCALE: 1 1/2" = 1'-0"

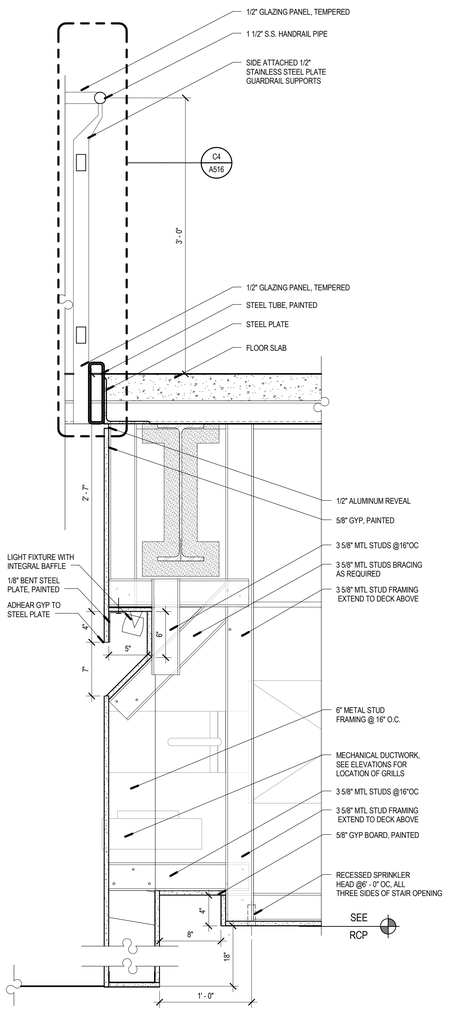

C2 SMOKE BAFFLE SECTION SOUTH
SCALE: 1 1/2" = 1'-0"

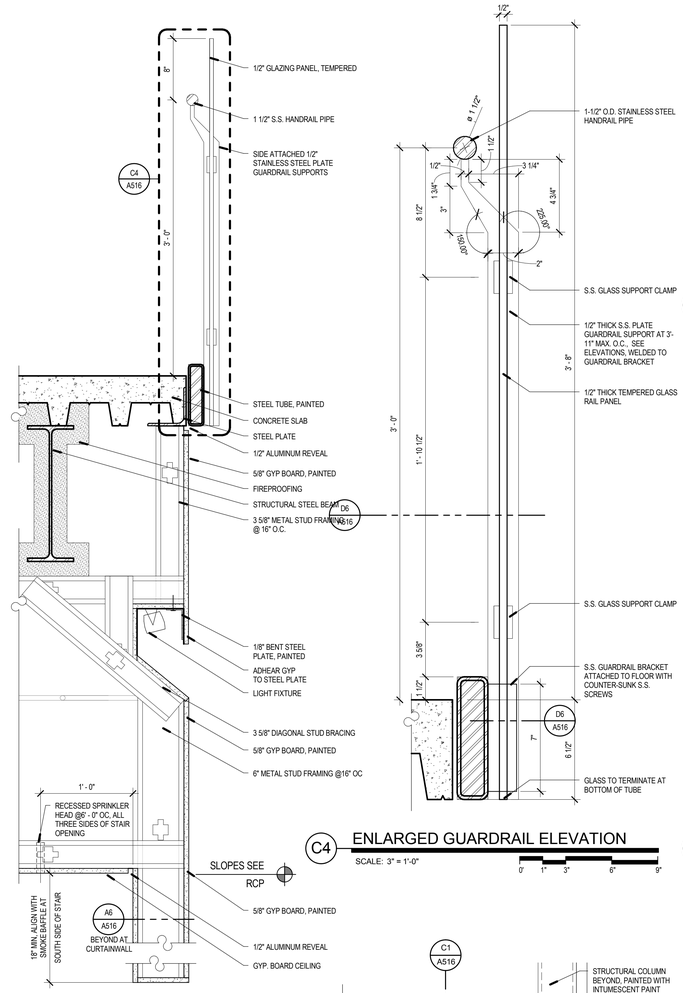

C3 SMOKE BAFFLE SECTION WEST
SCALE: 1 1/2" = 1'-0"

C4 ENLARGED GUARDRAIL ELEVATION
SCALE: 3" = 1'-0"

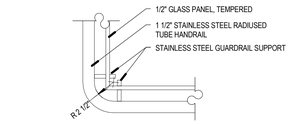

D5 TYP HANDRAIL CORNER
SCALE: 1 1/2" = 1'-0"

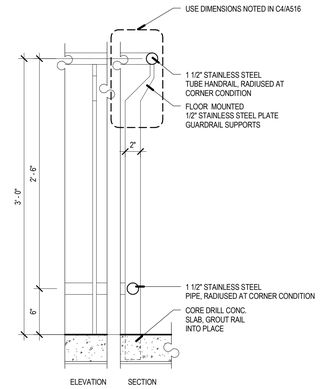

C5 UNDER STAIR RAILING DETAIL
SCALE: 1 1/2" = 1'-0"

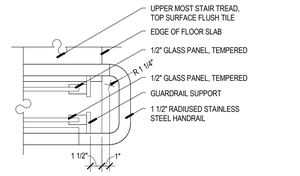

E6 TYP HANDRAIL RETURN AT TOP OF STAIR
SCALE: 1 1/2" = 1'-0"

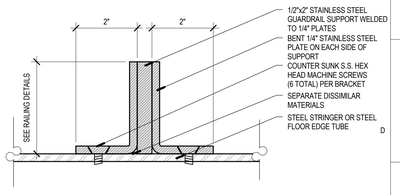

D6 TYP RAILING SUPPORT ATTACHMENT BRACKET
SCALE: 6" = 1'-0"

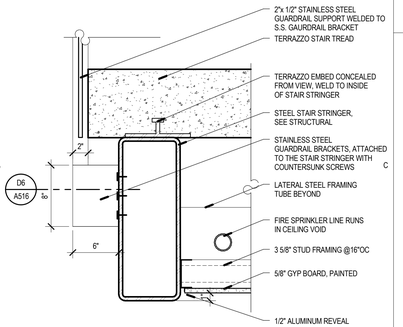

C6 LOBBY STAIR STRINGER
SCALE: 1 1/2" = 1'-0"

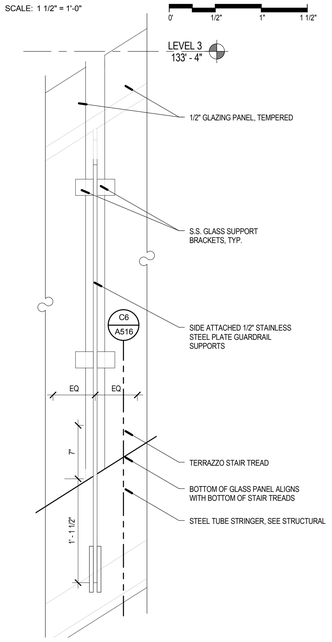

A1 TYP LOBBY STIAR TREAD
SCALE: 1 1/2" = 1'-0"

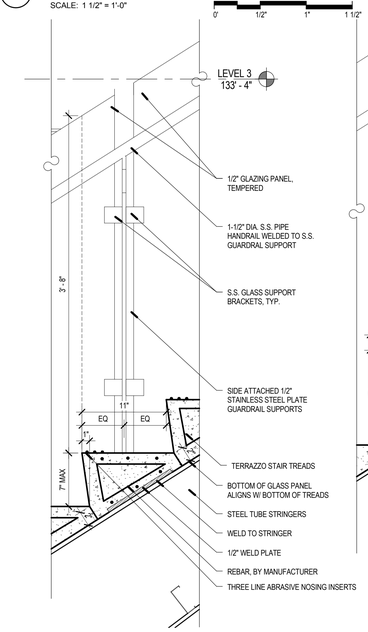

A2 TYP LOBBY STAIR TREAD SECTION
SCALE: 1 1/2" = 1'-0"

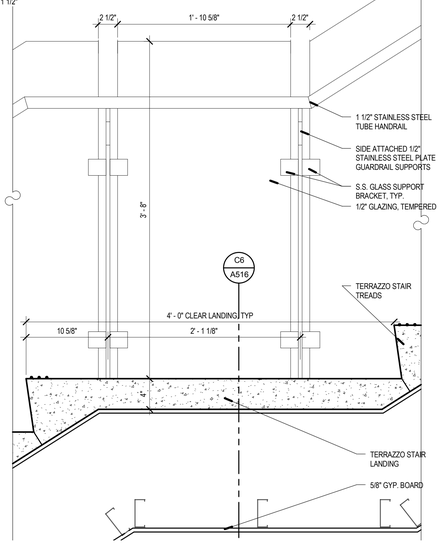

A3 INTERMEDIATE LANDING GRAND STAIR
SCALE: 1 1/2" = 1'-0"

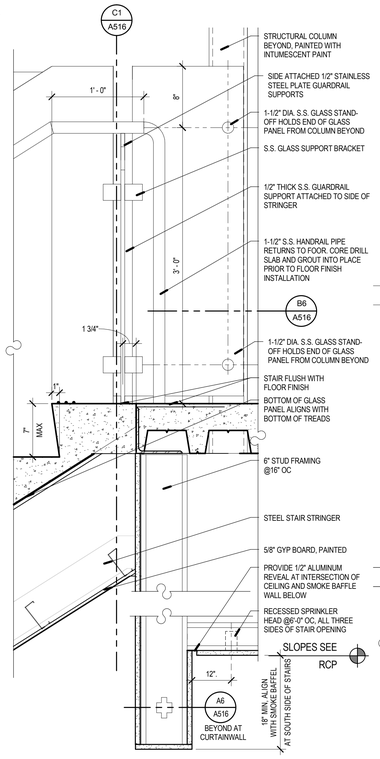

A4 TOP OF LOBBY STAIR
SCALE: 1 1/2" = 1'-0"

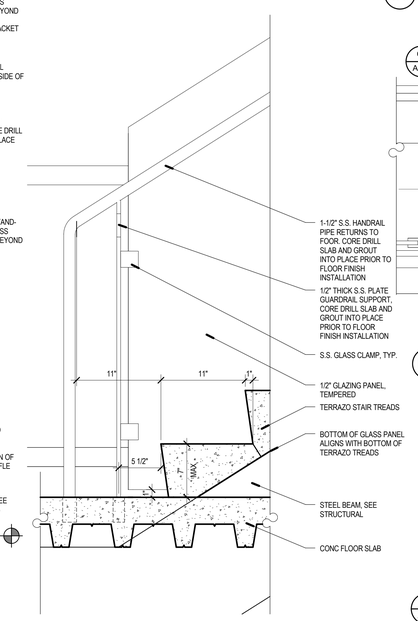

A5 BOTTOM OF LOBBY STAIR
SCALE: 1 1/2" = 1'-0"

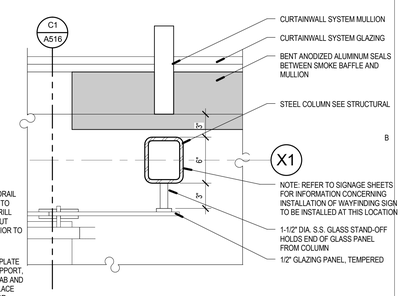

B6 ENLARGED PLAN TOP OF STAIR
SCALE: 1 1/2" = 1'-0"

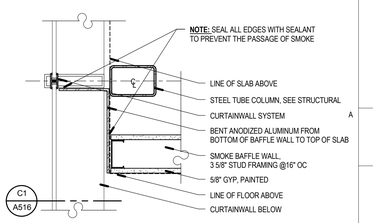

A6 SMOKE BAFFLE PLAN END CONDITION
SCALE: 1 1/2" = 1'-0"

8/14/2013 2:30:37 PM

VCBO ARCHITECTURE
524 SOUTH 600 EAST
SALT LAKE CITY, UT 84102
Phone: (801) 575-8800
Fax: (801) 531-9850
Web: vcbo.com

LICENSED ARCHITECT No. 153912 BRENT R. TIPPETS 8-15-13 STATE OF UTAH

2nd District Juvenile Courthouse

Utah State Courts
08284150
165 West 20th Street, Ogden, Utah
BID DOCUMENTS

Rev #	Date	Description
1	4/30/2013	Fire Marshal Response

Job # 12500
Date August 15, 2013
Owner # 08284150
Ins. #

DETAILS - VERTICAL CIRCULATION

A516

NOTES:
1. ALL PIPE MATERIAL SHALL BE SCHEDULE 40 PIPE
2. GALVANIZED STEEL TO BE USED AT EXTERIOR AND AS NOTED ELSE WHERE
3. GRIND ALL WELDS SMOOTH

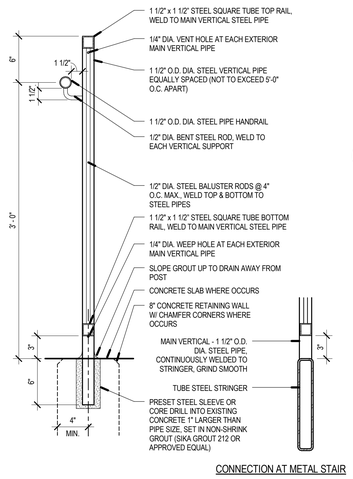

CONNECTION AT METAL STAIR

D2 GUARDRAIL SECTION
SCALE: 1 1/2" = 1'-0"

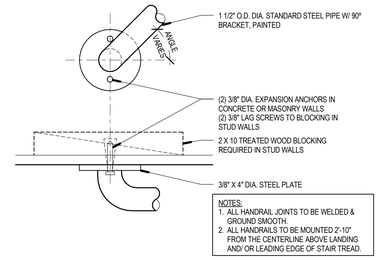

NOTES:
1. ALL HANDRAIL JOINTS TO BE WELDED & GROUND SMOOTH.
2. ALL HANDRAILS TO BE MOUNTED 2'-10" FROM THE CENTERLINE ABOVE LANDING AND/ OR LEADING EDGE OF STAIR TREAD.

E3 TYP WALL HANDRAIL TERMINATION
SCALE: 3" = 1'-0"

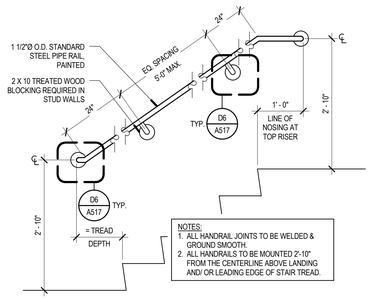

NOTES:
1. ALL HANDRAIL JOINTS TO BE WELDED & GROUND SMOOTH.
2. ALL HANDRAILS TO BE MOUNTED 2'-10" FROM THE CENTERLINE ABOVE LANDING AND/ OR LEADING EDGE OF STAIR TREAD.

D3 TYP HANDRAIL ELEVATION
SCALE: 3/4" = 1'-0"

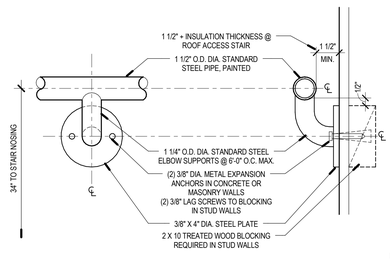

E4 TYP WALL MID-RAIL DETAIL
SCALE: 3" = 1'-0"

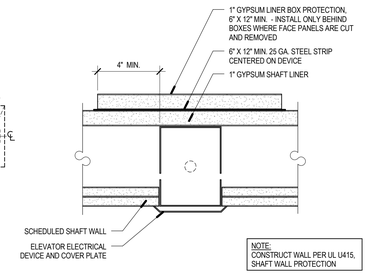

NOTE:
CONSTRUCT WALL PER UL U415, SHAFT WALL PROTECTION

E5 ELEVATOR ELECTRICAL DEVICE
SCALE: 3" = 1'-0"

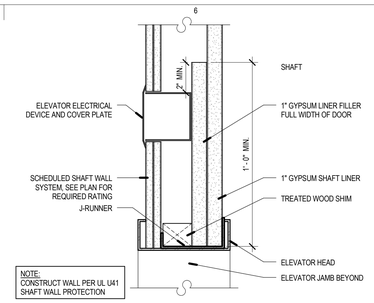

NOTE:
CONSTRUCT WALL PER UL U41 SHAFT WALL PROTECTION

E6 ELEVATOR HEAD SHAFT DETAIL
SCALE: 3" = 1'-0"

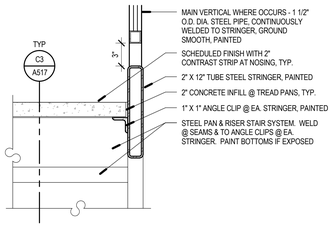

D4 TYP STRINGER DETAIL
SCALE: 1 1/2" = 1'-0"

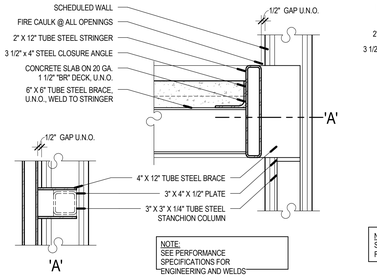

NOTE:
SEE PERFORMANCE SPECIFICATIONS FOR ENGINEERING AND WELDS

D5 LANDING SUPPORT DETAIL
SCALE: 1 1/2" = 1'-0"

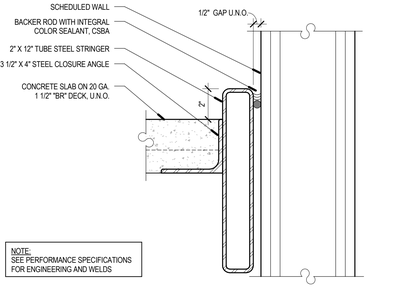

NOTE:
SEE PERFORMANCE SPECIFICATIONS FOR ENGINEERING AND WELDS

D6 LANDING DETAIL
SCALE: 3" = 1'-0"

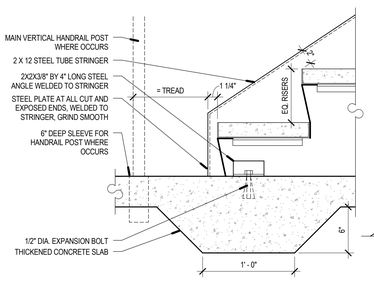

C2 TYP STAIR @ BASE
SCALE: 1 1/2" = 1'-0"

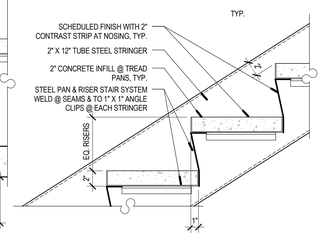

C3 TYP STAIR TREAD
SCALE: 1 1/2" = 1'-0"

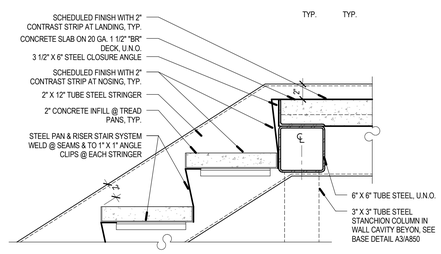

C4 TYP STAIR LANDING
SCALE: 1 1/2" = 1'-0"

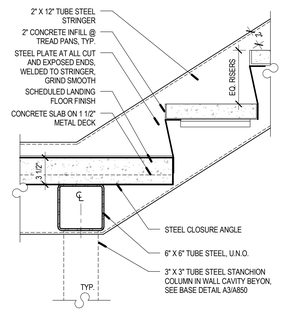

C5 TYPICAL STAIR LANDING
SCALE: 1 1/2" = 1'-0"

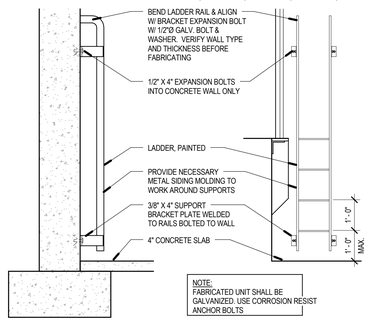

NOTE:
FABRICATED UNIT SHALL BE GALVANIZED. USE CORROSION RESIST ANCHOR BOLTS

C6 PIT LADDER
SCALE: 1/2" = 1'-0"

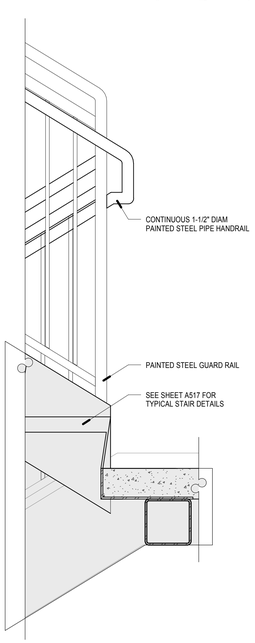

A3 RAILING AT LANDING ASCENDING
SCALE: 1 1/2" = 1'-0"

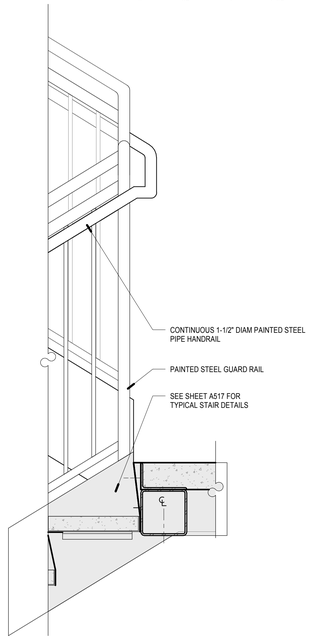

A4 RAILING AT LANDING DESCENDING
SCALE: 1 1/2" = 1'-0"

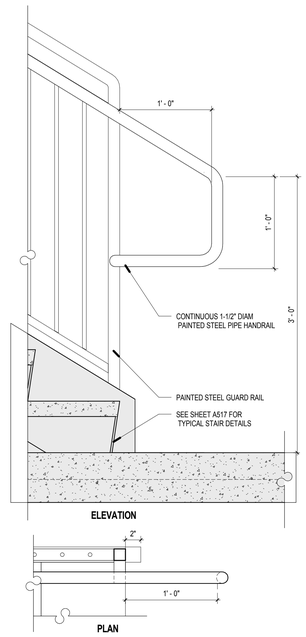

A5 STAIR RAILING ADAAG EXTENSION
SCALE: 1 1/2" = 1'-0"

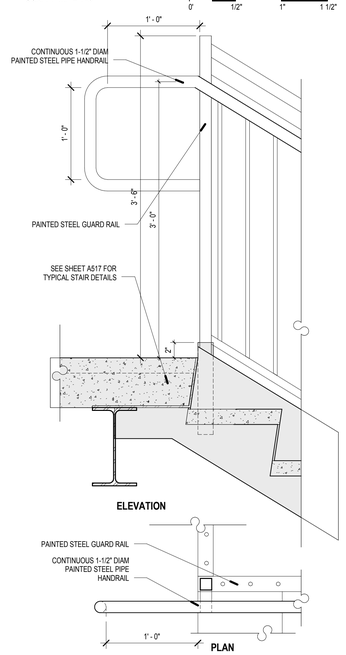

A6 STAIR RAILING TOP OF STAIR
SCALE: 1 1/2" = 1'-0"

VCBO ARCHITECTURE
524 SOUTH 600 EAST
SALT LAKE CITY, UT 84102
Phone: (801) 575-8800
Fax: (801) 531-9850
Web: vcbo.com

REGISTERED ARCHITECT
No. 153912
BRENT R. TIPPETS
8-15-13
STATE OF UTAH

2nd District Juvenile Courthouse

Utah State Courts
08284150
165 West 20th Street, Ogden, Utah
BID DOCUMENTS

Rev #	Date	Description

Job # 12500
Date August 15, 2013
Owner # 08284150
Ins. #

DETAILS - VERTICAL CIRCULATION

A517

8/14/2013 2:30:50 PM

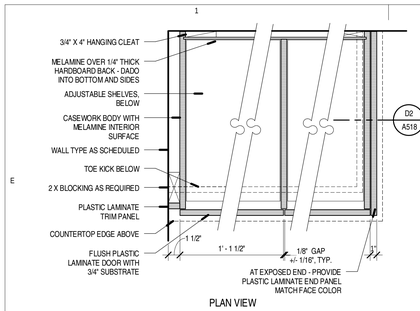

E1 BASE CABINET PLAN DETAIL

SCALE: 1 1/2" = 1'-0"

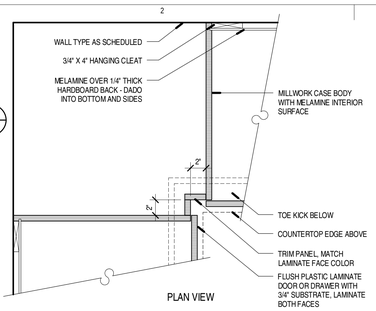

E2 BASE CORNER DETAIL - TYPICAL

SCALE: 1 1/2" = 1'-0"

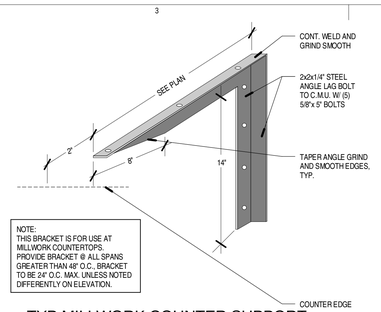

E3 TYP MILLWORK COUNTER SUPPORT BRACKET

SCALE: 1 1/2" = 1'-0"

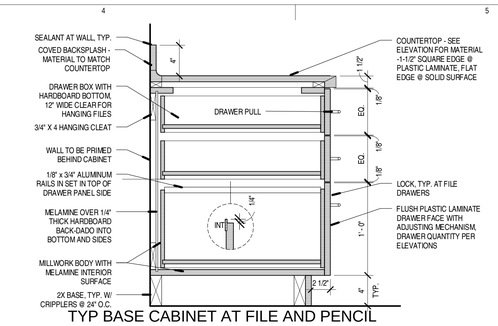

E4 TYP BASE CABINET AT FILE AND PENCIL DRAWER UNIT

SCALE: 1 1/2" = 1'-0"

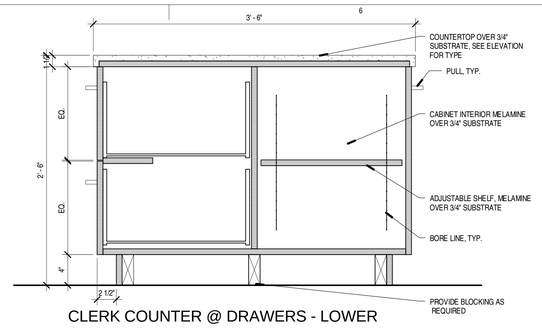

E5 CLERK COUNTER @ DRAWERS - LOWER CABINETS

SCALE: 1 1/2" = 1'-0"

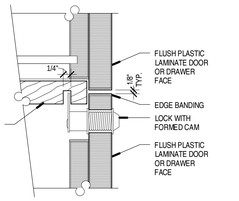

D1 LOCK DETAIL - TYPICAL

SCALE: 6" = 1'-0"

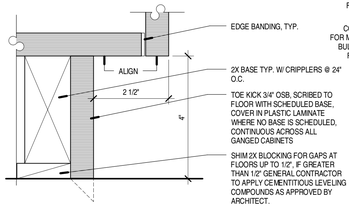

D2 TOE KICK DETAIL - TYPICAL

SCALE: 6" = 1'-0"

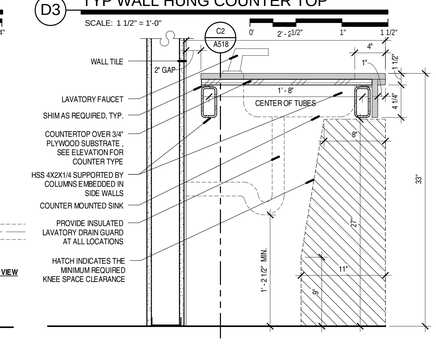

D3 TYP WALL HUNG COUNTER TOP

SCALE: 1 1/2" = 1'-0"

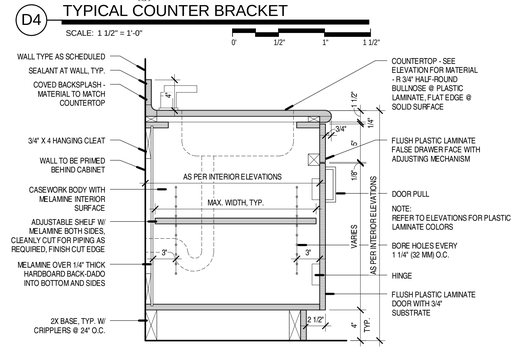

D4 TYPICAL COUNTER BRACKET

SCALE: 1 1/2" = 1'-0"

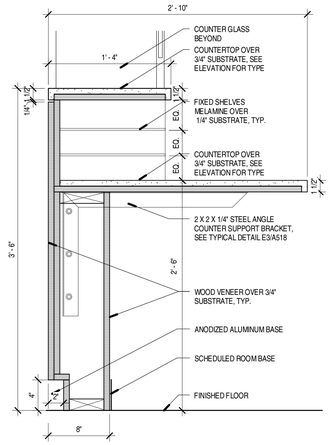

D5 CLERK COUNTER @ KNEE SPACE

SCALE: 1 1/2" = 1'-0"

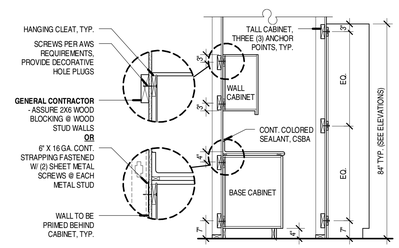

C1 TYP MILLWORK ANCHOR DETAILS

SCALE: 1/2" = 1'-0"

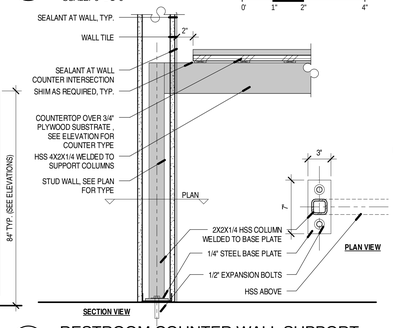

C2 RESTROOM COUNTER WALL SUPPORT

SCALE: 1 1/2" = 1'-0"

C3 TYP RESTROOM COUNTER

SCALE: 1 1/2" = 1'-0"

C4 TYP SINK BASE CABINET

SCALE: 1 1/2" = 1'-0"

C5 CLERK COUNTER @ PAPER STORAGE

SCALE: 1 1/2" = 1'-0"

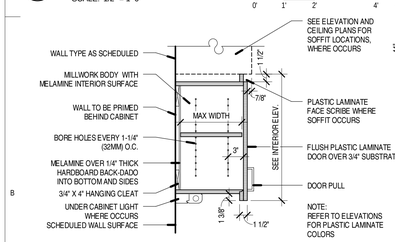

B1 UPPER FULL DOOR SECTION

SCALE: 1" = 1'-0"

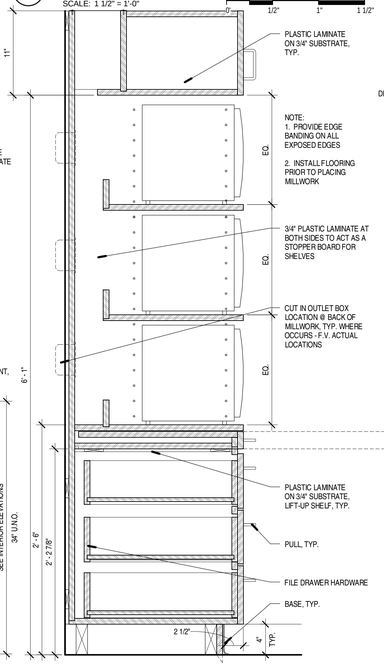

A1 TYP WALL HUNG COUNTE RTOP AT CMU

SCALE: 1 1/2" = 1'-0"

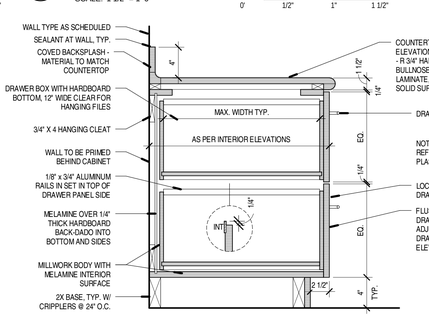

B3 TYP BASE CABINET W/ (2) FILE DRAWERS

SCALE: 1 1/2" = 1'-0"

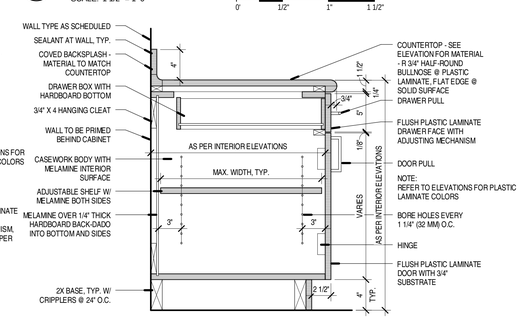

B4 TYP BASE CABINET AT DRAWER / DOOR

SCALE: 1 1/2" = 1'-0"

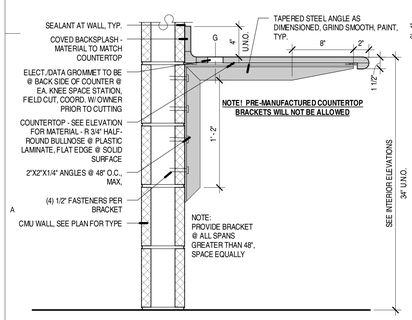

A2 MICROWAVE COOKING STATION WITH FRIDGE OR ICE MACHINE

SCALE: 1 1/2" = 1'-0"

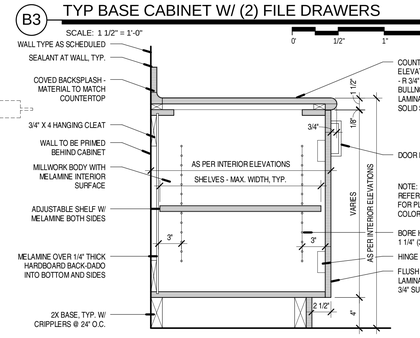

A3 TYP BASE CABINET WITH FULL DOOR

SCALE: 1 1/2" = 1'-0"

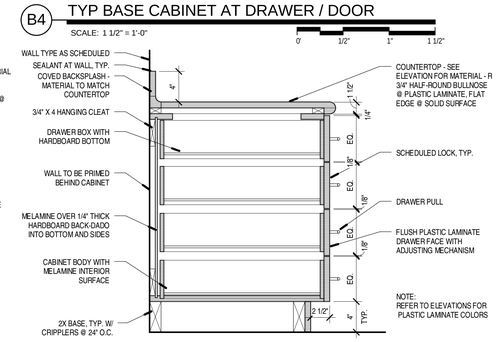

A4 TYP 4 DRAWER CABINET

SCALE: 1 1/2" = 1'-0"

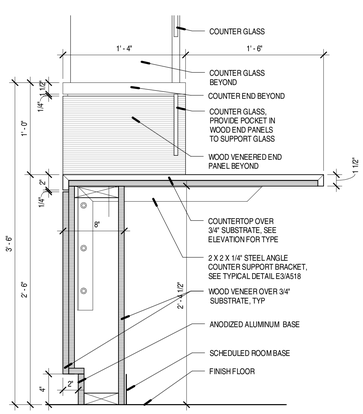

A5 CLERK COUNTER @ A.D.A. SECTION

SCALE: 1 1/2" = 1'-0"

8/14/2013 4:15:25 PM

VCBO ARCHITECTURE
VCBO ARCHITECTURE
524 SOUTH 600 EAST
SALT LAKE CITY, UT 84102
Phone: (801) 575-8800
Fax: (801) 531-9850
Web: vcbo.com

LICENSED ARCHITECT No. 133012 BRENT R. TIPPETS 8-15-13 STATE OF UTAH

2nd District Juvenile Courthouse

Utah State Courts
08284150
165 West 20th Street, Ogden, Utah
BID DOCUMENTS

Rev #	Date	Description

Job # 12500
Date August 15, 2013
Owner # 08284150
Ins. #

DETAILS - CASEWORK

A518

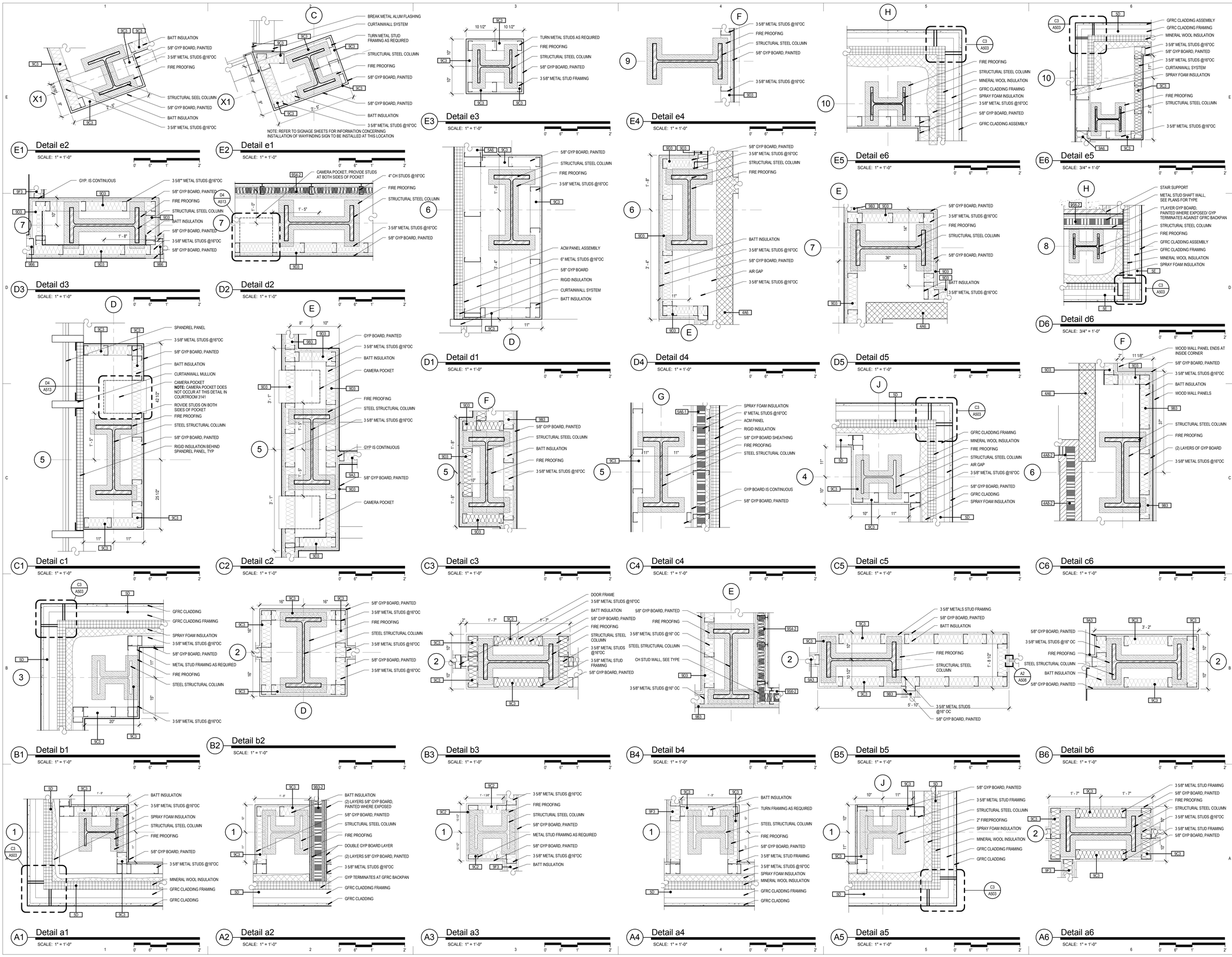

VCBO
ARCHITECTURE

VCBO ARCHITECTURE
524 SOUTH 600 EAST
SALT LAKE CITY, UT 84102
Phone: (801) 575-8800
Fax: (801) 531-9850
Web: vcbo.com

LICENSED ARCHITECT
No. 153912
BRENT R. TIPPETS
8-15-12
STATE OF UTAH

2nd District Juvenile Courthouse

Utah State Courts
08284150
165 West 20th Street, Ogden, Utah
BID DOCUMENTS

Rev #	Date	Description

Job # 12500
Date August 15, 2013
Owner # 08284150
Ins. #

DETAILS - COLUMN FRAMING

A519

8/14/2013 2:31:55 PM

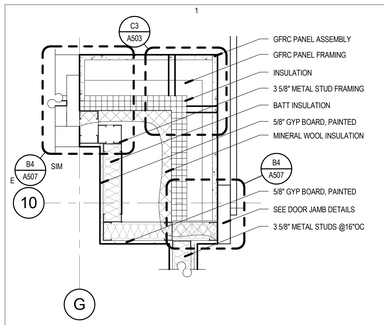

E1 Column 6
SCALE: 1" = 1'-0"

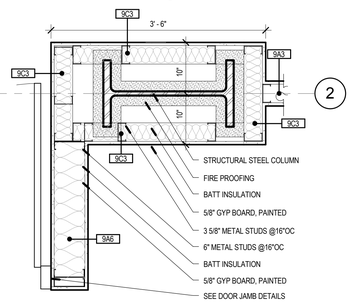

E2 Column 12
SCALE: 1" = 1'-0"

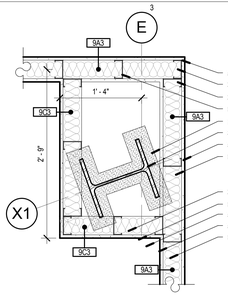

E3 Column 3
SCALE: 1" = 1'-0"

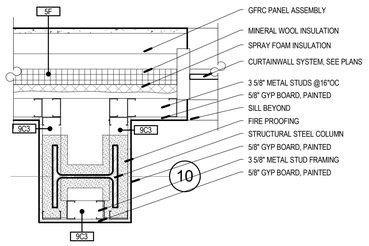

E4 Column 1
SCALE: 1" = 1'-0"

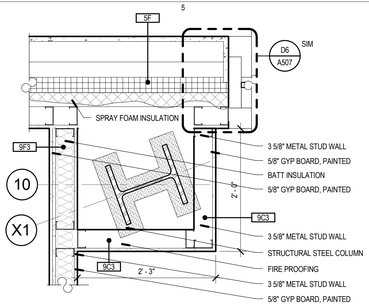

E5 Column 2
SCALE: 1" = 1'-0"

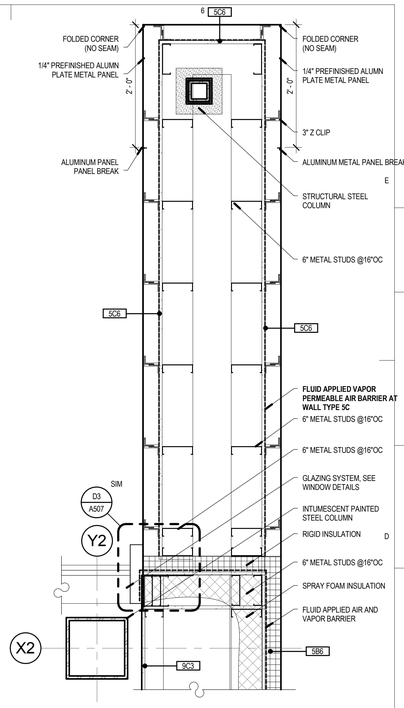

D6 Detail 16
SCALE: 1" = 1'-0"

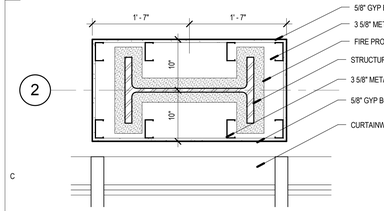

C1 Column 8
SCALE: 1" = 1'-0"

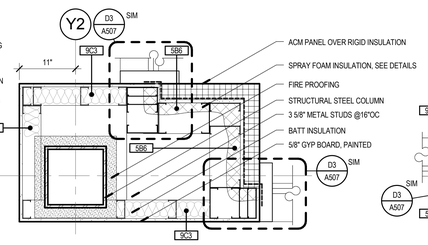

C2 Detail 11
SCALE: 1" = 1'-0"

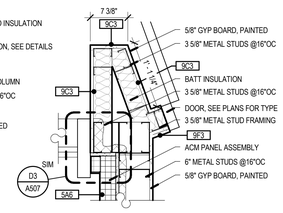

C3 Detail 9
SCALE: 1" = 1'-0"

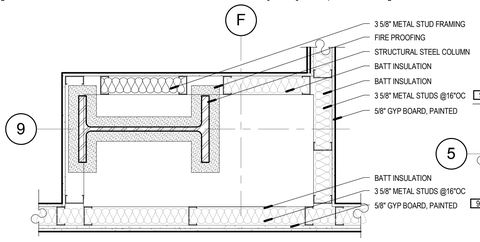

C4 Column 17
SCALE: 1" = 1'-0"

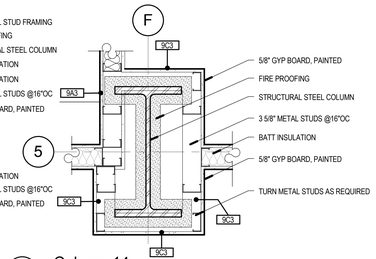

C5 Column 14
SCALE: 1" = 1'-0"

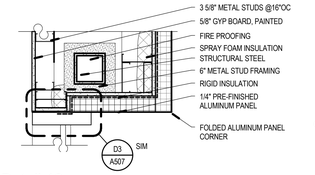

C6 Detail 12
SCALE: 1" = 1'-0"

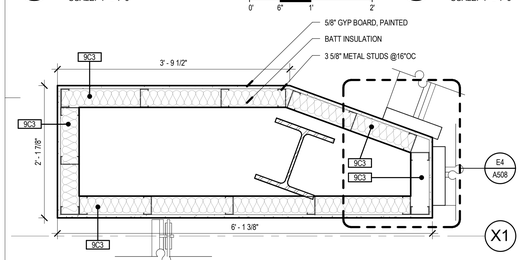

B1 Column 9
SCALE: 1" = 1'-0"

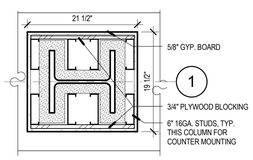

B2 Column 11
SCALE: 1" = 1'-0"

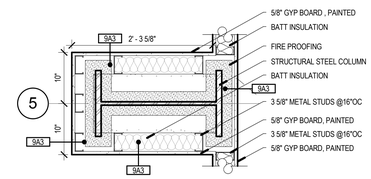

B3 Detail 10
SCALE: 1" = 1'-0"

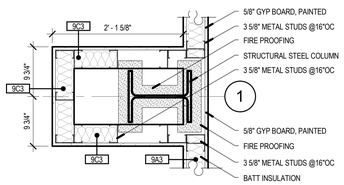

B4 Column 10
SCALE: 1" = 1'-0"

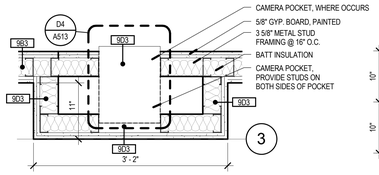

CAMERA POCKET ALCOVE AT WESTERN COURTROOMS
SCALE: 1" = 1'-0"

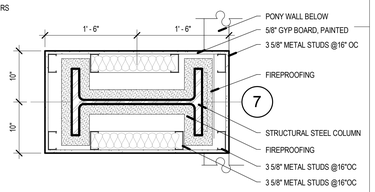

B6 Column 5
SCALE: 1" = 1'-0"

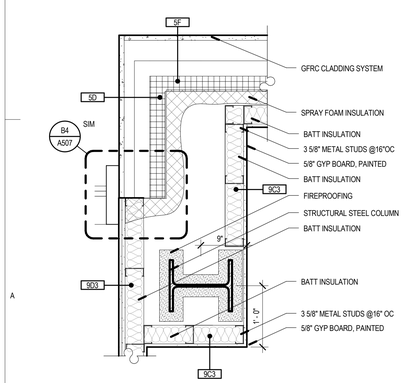

A1 Column 7
SCALE: 1" = 1'-0"

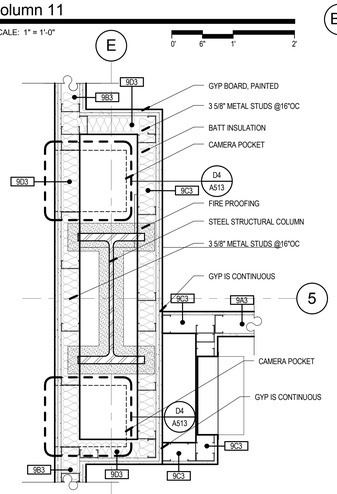

A2 Column 13
SCALE: 1" = 1'-0"

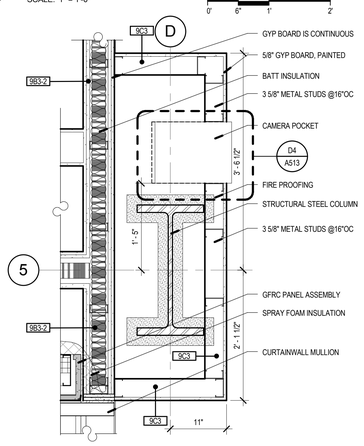

A3 Column 15
SCALE: 1" = 1'-0"

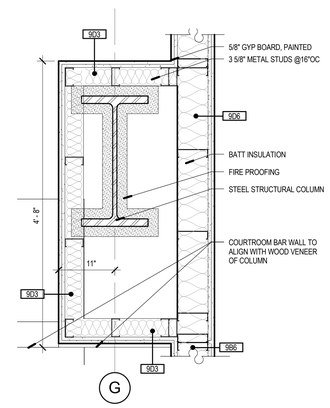

A4 Detail 5
SCALE: 1" = 1'-0"

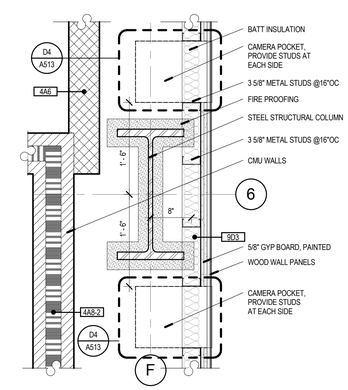

A5 CAMERA POCKET ALCOVE 2
SCALE: 1" = 1'-0"

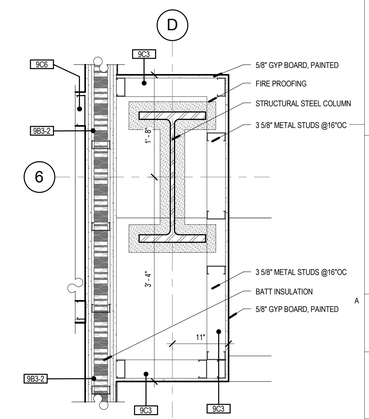

A6 Column 16
SCALE: 1" = 1'-0"

VCBO ARCHITECTURE

VCBO ARCHITECTURE
524 SOUTH 600 EAST
SALT LAKE CITY, UT 84102
Phone: (801) 575-8800
Fax: (801) 531-9850
Web: vcbo.com

LICENSED ARCHITECT
No. 153912
BRENT R. TIPPETS
8-15-12
STATE OF UTAH

2nd District Juvenile Courthouse

Utah State Courts
08284150
165 West 20th Street, Ogden, Utah
BID DOCUMENTS

Rev #	Date	Description

Job # 12500
Date August 15, 2013
Owner # 08284150
Ins. #

DETAILS - COLUMN FRAMING

A520

8/14/2013 2:32:43 PM

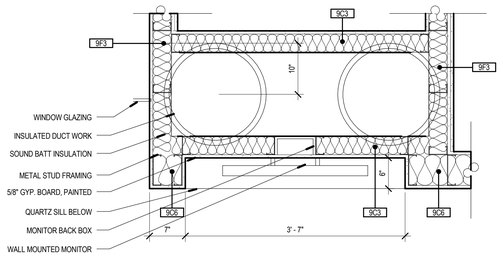

E3 MONITOR POCKET / DUCT CHASE
SCALE: 1" = 1'-0"

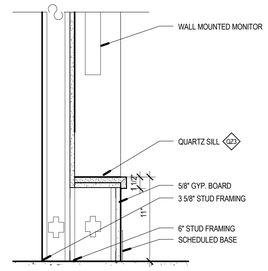

E4 MONITOR POCKET SILL
SCALE: 1 1/2" = 1'-0"

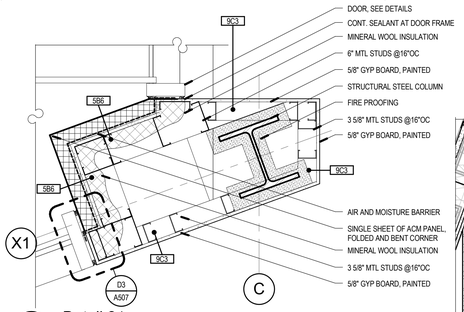

E5 Detail 24
SCALE: 1" = 1'-0"

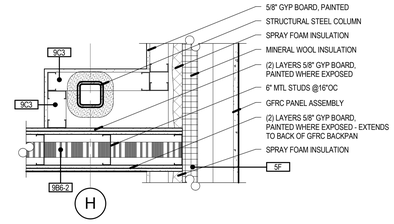

D3 Detail 27
SCALE: 1" = 1'-0"

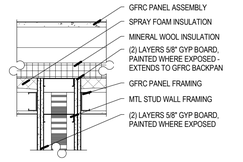

D4 TYP FIRE BARRIER AT EXT WALL
SCALE: 1" = 1'-0"

NOTE: VERIFY POCKET DEPTH AND WIDTH W/ DOOR MANUF PRIOR TO INSTALLATION OF WALLS

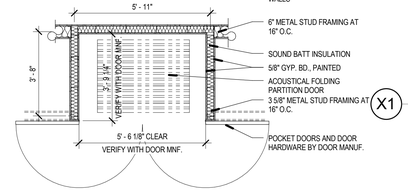

D5 ACOUSTICAL FOLDING PARTITION DOOR POCKET
SCALE: 3/8" = 1'-0"

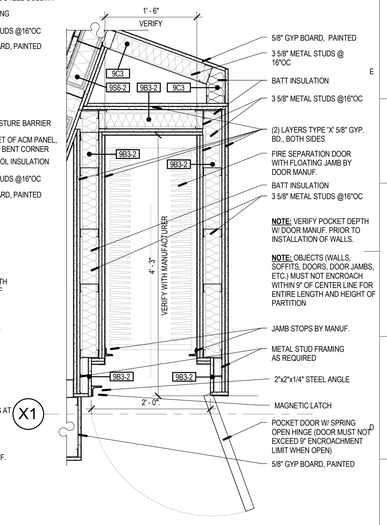

D6 FIRE DOOR POCKET
SCALE: 1" = 1'-0"

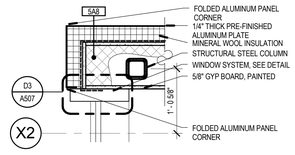

C3 Detail 22
SCALE: 1" = 1'-0"

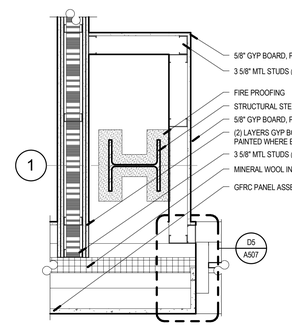

C4 Detail 30
SCALE: 1" = 1'-0"

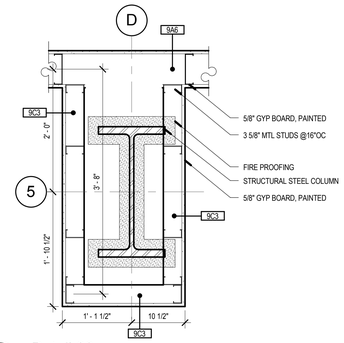

C5 Detail 29
SCALE: 1" = 1'-0"

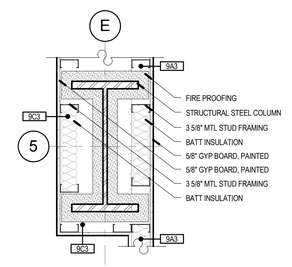

C6 Detail 31
SCALE: 1" = 1'-0"

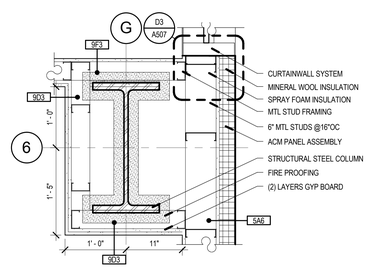

B3 Detail 28
SCALE: 1" = 1'-0"

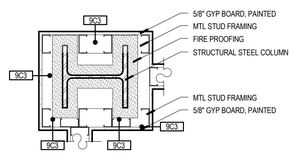

B4 Detail 34
SCALE: 1" = 1'-0"

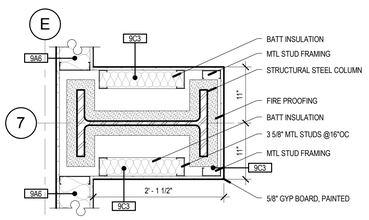

B5 Detail 33
SCALE: 1" = 1'-0"

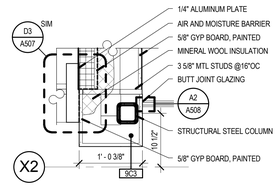

B6 Detail 21
SCALE: 1" = 1'-0"

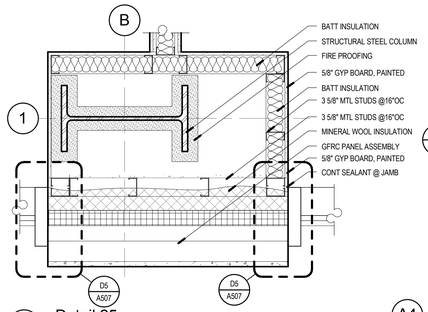

A3 Detail 25
SCALE: 1" = 1'-0"

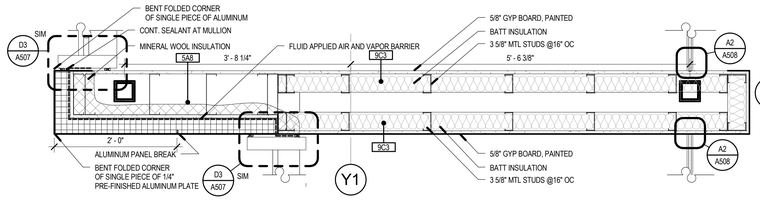

A4 Detail 23
SCALE: 1" = 1'-0"

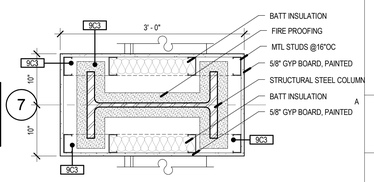

A6 DETAIL 1
SCALE: 1" = 1'-0"

VCBO ARCHITECTURE
524 SOUTH 600 EAST
SALT LAKE CITY, UT 84102
Phone: (801) 575-8800
Fax: (801) 531-9850
Web: vcbo.com

LICENSED ARCHITECT
No. 153912
BRENT R. TIPPETS
8-15-13
STATE OF UTAH

2nd District Juvenile Courthouse

Utah State Courts
08284150
165 West 20th Street, Ogden, Utah
BID DOCUMENTS

Rev #	Date	Description

Job # 12500
Date August 15, 2013
Owner # 08284150
Ins. #

DETAILS - COLUMN FRAMING

A521

8/14/2013 2:33:15 PM

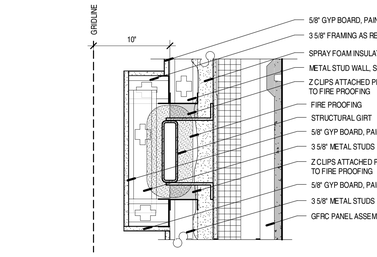

E1 GIRT WRAP AT STAIR
SCALE: 1 1/2" = 1'-0"

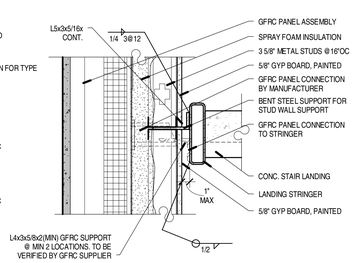

E2 EXTERIOR WALL AT LANDING
SCALE: 1 1/2" = 1'-0"

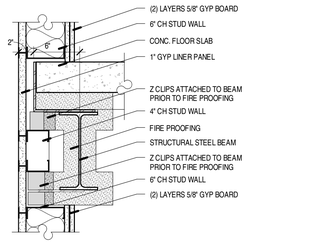

E3 ELEVATOR SLAB EDGE AT STAFF ELEVATOR
SCALE: 1 1/2" = 1'-0"

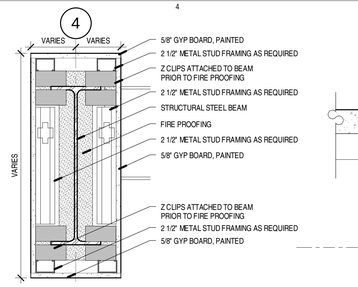

E4 SE STAIR LOOKING EAST
SCALE: 1 1/2" = 1'-0"

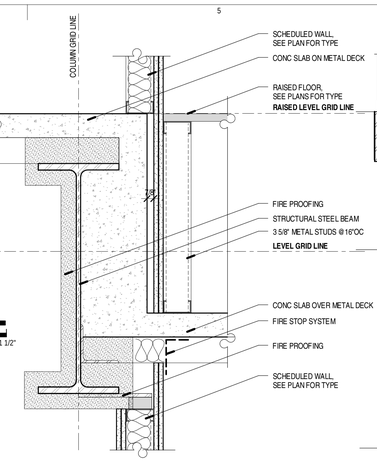

D5 TYPICAL FLOOR STEP
SCALE: 1 1/2" = 1'-0"

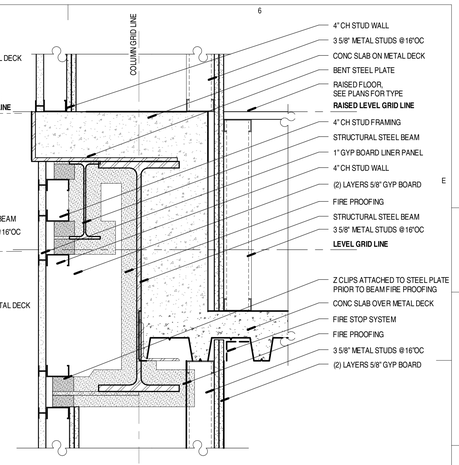

D6 SHAFT WALL AT SLAB STEP
SCALE: 1 1/2" = 1'-0"

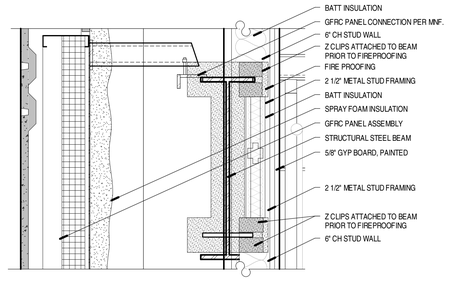

D1 STAIR SHAFT AT GFRC
SCALE: 1 1/2" = 1'-0"

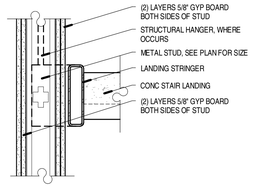

D2 INTERIOR STAIR WALL AT LANDING
SCALE: 1 1/2" = 1'-0"

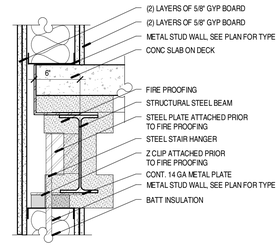

D3 STAIR HANGER BEAM AT FLOOR EDGE
SCALE: 1 1/2" = 1'-0"

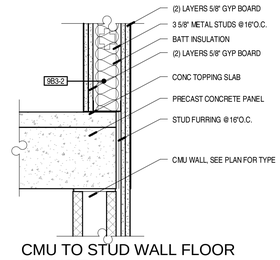

D4 CMU TO STUD WALL FLOOR TRANSITION
SCALE: 1 1/2" = 1'-0"

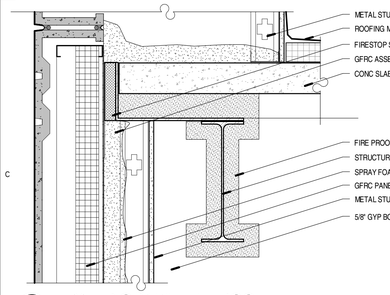

C1 EXTERIOR WALL AT ROOF
SCALE: 1 1/2" = 1'-0"

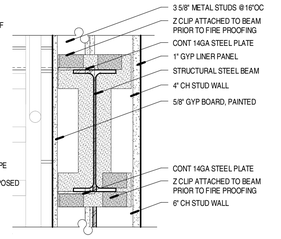

C2 BEAM AT ELEVATOR/STAIR WALL
SCALE: 1 1/2" = 1'-0"

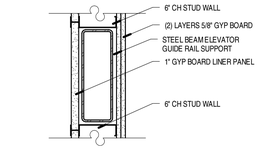

C3 BEAM WRAP AT ELEVATOR SHAFT
SCALE: 1 1/2" = 1'-0"

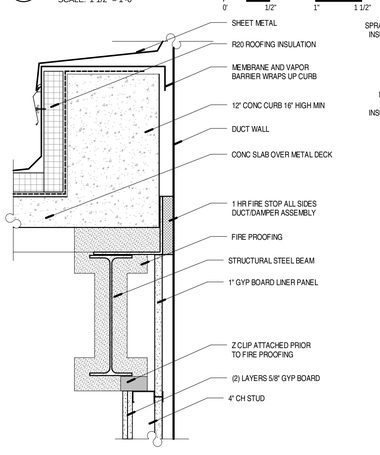

B3 ROOF TYPICAL SHAFTWALL AT ROOF EDGE
SCALE: 1 1/2" = 1'-0"

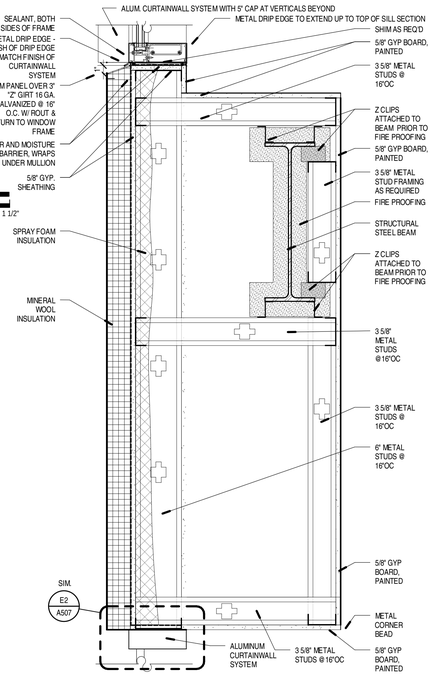

B4 SE STAIR SECTION DETAIL
SCALE: 1 1/2" = 1'-0"

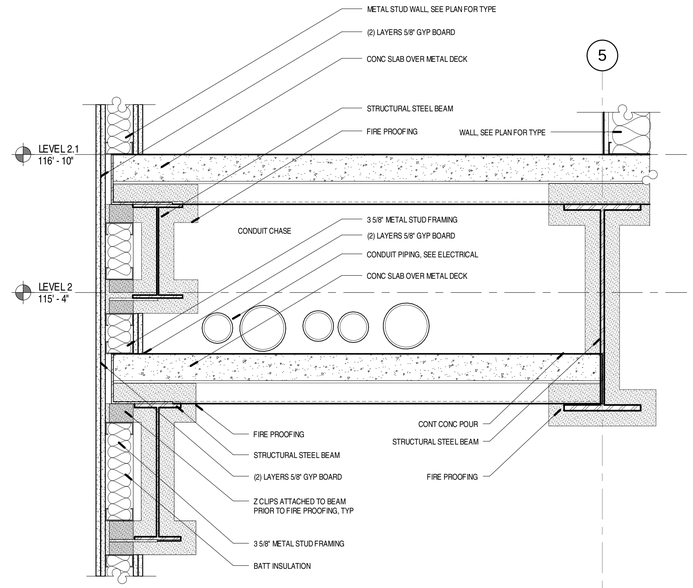

B5 CONDUIT CHASE FLOOR STEP
SCALE: 1 1/2" = 1'-0"

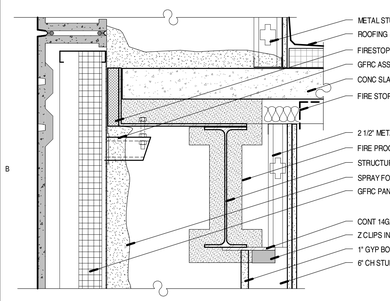

B1 ELEVATOR SHAFT AT ROOF
SCALE: 1 1/2" = 1'-0"

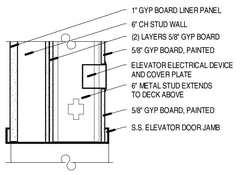

B2 ELEVATOR DOOR HEAD, JAMB SIM
SCALE: 1 1/2" = 1'-0"

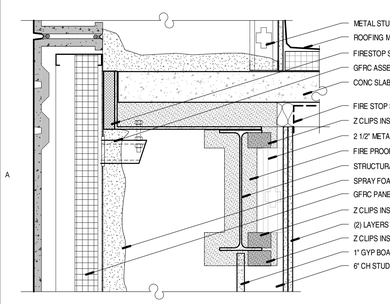

A1 STAIR SHAFT AT ROOF
SCALE: 1 1/2" = 1'-0"

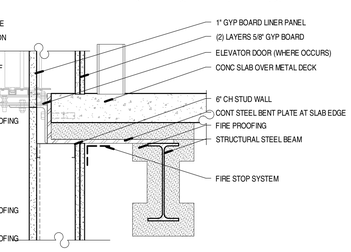

A2 ELEVATOR THRESHOLD SHAFT WALL
SCALE: 1 1/2" = 1'-0"

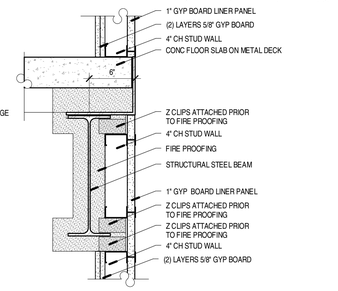

A3 TYPICAL SHAFT WALL AT SLAB EDGE
SCALE: 1 1/2" = 1'-0"

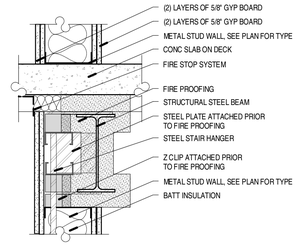

A4 STAIR HANGER AT CONT FLOOR
SCALE: 1 1/2" = 1'-0"

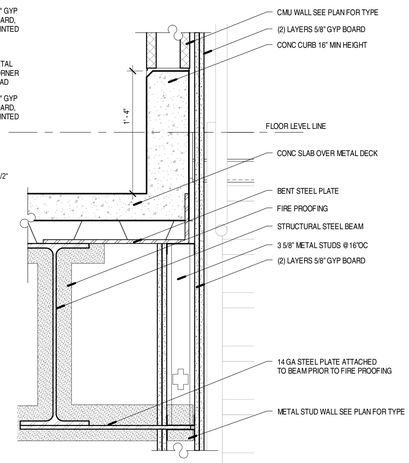

A5 FLOOR CURB WITH CMU
SCALE: 1 1/2" = 1'-0"

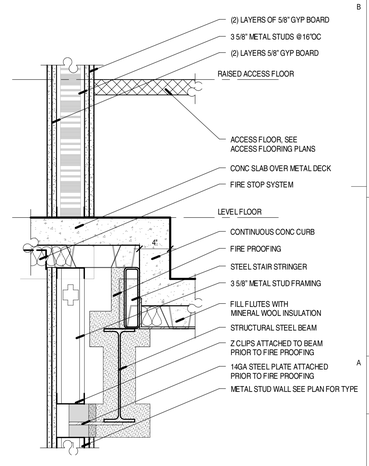

A6 W - BEAMWRAP
SCALE: 1 1/2" = 1'-0"

8/14/2013 4:33:22 PM

VCBO ARCHITECTURE
524 SOUTH 600 EAST
SALT LAKE CITY, UT 84102
Phone: (801) 575-8800
Fax: (801) 531-9850
Web: vcbo.com

LICENSED ARCHITECT No. 133012 BRENT R. TIPPETS 8-15-13 STATE OF UTAH

2nd District Juvenile Courthouse

Utah State Courts
08284150
165 West 20th Street, Ogden, Utah
BID DOCUMENTS

Rev #	Date	Description

Job # 12500
Date August 15, 2013
Owner # 08284150
Ins. #

DETAILS - BEAM FRAMING

A522

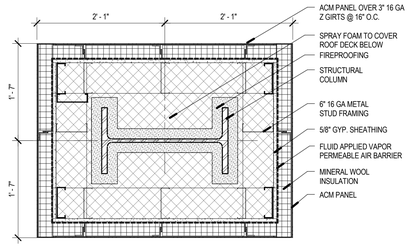

E5 ACM COLUMN WRAP

SCALE: 1" = 1'-0"

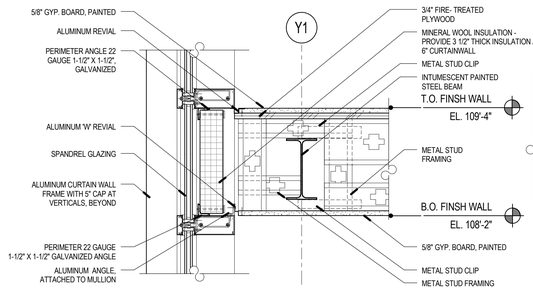

D5 NORTH ENTRANCE VESTIBULE DETAIL

SCALE: 1 1/2" = 1'-0"

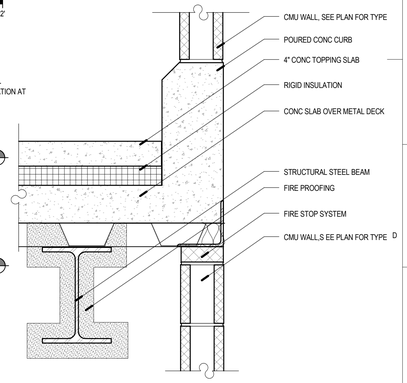

D6 CMU SHAFT WALL

SCALE: 1 1/2" = 1'-0"

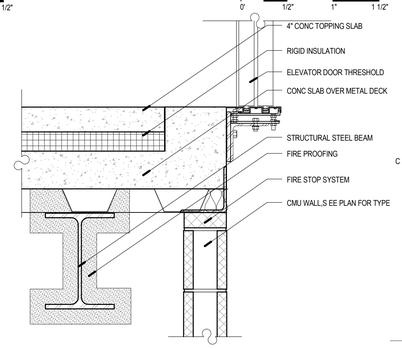

C6 CMU SHAFT @ ELEVATOR DOOR

SCALE: 1 1/2" = 1'-0"

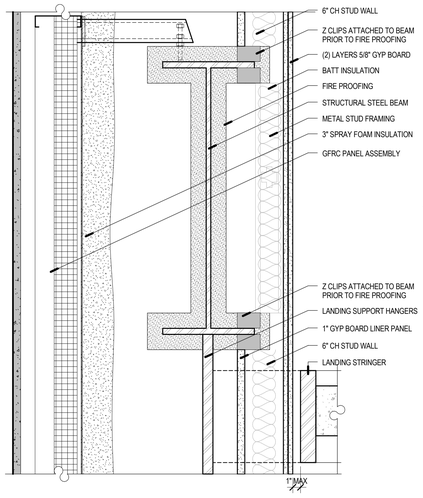

A6 D - STAIR SHAFT AT LANDING SUPPORT

SCALE: 1 1/2" = 1'-0"

VCBO ARCHITECTURE

VCBO ARCHITECTURE
524 SOUTH 600 EAST
SALT LAKE CITY, UT 84102
Phone: (801) 575-8800
Fax: (801) 531-9850
Web: vcbo.com

LICENSED ARCHITECT
No. 153912
BRENT R. TIPPETS
8-15-13
STATE OF UTAH

2nd District Juvenile Courthouse

Utah State Courts
08284150
165 West 20th Street, Ogden, Utah
BID DOCUMENTS

Rev #	Date	Description

Job # 12500
Date August 15, 2013
Owner # 08284150
Ins. #

DETAILS - BEAM FRAMING

A523

8/14/2013 2:33:59 PM

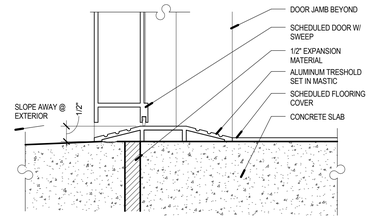

E5 TYP EXTERIOR THRESHOLD

SCALE: 6" = 1'-0"

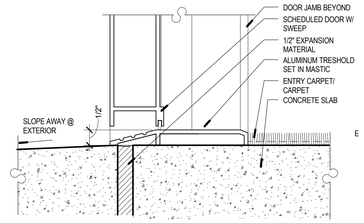

E6 TYP EXTERIOR THRESHOLD AT ENTRY CARPET/ CARPET

SCALE: 6" = 1'-0"

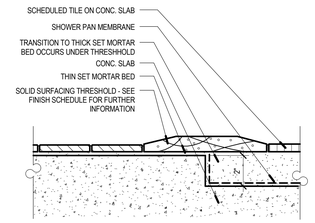

NOTE: THRESHOLD THICKNESS IS TO MATCH THE THICKNESS OF THE TILE SYSTEM. MORE THAN ONE THICKNESS MAY BE REQUIRED. VERIFY THE THICKNESS OF ALL TILE TYPES.

D5 TYP SHOWER THRESHOLD

SCALE: 3" = 1'-0"

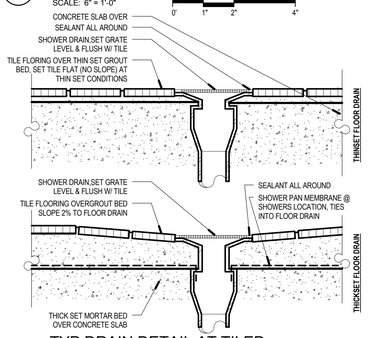

D6 TYP DRAIN DETAIL AT TILED FLOOR

SCALE: 3" = 1'-0"

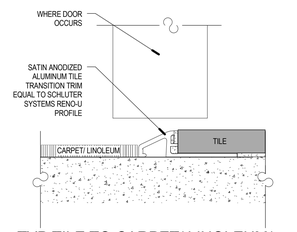

C4 TYP TILE TO CARPET/ LINOLEUM/ RUBBER TRANSITION

SCALE: 12" = 1'-0"

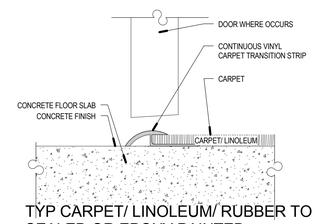

C5 TYP CARPET/ LINOLEUM/ RUBBER TO SEALED OR EPOXY PAINTED CONCRETE

SCALE: 6" = 1'-0"

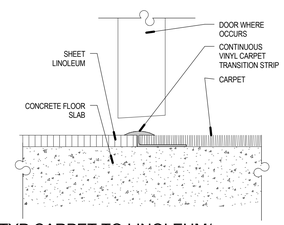

C6 TYP CARPET TO LINOLEUM/ RUBBER TRANSITION

SCALE: 6" = 1'-0"

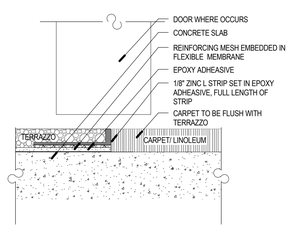

B4 TYP TERRAZZO TO CARPET/ LINOLEUM TRANSITION

SCALE: 12" = 1'-0"

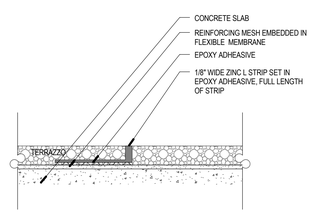

B5 TYP TERRAZZO JOINT

SCALE: 12" = 1'-0"

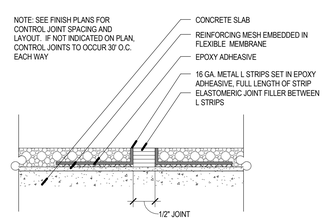

B6 TYP TERRAZZO CONTROL JOINT

SCALE: 12" = 1'-0"

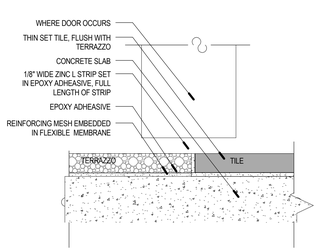

A4 TYP TILE TO TERRAZZO

SCALE: 12" = 1'-0"

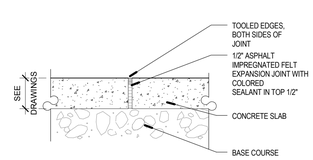

A5 CONSTRUCTION JOINT DETAIL

SCALE: 1 1/2" = 1'-0"

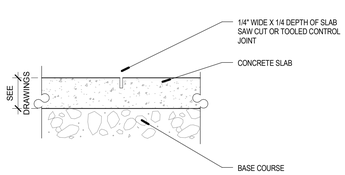

A6 TYP CONTROL JOINT

SCALE: 1 1/2" = 1'-0"

VCBO ARCHITECTURE

VCBO ARCHITECTURE
524 SOUTH 600 EAST
SALT LAKE CITY, UT 84102
Phone: (801) 575-8800
Fax: (801) 531-9850
Web: vcbo.com

2nd District Juvenile Courthouse

Utah State Courts
08284150
165 West 20th Street, Ogden, Utah
BID DOCUMENTS

Rev #	Date	Description

Job # 12500
Date August 15, 2013
Owner # 08284150
Ins. #

DETAILS - FLOOR

A524

8/14/2013 2:34:10 PM

DOOR AND FRAME SCHEDULE

DOOR NUMBER	DOOR						FRAME			HARDWARE GROUP	GLAZING TYPE	LABEL (MIN.)	NOTES	DOOR NUMBER
	SIZE													
	WIDTH	HEIGHT	THICK	ELEV. TYPE	MATERIAL	FACING/FINISH	ELEV. TYPE	MATERIAL	FINISH/FACING					
1101	36"	96"	1 3/4"	HA	HM	PAINTED	H1	HM	PAINTED	03		NOT RATED		1101
1103A	72"	95 1/2"	2"	AA	AL	ANODIZED	C1	AL	ANODIZED	A		NOT RATED		1103A
1103B	72"	95 1/2"	2"	AB	AL	ANODIZED	C2	AL	ANODIZED	C		NOT RATED		1103B
1105A	72"	95 1/2"	2"	AA	AL	ANODIZED	C3	AL	ANODIZED	B		NOT RATED		1105A
1105B	72"	95 1/2"	2"	AB	AL	ANODIZED	C5	AL	ANODIZED	D		NOT RATED		1105B
1106A	36"	95 1/2"	2"	AA	AL	ANODIZED	C4	AL	ANODIZED	E		NOT RATED		1106A
1106B	36"	95 1/2"	2"	AB	AL	ANODIZED	C5	AL	ANODIZED	F		NOT RATED		1106B
1108	36"	96"	1 3/4"	WA	WD	SEALED	H1	HM	PAINTED	21		NOT RATED		1108
1109	36"	96"	1 3/4"	WD	WD	SEALED	H1	HM	PAINTED	21		NOT RATED		1109
1110	36"	96"	1 3/4"	WD	WD	SEALED	H1	HM	PAINTED	21		NOT RATED		1110
1111A	36"	96"	2"	AB	AL	ANODIZED	S2	AL	ANODIZED	N		NOT RATED		1111A
1111B	36"	96"	1 3/4"	HA	HM	PAINTED	H1	HM	PAINTED	03		NOT RATED		1111B
1112	36"	96"	1 3/4"	WA	WD	SEALED	H1	HM	PAINTED	18		NOT RATED		1112
1113	36"	96"	1 3/4"	WA	WD	SEALED	H1	HM	PAINTED	28		NOT RATED		1113
1114	36"	96"	1 3/4"	WA	WD	SEALED	H1	HM	PAINTED	18		NOT RATED		1114
1115A	36"	96"	2"	AB	AL	ANODIZED	S2	AL	ANODIZED	J		NOT RATED	PROVIDE TYPE 'K' GLAZING IN DOOR LITE	1115A
1115B	36"	96"	1 3/4"	WA	WD	SEALED	H1	HM	PAINTED	20		NOT RATED		1115B
1116	36"	96"	1 3/4"	WD	WD	SEALED	H1	HM	PAINTED	21		NOT RATED		1116
1117	36"	96"	1 3/4"	WA	WD	SEALED	H1	HM	PAINTED	36		NOT RATED		1117
1118	36"	96"	1 3/4"	WD	WD	SEALED	H1	HM	PAINTED	21		NOT RATED		1118
1119	36"	96"	1 3/4"	WD	WD	SEALED	H1	HM	PAINTED	21		NOT RATED		1119
1120	36"	96"	1 3/4"	WD	WD	SEALED	H1	HM	PAINTED	21		NOT RATED		1120
1121A	72"	96"	1 3/4"	WA	WD	SEALED	H3	HM	PAINTED	29		NOT RATED		1121A
1121B	72"	96"	1 3/4"	HA	HM	PAINTED	H3	HM	PAINTED	07		NOT RATED		1121B
1122	36"	96"	1 3/4"	WA	WD	SEALED	H1	HM	PAINTED	22		NOT RATED		1122
1123A	36"	96"	1 3/4"	WB	WD	SEALED	H1	HM	PAINTED	10		90 MINUTES		1123A
1123B	36"	96"	1 3/4"	HA	HM	PAINTED	H1	HM	PAINTED	03		NOT RATED		1123B
1124A	36"	96"	1 3/4"	WA	WD	SEALED	H1	HM	PAINTED	35		NOT RATED		1124A
1124B	36"	96"	1 3/4"	WA	WD	SEALED	H1	HM	PAINTED	35		NOT RATED		1124B
1124C	36"	96"	1 3/4"	WA	WD	SEALED	H1	HM	PAINTED	30		NOT RATED		1124C
1124D	36"	96"	1 3/4"	WA	WD	SEALED	H1	HM	PAINTED	30		NOT RATED		1124D
1124E	296 1/8"	120"	4"	PD	AL	VINYL		AL	ANODIZED	02		NOT RATED		1124E
1125	36"	96"	1 3/4"	WA	WD	SEALED	H1	HM	PAINTED	34		NOT RATED		1125
1127A	36"	96"	1 3/4"	WA	WD	SEALED	H1	HM	PAINTED	37		NOT RATED		1127A
1127B	20"	96"	1 3/4"	WA	WD	SEALED	H1	HM	PAINTED	17		NOT RATED		1127B
1128A	36"	96"	1 3/4"	WA	WD	SEALED	H1	HM	PAINTED	37		NOT RATED		1128A
1128B	20"	96"	1 3/4"	WA	WD	SEALED	H1	HM	PAINTED	17		NOT RATED		1128B
1129	36"	96"	1 3/4"	WA	WD	SEALED	H1	HM	PAINTED	36		NOT RATED		1129
1130	36"	96"	1 3/4"	WA	WD	SEALED	H1	HM	PAINTED	36		NOT RATED		1130
1131	36"	96"	1 3/4"	WA	WD	SEALED	H1	HM	PAINTED	31		NOT RATED		1131
1132A	36"	96"	2"	AB	AL	ANODIZED	S7	AL	ANODIZED	P		NOT RATED		1132A
1132B	36"	95 1/2"	2"	AA	AL	ANODIZED	C10	AL	ANODIZED	H		NOT RATED		1132B
1134	36"	96"	1 3/4"	WA	WD	SEALED	H1	HM	PAINTED	30		NOT RATED		1134
1135	36"	84"	1 3/4"	HB	HM	PAINTED	H20	HM	PAINTED	11		90 MINUTES		1135
1136	36"	96"	1 3/4"	WA	WD	SEALED	H1	HM	PAINTED	35		NOT RATED		1136
1139	36"	96"	1 3/4"	WA	WD	SEALED	H1	HM	PAINTED	41		NOT RATED		1139
1140	36"	96"	1 3/4"	WA	WD	SEALED	H1	HM	PAINTED	41		NOT RATED		1140
1141	36"	96"	1 3/4"	WD	WD	SEALED	H1	HM	PAINTED	54		NOT RATED		1141
1142	36"	96"	1 3/4"	WA	WD	SEALED	H1	HM	PAINTED	31		NOT RATED		1142
1143A	36"	96"	1 3/4"	WA	WD	SEALED	H1	HM	PAINTED	23		NOT RATED		1143A
1143B	20"	78"	1 3/4"	WA	WD	SEALED	H15	HM	PAINTED	47		NOT RATED	DOOR HEIGHT LISTED UNDER DOOR SIZE IS HEIGHT TO T.O. DOOR A.F.F. - DOOR SLAB IS 3'-8" TALL	1143B
1144	36"	84"	1 3/4"	HB	HM	PAINTED	H20	HM	PAINTED	46		NOT RATED		1144
1145A	20"	84"	1 3/4"	HB	HM	PAINTED	H20	HM	PAINTED	46		NOT RATED		1145A
1145B	20"	84"	1 3/4"	HB	HM	PAINTED	H20	HM	PAINTED	46		NOT RATED		1145B
1146	38"	84"	1 3/4"	HE	HM	PAINTED	H19	HM	PAINTED	48		NOT RATED		1146
1147	38"	84"	1 3/4"	HE	HM	PAINTED	H19	HM	PAINTED	48		NOT RATED		1147
1148	36"	84"	1 3/4"	HE	HM	PAINTED	H6	HM	PAINTED	48		NOT RATED		1148
1149A	36"	84"	1 3/4"	HD	HM	PAINTED	H12	HM	PAINTED	49		NOT RATED		1149A
1149B	36"	84"	1 3/4"	HD	HM	PAINTED	H12	HM	PAINTED	50		NOT RATED		1149B
1150A	36"	84"	1 3/4"	HD	HM	PAINTED	H20	HM	PAINTED	50		NOT RATED		1150A
1150B	20"	84"	1 3/4"	HB	HM	PAINTED	H20	HM	PAINTED	46		NOT RATED		1150B
1150C	20"	84"	1 3/4"	HB	HM	PAINTED	H20	HM	PAINTED	46		NOT RATED		1150C
1151	36"	84"	1 3/4"	HE	HM	PAINTED	H8	HM	PAINTED	48		NOT RATED		1151
1152	36"	84"	1 3/4"	HE	HM	PAINTED	H6	HM	PAINTED	48		NOT RATED		1152
1153A	36"	84"	1 3/4"	HD	HM	PAINTED	H20	HM	PAINTED	50		NOT RATED		1153A
1153B	20"	84"	1 3/4"	HB	HM	PAINTED	H20	HM	PAINTED	46		NOT RATED		1153B
1154	36"	84"	1 3/4"	HE	HM	PAINTED	H5	HM	PAINTED	48		NOT RATED		1154
1155A	36"	96"	1 3/4"	HG	HM / WD	PAINTED / SEALED	H18	HM	PAINTED	24		NOT RATED	DOOR VENEERED ON COURTROOM / CORRIDOR SIDE	1155A
1155B	36"	84"	1 3/4"	HD	HM	PAINTED	H20	HM	PAINTED	50		NOT RATED		1155B
1156	36"	84"	1 3/4"	HB	HM	PAINTED	H20	HM	PAINTED	49		NOT RATED		1156
1157A	36"	84"	1 3/4"	HB	HM	PAINTED	H20	HM	PAINTED	50		NOT RATED	INSULATED DOOR	1157A
1157B	36"	84"	1 3/4"	HD	HM	PAINTED	H20	HM	PAINTED	50		NOT RATED		1157B
1158	36"	96"	1 3/4"	WA	WD	SEALED	H20	HM	PAINTED	38		NOT RATED		1158
1159A	36"	96"	1 3/4"	HF	HM	PAINTED	H1	HM	PAINTED	06		NOT RATED		1159A
1159B	144"	144"	2"	MD	AL	ANODIZED	-	-	-	01		NOT RATED		1159B
1159C	36"	96"	1 3/4"	HF	HM	PAINTED	H1	HM	PAINTED	06		NOT RATED		1159C
1159D	144"	144"	2"	MD	AL	ANODIZED	-	-	-	01		NOT RATED		1159D
1160	36"	84"	1 3/4"	HE	HM	PAINTED	H10	HM	PAINTED	48		NOT RATED		1160
1161A	36"	84"	1 3/4"	HB	HM	PAINTED	H20	HM	PAINTED	50		NOT RATED	INSULATED DOOR	1161A
1161B	36"	84"	1 3/4"	HD	HM	PAINTED	H20	HM	PAINTED	50		NOT RATED		1161B
1161C	20"	84"	1 3/4"	HB	HM	PAINTED	H20	HM	PAINTED	46		NOT RATED		1161C
1162	36"	84"	1 3/4"	HE	HM	PAINTED	H9	HM	PAINTED	48		NOT RATED		1162
1163	36"	96"	1 3/4"	HA	HM	PAINTED	H1	HM	PAINTED	05		NOT RATED		1163
1164A	48"	96"	1 3/4"	HA	HM	PAINTED	H1	HM	PAINTED	04		NOT RATED		1164A
1164B	36"	96"	1 3/4"	HF	HM	PAINTED	H1	HM	PAINTED	12		NOT RATED		1164B
1165	36"	96"	1 3/4"	HF	HM	PAINTED	H1	HM	PAINTED	03		NOT RATED		1165
1169	36"	96"	1 3/4"	WA	WD	SEALED	H1	HM	PAINTED	28		NOT RATED		1169
1171	36"	96"	1 3/4"	HA	HM	PAINTED	H1	HM	PAINTED	03		NOT RATED		1171
1172	36"	96"	1 3/4"	WD	WD	SEALED	H1	HM	PAINTED	54		NOT RATED		1172
1173	36"	96"	1 3/4"	WD	WD	SEALED	H1	HM	PAINTED	54		NOT RATED		1173
1174	36"	96"	1 3/4"	WD	WD	SEALED	H1	HM	PAINTED	54		NOT RATED		1174
1175	36"	96"	1 3/4"	WD	WD	SEALED	H1	HM	PAINTED	54		NOT RATED		1175
1176	36"	96"	1 3/4"	WD	WD	SEALED	H1	HM	PAINTED	54		NOT RATED		1176
1177	36"	96"	1 3/4"	WD	WD	SEALED	H1	HM	PAINTED	54		NOT RATED		1177
1178	36"	96"	1 3/4"	WD	WD	SEALED	H1	HM	PAINTED	54		NOT RATED		1178
1179	36"	96"	1 3/4"	WD	WD	SEALED	H1	HM	PAINTED	54		NOT RATED		1179
1180	36"	96"	1 3/4"	WD	WD	SEALED	H1	HM	PAINTED	54		NOT RATED		1180
1181	36"	96"	1 3/4"	WD	WD	SEALED	H1	HM	PAINTED	54		NOT RATED		1181
1182	36"	96"	1 3/4"	WD	WD	SEALED	H1	HM	PAINTED	54		NOT RATED		1182
1184	36"	96"	1 3/4"	WA	WD	SEALED	H1	HM	PAINTED	20		NOT RATED		1184
1185	36"	96"	1 3/4"	WA	WD	SEALED	H1	HM	PAINTED	23		NOT RATED		1185
1186	36"	96"	1 3/4"	WA	WD	SEALED	H1	HM	PAINTED	39		NOT RATED		1186
1187	36"	96"	1 3/4"	WA	WD	SEALED	H1	HM	PAINTED	31		NOT RATED		1187
1188A	36"	96"	1 3/4"	WD	WD	SEALED	H1	HM	PAINTED	21		NOT RATED		1188A
1188B	36"	96"	1 3/4"	WD	WD	SEALED	H1	HM	PAINTED	21		NOT RATED		1188B
1190A	36"	96"	2"	AB	AL	ANODIZED	S3	AL	ANODIZED	K		NOT RATED		1190A
1190B	36"	96"	1 3/4"	WA	WD	SEALED	H1	HM	PAINTED	20		NOT RATED		1190B
1191	36"	96"	1 3/4"	WA	WD	SEALED	H17	HM	PAINTED	53		NOT RATED		1191

DOOR AND FRAME SCHEDULE

DOOR NUMBER	DOOR						FRAME			HARDWARE GROUP	GLAZING TYPE	LABEL (MIN.)	NOTES	DOOR NUMBER
	SIZE													
	WIDTH	HEIGHT	THICK	ELEV. TYPE	MATERIAL	FACING/FINISH	ELEV. TYPE	MATERIAL	FINISH/FACING					
1192	36"	96"	1 3/4"	WA	WD	SEALED	H17	HM	PAINTED	53		NOT RATED		1192
1193	36"	96"	1 3/4"	WA	WD	SEALED	H17	HM	PAINTED	53		NOT RATED		1193
1195	36"	96"	1 3/4"	WA	WD	SEALED	H1	HM	PAINTED	19		NOT RATED		1195
1196	36"	96"	2"	AA	AL	ANODIZED	C22	AL	ANODIZED	H		NOT RATED		1196
1196A	36"	96"	1 3/4"	WA	WD	SEALED	H1	HM	PAINTED	28		NOT RATED		1196A
1198	36"	96"	2"	AA	AL	ANODIZED	C13	AL	ANODIZED	G		NOT RATED		1198
1198A	36"	96"	2"	AB	AL	ANODIZED	S1	AL	ANODIZED	R		NOT RATED		1198A
1198B	36"	96"	2"	AB	AL	ANODIZED	S1	AL	ANODIZED	R		NOT RATED		1198B
1199	36"	96"	1 3/4"	WA	WD	SEALED	H1	HM	PAINTED	30		NOT RATED		1199
1201	36"	96"	1 3/4"	WA	WD	SEALED	H1	HM	PAINTED	23		NOT RATED		1201
2101	36"	96"	1 3/4"	WB	WD	SEALED	H1	HM	PAINTED	13		90 MINUTES		2101
2103	36"	96"	1 3/4"	WA	WD	SEALED	H1	HM	PAINTED	38		NOT RATED		2103
2104A	36"	96"	1 3/4"	WB	WD	SEALED	H1	HM	PAINTED	14		90 MINUTES		2104A
2104B	36"	96"	1 3/4"	WA	WD	SEALED	H1	HM	PAINTED	43		NOT RATED	FRAME THROAT TO ACCOMMODATE FINISH MATERIALS	2104B
2105	36"	96"	1 3/4"	WA	WD	SEALED	H1	HM	PAINTED	23		NOT RATED		2105
2106	36"	96"	1 3/4"	WD	WD	SEALED	H1	HM	PAINTED	21		NOT RATED		2106
2107A	72"	96"	1 3/4"	WD	WD	SEALED	H1	HM	PAINTED	25		NOT RATED		2107A
2107B	72"	96"	1 3/4"	WC	WD	SEALED	H3	HM	PAINTED	44		NOT RATED	FRAME THROAT TO ACCOMMODATE FINISH MATERIALS	2107B
2108	36"	96"	1 3/4"	WD	WD	SEALED	H1	HM	PAINTED	27		NOT RATED		2108
2109	36"	96"	1 3/4"	WA	WD	SEALED	H1	HM	PAINTED	32		NOT RATED	FRAME THROAT TO ACCOMMODATE FINISH MATERIALS	2109
2110	36"	96"	1 3/4"	WA	WD	SEALED	H1	HM	PAINTED	32		NOT RATED		2110
2111	36"	96"	1 3/4"	WA	WD	SEALED	H1	HM	PAINTED	40		NOT RATED		2111
2112	36"	96"	1 3/4"	WD	WD	SEALED	H1	HM	PAINTED	26		NOT RATED		2112
2113	36"	96"	1 3/4"	WA	WD	SEALED	H1	HM	PAINTED	32		NOT RATED		2113
2114	36"	96"	1 3/4"	WB	WD	SEALED	H1	HM	PAINTED	15		90 MINUTES		2114
2115	36"	96"	1 3/4"	WA	WD	SEALED	H17	HM	PAINTED	53		NOT RATED		2115
2116	36"	96"	1 3/4"	WA	WD	SEALED	H1	HM	PAINTED	31		NOT RATED		2116
2117	36"	96"	1 3/4"	WA	WD	SEALED	H1	HM	PAINTED	36		NOT RATED		2117
2120	36"	96"	1 3/4"	WA	WD	SEALED	H1	HM	PAINTED	42		NOT RATED		2120
2121	36"	96"	1 3/4"	WA	WD	SEALED	H1	HM	PAINTED	28		NOT RATED		2121
2122A	36"	84"	1 3/4"	HB	HM	PAINTED	H20	HM	PAINTED	11		90 MINUTES		2122A
2122B	26"	52"	1 3/4"	HB	HM	PAINTED	H21	HM	PAINTED	16		90 MINUTES		2122B
2123	36"	96"	1 3/4"	WA	WD	SEALED	H1	HM	PAINTED	32		NOT RATED		2123
2124	36"	96"	2"	AB	AL	ANODIZED	S9	AL	ANODIZED	S		NOT RATED		2124
2125	36"	96"	1 3/4"	WA	WD	SEALED	H1	HM	PAINTED	42		NOT RATED		2125
2126	36"	96"	1 3/4"	WA	WD	SEALED	H1	HM	PAINTED	19		NOT RATED		2126
2128A	36"	96"	1 3/4"	HF	HM	PAINTED	H1	HM	PAINTED	20		NOT RATED		2128A
2128B	20"	96"	1 3/4"	WA	WD	SEALED	H1	HM	PAINTED	17		NOT RATED		2128B
2129	36"	96"	1 3/4"	WA	WD	SEALED	H1	HM	PAINTED	41		NOT RATED		2129
2130	36"	96"	1 3/4"	WA	WD	SEALED	H1	HM	PAINTED	41		NOT RATED		2130
2131A	36"	96"	2"	AB	AL	ANODIZED	S8	AL	ANODIZED	T		NOT RATED		2131A
2131B	36"	96"	2"	AB	AL	ANODIZED	S8	AL	ANODIZED	T		NOT RATED		2131B
2131C	36"	96"	2"	AA	AL	ANODIZED	C31	AL	ANODIZED	M		NOT RATED		2131C
2134	36"	96"	1 3/4"	WA	WD	SEALED	H17	HM	PAINTED	53		NOT RATED		2134
2135	36"	96"	1 3/4"	WA	WD	SEALED	H17	HM	PAINTED	36		NOT RATED		2135
2136	36"	96"	1 3/4"	WA	WD	SEALED	H1	HM	PAINTED	23		NOT RATED		2136
2137	36"	96"	1 3/4"	WA	WD	SEALED	H1	HM	PAINTED	40		NOT RATED		2137
2138	36"	96"	1 3/4"	WD	WD	SEALED	H1	HM	PAINTED	26		NOT RATED		2138
2139	36"	96"	1 3/4"	WB	WD	SEALED	H1	HM	PAINTED	15		90 MINUTES		2139
2140	36"	96"	1 3/4"	WA	WD	SEALED	H1	HM	PAINTED	32		NOT RATED	FRAME THROAT TO ACCOMMODATE FINISH MATERIALS	2140
2141	36"	96"	1 3/4"	WD	WD	SEALED	H1	HM	PAINTED	27		NOT RATED		2141
2142	36"	96"	1 3/4"	WB	WD	SEALED	H1	HM	PAINTED	13		90 MINUTES		2142
2143	36"	96"	1 3/4"	WA	WD	SEALED	H1	HM	PAINTED	42		NOT RATED		2143
2144	36"	96"	1 3/4"	WA	WD	SEALED	H1	HM	PAINTED	42		NOT RATED		2144
2144A	20"	96"	1 3/4"	WA	WD	SEALED	H1	HM	PAINTED	28		NOT RATED		2144A
2145A	231 1/8"	166"		FD			-			02		90 MINUTES	14'-10 1/8" OPENING WIDTH - F.V.	2145A
2145B	24"	157"	1 3/4"	HF	HM	PAINTED	-	-	-	45		NOT RATED	POCKET DOOR FOR ACCORDION FIRE DOOR	2145B
2146A	36"	96"	1 3/4"	WA	WD	SEALED	H1	HM	PAINTED	33		NOT RATED		2146A
2146B	36"	96"	1 3/4"	WA	WD	SEALED	H1	HM	PAINTED	43		NOT RATED	FRAME THROAT TO ACCOMMODATE FINISH MATERIALS	2146B
2147	36"	96"	1 3/4"	WA	WD	SEALED	H1	HM	PAINTED	31		NOT RATED		2147
2148	36"	96"	1 3/4"	WD	WD	SEALED	H1	HM	PAINTED	21		NOT RATED		2148
2149A	72"	96"	1 3/4"	WD	WD	SEALED	H1	HM	PAINTED	25		NOT RATED		2149A
2149B	72"	96"	1 3/4"	WC	WD	SEALED	H3	HM	PAINTED	44		NOT RATED	FRAME THROAT TO ACCOMMODATE FINISH MATERIALS	2149B
2150A	36"	84"	1 3/4"	HD	HM	PAINTED	H20	HM	PAINTED	51		NOT RATED		2150A
2150B	36"	96"	1 3/4"	HG	HM / WD	PAINTED / SEALED	H18	HM	PAINTED	52		NOT RATED	DOOR VENEERED ON COURTROOM / CORRIDOR SIDE	2150B
2151	36"	84"	1 3/4"	HE	HM	PAINTED	H20	HM	PAINTED	48		NOT RATED		2151
2152	36"	84"	1 3/4"	HE	HM	PAINTED	H20	HM	PAINTED	48		NOT RATED		2152
2153A	36"	96"	1 3/4"	WD	WD	SEALED	H1	HM	PAINTED	21		NOT RATED		2153A
2153B	20"	78"	1 3/4"	WA	WD	SEALED	H15	HM	PAINTED	47		NOT RATED	DOOR HEIGHT LISTED UNDER DOOR SIZE IS HEIGHT TO T.O. DOOR A.F.F. - DOOR SLAB IS 3'-8" TALL	2153B
2154A	20"	84"	1 3/4"	HB	HM	PAINTED	H20	HM	PAINTED	46		NOT RATED		2154A
2154B	20"	84"	1 3/4"	HB	HM	PAINTED	H20	HM	PAINTED	46		NOT RATED		2154B
2155A	36"	84"	1 3/4"	HD	HM	PAINTED	H20	HM	PAINTED	51		NOT RATED		2155A
2155B	36"	96"	1 3/4"	HG	HM / WD	PAINTED / SEALED	H18	HM	PAINTED	52		NOT RATED	DOOR VENEERED ON COURTROOM / CORRIDOR SIDE	2155B
2156	36"	84"	1 3/4"	HE	HM	PAINTED	H20	HM	PAINTED	48		NOT RATED		2156
2157	36"	84"	1 3/4"	HE	HM	PAINTED	H20	HM	PAINTED	48		NOT RATED		2157
3101	36"	96"	1 3/4"	WB	WD	SEALED	H1	HM	PAINTED	13		90 MINUTES		3101
3103	36"	96"	1 3/4"	WA	WD	SEALED	H1	HM	PAINTED	28		NOT RATED		3103
3104A	36"	96"	1 3/4"	WA	WD	SEALED	H1	HM	PAINTED	33		NOT RATED		3104A
3104B	36"	96"	1 3/4"	WA	WD	SEALED	H1	HM	PAINTED	43		NOT RATED	FRAME THROAT TO ACCOMMODATE FINISH MATERIALS	3104B
3105	36"	96"	1 3/4"	WA	WD	SEALED	H1	HM	PAINTED	23		NOT RATED		3105
3106	36"	96"	1 3/4"	WD	WD	SEALED	H1	HM	PAINTED	21		NOT RATED		3106
3107A	72"	96"	1 3/4"	WD	WD	SEALED	H1	HM	PAINTED	25		NOT RATED		3107A
3107B	72"	96"	1 3/4"	WC	WD	SEALED	H3	HM	PAINTED	44		NOT RATED	FRAME THROAT TO ACCOMMODATE FINISH MATERIALS	3107B
3108	36"	96"	1 3/4"	WD	WD	SEALED	H1	HM	PAINTED	27		NOT RATED		3108
3109	36"	96"	1 3/4"	WA	WD	SEALED	H1	HM	PAINTED	32		NOT RATED	FRAME THROAT TO ACCOMMODATE FINISH MATERIALS	3109
3110	36"	96"	1 3/4"	WA	WD	SEALED	H1	HM	PAINTED	32		NOT RATED		3110
3111	36"	96"	1 3/4"	WA	WD	SEALED	H1	HM	PAINTED	40		NOT RATED		3111
3112	36"	96"	1 3/4"	WD	WD	SEALED	H1	HM	PAINTED	26		NOT RATED		3112
3113	36"	96"	1 3/4"	WA	WD	SEALED	H1	HM	PAINTED	32		NOT RATED		3113
3114	36"	96"	1 3/4"	WB	WD	SEALED	H1	HM	PAINTED	15		90 MINUTES		3114
3115	36"	96"	1 3/4"	WA	WD	SEALED	H17	HM	PAINTED	53		NOT RATED		3115
3116	36"	96"	1 3/4"	WA	WD	SEALED	H17	HM	PAINTED	36		NOT RATED		3116
3117	36"	96"	1 3/4"	WA	WD	SEALED	H17	HM	PAINTED	36		NOT RATED		3117
3120	36"	96"	1 3/4"	WA	WD	SEALED	H1	HM	PAINTED	31		NOT RATED		3120
3121	36"	96"	1 3/4"	WA	WD	SEALED	H1	HM	PAINTED	31		NOT RATED		3121
3122A	36"	84"	1 3/4"	HB	HM	PAINTED	H20	HM	PAINTED	11		90 MINUTES		3122A
3122B	26"	52"	1 3/4"	HB	HM	PAINTED	H21	HM	PAINTED	16		90 MINUTES		3122B
3123	36"	96"	1 3/4"	WA	WD	SEALED	H1	HM	PAINTED	28		NOT RATED		3123
3125	36"	96"	1 3/4"	WA	WD	SEALED	H1	HM	PAINTED	53		NOT RATED		3125
3127	36"	96"	1 3/4"	WA	WD	SEALED	H1	HM	PAINTED	41		NOT RATED		3127
3128	36"	96"	1 3/4"	WA	WD	SEALED	H1	HM	PAINTED	41		NOT RATED		3128
3129	36"	96"	1 3/4"	WA	WD	SEALED	H1	HM	PAINTED	23		NOT RATED		3129
3130	36"	96"	1 3/4"	WA	WD	SEALED	H17	HM	PAINTED	53		NOT RATED		3130
3131	36"	96"	1 3/4"	WA	WD	SEALED	H17	HM	PAINTED	36		NOT RATED		3131
3132	36"	96"	1 3/4"	WA	WD	SEALED	H1	HM	PAINTED	40		NOT RATED		3132
3134	36"	96"	1 3/4"	WA	WD	SEALED	H17	HM	PAINTED	53		NOT RATED		3134
3135	36"	96"	1 3/4"	WA	WD	SEALED	H17	HM	PAINTED	53		NOT RATED		3135

DOOR AND FRAME SCHEDULE

DOOR NUMBER	DOOR						FRAME			HARDWARE GROUP	GLAZING TYPE	LABEL (MIN.)	NOTES	DOOR NUMBER
	SIZE													
	WIDTH	HEIGHT	THICK	ELEV. TYPE	MATERIAL	FACING/FINISH	ELEV. TYPE	MATERIAL	FINISH/FACING					
3136	36"	96"	1 3/4"	WA	WD	SEALED	H1	HM	PAINTED	23		NOT RATED		3136
3137	36"	96"	1 3/4"	WA	WD	SEALED	H1	HM	PAINTED	40		NOT RATED		3137
3138	36"	96"	1 3/4"	WD	WD	SEALED	H1	HM	PAINTED	26		NOT RATED		3138
3139	36"	96"	1 3/4"	WB	WD	SEALED	H1	HM	PAINTED	15		90 MINUTES		3139
3140	36"	96"	1 3/4"	WA	WD	SEALED	H1	HM	PAINTED	32		NOT RATED	FRAME THROAT TO ACCOMMODATE FINISH MATERIALS	3140
3141	36"	96"	1 3/4"	WD	WD	SEALED	H1	HM	PAINTED	27		NOT RATED		3141
3142	36"	96"	1 3/4"	WB	WD	SEALED	H1	HM	PAINTED	13		90 MINUTES		3142
3143	36"	96"	1 3/4"	WA	WD	SEALED	H1	HM	PAINTED	42		NOT RATED		3143
3144	36"	96"	1 3/4"	WA	WD	SEALED	H1	HM	PAINTED	42		NOT RATED		3144
3144A	20"	96"	1 3/4"	WA	WD	SEALED	H1	HM	PAINTED	32		NOT RATED		3144A
3146A	36"	96"	1 3/4"	WA	WD	SEALED	H1	HM	PAINTED	33		NOT RATED		3146A
3146B	36"	96"	1 3/4"	WA	WD	SEALED	H1	HM	PAINTED	43		NOT RATED	FRAME THROAT TO ACCOMMODATE FINISH MATERIALS	3146B
3147	36"	96"	1 3/4"	WA	WD	SEALED	H1	HM	PAINTED	31		NOT RATED		3147
3148	36"	96"	1 3/4"	WD	WD	SEALED	H1	HM	PAINTED	21		NOT RATED		3148
3149A	72"	96"	1 3/4"	WD	WD	SEALED	H1	HM	PAINTED	25		NOT RATED		3149A
3149B	72"	96"	1 3/4"	WC	WD	SEALED	H3	HM	PAINTED	44		NOT RATED	FRAME THROAT TO ACCOMMODATE FINISH MATERIALS	3149B
3150A	36"	84"	1 3/4"	HD	HM	PAINTED	H20	HM	PAINTED	52		NOT RATED		3150A
3150B	36"	96"	1 3/4"	HG	HM / WD	PAINTED / SEALED	H18	HM	PAINTED	51		NOT RATED	DOOR VENEERED ON COURTROOM / CORRIDOR SIDE	3150B
3151	36"	84"	1 3/4"	HE	HM	PAINTED	H20	HM	PAINTED	48		NOT RATED		3151
3152	36"	84"	1 3/4"	HE	HM	PAINTED	H20	HM	PAINTED	48		NOT RATED		3152
3153A	36"	96"	1 3/4"	WD	WD	SEALED	H1	HM	PAINTED	21		NOT RATED		3153A
3153B	20"	78"	1 3/4"	WA	WD	SEALED	H15	HM	PAINTED	47		NOT RATED	DOOR HEIGHT LISTED UNDER DOOR SIZE IS HEIGHT TO T.O. DOOR A.F.F. - DOOR SLAB IS 3'-8" TALL	3153B
3154A	20"	84"	1 3/4"	HB	HM	PAINTED	H20	HM	PAINTED	46		NOT RATED		3154A
3154B	20"	84"	1 3/4"	HB	HM	PAINTED	H20	HM	PAINTED	46		NOT RATED		3154B
3155A	36"	84"	1 3/4"	HD	HM	PAINTED	H20	HM	PAINTED	51		NOT RATED		3155A
3155B	36"	96"	1 3/4"	HG	HM / WD	PAINTED / SEALED	H18	HM	PAINTED	52		NOT RATED	DOOR VENEERED ON COURTROOM / CORRIDOR SIDE	3155B
3156	36"	84"	1 3/4"	HE	HM	PAINTED	H20	HM	PAINTED	48		NOT RATED		3156
3157	36"	84"	1 3/4"	HE	HM	PAINTED	H20	HM	PAINTED	48		NOT RATED		3157
4101	36"	96"	1 3/4"	WB	WD	SEALED	H1	HM	PAINTED	13		90 MINUTES		4101
4103	36"	96"	1 3/4"	WA	WD	SEALED	H1	HM	PAINTED	38		NOT RATED		4103
4104A	36"	96"	1 3/4"	WA	WD	SEALED	H1	HM	PAINTED	33		NOT RATED		4104A
4105	36"	96"	1 3/4"	WA	WD	SEALED	H1	HM	PAINTED	23		NOT RATED		4105
4107A	72"	96"	1 3/4"	WD	WD	SEALED	H1	HM	PAINTED	25		NOT RATED		4107A
4114	36"	96"	1 3/4"	WB	WD	SEALED	H1	HM	PAINTED	15		90 MINUTES		4114
4116	36"	84"	2"	AA	AL	ANODIZED	C37	AL	ANODIZED	U		NOT RATED		4116
4120	36"	96"	1 3/4"	WA	WD	SEALED	H1	HM	PAINTED	31		NOT RATED		4120
4121	36"	96"	1 3/4"	WA	WD	SEALED	H1	HM	PAINTED	28		NOT RATED		4121
4122A	36"	84"	1 3/4"	HB	HM	PAINTED	H20	HM	PAINTED	11		90 MINUTES		4122A
4122B	26"	52"	1 3/4"	HB	HM	PAINTED	H21	HM	PAINTED	16		90 MINUTES		4122B
4135	36"	96"	1 3/4"	WB	WD	SEALED	H1	HM	PAINTED	15		90 MINUTES		4135
4138	36"	96"	1 3/4"	WB	WD	SEALED	H1	HM	PAINTED	13		90 MINUTES		4138
4139	36"	96"	1 3/4"	WA	WD	SEALED	H1	HM	PAINTED	42		NOT RATED		4139
4140	36"	96"	1 3/4"	WA	WD	SEALED	H1	HM	PAINTED	42		NOT RATED		4140
4140A	20"	96"	1 3/4"	WA	WD	SEALED	H1	HM	PAINTED	32		NOT RATED		4140A
4141A	36"	96"	1 3/4"	WA	WD	SEALED	H1	HM	PAINTED	33		NOT RATED		4141A
4142	36"	96"	1 3/4"	WA	WD	SEALED	H1	HM	PAINTED	31		NOT RATED		4142
4144A	72"	96"	1 3/4"	WD	WD	SEALED	H1	HM	PAINTED	25		NOT RATED		4144A
4145	36"	96"	2"	AB	AL	ANODIZED		AL	ANODIZED	N		NOT RATED		4145
4149A	36"	96"	1 3/4"	WD	WD	SEALED	H1	HM	PAINTED	21		NOT RATED		4149A
5101	36"	96"	1 3/4"	WB	WD	SEALED	H1	HM	PAINTED	13		90 MINUTES		5101
5103	36"	96"	1 3/4"	WA	WD	SEALED	H1	HM	PAINTED	38		NOT RATED		5103
5104A	36"	96"	1 3/4"	WA	WD	SEALED	H1	HM	PAINTED	33		NOT RATED		5104A
5104B	36"	96"	1 3/4"	WA	WD	SEALED	H1	HM	PAINTED	43		NOT RATED	FRAME THROAT TO ACCOMMODATE FINISH MATERIALS	5104B
5105	36"	96"	1 3/4"	WB	WD	SEALED	H1	HM	PAINTED	08		90 MINUTES		5105
5106	36"	96"	1 3/4"	WD	WD	SEALED	H1	HM	PAINTED	21		NOT RATED		5106
5107A	72"	96"	1 3/4"	WD	WD	SEALED	H1	HM	PAINTED	25		NOT RATED		5107A
5107B	72"	96"	1 3/4"	WC	WD	SEALED	H3	HM	PAINTED	44		NOT RATED	FRAME THROAT TO ACCOMMODATE FINISH MATERIALS	5107B
5108	36"	96"	1 3/4"	WD	WD	SEALED	H1	HM	PAINTED	27		NOT RATED		5108
5109	36"	96"	1 3/4"	WA	WD	SEALED	H1	HM	PAINTED	32		NOT RATED	FRAME THROAT TO ACCOMMODATE FINISH MATERIALS	5109
5110	36"	96"	1 3/4"	WA	WD	SEALED	H1	HM	PAINTED	32		NOT RATED		5110
5111	36"	96"	1 3/4"	WA	WD	SEALED	H1	HM	PAINTED	40		NOT RATED		5111
5112	36"	96"	1 3/4"	WD	WD	SEALED	H1	HM	PAINTED	26		NOT RATED		5112
5113	36"	96"	1 3/4"	WA	WD	SEALED	H1	HM	PAINTED	32		NOT RATED		5113
5114	36"	96"	1 3/4"	WB	WD	SEALED	H1	HM	PAINTED	15		90 MINUTES		5114
5115	36"	96"	1 3/4"	WA	WD	SEALED	H17	HM	PAINTED	53		NOT RATED		5115
5118	36"	96"	1 3/4"	WA	WD	SEALED	H1	HM	PAINTED	29		NOT RATED		5118
5120	36"	96"	1 3/4"	WA	WD	SEALED	H1	HM	PAINTED	29		NOT RATED		5120
5121	36"	96"	1 3/4"	WA	WD	SEALED	H1	HM	PAINTED	32		NOT RATED		5121
5122A	36"	84"	1 3/4"	HB	HM	PAINTED	H20	HM	PAINTED	11		90 MINUTES		5122A
5122B	26"	52"	1 3/4"	HB	HM	PAINTED	H21	HM	PAINTED	16		90 MINUTES		5122B
5124A	20"	96"	1 3/4"	WA	WD	SEALED	H1	HM	PAINTED	17		NOT RATED		5124A
5126	36"	96"	1 3/4"	WD	WD	SEALED	H1	HM	PAINTED	21		NOT RATED		5126
5127	36"	96"	1 3/4"	WB	WD	SEALED	H1	HM	PAINTED	08		90 MINUTES		5127
5128	36"	96"	1 3/4"	WA	WD	SEALED	H1	HM	PAINTED	41		NOT RATED		5128
5129	36"	96"	1 3/4"	WA	WD	SEALED	H1	HM	PAINTED	41		NOT RATED		5129
5130	36"	96"	1 3/4"	WA	WD	SEALED	H17	HM	PAINTED	53		NOT RATED		5130
5131	36"	96"	1 3/4"	WA	WD	SEALED	H17	HM	PAINTED	36		NOT RATED		5131
5132	36"	96"	1 3/4"	WA	WD	SEALED	H1	HM	PAINTED	23		NOT RATED		5132
5133	36"	96"	1 3/4"	WA	WD	SEALED	H1	HM	PAINTED	40		NOT RATED		5133
5134	36"	96"	1 3/4"	WD	WD	SEALED	H1	HM	PAINTED	26		NOT RATED		5134
5135	36"	96"	1 3/4"	WB	WD	SEALED	H1	HM	PAINTED	15		90 MINUTES		5135
5136	36"	96"	1 3/4"	WA	WD	SEALED	H1	HM	PAINTED	32		NOT RATED	FRAME THROAT TO ACCOMMODATE FINISH MATERIALS	5136
5137	36"	96"	1 3/4"	WD	WD	SEALED	H1	HM	PAINTED	27		NOT RATED		5137
5138	36"	96"	1 3/4"	WB	WD	SEALED	H1	HM	PAINTED	13		90 MINUTES		5138
5139	36"	96"	1 3/4"	WA	WD	SEALED	H1	HM	PAINTED	42		NOT RATED		5139
5140	36"	96"	1 3/4"	WA	WD	SEALED	H1	HM	PAINTED	42		NOT RATED		5140
5140A	20"	96"	1 3/4"	WA	WD	SEALED	H1	HM	PAINTED	32		NOT RATED		5140A
5141A	36"	96"	1 3/4"	WA	WD	SEALED	H1	HM	PAINTED	33		NOT RATED		5141A
5141B	36"	96"	1 3/4"	WA	WD	SEALED	H1	HM	PAINTED	43		NOT RATED	FRAME THROAT TO ACCOMMODATE FINISH MATERIALS	5141B
5142	36"	96"	1 3/4"	WA	WD	SEALED	H1	HM	PAINTED	32		NOT RATED		5142
5143	36"	96"	1 3/4"	WD	WD	SEALED	H1	HM	PAINTED	21		NOT RATED		5143
5144A	72"	96"	1 3/4"	WD	WD	SEALED	H1	HM	PAINTED	25		NOT RATED		5144A
5144B	72"	96"	1 3/4"	WC	WD	SEALED	H3	HM	PAINTED	44		NOT RATED	FRAME THROAT TO ACCOMMODATE FINISH MATERIALS	5144B
5146A	36"	84"	1 3/4"	HD	HM	PAINTED	H20	HM	PAINTED	51		NOT RATED		5146A
5146B	36"	96"	1 3/4"	HG	HM / WD	PAINTED / SEALED	H18	HM	PAINTED	52		NOT RATED	DOOR VENEERED ON COURTROOM / CORRIDOR SIDE	5146B
5147	36"	84"	1 3/4"	HE	HM	PAINTED	H20	HM	PAINTED	48		NOT RATED		5147
5148	36"	84"	1 3/4"	HE	HM	PAINTED	H20	HM	PAINTED	48		NOT RATED		5148
5149A	36"	96"	1 3/4"	WD	WD	SEALED	H1	HM	PAINTED	21		NOT RATED		5149A
5149B	20"	78"	1 3/4"	WA	WD	SEALED	H15	HM	PAINTED	47		NOT RATED	DOOR HEIGHT LISTED UNDER DOOR SIZE IS HEIGHT TO T.O. DOOR A.F.F. - DOOR SLAB IS 3'-8" TALL	5149B
5150A	20"	84"	1 3/4"	HB	HM	PAINTED	H20	HM	PAINTED	46		NOT RATED		5150A
5150B	20"	84"	1 3/4"	HB	HM	PAINTED	H20	HM	PAINTED	46		NOT RATED		5150B
5151A	36"	84"	1 3/4"	HD	HM	PAINTED	H20	HM	PAINTED	51		NOT RATED		5151A
5151B	36"	96"	1 3/4"	HG	HM / WD	PAINTED / SEALED	H18	HM	PAINTED	52		NOT RATED	DOOR VENEERED ON COURTROOM / CORRIDOR SIDE	5151B
5152	36"	84"	1 3/4"	HE	HM	PAINTED	H20	HM	PAINTED	48		NOT RATED		5152
5153	36"	84"	1 3/4"	HE	HM	PAINTED	H20	HM	PAINTED	48		NOT RATED		5153
6114	36"	84"	1 3/4"	HA	HM	PAINTED	H16	HM	PAINTED	09		90 MINUTES	B.O. FRAME TO BE INSTALLED 1'-6" A.F.F. (PENTHOUSE LANDING)	6114

DOOR AND FRAME SCHEDULE - 4TH FLOOR ALTERNATE

DOOR NUMBER	DOOR						FRAME			HARDWARE GROUP	GLAZING TYPE	LABEL (MIN.)	NOTES	DOOR NUMBER
	SIZE													
	WIDTH	HEIGHT	THICK	ELEV. TYPE	MATERIAL	FACING/FINISH	ELEV. TYPE	MATERIAL	FINISH/FACING					
4104B	36"	96"	1 3/4"	WA	WD	SEALED	H1	HM	PAINTED	43		NOT RATED	FRAME THROAT TO ACCOMMODATE FINISH MATERIALS	4104B
4106	36"	96"	1 3/4"	WD	WD	SEALED	H1	HM	PAINTED	21		NOT RATED		4106
4107B	72"	96"	1 3/4"	WC	WD	SEALED	H3	HM	PAINTED	44		NOT RATED	FRAME THROAT TO ACCOMMODATE FINISH MATERIALS	4107B
4108	36"	96"	1 3/4"	WD	WD	SEALED	H1	HM	PAINTED	27		NOT RATED		4108
4109	36"	96"	1 3/4"	WA	WD	SEALED	H1	HM	PAINTED	32		NOT RATED	FRAME THROAT TO ACCOMMODATE FINISH MATERIALS	4109
4110	36"	96"	1 3/4"	WA	WD	SEALED	H1	HM	PAINTED	32		NOT RATED		4110
4111	36"	96"	1 3/4"	WA	WD	SEALED	H1	HM	PAINTED	40		NOT RATED		4111
4112	36"	96"	1 3/4"	WD	WD	SEALED	H1	HM	PAINTED	26		NOT RATED		4112
4113	36"	96"	1 3/4"	WA	WD	SEALED	H1	HM	PAINTED	32		NOT RATED		4113
4115	36"	96"	1 3/4"	WA	WD	SEALED	H17	HM	PAINTED	53		NOT RATED		4115
4118	36"	96"	1 3/4"	WA	WD	SEALED	H1	HM	PAINTED	31		NOT RATED		4118
4126	36"	96"	1 3/4"	WD	WD	SEALED	H1	HM	PAINTED	21		NOT RATED		4126
4127A	36"	96"	1 3/4"	WA	WD	SEALED	H1	HM	PAINTED	31		NOT RATED		4127A
4127B	20"	96"	1 3/4"	WA	WD	SEALED	H1	HM	PAINTED	17		NOT RATED		4127B
4128	36"	96"	1 3/4"	WA	WD	SEALED	H1	HM	PAINTED	41		NOT RATED		4128
4129	36"	96"	1 3/4"	WA	WD	SEALED	H1	HM	PAINTED	41		NOT RATED		4129
4130	36"	96"	1 3/4"	WA	WD	SEALED	H17	HM	PAINTED	53		NOT RATED		4130
4131	36"	96"	1 3/4"	WA	WD	SEALED	H17	HM	PAINTED	36		NOT RATED		4131
4132	36"	96"	1 3/4"	WA	WD	SEALED	H1	HM	PAINTED	23		NOT RATED		4132

DOOR AND FRAME SCHEDULE - 4TH FLOOR ALTERNATE

DOOR NUMBER	DOOR						FRAME			HARDWARE GROUP	GLAZING TYPE	LABEL (MIN.)	NOTES	DOOR NUMBER
	SIZE													
	WIDTH	HEIGHT	THICK	ELEV. TYPE	MATERIAL	FACING/FINISH	ELEV. TYPE	MATERIAL	FINISH/FACING					
4133	36"	96"	1 3/4"	WA	WD	SEALED	H1	HM	PAINTED	40		NOT RATED		4133
4134	36"	96"	1 3/4"	WD	WD	SEALED	H1	HM	PAINTED	26		NOT RATED		4134
4136	36"	96"	1 3/4"	WA	WD	SEALED	H1	HM	PAINTED	32		NOT RATED	FRAME THROAT TO ACCOMMODATE FINISH MATERIALS	4136
4137	36"	96"	1 3/4"	WD	WD	SEALED	H1	HM	PAINTED	27		NOT RATED		4137
4141B	36"	96"	1 3/4"	WA	WD	SEALED	H1	HM	PAINTED	43		NOT RATED	FRAME THROAT TO ACCOMMODATE FINISH MATERIALS	4141B
4143	36"	96"	1 3/4"	WD	WD	SEALED	H1	HM	PAINTED	21		NOT RATED		4143
4144B	72"	96"	1 3/4"	WC	WD	SEALED	H3	HM	PAINTED	44		NOT RATED	FRAME THROAT TO ACCOMMODATE FINISH MATERIALS	4144B
4146A	36"	84"	1 3/4"	HD	HM	PAINTED	H20	HM	PAINTED	51		NOT RATED		4146A
4146B	36"	96"	1 3/4"	HG	HM / WD	PAINTED / SEALED	H18	HM	PAINTED	52		NOT RATED	DOOR VENEERED ON COURTROOM / CORRIDOR SIDE	4146B
4147	36"	84"	1 3/4"	HE	HM	PAINTED	H20	HM	PAINTED	48		NOT RATED		4147
4148	36"	84"	1 3/4"	HE	HM	PAINTED	H20	HM	PAINTED	48		NOT RATED		4148
4149B	20"	78"	1 3/4"	WA	WD	SEALED	H15	HM	PAINTED	47		NOT RATED	DOOR HEIGHT LISTED UNDER DOOR SIZE IS HEIGHT TO T.O. DOOR A.F.F. - DOOR SLAB IS 3'-8" TALL	4149B
4150A	20"	84"	1 3/4"	HB	HM	PAINTED	H20	HM	PAINTED	46		NOT RATED		4150A
4150B	20"	84"	1 3/4"	HB	HM	PAINTED	H20	HM	PAINTED	46		NOT RATED		4150B
4151A	36"	84"	1 3/4"	HD	HM	PAINTED	H20	HM	PAINTED	51		NOT RATED		4151A
4151B	36"	96"	1 3/4"	HG	HM / WD	PAINTED / SEALED	H18	HM	PAINTED	52		NOT RATED	DOOR VENEERED ON COURTROOM / CORRIDOR SIDE	4151B
4152	36"	84"	1 3/4"	HE	HM	PAINTED	H20	HM	PAINTED	48		NOT RATED		4152
4153	36"	84"	1 3/4"	HE	HM	PAINTED	H20	HM	PAINTED	48		NOT RATED		4153

ROOF DOOR SCHEDULE

NOTE: DOORS AND BALANCE OF HARDWARE TO BE PROVIDED BY EQUIPMENT MANUFACTURER

DOOR NUMBER	LOCATION AT ROOF - SEE ROOF PLAN	HARDWARE GROUP
ROOF DOOR #001	MECHANICAL PENTHOUSE - SEE ROOF PLAN FOR LOCATION	SEE MISCELLANEOUS SECTION OF HARDWARE SPECIFICATIONS FOR LOCKSET TO BE PROVIDED
ROOF DOOR #002	MECHANICAL PENTHOUSE - SEE ROOF PLAN FOR LOCATION	SEE MISCELLANEOUS SECTION OF HARDWARE SPECIFICATIONS FOR LOCKSET TO BE PROVIDED
ROOF DOOR #003	MECHANICAL PENTHOUSE - SEE ROOF PLAN FOR LOCATION	SEE MISCELLANEOUS SECTION OF HARDWARE SPECIFICATIONS FOR LOCKSET TO BE PROVIDED
ROOF DOOR #004	MECHANICAL PENTHOUSE - SEE ROOF PLAN FOR LOCATION	SEE MISCELLANEOUS SECTION OF HARDWARE SPECIFICATIONS FOR LOCKSET TO BE PROVIDED
ROOF DOOR #005	MECHANICAL PUMP HOUSE - SEE ROOF PLAN FOR LOCATION	SEE MISCELLANEOUS SECTION OF HARDWARE SPECIFICATIONS FOR LOCKSET TO BE PROVIDED

SITE GATE SCHEDULE

GATE NUMBER	LOCATION AT SITE - SEE SITE PLANS	HARDWARE GROUP
SITE GATE #001	EMPLOYEE ENTRANCE GATE, BETWEEN JUDGES PARKING AND SECURE YARD	*
SITE GATE #002	FIRE PERSONNEL GATE, LOCATED AT SOUTH SIDE OF BUILDING AT DELIVERY DRIVE	*
SITE GATE #003	GENERATOR PIT ENTRANCE GATE, LOCATED SOUTH OF SECURE YARD	*
SITE GATE #004	SERVICE/ UTILITY YARD, LOCATED NORTH EAST OF SECURE YARD	SEE MISCELLANEOUS SECTION OF HARDWARE SPECIFICATIONS FOR PADLOCK, *
SITE GATE #005	SERVICE/ UTILITY YARD, LOCATED NORTH EAST OF SECURE YARD	SEE MISCELLANEOUS SECTION OF HARDWARE SPECIFICATIONS FOR PADLOCK, *
SITE GATE #006	SERVICE/ UTILITY YARD, LOCATED NORTH EAST OF SECURE YARD	SEE MISCELLANEOUS SECTION OF HARDWARE SPECIFICATIONS FOR PADLOCK, *

ASTERISK (*) DENOTES BALANCE OF HARDWARE TO BE PROVIDED BY GATE MANUFACTURER

VCBO ARCHITECTURE

VCBO ARCHITECTURE
524 SOUTH 600 EAST
SALT LAKE CITY, UT 84102
Phone: (801) 575-8800
Fax: (801) 531-9850
Web: vcbo.com

LICENSED ARCHITECT No. 133912 BRENT R. TIPPETS 8-15-13 STATE OF UTAH

2nd District Juvenile Courthouse

Utah State Courts
08284150
165 West 20th Street, Ogden, Utah
BID DOCUMENTS

Rev #	Date	Description
1	4/30/2013	Fire Marshal Response

Job # 12500
Date August 15, 2013
Owner # 08284150
Ins. #

DOOR SCHEDULES

A601

8/14/2013 2:34:27 PM

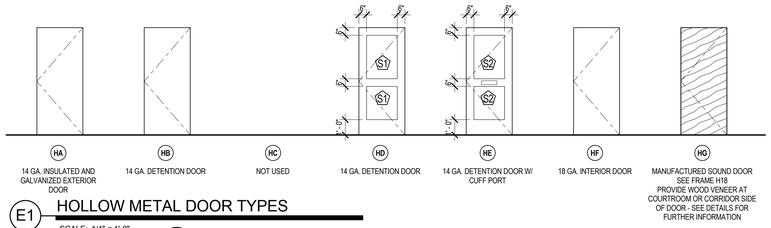

E1 HOLLOW METAL DOOR TYPES

SCALE: 1/4" = 1'-0"

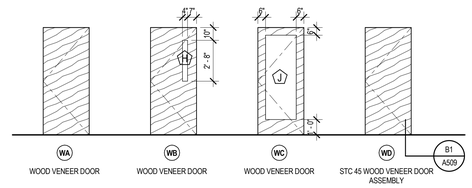

E3 WOOD DOOR TYPES

SCALE: 1/4" = 1'-0"

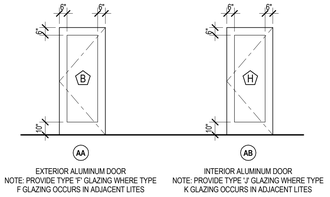

E5 ALUMINUM DOOR TYPES

SCALE: 1/4" = 1'-0"

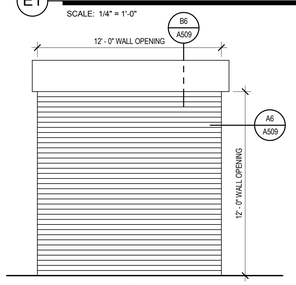

D1 COILING DOOR TYPES

SCALE: 1/4" = 1'-0"

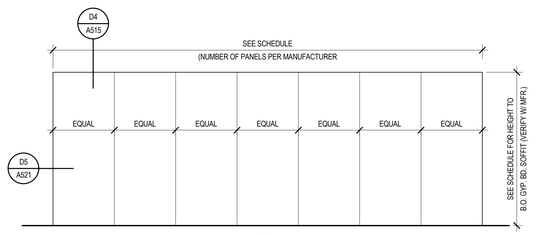

D2 FOLDING PARTITION DOOR TYPES

SCALE: 1/4" = 1'-0"

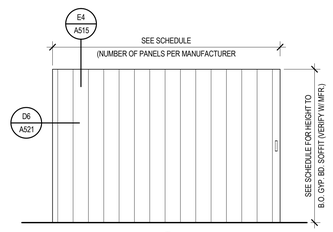

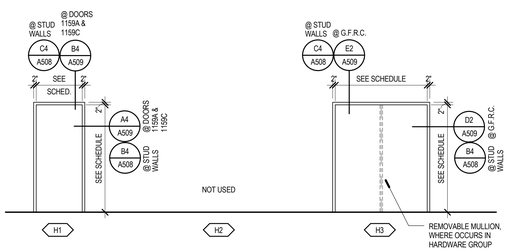

C1 HOLLOW METAL FRAME TYPES

SCALE: 1/4" = 1'-0"

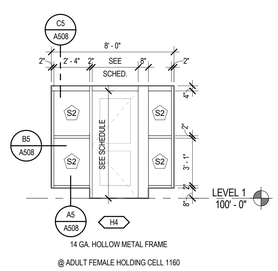

14 GA. HOLLOW METAL FRAME

@ ADULT FEMALE HOLDING CELL 1160

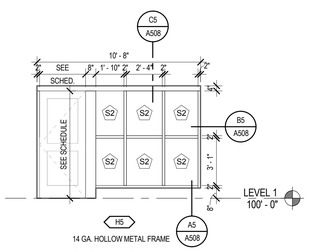

14 GA. HOLLOW METAL FRAME

@ GROUP HOLDING CELL 1154

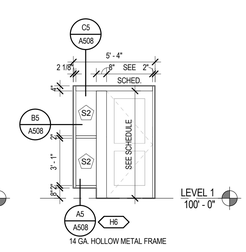

14 GA. HOLLOW METAL FRAME

@ GROUP HOLDING CELL 1148

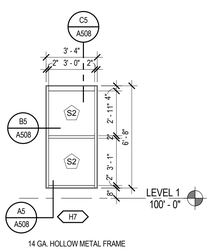

14 GA. HOLLOW METAL FRAME

@ ADULT MALE HOLDING CELL 1147 AND JUVENILE FEMALE HODING CELL 1146

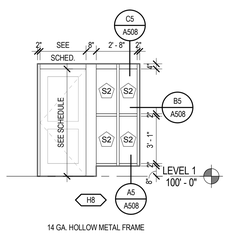

14 GA. HOLLOW METAL FRAME

@ GROUP HOLDING CELL 1151

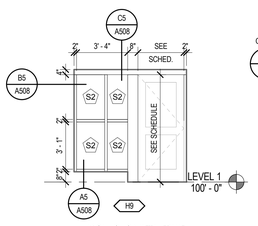

14 GA. HOLLOW METAL FRAME

@ JUVENILE MALE HOLDING CELL 1162

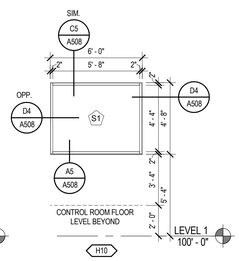

14 GA. HOLLOW METAL FRAME

@ CONTROL ROOM 1149

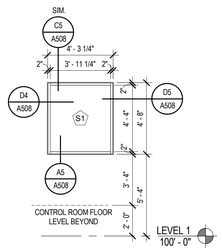

14 GA. HOLLOW METAL FRAME

@ CONTROL ROOM 1149

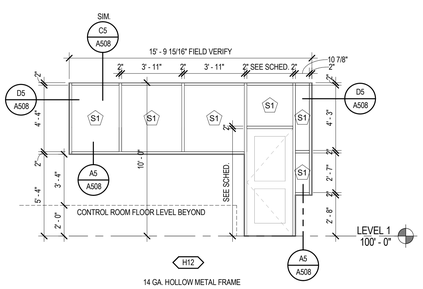

14 GA. HOLLOW METAL FRAME

@ CONTROL ROOM 1149

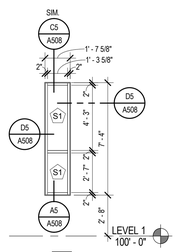

14 GA. HOLLOW METAL FRAME

@ CONTROL ROOM 1149

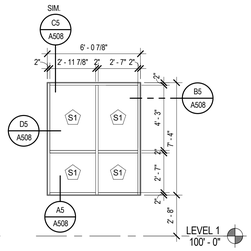

14 GA. HOLLOW METAL FRAME

@ CONTROL ROOM 1149

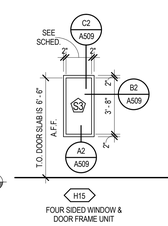

FOUR SIDED WINDOW & DOOR FRAME UNIT

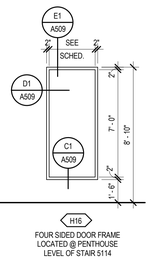

FOUR SIDED DOOR FRAME LOCATED @ PENTHOUSE LEVEL OF STAIR S114

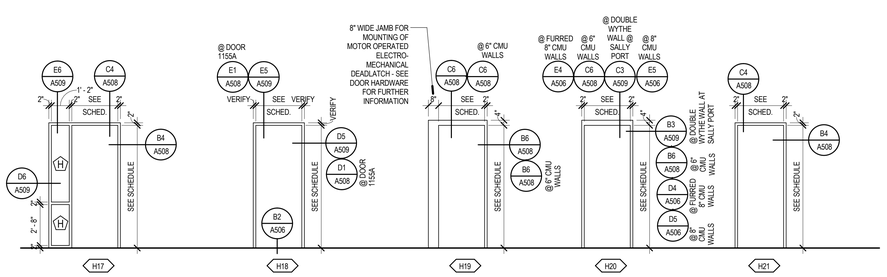

CONTRACTOR TO VERIFY FRAME JAMB AND HEAD THICKNESSES WITH SUCCESSFUL MANUFACTURER PRIOR TO INSTALLATION OF MASONRY WALL OPENING

14 GA. HOLLOW METAL FRAME

14 GA. HOLLOW METAL FRAME

14 GA. HOLLOW METAL FRAME

DOOR & FRAME NOTES

1. MATERIAL ABBREVIATIONS:
   WD = WOOD
   AL = ALUMINUM
   HM = HOLLOW METAL
   HM / WD = MANUFACTURED SOUND DOOR WITH WOOD VENEER ON ONE SIDE OF DOOR SLAB - SEE DOOR TYPE AND DETAILS FOR FURTHER INFORMATION.
2. ALL HOLLOW METAL DOOR AND WINDOW FRAMES ARE TO HAVE A SINGLE RABBIT PROFILE.
3. SEE SPECIFICATION FOR HARDWARE GROUP DEFINITION
4. ALL HOLLOW METAL FRAMES OPENING TO THE EXTERIOR ARE TO BE 16 GAUGE AND GALVANIZED.
5. ALL HOLLOW METAL DOORS OPENING TO THE EXTERIOR ARE TO BE 14 GAUGE, INSULATED AND GALVANIZED. WHERE DOORS OPEN TO THE EXTERIOR, PROVIDE INSULATED HOLLOW METAL DOORS.
6. OVERALL CURTAINWALL AND ALUMINUM FRAME DIMENSIONS ARE GIVEN FOR REFERENCE, REFER TO DETAILS FOR JAMB AND SILL CONDITIONS. OVERALL DIMENSIONS ARE TO BE FIELD VERIFIED.
7. GENERAL CONTRACTOR TO COORDINATE WORK BETWEEN DOOR INSTALLER AND SECURITY SYSTEM INSTALLER

GLAZING TYPE LEGEND

MARK	DESCRIPTION
A	1" THICK INSULATED FLOAT GLASS, LOW-E SOLAR BAN 60
B	1" THICK INSULATED TEMPERED GLASS, LOW-E SOLAR BAN 60 - BOTH LITES TEMPERED
C	1" THICK INSULATED SPANDREL GLASS. PROVIDE SPANDREL MINERAL WOOL INSULATION SYSTEM BEHIND ALL GLASS OF THIS TYPE
D	1" THICK INSULATED TEMPERED SPANDREL GLASS - TEMPERED AT EXTERIOR LITE. PROVIDE SPANDREL MINERAL WOOL INSULATION SYSTEM BEHIND ALL GLASS OF THIS TYPE
E	1" THICK INSULATED FLOAT GLASS, LOW-E SOLAR BAN 70
F	1" THICK INSULATED TEMPERED GLASS, LOW-E SOLAR BAN 70 - BOTH LITES TEMPERED
G	1/2" TEMPERED CLEAR GLASS
H	1/4" TEMPERED CLEAR GLASS
J	1/4" TEMPERED TRANSLUCENT GLAZING
K	1/2" TEMPERED TRANSLUCENT GLAZING
L	1" THICK INSULATED TRANSLUCENT GLAZING
M	1" THICK INSULATED TEMPERED TRANSLUCENT GLAZING
N	1" THICK INSULATED GLASS, LOW-E SOLAR BAN 60 - TEMPERED AT INTERIOR LITE
P	1" THICK INSULATED GLASS, LOW-E SOLAR BAN 70 - TEMPERED AT INTERIOR LITE
Q	1" THICK INSULATED TRANSLUCENT FLOAT GLASS, LOW-E SOLAR BAN 60
S1	SECURITY GLAZING (1) LAYER 1/8" TEMPERED CLEAR GLASS LAMINATED TO BOTH SIDES OF A 1/4" POLYCARBONATE SHEET - TOTAL GLAZING SYSTEM THICKNESS: 1/2"
S2	SECURITY GLAZING - ONE WAY (1) LAYER 1/8" TEMPERED ONE WAY GLASS LAMINATED TO (1) LAYER 1/4" POLYCARBONATE SHEET LAMINATED TO (1) LAYER 1/8" TEMPERED CLEAR GLASS - TOTAL GLAZING SYSTEM THICKNESS: 1/2"
S3	SECURITY GLAZING - INSULATED AT CELL SIDE, LITE SHALL BE (2) LAYERS OF 1/8" TEMPERED CLEAR GLASS LAMINATED TO 1/4" POLYCARBONATE SHEET, OUTER LITE SHALL BE 1/4" THICK TEMPERED CLEAR GLASS - TOTAL GLAZING SYSTEM THICKNESS: 1"

DOOR AND WINDOW NOTES

1. ALL METAL FRAMES SHALL HAVE A SINGLE RABBET PROFILE WITH A 2" DIMENSION ON THE STOP SIDE OF THE FRAME.

2. SECURITY SCREWS TO BE SET TO NON-SECURE SIDE.

3. ALL HOLLOW METAL DOORS LOCATED AT THE EXTERIOR OF THE BUILDING ARE TO BE INSULATED.

4. OVERALL FRAME DIMENSIONS ARE PROVIDED AS REFERENCE AND ARE TO BE FIELD VERIFIED.

5. POLYCARBONATE SHEET TO FACE THE NON-SECURE SIDE OF WINDOW.

6. ALL CURTAIN WALL OPENINGS SHALL HAVE (3) CONTINUOUS BEADS OF SEALANT AND BACKER ROD AT THE HEAD AND JAMB CONDITIONS. ALL CURTAIN WALL OPENINGS SHALL HAVE (2) CONTINUOUS BEADS OF SEALANT AND BACKER ROD AT SILL LOCATIONS WITH THE SILL FLASHING SET IN AN ADDITIONAL CONTINUOUS BEAD OF SEALANT. SEE DETAILS FOR FURTHER INFORMATION.

7. ALL 5" DEEP VERTICAL CURTAIN WALL CAPS SHALL HAVE A CAPPED ENDS AT THE TOP AND BOTTOM OF THE SYSTEMS.

8. PROVIDE 'PICK RESISTANT' SECURITY SEALANT AT ALL HOLDING CELLS, HOLDING AREAS, AND AT CORRIDORS/ SECURE VESTIBULES/ SECURITY VESTIBULES/ SECURE SOUND VESTIBULES WITHIN HOLDING AREAS.

VCBO ARCHITECTURE
524 SOUTH 600 EAST
SALT LAKE CITY, UT 84102
Phone: (801) 575-8800
Fax: (801) 531-9850
Web: vcbo.com

LICENSED ARCHITECT
No. 153912
BRENT R. TIPPETS
8-15-13
STATE OF UTAH

2nd District Juvenile Courthouse

Utah State Courts
08284150
165 West 20th Street, Ogden, Utah
BID DOCUMENTS

Rev #	Date	Description

Job # 12500
Date August 15, 2013
Owner # 08284150
Ins. #

DOOR AND FRAME TYPES

A602

8/14/2013 2:34:48 PM

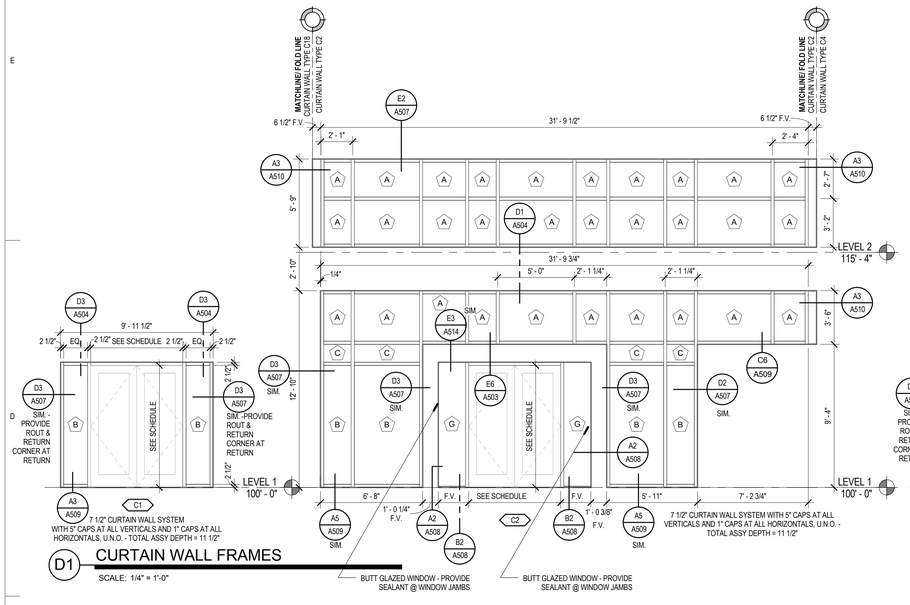

D1 CURTAIN WALL FRAMES

SCALE: 1/4" = 1'-0"

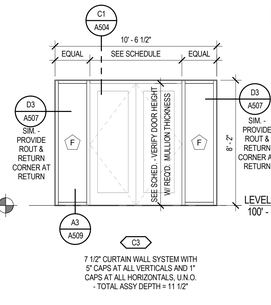

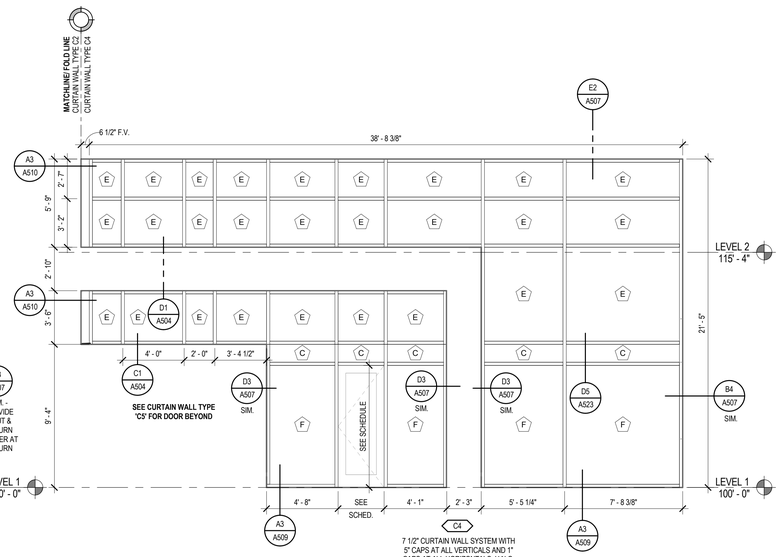

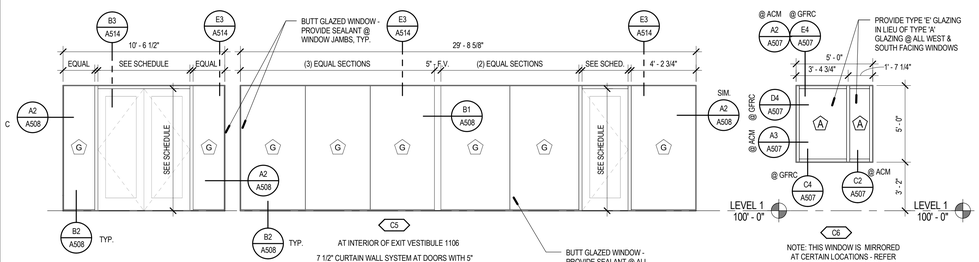

AT INTERIOR OF EXIT VESTIBULE 1106

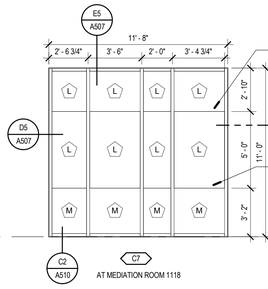

AT MEDIATION ROOM 1118

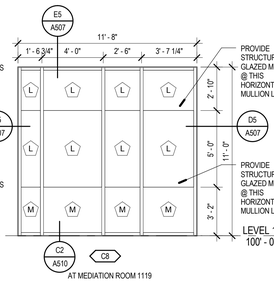

AT MEDIATION ROOM 1119

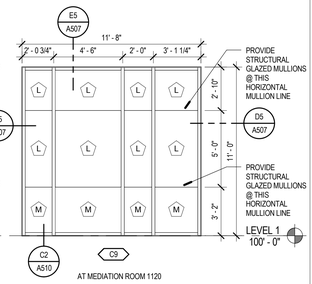

AT MEDIATION ROOM 1120

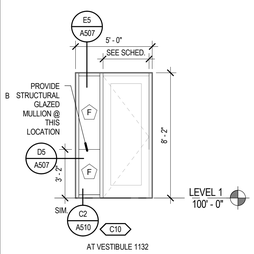

AT VESTIBULE 1132

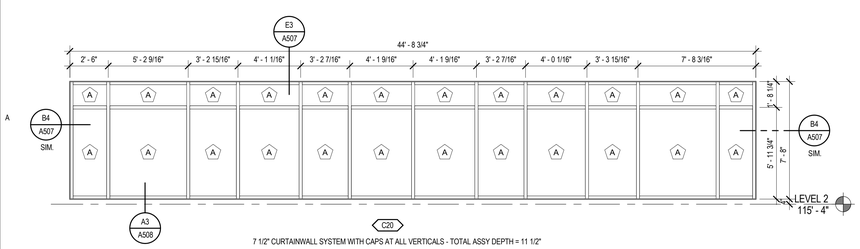

NOTE: VERTICAL MULLIONS ALIGN WITH REVEALS IN WOOD VENEER WALL AND MULLIONS AT INTERIOR SPACE - REFER TO INTERIOR ELEVATION FOR FURTHER INFORMATION

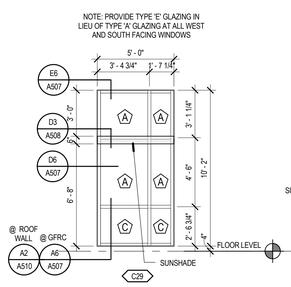

NOTE: THIS WINDOW TYPE OCCURS AT LEVELS 2 AND 3

NOTE: THIS WINDOW IS MIRRORED AT CERTAIN LOCATIONS - REFER TO EXTERIOR ELEVATIONS FOR MULLION PLACEMENT
ADDITIONAL NOTE: PROVIDE TYPE 'D' GLAZING IN LIEU OF TYPE 'C' AT WINDOW AT JUDICIAL CASE MANAGER 2134, OPPOSITE OF THE LEVEL 2 ROOF PLAZA

6" CURTAIN WALL SYSTEM WITH 5" CAPS AT ALL VERTICALS AND 1" CAPS AT ALL HORIZONTALS, U.N.O. - TOTAL ASSY DEPTH = 10"

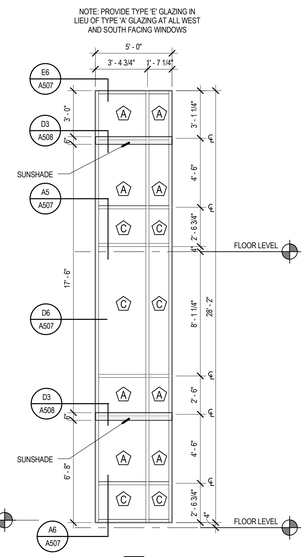

NOTE: THIS WINDOW IS MIRRORED AT CERTAIN LOCATIONS - REFER TO EXTERIOR ELEVATIONS FOR MULLION PLACEMENT

6" CURTAIN WALL SYSTEM WITH 5" CAPS AT ALL VERTICALS AND 1" CAPS AT ALL HORIZONTALS, U.N.O. - TOTAL ASSY DEPTH = 10"

DOOR & FRAME NOTES

1. MATERIAL ABBREVIATIONS:
   WD = WOOD
   AL = ALUMINUM
   HM = HOLLOW METAL
   HM / WD = MANUFACTURED SOUND DOOR WITH WOOD VENEER ON ONE SIDE OF DOOR SLAB - SEE DOOR TYPE AND DETAILS FOR FURTHER INFORMATION.
2. ALL HOLLOW METAL DOOR AND WINDOW FRAMES ARE TO HAVE A SINGLE RABBIT PROFILE.
3. SEE SPECIFICATION FOR HARDWARE GROUP DEFINITION
4. ALL HOLLOW METAL FRAMES OPENING TO THE EXTERIOR ARE TO BE 16 GAUGE AND GALVANIZED.
5. ALL HOLLOW METAL DOORS OPENING TO THE EXTERIOR ARE TO BE 14 GAUGE, INSULATED AND GALVANIZED. WHERE DOORS OPEN TO THE EXTERIOR, PROVIDE INSULATED HOLLOW METAL DOORS.
6. OVERALL CURTAINWALL AND ALUMINUM FRAME DIMENSIONS ARE GIVEN FOR REFERENCE, REFER TO DETAILS FOR JAMB AND SILL CONDITIONS. OVERALL DIMENSIONS ARE TO BE FIELD VERIFIED.
7. GENERAL CONTRACTOR TO COORDINATE WORK BETWEEN DOOR INSTALLER AND SECURITY SYSTEM INSTALLER

GLAZING TYPE LEGEND

MARK	DESCRIPTION
A	1" THICK INSULATED FLOAT GLASS, LOW-E SOLAR BAN 60
B	1" THICK INSULATED TEMPERED GLASS, LOW-E SOLAR BAN 60 - BOTH LITES TEMPERED
C	1" THICK INSULATED SPANDREL GLASS. PROVIDE SPANDREL MINERAL WOOL INSULATION SYSTEM BEHIND ALL GLASS OF THIS TYPE
D	1" THICK INSULATED TEMPERED SPANDREL GLASS - TEMPERED AT EXTERIOR LITE. PROVIDE SPANDREL MINERAL WOOL INSULATION SYSTEM BEHIND ALL GLASS OF THIS TYPE
E	1" THICK INSULATED FLOAT GLASS, LOW-E SOLAR BAN 70
F	1" THICK INSULATED TEMPERED GLASS, LOW-E SOLAR BAN 70 - BOTH LITES TEMPERED
G	1/2" TEMPERED CLEAR GLASS
H	1/4" TEMPERED CLEAR GLASS
J	1/4" TEMPERED TRANSLUCENT GLAZING
K	1/2" TEMPERED TRANSLUCENT GLAZING
L	1" THICK INSULATED TRANSLUCENT GLAZING
M	1" THICK INSULATED TEMPERED TRANSLUCENT GLAZING
N	1" THICK INSULATED GLASS, LOW-E SOLAR BAN 60 - TEMPERED AT INTERIOR LITE
P	1" THICK INSULATED GLASS, LOW-E SOLAR BAN 70 - TEMPERED AT INTERIOR LITE
Q	1" THICK INSULATED TRANSLUCENT FLOAT GLASS, LOW-E SOLAR BAN 60
S1	SECURITY GLAZING (1) LAYER 1/8" TEMPERED CLEAR GLASS LAMINATED TO BOTH SIDES OF A 1/4" POLYCARBONATE SHEET - TOTAL GLAZING SYSTEM THICKNESS: 1/2"
S2	SECURITY GLAZING - ONE WAY (1) LAYER 1/8" TEMPERED ONE WAY GLASS LAMINATED TO (1) LAYER 1/4" POLYCARBONATE SHEET LAMINATED TO (1) LAYER 1/8" TEMPERED CLEAR GLASS - TOTAL GLAZING SYSTEM THICKNESS: 1/2"
S3	SECURITY GLAZING - INSULATED AT CELL SIDE, LITE SHALL BE (2) LAYERS OF 1/8" TEMPERED CLEAR GLASS LAMINATED TO 1/4" POLYCARBONATE SHEET, OUTER LITE SHALL BE 1/4" THICK TEMPERED CLEAR GLASS - TOTAL GLAZING SYSTEM THICKNESS: 1"

DOOR AND WINDOW NOTES

1. ALL METAL FRAMES SHALL HAVE A SINGLE RABBET PROFILE WITH A 2" DIMENSION ON THE STOP SIDE OF THE FRAME.

2. SECURITY SCREWS TO BE SET TO NON-SECURE SIDE.

3. ALL HOLLOW METAL DOORS LOCATED AT THE EXTERIOR OF THE BUILDING ARE TO BE INSULATED.

4. OVERALL FRAME DIMENSIONS ARE PROVIDED AS REFERENCE AND ARE TO BE FIELD VERIFIED.

5. POLYCARBONATE SHEET TO FACE THE NON-SECURE SIDE OF WINDOW.

6. ALL CURTAIN WALL OPENINGS SHALL HAVE (3) CONTINUOUS BEADS OF SEALANT AND BACKER ROD AT THE HEAD AND JAMB CONDITIONS. ALL CURTAIN WALL OPENINGS SHALL HAVE (2) CONTINUOUS BEADS OF SEALANT AND BACKER ROD AT SILL LOCATIONS WITH THE SILL FLASHING SET IN AN ADDITIONAL CONTINUOUS BEAD OF SEALANT. SEE DETAILS FOR FURTHER INFORMATION.

7. ALL 5" DEEP VERTICAL CURTAIN WALL CAPS SHALL HAVE A CAPPED ENDS AT THE TOP AND BOTTOM OF THE SYSTEMS.

8. PROVIDE 'PICK RESISTANT' SECURITY SEALANT AT ALL HOLDING CELLS, HOLDING AREAS, AND AT CORRIDORS/ SECURE VESTIBULES/ SECURITY VESTIBULES/ SECURE SOUND VESTIBULES WITHIN HOLDING AREAS.

VCBO ARCHITECTURE
524 SOUTH 600 EAST
SALT LAKE CITY, UT 84102
Phone: (801) 575-8800
Fax: (801) 531-9850
Web: vcbo.com

LICENSED ARCHITECT No. 153912 BRENT R. TIPPETS 8-15-13 STATE OF UTAH

2nd District Juvenile Courthouse

Utah State Courts
08284150
165 West 20th Street, Ogden, Utah
BID DOCUMENTS

Rev #	Date	Description
1	4/30/2013	Fire Marshal Response

Job # 12500
Date August 15, 2013
Owner # 08284150
Ins. #

CURTAIN WALL FRAME TYPES

A603

8/14/2013 2:35:11 PM

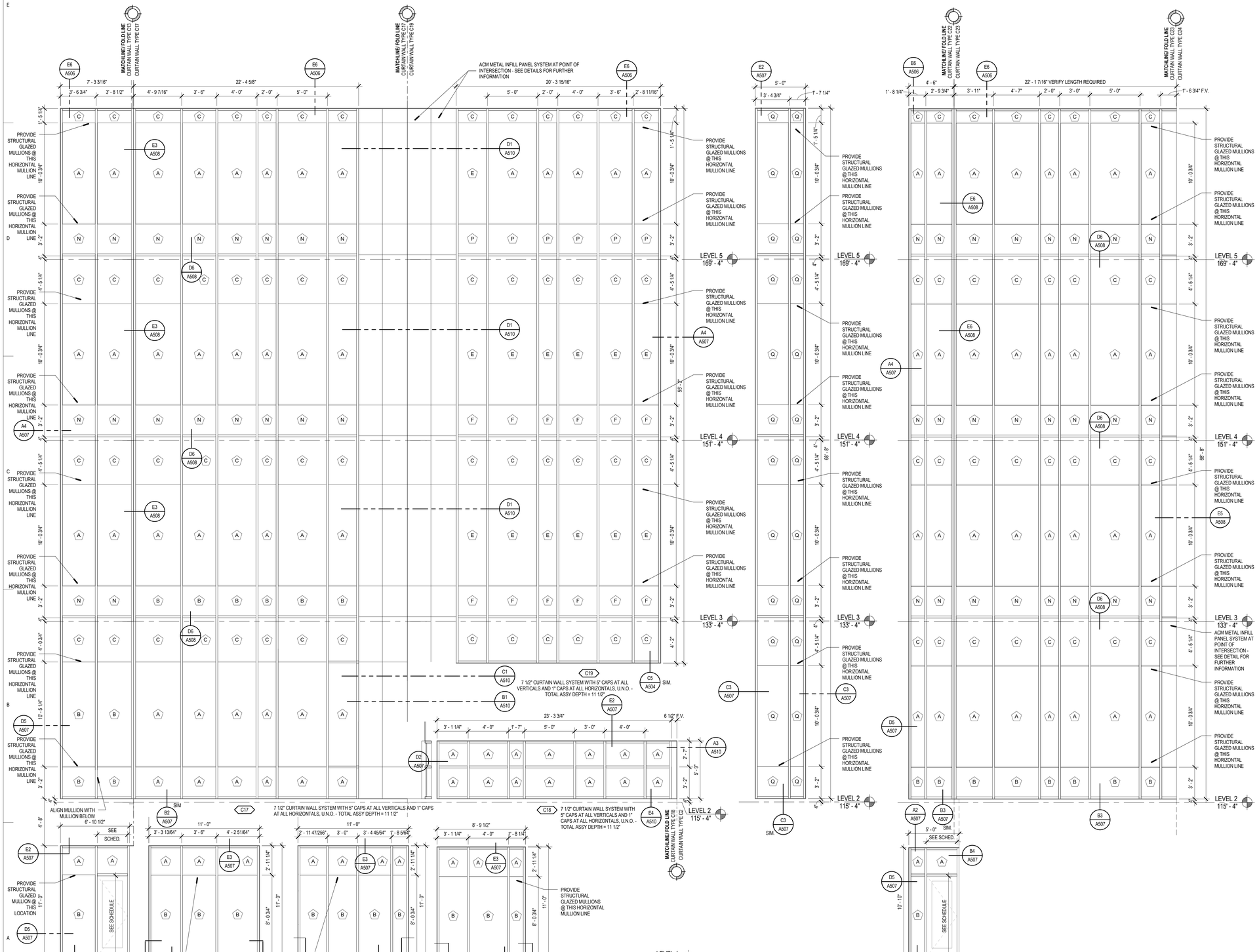

A1 CURTAIN WALL FRAMES CONT.

SCALE: 1/4" = 1'-0"

8/14/2013 2:35:31 PM

DOOR & FRAME NOTES

1. MATERIAL ABBREVIATIONS:
   WD = WOOD
   AL = ALUMINUM
   HM = HOLLOW METAL
   HM / WD = MANUFACTURED SOUND DOOR WITH WOOD VENEER ON ONE SIDE OF DOOR SLAB - SEE DOOR TYPE AND DETAILS FOR FURTHER INFORMATION.
2. ALL HOLLOW METAL DOOR AND WINDOW FRAMES ARE TO HAVE A SINGLE RABBIT PROFILE.
3. SEE SPECIFICATION FOR HARDWARE GROUP DEFINITION
4. ALL HOLLOW METAL FRAMES OPENING TO THE EXTERIOR ARE TO BE 16 GAUGE AND GALVANIZED.
5. ALL HOLLOW METAL DOORS OPENING TO THE EXTERIOR ARE TO BE 14 GAUGE, INSULATED AND GALVANIZED. WHERE DOORS OPEN TO THE EXTERIOR, PROVIDE INSULATED HOLLOW METAL DOORS.
6. OVERALL CURTAINWALL AND ALUMINUM FRAME DIMENSIONS ARE GIVEN FOR REFERENCE. REFER TO DETAILS FOR JAMB AND SILL CONDITIONS. OVERALL DIMENSIONS ARE TO BE FIELD VERIFIED.
7. GENERAL CONTRACTOR TO COORDINATE WORK BETWEEN DOOR INSTALLER AND SECURITY SYSTEM INSTALLER

GLAZING TYPE LEGEND

MARK	DESCRIPTION
A	1" THICK INSULATED FLOAT GLASS, LOW-E SOLAR BAN 60
B	1" THICK INSULATED TEMPERED GLASS, LOW-E SOLAR BAN 60 - BOTH LITES TEMPERED
C	1" THICK INSULATED SPANDREL GLASS. PROVIDE SPANDREL MINERAL WOOL INSULATION SYSTEM BEHIND ALL GLASS OF THIS TYPE
D	1" THICK INSULATED TEMPERED SPANDREL GLASS - TEMPERED AT EXTERIOR LITE. PROVIDE SPANDREL MINERAL WOOL INSULATION SYSTEM BEHIND ALL GLASS OF THIS TYPE
E	1" THICK INSULATED FLOAT GLASS, LOW-E SOLAR BAN 70
F	1" THICK INSULATED TEMPERED GLASS, LOW-E SOLAR BAN 70 - BOTH LITES TEMPERED
G	1/2" TEMPERED CLEAR GLASS
H	1/4" TEMPERED CLEAR GLASS
J	1/4" TEMPERED TRANSLUCENT GLAZING
K	1/2" TEMPERED TRANSLUCENT GLAZING
L	1" THICK INSULATED TRANSLUCENT GLAZING
M	1" THICK INSULATED TEMPERED TRANSLUCENT GLAZING
N	1" THICK INSULATED GLASS, LOW-E SOLAR BAN 60 - TEMPERED AT INTERIOR LITE
P	1" THICK INSULATED GLASS, LOW-E SOLAR BAN 70 - TEMPERED AT INTERIOR LITE
Q	1" THICK INSULATED TRANSLUCENT FLOAT GLASS, LOW-E SOLAR BAN 60
S1	SECURITY GLAZING (1) LAYER 1/8" TEMPERED CLEAR GLASS LAMINATED TO BOTH SIDES OF A 1/4" POLYCARBONATE SHEET - TOTAL GLAZING SYSTEM THICKNESS: 1/2"
S2	SECURITY GLAZING - ONE WAY (1) LAYER 1/8" TEMPERED ONE WAY GLASS LAMINATED TO (1) LAYER 1/4" POLYCARBONATE SHEET LAMINATED TO (1) LAYER 1/8" TEMPERED CLEAR GLASS - TOTAL GLAZING SYSTEM THICKNESS: 1/2"
S3	SECURITY GLAZING - INSULATED AT CELL SIDE, LITE SHALL BE (2) LAYERS OF 1/8" TEMPERED CLEAR GLASS LAMINATED TO 1/4" POLYCARBONATE SHEET, OUTER LITE SHALL BE 1/4" THICK TEMPERED CLEAR GLASS - TOTAL GLAZING SYSTEM THICKNESS: 1"

DOOR AND WINDOW NOTES

1. ALL METAL FRAMES SHALL HAVE A SINGLE RABBET PROFILE WITH A 2" DIMENSION ON THE STOP SIDE OF THE FRAME.

2. SECURITY SCREWS TO BE SET TO NON-SECURE SIDE.

3. ALL HOLLOW METAL DOORS LOCATED AT THE EXTERIOR OF THE BUILDING ARE TO BE INSULATED.

4. OVERALL FRAME DIMENSIONS ARE PROVIDED AS REFERENCE AND ARE TO BE FIELD VERIFIED.

5. POLYCARBONATE SHEET TO FACE THE NON-SECURE SIDE OF WINDOW.

6. ALL CURTAIN WALL OPENINGS SHALL HAVE (3) CONTINUOUS BEADS OF SEALANT AND BACKER ROD AT THE HEAD AND JAMB CONDITIONS. ALL CURTAIN WALL OPENINGS SHALL HAVE (2) CONTINUOUS BEADS OF SEALANT AND BACKER ROD AT SILL LOCATIONS WITH THE SILL FLASHING SET IN AN ADDITIONAL CONTINUOUS BEAD OF SEALANT. SEE DETAILS FOR FURTHER INFORMATION.

7. ALL 5" DEEP VERTICAL CURTAIN WALL CAPS SHALL HAVE A CAPPED ENDS AT THE TOP AND BOTTOM OF THE SYSTEMS.

8. PROVIDE 'PICK RESISTANT' SECURITY SEALANT AT ALL HOLDING CELLS, HOLDING AREAS, AND AT CORRIDORS/ SECURE VESTIBULES/ SECURITY VESTIBULES/ SECURE SOUND VESTIBULES WITHIN HOLDING AREAS.

VCBO ARCHITECTURE

VCBO ARCHITECTURE
524 SOUTH 600 EAST
SALT LAKE CITY, UT 84102
Phone: (801) 575-8800
Fax: (801) 531-9850
Web: vcbo.com

LICENSED ARCHITECT
No. 153912
BRENT R. TIPPETS
8-15-13
STATE OF UTAH

2nd District Juvenile Courthouse

Utah State Courts
08284150
165 West 20th Street, Ogden, Utah
BID DOCUMENTS

Rev #	Date	Description

Job # 12500
Date August 15, 2013
Owner # 08284150
Ins. #

CURTAIN WALL FRAME TYPES

A604

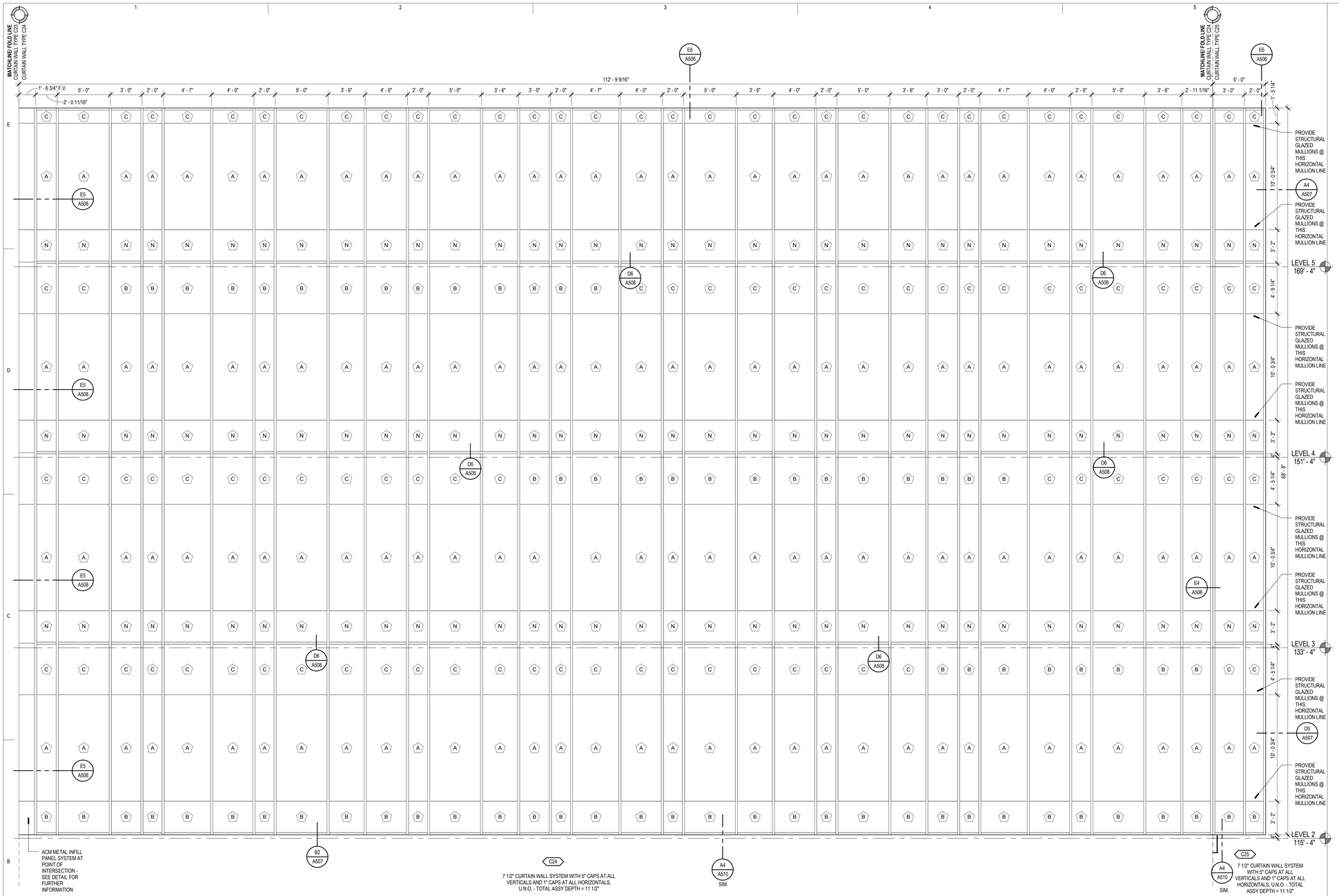

A1 CURTAIN WALL TYPES CONT.

SCALE: 1/4" = 1'-0"

DOOR & FRAME NOTES

1. MATERIAL ABBREVIATIONS:
   WD = WOOD
   AL = ALUMINUM
   HM = HOLLOW METAL
   HM / WD = MANUFACTURED SOUND DOOR WITH WOOD VENEER ON ONE SIDE OF DOOR SLAB - SEE DOOR TYPE AND DETAILS FOR FURTHER INFORMATION.
2. ALL HOLLOW METAL DOOR AND WINDOW FRAMES ARE TO HAVE A SINGLE RABBIT PROFILE.
3. SEE SPECIFICATION FOR HARDWARE GROUP DEFINITION
4. ALL HOLLOW METAL FRAMES OPENING TO THE EXTERIOR ARE TO BE 16 GAUGE AND GALVANIZED.
5. ALL HOLLOW METAL DOORS OPENING TO THE EXTERIOR ARE TO BE 14 GAUGE, INSULATED AND GALVANIZED. WHERE DOORS OPEN TO THE EXTERIOR, PROVIDE INSULATED HOLLOW METAL DOORS.
6. OVERALL CURTAINWALL AND ALUMINUM FRAME DIMENSIONS ARE GIVEN FOR REFERENCE. REFER TO DETAILS FOR JAMB AND SILL CONDITIONS. OVERALL DIMENSIONS ARE TO BE FIELD VERIFIED.
7. GENERAL CONTRACTOR TO COORDINATE WORK BETWEEN DOOR INSTALLER AND SECURITY SYSTEM INSTALLER

GLAZING TYPE LEGEND

MARK	DESCRIPTION
A	1" THICK INSULATED FLOAT GLASS, LOW-E SOLAR BAN 60
B	1" THICK INSULATED TEMPERED GLASS, LOW-E SOLAR BAN 60 - BOTH LITES TEMPERED
C	1" THICK INSULATED SPANDREL GLASS. PROVIDE SPANDREL MINERAL WOOL INSULATION SYSTEM BEHIND ALL GLASS OF THIS TYPE
D	1" THICK INSULATED TEMPERED SPANDREL GLASS - TEMPERED AT EXTERIOR LITE. PROVIDE SPANDREL MINERAL WOOL INSULATION SYSTEM BEHIND ALL GLASS OF THIS TYPE
E	1" THICK INSULATED FLOAT GLASS, LOW-E SOLAR BAN 70
F	1" THICK INSULATED TEMPERED GLASS, LOW-E SOLAR BAN 70 - BOTH LITES TEMPERED
G	1/2" TEMPERED CLEAR GLASS
H	1/4" TEMPERED CLEAR GLASS
J	1/4" TEMPERED TRANSLUCENT GLAZING
K	1/2" TEMPERED TRANSLUCENT GLAZING
L	1" THICK INSULATED TRANSLUCENT GLAZING
M	1" THICK INSULATED TEMPERED TRANSLUCENT GLAZING
N	1" THICK INSULATED GLASS, LOW-E SOLAR BAN 60 - TEMPERED AT INTERIOR LITE
P	1" THICK INSULATED GLASS, LOW-E SOLAR BAN 70 - TEMPERED AT INTERIOR LITE
Q	1" THICK INSULATED TRANSLUCENT FLOAT GLASS, LOW-E SOLAR BAN 60
S1	SECURITY GLAZING (1) LAYER 1/8" TEMPERED CLEAR GLASS LAMINATED TO BOTH SIDES OF A 1/4" POLYCARBONATE SHEET - TOTAL GLAZING SYSTEM THICKNESS: 1/2"
S2	SECURITY GLAZING - ONE WAY (1) LAYER 1/8" TEMPERED ONE WAY GLASS LAMINATED TO (1) LAYER 1/4" POLYCARBONATE SHEET LAMINATED TO (1) LAYER 1/8" TEMPERED CLEAR GLASS - TOTAL GLAZING SYSTEM THICKNESS: 1/2"
S3	SECURITY GLAZING - INSULATED AT CELL SIDE, LITE SHALL BE (2) LAYERS OF 1/8" TEMPERED CLEAR GLASS LAMINATED TO 1/4" POLYCARBONATE SHEET, OUTER LITE SHALL BE 1/4" THICK TEMPERED CLEAR GLASS - TOTAL GLAZING SYSTEM THICKNESS: 1"

DOOR AND WINDOW NOTES

1. ALL METAL FRAMES SHALL HAVE A SINGLE RABBET PROFILE WITH A 2" DIMENSION ON THE STOP SIDE OF THE FRAME.
2. SECURITY SCREWS TO BE SET TO NON-SECURE SIDE.
3. ALL HOLLOW METAL DOORS LOCATED AT THE EXTERIOR OF THE BUILDING ARE TO BE INSULATED.
4. OVERALL FRAME DIMENSIONS ARE PROVIDED AS REFERENCE AND ARE TO BE FIELD VERIFIED.
5. POLYCARBONATE SHEET TO FACE THE NON-SECURE SIDE OF WINDOW.
6. ALL CURTAIN WALL OPENINGS SHALL HAVE (3) CONTINUOUS BEADS OF SEALANT AND BACKER ROD AT THE HEAD AND JAMB CONDITIONS. ALL CURTAIN WALL OPENINGS SHALL HAVE (2) CONTINUOUS BEADS OF SEALANT AND BACKER ROD AT SILL LOCATIONS WITH THE SILL FLASHING SET IN AN ADDITIONAL CONTINUOUS BEAD OF SEALANT. SEE DETAILS FOR FURTHER INFORMATION.
7. ALL 5" DEEP VERTICAL CURTAIN WALL CAPS SHALL HAVE A CAPPED ENDS AT THE TOP AND BOTTOM OF THE SYSTEMS.
8. PROVIDE 'PICK RESISTANT' SECURITY SEALANT AT ALL HOLDING CELLS, HOLDING AREAS, AND AT CORRIDORS/ SECURE VESTIBULES/ SECURITY VESTIBULES/ SECURE SOUND VESTIBULES WITHIN HOLDING AREAS.

VCBO ARCHITECTURE

VCBO ARCHITECTURE
524 SOUTH 600 EAST
SALT LAKE CITY, UT 84102
Phone: (801) 575-8800
Fax: (801) 531-9850
Web: vcbo.com

LICENSED ARCHITECT
No. 153912
BRENT R. TIPPETS
8-15-13
STATE OF UTAH

2nd District Juvenile Courthouse

Utah State Courts
08284150
165 West 20th Street, Ogden, Utah
BID DOCUMENTS

Rev #	Date	Description

Job # 12500
Date August 15, 2013
Owner # 08284150
Ins. #

CURTAIN WALL FRAME TYPES

A605

8/14/2013 2:35:42 PM

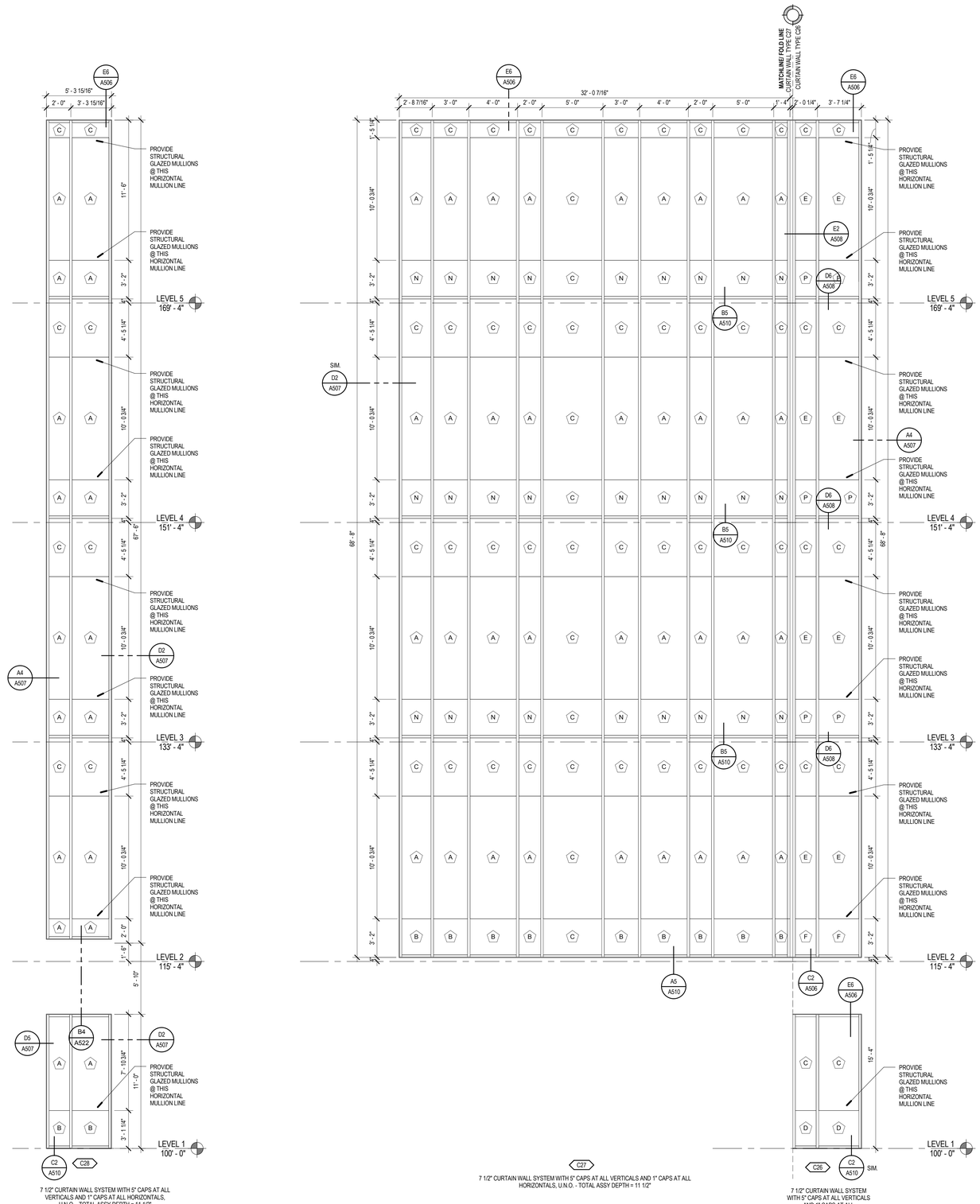

A1 CURTAIN WALL TYPES CONT.

SCALE: 1/4" = 1'-0"

DOOR & FRAME NOTES

1. MATERIAL ABBREVIATIONS:
   WD = WOOD
   AL = ALUMINUM
   HM = HOLLOW METAL
   HM / WD = MANUFACTURED SOUND DOOR WITH WOOD VENEER ON ONE SIDE OF DOOR SLAB - SEE DOOR TYPE AND DETAILS FOR FURTHER INFORMATION.
2. ALL HOLLOW METAL DOOR AND WINDOW FRAMES ARE TO HAVE A SINGLE RABBIT PROFILE.
3. SEE SPECIFICATION FOR HARDWARE GROUP DEFINITION
4. ALL HOLLOW METAL FRAMES OPENING TO THE EXTERIOR ARE TO BE 16 GAUGE AND GALVANIZED.
5. ALL HOLLOW METAL DOORS OPENING TO THE EXTERIOR ARE TO BE 14 GAUGE, INSULATED AND GALVANIZED. WHERE DOORS OPEN TO THE EXTERIOR, PROVIDE INSULATED HOLLOW METAL DOORS.
6. OVERALL CURTAINWALL AND ALUMINUM FRAME DIMENSIONS ARE GIVEN FOR REFERENCE, REFER TO DETAILS FOR JAMB AND SILL CONDITIONS. OVERALL DIMENSIONS ARE TO BE FIELD VERIFIED.
7. GENERAL CONTRACTOR TO COORDINATE WORK BETWEEN DOOR INSTALLER AND SECURITY SYSTEM INSTALLER

GLAZING TYPE LEGEND

MARK	DESCRIPTION
A	1" THICK INSULATED FLOAT GLASS, LOW-E SOLAR BAN 60
B	1" THICK INSULATED TEMPERED GLASS, LOW-E SOLAR BAN 60 - BOTH LITES TEMPERED
C	1" THICK INSULATED SPANDREL GLASS. PROVIDE SPANDREL MINERAL WOOL INSULATION SYSTEM BEHIND ALL GLASS OF THIS TYPE
D	1" THICK INSULATED TEMPERED SPANDREL GLASS - TEMPERED AT EXTERIOR LITE. PROVIDE SPANDREL MINERAL WOOL INSULATION SYSTEM BEHIND ALL GLASS OF THIS TYPE
E	1" THICK INSULATED FLOAT GLASS, LOW-E SOLAR BAN 70
F	1" THICK INSULATED TEMPERED GLASS, LOW-E SOLAR BAN 70 - BOTH LITES TEMPERED
G	1/2" TEMPERED CLEAR GLASS
H	1/4" TEMPERED CLEAR GLASS
J	1/4" TEMPERED TRANSLUCENT GLAZING
K	1/2" TEMPERED TRANSLUCENT GLAZING
L	1" THICK INSULATED TRANSLUCENT GLAZING
M	1" THICK INSULATED TEMPERED TRANSLUCENT GLAZING
N	1" THICK INSULATED GLASS, LOW-E SOLAR BAN 60 - TEMPERED AT INTERIOR LITE
P	1" THICK INSULATED GLASS, LOW-E SOLAR BAN 70 - TEMPERED AT INTERIOR LITE
Q	1" THICK INSULATED TRANSLUCENT FLOAT GLASS, LOW-E SOLAR BAN 60
S1	SECURITY GLAZING (1) LAYER 1/8" TEMPERED CLEAR GLASS LAMINATED TO BOTH SIDES OF A 1/4" POLYCARBONATE SHEET - TOTAL GLAZING SYSTEM THICKNESS: 1/2"
S2	SECURITY GLAZING - ONE WAY (1) LAYER 1/8" TEMPERED ONE WAY GLASS LAMINATED TO (1) LAYER 1/4" POLYCARBONATE SHEET LAMINATED TO (1) LAYER 1/8" TEMPERED CLEAR GLASS - TOTAL GLAZING SYSTEM THICKNESS: 1/2"
S3	SECURITY GLAZING - INSULATED AT CELL SIDE, LITE SHALL BE (2) LAYERS OF 1/8" TEMPERED CLEAR GLASS LAMINATED TO 1/4" POLYCARBONATE SHEET, OUTER LITE SHALL BE 1/4" THICK TEMPERED CLEAR GLASS - TOTAL GLAZING SYSTEM THICKNESS: 1"

DOOR AND WINDOW NOTES

1. ALL METAL FRAMES SHALL HAVE A SINGLE RABBET PROFILE WITH A 2" DIMENSION ON THE STOP SIDE OF THE FRAME.

2. SECURITY SCREWS TO BE SET TO NON-SECURE SIDE.

3. ALL HOLLOW METAL DOORS LOCATED AT THE EXTERIOR OF THE BUILDING ARE TO BE INSULATED.

4. OVERALL FRAME DIMENSIONS ARE PROVIDED AS REFERENCE AND ARE TO BE FIELD VERIFIED.

5. POLYCARBONATE SHEET TO FACE THE NON-SECURE SIDE OF WINDOW.

6. ALL CURTAIN WALL OPENINGS SHALL HAVE (3) CONTINUOUS BEADS OF SEALANT AND BACKER ROD AT THE HEAD AND JAMB CONDITIONS. ALL CURTAIN WALL OPENINGS SHALL HAVE (2) CONTINUOUS BEADS OF SEALANT AND BACKER ROD AT SILL LOCATIONS WITH THE SILL FLASHING SET IN AN ADDITIONAL CONTINUOUS BEAD OF SEALANT. SEE DETAILS FOR FURTHER INFORMATION.

7. ALL 5" DEEP VERTICAL CURTAIN WALL CAPS SHALL HAVE A CAPPED ENDS AT THE TOP AND BOTTOM OF THE SYSTEMS.

8. PROVIDE 'PICK RESISTANT' SECURITY SEALANT AT ALL HOLDING CELLS, HOLDING AREAS, AND AT CORRIDORS/ SECURE VESTIBULES/ SECURITY VESTIBULES/ SECURE SOUND VESTIBULES WITHIN HOLDING AREAS.

VCBO ARCHITECTURE
524 SOUTH 600 EAST
SALT LAKE CITY, UT 84102
Phone: (801) 575-8800
Fax: (801) 531-9850
Web: vcbo.com

LICENSED ARCHITECT
No. 153912
BRENT R. TIPPETS
8-15-13
STATE OF UTAH

2nd District Juvenile Courthouse

Utah State Courts
08284150
165 West 20th Street, Ogden, Utah
BID DOCUMENTS

Rev #	Date	Description

Job # 12500
Date August 15, 2013
Owner # 08284150
Ins. #

CURTAIN WALL FRAME TYPES

A606

8/14/2013 2:35:52 PM

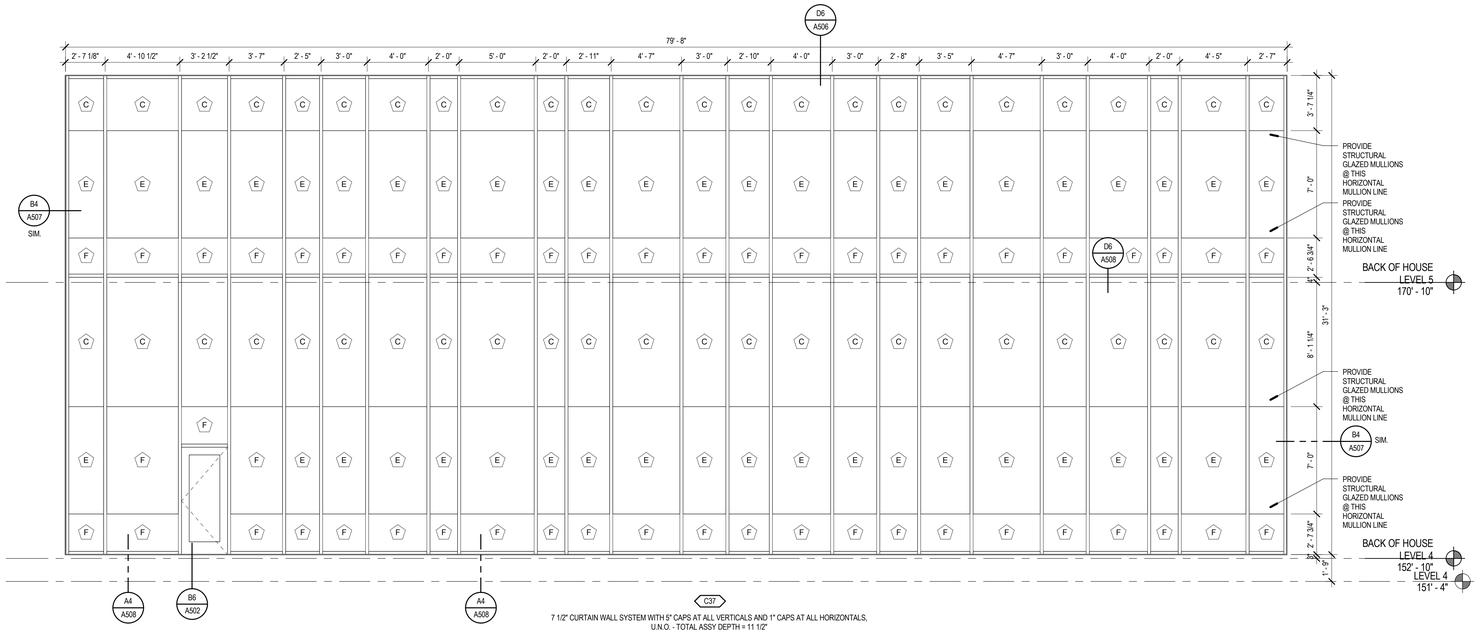

D1 CURTAIN WALL TYPES CONT.

SCALE: 1/4" = 1'-0"

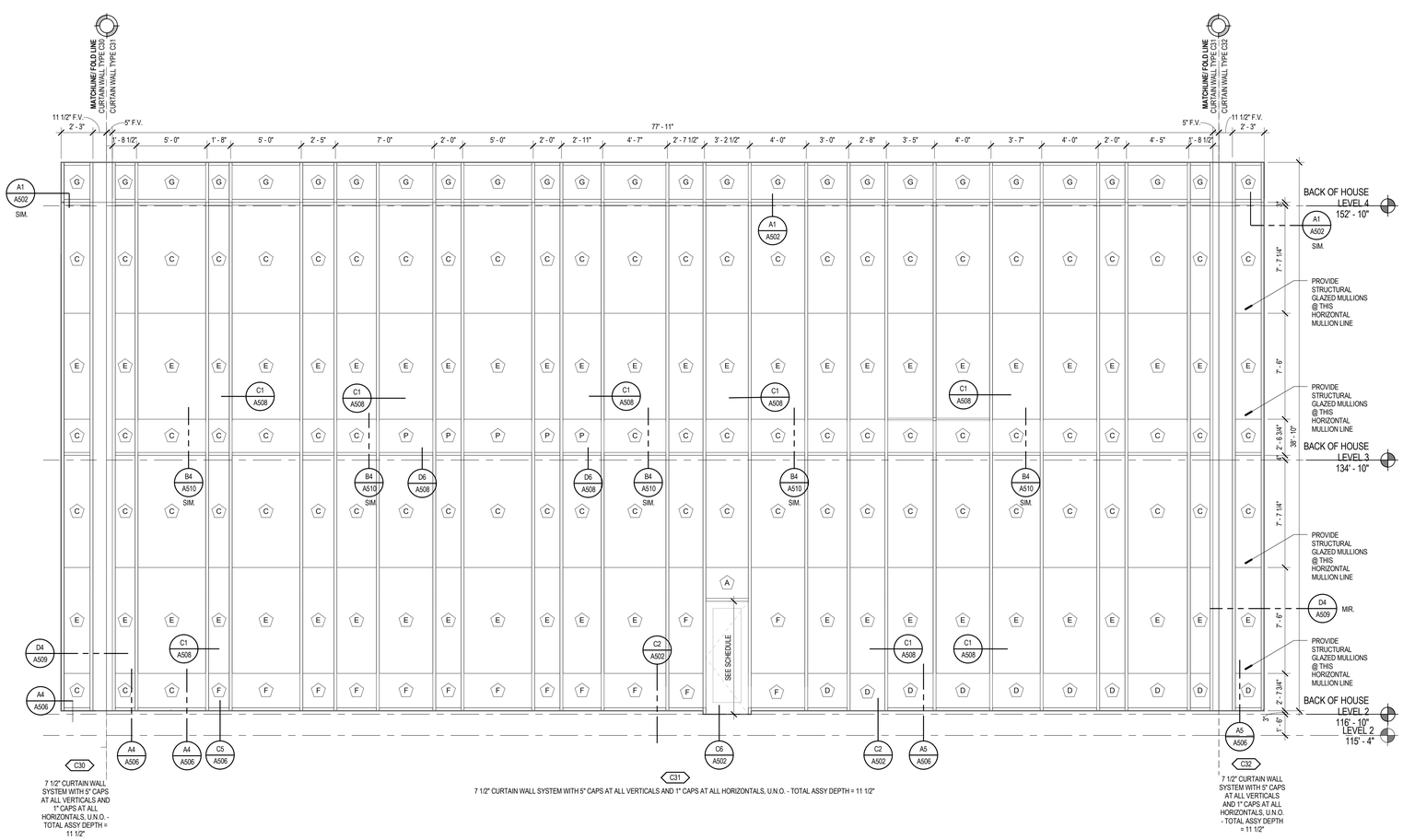

DOOR & FRAME NOTES

1. MATERIAL ABBREVIATIONS:
   WD = WOOD
   AL = ALUMINUM
   HM = HOLLOW METAL
   HM / WD = MANUFACTURED SOUND DOOR WITH WOOD VENEER ON ONE SIDE OF DOOR SLAB - SEE DOOR TYPE AND DETAILS FOR FURTHER INFORMATION.
2. ALL HOLLOW METAL DOOR AND WINDOW FRAMES ARE TO HAVE A SINGLE RABBIT PROFILE.
3. SEE SPECIFICATION FOR HARDWARE GROUP DEFINITION
4. ALL HOLLOW METAL FRAMES OPENING TO THE EXTERIOR ARE TO BE 16 GAUGE AND GALVANIZED.
5. ALL HOLLOW METAL DOORS OPENING TO THE EXTERIOR ARE TO BE 14 GAUGE, INSULATED AND GALVANIZED. WHERE DOORS OPEN TO THE EXTERIOR, PROVIDE INSULATED HOLLOW METAL DOORS.
6. OVERALL CURTAINWALL AND ALUMINUM FRAME DIMENSIONS ARE GIVEN FOR REFERENCE, REFER TO DETAILS FOR JAMB AND SILL CONDITIONS. OVERALL DIMENSIONS ARE TO BE FIELD VERIFIED.
7. GENERAL CONTRACTOR TO COORDINATE WORK BETWEEN DOOR INSTALLER AND SECURITY SYSTEM INSTALLER

GLAZING TYPE LEGEND

MARK	DESCRIPTION
A	1" THICK INSULATED FLOAT GLASS, LOW-E SOLAR BAN 60
B	1" THICK INSULATED TEMPERED GLASS, LOW-E SOLAR BAN 60 - BOTH LITES TEMPERED
C	1" THICK INSULATED SPANDREL GLASS. PROVIDE SPANDREL MINERAL WOOL INSULATION SYSTEM BEHIND ALL GLASS OF THIS TYPE
D	1" THICK INSULATED TEMPERED SPANDREL GLASS - TEMPERED AT EXTERIOR LITE. PROVIDE SPANDREL MINERAL WOOL INSULATION SYSTEM BEHIND ALL GLASS OF THIS TYPE
E	1" THICK INSULATED FLOAT GLASS, LOW-E SOLAR BAN 70
F	1" THICK INSULATED TEMPERED GLASS, LOW-E SOLAR BAN 70 - BOTH LITES TEMPERED
G	1/2" TEMPERED CLEAR GLASS
H	1/4" TEMPERED CLEAR GLASS
J	1/4" TEMPERED TRANSLUCENT GLAZING
K	1/2" TEMPERED TRANSLUCENT GLAZING
L	1" THICK INSULATED TRANSLUCENT GLAZING
M	1" THICK INSULATED TEMPERED TRANSLUCENT GLAZING
N	1" THICK INSULATED GLASS, LOW-E SOLAR BAN 60 - TEMPERED AT INTERIOR LITE
P	1" THICK INSULATED GLASS, LOW-E SOLAR BAN 70 - TEMPERED AT INTERIOR LITE
Q	1" THICK INSULATED TRANSLUCENT FLOAT GLASS, LOW-E SOLAR BAN 60
S1	SECURITY GLAZING (1) LAYER 1/8" TEMPERED CLEAR GLASS LAMINATED TO BOTH SIDES OF A 1/4" POLYCARBONATE SHEET - TOTAL GLAZING SYSTEM THICKNESS: 1/2"
S2	SECURITY GLAZING - ONE WAY (1) LAYER 1/8" TEMPERED ONE WAY GLASS LAMINATED TO (1) LAYER 1/4" POLYCARBONATE SHEET LAMINATED TO (1) LAYER 1/8" TEMPERED CLEAR GLASS - TOTAL GLAZING SYSTEM THICKNESS: 1/2"
S3	SECURITY GLAZING - INSULATED AT CELL SIDE, LITE SHALL BE (2) LAYERS OF 1/8" TEMPERED CLEAR GLASS LAMINATED TO 1/4" POLYCARBONATE SHEET, OUTER LITE SHALL BE 1/4" THICK TEMPERED CLEAR GLASS - TOTAL GLAZING SYSTEM THICKNESS: 1"

DOOR AND WINDOW NOTES

1. ALL METAL FRAMES SHALL HAVE A SINGLE RABBET PROFILE WITH A 2" DIMENSION ON THE STOP SIDE OF THE FRAME.
2. SECURITY SCREWS TO BE SET TO NON-SECURE SIDE.
3. ALL HOLLOW METAL DOORS LOCATED AT THE EXTERIOR OF THE BUILDING ARE TO BE INSULATED.
4. OVERALL FRAME DIMENSIONS ARE PROVIDED AS REFERENCE AND ARE TO BE FIELD VERIFIED.
5. POLYCARBONATE SHEET TO FACE THE NON-SECURE SIDE OF WINDOW.
6. ALL CURTAIN WALL OPENINGS SHALL HAVE (3) CONTINUOUS BEADS OF SEALANT AND BACKER ROD AT THE HEAD AND JAMB CONDITIONS. ALL CURTAIN WALL OPENINGS SHALL HAVE (2) CONTINUOUS BEADS OF SEALANT AND BACKER ROD AT SILL LOCATIONS WITH THE SILL FLASHING SET IN AN ADDITIONAL CONTINUOUS BEAD OF SEALANT. SEE DETAILS FOR FURTHER INFORMATION.
7. ALL 5" DEEP VERTICAL CURTAIN WALL CAPS SHALL HAVE A CAPPED ENDS AT THE TOP AND BOTTOM OF THE SYSTEMS.
8. PROVIDE 'PICK RESISTANT' SECURITY SEALANT AT ALL HOLDING CELLS, HOLDING AREAS, AND AT CORRIDORS/ SECURE VESTIBULES/ SECURITY VESTIBULES/ SECURE SOUND VESTIBULES WITHIN HOLDING AREAS.

VCBO ARCHITECTURE
524 SOUTH 600 EAST
SALT LAKE CITY, UT 84102
Phone: (801) 575-8800
Fax: (801) 531-9850
Web: vcbo.com

LICENSED ARCHITECT
No. 153912
BRENT R. TIPPETS
8-15-13
STATE OF UTAH

2nd District Juvenile Courthouse

Utah State Courts
08284150
165 West 20th Street, Ogden, Utah
BID DOCUMENTS

Rev #	Date	Description

Job # 12500
Date August 15, 2013
Owner # 08284150
Ins. #

CURTAIN WALL FRAME TYPES

A607

8/14/2013 2:36:05 PM

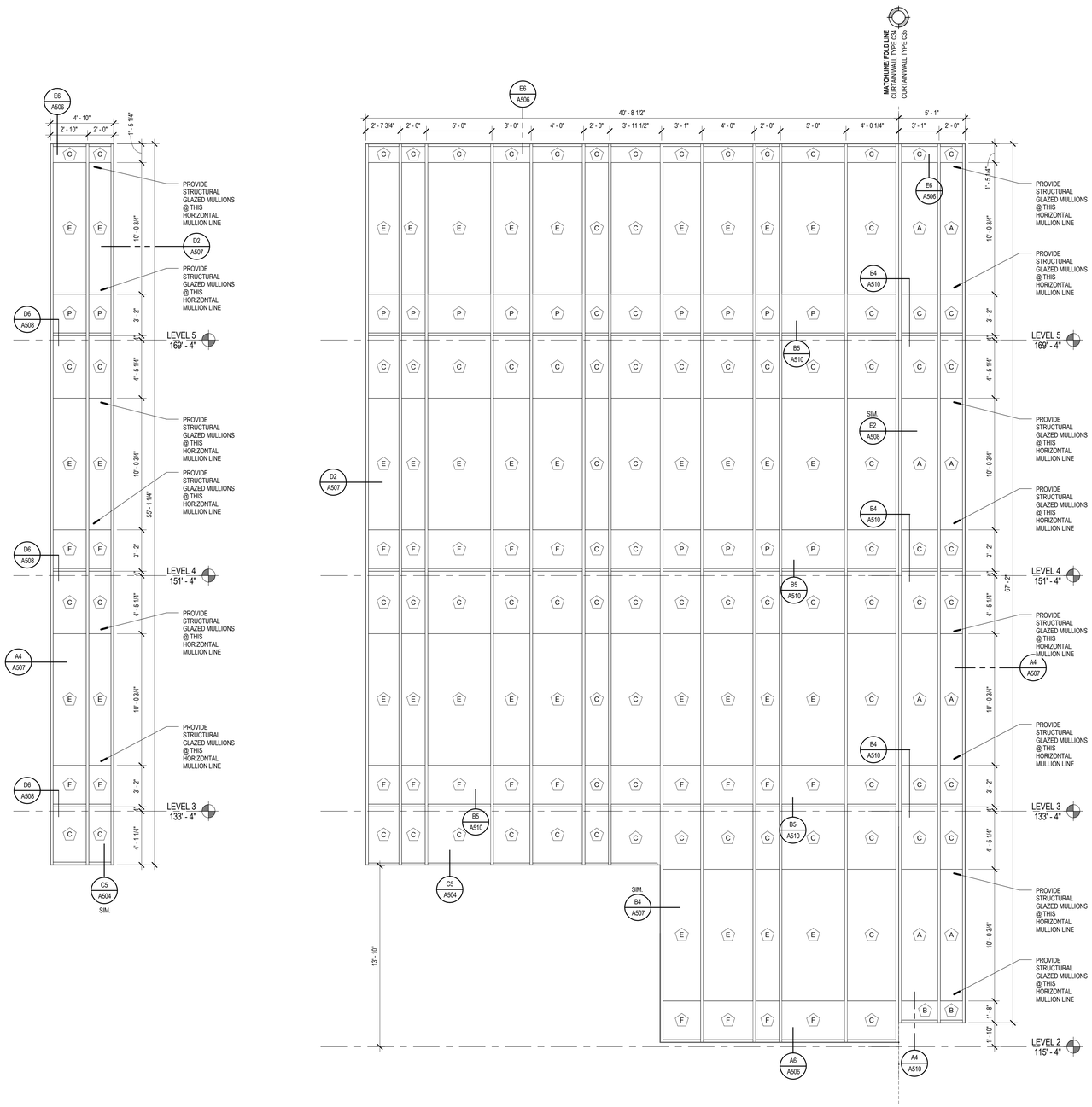

C33

7 1/2" CURTAIN WALL SYSTEM WITH 5" CAPS AT ALL VERTICALS AND 1" CAPS AT ALL HORIZONTALS, U.N.O. - TOTAL ASSY DEPTH = 11 1/2"

C34

7 1/2" CURTAIN WALL SYSTEM WITH 5" CAPS AT ALL VERTICALS AND 1" CAPS AT ALL HORIZONTALS, U.N.O. - TOTAL ASSY DEPTH = 11 1/2"

C35

7 1/2" CURTAIN WALL SYSTEM WITH 5" CAPS AT ALL VERTICALS AND 1" CAPS AT ALL HORIZONTALS, U.N.O. - TOTAL ASSY DEPTH = 11 1/2"

A1 CURTAIN WALL TYPES CONT.

SCALE: 1/4" = 1'-0"

DOOR & FRAME NOTES

1. MATERIAL ABBREVIATIONS:
   WD = WOOD
   AL = ALUMINUM
   HM = HOLLOW METAL
   HM / WD = MANUFACTURED SOUND DOOR WITH WOOD VENEER ON ONE SIDE OF DOOR SLAB - SEE DOOR TYPE AND DETAILS FOR FURTHER INFORMATION.
2. ALL HOLLOW METAL DOOR AND WINDOW FRAMES ARE TO HAVE A SINGLE RABBIT PROFILE.
3. SEE SPECIFICATION FOR HARDWARE GROUP DEFINITION
4. ALL HOLLOW METAL FRAMES OPENING TO THE EXTERIOR ARE TO BE 16 GAUGE AND GALVANIZED.
5. ALL HOLLOW METAL DOORS OPENING TO THE EXTERIOR ARE TO BE 14 GAUGE, INSULATED AND GALVANIZED. WHERE DOORS OPEN TO THE EXTERIOR, PROVIDE INSULATED HOLLOW METAL DOORS.
6. OVERALL CURTAINWALL AND ALUMINUM FRAME DIMENSIONS ARE GIVEN FOR REFERENCE, REFER TO DETAILS FOR JAMB AND SILL CONDITIONS. OVERALL DIMENSIONS ARE TO BE FIELD VERIFIED.
7. GENERAL CONTRACTOR TO COORDINATE WORK BETWEEN DOOR INSTALLER AND SECURITY SYSTEM INSTALLER

GLAZING TYPE LEGEND

MARK	DESCRIPTION
A	1" THICK INSULATED FLOAT GLASS, LOW-E SOLAR BAN 60
B	1" THICK INSULATED TEMPERED GLASS, LOW-E SOLAR BAN 60 - BOTH LITES TEMPERED
C	1" THICK INSULATED SPANDREL GLASS. PROVIDE SPANDREL MINERAL WOOL INSULATION SYSTEM BEHIND ALL GLASS OF THIS TYPE
D	1" THICK INSULATED TEMPERED SPANDREL GLASS - TEMPERED AT EXTERIOR LITE. PROVIDE SPANDREL MINERAL WOOL INSULATION SYSTEM BEHIND ALL GLASS OF THIS TYPE
E	1" THICK INSULATED FLOAT GLASS, LOW-E SOLAR BAN 70
F	1" THICK INSULATED TEMPERED GLASS, LOW-E SOLAR BAN 70 - BOTH LITES TEMPERED
G	1/2" TEMPERED CLEAR GLASS
H	1/4" TEMPERED CLEAR GLASS
J	1/4" TEMPERED TRANSLUCENT GLAZING
K	1/2" TEMPERED TRANSLUCENT GLAZING
L	1" THICK INSULATED TRANSLUCENT GLAZING
M	1" THICK INSULATED TEMPERED TRANSLUCENT GLAZING
N	1" THICK INSULATED GLASS, LOW-E SOLAR BAN 60 - TEMPERED AT INTERIOR LITE
P	1" THICK INSULATED GLASS, LOW-E SOLAR BAN 70 - TEMPERED AT INTERIOR LITE
Q	1" THICK INSULATED TRANSLUCENT FLOAT GLASS, LOW-E SOLAR BAN 60
S1	SECURITY GLAZING (1) LAYER 1/8" TEMPERED CLEAR GLASS LAMINATED TO BOTH SIDES OF A 1/4" POLYCARBONATE SHEET - TOTAL GLAZING SYSTEM THICKNESS: 1/2"
S2	SECURITY GLAZING - ONE WAY (1) LAYER 1/8" TEMPERED ONE WAY GLASS LAMINATED TO (1) LAYER 1/4" POLYCARBONATE SHEET LAMINATED TO (1) LAYER 1/8" TEMPERED CLEAR GLASS - TOTAL GLAZING SYSTEM THICKNESS: 1/2"
S3	SECURITY GLAZING - INSULATED AT CELL SIDE: LITE SHALL BE (2) LAYERS OF 1/8" TEMPERED CLEAR GLASS LAMINATED TO 1/4" POLYCARBONATE SHEET, OUTER LITE SHALL BE 1/4" THICK TEMPERED CLEAR GLASS - TOTAL GLAZING SYSTEM THICKNESS: 1"

DOOR AND WINDOW NOTES

1. ALL METAL FRAMES SHALL HAVE A SINGLE RABBET PROFILE WITH A 2" DIMENSION ON THE STOP SIDE OF THE FRAME.

2. SECURITY SCREWS TO BE SET TO NON-SECURE SIDE.

3. ALL HOLLOW METAL DOORS LOCATED AT THE EXTERIOR OF THE BUILDING ARE TO BE INSULATED.

4. OVERALL FRAME DIMENSIONS ARE PROVIDED AS REFERENCE AND ARE TO BE FIELD VERIFIED.

5. POLYCARBONATE SHEET TO FACE THE NON-SECURE SIDE OF WINDOW.

6. ALL CURTAIN WALL OPENINGS SHALL HAVE (3) CONTINUOUS BEADS OF SEALANT AND BACKER ROD AT THE HEAD AND JAMB CONDITIONS. ALL CURTAIN WALL OPENINGS SHALL HAVE (2) CONTINUOUS BEADS OF SEALANT AND BACKER ROD AT SILL LOCATIONS WITH THE SILL FLASHING SET IN AN ADDITIONAL CONTINUOUS BEAD OF SEALANT. SEE DETAILS FOR FURTHER INFORMATION.

7. ALL 5" DEEP VERTICAL CURTAIN WALL CAPS SHALL HAVE A CAPPED ENDS AT THE TOP AND BOTTOM OF THE SYSTEMS.

8. PROVIDE 'PICK RESISTANT' SECURITY SEALANT AT ALL HOLDING CELLS, HOLDING AREAS, AND AT CORRIDORS/ SECURE VESTIBULES/ SECURITY VESTIBULES/ SECURE SOUND VESTIBULES WITHIN HOLDING AREAS.

VCBO ARCHITECTURE
524 SOUTH 600 EAST
SALT LAKE CITY, UT 84102
Phone: (801) 575-8800
Fax: (801) 531-9850
Web: vcbo.com

2nd District Juvenile Courthouse

Utah State Courts
08284150
165 West 20th Street, Ogden, Utah
BID DOCUMENTS

Rev #	Date	Description

Job # 12500
Date August 15, 2013
Owner # 08284150
Ins. #

CURTAIN WALL FRAME TYPES

A608

8/14/2013 2:36:15 PM

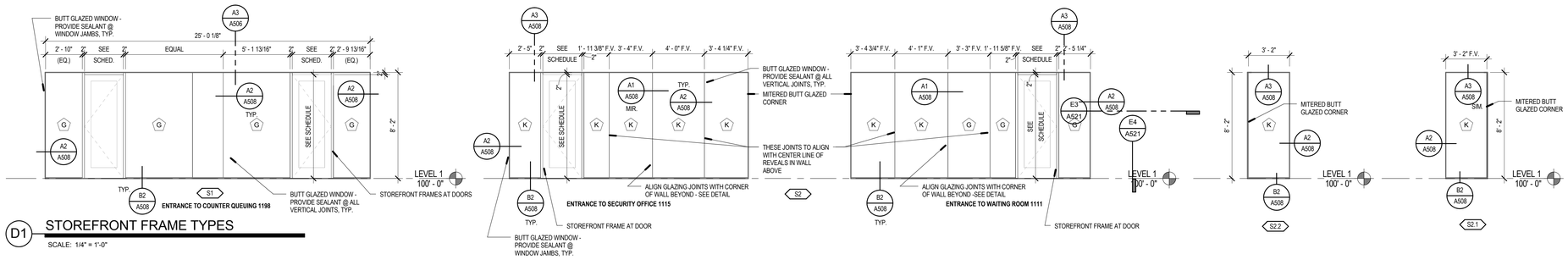

D1 STOREFRONT FRAME TYPES

SCALE: 1/4" = 1'-0"

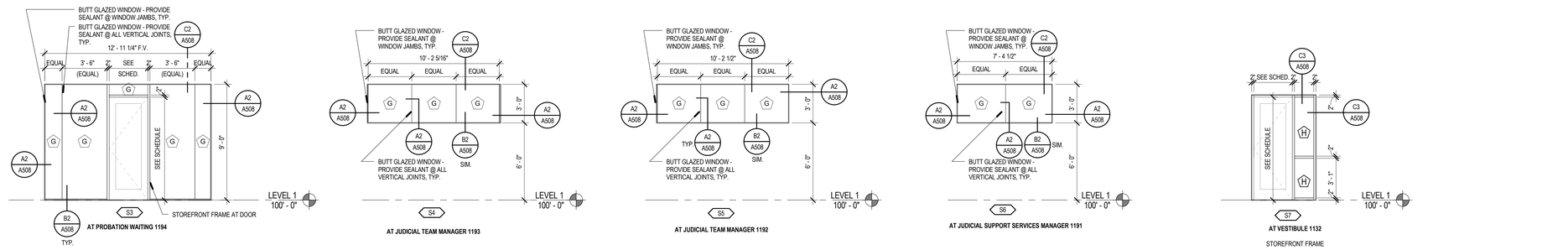

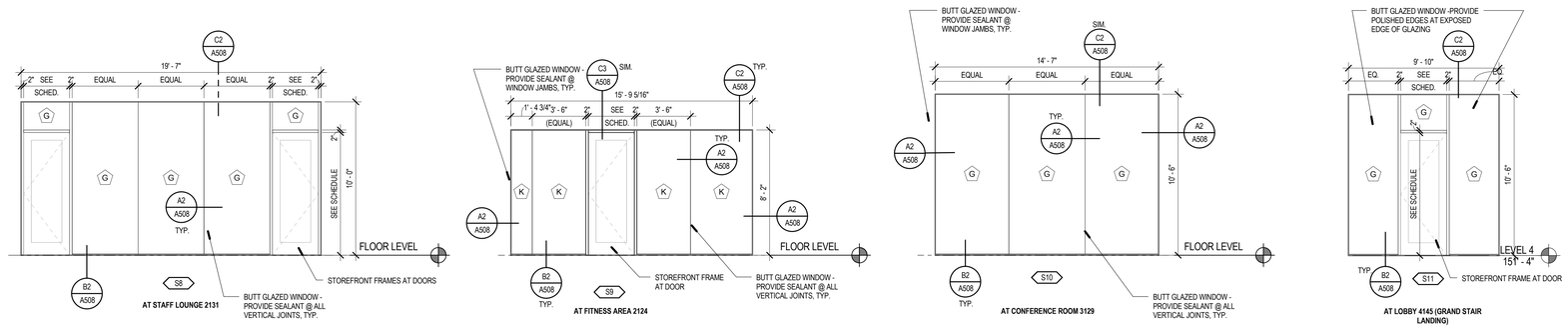

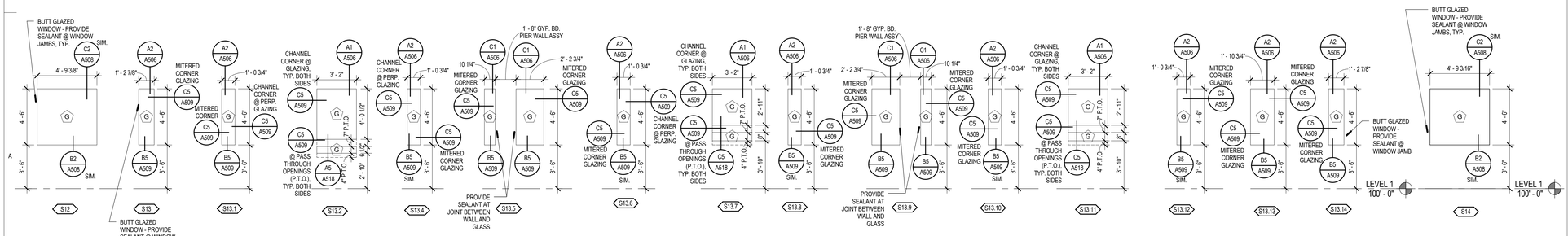

DOOR & FRAME NOTES

1. MATERIAL ABBREVIATIONS:
   WD = WOOD
   AL = ALUMINUM
   HM = HOLLOW METAL
   HM / WD = MANUFACTURED SOUND DOOR WITH WOOD VENEER ON ONE SIDE OF DOOR SLAB - SEE DOOR TYPE AND DETAILS FOR FURTHER INFORMATION.
2. ALL HOLLOW METAL DOOR AND WINDOW FRAMES ARE TO HAVE A SINGLE RABBIT PROFILE.
3. SEE SPECIFICATION FOR HARDWARE GROUP DEFINITION
4. ALL HOLLOW METAL FRAMES OPENING TO THE EXTERIOR ARE TO BE 16 GAUGE AND GALVANIZED.
5. ALL HOLLOW METAL DOORS OPENING TO THE EXTERIOR ARE TO BE 14 GAUGE, INSULATED AND GALVANIZED. WHERE DOORS OPEN TO THE EXTERIOR, PROVIDE INSULATED HOLLOW METAL DOORS.
6. OVERALL CURTAINWALL AND ALUMINUM FRAME DIMENSIONS ARE GIVEN FOR REFERENCE, REFER TO DETAILS FOR JAMB AND SILL CONDITIONS. OVERALL DIMENSIONS ARE TO BE FIELD VERIFIED.
7. GENERAL CONTRACTOR TO COORDINATE WORK BETWEEN DOOR INSTALLER AND SECURITY SYSTEM INSTALLER

GLAZING TYPE LEGEND

MARK	DESCRIPTION
A	1" THICK INSULATED FLOAT GLASS, LOW-E SOLAR BAN 60
B	1" THICK INSULATED TEMPERED GLASS, LOW-E SOLAR BAN 60 - BOTH LITES TEMPERED
C	1" THICK INSULATED SPANDREL GLASS. PROVIDE SPANDREL MINERAL WOOL INSULATION SYSTEM BEHIND ALL GLASS OF THIS TYPE
D	1" THICK INSULATED TEMPERED SPANDREL GLASS - TEMPERED AT EXTERIOR LITE. PROVIDE SPANDREL MINERAL WOOL INSULATION SYSTEM BEHIND ALL GLASS OF THIS TYPE
E	1" THICK INSULATED FLOAT GLASS, LOW-E SOLAR BAN 70
F	1" THICK INSULATED TEMPERED GLASS, LOW-E SOLAR BAN 70 - BOTH LITES TEMPERED
G	1/2" TEMPERED CLEAR GLASS
H	1/4" TEMPERED CLEAR GLASS
J	1/4" TEMPERED TRANSLUCENT GLAZING
K	1/2" TEMPERED TRANSLUCENT GLAZING
L	1" THICK INSULATED TRANSLUCENT GLAZING
M	1" THICK INSULATED TEMPERED TRANSLUCENT GLAZING
N	1" THICK INSULATED GLASS, LOW-E SOLAR BAN 60 - TEMPERED AT INTERIOR LITE
P	1" THICK INSULATED GLASS, LOW-E SOLAR BAN 70 - TEMPERED AT INTERIOR LITE
Q	1" THICK INSULATED TRANSLUCENT FLOAT GLASS, LOW-E SOLAR BAN 60
S1	SECURITY GLAZING (1) LAYER 1/8" TEMPERED CLEAR GLASS LAMINATED TO BOTH SIDES OF A 1/4" POLYCARBONATE SHEET - TOTAL GLAZING SYSTEM THICKNESS: 1/2"
S2	SECURITY GLAZING - ONE WAY (1) LAYER 1/8" TEMPERED ONE WAY GLASS LAMINATED TO (1) LAYER 1/4" POLYCARBONATE SHEET LAMINATED TO (1) LAYER 1/8" TEMPERED CLEAR GLASS - TOTAL GLAZING SYSTEM THICKNESS: 1/2"
S3	SECURITY GLAZING - INSULATED AT CELL SIDE: LITE SHALL BE (2) LAYERS OF 1/8" TEMPERED CLEAR GLASS LAMINATED TO 1/4" POLYCARBONATE SHEET, OUTER LITE SHALL BE 1/4" THICK TEMPERED CLEAR GLASS - TOTAL GLAZING SYSTEM THICKNESS: 1"

DOOR AND WINDOW NOTES

1. ALL METAL FRAMES SHALL HAVE A SINGLE RABBET PROFILE WITH A 2" DIMENSION ON THE STOP SIDE OF THE FRAME.
2. SECURITY SCREWS TO BE SET TO NON-SECURE SIDE.
3. ALL HOLLOW METAL DOORS LOCATED AT THE EXTERIOR OF THE BUILDING ARE TO BE INSULATED.
4. OVERALL FRAME DIMENSIONS ARE PROVIDED AS REFERENCE AND ARE TO BE FIELD VERIFIED.
5. POLYCARBONATE SHEET TO FACE THE NON-SECURE SIDE OF WINDOW.
6. ALL CURTAIN WALL OPENINGS SHALL HAVE (3) CONTINUOUS BEADS OF SEALANT AND BACKER ROD AT THE HEAD AND JAMB CONDITIONS. ALL CURTAIN WALL OPENINGS SHALL HAVE (2) CONTINUOUS BEADS OF SEALANT AND BACKER ROD AT SILL LOCATIONS WITH THE SILL FLASHING SET IN AN ADDITIONAL CONTINUOUS BEAD OF SEALANT. SEE DETAILS FOR FURTHER INFORMATION.
7. ALL 5" DEEP VERTICAL CURTAIN WALL CAPS SHALL HAVE A CAPPED ENDS AT THE TOP AND BOTTOM OF THE SYSTEMS.
8. PROVIDE 'PICK RESISTANT' SECURITY SEALANT AT ALL HOLDING CELLS, HOLDING AREAS, AND AT CORRIDORS/ SECURE VESTIBULES/ SECURITY VESTIBULES/ SECURE SOUND VESTIBULES WITHIN HOLDING AREAS.

VCBO ARCHITECTURE
524 SOUTH 600 EAST
SALT LAKE CITY, UT 84102
Phone: (801) 575-8800
Fax: (801) 531-9850
Web: vcbo.com

LICENSED ARCHITECT No. 153912 BRENT R. TIPPETS 8-15-13 STATE OF UTAH

2nd District Juvenile Courthouse

Utah State Courts
165 West 20th Street, Ogden, Utah
08284150
BID DOCUMENTS

Rev #	Date	Description
1	4/30/2013	Fire Marshal Response

Job # 12500
Date August 15, 2013
Owner # 08284150
Ins. #

STOREFRONT TYPES

A609

8/14/2013 2:36:54 PM

SIGNAGE SCHEDULE

MARK	VCBO ROOM NUMBER	SIGN ROOM NUMBER	TYPE MARK	TYPE	SIGN TEXT	SIGN BLANK BACK	SIGN NOTES
001S	SITE		SP	SP - Judiciary Seal	SEE SIGN TYPE	No	SITE SIGNAGE -SEE A1/AS101
002S	SITE		ML12	ML12 - CAST STAINLESS STEEL LETTERING - 12" TALL - CENTURY GOTHIC FONT	SECOND		SITE SIGNAGE -SEE A1/AS101
003S	SITE		ML12	ML12 - CAST STAINLESS STEEL LETTERING - 12" TALL - CENTURY GOTHIC FONT	DISTRICT		SITE SIGNAGE -SEE A1/AS101
004S	SITE		ML12	ML12 - CAST STAINLESS STEEL LETTERING - 12" TALL - CENTURY GOTHIC FONT	JUVENILE		SITE SIGNAGE -SEE A1/AS101
005S	SITE		ML12	ML12 - CAST STAINLESS STEEL LETTERING - 12" TALL - CENTURY GOTHIC FONT	COURTHOUSE		SITE SIGNAGE -SEE A1/AS101
1101	1101		FS	FS - STAIRWELL SIGN	NW STAIR, LEVEL 1, EXIT LEVEL 1, NO ROOF ACCESS	No	
1102A	1102		FE	FE - ELEVATOR	SEE SIGN TYPE	No	
1102B	1102		VL1	VL - Vinyl - 1	SEE SIGN TYPE	No	*
1102C	1102		VL1	VL - Vinyl - 1	SEE SIGN TYPE	No	*
1103	1103		ML14	ML14 - CAST STAINLESS STEEL LETTERING - 14" TALL - CENTURY GOTHIC FONT	165		BUILDING ADDRESS *
1104	1104		D	D - DEDICATION PLAQUE	SEE SIGN TYPE	No	
1107A	1107		SP	SP - Judiciary Seal	SEE SIGN TYPE	No	*
1107B	1107		ML6	ML6 - CAST ALUMINUM LETTERING - 6" TALL - CENTURY GOTHIC FONT	SECOND DISTRICT		*
1107C	1107		ML6	ML6 - CAST ALUMINUM LETTERING - 6" TALL - CENTURY GOTHIC FONT	JUVENILE COURTHOUSE		*
1107D	1107	N/A	FX	FX - MAXIMUM OCCUPANCY	MAXIMUM OCCUPANCY XXX	No	
1108	1108		F2	F2 - ROOM SIGN - CONFERENCE	CONFERENCE ROOM	No	
1109A	1109		B2	B2 - ROOM SIGN - CONFERENCE	CONFERENCE ROOM	No	
1109B	1109		FX	FX - MAXIMUM OCCUPANCY	MAXIMUM OCCUPANCY XXX	No	
1110A	1110		B2	B2 - ROOM SIGN - CONFERENCE	CONFERENCE ROOM	No	
1110B	1110		FX	FX - MAXIMUM OCCUPANCY	MAXIMUM OCCUPANCY XXX	No	
1111	1111		F1	F1 - ROOM SIGN	MEDIATION	Yes	
1111A	1111		ML6	ML6 - CAST ALUMINUM LETTERING - 6" TALL - CENTURY GOTHIC FONT	MEDIATION		*
1112	1112		FW	FW - ACCESSIBLE WOMEN'S R.R.	WOMEN	No	
1113	1113		FD	FD - ACCESSIBLE DIRECTIONAL	THE NEAREST FAMILY RESTROOM CAN BE FOUND AT LEVEL 2	No	
1114	1114		FM	FM - ACCESSIBLE MEN'S R.R.	MEN	No	
1115	1115		F1	F1 - ROOM SIGN	SECURITY OFFICE	Yes	
1116A	1116		B2	B2 - ROOM SIGN - CONFERENCE	CONFERENCE ROOM	No	
1116B	1116		FX	FX - MAXIMUM OCCUPANCY	MAXIMUM OCCUPANCY XXX	No	
1117	1117		B2	B2 - ROOM SIGN - CONFERENCE	OFFICE	No	
1118A	1118		B2	B2 - ROOM SIGN - CONFERENCE	CONFERENCE ROOM	No	
1118B	1118		FX	FX - MAXIMUM OCCUPANCY	MAXIMUM OCCUPANCY XXX	No	
1119A	1119		B2	B2 - ROOM SIGN - CONFERENCE	CONFERENCE ROOM	No	
1119B	1119		FX	FX - MAXIMUM OCCUPANCY	MAXIMUM OCCUPANCY XXX	No	
1120A	1120		B2	B2 - ROOM SIGN - CONFERENCE	CONFERENCE ROOM	No	
1120B	1120		FX	FX - MAXIMUM OCCUPANCY	MAXIMUM OCCUPANCY XXX	No	
1121	1121		B1	B1 - ROOM SIGN	RECEIVING	No	
1122	1122		B1	B1 - ROOM SIGN	MAIL ROOM	No	
1123	1123		B1	B1 - ROOM SIGN	STAIR	No	
1123A	1123		BS	BS - STAIRWELL SIGN	SW STAIR, LEVEL 1, EXIT LEVEL 1, ROOF ACCESS	No	
1124A	1124		B2	B2 - ROOM SIGN - CONFERENCE	CONFERENCE ROOM	No	
1124B	1124		B2	B2 - ROOM SIGN - CONFERENCE	CONFERENCE ROOM	No	
1124C	1124		B2	B2 - ROOM SIGN - CONFERENCE	CONFERENCE ROOM	No	
1124D	1124		B2	B2 - ROOM SIGN - CONFERENCE	CONFERENCE ROOM	No	
1124E	1124	N/A	BX	BX - MAXIMUM OCCUPANCY	MAXIMUM OCCUPANCY XXX	No	
1124F	1124	N/A	BX	BX - MAXIMUM OCCUPANCY	MAXIMUM OCCUPANCY XXX	No	
1127	1127		BR	BR - ACCESSIBLE UNISEX R.R.	RESTROOM	No	
1128	1128		BR	BR - ACCESSIBLE UNISEX R.R.	RESTROOM	No	
1129	1129		B1	B1 - ROOM SIGN	CUSTODIAL OFFICE	No	
1130	1130		B1	B1 - ROOM SIGN	CUSTODIAL WORK ROOM	No	
1131	1131		B1	B1 - ROOM SIGN	STORAGE	No	
1133A	1133		BE	BE - ELEVATOR	SEE SIGN TYPE	No	
1134	1134		B1	B1 - ROOM SIGN	COMMUNICATION CLOSET	No	
1135	1135		F1	F1 - ROOM SIGN	STAIR	No	MOUNT W/ TAMPER-PROOF SCREWS
1135A	1135		FS	FS - STAIRWELL SIGN	STAIR, LEVEL 1, EXIT LEVEL 1, NO ROOF ACCESS	No	MOUNT W/ TAMPER-PROOF SCREWS
1136	1136		B1	B1 - ROOM SIGN	ELECTRICAL	No	
1137	1137		F1	F1 - ROOM SIGN	ELEVATOR	No	MOUNT W/ TAMPER-PROOF SCREWS
1139	1139		BR	BR - ACCESSIBLE UNISEX R.R.	RESTROOM	No	
1140	1140		BR	BR - ACCESSIBLE UNISEX R.R.	RESTROOM	No	
1141	1141		B4	B4 - ROOM SIGN W/ INSERT	PROBATION OFFICER	No	
1142	1142		B1	B1 - ROOM SIGN	SUPPLY STORAGE	No	
1143	1143		B2	B2 - ROOM SIGN - CONFERENCE	CONFERENCE ROOM	No	
1146	1146		HC	HC - HOLDING CELL ROOM SIGN	JUVE. MALE HOLDING CELL	No	MOUNT W/ TAMPER-PROOF SCREWS
1147	1147		HC	HC - HOLDING CELL ROOM SIGN	ADULT MALE HOLDING CELL	No	MOUNT W/ TAMPER-PROOF SCREWS
1148	1148		HC	HC - HOLDING CELL ROOM SIGN	GROUP HOLDING CELL XXX	No	MOUNT W/ TAMPER-PROOF SCREWS
1149	1149		FX	FX - MAXIMUM OCCUPANCY	MAXIMUM OCCUPANCY XXX	No	
1151	1151		HC	HC - HOLDING CELL ROOM SIGN	GROUP HOLDING CELL XXX	No	MOUNT W/ TAMPER-PROOF SCREWS
1152	1152		HC	HC - HOLDING CELL ROOM SIGN	GROUP HOLDING CELL XXX	No	MOUNT W/ TAMPER-PROOF SCREWS
1154	1154		HC	HC - HOLDING CELL ROOM SIGN	GROUP HOLDING CELL XXX	No	MOUNT W/ TAMPER-PROOF SCREWS
1155	1155		B1	B1 - ROOM SIGN	HOLDING	No	
1156A	1156		F1	F1 - ROOM SIGN	BREAK ROOM	No	MOUNT W/ TAMPER-PROOF SCREWS
1156B	1156		BX	BX - MAXIMUM OCCUPANCY	MAXIMUM OCCUPANCY	No	
1158	1158		F1	F1 - ROOM SIGN	RESTROOM	No	MOUNT W/ TAMPER-PROOF SCREWS
1160	1160		HC	HC - HOLDING CELL ROOM SIGN	FEMALE HOLDING CELL	No	MOUNT W/ TAMPER-PROOF SCREWS
1162	1162		HC	HC - HOLDING CELL ROOM SIGN	JUVE. MALE HOLDING CELL	No	MOUNT W/ TAMPER-PROOF SCREWS
1163	1163		F3	F3 - ROOM SIGN W/ NAME ONLY	FIRE RISER	No	MOUNT SIGN TO DOOR
1164	1164		F1	F1 - ROOM SIGN	ELECTRICAL	No	
1164A	1164		F3	F3 - ROOM SIGN W/ NAME ONLY	FIRE CONTROL PANEL	No	MOUNT SIGN TO DOOR
1164B	1164		F3	F3 - ROOM SIGN W/ NAME ONLY	FIRE CONTROL PANEL	No	MOUNT SIGN TO DOOR
1165	1165		F1	F1 - ROOM SIGN	STAIR	No	
1171A	1171		FS	FS - STAIRWELL SIGN	NE STAIR, LEVEL 1, EXIT LEVEL 1, NO ROOF ACCESS	No	
1172	1172		B4	B4 - ROOM SIGN W/ INSERT	PROBATION SUPERVISOR	No	
1173	1173		B4	B4 - ROOM SIGN W/ INSERT	PROBATION SUPERVISOR	No	
1174	1174		B4	B4 - ROOM SIGN W/ INSERT	PROBATION OFFICER	No	
1175	1175		B4	B4 - ROOM SIGN W/ INSERT	PROBATION OFFICER	No	
1176	1176		B4	B4 - ROOM SIGN W/ INSERT	PROBATION OFFICER	No	
1177	1177		B4	B4 - ROOM SIGN W/ INSERT	PROBATION OFFICER	No	
1178	1178		B4	B4 - ROOM SIGN W/ INSERT	PROBATION OFFICER	No	
1179	1179		B4	B4 - ROOM SIGN W/ INSERT	PROBATION OFFICER	No	
1180	1180		B4	B4 - ROOM SIGN W/ INSERT	PROBATION OFFICER	No	
1181	1181		B4	B4 - ROOM SIGN W/ INSERT	PROBATION OFFICER	No	
1182	1182		B4	B4 - ROOM SIGN W/ INSERT	PROBATION OFFICER	No	
1184	1199		B1	B1 - ROOM SIGN	PROBATION	No	
1185	1185		B1	B1 - ROOM SIGN	U.A./ DRUG TESTING	No	
1186	1186		B1	B1 - ROOM SIGN	RESTROOM	No	
1187	1187		B1	B1 - ROOM SIGN	HOUSEKEEPING	No	
1188A	1188		B2	B2 - ROOM SIGN - CONFERENCE	CONFERENCE ROOM	No	
1188B	1188		B2	B2 - ROOM SIGN - CONFERENCE	CONFERENCE ROOM	No	
1188C	1188		BX	BX - MAXIMUM OCCUPANCY	MAXIMUM OCCUPANCY	No	
1189	1189		B1	B1 - ROOM SIGN	BREAK ROOM	No	
1190A	1194		B1	B1 - ROOM SIGN	WAITING	No	
1190B	1189		B1	B1 - ROOM SIGN	PROBATION	No	
1191	1191		B4	B4 - ROOM SIGN W/ INSERT	JUDICIAL SUPPORT SERV. MGR. OFFICER	No	
1192	1192		B4	B4 - ROOM SIGN W/ INSERT	JUDICIAL TEAM MGR. OFFICER	No	
1193	1193		B4	B4 - ROOM SIGN W/ INSERT	JUDICIAL TEAM MGR. OFFICER	No	
1194	1194		B1	B1 - ROOM SIGN	PROBATION	No	
1198A	1198		F1	F1 - ROOM SIGN	PROBATION / CLERKS OFFICE	Yes	
1198B	1198		F1	F1 - ROOM SIGN	PROBATION / CLERKS OFFICE	Yes	
1198C	1198		ML6	ML6 - CAST ALUMINUM LETTERING - 6" TALL - CENTURY GOTHIC FONT	COURT CLERK		*
1198D	1198		ML6	ML6 - CAST ALUMINUM LETTERING - 6" TALL - CENTURY GOTHIC FONT	COURT CLERK		*
1199	1199		B1	B1 - ROOM SIGN	WAITING	No	
2101	2101		F1	F1 - ROOM SIGN	STAIR	No	
2101A	2101		FS	FS - STAIRWELL SIGN	NW STAIR, LEVEL 2, EXIT LEVEL 1, NO ROOF ACCESS	No	
2102A	2102		FE	FE - ELEVATOR	SEE SIGN TYPE	No	
2102B	2102		VL2	VL -Vinyl - 2	SEE SIGN TYPE	No	*
2102C	2102		VL2	VL -Vinyl - 2	SEE SIGN TYPE	No	*
2103	2103		FR	FR - ACCESSIBLE FAMILY R.R.	FAMILY RESTROOM	No	
2105	2105		F1	F1 - ROOM SIGN	OFFICE	No	
2106A	2106		F2	F2 - ROOM SIGN - CONFERENCE	CONFERENCE ROOM	No	
2106B	2106		FX	FX - MAXIMUM OCCUPANCY	MAXIMUM OCCUPANCY XXX	No	
2107A	2107		F1	F1 - ROOM SIGN	COURTROOM XXXX	No	
2107B	2107		F1	F1 - ROOM SIGN	COURTROOM	No	
2107C	2107		ML4	ML4 - CAST ALUMINUM LETTERING - 4" TALL - CENTURY GOTHIC FONT	A		*
2107D	2107		ML3V	ML3V - CAST ALUMINUM LETTERING - 3" TALL - CENTURY GOTHIC FONT	COURTROOM		*
2107E	2107		FB2S	FB - FABRICATED SIGN - 2	SEE SIGN TYPE	No	*
2107F	2107		ML4	ML4 - CAST ALUMINUM LETTERING - 4" TALL - CENTURY GOTHIC FONT	A		*
2107 G	2107		ML3V	ML3V - CAST ALUMINUM LETTERING - 3" TALL - CENTURY GOTHIC FONT	COURTROOM		*
2107H	2107		FB2S	FB - FABRICATED SIGN - 2	SEE SIGN TYPE	No	*
2108	2108		B1	B1 - ROOM SIGN	COURTROOM XXXX	No	
2108A	2108		SP	SP - Judiciary Seal	SEE SIGN TYPE	No	*
2108B	2108	N/A	FX	FX - MAXIMUM OCCUPANCY	MAXIMUM OCCUPANCY XXX	No	
2108C	2108		FC	FC - COURTROOM RULES	SEE SIGN TYPE	No	
2108D	2108		AL	AL - ASSISTED LISTENING DEVICE	SEE SIGN TYPE	No	
2110	2110		B1	B1 - ROOM SIGN	STORAGE	No	
2112	2112		B4	B4 - ROOM SIGN W/ INSERT	OFFICE	No	
2113	2113		B1	B1 - ROOM SIGN	HOUSEKEEPING	No	
2114	2114		B1	B1 - ROOM SIGN	STAIR	No	
2114A	2114		BS	BS - STAIRWELL SIGN	SW STAIR, LEVEL 2, EXIT LEVEL 1, ROOF ACCESS	No	

SIGNAGE SCHEDULE

MARK	VCBO ROOM NUMBER	SIGN ROOM NUMBER	TYPE MARK	TYPE	SIGN TEXT	SIGN BLANK BACK	SIGN NOTES
2115	2115		B4	B4 - ROOM SIGN W/ INSERT	OFFICE	No	
2116	2116		B1	B1 - ROOM SIGN	STORAGE	No	
2117	2117		B1	B1 - ROOM SIGN	PERSONAL HEALTH	No	
2119A	2119		BE	BE - ELEVATOR	SEE SIGN TYPE	No	
2120	2120		B1	B1 - ROOM SIGN	MEN'S LOCKER	No	
2121	2121		B1	B1 - ROOM SIGN	ELECTRICAL	No	
2122	2122		F1	F1 - ROOM SIGN	STAIR	No	MOUNT W/ TAMPER-PROOF SCREWS
2122A	2122		FS	FS - STAIRWELL SIGN	STAIR, LEVEL 2, EXIT LEVEL 1, NO ROOF ACCESS	No	MOUNT W/ TAMPER-PROOF SCREWS
2123	2123		B1	B1 - ROOM SIGN	COMMUNICATION CLOSET	No	
2124	2124		B1	B1 - ROOM SIGN	FITNESS AREA	No	
2125	2125		B1	B1 - ROOM SIGN	WOMEN'S LOCKER	No	
2126	2126		B1	B1 - ROOM SIGN	COURTROOM XXXX	No	
2128	2128		B1	B1 - ROOM SIGN	EVIDENCE STORAGE	No	
2129	2129		BR	BR - ACCESSIBLE UNISEX R.R.	RESTROOM	No	
2130	2130		BR	BR - ACCESSIBLE UNISEX R.R.	RESTROOM	No	
2131A	2131		B1	B1 - ROOM SIGN	STAFF LOUNGE	No	
2131B	2131		B1	B1 - ROOM SIGN	STAFF LOUNGE	No	
2131C	2131	N/A	BX	BX - MAXIMUM OCCUPANCY	ROOF PLAZA MAXIMUM OCCUPANCY 49	No	
2131D	2131	N/A	BX	BX - MAXIMUM OCCUPANCY	ROOF PLAZA MAXIMUM OCCUPANCY 49	No	
2131E	2131		BX	BX - MAXIMUM OCCUPANCY	MAXIMUM OCCUPANCY	No	
2132	2132		B1	B1 - ROOM SIGN	FILE STORAGE	No	
2133	2133		B1	B1 - ROOM SIGN	OFFICE	No	
2134	2134		B4	B4 - ROOM SIGN W/ INSERT	OFFICE	No	
2135	2135		B4	B4 - ROOM SIGN W/ INSERT	OFFICE	No	
2136A	2136		B2	B2 - ROOM SIGN - CONFERENCE	CONFERENCE ROOM	No	
2136B	2136		BX	BX - MAXIMUM OCCUPANCY	MAXIMUM OCCUPANCY	No	
2138	2138		B4	B4 - ROOM SIGN W/ INSERT	OFFICE	No	
2139	2139		B1	B1 - ROOM SIGN	STAIR	No	
2139A	2139		B4	B4 - ROOM SIGN W/ INSERT	SE STAIR, LEVEL 2, EXIT LEVEL 1, NO ROOF ACCESS	No	
2141A	2141		SP	SP - Judiciary Seal	SEE SIGN TYPE	No	*
2141B	2141	N/A	FX	FX - MAXIMUM OCCUPANCY	MAXIMUM OCCUPANCY XXX	No	
2141C	2141		FC	FC - COURTROOM RULES	SEE SIGN TYPE	No	
2141D	2141		AL	AL - ASSISTED LISTENING DEVICE	SEE SIGN TYPE	No	
2142	2142		F1	F1 - ROOM SIGN	STAIR	No	
2142A	2142		FS	FS - STAIRWELL SIGN	NE STAIR, LEVEL 2, EXIT LEVEL 1, NO ROOF ACCESS	No	
2143	2143		FM	FM - ACCESSIBLE MEN'S R.R.	MEN	No	
2144	2144		FW	FW - ACCESSIBLE WOMEN'S R.R.	WOMEN	No	
2144A	2144A		FD	FD - ACCESSIBLE DIRECTIONAL	THE NEAREST FAMILY RESTROOM IS LOCATED OPPOSITE THE ELEVATORS ON THIS LEVEL	No	
2145	2145	N/A	FX	FX - MAXIMUM OCCUPANCY	MAXIMUM OCCUPANCY XXX	No	
2145A	2145		FA2	FA - FABRICATED SIGN - 2	SEE SIGN TYPE	No	*
2145B	2145		ML3	ML3 - CAST ALUMINUM LETTERING - 3" TALL - CENTURY GOTHIC FONT	COURTROOM 2A		*
2145C	2145		ML3	ML3 - CAST ALUMINUM LETTERING - 3" TALL - CENTURY GOTHIC FONT	COURTROOM 2B		*
2145D	2145		ML3	ML3 - CAST ALUMINUM LETTERING - 3" TALL - CENTURY GOTHIC FONT	LEVEL		*
2145E	2145		WF2	Sign - Wayfinding Panel - 2	SEE SIGN TYPE		
2147	2147		F1	F1 - ROOM SIGN	HOUSEKEEPING	No	
2148A	2148		F2	F2 - ROOM SIGN - CONFERENCE	CONFERENCE ROOM	No	
2148B	2148		FX	FX - MAXIMUM OCCUPANCY	MAXIMUM OCCUPANCY XXX	No	
2149A	2149		F1	F1 - ROOM SIGN	COURTROOM XXXX	No	
2149B	2149		F1	F1 - ROOM SIGN	COURTROOM	No	
2149C	2149		ML4	ML4 - CAST ALUMINUM LETTERING - 4" TALL - CENTURY GOTHIC FONT	B		*
2149D	2149		ML3V	ML3V - CAST ALUMINUM LETTERING - 3" TALL - CENTURY GOTHIC FONT	COURTROOM		*
2149E	2149		FB2S	FB - FABRICATED SIGN - 2	SEE SIGN TYPE	No	*
2150	2150		F1	F1 - ROOM SIGN	COURTROOM XXXX	No	MOUNT W/ TAMPER-PROOF SCREWS
2151	2151		HC	HC - HOLDING CELL ROOM SIGN	HOLDING CELL XXX	No	MOUNT W/ TAMPER-PROOF SCREWS
2152	2152		HC	HC - HOLDING CELL ROOM SIGN	HOLDING CELL XXX	No	MOUNT W/ TAMPER-PROOF SCREWS
2153A	2153		F2	F2 - ROOM SIGN - CONFERENCE	CONFERENCE ROOM	No	
2153B	2153		FX	FX - MAXIMUM OCCUPANCY	MAXIMUM OCCUPANCY XXX	No	
2155	2155		F1	F1 - ROOM SIGN	COURTROOM XXXX	No	MOUNT W/ TAMPER-PROOF SCREWS
2156	2156		HC	HC - HOLDING CELL ROOM SIGN	HOLDING CELL XXX	No	MOUNT W/ TAMPER-PROOF SCREWS
2157	2157		HC	HC - HOLDING CELL ROOM SIGN	HOLDING CELL XXX	No	MOUNT W/ TAMPER-PROOF SCREWS
2158	2158		F1	F1 - ROOM SIGN	ELEVATOR	No	MOUNT W/ TAMPER-PROOF SCREWS
3101	3101		F1	F1 - ROOM SIGN	STAIR	No	
3101A	3101		FS	FS - STAIRWELL SIGN	NW STAIR, LEVEL 3, EXIT LEVEL 1, NO ROOF ACCESS	No	
3102A	3102		FE	FE - ELEVATOR	SEE SIGN TYPE	No	
3102B	3102		VL3	VL - Vinyl - 3	SEE SIGN TYPE	No	*
3102C	3102		VL3	VL - Vinyl - 3	SEE SIGN TYPE	No	*
3103	3103		F1	F1 - ROOM SIGN	STORAGE	No	
3105	3105		F1	F1 - ROOM SIGN	OFFICE	No	
3106A	3106		F2	F2 - ROOM SIGN - CONFERENCE	CONFERENCE ROOM	No	
3106B	3106		FX	FX - MAXIMUM OCCUPANCY	MAXIMUM OCCUPANCY XXX	No	
3107A	3107		F1	F1 - ROOM SIGN	COURTROOM XXXX	No	
3107B	3107		F1	F1 - ROOM SIGN	COURTROOM	No	
3107C	3107		ML4	ML4 - CAST ALUMINUM LETTERING - 4" TALL - CENTURY GOTHIC FONT	A		*
3107D	3107		ML3V	ML3V - CAST ALUMINUM LETTERING - 3" TALL - CENTURY GOTHIC FONT	COURTROOM		*
3107E	3107		FB3	FB - FABRICATED SIGN - 3	SEE SIGN TYPE	No	*
3107F	3107		ML3V	ML3V - CAST ALUMINUM LETTERING - 3" TALL - CENTURY GOTHIC FONT	COURTROOM		*
3107 G	3107		ML4	ML4 - CAST ALUMINUM LETTERING - 4" TALL - CENTURY GOTHIC FONT	A		*
3107H	3107		FB3	FB - FABRICATED SIGN - 3	SEE SIGN TYPE	No	*
3108	3108		B1	B1 - ROOM SIGN	COURTROOM XXXX	No	
3108A	3108		SP	SP - Judiciary Seal	SEE SIGN TYPE	No	*
3108B	3108	N/A	FX	FX - MAXIMUM OCCUPANCY	MAXIMUM OCCUPANCY XXX	No	
3108C	3108		FC	FC - COURTROOM RULES	SEE SIGN TYPE	No	
3108D	3108		AL	AL - ASSISTED LISTENING DEVICE	SEE SIGN TYPE	No	
3110	3110		B1	B1 - ROOM SIGN	STORAGE	No	
3112	3112		B4	B4 - ROOM SIGN W/ INSERT	OFFICE	No	
3113	3113		B1	B1 - ROOM SIGN	HOUSEKEEPING	No	
3114	3114		B1	B1 - ROOM SIGN	STAIR	No	
3114A	3114		BS	BS - STAIRWELL SIGN	SW STAIR, LEVEL 3, EXIT LEVEL 1, ROOF ACCESS	No	
3115	3115		B4	B4 - ROOM SIGN W/ INSERT	OFFICE	No	
3116	3116		B4	B4 - ROOM SIGN W/ INSERT	OFFICE	No	
3117	3117		B4	B4 - ROOM SIGN W/ INSERT	OFFICE	No	
3119A	3119		BE	BE - ELEVATOR	SEE SIGN TYPE	No	
3120	3120		B1	B1 - ROOM SIGN	STORAGE	No	
3121	3121		B1	B1 - ROOM SIGN	ELECTRICAL	No	
3122	3122		F1	F1 - ROOM SIGN	STAIR	No	MOUNT W/ TAMPER-PROOF SCREWS
3122A	3122A		B3	B3 - ROOM SIGN W/ NAME ONLY	BREAK ROOM	No	
3122B	3122		FS	FS - STAIRWELL SIGN	STAIR, LEVEL 3, EXIT LEVEL 1, NO ROOF ACCESS	No	MOUNT W/ TAMPER-PROOF SCREWS
3123	3123		B1	B1 - ROOM SIGN	COMMUNICATION CLOSET	No	
3125	3125		B4	B4 - ROOM SIGN W/ INSERT	OFFICE	No	
3126	3126		B1	B1 - ROOM SIGN	FILE STORAGE	No	
3127	3127		BR	BR - ACCESSIBLE UNISEX R.R.	RESTROOM	No	
3128	3128		BR	BR - ACCESSIBLE UNISEX R.R.	RESTROOM	No	
3129A	3129		B2	B2 - ROOM SIGN - CONFERENCE	CONFERENCE ROOM	No	
3129B	3129		BX	BX - MAXIMUM OCCUPANCY	MAXIMUM OCCUPANCY	No	
3130	3130		B4	B4 - ROOM SIGN W/ INSERT	OFFICE	No	
3131	3131		B4	B4 - ROOM SIGN W/ INSERT	OFFICE	No	
3133	3133		B1	B1 - ROOM SIGN	OFFICE	No	
3134	3134		B4	B4 - ROOM SIGN W/ INSERT	OFFICE	No	
3135	3135		B4	B4 - ROOM SIGN W/ INSERT	OFFICE	No	
3136A	3136		B2	B2 - ROOM SIGN - CONFERENCE	CONFERENCE ROOM	No	
3136B	3136		BX	BX - MAXIMUM OCCUPANCY	MAXIMUM OCCUPANCY XXX	No	
3138	3138		B4	B4 - ROOM SIGN W/ INSERT	OFFICE	No	
3139	3139		B1	B1 - ROOM SIGN	STAIR	No	
3139A	3139		BS	BS - STAIRWELL SIGN	SE STAIR, LEVEL 3, EXIT LEVEL 1, NO ROOF ACCESS	No	
3141	3141		B1	B1 - ROOM SIGN	COURTROOM XXXX	No	
3141A	3141		SP	SP - Judiciary Seal	SEE SIGN TYPE	No	*
3141B	3141	N/A	FX	FX - MAXIMUM OCCUPANCY	MAXIMUM OCCUPANCY XXX	No	
3141C	3141		FC	FC - COURTROOM RULES	SEE SIGN TYPE	No	
3141D	3141		AL	AL - ASSISTED LISTENING DEVICE	SEE SIGN TYPE	No	
3142	3142		F1	F1 - ROOM SIGN	STAIR	No	
3142A	3142		FS	FS - STAIRWELL SIGN	NE STAIR, LEVEL 3, EXIT LEVEL 1, NO ROOF ACCESS	No	
3143	3143	N/A	FM	FM - ACCESSIBLE MEN'S R.R.	MEN	No	
3144	3144	N/A	FW	FW - ACCESSIBLE WOMEN'S R.R.	WOMEN	No	
3144A	3144A	N/A	FD	FD - ACCESSIBLE DIRECTIONAL	THE NEAREST FAMILY RESTROOM CAN BE FOUND AT LEVELS 2 & 4, OPPOSITE THE ELEVATORS	No	
3145	3145	N/A	FX	FX - MAXIMUM OCCUPANCY	MAXIMUM OCCUPANCY XXX	No	
3145A	3145		FA3	FA - FABRICATED SIGN - 3	SEE SIGN TYPE	No	*
3145B	3145		ML3	ML3 - CAST ALUMINUM LETTERING - 3" TALL - CENTURY GOTHIC FONT	COURTROOM 3A		*
3145C	3145		ML3	ML3 - CAST ALUMINUM LETTERING - 3" TALL - CENTURY GOTHIC FONT	COURTROOM 3B		*
3145D	3145		ML3	ML3 - CAST ALUMINUM LETTERING - 3" TALL - CENTURY GOTHIC FONT	LEVEL		*
3145E	3145		WF3	Sign - Wayfinding Panel - 3	SEE SIGN TYPE		
3147	3147		F1	F1 - ROOM SIGN	HOUSEKEEPING	No	
3148A	3148		F2	F2 - ROOM SIGN - CONFERENCE	CONFERENCE ROOM	No	
3148B	3148		FX	FX - MAXIMUM OCCUPANCY	MAXIMUM OCCUPANCY XXX	No	
3149A	3149		F1	F1 - ROOM SIGN	COURTROOM XXXX	No	
3149B	3149		F1	F1 - ROOM SIGN	COURTROOM	No	
3149C	3149		ML4	ML4 - CAST ALUMINUM LETTERING - 4" TALL - CENTURY GOTHIC FONT	B		*

SIGNAGE SCHEDULE

MARK	VCBO ROOM NUMBER	SIGN ROOM NUMBER	TYPE MARK	TYPE	SIGN TEXT	SIGN BLANK BACK	SIGN NOTES
3149D	3149		ML3V	ML3V - CAST ALUMINUM LETTERING - 3" TALL - CENTURY GOTHIC FONT	COURTROOM		*
3149E	3149		FB3	FB - FABRICATED SIGN - 3	SEE SIGN TYPE	No	*
3150	3150		F1	F1 - ROOM SIGN	COURTROOM XXXX	No	MOUNT W/ TAMPER-PROOF SCREWS
3151	3151		HC	HC - HOLDING CELL ROOM SIGN	HOLDING CELL XXX	No	MOUNT W/ TAMPER-PROOF SCREWS
3152	3152		HC	HC - HOLDING CELL ROOM SIGN	HOLDING CELL XXX	No	MOUNT W/ TAMPER-PROOF SCREWS
3153A	3153		F2	F2 - ROOM SIGN - CONFERENCE	CONFERENCE ROOM	No	
3153B	3153		FX	FX - MAXIMUM OCCUPANCY	MAXIMUM OCCUPANCY XXX	No	
3155A	3155		F1	F1 - ROOM SIGN	COURTROOM XXXX	No	MOUNT W/ TAMPER-PROOF SCREWS
3156	3156		HC	HC - HOLDING CELL ROOM SIGN	HOLDING CELL XXX	No	MOUNT W/ TAMPER-PROOF SCREWS
3157	3157		HC	HC - HOLDING CELL ROOM SIGN	HOLDING CELL XXX	No	MOUNT W/ TAMPER-PROOF SCREWS
3158	3158		F1	F1 - ROOM SIGN	ELEVATOR	No	MOUNT W/ TAMPER-PROOF SCREWS
4101	4101		F1	F1 - ROOM SIGN	STAIR	No	
4101A	4101		FS	FS - STAIRWELL SIGN	NW STAIR, LEVEL 4, EXIT LEVEL 1, NO ROOF ACCESS	No	
4102A	4102		FE	FE - ELEVATOR	SEE SIGN TYPE	No	
4102B	4102		VL4	VL - Vinyl - 4	SEE SIGN TYPE	No	*
4102C	4102		VL4	VL - Vinyl - 4	SEE SIGN TYPE	No	*
4103	4103		F1	F1 - ROOM SIGN	OFFICE	No	
4105	4105		F1	F1 - ROOM SIGN	STORAGE	No	
4107A	4107		F1	F1 - ROOM SIGN	COURTROOM XXXX	No	
4107C	4107		ML4	ML4 - CAST ALUMINUM LETTERING - 4" TALL - CENTURY GOTHIC FONT	A		*
4107D	4107		ML3V	ML3V - CAST ALUMINUM LETTERING - 3" TALL - CENTURY GOTHIC FONT	COURTROOM		*
4107E	4107		FB4	FB - FABRICATED SIGN - 4	SEE SIGN TYPE	No	*
4107F	4107		ML3V	ML3V - CAST ALUMINUM LETTERING - 3" TALL - CENTURY GOTHIC FONT	COURTROOM		*
4107 G	4107		ML4	ML4 - CAST ALUMINUM LETTERING - 4" TALL - CENTURY GOTHIC FONT	A		*
4107H	4107		FB4	FB - FABRICATED SIGN - 4	SEE SIGN TYPE	No	*
4114A	4114		BS	BS - STAIRWELL SIGN	SW STAIR, LEVEL 4, EXIT LEVEL 1, ROOF ACCESS	No	
4117A	4117		BE	BE - ELEVATOR	SEE SIGN TYPE	No	
4121	4121		B1	B1 - ROOM SIGN	STORAGE	No	
4122	4122		F1	F1 - ROOM SIGN	STAIR	No	*
4122A	4122		FS	FS - STAIRWELL SIGN	STAIR, LEVEL 4, EXIT LEVEL 1, NO ROOF ACCESS	No	*
4135	4135		B1	B1 - ROOM SIGN	STAIR	No	
4135A	4135		BS	BS - STAIRWELL SIGN	SE STAIR, LEVEL 4, EXIT LEVEL 1, NO ROOF ACCESS	No	
4138	4138		F1	F1 - ROOM SIGN	STAIR	No	
4138A	4138		FS	FS - STAIRWELL SIGN	NE STAIR, LEVEL 4, EXIT LEVEL 1, NO ROOF ACCESS	No	
4139	4139		FM	FM - ACCESSIBLE MEN'S R.R.	MENS	No	
4140	4140		FW	FW - ACCESSIBLE WOMEN'S R.R.	WOMENS	No	
4140A	4140A		FD	FD - ACCESSIBLE DIRECTIONAL	THE NEAREST FAMILY RESTROOM IS LOCATED OPPOSITE THE ELEVATORS ON THIS LEVEL	No	
4142	4142		F1	F1 - ROOM SIGN	HOUSEKEEPING	No	
4144A	4144		F1	F1 - ROOM SIGN	COURTROOM XXXX	No	
4144C	4144		ML4	ML4 - CAST ALUMINUM LETTERING - 4" TALL - CENTURY GOTHIC FONT	B		*
4144D	4144		ML3V	ML3V - CAST ALUMINUM LETTERING - 3" TALL - CENTURY GOTHIC FONT	COURTROOM		*
4144E	4144		FB4	FB - FABRICATED SIGN - 4	SEE SIGN TYPE	No	*
4145	4145	N/A	FX	FX - MAXIMUM OCCUPANCY	MAXIMUM OCCUPANCY XXX	No	
4145A	4145		FA4	FA - FABRICATED SIGN - 4	SEE SIGN TYPE	No	*
4145B	4145		ML3	ML3 - CAST ALUMINUM LETTERING - 3" TALL - CENTURY GOTHIC FONT	COURTROOM 4A		*
4145C	4145		ML3	ML3 - CAST ALUMINUM LETTERING - 3" TALL - CENTURY GOTHIC FONT	COURTROOM 4B		*
4145D	4145		ML3	ML3 - CAST ALUMINUM LETTERING - 3" TALL - CENTURY GOTHIC FONT	LEVEL		*
4145E	4145		WF4	Sign - Wayfinding Panel - 4	SEE SIGN TYPE		
4149A	4149		F2	F2 - ROOM SIGN - CONFERENCE	CONFERENCE ROOM	No	
4154	4154		F1	F1 - ROOM SIGN	ELEVATOR	No	MOUNT W/ TAMPER-PROOF SCREWS
5101	5101		F1	F1 - ROOM SIGN	STAIR	No	
5101A	5101		FS	FS - STAIRWELL SIGN	NW STAIR, LEVEL 5, EXIT LEVEL 1, NO ROOF ACCESS	No	
5102A	5102		FE	FE - ELEVATOR	SEE SIGN TYPE	No	
5102B	5102		VL5	VL - Vinyl - 5	SEE SIGN TYPE	No	*
5102C	5102		VL5	VL - Vinyl - 5	SEE SIGN TYPE	No	*
5103	5103		FR	FR - ACCESSIBLE FAMILY R.R.	FAMILY RESTROOM	No	
5105	5105	N/A	F3	F3 - ROOM SIGN W/ NAME ONLY	ELEVATOR EQUIPMENT	No	
5105A	5105	N/A	F3	F3 - ROOM SIGN W/ NAME ONLY	NO STORAGE	No	
5106A	5106		F2	F2 - ROOM SIGN - CONFERENCE	CONFERENCE ROOM	No	
5106B	5106		FX	FX - MAXIMUM OCCUPANCY	MAXIMUM OCCUPANCY XXX	No	
5107A	5107		F1	F1 - ROOM SIGN	COURTROOM XXXX	No	
5107B	5107		F1	F1 - ROOM SIGN	COURTROOM	No	
5107C	5107		ML4	ML4 - CAST ALUMINUM LETTERING - 4" TALL - CENTURY GOTHIC FONT	A		*
5107D	5107		ML3V	ML3V - CAST ALUMINUM LETTERING - 3" TALL - CENTURY GOTHIC FONT	COURTROOM		*
5107E	5107		FB5	FB - FABRICATED SIGN - 5	SEE SIGN TYPE	No	*
5107F	5107		ML3V	ML3V - CAST ALUMINUM LETTERING - 3" TALL - CENTURY GOTHIC FONT	COURTROOM		*
5107 G	5107		ML4	ML4 - CAST ALUMINUM LETTERING - 4" TALL - CENTURY GOTHIC FONT	A		*
5107H	5107		FB5	FB - FABRICATED SIGN - 5	SEE SIGN TYPE	No	*
5108	5108		B1	B1 - ROOM SIGN	COURTROOM XXXX	No	
5108A	5108		SP	SP - Judiciary Seal	SEE SIGN TYPE	No	*
5108B	5108	N/A	FX	FX - MAXIMUM OCCUPANCY	MAXIMUM OCCUPANCY XXX	No	
5108C	5108		FC	FC - COURTROOM RULES	SEE SIGN TYPE	No	
5108D	5108		AL	AL - ASSISTED LISTENING DEVICE	SEE SIGN TYPE	No	
5110	5110		B1	B1 - ROOM SIGN	STORAGE	No	
5112	5112		B4	B4 - ROOM SIGN W/ INSERT	OFFICE	No	
5113	5113		B1	B1 - ROOM SIGN	HOUSEKEEPING	No	
5114	5114		B1	B1 - ROOM SIGN	STAIR	No	
5114A	5114		BS	BS - STAIRWELL SIGN	SW STAIR, LEVEL 5, EXIT LEVEL 1, ROOF ACCESS	No	
5115	5115		B4	B4 - ROOM SIGN W/ INSERT	OFFICE	No	
5117A	5117		BE	BE - ELEVATOR	SEE SIGN TYPE	No	
5118	5118		B1	B1 - ROOM SIGN	STORAGE	No	
5119	5119	N/A	B3	B3 - ROOM SIGN W/ NAME ONLY	BREAK ROOM	No	
5120	5120		B1	B1 - ROOM SIGN	ELECTRICAL	No	
5121	5121		B1	B1 - ROOM SIGN	COMMUNICATION CLOSET	No	
5122	5122		F1	F1 - ROOM SIGN	STAIR	No	MOUNT W/ TAMPER-PROOF SCREWS
5122A	5122		F1	F1 - ROOM SIGN	STAIR, LEVEL 5, EXIT LEVEL 1, NO ROOF ACCESS	No	MOUNT W/ TAMPER-PROOF SCREWS
5123	5123		B1	B1 - ROOM SIGN	COURTROOM XXXX	No	
5125	5125		B1	B1 - ROOM SIGN	FILE STORAGE	No	
5126	5126		B1	B1 - ROOM SIGN	VICTIM/ WITNESS WAITING	No	
5127	5127	N/A	B3	B3 - ROOM SIGN W/ NAME ONLY	ELEVATOR EQUIPMENT	No	
5127A	5127	N/A	B3	B3 - ROOM SIGN W/ NAME ONLY	NO STORAGE	No	
5128	5128		BR	BR - ACCESSIBLE UNISEX R.R.	RESTROOM	No	
5129	5129		BR	BR - ACCESSIBLE UNISEX R.R.	RESTROOM	No	
5130	5130		B4	B4 - ROOM SIGN W/ INSERT	OFFICE	No	
5131	5131		B4	B4 - ROOM SIGN W/ INSERT	OFFICE	No	
5132A	5132		B2	B2 - ROOM SIGN - CONFERENCE	CONFERENCE ROOM	No	
5132B	5132		BX	BX - MAXIMUM OCCUPANCY	MAXIMUM OCCUPANCY	No	
5134	5134		B4	B4 - ROOM SIGN W/ INSERT	OFFICE	No	
5135	5135		B1	B1 - ROOM SIGN	STAIR	No	
5135A	5135		BS	BS - STAIRWELL SIGN	SE STAIR, LEVEL 5, EXIT LEVEL 1, NO ROOF ACCESS	No	
5137A	5137		SP	SP - Judiciary Seal	SEE SIGN TYPE	No	*
5137B	5137	N/A	FX	FX - MAXIMUM OCCUPANCY	MAXIMUM OCCUPANCY XXX	No	
5137C	5137		FC	FC - COURTROOM RULES	SEE SIGN TYPE	No	
5137D	5137		AL	AL - ASSISTED LISTENING DEVICE	SEE SIGN TYPE	No	
5138	5141		F1	F1 - ROOM SIGN	STAIR	No	
5138A	5138		FS	FS - STAIRWELL SIGN	NE STAIR, LEVEL 5, EXIT LEVEL 1, NO ROOF ACCESS	No	
5139	5139		FM	FM - ACCESSIBLE MEN'S R.R.	MEN	No	
5140	5140		FW	FW - ACCESSIBLE WOMEN'S R.R.	WOMEN	No	
5140A	5140A		FD	FD - ACCESSIBLE DIRECTIONAL	THE NEAREST FAMILY RESTROOM CAN BE FOUND ON LEVEL 4, OPPOSITE THE ELEVATORS	No	
5142	5142		F1	F1 - ROOM SIGN	HOUSEKEEPING	No	
5143A	5143		F2	F2 - ROOM SIGN - CONFERENCE	CONFERENCE ROOM	No	
5143B	5143		FX	FX - MAXIMUM OCCUPANCY	MAXIMUM OCCUPANCY XXX	No	
5144A	5144		F1	F1 - ROOM SIGN	COURTROOM XXXX	No	
5144B	5144		F1	F1 - ROOM SIGN	COURTROOM	No	
5144C	5144		ML4	ML4 - CAST ALUMINUM LETTERING - 4" TALL - CENTURY GOTHIC FONT	B		*
5144D	5144		ML3V	ML3V - CAST ALUMINUM LETTERING - 3" TALL - CENTURY GOTHIC FONT	COURTROOM		*
5144E	5144		FB5	FB - FABRICATED SIGN - 5	SEE SIGN TYPE	No	*
5145	5145	N/A	FX	FX - MAXIMUM OCCUPANCY	MAXIMUM OCCUPANCY XXX	No	
5145A	5145		FA5	FA - FABRICATED SIGN - 5	SEE SIGN TYPE	No	*
5145B	5145		ML3	ML3 - CAST ALUMINUM LETTERING - 3" TALL - CENTURY GOTHIC FONT	COURTROOM 5A		*
5145C	5145		ML3	ML3 - CAST ALUMINUM LETTERING - 3" TALL - CENTURY GOTHIC FONT	COURTROOM 5B		*
5145D	5145		ML3	ML3 - CAST ALUMINUM LETTERING - 3" TALL - CENTURY GOTHIC FONT	LEVEL		*
5145E	5145		WF5	Sign - Wayfinding Panel - 5	SEE SIGN TYPE		
5146	5146		F1	F1 - ROOM SIGN	COURTROOM XXXX	No	MOUNT W/ TAMPER-PROOF SCREWS
5147	5147		HC	HC - HOLDING CELL ROOM SIGN	HOLDING CELL XXX	No	MOUNT W/ TAMPER-PROOF SCREWS
5148	5148		HC	HC - HOLDING CELL ROOM SIGN	HOLDING CELL XXX	No	MOUNT W/ TAMPER-PROOF SCREWS
5149A	5149		F2	F2 - ROOM SIGN - CONFERENCE	CONFERENCE ROOM	No	
5149B	5149		FX	FX - MAXIMUM OCCUPANCY	MAXIMUM OCCUPANCY XXX	No	
5151	5151		F1	F1 - ROOM SIGN	COURTROOM XXXX	No	MOUNT W/ TAMPER-PROOF SCREWS
5152	5152		HC	HC - HOLDING CELL ROOM SIGN	HOLDING CELL XXX	No	MOUNT W/ TAMPER-PROOF SCREWS
5153	5153		HC	HC - HOLDING CELL ROOM SIGN	HOLDING CELL XXX	No	MOUNT W/ TAMPER-PROOF SCREWS
5154	5154		F1	F1 - ROOM SIGN	ELEVATOR		[illegible]WS

SIGN NOTES NOTE: ASTERISK (*) DENOTES : COORDINATE EXACT MOUNTING LOCATION WITH ARCHITECT PRIOR TO INSTALLATION

VCBO ARCHITECTURE
VCBO ARCHITECTURE
524 SOUTH 600 EAST
SALT LAKE CITY, UT 84102
Phone: (801) 575-8800
Fax: (801) 531-9850
Web: vcbo.com

LICENSED ARCHITECT No. 133912 BRENT R. TIPPETS 8-15-13 STATE OF UTAH

2nd District Juvenile Courthouse

Utah State Courts
08284150
165 West 20th Street, Ogden, Utah
BID DOCUMENTS

Rev #	Date	Description

Job # 12500
Date August 15, 2013
Owner # 08284150
Ins. #

SIGNAGE SCHEDULE

A700

8/14/2013 2:37:06 PM

SIGNAGE SCHEDULE - 4TH FLOOR ALTERNATE

MARK	VCBO ROOM NUMBER	SIGN ROOM NUMBER	TYPE MARK	TYPE	SIGN TEXT	SIGN BLANK BACK	SIGN NOTES
4106A	4106		F2	F2 - ROOM SIGN - CONFERENCE	CONFERENCE ROOM	No	
4106B	4106		FX	FX - MAXIMUM OCCUPANCY	MAXIMUM OCCUPANCY XXX	No	
4107B	4107		F1	F1 - ROOM SIGN	COURTROOM	No	
4108	4108		B1	B1 - ROOM SIGN	COURTROOM XXXX	No	
4108A	4108		SP	SP - Judiciary Seal	SEE SIGN TYPE	No	*
4108B	4108		FX	FX - MAXIMUM OCCUPANCY	MAXIMUM OCCUPANCY XXX	No	
4108C	4108		FC	FC - COURTROOM RULES	SEE SIGN TYPE	No	
4108D	4108		AL	AL - ASSISTED LISTENING DEVICE	SEE SIGN TYPE	No	
4110	4110		B1	B1 - ROOM SIGN	STORAGE	No	
4112	4112		B4	B4 - ROOM SIGN W/ INSERT	OFFICE	No	
4113	4113		B1	B1 - ROOM SIGN	HOUSEKEEPING	No	
4114	4114		B1	B1 - ROOM SIGN	STAIR	No	
4115	4115		B4	B4 - ROOM SIGN W/ INSERT	OFFICE	No	
4118	4118		B1	B1 - ROOM SIGN	STORAGE	No	

SIGNAGE SCHEDULE - 4TH FLOOR ALTERNATE

MARK	VCBO ROOM NUMBER	SIGN ROOM NUMBER	TYPE MARK	TYPE	SIGN TEXT	SIGN BLANK BACK	SIGN NOTES
4119	4119		B3	B3 - ROOM SIGN W/ NAME ONLY	BREAK ROOM	No	
4120	4120		B1	B1 - ROOM SIGN	ELECTRICAL	No	
4123B	4123		BX	BX - MAXIMUM OCCUPANCY	MAXIMUM OCCUPANCY XXX	No	
4125	4125		B1	B1 - ROOM SIGN	FILE STORAGE	No	
4126	4126		B1	B1 - ROOM SIGN	VICTIM/ WITNESS WAITING	No	
4127	4127		B1	B1 - ROOM SIGN	STORAGE	No	
4128	4128		BR	BR - ACCESSIBLE UNISEX R.R.	RESTROOM	No	
4129	4129		BR	BR - ACCESSIBLE UNISEX R.R.	RESTROOM	No	
4130	4130		B4	B4 - ROOM SIGN W/ INSERT	OFFICE	No	
4131	4131		B4	B4 - ROOM SIGN W/ INSERT	OFFICE	No	
4132A	4132		B2	B2 - ROOM SIGN - CONFERENCE	CONFERENCE ROOM	No	
4134	4134		B4	B4 - ROOM SIGN W/ INSERT	OFFICE	No	
4137	4137		B1	B1 - ROOM SIGN	COURTROOM XXXX	No	

SIGNAGE SCHEDULE - 4TH FLOOR ALTERNATE

MARK	VCBO ROOM NUMBER	SIGN ROOM NUMBER	TYPE MARK	TYPE	SIGN TEXT	SIGN BLANK BACK	SIGN NOTES
4137A	4137		SP	SP - Judiciary Seal	SEE SIGN TYPE	No	*
4137B	4137		FX	FX - MAXIMUM OCCUPANCY	MAXIMUM OCCUPANCY XXX	No	
4137C	4137		FC	FC - COURTROOM RULES	SEE SIGN TYPE	No	
4137D	4137		AL	AL - ASSISTED LISTENING DEVICE	SEE SIGN TYPE	No	
4143A	4143		F2	F2 - ROOM SIGN - CONFERENCE	CONFERENCE ROOM	No	
4143B	4143		FX	FX - MAXIMUM OCCUPANCY	MAXIMUM OCCUPANCY XXX	No	
4144B	4144		F1	F1 - ROOM SIGN	COURTROOM	No	
4146	4146		F1	F1 - ROOM SIGN	COURTROOM XXXX	No	MOUNT W/ TAMPER-PROOF SCREWS
4147	4147		HC	HC - HOLDING CELL ROOM SIGN	HOLDING CELL	No	MOUNT W/ TAMPER-PROOF SCREWS
4148	4148		HC	HC - HOLDING CELL ROOM SIGN	HOLDING CELL	No	MOUNT W/ TAMPER-PROOF SCREWS
4149B	4149		FX	FX - MAXIMUM OCCUPANCY	MAXIMUM OCCUPANCY XXX	No	
4151	4151		F1	F1 - ROOM SIGN	COURTROOM XXXX	No	MOUNT W/ TAMPER-PROOF SCREWS
4152	4152		HC	HC - HOLDING CELL ROOM SIGN	HOLDING CELL	No	MOUNT W/ TAMPER-PROOF SCREWS
4153	4153		HC	HC - HOLDING CELL ROOM SIGN	HOLDING CELL	No	MOUNT W/ TAMPER-PROOF SCREWS

SIGN NOTES NOTE: ASTERISK (*) DENOTES : COORDINATE EXACT MOUNTING LOCATION WITH ARCHITECT PRIOR TO INSTALLATION

VCBO ARCHITECTURE

VCBO ARCHITECTURE
524 SOUTH 600 EAST
SALT LAKE CITY, UT 84102
Phone: (801) 575-8800
Fax: (801) 531-9850
Web: vcbo.com

LICENSED ARCHITECT
No. 153912
BRENT R. TIPPETS
8-15-13
STATE OF UTAH

2nd District Juvenile Courthouse

Utah State Courts
08284150
165 West 20th Street, Ogden, Utah
BID DOCUMENTS

Rev #	Date	Description

Job # 12500
Date August 15, 2013
Owner # 08284150
Ins. #

SIGNAGE SCHEDULE - 4TH FLOOR ALTERNATE

A701

8/14/2013 2:37:16 PM

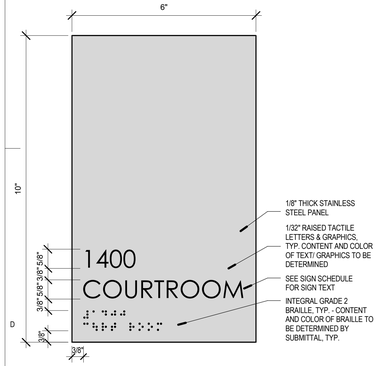

F1 FRONT OF HOUSE - ROOM NAME & NUMBER SIGN
6" = 1'-0"

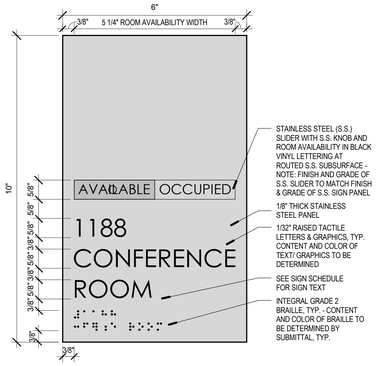

F2 FRONT OF HOUSE - CONFERENCE ROOM SIGN
6" = 1'-0"

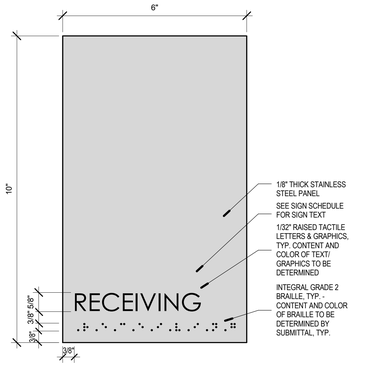

F3 FRONT OF HOUSE - ROOM NAME SIGN
6" = 1'-0"

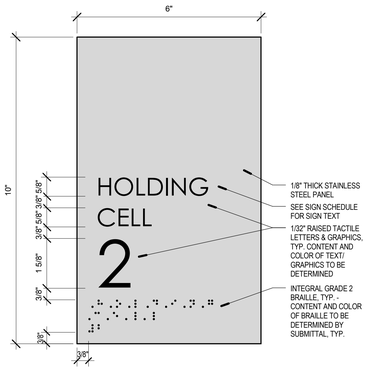

HC HOLDING CELL - ROOM SIGN
6" = 1'-0"

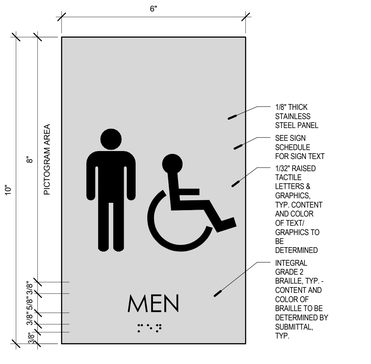

FM FRONT OF HOUSE - ACCESSIBLE MEN'S RESTROOM SIGN
6" = 1'-0"

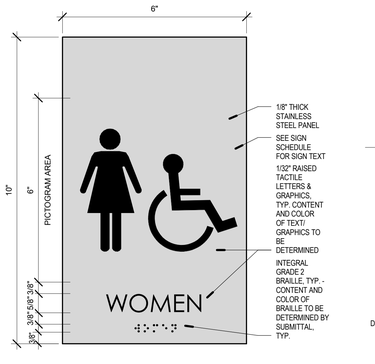

FW FRONT OF HOUSE - ACCESSIBLE WOMEN'S RESTROOM SIGN
6" = 1'-0"

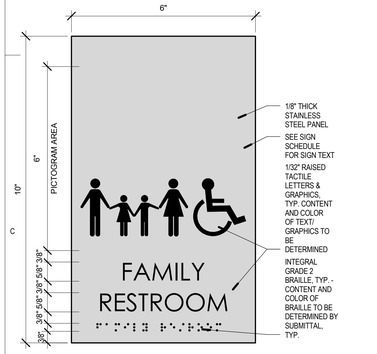

FR FRONT OF HOUSE - ACCESSIBLE FAMILY RESTROOM SIGN
6" = 1'-0"

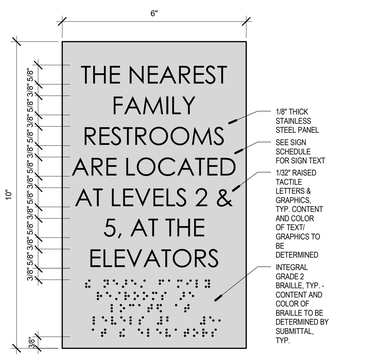

FD FRONT OF HOUSE - ACCESSIBLE DIRECTIONAL SIGN
6" = 1'-0"

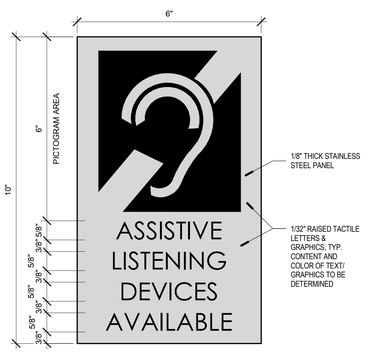

AL ASSISTED LISTENING FOR ASSEMBLY SPACE SIGN
6" = 1'-0"

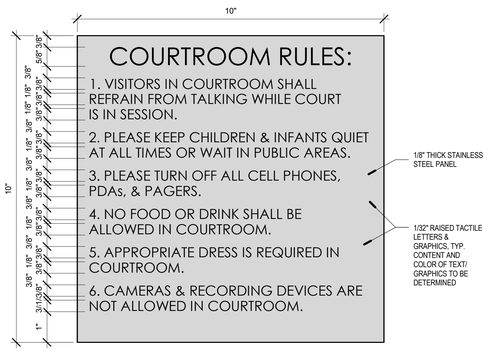

FC FRONT OF HOUSE - COURTROOM RULES SIGN
6" = 1'-0"

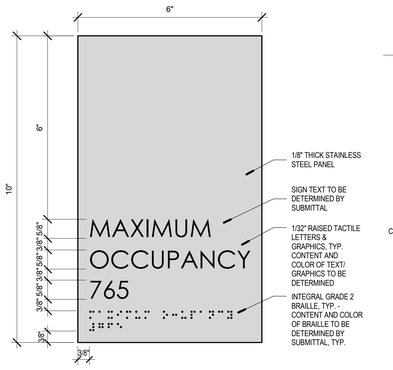

FX FRONT OF HOUSE - MAXIMUM OCCUPANCY SIGN
6" = 1'-0"

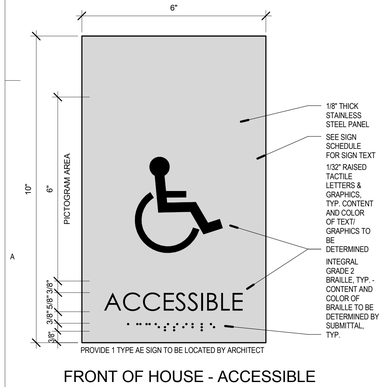

AE FRONT OF HOUSE - ACCESSIBLE ENTRANCE SIGN
6" = 1'-0"

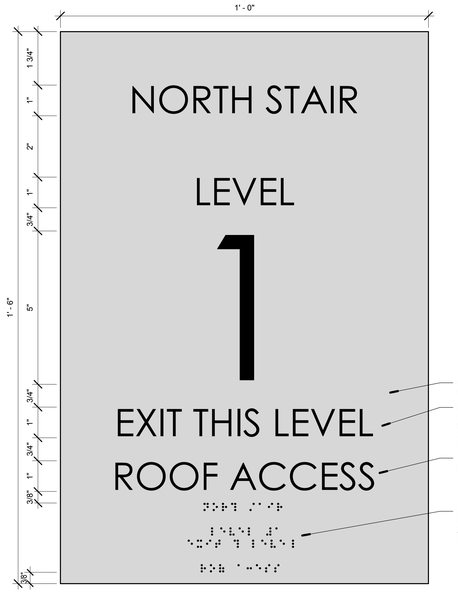

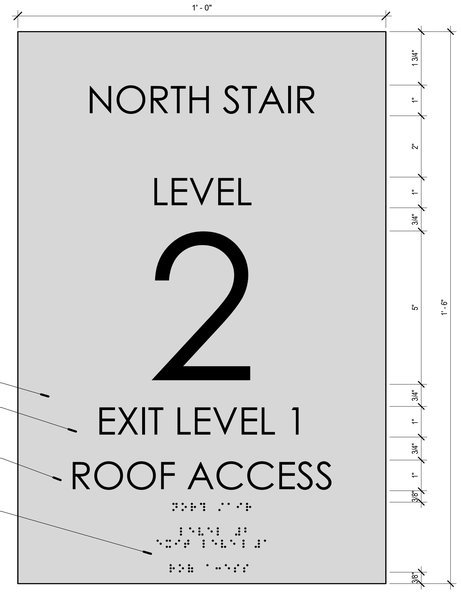

FS FRONT OF HOUSE - STAIRWELL SIGNAGE
6" = 1'-0"

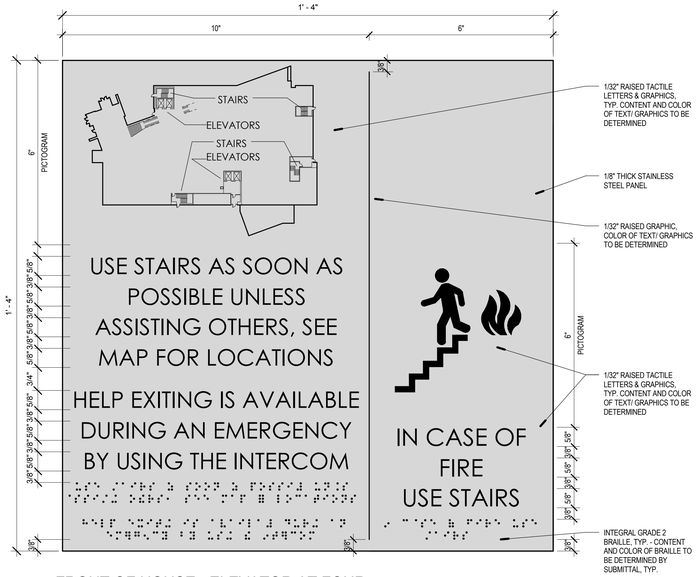

FE FRONT OF HOUSE - ELEVATOR AT FOUR OR MORE LEVELS
6" = 1'-0"

8/14/2013 2:37:32 PM

VCBO ARCHITECTURE
524 SOUTH 600 EAST
SALT LAKE CITY, UT 84102
Phone: (801) 575-8800
Fax: (801) 531-9850
Web: vcbo.com

2nd District Juvenile Courthouse

Utah State Courts
08284150
165 West 20th Street, Ogden, Utah
BID DOCUMENTS

Rev #	Date	Description

Job # 12500
Date August 15, 2013
Owner # 08284150
Ins. #

ARCHITECTURAL SIGNAGE TYPES & DETAILS

A702

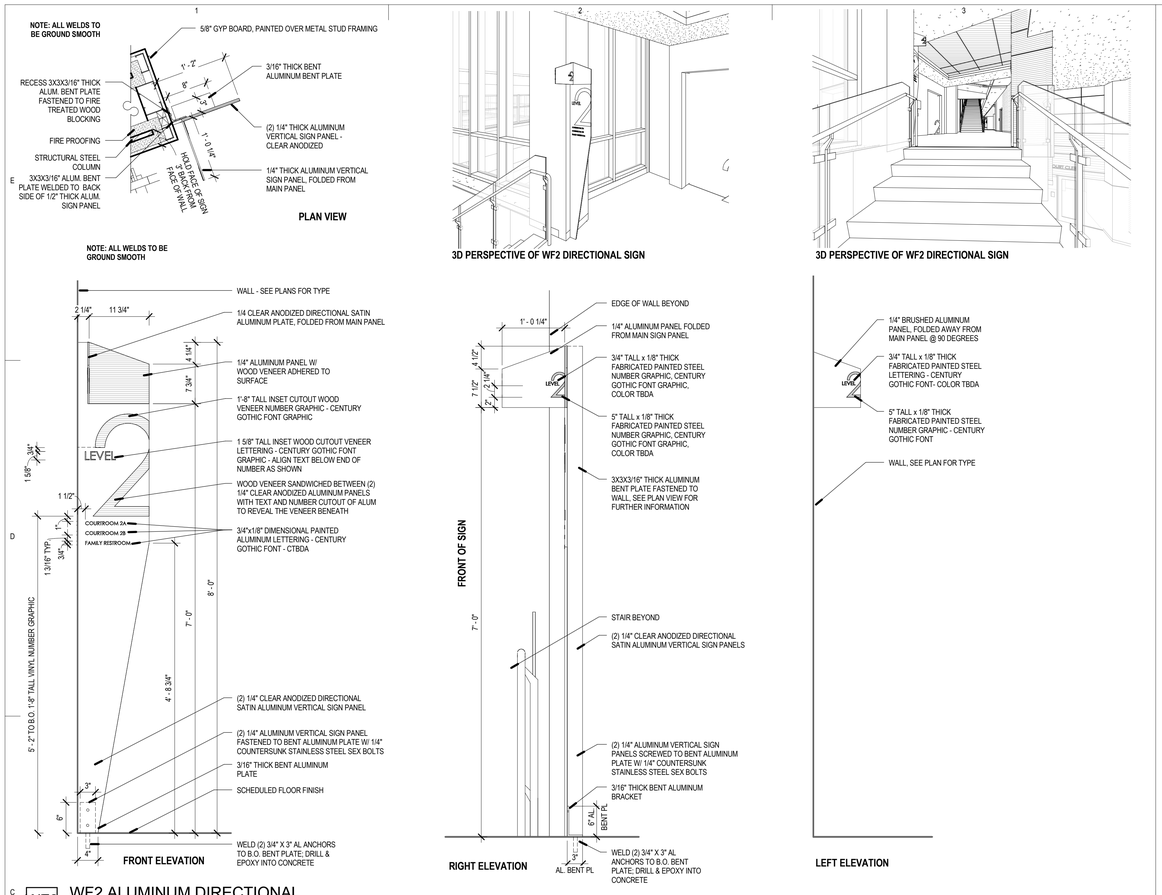

WF2 WF2 ALUMINUM DIRECTIONAL
1" = 1'-0"

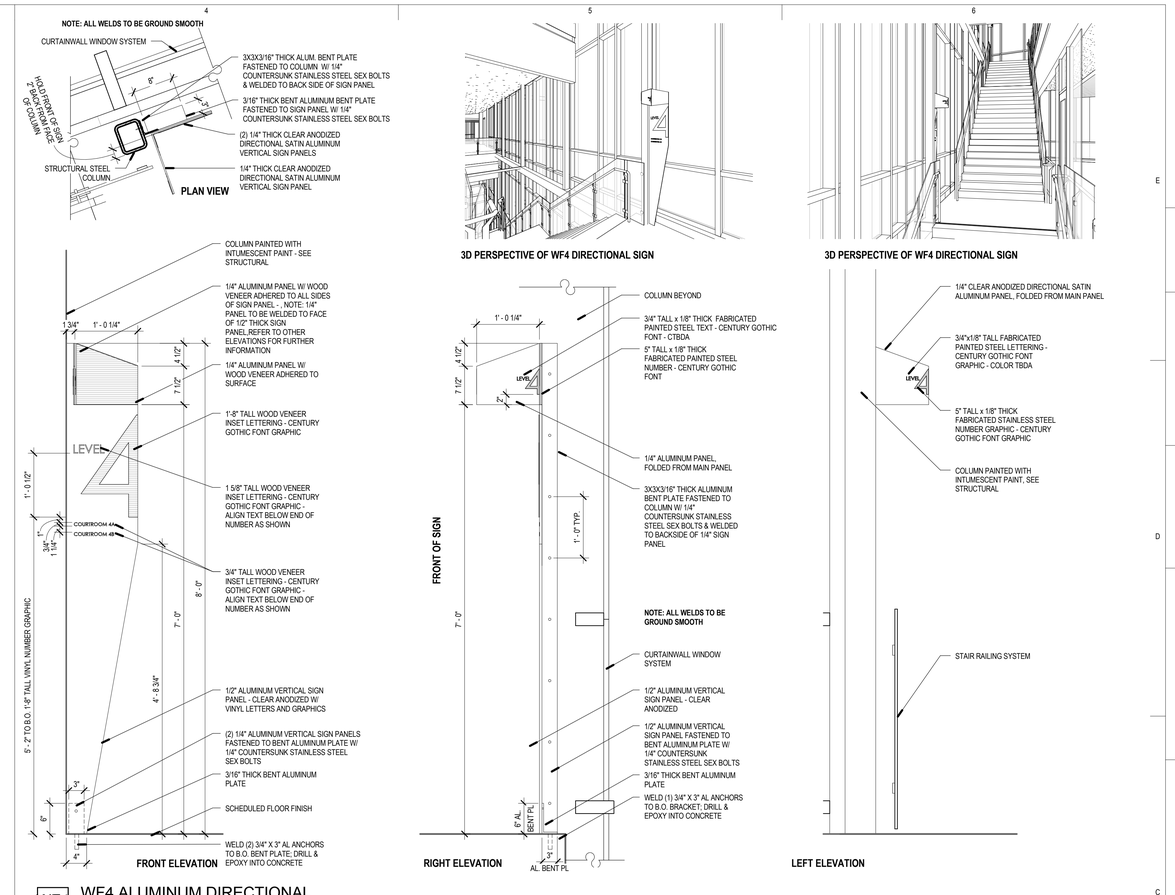

WF4 WF4 ALUMINUM DIRECTIONAL
1" = 1'-0"

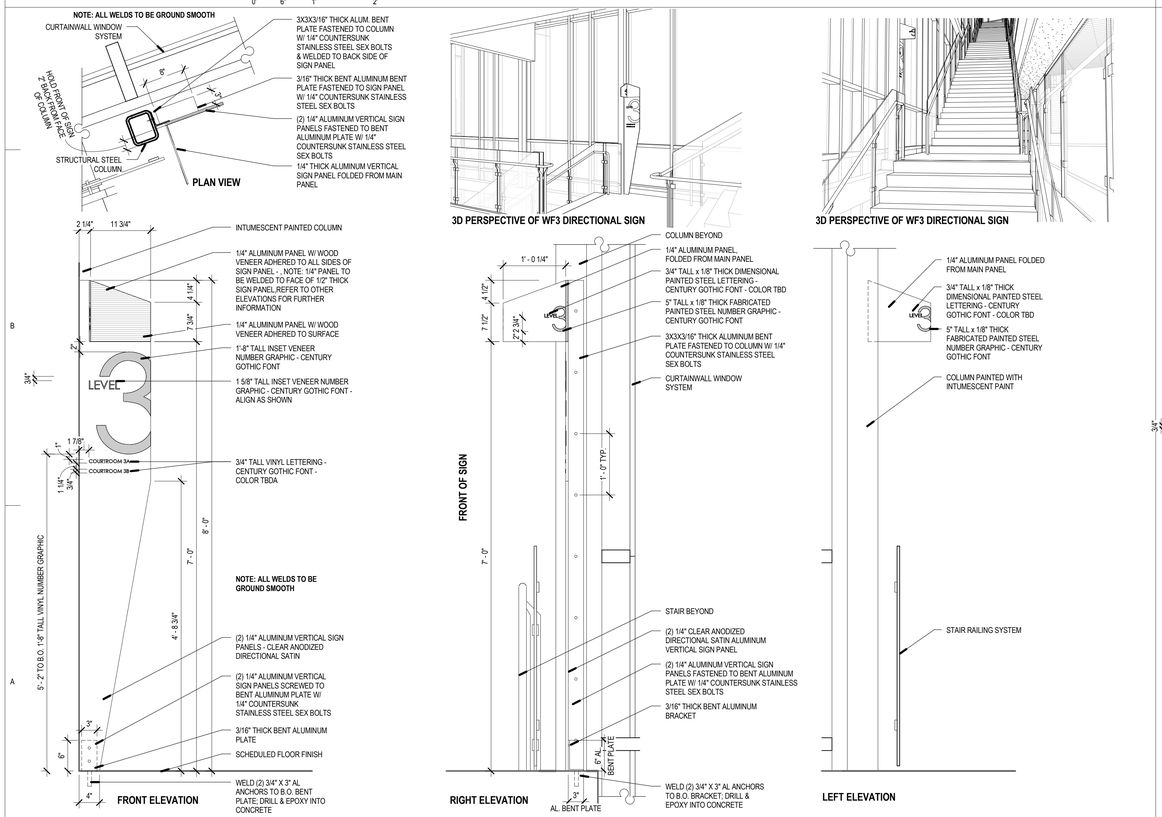

WF3 WF3 ALUMINUM DIRECTIONAL
1" = 1'-0"

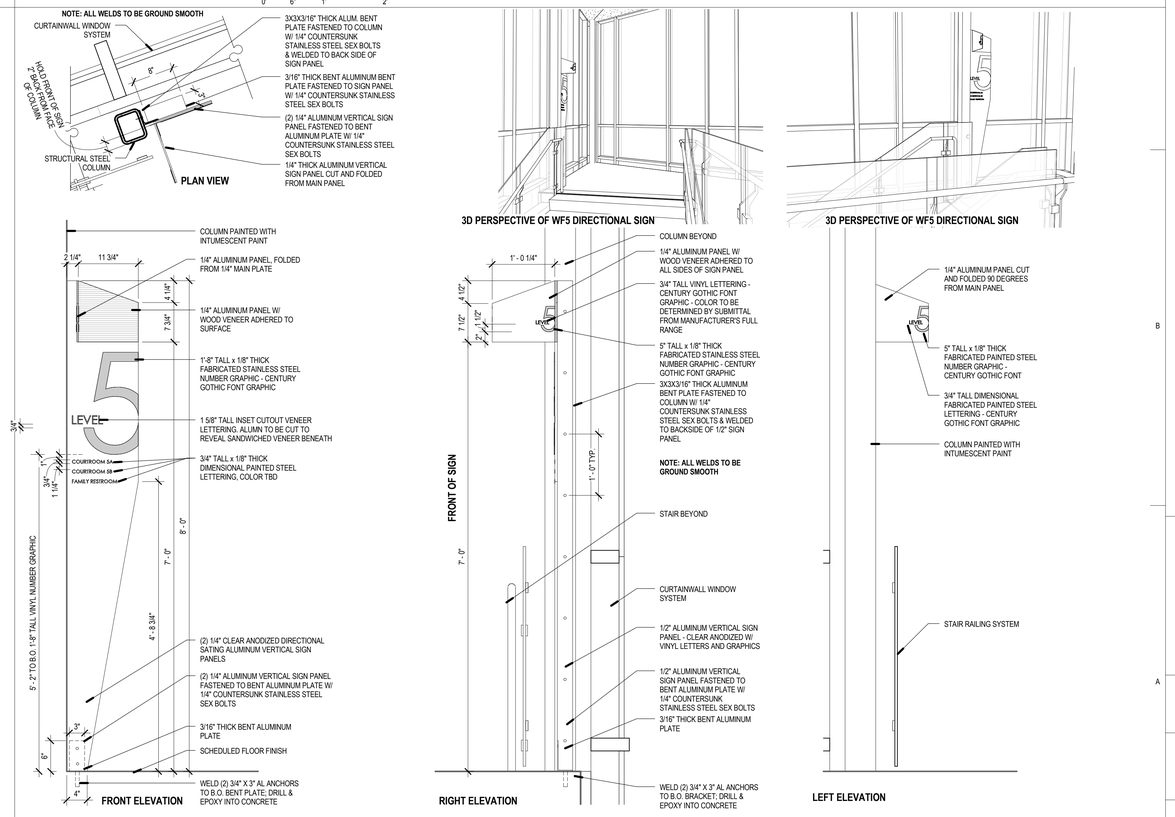

WF5 WF5 ALUMINUM DIRECTIONAL
1" = 1'-0"

VCBO ARCHITECTURE
524 SOUTH 600 EAST
SALT LAKE CITY, UT 84102
Phone: (801) 575-8800
Fax: (801) 531-9850
Web: vcbo.com

2nd District Juvenile Courthouse

Utah State Courts
08284150
165 West 20th Street, Ogden, Utah
BID DOCUMENTS

Rev #	Date	Description

Job # 12500
Date August 15, 2013
Owner # 08284150
Ins. #

ARCHITECTURAL SIGNAGE TYPES & DETAILS

A703

8/14/2013 2:39:04 PM

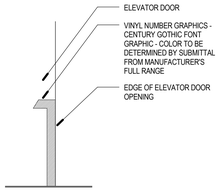

VL1 VL1 VINYL GRAPHICS
1/2" = 1'-0"
0' 6" 1' 2'

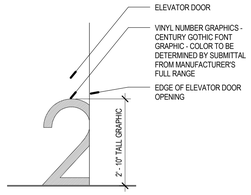

VL2 VL2 VINYL GRAPHICS
1/2" = 1'-0"
0' 6" 1' 2'

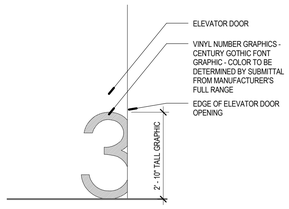

VL3 VL3 VINYL GRAPHICS
1/2" = 1'-0"
0' 6" 1' 2'

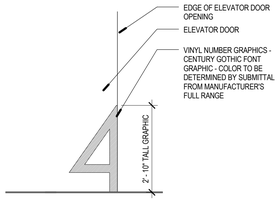

VL4 VL4 VINYL GRAPHICS
1/2" = 1'-0"
0' 6" 1' 2'

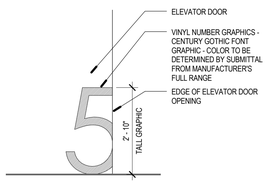

VL5 VL5 VINYL GRAPHICS
1/2" = 1'-0"
0' 6" 1' 2'

SP STAINLESS STEEL SEAL PLAQUE
3" = 1'-0"
0' 1" 3' 6' 9"

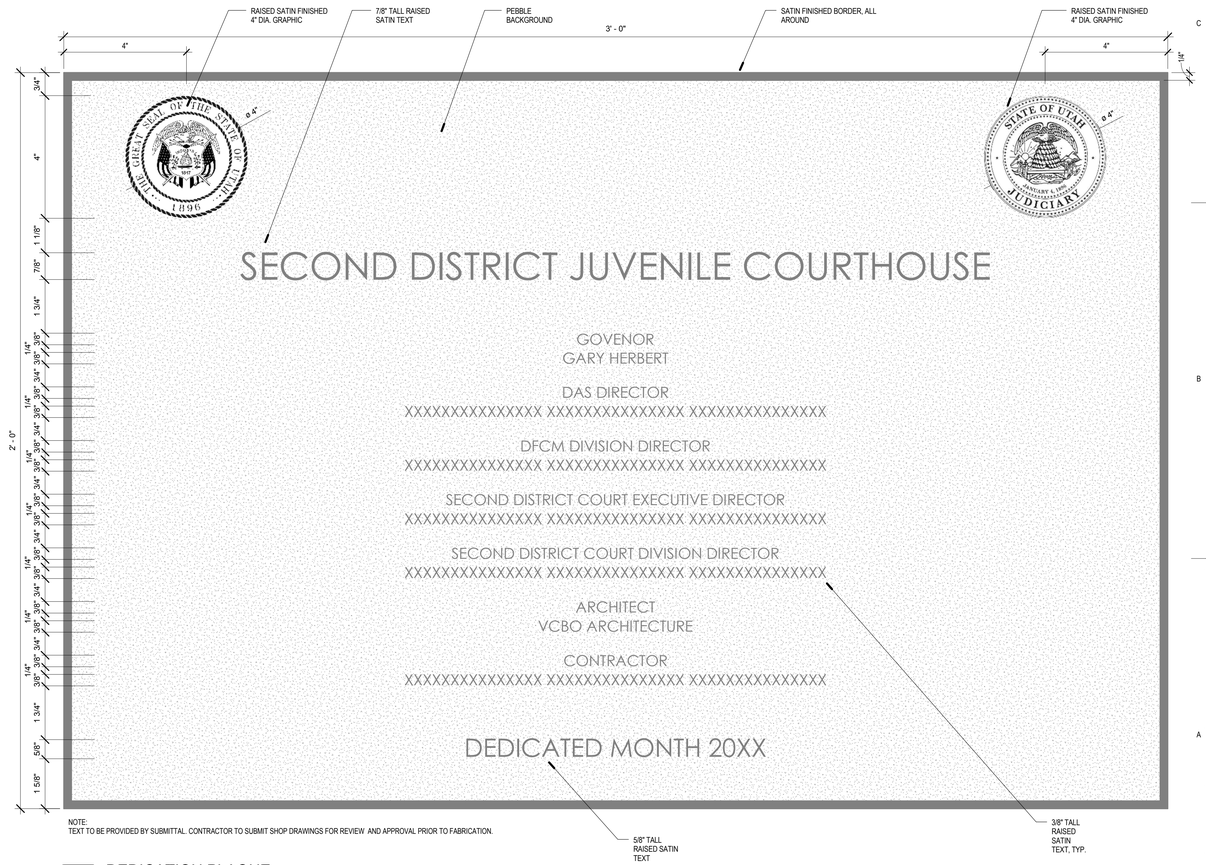

NOTE:
TEXT TO BE PROVIDED BY SUBMITTAL. CONTRACTOR TO SUBMIT SHOP DRAWINGS FOR REVIEW AND APPROVAL PRIOR TO FABRICATION.

D DEDICATION PLAQUE
6" = 1'-0"
0' 1" 2' 4"

VCBO ARCHITECTURE
524 SOUTH 600 EAST
SALT LAKE CITY, UT 84102
Phone: (801) 575-8800
Fax: (801) 531-9850
Web: vcbo.com

2nd District Juvenile Courthouse

Utah State Courts
08284150
165 West 20th Street, Ogden, Utah
BID DOCUMENTS

Rev #	Date	Description

Job # 12500
Date August 15, 2013
Owner # 08284150
Ins. #

ARCHITECTURAL SIGNAGE TYPES & DETAILS

A704

8/14/2013 2:39:29 PM

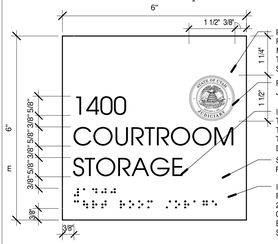

B1 BACK OF HOUSE - ROOM NAME & NUMBER SIGN
6" = 1'-0"

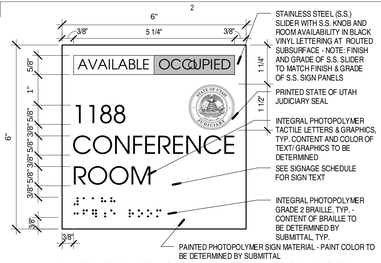

B2 BACK OF HOUSE - CONFERENCE ROOM SIGN
6" = 1'-0"

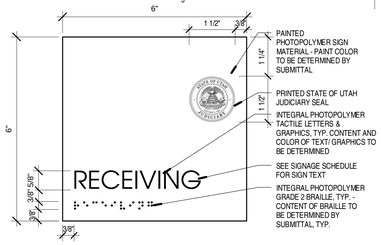

B3 BACK OF HOUSE - ROOM NAME SIGN
6" = 1'-0"

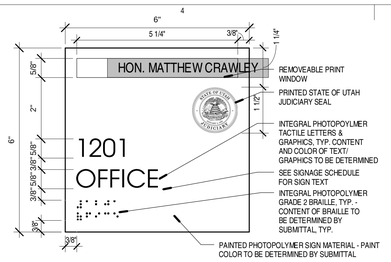

B4 BACK OF HOUSE ROOM SIGN WITH INSERT
6" = 1'-0"

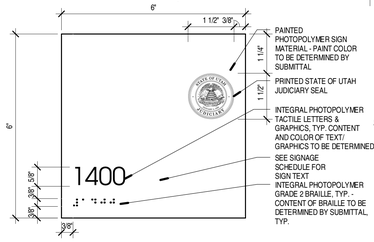

B5 BACK OF HOUSE - ROOM NUMBER SIGN
6" = 1'-0"

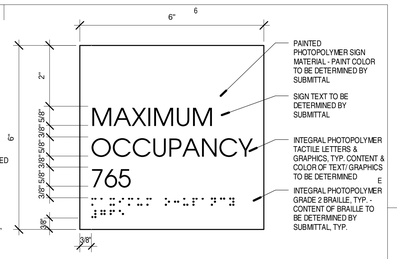

BX BACK OF HOUSE - MAXIMUM OCCUPANCY SIGN
6" = 1'-0"

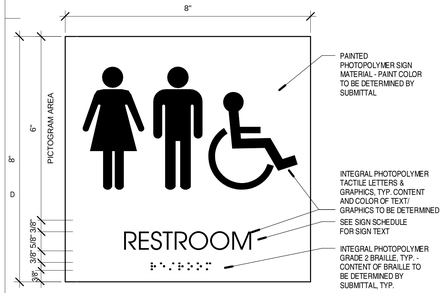

BR BACK OF HOUSE - ACCESSIBLE UNISEX RESTROOM
6" = 1'-0"

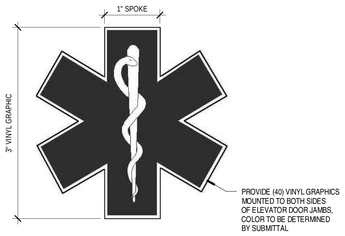

SL SL - STAR OF LIFE DETAIL
12" = 1'-0"

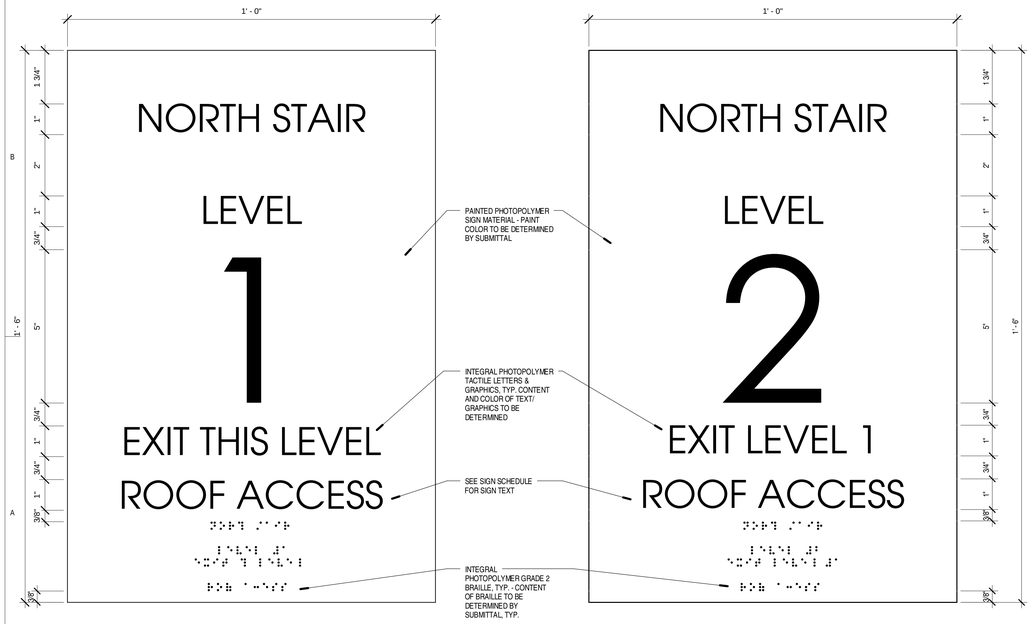

BS BACK OF HOUSE - STAIRWELL SIGNAGE
6" = 1'-0"

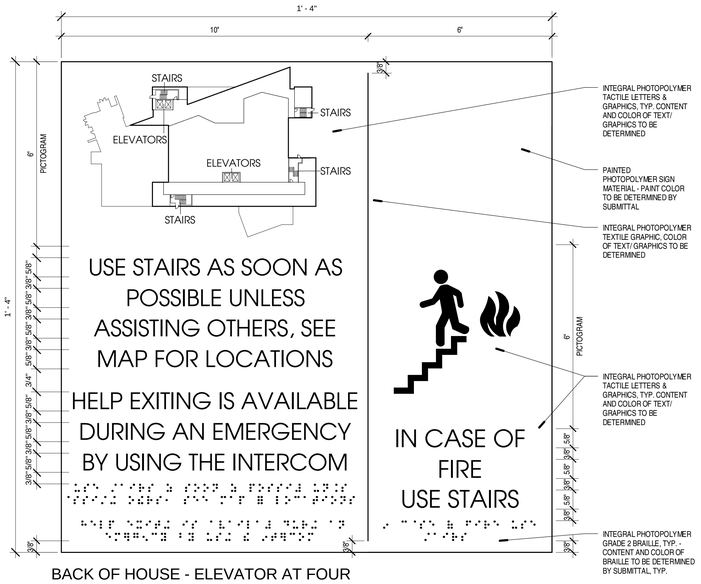

BE BACK OF HOUSE - ELEVATOR AT FOUR OR MORE LEVELS
6" = 1'-0"

8/15/2013 10:36:20 AM

VCBO ARCHITECTURE
VCBO ARCHITECTURE
524 SOUTH 600 EAST
SALT LAKE CITY, UT 84102
Phone: (801) 575-8800
Fax: (801) 531-9850
Web: vcbo.com

LICENSED ARCHITECT No. 133012 BRENT R. TIPPETS 8-15-13 STATE OF UTAH

2nd District Juvenile Courthouse

Utah State Courts
08284150
165 West 20th Street, Ogden, Utah
BID DOCUMENTS

Rev #	Date	Description
1	4/30/2013	Fire Marshal Response

Job # 12500
Date August 15, 2013
Owner # 08284150
Ins. #

ARCHITECTURAL SIGNAGE TYPES & DETAILS

A705

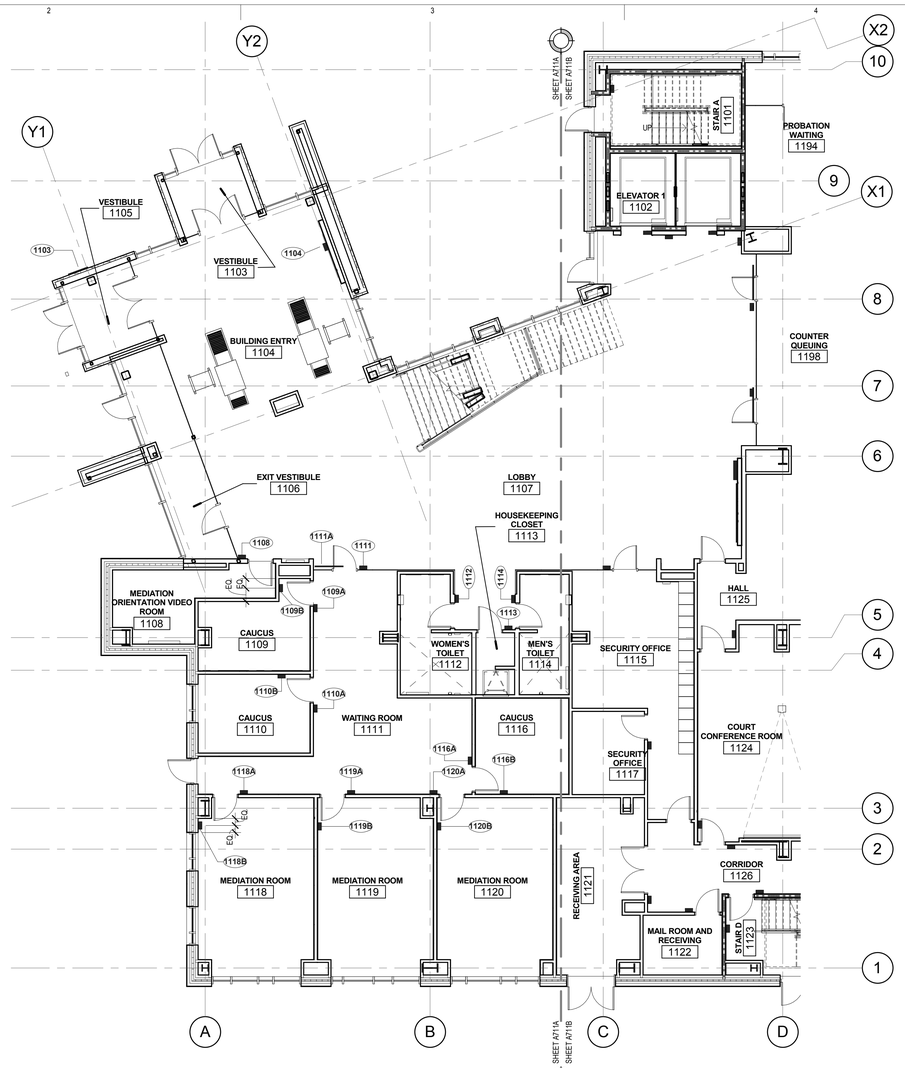

C1 LEVEL 1 AREA A SIGNAGE PLAN

SCALE: 1/8" = 1'-0"

PLAN NORTH

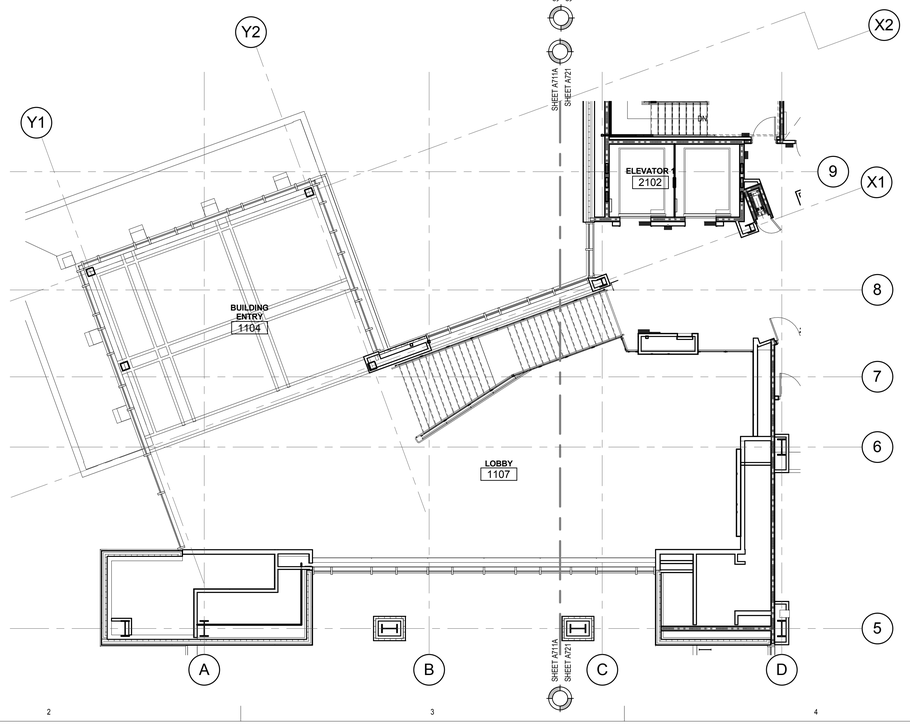

A1 LEVEL 1 AREA A UPPER LOBBY SIGNAGE PLAN

SCALE: 1/8" = 1'-0"

PLAN NORTH

TYPICAL SIGNAGE LOCATIONS

NOTE:

- TYPICAL SIGN HEIGHT, ARCHITECT TO FIELD VERIFY SIGN LOCATIONS WHEN CONFLICTS WITH DEVICES ARISE.
- SIGNS WITH TACTILE CHARACTERS SHALL BE PERMITTED ON THE PUSH SIDE OF DOORS WITH CLOSERS AND WITHOUT HOLD-OPEN DEVICES.
- WHERE A TACTILE SIGN IS PROVIDED AT DOUBLE DOORS WITH ONE ACTIVE LEAF, THE SIGN SHALL BE LOCATED ON THE INACTIVE LEAF.

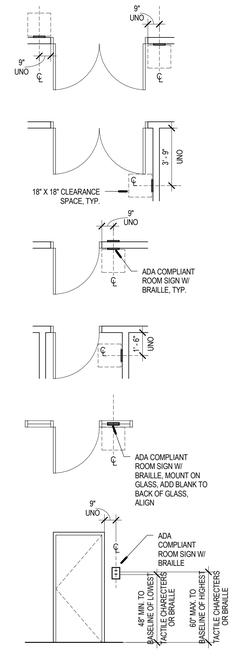

GAS VAPOR BARRIER GENERAL N

1. THE GAS VAPOR BARRIER IS TO BE INSTALLED UNDER ALL SL AND IS TO BE INSTALLED UNDER AND AROUND ALL ELEVATOR [redacted]
2. GAS VAPOR VENTS ARE TO BE INSTALLED PER THE LAYOUT A REFERENCED ON DRAWING C1A030 AND AS RECOMMENDED MANUFACTURER. [redacted]
3. THE TYPICAL THICKNESS OF THE GAS VAPOR BARRIER IS TO 100 MILS APPLIED UNDER AND AROUND ALL ELEVATOR PITS
4. ALL UNDERGROUND VENT PIPING TO BE ABS, PVC OR A PIPIN WITH THE MANUFACTURE'S VENTING SYSTEM. ALL VENT RISI GRADE, CONCEALED IN WALLS AND CEILING SPACES, ARE TO [redacted]
5. THE GAS VAPOR BARRIER IS TO WRAP UP ONTO AND SEAL AC FOUNDATION WALLS. [redacted]
6. WHERE THE GAS VAPOR VENT RISER PENETRATES THE SLAE WALL, THE PENETRATION IS TO BE TREATED AND SEALED PE MANUFACTURER'S DETAILS. [redacted]
7. AT ALL OBJECTS PENETRATING THE BARRIER, SUCH AS UNDE PLUMBING, UNDERGROUND DUCTS, ETC., THE GAS VAPOR BA FULLY SEALED TO THAT OBJECT PER THE BARRIER MANUFAC

SALT LAKE CITY, UT 84102
Phone: (801) 575-8800
Fax: (801) 531-9850
Web: vcbo.com

2nd District Juvenile Courthouse

Utah State Courts

08284150

165 West 20th Street, Ogden, Utah

BID DOCUMENTS

Rev #	Date	Description

Job # 12500
Date August 15, 2013
Owner # 08284150
Ins. #

LEVEL 1 AREA A SIGNAGE PLANS

A711A

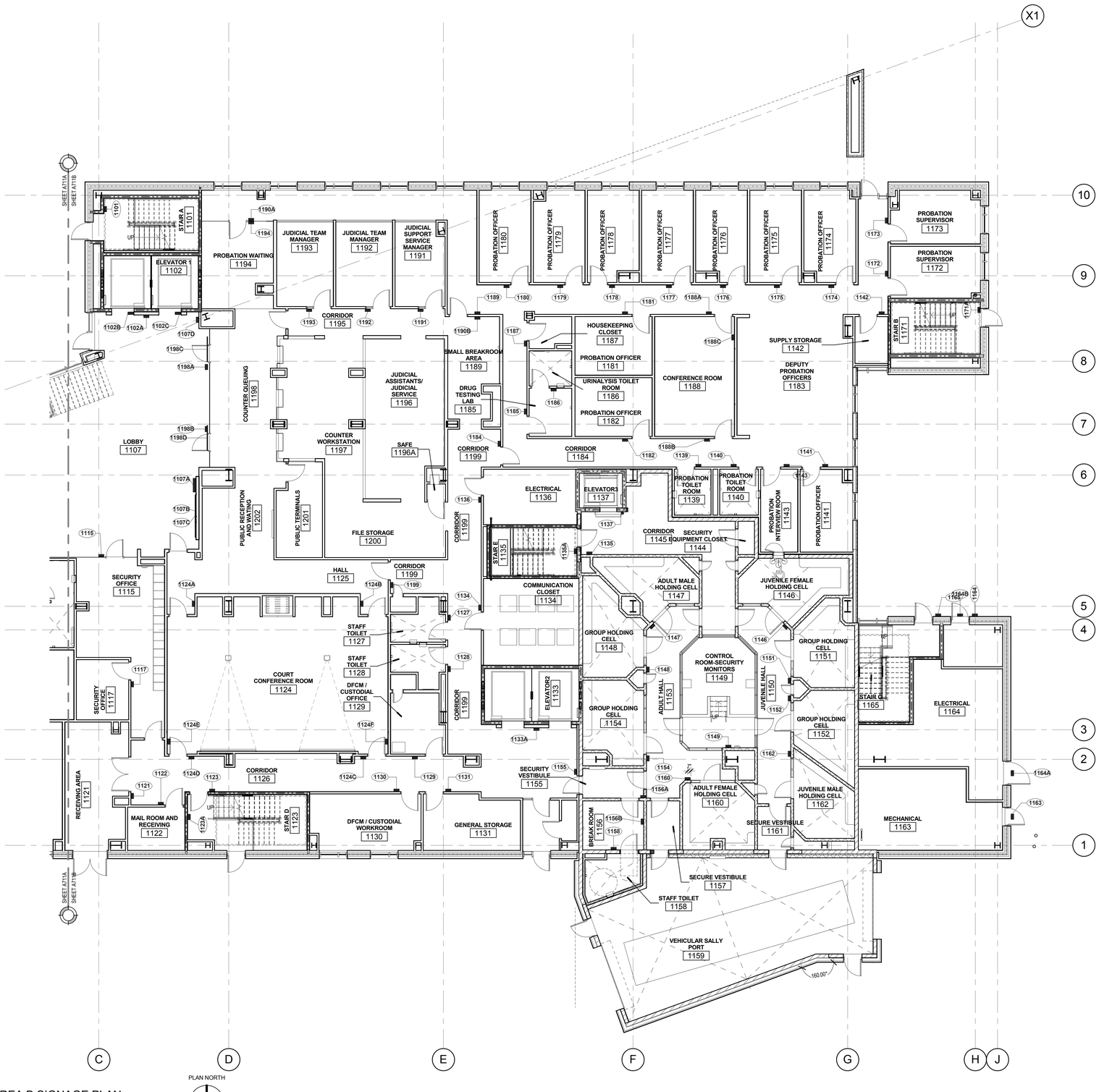

A1 LEVEL 1 AREA B SIGNAGE PLAN

SCALE: 1/8" = 1'-0"

GAS VAPOR BARRIER GENERAL N

1. THE GAS VAPOR BARRIER IS TO BE INSTALLED UNDER ALL SL AND IS TO BE INSTALLED UNDER AND AROUND ALL ELEVATOR [redacted]
2. GAS VAPOR VENTS ARE TO BE INSTALLED PER THE LAYOUT A REFERENCED ON DRAWING C1A030 AND AS RECOMMENDED MANUFACTURER. [redacted]
3. THE TYPICAL THICKNESS OF THE GAS VAPOR BARRIER IS TO 100 MILS APPLIED UNDER AND AROUND ALL ELEVATOR PITS [redacted]
4. ALL UNDERGROUND VENT PIPING TO BE ABS, PVC OR A PIPIN WITH THE MANUFACTURE'S VENTING SYSTEM. ALL VENT RISI GRADE, CONCEALED IN WALLS AND CEILING SPACES, ARE TO [redacted]
5. THE GAS VAPOR BARRIER IS TO WRAP UP ONTO AND SEAL AC FOUNDATION WALLS. [redacted]
6. WHERE THE GAS VAPOR VENT RISER PENETRATES THE SLAB WALL, THE PENETRATION IS TO BE TREATED AND SEALED PE MANUFACTURER'S DETAILS. [redacted]
7. AT ALL OBJECTS PENETRATING THE BARRIER, SUCH AS UNDE PLUMBING, UNDERGROUND DUCTS, ETC., THE GAS VAPOR BA FULLY SEALED TO THAT OBJECT PER THE BARRIER MANUFAC

SALT LAKE CITY, UT 84102
Phone: (801) 575-8800
Fax: (801) 531-9850
Web: vcbo.com

TYPICAL SIGNAGE LOCATIONS

NOTE:

- TYPICAL SIGN HEIGHT, ARCHITECT TO FIELD VERIFY SIGN LOCATIONS WHEN CONFLICTS WITH DEVICES ARISE.
- SIGNS WITH TACTILE CHARACTERS SHALL BE PERMITTED ON THE PUSH SIDE OF DOORS WITH CLOSERS AND WITHOUT HOLD-OPEN DEVICES.
- WHERE A TACTILE SIGN IS PROVIDED AT DOUBLE DOORS WITH ONE ACTIVE LEAF, THE SIGN SHALL BE LOCATED ON THE INACTIVE LEAF.

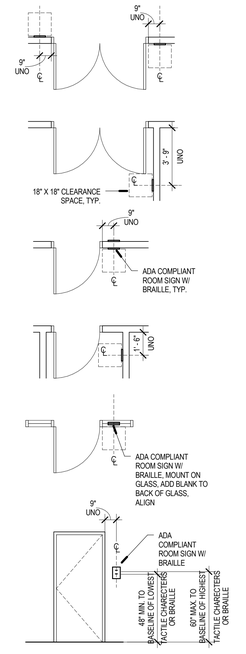

LICENSED ARCHITECT
No. 153912
BRENT R. TIPPETS
8-15-13
STATE OF UTAH

2nd District Juvenile Courthouse

Utah State Courts
08284150
165 West 20th Street, Ogden, Utah
BID DOCUMENTS

Rev #	Date	Description

Job # 12500
Date August 15, 2013
Owner # 08284150
Ins. #

LEVEL 1 AREA B
SIGNAGE PLAN

A711B

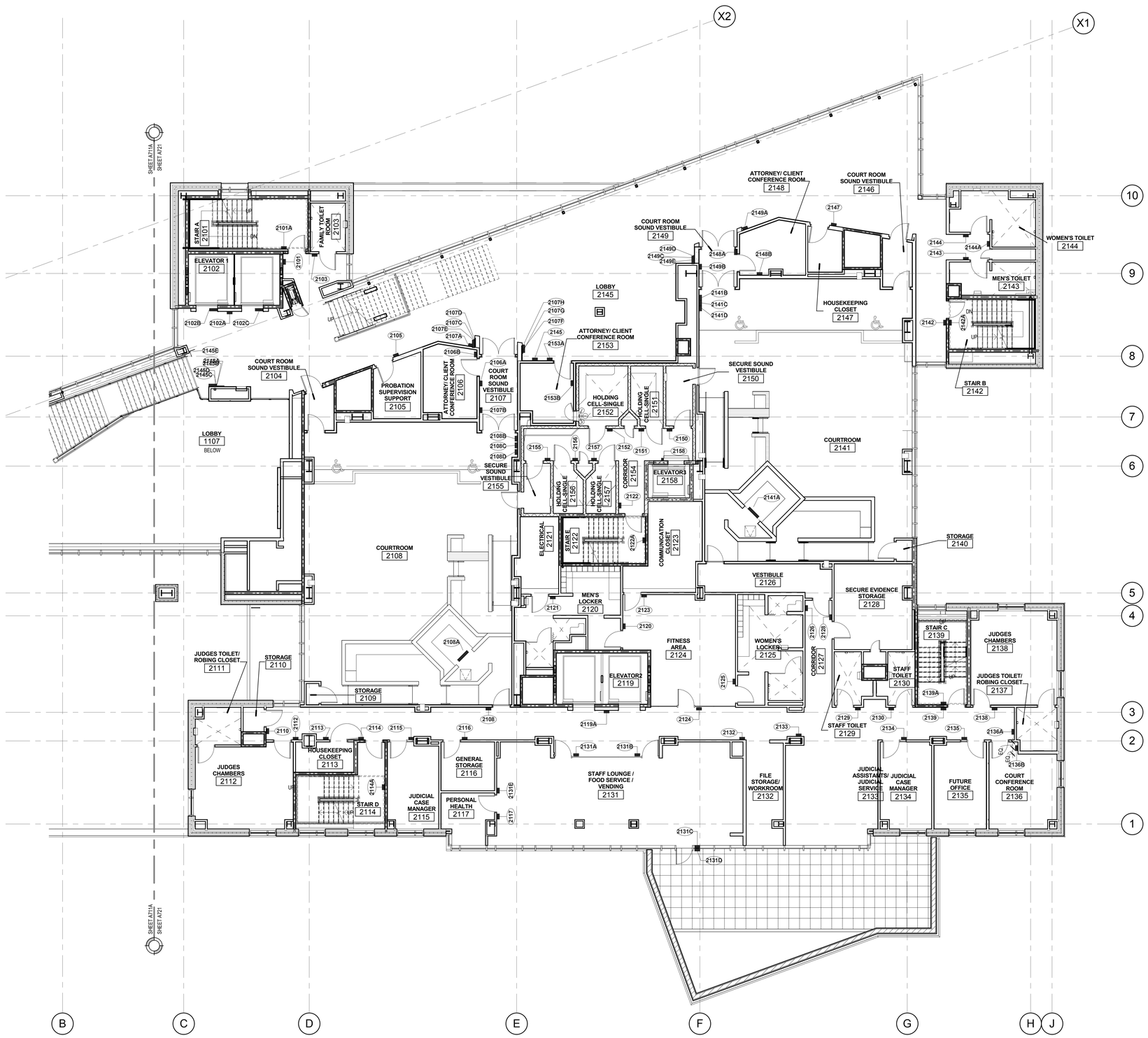

A1 LEVEL 2 AREA B SIGNAGE PLAN

SCALE: 1/8" = 1'-0"

GAS VAPOR BARRIER GENERAL N

1. THE GAS VAPOR BARRIER IS TO BE INSTALLED UNDER ALL SL AND IS TO BE INSTALLED UNDER AND AROUND ALL ELEVATOR [redacted]
2. GAS VAPOR VENTS ARE TO BE INSTALLED PER THE LAYOUT A REFERENCED ON DRAWING C1A030 AND AS RECOMMENDED MANUFACTURER [redacted]
3. THE TYPICAL THICKNESS OF THE GAS VAPOR BARRIER IS TO 100 MILS APPLIED UNDER AND AROUND ALL ELEVATOR PITS [redacted]
4. ALL UNDERGROUND VENT PIPING TO BE ABS, PVC OR A PIPIN WITH THE MANUFACTURE'S VENTING SYSTEM. ALL VENT RISI GRADE, CONCEALED IN WALLS AND CEILING SPACES, ARE TO [redacted]
5. THE GAS VAPOR BARRIER IS TO WRAP UP ONTO AND SEAL AG FOUNDATION WALLS [redacted]
6. WHERE THE GAS VAPOR VENT RISER PENETRATES THE SLAB WALL, THE PENETRATION IS TO BE TREATED AND SEALED PE MANUFACTURER'S DETAILS [redacted]
7. AT ALL OBJECTS PENETRATING THE BARRIER, SUCH AS UNDE PLUMBING, UNDERGROUND DUCTS, ETC., THE GAS VAPOR BA FULLY SEALED TO THAT OBJECT PER THE BARRIER MANUFAC

SALT LAKE CITY, UT 84102
Phone: (801) 575-8800
Fax: (801) 531-9850
Web: vcbo.com

TYPICAL SIGNAGE LOCATIONS

NOTE:

- TYPICAL SIGN HEIGHT, ARCHITECT TO FIELD VERIFY SIGN LOCATIONS WHEN CONFLICTS WITH DEVICES ARISE.
- SIGNS WITH TACTILE CHARACTERS SHALL BE PERMITTED ON THE PUSH SIDE OF DOORS WITH CLOSERS AND WITHOUT HOLD-OPEN DEVICES.
- WHERE A TACTILE SIGN IS PROVIDED AT DOUBLE DOORS WITH ONE ACTIVE LEAF, THE SIGN SHALL BE LOCATED ON THE INACTIVE LEAF.

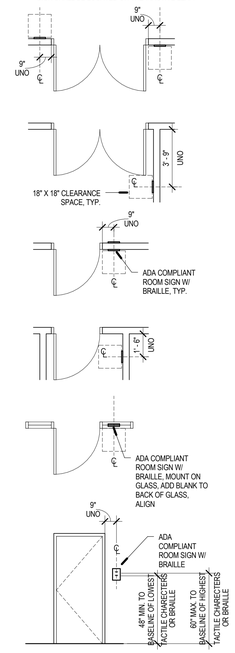

2nd District Juvenile Courthouse

Utah State Courts
08284150
165 West 20th Street, Ogden, Utah
BID DOCUMENTS

Rev #	Date	Description

Job # 12500
Date August 15, 2013
Owner # 08284150
Ins. #

LEVEL 2 SIGNAGE PLAN

A721

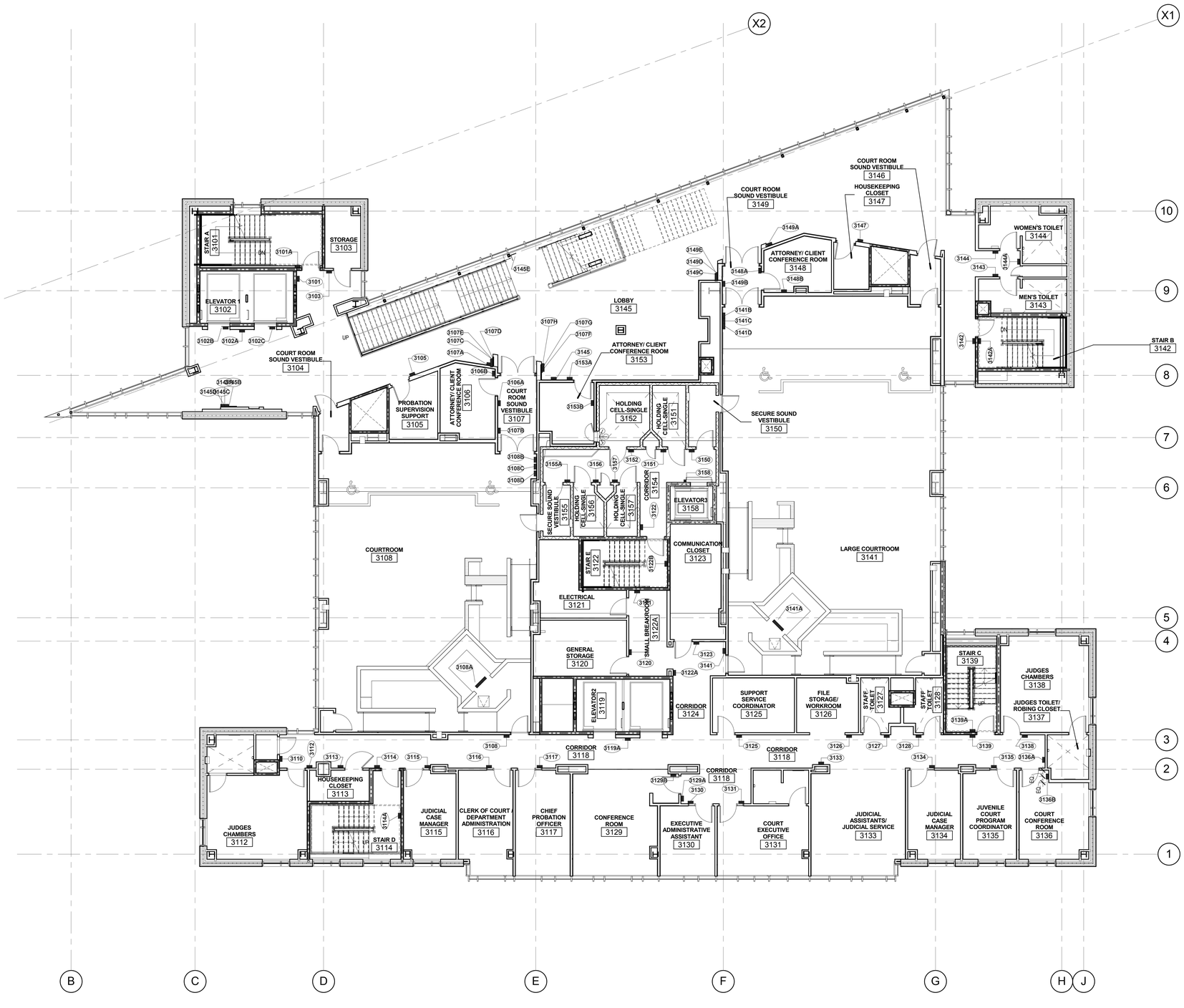

GAS VAPOR BARRIER GENERAL N

1. THE GAS VAPOR BARRIER IS TO BE INSTALLED UNDER ALL SL AND IS TO BE INSTALLED UNDER AND AROUND ALL ELEVATOR [redacted]
2. GAS VAPOR VENTS ARE TO BE INSTALLED PER THE LAYOUT A REFERENCED ON DRAWING C1A030 AND AS RECOMMENDED MANUFACTURER. [redacted]
3. THE TYPICAL THICKNESS OF THE GAS VAPOR BARRIER IS TO 100 MILS APPLIED UNDER AND AROUND ALL ELEVATOR PITS [redacted]
4. ALL UNDERGROUND VENT PIPING TO BE ABS, PVC OR A PIPIN WITH THE MANUFACTURE'S VENTING SYSTEM. ALL VENT RISI GRADE, CONCEALED IN WALLS AND CEILING SPACES, ARE TO [redacted]
5. THE GAS VAPOR BARRIER IS TO WRAP UP ONTO AND SEAL AC FOUNDATION WALLS. [redacted]
6. WHERE THE GAS VAPOR VENT RISER PENETRATES THE SLAE WALL, THE PENETRATION IS TO BE TREATED AND SEALED PE MANUFACTURER'S DETAILS. [redacted]
7. AT ALL OBJECTS PENETRATING THE BARRIER, SUCH AS UNDE PLUMBING, UNDERGROUND DUCTS, ETC., THE GAS VAPOR BA FULLY SEALED TO THAT OBJECT PER THE BARRIER MANUFAC

SALT LAKE CITY, UT 84102
Phone: (801) 575-8800
Fax: (801) 531-9850
Web: vcbo.com

TYPICAL SIGNAGE LOCATIONS

NOTE:

- TYPICAL SIGN HEIGHT, ARCHITECT TO FIELD VERIFY SIGN LOCATIONS WHEN CONFLICTS WITH DEVICES ARISE.
- SIGNS WITH TACTILE CHARACTERS SHALL BE PERMITTED ON THE PUSH SIDE OF DOORS WITH CLOSERS AND WITHOUT HOLD-OPEN DEVICES.
- WHERE A TACTILE SIGN IS PROVIDED AT DOUBLE DOORS WITH ONE ACTIVE LEAF, THE SIGN SHALL BE LOCATED ON THE INACTIVE LEAF.

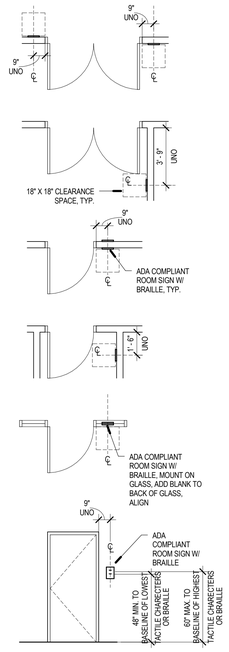

2nd District Juvenile Courthouse

Utah State Courts
08284150
165 West 20th Street, Ogden, Utah
BID DOCUMENTS

Rev #	Date	Description

Job # 12500
Date August 15, 2013
Owner # 08284150
Ins. #

LEVEL 3 SIGNAGE PLAN

A731

A1 LEVEL 3 SIGNAGE PLAN
SCALE: 1/8" = 1'-0"

PLAN NORTH

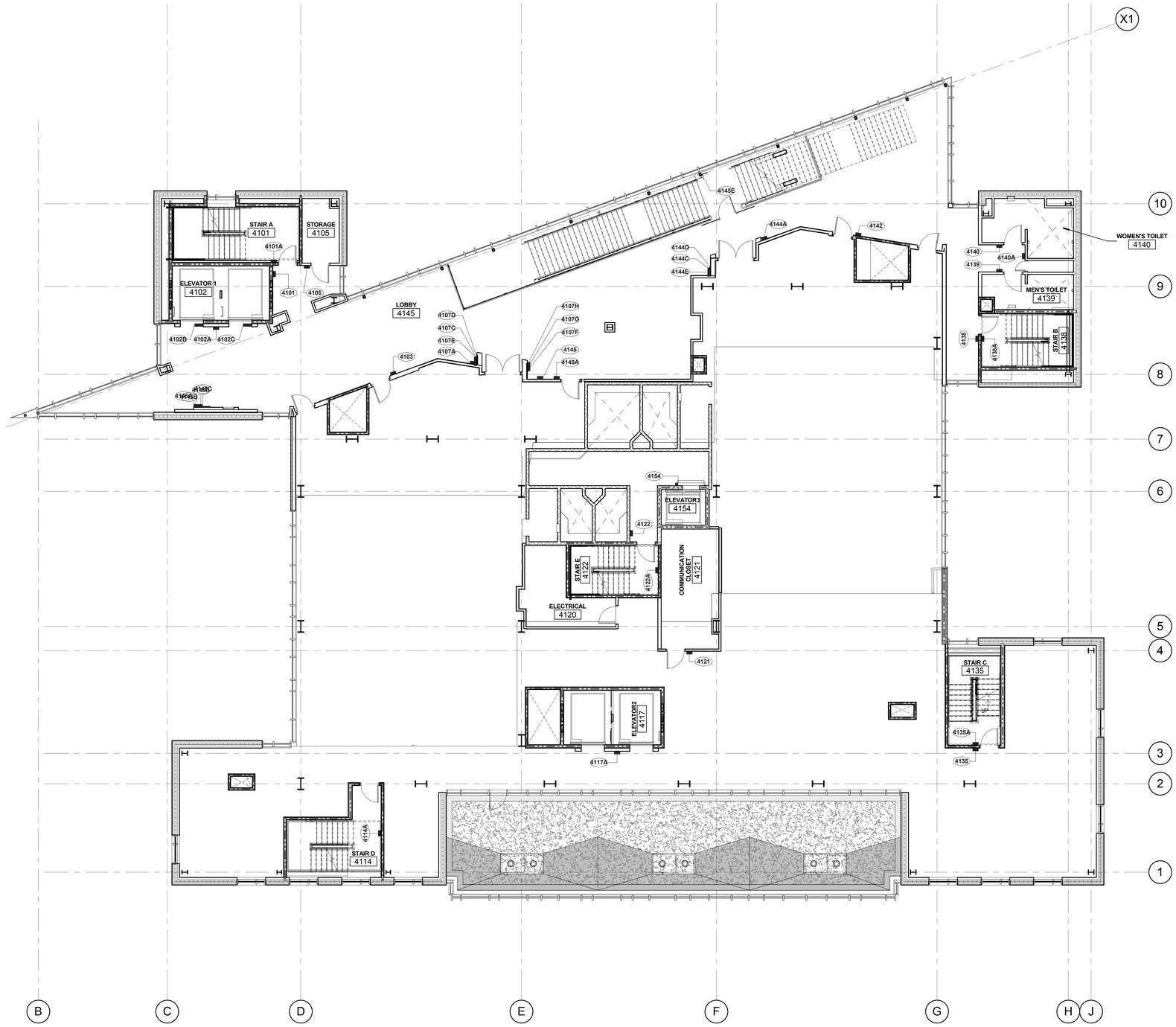

TYPICAL SIGNAGE LOCATIONS

NOTE:

- TYPICAL SIGN HEIGHT, ARCHITECT TO FIELD VERIFY SIGN LOCATIONS WHEN CONFLICTS WITH DEVICES ARISE.
- SIGNS WITH TACTILE CHARACTERS SHALL BE PERMITTED ON THE PUSH SIDE OF DOORS WITH CLOSERS AND WITHOUT HOLD-OPEN DEVICES.
- WHERE A TACTILE SIGN IS PROVIDED AT DOUBLE DOORS WITH ONE ACTIVE LEAF, THE SIGN SHALL BE LOCATED ON THE INACTIVE LEAF.

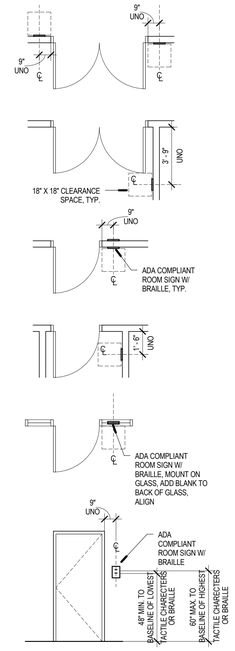

GAS VAPOR BARRIER GENERAL N

1. THE GAS VAPOR BARRIER IS TO BE INSTALLED UNDER ALL SL AND IS TO BE INSTALLED UNDER AND AROUND ALL ELEVATOR [redacted]
2. GAS VAPOR VENTS ARE TO BE INSTALLED PER THE LAYOUT A REFERENCED ON DRAWING C1A030 AND AS RECOMMENDED MANUFACTURER. [redacted]
3. THE TYPICAL THICKNESS OF THE GAS VAPOR BARRIER IS TO 100 MILS APPLIED UNDER AND AROUND ALL ELEVATOR PITS [redacted]
4. ALL UNDERGROUND VENT PIPING TO BE ABS, PVC OR A PIPIN WITH THE MANUFACTURE'S VENTING SYSTEM. ALL VENT RISI GRADE, CONCEALED IN WALLS AND CEILING SPACES, ARE TO [redacted]
5. THE GAS VAPOR BARRIER IS TO WRAP UP ONTO AND SEAL AC FOUNDATION WALLS. [redacted]
6. WHERE THE GAS VAPOR VENT RISER PENETRATES THE SLAB WALL, THE PENETRATION IS TO BE TREATED AND SEALED PE MANUFACTURER'S DETAILS. [redacted]
7. AT ALL OBJECTS PENETRATING THE BARRIER, SUCH AS UNDE PLUMBING, UNDERGROUND DUCTS, ETC., THE GAS VAPOR BA FULLY SEALED TO THAT OBJECT PER THE BARRIER MANUFAC

SALT LAKE CITY, UT 84102
Phone: (801) 575-8800
Fax: (801) 531-9850
Web: vcbo.com

2nd District Juvenile Courthouse

Utah State Courts
08284150
165 West 20th Street, Ogden, Utah
BID DOCUMENTS

Rev #	Date	Description

Job # 12500
Date August 15, 2013
Owner # 08284150
Ins. #

LEVEL 4 SIGNAGE PLAN

A741

A1 LEVEL 4 SIGNAGE PLAN
SCALE: 1/8" = 1'-0"

PLAN NORTH

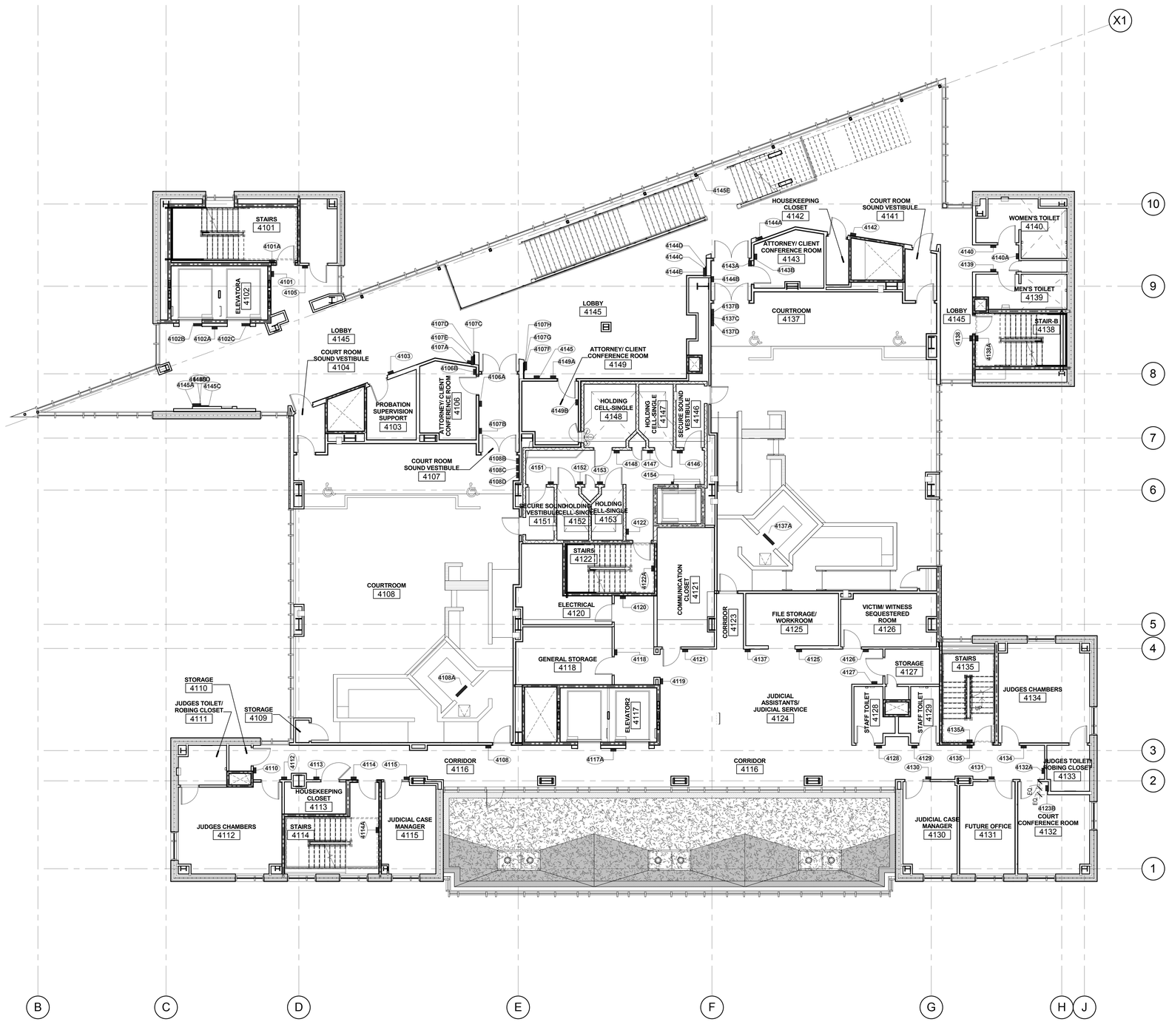

A1 LEVEL 4 SIGNAGE PLAN ALTERNATE

SCALE: 1/8" = 1'-0"

PLAN NORTH

GAS VAPOR BARRIER GENERAL NO

1. THE GAS VAPOR BARRIER IS TO BE INSTALLED UNDER ALL SLABS AND IS TO BE INSTALLED UNDER AND AROUND ALL ELEVATOR PIT
2. GAS VAPOR VENTS ARE TO BE INSTALLED PER THE LAYOUT AND REFERENCED ON DRAWING C1/A030 AND AS RECOMMENDED BY T MANUFACTURER
3. THE TYPICAL THICKNESS OF THE GAS VAPOR BARRIER IS TO BE 6 100 MILS APPLIED UNDER AND AROUND ALL ELEVATOR PITS
4. ALL UNDERGROUND VENT PIPING TO BE ABS, PVC OR A PIPING CO WITH THE MANUFACTURE'S VENTING SYSTEM. ALL VENT RISER P GRADE. CONCEALED IN WALLS AND CEILING SPACES. ARE TO BE
5. THE GAS VAPOR BARRIER IS TO WRAP UP ONTO AND SEAL AGAIN FOUNDATION WALLS
6. WHERE THE GAS VAPOR VENT RISER PENETRATES THE SLAB OR WALL, THE PENETRATION IS TO BE TREATED AND SEALED PER TH MANUFACTURER'S DETAILS
7. AT ALL OBJECTS PENETRATING THE BARRIER, SUCH AS UNDERGR PLUMBING, UNDERGROUND DUCTS, ETC., THE GAS VAPOR BARRI FULLY SEALED TO THAT OBJECT PER THE BARRIER MANUFACTUR

VCBO ARCHITECTURE
Phone: (801) 575-8800
Fax: (801) 531-9850
Web: vcbo.com

TYPICAL SIGNAGE LOCATIONS

NOTE:

- TYPICAL SIGN HEIGHT, ARCHITECT TO FIELD VERIFY SIGN LOCATIONS WHEN CONFLICTS WITH DEVICES ARISE.
- SIGNS WITH TACTILE CHARACTERS SHALL BE PERMITTED ON THE PUSH SIDE OF DOORS WITH CLOSERS AND WITHOUT HOLD-OPEN DEVICES.
- WHERE A TACTILE SIGN IS PROVIDED AT DOUBLE DOORS WITH ONE ACTIVE LEAF, THE SIGN SHALL BE LOCATED ON THE INACTIVE LEAF.

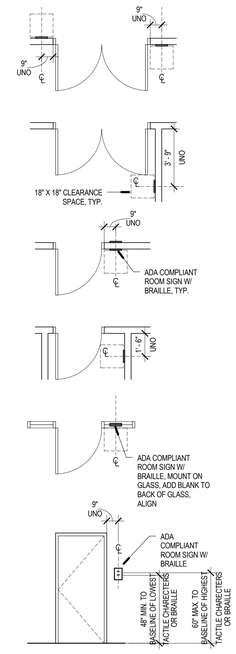

2nd District Juvenile Courthouse

Utah State Courts

08284150

165 West 20th Street, Ogden, Utah

BID DOCUMENTS

Rev #	Date	Description

Job # 12500
Date August 15, 2013
Owner # 08284150
Ins. #

LEVEL 4 SIGNAGE PLAN ALT.

A741alt

8/14/2013 2:41:22 PM

A1 LEVEL 5 SIGNAGE PLAN

SCALE: 1/8" = 1'-0"

PLAN NORTH

GAS VAPOR BARRIER GENERAL N

1. THE GAS VAPOR BARRIER IS TO BE INSTALLED UNDER ALL SL AND IS TO BE INSTALLED UNDER AND AROUND ALL ELEVATOR [redacted]
2. GAS VAPOR VENTS ARE TO BE INSTALLED PER THE LAYOUT A REFERENCED ON DRAWING C1A030 AND AS RECOMMENDED MANUFACTURER. [redacted]
3. THE TYPICAL THICKNESS OF THE GAS VAPOR BARRIER IS TO 100 MILS APPLIED UNDER AND AROUND ALL ELEVATOR PITS [redacted]
4. ALL UNDERGROUND VENT PIPING TO BE ABS, PVC OR A PIPIN WITH THE MANUFACTURE'S VENTING SYSTEM. ALL VENT RISI GRADE, CONCEALED IN WALLS AND CEILING SPACES, ARE TO [redacted]
5. THE GAS VAPOR BARRIER IS TO WRAP UP ONTO AND SEAL AC FOUNDATION WALLS. [redacted]
6. WHERE THE GAS VAPOR VENT RISER PENETRATES THE SLAE WALL, THE PENETRATION IS TO BE TREATED AND SEALED PE MANUFACTURER'S DETAILS. [redacted]
7. AT ALL OBJECTS PENETRATING THE BARRIER, SUCH AS UNDE PLUMBING, UNDERGROUND DUCTS, ETC., THE GAS VAPOR BA FULLY SEALED TO THAT OBJECT PER THE BARRIER MANUFAC

SALT LAKE CITY, UT 84102
Phone: (801) 575-8800
Fax: (801) 531-9850
Web: vcbo.com

LICENSED ARCHITECT
No. 153912
BRENT R. TIPPETS
8-15-13
STATE OF UTAH

TYPICAL SIGNAGE LOCATIONS

NOTE:

- TYPICAL SIGN HEIGHT, ARCHITECT TO FIELD VERIFY SIGN LOCATIONS WHEN CONFLICTS WITH DEVICES ARISE.
- SIGNS WITH TACTILE CHARACTERS SHALL BE PERMITTED ON THE PUSH SIDE OF DOORS WITH CLOSERS AND WITHOUT HOLD-OPEN DEVICES.
- WHERE A TACTILE SIGN IS PROVIDED AT DOUBLE DOORS WITH ONE ACTIVE LEAF, THE SIGN SHALL BE LOCATED ON THE INACTIVE LEAF.

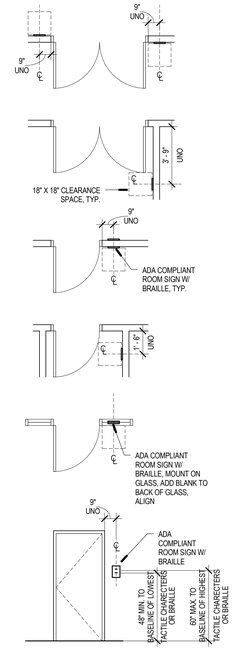

2nd District Juvenile Courthouse

Utah State Courts
08284150
165 West 20th Street, Ogden, Utah
BID DOCUMENTS

Rev #	Date	Description

Job # 12500
Date August 15, 2013
Owner # 08284150
Ins. #

LEVEL 5 SIGNAGE PLAN

A751

D1 EXTERIOR APPROACH WEST

SCALE:

D3 EXTERIOR APPROACH WEST2

SCALE:

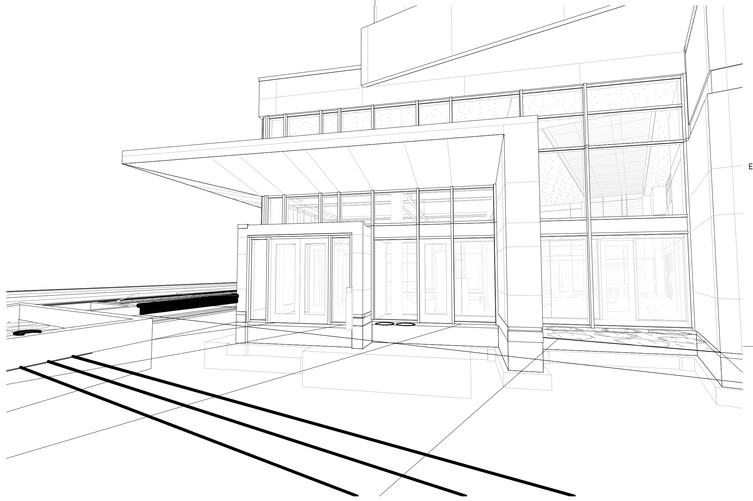

D5 WEST VESTIBULE EXTERIOR

SCALE:

B1 VESTIBULE INTERIOR

SCALE:

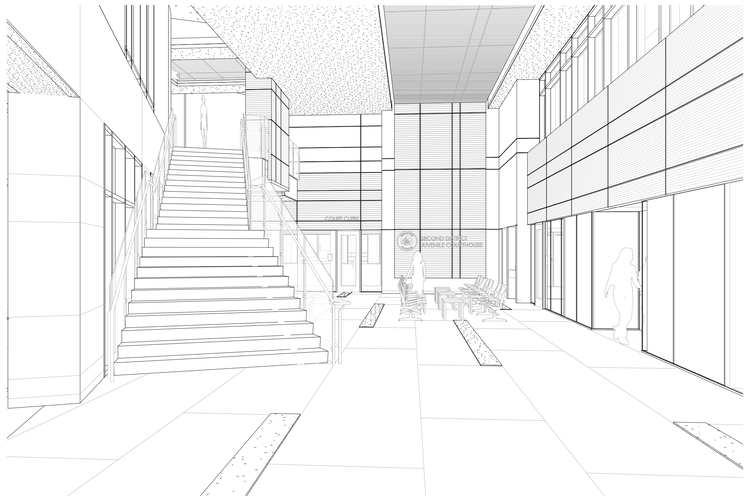

B3 GRAND LOBBY

SCALE:

B5 GRAND LOBBY2

SCALE:

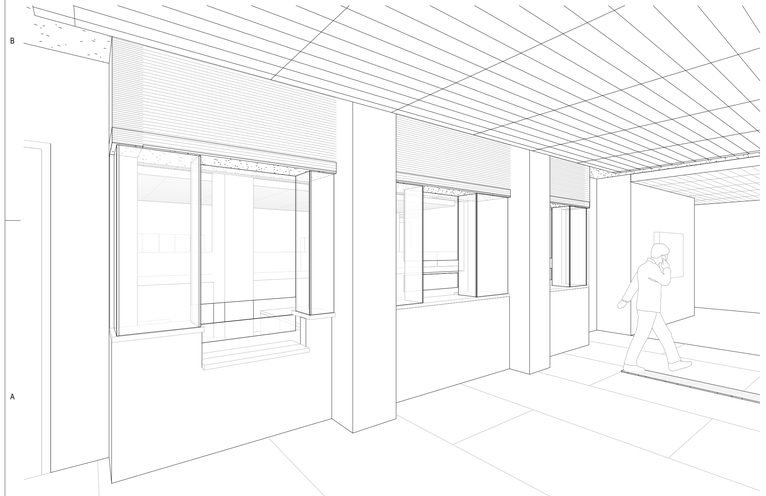

A1 1ST LEVEL COURT CLERK INTERIOR

SCALE:

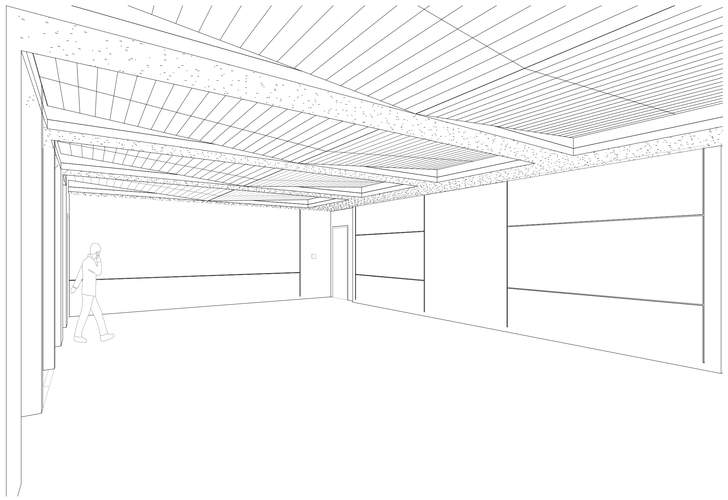

A3 1ST LEVEL LARGE CONFERENCE ROOM

SCALE:

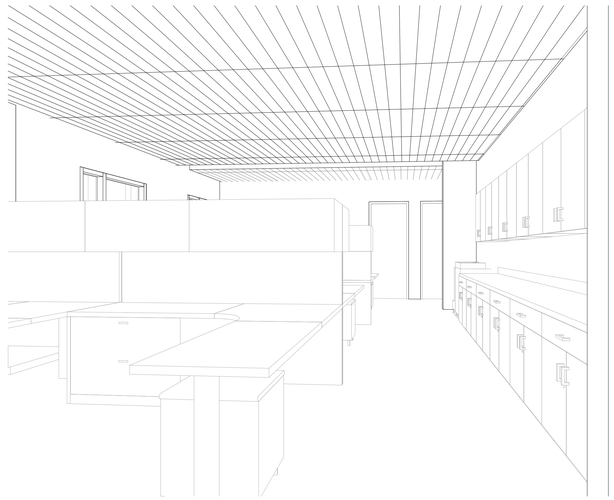

A5 1ST LEVEL OPEN OFFICE

SCALE:

8/14/2013 2:43:09 PM

VCBO ARCHITECTURE

VCBO ARCHITECTURE
524 SOUTH 600 EAST
SALT LAKE CITY, UT 84102
Phone: (801) 575-8800
Fax: (801) 531-9850
Web: vcbo.com

LICENSED ARCHITECT No. 153912 BRENT R. TIPPETS 8-15-13 STATE OF UTAH

2nd District Juvenile Courthouse

Utah State Courts

08284150

165 West 20th Street, Ogden, Utah

BID DOCUMENTS

Rev #	Date	Description

Job # 12500
Date August 15, 2013
Owner # 08284150
Ins. #

3D PERSPECTIVES

A901

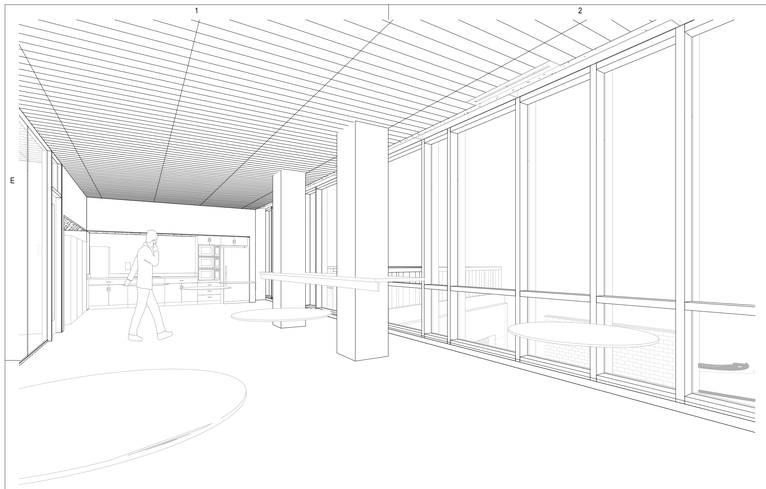

D1 2ND LEVEL STAFF LOUNGE

SCALE:

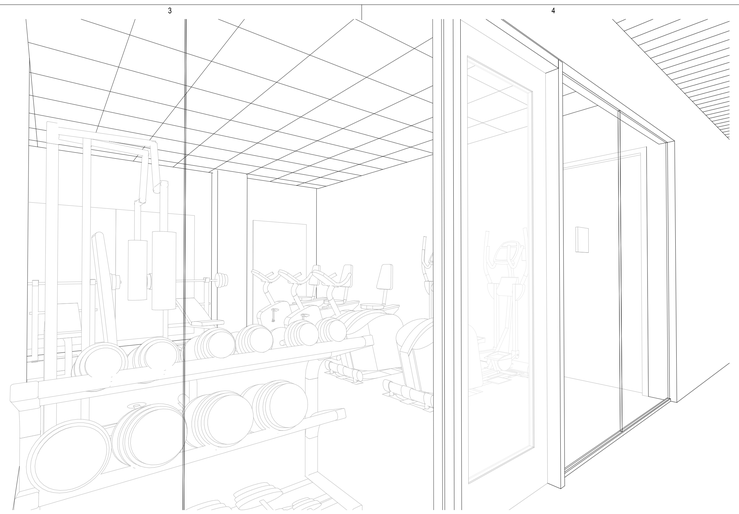

D3 2ND LEVEL WELLNESS

SCALE:

D5 2ND LEVEL LOBBY ENTRANCE

SCALE:

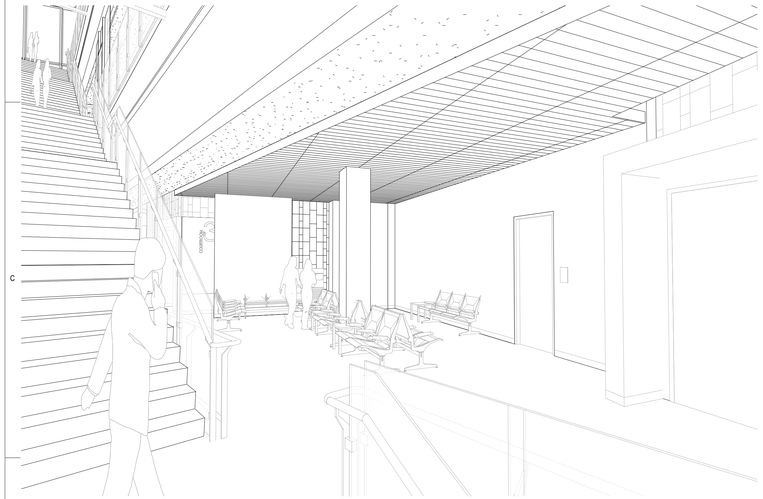

B1 3RD LEVEL WAITING

SCALE:

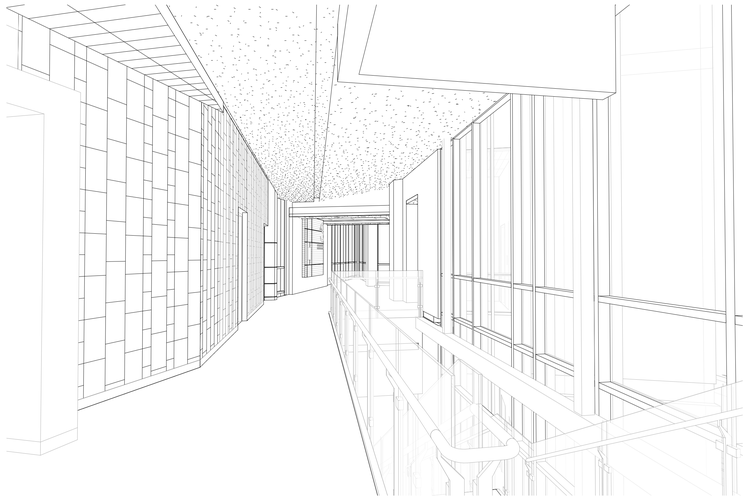

B3 3RD LEVEL TOWARDS POINT

SCALE:

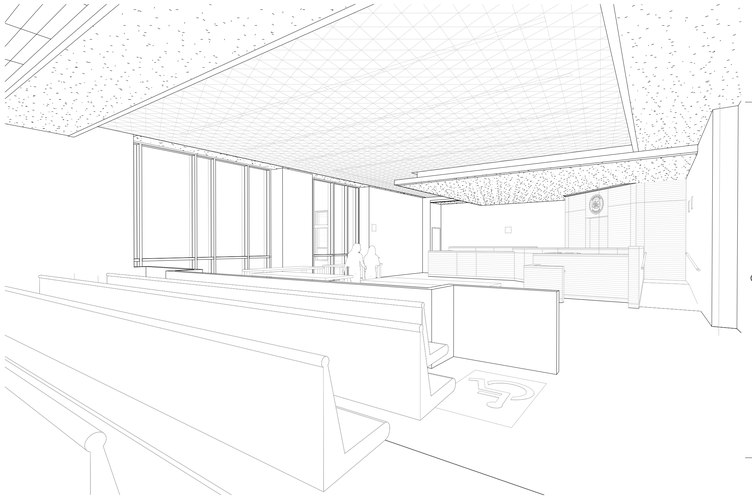

B5 3RD LEVEL LARGE COURTROOM

SCALE:

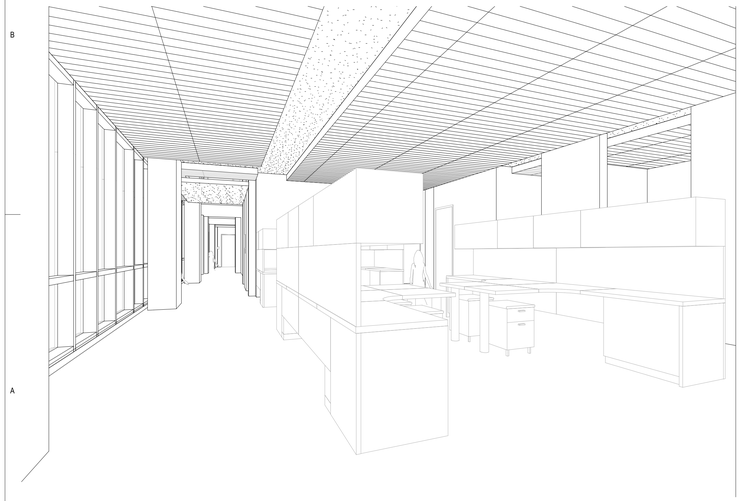

A1 4TH LEVEL OPEN OFFICE

SCALE:

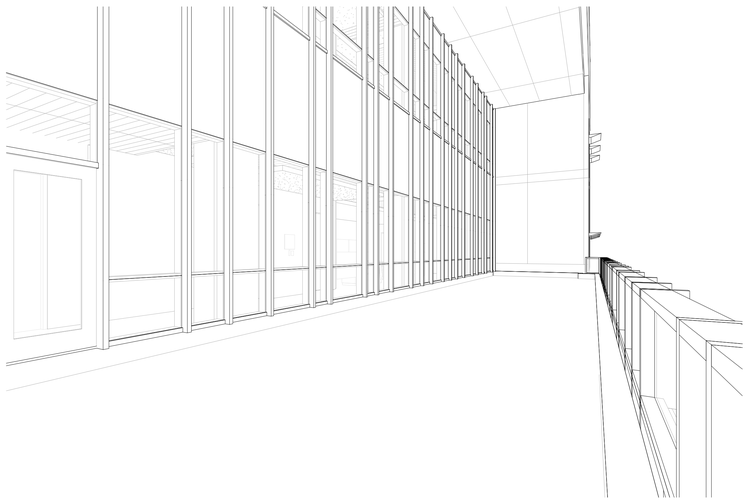

A3 4TH LEVEL PATIO

SCALE:

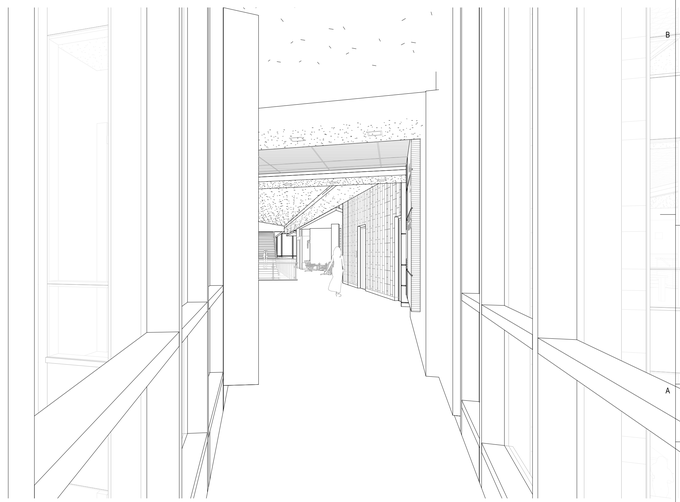

A5 4TH LEVEL POINT TOWARD LOBBY

SCALE:

VCBO
ARCHITECTURE

VCBO ARCHITECTURE
524 SOUTH 600 EAST
SALT LAKE CITY, UT 84102
Phone: (801) 575-8800
Fax: (801) 531-9850
Web: vcbo.com

LICENSED ARCHITECT
No. 153912
BRENT R. TIPPETS
8-15-13
STATE OF UTAH

2nd District Juvenile Courthouse

Utah State Courts
08284150
165 West 20th Street, Ogden, Utah
BID DOCUMENTS

Rev #	Date	Description

Job # 12500
Date August 15, 2013
Owner # 08284150
Reg. #

3D PERSPECTIVES

A902

8/14/2013 2:44:26 PM

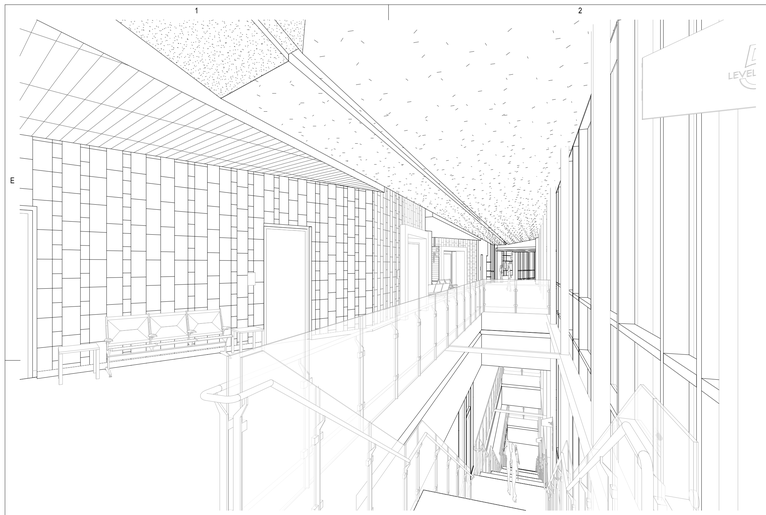

D1 5TH LEVEL TOP OF STAIR

SCALE:

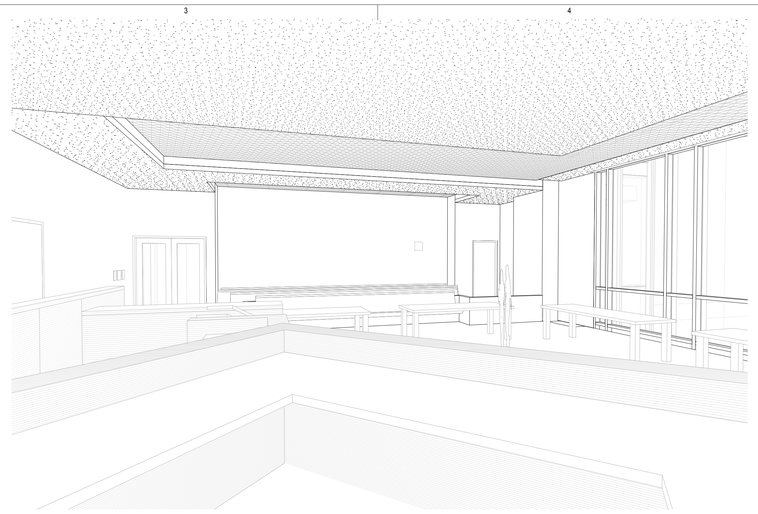

D3 5TH LEVEL COURTROOM

SCALE:

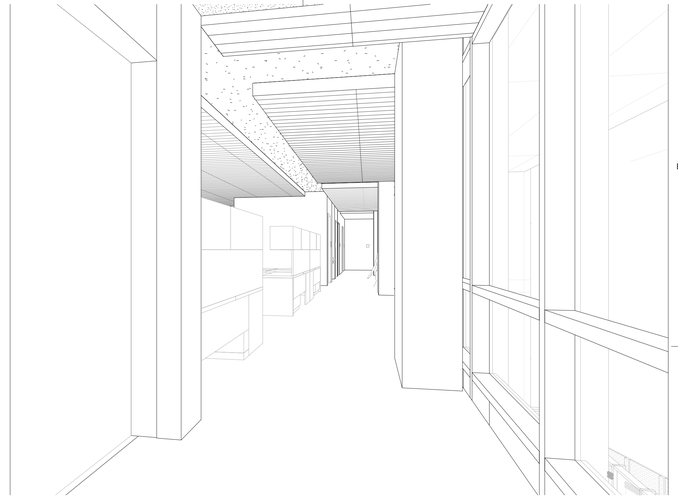

D5 5TH LEVEL ELEVATOR LOBBY

SCALE:

VCBO ARCHITECTURE

VCBO ARCHITECTURE
524 SOUTH 600 EAST
SALT LAKE CITY, UT 84102
Phone: (801) 575-8800
Fax: (801) 531-9850
Web: vcbo.com

LICENSED ARCHITECT
No. 153912
BRENT R. TIPPETS
8-15-13
STATE OF UTAH

2nd District Juvenile Courthouse

Utah State Courts
08284150
165 West 20th Street, Ogden, Utah
BID DOCUMENTS

Rev #	Date	Description

Job # 12500
Date August 15, 2013
Owner # 08284150
Ins. #

3D PERSPECTIVES

A903

8/14/2013 2:44:56 PM

GENERAL STRUCTURAL NOTES

1. Design Criteria

1.1. Governing Building Code: 2009 International Building Code (IBC)

1.2. Floor Live Loading:
- A. Office: .... 80 psf Live Load + 20 psf Partition Load
- B. Exit Facilities & Corridors: .... 100 psf Live Load
- C. Mechanical Rooms: .... 125 psf Live Load or actual weights, if larger
- D. Mezzanine: .... 100 psf Live Load

1.3. Roof Live Loading:
- A. Roof Live Load: .... 20 psf
- B. Roof Snow Load: .... 33 psf + Drift per IBC
  1. Ground Snow Load, P_g: .... 43 psf
  2. Snow Exposure Factor, C_e: 1.0
  3. Importance Factor, I_S: 1.1
  4. Thermal Factor, C_t: 1.0

1.4. Holding cells precast Lid Loading:
- A. Precast Lid dead Loads: .... Self Weight+10 psf Superimposed Dead
- B. Precast Lid Live Load: .... 20 psf Live Load

1.5. Earthquake:
- A. Occupancy Category: III
- B. Seismic Design Category .... D
- C. Spectral Response Accelerations:
  S_S = 1.385 g S_{DS} = 0.923 g
  S_1 = 0.577g S_{D1} = 0.577g
- D. Soil Site Class: .... D
  F_a = 1.0 F_v = 1.5
- E. Basic Seismic-Force-Resisting System: .... Special Steel Moment Frame
  R = 8 C_d = 5.5 Ω_0 = 3.0
- F. Importance Factor, I_E: 1.25
- G. Design Base Shear: .... 598 kips (Eq. Static)
- H. Design Story Drift, Δ: .... 2.2 in. (1%)
- I. Analysis Procedure: .... Dynamic Response Spectrum
- J. Response Modification factor: .... R=8

1.6. Wind:
- A. Basic Wind Speed (3-second gust): .... 90 mph
- B. Importance Factor, I_W: 1.15
- C. Exposure: C
- D. Internal Pressure Coefficient, GC_{pi}: 0.18
- E. Topographic Factor, K_{zt}: 1.0
- F. Components and Cladding Design Pressure:

Design Wind Pressure (psf)					
Location		Tributary Area (ft^2)			
		< 10	50	100	> 500
Walls	Within 14 ft of building corner	62.4	53.6	49.9	41.6
	All other areas	38.50	36.32	35.38	33.19
Roof	Within 28ft of building corner	99.57	89.74	85.5	75.68
	Within 14ft of building edge	75.68	68.03	64.74	57.09
	All other areas	51.78	46.32	43.97	38.5

1.7. Foundation:
- A. Subsurface Conditions:
  Soils report and log of borings was obtained by the Owner for the Engineer's use in the design of the foundation, and is not a part of the Contract Documents. This report and log of borings is available for the Contractor's information, but is not a warranty of the subsurface conditions. The Contractor may use the report at his own risk.
- B. Soils Report by AGEC Applied Geotech, dated October 8, 2012.
- C. Soil Bearing Pressure: 2500 psf, on 3'-6" Compacted Fill on native undisturbed soil
- D. Lateral Soil Pressure Fluid Equivalent Density.
  1. Active: .... 35 pcf (retaining walls)
  2. At Rest: .... 55 pcf (rigid foundation walls)
  3. Passive: .... 300 pcf
  4. Increase for Seismic: .... 20 pcf
- E. Coefficient of Friction: 0.35

1.8. Classification for Fire Rated Construction:
- A. For the purpose of determining fire-resistive assemblies, open-web steel framing members shall be considered unrestrained. All other steel floor and roof framing members shall be considered restrained.
- B. Diagonal members in vertical braced frames shall be considered as secondary members for fire proofing protection

2. Earthwork

2.1. Clearing: The entire building area shall be scraped to remove the top 4 inches of soil, including all vegetation and debris.

2.2. Unsuitable existing fill: The depth of this material is approximately 2ft -8.5 ft feet. Do not place any footing on this material. Remove all unsuitable fill material from below footings and building foot print to undisturbed native soil and replace it with compacted structural fill as neede to bring footing and slabs to required elevations.

2.3. Proof rolling: The natural undisturbed soil below all footings shall be proof rolled prior to placing concrete. Remove all soft spots and replace with compacted structural fill.

2.4. At existing building basements that are below new building footprint, demo and remove all existing basements structure including existing footings, slabs, walls and existing fill. Remove to undisturbed natural soils. Backfill with approved structural fill per contract document and compact per soil report and contract document to the desired compaction. Soil inspections and compaction tests required per contract document.

2.5. Compacted structural fill: All fill material shall be a well-graded granular material with a maximum size less than 4 inches and with not more than 10 percent passing a No. 200 sieve. It shall be compacted to 95 percent of the maximum laboratory density as determined by ASTM D1557. All fill shall be tested (See Specifications and the Quality Assurance section of the GSN).

3. Concrete

3.1. Materials shall comply with the Standards specified in American Concrete Institute (ACI) 318-08, "Building Code Requirements for Structural Concrete."
- A. Concrete mix design requirements shall be as follows:

Location	f'c at 28 days (psi)	Max W/C Ratio	Air Content (%)	Max Aggregate Size	Exposure Classes* F	S	C
Footings	4500	0.45	4.5	1"	F1	S0	C1
Interior Slabs on Grade	3000	0.45	-	1"	F0	S0	C0
Exterior Walls	4500	0.45	5	¾"	F1	S0	C1
Walls	4000	0.45	-	¾"	F0	S0	C0
Exterior Columns	4500	0.45	5	¾"	F1	S0	C1
Columns	4000	0.45	-	¾"	F0	S0	C0
Joist, Beams and Suspended Slabs	4000	0.45	-	¾"	F0	S0	C0
Lightweight Concrete over Steel Deck	3000	0.45	-	¾"	F0	S0	C0
All other site cast concrete	4500	0.45	4.5	1"	F1	S0	C1

* Exposure Classes are per ACI 318, Section 4.2.1, where F, S and C are exposure categories for freezing and thawing, sulfate, and corrosion protection of reinforcement, respectively.

- B. Cementitious Materials:
  1. Portland Cement (ASTM C150):
     - a. Type I or II for exposure class S0.
     - b. Type II or V for exposure class S1.
     - c. Type V for exposure class S2 and S3.
  2. Fly Ash (ASTM C618, Class C or F): maximum fly ash content as a percentage of total weight of cementitious materials shall be 25 percent.
- C. Concrete Density (Maximum Air Dry Weight):
  1. Normal weight concrete shall be approximately 145 to 155 pounds per cubic foot. Aggregate shall be ASTM C33.
  2. Lightweight concrete shall not exceed 110 pounds per cubic foot and shall be made of lightweight coarse aggregates and either lightweight and/or normal weight fines meeting ASTM C330.
- D. Reinforcement steel:
  1. ASTM A615 Grade 60, fy = 60,000 psi min. unless noted otherwise.
  2. Reinforcement at concrete moment frames and shear wall jambs shall be ASTM A706 or ASTM A615 Grade 60, with the following properties:
     - a. Actual yield strength based on mill tests shall not exceed 78,000 psi.
     - b. Retest shall not exceed 81,000 psi.
     - c. Ratio of actual ultimate tensile stress to actual yield strength shall not be less than 1.25.
     - d. Mill tests shall be submitted to the Engineer.
- E. Admixtures:
  1. Air-entraining admixtures, comply with ASTM C 260 (when used).
     - a. Tolerance on air content as delivered shall be +/- 1.5%.
     - b. When air content of a trowel finished floor slab exceeds 3%, there is an increased risk for delaminations and blistering to occur. When this situation is present, the contractor shall pay special attention to the finishing procedures to help minimize such risks. Refer to ACI 302.1R-96 "Guide for Concrete Floor and Slab Construction" for proper finishing guidelines.
  2. Corrosion Inhibiting Admixture:
     - a. Corrosion inhibiting additive containing a minimum of 30 percent calcium nitrite dosed at 3 gallons per cubic yard shall be added to all reinforced concrete with exposure class C2.
  3. The use of super plasticizers and water reducers is allowed, but not required.
  4. Calcium chloride or admixtures containing calcium chloride shall not be added to the concrete mix.
- F. Chloride Ion: Maximum water soluble chloride ion concentrations in hardened concrete at age between 28 and 42 days contributed from the ingredients including water, aggregates, cementitious materials, and admixtures shall not exceed a maximum, by weight of cement, of 1.00% for concrete with exposure class C0, 0.30% for concrete with exposure class C1, 0.15% for concrete with exposure class C2, and 0.06% for all prestressed concrete.
- G. Slump Limit: 4 inches, maximum for all concrete prior to the addition of plasticizers and water reducing admixtures. The concrete supplier shall indicate the final slump of each concrete mix in the submitted mix design.
- H. Shrinkage Limit: Interior slabs on grade shall have a drying shrinkage limit of 0.040 percent tested in accordance with ASTM C157. Drying shrinkage test results shall be submitted with mix designs.
- I. Only one grade or type of concrete shall be poured on the site at any given time.

3.2. Formwork shall comply with ACI Standards Publication 347 and the project specifications. The contractor shall be responsible for the design, detailing, care, placement and removal of the formwork and shores.
- A. Pre-camber forms and screeds with a camber of 1/4" per every 10'-0" of span to compensate for dead load deflection, unless noted otherwise. Post tensioned concrete slabs and beams do not require formwork to be pre-cambered.

3.3. Concrete cover requirements for deformed bar reinforcing steel shall comply with ACI 318, "Building Code Requirements for Structural Concrete".
- A. Cast-in-place Concrete: Specified Cover
  1. Cast against and permanently exposed to earth: .... 3"
  2. Formed concrete exposed to earth or weather:
     #6 thru #18 bars .... 2"
     #5 and smaller bars .... 1.1/2"
  3. Concrete not exposed to weather or in contact with ground:
     Slabs, Walls, Joists; #11 bars and smaller .... 3/4"
     Beams, Columns: primary reinforcement, ties, stirrups, spirals .... 1.1/2"
  4. Concrete Tilt-Up Panels:
     #8 and smaller bars .... 1"
     #9 thru #18 bars .... 2"
- B. Pre-cast Concrete (manufactured under plant controlled conditions):
  1. Wall Panels #11 bars and smaller .... 3/4"
  2. Other members #6 thru #11 bars .... 1.1/2"
  3. Other members #5 bars and smaller .... 1.1/4"
- C. Prestressed Concrete (Provide the following specified cover for prestressed and non-prestressed reinforcements, ducts, and end fittings.):
  1. Cast against and permanently exposed to earth .... 3"
  2. Formed concrete exposed to earth or weather:
     Wall Panels, Slabs, Joists .... 1"
     Other members .... 1.1/2"
  3. Concrete not exposed to weather or in contact with ground:
     Slabs, Walls, Joists .... 3/4"
     Beams, Columns: primary reinforcement .... 1.1/2"
     Beams, Columns: ties, stirrups, spirals .... 1"

3.4. Construction Joints and Control Joints:
- A. Provide a surface intentionally roughened to ¼" amplitude in all wall footings. A continuous keyway shall not be used for concrete shear wall to footing connections, unless specifically indicated. Refer to project plans, schedules and details for the shear wall to footing connection requirements.
- B. All horizontal and vertical construction joints shall have a surface intentionally roughened to ¼" amplitude. A continuous 2 X 4 keyway may be used on elements other than shear walls.
- C. Provide reinforcement dowels to match the member reinforcement across the joint, unless noted otherwise. For dowels across construction joints and wall to footing connections of concrete shear walls, refer to specific project plans, schedules, and details.
- D. Construction joints in suspended concrete pours shall be made at the center of spans.
- E. Slabs on grade shall have construction or control joints spaced not to exceed 30 times the slab thickness in any direction.
- F. Control joints shall be installed in slabs on grade so the length to width ratio of the slab is no more than 1.25:1. Control joints shall be completed within 12 hours of concrete placement. See typical details for joint configuration.
- G. Control joints in visually exposed walls, unless noted otherwise: (Joints shall line up with masonry and architectural joints, see drawings.)
  1. Vertical control joints at 10'-0" on center.
  2. Reinforcing shall be continuous through control and construction joints, unless noted otherwise.
  3. Control joints in concrete foundation walls shall line up with masonry control joints.
- H. Control joints shall be installed in concrete slabs over steel deck by saw-cutting along girders and purlins at interior grid lines. See typical details for joint size and reinforcement. Reinforcement required shall be in addition to any slab reinforcement.

3.5. Detailing: All reinforcing, including welded wire fabric, shall be detailed, bolstered & supported to comply with ACI 315, "Details and Detailing of Concrete Reinforcement" and the Concrete Reinforcing Steel Institute (CRSI) recommendations. Reinforcing bars shall not be welded unless specifically shown on drawings.
- A. Lap splice lengths shall be detailed to comply with the CONCRETE REINFORCING BAR DEVELOPMENT AND LAP SPLICE SCHEDULE.
- B. All mechanical splices shall have the capacity to develop at least 1.25fy of the bar in tension or compression. Type 2 couplers have the capacity to develop the full tension capacity of the bar. Type 1 couplers shall not be used in moment frames and shear wall jamb columns. Mechanical splices shall have a current ICC Code Evaluation Report; "Lenton" (ER-3967), "Taper-Lock" (ESR-2481) or "SAS Stressteel" (ESR-1163) tapered threaded rebar splices, "Bar-Lock" (ESR-2495) bolt coupling sleeves or approved equivalent may be used. Mechanical couplers on adjacent bars shall be staggered a minimum of 24" apart along the longitudinal axis of the reinforcing bars.
- C. All embedded elements and dowels shall be securely tied to formwork or to adjacent reinforcing prior to the placement of concrete.
- D. Use chairs or other support devices recommended by CRSI to support and tie reinforcement bars and welded wire fabric prior to placing concrete. Welded wire fabric shall be continuously supported at 36" o.c. maximum.
- E. See typical details for reinforcing at wall intersections and ends, reinforcing around wall openings and suspended slab openings, vertical wall dowels, concrete column ties and splices in vertical column reinforcing.
- F. See typical details for column cross-ties. The 90-degree hooks of two successive crossties engaging the same longitudinal bars shall be alternated end for end.
- G. Contractor shall coordinate placement of all openings, curbs, dowels, sleeves, conduits, bolts, inserts and other embedded items prior to concrete placement.
- H. All reinforcement shall be bent cold, and shall be bent only once at the same location. All reinforcement shall be shop bent, unless otherwise permitted by the engineer.

3.6. Minimum Reinforcing: Wall reinforcing shall be as follows, unless noted otherwise:

Wall Thickness	Horizontal Reinforcing	Vertical Reinforcing
6"	#4 @ 13" o.c.	#4 @ 18" o.c.
8"	#5 @ 15" o.c.	#4 @ 16" o.c.
10"	#5 @ 12" o.c.	#4 @ 13" o.c.
12"	#4 @ 13" o.c. Each Face	#4 @ 18" o.c. Each Face
Others	0.25% of Wall Area	0.15% of Wall Area

Spacing shall exceed neither three times the wall thickness nor 18". In addition to the above reinforcing, 2 - #5 x continuous horizontal bars shall be placed at the bottom of the wall (near the footing) and at each floor level, at the roof level and at the top of wall.

3.7. No aluminum conduit or product containing aluminum or any other material injurious to concrete shall be embedded in concrete.

3.8. Unless otherwise noted, all slabs on grade shall be 4" thick.

3.9. Prestressed (precast) concrete shall be designed to conform to the current editions and supplements of the IBC, ACI 318 and PCI design handbook.
- A. The prestressed (precast) concrete supplier shall provide members designed for all loads as shown on the contract documents.
- B. Bolts, angles, plate inserts and other embed items which are to be cast in the precast element shall be provided by the precast supplier.
- C. Lifting inserts shall be located and placed by the supplier with additional reinforcing provided as required.
- D. See mechanical and electrical drawings for sleeves and inserts required for those trades.
- E. See architectural drawings for locations of prestressed (precast) elements, rib placements, finish conditions, and locations of feature strips.
- F. The prestressed (precast) supplier shall submit calculations, by a registered professional engineer. Calculations shall bear the seal of a professional engineer licensed in the State of Utah and shall be submitted with the shop drawings for review. Calculations shall include (but not be limited to) the following items.
  1. Design of the elements for flexural, compression, tension, and shear stress imposed by the loads as indicated on the structural drawings and by loads specified in the International Building Code. Thermal loads may be included.
  2. Panel connections as required by the International Building Code.
  3. When double tee wall panels are used in construction, the design of the panels is the responsibility of the manufacturer.
- G. Field verify locations of connections and coordinate with the prime contractor all requirements for attachment of prestressed or precast elements.
- H. Field verify dimensions.

4. Masonry

4.1. Materials, unless noted otherwise:
- A. Concrete Masonry Units: ASTM C 90, Lightweight.
- B. Hollow Clay Units: Hollow Brick, ASTM C652, Grade SW.
- C. Solid Clay Units: ASTM C216, Grade SW.
- D. Material Strength: The Prism Test Method or the Unit Strength Method according to IBC Section 2105.2 may be used to determine the compressive strength of masonry assemblies. The contractor shall select the desired method and meet the required material strengths as follows:
  1. Prism Test Method, IBC 2105.2.2.1:
     - a. Concrete Masonry Unit Assembly, f'm = 2500 psi.
     - b. Hollow Clay Unit Assembly, f'm = 2500 psi.
     - c. Solid Clay Unit Assembly f'm = 1500 psi.
  2. Unit Strength Method, IBC 2105.2.2.2:
     - a. Concrete Masonry Units, minimum unit strength of 3750 psi average or better. (f'm = 2500 psi)
     - b. Hollow Clay Units, minimum unit strength of 6600 psi average or better. (f'm = 2500 psi)
     - c. Solid Clay Units, minimum unit strength of 3350 psi average or better. (f'm = 1500 psi)
- E. Mortar: Use Type "S" according to ASTM C270, proportion specification. Admixtures shall not be added to the mortar mix.
- F. Grout: For masonry assemblies with f'm = 2,000 psi or less conform to ASTM C476, proportion specification. Grout that does not meet the requirements of ASTM C476 proportion specification or that is used in masonry assemblies with f'm > 2,000 psi shall meet the following requirements: Meet the material requirements of ASTM C476, obtain a minimum compressive strength of f'm or 2,500 psi, whichever is larger, at 28 days tested according to ASTM C1019, and a slump of 8 in. to 11 in. as determined by ASTM C143.
  1. Self Consolidating Grout: Conform to the material requirements of ASTM C476, obtain a minimum compressive strength of f'm or 2,500 psi, whichever is larger, at 28 days tested according to ASTM C1019, obtain a slump flow of 24 in. to 30 in. as determined by ASTM C1611, and shall have a Visual Stability Index less than or equal to 1 as determined in accordance with ASTM C1611 Appendix X.1. Field addition of admixtures is not permitted.
- G. Reinforcing: Grade 60 reinforcing steel shall comply with ASTM A615. Wire joint reinforcing shall comply with ASTM A951.
- H. Deformed Bar Anchors (DBA): All DBAs shall comply with ASTM A496.
- I. Anchor Bolts (AB): ASTM A307 with ASTM A563 heavy hex nuts and hardened washers, Grade A, unless noted otherwise.
- J. Headed Stud Anchors (HSA): Manufacture all HSAs in conformance with ASTM A108 with dimensions complying with AISC specifications.

4.2. Construction Requirements:
- A. Mortar Joints: Joints shall be "concave", "V-joint" or "weathered raked" for structural members unless noted otherwise on architectural drawings.
- B. Masonry walls, beams and columns shall be constructed with running bond, unless noted otherwise.
- C. Grouting Requirements: Comply with IBC Section 2104 and ACI 530.1/ASCE 6/TMS 602 Section 3.5. Grout shall be mechanically consolidated and mechanically reconsolidated according to TMS 602/ACI 530.1/ASCE 6 Section 3.5 E.
  1. Grout Pour Heights that exceed 4 feet shall meet the following requirements:
     - a. Provide cleanouts in the bottom course of masonry for each grout pour in accordance with ACI530.1/ASCE 6/TMS 602 Section 3.2 F.
     - b. For grout other than Self Consolidating Grout a demonstration panel representative of the proposed wall construction and construction procedures shall be provided and approved by the Architect. The demonstration panel may be a part of the completed construction as approved by the Architect.
     - c. For Self Consolidating Grout placed in masonry that has cured for at least 4 hours, place in lifts not exceeding the Maximum Grout Pour Height in listed in ACI 530.1/ASCE 6/TMS 602 Table 7.
  2. When grouting, form grout keys between grout pours. Form grout keys between grout lifts when the first lift is permitted to set prior to placement of the subsequent lift.
     - a. Form a grout key by terminating the grout a minimum of 1.1/2 in. below a mortar joint.
     - b. Do not form grout keys within beams.
     - c. At beams or lintels laid with closed bottom units, terminate the grout pour at the bottom of the beam or lintel without forming a grout key.
- D. Reinforcing Bars shall not be welded unless specifically shown on drawings. In such cases, use only AWS standards. Do not substitute reinforcing bars for DBAs or HSAs.
- E. Control Joints: Spacing shall not exceed 40'-0" or 2.5 times the wall height, whichever is less. Joints shall not be located over masonry openings, and shall be a minimum of the schedule masonry column width away from masonry openings. See architectural drawings for locations.
- F. Grout all beam and joist pockets solid after installation of beams and joists.
- G. Masonry Veneer Attachment and Reinforcing:
  1. To steel stud and wood stud walls: Veneer shall be attached to the studs Dur-O-Wal DA 213S seismic veneer anchors or Hohmann & Barnard DW-10HS seismic veneer anchors (or equal) spaced at 16" o.c. Veneer anchors shall be attached to studs with #10 corrosion resistant self drilling screws. Attach the veneer to the anchors with Dur-O-Wal Seismic Steel Pintles or Hohmann & Barnard Seismiclip Interlock System (or equal) spaced at a maximum of 16" o.c. in both directions. Anchor ties shall engage to a galvanized No. 9 gauge horizontal joint reinforcement wire in the veneer which shall be continuous and shall be placed at 16" o.c. maximum at the center of the veneer.
  2. To concrete walls: 22 gauge galvanized dovetail slots shall be installed vertically in concrete at 16" o.c. Attach the veneer to dovetail slots with Dur-O-Wal 16 gage seismic dovetail anchor ties or Hohmann & Barnard #315 BT Flexible Brick Tie with Seismiclip Interlock System (or equal) spaced at a maximum of 16" o.c. in both vertical and horizontal directions. Anchor ties shall engage to a galvanized No. 9 gauge horizontal joint reinforcement wire in the veneer which shall be continuous and shall be placed at 16" o.c. maximum at the center of the veneer. Dovetail slots and anchor ties shall be galvanized.
  3. To reinforced masonry walls: Veneer shall be attached with tri-rod laddur type reinforcement spaced at a maximum of 16" o.c. vertically consisting of 3 - #9 gauge, galvanized, corrugated, wires. Veneer may also be attached with Dur-O-Wal DA 3600 S Seismic Ladur-Eye (or equal) spaced at 16" o.c. maximum in both vertical and horizontal directions. Where the joints in the veneer and masonry back up walls do not align, attach veneer with Dur-O-Wal DA 5213 S seismic veneer anchors (or equal) spaced at 16" o.c. maximum in both directions. Attach the veneer to the anchors with Dur-O-Wal Seismic Steel Pintles (or equal) that shall engage a galvanized No. 9 gauge horizontal joint reinforcement wire in the veneer which shall be continuous and shall be placed at 16" o.c. maximum at the center of the veneer.
  4. Other methods of attachment may be used after written acceptance by the architect and structural engineer.
  5. Steel Lintels: Provide steel angle lintels at all openings through the masonry veneer. Provide one inch of bearing for each foot of width of opening, with a minimum bearing of six inches. See the Steel Angle Lintel Schedule for size.

4.3. Detailing Requirements:
- A. Standards: Reinforcing detailing shall comply with American Concrete Institute (ACI) Standard 315, "Details and Detailing of Concrete Reinforcement."
- B. Reinforcement Protection (cover):
  1. Joint reinforcement shall have not less than 5/8" mortar coverage from the exposed face.
  2. Other reinforcement shall have a minimum coverage of one bar diameter over all the bars, but not less than 3/4". When masonry is exposed to soil, minimum coverage shall be 1.5".
- C. Vertical steel reinforcement shall be placed and secured against displacement prior to grouting by wire positioners or other suitable devices: at intervals not exceeding 112 bar diameters, at the grout lift heights, or at bar splice locations, whichever is less. Vertical reinforcing shall be located at the center of the wall, unless noted otherwise.
- D. Lap Splice Lengths: Lap all masonry reinforcing bars per the "Masonry Reinforcing Bar Lap Splice Schedule." Joint reinforcement shall lap a minimum of 6".
- E. Corner Bars: Horizontal reinforcement shall be continuous at all corners and at intersecting walls. Provide corner bars with the required lap splice length.
- F. Dowels: All vertical reinforcing shall be doweled to the foundation wall, footing (structure below) and to the structure above with the same size dowel, spacing (and in the same core) as the vertical wall reinforcing unless noted otherwise.
- G. Wall Openings 24" wide and wider: Provide reinforced masonry lintels per Masonry Lintel Schedule over the top of, and 2 - #5 bars, in grouted spaces, on all sides and adjacent to every unscheduled opening, unless noted otherwise. Bars for all openings shall extend a minimum of 48 bar diameters beyond the corners of the opening. Vertical bars shall extend from floor level below to the floor, or roof, level above. Where a 48 bar diameter extension is not possible, extend bars as far beyond the opening as possible and terminate them with a 90 degree standard ACI hook.
- H. Horizontal wall reinforcing shall be continuous through joining concrete walls, masonry walls, columns, and pilasters. Provide a key between the wall and the column or pilaster. Horizontal wall reinforcing shall be placed inside the column vertical reinforcing.
- I. Anchor bolts and headed stud anchors shall be set in a grouted cell. Anchor bolts and headed stud anchors shall have 1" grout surrounding the shank at its penetration. Grout shall be flush with the face or top of the masonry.
- J. All masonry column ties shall terminate with 135 degree hooks plus a 6 bar diameter extension (4" minimum).
- K. The exposed face of all embed plates shall be set flush with the face of masonry wall or column.

4.4. Minimum Reinforcing:
All masonry walls shall be reinforced as follows, unless shown otherwise on the drawings. Reinforcing shall be placed in grouted cells.

Wall Thickness	Horizontal Reinf.	Vertical Reinf.
6"	#4 @ 48" o.c.	#5 @ 32" o.c.
8"	#5 @ 48" o.c.	#5 @ 32" o.c.
10"	#6 @ 48" o.c.	#6 @ 32" o.c.
12"	2 - #5 @ 48" o.c.	#6 @ 32" o.c.

5. Structural Steel

5.1. Material:
- A. W-Shapes: ASTM A992, (F_y = 50 ksi), except as noted otherwise.
- B. All Other Shapes and Plates: ASTM A36 (Fy = 36 ksi), except as noted otherwise.
- C. Rectangular and Square Hollow Structural Sections (HSS): ASTM A500, Grade B (Fy = 46 ksi).
- D. Round HSS: ASTM A500, Grade B (Fy = 42 ksi).
- E. Steel Pipe: ASTM A53, Grade B (Fy = 35 ksi).
- F. Deformed Bar Anchors (DBA): ASTM A496.
- G. Headed Stud Anchors (HSA): ASTM A108, with dimensions complying with AISC specifications.
- H. Anchor Rods: ASTM F1554, Grade 36 with ASTM A563 heavy hex nuts and ASTM F436 hardened washers, unless noted otherwise.
- I. Structural steel that is part of the seismic force resisting system shall be supplied with minimum Charpy V-Notch impact test results of 20 ft-lbs. absorbed energy at 70 degrees Fahrenheit, indicated below:
  1. Hot rolled shapes with flanges 1.1/2" thick and thicker tested in the alternate core location as described in ASTM A6 Supplementary requirement S30.
  2. Plates 2" and thicker measured at any location permitted by ASTM A673.
  3. Test Frequency: Each heat.

5.2. Fabrication and construction shall comply with the following Codes and Standards:
- A. American Institute of Steel Construction (AISC) 360-05, "Specification for Structural Steel Buildings," dated March 9, 2005.
- B. AISC 341-05, "Seismic Provisions for Structural Steel Buildings" dated March 9, 2005, including Supplement No. 1, dated November 16, 2005.
- C. AISC 303-05, "Code of Standard Practice for Steel Buildings and Bridges" excluding the following: Section 3.3 (last sentence of first paragraph), Section 4.4, Section 4.4.1, Section 4.4.2, Section 4.5, and Section 7.13.3.
  1. The architectural drawings are the prime contract drawings. Consultants' drawings by other disciplines are supplementary to the architectural drawings. The structural drawings shall be used in conjunction with the architectural drawings. Detailing and shop drawing production for structural elements will require information (including dimensions) contained in architectural, structural, and/or other consultants' drawings. Refer to VII. Special Instructions, notes VII.B and VII.C on this sheet.
- D. AISC 358-05, "Prequalified Connections for Special and Intermediate Steel Moment Frames for Seismic Applications," dated December 13, 2005.
- E. AISC/RCSC 2004, "Specification for Structural Joints Using ASTM A325 or A490 Bolts"
- F. American Welding Society (AWS) D1.1-04, "Structural Welding Code – Steel" (specific items do not apply when they conflict with the AISC requirements).
- G. American Welding Society (AWS) D1.8-05, "Structural Welding Code – Seismic Supplement" (specific items do not apply when they conflict with the AISC requirements).
- H. Steel Joist Institute (SJI) 2005, "Standard Specification, Load Tables and Weight Tables for Steel Joists and Joist Girders," and "Recommended Code of Standard Practice."
- I. American Iron and Steel Institute (AISI) 2007, "North American Specification for the Design of Cold-Formed Steel Structural Members."

5.3. Structural shapes and plates shall be fabricated from newly rolled (milled) one-piece sections without splices, unless specifically noted otherwise on the structural drawings. Connections for structural steel shall comply with the structural drawings, unless written approval is given by the structural engineer.

PLAN MARKS

BF-#	BRACED FRAME
CB-#	CONCRETE BEAM
CC-#	CONCRETE COLUMN
CDP-#	CONC DRILLED PIER
CFW-#	CONC FDTN. WALL
CGB-#	CONC GRADE BEAM
CJ-#	CONCRETE JOIST
CL-#	CONCRETE LINTEL
CP-#	CONCRETE PIER
CRW-#	CONC RETAINING WALL
CSG-#	CONC SLAB ON GRADE
CSS-#	CONC SUSPENDED SLAB
CSW-#	CONC SHEAR WALL
CW-#	CONCRETE WALL
FC#	CONTINUOUS FOOTING
FM#	MAT FOOTING
FR#	RECTANGULAR FOOTING
FS#	SQUARE FOOTING
FTS#	THICKEND SLAB FOOTING
MC-#	MASONRY COLUMN
MF-#	MOMENT FRAME
ML-#	MASONRY LINTEL
MP-#	MASONRY PIER
MW-#	MASONRY WALL
PD-#	PLYWOOD DIAPHRAGM
PSW-#	PLYWOOD SHEAR WALL
SBP-#	STEEL BASE PLATE
SC-#	STEEL COLUMN
SCP-#	STEEL CAP PLATE
SD-#	STEEL DECK

STRUCTURAL DRAWING LIST

SHEET NO.	SHEET NAME
SE001	GENERAL STRUCTURAL NOTES
SE002	GENERAL STRUCTURAL NOTES
SE003	GENERAL STRUCTURAL NOTES
SB101	FOOTING AND FOUNDATION PLAN
SB501	FOOTING & FOUNDATION DETAILS
SB502	FOOTING & FOUNDATION DETAILS
SB601	STRUCTURAL SCHEDULES
SB602	STRUCTURAL SCHEDULES
SF101	LEVEL 2 FLOOR FRAMING PLAN
SF102	LEVEL 3 FLOOR FRAMING PLAN
SF103	LEVEL 4 FLOOR FRAMING PLAN
SF104	LEVEL 5 FLOOR FRAMING PLAN
SF105	ROOF FRAMING PLAN
SF106	PARAPET FRAMING PLAN
SF107	MISC. FRAMING PLANS
SF110	HOLDING CELL LID FRAMING PLANS
SF111	RAISED FLOOR PLANS
SF201	MOMENT FRAME ELEVATIONS
SF202	MOMENT FRAME ELEVATIONS
SF205	COOLING TOWER PARAPET & FRAME ELEVATIONS
SF210	SIDEPLATE GENERAL NOTES (1 OF2)
SF211	SIDEPLATE GENERAL NOTES (2 OF 2)
SF212	SIDEPLATE A TYPE & B TYPE TYPICAL DETAILS
SF213	SIDEPLATE C TYPE TYPICAL DETAILS
SF214	SIDEPLATE HSS A&B TYPE TYPICAL DETAILS
SF215	SIDEPLATE TYPICAL BEAM DETAILS
SF216	SIDEPLATE MISC DETAILS
SF401	STAIR FRAMING PLANS
SF402	STAIR FRAMING PLANS
SF404	STAIR FRAMING DETAILS
SF501	FLOOR FRAMING DETAILS
SF502	FLOOR FRAMING DETAILS
SF503	FLOOR FRAMING DETAILS
SF504	FLOOR FRAMING DETAILS
SF515	ROOF FRAMING DETAILS
SF516	ROOF FRAMING DETAILS
SF517	ROOF FRAMING DETAILS
SF518	ROOF FRAMING DETAILS
SF601	STRUCTURAL SCHEDULES
SF602	STRUCTURAL SCHEDULES

ABBREVIATIONS

AB	ANCHOR BOLT (S)
ABV	ABOVE
@	AT
ALT	ALTERNATE
APPROX	APPROXIMATE
ARCH	ARCHITECT(URAL)
BM	BEAM
BLW	BELOW
BRG	BEARING
BTWN	BETWEEN
BLDG	BUILDING
BOT	BOTTOM
C.J.	CONSTRUCTION JOINT OR CONTROL JOINT
CJP	COMPLETE JOINT PENETRATION
CMU	CONC MASONRY UNIT
COL	COLUMN
CONC	CONCRETE
CONST	CONSTRUCTION
CONT	CONTINUOUS
CONTR	CONTRACTOR
CTR	CENTER
DB	DECK BEARING
DBA	DEFORMED BAR ANCHORS
DBL	DOUBLE
DET	DETAIL
DIA (OR Ø)	DIAMETER
DIM	DIMENSION
DN	DOWN
DWG	DRAWING
DWL	DOWEL
EA	EACH
E.J.	EXPANSION JOINT (SEISMIC SEPARATION JOINT)
ELEV	ELEVATION
ELEC	ELECTRICAL
EQUIP	EQUIPMENT
EQ	EQUAL
EXIST	EXISTING
EXP	EXPANSION / EXPOSED
EXT	EXTERIOR
E.F.	EACH FACE
E.W.	EACH WAY
F.D	FLOOR DRAIN
FDTN	FOUNDATION
F.F.	FINISH FLOOR
FIN	FINISH
FL	FLOOR
FT	FOOT
FTG	FOOTING
FV	FIELD VERIFY
GA	GAUGE
GALV	GALVANIZED
GLB	GLU-LAMINATED BEAM
GR	GRADE
GSN	GENERAL STRUCTURAL NOTES
HB	HORIZONTAL BRIDGING
HT	HEIGHT
HORIZ	HORIZONTAL
HSA	HEADED STUD ANCHORS
IBC	INTERNATIONAL BUILDING CODE
ICBO	INTERNATIONAL CONFERENCE OF BUILDING OFFICIALS
ICC	INTERNATIONAL CODE COUNCIL
IN.	INCH
INSUL	INSULATION
INT	INTERIOR
I.F.	INSIDE FACE
JT	JOINT
JST	JOIST
KLF	KIPS PER LINEAL FOOT
KSF	KIPS PER SQUARE FOOT
KSI	KIPS PER SQUARE INCH
K	KIPS - 1,000 POUNDS
LF	LINEAL FOOT
LBS	POUNDS
LLH	LONG LEG HORIZONTAL
LLV	LONG LEG VERTICAL
MAS	MASONRY
MAX	MAXIMUM
MCJ	MASONRY C.J.
MECH	MECHANICAL
MFR	MANUFACTURER
MIN	MINIMUM
MISC	MISCELLANEOUS
NIC	NOT IN CONTRACT
NTS	NOT TO SCALE
OPNG	OPENING
OPP	OPPOSITE
O.C.	ON CENTER
O.F.	OUTSIDE FACE
OWSJ	OPEN WEB STEEL JOIST
PCF	POUNDS/CUBIC FOOT
PL	PLATE
PLF	POUNDS/LINEAL FOOT
PNL	PANEL
PSF	POUNDS/SQ FOOT
PSI	POUNDS/SQ INCH
PT	POINT
REINF	REINFORCING
R.D.	ROOF DRAIN
REQ'D	REQUIRED
SHT	SHEET
SI	SPECIAL INSPECTION
SOG	SLAB ON GRADE
STD	STANDARD
STIFF	STIFFENER
STL	STEEL
SQ	SQUARE
SIM	SIMILAR
STR	STRUCTURAL
STAG	STAGGERED
T&B	TOP AND BOTTOM
TEMP	TEMPERATURE
THDS	THREADS
T.O.	TOP OF
TOC	TOP OF CONCRETE
TOF	TOP OF FOOTING
TOS	TOP OF SLAB
TOW	TOP OF WALL
TYP	TYPICAL
UNO	UNLESS NOTED OTHERWISE
VERT	VERTICAL
W/	WITH
WWF	WELDED WIRE FABRIC

VCBO ARCHITECTURE
524 SOUTH 600 EAST
SALT LAKE CITY, UT 84102
Phone: (801) 575-8800
Fax: (801) 531-9850
Web: vcbo.com

PROFESSIONAL STRUCTURAL ENGINEER No. 295733 JEROD G. JOHNSON STATE OF UTAH

REAVELEY ENGINEERS + ASSOCIATES
Consulting Structural Engineers
P: 801.486.3883
F: 801.485.0911
675 E. 500 S. Suite 400
Salt Lake City, Utah 84102
www.reaveley.com

2nd District Juvenile Courthouse
Utah State Courts
08284150
165 West 20th Street, Ogden, Utah
BID DOCUMENTS

Rev #	Date	Description

Job # 12500
Date August 15, 2013
Owner # 08284150
Ins. #

GENERAL STRUCTURAL NOTES

SE001

8/14/2013 4:53:48 PM

GENERAL STRUCTURAL NOTES - CONT.

5.4. Welding:
- A. It is recommended the steel erection contractor and steel fabricator contact the Quality Assurance Agency prior to beginning any welds. A program of joint preparation and welding procedures should be worked out between the two parties before the welding is started so that correct welds will be made from the beginning.
- B. Certification of Welders: All shop and field welding shall be executed by AWS certified welders who have been specifically certified for the process of welding being performed. The welder's certification will be considered as being current unless the welder is not engaged in the process of welding being performed for a period exceeding six months or there is a specific reason to question a welder's ability as required by AWS. Certification and records must comply with AWS Standards. Certification and appropriate records must be provided to the architect prior to beginning work.
- C. Electrodes: E-70 XX or as noted otherwise. E60 XX may be used for welding steel floor and roof decks.
- D. Minimum Welds: All intersecting steel shapes that are not bolted shall be connected by a fillet weld all around, unless noted otherwise. Fillet weld sizes that are not shown shall be 1/16" less than the thinnest of the connected parts for thicknesses 1/4" and larger. Fillet welds on plates less than 1/4" shall be of the same size as the thinnest of the connected parts.
- E. Reinforcing Bars: Do not weld rebar except as specifically detailed in the drawings. In such cases, use only AWS standards. Do not substitute reinforcing bars for deformed bar anchors (DBAs), machine bolts, or headed stud anchors (HSAs).
- F. Bolts: Do not apply any welds, including "tack" welds to bolts, including anchor bolts, except as specifically detailed in the drawings.
- G. Headed Stud Anchor (HSA) welding and Deformed Bar Anchor (DBA) welding shall conform to the manufacturer's specifications. Welding shall comply with AWS D1.1 Section 7.6 through 7.8 and Annex IX.
- H. Special Provisions for Welds in the SLRS (Seismic Load Resisting Systems): Welds used in members and connections of moment frames, braced frames, and collector elements shall comply with these requirements. Welding methods, procedures and quality control shall comply with AISC 341, AWS D1.1, AWS D1.8 and the following:
  1. Demand Critical Welds: The following CJP groove welds are demand critical and shall comply with the special requirements for Demand Critical Welds.
     - a. Beam flanges to columns, single plate shear connections to columns, and beam webs to columns in moment frames.
     - b. Column splice welds including column bases in moment frames and braced frames.
     - c. Link beams to columns in Eccentrically Braced Frames.
     - d. Web plate to flange plate welds in built-up Eccentrically Braced Frame link beams.
     - e. Other welds designated as demand critical in the drawings.
  2. Welding shall be performed in accordance with AISC 341 Appendix W and a welding procedure specification (WPS) as required in AWS D1.1. WPS variables shall be within the parameters established by the filler metal manufacturer. WPS for demand critical welds shall also comply with AWS D1.8 Section 6.1.
  3. All welds except for demand critical welds shall be made with a filler metal that can produce welds that have a minimum Charpy V-Notch toughness of 20 ft-lb at 0 degrees Fahrenheit, as determined by the appropriate AWS A5 classification test method or manufacturer certification.
  4. Demand critical welds shall be made with a filler metal that can produce welds that have a minimum Charpy V-Notch toughness of 20 ft-lb at -20 degrees Fahrenheit, as determined by the appropriate AWS A5 classification test method or manufacturer certification and 40 ft-lb at 70 degrees Fahrenheit as determined by AISC 341 Appendix X.
  5. Backer bars shall be removed from the beam bottom flange to columns. The root of the weld shall be back gouged to sound metal to remove all slag and cracks. Weld the back gouged region and finish welding using a reinforcing fillet weld. Comply with AWS D1.8 sections 6.7 and 6.8. This requirement also applies to all non-fusible backing used at beam to column CJP welds.
  6. Steel backer bars need not be removed from the beam top flange connections to columns or at continuity plate connections to columns provided that the backer bars are welded to the column flange with a continuous 5/16 inch fillet weld on the edge below the CJP groove weld for the entire length of the backer bar.
  7. Backing at beam flange to column flange joints shall not be welded to the underside of the beam flange, nor tack welded at this location. If fillet welds or tack welds are placed between the backing and the beam flange in error, they shall be repaired per AWS D1.8 Section 6.12.3.
  8. Details and treatment of weld tabs shall be per AWS D1.8 Section 6.10. Use weld tabs as specified in AWS D1.1 Section 5.31 except at the end of CJP welds adjacent to the column web/flange juncture at continuity plates. Remove weld tabs to within 1/8 inch of the base metal surface after welding. Where weld tabs are used at continuity plates, remove them to within 1/4 inch of the base metal surface after welding. Finish the edge where weld tabs are removed to a surface roughness of 500 microinches.
  9. CJP joints in members with different thickness or widths (such as column splices) shall be transitioned in a manner that the slope in the transition does not exceed 1 in 2.12. The transition shall be accomplished by chamfering the thicker part, tapering the wider part, sloping the weld metal, or by a combination of these.
  10. Quality requirements for weld access holes for all demand critical welds shall comply with AWS D1.8 Section 6.9.2. Weld access hole shape shall be per AWS D1.8 Figure 6.2.
  11. Beam bottom flange welding sequence shall comply with AWS D1.1 Section 6.14.
  12. Filler and weld metal shall comply with AWS D1.8 Section 6.3 in addition to the following:
     - a. Intermixed filler metals shall comply with AISC 341 Appendix W5.1.
     - b. Filler metal diffusible hydrogen shall comply with AISC 341 Appendix W.5.2.
  13. Preheat, and interpass temperatures shall comply with AWS D1.1 Section 3.5, AWS D1.8 Section 6.5 and AISC 341 Appendix W5.4.
  14. Additional welding provisions applicable to demand critical welds only are as follows:
     - a. Welding processes shall comply with AWS D1.8 Section 6.2.
     - b. Filler metal packaging and exposure limitations shall comply with AISC 341 Appendix W6.2 and W6.3 and AWS D1.8 Section 6.4.
  15. Tack welds shall comply with AWS D1.1 Section 5.18 and AWS D1.8 Section 6.16. Tack welds attaching backing bars and weld tabs at demand critical welds shall be placed where they are incorporated into a final weld.
  16. Unrepaired cracks, gouges, grooves and notches will not be permitted in the joint area. Arc strikes, gouges and other imperfections within or adjacent to the joint, shall be repaired or removed in accordance with AWS D1.8 Section 6.15.4.
  17. Braced Frame Welding: Lengths shown for fillet welds at brace-to-gusset, gusset-to-baseplate, and column-to-gusset connections are minimums, intended for establishing gusset plate dimensions. Weld entire contact length at these joints, typical.

5.5. Bolted Connections:
- A. Provide snug tightened joints with ASTM A325N Type 1 bolts for steel to steel connections, as noted herein or as noted on the drawings. Snug tightened joints shall be used in connections for simple span framing and beam (or girder) to bearing plate connections. The snug tightened condition is usually attained by a few impacts of an impact wrench or the full effort of a man using an ordinary spud wrench. Bolts shall be tightened until all plies of the joint are in firm contact.
- B. Provide pretensioned joints with ASTM A325N Type 1 bolts for all steel to steel connections that are part of the Seismic Load Resisting System (SLRS). Faying surfaces shall meet the requirements of a slip-critical Class A surface except for faying surfaces of end plate moment connections. Tighten bolts by the turn of the nut, calibrated wrench, or direct tension indicator method. Alternate fastener designs as defined by AISC shall be submitted to the engineer for review and acceptability prior to installation. Provide hardened washers beneath turned element.
- C. Provide pretensioned joints with ASTM A325X Type 1 bolts for all steel to steel connections, unless noted otherwise. Tighten bolts by the turn of the nut, calibrated wrench, or direct tension indicator method. Alternate fastener designs as defined by AISC shall be submitted to the engineer for review and acceptability prior to installation. Provide hardened washers beneath turned element.
- D. Provide pretensioned joints with ASTM A325N Type 1 bolts for steel to steel connections subject to significant load reversal, fatigue with no load reversal, tensile fatigue, and the conditions listed in AISC 360 Section J.1.10. Tighten bolts by the turn of the nut, calibrated wrench, or direct tension indicator method. Alternate fastener designs as defined by AISC shall be submitted to the engineer for review and acceptability prior to installation.
- E. Provide slip critical joints with ASTM A325 Type 1 bolts for steel to steel connections subject to fatigue with load reversal, joints that utilize oversized holes, and joints that utilize slotted holes not loaded perpendicular to the long direction of the slot. Faying surfaces shall meet the requirements of a slip-critical Class A surface. Tighten bolts by the turn of the nut, calibrated wrench, or direct tension indicator method. Alternate fastener designs as defined by AISC shall be submitted to the engineer for review and acceptability prior to installation.
- F. Provide hardened washers beneath the turned element of all bolts or nuts. Provide hardened beveled washers, to compensate for the lack of parallelism, where the outer face of the bolted parts has a slope greater than one in twenty with respect to the plane normal to the bolt axis. Hardened washers or plates installed over oversized holes or slotted holes shall be at least 5/16" thick and shall conform to ASTM F436. Plates or bars installed at slotted holes shall have a size sufficient to completely cover the slot after installation.
- G. Where a steel to steel beam connection is not detailed in the drawings, provide a standard AISC framed connection with the capacity to support one half of the total uniform load capacity of the given shape for the span and for the steel specified.
- H. Bolts, nuts and washers shall not be reused.

5.6. Steel Lintels
- A. Provide steel angle lintels at all openings through the masonry veneer. Provide one inch of bearing for each foot of width of opening, with a minimum bearing of six inches. See the Steel Angle Lintel Schedule for size.

5.7. Beam Web Stiffener Plates:
- A. Provide full-height web stiffener plates to each side of all beams above all bearing points. Stiffener plates shall be the thickness noted below unless noted otherwise and shall be welded on both sides of the stiffener plate with fillet welds (noted below) all around.

Beam Web stiffener thickness	For beams with flange widths between	Weld Size
1/4 inch thick	Greater than 0" and less than 8 1/4"	3/16"
3/8 inch thick	Greater than 8 1/4" and less than 12 1/4"	1/4"
1/2 inch thick	Greater than 12 1/4" and less than 16 1/2"	5/16"
5/8 inch thick	Greater than 16 1/2" and less than 20 3/4"	3/8"

5.8. Composite Beams
- A. Composite beams are indicated on the framing plans with the suffix ( ). The number inside the brackets indicates number of studs for this beam. Beams shall have the studs spaced uniformly over the entire beam length.
- B. Beams which have more than one number inside the symbol (, , ,), such as (W, X, Y, Z), shall have "W" number of studs spaced evenly over the first "section of beam", "X" number of studs spaced evenly over the second "section of beam", "Y" number of studs spaced evenly over the third "section of beam", and "Z" number of studs spaced evenly over the fourth "section of beam". A "section of beam" is defined as that portion of beam located between the column and the nearest intersecting framing member or that portion of beam located between two adjacent intersecting framing members.
- C. All headed stud type shear connectors shall be in conformance with ASTM A108. Dimensions shall comply with AWS. Use 3/4" diameter studs. Headed studs shall extend 2" minimum above the top of the steel deck after welding. Headed studs shall be applied through the metal deck to the top flange of the steel section, or welded directly to the steel section.
- D. The minimum center-to-center spacing of stud connectors shall be six (6) diameters along the longitudinal axis of the supporting composite beam and four (4) diameters transverse to the longitudinal axis of the supporting composite beam. The maximum center to center spacing shall not exceed 32".
- E. C= 0.00" on the plans denotes precamber dimension (upward) in inches.

5.9. Steel Floor Deck:
- A. Steel floor deck shall comply with the latest requirements of the Steel Deck Institute (SDI). Submit ICC Code Evaluation Report with load and lateral shear capacities with shop drawings.
- B. Steel floor deck shall be 3" deep X 20 gauge minimum phosphatized/painted composite (deck shall be galvanized (G60) when used above or below mechanical equipment rooms), type "W" deck with interlocking side seams with the following properties:

	20 Gauge	18 Gauge
Minimum S (in^3/ft) =	0.534	0.767
Minimum I (in^4/ft) =	0.896	1.203

  Painted deck shall be coated with special paint to receive sprayed-on fire proofing, where required.
- C. A 3 1/2" thick (6 1/2" overall) lightweight concrete (f'c = 3,000 psi @ 28 days unless noted otherwise) slab shall be poured over the steel deck. Reinforce slab with 6 x 6 - W2.0 x W2.0 welded wire fabric (minimum) or reinforce slab with 2 pounds per cubic yard minimum polypropylene fibrillated fiber reinforcement, as per specifications. Welded Wire Fabric shall be placed 1" to 1 1/2" below the top of the slab.
- D. Steel deck with 3 1/2" thick (6 1/2" overall) lightweight concrete slab shall have a minimum allowable diaphragm shear capacity of 1,740 lbs/ft. for a 10'-0" deck span.
- E. Weld deck to supporting framing members with 3/4" diameter puddle welds at the following spacing (Closer spacings may be used to develop minimum shear requirements.):
  1. 12" o.c. to supports perpendicular to deck corrugations (4 welds per 36" wide sheet).
  2. 12" o.c. to all supports parallel to deck corrugations.
  3. Stud welds may take the place of puddle welds where studs are welded through the deck to the top flange of beams.
  4. All welded surfaces shall be dry before welding deck or studs to supports.
- F. Attach interlocking seams with 3/16" button punch at 18" o.c. or 1 1/2" top seam weld at 36" o.c. between adjacent pieces of deck. Crimp seams before button punching or welding interlocking seams. Closer spacings may be used to develop minimum shear requirements.
- G. All deck shall be 3-span continuous minimum where possible. In areas where 3-span conditions are not possible, the deck shall meet the above loading criteria for the span condition. The contractor shall provide heavier gauge deck or provide shoring as required for one or two span conditions to meet the equivalent loading of the above deck under a three span condition.
- H. Deck shall have a minimum bearing length of 2".

5.10. Steel Roof Deck:
- A. Steel roof deck shall comply with the latest requirements of the Steel Deck Institute (SDI). Submit ICC Code Evaluation Report with load and lateral shear capacities with shop drawings.
- B. Steel roof deck shall be 1 1/2" deep X 20 Gauge minimum galvanized (G60), type "B" wide rib deck with interlocking side seams with the following properties:

	20 Gauge	18 Gauge
Minimum S (in^3/ft)=	0.234	0.322
Minimum I (in^4/ft)=	0.213	0.296

  Painted roof deck shall be coated with special paint to receive sprayed-on fire proofing, where required.
- C. Minimum allowable deck diaphragm shear values shall be 1,189 lb/ft. for a 6'-0" deck span.
- D. Weld steel roof deck to supporting framing members with 3/4" diameter puddle welds at the following spacings (Closer spacings may be used to develop minimum shear requirements.):
  1. 6" o.c. to all supports perpendicular to deck corrugations (7 welds per 36" sheet).
  2. 6" o.c. to the following supports parallel to deck corrugations: All perimeter supports, all concrete or masonry walls, all joists or joist girders with a "T/C" designation, and all steel beams which are on a grid line with braced frames or moment frames.
  3. 12" o.c. to all other supports parallel to deck corrugations.
  4. All welded surfaces shall be dry before welding deck to supports.
- E. Attach interlocking seams with 1 1/2" long top seam welds at 12" o.c. minimum between adjacent pieces of decking. Crimp side seams before welding. Closer spacings may be used to develop minimum shear requirements.
- F. Alternate means of deck attachment and fastening using screws, pins or other mechanical fastening methods are permitted with approval of the engineer. The contractor shall submit the proposed attachment system and the code evaluation report demonstrating the system has the strength to meet the required deck shears specified above (in item 3) and on the plans. The flexibility factor of the proposed deck attachment system shall be equal to or less than the flexibility factor for the specified welded deck attachment system. If the alternate attachment method is approved, it is the responsibility of the contractor to ensure that the deck type and profile is compatible with the fastening system being used.
- G. Provide a 2" minimum bearing and a 4-inch lap at the splice points of all pieces of deck.
- H. All deck shall be 3-span continuous minimum where possible. The contractor shall provide heavier gauge deck as required for one or two span conditions to meet equivalent loading of the above deck under a three span condition.
- I. Steel roof deck shall not be used to support loads from plumbing, HVAC ducts, light fixtures, architectural elements or equipment of any kind, unless specifically noted otherwise. Lightweight suspended acoustical ceilings with a total weight per wire not exceeding 50# may be hung from the steel roof deck. The hangers should be staggered to distribute the load over multiple deck flutes.

5.11. Cold-Formed Steel
- A. Light Gauge Steel Framing:
  1. Where steel framing size designators are used in the drawings, they follow the convention established by the Steel Stud Manufacturers' Association (SSMA) and the North American Steel Framing Alliance (NASFA). Framing members provided shall comply with the designations according to this convention.
  2. All load bearing stud (and/or) joist framing members along with all runner, bridging, and end track shall be of the designation shown on the plans. All studs with base metal thickness of 54 mil and 68 mil, and joists with base metal thickness of 54 mil, 68 mil and 97 mil, shall be formed from steel meeting the requirements of ASTM A570 except that the steel shall have a 50,000 psi yield stress. All track and end closures with base metal thickness of 54 mil and 68 mil, bridging with base metal thickness of 54 mil, and studs and track with base metal thickness of 43 mil and 33 mil, shall be formed from steel with a minimum yield of 33,000 psi. All components shall be galvanized.
  3. Follow all manufacturers' recommendations for the use of these products.
  4. Unless noted otherwise, all welded connections shall be done using 1/8" AWS type 6013 or 7014 rod with a welding heat of 60-110 amperes depending on the gauge of material and the fit of the parts. Wire tying of framing components shall not be permitted.
  5. All interior non-bearing steel stud walls that extend above the ceiling but do not attach to the floor or roof diaphragm (above) shall have diagonal braces at 45 degrees (+/-). The KL/r ratio of the brace shall not exceed 200 and shall not be spaced further apart than 10'-0". Connect diagonal braces to the top of the steel stud walls and to the underside of the top flange of the steel beams, open web joists or girders, etc. with 1/8" fillet welds all around. Diagonal angle braces may be connected to 8" x 8" x 1/4" steel plates which shall be anchored to the floor or roof decks which have concrete fill above with 2- 3/8" dia. expansion anchors for each plate. Connect angle to plate with a 1/4" fillet weld all around. Connect diagonal braces to roof decking which does not have concrete fill above per the non-bearing wall brace connection details shown on the structural drawings. Diagonal braces may be constructed from cold-formed light gauge steel studs but must conform to the kl/r ratio of less than 200 requirement. When diagonal brace lengths exceed 10'-0" (+/-), cold-formed box sections made from two 600S137-54 steel studs will likely be required.
- B. Prefabricated Systems: Submit complete shop drawings and calculations of all elements for review. Submittals shall bear the stamp of a Professional Engineer registered in the State of Utah.

5.12. Metal Bar Grating:
- A. Metal bar grating shall comply with the most recent requirements of the National Association of Architectural Metals Manufacturers, Metal Bar Grating Division (NAAMM MBG). Products shall conform to the latest edition of the Metal Bar Grating Manual, ANSI/NAAMM MBG 531, or the Heavy Duty Metal Bar Grating Manual, ANSI/NAAMM MBG 532, as appropriate.
- B. Materials: Unless noted otherwise, metal bar grating of the following types shall conform with the following standards:
  1. Steel: ASTM A569 (allowable fiber unit stress F = 18,000 psi)
  2. Stainless Steel: ASTM A167, alloys 304/316 (allowable fiber unit stress F = 20,000 psi)
  3. Aluminum: ASTM B221, alloys 6063-T6/6061-T6 (allowable fiber unit stress F = 12,000 psi)
- C. Metal bar grating shall be provided with mill finish, unless otherwise noted.
- D. Unless noted otherwise, provide W-19-4 (1.1/2" x 3/16") Steel grating in locations where metal bar grating is specified.
- E. All metal bar grating shall be firmly and positively anchored to supporting members. Unless noted otherwise, weld grating to supporting members with 3/16" fillet welds, 3/4" long. Locate welds at each end of bearing bars approximately 6 in from each side of grating panel. At intermediate supports in panel, locate one weld at middle of panel.

6. Special Instructions

6.1. The project specifications are not superseded by the General Structural Notes but are intended to be complementary to them. Consult the specifications for additional requirements in each section. Notes and specific details on the drawings shall take precedence over General Structural Notes and typical details.

6.2. The architectural drawings are the prime contract drawings. Consultant drawings by other disciplines are supplementary to the architectural drawings. All omissions or conflicts, including dimensions, between the various elements of the consultants' drawings and/or specifications shall be brought to the attention of the Architect before proceeding with any work involved. In case of conflict, follow the most stringent requirement as directed by the Architect without additional cost to the owner. Any work done by the contractor after discovery of such discrepancy shall be done at the contractor's risk.

6.3. The structural drawings shall be used in conjunction with the architectural drawings. Primary structural elements and overall structural layout are indicated within the structural plans and details. Some secondary elements, architectural layouts, alcoves, elevations, slopes, depressions, curbs, mechanical equipment and electrical equipment, are not indicated within the structural drawings. Detailing and shop drawing production for structural elements will require information (including dimensions) contained in the architectural, structural and/or other consultants' drawings.

6.4. Shoring and Bracing Requirements:
- A. Floor and Roof Structures -- The General Contractor is responsible for the method and sequence of all structural erection. He shall provide temporary shoring and bracing as his method of erection requires to provide adequate vertical and lateral support. Shoring and bracing shall remain in place as the chosen method requires until all permanent members are in place and all final connections are completed, including all roof and floor attachments. The building shall not be considered stable until all connections are complete.
- B. Foundation walls must be braced until the complete floor or roof systems is completed. Do not backfill until floor or roof systems are in place.
- C. Walls above grade shall be braced until the structural system is complete. Walls shall not be considered to be self supporting.

6.5. All expansion joints (E.J.) shown in the structural drawings shall be considered seismic separation joints, unless noted otherwise.

6.6. Submittals: A copy of all shop drawings that have been submitted for review must be kept at the construction site for reference. These drawings must bear the appropriate review stamps. The shop drawing review shall not relieve the contractor of the responsibility of completing the project according to the contract documents. The general contractor shall review and mark all shop drawings prior to submitting them to the Architect for his review. Shop Drawings made from reproductions of (these) contract drawings will be rejected.

6.7. Project Coordination: It shall be the responsibility of the general contractor to coordinate with all trades any and all items that are to be integrated into the structural system. Openings or penetrations through, or attachments to the structural system that are not indicated on these drawings shall be the responsibility of the general contractor and shall be coordinated with the Architect/Engineers. The order of construction is the responsibility of the general contractor. It is the contractor's obligation to provide all items necessary for his chosen procedure.

6.8. Contractor shall field verify all dimensions, and conditions. If the contract drawings do not represent actual conditions, contractor shall notify architect/engineer prior to fabrication or construction within that area.

6.9. Notice of Copyright: The structural drawings, plans, schedules, notes and details are hereby copyrighted by Reaveley Engineers and Associates, Inc., All Rights reserved. Submission or distribution of documents to meet official regulatory requirements or for similar purposes in connection with the project is not to be construed as publication in derogation of Reaveley Engineers and Associates, Inc.'s reserved rights. The documents defining the structure are instruments of service prepared by Reaveley Engineers and Associates, Inc. for one use only. Furthermore, these documents shall not be reproduced, or copied, in whole or in part by the contractor or his subcontractors for preparation of shop drawings or other submittals.

QUALITY ASSURANCE

1. Quality Assurance

1.1. Quality Assurance Agency Requirements:
- A. The Owner shall engage a qualified Quality Assurance Agency (QAA) to provide all special inspection and quality assurance testing for the project. The QAA shall provide all information necessary for the building official to determine that the agency meets the applicable requirements
  1. The QAA shall be objective, competent and independent from the contractor responsible for the work being inspected. The agency shall also disclose possible conflicts of interest to confirm objectively.
  2. The QAA shall have adequate equipment to perform required tests.
  3. The QAA shall employ experienced personnel educated in conducting, supervising and evaluating tests and/or inspections. Experience or training shall be considered relevant when the documented experience or training is related in complexity to the same type of special inspection activities for projects of similar complexity and material qualities.
  4. Prior to the start of construction, the QAA shall submit to the building official, the owner architect and engineer copies of the following:
     - a. Current calibration records for all equipment to be used for the work being inspected and/or tested.
     - b. Current certification and training records for each individual performing the inspections and/or testing.
     - c. Sample inspection and testing reports and the distribution list for the records.
     - d. Proposed inspection procedures and frequency for each inspection required by the work.
     - e. Proposed testing methods and frequency of testing required by the work.
  5. The QAA shall send copies of all inspection and testing reports to the building official, owner, architect, engineer and contractor. Reports shall indicate that the work inspected was or was not completed in conformance to the approved construction documents. Discrepancies shall be brought to the immediate attention of the contractor for correction. If they are not corrected, the discrepancies shall be brought to the attention of the building official, architect and engineer.
  6. The QAA shall submit a final report documenting required special inspections and correction of any discrepancies noted in the inspections. The final report shall be distributed to the building official, owner, architect and engineer in a timely manner prior to the completion of the project.

1.2. Contractor Responsibilities:
- A. Each contractor responsible for the construction of a system or component requiring special inspections or testing shall submit a written statement of responsibility to the building official, owner, architect and engineer prior to the commencement of the work. The contractor's statement of responsibility shall contain the following:
  1. Acknowledgement of awareness of the special requirements defined in the statement of special inspections.
  2. Acknowledgement that control will be exercised in order to obtain conformance to the approved construction documents.
  3. Contractor's internal quality control procedures, methods and measures to be used in order to obtain conformance to the approved construction documents. Include copies of quality control reports, frequency of reporting and distribution of reports.
  4. Identification and qualifications of the person(s) responsible for quality control and their position(s) within the organization.
- B. Notification of Engineer: The contractor shall notify the engineer twenty-four hours prior to:
  1. Placing concrete in any footing.
  2. Closing any wall forms.
  3. Placing concrete in any column, beam or suspended slab.
  4. Grouting any masonry.
  5. Completing the welding of major sections of steel decking.
- C. Notification of QAA: The contractor shall notify the QAA in a timely manner so that inspection and testing may be performed as outlined in the statement of special inspections.

1.3. Structural Observations by the Engineer of Record.
- A. The Engineer of Record will perform structural observations at critical phases of the project. Copies of the engineer's report will be distributed to the architect, contractor, owner, and building official.
- B. Observation visits to the site by the Engineer's field representatives shall not be construed as inspection or approval of construction.

2. Statement of Special Inspections

2.1. The following materials, systems and components require special inspection or testing per Chapter 17 of the International Building Code (IBC).

2.2. For items requiring continuous inspection, a special inspector must be present onsite during the performance of that task. In most cases, periodic inspections/tests shall be performed prior to commencing the task, intermittently during the task, and at the completion of the task.

Steel Construction per IBC Sections 1704.3, 1707.2 & 1708.3

Item	Frequency	Detailed Instructions
Material Verification (IBC Table 1704.3)		
Material verification of structural steel and cold-formed steel deck	Periodic	Verify identification markings of steel conform to ASTM standards noted in General Structural Notes. Verify manufacturer's certified test reports.
Material verification of high-strength bolts, nuts and washers	Periodic	Verify identification markings to conform to ASTM standards noted in General Structural Notes. Manufacturer's certificate of compliance is required.
Material verification of weld filler materials	Periodic	Verify identification markings to conform to AWS specification. Manufacturer's certificate of compliance is required.
Welding (IBC 1704.3.1)		
Complete & partial penetration groove welds	Continuous	Pre-welding inspections are to be performed to ensure that proper materials, welding procedures, and welding personnel qualifications are appropriate and comply with AWS D1.1.
Multi-pass fillet welds	Continuous	
Single-pass fillet welds > 5/16"	Continuous	
Plug, slot, seam or flange welds	Continuous	
Single-pass fillet welds ≤ 5/16"	Periodic	A visual inspection of all welds must be provided with periodic inspections made of work in progress.
Floor & roof deck welds	Periodic	
Shear connector (i.e. stud) welds	Periodic	
Cold-formed steel welds	Periodic	
Welds of stairs & railing systems	Periodic	
Details of Steel Frame (IBC 1704.3.2)		
Member locations, bracing, gusset plates, stiffeners and other connection components	Periodic	All steel frames shall be inspected to verify compliance with the approved construction documents, such as bracing, stiffening, member size and location, and proper application of joint details at each connection.
High-Strength Bolting (IBC 1704.3.3)		
Pretensioned & slip-critical joints	Periodic	See steel section of the General Structural Notes and Section 9.2 and 9.3 of the RCSC Specification.
Item	Frequency	Detailed Instructions
Snug-tightened joints	Periodic	Verify that all joints use proper fastener components, connected elements are fabricated properly, the bolted joint is drawn into firm contact, and that the nuts cannot be removed without the use of a wrench. (See Section 9.1 of RCSC Specification).
Structural Steel in Seismic-Force-Resisting Systems (IBC 1707.2 & 1708.3 and AISC 341 Appendix Q)		
Visual inspection prior to welding	Continuous	Verify materials, fit-up of groove welds, configuration and finish of access holes and fit-up of fillet welds.
Visual inspection during welding	Continuous	Verify: WPS followed, use of qualified welders, control and handling of welding consumables, environmental conditions, welding techniques and no welding over cracked tacks.
Visual inspection after welding	Periodic	Verify: welds are cleaned; welder identification is legible; size, length and location of welds; verify that welds meet acceptance criteria; placement of reinforcement fillets; removal of backing bars and weld tabs as required; and repair activities.
Nondestructive testing of welds Ultrasonic testing		(1) All complete joint penetration (CJP) groove welds in materials 5/16" thick or greater. (2) For base metal thickness greater than 1-1/2" and connected material greater than 3/4" thick containing CJP groove welds loaded in tension in the through thickness direction in tee and corner joints. (3) Where approved by the Engineer and the Building Official, the amount of required ultrasonic testing may be reduced to 25% provided the demonstrated reject rate of a welder or welding operator is 5% or less and at least 40 completed welds have been used to calculate reject rate.
Nondestructive testing of welds Magnetic particle testing (MT)		(1) When welding of doubler plates, continuity plates or stiffeners has been done in the k-area, the web shall be tested for cracks using magnetic particle testing (MT). Inspection area shall include the k-area base metal within 3 in. of the weld. (2) 25 percent of all beam-to-column CJP groove welds. (3) At welded splices and connections, thermally cut surfaces of beam copes and access holes shall be tested when the flange thickness exceeds 1½" for rolled shapes or when the web thickness exceeds 1½" for built-up shapes. (4) Any weld and adjacent area of the RBS plastic hinge region that has been repaired by welding, or on the base metal of the RBS plastic hinge region if a sharp notch has been removed by grinding. (5) The ends of welds from which the weld tabs have been removed, except for continuity plate weld tabs. (6) Where approved by the Engineer and the Building Official, the amount of required MT on CJP groove welds may be reduced to 10% provided the demonstrated reject rate of a welder or welding operator is 5% or less and at least 20 completed welds have been used to calculate reject rate. This reduction only applies to welds in item (2) above, and is not permitted on other welds requiring MT.

VCBO ARCHITECTURE
VCBO ARCHITECTURE
524 SOUTH 600 EAST
SALT LAKE CITY, UT 84102
Phone: (801) 575-8800
Fax: (801) 531-9850
Web: vcbo.com

LICENSED PROFESSIONAL STRUCTURAL ENGINEER No. 299033 JERROD G. JOHNSON 3/15/13 STATE OF UTAH

REAVELEY ENGINEERS + ASSOCIATES
Consulting Structural Engineers
P:801.486.3883
F:801.485.0911
670 E 500 S, Suite 400
Salt Lake City, Utah 84102
www.reaveley.com

2nd District Juvenile Courthouse

Utah State Courts
165 West 20th Street, Ogden, Utah
08284150
BID DOCUMENTS

Rev #	Date	Description

Job # 12500
Date August 15, 2013
Owner # 08284150
Ins. #

GENERAL STRUCTURAL NOTES

SE002

8/14/2013 4:53:52 PM

QUALITY ASSURANCE - CONT.

Item	Frequency	Detailed Instructions
Inspection prior to bolting	Periodic	Verify: proper bolts and bolting procedure are selected for joint details; connecting elements are fabricated properly, including faying surface and hole preparation; pre-installation verification testing of fastener assemblies and methods; and proper storage is provided for bolts, nuts, washers and fastener components.
Item	Frequency	Detailed Instructions
Inspection during bolting	Periodic	Verify: fastener assemblies placed in all holes and washers are properly positioned, joint brought to snug-tight condition prior to pretensioning, fastener components not turned by the wrench are prevented from rotating, bolts are progressing systematically from most rigid point toward free edges.
Inspection after bolting	Continuous	Document accepted and rejected connections.
Reduced beam sections (RBS)	Continuous	Verify contour and finish as well as dimensional tolerances.
Protected zones	Continuous	Verify that no holes or unapproved attachments are made within the protected zone.

Concrete Construction per IBC Sections 1704.4 & 1708.2

Item	Frequency	Detailed Instructions
Reinforcing steel, including prestressing tendons	Periodic	Verify prior to placing concrete that reinforcing is of specified type, grade and size; that it is free of oil, dirt and rust; that it is located and spaced properly; that hooks, bends, ties, stirrups and supplemental reinforcement are placed correctly; that lap lengths, stagger and offsets are provided; and that all mechanical connections are installed per the manufacturer's instructions and/or evaluation report.
Welding of reinforcing steel	Periodic	Verify weldability of reinforcing steel other than A706. Continuous inspection is required for welding of reinforcing steel used in intermediate or special concrete moment frames, boundary elements of special structural walls or shear reinforcement.
Cast-in bolts & embeds	Continuous	
Post-installed anchors or dowels		All post-installed anchors/dowels shall be specially inspected as required by the approved ICC-ES report.
Use of required mix design	Periodic	Verify that all mixes used comply with the approved construction documents; ACI 318: Ch. 4, 5.2-5.4; and IBC 1904.3, 1913.2, 1913.3.
Concrete sampling for strength tests, slump, air content, and temperature	Continuous	Samples for strength tests shall be taken in accordance with ASTM C172; cured per ASTM C31 and tested in accordance with ASTM C39. Acceptance criteria for strength tests shall be per ACI 318 Section 5.6.3.3. For each mix placed, samples shall be taken not less than once a day, nor less than once for each 150 yd^3 of concrete, nor less than once for each 5000 ft^2 of surface area for slabs or walls. At the time fresh concrete is is sampled to fabricate specimens for strength tests, perform slump and air content tests and determine the temperature of the concrete.
Concrete & shotcrete placement	Continuous	
Item	Frequency	Detailed Instructions
Curing temperature and techniques	Periodic	Verify that the ambient temperature for concrete is kept at > 50°F for at least 7 days after placement. High-early-strength concrete shall be kept at > 50°F for at least 3 days. Accelerated curing methods may be used (see ACI 318: 5.11.3). The ambient temperature for shotcrete shall be > 40°F for the same period of time as noted for concrete. Shotcrete shall be kept continuously moist for at least 24 hours after shotcreting. All concrete materials, reinforcement, forms, fillers, and ground shall be free from frost. In hot weather conditions ensure that appropriate measures are taken to avoid plastic shrinkage cracking and that the specified water/cement ratio is not exceeded.
Pre-stressed concrete	Continuous	Verify application of prestressing forces and grouting of bonded prestressing tendons.
Erection of precast concrete	Periodic	Verify that all precast elements are lifted, assembled and braced in accordance with the approved construction documents.
In-situ strength verification	Periodic	Verify that adequate strength has been achieved prior to the removal of shores and forms or the stressing of post-tensioned tendons.
Formwork	Periodic	Verify that the forms are placed plumb and conform to the shapes, lines, and dimensions of the members as required by the approved construction documents.
Reinforcement in special moment frames, special structural walls and coupling beams	Periodic	Verify that ASTM A 615 reinforcing steel used in these areas complies with ACI 318: 21.1.5.2 by means of certified mill test reports.

Masonry Construction per IBC Section 1704.5

Item	Frequency	Detailed Instructions
Review material certificates, mix designs, test results and construction procedures	Periodic	It shall be confirmed that materials used conform to the requirements of the approved construction documents. Mortar mix designs shall show compliance with the proportion or property specification of ASTM C270. Grout shall comply with the proportion or strength requirements of ASTM C476 or be based upon compressive strength tests in accordance with ASTM C1019. Material certificates shall be provided for the following: reinforcement; anchors, ties, fasteners, and metal accessories; masonry units; mortar and grout materials. Construction procedures for cold-weather or hot-weather construction shall be reviewed.
Verify f'_m and f'_{AAC} prior to construction	Periodic	Determine the compressive strength for each wythe by the "unit strength method" or by the "prism test method" as specified in Section 1.4B of ACI 530.1-08 prior to construction.
Self-consolidating grout	Continuous	
Grout placement	Continuous	
Preparation of required grout specimens, mortar specimens and/or prisms shall be observed	Periodic	If the prism test method is used a minimum of three prisms shall be constructed in accordance with ASTM C1314. If the unit strength method is selected the compressive strength of the grout shall be determined per ASTM C1019 (not required if grout complies with ASTM C476).
Item	Frequency	Detailed Instructions
Post-installed anchors or dowels		All post-installed anchors/dowels shall be specially inspected as required by the approved ICC-ES report.
Prior to Grouting:		
Grout space is clean	Periodic	Verify that grout space is free of mortar droppings, debris, loose aggregate, and material deleterious to masonry grout.
Placement of reinforcement an connectors	Periodic	Verify that reinforcement, joint reinforcement, wall ties, anchor bolts and veneer anchors are installed in accordance with Section 3.4 of ACI 530.1-08.
Proportions of site-prepared grout	Periodic	Verify that grout is proportioned per ASTM C476 and has a slump between 8-11 inches. Self-consolidated grout shall not be proportioned onsite.
Verification of proportions of materials in premixed or pre-blended mortar and grout as delivered to the site	Periodic	Verify that proportions for mortar meet ASTM C270 and proportions for grout meet ASTM C476.
Placement of masonry units	Periodic	Verify that face shells and head joints are fully mortared and that vertical cells are aligned and unobstructed openings for grout are provided. All units are to be clean and placed while mortar is soft and plastic.
As Masonry Construction Begins:		
Proportions of site-prepared mortar	Periodic	Ensure that mortar that begins to stiffen or is not used within 2½ hours is discarded. No admixtures containing > 0.2% chlorides shall be used. Jobsite pigments shall meet the limitations of Section 2.6A of ACI 530.1-08.
Construction of mortar joints	Periodic	Unless specified otherwise construct 3/8" bed and head joints, except at foundation or glass unit masonry. Bed joint at foundation shall be >1/4" and ≤ 3/4". Tool joints with a round jointer when mortar is thumbprint hard. Remove masonry protrusions extending ≥ 1/2" into cells to be grouted. Solidly fill collar joints < 3/4" with mortar during construction.
Location of reinforcement and connectors	Periodic	Verify compliance with approved construction documents. Do not place dissimilar metals in contact with each other.
During Construction:		
Size and location of structural elements	Periodic	Verify that structural elements are placed in locations specified on the approved construction documents and to the tolerances noted in Section 3.3F of ACI 530.1-08.
Type, size and location of anchors and other details of masonry anchorages to structural members	Periodic	Verify that structural elements are placed in locations specified on the approved construction documents. Headed or bent bar anchor bolts shall be embedded in grout.
Size, grade and type of reinforcement, and metal accessories	Periodic	Verify that materials meet the requirements of Section 2.4 of ACI 530.1-08. All reinforcement shall be placed in grout with minimum grout cover of 1/2" for coarse grout and 1/4" for fine grout. Verify that reinforcement protection, standard hooks and minimum bend diameters comply with Section 1.15 of ACI 530-08.
Item	Frequency	Detailed Instructions
Preparation, construction and protection of masonry during cold or hot weather construction	Periodic	When the ambient air temperature is <40°F ensure that construction complies with Section 1.8C of ACI 530.1-08. When the ambient air temperature is >100°F, or >90°F with a wind velocity >8mph, ensure that construction complies with Section 1.8D of ACI 530.1-08.

Soils per IBC Section 1704.7

Item	Frequency	Detailed Instructions
Verify subgrade is adequate to achieve design bearing capacity	Periodic	Prior to placement of concrete.
Verify excavations extend to proper depth and material	Periodic	Prior to placement of compacted fill or concrete.
Verify that subgrade has been appropriately prepared prior to placing compacted fill	Periodic	Prior to placement of compacted fill.
Perform classification and testing of compacted fill materials	Periodic	All materials shall be checked at each lift for proper classifications and gradations not less than once for each 10,000ft^2 of surface area.
Verify proper materials, densities and lift thicknesses during placement and compaction.	Continuous	

Cold-Formed Steel Light-Frame Construction per IBC Sections 1704.3.4, 1706.3 & 1707.4

Item	Frequency	Detailed Instructions
Wind-force-resisting systems or seismic-force-resisting systems	Periodic	Periodic inspections of welding operations. If fastener spacing is < 4"o.c.: Verify that proper screw attachment, bolting, anchoring and other fastening of shearwalls, diaphragms, drag struts, braces, shear panels and holdowns has occurred.

VCBO ARCHITECTURE
VCBO ARCHITECTURE
524 SOUTH 600 EAST
SALT LAKE CITY, UT 84102
Phone: (801) 575-8800
Fax: (801) 531-9850
Web: vcbo.com

PROFESSIONAL STRUCTURAL ENGINEER No. 299033 JEROD G. JOHNSON 8/15/13 STATE OF UTAH

REAVELEY ENGINEERS + ASSOCIATES
Consulting Structural Engineers
P: 801.486.3883
F: 801.485.0911
473 E 500 S, Suite 400
Salt Lake City, Utah 84102
www.reaveley.com

2nd District Juvenile Courthouse

Utah State Courts
08284150
165 West 20th Street, Ogden, Utah
BID DOCUMENTS

Rev #	Date	Description

Job # 12500
Date August 15, 2013
Owner # 08284150
Ins. #

GENERAL STRUCTURAL NOTES

SE003

8/14/2013 4:53:55 PM

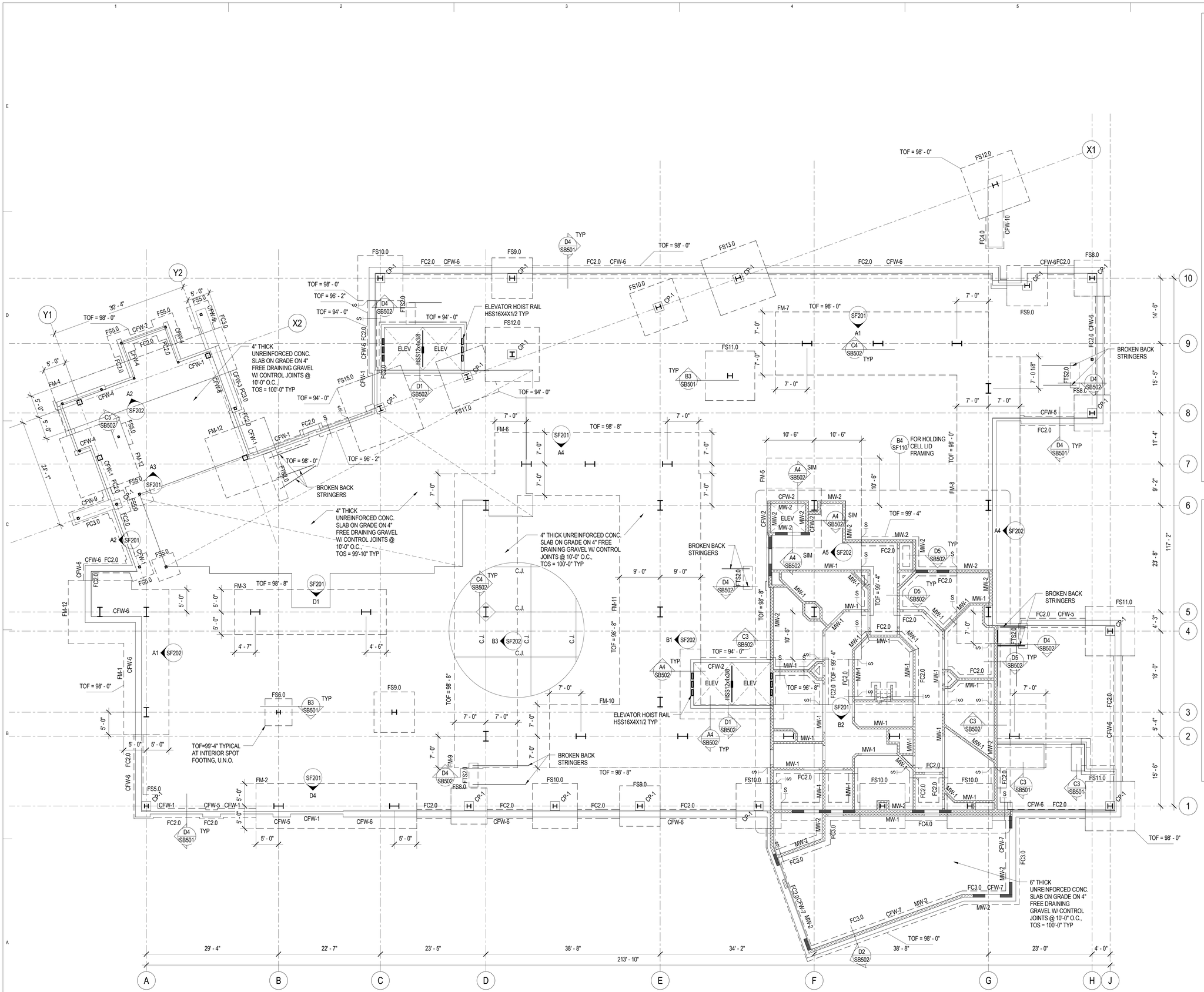

FOOTING & FOUNDATION PLAN LEGEND

- FOOTING STEP
- FOOTING - CONTINUOUS
- FOOTING - THICKENED SLAB
- FOOTING - SQUARE FOOTING - RECTANGULAR FOOTING - MAT FOOTING
- CONCRETE WALL, CONCRETE FOUNDATION WALL, OR CONCRETE RETAINING WALL
- CONCRETE FOUNDATION WALL - RECESSED
- CONCRETE PIER IN CONCRETE WALL. TOP OF PIER RECESSED 8" BELOW SLAB. TYP U.N.O.
- CONCRETE COLUMN
- CONCRETE JAMB COLUMN POURED MONOLITHIC WITH CONCRETE WALL
- MASONRY WALL
- MASONRY WALL - RECESSED
- MASONRY COLUMN IN MASONRY WALL
- STEEL COLUMN - TUBE
- STEEL COLUMN - WIDE FLANGE
- STEEL COLUMN - PIPE
- STEEL BRACED FRAME - ABOVE
- 0" CHANGE IN ELEVATION
- SLAB BLOCK-OUT AT COLUMN
- CJ / CJ SLAB CONTROL/CONSTRUCTION JOINT
- SPECIAL SLAB AREA
- RECESSED/DEPRESSED SLAB
- OPENING

FOOTING & FOUNDATION PLAN NOTES

1. SEE ARCHITECTURAL, CIVIL AND LANDSCAPE DRAWINGS FOR EXTERIOR CONCRETE WORK AT DOORS, SIDEWALKS ETC.
2. SEE ARCHITECTURAL DRAWINGS AND FINISH SCHEDULE FOR SLAB AREAS TO RECEIVE FLOOR TILE.
3. SEE ARCHITECTURAL DRAWINGS FOR SLAB DEPRESSIONS AND SLOPES TO DRAINS, ETC.
4. SEE ARCHITECTURAL, CIVIL AND LANDSCAPE DRAWINGS FOR ADDITIONAL EXTERIOR CONCRETE RETAINING AND / OR SITE WALLS NOT SHOWN ON THE STRUCTURAL DRAWINGS.
5. SEE TYPICAL STEP DETAIL AT CONTINUOUS FOOTING AND TYPICAL STEP DETAIL AT MAT FOOTING FOR CHANGES IN FOOTING ELEVATIONS.
6. SEE TYPICAL CONCRETE WALL REINFORCING DETAILS FOR REINFORCEMENT AT INTERSECTIONS CORNERS AND ENDS.
7. SEE TYPICAL CONCRETE SLAB ON GRADE DETAILS FOR CONSTRUCTION JOINTS, CONTROL JOINTS AND ADDITIONAL SLAB REINFORCING.
8. SEE TYPICAL CONCRETE SLAB ON GRADE PROFILE DETAIL FOR SUBGRADE REQUIREMENTS.
9. PROVIDE COMPACTED STRUCTURAL FILL UNDER ALL CONCRETE FOOTINGS PER TYPICAL COMPACTED STRUCTURAL FILL DETAIL.

A1 / SB101 FOOTING AND FOUNDATION PLAN

SCALE: 1/8" = 1'-0"

8/14/2013 4:53:56 PM

VCBO ARCHITECTURE

VCBO ARCHITECTURE
524 SOUTH 600 EAST
SALT LAKE CITY, UT 84102
Phone: (801) 575-8800
Fax: (801) 531-9850
Web: vcbo.com

PROFESSIONAL STRUCTURAL ENGINEER No. 299033 JEROD G. JOHNSON 8/15/13 STATE OF UTAH

REAVELEY ENGINEERS + ASSOCIATES
Consulting Structural Engineers
P: 801.486.3883
F: 801.485.0911
477 E 500 S, Suite 400
Salt Lake City, Utah 84102
www.reaveley.com

2nd District Juvenile Courthouse

Utah State Courts
08284150
165 West 20th Street, Ogden, Utah
BID DOCUMENTS

Rev #	Date	Description

Job # 12500
Date August 15, 2013
Owner # 08284150
Ins. #

FOOTING AND FOUNDATION PLAN

SB101

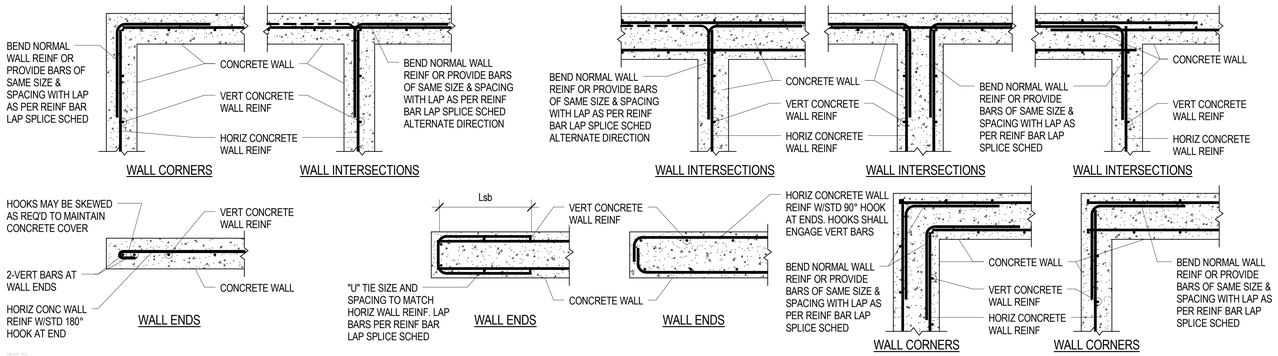

D1 / SB501 TYPICAL CONCRETE WALL INTERSECTIONS AND ENDS (PLAN VIEWS)
NO SCALE

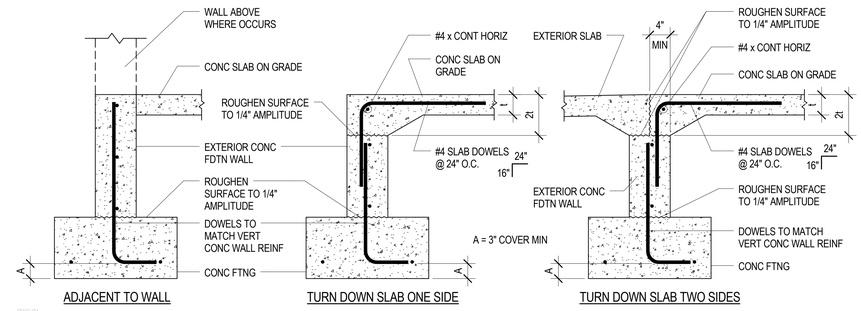

D4 / SB501 TYPICAL CONCRETE SLAB ON GRADE TO EXTERIOR CONCRETE FOUNDATION WALL
NO SCALE

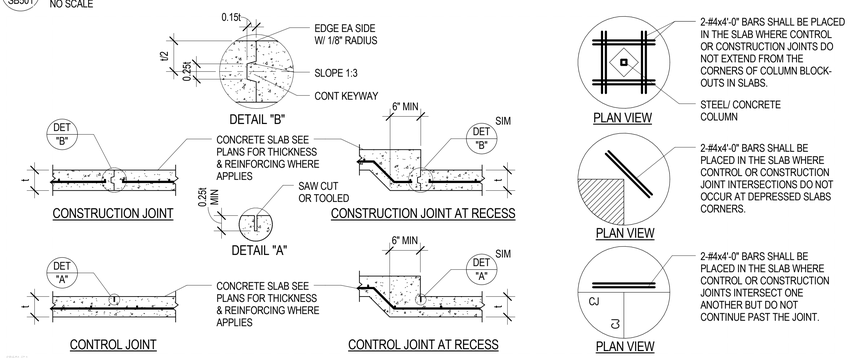

C1 / SB501 TYPICAL CONCRETE SLAB ON GRADE DETAILS
NO SCALE

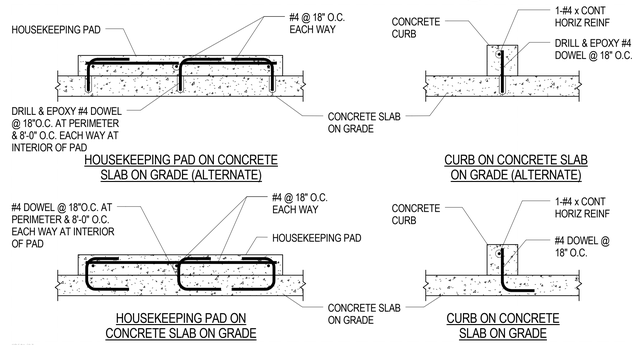

C3 / SB501 TYPICAL HOUSEKEEPING PAD & CURB DETAILS
NO SCALE

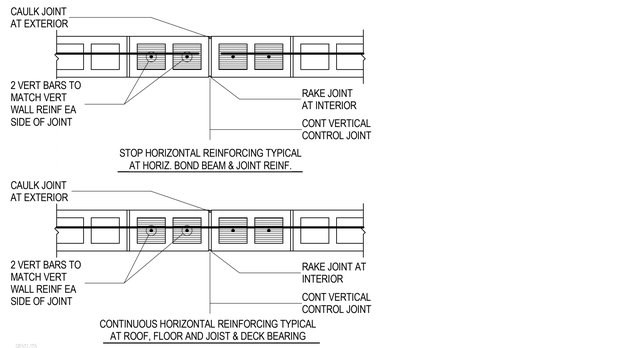

D5 / SB501 TYPICAL CONTROL JOINTS IN 8" MASONRY WALLS
NO SCALE

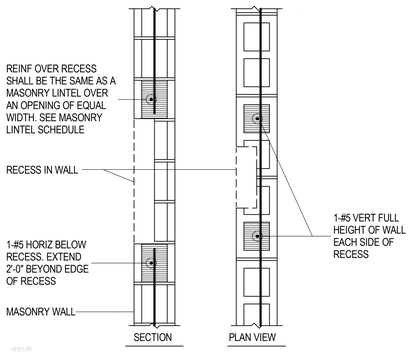

B1 / SB501 TYPICAL RECESS IN 8" MASONRY WALL
NO SCALE

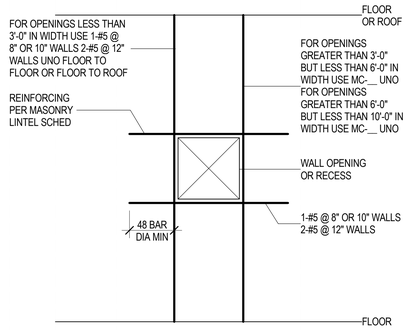

B2 / SB501 TYP REINF AROUND MISC OR RECESSED MASONRY OPENINGS
NO SCALE

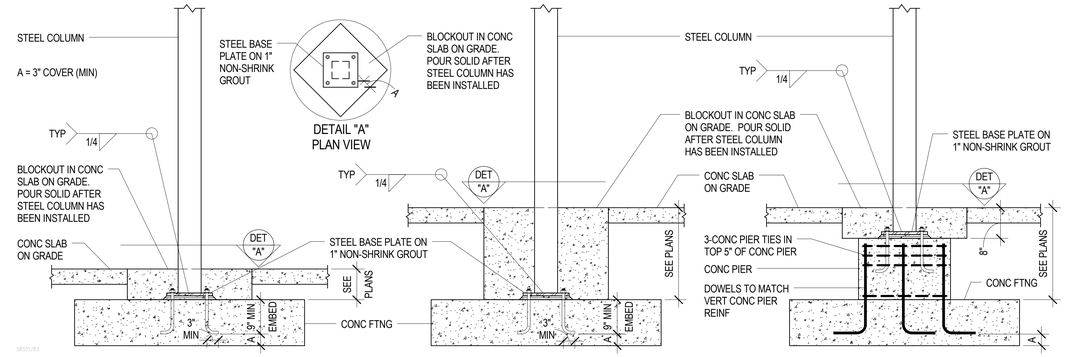

B3 / SB501 TYPICAL STEEL COLUMN CONNECTION TO CONCRETE FOOTING/CONCRETE PIER
NO SCALE

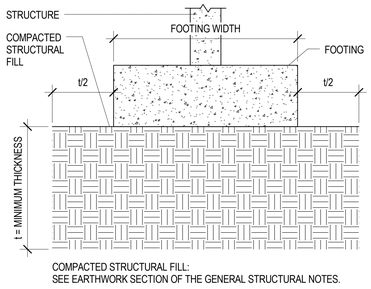

A1 / SB501 TYPICAL COMPACTED STRUCTURAL FILL DETAIL
NO SCALE

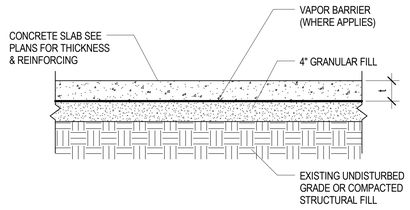

A2 / SB501 TYPICAL CONCRETE SLAB ON GRADE PROFILE
NO SCALE

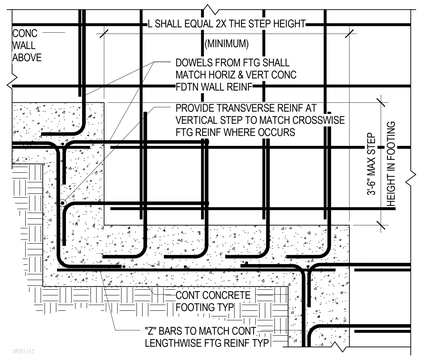

A3 / SB501 TYPICAL STEP DETAIL AT CONTINUOUS FOOTING
NO SCALE

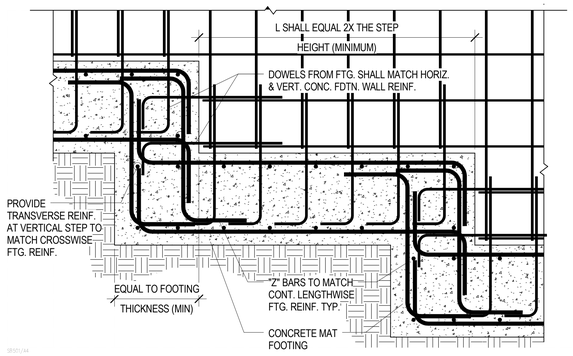

A4 / SB501 TYPICAL STEP DETAIL AT MAT FOOTING
NO SCALE

VCBO ARCHITECTURE
524 SOUTH 600 EAST
SALT LAKE CITY, UT 84102
Phone: (801) 575-8800
Fax: (801) 531-9850
Web: vcbo.com

PROFESSIONAL STRUCTURAL ENGINEER No. 299733 JEROD G. JOHNSON 3/15/13 STATE OF UTAH

REAVELEY ENGINEERS + ASSOCIATES
Consulting Structural Engineers
P:801.486.3883
F:801.485.0911
675 E. 500 S. Suite 400
Salt Lake City, Utah 84102
www.reaveley.com

2nd District Juvenile Courthouse

Utah State Courts
08284150
165 West 20th Street, Ogden, Utah
BID DOCUMENTS

Rev #	Date	Description

Job # 12500
Date August 15, 2013
Owner # 08284150
Ins. #

FOOTING & FOUNDATION DETAILS

SB501

8/14/2013 4:53:58 PM

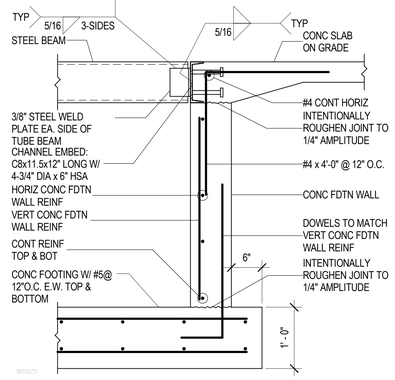

D1 / SB502 TYP CONCRETE FOUNDATION WALL AT ELEVATOR PIT W/ SEPERATOR BEAM

NO SCALE

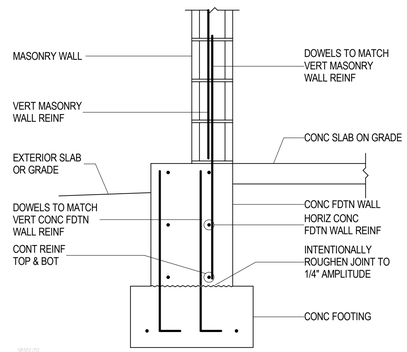

D2 / SB502 TYP MASONRY WALL ON FOUNDATION WALL

NO SCALE

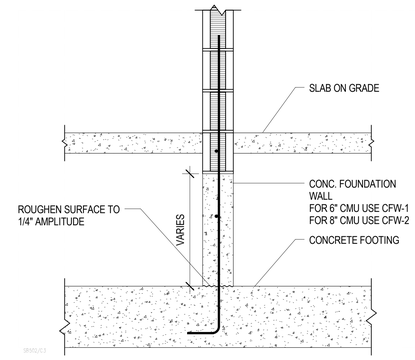

C3 / SB502 TYPICAL HOLDING CELL AT MAT FOOTING OR STEPPED FOOTING

NO SCALE

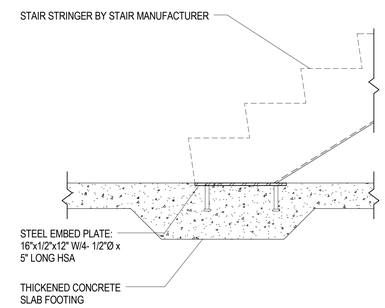

D4 / SB502 STAIR STRINGER BASE CONNECTION

NO SCALE

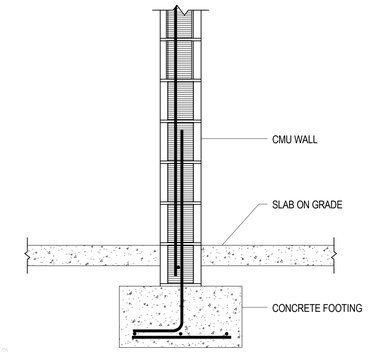

D5 / SB502 TYPICAL HOLDING CELL CMU WALL AT CONTINUOUS FOOTING

NO SCALE

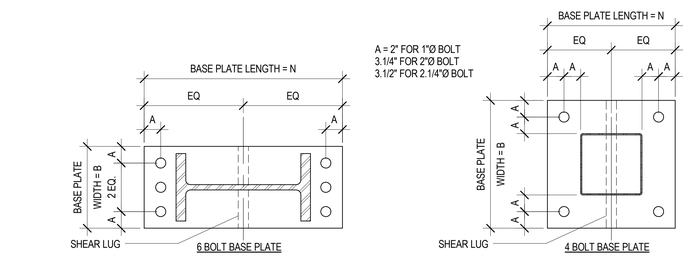

C2 / SB502 TYPICAL MOMENT FRAME STEEL COLUMN BASE PLATE LAYOUT

NO SCALE

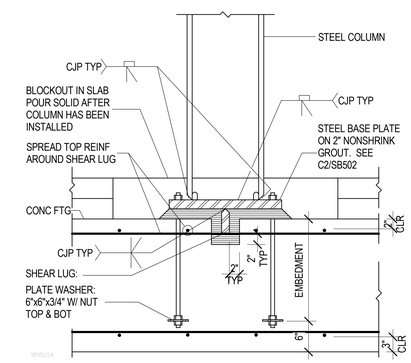

C4 / SB502 TYP MOMENT FRAME STEEL COLUMN BASE W/ SHEAR LUG ON CONCRETE FOOTING

NO SCALE

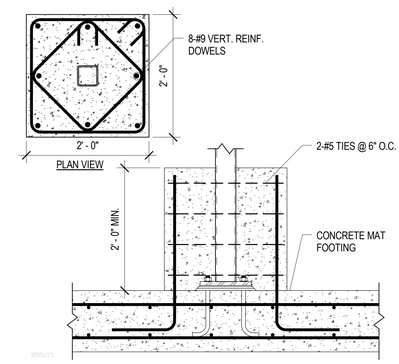

C5 / SB502 TYPICAL COLUMN AT VESTIBULE

NO SCALE

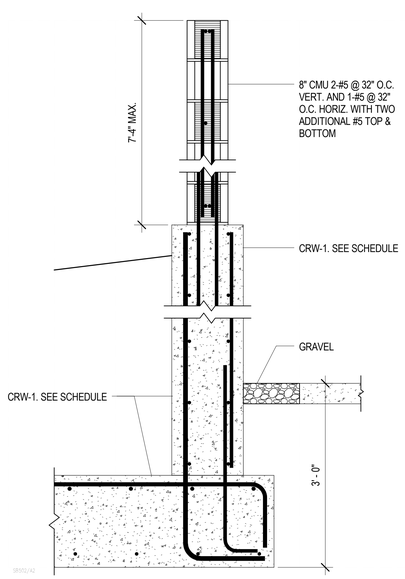

A2 / SB502 GENERATOR RETAINING AND SCREEN WALL

NO SCALE

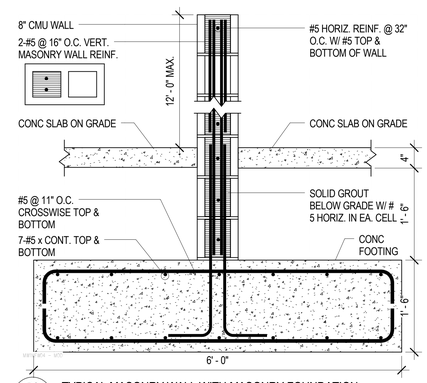

B3 / SB502 TYPICAL MASONRY WALL WITH MASONRY FOUNDATION

NO SCALE

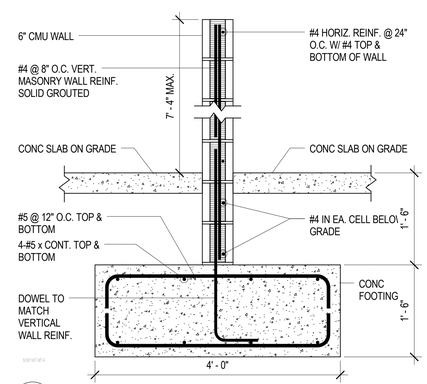

A3 / SB502 TYPICAL MASONRY WALL WITH MASONRY FOUNDATION

NO SCALE

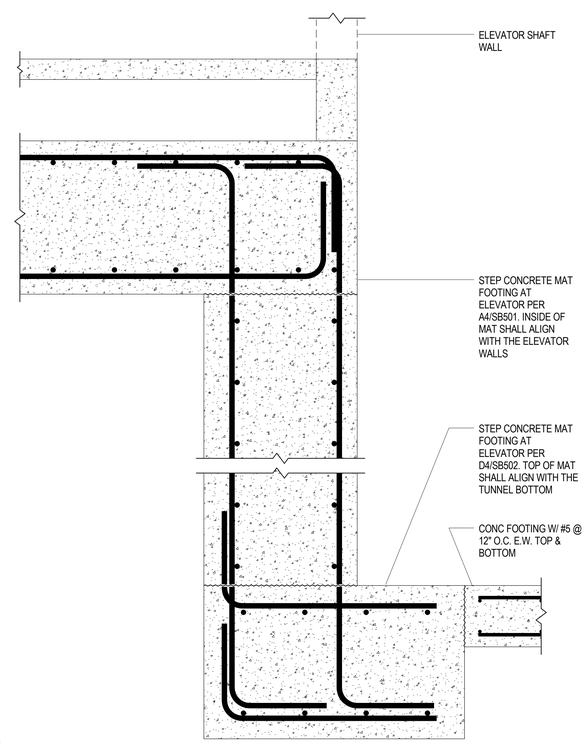

A4 / SB502 MAT FOOTING STEP AT ELEVATOR

NO SCALE

VCBO ARCHITECTURE
524 SOUTH 600 EAST
SALT LAKE CITY, UT 84102
Phone: (801) 575-8800
Fax: (801) 531-9850
Web: vcbo.com

REAVELEY ENGINEERS + ASSOCIATES
Consulting Structural Engineers
P: 801.486.3883
F: 801.485.0911
675 E. 500 S. Suite 400
Salt Lake City, Utah 84102
www.reaveley.com

2nd District Juvenile Courthouse

Utah State Courts
08284150
165 West 20th Street, Ogden, Utah
BID DOCUMENTS

Rev #	Date	Description

Job # 12500
Date August 15, 2013
Owner # 08284150
Ins. #

FOOTING & FOUNDATION DETAILS

SB502

8/14/2013 4:54:00 PM

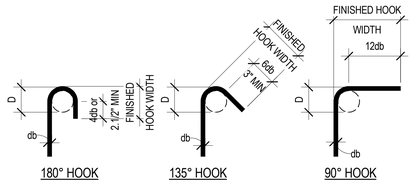

END HOOK SCHEDULE				
BAR SIZE	D	FINISHED HOOK WIDTH		
		180° HOOK	135° HOOK	90° HOOK
#3	2.1/4"	3"	3"	6"
#4	3"	4"	3"	8"
#5	3.1/4"	5"	3.3/4"	10"
#6	4.1/2"	6"	4.1/2"	12"
#7	5.1/4"	7"	5.1/4"	14"
#8	6"	8"	6"	16"
#9	9.1/2"	11.3/4"	--	19"
#10	10.3/4"	13.1/4"	--	22"
#11	12"	14.3/4"	--	24"
#14	18.1/4"	21.3/4"	--	31"
#18	24"	28.1/2"	--	41"

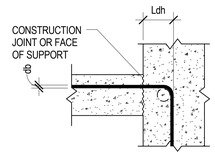

TENSION HOOK DEVELOPMENT LENGTH (Ldh)					
BAR SIZE	NORMAL WEIGHT CONCRETE, f'c = PSI				
	3,000	4,000	4,500	5,000	6,000
#3	6"	6"	6"	6"	6"
#4	8"	7"	7"	7"	7"
#5	10"	9"	8"	8"	7"
#6	12"	10"	10"	9"	8"
#7	14"	12"	11"	11"	10"
#8	16"	14"	13"	12"	11"
#9	18"	15"	14"	14"	13"
#10	20"	17"	16"	15"	14"
#11	22"	19"	18"	17"	16"
#14	37"	32"	31"	29"	27"
#18	50"	43"	41"	39"	35"

NOTES:
1. VALUES HERE VALID FOR ALL CASES IF:
   SIDE COVER ≥ 2.1/2"
   END COVER ≥ 2"

2. MULTIPLY VALUES IN SCHEDULE BY 1.2 FOR LIGHTWEIGHT CONCRETE

3. MULTIPLY VALUES IN SCHEDULE BY 1.2 FOR USE WITH EPOXY COATED REBAR

CONCRETE REINFORCING BAR DEVELOPMENT AND LAP SPLICE LENGTH SCHEDULE																						
BAR SIZE	f'c = 3000 PSI				f'c = 4000 PSI				f'c = 4500 PSI				f'c = 5000 PSI				f'c = 6000 PSI				f'c = ALL	
	Ld	Lt	Lsb	Lsbt	Ld	Lt	Lsb	Lsbt	Ld	Lt	Lsb	Lsbt	Ld	Lt	Lsb	Lsbt	Ld	Lt	Lsb	Lsbt	Ldc	Lsc
#3	17"	22"	22"	28"	15"	19"	19"	25"	14"	18"	18"	23"	13"	17"	17"	22"	12"	16"	16"	20"	8"	12"
#4	22"	29"	29"	38"	19"	25"	25"	33"	18"	24"	24"	31"	17"	23"	23"	29"	16"	21"	21"	27"	10"	15"
#5	28"	36"	36"	47"	24"	31"	31"	41"	23"	30"	30"	38"	22"	28"	28"	36"	20"	26"	26"	33"	12"	19"
#6	33"	43"	43"	56"	29"	37"	37"	49"	27"	35"	35"	46"	26"	34"	34"	44"	24"	31"	31"	40"	15"	23"
#7	48"	63"	63"	81"	42"	54"	54"	71"	40"	51"	51"	67"	38"	49"	49"	63"	34"	45"	45"	58"	17"	27"
#8	55"	72"	72"	93"	48"	62"	62"	81"	45"	59"	59"	76"	43"	56"	56"	72"	39"	51"	51"	66"	19"	30"
#9	62"	81"	81"	105"	54"	70"	70"	91"	51"	66"	66"	86"	48"	63"	63"	81"	44"	57"	57"	74"	22"	34"
#10	70"	91"	91"	118"	61"	79"	79"	102"	57"	74"	74"	96"	54"	71"	71"	92"	50"	64"	64"	84"	24"	39"
#11	78"	101"	101"	131"	67"	87"	87"	114"	64"	82"	82"	107"	60"	78"	78"	102"	55"	71"	71"	93"	27"	43"
#14	93"	121"	NA	NA	81"	105"	NA	NA	76"	99"	NA	NA	72"	94"	NA	NA	66"	86"	NA	NA	33"	NA
#18	124"	161"	NA	NA	108"	140"	NA	NA	101"	132"	NA	NA	96"	125"	NA	NA	88"	114"	NA	NA	43"	NA

NOTES:
1. DEFINITIONS:
   Ld: TENSION DEVELOPMENT LENGTH FOR REINFORCEMENT SATISFYING THE FOLLOWING CONDITIONS:
      SLABS AND WALLS: CLEAR SPACING > 2db AND CONCRETE CLEAR COVER > db
      BEAMS AND COLUMNS: CLEAR COVER SPACING > db AND CONCRETE CLEAR COVER > db
   Lt: DEVELOPMENT LENGTH FOR TOP BARS IN TENSION
   Lsb: TENSION LAP SPLICE LENGTH FOR OTHER THAN TOP BARS (CLASS B)
   Lsbt: TENSION LAP SPLICE LENGTH OF TOP BARS.
   Ldc: DEVELOPMENT LENGTH FOR BARS IN COMPRESSION
   Lsc: TIED COLUMN LAP SPLICE IN COMPRESSION
   db: NOMINAL BAR DIAMETER (INCHES)
   TOP BARS: HORIZONTAL BEAM REINFORCEMENT WITH MORE THAN 12 INCHES OF CONCRETE CAST BELOW

2. MULTIPLY VALUES IN SCHEDULE BY 1.5 IF CLEAR SPACING OR CONCRETE COVER DO NOT MEET REQUIREMENTS FOR Ld IN NOTE 1.

3. MULTIPLY VALUES IN SCHEDULE BY 1.3 FOR USE IN LIGHTWEIGHT AGGREGATE CONCRETE.

4. FOR EPOXY COATED BAR: MULTIPLY VALUES IN SCHEDULE BY 1.5 FOR BARS WITH CLEAR COVER < 3db OR CLEAR SPACING < 6db. OTHERWISE MULTIPLY VALUES BY 1.2.

5. a. FOR BUNDLED BARS OF THREE OR LESS MULTIPLY LENGTHS BY 1.2.
   b. FOR BUNDLED BARS OF FOUR OR MORE MULTIPLY LENGTHS BY 1.33.
   c. INDIVIDUAL BAR SPLICES WITHIN A BUNDLE SHALL NOT OVERLAP. ENTIRE BUNDLES SHALL NOT BE LAP SPLICED.

6. SCHEDULE LENGTHS ARE FOR fy=60ksi REINFORCING, MULTIPLY LENGTHS BY 1.25 FOR fy=75ksi REINFORCING.

7. LAP SPLICES ARE NOT PERMITTED FOR #14 & #18 BARS. USE BAR COUPLERS PER G.S.N.

A1 / SB601 CONCRETE REINFORCING BAR LAP SPLICE SCHEDULE
NO SCALE

CONCRETE PIER SCHEDULE					
MARK	DIMENSIONS		REINFORCING		REMARKS
	DEPTH	WIDTH	VERTICAL	TIES	
CP-1	2' - 0"	2' - 0"	8-#8	#5 @ 12" O.C.	

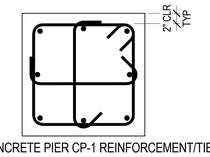

B3 / SB601 TYPICAL CONCRETE PIER CP-1 REINFORCEMENT/TIE DIAGRAM
NO SCALE

CONCRETE FOOTING SCHEDULE												
MARK	WIDTH	LENGTH	THICK	CROSSWISE REINFORCING				LENGTHWISE REINFORCING				REMARKS
				NO.	SIZE	LENGTH	SPACE	NO.	SIZE	LENGTH	SPACE	
FTS2.0	2' - 0"	CONT.	1' - 0"	--	NONE	REQ'D	--	3	#4	CONT.	9"	
FC2.0	2' - 0"	CONT.	1' - 0"	--	NONE	REQ'D	--	3	#4	CONT.	9"	
FC3.0	3' - 0"	CONT.	1' - 0"	--	#5	2' 6"	14"	3	#5	CONT.	15"	
FC4.0	4' - 0"	CONT.	1' - 0"	--	#5	3' 6"	14"	4	#5	CONT.	14"	
FS5.0	5' - 0"	5' 0"	1' - 0"	7	#4	4' 6"	9"	7	#4	4' 6"	9"	
FS6.0	6' - 0"	6' 0"	1' - 2"	7	#5	5' 6"	11"	7	#5	5' 6"	11"	
FS8.0	8' - 0"	8' 0"	1' - 7"	8	#6	7' 6"	12.86"	8	#6	7' 6"	12.86"	
FS9.0	9' - 0"	9' 0"	1' - 9"	10	#6	8' 6"	11.33"	10	#6	8' 6"	11.33"	
FS10.0	10' - 0"	10' 0"	1' - 11"	10	#7	9' 6"	12.7"	10	#7	9' 6"	12.7"	
FS11.0	11' - 0"	11' 0"	2' - 1"	12	#7	10' 6"	11.5"	12	#7	10' 6"	11.5"	
FS12.0	12' - 0"	12' 0"	2' - 3"	14	#7	11' 6"	10.7"	14	#7	11' 6"	10.7"	
FS13.0	13' - 0"	13' 0"	2' - 5"	16	#7	12' 6"	10"	16	#7	12' 6"	10"	
FS15.0	15' - 0"	15' 0"	2' - 8"	17	#8	14' 6"	10.9"	17	#8	14' 6"	10.9"	

1. PLACE ALL FOOTING REINFORCING IN BOTTOM OF FOOTING WITH 3" CLEAR CONCRETE COVER UNLESS NOTED OTHERWISE.
2. TOP REINFORCING, WHERE SPECIFIED, SHALL BE PLACED IN THE TOP OF THE FOOTING WITH 2" CLEAR CONCRETE COVER.
3. SPOT FOOTINGS SHALL BE CENTERED UNDER COLUMNS AND CONTINUOUS FOOTINGS SHALL BE CENTERED UNDER WALLS, UNLESS NOTED OTHERWISE.
4. ALL FOOTINGS SHALL BE FORMED. FOOTINGS SHALL NOT BE EARTH FORMED OR OVERSIZED WITHOUT WRITTEN PERMISSION FROM THE STRUCTURAL ENGINEER.

CONCRETE MAT FOOTING SCHEDULE												
MARK	WIDTH	LENGTH	THICK	CROSSWISE REINFORCING				LENGTHWISE REINFORCING				REMARKS
				NO.	SIZE	LENGTH	SPACE	NO.	SIZE	LENGTH	SPACE	
FM-1	10' 0"	32' 3"	2' - 6"		#9 #9	9' 6" 9' 6"	12" O.C. 12" O.C.		#10 #10	CONT. CONT.	12" O.C. 12" O.C.	TOP BOTTOM
FM-2	10' 0"	35' 8"	2' - 6"		#9 #9	9' 6" 9' 6"	12" O.C. 12" O.C.		#10 #10	CONT. CONT.	12" O.C. 12" O.C.	TOP BOTTOM
FM-3	10' 0"	33' 8"	2' - 6"		#9 #9	9' 6" 9' 6"	12" O.C. 12" O.C.		#10 #10	CONT. CONT.	12" O.C. 12" O.C.	TOP BOTTOM
FM-4	10' 0"	40' 4"	2' - 6"		#9 #9	9' 6" 9' 6"	12" O.C. 12" O.C.		#10 #10	CONT. CONT.	12" O.C. 12" O.C.	TOP BOTTOM
FM-5	21' 0"	44' 8"	3' - 6"		#11 #11	20' 6" 20' 6"	12" O.C. 12" O.C.		#11 #11	CONT. CONT.	12" O.C. 12" O.C.	TOP BOTTOM
FM-6	14' 0"	45' 3"	3' - 0"		#11 #11	13' 6" 13' 6"	12" O.C. 12" O.C.		#11 #11	CONT. CONT.	12" O.C. 12" O.C.	TOP BOTTOM
FM-7	14' 0"	47' 3"	3' - 0"		#11 #11	13' 6" 13' 6"	12" O.C. 12" O.C.		#11 #11	CONT. CONT.	12" O.C. 12" O.C.	TOP BOTTOM
FM-8	14' 0"	63' 7 1/2"	3' - 0"		#11 #11	13' 6" 13' 6"	12" O.C. 12" O.C.		#11 #11	CONT. CONT.	12" O.C. 12" O.C.	TOP BOTTOM
FM-9	14' 0"	65' 3"	3' - 0"		#11 #11	13' 6" 13' 6"	12" O.C. 12" O.C.		#11 #11	CONT. CONT.	12" O.C. 12" O.C.	TOP BOTTOM
FM-10	14' 0"	110' 2"	3' - 0"		#11 #11	13' 6" 13' 6"	12" O.C. 12" O.C.		#11 #11	CONT. CONT.	12" O.C. 12" O.C.	TOP BOTTOM
FM-11	18' 0"	57' 8"	3' - 0"		#11 #11	17' 6" 17' 6"	12" O.C. 12" O.C.		#11 #11	CONT. CONT.	12" O.C. 12" O.C.	TOP BOTTOM
FM-12	14' 0"	14' 0"	3' - 0"		#11 #11	13' 6" 13' 6"	12" O.C. 12" O.C.		#11 #11	CONT. CONT.	12" O.C. 12" O.C.	TOP BOTTOM

NOTES:
1. PLACE ALL FOOTING REINFORCING IN BOTTOM OF FOOTING WITH 3" CLEAR CONCRETE COVER UNLESS NOTED OTHERWISE.

2. TOP REINFORCING, WHERE SPECIFIED, SHALL BE PLACED IN THE TOP OF THE FOOTING WITH 2" CLEAR CONCRETE COVER.

3. SPOT FOOTINGS SHALL BE CENTERED UNDER COLUMNS AND CONTINUOUS FOOTINGS SHALL BE CENTERED UNDER WALLS, UNLESS NOTED OTHERWISE.

4. ALL FOOTINGS SHALL BE FORMED. FOOTINGS SHALL NOT BE EARTH FORMED OR OVERSIZED WITHOUT WRITTEN PERMISSION FROM THE STRUCTURAL ENGINEER.

CONCRETE FOUNDATION WALL SCHEDULE					
MARK	THICK	VERTICAL REINFORCING	HORIZONTAL REINFORCING	T & B HORIZ. BARS	PLACEMENT
CFW-1	6"	#4 @ 12" O.C.	#4 @ 12" O.C.	2-#4	A
CFW-2	8"	#5 @ 12" O.C.	#5 @ 12" O.C.	2-#5	A
CFW-3	10"	#5 @ 12" O.C.	#5 @ 12" O.C.	2-#5	A
CFW-4	1' - 0"	#4 @ 12" O.C.E.F.	#4 @ 12" O.C.E.F.	2-#5	C
CFW-5	1' - 2"	#5 @ 12" O.C.E.F.	#5 @ 12" O.C.E.F.	2-#5	C
CFW-6	1' - 4"	#5 @ 12" O.C.E.F.	#5 @ 12" O.C.E.F.	2-#5	C
CFW-7	1' - 6"	#5 @ 10" O.C.E.F.	#5 @ 10" O.C.E.F.	2-#5	C
CFW-8	2' - 2"	#6 @ 12" O.C. E.F.	#6 @ 12" O.C. E.F.	2-#5	C
CFW-9	2' - 3"	#6 @ 12" O.C. E.F.	#6 @ 12" O.C. E.F.	2-#5	C
CFW-10	3' - 2"	#6 @ 12" O.C. 3 LAYERS	#6 @ 12" O.C. 3 LAYERS	3-#6	E

NOTES:
1. HORIZONTAL WALL REINFORCING SHALL BE CONTINUOUS THRU CONSTRUCTION & CONTROL JOINTS.
2. SPLICES IN HORIZONTAL WALL REINFORCING SHALL BE TYPE Lsb, STAGGERED SUCH THAT SPLICES DO NOT OVERLAP. SPLICES IN TWO CURTAINS SHALL NOT OCCUR IN THE SAME LOCATION.

PLACEMENT TYPE

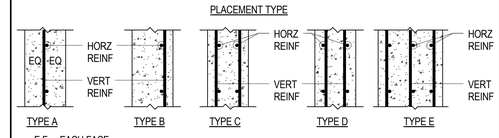

E.F. = EACH FACE
O.F. = OUTSIDE FACE (AGAINST SOIL)
I.F. = INSIDE FACE
3L = THREE LAYERS

VCBO ARCHITECTURE
524 SOUTH 600 EAST
SALT LAKE CITY, UT 84102
Phone: (801) 575-8800
Fax: (801) 531-9850
Web: vcbo.com

PROFESSIONAL STRUCTURAL ENGINEER No. 299033 JEROD G. JOHNSON 8/15/13 STATE OF UTAH

REAVELEY ENGINEERS + ASSOCIATES
Consulting Structural Engineers
P: 801.486.3883
F: 801.485.0911
675 E. 500 S. Suite 400
Salt Lake City, Utah 84102
www.reaveley.com

2nd District Juvenile Courthouse

Utah State Courts
08284150
165 West 20th Street, Ogden, Utah
BID DOCUMENTS

Rev #	Date	Description

Job # 12500
Date August 15, 2013
Owner # 08284150
Ins. #

STRUCTURAL SCHEDULES

SB601

8/14/2013 4:54:03 PM

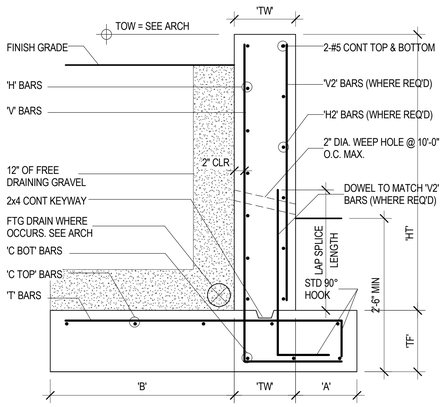

CONCRETE RETAINING WALL SCHEDULE

MARK	'HT'	'A'	'B'	'TW'	'TF'	'V' BARS		'H' BARS		'V2' BARS		'H2' BARS		'T' BARS		'C TOP' BARS		'C BOT' BARS	
						SIZE	SPACE	SIZE	SPACE	SIZE	SPACE	SIZE	SPACE	SIZE	SPACE	SIZE	SPACE	SIZE	SPACE
CRW-1	8' - 0"	0' - 6"	6' - 10"	1' - 2"	1' - 6"	#7	8"	#5	12"	#5	8"	#5	12"	#6	8"	9-#6	12"	2-#6	14"
CRW-2	6' - 0"	0' - 6"	4' - 0"	1' - 0"	1' - 0"	#6	12"	#5	12"	#5	12"	#5	12"	#5	12"	6-#5	12"	2-#5	12"

NOTES:
1. 'V' BARS SHALL NOT BE SPLICED BELOW MID-HEIGHT OF WALL
2. FOR WALLS WITH 'HT' OF 9'-0" & GREATER. ONE HALF OF THE 'V' BARS CAN BE DISCONTINUED FROM MID-HEIGHT TO TOP OF WALL.

B1 / SB602 TYPICAL CONCRETE RETAINING WALL SCHEDULE AND DETAIL
NO SCALE

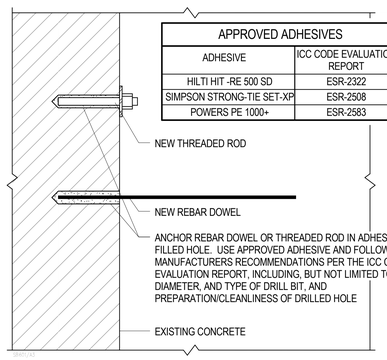

APPROVED ADHESIVES

ADHESIVE	ICC CODE EVALUATION REPORT
HILTI HIT -RE 500 SD	ESR-2322
SIMPSON STRONG-TIE SET-XP	ESR-2508
POWERS PE 1000+	ESR-2583

ADHESIVE ANCHORING SCHEDULE

REINFORCING		THREADED ROD	
DOWEL SIZE	EMBEDMENT LENGTH (SEE NOTE #2)	SIZE (DIA)	EMBEDMENT LENGTH (SEE NOTE #2)
#3	4"	3/8"	4 1/2"
#4	6"	1/2"	6"
#5	9"	5/8"	7 1/2"
#6	10"	3/4"	9"
#7	12"	7/8"	10 1/2"
#8	13"	1"	12"
#9	14"	1 1/4"	15"
#10	18"		
#11	18"		

NOTES:
1. THIS SCHEDULE SHALL BE USED ONLY WHERE SPECIFICALLY REFERENCED ON THE DRAWINGS AND AT OTHER LOCATIONS WITH THE APPROVAL OF THE ENGINEER.
2. EMBEDMENT LENGTHS SPECIFIED ON PLANS OR DETAILS TAKE PRECEDENCE OVER EMBEDMENT LENGTHS IN THIS SCHEDULE.
3. WHERE THE THICKNESS OF THE EXISTING CONCRETE MEMBER IS NOT SUFFICIENT TO ACHIEVE SCHEDULED EMBEDMENT AND SPECIFIED CLEAR COVER FOR THE ANCHOR, CONTACT THE ENGINEER.
4. USE PROCEDURES AND PRODUCTS RECOMMENDED BY ADHESIVE MANUFACTURER FOR OVERHEAD INSTALLATION.
5. SPECIAL INSPECTION IS REQUIRED DURING INSTALLATION OF ALL ADHESIVE ANCHORS PER THE CODE EVALUATION REPORT FOR THE ANCHOR AND THE QUALITY ASSURANCE SECTION OF THE GENERAL STRUCTURAL NOTES.

A1 / SB602 ADHESIVE ANCHORING SCHEDULE
NO SCALE

MASONRY LINTEL SCHEDULE

MARK	LINTEL DEPTH	LINTEL WIDTH	MASONRY TYPE	LINTEL		MAXIMUM SPAN	REMARKS
				HORIZONTAL	STIRRUPS		
ML-1	8"	6"	BRICK OR CMU	1- #4 CONT.	-----	3'-4"	
ML-2	16"	6"	BRICK OR CMU	1- #4 CONT. TOP & BOT.	#3 @ 8" O.C.	5'-4"	
ML-3	24"	6"	BRICK OR CMU	1- #4 CONT. TOP & BOT.	#3 @ 8" O.C.	8'-0"	
ML-4	32"	6"	BRICK OR CMU	1- #4 CONT. TOP, 2-#4 BOT.	#3 @ 8" O.C.	10'-0"	
ML-5	8"	8"	BRICK OR CMU	1- #7 CONT.	-----	3'-4"	
ML-6	16"	8"	BRICK OR CMU	1- #7 CONT. TOP & BOT.	#3 @ 8" O.C.	5'-4"	
ML-7	24"	8"	BRICK OR CMU	1- #7 CONT. TOP & BOT.	#3 @ 8" O.C.	8'-0"	
ML-8	32"	8"	BRICK OR CMU	1- #7 CONT. TOP & BOT.	#3 @ 8" O.C.	10'-0"	

NOTES:
1. MASONRY LINTELS ML-1 THROUGH ML-8 SHALL BE USED OVER OPENINGS IN MASONRY WALLS WHEN A SPECIFIC MASONRY LINTEL IS NOT OTHERWISE SPECIFIED. THE MASONRY LINTEL TO BE USED SHALL BE DETERMINED BY THE MAXIMUM SPAN AS SPECIFIED IN THIS SCHEDULE. WHEN A SPECIFIC MASONRY LINTEL IS CALLED OUT ON THE PLAN, THE MAXIMUM SPAN AS NOTED IN THIS SCHEDULE SHALL NOT APPLY

2. MASONRY LINTELS ML-1 THROUGH ML-8 SHALL NOT BE LOCATED BELOW ANY FLOOR, OR ROOF BEAM, OR GIRDER, OR ANY OTHER CONCENTRATED LOAD UNLESS SHOWN SPECIFICALLY ON THE PLAN SHEET. JOISTS SHALL NOT BEAR ON ANY LINTEL LESS THAN 16" DEEP.

3. FOR MASONRY LINTELS NOT SHOWN ON THE DRAWINGS THAT CARRY ANY FLOOR, OR ROOF BEAM, OR GIRDER, OR ANY OTHER CONCENTRATED LOAD, OR THAT SPAN GREATER THAN 10'-0" CONSULT THE STRUCTURAL ENGINEER.

4. EXTEND ALL HORIZONTAL REINFORCING 48 BAR DIAMETERS BEYOND THE EDGE OF THE OPENING. IF HORIZONTAL REINFORCING CANNOT BE EXTENDED 48 BAR DIAMETERS BEYOND THE EDGE OF THE OPENING, PROVIDE 90 DEGREE STANDARD HOOK.

5. GROUT MASONRY LINTELS MONOLITHICALLY WITH THE SUPPORT WALL OR COLUMN AT EACH END.

6. SPLICE TOP BARS AT MIDSPAN OF LINTEL ONLY.

7. SPLICE BOTTOM BARS OVER SUPPORTS ONLY.

8. FOR WALL ABOVE LINTEL, DOWEL VERTICAL REINFORCING INTO FULL DEPTH OF THE LINTEL OR 48 BAR DIAMETERS, WHICHEVER IS LESS.

9. HORIZONTAL WALL REINFORCING SHALL CONTINUE THROUGH MASONRY LINTELS. WHERE BOTH HORIZONTAL WALL REINFORCING AND LINTEL REINFORCING WOULD OCCUR IN THE SAME COURSE, THE LARGER BARS ARE TO REPLACE THE SMALLER BARS.

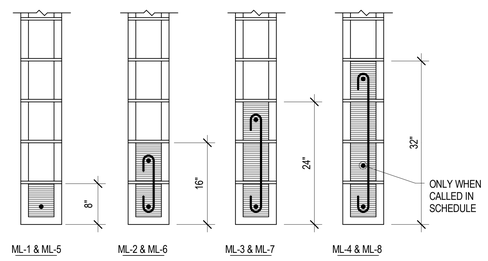

B3 / SB602 TYPICAL MASONRY LINTEL DETAILS
NO SCALE

MASONRY REINFORCING BAR LAP SPLICE SCHEDULE

BAR SIZE	f'm = 3000 psi							f'm = 3000 psi		
	6" CMU	8" CMU		10" CMU		12" CMU		6" ATLAS	8" ATLAS	
	CLASS	CLASS		CLASS		CLASS		CLASS	CLASS	
	A	A	B	A	B	A	B	A	A	B
#3	14"	14"	14"	14"	14"	14"	14"	14"	14"	14"
#4	18"	18"	21"	18"	20"	18"	20"	18"	18"	22"
#5	28"	22"	35"	22"	33"	22"	32"	29"	22"	37"
#6	57"	41"	74"	37"	65"	37"	65"	59"	41"	79"
#7	-	56"	**	43"	92"	43"	92"	-	57"	**
#8	-	80"	**	61"	**	53"	**	-	81"	**
#9	-	-	-	79"	**	64"	**	-	-	-

NOTES:
1. CLASS A SPLICES MAY BE USED WHEN ONLY ONE BAR IS CONTINUOUS IN THE MASONRY CELL OR COURSE.
2. CLASS B SPLICES SHALL BE USED WHEN TWO BARS ARE CONTINUOUS IN THE MASONRY CELL OR COURSE.
3. ** INDICATES THAT A LAP SPLICE IS NOT ALLOWED AND MECHANICAL BAR COUPLERS ARE REQUIRED FOR THE BAR SPLICES.
4. WHERE VERTICAL BARS HAVE A REQUIRED LAP SPLICE GREATER THAN THE HEIGHT OF THE GROUT POUR, THE BAR SPLICE SHALL BE MADE WITH A MECHANICAL BAR COUPLER. WHERE THE HEIGHT OF THE GROUT POUR EXCEEDS 60 INCHES, HIGH LIFT GROUTING PROCEDURES SHALL BE FOLLOWED.
5. WHERE MECHANICAL BAR COUPLERS ARE USED, THE CONNECTOR SHALL DEVELOP 125% OF THE SPECIFIED YIELD STRENGTH OF THE BAR IN TENSION AND COMPRESSION.

MASONRY WALL SCHEDULE

MARK	THICK	MATERIAL	REINFORCING		REMARKS
			VERTICAL	HORIZONTAL	
MW-1	6"	CMU	#4 @ 8" O.C.	#4 @ 24" O.C.	SOLID GROUT
MW-2	8"	CMU	#5 @ 24" O.C.	#5 @ 24" O.C.	SOLID GROUT

1. PROVIDE SCHEDULED VERTICAL REINFORCING BARS AT ALL CORNERS, ENDS OF WALLS, AND SPACED AS SCHEDULED, UNLESS NOTED OTHERWISE.
2. HORIZONTAL REINFORCING BARS SHALL BE CONTINUOUS AT ALL CORNERS AND AT INTERSECTING WALLS. PROVIDE CORNER BARS WITH THE REQUIRED LAP SPLICE LENGTH.
3. TERMINATE ALL HORIZONTAL REINFORCING BARS AT ENDS OF WALLS AND EDGES OF OPENINGS WITH A STANDARD HOOK AROUND VERTICAL REINFORCING BARS.
4. SEE PLANS, DETAILS AND GENERAL STRUCTURAL NOTES FOR ADDITIONAL REINFORCING REQUIREMENTS.
5. GROUT SOLID ALL CELLS BELOW GRADE, CELLS CONTAINING EMBEDS (HSA'S, DBA'S, ANCHOR BOLTS, ETC.), AND CELLS CONTAINING REINFORCING. CONSOLIDATE GROUT AS PER THE GENERAL STRUCTURAL NOTES.
6. HORIZONTAL WALL REINFORCING SHALL BE PLACED INSIDE THE VERTICALS OF MASONRY COLUMNS.
7. HORIZONTAL WALL REINFORCING SHALL CONTINUE THROUGH MASONRY LINTELS. WHERE BOTH HORIZONTAL WALL REINFORCING AND LINTEL REINFORCING OCCUR IN THE SAME COURSE, THE LARGER BARS ARE TO REPLACE THE SMALLER BARS.

MASONRY COLUMN SCHEDULE

MARK	DIMENSIONS		REINFORCING		REMARKS
	WIDTH	LENGTH	VERTICAL	TIES	
MC-1	8"	2' - 0"	6-#5	NONE	
MC-2	8"	2' - 8"	8-#5	NONE	

1. THE CENTERLINE OF VERTICAL BARS SHALL BE LOCATED 2.1/2" FROM THE FACE OF THE MASONRY. HORIZONTAL BARS SHALL BE LOCATED TO THE INSIDE OF THE VERTICAL BARS.
2. UNLESS NOTED OTHERWISE, VERTICAL REINFORCING AND TIES SHALL EXTEND FULL HEIGHT OF THE WALL.
3. MASONRY COLUMN VERTICAL BARS OR DOWELS IN CONCRETE FOUNDATION WALLS SHALL BE TIED WITH #3 TIES @ 8" O.C.

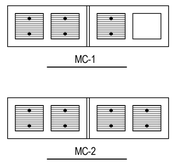

B5 / SB602 TYPICAL MASONRY COLUMN DIAGRAMS
NO SCALE

VCBO ARCHITECTURE
524 SOUTH 600 EAST
SALT LAKE CITY, UT 84102
Phone: (801) 575-8800
Fax: (801) 531-9850
Web: vcbo.com

REAVELEY ENGINEERS + ASSOCIATES
Consulting Structural Engineers
P: 801.486.3883
F: 801.485.0911
675 E. 500 S. Suite 400
Salt Lake City, Utah 84102
www.reaveley.com

2nd District Juvenile Courthouse

Utah State Courts
08284150
165 West 20th Street, Ogden, Utah
BID DOCUMENTS

Rev #	Date	Description

Job # 12500
Date August 15, 2013
Owner # 08284150
Ins. #

STRUCTURAL SCHEDULES

SB602

8/14/2013 4:54:06 PM

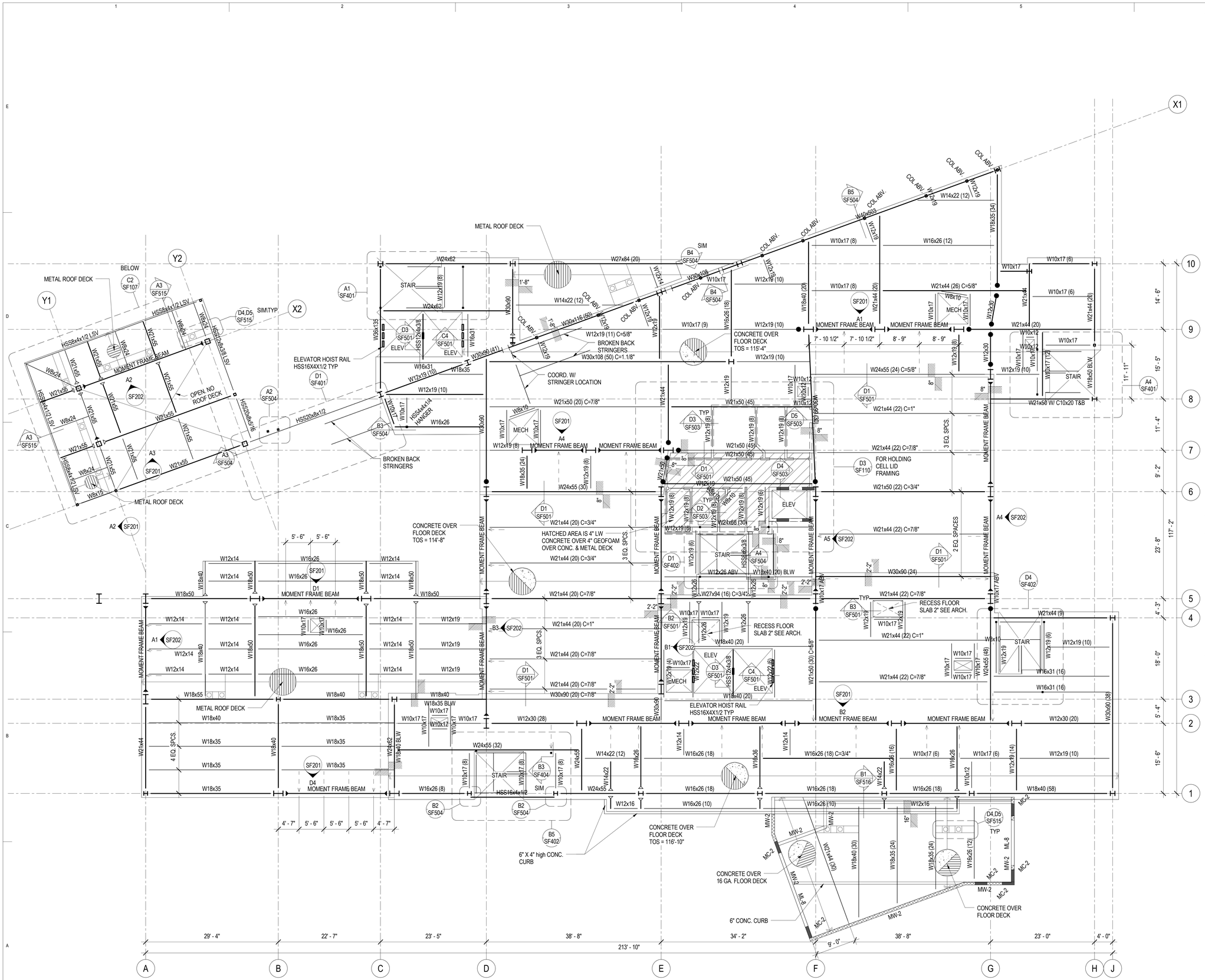

FLOOR FRAMING PLAN LEGEND

- CONCRETE WALL
- CONCRETE LINTEL IN CONCRETE WALL
- CONCRETE COLUMN IN CONCRETE WALL
- CONCRETE COLUMN
- CONCRETE JAMB COLUMN POURED MONOLITHIC WITH CONCRETE WALL
- MASONRY WALL
- MASONRY LINTEL IN MASONRY WALL
- MASONRY COLUMN IN MASONRY WALL
- STEEL COLUMN - TUBE
- STEEL COLUMN - WIDE FLANGE
- STEEL COLUMN - PIPE
- STEEL BRACED FRAME
- MOMENT CONNECTION
- CANTILEVER FULL PEN CONNECTION
- COLLECTOR CONNECTION SEE B1/SF602
- STEEL BEAM OR GIRDER
- STEEL JOIST OR PURLIN
- STEEL ANGLE BRACE / KICKER. SEE B1/SF502 FOR SLAB EDGE KICKER. SEE A4/SF503 FOR FRAME BRACE
- CROSS BRIDGING
- HORIZONTAL BRIDGING
- STEEL STUD WALL - STRUCTURAL
- STEEL HEADER IN STEEL STUD WALL
- 0" CHANGE IN ELEVATION
- CONCRETE ON METAL DECK
- ROOF DECK
- SPECIAL DECK AREA
- RECESSED/DEPRESSED SLAB ON METAL DECK
- OPENING

FLOOR FRAMING PLAN NOTES

1. SEE GENERAL STRUCTURAL NOTE (III.D.8) AND DETAILS D3/SF502 FOR CONTROL JOINTS IN SUSPENDED SLABS OVER STEEL DECK.

2. SEE DETAILS D1/SF502 FOR MISCELLANEOUS FLOOR OPENINGS.

3. SEE GENERAL STRUCTURAL NOTE (V.J.7) FOR STEEL DECK REQUIREMENTS WHERE 3-SPAN CONDITIONS ARE NOT POSSIBLE.

4. PROVIDE 4.1/2" LONG HEADED STUD ANCHORS ON COMPOSITE BEAMS IN THE AREAS OF 1" SLAB RECESSES.

A1 / SF101 LEVEL 2 FLOOR FRAMING PLAN

SCALE: 1/8" = 1'-0"

VCBO ARCHITECTURE
524 SOUTH 600 EAST
SALT LAKE CITY, UT 84102
Phone: (801) 575-8800
Fax: (801) 531-9850
Web: vcbo.com

REAVELEY ENGINEERS + ASSOCIATES
Consulting Structural Engineers
P: 801.466.3883
F: 801.485.0911
675 E. 500 S. Suite 400
Salt Lake City, Utah 84102
www.reaveley.com

2nd District Juvenile Courthouse

Utah State Courts
08284150
165 West 20th Street, Ogden, Utah
BID DOCUMENTS

Rev #	Date	Description

Job # 12500
Date August 15, 2013
Owner # 08284150
Ins. #

LEVEL 2 FLOOR FRAMING PLAN

SF101

8/14/2013 4:54:07 PM

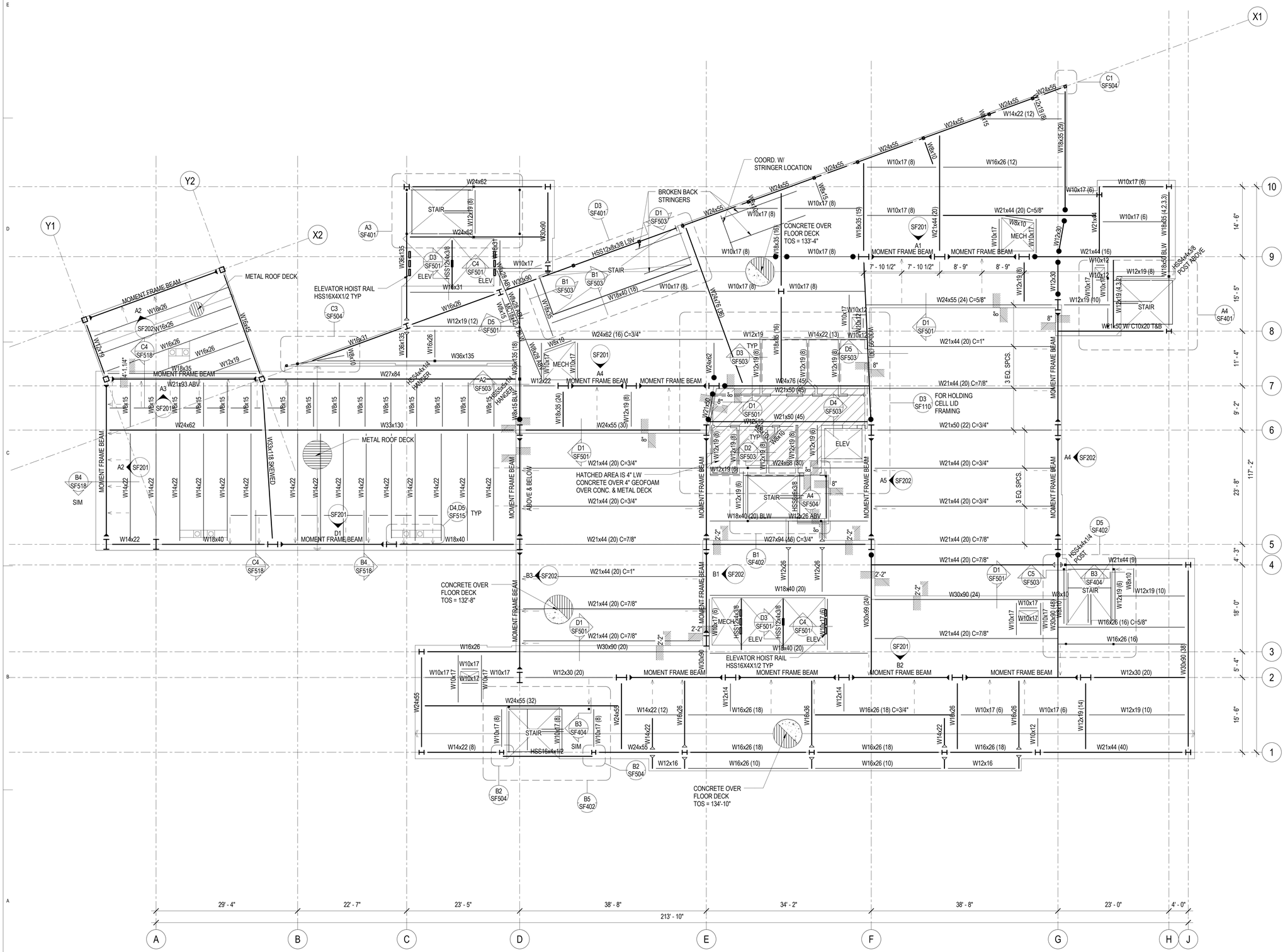

FLOOR FRAMING PLAN LEGEND

- CONCRETE WALL
- CONCRETE LINTEL IN CONCRETE WALL
- CONCRETE COLUMN IN CONCRETE WALL
- CONCRETE COLUMN
- CONCRETE JAMB COLUMN POURED MONOLITHIC WITH CONCRETE WALL
- MASONRY WALL
- MASONRY LINTEL IN MASONRY WALL
- MASONRY COLUMN IN MASONRY WALL
- STEEL COLUMN - TUBE
- STEEL COLUMN - WIDE FLANGE
- STEEL COLUMN - PIPE
- STEEL BRACED FRAME
- MOMENT CONNECTION
- CANTILEVER FULL PEN CONNECTION
- COLLECTOR CONNECTION SEE B1/SF602
- STEEL BEAM OR GIRDER
- STEEL JOIST OR PURLIN
- STEEL ANGLE BRACE / KICKER. SEE B1/SF502 FOR SLAB EDGE KICKER. SEE A4/SF503 FOR FRAME BRACE
- CROSS BRIDGING
- HORIZONTAL BRIDGING
- STEEL STUD WALL - STRUCTURAL
- STEEL HEADER IN STEEL STUD WALL
- CHANGE IN ELEVATION
- CONCRETE ON METAL DECK
- ROOF DECK
- SPECIAL DECK AREA
- RECESSED/DEPRESSED SLAB ON METAL DECK
- OPENING

FLOOR FRAMING PLAN NOTES

1. SEE GENERAL STRUCTURAL NOTE (III.D.8) AND DETAILS D3/SF502 FOR CONTROL JOINTS IN SUSPENDED SLABS OVER STEEL DECK.
2. SEE DETAILS D1/SF502 FOR MISCELLANEOUS FLOOR OPENINGS.
3. SEE GENERAL STRUCTURAL NOTE (V.J.7) FOR STEEL DECK REQUIREMENTS WHERE 3-SPAN CONDITIONS ARE NOT POSSIBLE.
4. PROVIDE 4.1/2" LONG HEADED STUD ANCHORS ON COMPOSITE BEAMS IN THE AREAS OF 1" SLAB RECESSES.

A1 SF102 LEVEL 3 FLOOR FRAMING PLAN

SCALE: 1/8" = 1'-0"

8/14/2013 4:54:08 PM

VCBO ARCHITECTURE

VCBO ARCHITECTURE
524 SOUTH 600 EAST
SALT LAKE CITY, UT 84102
Phone: (801) 575-8800
Fax: (801) 531-9850
Web: vcbo.com

REAVELEY ENGINEERS + ASSOCIATES
Consulting Structural Engineers
P: 801.486.3883
F: 801.485.0911
675 E. 500 S. Suite 400
Salt Lake City, Utah 84102
www.reaveley.com

2nd District Juvenile Courthouse

Utah State Courts
08284150
165 West 20th Street, Ogden, Utah
BID DOCUMENTS

Rev #	Date	Description

Job # 12500
Date August 15, 2013
Owner # 08284150
Ins. #

LEVEL 3 FLOOR FRAMING PLAN

SF102

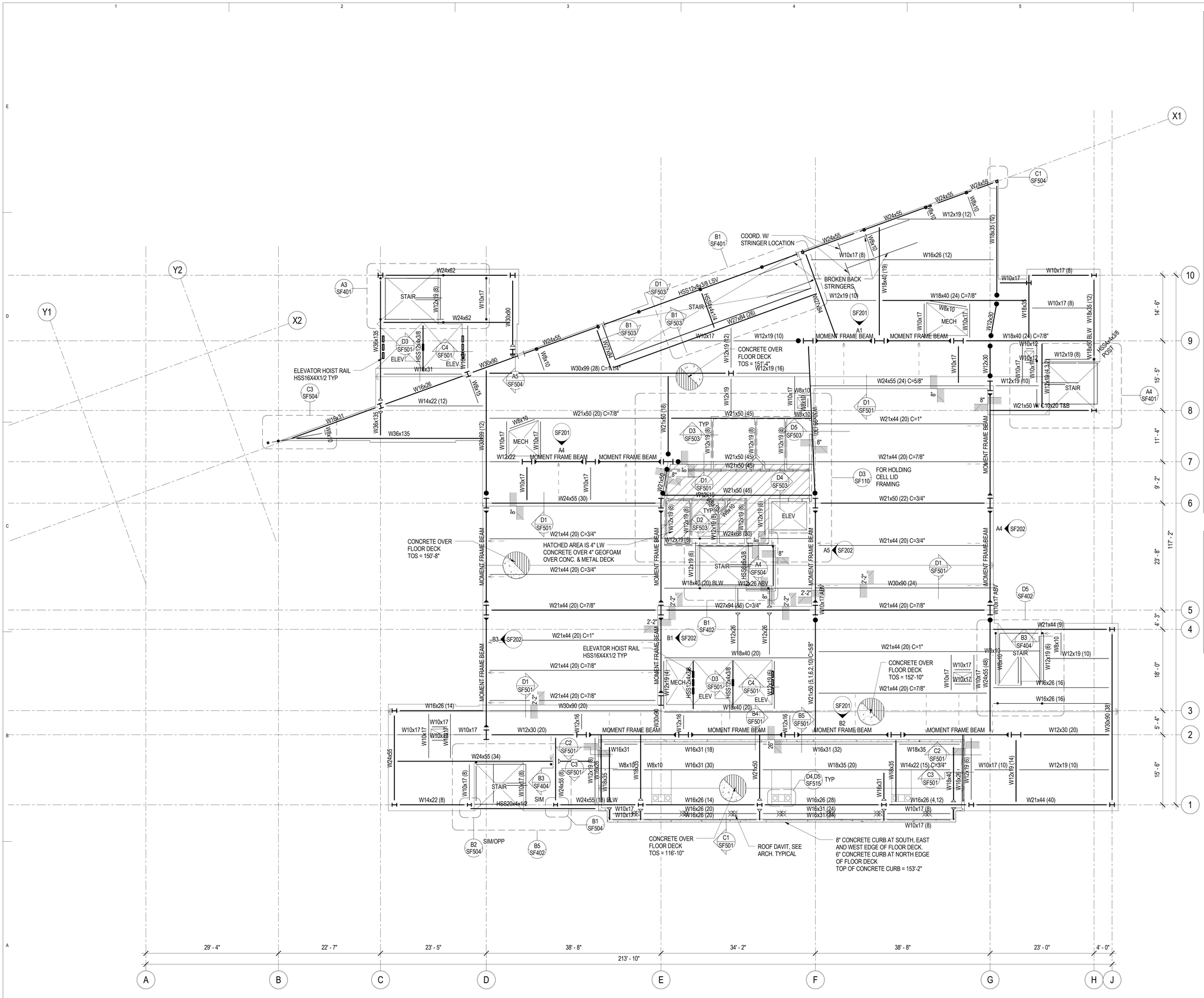

FLOOR FRAMING PLAN LEGEND

- CONCRETE WALL
- CONCRETE LINTEL IN CONCRETE WALL
- CONCRETE COLUMN IN CONCRETE WALL
- CONCRETE COLUMN
- CONCRETE JAMB COLUMN POURED MONOLITHIC WITH CONCRETE WALL
- MASONRY WALL
- MASONRY LINTEL IN MASONRY WALL
- MASONRY COLUMN IN MASONRY WALL
- STEEL COLUMN - TUBE
- STEEL COLUMN - WIDE FLANGE
- STEEL COLUMN - PIPE
- STEEL BRACED FRAME
- MOMENT CONNECTION
- CANTILEVER FULL PEN CONNECTION
- COLLECTOR CONNECTION SEE B1/SF602
- STEEL BEAM OR GIRDER
- STEEL JOIST OR PURLIN
- STEEL ANGLE BRACE / KICKER. SEE B1/SF502 FOR SLAB EDGE KICKER. SEE A4/SF503 FOR FRAME BRACE
- CROSS BRIDGING
- HORIZONTAL BRIDGING
- STEEL STUD WALL - STRUCTURAL
- STEEL HEADER IN STEEL STUD WALL
- CHANGE IN ELEVATION
- CONCRETE ON METAL DECK
- ROOF DECK
- SPECIAL DECK AREA
- RECESSED/DEPRESSED SLAB ON METAL DECK
- OPENING

FLOOR FRAMING PLAN NOTES

1. SEE GENERAL STRUCTURAL NOTE (III.D.8) AND DETAILS D3/SF502 FOR CONTROL JOINTS IN SUSPENDED SLABS OVER STEEL DECK.

2. SEE DETAILS D1/SF502 FOR MISCELLANEOUS FLOOR OPENINGS.

3. SEE GENERAL STRUCTURAL NOTE (V.J.7) FOR STEEL DECK REQUIREMENTS WHERE 3-SPAN CONDITIONS ARE NOT POSSIBLE.

4. PROVIDE 4.1/2" LONG HEADED STUD ANCHORS ON COMPOSITE BEAMS IN THE AREAS OF 1" SLAB RECESSES.

LEVEL 4 FLOOR FRAMING PLAN

A1 / SF103

SCALE: 1/8" = 1'-0"

VCBO ARCHITECTURE

VCBO ARCHITECTURE
524 SOUTH 600 EAST
SALT LAKE CITY, UT 84102
Phone: (801) 575-8800
Fax: (801) 531-9850
Web: vcbo.com

REGISTERED PROFESSIONAL STRUCTURAL ENGINEER No. 299733 JEROD G. JOHNSON 8/15/13 STATE OF UTAH

REAVELEY ENGINEERS + ASSOCIATES
Consulting Structural Engineers
P: 801.486.3883
F: 801.485.0911
675 E. 500 S. Suite 400
Salt Lake City, Utah 84102
www.reaveley.com

2nd District Juvenile Courthouse

Utah State Courts
08284150
165 West 20th Street, Ogden, Utah
BID DOCUMENTS

Rev #	Date	Description

Job # 12500
Date August 15, 2013
Owner # 08284150
Ins. #

LEVEL 4 FLOOR FRAMING PLAN

SF103

8/14/2013 4:54:10 PM

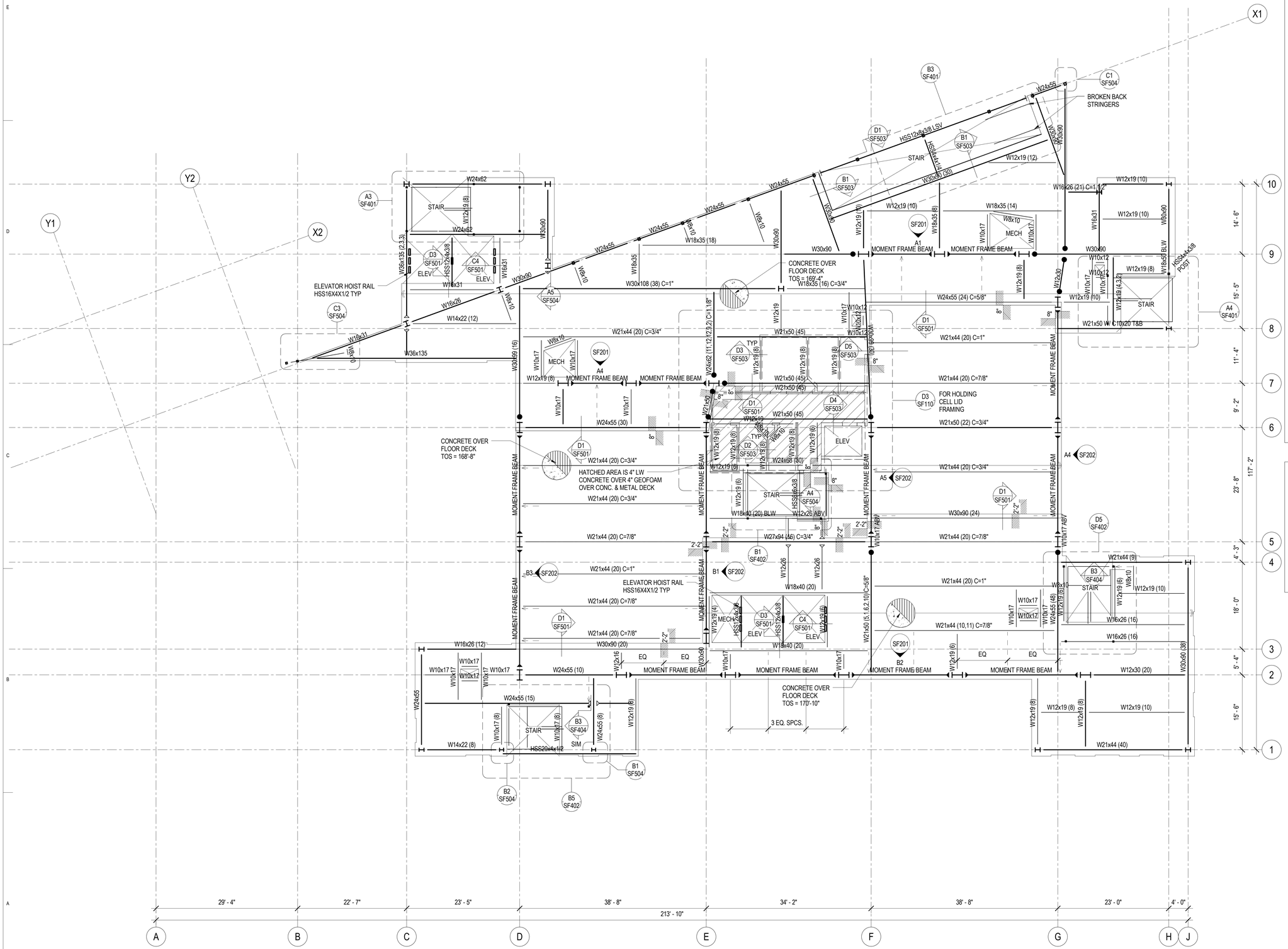

FLOOR FRAMING PLAN LEGEND

- CONCRETE WALL
- CONCRETE LINTEL IN CONCRETE WALL
- CONCRETE COLUMN IN CONCRETE WALL
- CONCRETE COLUMN
- CONCRETE JAMB COLUMN POURED MONOLITHIC WITH CONCRETE WALL
- MASONRY WALL
- MASONRY LINTEL IN MASONRY WALL
- MASONRY COLUMN IN MASONRY WALL
- STEEL COLUMN - TUBE
- STEEL COLUMN - WIDE FLANGE
- STEEL COLUMN - PIPE
- STEEL BRACED FRAME
- MOMENT CONNECTION
- CANTILEVER FULL PEN CONNECTION
- COLLECTOR CONNECTION SEE B1/SF602
- STEEL BEAM OR GIRDER
- STEEL JOIST OR PURLIN
- STEEL ANGLE BRACE / KICKER. SEE B1/SF502 FOR SLAB EDGE KICKER. SEE A4/SF503 FOR FRAME BRACE
- CROSS BRIDGING
- HORIZONTAL BRIDGING
- STEEL STUD WALL - STRUCTURAL
- STEEL HEADER IN STEEL STUD WALL
- CHANGE IN ELEVATION
- CONCRETE ON METAL DECK
- ROOF DECK
- SPECIAL DECK AREA
- RECESSED/DEPRESSED SLAB ON METAL DECK
- OPENING

FLOOR FRAMING PLAN NOTES

1. SEE GENERAL STRUCTURAL NOTE (III.D.8) AND DETAILS D3/SF502 FOR CONTROL JOINTS IN SUSPENDED SLABS OVER STEEL DECK.

2. SEE DETAILS D1/SF502 FOR MISCELLANEOUS FLOOR OPENINGS.

3. SEE GENERAL STRUCTURAL NOTE (V.J.7) FOR STEEL DECK REQUIREMENTS WHERE 3-SPAN CONDITIONS ARE NOT POSSIBLE.

4. PROVIDE 4.1/2" LONG HEADED STUD ANCHORS ON COMPOSITE BEAMS IN THE AREAS OF 1" SLAB RECESSES.

A1 SF104 LEVEL 5 FLOOR FRAMING PLAN

SCALE: 1/8" = 1'-0"

VCBO ARCHITECTURE

VCBO ARCHITECTURE
524 SOUTH 600 EAST
SALT LAKE CITY, UT 84102
Phone: (801) 575-8800
Fax: (801) 531-9850
Web: vcbo.com

REAVELEY ENGINEERS + ASSOCIATES
Consulting Structural Engineers
P: 801.466.3883
F: 801.485.0911
675 E. 500 S. Suite 400
Salt Lake City, Utah 84102
www.reaveley.com

2nd District Juvenile Courthouse

Utah State Courts

08284150

165 West 20th Street, Ogden, Utah

BID DOCUMENTS

Rev #	Date	Description

Job # 12500
Date August 15, 2013
Owner # 08284150
Ins. #

LEVEL 5 FLOOR FRAMING PLAN

SF104

8/14/2013 4:54:11 PM

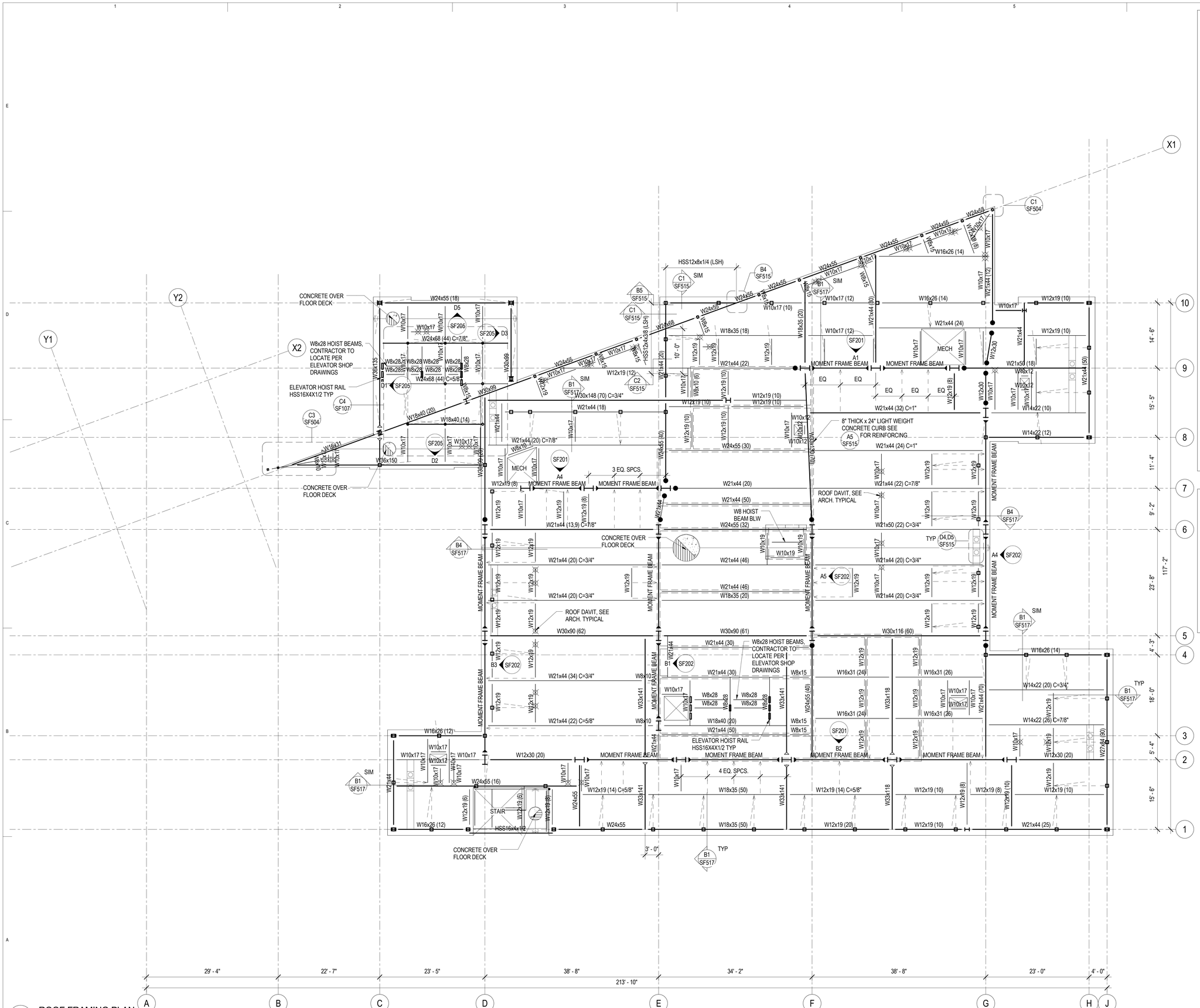

A1 SF105 ROOF FRAMING PLAN

SCALE: 1/8" = 1'-0"

ROOF FRAMING PLAN LEGEND

- CONCRETE WALL
- CONCRETE LINTEL IN CONCRETE WALL
- CONCRETE COLUMN IN CONCRETE WALL
- CONCRETE COLUMN
- CONCRETE JAMB COLUMN POURED MONOLITHIC WITH CONCRETE WALL
- MASONRY WALL
- MASONRY LINTEL IN MASONRY WALL
- MASONRY COLUMN IN MASONRY WALL
- STEEL COLUMN - TUBE
- STEEL COLUMN - WIDE FLANGE
- STEEL COLUMN - PIPE
- STEEL BRACED FRAME
- MOMENT CONNECTION
- CANTILEVER FULL PEN CONNECTION
- COLLECTOR CONNECTION SEE B1/SF602
- STEEL BEAM OR GIRDER
- STEEL JOIST OR PURLIN
- ROOF ANCHOR/DAVIT SEE DETAIL D2/SF517
- STEEL ANGLE BRACE / KICKER. SEE B1/SF502 FOR ROOF EDGE KICKER. SEE A4/SF503 FOR FRAME BRACE
- 0" CHANGE IN ELEVATION
- CONCRETE ON METAL DECK
- ROOF DECK
- SPECIAL DECK AREA
- RECESSED/DEPRESSED SLAB ON METAL DECK
- OPENING

ROOF FRAMING PLAN NOTES

1. VERIFY SIZE, WEIGHT, LOCATION AND CONFIGURATION OF ALL ROOF TOP EQUIPMENT WITH ARCHITECT AND MECHANICAL ENGINEER. PROVIDE STEEL FRAMES FOR SUPPORT OF ROOF TOP EQUIPMENT AS INDICATED IN DETAIL D1/SF515 COORDINATE OPENINGS WITH MECHANICAL AND ELECTRICAL AND GENERAL CONTRACTORS.

2. ALL ROOF OPENINGS SHALL BE FRAMED AS INDICATED IN DETAIL D2/SF515. FOR ROUND OPENINGS WHICH ARE LESS THAN 12" DIA. SEE DETAIL D3/SF515.

3. SEE ARCHITECTURAL FOR ROOF SLOPES AND DRAINS. SEE D4 & D5/SF515 FOR ROOF DRAIN OPENING FRAME.

VCBO ARCHITECTURE

VCBO ARCHITECTURE
524 SOUTH 600 EAST
SALT LAKE CITY, UT 84102
Phone: (801) 575-8800
Fax: (801) 531-9850
Web: vcbo.com

REGISTERED STRUCTURAL ENGINEER No. 299133 JEROD G. JOHNSON 8/15/13 STATE OF UTAH

REAVELEY ENGINEERS + ASSOCIATES
Consulting Structural Engineers
P: 801.486.3883
F: 801.485.0911
675 E. 500 S. Suite 400
Salt Lake City, Utah 84102
www.reaveley.com

2nd District Juvenile Courthouse

Utah State Courts
08284150
165 West 20th Street, Ogden, Utah
BID DOCUMENTS

Rev #	Date	Description

Job # 12500
Date August 15, 2013
Owner # 08284150
Ins. #

ROOF FRAMING PLAN

SF105

8/14/2013 4:54:12 PM

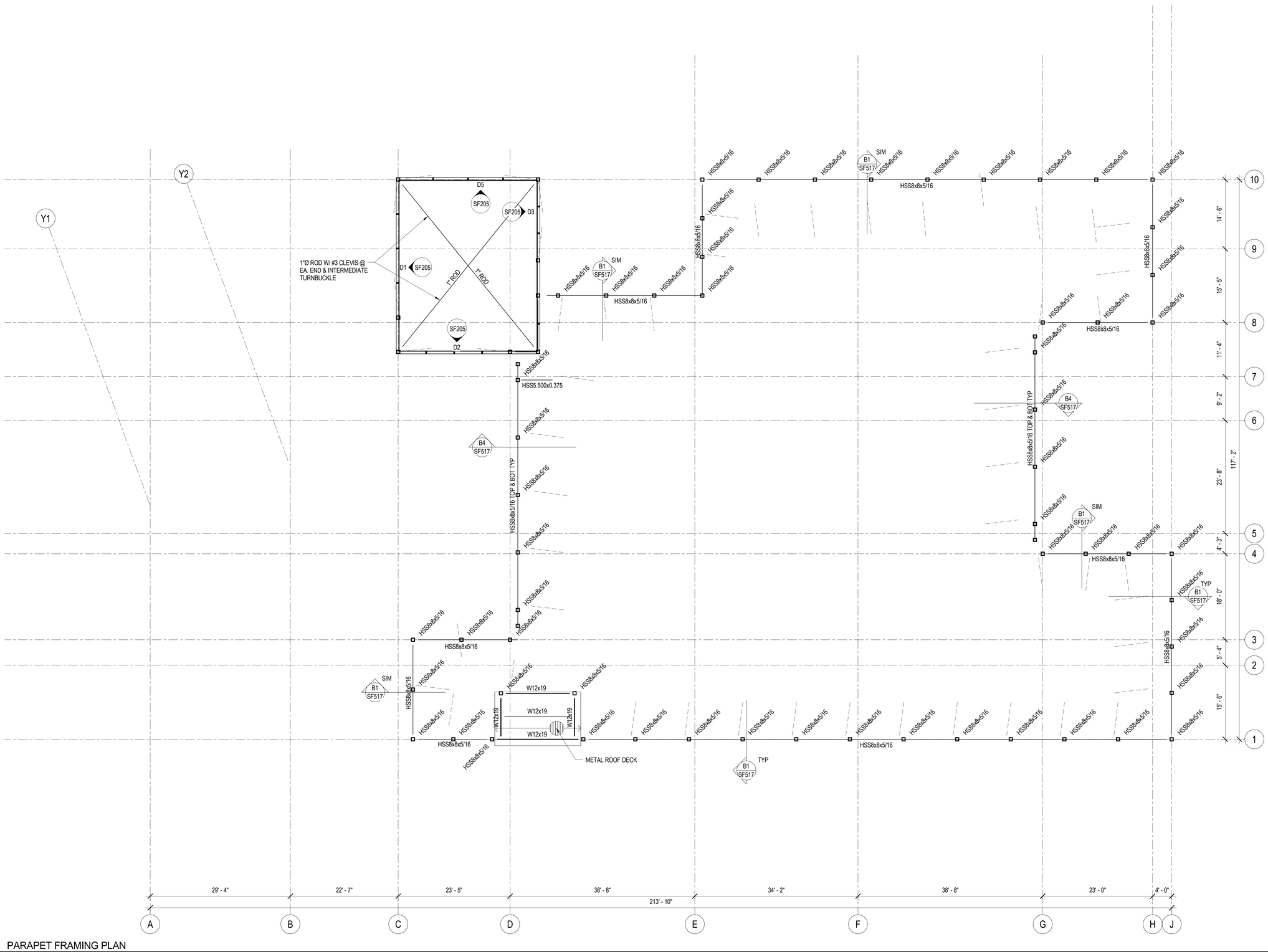

A1 SF106 PARAPET FRAMING PLAN

SCALE: 1/8" = 1'-0"

8/14/2013 4:54:14 PM

VCBO ARCHITECTURE

VCBO ARCHITECTURE
524 SOUTH 600 EAST
SALT LAKE CITY, UT 84102
Phone: (801) 575-8800
Fax: (801) 531-9850
Web: vcbo.com

PROFESSIONAL STRUCTURAL ENGINEER
No. 259033
JEROD G. JOHNSON
3/15/13
STATE OF UTAH

REAVELEY
ENGINEERS + ASSOCIATES
Consulting Structural Engineers

P: 801.486.3883
F: 801.485.0911

675 E. 500 S. Suite 400
Salt Lake City, Utah 84102
www.reaveley.com

2nd District Juvenile Courthouse

Utah State Courts
08284150
165 West 20th Street, Ogden, Utah
BID DOCUMENTS

Rev #	Date	Description

Job # 12500
Date August 15, 2013
Owner # 08284150
Ins. #

PARAPET FRAMING PLAN

SF106

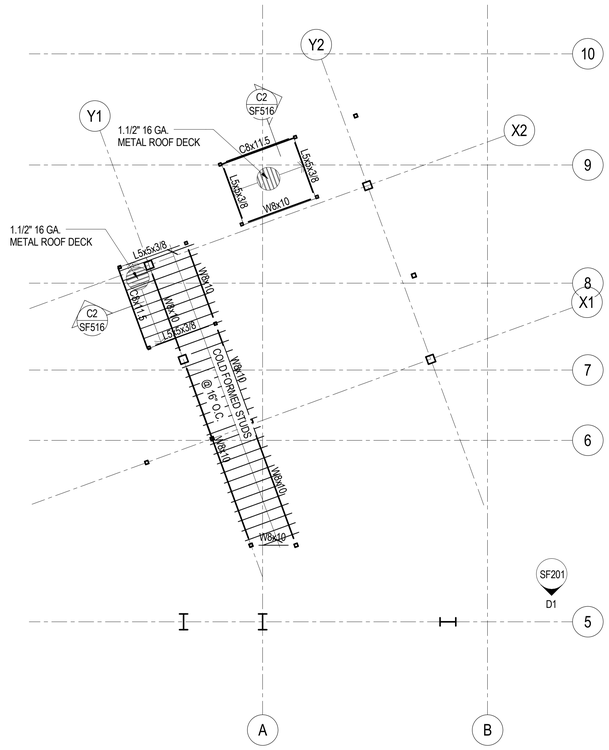

C2 / SF107 LOW ROOF FRAMING PLAN AT ENTRY

SCALE: 1/8" = 1'-0"

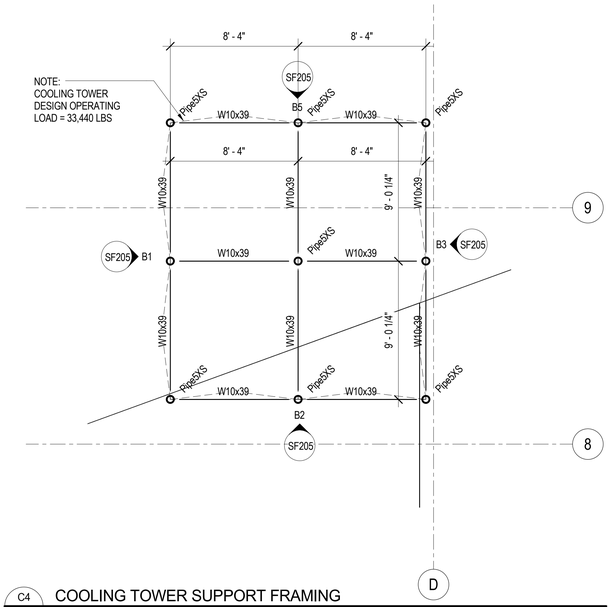

C4 / SF107 COOLING TOWER SUPPORT FRAMING

SCALE: 1/4" = 1'-0"

ROOF FRAMING PLAN LEGEND

- CONCRETE WALL
- CONCRETE LINTEL IN CONCRETE WALL
- CONCRETE COLUMN IN CONCRETE WALL
- CONCRETE COLUMN
- CONCRETE JAMB COLUMN POURED MONOLITHIC WITH CONCRETE WALL
- MASONRY WALL
- MASONRY LINTEL IN MASONRY WALL
- MASONRY COLUMN IN MASONRY WALL
- STEEL COLUMN - TUBE
- STEEL COLUMN - WIDE FLANGE
- STEEL COLUMN - PIPE
- STEEL BRACED FRAME
- MOMENT CONNECTION
- CANTILEVER FULL PEN CONNECTION
- COLLECTOR CONNECTION SEE B1/SF602
- STEEL BEAM OR GIRDER
- STEEL JOIST OR PURLIN
- ROOF ANCHOR/DAVIT SEE DETAIL D2/SF517
- STEEL ANGLE BRACE / KICKER. SEE B1/SF502 FOR ROOF EDGE KICKER. SEE A4/SF503 FOR FRAME BRACE
- 0" CHANGE IN ELEVATION
- CONCRETE ON METAL DECK
- ROOF DECK
- SPECIAL DECK AREA
- RECESSED/DEPRESSED SLAB ON METAL DECK
- OPENING

ROOF FRAMING PLAN NOTES

1. VERIFY SIZE, WEIGHT, LOCATION AND CONFIGURATION OF ALL ROOF TOP EQUIPMENT WITH ARCHITECT AND MECHANICAL ENGINEER. PROVIDE STEEL FRAMES FOR SUPPORT OF ROOF TOP EQUIPMENT AS INDICATED IN DETAIL D1/SF515 COORDINATE OPENINGS WITH MECHANICAL AND ELECTRICAL AND GENERAL CONTRACTORS.

2. ALL ROOF OPENINGS SHALL BE FRAMED AS INDICATED IN DETAIL D2/SF515. FOR ROUND OPENINGS WHICH ARE LESS THAN 12" DIA. SEE DETAIL D3/SF515.

3. SEE ARCHITECTURAL FOR ROOF SLOPES AND DRAINS. SEE D4 & D5/SF515 FOR ROOF DRAIN OPENING FRAME.

VCBO ARCHITECTURE

VCBO ARCHITECTURE
524 SOUTH 600 EAST
SALT LAKE CITY, UT 84102
Phone: (801) 575-8800
Fax: (801) 531-9850
Web: vcbo.com

PROFESSIONAL STRUCTURAL ENGINEER No. 299133 JEROD G. JOHNSON 8/15/13 STATE OF UTAH

REAVELEY ENGINEERS + ASSOCIATES
Consulting Structural Engineers
P: 801.486.3883
F: 801.485.0911
675 E. 500 S. Suite 400
Salt Lake City, Utah 84102
www.reaveley.com

2nd District Juvenile Courthouse

Utah State Courts
08284150
165 West 20th Street, Ogden, Utah
BID DOCUMENTS

Rev #	Date	Description

Job # 12500
Date August 15, 2013
Owner # 08284150
Ins. #

MISC. FRAMING PLANS

SF107

8/14/2013 4:54:15 PM

NOTE:
ALL WALLS 6" CMU REINFORCE W/ #4 @ 8" O.C. VERTICAL & #4 @ 32" O.C. HORIZONTAL ON 8" HIGH CONCRETE CURB TYP.

PRECAST HOLLOW CORE NORMAL WT. CONCRETE 6" THICK W/ 2" TOPPING. DESIGNED FOR MIN. 1 HOUR FIRE RATING

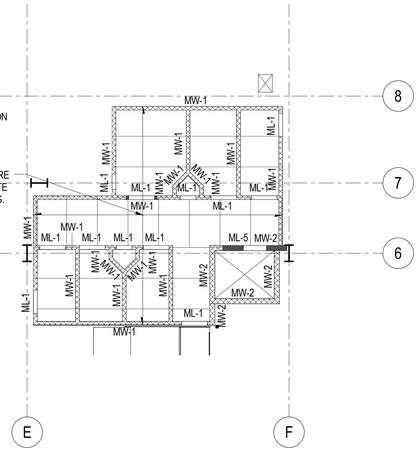

D3 / SF110 LEVELS 2, 3, 4 & 5 HOLDING CELL LID PLAN

SCALE: 1/8" = 1'-0"

NOTE

HOLLOW CORE MANUFACTURER AND SUPPLIER TO DESIGN THE HOLLOW CORE SLAB & TOPPING AS A DIAPHRAM TO RESIST SEISMIC FORCES AND BRACE THE CMU WALLS AGAINST OUT OF PLAN FORCES AND TO DETAIL AND DESIGN ANCHORS AND CONNECTIONS TO TRANSFER LATERAL FORCES AND BRACE CMU WALLS. PROVIDE CALCULATIONS AND DETAILS STAMPED BY A UTAH LICENCED ENGINEER FOR REVIEW.

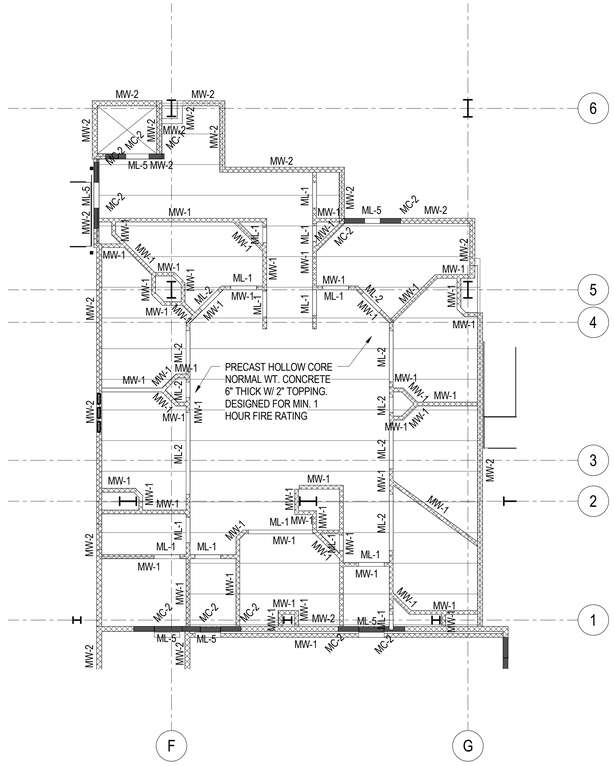

B4 / SF110 LEVEL 1 HOLDING CELL LID PLAN

SCALE: 1/8" = 1'-0"

VCBO ARCHITECTURE

VCBO ARCHITECTURE
524 SOUTH 600 EAST
SALT LAKE CITY, UT 84102
Phone: (801) 575-8800
Fax: (801) 531-9850
Web: vcbo.com

PROFESSIONAL STRUCTURAL ENGINEER No. 299033 JEROD G. JOHNSON 8/15/13 STATE OF UTAH

REAVELEY ENGINEERS + ASSOCIATES
Consulting Structural Engineers

P: 801.486.3883
F: 801.485.0911

677 E 500 S, Suite 400
Salt Lake City, Utah 84102
www.reaveley.com

2nd District Juvenile Courthouse

Utah State Courts
08284150
165 West 20th Street, Ogden, Utah
BID DOCUMENTS

Rev #	Date	Description

Job # 12500
Date August 15, 2013
Owner # 08284150
Ins. #

HOLDING CELL LID FRAMING PLANS

SF110

8/14/2013 4:54:16 PM

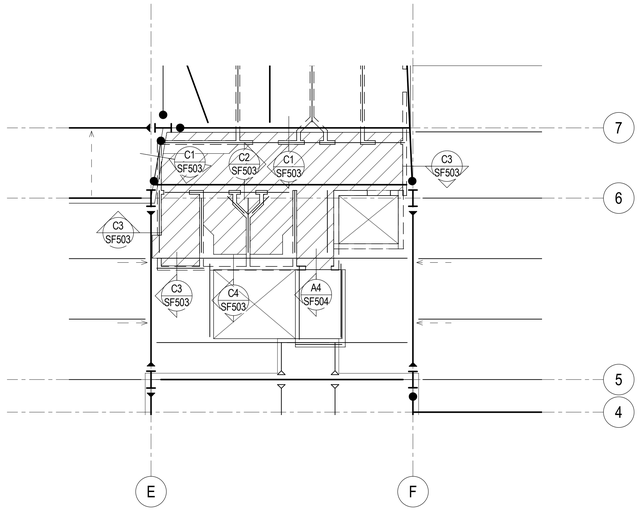

2 SF111 LEVEL 3 RAISED FLOOR PLAN

SCALE: 1/8" = 1'-0"

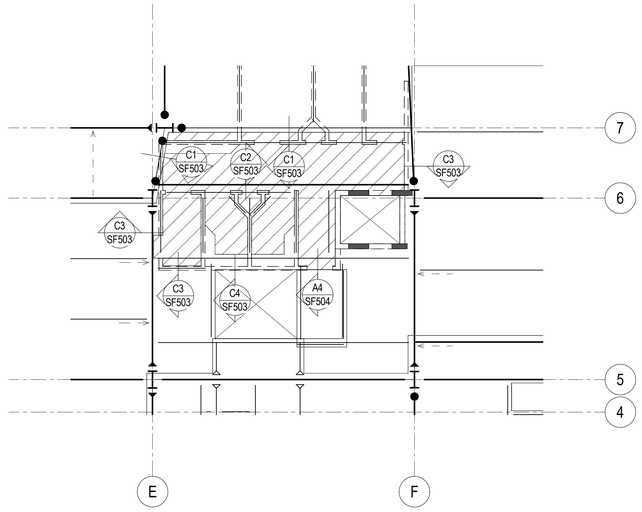

1 SF111 LEVEL 2 RAISED FLOOR PLAN

SCALE: 1/8" = 1'-0"

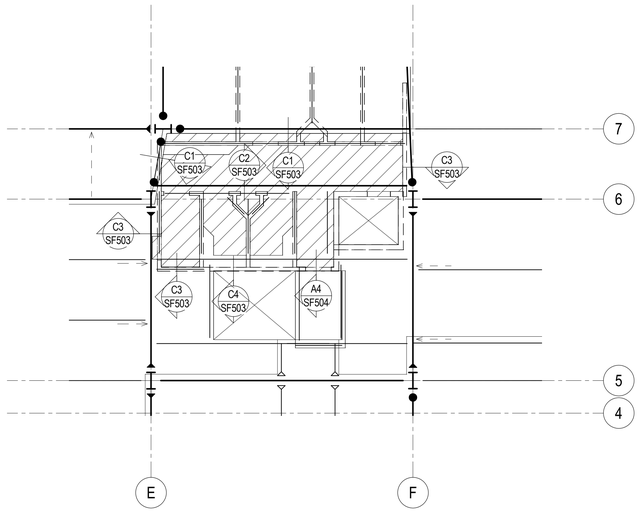

4 SF111 LEVEL 5 RAISED FLOOR PLAN

SCALE: 1/8" = 1'-0"

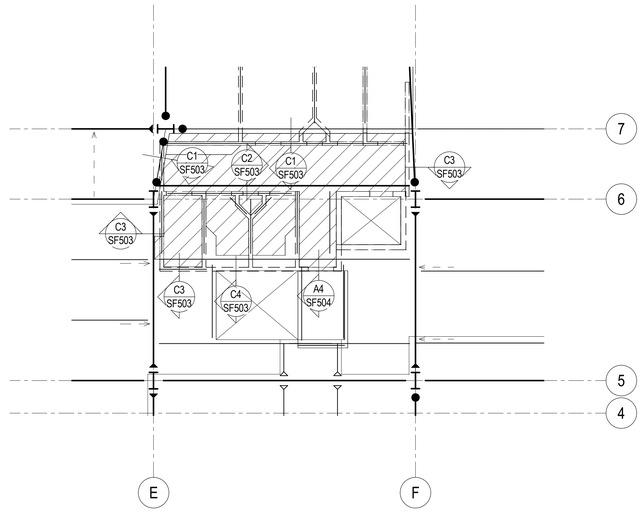

3 SF111 LEVEL 4 RAISED FLOOR PLAN

SCALE: 1/8" = 1'-0"

RAISED FLOOR PLAN LEGEND

- 0" CHANGE IN ELEVATION
- 4" LIGHT WEIGHT CONCRETE TOPPING SLAB OVER 4" GEOFOAM (8" TOTAL)
- RECESSED/DEPRESSED SLAB ON METAL DECK - SEE ARCH
- OPENING

RAISED FLOOR PLAN NOTES

1. PROVIDE CONTROL JOINTS IN TOPPING SLAB AS FOLLOWS:
   3" TOPPING SLABS . . . . . 8'-0" O.C.
   4" TOPPING SLABS . . . . 6'-6" O.C.
   REINFORCED HOUSEKEEPING SLABS & SLABS LESS THAN 3" THICK DO NOT REQUIRE JOINTS.

2. SEE C2/SF503 FOR CONNECTION OF CONCRETE TOPPING SLAB OVER GEOFOAM TO CONCRETE OVER FLOOR DECK.

VCBO ARCHITECTURE
524 SOUTH 600 EAST
SALT LAKE CITY, UT 84102
Phone: (801) 575-8800
Fax: (801) 531-9850
Web: vcbo.com

PROFESSIONAL STRUCTURAL ENGINEER No. 299033 JEROD G. JOHNSON 8/15/13 STATE OF UTAH

REAVELEY ENGINEERS + ASSOCIATES
Consulting Structural Engineers
P: 801.486.3883
F: 801.485.0911
675 E. 500 S. Suite 400
Salt Lake City, Utah 84102
www.reaveley.com

2nd District Juvenile Courthouse

Utah State Courts
08284150
165 West 20th Street, Ogden, Utah
BID DOCUMENTS

Rev #	Date	Description

Job # 12500
Date August 15, 2013
Owner # 08284150
Ins. #

RAISED FLOOR PLANS

SF111

8/14/2013 4:54:17 PM

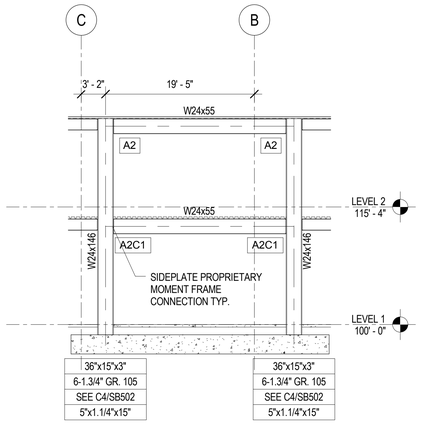

D1 SF201 MOMENT FRAME ELEVATION GRID 5

SCALE: 1/8" = 1'-0"

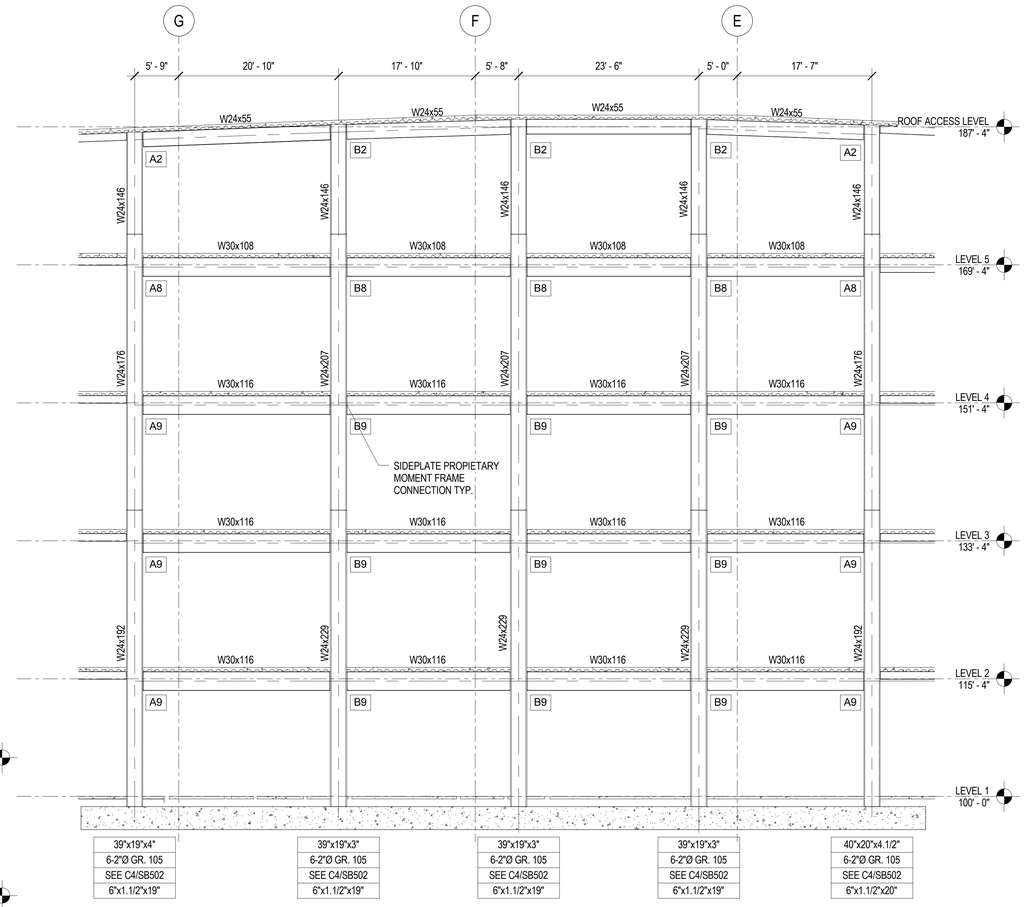

B2 SF201 MOMENT FRAME ELEVATION GRID 2

SCALE: 1/8" = 1'-0"

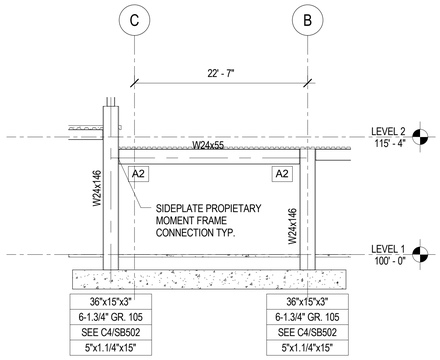

D4 SF201 MOMENT FRAME ELEVATION GRID 1

SCALE: 1/8" = 1'-0"

MOMENT FRAME ELEVATION NOTES AND LEGEND

1. ALL MOMENT FRAME HORIZONTAL FRAMING MEMBERS (BEAMS) SHALL BE ASTM A992 (Fy = 50KSI) STEEL U.N.O.

2. ALL MOMENT FRAME VERTICAL FRAMING MEMBERS (COLUMNS) SHALL BE ASTM A992 (Fy = 50KSI) STEEL U.N.O.

3. ADD 2-3/4" DIA x 5" LONG HEADED STUD ANCHOR AT 12" O.C. TO ALL MOMENT FRAME HORIZONTAL FRAMING MEMBERS (BEAMS) EXCEPT BEAM AT 1.1/2" ROOF DECK (NO CONCRETE).

4. ## SEE SIDEPLATE CONNECTION DETAILS.

5.

BP
AR
EB
SL

BP = BASE PLATE SIZE. (ASTM A572 GRADE 50)
AR = ANCHOR RODS. (ASTM F1554 GRADE 105)
EB = ANCHOR ROD EMBEDMENT LENGTH
SL = SHEAR LUG SEE STEEL SHEAR LUG DETAIL C4/SB502

6. SEE PLANS FOR ADDITIONAL MOMENT FRAME LOCATIONS.

7. VERIFY ALL DATUM ELEVATIONS W/ ARCHITECTURAL DRAWINGS.

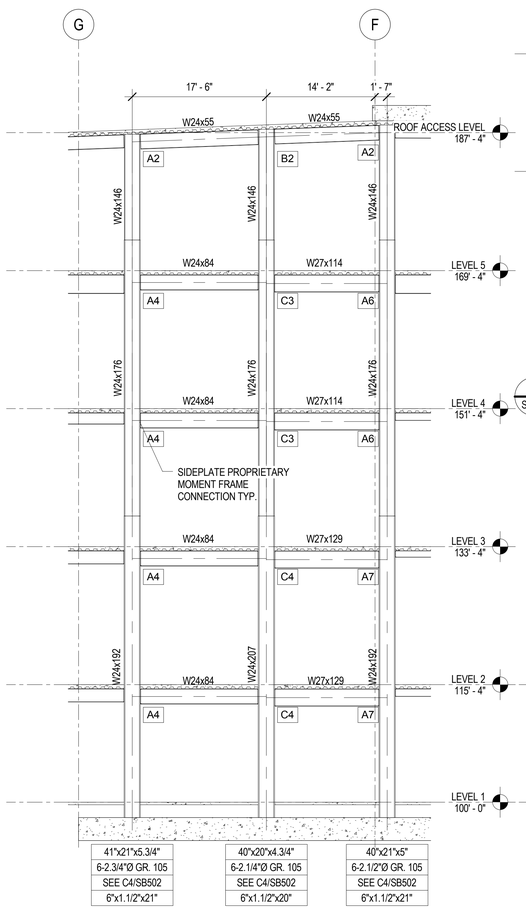

A1 SF201 MOMENT FRAME ELEVATION GRID 9

SCALE: 1/8" = 1'-0"

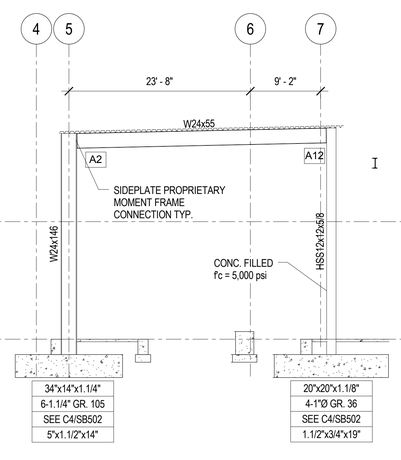

A2 SF201 MOMENT FRAME ELEVATION GRID -A.3

SCALE: 1/8" = 1'-0"

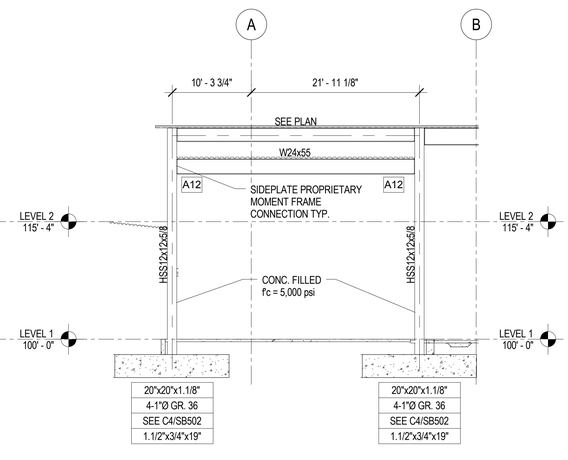

A3 SF201 MOMENT FRAME ELEVATION GRID 7.1

SCALE: 1/8" = 1'-0"

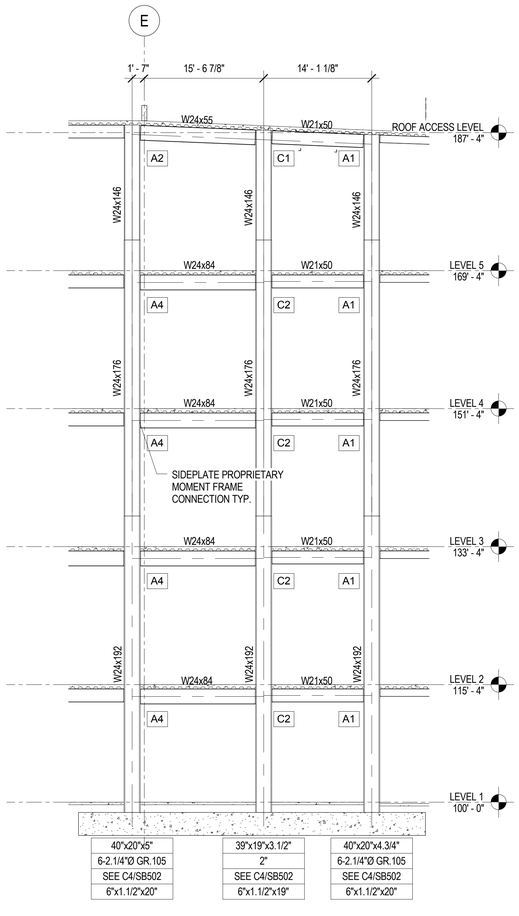

A4 SF201 MOMENT FRAME ELEVATION GRID 7

SCALE: 1/8" = 1'-0"

8/14/2013 4:54:23 PM

VCBO ARCHITECTURE
524 SOUTH 600 EAST
SALT LAKE CITY, UT 84102
Phone: (801) 575-8800
Fax: (801) 531-9850
Web: vcbo.com

REAVELEY ENGINEERS + ASSOCIATES
Consulting Structural Engineers

2nd District Juvenile Courthouse

Utah State Courts
08284150
165 West 20th Street, Ogden, Utah
BID DOCUMENTS

Rev #	Date	Description

Job # 12500
Date August 15, 2013
Owner # 08284150
Ins. #

MOMENT FRAME ELEVATIONS

SF201

MOMENT FRAME ELEVATION NOTES AND LEGEND

SCALE: NONE

1. ALL MOMENT FRAME HORIZONTAL FRAMING MEMBERS (BEAMS) SHALL BE ASTM A992 (Fy = 50KSI) STEEL U.N.O.

2. ALL MOMENT FRAME VERTICAL FRAMING MEMBERS (COLUMNS) SHALL BE ASTM A992 (Fy = 50KSI) STEEL U.N.O.

3. ADD 2-3/4" DIA x 5" LONG HEADED STUD ANCHOR AT 12" O.C. TO ALL MOMENT FRAME HORIZONTAL FRAMING MEMBERS (BEAMS) EXCEPT BEAM AT 1.1/2" ROOF DECK (NO CONCRETE).

4. ## SEE SIDEPLATE CONNECTION DETAILS.

5.

BP
AR
EB
SL

BP = BASE PLATE SIZE. (ASTM A572 GRADE 50)
AR = ANCHOR RODS. (ASTM F1554 GRADE 105)
EB = ANCHOR ROD EMBEDMENT LENGTH
SL = SHEAR LUG SEE STEEL SHEAR LUG DETAIL C4/SB502

6. SEE PLANS FOR ADDITIONAL MOMENT FRAME LOCATIONS.

7. VERIFY ALL DATUM ELEVATIONS W/ ARCHITECTURAL DRAWINGS.

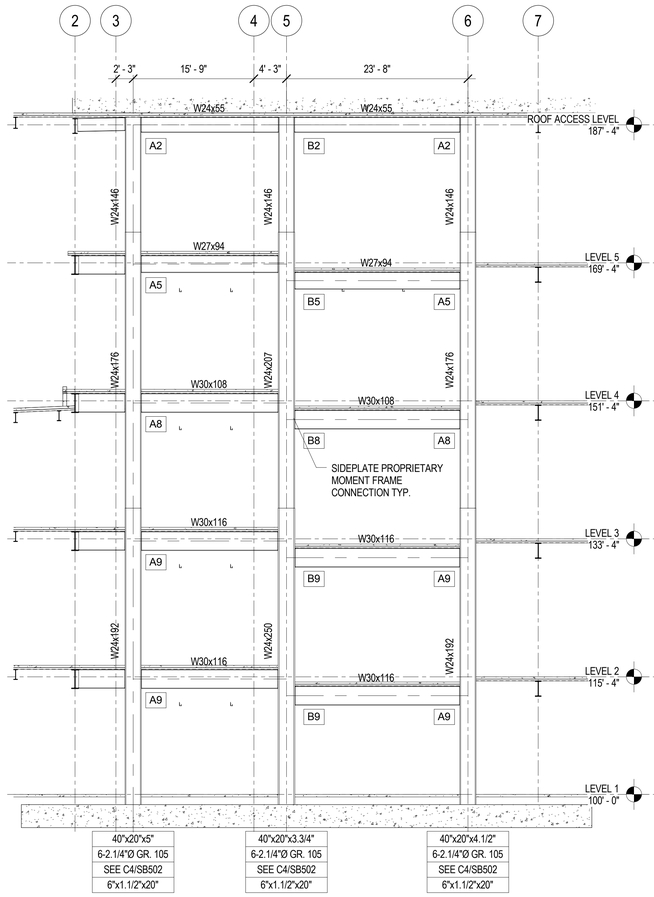

B1 SF202 MOMENT FRAME ELEVATION GRID E
SCALE: 1/8" = 1'-0"

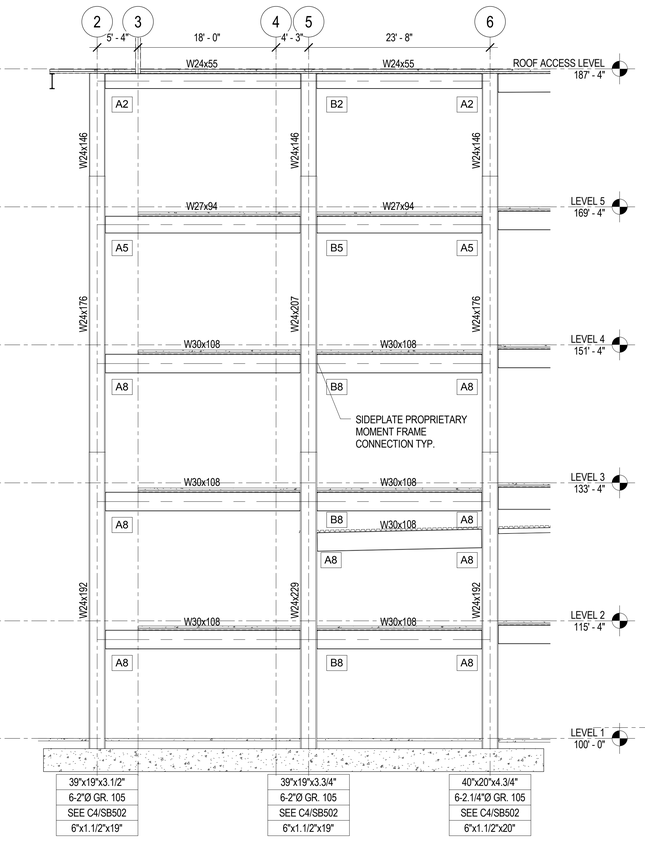

B3 SF202 MOMENT FRAME ELEVATION GRID D
SCALE: 1/8" = 1'-0"

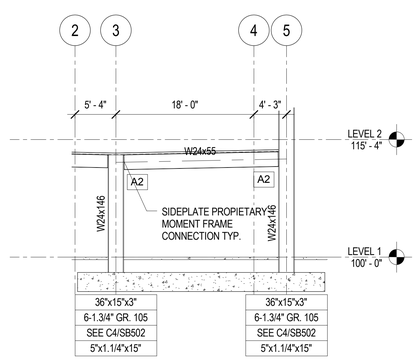

A1 SF202 MOMENT FRAME ELEVATION GRID A
SCALE: 1/8" = 1'-0"

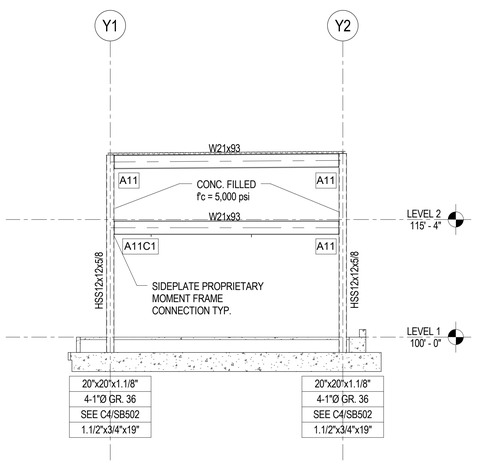

A2 SF202 MOMENT FRAME ELEVATION GRID X.2
SCALE: 1/8" = 1'-0"

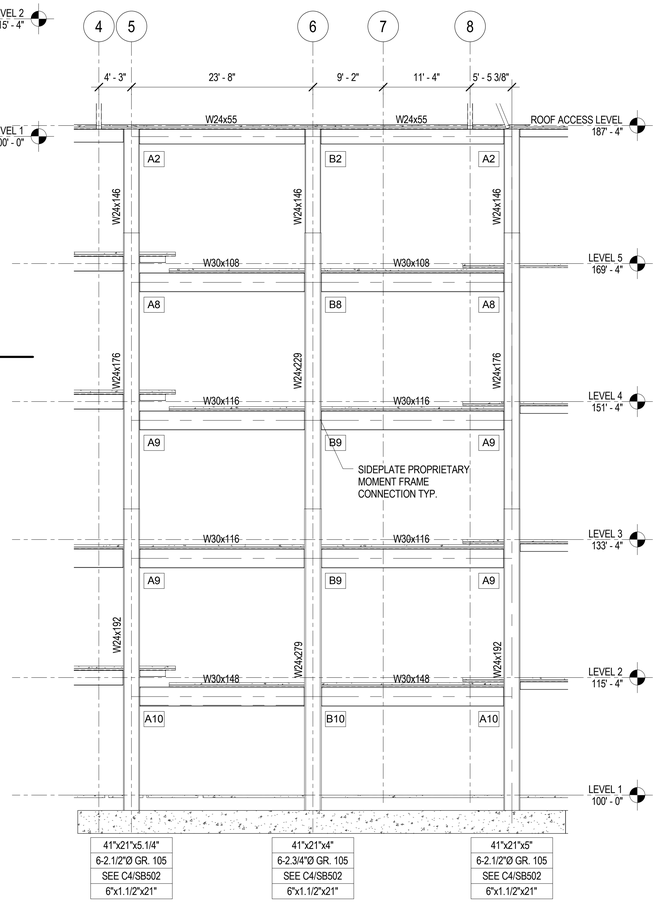

A4 SF202 MOMENT FRAME ELEVATION GRID G
SCALE: 1/8" = 1'-0"

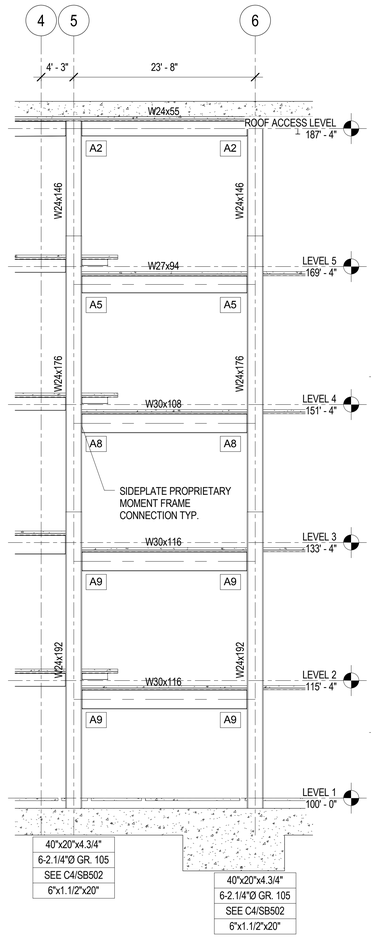

A5 SF202 MOMENT FRAME ELEVATION GRID F
SCALE: 1/8" = 1'-0"

8/14/2013 4:54:25 PM

VCBO ARCHITECTURE
524 SOUTH 600 EAST
SALT LAKE CITY, UT 84102
Phone: (801) 575-8800
Fax: (801) 531-9850
Web: vcbo.com

REAVELEY ENGINEERS + ASSOCIATES
Consulting Structural Engineers
P: 801.486.3883
F: 801.485.0911
675 E. 500 S. Suite 400
Salt Lake City, Utah 84102
www.reaveley.com

2nd District Juvenile Courthouse

Utah State Courts
08284150
165 West 20th Street, Ogden, Utah
BID DOCUMENTS

Rev #	Date	Description

Job # 12500
Date August 15, 2013
Owner # 08284150
Ins. #

MOMENT FRAME ELEVATIONS

SF202

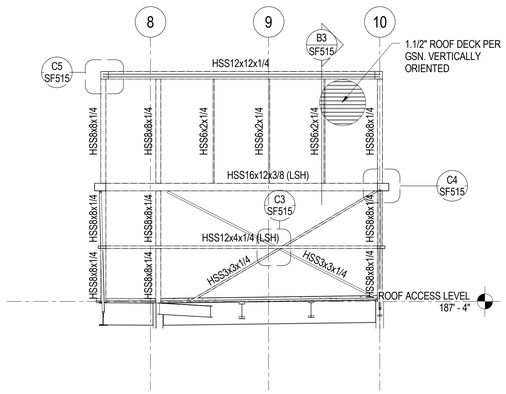

D1 SF205 COOLING TOWER PARAPET SUPPORT ALONG GRID C

SCALE: 1/8" = 1'-0"

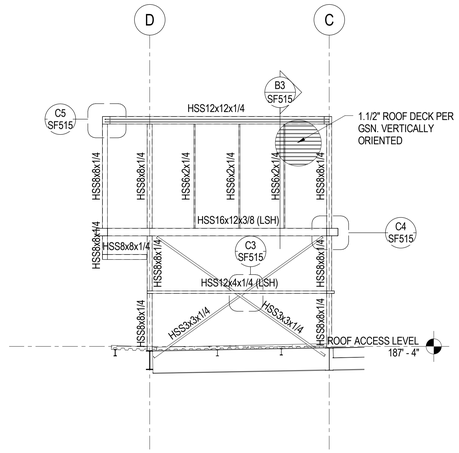

D2 SF205 COOLING TOWER PARAPET SUPPORT ALONG GRID 7.4

SCALE: 1/8" = 1'-0"

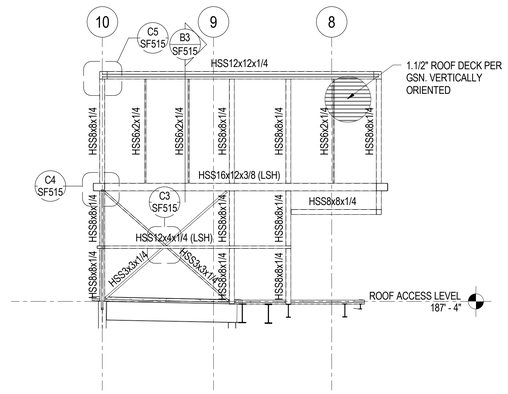

D3 SF205 COOLING TOWER PARAPET SUPPORT ALONG GRID D.2

SCALE: 1/8" = 1'-0"

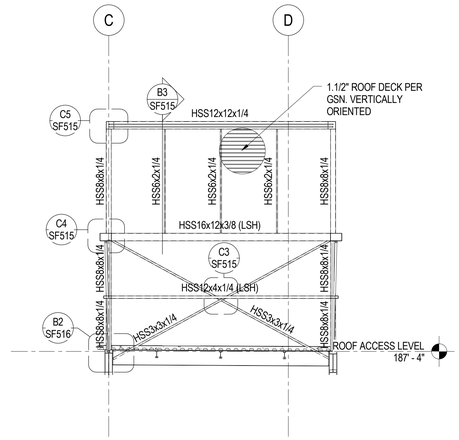

D5 SF205 COOLING TOWER PARAPET SUPPORT ALONG GRID 10

SCALE: 1/8" = 1'-0"

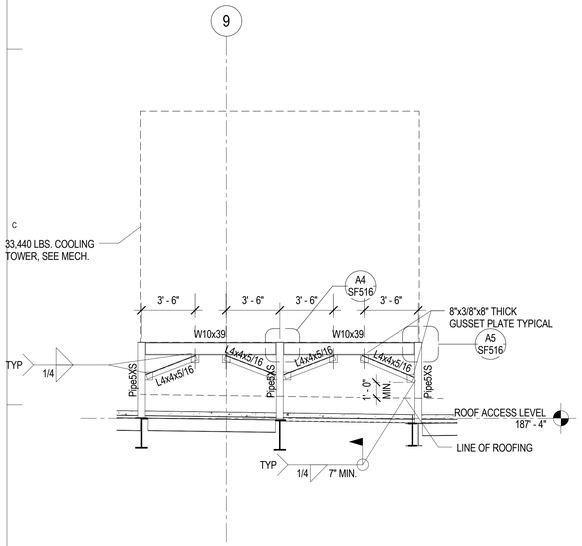

B1 SF205 WEST COOLING TOWER FRAME

SCALE: 1/4" = 1'-0"

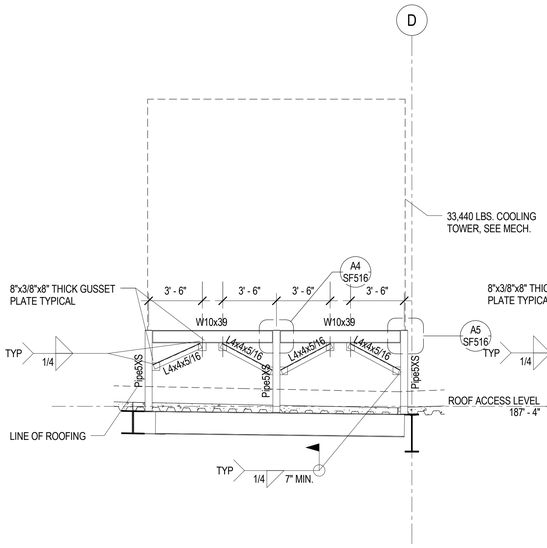

B2 SF205 SOUTH COOING TOWER FRAME

SCALE: 1/4" = 1'-0"

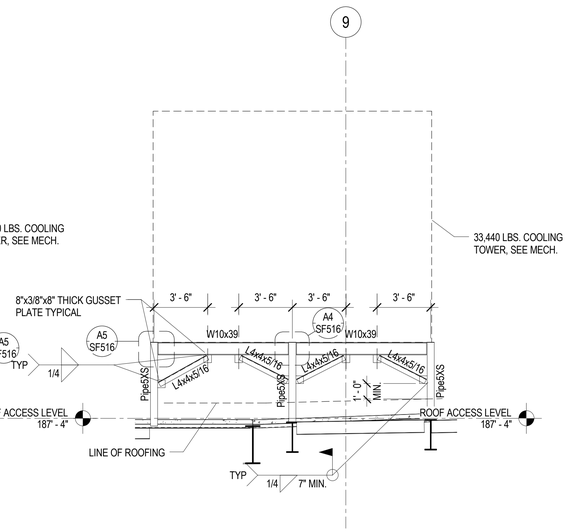

B3 SF205 EAST COOLING TOWER FRAME

SCALE: 1/4" = 1'-0"

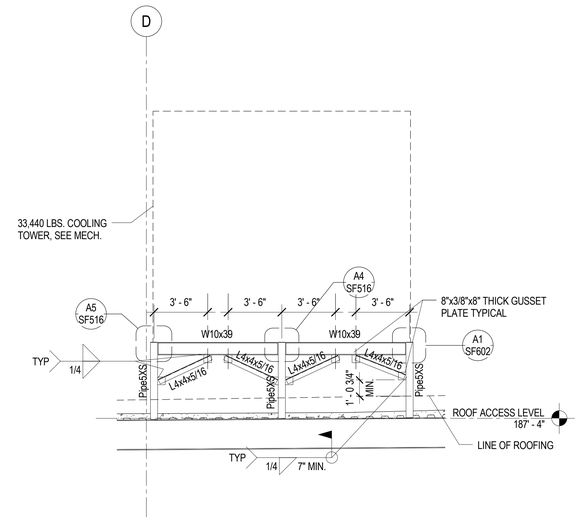

B5 SF205 NORTH COOLING TOWER FRAME

SCALE: 1/4" = 1'-0"

VCBO ARCHITECTURE

VCBO ARCHITECTURE
524 SOUTH 600 EAST
SALT LAKE CITY, UT 84102
Phone: (801) 575-8800
Fax: (801) 531-9850
Web: vcbo.com

PROFESSIONAL STRUCTURAL ENGINEER No. 299733 JEROD G. JOHNSON 8/15/13 STATE OF UTAH

REAVELEY ENGINEERS + ASSOCIATES
Consulting Structural Engineers

P: 801.486.3883
F: 801.485.0911

675 E. 500 S. Suite 400
Salt Lake City, Utah 84102
www.reaveley.com

2nd District Juvenile Courthouse

Utah State Courts
08284150
165 West 20th Street, Ogden, Utah
BID DOCUMENTS

Rev #	Date	Description

Job # 12500
Date August 15, 2013
Owner # 08284150
Ins. #

COOLING TOWER
PARAPET & FRAME
ELEVATIONS

SF205

8/14/2013 4:54:28 PM

INSTRUCTIONS TO STEEL FABRICATOR

1. LICENSE REQUIREMENTS FOR THE USE OF SIDEPLATE® CONNECTION TECHNOLOGY ON SECOND DISTRICT JUVENILE C.H., OGDEN, UT - SIDEPLATE PROJECT TRACKING NUMBER 13002-A-04

SIDEPLATE® LICENSE FEE:

a) THE STEEL FABRICATOR'S BID PRICE FOR PROCUREMENT, FABRICATION AND ERECTION OF STRUCTURAL AND MISCELLANEOUS STEEL SHALL INCLUDE THE SIDEPLATE® LICENSE FEE FOR THE PROJECT. TO OBTAIN THE SIDEPLATE® LICENSE FEE, EACH PROSPECTIVE STEEL FABRICATOR WHO BIDS THE PROJECT SHALL CONTACT SIDEPLATE SYSTEMS, INC. BY ACCESSING THE SIDEPLATE WEBSITE (**http://www.sideplate.com/fee**) TO FORMALLY REQUEST THE SIDEPLATE® LICENSE FEE FOR THE PROJECT. IN THE UNLIKELY EVENT OF WEBSITE TECHNICAL DIFFICULTIES, PROSPECTIVE STEEL FABRICATORS MAY CONTACT SIDEPLATE SYSTEMS, INC. DIRECTLY VIA TELEPHONE TO REQUEST THAT THE SIDEPLATE® LICENSE FEE BE PROVIDED TO THEM VIA EMAIL.

b) UPON THE SUCCESSFUL STEEL FABRICATOR SIGNING A CONTRACT TO FABRICATE STRUCTURAL STEEL FOR THIS PROJECT, THE STEEL FABRICATOR SHALL SUBMIT A PURCHASE ORDER (PO) TO SIDEPLATE SYSTEMS, INC. FOR THE TOTAL AMOUNT OF THE SIDEPLATE® LICENSE FEE AND, SHALL INCLUDE SAID FEE IN ITS FIRST CONSTRUCTION DRAW. THE CONTENT OF THE PO SHALL INCLUDE THE LIST OF ITEMS PROVIDED BY SIDEPLATE SYSTEMS, INC. WHICH IS AVAILABLE FOR DOWNLOADING FROM **http://www.sideplate.com/po**. THE SIDEPLATE® LICENSE FEE SHALL BE PAID WITHIN 75 CALENDAR DAYS FROM THE DATE ON WHICH THE LATEST OF THESE TWO EVENTS OCCURS. WITHOUT LIMITATION OF REMEDIES, LATE PAYMENTS SHALL BEAR INTEREST AT THE RATE OF 10% PER ANNUM.

THE STEEL FABRICATOR SHALL MAKE PAYMENT OF THE SIDEPLATE® LICENSE FEE DIRECTLY TO:

SIDEPLATE SYSTEMS, INC.
23332 MILL CREEK DRIVE, SUITE 225
LAGUNA HILLS, CALIFORNIA 92653
TEL: 949-305-7889

GENERAL

1. THE GOVERNING CODES SHALL CONSIST OF ANSI/AWS D1.1-2008 (AWS D1.1), ANSI/AWS D1.8-2009 AISC CODE OF STANDARD PRACTICE FOR STEEL BUILDINGS AND BRIDGES (APRIL 14,2010), AND ALL APPLICABLE BUILDING AND JURISDICTIONAL CODES AND PROJECT STANDARDS SPECIFIED IN THE PROJECT SPECIFICATION STRUCTURAL STEEL SECTION. WHERE THE REQUIREMENTS DIFFER BETWEEN SIDEPLATE® CONNECTION NOTES, THE GENERAL STRUCTURAL NOTES AND THE GOVERNING CODES, THE MORE STRINGENT SECTION CRITERIA SHALL CONTROL.

2. ALPHA AND NUMERIC DESIGNATORS {#} & {#} USED HEREIN TO SIMPLIFY THE IDENTIFICATION OF PLATES, ANGLES AND WELDS, RESPECTIVELY, ARE DEFINED BELOW:

{A} SIDE PLATE FOR UNIAXIAL CONNECTIONS, PARALLEL TO WEB OF COLUMN, CONNECTING BEAM TO COLUMN

{B} BEAM FLANGE COVER PLATE BRIDGING BETWEEN SIDE PLATES {A}

{C} VERTICAL SHEAR PLATE

{D} HORIZONTAL SHEAR PLATE

{E} ANGLE

{F} VERTICAL SHEAR ELEMENT (WHICH CONSISTS OF PLATE {C} AND/OR ANGLE MATERIAL -SEE GRAPHIC NO. 9 FOR OPTIONS)

{1} FILLET WELD CONNECTING SIDE PLATE {A} TO HORIZONTAL SHEAR PLATE {D}

{2} FILLET WELD CONNECTING INSIDE FACE OF SIDE PLATE {A} TO COLUMN [DEMAND CRITICAL]

{3} FILLET WELD CONNECTING HORIZONTAL SHEAR PLATE {D} TO FACES OF WEB AND FLANGES (WHERE APPLICABLE) OF COLUMN

{4} FILLET WELD TO CONSTRUCT VERTICAL SHEAR ELEMENT {F} AND TO CONNECT VERTICAL SHEAR ELEMENT {F} TO THE BEAM

{5} FILLET WELD CONNECTING EDGE OF BEAM FLANGE TO COVER PLATE {B} [DEMAND CRITICAL]

{5a} FILLET WELD CONNECTING OUTSIDE SURFACE OF BEAM FLANGE TO COVER PLATE {B} 'U'-SHAPED SLOT [DEMAND CRITICAL]

{6} FILLET WELD CONNECTING VERTICAL SHEAR ELEMENT {F} TO VERTICAL EDGE OF SIDE PLATE {A}

{7} FILLET WELD CONNECTING BEAM FLANGE COVER PLATE {B} AND/OR BEAM FLANGE TO SIDE PLATE {A} [DEMAND CRITICAL]

SUBMITTALS

1. IN ADDITION TO THE REQUIRED SUBMITTALS SPECIFIED BY THE BALANCE OF THE CONTRACT DOCUMENTS, THE FOLLOWING SUBMITTALS SHALL BE SENT TO SIDEPLATE SYSTEMS, INC. AT 23332 MILL CREEK DRIVE, SUITE 225, LAGUNA HILLS, CA 92653, PRIOR TO THE START OF THE ACTIVITIES CITED BELOW:

a) DETAILING OF SHOP DRAWINGS:
PRIOR TO THE START OF THIS ACTIVITY, THE FABRICATION SUBCONTRACTOR SHALL FORMALLY REQUEST THE FOLLOWING FROM SIDEPLATE SYSTEMS, INC.:
- THE NOTICE OF INTELLECTUAL PROPERTY (AutoCAD OR WORD FORMAT)
- THE PATENT LABELS

b) SHOP FABRICATION:
PRIOR TO THE START OF THIS ACTIVITY, THE CONTRACTOR SHALL SUBMIT TO SIDEPLATE SYSTEMS, INC VIA THE STRUCTURAL ENGINEER OF RECORD FOR ITS REVIEW AND DISPOSITION:
- DISTORTION CONTROL PROGRAM
- QUALITY CONTROL PROGRAM
- WELDING PROCEDURE SPECIFICATIONS (WPS)
- SUPPORTING PROCEDURE QUALIFICATION RECORDS (PQR)
- ONE ELECTRONIC COPY OF ALL STRUCTURAL STEEL SHOP DRAWINGS THAT EITHER DIRECTLY PERTAINS TO AND/OR AFFECTS THE FABRICATION OR ERECTION OF THE SIDEPLATE® STEEL FRAME CONNECTION SYSTEM, INCLUDING THE INITIAL SUBMITTAL AND ALL CORRECTED RE-SUBMITTALS OF AFFECTED SHOP DRAWINGS. SIDEPLATE SYSTEMS, INC. SHALL BE GIVEN, AS A MINIMUM, THE SAME SPECIFIED REVIEW TIME (NOT LESS THAN 7 BUSINESS DAYS) AS THE ENGINEER OF RECORD.

c) FIELD ERECTION:
PRIOR TO THE START OF THIS ACTIVITY, THE CONTRACTOR SHALL SUBMIT TO SIDEPLATE SYSTEMS, INC VIA THE STRUCTURAL ENGINEER OF RECORD FOR ITS REVIEW AND DISPOSITION:
- DISTORTION CONTROL PLAN
- QUALITY CONTROL PLAN
- WELDING PROCEDURE SPECIFICATIONS (WPS)
- SUPPORTING PROCEDURE QUALIFICATION RECORDS (PQR)
- ONE ELECTRONIC COPY OF ALL STRUCTURAL STEEL ERECTION DRAWINGS RELATED TO THE SIDEPLATE STEEL FRAME CONNECTION SYSTEM.

MATERIAL

1. PLATE AND ANGLE MATERIAL:
a) ALL PLATE MATERIAL SHALL BE ASTM A572, GRADE 50.
b) ANGLE {E} MATERIAL SHALL BE ASTM A529, GRADE 50, OR ASTM A36 (fy=50KSI MIN.), OR EQUIVALENT, UNO.
c) ALL PLATE MATERIAL 2 INCHES THICK AND GREATER SHALL MEET THE FOLLOWING ADDITIONAL REQUIREMENTS:
- ASTM A435 TO PRECLUDE LAMELLAR DISCONTINUITIES
- A MINIMUM CVN TOUGHNESS OF 20 FT-LB. AT A TEMPERATURE OF 70°F IN ACCORDANCE WITH ASTM A6, SUPPLEMENTARY REQUIREMENT S5, AND THE PROVISIONS OF ASTM A673, FREQUENCY P-PIECE TESTING.

d) THE ROLLED DIRECTION (I.E., DIRECTION OF GRAIN) OF SIDE PLATES {A} SHALL BE CLEARLY MARKED, USING ANY SUITABLE NON-DESTRUCTIVE MEANS, BY THE FABRICATION SUBCONTRACTOR ON EACH CUT PLATE TO INDICATE THE DIRECTION OF ROLL.

2. WELD FILLER METAL:
a) THE WELD FILLER METAL AND ASSOCIATED WELDING PROCESS FOR ALL FILLET WELDS SHALL MEET THE REQUIREMENTS OF AWS D1.1 AND D1.8 SECTION 6.3, AND SHALL BE ANY OF THE FOLLOWING, PROVIDED COMPLIANCE WITH NOTES 2.c AND 2.d BELOW IS DEMONSTRATED
- E70T-6, E71T-8 OR E70TG-K2 FOR FCAW
- E7XT-9 FOR FLUX CORED ARC WELDING (FCAW) WITH GAS SHIELDING
- F7A2-EXXX FOR SUBMERGED ARC WELDING (SAW)
- E7018 STICK ELECTRODE FOR SHIELDED METAL ARC WELDING (SMAW)
- ER70S -X, E70C - XM, OR E70C - XC FOR GMAW (EXCEPT SHORT CIRCUIT TRANSFER)

b) THE WELD FILLER METAL USED FOR FILLET WELDS TO CONSTRUCT THE SIDEPLATE® CONNECTION SYSTEM PRESENTED HEREIN SHALL DEMONSTRATE AN ENERGY EQUIVALENT TO A MINIMUM CVN TOUGHNESS OF 20 FT-LBS. IMPACT STRENGTH AT A TEMPERATURE OF -20°F AND 40 FT-LBS. IMPACT STRENGTH AT 70°F AS DETERMINED BY AWS CLASSIFICATION TEST METHODS OR MANUFACTURER CERTIFICATION.

c) ALL WELD FILLER METAL SHALL SATISFY A MAXIMUM DIFFUSIBLE HYDROGEN CONTENT REQUIREMENT PER AWS D1.8, SECTION 6.3.2 OF 16 MILLILITERS OF HYDROGEN PER 100 GRAMS OF WELD METAL (H16) OR LESS.

d) REFER TO AWS D1.8 ANNEX B, FOR REQUIREMENTS WHEN MIXING FCAW-S WITH OTHER WELD PROCESSES.

3. HIGH STRENGTH BOLTS:
a) BOLTS SHALL BE ASTM A325-N GRADE MATERIAL

4. ROLLED SHAPES AND WELDED BUILT-UP SHAPES:
a) ALL ROLLED SHAPES USED FOR COLUMNS AND BEAMS IN CONSTRUCTING SIDEPLATE® MOMENT FRAMES SHALL BE ASTM A992 GRADE 50 UNO.
b) HEAVY SHAPES (AS OCCURS):
- FOR EACH DIFFERENT SIZE OF STEEL FRAME COLUMNS AND BEAMS IDENTIFIED IN THE CONTRACT DOCUMENTS INVOLVING ASTM A6 HOT-ROLLED SHAPES WITH FLANGES 1 1/2 INCHES THICK OR THICKER, AND/OR PLATE 2 INCHES THICK OR THICKER USED TO CONSTRUCT WELDED BUILT-UP SECTIONS, CHARPY V-NOTCH (CVN) TOUGHNESS TESTING SHALL BE CONDUCTED IN ACCORDANCE WITH THE PROVISIONS OF ASTM A673, AS FOLLOWS:
  - FREQUENCY H - HEAT TESTING FOR CITED ASTM A6 GROUP SHAPES AND/OR THRESHOLD OF FLANGE THICKNESS.
  - FREQUENCY P - PIECE TESTING FOR CITED THRESHOLD OF PLATE THICKNESS.
- A MINIMUM CVN TOUGHNESS OF 20 FT-LB AT A TEMPERATURE OF 70° F, IN ACCORDANCE WITH ASTM A6, SUPPLEMENTARY REQUIREMENT S30, SHALL BE DOCUMENTED IN THE (CERTIFIED MILL TEST REPORT) CMTR.
  - IF THE CMTR DOES NOT DOCUMENT THE MINIMUM CVN VALUES, A COUPON SHALL BE REMOVED FROM THE END OF EACH MEMBER SHAPE SAMPLED AND/OR FROM THE END OF EACH PIECE OF PLATE TO BE TESTED. THE LENGTH OF COUPON SHALL BE ORIENTED PARALLEL TO THE LONGITUDINAL AXIS OF THE MEMBER. THE TEST SPECIMEN SHALL BE MACHINED FROM EACH COUPON, EXCEPT THE LONGITUDINAL AXIS OF THE TEST SPECIMEN FOR HEAVY ROLLED SHAPES SHALL BE LOCATED AS NEAR AS PRACTICABLE TO A POINT MIDWAY BETWEEN THE INNER FLANGE SURFACE AND THE CENTER OF FLANGE THICKNESS, AT THE INTERSECTION OF THE WEB MID-THICKNESS, IN ACCORDANCE WITH THE AISC SPECIFICATION FOR STRUCTURAL STEEL BUILDINGS, SECTION A3-1C, HEAVY SHAPES.

5. HSS TUBE SHAPES (AS OCCURS):
a) ALL HSS SHAPES USED FOR COLUMNS AND BEAMS IN CONSTRUCTING SIDEPLATE® MOMENT FRAMES SHALL, AS A MINIMUM, BE ASTM A500 GRADE B.

b) TWIST TOLERANCE (I.E., VARIATION WITH RESPECT TO AXIAL ALIGNMENT): FOR HSS TUBE COLUMNS AND BEAMS LARGER THAN 8 INCHES IN THE LONGEST SIDE DIMENSION, THE MAXIMUM TWIST IN THE FIRST 3 FEET AND EACH ADDITIONAL 3 FEET SHALL NOT EXCEED .056 INCHES. TWIST SHALL BE MEASURED BY HOLDING ONE END OF A SQUARE OR RECTANGULAR TUBE ON A FLAT SURFACE PLATE WITH THE BOTTOM SIDE OF THE TUBE PARALLEL TO THE SURFACE PLATE, AND MEASURING THE HEIGHT THAT EITHER CORNER, AT THE OPPOSITE END OF THE BOTTOM SIDE OF THE TUBE, EXTENDS ABOVE THE SURFACE PLATE.

PREPARATION

1. THE CONTRACTOR'S FABRICATION AND ERECTION SUBCONTRACTOR SHALL EMPLOY A DISTORTION CONTROL PROGRAM AND SHALL SUBMIT IT TO SIDEPLATE SYSTEMS INC. FOR ITS REVIEW AND DISPOSITION PRIOR TO THE START OF SIDEPLATE® MOMENT FRAME FABRICATION. THE DISTORTION CONTROL PROGRAM SHALL BE IN ACCORDANCE WITH THE PROVISIONS OF AWS D1.1 SECTION 5.21 AND 5.22 TO ENSURE THAT THE FOLLOWING ARE MAINTAINED:
- DIMENSIONAL ACCURACY
- FRAMING AND ALIGNMENT TOLERANCES
- COMPLIANCE WITH AISC CODE OF STANDARD PRACTICE FOR STEEL BUILDINGS AND BRIDGES, SECTION 7.0, ERECTION PROVISIONS
- CONTROL OF DISTORTION AND WELD SHRINKAGE

2. BASE METAL SURFACE PREPARATION: SURFACES ON WHICH WELD METAL IS TO BE DEPOSITED, INCLUDING BUT NOT LIMITED TO COLUMN FLANGE TIPS (I.E., COLUMN FLANGE-TO-SIDE PLATE {A} ATTACHMENT), BEAM FLANGE TIPS (I.E., BEAM FLANGE-TO-COVER PLATE {B} ATTACHMENT), AND THERMAL CUT EDGES (E.G., LONGITUDINAL EDGES OF COVER PLATE {B}), SHALL BE SMOOTH, UNIFORM, AND FREE FROM LOOSE OR THICK SCALE, SLAG, RUST, MOISTURE, GREASE AND OTHER FOREIGN MATERIAL THAT WOULD PREVENT PROPER WELDING.

3. THERMAL CUTTING:
a) THE ROUGHNESS OF ALL THERMAL-CUT SURFACES SHALL BE NO GREATER THAN AN ANSI SURFACE ROUGHNESS VALUE OF 1000 MICRO-INCHES. ROUGHNESS EXCEEDING THIS VALUE, AND NOTCHES OR GOUGES NOT MORE THAN 3/16 INCH DEEP, ON OTHERWISE SATISFACTORY SURFACES SHALL BE REMOVED BY MACHINING OR GRINDING.

b) FLAME CUT SURFACES SHALL BE FREE OF GLOBULES AND LOOSE SLAG. THE THERMAL CUTTING EQUIPMENT SHALL BE ADJUSTED AND MANIPULATED SO AS TO AVOID CUTTING BEYOND (INSIDE) THE PRESCRIBED LINES.

c) THERMAL CUTTING PROCESSES SHALL BE LIMITED TO PLASMA ARC-CUTTING OR OXYFUEL GAS PROCESSES.

4. WEB/FLANGE FILLET AREA (K-LINE):
a) UNLESS NOTED OTHERWISE,VERTICAL SHEAR PLATES {C} AND HORIZONTAL SHEAR PLATES {D} SHALL HAVE THEIR INSIDE CORNERS CLIPPED PER AWS D1.8 CLAUSE 4 TO PREVENT WELDING IN THE K-AREA BETWEEN WEB AND FLANGE. THE DIMENSIONS OF THE CLIPPED CORNER SHALL BE DETAILED ON THE SHOP DRAWINGS AND SHALL BE SUCH THAT THE WELD FROM THE PLATE TO THE WEB STARTS AND STOPS A DISTANCE OF 11/2" FROM THE TANGENT OF THE FLANGE TO WEB FILLET (I.E., THE AISC 'K' DIMENSION).

b) WELD {3} RETURNS ON THE INSIDE FACE OF THE COLUMN FLANGES (AS OCCURS): IN NO CASE SHALL A WELD TIE-IN OF WELD {3} BE ALLOWED ACROSS THE CLIPPED CORNER OF THE HORIZONTAL SHEAR PLATES {D}, AT THE K-LINE BETWEEN WEB AND FLANGE.

c) WHERE WELDING OF HORIZONTAL SHEAR PLATE {D} OR VERTICAL SHEAR PLATE {C} ENCROACH INTO THE K-AREA (AS DEFINED IN AISC 341-10), THE WEB SHALL BE TESTED FOR CRACKS USING MAGNETIC PARTICLE TESTING (MT). THE MT INSPECTION AREA SHALL INCLUDE THE ACCESSIBLE K-AREA BASE METAL WITHIN 3 INCHES.

WELDING

1. WELDER QUALIFICATION: THE PERFORMANCE OF ALL WELDERS, WELDING OPERATORS AND TACK WELDERS SHALL BE QUALIFIED IN CONFORMANCE WITH AWS D1.1, SECTION 4, PART C TO DEMONSTRATE ABILITY TO PRODUCE SOUND WELDS.

2. WELDING PROCEDURE SPECIFICATIONS (WPS):

a) THE CONTRACTOR SHALL PREPARE A SPECIFIC WRITTEN WPS FOR EVERY DIFFERENT WELDING APPLICATION. DIFFERENT WELDING APPLICATIONS INCLUDE, BUT ARE NOT LIMITED TO, THE JOINT DETAILS AND TOLERANCES, PREHEAT AND INTERPASS TEMPERATURE, SINGLE OR MULTIPLE STRINGER PASSES, WELDING CURRENT, POLARITY, ALLOWABLE AMPERAGE RANGES, ALLOWABLE VOLTAGE RANGES, ALLOWABLE TRAVEL SPEED RANGES, ELECTRODE EXTENSION, ROOT TREATMENT, WELDING POSITION, WELDING PROCESS, ELECTRODE MANUFACTURER, FILLER METAL TRADE NAME FOR THE ELECTRODE TYPE SELECTED, AND OTHER ESSENTIAL VARIABLES AS DEFINED IN AWS D1.1 REQUIRED TO COMPLETE THE FABRICATION AND ERECTION OF THE SPECIFIED SIDEPLATE® CONNECTIONS. AMPERAGE, VOLTAGE, TRAVEL SPEED AND ELECTRODE EXTENSION SHALL BE WITHIN THE FILLER METAL MANUFACTURER'S RECOMMENDATIONS.

b) EACH WPS PREPARED SHALL BE BASED ON AND REFERENCED TO A DOCUMENTED PROCEDURE QUALIFICATION RECORD (PQR). PREVIOUS WPS QUALIFICATION PERFORMED BY THE CONTRACTOR'S FABRICATION/ERECTION SUBCONTRACTOR THAT COMPLIES WITH THE PROVISIONS HEREIN MAY SATISFY THIS REQUIREMENT. EACH WPS AND SUPPORTING PQR SHALL BE SUBMITTED TO THE ENGINEER OF RECORD, AND TO SIDEPLATE SYSTEMS, INC. FOR REVIEW AND DISPOSITION PRIOR TO STARTING THE WORK.

c) THE APPROVED WPS FOR EACH APPLICABLE PRODUCTION WELD, FOR THE WORK TO BE PERFORMED, SHALL BE CLEARLY DISPLAYED TO PROVIDE READY ACCESS BY THE ASSIGNED WELDERS, WELDING SUPERVISORS AND INSPECTORS.

d) EACH WPS SHALL BE PREPARED BY A QUALIFIED INDIVIDUAL WHO IS RESPONSIBLE FOR THE SUITABILITY OF THE WPS.

3. WELDING PROCEDURE QUALIFICATION RECORDS (PQR):
a) DOCUMENTED PROCEDURE QUALIFICATION RECORDS SHALL BE MAINTAINED BY THE CONTRACTOR'S FABRICATION/ERECTION SUBCONTRACTOR. PROCEDURE QUALIFICATION SHALL CONFORM TO THE REQUIREMENTS OF AWS D1.1, TABLE 4.1 AND EMPLOY THE FOLLOWING TESTING METHODS AND ACCEPTANCE CRITERIA:
- VISUAL INSPECTION IN ACCORDANCE WITH AWS D1.1, SECTION 4.8.1.
- ULTRASONIC TESTING (UT) BEFORE PREPARING MECHANICAL TEST SPECIMENS, IN ACCORDANCE WITH AWS D1.1, SECTION 4.8.2.
- MECHANICAL TESTING IN ACCORDANCE WITH AWS D1.1, SECTION 4.8.3. THE TYPE AND NUMBER OF TEST SPECIMENS, FOR EACH QUALIFIED PRODUCTION WELDING POSITION, SHALL BE PER AWS D1.1, TABLE 4.2 (1), USING A GROOVE WELD TEST PLATE PER FIGURE 4.10(2).
- ALTERNATELY, FOR FILLET WELDS ONLY, QUALIFICATION BY MECHANICAL TESTING MAY BE SATISFIED BY A CONSUMABLES VERIFICATION TEST IN ACCORDANCE WITH AWS D1.1, SECTION 4.11.3 USING A GROOVE WELD TEST PLATE PER FIGURE 4.23, WELDED IN THE FLAT POSITION; FOLLOWED BY MACROETCH TEST IN ACCORDANCE WITH AWS D1.1, SECTION 4.11.2, USING A FILLET WELDED T-JOINT TEST PLATE PER FIGURE 4.19 FOR EACH QUALIFIED PRODUCTION WELDING POSITION. THE TYPE AND NUMBER OF TEST SPECIMENS, FOR EACH QUALIFIED PRODUCTION WELDING POSITION, SHALL BE PER AWS D1.1, TABLE 4.4.
- CHARPY V-NOTCH IMPACT TESTING OF THE WELD METAL IN ACCORDANCE WITH AWS D1.1, SECTION 4.1.1.3. THE REQUIRED TEST TEMPERATURE AND ENERGY VALUE SHALL BE THAT SPECIFIED IN MATERIAL SECTION 2.C. THE TYPE AND NUMBER OF NOTCH TOUGHNESS SPECIMENS, FOR EACH QUALIFIED PRODUCTION WELDING POSITION, SHALL BE PER AWS D1.1, ANNEX III, TABLE III-1. ONE SPECIMEN MAY BE LESS THAN THE MINIMUM AVERAGE OF 20 FT-LBS., BUT NOT LESS THAN 15 FT-LBS.

b) ALL PROCEDURE QUALIFICATION TESTING SHALL BE THE RESPONSIBILITY OF THE CONTRACTOR AND SHALL BE PERFORMED BY AN INDEPENDENT TESTING LABORATORY CERTIFIED BY THE APPLICABLE GOVERNMENTAL BODY AND APPROVED BY THE AUTHORITY HAVING JURISDICTION.

c) IN LIEU OF THE REQUIREMENTS OF 3.a AND 3.b, A CURRENT CERTIFICATE OF CONFORMANCE PROVIDED BY THE WIRE MANUFACTURE MAY BE USED AS THE SUPPORTING PQR PROVIDED FULL COMPLIANCE WITH EVERY SINGLE CONDITION OF PREQUALIFICATION FOUND IN AWS D1.1 SECTION 3 ,AND AWS D1.8 HIGH AND LOW HEAT INPUT, FOR PREQUALIFIED FILLET AND CJP WELDS. THE SELECTION OF THIS OPTION BY THE CONTRACTOR'S FABRICATION/ERECTION SUBCONTRACTOR IS PREDICATED ON ITS ACKNOWLEDGEMENT THAT ITS CERTIFIED WELDERS ARE EXPERIENCED AND CONFIDENT IN THE USE AND SETTINGS SPECIFIED IN THE CERTIFICATE OF CONFORMANCE WITH THE ALLOWABLE TOLERANCES FOR ESSENTIAL VARIABLES FOUND IN TABLE 4.5 OF AWSD1.1. COMBINATIONS OF WELDING VARIABLES SHALL PRODUCE HEAT INPUTS WITHIN THE RANGE QUALIFIED BY THE ELECTRODE MANUFACTURER'S HEAT INPUT ENVELOPE TESTING OF FILLER METALS AS REQUIRED BY AWS D1.8.

4. TACK WELDS:
a) TACK WELDS SHALL BE PLACED WHERE THEY WILL BE INCORPORATED INTO A FINAL WELD AND SHALL BE SUBJECT TO THE SAME QUALITY REQUIREMENTS AS THE FINAL WELDS, INCLUDING POSITION, PREHEAT AND UNDERCUT, IN ACCORDANCE WITH AWS D1.1, SECTION 5.18.2 AND AWS D1.8, SECTION 6.16. THESE QUALITY REQUIREMENTS SHALL APPLY EQUALLY TO TACK WELDING OF ANY OTHER CONSTRUCTION AIDS.

b) TACK WELDS BETWEEN SIDE PLATE {A}, AND FLANGE EDGES OF COLUMN SHALL NOT BE PLACED WITHIN 3 INCHES OF EACH END OF WELD {2}, AND THEY SHALL NOT BE PERMITTED ACROSS THE COLUMN'S FLANGE THICKNESS.

c) TACK WELDS BETWEEN SIDE PLATES {A}, AND COVER PLATES {B} , AND TACK WELDS BETWEEN BEAM FLANGE TIPS AND COVER PLATES {B} , SHALL NOT BE PLACED WITHIN 3 INCHES OF EACH END OF WELD {7} OR WELD {5} , RESPECTIVELY.

d) ALIGNMENT CONTROL METHODS TO MAINTAIN THE NECESSARY SEPARATION DISTANCE REQUIRED TO INSTALL BEAM ASSEMBLY INCLUDE, BUT ARE NOT LIMITED TO, TACK WELDING OF TEMPORARY ANGLE STRUTS ('DOGS') TO TOP AND BOTTOM FREE EDGES OF SIDE PLATE {A}.

5. WELD RUN-OFF TABS SHALL NOT BE USED FOR FILLET WELDS.

6. PREHEAT AND INTERPASS TEMPERATURE REQUIREMENTS:
a) THE MINIMUM PREHEAT AND INTERPASS TEMPERATURES FOR A GIVEN THICKNESS OF BASE METAL TO BE WELDED SHALL BE IN ACCORDANCE WITH AWS D1.1 TABLE 3.2.

b) IN NO CASE, REGARDLESS OF THE WELDING PROCESS, SHALL THE PREHEAT TEMPERATURE BE LESS THAN THAT REQUIRED TO DRIVE OFF ANY SURFACE MOISTURE OR CONDENSATION WHICH MAY BE PRESENT ON THE STEEL ELEMENTS TO BE WELDED.

c) PREHEAT TEMPERATURES SHALL BE MEASURED AT A DISTANCE FROM THE WELD EQUAL TO THE THICKNESS OF THE PART BEING WELDED, BUT NOT LESS THAN THREE INCHES IN ANY DIRECTION INCLUDING THE THROUGH THICKNESS OF THE PIECE. WHERE PLATES ARE OF DIFFERENT THICKNESS, THE PREHEAT REQUIREMENT FOR THE THICKER PLATE SHALL GOVERN. MAINTENANCE OF PREHEAT TEMPERATURE THROUGH THE EXECUTION OF THE WELD (I.E. THE INTERPASS TEMPERATURE) IS ESSENTIAL. MAXIMUM INTERPASS TEMPERATURE SHALL NOT EXCEED 550 DEGREES FAHRENHEIT, MEASURED AT A DISTANCE NOT EXCEEDING THREE INCHES FROM THE START OF THE WELD PASS. WELDING OPERATORS AND INSPECTORS SHALL BE IN POSSESSION OF AND UTILIZING TEMPERATURE MEASURING DEVICES.

7. ALL SLAG SHALL BE REMOVED AFTER EACH WELD PASS AND THE WELD AND THE ADJACENT BASE METAL SHALL BE CLEANED BEFORE WELDING OVER PREVIOUSLY DEPOSITED WELD METAL. THIS REQUIREMENT SHALL APPLY NOT ONLY TO SUCCESSIVE LAYERS BUT ALSO TO SUCCESSIVE BEADS AND TO THE CRATER AREA WHEN WELDING IS RESUMED AFTER ANY INTERRUPTION, IN ACCORDANCE WITH AWS D1.1 SECTION 5.30.1.

8. ARC STRIKES WITHIN THE SIDEPLATE PROTECTED ZONE ON BOTH THE INTERIOR AND EXTERIOR FACES OF SIDE PLATES {A}, WITHIN THE TOP AND BOTTOM 6 INCHES OF PLATE HEIGHT SHALL BE AVOIDED. IF THEY DO OCCUR, THEY SHALL BE REMOVED BY GRINDING AND SHALL HAVE BASE METAL REPAIRED AND NON-DESTRUCTIVE TESTING AS NECESSARY.

9. WELD END TERMINATIONS FOR RECESSED PLATE {D} OPTION ONLY (AS OCCURS FOR THE WELD {3} ONLY ON THE COLUMN WEB AND FLANGES):
a) IN ORDER TO PREVENT TIE-IN BETWEEN THE ENDS OF WELD {3} , CLOSEST TO THE INSIDE FACE OF SIDE PLATE {A} , AND WELD {1} , THE ENDS OF WELD {1} SHALL BE HELD BACK FROM THE FLANGE TIP OF COLUMN BY A DISTANCE EQUAL TO WELD {3} PLUS 1/8". IN NO CASE SHALL A WELD TIE-IN BETWEEN THE ENDS OF WELD {1} AND THE ENDS OF WELD {3} CLOSEST TO THE INSIDE FACE OF SIDE PLATE {A} BE ALLOWED. FABRICATION PRIORITY IS GIVEN HEREIN TO WELDING FILLET WELD {3} ALONG ITS FULL DISTANCE.

10. PEENING SHALL NOT BE ALLOWED.

BOLTING

1. ASTM A325-N BOLTS ARE PERMITTED TO BE INSTALLED TO SNUG-TIGHT CONDITION. THE SNUG-TIGHT CONDITION IS DEFINED AS THE TIGHTNESS ATTAINED BY EITHER A FEW IMPACTS OF AN IMPACT WRENCH OR THE FULL EFFORT OF A WORKER WITH AN ORDINARY SPUD WRENCH THAT BRINGS THE CONNECTED PLIES INTO FIRM CONTACT.

QUALITY CONTROL

1. THE CONTRACTOR'S FABRICATION/ERECTION SUBCONTRACTOR SHALL BE RESPONSIBLE FOR QUALITY CONTROL BY PROVIDING, AS A MINIMUM, IN-PROCESS VISUAL INSPECTION OF ALL FABRICATION AND ERECTION ACTIVITIES TO ENSURE THAT MATERIALS AND WORKMANSHIP MEET THE REQUIREMENTS OF THE CONTRACT DOCUMENTS, AND SHALL INCLUDE WORK PERFORMED PRIOR TO ASSEMBLY. SUCH WORK SHALL INCLUDE, BUT NOT BE LIMITED TO, VERIFYING THAT EFFECTIVE PROCEDURES AND METHODS HAVE BEEN EMPLOYED IN THE FORM OF AN EFFECTIVE DISTORTION CONTROL PROGRAM TO ACCOUNT FOR AND COUNTERACT THE EFFECTS OF WELD SHRINKAGE, EXISTING BEAM SWEEP AND CAMBER, AND CHANGES IN MOMENT FRAME GEOMETRY DUE TO SKEWED AND CURVED DESIGN CONFIGURATIONS (AS OCCURS), TO ENSURE COMPLIANCE WITH SPECIFIED ERECTION AND ALIGNMENT TOLERANCES. QC INSPECTION SHALL INCLUDE **HOLD POINTS** FOR THE FOLLOWING:

FULL-LENGTH BEAM APPLICATIONS:

a) COLUMN TREE ASSEMBLY

i. VERIFICATION THAT ACTUAL COLUMN FLANGE WIDTH IS AT LEAST NOMINAL COLUMN FLANGE WIDTH WHERE THE SIDE PLATES {A} ARE TO BE INSTALLED. IN THE UNLIKELY EVENT ACTUAL COLUMN FLANGE WIDTH IS LESS THAN NOMINAL, BUT WITHIN AISC STANDARD MILL TOLERANCES (-3/16" MAX), CONTACT SIDEPLATE SYSTEMS, INC FOR APPROPRIATE RECOMMENDATIONS.

ii. QC INSPECTION SHALL PROVIDE A HOLD POINT AFTER PLACEMENT OF WELD {2}, COOLING OF WELD {2} AND REMOVAL OF BOTTOM 'DOG' TO VERIFY MINIMUM DIMENSION 'Z' ANYWHERE IN BETWEEN THE SIDE PLATES FROM TOP TO BOTTOM, AND TO ASCERTAIN IF REQUIRED RATTLE SPACE WILL BE PROVIDED BASED ON THE DETAILED WIDTH OF TOP COVER PLATE {B} (SEE GRAPHIC NO. 5).

iii VERIFICATION THAT THE CENTER OF BOTTOM BOLT HOLE IN EACH SIDE PLATE {A} IS 6 INCHES ABOVE THE BOTTOM EDGE OF SIDE PLATE {A}.

b) FULL-LENGTH BEAM ASSEMBLY

i. VERIFICATION OF PERPENDICULAR ALIGNMENT BETWEEN TOP FACE OF BOTTOM COVER PLATE {B} AND WEB OF FULL-LENGTH BEAM, TO MINIMIZE, IF NOT ELIMINATE, ANY POTENTIAL ROOT GAP BETWEEN BOTTOM EDGE OF EACH SIDE PLATE {A}, AND TOP FACE OF THE BOTTOM COVER PLATE {B} WHEN THE FULL-LENGTH BEAM HAS BEEN LIFTED INTO PLACE.

ii. VERIFICATION THAT THE CENTER OF BOTTOM ERECTION BOLT HOLE IS 6 INCHES ABOVE THE TOP FACE OF THE BOTTOM COVER PLATE {B}. CONSIDERATION SHALL BE GIVEN TO THE CUPPING UPWARD OF THE BOTTOM COVER PLATE {B}.

iii. VERIFICATION THAT THE ENTIRE EXTERIOR FACE OF THE OUTSTANDING LEG OF VERTICAL SHEAR ELEMENT IS PARALLEL TO THE WEB OF THE FULL-LENGTH BEAM. IN NO CASE SHALL THE OUTSIDE FACE OF THE VERTICAL SHEAR ELEMENT EXTEND BEYOND THE EDGE OF TOP COVER PLATE {B}.

2. EXPOSURE LIMITATIONS ON FCAW ELECTRODES:
a) AFTER REMOVAL FROM PROTECTIVE PACKAGING, THE PERMISSIBLE ATMOSPHERIC EXPOSURE TIME OF FCAW ELECTRODES SHALL NOT EXCEED THE ELECTRODE MANUFACTURER'S GUIDELINES AND SHALL BE IN ACCORDANCE WITH AWS D1.8 SECTION 6.4.

3. FILLET WELD FIT-UP TOLERANCES:
a) THE PARTS TO BE JOINED BY FILLET WELDS SHALL BE BROUGHT INTO AS CLOSE CONTACT AS PRACTICABLE, USING AS NECESSARY SUITABLE CLAMPING MEANS. THE ROOT OPENING (I.E., THE FIT-UP GAP) SHALL NOT EXCEED 1/4 INCH. FOR FILLET WELD ROOT GAPS GREATER THAN 1/16 INCH, THE LEG SIZE (I.E., THE SPECIFIED SIZE) OF FILLET WELD SHALL BE INCREASED BY THE AMOUNT OF THE ROOT OPENING.

4. HSS COLUMN TREE FABRICATION (AS OCCURS):
a) FABRICATION QUALITY CONTROL
ALL SQUARE TUBES SHALL COMPLY WITH THE TWIST TOLERANCE REQUIREMENTS DEFINED IN ITEM 4 IN THE MATERIAL SECTION OF THESE NOTES. TUBES EXCEEDING THE TWIST TOLERANCE SHALL BE REJECTED AND REPLACED BY THE FABRICATOR. ANY ADDITIONAL COST SHALL BE BORNE BY THE FABRICATOR.

b) DISTORTION CONTROL
THE DISTORTION CONTROL PROGRAM SHALL ACCOUNT FOR AND COUNTERACT BUT NOT BE LIMITED TO THE EFFECT OF EXISTING TUBE STEEL COLUMN TWIST, AND EXISTING BEAM SWEEP AND CAMBER THAT COULD AFFECT THE ADEQUACY OF THE MEMBERS AND THEIR CONNECTIONS AND/OR THE STRUCTURE AS A WHOLE IF NOT EFFECTIVELY ADDRESSED. TO MINIMIZE THE EFFECT OF THE TUBE STEEL COLUMN TWIST, IT IS RECOMMENDED THAT THE CONTRACTOR'S FABRICATION AND ERECTION SUBCONTRACTOR PURCHASE TUBE MATERIAL FROM SUPPLIERS CAPABLE OF PRODUCING TUBE SHAPES FREE OF SIGNIFICANT DISTORTION.

NOTICE OF INTELLECTUAL PROPERTY
The SIDEPLATE® steel frame connection system described herein is PATENTED technology protected and covered by one or more of U.S. patent nos. 5,660,017; 6,138,427; 6,516,583; 6,591,573; 7,178,296; 8,122,671; 8,122,672; 8,146,322, 8,176,706 and 8,205,408; other U.S. and foreign patents pending; and also contains trade secret information that is PROPRIETARY to SidePlate Systems, Inc. [tel (800) 475-2077 and (949) 305-7889, fax (949) 305-6395; www.sideplate.com]. R=8

Copyright©2012 SidePlate Systems, Inc. all rights reserved. Without limitation, this drawing and the information hereon may be used by others solely (i) upon payment in full of SidePlate® License Fee to SidePlate Systems, Inc. and (ii) in connection with the design, construction, operation, repair, maintenance, restoration or demolition of the building(s) specifically identified hereon, all other uses being expressly prohibited. v5.3.1

QUALITY ASSURANCE

1. IN ADDITION TO ALL OTHER QUALITY ASSURANCE INSPECTION ACTIVITIES, THE OWNER'S VERIFICATION INSPECTOR SHALL BE RESPONSIBLE FOR:
a) MAGNETIC PARTICLE TESTING (MT) SHALL BE PROVIDED IN ACCORDANCE WITH AWS D1.1, ASTM E709 AND ASTM E1444 FOR PROCEDURE AND TECHNIQUE FOR FILLET WELDS{7} . INSPECT THE BEGINNING AND END OF THESE WELDS FOR A 6 INCH LENGTH, PLUS ANY LOCATION ALONG THE LENGTH OF THE WELD WHERE A START AND RESTART IS VISUALLY NOTED FOR A DISTANCE OF 6 INCHES ON EITHER SIDE OF THE STOP/START LOCATION. THE STANDARDS OF ACCEPTANCE SHALL BE IN ACCORDANCE WITH AWS D1.1, ASTM E709 AND ASTM E1444.

A SLIDING SAMPLING SCALE MAY BE USED, IN LIEU OF 100% MT INSPECTION, IF APPROVED BY THE ENGINEER OF RECORD AND THE AUTHORITY HAVING JURISDICTION, IN ACCORDANCE WITH THE FOLLOWING SPECIFICATION, WHICH PROVIDES FOR A REDUCTION IN THE MT TESTING RATE FOR AN INDIVIDUAL WELDER OR WELDING OPERATOR BASED ON THE REJECTION RATE DEMONSTRATED BY THE INDIVIDUAL WELDER OR WELDING OPERATOR, AS RECORDED BY THE QA VERIFICATION INSPECTOR. SPECIFICALLY, THE RATE OF MT INSPECTION MAY BE REDUCED TO 25% OF WELDED JOINTS (FOR WELD {7} WHEN AN INDIVIDUAL WELDER'S REJECT RATE IS LESS THAN 5%, AFTER 40 WELDS HAVE BEEN INSPECTED FOR A JOB.

b) EACH WPS AND SUPPORTING PQR SHALL BE SUBMITTED TO THE ENGINEER OF RECORD, AND TO SIDEPLATE SYSTEMS, INC. FOR REVIEW AND APPROVAL **PRIOR TO THE START OF FABRICATION**.

c) TO ASSURE THE PROPER AMPERAGE AND VOLTAGE OF THE WELDING PROCESS, THE USE OF HAND HELD CALIBRATED AMP AND VOLT METERS SHALL BE USED. THIS EQUIPMENT SHALL BE USED BY THE FABRICATOR, ERECTOR, AND THE INSPECTOR. AMPERAGE AND VOLTAGE SHALL BE MEASURED NEAR THE ARC. TRAVEL SPEED AND ELECTRODE STICK OUT SHALL BE VERIFIED TO BE IN COMPLIANCE WITH THE APPROVED WPS.

d) VISUAL INSPECTION SHALL BE PERFORMED ON ALL SHOP AND FIELD WELDS.

e) EACH WELDER EMPLOYED ON THE PROJECT SHALL UNDERSTAND ALL THE REQUIREMENTS OF THE WELDING PROCEDURE SPECIFICATION(S) BEFORE WELDING ON THE PROJECT.

f) WHERE WELDING OF HORIZONTAL SHEAR PLATE {D} OR VERTICAL SHEAR PLATE {C} ENCROACH INTO THE K-AREA (AS DEFINED IN AISC 341), THE WEB SHALL BE TESTED FOR CRACKS USING MAGNETIC PARTICLE TESTING (MT). THE MT INSPECTION AREA SHALL INCLUDE THE K-AREA BASE METAL WITHIN 3 IN. (75 MM) OF THE WELD. THE MT SHALL BE PERFORMED NO SOONER THAN 48 HOURS FOLLOWING COMPLETION OF THE WELDING.

PROTECTED ZONES

1. PER AISC 341 SEISMIC PROVISIONS FOR STRUCTURAL STEEL BUILDINGS, SECTION 7.4, SPECIAL (SMF) AND INTERMEDIATE (IMF) MOMENT FRAME SYSTEMS SHALL HAVE DESIGNATED PROTECTED ZONES AS FOLLOWS:

BEAM
- THE PROTECTED ZONE STARTS FROM THE VERTICAL EDGE OF SIDE PLATE {A}, AWAY FROM THE COLUMN, AND ENDS 0.83 TIMES THE DEPTH OF THE BEAM, SEE SIDEPLATE® TYPICAL DETAILS. NOTE: WELD {5} AND/OR {5a} IS ACCEPTABLE IN THIS PROTECTED ZONE.

SIDE PLATE
- THE PROTECTED ZONE FOR THE SIDE PLATES {A} ARE DEFINED AS A RECTANGULAR AREA CENTERED AT THE COLUMN/BEAM SEPARATION (GAP) ALONG THE TOP AND BOTTOM EDGES OF THE SIDE PLATES {A}. SEE SIDEPLATE® TYPICAL DETAILS. NOTE: WELDS {1}, {2} & {7} ARE ACCEPTABLE IN THIS PROTECTED ZONE.

INTELLECTUAL PROPERTY

1. IN ORDER TO SAFEGUARD THE AUTHORIZED USE AND INTELLECTUAL PROPERTY OF THE PATENTED SIDEPLATE® CONNECTION TECHNOLOGY, THE CONTRACTOR SHALL REQUIRE ITS FABRICATION SUBCONTRACTOR TO SATISFY THE FOLLOWING REQUIREMENTS:

a) A NOTICE OF INTELLECTUAL PROPERTY, IDENTICAL TO THAT PROVIDED ON THIS SHEET, SHALL BE AFFIXED ON EACH SHEET OF SHOP DETAIL AND FIELD ERECTION DRAWINGS CONTAINING SIDEPLATE® SYSTEM INFORMATION WHICH DISCLOSES IN ANY WAY THE SIDEPLATE® CONNECTION CONCEPT PRIOR TO RELEASING SUCH INFORMATION FOR ITS INTENDED USE. SUCH NOTICE SHALL BE PROVIDED TO THE CONTRACTOR'S FABRICATION SUBCONTRACTOR BY SIDEPLATE SYSTEMS, INC. IN A FORMAT (E.G. WORD OR AUTOCAD) SUITABLE TO THE NEEDS OF THE FABRICATION SUBCONTRACTOR'S DETAILER.

b) PATENT LABEL SHALL BE APPLIED ON THE OUTSIDE FACE OF ONE OF THE TWO BOTTOM HORIZONTAL STIFFENER PLATES {D}, OF EACH MOMENT CONNECTION (SEE GRAPHIC NO. 5) AND ON ONE END OF THE FULL LENGTH BEAM WEB BETWEEN THE TOP AND BOTTOM COVER PLATES {B} (SEE GRAPHIC NO.8), IN COMPLIANCE WITH THE PATENT AND INTELLECTUAL PROPERTY LAWS OF THE UNITED STATES OF AMERICA.

CONSTRUCTION GUIDELINES

1. THE CONTRACTOR SHALL ASSUME FULL AND COMPLETE RESPONSIBILITY FOR THE MEANS AND METHODS OF CONSTRUCTING THE STEEL FRAME USING THE SIDEPLATE® CONNECTION SYSTEM. CONSTRUCTION MEANS AND METHODS SHALL BE COMPLIANT WITH THE CURRENT PROVISIONS OF AWS D1.1, AND WITH THE CONSTRUCTION GUIDELINES PROVIDED HEREIN; AND SHALL INCLUDE, BUT ARE NOT LIMITED TO:

a) DIMENSIONAL VERIFICATION AND CONTROL

b) FILLET WELD END PROFILE AND HOLDBACK DISTANCES FROM EDGE OF PLATE

c) STEEL DETAILING AND ERECTION DRAWINGS

d) FABRICATION AND ERECTION PROCEDURES (INCLUDING METHODS FOR CONTROLLING DISTORTION DUE TO WELD SHRINKAGE, AND FOR CONTROLLING COMBINED MILL, FABRICATION AND ERECTION TOLERANCES)

e) WELDING PROCEDURES

f) WELDING SEQUENCE OF FABRICATED AND ERECTED ELEMENTS

g) QUALITY CONTROL MEASURES

h) CONSTRUCTION STRUCTURES SUCH AS ERECTION RIGGING AND SHORING

2. THE SEQUENCE OF CONSTRUCTION OPTIONS PROVIDED BELOW IN THESE CONSTRUCTION GUIDELINES HAVE PROVEN TO BE SUCCESSFUL BY STEEL FABRICATORS AND ERECTORS TO COST EFFICIENTLY CONSTRUCT THE SIDEPLATE® CONNECTION SYSTEM. VARIATIONS TO THESE CONSTRUCTION SEQUENCE OPTIONS PROVIDED BELOW SHALL BE SUBMITTED FOR REVIEW AND DISPOSITION TO SIDEPLATE SYSTEMS, INC.

3. A PRE-FABRICATION KICK-OFF MEETING WITH A SIDEPLATE SYSTEMS, INC REPRESENTATIVE IS REQUIRED FOR ALL PROJECTS.

4. WELD END PROFILE OF FILLET WELDS:
a) THE START AND STOP OF FILLET WELDS {1}, {2}, {3}, {4}, {5a}, {6} AND {7} SHALL BE ACCOMPLISHED BY STEPPED STRINGER PASSES STARTING FROM EACH END OF ROOT PASS. STEPPED PASSES SHALL BE STACKED AT AN ANGLE THAT IS BETWEEN 45° AND 90° WITHOUT OVERLAPPING, UNO.
b) START OR STOP FILLET WELDS AS DEFINED BELOW IN GRAPHIC NO. 1. NO WRAP AROUND WILL BE ALLOWED.

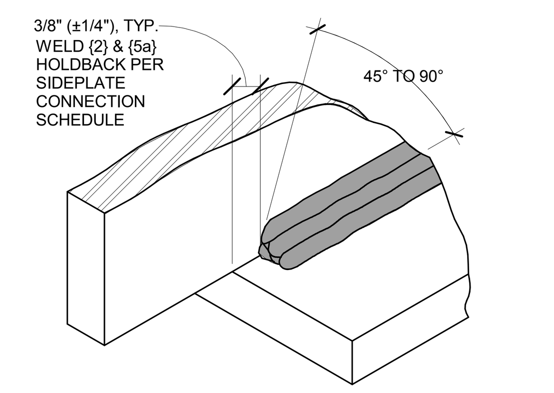

GRAPHIC NO. 1 - FILLET WELD END PROFILE FOR FILLET WELDS {1}, {2}, {3}, {4},{5a}, {6} AND {7}

c) THE END OF FILLET WELD {5}, FURTHEST FROM BEAM END, SHALL BE ACCOMPLISHED BY STEPPED STRINGER PASSES STARTING FROM THE END OF THE PREVIOUSLY DEPOSITED STRINGER PASS. THE ROOT PASS SHALL START A DISTANCE FROM END OF COVER PLATE {B} PER THE HOLDBACKS CALLED OUT IN THE SIDEPLATE CONNECTION SCHEDULE. STEPPED PASSES SHALL BE STACKED PER GRAPHIC 2 BELOW.

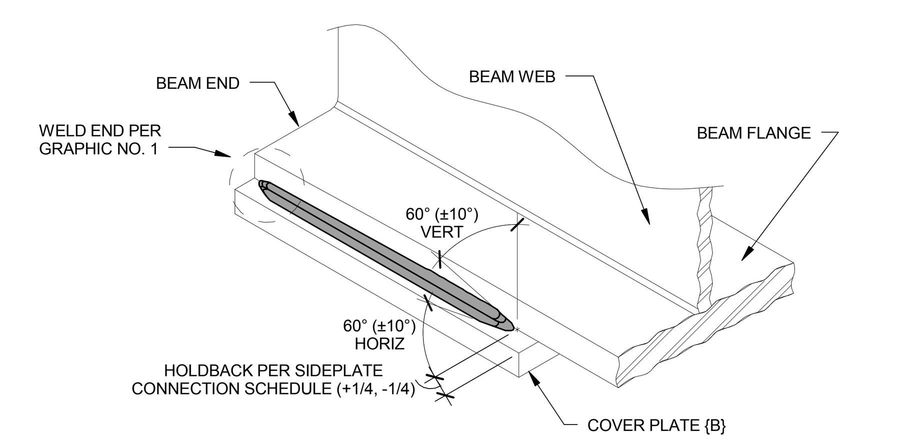

GRAPHIC NO. 2 - WELD END PROFILE & TERMINATION OF FILLET WELD {5}, FURTHEST FROM BEAM END

d) NON-COMPLIANCE WITH WELD END PROFILES SHALL BE DOCUMENTED AND SUBMITTED TO SIDEPLATE SYSTEMS, INC. FOR REVIEW AND DISPOSITION.

e) THE START, STOP AND APPLICABLE PROFILE OF EACH FILLET WELD END SHALL BE NOTED ON THE SHOP DRAWINGS.

VCBO ARCHITECTURE
524 SOUTH 600 EAST
SALT LAKE CITY, UT 84102
Phone: (801) 575-8800
Fax: (801) 531-9850
Web: vcbo.com

REAVELEY ENGINEERS + ASSOCIATES
Consulting Structural Engineers
P: 801.486.3883
F: 801.485.0911
675 E. 500 S. Suite 400
Salt Lake City, Utah 84102
www.reaveley.com

2nd District Juvenile Courthouse

Utah State Courts
08284150
165 West 20th Street, Ogden, Utah
BID DOCUMENTS

Rev #	Date	Description

Job # 12500
Date August 15, 2013
Owner # 08284150
Ins. #

SIDEPLATE GENERAL NOTES (1 OF 2)

PROFESSIONAL ENGINEER No. 311750-2202 JARED J ADAMS STATE OF UTAH
03/19/2013

SF210

8/14/2013 5:24:22 PM

SHOP FABRICATION OF THE SIDEPLATE FRAME® SYSTEM

(THE SIDEPLATE FRAME® SYSTEM CONSISTS OF FIELD LIFTING AND PLACING A FULL-LENGTH BEAM ASSEMBLY BETWEEN SIDE PLATES {A} OF OPPOSING COLUMN TREE ASSEMBLIES).

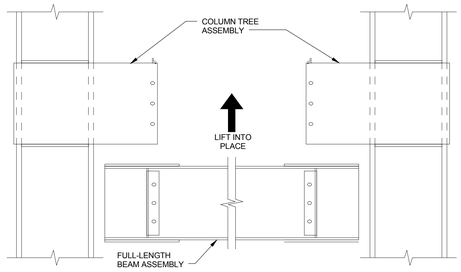

GRAPHIC NO. 3 SIDEPLATE FRAME® SYSTEM FIELD ERECTION METHOD

1. COLUMN TREE ASSEMBLY FOR UNIAXIAL CONNECTIONS (CONSISTS OF COLUMN SECTION, TOP AND BOTTOM HORIZONTAL SHEAR PLATES {D}, AND SIDE PLATES {A}).

a) TACK SIDE PLATES {A} AND HORIZONTAL SHEAR PLATES {D} TO THE COLUMN.
- QC INSPECTION SHALL PROVIDE VERIFICATION THAT ACTUAL COLUMN FLANGE WIDTH IS AT LEAST NOMINAL COLUMN FLANGE WIDTH WHERE THE SIDE PLATES {A} ARE TO BE INSTALLED. IN THE UNLIKELY EVENT ACTUAL COLUMN FLANGE WIDTH IS LESS THAN NOMINAL, BUT WITHIN AISC STANDARD MILL TOLERANCES (-3/16" MAX), CONTACT SIDEPLATE SYSTEMS FOR APPROPRIATE RECOMMENDATIONS.

b) WELD HORIZONTAL SHEAR PLATES {D} TO COLUMN WEB USING FILLET WELDS {3} ON OUTER FACE OF PLATE. WHEN WELD {3} OCCURS ON THE COLUMN FLANGES, A WELD TIE-IN OF FILLET WELDS {3} SHALL NOT BE ALLOWED ACROSS THE CLIPPED CORNER OF HORIZONTAL SHEAR PLATE {D} AT THE K-LINE AREA. SEE PREPARATION NOTE 4.a.

c) WELD HORIZONTAL SHEAR PLATES {D} TO SIDE PLATE {A} USING FILLET WELD {1}.

d) TEMPORARILY MAINTAIN FLARED-OUT SEPARATION OF SIDE PLATES {A}, IN ANTICIPATION OF WELD {2} SHRINKAGE EFFECTS, BY SUITABLE CONSTRUCTION AIDS (SUCH AS ANGLE IRON 'DOGS', PIPES OR STRUTS) AT THE TOP AND BOTTOM OF THE SIDE PLATE {A}. THEY MAY BE CUT TO FIT AND BEAR ON THE INSIDE FACE OF THE SIDE PLATES OR CUT LONG AND TACKED TO THE EDGES OF THE SIDE PLATES. SUCH CONSTRUCTION AIDS ACT AS SPACERS DURING THE WELDING AND SUBSEQUENT COOL DOWN OF FILLET WELDS {2}. SEE GRAPHIC NO. 4.

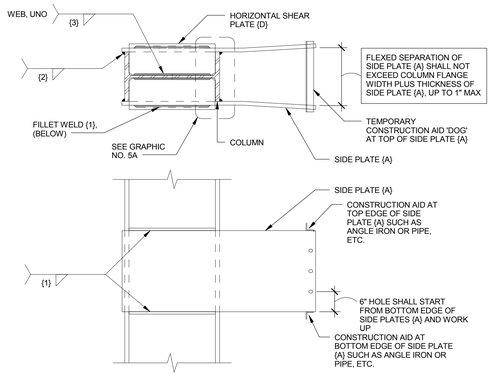

GRAPHIC NO. 4 - COLUMN TREE ASSEMBLY READY FOR WELD {2}

e) WELD INSIDE FACE OF SIDE PLATES {A} TO THE FLANGE TIPS OF COLUMN USING FILLET WELDS {2}. REFER TO GRAPHIC NO 5A FOR CONDITIONS WITH NON-SQUARE COLUMN FLANGE TOES DUE TO MILL ROLLING.

f) AFTER COOL DOWN OF COMPLETED FILLET WELDS {2}, REMOVE ALL CONSTRUCTION AIDS EXCEPT FOR THE ONE AT THE TOP OF SIDE PLATES {A} AND THEN VERIFY DIMENSION 'Z' AT BOTTOM OF SIDE PLATES {A}. DIMENSION 'Z' IS THE REQUIRED CLEARANCE FOR INSERTING THE FULL-LENGTH BEAM ASSEMBLY. REFER TO NOTE 1A BELOW FOR ADDITIONAL DIMENSION 'Z' INFORMATION.

- IF CLEARANCE VERIFICATION IS SUFFICIENT, A SUITABLE ERECTION AID (AKA 'TOP DOG') SHALL BE WELDED TO THE TOP EDGE OF THE SIDE PLATES {A}. IT SHALL BE SUFFICIENTLY STRONG TO REMAIN IN PLACE DURING TRANSPORTATION AND ERECTION OF FULL-LENGTH BEAM (NOTE THIS CONSTRUCTION AID WILL BE UNDER LOAD AND CARE SHALL BE TAKEN WHEN REMOVING).
- IF CLEARANCE VERIFICATION IS NOT SUFFICIENT, FLEX SIDE PLATES {A} BY JACKING THEM APART TO A DIMENSION GREATER THAN THE WIDTH OF COLUMN FLANGE (MAXIMUM SEPARATION SHALL NOT EXCEED WIDTH OF COLUMN FLANGE PLUS THICKNESS OF ONE SIDE PLATE {A} UP TO 1" MAX WITHOUT APPROVAL FROM SIDEPLATE SYSTEMS, INC.) TO COMPENSATE FOR THE SHRINKAGE EFFECT OF FILLET WELDS {2} ON MAINTAINING PARALLEL ALIGNMENT BETWEEN SIDE PLATES {A}. ONCE NECESSARY CLEARANCE HAS BEEN ESTABLISHED, A SUITABLE ERECTION AID (AKA 'TOP DOG') SHALL THEN BE WELDED TO TOP EDGE OF SIDE PLATES {A}. IT SHALL BE SUFFICIENTLY STRONG TO REMAIN IN PLACE DURING TRANSPORTATION AND ERECTION OF FULL-LENGTH BEAM (NOTE THIS CONSTRUCTION AID WILL BE UNDER LOAD AND CARE SHALL BE TAKEN WHEN REMOVING).

1A. THE FOLLOWING FABRICATION AND SEPARATION MEASURES ARE IMPLEMENTED AND MAINTAINED THROUGH DELIVERY TO THE FIELD IN ORDER TO FACILITATE THE LIFTING INTO PLACE OF THE FULL-LENGTH BEAM ASSEMBLY BETWEEN SIDE PLATES {A} OF OPPOSING COLUMN ASSEMBLIES.

a) MAINTAIN SUFFICIENT SEPARATION BETWEEN THE INTERIOR FACES OF SIDES PLATES {A} (DENOTED HEREAFTER AS DIMENSION 'Z' - SEE GRAPHIC NO. 5) TO INSURE SUFFICIENT RATTLE SPACE UPON LIFTING INTO PLACE THE FULL-LENGTH BEAM ASSEMBLY.

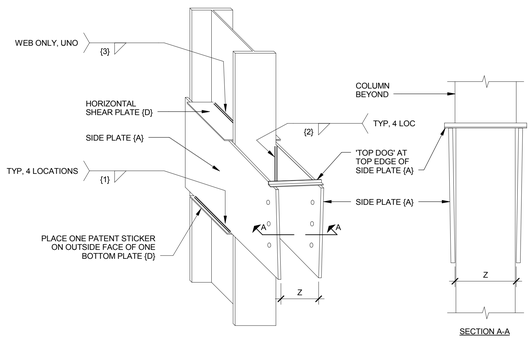

GRAPHIC NO. 5 - COMPLETED SIDEPLATE® FRAME COLUMN TREE ASSEMBLY

b) THE 'Z' DIMENSION SHALL EXTEND AND BE MAINTAINED ANYWHERE IN BETWEEN THE SIDE PLATES FROM TOP TO BOTTOM.

c) THE FABRICATOR MAY PROVIDE A RATTLE SPACE OF APPROXIMATELY 1/4" BETWEEN THE INSIDE FACES OF SIDE PLATES {A} AND THE WIDTH OF THE TOP COVER PLATE {B} OF THE FULL-LENGTH BEAM ASSEMBLY.

d) IN ADDITION TO THE USE OF SEPARATION METHODS PREVIOUSLY IDENTIFIED, THE DETAILED WIDTH OF TOP COVER PLATE {B} CAN BE CORRESPONDINGLY DIMENSIONED TO BE THE COLUMN FLANGE NOMINAL WIDTH OR UP TO 1/8" LESS AT THE FABRICATOR'S DISCRETION. THE REDUCTION IN WIDTH OF THE TOP COVER PLATE {B} SHALL BE BASED ON THE FABRICATOR'S EXPERIENCE WITH THE TYPICAL MILL OVERRUN IN COLUMN FLANGE WIDTH FOR THE COLUMN SECTIONS BEING USED. THE PROPER DETAILED DIMENSIONING OF THE TOP COVER PLATE {B} IS TO FACILITATE ERECTION CLEARANCE DURING THE LIFTING INTO PLACE OF FULL-LENGTH BEAM ASSEMBLY SEE GRAPHIC NO. 5A.

- IT'S IMPORTANT TO MAINTAIN SUFFICIENT EDGE DISTANCE BETWEEN THE LONGITUDINAL EDGE OF COVER PLATE {B} AND THE CORRESPONDING FLANGE TIP OF THE BEAM FOR PLACEMENT OF WELD {5}.
- THE STRUCTURAL STEEL DETAILER SHALL CONSIDER THE SUGGESTED DETAILED WIDTH OF TOP COVER PLATE {B} FOUND IN THE TABLE IN GRAPHIC NO. 5A WHICH IS BASED ON AVERAGES OF MILL TOLERANCE OVERRUNS IN COLUMN FLANGE WIDTHS REPORTED BY EXPERIENCED FABRICATORS.

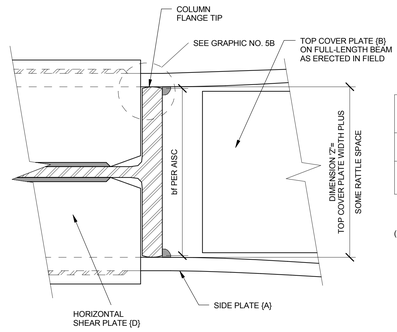

GRAPHIC NO. 5A

COLUMN FLANGE THICKNESS	REPORTED AVERAGE MILL OVERRUNS (1)	SUGGESTED DETAILED WIDTH OF TOP COVER PLATE (B) (1)	POTENTIAL RATTLE SPACE
< 1 1/2"	0- 3/16"	(NOMINAL COLUMN FLANGE WIDTH)-1/8"	1/8" - 5/16"
≥ 1 1/2"	1/8" - 5/16"	(NOMINAL COLUMN FLANGE WIDTH)-1/16"	3/16" -3/8"

TOP COVER PLATE (B) WIDTH TABLE

(1) SIDEPLATE SYSTEMS, INC. ASSUMES NO RESPONSIBILITY FOR ACTUAL PROJECT SPECIFIC MILL OVER RUNS AND HOW SUCH OVER RUNS MAY AFFECT THE FIT-UP IN THE FIELD. STRUCTURAL STEEL DETAILER AND FABRICATOR SHALL WORK CLOSELY TO DETERMINE THE APPROPRIATE DETAILED WIDTH OF TOP COVER PLATE (B).

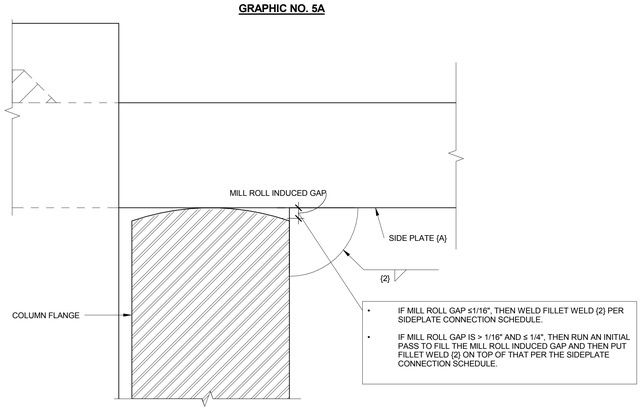

GRAPHIC NO.5B

e) QC INSPECTION SHALL PROVIDE A HOLD POINT AFTER PLACEMENT OF WELD {2}, COOLING OF WELD {2} AND REMOVAL OF ALL CONSTRUCTION AIDS EXCEPT FOR 'TOP DOG' TO VERIFY MINIMUM DIMENSION 'Z' ANYWHERE IN BETWEEN THE SIDE PLATES FROM TOP TO BOTTOM, AND TO ASCERTAIN IF REQUIRED RATTLE SPACE WILL BE PROVIDED BASED ON THE DETAILED WIDTH OF TOP COVER PLATE {B} (SEE GRAPHIC NO. 5).

f) FOR THE PURPOSE OF SETTING TOP OF STEEL OF THE FULL-LENGTH BEAM, THE DIMENSIONING OF ERECTION BOLT HOLES IN SIDE PLATES {A} SHALL START AND BE REFERENCED FROM THE BOTTOM EDGE OF SIDE PLATES {A}.

2. FULL-LENGTH BEAM ASSEMBLY: (CONSISTS OF A FULL-LENGTH BEAM, TOP AND BOTTOM COVER PLATES {B}, AND VERTICAL SHEAR ELEMENT (OPTIONS 1, 2, 3):

a) PRIOR TO CUTTING COVER PLATES {B}, IT IS HIGHLY RECOMMENDED THAT A SUFFICIENT RANDOM SAMPLING OF ACTUAL COLUMN FLANGE WIDTH DIMENSIONS BE MADE SO THAT THE AS-DETAILED COVER PLATE {B} WIDTH AND RATTLE SPACE CAN BE VERIFIED. IF THERE IS A DISCREPANCY, AN ADJUSTMENT IN THE COVER PLATE {B} WIDTH SHOULD BE MADE.

b) AS BEST AS POSSIBLE, BOTTOM COVER PLATE {B} SHALL BE PLACED PERPENDICULAR TO THE WEB OF BEAM, REGARDLESS OF POSSIBLE FLANGE TILT (AS ROLLED BY THE MILL).

c) QC INSPECTION SHALL PROVIDE HOLD POINT FOR VERIFICATION OF PERPENDICULAR ALIGNMENT BETWEEN TOP FACE OF BOTTOM COVER PLATE {B} AND WEB OF FULL-LENGTH BEAM, TO MINIMIZE, IF NOT ELIMINATE ANY POTENTIAL ROOT GAP BETWEEN BOTTOM EDGE OF EACH SIDE PLATE {A} AND TOP FACE OF THE BOTTOM COVER PLATE {B}, WHEN THE FULL-LENGTH BEAM HAS BEEN LIFTED INTO PLACE.

d) CUTTING OF THE 'U'-SHAPED SLOT SHALL BE ACCOMPLISHED BY DRILLING AND SAW CUT OR BY THERMAL CUTTING. PROCESS CAN BE AUTOMATED OR BY HAND. SURFACE OF THE CUT SHALL BE FINISHED PER SECTION 2. AND 3. OF 'PREPARATION'.

e) TACK WELDING THE COVER PLATES {B} IN THE BEAM'S PROTECTED ZONE SHALL NOT BE PERMITTED.

f) WELD BEAM FLANGE COVER PLATES {B} TO BEAM USING FILLET WELDS {5} (SEE GRAPHIC NO 2)AND (5a) (SEE GRAPHIC NO. 1) BEFORE TACK WELDING THE VERTICAL SHEAR ELEMENT (I.E. THIS IS A DISTORTION CONTROL METHOD THAT IS RECOMMENDED, DUE TO THE POTENTIAL WARPING EFFECTS OF WELD {5} ON THE BOTTOM COVER PLATE {B}).

g) FOR THE PURPOSE OF SETTING THE TOP OF STEEL ELEVATION OF THE FULL-LENGTH BEAM, THE DIMENSIONING OF THE BOLT HOLES IN THE OUTSTANDING LEG OF THE VERTICAL SHEAR ELEMENT SHALL START AND BE REFERENCED 6 INCHES FROM THE TOP FACE OF THE BOTTOM COVER PLATE {B} THAT IS WELDED IN PLACE. IF THE BOTTOM COVER PLATE {B} HAS DISTORTION OR A CUPPING UPWARD EFFECT DUE TO WELD {5}, GENERAL AREA HEATING MAY BE APPLIED TO THE BOTTOM COVER PLATE {B} IN ORDER TO REMOVE THE CUPPING UPWARD AFFECT ALONG THE ENTIRE LENGTH OF THE COVER PLATE {B}. ALTERNATELY, THE THICKNESS OF SIDE PLATE {A} SHALL BE CONSIDERED WHEN PLACING THE VERTICAL SHEAR ELEMENT AS TO WHEN THE SIDE PLATE {A} WILL FIRST MAKE CONTACT WITH THE TOP FACE OF BOTTOM COVER PLATE {B}, (SEE GRAPHIC NO. 7).

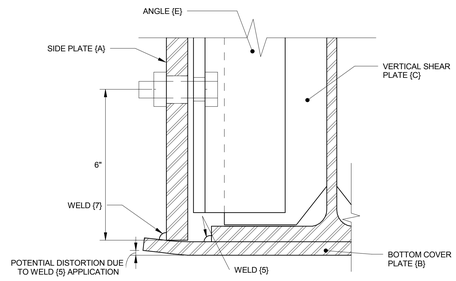

GRAPHIC NO. 7

h) THE ENTIRE EXTERIOR FACE OF THE OUTSTANDING LEG OF THE VERTICAL SHEAR ELEMENT SHALL BE PLACED PARALLEL TO THE WEB OF THE FULL-LENGTH BEAM, AND SHALL ALSO DEFINE A VERTICAL PLANE THAT COINCIDES WITH THE LONGITUDINAL EDGE OF TOP COVER PLATE {B} OR A 1/16" IN FROM EDGE.

i) QC INSPECTION SHALL PROVIDE HOLD POINT FOR VERIFICATION OF THE PLACEMENT OF THE VERTICAL SHEAR ELEMENT AND ITS VERTICAL HOLE ALIGNMENTS PER PROVISION OF INSTRUCTION "f)", "g)" AND "h)") ABOVE (SEE GRAPHIC NO. 8).

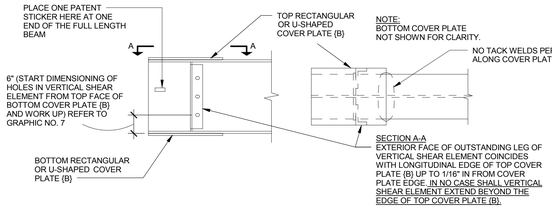

GRAPHIC NO. 8-TYP END OF COMPLETED SIDEPLATE FULL-LENGTH BEAM ASSEMBLY

j) WELD ONE VERTICAL SHEAR ELEMENT OPTION (1, 2, 3) PER GRAPHIC NO. 9 TO BEAM WEB, USING CONTINUOUS FILLET WELDS {4} - EACH SIDE OF BEAM WEB. U.N.O, THE VERTICAL SHEAR ELEMENT SHALL NOT BE WELDED OR TACK WELDED TO BEAM FLANGES FOR OPTION 1, 2 & 3. REFER TO GRAPHIC NO. 9 FOR VERTICAL SHEAR ELEMENT OPTIONS.

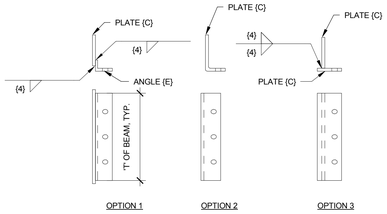

STANDARD

GRAPHIC NO. 9- VERTICAL SHEAR ELEMENT OPTIONS FOR FULL-LENGTH BEAM ASSEMBLY

FIELD ERECTION OF COMPLETED SIDEPLATE FRAME® SYSTEM

(CONSISTS OF JOINING FULL-LENGTH BEAM ASSEMBLY TO COLUMN TREE ASSEMBLIES)

1. INSERT FULL-LENGTH BEAM ASSEMBLY INTO OPPOSING COLUMN ASSEMBLIES WITH UP TO 1/4" RATTLE SPACE.

a) LIFT FULL-LENGTH BEAM ASSEMBLY UP INTO PLACE (SEE GRAPHIC NO. 3), AND INSERT BOLTS.
- IN THE EVENT THAT A BEAM IS NOT POSSIBLE TO LIFT INTO PLACE BETWEEN THE SIDE PLATES, CONTACT SIDEPLATE SYSTEMS, INC IMMEDIATELY FOR REVIEW AND DISPOSITION. SPREADING OF THE SIDE PLATES IN THE FIELD IS NOT ALLOWED WITHOUT PRIOR WRITTEN APPROVAL BY SIDEPLATE SYSTEMS, INC.

b) CAREFULLY REMOVE TEMPORARY 'TOP DOG' WHICH IS UNDER LOAD. 'TOP DOG' ATTACHMENT WELD MAY REMAIN AND IS NOT NECESSARY TO BE GROUND FLUSH.

c) INSTALL BOLTS WHICH SERVE AS A CLAMPING DEVICE TO PULL SIDE PLATES {A} IN AS CLOSE AS POSSIBLE TO THE LONGITUDINAL EDGES OF TOP COVER PLATE {B}, THEREBY MINIMIZING ANY, IF NOT ELIMINATING, POSSIBLE ROOT GAP(S). BOLTS SHALL BE SNUG TIGHTENED. SEE GRAPHIC NO. 10. IF THERE ARE ROOT GAPS, ALL EFFORTS SHOULD BE MADE TO SPLIT THE DIFFERENCE BETWEEN TOP COVER PLATE {B} AND SIDE PLATES {A}, AS WELL AS BOTTOM OF SIDE PLATE {A} TO TOP FACE OF BOTTOM COVER PLATE {B}.
- ROOT GAPS GREATER THAN 1/16" AND UP TO 1/4" ARE ACCEPTABLE WITH THE FILLET WELD {7} BEING INCREASED BY THE GAP AMOUNT.
- ROOT GAPS GREATER THAN 1/4" BUT NOT MORE THAN 3/8" SHALL BE DOCUMENTED. A PQR TYPE TEST PLATE ASSEMBLY WILL BE REQUIRED. TEST CONFIGURATION AND RESULTS SHALL BE SUBMITTED TO SIDEPLATE SYSTEMS, INC. AND EOR FOR REVIEW AND DISPOSITION. CONTACT SIDEPLATE SYSTEMS, INC FOR MORE INFORMATION.

d) WELD FILLET WELDS {7}, AND {6} AS OCCURS.

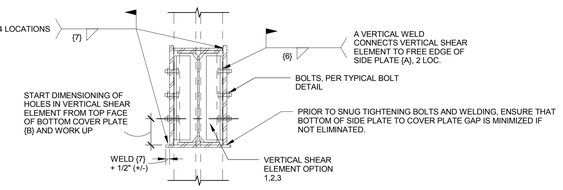

GRAPHIC NO. 10- SECTIONS THROUGH FULL-LENGTH BEAM ASSEMBLY END OF COMPLETED SIDEPLATE FRAME® SYSTEM

2. COLUMN/BEAM SEPARATION (GAP) CLOSURE

a) PROVIDE A FOLDED STRIP OF LIGHT GAGE METAL, OR SIMILAR, SECURED TO STEEL SURFACES BY DUCT TAPE (OR A TACK WELD LOCATED AS CLOSE AS POSSIBLE TO THE MID SECTION OF BEAM FLANGE COVER PLATE {B}) ACROSS THE PHYSICAL COLUMN/BEAM SEPARATION (GAP) BETWEEN THE TOP BEAM FLANGE COVER PLATE {B} AND THE FACE OF COLUMN FLANGE. TO PREVENT CONCRETE FILL FROM ENTERING THROUGH THE TOP SEPARATION, AND WHEN APPLICABLE, TO PROVIDE SOME BACKING FOR FIREPROOFING ACROSS THE BOTTOM SEPARATION.

b) IN NO CASE SHALL THE FOLDED STRIP OF LIGHT GAGE METAL BE WELDED TO THE EDGE OF SIDE PLATE {A}, OR TO THE FACE OF COLUMN FLANGE TO ACHIEVE CLOSURE OF THE PHYSICAL COLUMN/BEAM SEPARATIONS.

3. FIREPROOFING

a) WHEN REQUIRED BY THE GOVERNING CODE FOR CERTAIN TYPES OF CONSTRUCTION, SIDEPLATE® CONNECTIONS SHALL HAVE A FIRE-RESISTANCE RATING LIKE THAT OF A STEEL "STRUCTURAL FRAME".

b) THE MINIMUM THICKNESS OF SPRAYED ON FIRE-RESISTIVE MATERIAL (SFRM) FOR STEEL SIDEPLATE® CONNECTIONS PLATES, NOT ENCASED IN CONCRETE, SHALL BE DETERMINED JUST LIKE THAT OF A PIPE/TUBE COLUMN SECTION WITH A CONSTANT STEEL WALL THICKNESS USING THE THICKNESS OF SIDE PLATE {A} FOR EACH SIDEPLATE CONNECTION ID PER THE SIDEPLATE CONNECTION SCHEDULE, WHICH ARE UNIFORMLY HEATED AND PROTECTED (THE FIRE EXPOSURE OF A PIPE/TUBE COLUMN IS DIRECTLY ANALOGOUS TO A PLATE WITH A 1-SIDED FIRE EXPOSURE AND PROTECTION). THE SFRM SHALL HAVE BEEN TESTED IN ACCORDANCE WITH ASTM E119 AND LISTED FOR FIRE RESISTIVE PIPE/TUBE COLUMN APPLICATIONS FOR NO LESS THAN THE REQUIRED RATED TIME.

c) THE CONTRACTOR SHALL PROVIDE THE MEANS (TYPICALLY DONE WITH A LAYERING TECHNIQUE) FOR FIREPROOFING ACROSS THE PHYSICAL COLUMN/BEAM SEPARATION (GAP) BETWEEN THE BOTTOM BEAM FLANGE COVER PLATE {B} AND THE FACE OF THE COLUMN FLANGE. (IF CLOSURE IS REQUIRED FOLLOW GUIDELINES ABOVE IN ITEM 2a & 2b).

4. PROTECTED ZONES

a) THE CONTRACTOR SHALL IDENTIFY THE PROTECTED ZONES ON BOTH THE BEAM AND THE SIDE PLATES BY USING ANY SUITABLE NON-DESTRUCTIVE MEANS.

b) ONCE THE STEEL DECKING IS IN PLACE, THE CONTRACTOR SHALL USE ANY SUITABLE NON-DESTRUCTIVE MEANS TO IDENTIFY THE PROTECTED ZONE PRIOR TO THE INSTALLATION OF SHEAR STUDS AND DECK ATTACHMENTS, ETC.

c) AFTER SPRAYED ON FIRE-RESISTIVE MATERIAL HAS BEEN APPLIED, THE CONTRACTOR SHALL USE ANY SUITABLE NON-DESTRUCTIVE MEANS TO IDENTIFY THE PROTECTED ZONES, FOR OTHER DISCIPLINES TO PRECLUDE WELDED OR SHOT IN ATTACHMENTS, ETC.

d) NOTE: WELDS {1}, {2}, {5}, {5a} AND {7} ARE ALLOWED IN THE PROTECTED ZONES, AS DETAILED.

NOTICE OF INTELLECTUAL PROPERTY
The SIDEPLATE®steel frame connection system described herein is PATENTED technology protected and covered by one or more of U.S. patent nos. 5,660,017; 6,138,427; 6,516,583; 6,591,573; 7,178,296; 8,122,671; 8,122,672; 8,146,322; 8,176,706 and 8,205,408; other U.S. and foreign patents pending; and also contains trade secret information that is PROPRIETARY to SidePlate Systems, Inc. [tel (800) 475-2077 and (949) 305-7889, fax (949) 305-6395; www.sideplate.com].

Copyright©2012 SidePlate Systems, Inc. all rights reserved. Without limitation, this drawing and the information hereon may be used by others solely (i) upon payment in full of SidePlate®License Fee to SidePlate Systems, Inc. and (ii) in connection with the design, construction, operation, repair, maintenance, restoration or demolition of the building(s) specifically identified hereon, all other uses being expressly prohibited. v5.3.1

VCBO ARCHITECTURE
524 SOUTH 600 EAST
SALT LAKE CITY, UT 84102
Phone: (801) 575-8800
Fax: (801) 531-9850
Web: vcbo.com

REAVELEY ENGINEERS + ASSOCIATES
Consulting Structural Engineers
P:801.486.3883
F:801.485.0911
675 E 500 S, Suite 400
Salt Lake City, Utah 84102
www.reaveley.com

2nd District Juvenile Courthouse

Utah State Courts
08284150
165 West 20th Street, Ogden, Utah
BID DOCUMENTS

Rev #	Date	Description

Job # 12500
Date August 15, 2013
Owner # 08284150
Ins. #

SIDEPLATE GENERAL NOTES (2 OF 2)

SF211

03/19/2013

8/14/2013 5:24:23 PM

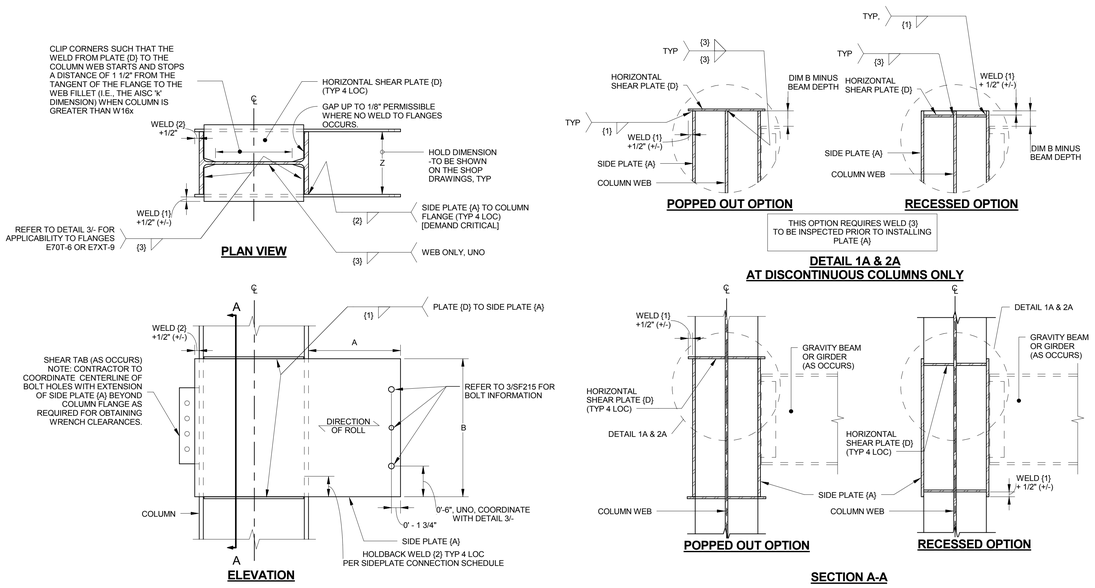

ONE-SIDED CONNECTION COLUMN SHOP DETAIL (A-TYPE) 1

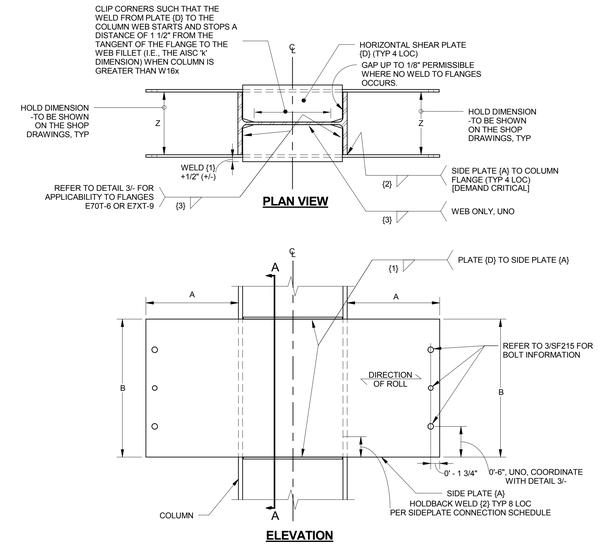

TWO-SIDED CONNECTION COLUMN SHOP DETAIL (B-TYPE) 2

ID	COLUMN DESIGN								BEAM DESIGN													MISCELLANEOUS			
	COLUMN	PLATE THICKNESS		WELD SIZE				WELD HOLD BACK	BEAM	GAP	DIMENSIONS			PLATE THICKNESS		WELD SIZE					WELD HOLDBACK		COVER PLATE	VERTICAL SHEAR ELEMENT OPTION	ANGLE {E} & GRADE	COORDINATE WITH DETAIL
		{A}	{D}	{1}	{2}	{3} WEB	{3} FLANGE	{2}			A	B	C	{B}	{C}	{4}	{5}	{5a}	{6}	{7}	{5}	{5a}				
A1	W24X	7/8	3/8	5/16	3/8	5/16	-	1 1/2	W21X50	2	16	24	20 1/2	1/2	3/8	5/16	5/16	5/16	5/16	5/8	4 1/4	3	U-Shaped	1, 2 or 3	L5x3x1/2 (Gr. 50)	-
A2	W24X	3/4	3/8	5/16	3/8	5/16	-	1 1/2	W24X55	1 3/4	18	27	23 1/2	1/2	3/8	5/16	5/16	5/16	5/16	1/2	5 1/4	3 1/2	U-Shaped	1, 2 or 3	L5x3x1/2 (Gr. 50)	-
A2C1	W24X	1 1/4	3/8	5/16	3/8	5/16	5/16	1 1/2	W24X55	1 3/4	18	27	23 1/2	1/2	3/8	5/16	5/16	5/16	5/16	1/2	5 1/4	3 1/2	U-Shaped	1, 2 or 3	L5x3x1/2 (Gr. 50)	1/SF216
A3	W24X	3/4	3/8	5/16	3/8	5/16	-	1 1/2	W24X62	1 3/4	18	27	23 1/2	1/2	3/8	5/16	5/16	5/16	5/16	9/16	5 1/4	3 1/2	U-Shaped	1, 2 or 3	L5x3x1/2 (Gr. 50)	-
A4	W24X	1 1/4	3/8	5/16	7/16	5/16	-	1 3/4	W24X84	2 3/4	18	27	22 1/2	3/4	3/8	5/16	7/16	7/16	5/16	15/16	5 1/4	3 1/2	U-Shaped	1, 2 or 3	L5x3x1/2 (Gr. 50)	-
A5	W24X	1 1/8	3/8	5/16	3/8	5/16	-	1 5/8	W27X94	2 1/2	22	30	26 1/2	5/8	3/8	5/16	7/16	7/16	5/16	3/4	6	4	U-Shaped	1, 2 or 3	L5x3x1/2 (Gr. 50)	-
A5S	W24X	1 1/8	1/2	3/8	7/16	3/8	-	1 5/8	W27X94	2 1/2	22	30	26 1/2	5/8	3/8	5/16	7/16	7/16	5/16	3/4	6	4	U-Shaped	1, 2 or 3	L5x3x1/2 (Gr. 50)	7/SF216
A6	W24X	1 1/2	3/8	5/16	5/8	5/16	-	2	W27X114	3 1/4	22	30	27	7/8	3/8	5/16	1/2	1/2	5/16	1	6 1/4	4	U-Shaped	1, 2 or 3	L5x3x1/2 (Gr. 50)	-
A7	W24X	1 3/4	3/8	3/8	11/16	3/8	-	2 1/4	W27X129	3 3/4	21	30 1/2	25 1/2	1	3/8	5/16	5/8	5/8	5/16	1 5/16	6 1/4	4	U-Shaped	1, 2 or 3	L5x3x1/2 (Gr. 50)	-
A8	W24X	1 1/4	3/8	5/16	7/16	5/16	-	1 3/4	W30X108	2 3/4	24	33	29 1/2	5/8	3/8	5/16	7/16	7/16	5/16	3/4	7 1/4	4 1/2	U-Shaped	1, 2 or 3	L5x3x1/2 (Gr. 50)	-
A8S	W24X	1 1/4	5/8	1/2	1/2	1/2	-	1 3/4	W30X108	2 3/4	24	33	29 1/2	5/8	3/8	5/16	7/16	7/16	5/16	3/4	7 1/4	4 1/2	U-Shaped	1, 2 or 3	L5x3x1/2 (Gr. 50)	7/SF216
A9	W24X	1 3/8	3/8	5/16	1/2	5/16	-	1 7/8	W30X116	3	23	33	29 1/2	3/4	3/8	5/16	1/2	1/2	5/16	15/16	7 1/4	4 1/2	U-Shaped	1, 2 or 3	L5x3x1/2 (Gr. 50)	-
A9S	W24X	1 3/8	5/8	1/2	9/16	1/2	-	1 7/8	W30X116	3	23	33	29 1/2	3/4	3/8	5/16	1/2	1/2	5/16	15/16	7 1/4	4 1/2	U-Shaped	1, 2 or 3	L5x3x1/2 (Gr. 50)	7/SF216
A10	W24X	1 5/8	3/8	3/8	11/16	3/8	-	2 1/8	W30X148	3 1/2	23	33 1/2	28 1/2	1	3/8	5/16	5/8	5/8	5/16	1 3/16	7	4 1/2	U-Shaped	1, 2 or 3	L5x3x1/2 (Gr. 50)	-
B2	W24X	3/4	3/8	5/16	1/2	5/16	-	1 1/2	W24X55	1 3/4	18	27	23 1/2	1/2	3/8	5/16	5/16	5/16	5/16	1/2	5 1/4	3 1/2	U-Shaped	1, 2 or 3	L5x3x1/2 (Gr. 50)	-
B3	W24X	3/4	3/8	5/16	1/2	5/16	-	1 1/2	W24X62	1 3/4	18	27	23 1/2	1/2	3/8	5/16	5/16	5/16	5/16	9/16	5 1/4	3 1/2	U-Shaped	1, 2 or 3	L5x3x1/2 (Gr. 50)	-
B5	W24X	1 1/8	3/8	3/8	11/16	3/8	-	1 5/8	W27X94	2 1/2	22	30	26 1/2	5/8	3/8	5/16	7/16	7/16	5/16	3/4	6	4	U-Shaped	1, 2 or 3	L5x3x1/2 (Gr. 50)	-
B8	W24X	1 1/4	3/8	3/8	13/16	3/8	-	1 3/4	W30X108	2 3/4	24	33	29 1/2	5/8	3/8	5/16	7/16	7/16	5/16	3/4	7 1/4	4 1/2	U-Shaped	1, 2 or 3	L5x3x1/2 (Gr. 50)	-
B9	W24X	1 3/8	1/2	7/16	15/16	7/16	-	1 7/8	W30X116	3	23	33	29 1/2	3/4	3/8	5/16	1/2	1/2	5/16	15/16	7 1/4	4 1/2	U-Shaped	1, 2 or 3	L5x3x1/2 (Gr. 50)	-
B10	W24X	1 5/8	1/2	7/16	1 1/16	7/16	-	2 1/8	W30X148	3 1/2	23	33 1/2	28 1/2	1	3/8	5/16	5/8	5/8	5/16	1 3/16	7	4 1/2	U-Shaped	1, 2 or 3	L5x3x1/2 (Gr. 50)	-

SIDEPLATE A&B-TYPE CONNECTION SCHEDULE 3

NOTE: USE THIS SCHEDULE WITH DETAILS 1 & 2 /SF212
REFER TO FULL-LENGTH BEAM DETAIL 1 & 2 ON SHEET SF215

NOTICE OF INTELLECTUAL PROPERTY
The SIDEPLATE®steel frame connection system described herein is PATENTED technology protected and covered by one or more of U.S. patent nos. 5,660,017; 6,138,427; 6,516,583; 6,591,573; 7,178,296; 8,122,671; 8,122,672; 8,146,322; 8,176,706 and 8,205,408; other U.S. and foreign patents pending; and also contains trade secret information that is PROPRIETARY to SidePlate Systems, Inc. [tel (800) 475-2077 and (949) 305-7889, fax (949) 305-6395; www.sideplate.com].

Copyright©2012 SidePlate Systems, Inc. all rights reserved. Without limitation, this drawing and the information hereon may be used by others solely (i) upon payment in full of SidePlate®License Fee to SidePlate Systems, Inc. and (ii) in connection with the design, construction, operation, repair, maintenance, restoration or demolition of the building(s) specifically identified hereon, all other uses being expressly prohibited. v5.3.1

8/14/2013 5:24:23 PM

VCBO ARCHITECTURE
VCBO ARCHITECTURE
524 SOUTH 600 EAST
SALT LAKE CITY, UT 84102
Phone: (801) 575-8800
Fax: (801) 531-9850
Web: vcbo.com

REAVELEY ENGINEERS + ASSOCIATES
Consulting Structural Engineers
P:801.486.3883
F:801.485.0911
675 E 500 S, Suite 400
Salt Lake City, Utah 84102
www.reaveley.com

2nd District Juvenile Courthouse

Utah State Courts
08284150
165 West 20th Street, Ogden, Utah
BID DOCUMENTS

Rev #	Date	Description

Job # 12500
Date August 15, 2013
Owner # 08284150
Ins. #

SIDEPLATE A TYPE & B TYPE TYPICAL DETAILS

PROFESSIONAL ENGINEER No. 317790-2202 JARED J ADAMS STATE OF UTAH
08/19/2013

SF212

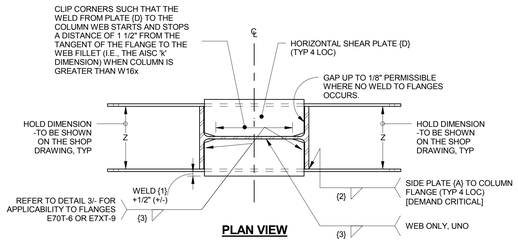

PLAN VIEW

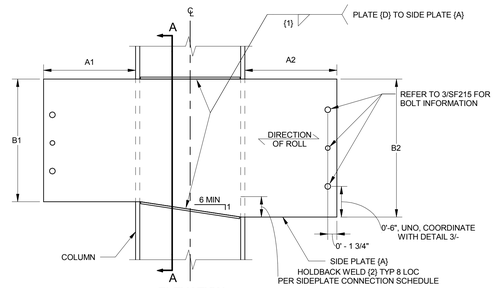

ELEVATION

SUBTLE BEAM DEPTH DIFFERENCES

(MAX SIDE PLATE {A} SLOPE 1:6)

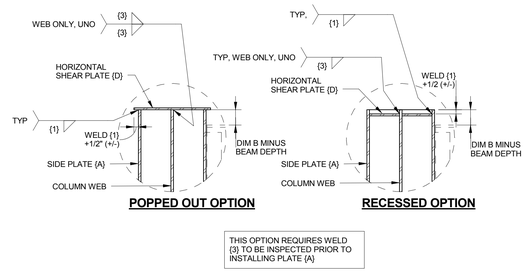

POPPED OUT OPTION **RECESSED OPTION**

THIS OPTION REQUIRES WELD {3} TO BE INSPECTED PRIOR TO INSTALLING PLATE {A}

DETAIL 1A, 2A & 2B
AT DISCONTINUOUS COLUMNS ONLY

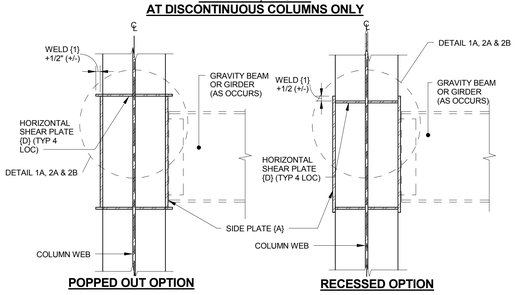

POPPED OUT OPTION **RECESSED OPTION**

SECTION A-A

TWO-SIDED CONNECTION COLUMN SHOP DETAIL (C-TYPE)

1

ID	COLUMN DESIGN								BEAM DESIGN													MISCELLANEOUS			
	COLUMN	PLATE THICKNESS		WELD SIZE				WELD HOLDBACK			DIMENSIONS			PLATE THICKNESS		WELD SIZE					WELD HOLDBACK		COVER PLATE	VERTICAL SHEAR ELEMENT OPTION / VERTICAL SHEAR ELEMENT OPTION 2	ANGLE {E} & GRADE	COORDINATE WITH DETAIL
		{A}	{D}	{1}	{2}	{3} WEB	{3} FLANGE	{2}	BEAM 1 / BEAM 2	GAP 1 / GAP 2	A 1 / A 2*	B 1 / B 2*	C 1 / C 2*	{B} 1 / {B} 2*	{C} 1 / {C} 2*	{4} 1 / {4} 2*	{5} 1 / {5} 2*	{5a} 1 / {5a} 2*	{6} 1 / {6} 2*	{7} 1 / {7} 2*	{5} 1 / {5} 2*	{5a} 1 / {5a} 2*				
C1	W24X	3/4	3/8	5/16	1/2	5/16	-	1 1/2	W21X50	1 3/4	16	24 1/4	20 1/2	1/2	3/8	5/16	5/16	5/16	5/16	9/16	4 1/4	3	U-Shaped	1, 2 or 3	L5x3x1/2 (Gr. 50)	-
							-		W24X55	1 3/4	18	27	23 1/2	1/2	3/8	5/16	5/16	5/16	5/16	1/2	5 1/4	3 1/2		1, 2 or 3	L5x3x1/2 (Gr. 50)	
C2	W24X	1 1/4	3/8	5/16	11/16	5/16	-	1 3/4	W21X50	2	16	23 3/4	20	1/2	3/8	5/16	5/16	5/16	5/16	5/8	4	3	U-Shaped	1, 2 or 3	L5x3x1/2 (Gr. 50)	-
							-		W24X84	2 3/4	18	27	22 1/2	3/4	3/8	5/16	7/16	7/16	5/16	15/16	5 1/4	3 1/2		1, 2 or 3	L5x3x1/2 (Gr. 50)	
C3	W24X	1 1/2	1/2	1/2	1	1/2	-	2	W24X84	2 3/4	18	26 7/8	22 1/2	3/4	3/8	5/16	7/16	7/16	5/16	15/16	5 1/4	3 1/2	U-Shaped	1, 2 or 3	L5x3x1/2 (Gr. 50)	-
							-		W27X114	3 1/4	21	30	26	7/8	3/8	5/16	9/16	9/16	5/16	1 1/16	6 1/4	4		1, 2 or 3	L5x3x1/2 (Gr. 50)	
C4	W24X	1 3/4	1/2	1/2	1 1/16	1/2	-	2 1/4	W24X84	2 3/4	18	27	22 1/2	3/4	3/8	5/16	7/16	7/16	5/16	15/16	5 1/4	3 1/2	U-Shaped	1, 2 or 3	L5x3x1/2 (Gr. 50)	-
							-		W27X129	3 3/4	21	30 1/2	25 1/2	1	3/8	5/16	5/8	5/8	5/16	1 5/16	6 1/4	4		1, 2 or 3	L5x3x1/2 (Gr. 50)	

SIDEPLATE C-TYPE CONNECTION SCHEDULE

3

NOTE: USE THIS SCHEDULE WITH DETAIL 1/SF213
REFER TO FULL-LENGTH BEAM DETAIL 1 & 2 ON SHEET SF215

NOTICE OF INTELLECTUAL PROPERTY
The SIDEPLATE®steel frame connection system described herein is PATENTED technology protected and covered by one or more of U.S. patent nos. 5,660,017; 6,138,427; 6,516,583; 6,591,573; 7,178,296; 8,122,671; 8,122,672; 8,146,322; 8,176,706 and 8,205,408; other U.S. and foreign patents pending; and also contains trade secret information that is PROPRIETARY to SidePlate Systems, Inc. [tel (800) 475-2077 and (949) 305-7889, fax (949) 305-6395; www.sideplate.com].

Copyright©2012 SidePlate Systems, Inc. all rights reserved. Without limitation, this drawing and the information hereon may be used by others solely (i) upon payment in full of SidePlate®License Fee to SidePlate Systems, Inc. and (ii) in connection with the design, construction, operation, repair, maintenance, restoration or demolition of the building(s) specifically identified hereon, all other uses being expressly prohibited. v5.3.1

VCBO ARCHITECTURE
524 SOUTH 600 EAST
SALT LAKE CITY, UT 84102
Phone: (801) 575-8800
Fax: (801) 531-9850
Web: vcbo.com

REAVELEY ENGINEERS + ASSOCIATES
Consulting Structural Engineers
P:801.486.3883
F:801.485.0911
675 E 500 S, Suite 400
Salt Lake City, Utah 84102
www.reaveley.com

2nd District Juvenile Courthouse

Utah State Courts
08284150
165 West 20th Street, Ogden, Utah
BID DOCUMENTS

Rev #	Date	Description

Job # 12500
Date August 15, 2013
Owner # 08284150
Ins. #

SIDEPLATE C TYPE
TYPICAL DETAILS

SF213

8/14/2013 5:24:25 PM

03/19/2013

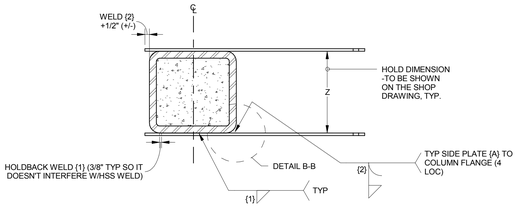

PLAN VIEW

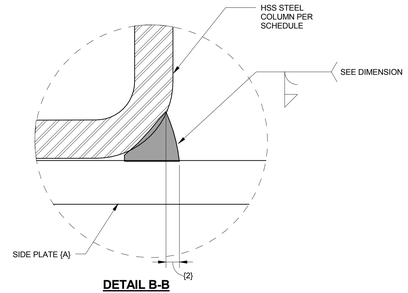

DETAIL B-B

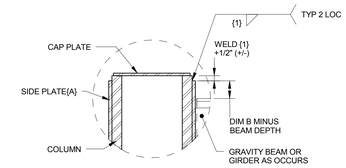

POPPED OUT OPTION

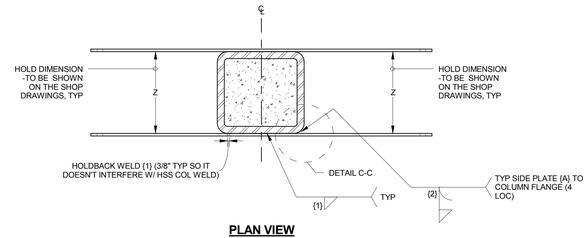

PLAN VIEW

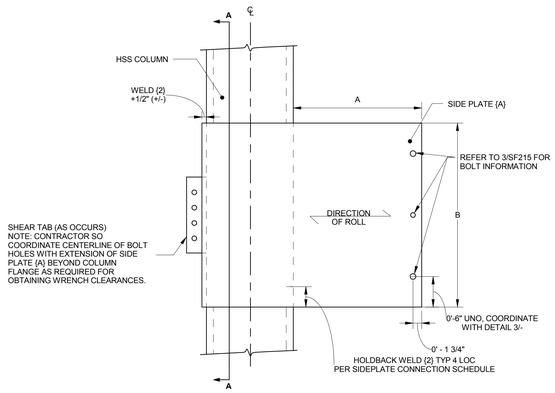

ELEVATION

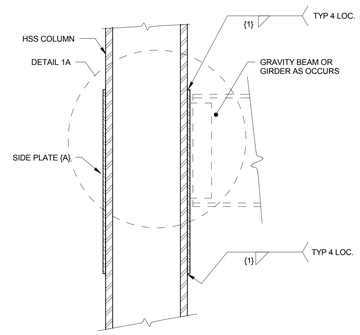

SECTION A-A

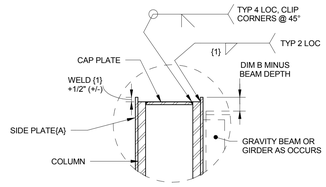

RECESSED OPTION

DETAIL 1A
AT DISCONTINUOUS COLUMNS ONLY

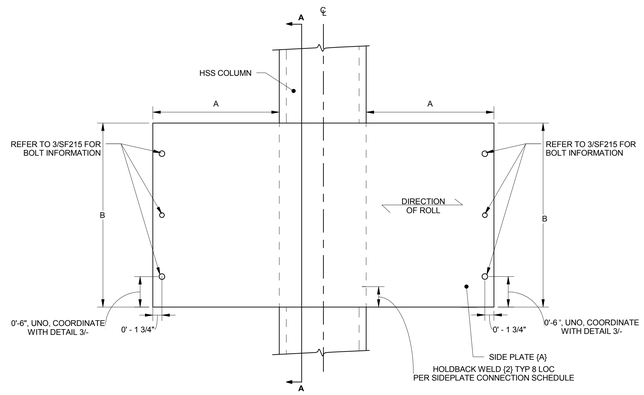

ELEVATION

ONE-SIDED CONNECTION HSS COLUMN SHOP DETAIL (A-TYPE) 1

TWO-SIDED CONNECTION HSS COLUMN SHOP DETAIL (B-TYPE) 2

ID	COLUMN DESIGN								BEAM DESIGN													MISCELLANEOUS			
	COLUMN	PLATE THICKNESS		WELD SIZE				WELD HOLD BACK	BEAM	GAP	DIMENSIONS			PLATE THICKNESS		WELD SIZE					WELD HOLDBACK		COVER PLATE	VERTICAL SHEAR ELEMENT OPTION	ANGLE {E} & GRADE	COORDINATE WITH DETAIL
		{A}	{D}	{1}	{2}	{3} WEB	{3} FLANGE	{2}			A	B	C	{B}	{C}	{4}	{5}	{5a}	{6}	{7}	{5}	{5a}				
A11	HSS12X12X	1 1/4	-	3/8	1/4	-	-	1 3/4	W21X93	2 3/4	17	24	20 1/2	3/4	3/8	5/16	1/2	1/2	5/16	1	4 1/4	3	U-Shaped	1, 2 or 3	L5x3x1/2 (Gr. 50)	-
A11C1	HSS12X12X	1 3/8	-	7/16	5/16	-	-	1 3/4	W21X93	2 3/4	17	24	20 1/2	3/4	3/8	5/16	1/2	1/2	5/16	1	4 1/4	3	U-Shaped	1, 2 or 3	L5x3x1/2 (Gr. 50)	2/SF216
A12	HSS12X12X	5/8	-	5/16	1/4	-	-	1 1/2	W24X55	1 1/2	18	27	23 1/2	1/2	3/8	5/16	5/16	5/16	5/16	7/16	5	3 1/2	U-Shaped	1, 2 or 3	L5x3x1/2 (Gr. 50)	-

SIDEPLATE HSS COLUMN A & B-TYPE CONNECTION SCHEDULE 3

NOTE: REFER TO FULL-LENGTH BEAM DETAIL 1 & 2 ON SHEET SF215.

NOTICE OF INTELLECTUAL PROPERTY
The SIDEPLATE®steel frame connection system described herein is PATENTED technology protected and covered by one or more of U.S. patent nos. 5,660,017; 6,138,427; 6,516,583; 6,591,573; 7,178,296; 9,122,671; 8,122,672; 8,146,322; 8,176,706 and 8,205,408; other U.S. and foreign patents pending; and also contains trade secret information that is PROPRIETARY to SidePlate Systems, Inc. [tel (800) 475-2077 and (949) 305-7889, fax (949) 305-6395; www.sideplate.com].

Copyright©2012 SidePlate Systems, Inc. all rights reserved. Without limitation, this drawing and the information hereon may be used by others solely (i) upon payment in full of SidePlate®License Fee to SidePlate Systems, Inc. and (ii) in connection with the design, construction, operation, repair, maintenance, restoration or demolition of the building(s) specifically identified hereon, all other uses being expressly prohibited. v5.3.1

VCBO ARCHITECTURE
524 SOUTH 600 EAST
SALT LAKE CITY, UT 84102
Phone: (801) 575-8800
Fax: (801) 531-9850
Web: vcbo.com

REAVELEY ENGINEERS + ASSOCIATES
Consulting Structural Engineers
P:801.486.3883
F:801.485.0911
675 E 500 S, Suite 400
Salt Lake City, Utah 84102
www.reaveley.com

2nd District Juvenile Courthouse

Utah State Courts
08284150
165 West 20th Street, Ogden, Utah
BID DOCUMENTS

Rev #	Date	Description

Job # 12500
Date August 15, 2013
Owner # 08284150
Ins. #

SIDEPLATE HSS A&B
TYPE TYPICAL DETAILS

SF214

PROFESSIONAL ENGINEER No. 181790-2202 JARED J. ADAMS STATE OF UTAH
03/19/2013

8/14/2013 5:24:25 PM

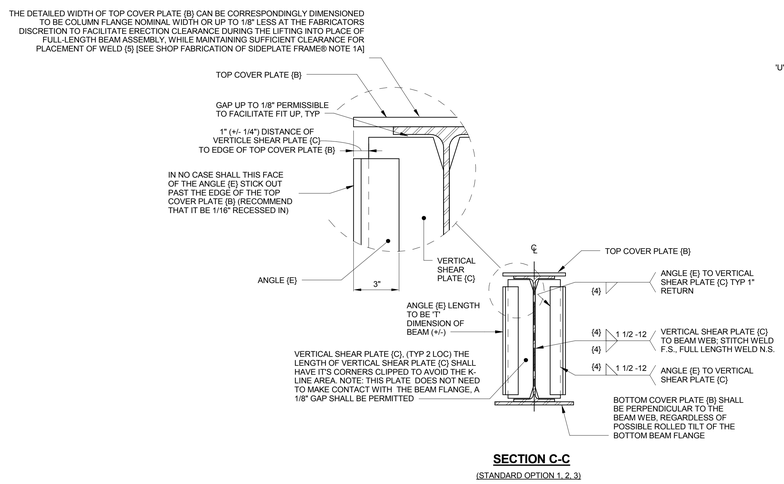

SECTION C-C

(STANDARD OPTION 1, 2, 3)

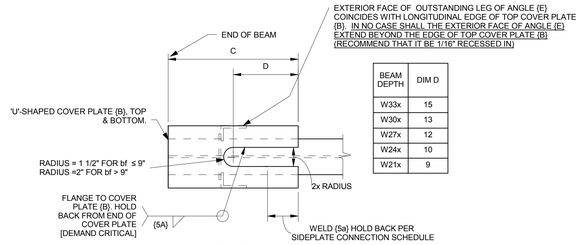

BEAM DEPTH	DIM D
W33x	15
W30x	13
W27x	12
W24x	10
W21x	9

U-SHAPED COVER PLATE {B} PLAN VIEW

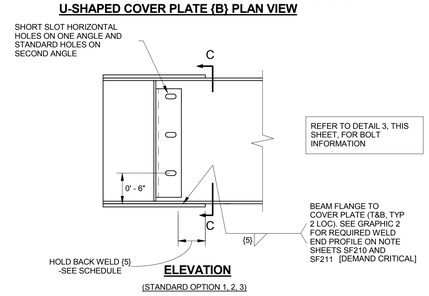

ELEVATION

(STANDARD OPTION 1, 2, 3)

FULL LENGTH BEAM SHOP DETAIL

1

NOTE: REFER TO SIDEPLATE CONNECTION SCHEDULE DETAIL 3 ON SHEET SF212, SF213 & SF214.

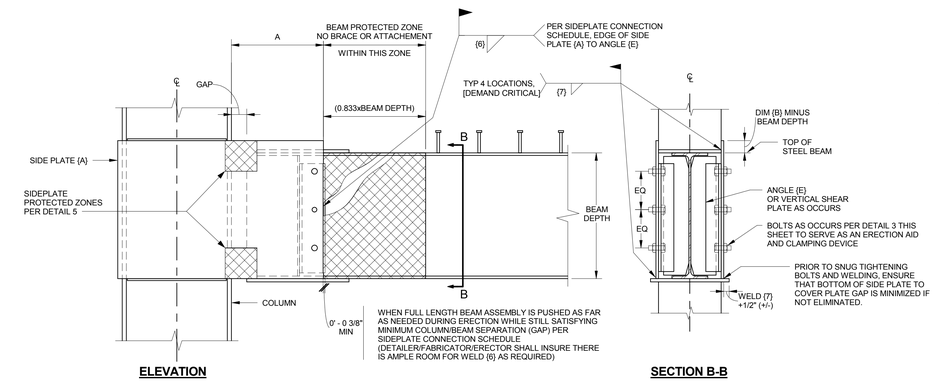

ELEVATION **SECTION B-B**

FULL-LENGTH BEAM TO SIDEPLATE FIELD ERECTION DETAIL

2

NOTE: REFER TO SIDE PLATE CONNECTION SCHEDULE DETAIL 3 ON SHEET SF212, SF213 & SF214.

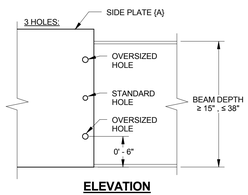

ELEVATION

NOTES:
1) BOLTS SHALL MATCH TYPICAL BOLT SIZE & MATERIAL USED ON PROJECT.

- PROVIDE A325 AS MINIMUM GRADE MATERIAL.
- MINIMUM BOLT DIAMETER SHALL BE 3/4".
- MAXIMUM BOLT DIAMETER SHALL BE 1".
- BOLTS SHALL BE INSTALLED SNUG TIGHT, AS A MINIMUM.

2) BEAM OUTLINE IS SHOWN FOR DISTINGUISHING QUANTITY OF BOLTS REQUIRED DEPENDING ON BEAM DEPTH. COVER PLATES & VERTICAL SHEAR ELEMENTS ARE NOT SHOWN FOR CLARITY.

BOLT AND BOLT HOLE DETAIL AT SIDE PLATES{A}

3

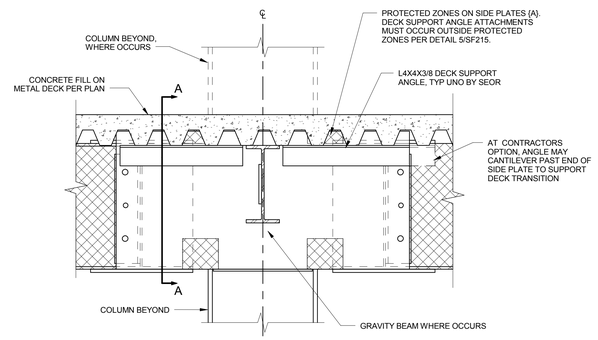

NOTES:
1. DECK SUPPORT ANGLE NOT REQUIRED WHERE DECK RUNS PARALLEL TO SIDE PLATES {A} UNO BY SEOR

ELEVATION

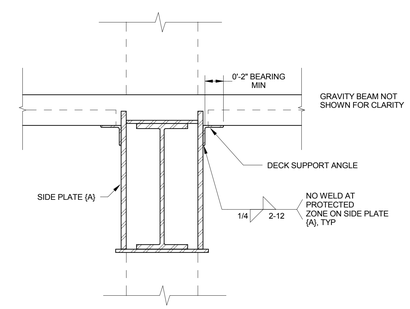

SECTION A-A

DECK SUPPORT ANGLE TO SIDE PLATE CONNECTION

4

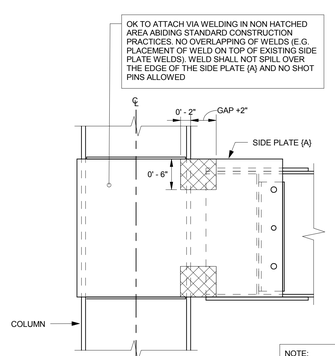

ELEVATION

ONE-SIDED CONNECTION

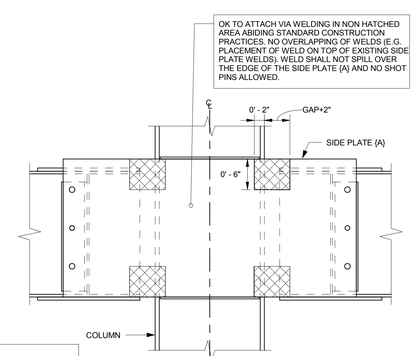

ELEVATION

TWO-SIDED CONNECTION

NOTE:
WELD {1}, {2}, {5} AND {7} ARE ALLOWED IN PROTECTED ZONES AS DETAILED

SIDE PLATE {A} PROTECTED ZONES

5

NOTICE OF INTELLECTUAL PROPERTY
The SIDEPLATE®steel frame connection system described herein is PATENTED technology protected and covered by one or more of U.S. patent nos. 5,660,017; 6,138,427; 6,516,583; 6,591,573; 7,178,296; 8,122,671; 8,122,672; 8,146,322; 8,176,706 and 8,205,408; other U.S. and foreign patents pending; and also contains trade secret information that is PROPRIETARY to SidePlate Systems, Inc. [tel (800) 475-2077 and (949) 305-7889, fax (949) 305-6395; www.sideplate.com].

Copyright©2012 SidePlate Systems, Inc. all rights reserved. Without limitation, this drawing and the information hereon may be used by others solely (i) upon payment in full of SidePlate®License Fee to SidePlate Systems, Inc. and (ii) in connection with the design, construction, operation, repair, maintenance, restoration or demolition of the building(s) specifically identified hereon, all other uses being expressly prohibited. v5.3.1

VCBO ARCHITECTURE
524 SOUTH 600 EAST
SALT LAKE CITY, UT 84102
Phone: (801) 575-8800
Fax: (801) 531-9850
Web: vcbo.com

REAVELEY ENGINEERS + ASSOCIATES
Consulting Structural Engineers
P: 801.486.3883
F: 801.485.0911
675 E 500 S, Suite 400
Salt Lake City, Utah 84102
www.reaveley.com

2nd District Juvenile Courthouse

Utah State Courts
08284150
165 West 20th Street, Ogden, Utah
BID DOCUMENTS

Rev #	Date	Description

Job # 12500
Date August 15, 2013
Owner # 08284150
Ins. #

SIDEPLATE TYPICAL BEAM DETAILS

PROFESSIONAL ENGINEER
Apr. 31, 1980-2014
JARED J ADAMS
STATE OF UTAH
03/19/2013

SF215

8/14/2013 5:24:26 PM

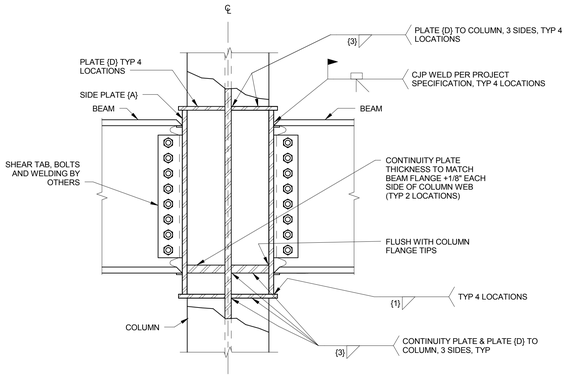

NOTES:
1. REFER TO SIDEPLATE CONNECTION SCHEDULE FOR SIDEPLATE PROPERTIES NOT SPECIFIED HERE.
2. USE THIS DETAIL WHEN CANTILEVERING BEAM IS SHALLOWER THAN THE SIDEPLATE MOMENT FRAME BEAM
3. ALL PLATES SHALL BE A572 GR50 UNO.

SHALLOW REINFORCED CANTILEVER CONNECTION

1

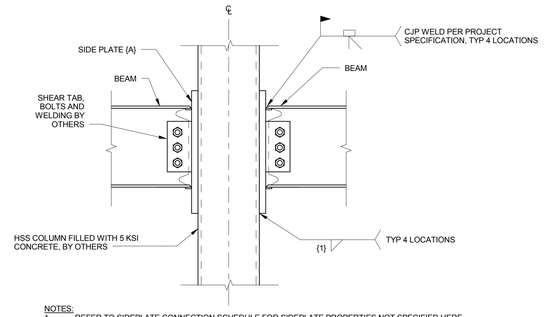

NOTES:
1. REFER TO SIDEPLATE CONNECTION SCHEDULE FOR SIDEPLATE PROPERTIES NOT SPECIFIED HERE.
2. USE THIS DETAIL WHEN CANTILEVERING BEAM IS SHALLOWER THAN THE SIDEPLATE MOMENT FRAME BEAM
3. ALL PLATES SHALL BE A572 GR50 UNO.

SHALLOW CANTILEVER CONNECTION ON HSS

2

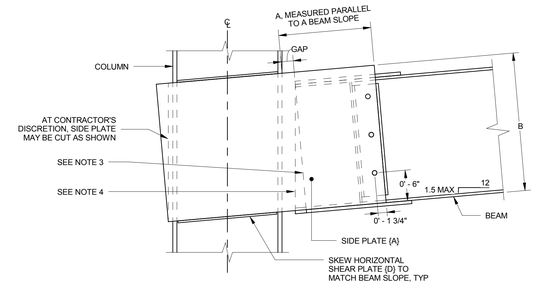

NOTES:
1. REFER TO SIDEPLATE CONNECTION SCHEDULE FOR SIDEPLATE PROPERTIES NOT SPECIFIED HERE.
2. PER THE SIDEPLATE CONSTRUCTION GUIDELINES, FABRICATOR MAY CHOOSE RECESSED OPTION, IN LIEU OF THE POPPED-OUT OPTION SHOWN HERE, FOR THE HORIZONTAL SHEAR PLATE {D}.
3. FOR BEAM SLOPE ≤ 1/8" PER FOOT, A VARYING BEAM GAP IS ACCEPTABLE AS SHOWN.
4. WHEN BEAM SLOPE IS >1/8" PER FOOT AND ≤1.5" PER FOOT, A CONSTANT GAP SHALL BE USED AS SHOWN.
5. FOR BEAM SLOPES > 1.5" PER FOOT, CONTACT SIDEPLATE SYSTEMS FOR DETAILS.
6. ALL PLATES SHALL BE A572 GR50 UNO.

ONE SIDED SLOPED SIDE PLATE

3

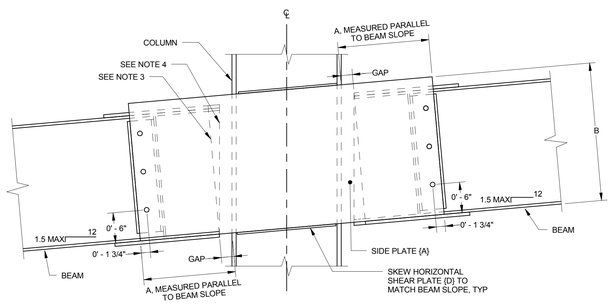

NOTES:
1. REFER TO SIDEPLATE CONNECTION SCHEDULE FOR SIDEPLATE PROPERTIES NOT SPECIFIED HERE.
2. PER THE SIDEPLATE CONSTRUCTION GUIDELINES, FABRICATOR MAY CHOOSE RECESSED OPTION, IN LIEU OF THE POPPED-OUT OPTION SHOWN HERE, FOR THE HORIZONTAL SHEAR PLATE {D}.
3. FOR BEAM SLOPE ≤ 1/8" PER FOOT, A VARYING BEAM GAP IS ACCEPTABLE AS SHOWN.
4. WHEN BEAM SLOPE IS >1/8" PER FOOT AND ≤1.5" PER FOOT, A CONSTANT GAP SHALL BE USED AS SHOWN.
5. FOR BEAM SLOPES > 1.5" PER FOOT, CONTACT SIDEPLATE SYSTEMS FOR DETAILS.
6. ALL PLATES SHALL BE A572 GR50 UNO.

TWO SIDED SLOPED SIDE PLATE

4

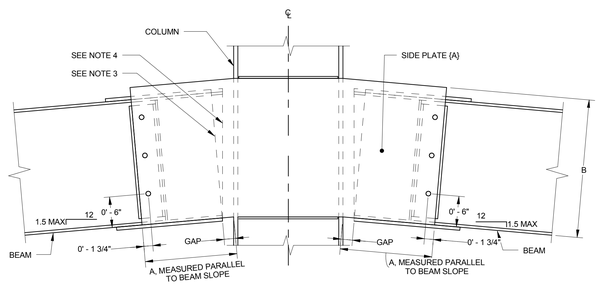

NOTES:
1. REFER TO SIDEPLATE CONNECTION SCHEDULE FOR SIDEPLATE PROPERTIES NOT SPECIFIED HERE.
2. PER THE SIDEPLATE CONSTRUCTION GUIDELINES, FABRICATOR MAY CHOOSE RECESSED OPTION, IN LIEU OF THE POPPED-OUT OPTION SHOWN HERE, FOR THE HORIZONTAL SHEAR PLATE {D}.
3. FOR BEAM SLOPE ≤ 1/8" PER FOOT, A VARYING BEAM GAP IS ACCEPTABLE AS SHOWN.
4. WHEN BEAM SLOPE IS >1/8" PER FOOT AND ≤1.5" PER FOOT, A CONSTANT GAP SHALL BE USED AS SHOWN.
5. FOR BEAM SLOPES > 1.5" PER FOOT, CONTACT SIDEPLATE SYSTEMS FOR DETAILS.
6. ALL PLATES SHALL BE A572 GR50 UNO.

PEAKED SLOPED BEAM

5

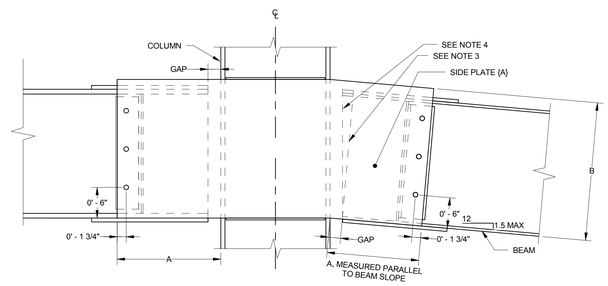

NOTES:
1. REFER TO SIDEPLATE CONNECTION SCHEDULE FOR SIDEPLATE PROPERTIES NOT SPECIFIED HERE.
2. PER THE SIDEPLATE CONSTRUCTION GUIDELINES, FABRICATOR MAY CHOOSE RECESSED OPTION, IN LIEU OF THE POPPED-OUT OPTION SHOWN HERE, FOR THE HORIZONTAL SHEAR PLATE {D}.
3. FOR BEAM SLOPE ≤ 1/8" PER FOOT, A VARYING BEAM GAP IS ACCEPTABLE AS SHOWN.
4. WHEN BEAM SLOPE IS >1/8" PER FOOT AND ≤1.5" PER FOOT, A CONSTANT GAP SHALL BE USED AS SHOWN.
5. FOR BEAM SLOPES > 1.5" PER FOOT, CONTACT SIDEPLATE SYSTEMS FOR DETAILS.
6. ALL PLATES SHALL BE A572 GR50 UNO.

SLOPED DOWN SIDE PLATE

6

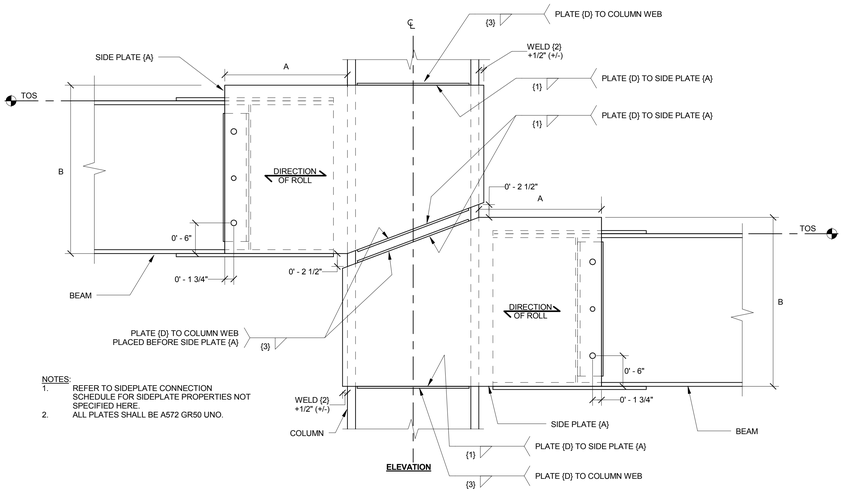

NOTES:
1. REFER TO SIDEPLATE CONNECTION SCHEDULE FOR SIDEPLATE PROPERTIES NOT SPECIFIED HERE.
2. ALL PLATES SHALL BE A572 GR50 UNO.

STEPPED CONNECTION WITH SEPARATE SIDE PLATE {A}

7

NOTICE OF INTELLECTUAL PROPERTY
The SIDEPLATE®steel frame connection system described herein is PATENTED technology protected and covered by one or more of U.S. patent nos. 5,660,017; 6,138,427; 6,516,583; 6,591,573; 7,178,296; 8,122,671; 8,122,672; 8,146,322; 8,176,706 and 8,205,408; other U.S. and foreign patents pending; and also contains trade secret information that is PROPRIETARY to SidePlate Systems, Inc. [tel (800) 475-2077 and (949) 305-7889, fax (949) 305-6395; www.sideplate.com].

Copyright©2012 SidePlate Systems, Inc. all rights reserved. Without limitation, this drawing and the information hereon may be used by others solely (i) upon payment in full of SidePlate®License Fee to SidePlate Systems, Inc. and (ii) in connection with the design, construction, operation, repair, maintenance, restoration or demolition of the building(s) specifically identified hereon, all other uses being expressly prohibited. v5.3.1

8/14/2013 5:24:27 PM

VCBO ARCHITECTURE
VCBO ARCHITECTURE
524 SOUTH 600 EAST
SALT LAKE CITY, UT 84102
Phone: (801) 575-8800
Fax: (801) 531-9850
Web: vcbo.com

REAVELEY ENGINEERS + ASSOCIATES
Consulting Structural Engineers
P:801.486.3883
F:801.485.0911
675 E 500 S, Suite 400
Salt Lake City, Utah 84102
www.reaveley.com

2nd District Juvenile Courthouse

Utah State Courts
08284150
165 West 20th Street, Ogden, Utah
BID DOCUMENTS

Rev #	Date	Description

Job # 12500
Date August 15, 2013
Owner # 08284150
Ins. #

SIDEPLATE MISC DETAILS

PROFESSIONAL ENGINEER No. 301750-2202 JARED J ADAMS STATE OF UTAH
03/19/2013

SF216

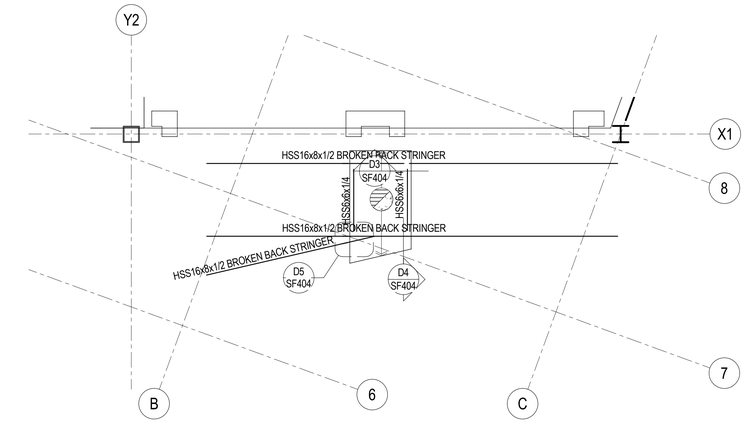

D1 / SF401 LEVEL 2 MAIN STAIR FRAMING PLAN

SCALE: 1/4" = 1'-0"

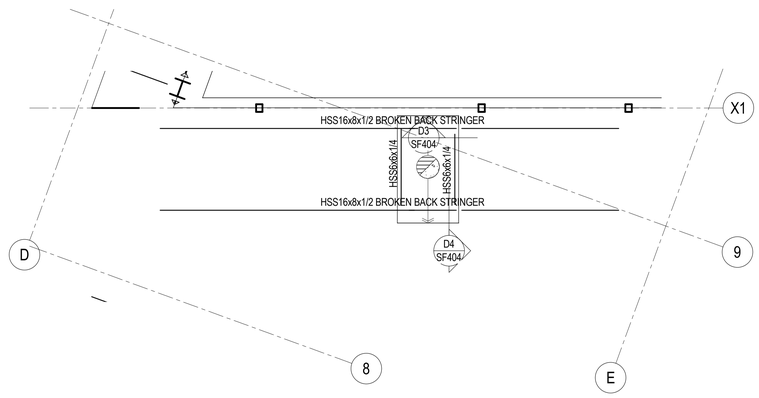

D3 / SF401 LEVEL 3 MAIN STAIR FRAMING PLAN

SCALE: 1/4" = 1'-0"

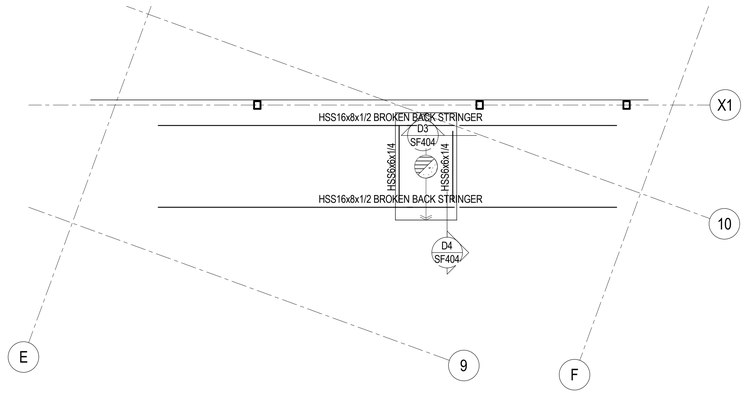

B1 / SF401 LEVEL 4 MAIN STAIR FRAMING PLAN

SCALE: 1/4" = 1'-0"

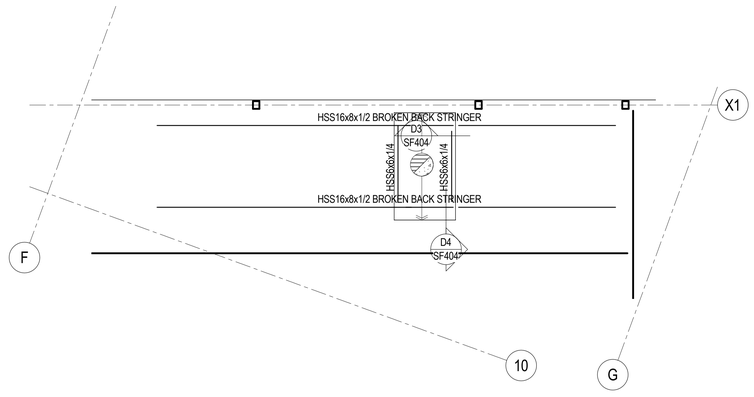

B3 / SF401 LEVEL 5 MAIN STAIR FRAMING PLAN

SCALE: 1/4" = 1'-0"

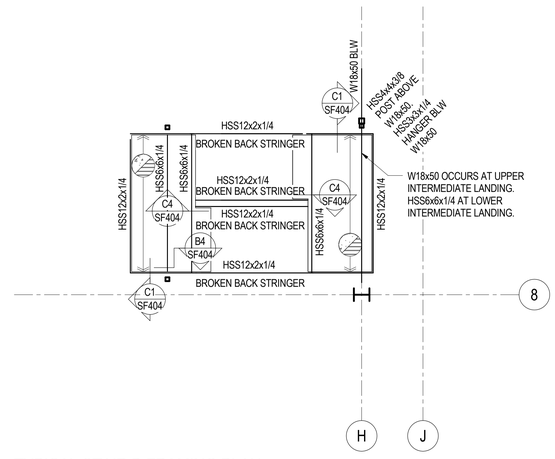

B4 / SF401 TYPICAL STAIR B FRAMING PLAN

SCALE: 1/4" = 1'-0"

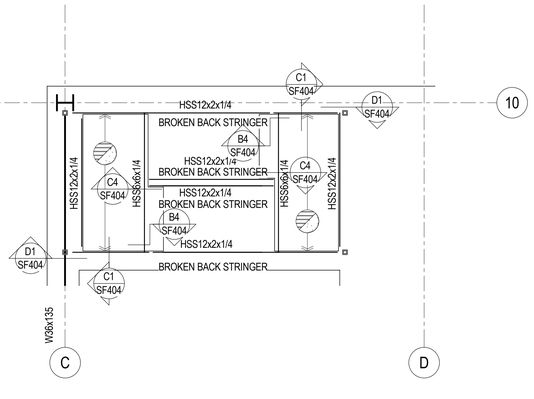

A1 / SF401 LEVEL 2 STAIR A FRAMING PLAN

SCALE: 1/4" = 1'-0"

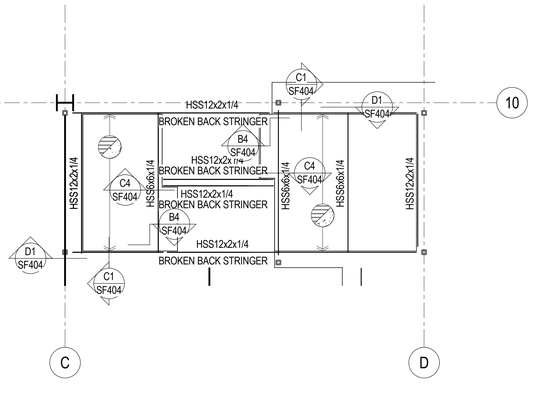

A3 / SF401 TYPICAL STAIR A FRAMING PLAN

SCALE: 1/4" = 1'-0"

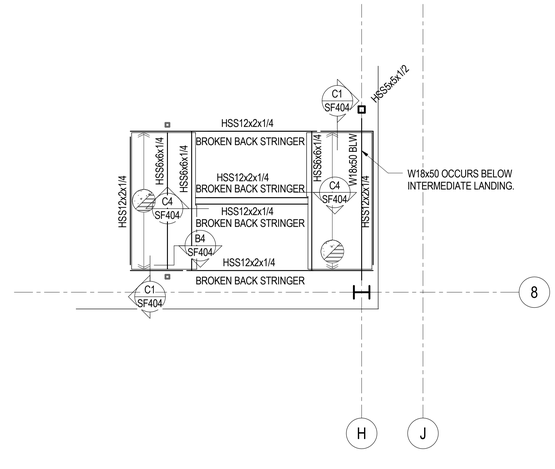

A4 / SF401 LEVEL 2 STAIR B FRAMING PLAN

SCALE: 1/4" = 1'-0"

VCBO ARCHITECTURE

VCBO ARCHITECTURE
524 SOUTH 600 EAST
SALT LAKE CITY, UT 84102
Phone: (801) 575-8800
Fax: (801) 531-9850
Web: vcbo.com

PROFESSIONAL STRUCTURAL ENGINEER No. 299733 JEROD G. JOHNSON 8/15/13 STATE OF UTAH

REAVELEY ENGINEERS + ASSOCIATES
Consulting Structural Engineers

P: 801.486.3883
F: 801.485.0911

675 E. 500 S. Suite 400
Salt Lake City, Utah 84102
www.reaveley.com

2nd District Juvenile Courthouse

Utah State Courts
08284150
165 West 20th Street, Ogden, Utah
BID DOCUMENTS

Rev #	Date	Description

Job # 12500
Date August 15, 2013
Owner # 08284150
Ins. #

STAIR FRAMING PLANS

SF401

8/14/2013 4:54:35 PM

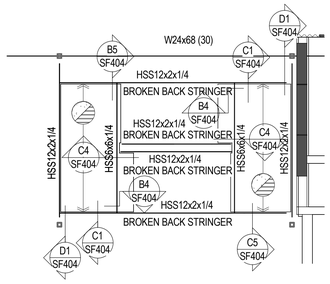

D1 / SF402 LEVEL 2 STAIR E FRAMING PLAN

SCALE: 1/4" = 1'-0"

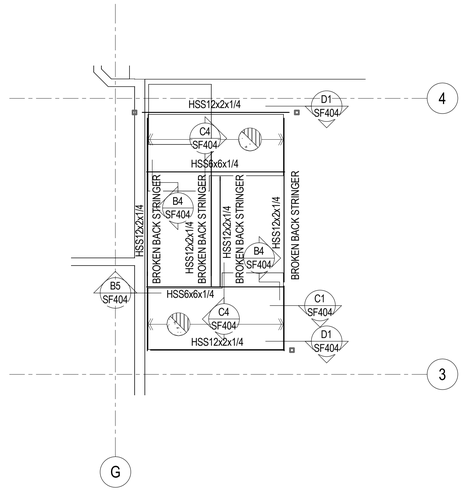

D4 / SF402 LEVEL 2 STAIR C FRAMING PLAN

SCALE: 1/4" = 1'-0"

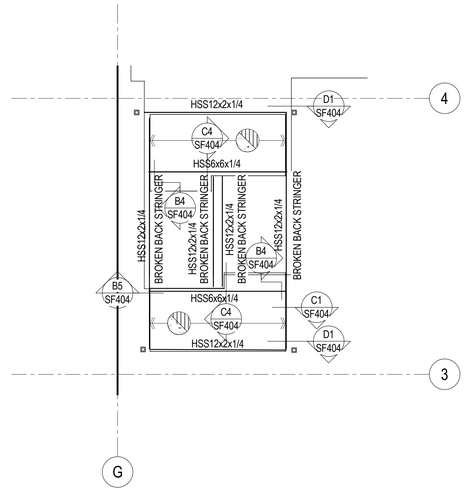

D5 / SF402 TYPICAL STAIR C FRAMING PLAN

SCALE: 1/4" = 1'-0"

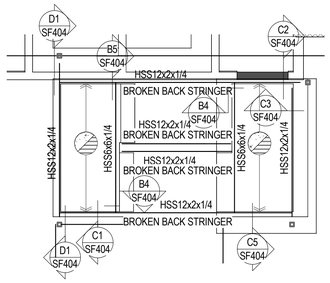

B1 / SF402 TYPICAL STAIR E FRAMING PLAN

SCALE: 1/4" = 1'-0"

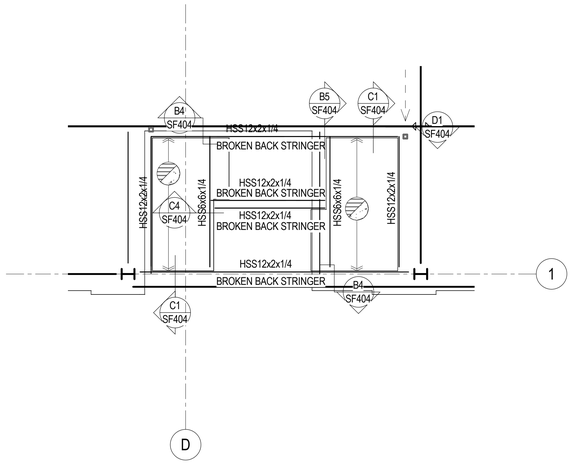

B3 / SF402 ROOF ACCESS LEVEL STAIR D FRAMING PLAN

SCALE: 1/4" = 1'-0"

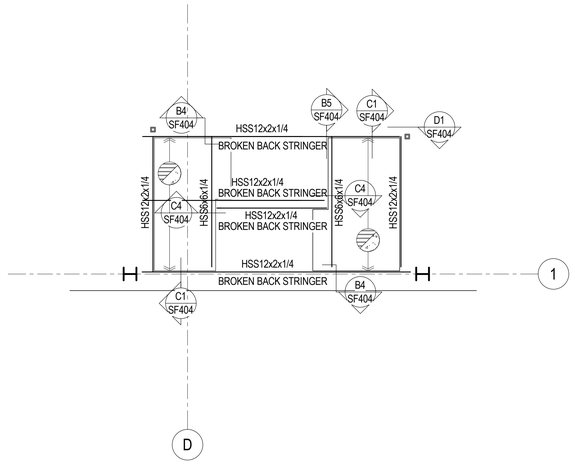

B5 / SF402 TYPICAL STAIR D FRAMING PLAN

SCALE: 1/4" = 1'-0"

VCBO ARCHITECTURE
524 SOUTH 600 EAST
SALT LAKE CITY, UT 84102
Phone: (801) 575-8800
Fax: (801) 531-9850
Web: vcbo.com

PROFESSIONAL STRUCTURAL ENGINEER No. 299733 JERROD G. JOHNSON 8/15/13 STATE OF UTAH

REAVELEY ENGINEERS + ASSOCIATES
Consulting Structural Engineers
P: 801.486.3883
F: 801.485.0911
675 E. 500 S. Suite 400
Salt Lake City, Utah 84102
www.reaveley.com

2nd District Juvenile Courthouse

Utah State Courts
08284150
165 West 20th Street, Ogden, Utah
BID DOCUMENTS

Rev #	Date	Description

Job # 12500
Date August 15, 2013
Owner # 08284150
Ins. #

STAIR FRAMING PLANS

SF402

8/14/2013 4:54:37 PM

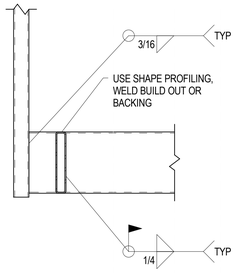

D1 / SF404 STAIR STRINGER TO STAIR HANGER CONNECTION
NO SCALE

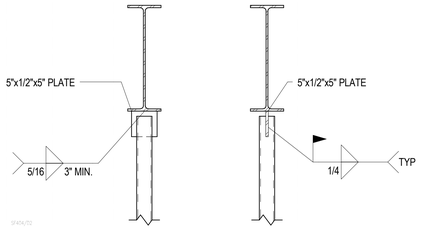

D2 / SF404 STAIR HANGER CONNECTION TO STEEL BEAM
NO SCALE

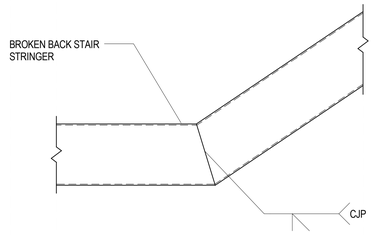

D3 / SF404 BROKEN BACK STRINGER DETAIL
NO SCALE

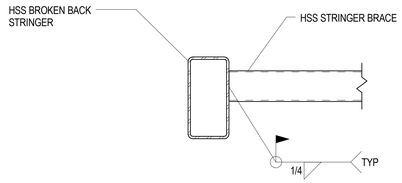

D4 / SF404 HSS TO HSS STRINGER CONNECTION
NO SCALE

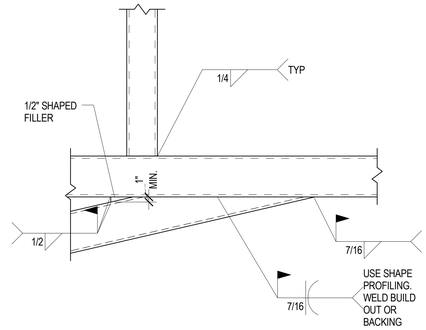

D5 / SF404 HSS STRINGER TO HSS STRINGER CONNECTION
NO SCALE

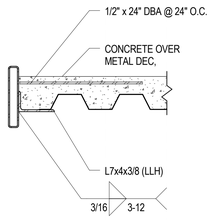

C1 / SF404 STAIR LANDING EDGE CONDITION
NO SCALE

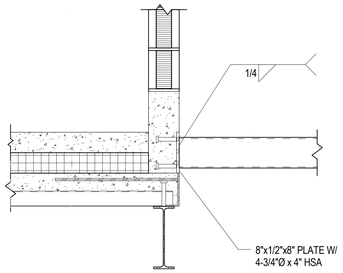

C2 / SF404 STAIR HSS TO CONCRETE CURB WALL
NO SCALE

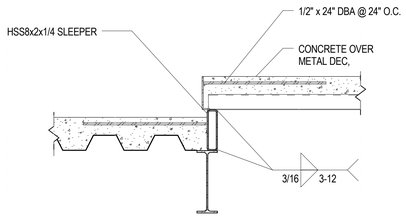

C3 / SF404 FLLOR STEP AT STAIR LANDING
NO SCALE

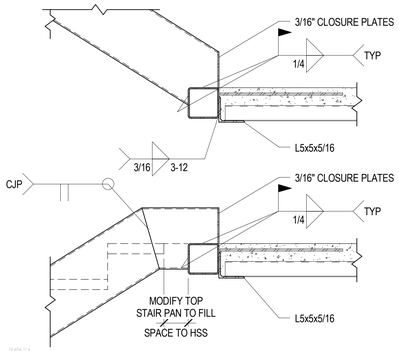

C4 / SF404 STAIR STRINGER AT INTERMIDIATE LANDINGS
NO SCALE

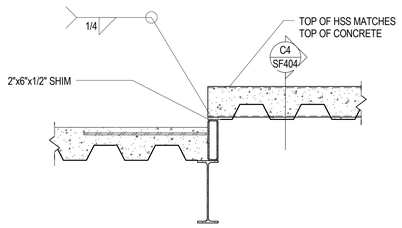

C5 / SF404 FLOOR STEP AT STAIR LANDING
NO SCALE

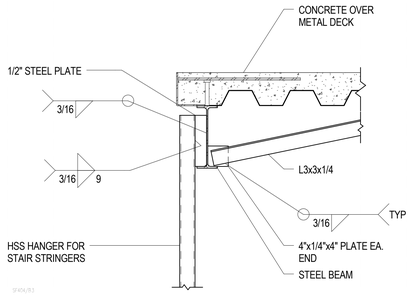

B3 / SF404 HSS HANGER FOR STAIR STRINGER
NO SCALE

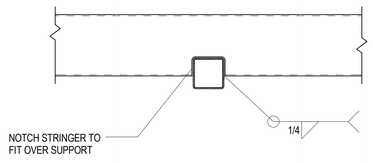

B4 / SF404 HSS STAIR STRINGER TO HSS SUPPORT
NO SCALE

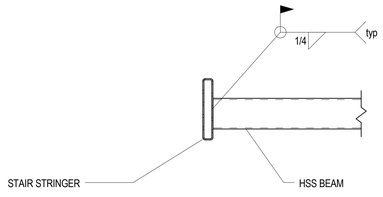

B5 / SF404 HSS BEAM TO HSS STRINGER
NO SCALE

VCBO ARCHITECTURE
VCBO ARCHITECTURE
524 SOUTH 600 EAST
SALT LAKE CITY, UT 84102
Phone: (801) 575-8800
Fax: (801) 531-9850
Web: vcbo.com

PROFESSIONAL STRUCTURAL ENGINEER No. 299733 JEROD G. JOHNSON 8/15/13 STATE OF UTAH

REAVELEY ENGINEERS + ASSOCIATES
Consulting Structural Engineers
P: 801.486.3883
F: 801.485.0911
675 E. 500 S. Suite 400
Salt Lake City, Utah 84102
www.reaveley.com

2nd District Juvenile Courthouse

Utah State Courts
08284150
165 West 20th Street, Ogden, Utah
BID DOCUMENTS

Rev #	Date	Description

Job # 12500
Date August 15, 2013
Owner # 08284150
Ins. #

STAIR FRAMING DETAILS

SF404

8/14/2013 4:54:38 PM

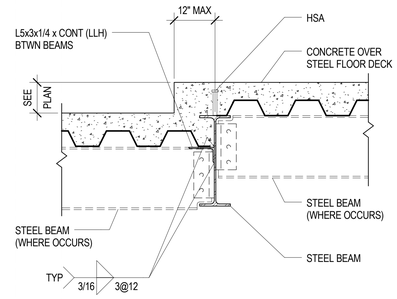

D1 / SF501 TYPICAL DETAIL AT STEP IN COMPOSITE FLOOR DECK
NO SCALE

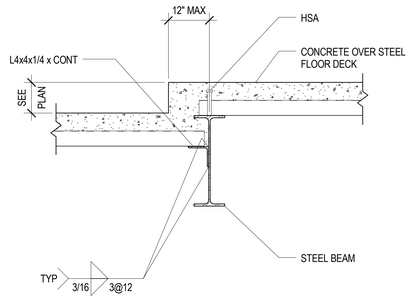

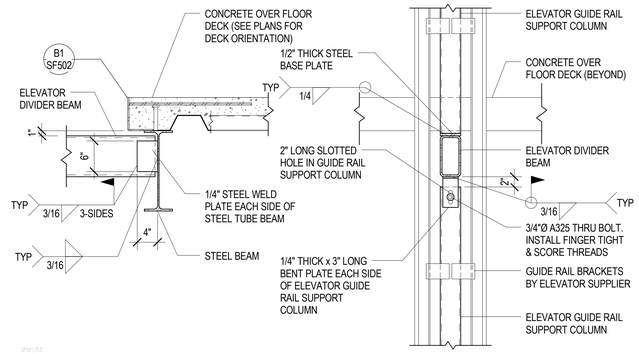

D3 / SF501 TYPICAL DETAIL AT ELEVATOR DIVIDER STEEL BEAM
NO SCALE

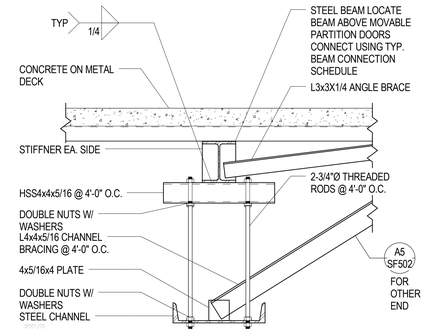

D5 / SF501 TYPICAL CHANNEL SUPPORT FOR MOVABLE PARTITION DOORS
NO SCALE

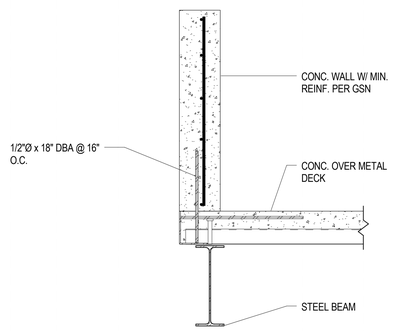

C1 / SF501 PLAZA DECK EDGE WITH CURB
NO SCALE

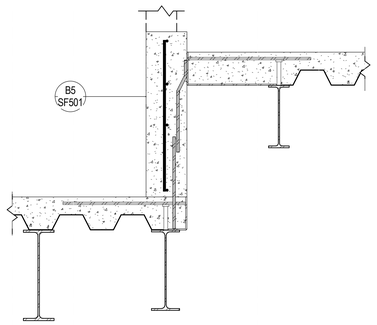

C2 / SF501 FLOOR STEP AT PLAZA
NO SCALE

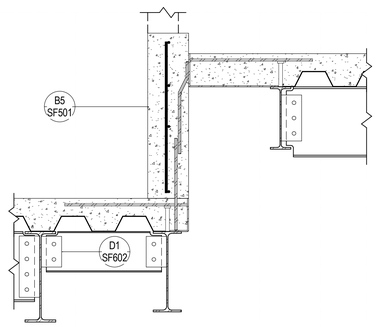

C3 / SF501 FLOOR STEP AT PLAZA
NO SCALE

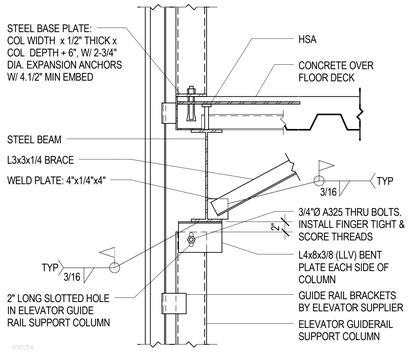

GUIDE RAIL SUPPORT COLUMN AT BEAM

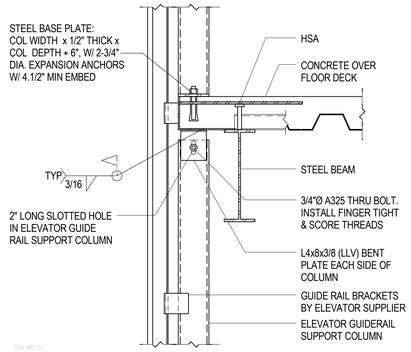

GUIDE RAIL SUPPORT COLUMN AT FLOOR SLAB

C4 / SF501 TYPICAL ELEVATOR GUIDE RAIL SUPPORT CONNECTIONS
NO SCALE

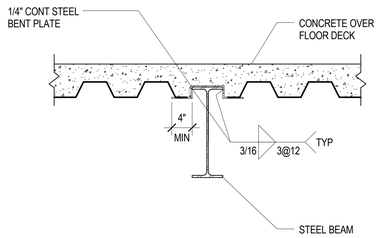

B2 / SF501 DETAIL AT LOWERED FLOOR DECK ON HIGH BEAM
NO SCALE

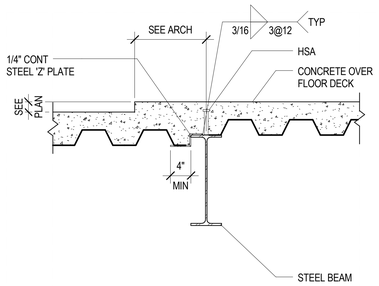

B3 / SF501 DETAIL AT STEP IN COMPOSITE FLOOR DECK
NO SCALE

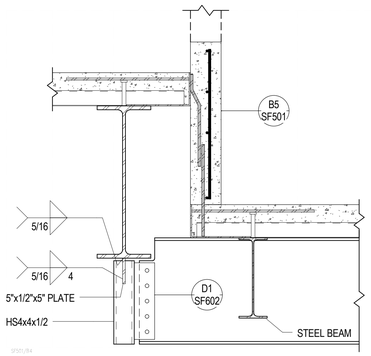

B4 / SF501 FLOOR STEP AT PLAZA
NO SCALE

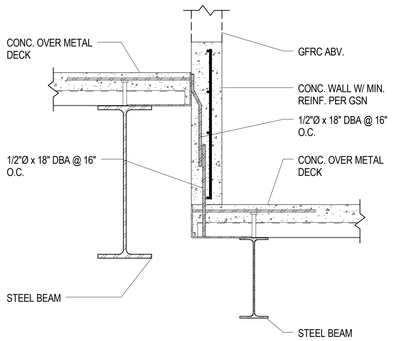

B5 / SF501 FLOOR STEP AT PLAZA
NO SCALE

VCBO ARCHITECTURE
VCBO ARCHITECTURE
524 SOUTH 600 EAST
SALT LAKE CITY, UT 84102
Phone: (801) 575-8800
Fax: (801) 531-9850
Web: vcbo.com

PROFESSIONAL STRUCTURAL ENGINEER No. 299033 JEROD G. JOHNSON 8/15/13 STATE OF UTAH

REAVELEY ENGINEERS + ASSOCIATES
Consulting Structural Engineers
P: 801.486.3883
F: 801.485.0911
675 E. 500 S. Suite 400
Salt Lake City, Utah 84102
www.reaveley.com

2nd District Juvenile Courthouse

Utah State Courts
08284150
165 West 20th Street, Ogden, Utah
BID DOCUMENTS

Rev #	Date	Description

Job # 12500
Date August 15, 2013
Owner # 08284150
Ins. #

FLOOR FRAMING DETAILS

SF501

8/14/2013 4:54:39 PM

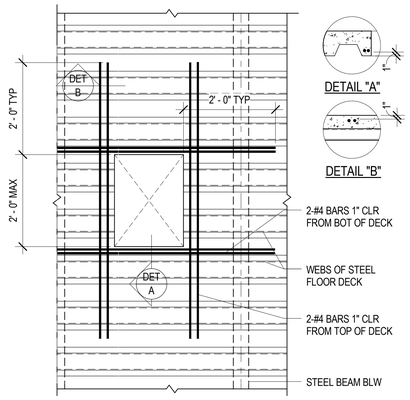

FORMED OPENING

DETAIL "A"

DETAIL "B"

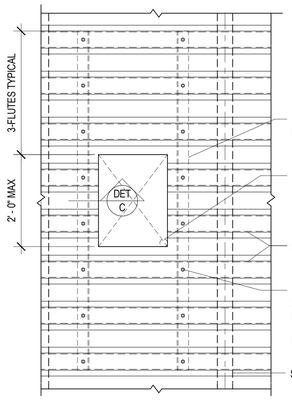

SAW-CUT OPENING

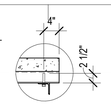

DETAIL "C"

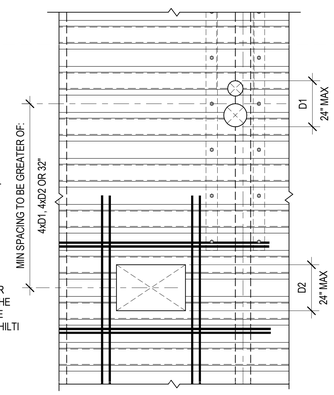

GROUPED OPENINGS

NOTES:

1. UNREINFORCED OPENINGS
A. OPENINGS UP TO 6" DIA. DO NOT REQUIRE REINFORCING PROVIDED THEY ARE NOT SPACED LESS THAN 32" O.C.

2. FORMED OPENINGS
A. LEAVE METAL DECK INTACT. PLACE REBAR & FORM OPENING. REMOVE METAL DECK ONCE CONCRETE REACHES 2500psi

3. SAW-CUT OPENINGS
A. SHIM GAPS BETWEEN ANGLE AND BOTTOM FLUTE.
B. INSTALL ANCHORS PER ICC REPORT.

4. GROUPED OPENINGS
A. OPENINGS SPACED CLOSER THAN THE MIN SPACING SHALL BE REINFORCED AS A SINGLE OPENING.
B. THE SIZE OF OPENINGS MEASURED PARALLEL TO THE DECK FLUTES IS NOT LIMITED.

D1 / SF502 TYPICAL MISCELLANEOUS FLOOR OPENING REINFORCING DETAIL FOR TYPE 'W' DECK (UP TO 24")

NO SCALE

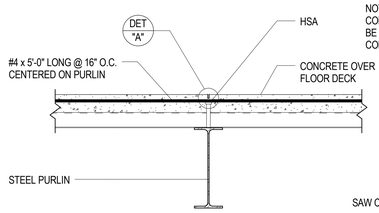

DETAIL AT STEEL PURLIN

NOTE:
CONTROL JOINTS SHALL BE LOCATED AT INTERIOR COLUMN LINES.

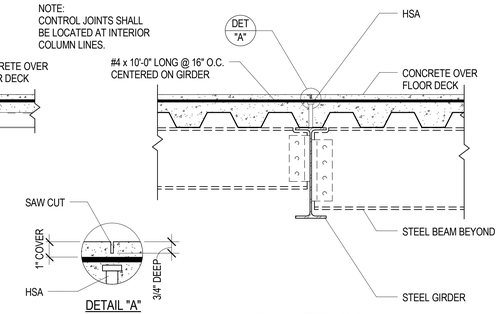

DETAIL "A"

DETAIL AT STEEL GIRDER

D3 / SF502 TYPICAL COMPOSITE DECK CONTOL JOINTS

NO SCALE

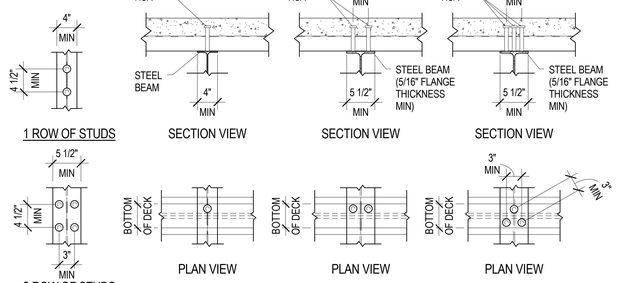

C1 / SF502 TYPICAL STUD PLACEMENT DIAGRAMS

NO SCALE

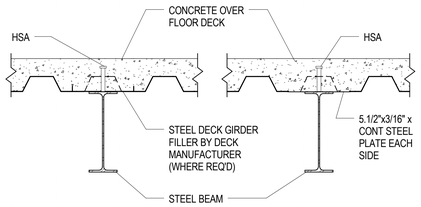

DETAIL AT STEEL BEAM

AT SKEWED BEAM

C2 / SF502 TYPICAL COMPOSITE DECK BEARING DETAIL AT STEEL BEAM (DECK GIRDER FILLER)

NO SCALE

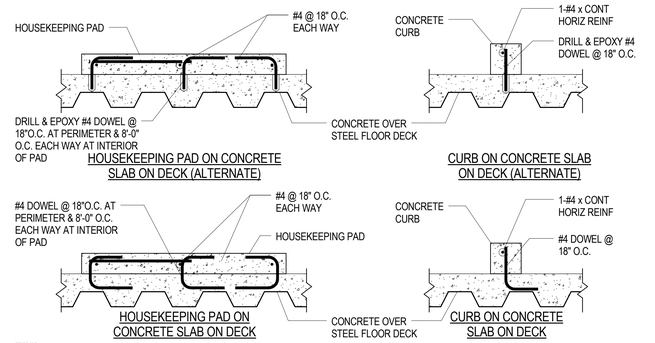

C3 / SF502 TYPICAL HOUSEKEEPING PAD & CURB DETAILS

NO SCALE

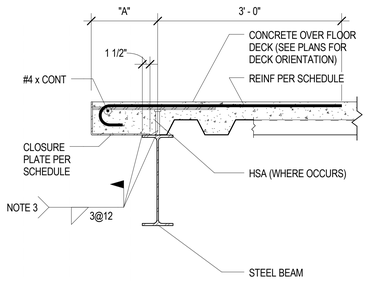

BENT PLATE SLAB EDGE DETAIL

DECK EDGE SCHEDULE			
"A"	DECK CLOSURE PLATE		REINFORCING
	THICKNESS	ANCHORS	
0" TO 6"	3/16"	1/2" Ø x 18" LONG DBA @ 24" O.C.	NONE
UP TO 12"	3/16"	1/2" Ø x 24" LONG DBA @ 24" O.C.	#4 @ 12" O.C.
UP TO 15"	1/4"	1/2" Ø x 24" LONG DBA @ 24" O.C.	#4 @ 12" O.C.
UP TO 18"	5/16"	1/2" Ø x 24" LONG DBA @ 24" O.C.	#4 @ 10" O.C.
UP TO 20"	3/8"	1/2" Ø x 24" LONG DBA @ 24" O.C.	#4 @ 8" O.C.
OVER 20"	USE BRACED SLAB EDGE		

NOTES:
1. CONTRACTOR SHALL VERIFY ALL DECK EDGE DIMENSIONS WITH ARCH. DRAWINGS PRIOR TO DETAILING AND FABRICATION OF CLOSURE PLATES.
2. COORDINATE CLOSURE ANGLES WITH EMBED BLOCKOUTS OR INSERTS THAT ARE REQ'D TO SUPPORT CLADDING, ELEVATOR RAILS & SILLS ETC.
3. CLOSURE PLATE WELD THICKNESS SHALL BE THE PLATE THICKNESS MINUS 1/16" (3/16" MIN)

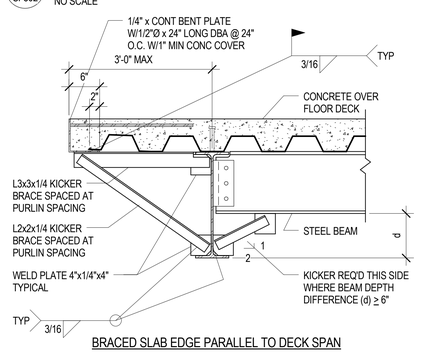

BRACED SLAB EDGE PARALLEL TO DECK SPAN

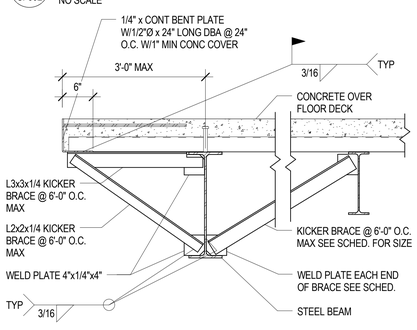

BRACED SLAB EDGE PERPENDICULAR TO DECK SPAN

ANGLE BRACE SCHEDULE		
BRACE LENGTH	ANGLE BRACE SIZE	WELD PLATE SIZE
UP TO 4'-0"	L2x2x1/4	4"x1/4"x4"
4'-0" TO 8'-0"	L3x3x1/4	4"x1/4"x4"
8'-0" TO 12'-0"	2-L2.1/2x2.1/2x1/4	4"x3/8"x4"
OVER 12'-0"	2-L3x3x1/4	5"x3/8"x5"

NOTE:
1. WHERE DOUBLE ANGLES ARE USED PROVIDE 3"x3/8" SPACER PLATES AT THIRD POINTS.

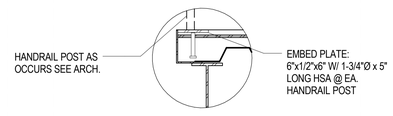

DETAIL @ HANDRAIL POST

B1 / SF502 TYPICAL CONCRETE OVER STEEL FLOOR DECK SLAB EDGE DETAILS AT STEEL BEAMS

NO SCALE

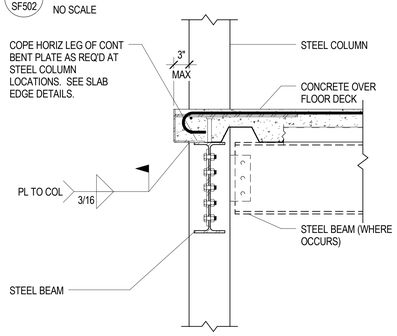

BENT PLATE SLAB EDGE DETAIL

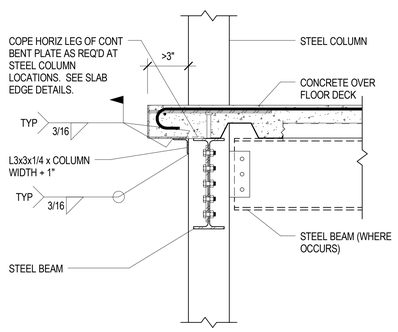

BENT PLATE SLAB EDGE DETAIL

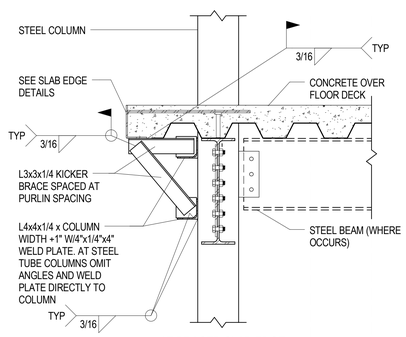

AT BRACED SLAB EDGE

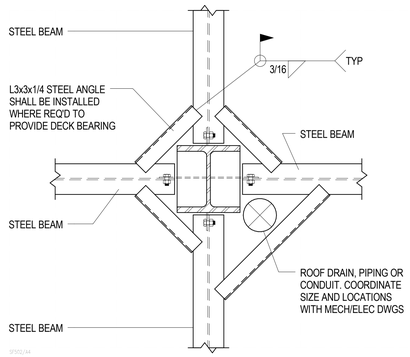

B5 / SF502 TYPICAL DETAIL AT HANDRAIL POST

NO SCALE

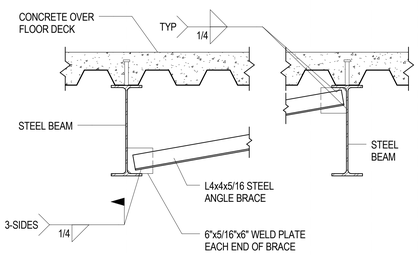

A1 / SF502 TYPICAL CONCRETE OVER STEEL FLOOR DECK SLAB EDGE DETAILS AT STEEL COLUMNS

NO SCALE

A4 / SF502 TYPICAL DECK BEARING AT STEEL COLUMN (PLAN VIEW)

NO SCALE

A5 / SF502 TYPICAL STEEL BEAM BOTTOM FLANGE BRACE DETAIL

NO SCALE

VCBO ARCHITECTURE
524 SOUTH 600 EAST
SALT LAKE CITY, UT 84102
Phone: (801) 575-8800
Fax: (801) 531-9850
Web: vcbo.com

REAVELEY ENGINEERS + ASSOCIATES
Consulting Structural Engineers

2nd District Juvenile Courthouse

Utah State Courts
08284150
165 West 20th Street, Ogden, Utah
BID DOCUMENTS

Rev #	Date	Description

Job # 12500
Date August 15, 2013
Owner # 08284150
Ins. #

FLOOR FRAMING DETAILS

SF502

8/14/2013 4:54:40 PM

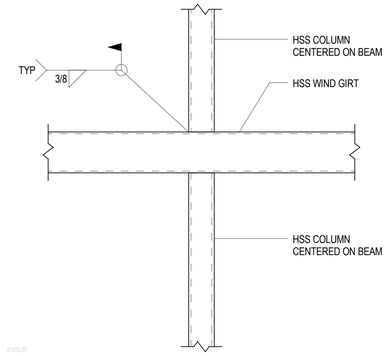

D1 / SF503 — WIND GIRT TO COLUMN CONNECTION
NO SCALE

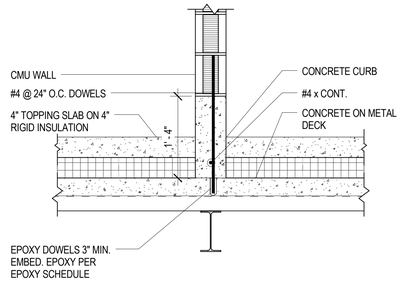

D2 / SF503 — CONCRETE CURB FOR FOR HOLDING CELL AT RAISED FLOOR
NO SCALE

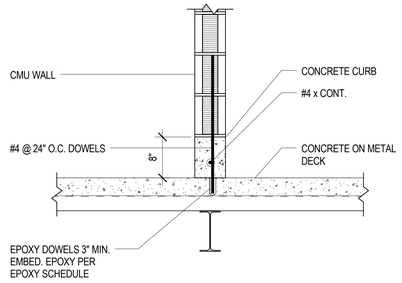

D3 / SF503 — CONCRETE CURB FOR HOLDING CELL
NO SCALE

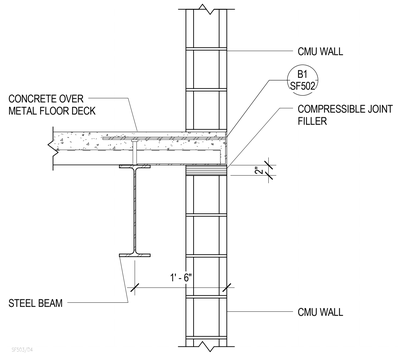

D4 / SF503 — SLAB EDGE AT ELEVATOR SHAFT
NO SCALE

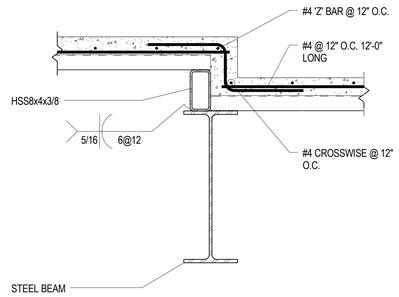

D5 / SF503 — FLOOR STEP AT STEEL BEAM
NO SCALE

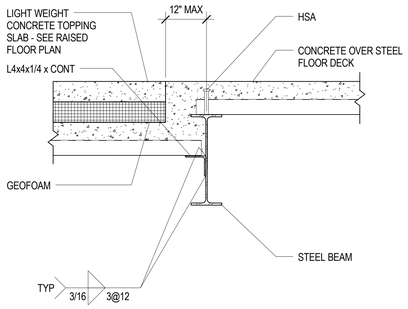

C1 / SF503 — TYPICAL CONCRETE TOPPING SLAB TO CONCRETE OVER STEEL FLOOR DECK AT STEP
NO SCALE

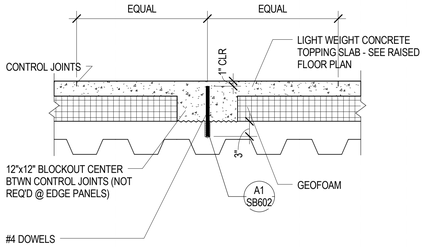

C2 / SF503 — TYPICAL CONCRETE TOPPING SLAB OVER RIGID INSULATION TO CONCRETE OVER STEEL FLOOR DECK
NO SCALE

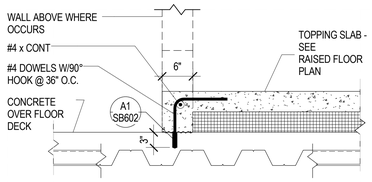

C3 / SF503 — CONCRETE TOPPING SLAB AT EDGE
NO SCALE

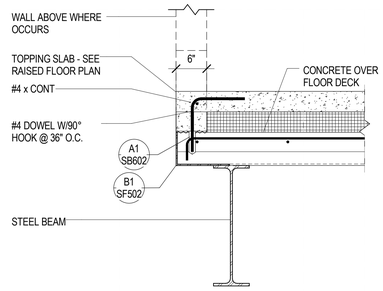

C4 / SF503 — TOPPING CONCRETE OVER CONCRETE OVER FLOOR DECK AT EDGE
NO SCALE

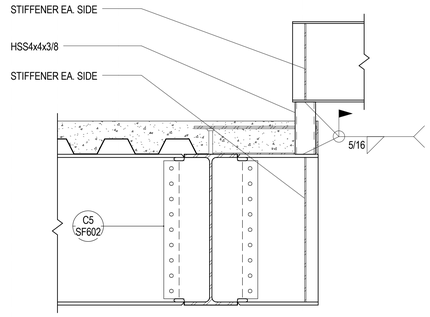

C5 / SF503 — CANTILEVERED BEAM TO BEAM CONNECTION AT STAIR BEAM AND COLUMN
NO SCALE

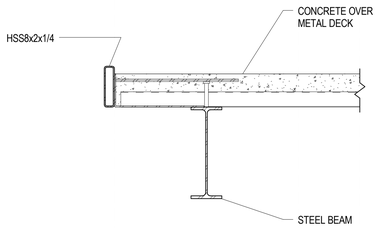

B1 / SF503 — DECK EDGE AT MAIN STAIR OPENING
NO SCALE

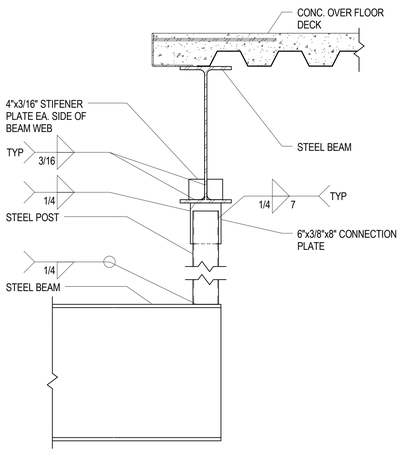

A2 / SF503 — STEEL BEAM AT STEEL POST HANGER
NO SCALE

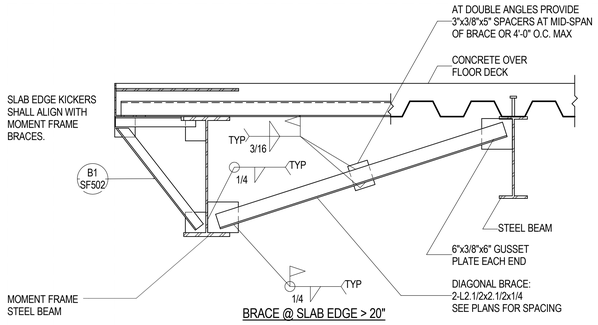

BRACE @ SLAB EDGE > 20"

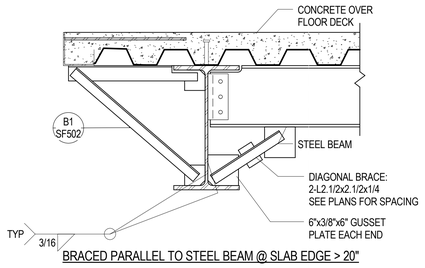

BRACED PARALLEL TO STEEL BEAM @ SLAB EDGE > 20"

NOTES:

1. AT CONTRACTOR'S OPTION, BRACING ANGLES MAY BE ATTACHED TO GUSSET PLATES WITH TWO A325 BOLTS EACH END IN LIEU OF WELDING.

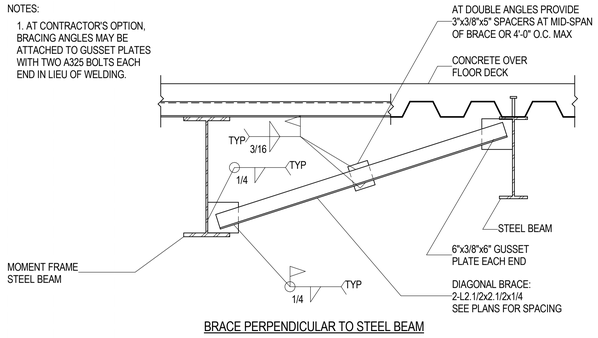

BRACE PERPENDICULAR TO STEEL BEAM

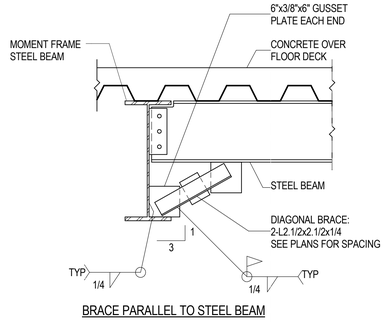

BRACE PARALLEL TO STEEL BEAM

A4 / SF503 — TYPICAL MOMENT FRAME ANGLE BRACE DETAIL
NO SCALE

VCBO ARCHITECTURE
524 SOUTH 600 EAST
SALT LAKE CITY, UT 84102
Phone: (801) 575-8800
Fax: (801) 531-9850
Web: vcbo.com

PROFESSIONAL STRUCTURAL ENGINEER
No. 259733
JEROD G. JOHNSON
8/15/13
STATE OF UTAH

REAVELEY
ENGINEERS + ASSOCIATES
Consulting Structural Engineers
P: 801.486.3883
F: 801.485.0911
675 E. 500 S. Suite 400
Salt Lake City, Utah 84102
www.reaveley.com

2nd District Juvenile Courthouse

Utah State Courts
08284150
165 West 20th Street, Ogden, Utah
BID DOCUMENTS

Rev #	Date	Description

Job # 12500
Date August 15, 2013
Owner # 08284150
Ins. #

FLOOR FRAMING DETAILS

SF503

8/14/2013 4:54:41 PM

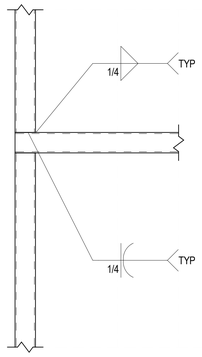

D1 / SF504 HSS COLUMN TO HSS BEAM CONNECTION
NO SCALE

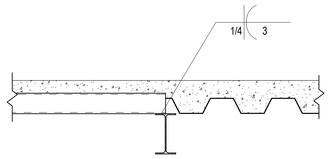

D2 / SF504 HSS EMBEDED IN CONCRETE OVER METAL FLOOR DECK
NO SCALE

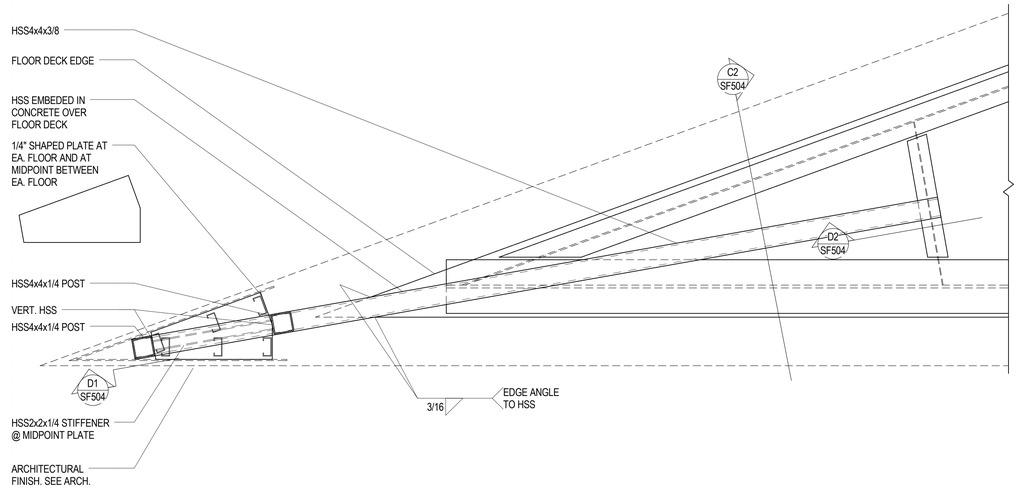

C3 / SF504 CANTILEVERED KNIFE EDGE PLAN VIEW
NO SCALE

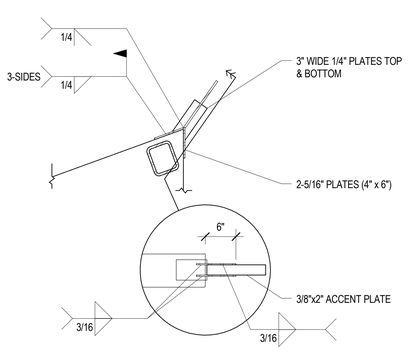

C1 / SF504 HSS COLUMN TO FLOOR DECK EDGE - PLAN VIEW
NO SCALE

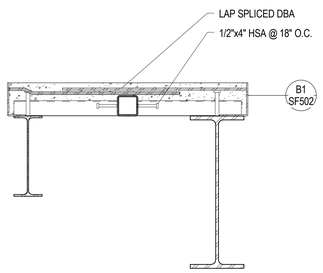

C2 / SF504 HSS EMBEDED IN CONCRETE OVER METAL FLOOR DECK
NO SCALE

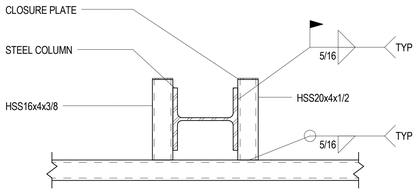

B1 / SF504 HSS CONNECTION TO WF COLUMN
NO SCALE

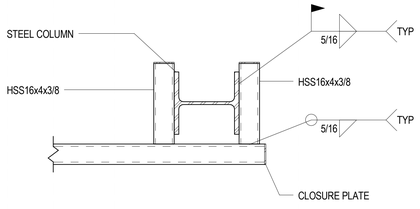

B2 / SF504 HSS CONNECTIN TO WF COLUMN - PLAN VIEW
NO SCALE

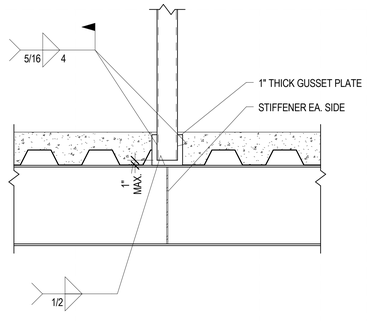

B3 / SF504 TYPICAL HANGER DETAIL
NO SCALE

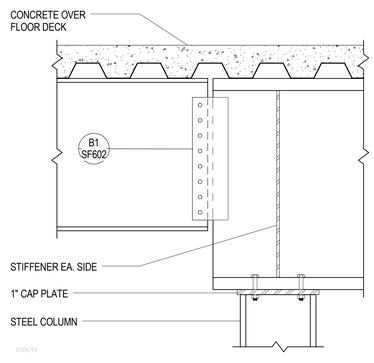

B4 / SF504 DROP IN BEAM TO STEEL BEAM CONNECTION
NO SCALE

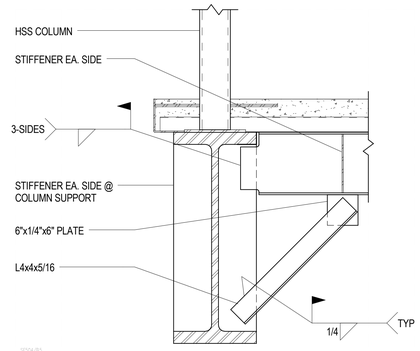

B5 / SF504 HSS TO STEEL BEAM
NO SCALE

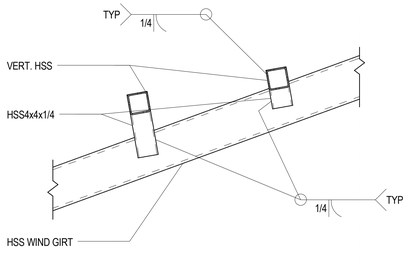

A2 / SF504 HSS COLUMN SUPPORT AT WIND GIRT - PLAN VIEW
NO SCALE

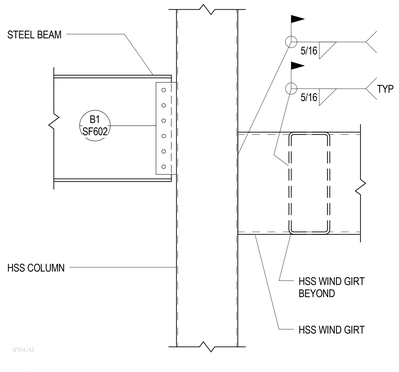

A3 / SF504 HSS BEAM TO HSS COLUMN
NO SCALE

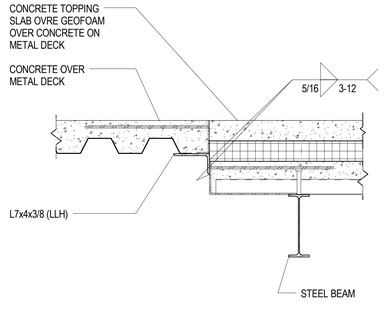

A4 / SF504 STEP AT FLOOR DECK
NO SCALE

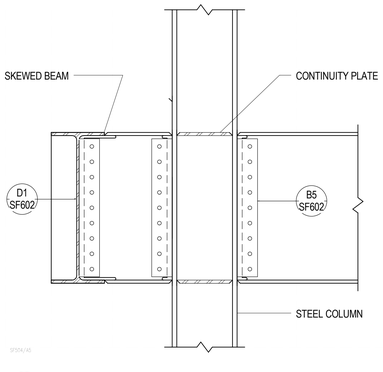

A5 / SF504 CANTILEVERED MOMENT CONNECTION AT COLUMN
NO SCALE

8/14/2013 4:54:42 PM

VCBO ARCHITECTURE
VCBO ARCHITECTURE
524 SOUTH 600 EAST
SALT LAKE CITY, UT 84102
Phone: (801) 575-8800
Fax: (801) 531-9850
Web: vcbo.com

PROFESSIONAL STRUCTURAL ENGINEER No. 299033 JEROD G. JOHNSON 8/15/13 STATE OF UTAH

REAVELEY ENGINEERS + ASSOCIATES
Consulting Structural Engineers
P: 801.486.3883
F: 801.485.0911
675 E. 500 S. Suite 400
Salt Lake City, Utah 84102
www.reaveley.com

2nd District Juvenile Courthouse

Utah State Courts
08284150
165 West 20th Street, Ogden, Utah
BID DOCUMENTS

Rev #	Date	Description

Job # 12500
Date August 15, 2013
Owner # 08284150
Ins. #

FLOOR FRAMING DETAILS

SF504

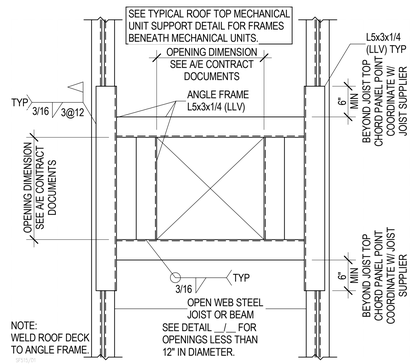

D1 / SF515 TYPICAL ROOF OPENING DETAIL (PLAN VIEW)
NO SCALE

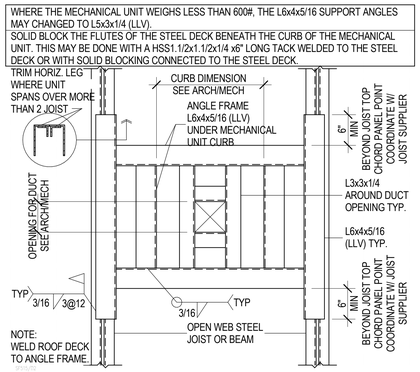

D2 / SF515 TYP ROOF TOP MECHANICAL UNIT SUPPORT DETAIL (PLAN VIEW)
NO SCALE

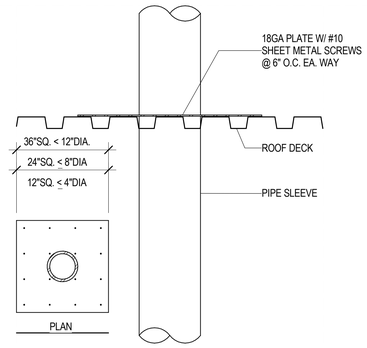

D3 / SF515 TYPICAL PIPE SLEEVE HOLE THRU ROOF DECK
NO SCALE

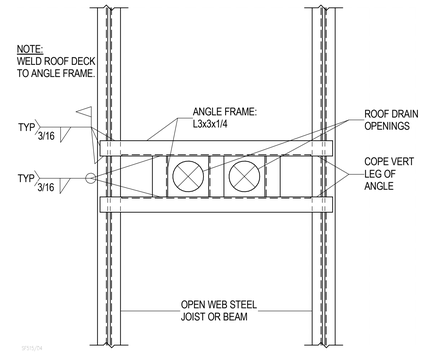

D4 / SF515 TYPICAL ROOF DRAIN OPENING (PLAN VIEW)
NO SCALE

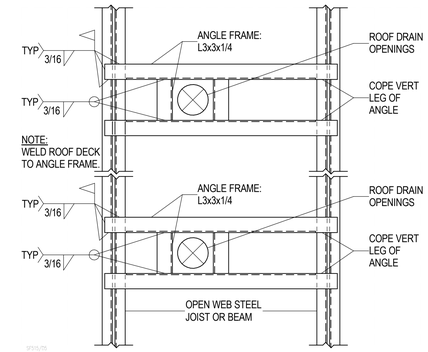

D5 / SF515 TYPICAL ROOF DRAIN OPENING (PLAN VIEW)
NO SCALE

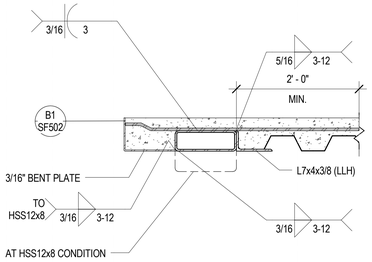

C1 / SF515 HSS CANTILEVERED AT FLOOR EDGE
NO SCALE

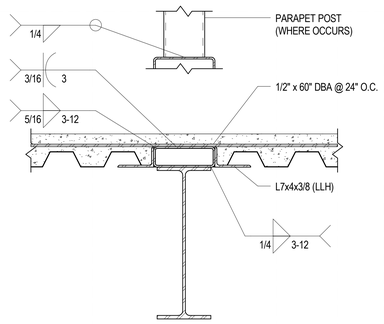

C2 / SF515 HSS OUTRIGGER FOR CANTILEVERED ROOF EDGE
NO SCALE

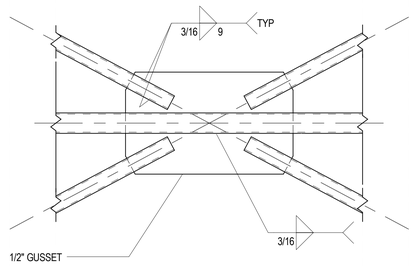

C3 / SF515 HSS BRACE TO HSS BEAM AT PARAPET SUPPORT
NO SCALE

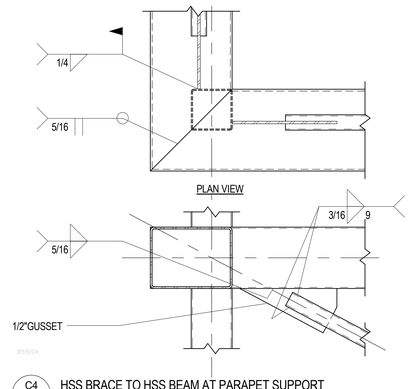

C4 / SF515 HSS BRACE TO HSS BEAM AT PARAPET SUPPORT
NO SCALE

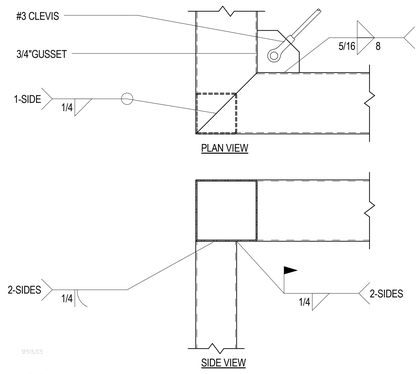

C5 / SF515 HSS BEAM TO HSS COLUMN AT PARAPET SUPPORT
NO SCALE

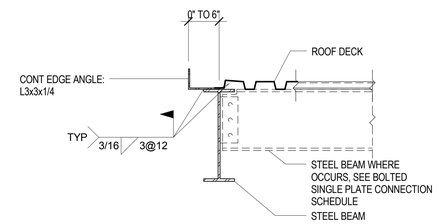

ROOF EDGE FOR 0" UP TO 6"

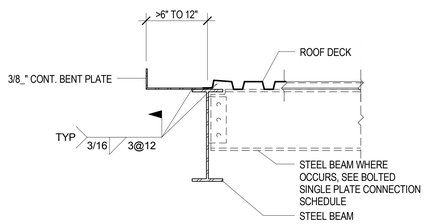

ROOF EDGE FOR >6" UP TO 12"

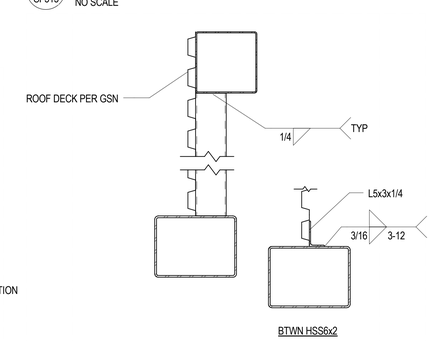

B3 / SF515 INTERMIDIATE HSS FOR PARAPET SUPPORT CONNECTION
NO SCALE

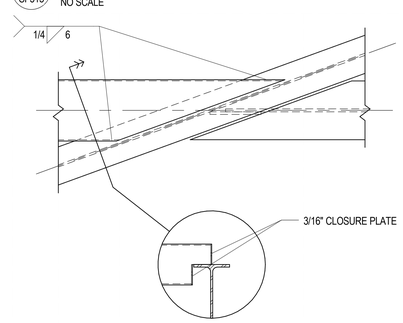

B4 / SF515 HSS OUTRIGGER TO STEEL GIRDER CONNECTION
NO SCALE

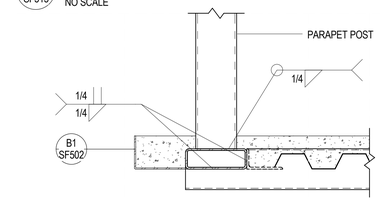

B5 / SF515 PARAPET POST AT CANTILEVERED ROOF EDGE
NO SCALE

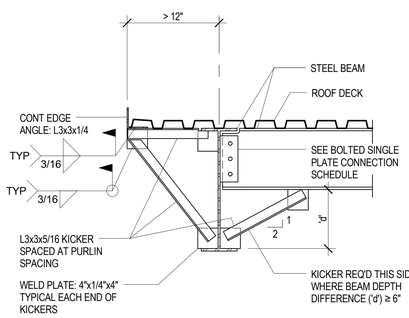

ROOF EDGE FOR >12"

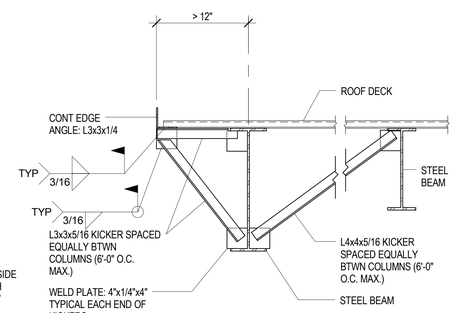

ROOF EDGE FOR >12"

A1 / SF515 TYPICAL ROOF EDGE DETAILS AT STEEL BEAMS
SCALE: 1" = 1'-0"

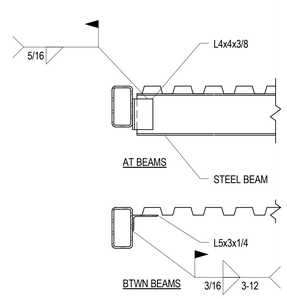

A3 / SF515 HSS TO BEAM AT ROOF EDGE
NO SCALE

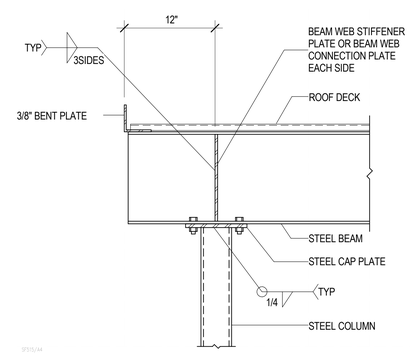

A4 / SF515 TYPICAL STEEL COLUMN/BEAM AT ROOF EDGE DETAIL FOR 12" DIMENSION
NO SCALE

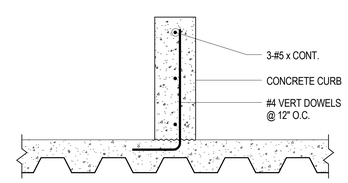

A5 / SF515 CONCRETE CURB FOR MECHANICAL EQUIPMENT
NO SCALE

8/14/2013 4:54:44 PM

VCBO ARCHITECTURE
ARCHITECTURE
VCBO ARCHITECTURE
524 SOUTH 600 EAST
SALT LAKE CITY, UT 84102
Phone: (801) 575-8800
Fax: (801) 531-9850
Web: vcbo.com

PROFESSIONAL STRUCTURAL ENGINEER No. 299733 JEROD G. JOHNSON 8/15/13 STATE OF UTAH

REAVELEY ENGINEERS + ASSOCIATES
Consulting Structural Engineers
P: 801.486.3883
F: 801.485.0911
675 E. 500 S. Suite 400
Salt Lake City, Utah 84102
www.reaveley.com

2nd District Juvenile Courthouse

Utah State Courts
08284150
165 West 20th Street, Ogden, Utah
BID DOCUMENTS

Rev #	Date	Description

Job # 12500
Date August 15, 2013
Owner # 08284150
Ins. #

ROOF FRAMING DETAILS

SF515

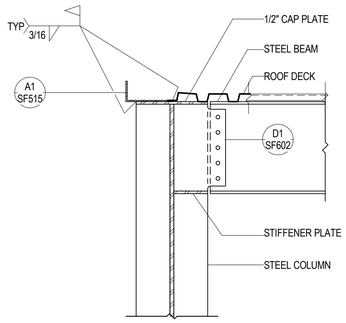

D1 SF516 TYPICAL BOLTED ROOF BEAM CONNECTION TO COLUMN WEB - ONE SIDE
NO SCALE

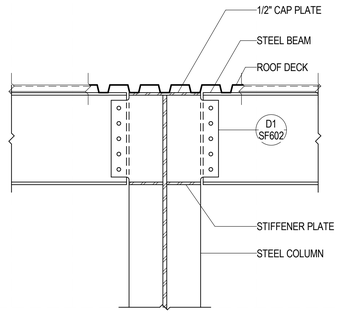

D2 SF516 TYPICAL BOLTED ROOF BEAM CONNECTION TO COLUMN WEB - TWO SIDES
NO SCALE

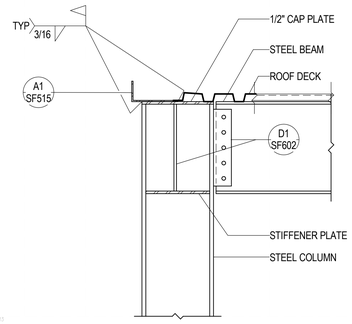

D3 SF516 TYPICAL BOLTED ROOF BEAM CONNECTION TO COLUMN WEB - ONE SIDE
NO SCALE

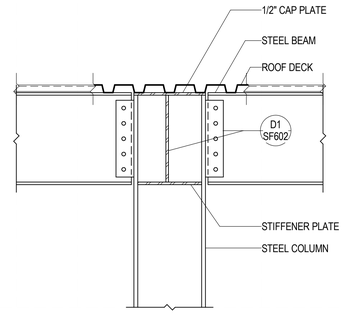

D4 SF516 TYPICAL BOLTED ROOF BEAM CONNECTION TO COLUMN WEB - TWO SIDES
NO SCALE

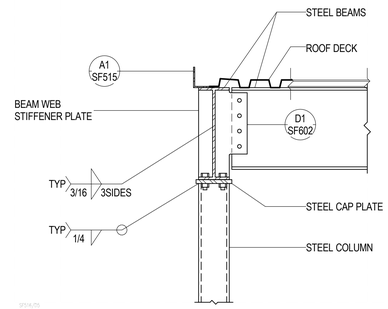

D5 SF516 TYPICAL STEEL BEAM TO STEEL COLUMN
NO SCALE

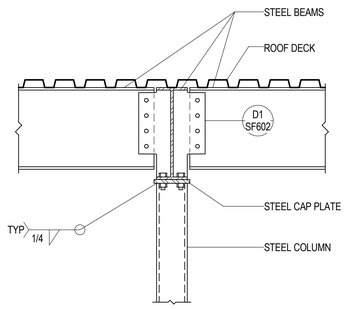

C1 SF516 TYPICAL STEEL BEAM TO STEEL COLUMN
NO SCALE

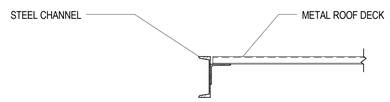

C2 SF516 ROOF DECK EDGE AT STEEL CHANNEL
NO SCALE

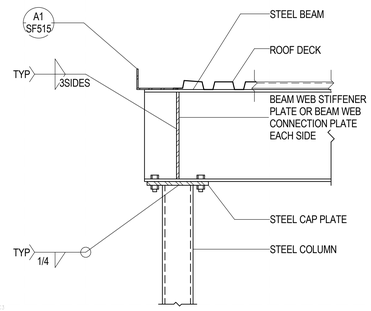

C3 SF516 TYPICAL STEEL BEAM TO STEEL COLUMN
NO SCALE

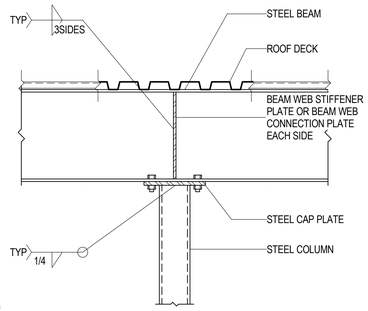

C4 SF516 TYPICAL STEEL BEAM TO STEEL COLUMN
NO SCALE

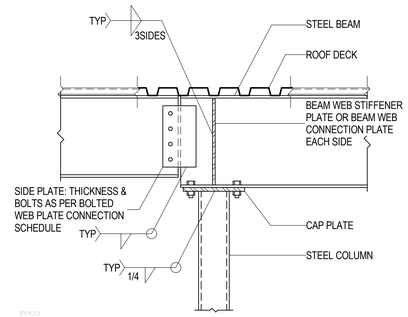

C5 SF516 TYPICAL STEEL BEAM TO STEEL COLUMN AT DROP-IN BEAM
NO SCALE

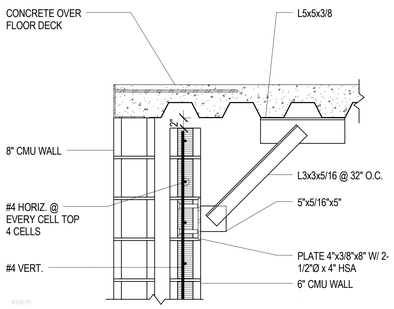

B1 SF516 ROOF BEARING AT DOUBLE MASONRY WALL
NO SCALE

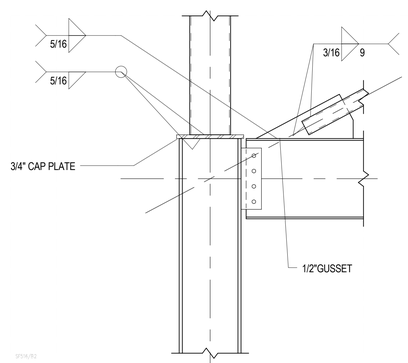

B2 SF516 HSS BRACE TO HSS BEAM AT PARAPET SUPPORT
NO SCALE

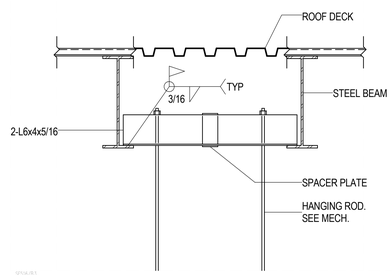

B3 SF516 TYPICAL HANGING MECHANICAL UNIT SUPPORT DETAIL
NO SCALE

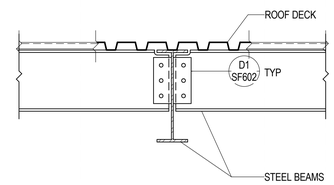

B4 SF516 TYP STEEL ROOF BEAM CONNECTION - TWO SIDES
NO SCALE

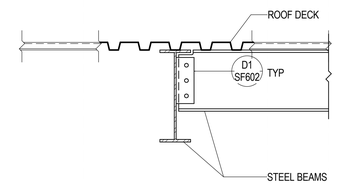

B5 SF516 TYPICAL STEEL ROOF BEAM CONNECTION - ONE SIDE
NO SCALE

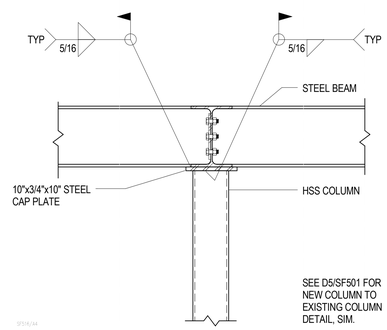

A4 SF516 MECHANICAL UNIT PLATFORM
NO SCALE

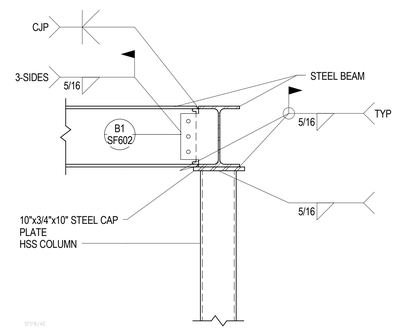

A5 SF516 MECHANICAL UNIT PLATFORM
NO SCALE

VCBO ARCHITECTURE
524 SOUTH 600 EAST
SALT LAKE CITY, UT 84102
Phone: (801) 575-8800
Fax: (801) 531-9850
Web: vcbo.com

REAVELEY ENGINEERS + ASSOCIATES
Consulting Structural Engineers
P: 801.486.3883
F: 801.485.0911
675 E. 500 S. Suite 400
Salt Lake City, Utah 84102
www.reaveley.com

2nd District Juvenile Courthouse

Utah State Courts
08284150
165 West 20th Street, Ogden, Utah
BID DOCUMENTS

Rev #	Date	Description

Job # 12500
Date August 15, 2013
Owner # 08284150
Ins. #

ROOF FRAMING DETAILS

SF516

8/14/2013 4:54:46 PM

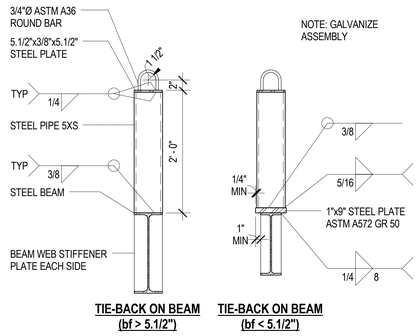

TIE-BACK ON BEAM (bf > 5.1/2") **TIE-BACK ON BEAM (bf < 5.1/2")**

D1 SF517 TYPICAL WINDOW WASHING TIE-BACK
NO SCALE

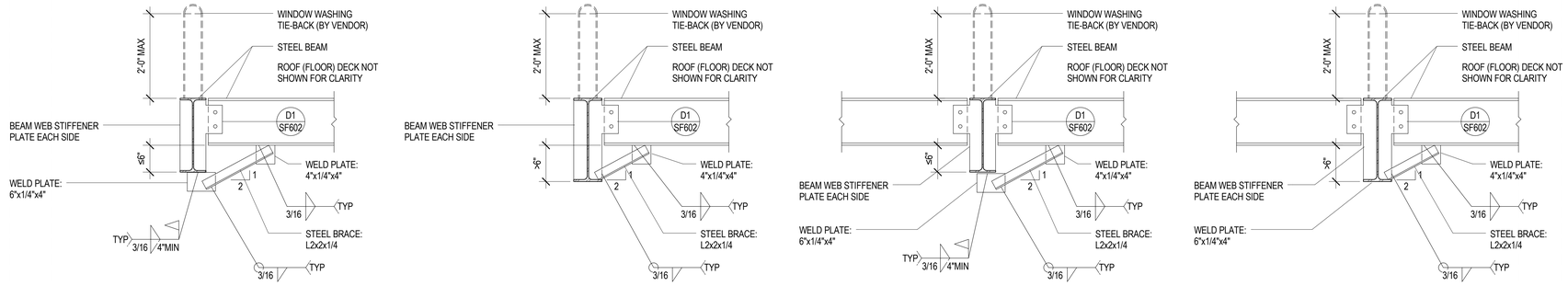

D2 SF517 TYPICAL WINDOW WASHING TIE-BACK CONNECTION TO STEEL BEAM
NO SCALE

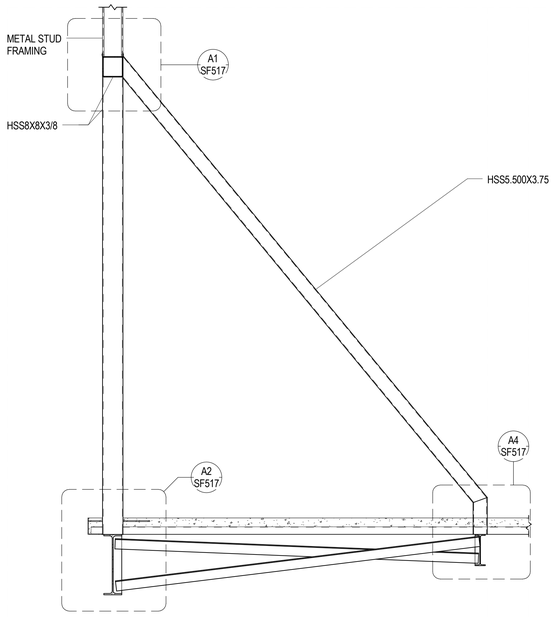

B1 SF517 PARAPET SUPPORT SECTION AT GFRC
NO SCALE

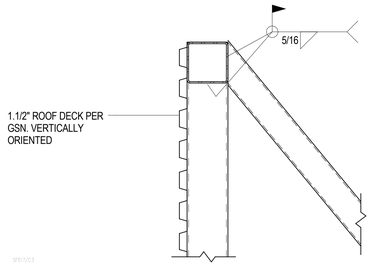

C3 SF517 HSS TO HSS AT TOP OF PARAPET SUPPORT
NO SCALE

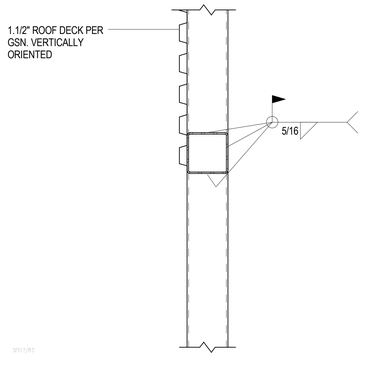

B3 SF517 HSS TO HSS CONNECTION
NO SCALE

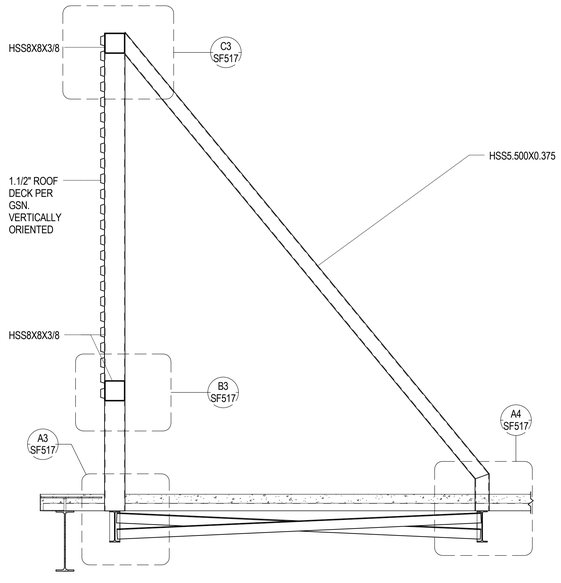

B4 SF517 PARAPET SUPPORT SECTION AT METAL PANEL
SCALE: 1/2" = 1'-0"

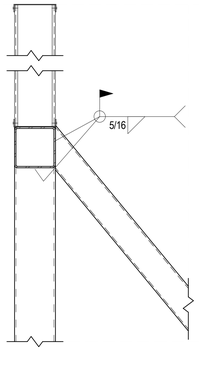

A1 SF517 HSS TO HSS AT TOP OF PARAPET SUPPORT
NO SCALE

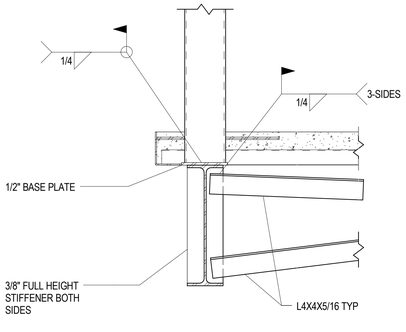

A2 SF517 HSS TO STEEL BEAM CONNECTION
NO SCALE

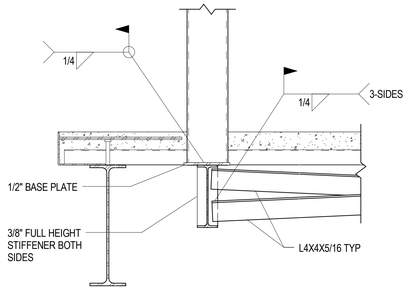

A3 SF517 HSS TO STEEL BEAM CONNECTION
NO SCALE

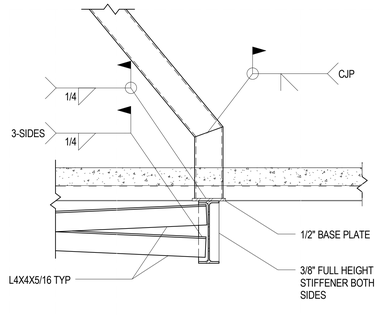

A4 SF517 HSS TO STEEL BEAM CONNECTION
NO SCALE

VCBO ARCHITECTURE
VCBO ARCHITECTURE
524 SOUTH 600 EAST
SALT LAKE CITY, UT 84102
Phone: (801) 575-8800
Fax: (801) 531-9850
Web: vcbo.com

PROFESSIONAL STRUCTURAL ENGINEER No. 299033 JEROD G. JOHNSON 8/15/13 STATE OF UTAH

REAVELEY ENGINEERS + ASSOCIATES
Consulting Structural Engineers
P: 801.486.3883
F: 801.485.0911
675 E. 500 S. Suite 400
Salt Lake City, Utah 84102
www.reaveley.com

2nd District Juvenile Courthouse

Utah State Courts
08284150
165 West 20th Street, Ogden, Utah
BID DOCUMENTS

Rev #	Date	Description

Job # 12500
Date August 15, 2013
Owner # 08284150
Ins. #

ROOF FRAMING DETAILS

SF517

8/14/2013 4:54:47 PM

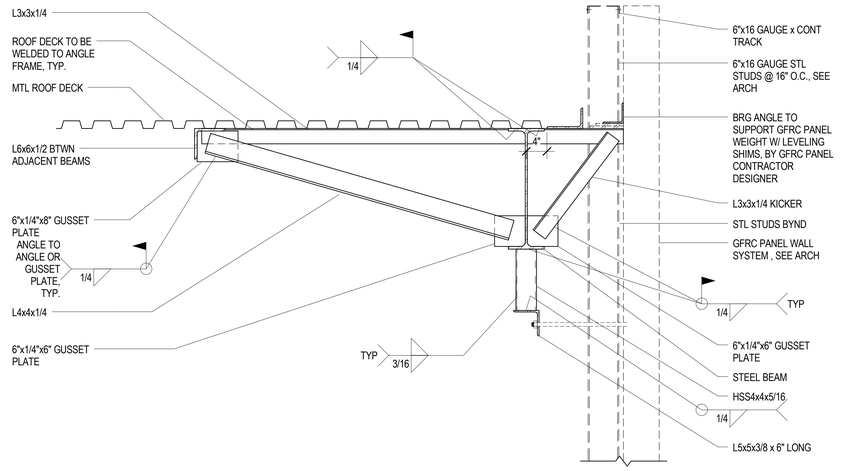

NOTE: THIS DETAIL ILLUSTRATES TYPICAL GFRC PANEL CONNECTION POINT. USE FOR BIDDING AND COST ESTIMATING. THE QUANTITY OF CONNECTION POINTS SHOWN IN THE DETAIL IS BASED ON THE ASSUMPTION THAT THERE IS ON AVERAGE OF ONE CONNECTION @ 6'-0" O.C. FOR AN ESTIMATED NUMBER OF 30. PAST EXPERIENCE HAS SHOWN THAT THIS IS A CONSERVATIVE NUMBER. AS SUCH, THE OWNER IS TO RECEIVE A CREDIT FOR EVERY CONNECTION POINT NOT USED IN THE FINAL DESIGN.

SF518/C4

C4 / SF518 TYPICAL STEEL STUD / GFRC PANEL AT PANEL CONNECTION POINTS TO ROOF BEAMS

NO SCALE

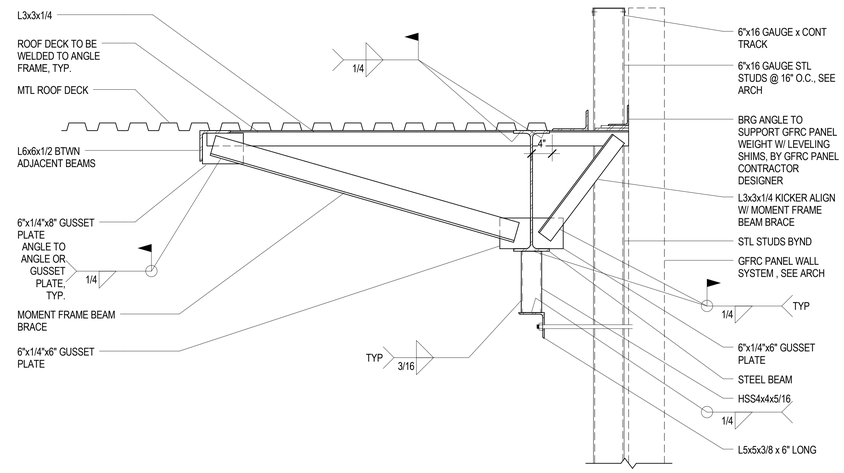

NOTE: THIS DETAIL ILLUSTRATES TYPICAL GFRC PANEL CONNECTION POINT. USE FOR BIDDING AND COST ESTIMATING. THE QUANTITY OF CONNECTION POINTS SHOWN IN THE DETAIL IS BASED ON THE ASSUMPTION THAT THERE IS ON AVERAGE OF ONE CONNECTION @ 6'-0" O.C. FOR AN ESTIMATED NUMBER OF 30. PAST EXPERIENCE HAS SHOWN THAT THIS IS A CONSERVATIVE NUMBER. AS SUCH, THE OWNER IS TO RECEIVE A CREDIT FOR EVERY CONNECTION POINT NOT USED IN THE FINAL DESIGN.

SF518/B4

B4 / SF518 TYPICAL STEEL STUD / GFRC PANEL AT PANEL CONNECTION POINTS TO ROOF BEAMS

NO SCALE

VCBO ARCHITECTURE

VCBO ARCHITECTURE
524 SOUTH 600 EAST
SALT LAKE CITY, UT 84102
Phone: (801) 575-8800
Fax: (801) 531-9850
Web: vcbo.com

PROFESSIONAL STRUCTURAL ENGINEER No. 299733 JEROD G. JOHNSON 8/15/13 STATE OF UTAH

REAVELEY ENGINEERS + ASSOCIATES
Consulting Structural Engineers

P: 801.486.3883
F: 801.485.0911

675 E. 500 S. Suite 400
Salt Lake City, Utah 84102
www.reaveley.com

2nd District Juvenile Courthouse

Utah State Courts
08284150
165 West 20th Street, Ogden, Utah
BID DOCUMENTS

Rev #	Date	Description

Job # 12500
Date August 15, 2013
Owner # 08284150
Ins. #

ROOF FRAMING DETAILS

SF518

8/14/2013 4:54:48 PM

ROOF ACCESS LEVEL																																	ROOF ACCESS LEVEL
187' - 4" LEVEL 5					W12x45	W12x50	W12x65	W10x39	W10x39	W12x65	W12x96		W12x65	HSS6x6x1/2	W12x50	W10x45	W12x45		W12x50		HSS6x6x1/2	HSS8x8x1/2							W12x65	W12x65		HSS6x6x1/2	187' - 4" LEVEL 5
169' - 4" LEVEL 4					W12x50	W12x58	W12x87	W10x45	W10x45	W12x87	W12x96		W12x87	HSS6x6x1/2	W12x58	W12x53	W12x50		W12x58		HSS6x6x1/2	HSS8x8x1/2							W12x87	W12x87		HSS6x6x1/2	169' - 4" LEVEL 4
151' - 4" LEVEL 3												W12x45		HSS6x6x1/2		W12x53					HSS6x6x1/2	HSS8x8x1/2										HSS6x6x1/2	151' - 4" LEVEL 3
133' - 4" LEVEL 2					W12x58	W12x72	W12x96	W10x49	W10x49	W12x96	W12x96	W12x58	W12x96	HSS6x6x1/2	W12x72	W12x58	W12x53	HSS4x4x3/8	W12x72		HSS6x6x1/2	HSS8x8x1/2							W12x96	W12x96		HSS6x6x1/2	133' - 4" LEVEL 2
115' - 4" LEVEL 1	W10x49	HSS5x5x3/8	HSS4x4x3/8	W10x49	SEE MOMENT FRAME ELEVATIONS											W12x38	HSS5x5x1/2			HSS5x5x3/8			W12x96	HSS4x4x3/8	HSS4x4x3/8	HSS6x6x1/2	HSS5x5x3/8	HSS5x5x3/8			W12x72	1", SBP-A W/4-7/8"DIA	115' - 4" LEVEL 1
100' - 0"	1", SBP-A W/4-7/8"DIA	1", SBP-A W/4-7/8"DIA	1", SBP-A W/4-7/8"DIA	1", SBP-A W/4-7/8"DIA		1.1/2", SBP-A W/4-7/8"DIA	1.1/2", SBP-A W/4-7/8"DIA	1.1/2", SBP-A W/4-7/8"DIA	1.1/2", SBP-A W/4-7/8"DIA	1.1/2", SBP-A W/4-7/8"DIA	1.1/2", SBP-A W/4-7/8"DIA	1.1/2", SBP-A W/4-7/8"DIA	1.1/2", SBP-A W/4-7/8"DIA	1", SBP-A W/4-7/8"DIA	1.1/2", SBP-A W/4-7/8"DIA	1.1/2", SBP-A W/4-7/8"DIA	1.1/2", SBP-A W/4-7/8"DIA	1", SBP-A W/4-7/8"DIA		1.1/2", SBP-A W/4-7/8"DIA	1", SBP-A W/4-7/8"DIA	1", SBP-A W/4-7/8"DIA	1", SBP-A W/4-7/8"DIA	1", SBP-A W/4-7/8"DIA	1", SBP-A W/4-7/8"DIA	1", SBP-A W/4-7/8"DIA	1", SBP-A W/4-7/8"DIA	1", SBP-A W/4-7/8"DIA		1.1/2", SBP-A W/4-7/8"DIA	1.1/2", SBP-A W/4-7/8"DIA	1", SBP-A W/4-7/8"DIA		100' - 0"
Column Locations	A-1	A(4' - 4 3/8")-5(9' - 11 3/4"), A(-1' - 6 1/4")-5(9' - 11 3/4")	A(4' - 3 1/8")-9(3' - 7 5/8"), A(-5' - 6 1/2")-9	B-3	C(3' - 1")-1	C(3' - 1")-3	C-10	D(15' - 4")-1	D(-3' - 9")-1	D(5' - 10")-9(-2' - 5")	D(5' - 10")-10	E(-4' - 6")-1, F(15' - 2")-1, F(-12' - 4")-1	E(15' - 6")-8(8' - 3")	E(8' - 8 1/2")-10(-3' - 1.5/8"), X1-10(1" - 9 7/8")	G(-4' - 2")-1	G(8' - 7")-10(-1' - 8")	H-8, H-10	H-9(-3' - 6")	H-9(-4' - 1")	J-1, J-4	X1-6(-2' - 10 5/8")	X1-9(3' - 1 1/2")	X1-9(-1' - 10")	X1-10	Y1(5' - 6 3/8")-7(6' - 0 5/8")	Y1(-3' - 8 1/4")-7(2' - 10 3/4")	Y2(1' - 8")-8(1' - 0")	Y2(1' - 8")-9(6' - 5")	A(-1' - 6 1/8")-X1(4 5/8")	A(-2' - 8 1/2")-X2(10 1/2"), X2(10 1/2")-Y2(-6' - 8 3/8")	C-X1	D(-4' - 1 1/4")-X1	E-X1	E(-4' - 11")-X1	

ROOF ACCESS LEVEL									ROOF ACCESS LEVEL
187' - 4" LEVEL 5	HSS6x6x1/2	HSS6x6x1/2	HSS6x6x1/2	HSS6x6x1/2	HSS6x6x1/2				187' - 4" LEVEL 5
169' - 4" LEVEL 4	HSS6x6x1/2	HSS6x6x1/2	HSS6x6x1/2	HSS6x6x1/2	HSS6x6x1/2				169' - 4" LEVEL 4
151' - 4" LEVEL 3	HSS6x6x1/2	HSS6x6x1/2	HSS6x6x1/2	HSS6x6x1/2	HSS6x6x1/2				151' - 4" LEVEL 3
133' - 4" LEVEL 2	HSS6x6x1/2	HSS6x6x1/2	HSS6x6x1/2	HSS6x6x1/2	HSS6x6x1/2				133' - 4" LEVEL 2
115' - 4" LEVEL 1			W12x136			HSS5x5x3/8	HSS4x4x3/8	HSS4x4x3/8	115' - 4" LEVEL 1
100' - 0"	1", SBP-A W/4-7/8"DIA	1", SBP-A W/4-7/8"DIA	1.1/2", SBP-A W/4-7/8"DIA	1", SBP-A W/4-7/8"DIA	1", SBP-A W/4-7/8"DIA	1", SBP-A W/4-7/8"DIA	1", SBP-A W/4-7/8"DIA	1", SBP-A W/4-7/8"DIA	100' - 0"
Column Locations	F(10' - 9 5/8")-X1	F(-2' - 9 7/8")-X1	G(1' - 6")-X1	G(-5' - 2 7/8")-X1	G(-14' - 2 7/8")-X1	X1-Y1	X2(1' - 0 5/8")-Y1(5' - 6 3/8")	X2(1' - 0 5/8")-Y1(-3' - 8 1/4")	

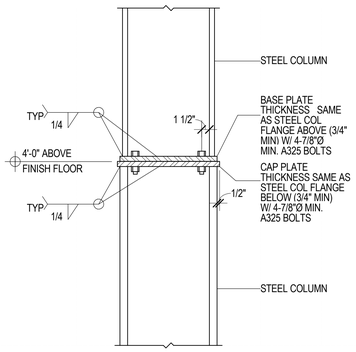

B3 / SF601 TYPICAL STEEL COLUMN SPLICE FOR GRAVITY COLUMNS WITH SAME NOMINAL DEPTH
NO SCALE

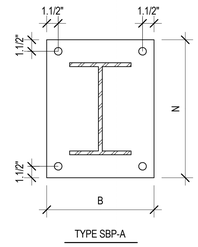

TYPE SBP-A

BASE PLATE SIZE SCHEDULE		
COLUMN SIZE	N	B
W10x49-W10x100	18"	17"
W12x65-W12x106	19"	19"
W12x120-W12x152	20"	19"

B4 / SF601 TYPICAL GRAVITY COLUMN STEEL BASE PLATE - TYPE SBP-A
NO SCALE

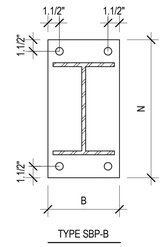

TYPE SBP-B

BASE PLATE SIZE SCHEDULE		
COLUMN SIZE	N	B
W10X49-W10x100	8	12
W12X65-W12x106	19	14
W12X120-W12x152	20	14

B5 / SF601 TYPICAL GRAVITY COLUMN STEEL BASE PLATE - TYPE SBP-B
NO SCALE

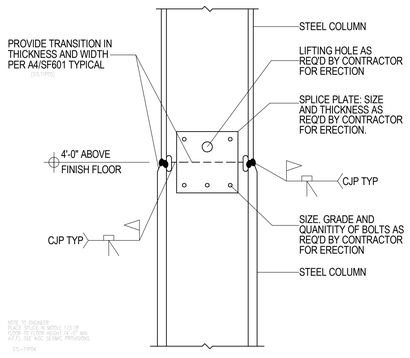

A3 / SF601 TYPICAL MOMENT FRAME & BRACED FRAME STEEL COLUMN SPLICE
NO SCALE

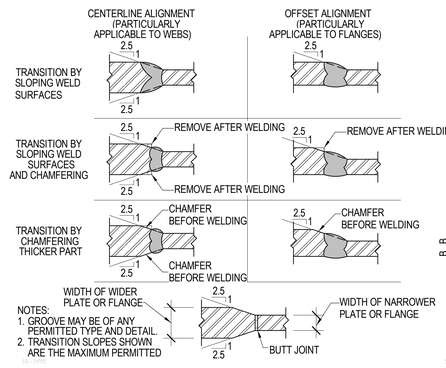

NOTES:
1. GROOVE MAY BE OF ANY PERMITTED TYPE AND DETAIL.
2. TRANSITION SLOPES SHOWN ARE THE MAXIMUM PERMITTED

A4 / SF601 TYPICAL TRANSITION OF BUTT JOINTS IN PARTS OF UNEQUAL THICKNESS AND WIDTH
NO SCALE

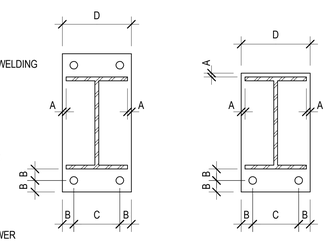

A = 1/2" MIN.
B = 1 1/2" MIN.
C = 3" MIN.
D = COLUMN WIDTH + 1", BEAM OR GIRDER WIDTH + 1" OR BOLT GAGE + 3", WHICHEVER IS GREATER.

A5 / SF601 TYPICAL STEEL CAP PLATES - REFLECTED PLAN VIEW
NO SCALE

VCBO ARCHITECTURE
524 SOUTH 600 EAST
SALT LAKE CITY, UT 84102
Phone: (801) 575-8800
Fax: (801) 531-9850
Web: vcbo.com

PROFESSIONAL STRUCTURAL ENGINEER No. 299033 JEROD G. JOHNSON 8/15/13 STATE OF UTAH

REAVELEY ENGINEERS + ASSOCIATES
Consulting Structural Engineers
P: 801.486.3883
F: 801.485.0911
675 E. 500 S. Suite 400
Salt Lake City, Utah 84102
www.reaveley.com

2nd District Juvenile Courthouse

Utah State Courts
165 West 20th Street, Ogden, Utah
08284150
BID DOCUMENTS

Rev #	Date	Description

Job # 12500
Date August 15, 2013
Owner # 08284150
Ins. #

STRUCTURAL SCHEDULES

SF601

8/14/2013 4:54:50 PM

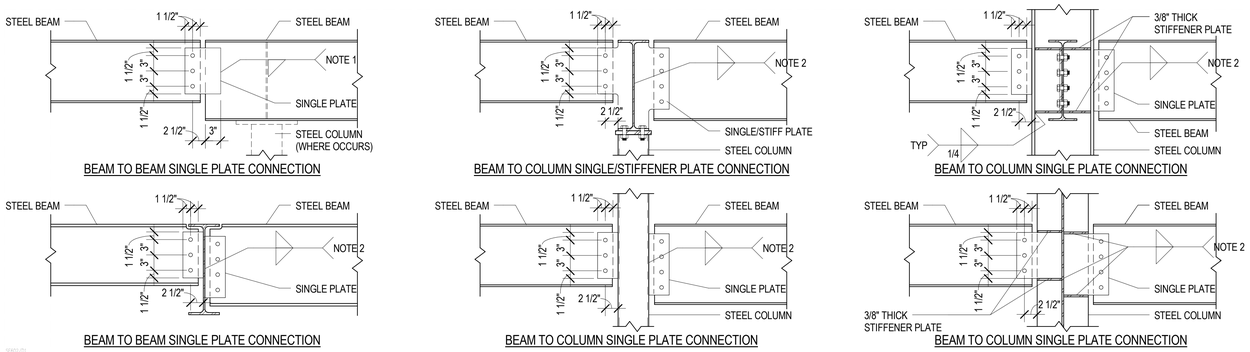

D1 / SF602 TYPICAL SINGLE PLATE CONNECTION DETAILS AND SCHEDULE

NO SCALE

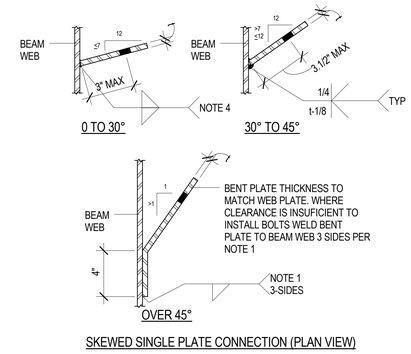

SINGLE PLATE CONNECTION SCHEDULE			
BEAM SIZE	WEB PLATE THICKNESS (t)	A325N BOLTS	
		NUMBER	SIZE
W8 AND W10	3/8"	2	7/8"Ø
W12 AND W14	3/8"	3	7/8"Ø
W16	3/8"	4	7/8"Ø
W18	3/8"	5	7/8"Ø
W21	1/2"	6	7/8"Ø
W24	1/2"	7	7/8"Ø
W27	1/2"	8	7/8"Ø
W30	1/2"	9	7/8"Ø
W33	1/2"	10	7/8"Ø
W36	1/2"	11	7/8"Ø

NOTES:
1. FILLET WELDS ONE SIDE SHALL EQUAL THE PLATE THICKNESS MINUS 1/16" (1/4" MIN.)
2. FILLET WELDS TWO SIDES SHALL BE 5/8 THE PLATE THICKNESS (1/4" MIN.) EACH SIDE
3. BOLT EDGE DISTANCE SHALL BE 1.1/2" AT ALL EDGES. BOLT SPACING SHALL BE 3" MIN.
4. AT SKEWED JOINTS PROVIDE AN EQUIVALENT LEG SIZE TO NOTE 2 PER AWS D1.1.

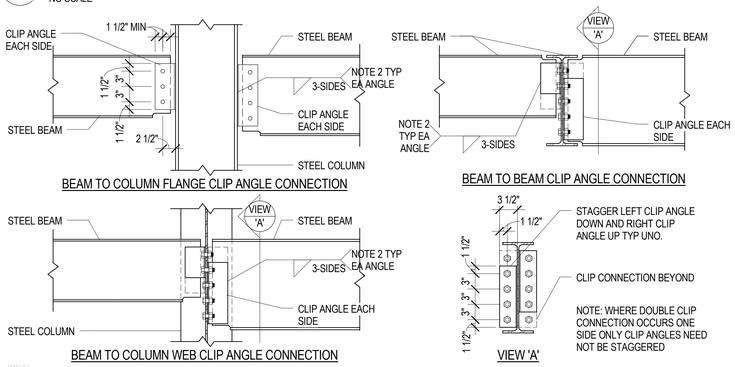

DOUBLE CLIP CONNECTION SCHEDULE		
BEAM SIZE	A325N BOLTS	
	NO. PER LEG	SIZE
W8, W10	2	7/8"Ø
W12, W14	3	7/8"Ø
W16	4	7/8"Ø
W18	5	7/8"Ø
W21	6	7/8"Ø
W24, W27	7	7/8"Ø
W30	8	7/8"Ø
W33	9	7/8"Ø
W36	10	7/8"Ø
		7/8"Ø

NOTES:
1. CLIP ANGLES: 2-L4x3.1/2. THICKNESS SHALL BE EQUAL TO ONE HALF THE BEAM WEB THICKNESS PLUS 1/16" (1/4" MIN.). FOR TWO ROWS OF BOLTS OR SKEWED CONNECTIONS, USE BENT PLATES.
2. FILLET WELDS SHALL BE ANGLE THICKNESS MINUS 1/16" (1/4" MIN.)
3. CONTRACTOR HAS OPTION TO BOLT CLIP ANGLES AT EITHER BEAM WEB IN BEAM TO BEAM CONNECTIONS.
4. BOLT EDGE DISTANCE SHALL BE 1.1/2" MIN. AT ALL BEAM AND CLIP ANGLE EDGES. BOLT SPACING SHALL BE 3" O.C. MIN.

C1 / SF602 TYPICAL DOUBLE ANGLE CONNECTION DETAILS AND SCHEDULE

NO SCALE

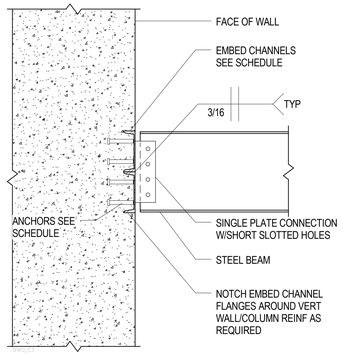

CONNECTION SCHEDULE		
BEAM DEPTH	EMBED CHANNEL	ANCHORS
TO 10"	1-C8x18.75x12"	4-3/4"Ø x 5" LONG HSA
TO 16"	2-C8x18.75x12"	8-3/4"Ø x 5" LONG HSA
TO 24"	3-C8x18.75x12"	12-3/4"Ø x 5" LONG HSA

NOTES:
1. WELD MULTIPLE EMBEDS TOGETHER WITH BUTT WELD EACH SIDE, FULL LENGTH.

C3 / SF602 TYPICAL EMBED CHANNEL CONNECTION SCHEDULE

NO SCALE

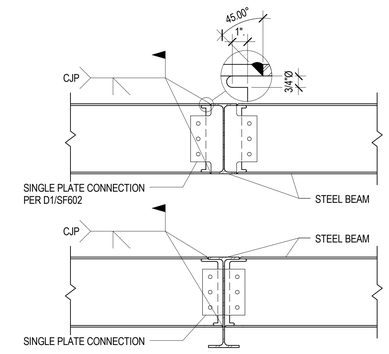

C5 / SF602 TYPICAL CANTILEVERED BEAM FULL PEN CONNECTION TO BEAM

NO SCALE

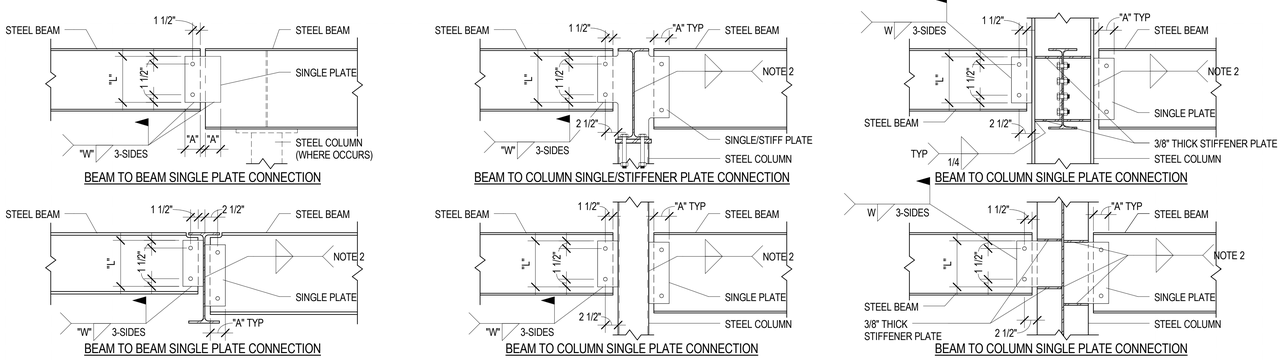

SINGLE PLATE COLLECTOR/CHORD CONNECTION SCHEDULE					
BEAM SIZE	WEB PLATE				ERECTION BOLTS
	"L"	"A"	WELD "W"	THICKNESS	
W12	9"	4"	3/8"	1/2"	2
W14	11"	4"	3/8"	1/2"	2

NOTES:
1. ERECTION BOLT SHALL BE 7/8"Ø A325N BOLTS.
2. FILLET WELDS TWO SIDES SHALL BE 3/4 THE PLATE THICKNESS (1/4" MIN.) EACH SIDE
3. BOLT EDGE DISTANCE SHALL BE 1.1/2" AT ALL EDGES U.N.O.

B1 / SF602 TYPICAL WELD SINGLE PLATE COLLECTOR/CHORD CONNECTION DETAILS AND SCHEDULE

NO SCALE

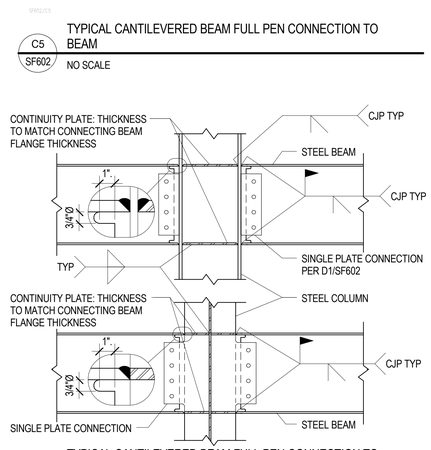

B5 / SF602 TYPICAL CANTILEVERED BEAM FULL PEN CONNECTION TO COLUMN

NO SCALE

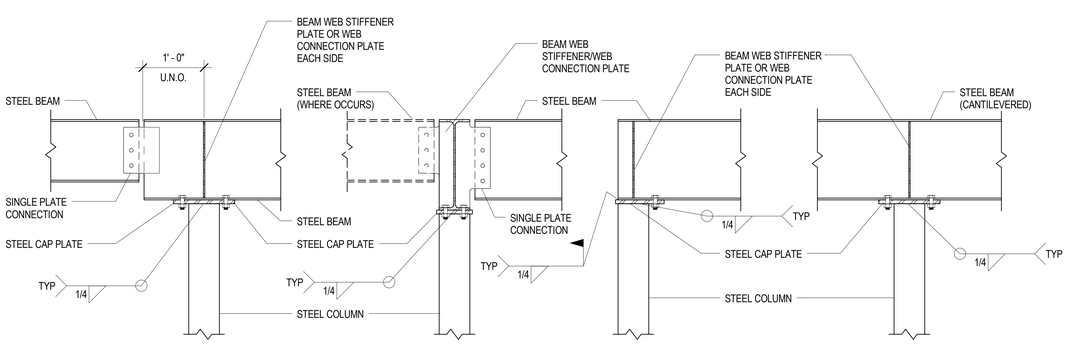

A1 / SF602 TYPICAL STEEL BEAM BEARING ON STEEL COLUMN

NO SCALE

8/14/2013 4:54:51 PM

VCBO ARCHITECTURE
VCBO ARCHITECTURE
524 SOUTH 600 EAST
SALT LAKE CITY, UT 84102
Phone: (801) 575-8800
Fax: (801) 531-9850
Web: vcbo.com

PROFESSIONAL STRUCTURAL ENGINEER No. 299733 JEROD G. JOHNSON 3/15/13 STATE OF UTAH

REAVELEY ENGINEERS + ASSOCIATES
Consulting Structural Engineers
P: 801.486.3883
F: 801.485.0911
675 E. 500 S. Suite 400
Salt Lake City, Utah 84102
www.reaveley.com

2nd District Juvenile Courthouse

Utah State Courts

08284150

165 West 20th Street, Ogden, Utah

BID DOCUMENTS

Rev #	Date	Description

Job # 12500
Date August 15, 2013
Owner # 08284150
Ins. #

STRUCTURAL SCHEDULES

SF602