State of Utah

GARY R. HERBERT
Governor

GREGORY S. BELL
Lt. Governor

Department of Administrative Services
KIMBERLY K. HOOD
Executive Director

Division of Facilities Construction and Management
RICH AMON
Interim Director

Addendum No. 4

Date: September 10, 2013

To: Contractors

From: Lynn Hinrichs - Project Manager

Reference: New Ogden Second District Juvenile Court
Administrative Office of the Courts – Ogden, Utah
DFCM Project No. 08284150

Subject: **Addendum No. 4**

Pages	Addendum Cover Sheet	1	page
	Architect's Addendum No. 003	35	pages
	Total	36	pages

Note: This Addendum shall be included as part of the Contract Documents. Items in this Addendum apply to all drawings and specification sections whether referenced or not involving the portion of the work added, deleted, modified, or otherwise addressed in the Addendum. Acknowledge receipt of this Addendum in the space provided on the Bid Form. Failure to do so may subject the Bidder to Disqualification.

4.1 **SCHEDULE CHANGES:** There are no Project Schedule changes.

4.2 **GENERAL ITEMS:** See attached Architect's Addendum No. 003 dated September 10, 2013.

Addendum 003

project:	Ogden Juvenile Courthouse	**project no:**	12500
date:	2013-09-10	**no. pages:**	35
owner:	Administrative Office of the Courts		
contractor:			

This Addendum shall be considered part of the Contract Documents and Project Manual for the above mentioned project as though it had been issued at the same time and shall be incorporated integrally therewith. Where provisions of the following supplementary data differ from those of the original Contract Documents and Project Manual, the Addendum shall govern and take precedence.

General:

Item	Description
3.1	Please note that the traffic signal relocation detailed on sheets SG-1A, SG-2A and SG-3A is a part of the contract documents and shall be included in the contractors cost proposals.
3.2	The wood veneer grain is to run horizontally, typical. At wood veneered ceiling panels, the grain is to run in the direction of the hatched pattern.
3.3	The fluid applied air and vapor barrier is to be applied to the double CMU wall between the sally port and holding area as per wall type 4D.
3.4	The garden roof system shall fill the depth from the top of the sloping roof slab to the heights indicated below: Level 2 garden - 116'-4" (6" below fin. floor, reference detail C3/A502) Level 4 garden - 152'-7" (6" below the top of the surrounding concrete curb)
3.5	See the attached 28 page structural addendum
3.6	See the attached 2 page electrical addendum

Drawings:

Item	Drawing No	Description
3.1	CU1.01	The fire line that enters the east side of the building will be 6" diameter C900 PVC
3.2	CD5.03	Drawing 6: Replace with the attached revised detail.
3.3		On several drawings throughout the set, two building sections are mis-referenced as C1/A305 and A1/A305. Where these references occur, Change references C1/A305 to read C4/A305 and A1/A305 to read A4/A305.
3.4	AS101	Drawing A2: Add detail call-out D2/AS500 to all four walls surrounding the generator.
3.5	A111.3B	Finish Schedule: Delete rooms 1166, 1167, 1168, 1170 from schedule. These rooms do not appear on the plans.

3.6	A151.3	Finish Schedule: Delete "Probation Supervision Support" from schedule. This room does not appear on the plans.
3.7	A426	The keyed notes legend is obscured. Keyed note 1205 is to be defined as MOTORIZED ROLLER WINDOW SHADES, RECESSED INTO CEILING POCKET" All courtroom windows are to be covered with shades. All intermediate shades edges are to align with window mullions.
3.8	A429	Drawing C3: Replace this drawing with the attached revised detail showing the acoustical panel joints.
3.9	A508	Change concrete curb height to 3" in lieu of 4". Roof garden soil is to be 6" below the top of curb.
3.10	A601	Change the door hardware group on doors 2123, 3123, 4121 and 5121 to group 30.

Specifications:

Item	Spec No	Description
3.1	00 3116	Exemption Certificate: Delete this section in its entirety. This project is not tax exempt.
3.2	03 2910	Paragraph 1.2.A.3 Please Note that the owner will be employing a third party testing agency to carry out the water leakage test called for in item "P". The GFRC fabricator is responsible for providing the testing called for in items K, L, and O needed to warrant the GFRC system as specified. Paragraph 1.5.E: Add: "...Certification or current APA plant certification". Paragraph 1.6.A Delete paragraph 1.6.A and replace with: "A. Manufacturer Qualifications: Designated a PCI-certified plant for Group G - Glass Fiber Reinforced Concrete or designated an APA-certified plant for GFRC production." Note: Subparagraphs 1.6 A.1 and 1.6 A.2 remain unchanged. Paragraph 2.16.B: Delete subparagraph 1. Note: Panel finish is to be per subparagraph 2.
3.3	06 4020	Paragraph 1.2.A: Delete item 7. No solid surfacing window sills are to be provided.

3.4	08 7100	Paragraph 2.7.B: Change this paragraph to read: **"Review the keying system** with the Owner and provide a new restricted master, grandmaster or great-grandmaster, patented to year **2027** minimum key system." Paragraph 3.7 Hardware Schedule: Where a door lever is specified, change lever design from Schlage Athens (ATH) to Schlage Sparta (SPA).

Approvals:

In addition to the manufacturers called out in the contract documents, the following manufacturers, trade names and products are acceptable with the provisions that they shall completely satisfy every requirement of the drawings, specifications, and all addenda, and shall conform to the design, quality and standards specified, established and required for the complete and satisfactory installation and performance of the building and all its respective parts. Any costs incurred due to the use of the following manufacturers shall be paid by the contractor.

Section	**Material**	**Manufacturer**	**Action**
21 1000	Fire Protection	Paradise Fire	Rejected
07 2100	Polyiso Insulation	Hunter	Rejected
07 1420	Hot Fluid-Applied Waterproofing	Henry	Approved
07 5563	Garden Roof System	Henry	Approved
07 1352	Gas Vapor Mitigation System	Land Science Technologies	Approved

End of Addendum 003

Note: This pavement section applies only to paving in the U.D.O.T. R.O.W. along SR-204/Wall Ave. Submittal of pavement mix design to U.D.O.T. prior to paving required. Asphalt binder to be PG-grade 64-34 or better.

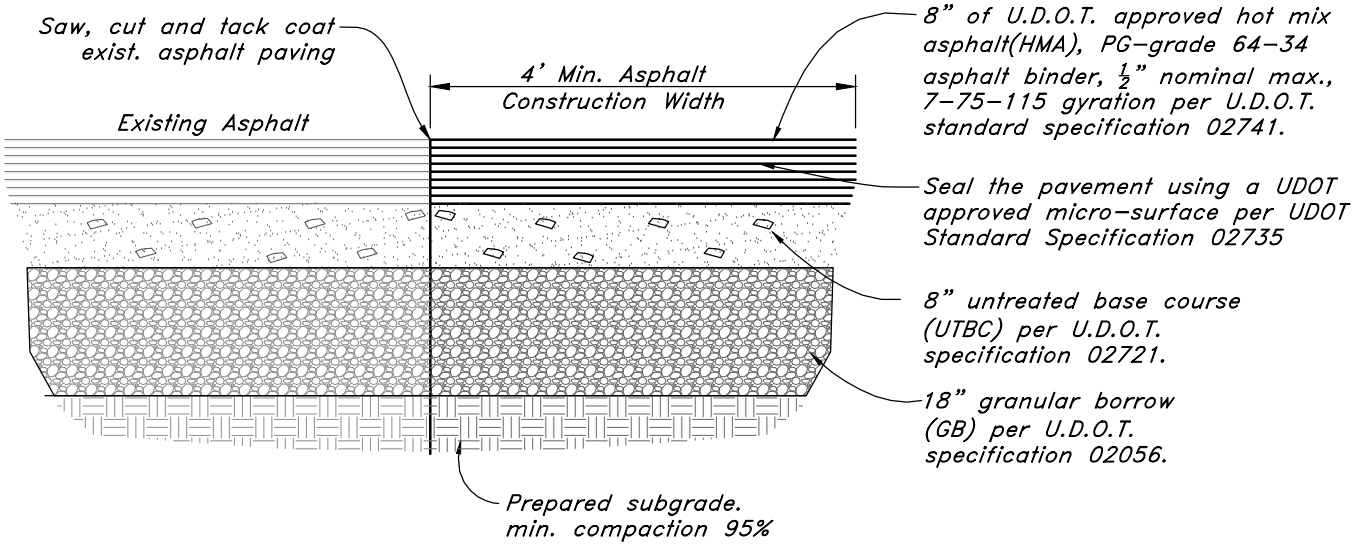

6 Typical Bituminous Pavement Section

SR-204 (Wall Avenue)

Not to Scale

2nd District Juvenile Courthouse
Utah State Courts

ADDENDUM 3

Sheet Name
ADD03-C01

Project Number 12500
Date September 10, 2013

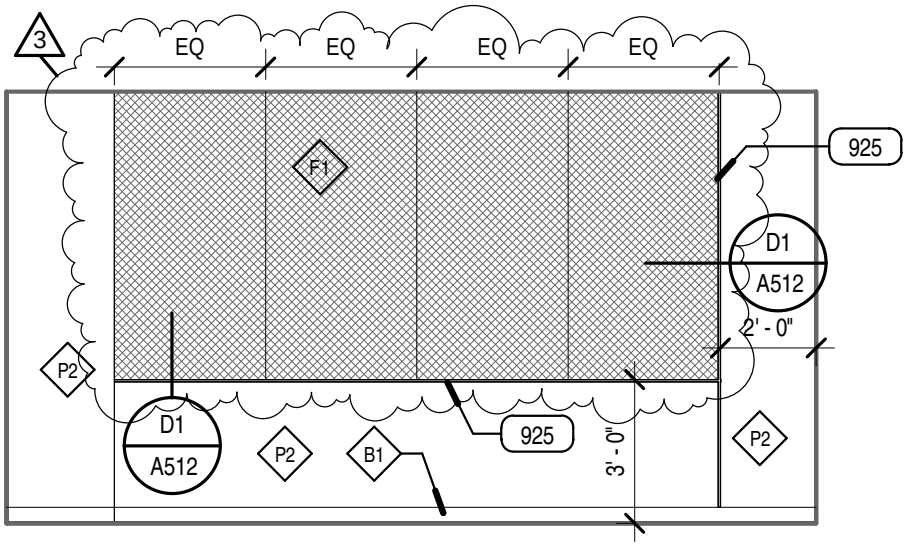

5126-1-VICTIM / WITNESS SEQUESTERED ROOM

C3

SCALE: 1/4" = 1'-0"

0' 2' 4' 8' 16'

2nd District Juvenile Courthouse
Utah State Courts

ADDENDUM 3

Sheet Name

C3/A429

Project Number **12500**
Date **September 10, 2013**

REAVELEY
ENGINEERS + ASSOCIATES
Consulting Structural Engineers

2nd district Juvenile Courthouse
Addendum #10
Sept 10, 2013

Sheet SE001
On “structural drawing List”, see added two additional detail sheets

Sheet SE002
See revised roof deck gauge from 20 to 18 gauge min.

Sheet SB101
We added or revised several detail cuts. Details are to clear footing steps at the elevator pit, foundation wall, and rotating connections for the guide rails. In general clarifying existing details or added to clarify existing. There are no changes to design sizes.

Sheet SB502
Several detail revisions. In general clarifying existing details or added to clarify existing framing. There are no changes to design sizes. Some of the changes to masonry wall were drafting changes showing more clear shading.

Sheet SB503
Added foundation details, showing clarifications mentioned on page SB101.

Sheet SF101
Added beams near grid A to support kickers at low roof.
Several details cuts added or revised clarifying existing details or added to clarify existing.

Sheet SF102 to SF104
Several details cuts added or revised clarifying existing details or added to clarify existing.

Sheet SF105
Added beams to support kickers.
Several details cuts added or revised clarifying existing details or added to clarify existing.

Sheet SF107
On C2/SF107 Light gage framing to vestibule size shown and clarifying the framing.

Sheet SF 201
Three detail cuts added to clarify HSS columns base plate and show the size graphically at elevations A2 and A3.

Sheet SF 202
One detail cut added to clarify HSS columns base plate and show the size graphically at elevations A2 grid Y1.

Sheet SF401 and SF402
Minor clarifications to detail cut TYP. Mainly adding TYP to detail cuts.

Sheet SF404
Detail D2 is graphically clarified. No changes to size or detailing.

Sheet SF501
Several revisions to clarifying existing details.

Sheet SF502
Detail C5, revised elevated guide support connection detail.

Sheet SF503 and SF504
Several revisions to clarifying existing details

Sheet SF505
Added detail sheet to clarify existing design intend.

Sheet SF515, SF516, SF517
Several revisions clarifying several details

Sheet SF601
Added detail A2/SF601
Clarify some base plate layout and bolt patterns for gravity columns.

Sheet SF602
Revise detail B1, adding to schedules complete list of drag beams that where shown on plans but not included in detail schedule.

GENERAL STRUCTURAL NOTES

1. Design Criteria

1.1. Governing Building Code: 2009 International Building Code (IBC)

1.2. Floor Live Loading:
- A. Office: .... 80 psf Live Load + 20 psf Partition Load
- B. Exit Facilities & Corridors: .... 100 psf Live Load
- C. Mechanical Rooms: .... 125 psf Live Load or actual weights, if larger
- D. Mezzanine: .... 100 psf Live Load

1.3. Roof Live Loading:
- A. Roof Live Load: .... 20 psf
- B. Roof Snow Load: .... 33 psf + Drift per IBC
  1. Ground Snow Load, P_g: .... 43 psf
  2. Snow Exposure Factor, C_e: 1.0
  3. Importance Factor, I_S: 1.1
  4. Thermal Factor, C_t: 1.0

1.4. Holding cells precast Lid Loading:
- A. Precast Lid dead Loads: .... Self Weight+10 psf Superimposed Dead
- B. Precast Lid Live Load: .... 20 psf Live Load

1.5. Earthquake:
- A. Occupancy Category: III
- B. Seismic Design Category .... D
- C. Spectral Response Accelerations:
  S_S = 1.385 g S_{DS} = 0.923 g
  S_1 = 0.577g S_{D1} = 0.577g
- D. Soil Site Class: .... D
  F_a = 1.0 F_v = 1.5
- E. Basic Seismic-Force-Resisting System: .... Special Steel Moment Frame
  R = 8 C_d = 5.5 Ω_0 = 3.0
- F. Importance Factor, I_E: 1.25
- G. Design Base Shear: .... 598 kips (Eq. Static)
- H. Design Story Drift, Δ: .... 2.2 in. (1%)
- I. Analysis Procedure: .... Dynamic Response Spectrum
- J. Response Modification factor: .... R=8

1.6. Wind:
- A. Basic Wind Speed (3-second gust): .... 90 mph
- B. Importance Factor, I_W: 1.15
- C. Exposure: C
- D. Internal Pressure Coefficient, GC_{pi}: 0.18
- E. Topographic Factor, K_{zt}: 1.0
- F. Components and Cladding Design Pressure:

Design Wind Pressure (psf)					
Location		Tributary Area (ft^2)			
		< 10	50	100	> 500
Walls	Within 14 ft of building corner	62.4	53.6	49.9	41.6
	All other areas	38.50	36.32	35.38	33.19
Roof	Within 28ft of building corner	99.57	89.74	85.5	75.68
	Within 14ft of building edge	75.68	68.03	64.74	57.09
	All other areas	51.78	46.32	43.97	38.5

1.7. Foundation:
- A. Subsurface Conditions:
  Soils report and log of borings was obtained by the Owner for the Engineer's use in the design of the foundation, and is not a part of the Contract Documents. This report and log of borings is available for the Contractor's information, but is not a warranty of the subsurface conditions. The Contractor may use the report at his own risk.
- B. Soils Report by AGEC Applied Geotech, dated October 8, 2012.
- C. Soil Bearing Pressure: 2500 psf, on 3'-6" Compacted Fill on native undisturbed soil
- D. Lateral Soil Pressure Fluid Equivalent Density.
  1. Active: .... 35 pcf (retaining walls)
  2. At Rest: .... 55 pcf (rigid foundation walls)
  3. Passive: .... 300 pcf
  4. Increase for Seismic: .... 20 pcf
- E. Coefficient of Friction: 0.35

1.8. Classification for Fire Rated Construction:
- A. For the purpose of determining fire-resistive assemblies, open-web steel framing members shall be considered unrestrained. All other steel floor and roof framing members shall be considered restrained.
- B. Diagonal members in vertical braced frames shall be considered as secondary members for fire proofing protection

2. Earthwork

2.1. Clearing: The entire building area shall be scraped to remove the top 4 inches of soil, including all vegetation and debris.

2.2. Unsuitable existing fill: The depth of this material is approximately 2ft -8.5 ft feet. Do not place any footing on this material. Remove all unsuitable fill material from below footings and building foot print to undisturbed native soil and replace it with compacted structural fill as neede to bring footing and slabs to required elevations.

2.3. Proof rolling: The natural undisturbed soil below all footings shall be proof rolled prior to placing concrete. Remove all soft spots and replace with compacted structural fill.

2.4. At existing building basements that are below new building footprint, demo and remove all existing basements structure including existing footings, slabs, walls and existing fill. Remove to undisturbed natural soils. Backfill with approved structural fill per contract document and compact per soil report and contract document to the desired compaction. Soil inspections and compaction tests required per contract document.

2.5. Compacted structural fill: All fill material shall be a well-graded granular material with a maximum size less than 4 inches and with not more than 10 percent passing a No. 200 sieve. It shall be compacted to 95 percent of the maximum laboratory density as determined by ASTM D1557. All fill shall be tested (See Specifications and the Quality Assurance section of the GSN).

3. Concrete

3.1. Materials shall comply with the Standards specified in American Concrete Institute (ACI) 318-08, "Building Code Requirements for Structural Concrete."
- A. Concrete mix design requirements shall be as follows:

Location	f'c at 28 days (psi)	Max W/C Ratio	Air Content (%)	Max Aggregate Size	Exposure Classes*		
					F	S	C
Footings	4500	0.45	4.5	1"	F1	S0	C1
Interior Slabs on Grade	3000	0.45	-	1"	F0	S0	C0
Exterior Walls	4500	0.45	5	¾"	F1	S0	C1
Walls	4000	0.45	-	¾"	F0	S0	C0
Exterior Columns	4500	0.45	5	¾"	F1	S0	C1
Columns	4000	0.45	-	¾"	F0	S0	C0
Joist, Beams and Suspended Slabs	4000	0.45	-	¾"	F0	S0	C0
Lightweight Concrete over Steel Deck	3000	0.45	-	¾"	F0	S0	C0
All other site cast concrete	4500	0.45	4.5	1"	F1	S0	C1

* Exposure Classes are per ACI 318, Section 4.2.1, where F, S and C are exposure categories for freezing and thawing, sulfate, and corrosion protection of reinforcement, respectively.

- B. Cementitious Materials:
  1. Portland Cement (ASTM C150):
     - a. Type I or II for exposure class S0.
     - b. Type II or V for exposure class S1.
     - c. Type V for exposure class S2 and S3.
  2. Fly Ash (ASTM C618, Class C or F): maximum fly ash content as a percentage of total weight of cementitious materials shall be 25 percent.
- C. Concrete Density (Maximum Air Dry Weight):
  1. Normal weight concrete shall be approximately 145 to 155 pounds per cubic foot. Aggregate shall be ASTM C33.
  2. Lightweight concrete shall not exceed 110 pounds per cubic foot and shall be made of lightweight coarse aggregates and either lightweight and/or normal weight fines meeting ASTM C330.
- D. Reinforcement steel:
  1. ASTM A615 Grade 60, fy = 60,000 psi min. unless noted otherwise.
  2. Reinforcement at concrete moment frames and shear wall jambs shall be ASTM A706 or ASTM A615 Grade 60, with the following properties:
     - a. Actual yield strength based on mill tests shall not exceed 78,000 psi.
     - b. Retest shall not exceed 81,000 psi.
     - c. Ratio of actual ultimate tensile stress to actual yield strength shall not be less than 1.25.
     - d. Mill tests shall be submitted to the Engineer.
- E. Admixtures:
  1. Air-entraining admixtures, comply with ASTM C 260 (when used).
     - a. Tolerance on air content as delivered shall be +/- 1.5%.
     - b. When air content of a trowel finished floor slab exceeds 3%, there is an increased risk for delaminations and blistering to occur. When this situation is present, the contractor shall pay special attention to the finishing procedures to help minimize such risks. Refer to ACI 302.1R-96 "Guide for Concrete Floor and Slab Construction" for proper finishing guidelines.
  2. Corrosion Inhibiting Admixture:
     - a. Corrosion inhibiting additive containing a minimum of 30 percent calcium nitrite dosed at 3 gallons per cubic yard shall be added to all reinforced concrete with exposure class C2.
  3. The use of super plasticizers and water reducers is allowed, but not required.
  4. Calcium chloride or admixtures containing calcium chloride shall not be added to the concrete mix.
- F. Chloride Ion: Maximum water soluble chloride ion concentrations in hardened concrete at age between 28 and 42 days contributed from the ingredients including water, aggregates, cementitious materials, and admixtures shall not exceed a maximum, by weight of cement, of 1.00% for concrete with exposure class C0, 0.30% for concrete with exposure class C1, 0.15% for concrete with exposure class C2, and 0.06% for all prestressed concrete.
- G. Slump Limit: 4 inches, maximum for all concrete prior to the addition of plasticizers and water reducing admixtures. The concrete supplier shall indicate the final slump of each concrete mix in the submitted mix design.
- H. Shrinkage Limit: Interior slabs on grade shall have a drying shrinkage limit of 0.040 percent tested in accordance with ASTM C157. Drying shrinkage test results shall be submitted with mix designs.
- I. Only one grade or type of concrete shall be poured on the site at any given time.

3.2. Formwork shall comply with ACI Standards Publication 347 and the project specifications. The contractor shall be responsible for the design, detailing, care, placement and removal of the formwork and shores.
- A. Pre-camber forms and screeds with a camber of 1/4" per every 10'-0" of span to compensate for dead load deflection, unless noted otherwise. Post tensioned concrete slabs and beams do not require formwork to be pre-cambered.

3.3. Concrete cover requirements for deformed bar reinforcing steel shall comply with ACI 318, "Building Code Requirements for Structural Concrete".
- A. Cast-in-place Concrete: Specified Cover
  1. Cast against and permanently exposed to earth: .... 3"
  2. Formed concrete exposed to earth or weather:
     #6 thru #18 bars .... 2"
     #5 and smaller bars .... 1.1/2"
  3. Concrete not exposed to weather or in contact with ground:
     Slabs, Walls, Joists; #11 bars and smaller .... 3/4"
     Beams, Columns: primary reinforcement, ties, stirrups, spirals .... 1.1/2"
  4. Concrete Tilt-Up Panels:
     #8 and smaller bars .... 1"
     #9 thru #18 bars .... 2"
- B. Pre-cast Concrete (manufactured under plant controlled conditions):
  1. Wall Panels #11 bars and smaller .... 3/4"
  2. Other members #6 thru #11 bars .... 1.1/2"
  3. Other members #5 bars and smaller .... 1.1/4"
- C. Prestressed Concrete (Provide the following specified cover for prestressed and non-prestressed reinforcements, ducts, and end fittings.):
  1. Cast against and permanently exposed to earth .... 3"
  2. Formed concrete exposed to earth or weather:
     Wall Panels, Slabs, Joists .... 1"
     Other members .... 1.1/2"
  3. Concrete not exposed to weather or in contact with ground:
     Slabs, Walls, Joists .... 3/4"
     Beams, Columns: primary reinforcement .... 1.1/2"
     Beams, Columns: ties, stirrups, spirals .... 1"

3.4. Construction Joints and Control Joints:
- A. Provide a surface intentionally roughened to ¼" amplitude in all wall footings. A continuous keyway shall not be used for concrete shear wall to footing connections, unless specifically indicated. Refer to project plans, schedules and details for the shear wall to footing connection requirements.
- B. All horizontal and vertical construction joints shall have a surface intentionally roughened to ¼" amplitude. A continuous 2 X 4 keyway may be used on elements other than shear walls.
- C. Provide reinforcement dowels to match the member reinforcement across the joint, unless noted otherwise. For dowels across construction joints and wall to footing connections of concrete shear walls, refer to specific project plans, schedules, and details.
- D. Construction joints in suspended concrete pours shall be made at the center of spans.
- E. Slabs on grade shall have construction or control joints spaced not to exceed 30 times the slab thickness in any direction.
- F. Control joints shall be installed in slabs on grade so the length to width ratio of the slab is no more than 1.25:1. Control joints shall be completed within 12 hours of concrete placement. See typical details for joint configuration.
- G. Control joints in visually exposed walls, unless noted otherwise: (Joints shall line up with masonry and architectural joints, see drawings.)
  1. Vertical control joints at 10'-0" on center.
  2. Reinforcing shall be continuous through control and construction joints, unless noted otherwise.
  3. Control joints in concrete foundation walls shall line up with masonry control joints.
- H. Control joints shall be installed in concrete slabs over steel deck by saw-cutting along girders and purlins at interior grid lines. See typical details for joint size and reinforcement. Reinforcement required shall be in addition to any slab reinforcement.

3.5. Detailing: All reinforcing, including welded wire fabric, shall be detailed, bolstered & supported to comply with ACI 315, "Details and Detailing of Concrete Reinforcement" and the Concrete Reinforcing Steel Institute (CRSI) recommendations. Reinforcing bars shall not be welded unless specifically shown on drawings.
- A. Lap splice lengths shall be detailed to comply with the CONCRETE REINFORCING BAR DEVELOPMENT AND LAP SPLICE SCHEDULE.
- B. All mechanical splices shall have the capacity to develop at least 1.25fy of the bar in tension or compression. Type 2 couplers have the capacity to develop the full tension capacity of the bar. Type 1 couplers shall not be used in moment frames and shear wall jamb columns. Mechanical splices shall have a current ICC Code Evaluation Report; "Lenton" (ER-3967), "Taper-Lock" (ESR-2481) or "SAS Stressteel" (ESR-1163) tapered threaded rebar splices, "Bar-Lock" (ESR-2495) bolt coupling sleeves or approved equivalent may be used. Mechanical couplers on adjacent bars shall be staggered a minimum of 24" apart along the longitudinal axis of the reinforcing bars.
- C. All embedded elements and dowels shall be securely tied to formwork or to adjacent reinforcing prior to the placement of concrete.
- D. Use chairs or other support devices recommended by CRSI to support and tie reinforcement bars and welded wire fabric prior to placing concrete. Welded wire fabric shall be continuously supported at 36" o.c. maximum.
- E. See typical details for reinforcing at wall intersections and ends, reinforcing around wall openings and suspended slab openings, vertical wall dowels, concrete column ties and splices in vertical column reinforcing.
- F. See typical details for column cross-ties. The 90-degree hooks of two successive crossties engaging the same longitudinal bars shall be alternated end for end.
- G. Contractor shall coordinate placement of all openings, curbs, dowels, sleeves, conduits, bolts, inserts and other embedded items prior to concrete placement.
- H. All reinforcement shall be bent cold, and shall be bent only once at the same location. All reinforcement shall be shop bent, unless otherwise permitted by the engineer.

3.6. Minimum Reinforcing: Wall reinforcing shall be as follows, unless noted otherwise:

Wall Thickness	Horizontal Reinforcing	Vertical Reinforcing
6"	#4 @ 13" o.c.	#4 @ 18" o.c.
8"	#5 @ 15" o.c.	#4 @ 16" o.c.
10"	#5 @ 12" o.c.	#4 @ 13" o.c.
12"	#4 @ 13" o.c. Each Face	#4 @ 18" o.c. Each Face
Others	0.25% of Wall Area	0.15% of Wall Area

Spacing shall exceed neither three times the wall thickness nor 18". In addition to the above reinforcing, 2 - #5 x continuous horizontal bars shall be placed at the bottom of the wall (near the footing) and at each floor level, at the roof level and at the top of wall.

3.7. No aluminum conduit or product containing aluminum or any other material injurious to concrete shall be embedded in concrete.

3.8. Unless otherwise noted, all slabs on grade shall be 4" thick.

3.9. Prestressed (precast) concrete shall be designed to conform to the current editions and supplements of the IBC, ACI 318 and PCI design handbook.
- A. The prestressed (precast) concrete supplier shall provide members designed for all loads as shown on the contract documents.
- B. Bolts, angles, plate inserts and other embed items which are to be cast in the precast element shall be provided by the precast supplier.
- C. Lifting inserts shall be located and placed by the supplier with additional reinforcing provided as required.
- D. See mechanical and electrical drawings for sleeves and inserts required for those trades.
- E. See architectural drawings for locations of prestressed (precast) elements, rib placements, finish conditions, and locations of feature strips.
- F. The prestressed (precast) supplier shall submit calculations, by a registered professional engineer. Calculations shall bear the seal of a professional engineer licensed in the State of Utah and shall be submitted with the shop drawings for review. Calculations shall include (but not be limited to) the following items.
  1. Design of the elements for flexural, compression, tension, and shear stress imposed by the loads as indicated on the structural drawings and by loads specified in the International Building Code. Thermal loads may be included.
  2. Panel connections as required by the International Building Code.
  3. When double tee wall panels are used in construction, the design of the panels is the responsibility of the manufacturer.
- G. Field verify locations of connections and coordinate with the prime contractor all requirements for attachment of prestressed or precast elements.
- H. Field verify dimensions.

4. Masonry

4.1. Materials, unless noted otherwise:
- A. Concrete Masonry Units: ASTM C 90, Lightweight.
- B. Hollow Clay Units: Hollow Brick, ASTM C652, Grade SW.
- C. Solid Clay Units: ASTM C216, Grade SW.
- D. Material Strength: The Prism Test Method or the Unit Strength Method according to IBC Section 2105.2 may be used to determine the compressive strength of masonry assemblies. The contractor shall select the desired method and meet the required material strengths as follows:
  1. Prism Test Method, IBC 2105.2.2.1:
     - a. Concrete Masonry Unit Assembly, f'm = 2500 psi.
     - b. Hollow Clay Unit Assembly, f'm = 2500 psi.
     - c. Solid Clay Unit Assembly f'm = 1500 psi.
  2. Unit Strength Method, IBC 2105.2.2.2:
     - a. Concrete Masonry Units, minimum unit strength of 3750 psi average or better. (f'm = 2500 psi)
     - b. Hollow Clay Units, minimum unit strength of 6600 psi average or better. (f'm = 2500 psi)
     - c. Solid Clay Units, minimum unit strength of 3350 psi average or better. (f'm = 1500 psi)
- E. Mortar: Use Type "S" according to ASTM C270, proportion specification. Admixtures shall not be added to the mortar mix.
- F. Grout: For masonry assemblies with f'm = 2,000 psi or less conform to ASTM C476, proportion specification. Grout that does not meet the requirements of ASTM C476 proportion specification or that is used in masonry assemblies with f'm > 2,000 psi shall meet the following requirements: Meet the material requirements of ASTM C476, obtain a minimum compressive strength of f'm or 2,500 psi, whichever is larger, at 28 days tested according to ASTM C1019, and a slump of 8 in. to 11 in. as determined by ASTM C143.
  1. Self Consolidating Grout: Conform to the material requirements of ASTM C476, obtain a minimum compressive strength of f'm or 2,500 psi, whichever is larger, at 28 days tested according to ASTM C1019, obtain a slump flow of 24 in. to 30 in. as determined by ASTM C1611, and shall have a Visual Stability Index less than or equal to 1 as determined in accordance with ASTM C1611 Appendix X.1. Field addition of admixtures is not permitted.
- G. Reinforcing: Grade 60 reinforcing steel shall comply with ASTM A615. Wire joint reinforcing shall comply with ASTM A951.
- H. Deformed Bar Anchors (DBA): All DBAs shall comply with ASTM A496.
- I. Anchor Bolts (AB): ASTM A307 with ASTM A563 heavy hex nuts and hardened washers, Grade A, unless noted otherwise.
- J. Headed Stud Anchors (HSA): Manufacture all HSAs in conformance with ASTM A108 with dimensions complying with AISC specifications.

4.2. Construction Requirements:
- A. Mortar Joints: Joints shall be "concave", "V-joint" or "weathered raked" for structural members unless noted otherwise on architectural drawings.
- B. Masonry walls, beams and columns shall be constructed with running bond, unless noted otherwise.
- C. Grouting Requirements: Comply with IBC Section 2104 and ACI 530.1/ASCE 6/TMS 602 Section 3.5. Grout shall be mechanically consolidated and mechanically reconsolidated according to TMS 602/ACI 530.1/ASCE 6 Section 3.5 E.
  1. Grout Pour Heights that exceed 4 feet shall meet the following requirements:
     - a. Provide cleanouts in the bottom course of masonry for each grout pour in accordance with ACI530.1/ASCE 6/TMS 602 Section 3.2 F.
     - b. For grout other than Self Consolidating Grout a demonstration panel representative of the proposed wall construction and construction procedures shall be provided and approved by the Architect. The demonstration panel may be a part of the completed construction as approved by the Architect.
     - c. For Self Consolidating Grout placed in masonry that has cured for at least 4 hours, place in lifts not exceeding the Maximum Grout Pour Height in listed in ACI 530.1/ASCE 6/TMS 602 Table 7.
  2. When grouting, form grout keys between grout pours. Form grout keys between grout lifts when the first lift is permitted to set prior to placement of the subsequent lift.
     - a. Form a grout key by terminating the grout a minimum of 1.1/2 in. below a mortar joint.
     - b. Do not form grout keys within beams.
     - c. At beams or lintels laid with closed bottom units, terminate the grout pour at the bottom of the beam or lintel without forming a grout key.
- D. Reinforcing Bars shall not be welded unless specifically shown on drawings. In such cases, use only AWS standards. Do not substitute reinforcing bars for DBAs or HSAs.
- E. Control Joints: Spacing shall not exceed 40'-0" or 2.5 times the wall height, whichever is less. Joints shall not be located over masonry openings, and shall be a minimum of the schedule masonry column width away from masonry openings. See architectural drawings for locations.
- F. Grout all beam and joist pockets solid after installation of beams and joists.
- G. Masonry Veneer Attachment and Reinforcing:
  1. To steel stud and wood stud walls: Veneer shall be attached to the studs Dur-O-Wal DA 213S seismic veneer anchors or Hohmann & Barnard DW-10HS seismic veneer anchors (or equal) spaced at 16" o.c. Veneer anchors shall be attached to studs with #10 corrosion resistant self drilling screws. Attach the veneer to the anchors with Dur-O-Wal Seismic Steel Pintles or Hohmann & Barnard Seismiclip Interlock System (or equal) spaced at a maximum of 16" o.c. in both directions. Anchor ties shall engage to a galvanized No. 9 gauge horizontal joint reinforcement wire in the veneer which shall be continuous and shall be placed at 16" o.c. maximum at the center of the veneer.
  2. To concrete walls: 22 gauge galvanized dovetail slots shall be installed vertically in concrete at 16" o.c. Attach the veneer to dovetail slots with Dur-O-Wal 16 gage seismic dovetail anchor ties or Hohmann & Barnard #315 BT Flexible Brick Tie with Seismiclip Interlock System (or equal) spaced at a maximum of 16" o.c. in both vertical and horizontal directions. Anchor ties shall engage to a galvanized No. 9 gauge horizontal joint reinforcement wire in the veneer which shall be continuous and shall be placed at 16" o.c. maximum at the center of the veneer. Dovetail slots and anchor ties shall be galvanized.
  3. To reinforced masonry walls: Veneer shall be attached with tri-rod laddur type reinforcement spaced at a maximum of 16" o.c. vertically consisting of 3 - #9 gauge, galvanized, corrugated, wires. Veneer may also be attached with Dur-O-Wal DA 3600 S Seismic Ladur-Eye (or equal) spaced at 16" o.c. maximum in both vertical and horizontal directions. Where the joints in the veneer and masonry back up walls do not align, attach veneer with Dur-O-Wal DA 5213 S seismic veneer anchors (or equal) spaced at 16" o.c. maximum in both directions. Attach the veneer to the anchors with Dur-O-Wal Seismic Steel Pintles (or equal) that shall engage a galvanized No. 9 gauge horizontal joint reinforcement wire in the veneer which shall be continuous and shall be placed at 16" o.c. maximum at the center of the veneer.
  4. Other methods of attachment may be used after written acceptance by the architect and structural engineer.
  5. Steel Lintels: Provide steel angle lintels at all openings through the masonry veneer. Provide one inch of bearing for each foot of width of opening, with a minimum bearing of six inches. See the Steel Angle Lintel Schedule for size.

4.3. Detailing Requirements:
- A. Standards: Reinforcing detailing shall comply with American Concrete Institute (ACI) Standard 315, "Details and Detailing of Concrete Reinforcement."
- B. Reinforcement Protection (cover):
  1. Joint reinforcement shall have not less than 5/8" mortar coverage from the exposed face.
  2. Other reinforcement shall have a minimum coverage of one bar diameter over all the bars, but not less than 3/4". When masonry is exposed to soil, minimum coverage shall be 1.5".
- C. Vertical steel reinforcement shall be placed and secured against displacement prior to grouting by wire positioners or other suitable devices: at intervals not exceeding 112 bar diameters, at the grout lift heights, or at bar splice locations, whichever is less. Vertical reinforcing shall be located at the center of the wall, unless noted otherwise.
- D. Lap Splice Lengths: Lap all masonry reinforcing bars per the "Masonry Reinforcing Bar Lap Splice Schedule." Joint reinforcement shall lap a minimum of 6".
- E. Corner Bars: Horizontal reinforcement shall be continuous at all corners and at intersecting walls. Provide corner bars with the required lap splice length.
- F. Dowels: All vertical reinforcing shall be doweled to the foundation wall, footing (structure below) and to the structure above with the same size dowel, spacing (and in the same core) as the vertical wall reinforcing unless noted otherwise.
- G. Wall Openings 24" wide and wider: Provide reinforced masonry lintels per Masonry Lintel Schedule over the top of, and 2 - #5 bars, in grouted spaces, on all sides and adjacent to every unscheduled opening, unless noted otherwise. Bars for all openings shall extend a minimum of 48 bar diameters beyond the corners of the opening. Vertical bars shall extend from floor level below to the floor, or roof, level above. Where a 48 bar diameter extension is not possible, extend bars as far beyond the opening as possible and terminate them with a 90 degree standard ACI hook.
- H. Horizontal wall reinforcing shall be continuous through joining concrete walls, masonry walls, columns, and pilasters. Provide a key between the wall and the column or pilaster. Horizontal wall reinforcing shall be placed inside the column vertical reinforcing.
- I. Anchor bolts and headed stud anchors shall be set in a grouted cell. Anchor bolts and headed stud anchors shall have 1" grout surrounding the shank at its penetration. Grout shall be flush with the face or top of the masonry.
- J. All masonry column ties shall terminate with 135 degree hooks plus a 6 bar diameter extension (4" minimum).
- K. The exposed face of all embed plates shall be set flush with the face of masonry wall or column.

4.4. Minimum Reinforcing:
All masonry walls shall be reinforced as follows, unless shown otherwise on the drawings. Reinforcing shall be placed in grouted cells.

Wall Thickness	Horizontal Reinf.	Vertical Reinf.
6"	#4 @ 48" o.c.	#5 @ 32" o.c.
8"	#5 @ 48" o.c.	#5 @ 32" o.c.
10"	#6 @ 48" o.c.	#6 @ 32" o.c.
12"	2 - #5 @ 48" o.c.	#6 @ 32" o.c.

5. Structural Steel

5.1. Material:
- A. W-Shapes: ASTM A992, (F_y = 50 ksi), except as noted otherwise.
- B. All Other Shapes and Plates: ASTM A36 (Fy = 36 ksi), except as noted otherwise.
- C. Rectangular and Square Hollow Structural Sections (HSS): ASTM A500, Grade B (Fy = 46 ksi).
- D. Round HSS: ASTM A500, Grade B (Fy = 42 ksi).
- E. Steel Pipe: ASTM A53, Grade B (Fy = 35 ksi).
- F. Deformed Bar Anchors (DBA): ASTM A496.
- G. Headed Stud Anchors (HSA): ASTM A108, with dimensions complying with AISC specifications.
- H. Anchor Rods: ASTM F1554, Grade 36 with ASTM A563 heavy hex nuts and ASTM F436 hardened washers, unless noted otherwise.
- I. Structural steel that is part of the seismic force resisting system shall be supplied with minimum Charpy V-Notch impact test results of 20 ft-lbs. absorbed energy at 70 degrees Fahrenheit, indicated below:
  1. Hot rolled shapes with flanges 1.1/2" thick and thicker tested in the alternate core location as described in ASTM A6 Supplementary requirement S30.
  2. Plates 2" and thicker measured at any location permitted by ASTM A673.
  3. Test Frequency: Each heat.

5.2. Fabrication and construction shall comply with the following Codes and Standards:
- A. American Institute of Steel Construction (AISC) 360-05, "Specification for Structural Steel Buildings," dated March 9, 2005.
- B. AISC 341-05, "Seismic Provisions for Structural Steel Buildings" dated March 9, 2005, including Supplement No. 1, dated November 16, 2005.
- C. AISC 303-05, "Code of Standard Practice for Steel Buildings and Bridges" excluding the following: Section 3.3 (last sentence of first paragraph), Section 4.4, Section 4.4.1, Section 4.4.2, Section 4.5, and Section 7.13.3.
  1. The architectural drawings are the prime contract drawings. Consultants' drawings by other disciplines are supplementary to the architectural drawings. The structural drawings shall be used in conjunction with the architectural drawings. Detailing and shop drawing production for structural elements will require information (including dimensions) contained in architectural, structural, and/or other consultants' drawings. Refer to VII. Special Instructions, notes VII.B and VII.C on this sheet.
- D. AISC 358-05, "Prequalified Connections for Special and Intermediate Steel Moment Frames for Seismic Applications," dated December 13, 2005.
- E. AISC/RCSC 2004, "Specification for Structural Joints Using ASTM A325 or A490 Bolts"
- F. American Welding Society (AWS) D1.1-04, "Structural Welding Code – Steel" (specific items do not apply when they conflict with the AISC requirements).
- G. American Welding Society (AWS) D1.8-05, "Structural Welding Code – Seismic Supplement" (specific items do not apply when they conflict with the AISC requirements).
- H. Steel Joist Institute (SJI) 2005, "Standard Specification, Load Tables and Weight Tables for Steel Joists and Joist Girders," and "Recommended Code of Standard Practice."
- I. American Iron and Steel Institute (AISI) 2007, "North American Specification for the Design of Cold-Formed Steel Structural Members."

5.3. Structural shapes and plates shall be fabricated from newly rolled (milled) one-piece sections without splices, unless specifically noted otherwise on the structural drawings. Connections for structural steel shall comply with the structural drawings, unless written approval is given by the structural engineer.

PLAN MARKS

PLANMARKS-LONG

BF-#	BRACED FRAME
CB-#	CONCRETE BEAM
CC-#	CONCRETE COLUMN
CDP-#	CONC DRILLED PIER
CFW-#	CONC FDTN. WALL
CGB-#	CONC GRADE BEAM
CJ-#	CONCRETE JOIST
CL-#	CONCRETE LINTEL
CP-#	CONCRETE PIER
CRW-#	CONC RETAINING WALL
CSG-#	CONC SLAB ON GRADE
CSS-#	CONC SUSPENDED SLAB
CSW-#	CONC SHEAR WALL
CW-#	CONCRETE WALL
FC#	CONTINUOUS FOOTING
FM#	MAT FOOTING
FR#	RECTANGULAR FOOTING
FS#	SQUARE FOOTING
FTS#	THICKEND SLAB FOOTING
MC-#	MASONRY COLUMN
MF-#	MOMENT FRAME
ML-#	MASONRY LINTEL
MP-#	MASONRY PIER
MW-#	MASONRY WALL
PD-#	PLYWOOD DIAPHRAGM
PSW-#	PLYWOOD SHEAR WALL
SBP-#	STEEL BASE PLATE
SC-#	STEEL COLUMN
SCP-#	STEEL CAP PLATE
SD-#	STEEL DECK

STRUCTURAL DRAWING LIST

SHEET NO.	SHEET NAME
SE001	GENERAL STRUCTURAL NOTES
SE002	GENERAL STRUCTURAL NOTES
SE003	GENERAL STRUCTURAL NOTES
SB101	FOOTING AND FOUNDATION PLAN
SB501	FOOTING & FOUNDATION DETAILS
SB502	FOOTING & FOUNDATION DETAILS
SB503	FOOTING & FOUNDATION DETAILS (3)
SB601	STRUCTURAL SCHEDULES
SB602	STRUCTURAL SCHEDULES
SF101	LEVEL 2 FLOOR FRAMING PLAN
SF102	LEVEL 3 FLOOR FRAMING PLAN
SF103	LEVEL 4 FLOOR FRAMING PLAN
SF104	LEVEL 5 FLOOR FRAMING PLAN
SF105	ROOF FRAMING PLAN
SF106	PARAPET FRAMING PLAN
SF107	MISC. FRAMING PLANS
SF110	HOLDING CELL LID FRAMING PLANS
SF111	RAISED FLOOR PLANS
SF201	MOMENT FRAME ELEVATIONS
SF202	MOMENT FRAME ELEVATIONS
SF205	COOLING TOWER PARAPET & FRAME ELEVATIONS
SF210	SIDEPLATE GENERAL NOTES (1 OF2)
SF211	SIDEPLATE GENERAL NOTES (2 OF 2)
SF212	SIDEPLATE A TYPE & B TYPE TYPICAL DETAILS
SF213	SIDEPLATE C TYPE TYPICAL DETAILS
SF214	SIDEPLATE HSS A&B TYPE TYPICAL DETAILS
SF215	SIDEPLATE TYPICAL BEAM DETAILS
SF216	SIDEPLATE MISC DETAILS
SF401	STAIR FRAMING PLANS
SF402	STAIR FRAMING PLANS
SF404	STAIR FRAMING DETAILS
SF501	FLOOR FRAMING DETAILS
SF502	FLOOR FRAMING DETAILS
SF503	FLOOR FRAMING DETAILS
SF504	FLOOR FRAMING DETAILS (3)
SF505	FLOOR FRAMING DETAILS
SF515	ROOF FRAMING DETAILS
SF516	ROOF FRAMING DETAILS
SF517	ROOF FRAMING DETAILS
SF518	ROOF FRAMING DETAILS
SF601	STRUCTURAL SCHEDULES
SF602	STRUCTURAL SCHEDULES

ABBREVIATIONS

ABBREVIATIONS-LONG

AB	ANCHOR BOLT (S)
ABV	ABOVE
@	AT
ALT	ALTERNATE
APPROX	APPROXIMATE
ARCH	ARCHITECT(URAL)
BM	BEAM
BLW	BELOW
BRG	BEARING
BTWN	BETWEEN
BLDG	BUILDING
BOT	BOTTOM
C.J.	CONSTRUCTION JOINT OR CONTROL JOINT
CJP	COMPLETE JOINT PENETRATION
CMU	CONC MASONRY UNIT
COL	COLUMN
CONC	CONCRETE
CONST	CONSTRUCTION
CONT	CONTINUOUS
CONTR	CONTRACTOR
CTR	CENTER
DB	DECK BEARING
DBA	DEFORMED BAR ANCHORS
DBL	DOUBLE
DET	DETAIL
DIA (OR Ø)	DIAMETER
DIM	DIMENSION
DN	DOWN
DWG	DRAWING
DWL	DOWEL
EA	EACH
E.J.	EXPANSION JOINT (SEISMIC SEPARATION JOINT)
ELEV	ELEVATION
ELEC	ELECTRICAL
EQUIP	EQUIPMENT
EQ	EQUAL
EXIST	EXISTING
EXP	EXPANSION / EXPOSED
EXT	EXTERIOR
E.F.	EACH FACE
E.W.	EACH WAY
F.D	FLOOR DRAIN
FDTN	FOUNDATION
F.F.	FINISH FLOOR
FIN	FINISH
FL	FLOOR
FT	FOOT
FTG	FOOTING
FV	FIELD VERIFY
GA	GAUGE
GALV	GALVANIZED
GLB	GLU-LAMINATED BEAM
GR	GRADE
GSN	GENERAL STRUCTURAL NOTES
HB	HORIZONTAL BRIDGING
HT	HEIGHT
HORIZ	HORIZONTAL
HSA	HEADED STUD ANCHORS
IBC	INTERNATIONAL BUILDING CODE
ICBO	INTERNATIONAL CONFERENCE OF BUILDING OFFICIALS
ICC	INTERNATIONAL CODE COUNCIL
IN.	INCH
INSUL	INSULATION
INT	INTERIOR
I.F.	INSIDE FACE
JT	JOINT
JST	JOIST
KLF	KIPS PER LINEAL FOOT
KSF	KIPS PER SQUARE FOOT
KSI	KIPS PER SQUARE INCH
K	KIPS - 1,000 POUNDS
LF	LINEAL FOOT
LBS	POUNDS
LLH	LONG LEG HORIZONTAL
LLV	LONG LEG VERTICAL
MAS	MASONRY
MAX	MAXIMUM
MCJ	MASONRY C.J.
MECH	MECHANICAL
MFR	MANUFACTURER
MIN	MINIMUM
MISC	MISCELLANEOUS
NIC	NOT IN CONTRACT
NTS	NOT TO SCALE
OPNG	OPENING
OPP	OPPOSITE
O.C.	ON CENTER
O.F.	OUTSIDE FACE
OWSJ	OPEN WEB STEEL JOIST
PCF	POUNDS/CUBIC FOOT
PL	PLATE
PLF	POUNDS/LINEAL FOOT
PNL	PANEL
PSF	POUNDS/SQ FOOT
PSI	POUNDS/SQ INCH
PT	POINT
REINF	REINFORCING
R.D.	ROOF DRAIN
REQ'D	REQUIRED
SHT	SHEET
SI	SPECIAL INSPECTION
SOG	SLAB ON GRADE
STD	STANDARD
STIFF	STIFFENER
STL	STEEL
SQ	SQUARE
SIM	SIMILAR
STR	STRUCTURAL
STAG	STAGGERED
T&B	TOP AND BOTTOM
TEMP	TEMPERATURE
THDS	THREADS
T.O.	TOP OF
TOC	TOP OF CONCRETE
TOF	TOP OF FOOTING
TOS	TOP OF SLAB
TOW	TOP OF WALL
TYP	TYPICAL
UNO	UNLESS NOTED OTHERWISE
VERT	VERTICAL
W/	WITH
WWF	WELDED WIRE FABRIC

VCBO ARCHITECTURE
524 SOUTH 600 EAST
SALT LAKE CITY, UT 84102
Phone: (801) 575-8800
Fax: (801) 531-9850
Web: vcbo.com

REAVELEY ENGINEERS + ASSOCIATES
Consulting Structural Engineers

2nd District Juvenile Courthouse
Utah State Courts
08284150
165 West 20th Street, Ogden, Utah
BID DOCUMENTS

Rev #	Date	Description
3	09/10/2013	ADDENDUM #003

Job # 12500
Date August 15, 2013
Owner # 08284150
Ins. #

GENERAL STRUCTURAL NOTES

SE001

9/10/2013 8:43:01 AM

GENERAL STRUCTURAL NOTES - CONT.

5.4. Welding:

A. It is recommended the steel erection contractor and steel fabricator contact the Quality Assurance Agency prior to beginning any welds. A program of joint preparation and welding procedures should be worked out between the two parties before the welding is started so that correct welds will be made from the beginning.

B. Certification of Welders: All shop and field welding shall be executed by AWS certified welders who have been specifically certified for the process of welding being performed. The welder's certification will be considered as being current unless the welder is not engaged in the process of welding being performed for a period exceeding six months or there is a specific reason to question a welder's ability as required by AWS. Certification and records must comply with AWS Standards. Certification and appropriate records must be provided to the architect prior to beginning work.

C. Electrodes: E-70 XX or as noted otherwise. E60 XX may be used for welding steel floor and roof decks.

D. Minimum Welds: All intersecting steel shapes that are not bolted shall be connected by a fillet weld all around, unless noted otherwise. Fillet weld sizes that are not shown shall be 1/16" less than the thinnest of the connected parts for thicknesses 1/4" and larger. Fillet welds on plates less than 1/4" shall be of the same size as the thinnest of the connected parts.

E. Reinforcing Bars: Do not weld rebar except as specifically detailed in the drawings. In such cases, use only AWS standards. Do not substitute reinforcing bars for deformed bar anchors (DBAs), machine bolts, or headed stud anchors (HSAs).

F. Bolts: Do not apply any welds, including "tack" welds to bolts, including anchor bolts, except as specifically detailed in the drawings.

G. Headed Stud Anchor (HSA) welding and Deformed Bar Anchor (DBA) welding shall conform to the manufacturer's specifications. Welding shall comply with AWS D1.1 Section 7.6 through 7.8 and Annex IX.

H. Special Provisions for Welds in the SLRS (Seismic Load Resisting Systems): Welds used in members and connections of moment frames, braced frames, and collector elements shall comply with these requirements. Welding methods, procedures and quality control shall comply with AISC 341, AWS D1.1, AWS D1.8 and the following:

1. Demand Critical Welds: The following CJP groove welds are demand critical and shall comply with the special requirements for Demand Critical Welds.
   a. Beam flanges to columns, single plate shear connections to columns, and beam webs to columns in moment frames.
   b. Column splice welds including column bases in moment frames and braced frames.
   c. Link beams to columns in Eccentrically Braced Frames.
   d. Web plate to flange plate welds in built-up Eccentrically Braced Frame link beams.
   e. Other welds designated as demand critical in the drawings.
2. Welding shall be performed in accordance with AISC 341 Appendix W and a welding procedure specification (WPS) as required in AWS D1.1. WPS variables shall be within the parameters established by the filler metal manufacturer. WPS for demand critical welds shall also comply with AWS D1.8 Section 6.1.
3. All welds except for demand critical welds shall be made with a filler metal that can produce welds that have a minimum Charpy V-Notch toughness of 20 ft-lb at 0 degrees Fahrenheit, as determined by the appropriate AWS A5 classification test method or manufacturer certification.
4. Demand critical welds shall be made with a filler metal that can produce welds that have a minimum Charpy V-Notch toughness of 20 ft-lb at -20 degrees Fahrenheit, as determined by the appropriate AWS A5 classification test method or manufacturer certification and 40 ft-lb at 70 degrees Fahrenheit as determined by AISC 341 Appendix X.
5. Backer bars shall be removed from the beam bottom flange to columns. The root of the weld shall be back gouged to sound metal to remove all slag and cracks. Weld the back gouged region and finish welding using a reinforcing fillet weld. Comply with AWS D1.8 sections 6.7 and 6.8. This requirement also applies to all non-fusible backing used at beam to column CJP welds.
6. Steel backer bars need not be removed from the beam top flange connections to columns or at continuity plate connections to columns provided that the backer bars are welded to the column flange with a continuous 5/16 inch fillet weld on the edge below the CJP groove weld for the entire length of the backer bar.
7. Backing at beam flange to column flange joints shall not be welded to the underside of the beam flange, nor tack welded at this location. If fillet welds or tack welds are placed between the backing and the beam flange in error, they shall be repaired per AWS D1.8 Section 6.12.3.
8. Details and treatment of weld tabs shall be per AWS D1.8 Section 6.10. Use weld tabs as specified in AWS D1.1 Section 5.31 except at the end of CJP welds adjacent to the column web/flange juncture at continuity plates. Remove weld tabs to within 1/8 inch of the base metal surface after welding. Where weld tabs are used at continuity plates, remove them to within 1/4 inch of the base metal surface after welding. Finish the edge where weld tabs are removed to a surface roughness of 500 microinches.
9. CJP joints in members with different thickness or widths (such as column splices) shall be transitioned in a manner that the slope in the transition does not exceed 1 in 2.1/2. The transition shall be accomplished by chamfering the thicker part, tapering the wider part, sloping the weld metal, or by a combination of these.
10. Quality requirements for weld access holes for all demand critical welds shall comply with AWS D1.8 Section 6.9.2. Weld access hole shape shall be per AWS D1.8 Figure 6.2.
11. Beam bottom flange welding sequence shall comply with AWS D1.1 Section 6.14.
12. Filler and weld metal shall comply with AWS D1.8 Section 6.3 in addition to the following:
    a. Intermixed filler metals shall comply with AISC 341 Appendix W5.1.
    b. Filler metal diffusible hydrogen shall comply with AISC 341 Appendix W.5.2.
13. Preheat, and interpass temperatures shall comply with AWS D1.1 Section 3.5, AWS D1.8 Section 6.5 and AISC 341 Appendix W5.4.
14. Additional welding provisions applicable to demand critical welds only are as follows:
    a. Welding processes shall comply with AWS D1.8 Section 6.2.
    b. Filler metal packaging and exposure limitations shall comply with AISC 341 Appendix W6.2 and W6.3 and AWS D1.8 Section 6.4.
15. Tack welds shall comply with AWS D1.1 Section 5.18 and AWS D1.8 Section 6.16. Tack welds attaching backing bars and weld tabs at demand critical welds shall be placed where they are incorporated into a final weld.
16. Unrepaired cracks, gouges, grooves and notches will not be permitted in the joint area. Arc strikes, gouges and other imperfections within or adjacent to the joint, shall be repaired or removed in accordance with AWS D1.8 Section 6.15.4.
17. Braced Frame Welding: Lengths shown for fillet welds at brace-to-gusset, gusset-to-baseplate, and column-to-gusset connections are minimums, intended for establishing gusset plate dimensions. Weld entire contact length at these joints, typical.

5.5. Bolted Connections:

A. Provide snug tightened joints with ASTM A325N Type 1 bolts for steel to steel connections, as noted herein or as noted on the drawings. Snug tightened joints shall be used in connections for simple span framing and beam (or girder) to bearing plate connections. The snug tightened condition is usually attained by a few impacts of an impact wrench or the full effort of a man using an ordinary spud wrench. Bolts shall be tightened until all plies of the joint are in firm contact.

B. Provide pretensioned joints with ASTM A325N Type 1 bolts for all steel to steel connections that are part of the Seismic Load Resisting System (SLRS). Faying surfaces shall meet the requirements of a slip-critical Class A surface except for faying surfaces of end plate moment connections. Tighten bolts by the turn of the nut, calibrated wrench, or direct tension indicator method. Alternate fastener designs as defined by AISC shall be submitted to the engineer for review and acceptability prior to installation. Provide hardened washers beneath turned element.

C. Provide pretensioned joints with ASTM A325X Type 1 bolts for all steel to steel connections, unless noted otherwise. Tighten bolts by the turn of the nut, calibrated wrench, or direct tension indicator method. Alternate fastener designs as defined by AISC shall be submitted to the engineer for review and acceptability prior to installation. Provide hardened washers beneath turned element.

D. Provide pretensioned joints with ASTM A325N Type 1 bolts for steel to steel connections subject to significant load reversal, fatigue with no load reversal, tensile fatigue, and the conditions listed in AISC 360 Section J.1.10. Tighten bolts by the turn of the nut, calibrated wrench, or direct tension indicator method. Alternate fastener designs as defined by AISC shall be submitted to the engineer for review and acceptability prior to installation.

E. Provide slip critical joints with ASTM A325 Type 1 bolts for steel to steel connections subject to fatigue with load reversal, joints that utilize oversized holes, and joints that utilize slotted holes not loaded perpendicular to the long direction of the slot. Faying surfaces shall meet the requirements of a slip-critical Class A surface. Tighten bolts by the turn of the nut, calibrated wrench, or direct tension indicator method. Alternate fastener designs as defined by AISC shall be submitted to the engineer for review and acceptability prior to installation.

F. Provide hardened washers beneath the turned element of all bolts or nuts. Provide hardened beveled washers, to compensate for the lack of parallelism, where the outer face of the bolted parts has a slope greater than one in twenty with respect to the plane normal to the bolt axis. Hardened washers or plates installed over oversized holes or slotted holes shall be at least 5/16" thick and shall conform to ASTM F436. Plates or bars installed at slotted holes shall have a size sufficient to completely cover the slot after installation.

G. Where a steel to steel beam connection is not detailed in the drawings, provide a standard AISC framed connection with the capacity to support one half of the total uniform load capacity of the given shape for the span and for the steel specified.

H. Bolts, nuts and washers shall not be reused.

5.6. Steel Lintels

A. Provide steel angle lintels at all openings through the masonry veneer. Provide one inch of bearing for each foot of width of opening, with a minimum bearing of six inches. See the Steel Angle Lintel Schedule for size.

5.7. Beam Web Stiffener Plates:

A. Provide full-height web stiffener plates to each side of all beams above all bearing points. Stiffener plates shall be the thickness noted below unless noted otherwise and shall be welded on both sides of the stiffener plate with fillet welds (noted below) all around.

Beam Web stiffener thickness	For beams with flange widths between	Weld Size
1/4 inch thick	Greater than 0" and less than 8 1/4"	3/16"
3/8 inch thick	Greater than 8 1/4" and less than 12 1/4"	1/4"
1/2 inch thick	Greater than 12 1/4" and less than 16 1/2"	5/16"
5/8 inch thick	Greater than 16 1/2" and less than 20 3/4"	3/8"

5.8. Composite Beams

A. Composite beams are indicated on the framing plans with the suffix ( ). The number inside the brackets indicates number of studs for this beam. Beams shall have the studs spaced uniformly over the entire beam length.

B. Beams which have more than one number inside the symbol (, ,), such as (W, X, Y, Z), shall have "W" number of studs spaced evenly over the first "section of beam", "X" number of studs spaced evenly over the second "section of beam", "Y" number of studs spaced evenly over the third "section of beam", and "Z" number of studs spaced evenly over the fourth "section of beam". A "section of beam" is defined as that portion of beam located between the column and the nearest intersecting framing member or that portion of beam located between two adjacent intersecting framing members.

C. All headed stud type shear connectors shall be in conformance with ASTM A108. Dimensions shall comply with AWS. Use 3/4" diameter studs. Headed studs shall extend 2" minimum above the top of the steel deck after welding. Headed studs shall be applied through the metal deck to the top flange of the steel section, or welded directly to the steel section.

D. The minimum center-to-center spacing of stud connectors shall be six (6) diameters along the longitudinal axis of the supporting composite beam and four (4) diameters transverse to the longitudinal axis of the supporting composite beam. The maximum center to center spacing shall not exceed 32".

E. C= 0.00" on the plans denotes precamber dimension (upward) in inches.

5.9. Steel Floor Deck:

A. Steel floor deck shall comply with the latest requirements of the Steel Deck Institute (SDI). Submit ICC Code Evaluation Report with load and lateral shear capacities with shop drawings.

B. Steel floor deck shall be 3" deep X 20 gauge minimum phosphatized/painted composite (deck shall be galvanized (G60) when used above or below mechanical equipment rooms), type "W" deck with interlocking side seams with the following properties:

	20 Gauge	18 Gauge
Minimum S (in^3/ft) =	0.534	0.767
Minimum I (in^4/ft) =	0.896	1.203

Painted deck shall be coated with special paint to receive sprayed-on fire proofing, where required.

C. A 3 1/2" thick (6 1/2" overall) lightweight concrete (f'c = 3,000 psi @ 28 days unless noted otherwise) slab shall be poured over the steel deck. Reinforce slab with 6 x 6 - W2.0 x W2.0 welded wire fabric (minimum) or reinforce slab with 2 pounds per cubic yard minimum polypropylene fibrillated fiber reinforcement, as per specifications. Welded Wire Fabric shall be placed 1" to 1 1/2" below the top of the slab.

D. Steel deck with 3 1/2" thick (6 1/2" overall) lightweight concrete slab shall have a minimum allowable diaphragm shear capacity of 1,740 lbs/ft. for a 10'-0" deck span.

E. Weld deck to supporting framing members with 3/4" diameter puddle welds at the following spacing (Closer spacings may be used to develop minimum shear requirements.):
1. 12" o.c. to supports perpendicular to deck corrugations (4 welds per 36" wide sheet).
2. 12" o.c. to all supports parallel to deck corrugations.
3. Stud welds may take the place of puddle welds where studs are welded through the deck to the top flange of beams.
4. All welded surfaces shall be dry before welding deck or studs to supports.

F. Attach interlocking seams with 3/16" button punch at 18" o.c. or 1 1/2" top seam weld at 36" o.c. between adjacent pieces of deck. Crimp seams before button punching or welding interlocking seams. Closer spacings may be used to develop minimum shear requirements.

G. All deck shall be 3-span continuous minimum where possible. In areas where 3-span conditions are not possible, the deck shall meet the above loading criteria for the span condition. The contractor shall provide heavier gauge deck or provide shoring as required for one or two span conditions to meet the equivalent loading of the above deck under a three span condition.

H. Deck shall have a minimum bearing length of 2".

5.10. Steel Roof Deck:

A. Steel roof deck shall comply with the latest requirements of the Steel Deck Institute (SDI). Submit ICC Code Evaluation Report with load and lateral shear capacities with shop drawings.

B. Steel roof deck shall be 1 1/2" deep X 18 Gauge minimum galvanized (G60), type "B" wide rib deck with interlocking side seams with the following properties: (3)

	18 Gauge
Minimum S (in^3/ft)=	0.322
Minimum I (in^4/ft)=	0.296

Painted roof deck shall be coated with special paint to receive sprayed-on fire proofing, where required.

C. Minimum allowable deck diaphragm shear values shall be 1,189 lb/ft. for a 6'-0" deck span.

D. Weld steel roof deck to supporting framing members with 3/4" diameter puddle welds at the following spacings (Closer spacings may be used to develop minimum shear requirements.):
1. 6" o.c. to all supports perpendicular to deck corrugations (7 welds per 36" sheet).
2. 6" o.c. to the following supports parallel to deck corrugations: All perimeter supports, all concrete or masonry walls, all joists or joist girders with a "T/C" designation, and all steel beams which are on a grid line with braced frames or moment frames.
3. 12" o.c. to all other supports parallel to deck corrugations.
4. All welded surfaces shall be dry before welding deck to supports.

E. Attach interlocking seams with 1 1/2" long top seam welds at 12" o.c. minimum between adjacent pieces of decking. Crimp side seams before welding. Closer spacings may be used to develop minimum shear requirements.

F. Alternate means of deck attachment and fastening using screws, pins or other mechanical fastening methods are permitted with approval of the engineer. The contractor shall submit the proposed attachment system and the code evaluation report demonstrating the system has the strength to meet the required deck shears specified above (in item 3) and on the plans. The flexibility factor of the proposed deck attachment system shall be equal to or less than the flexibility factor for the specified welded deck attachment system. If the alternate attachment method is approved, it is the responsibility of the contractor to ensure that the deck type and profile is compatible with the fastening system being used.

G. Provide a 2" minimum bearing and a 4-inch lap at the splice points of all pieces of deck.

H. All deck shall be 3-span continuous minimum where possible. The contractor shall provide heavier gauge deck as required for one or two span conditions to meet equivalent loading of the above deck under a three span condition.

I. Steel roof deck shall not be used to support loads from plumbing, HVAC ducts, light fixtures, architectural elements or equipment of any kind, unless specifically noted otherwise. Lightweight suspended acoustical ceilings with a total weight per wire not exceeding 50# may be hung from the steel roof deck. The hangers should be staggered to distribute the load over multiple deck flutes.

5.11. Cold-Formed Steel

A. Light Gauge Steel Framing:
1. Where steel framing size designators are used in the drawings, they follow the convention established by the Steel Stud Manufacturers' Association (SSMA) and the North American Steel Framing Alliance (NASFA). Framing members provided shall comply with the designations according to this convention.
2. All load bearing stud (and/or) joist framing members along with all runner, bridging, and end track shall be of the designation shown on the plans. All studs with base metal thickness of 54 mil and 68 mil, and joists with base metal thickness of 54 mil, 68 mil and 97 mil, shall be formed from steel meeting the requirements of ASTM A570 except that the steel shall have a 50,000 psi yield stress. All track and end closures with base metal thickness of 54 mil and 68 mil, bridging with base metal thickness of 54 mil, and studs and track with base metal thickness of 43 mil and 33 mil, shall be formed from steel with a minimum yield of 33,000 psi. All components shall be galvanized.
3. Follow all manufacturers' recommendations for the use of these products.
4. Unless noted otherwise, all welded connections shall be done using 1/8" AWS type 6013 or 7014 rod with a welding heat of 60-110 amperes depending on the gauge of material and the fit of the parts. Wire tying of framing components shall not be permitted.
5. All interior non-bearing steel stud walls that extend above the ceiling but do not attach to the floor or roof diaphragm (above) shall have diagonal braces at 45 degrees (+/-). The KL/r ratio of the brace shall not exceed 200 and shall not be spaced further apart than 10'-0". Connect diagonal braces to the top of the steel stud walls and to the underside of the top flange of the steel beams, open web joists or girders, etc. with 1/8" fillet welds all around. Diagonal angle braces may be connected to 8" x 8" x 1/4" steel plates which shall be anchored to the floor or roof decks which have concrete fill above with 2- 3/8" dia. expansion anchors for each plate. Connect angle to plate with a 1/4" fillet weld all around. Connect diagonal braces to roof decking which does not have concrete fill above per the non-bearing wall brace connection details shown on the structural drawings. Diagonal braces may be constructed from cold-formed light gauge steel studs but must conform to the kl/r ratio of less than 200 requirement. When diagonal brace lengths exceed 10'-0" (+/-), cold-formed box sections made from two 600S137-54 steel studs will likely be required.

B. Prefabricated Systems: Submit complete shop drawings and calculations of all elements for review. Submittals shall bear the stamp of a Professional Engineer registered in the State of Utah.

5.12. Metal Bar Grating:

A. Metal bar grating shall comply with the most recent requirements of the National Association of Architectural Metals Manufacturers, Metal Bar Grating Division (NAAMM MBG). Products shall conform to the latest edition of the Metal Bar Grating Manual, ANSI/NAAMM MBG 531, or the Heavy Duty Metal Bar Grating Manual, ANSI/NAAMM MBG 532, as appropriate.

B. Materials: Unless noted otherwise, metal bar grating of the following types shall conform with the following standards:
1. Steel: ASTM A569 (allowable fiber unit stress F = 18,000 psi)
2. Stainless Steel: ASTM A167, alloys 304/316 (allowable fiber unit stress F = 20,000 psi)
3. Aluminum: ASTM B221, alloys 6063-T6/6061-T6 (allowable fiber unit stress F = 12,000 psi)

C. Metal bar grating shall be provided with mill finish, unless otherwise noted.

D. Unless noted otherwise, provide W-19-4 (1.1/2" x 3/16") Steel grating in locations where metal bar grating is specified.

E. All metal bar grating shall be firmly and positively anchored to supporting members. Unless noted otherwise, weld grating to supporting members with 3/16" fillet welds, 3/4" long. Locate welds at each end of bearing bars approximately 6 in from each side of grating panel. At intermediate supports in panel, locate one weld at middle of panel.

6. Special Instructions

6.1. The project specifications are not superseded by the General Structural Notes but are intended to be complementary to them. Consult the specifications for additional requirements in each section. Notes and specific details on the drawings shall take precedence over General Structural Notes and typical details.

6.2. The architectural drawings are the prime contract drawings. Consultant drawings by other disciplines are supplementary to the architectural drawings. All omissions or conflicts, including dimensions, between the various elements of the consultants' drawings and/or specifications shall be brought to the attention of the Architect before proceeding with any work involved. In case of conflict, follow the most stringent requirement as directed by the Architect without additional cost to the owner. Any work done by the contractor after discovery of such discrepancy shall be done at the contractor's risk.

6.3. The structural drawings shall be used in conjunction with the architectural drawings. Primary structural elements and overall structural layout are indicated within the structural plans and details. Some secondary elements, architectural layouts, alcoves, elevations, slopes, depressions, curbs, mechanical equipment and electrical equipment, are not indicated within the structural drawings. Detailing and shop drawing production for structural elements will require information (including dimensions) contained in the architectural, structural and/or other consultants' drawings.

6.4. Shoring and Bracing Requirements:

A. Floor and Roof Structures -- The General Contractor is responsible for the method and sequence of all structural erection. He shall provide temporary shoring and bracing as his method of erection requires to provide adequate vertical and lateral support. Shoring and bracing shall remain in place as the chosen method requires until all permanent members are in place and all final connections are completed, including all roof and floor attachments. The building shall not be considered stable until all connections are complete.

B. Foundation walls must be braced until the complete floor or roof systems is completed. Do not backfill until floor or roof systems are in place.

C. Walls above grade shall be braced until the structural system is complete. Walls shall not be considered to be self supporting.

6.5. All expansion joints (E.J.) shown in the structural drawings shall be considered seismic separation joints, unless noted otherwise.

6.6. Submittals: A copy of all shop drawings that have been submitted for review must be kept at the construction site for reference. These drawings must bear the appropriate review stamps. The shop drawing review shall not relieve the contractor of the responsibility of completing the project according to the contract documents. The general contractor shall review and mark all shop drawings prior to submitting them to the Architect for his review. Shop Drawings made from reproductions of (these) contract drawings will be rejected.

6.7. Project Coordination: It shall be the responsibility of the general contractor to coordinate with all trades any and all items that are to be integrated into the structural system. Openings or penetrations through, or attachments to the structural system that are not indicated on these drawings shall be the responsibility of the general contractor and shall be coordinated with the Architect/Engineers. The order of construction is the responsibility of the general contractor. It is the contractor's obligation to provide all items necessary for his chosen procedure.

6.8. Contractor shall field verify all dimensions, and conditions. If the contract drawings do not represent actual conditions, contractor shall notify architect/engineer prior to fabrication or construction within that area.

6.9. Notice of Copyright: The structural drawings, plans, schedules, notes and details are hereby copyrighted by Reaveley Engineers and Associates, Inc., All Rights reserved. Submission or distribution of documents to meet official regulatory requirements or for similar purposes in connection with the project is not to be construed as publication in derogation of Reaveley Engineers and Associates, Inc.'s reserved rights. The documents defining the structure are instruments of service prepared by Reaveley Engineers and Associates, Inc. for one use only. Furthermore, these documents shall not be reproduced, or copied, in whole or in part by the contractor or his subcontractors for preparation of shop drawings or other submittals.

QUALITY ASSURANCE

1. Quality Assurance

1.1. Quality Assurance Agency Requirements:

A. The Owner shall engage a qualified Quality Assurance Agency (QAA) to provide all special inspection and quality assurance testing for the project. The QAA shall provide all information necessary for the building official to determine that the agency meets the applicable requirements
1. The QAA shall be objective, competent and independent from the contractor responsible for the work being inspected. The agency shall also disclose possible conflicts of interest to confirm objectivity.
2. The QAA shall have adequate equipment to perform required tests.
3. The QAA shall employ experienced personnel educated in conducting, supervising and evaluating tests and/or inspections. Experience or training shall be considered relevant when the documented experience or training is related in complexity to the same type of special inspection activities for projects of similar complexity and material qualities.
4. Prior to the start of construction, the QAA shall submit to the building official, the owner architect and engineer copies of the following:
   a. Current calibration records for all equipment to be used for the work being inspected and/or tested.
   b. Current certification and training records for each individual performing the inspections and/or testing.
   c. Sample inspection and testing reports and the distribution list for the records.
   d. Proposed inspection procedures and frequency for each inspection required by the work.
   e. Proposed testing methods and frequency of testing required by the work.
5. The QAA shall send copies of all inspection and testing reports to the building official, owner, architect, engineer and contractor. Reports shall indicate that the work inspected was or was not completed in conformance to the approved construction documents. Discrepancies shall be brought to the immediate attention of the contractor for correction. If they are not corrected, the discrepancies shall be brought to the attention of the building official, architect and engineer.
6. The QAA shall submit a final report documenting required special inspections and correction of any discrepancies noted in the inspections. The final report shall be distributed to the building official, owner, architect and engineer in a timely manner prior to the completion of the project.

1.2. Contractor Responsibilities:

A. Each contractor responsible for the construction of a system or component requiring special inspections or testing shall submit a written statement of responsibility to the building official, owner, architect and engineer prior to the commencement of the work. The contractor's statement of responsibility shall contain the following:
1. Acknowledgement of awareness of the special requirements defined in the statement of special inspections.
2. Acknowledgement that control will be exercised in order to obtain conformance to the approved construction documents.
3. Contractor's internal quality control procedures, methods and measures to be used in order to obtain conformance to the approved construction documents. Include copies of quality control reports, frequency of reporting and distribution of reports.
4. Identification and qualifications of the person(s) responsible for quality control and their position(s) within the organization.

B. Notification of Engineer: The contractor shall notify the engineer twenty-four hours prior to:
1. Placing concrete in any footing.
2. Closing any wall forms.
3. Placing concrete in any column, beam or suspended slab.
4. Grouting any masonry.
5. Completing the welding of major sections of steel decking.

C. Notification of QAA: The contractor shall notify the QAA in a timely manner so that inspection and testing may be performed as outlined in the statement of special inspections.

1.3. Structural Observations by the Engineer of Record.

A. The Engineer of Record will perform structural observations at critical phases of the project. Copies of the engineer's report will be distributed to the architect, contractor, owner, and building official.

B. Observation visits to the site by the Engineer's field representatives shall not be construed as inspection or approval of construction.

2. Statement of Special Inspections

2.1. The following materials, systems and components require special inspection or testing per Chapter 17 of the International Building Code (IBC).

2.2. For items requiring continuous inspection, a special inspector must be present onsite during the performance of that task. In most cases, periodic inspections/tests shall be performed prior to commencing the task, intermittently during the task, and at the completion of the task.

Steel Construction per IBC Sections 1704.3, 1707.2 & 1708.3

Item	Frequency	Detailed Instructions
Material Verification (IBC Table 1704.3)		
Material verification of structural steel and cold-formed steel deck	Periodic	Verify identification markings of steel conform to ASTM standards noted in General Structural Notes. Verify manufacturer's certified test reports.
Material verification of high-strength bolts, nuts and washers	Periodic	Verify identification markings to conform to ASTM standards noted in General Structural Notes. Manufacturer's certificate of compliance is required.
Material verification of weld filler materials	Periodic	Verify identification markings to conform to AWS specification. Manufacturer's certificate of compliance is required.
Welding (IBC 1704.3.1)		
Complete & partial penetration groove welds	Continuous	Pre-welding inspections are to be performed to ensure that proper materials, welding procedures, and welding personnel qualifications are appropriate and comply with AWS D1.1.
Multi-pass fillet welds	Continuous	
Single-pass fillet welds > 5/16"	Continuous	
Plug, slot, seam or flange welds	Continuous	
Single-pass fillet welds ≤ 5/16"	Periodic	A visual inspection of all welds must be provided with periodic inspections made of work in progress.
Floor & roof deck welds	Periodic	
Shear connector (i.e. stud) welds	Periodic	
Cold-formed steel welds	Periodic	
Welds of stairs & railing systems	Periodic	
Details of Steel Frame (IBC 1704.3.2)		
Member locations, bracing, gusset plates, stiffeners and other connection components	Periodic	All steel frames shall be inspected to verify compliance with the approved construction documents, such as bracing, stiffening, member size and location, and proper application of joint details at each connection.
High-Strength Bolting (IBC 1704.3.3)		
Pretensioned & slip-critical joints	Periodic	See steel section of the General Structural Notes and Section 9.2 and 9.3 of the RCSC Specification.
Item	Frequency	Detailed Instructions
Snug-tightened joints	Periodic	Verify that all joints use proper fastener components, connected elements are fabricated properly, the bolted joint is drawn into firm contact, and that the nuts cannot be removed without the use of a wrench. (See Section 9.1 of RCSC Specification).
Structural Steel in Seismic-Force-Resisting Systems (IBC 1707.2 & 1708.3 and AISC 341 Appendix Q)		
Visual inspection prior to welding	Continuous	Verify materials, fit-up of groove welds, configuration and finish of access holes and fit-up of fillet welds.
Visual inspection during welding	Continuous	Verify: WPS followed, use of qualified welders, control and handling of welding consumables, environmental conditions, welding techniques and no welding over cracked tacks.
Visual inspection after welding	Periodic	Verify: welds are cleaned; welder identification is legible; size, length and location of welds; verify that welds meet acceptance criteria; placement of reinforcement fillets; removal of backing bars and weld tabs as required; and repair activities.
Nondestructive testing of welds Ultrasonic testing	(1) All complete joint penetration (CJP) groove welds in materials 5/16" thick or greater. (2) For base metal thickness greater than 1-1/2" and connected material greater than 3/4" thick containing CJP groove welds loaded in tension in the through thickness direction in tee and corner joints. (3) Where approved by the Engineer and the Building Official, the amount of required ultrasonic testing may be reduced to 25% provided the demonstrated reject rate of a welder or welding operator is 5% or less and at least 40 completed welds have been used to calculate reject rate.	
Nondestructive testing of welds Magnetic particle testing (MT)	(1) When welding of doubler plates, continuity plates or stiffeners has been done in the k-area, the web shall be tested for cracks using magnetic particle testing (MT). Inspection area shall include the k-area base metal within 3 in. of the weld. (2) 25 percent of all beam-to-column CJP groove welds. (3) At welded splices and connections, thermally cut surfaces of beam copes and access holes shall be tested when the flange thickness exceeds 1½" for rolled shapes or when the web thickness exceeds 1½" for built-up shapes. (4) Any weld and adjacent area of the RBS plastic hinge region that has been repaired by welding, or on the base metal of the RBS plastic hinge region if a sharp notch has been removed by grinding. (5) The ends of welds from which the weld tabs have been removed, except for continuity plate weld tabs. (6) Where approved by the Engineer and the Building Official, the amount of required MT on CJP groove welds may be reduced to 10% provided the demonstrated reject rate of a welder or welding operator is 5% or less and at least 20 completed welds have been used to calculate reject rate. This reduction only applies to welds in item (2) above, and is not permitted on other welds requiring MT.	

VCBO
ARCHITECTURE
VCBO ARCHITECTURE
524 SOUTH 600 EAST
SALT LAKE CITY, UT 84102
Phone: (801) 575-8800
Fax: (801) 531-9850
Web: vcbo.com

REAVELEY ENGINEERS + ASSOCIATES
Consulting Structural Engineers

2nd District Juvenile Courthouse

Utah State Courts
08284150
165 West 20th Street, Ogden, Utah
BID DOCUMENTS

Rev #	Date	Description
3	09/10/2013	ADDENDUM #003

Job # 12500
Date August 15, 2013
Owner # 08284150
Ins. #

GENERAL STRUCTURAL NOTES

SE002

9/10/2013 8:43:06 AM

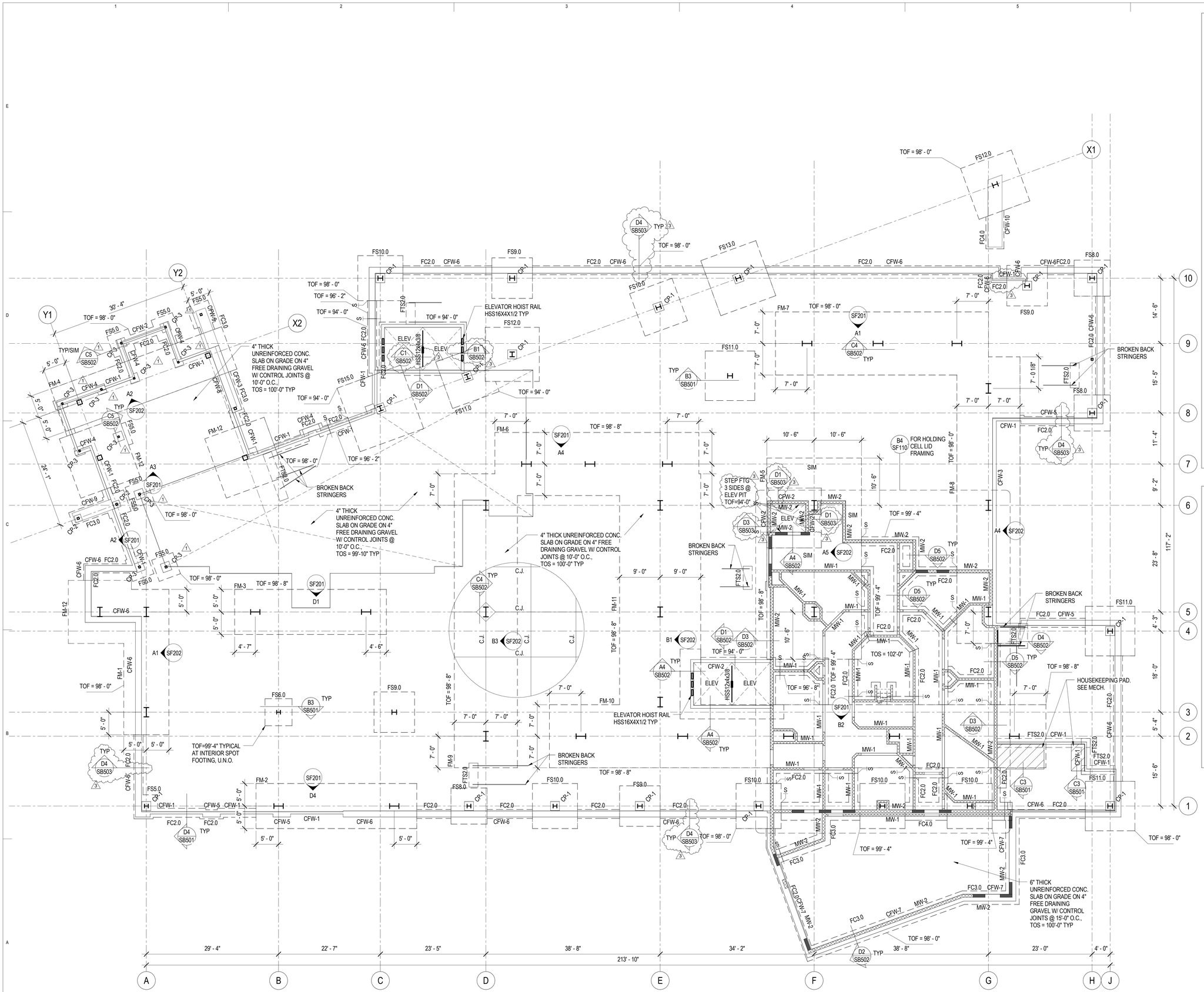

A1 SB101 FOOTING AND FOUNDATION PLAN

SCALE: 1/8" = 1'-0"

FOOTING & FOUNDATION PLAN LEGEND

- FOOTING STEP
- FOOTING - CONTINUOUS
- FOOTING - THICKENED SLAB
- FOOTING - SQUARE FOOTING - RECTANGULAR FOOTING - MAT FOOTING
- CONCRETE WALL, CONCRETE FOUNDATION WALL, OR CONCRETE RETAINING WALL
- CONCRETE FOUNDATION WALL - RECESSED
- CONCRETE PIER IN CONCRETE WALL. TOP OF PIER RECESSED 8" BELOW SLAB. TYP U.N.O.
- CONCRETE COLUMN
- CONCRETE JAMB COLUMN POURED MONOLITHIC WITH CONCRETE WALL
- MASONRY WALL
- MASONRY WALL - RECESSED
- MASONRY COLUMN IN MASONRY WALL
- STEEL COLUMN - TUBE
- STEEL COLUMN - WIDE FLANGE
- STEEL COLUMN - PIPE
- CHANGE IN ELEVATION
- SLAB BLOCK-OUT AT COLUMN
- CJ — SLAB CONTROL/CONSTRUCTION JOINT
- SPECIAL SLAB AREA
- RECESSED/DEPRESSED SLAB
- OPENING

FOOTING & FOUNDATION PLAN NOTES

1. SEE ARCHITECTURAL, CIVIL AND LANDSCAPE DRAWINGS FOR EXTERIOR CONCRETE WORK AT DOORS, SIDEWALKS ETC.

2. SEE ARCHITECTURAL DRAWINGS AND FINISH SCHEDULE FOR SLAB AREAS TO RECEIVE FLOOR TILE.

3. SEE ARCHITECTURAL DRAWINGS FOR SLAB DEPRESSIONS AND SLOPES TO DRAINS, ETC.

4. SEE ARCHITECTURAL, CIVIL AND LANDSCAPE DRAWINGS FOR ADDITIONAL EXTERIOR CONCRETE RETAINING AND / OR SITE WALLS NOT SHOWN ON THE STRUCTURAL DRAWINGS.

5. SEE TYPICAL STEP DETAIL AT CONTINUOUS FOOTING AND TYPICAL STEP DETAIL AT MAT FOOTING FOR CHANGES IN FOOTING ELEVATIONS.

6. SEE TYPICAL CONCRETE WALL REINFORCING DETAILS FOR REINFORCEMENT AT INTERSECTIONS CORNERS AND ENDS.

7. SEE TYPICAL CONCRETE SLAB ON GRADE DETAILS FOR CONSTRUCTION JOINTS, CONTROL JOINTS AND ADDITIONAL SLAB REINFORCING.

8. SEE TYPICAL CONCRETE SLAB ON GRADE PROFILE DETAIL FOR SUBGRADE REQUIREMENTS.

9. PROVIDE COMPACTED STRUCTURAL FILL UNDER ALL CONCRETE FOOTINGS PER TYPICAL COMPACTED STRUCTURAL FILL DETAIL.

VCBO ARCHITECTURE

VCBO ARCHITECTURE
524 SOUTH 600 EAST
SALT LAKE CITY, UT 84102
Phone: (801) 575-8800
Fax: (801) 531-9850
Web: vcbo.com

PROFESSIONAL STRUCTURAL ENGINEER No. 259033 JEROD G. JOHNSON 9/10/13 STATE OF UTAH

REAVELEY ENGINEERS + ASSOCIATES
Consulting Structural Engineers
P: 801.486.3883
F: 801.485.0911
477 E 500 S, Suite 400
Salt Lake City, Utah 84102
www.reaveley.com

2nd District Juvenile Courthouse

Utah State Courts
08284150
165 West 20th Street, Ogden, Utah
BID DOCUMENTS

Rev #	Date	Description
1	09/04/2013	ADDENDUM #002
3	09/10/2013	ADDENDUM #003

Job # 12500
Date August 15, 2013
Owner # 08284150
Ins. #

FOOTING AND FOUNDATION PLAN

SB101

9/10/2013 8:43:09 AM

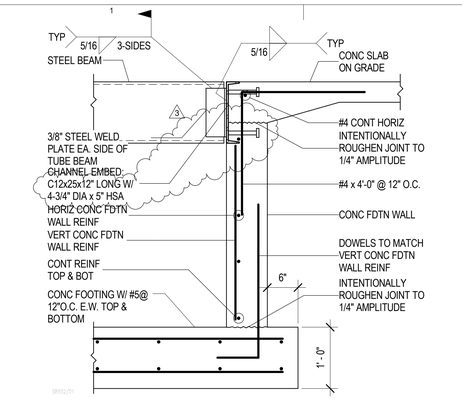

D1 / SB502 TYP CONCRETE FOUNDATION WALL AT ELEVATOR PIT W/ SEPERATOR BEAM
NO SCALE

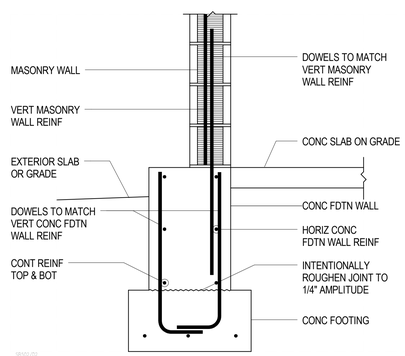

D2 / SB502 TYP MASONRY WALL ON FOUNDATION WALL
NO SCALE

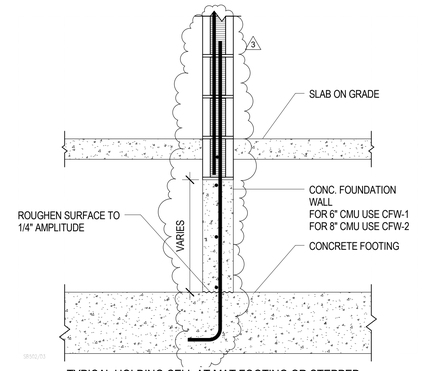

D3 / SB502 TYPICAL HOLDING CELL AT MAT FOOTING OR STEPPED FOOTING
NO SCALE

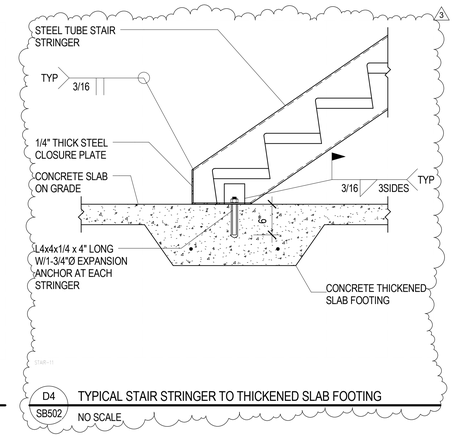

D4 / SB502 TYPICAL STAIR STRINGER TO THICKENED SLAB FOOTING
NO SCALE

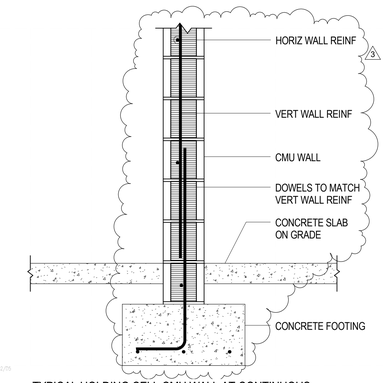

D5 / SB502 TYPICAL HOLDING CELL CMU WALL AT CONTINUOUS FOOTING
NO SCALE

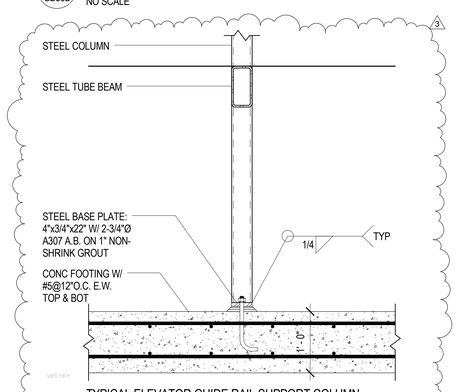

C1 / SB502 TYPICAL ELEVATOR GUIDE RAIL SUPPORT COLUMN BEARING ON CONCRETE FOOTING
NO SCALE

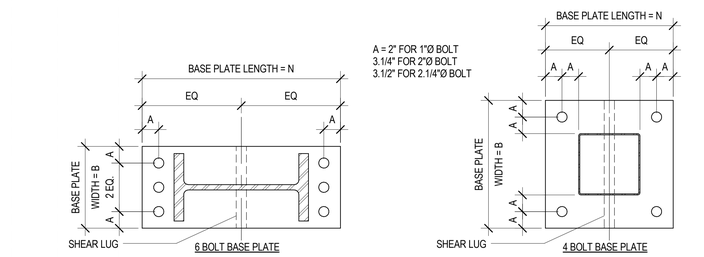

C2 / SB502 TYPICAL MOMENT FRAME STEEL COLUMN BASE PLATE LAYOUT
NO SCALE

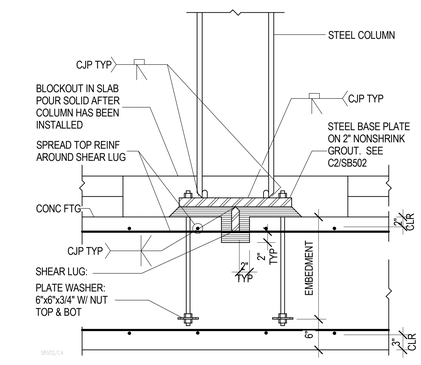

C4 / SB502 TYP MOMENT FRAME STEEL COLUMN BASE W/ SHEAR LUG ON CONCRETE FOOTING
NO SCALE

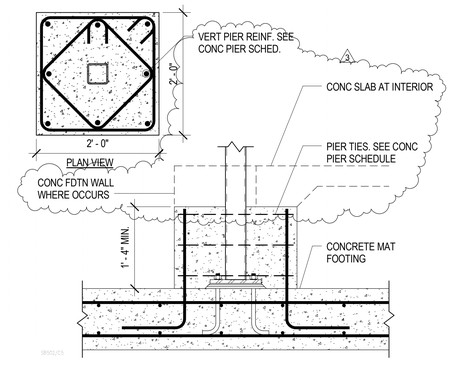

C5 / SB502 TYPICAL COLUMN AT VESTIBULE
NO SCALE

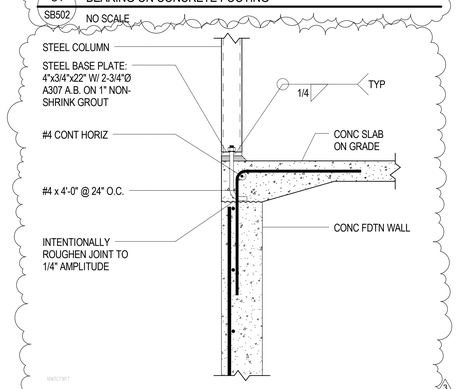

B1 / SB502 TYPICAL ELEVATOR GUIDE RAIL SUPPORT COLUMN BEARING ON CONC FOUNDATION WALL
NO SCALE

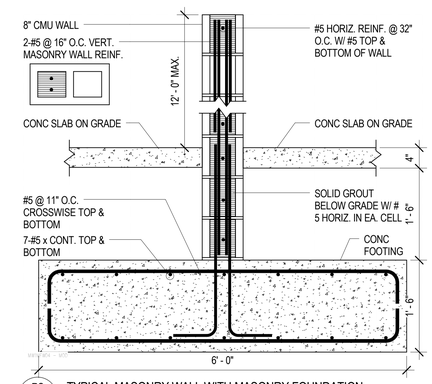

B3 / SB502 TYPICAL MASONRY WALL WITH MASONRY FOUNDATION
NO SCALE

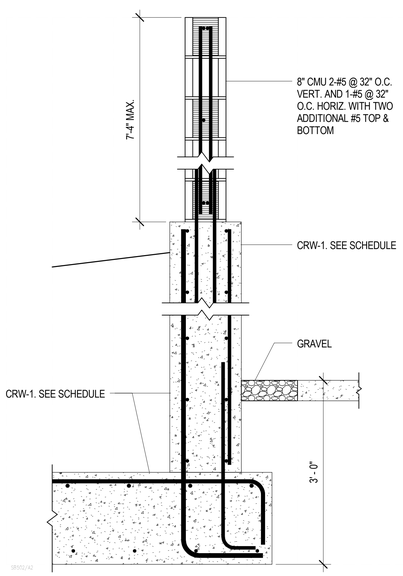

A2 / SB502 GENERATOR RETAINING AND SCREEN WALL
NO SCALE

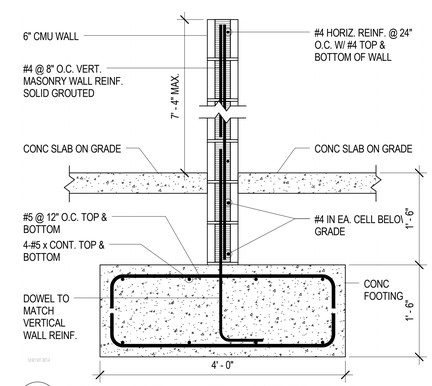

A3 / SB502 TYPICAL MASONRY WALL WITH MASONRY FOUNDATION
NO SCALE

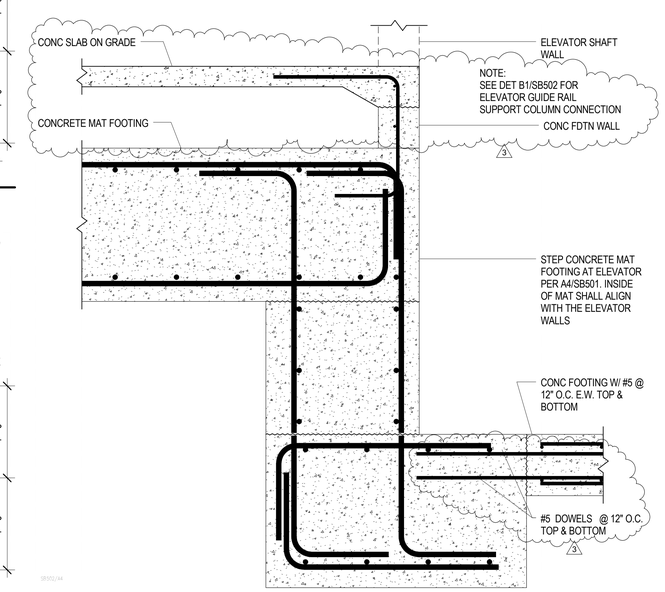

A4 / SB502 MAT FOOTING STEP AT ELEVATOR
NO SCALE

VCBO ARCHITECTURE
ARCHITECTURE
VCBO ARCHITECTURE
524 SOUTH 600 EAST
SALT LAKE CITY, UT 84102
Phone: (801) 575-8800
Fax: (801) 531-9850
Web: vcbo.com

PROFESSIONAL STRUCTURAL ENGINEER No. 299733 JEROD G. JOHNSON 3/15/13 STATE OF UTAH

REAVELEY ENGINEERS + ASSOCIATES
Consulting Structural Engineers
P: 801.486.3883
F: 801.485.0911
670 E. 500 S. Suite 400
Salt Lake City, Utah 84102
www.reaveley.com

2nd District Juvenile Courthouse

Utah State Courts
08284150
165 West 20th Street, Ogden, Utah
BID DOCUMENTS

Rev #	Date	Description
3	09/10/2013	ADDENDUM #003

Job # 12500
Date August 15, 2013
Owner # 08284150
Ins. #

FOOTING & FOUNDATION DETAILS

SB502

9/10/2013 8:43:12 AM

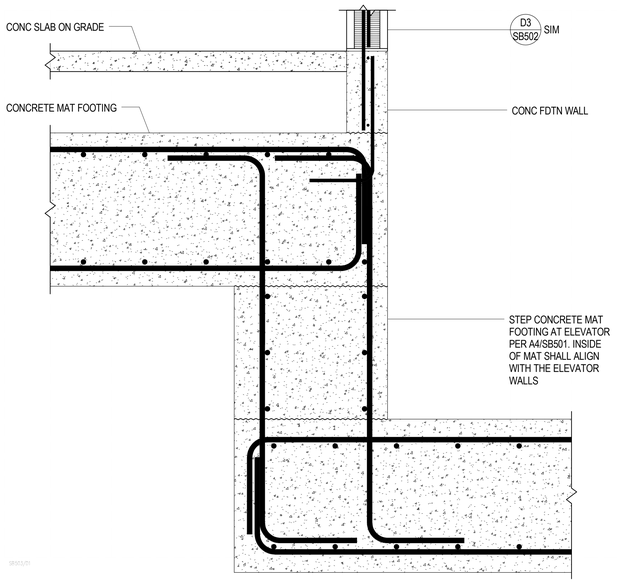

D1 / SB503 MAT FOOTING STEP AT ELEVATOR
NO SCALE

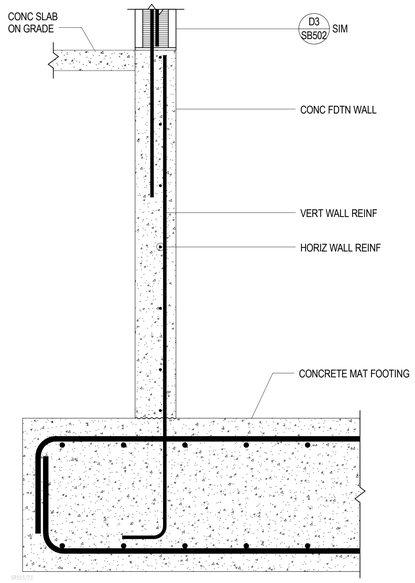

D3 / SB503 MAT FOOTING STEP AT ELEVATOR
NO SCALE

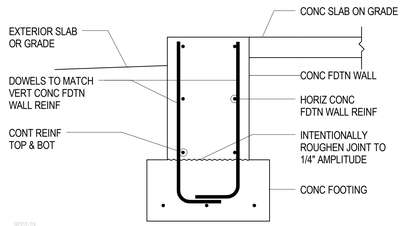

D4 / SB503 TYP MASONRY WALL ON FOUNDATION WALL
NO SCALE

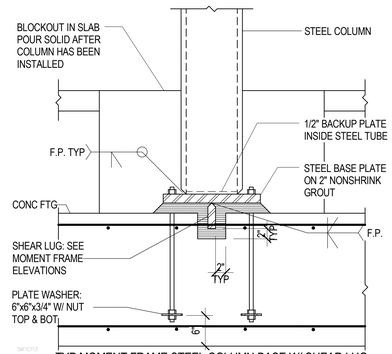

D5 / SB503 TYP MOMENT FRAME STEEL COLUMN BASE W/ SHEAR LUG ON CONCRETE FOOTING
NO SCALE

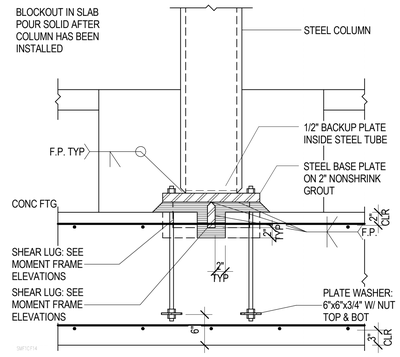

C5 / SB503 TYP MOMENT FRAME STEEL COLUMN BASE W/ SHEAR LUG EACH WAY ON CONC FOOTING
NO SCALE

VCBO ARCHITECTURE
524 SOUTH 600 EAST
SALT LAKE CITY, UT 84102
Phone: (801) 575-8800
Fax: (801) 531-9850
Web: vcbo.com

PROFESSIONAL STRUCTURAL ENGINEER No. 259033 JEROD G. JOHNSON 9/15/13 STATE OF UTAH

REAVELEY ENGINEERS + ASSOCIATES
Consulting Structural Engineers
P: 801.486.3883
F: 801.485.0911
470 E. 500 S. Suite 400
Salt Lake City, Utah 84102
www.reaveley.com

2nd District Juvenile Courthouse

Utah State Courts
08284150
165 West 20th Street, Ogden, Utah
BID DOCUMENTS

Rev #	Date	Description
3	09/10/2013	ADDENDUM #003

Job # 12500
Date August 15, 2013
Owner # 08284150
Ins. #

FOOTING & FOUNDATION DETAILS

SB503
3

9/10/2013 8:43:14 AM

A1 SF101 LEVEL 2 FLOOR FRAMING PLAN

SCALE: 1/8" = 1'-0"

FLOOR FRAMING PLAN LEGEND

- CONCRETE WALL
- CONCRETE LINTEL IN CONCRETE WALL
- CONCRETE COLUMN IN CONCRETE WALL
- CONCRETE COLUMN
- CONCRETE JAMB COLUMN POURED MONOLITHIC WITH CONCRETE WALL
- MASONRY WALL
- MASONRY LINTEL IN MASONRY WALL
- MASONRY COLUMN IN MASONRY WALL
- STEEL COLUMN - TUBE
- STEEL COLUMN - WIDE FLANGE
- STEEL COLUMN - PIPE
- STEEL BRACED FRAME
- MOMENT CONNECTION
- CANTILEVER FULL PEN CONNECTION
- COLLECTOR CONNECTION SEE B1/SF602
- DOUBLE SHEAR CONNECTION SEE C1/SF602
- STEEL BEAM OR GIRDER
- STEEL JOIST OR PURLIN
- STEEL ANGLE BRACE / KICKER. SEE B1/SF502 FOR SLAB EDGE KICKER. SEE A4/SF503 FOR FRAME BRACE
- CROSS BRIDGING
- HORIZONTAL BRIDGING
- STEEL STUD WALL - STRUCTURAL
- STEEL HEADER IN STEEL STUD WALL
- CHANGE IN ELEVATION
- CONCRETE ON METAL DECK
- ROOF DECK
- SPECIAL DECK AREA
- RECESSED/DEPRESSED SLAB ON METAL DECK
- OPENING

FLOOR FRAMING PLAN NOTES

1. SEE GENERAL STRUCTURAL NOTE (III.D.8) AND DETAILS D3/SF502 FOR CONTROL JOINTS IN SUSPENDED SLABS OVER STEEL DECK.

2. SEE DETAILS D1/SF502 FOR MISCELLANEOUS FLOOR OPENINGS.

3. SEE GENERAL STRUCTURAL NOTE (V.J.7) FOR STEEL DECK REQUIREMENTS WHERE 3-SPAN CONDITIONS ARE NOT POSSIBLE.

4. PROVIDE 4.1/2" LONG HEADED STUD ANCHORS ON COMPOSITE BEAMS IN THE AREAS OF 1" SLAB RECESSES.

VCBO ARCHITECTURE
ARCHITECTURE
VCBO ARCHITECTURE
524 SOUTH 600 EAST
SALT LAKE CITY, UT 84102
Phone: (801) 575-8800
Fax: (801) 531-9850
Web: vcbo.com

PROFESSIONAL STRUCTURAL ENGINEER No. 259133 JEROD G. JOHNSON 11/5/13 STATE OF UTAH

REAVELEY ENGINEERS + ASSOCIATES
Consulting Structural Engineers
P: 801.486.3883
F: 801.485.0911
477 E 500 S, Suite 400
Salt Lake City, Utah 84102
www.reaveley.com

2nd District Juvenile Courthouse

Utah State Courts
08284150
165 West 20th Street, Ogden, Utah
BID DOCUMENTS

Rev #	Date	Description
3	09/10/2013	ADDENDUM #003

Job # 12500
Date August 15, 2013
Owner # 08284150
Ins. #

LEVEL 2 FLOOR FRAMING PLAN

SF101

9/10/2013 8:43:22 AM

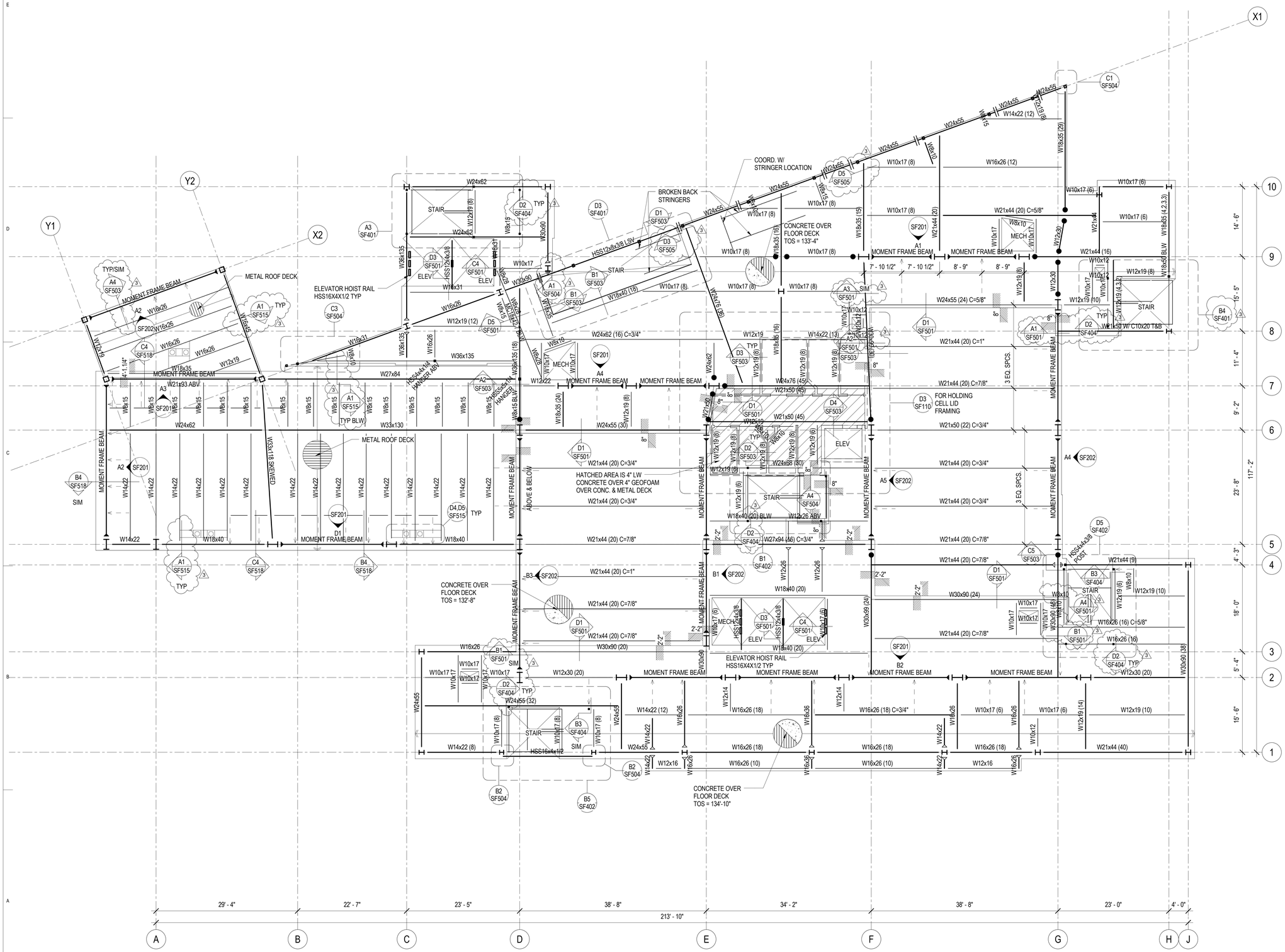

FLOOR FRAMING PLAN LEGEND

- CONCRETE WALL
- CONCRETE LINTEL IN CONCRETE WALL
- CONCRETE COLUMN IN CONCRETE WALL
- CONCRETE COLUMN
- CONCRETE JAMB COLUMN POURED MONOLITHIC WITH CONCRETE WALL
- MASONRY WALL
- MASONRY LINTEL IN MASONRY WALL
- MASONRY COLUMN IN MASONRY WALL
- STEEL COLUMN - TUBE
- STEEL COLUMN - WIDE FLANGE
- STEEL COLUMN - PIPE
- STEEL BRACED FRAME
- MOMENT CONNECTION
- CANTILEVER FULL PEN CONNECTION
- COLLECTOR CONNECTION SEE B1/SF602
- DOUBLE SHEAR CONNECTION SEE C1/SF602
- STEEL BEAM OR GIRDER
- STEEL JOIST OR PURLIN
- STEEL ANGLE BRACE / KICKER. SEE B1/SF502 FOR SLAB EDGE KICKER. SEE A4/SF503 FOR FRAME BRACE
- CROSS BRIDGING
- HORIZONTAL BRIDGING
- STEEL STUD WALL - STRUCTURAL
- STEEL HEADER IN STEEL STUD WALL
- CHANGE IN ELEVATION
- CONCRETE ON METAL DECK
- ROOF DECK
- SPECIAL DECK AREA
- RECESSED/DEPRESSED SLAB ON METAL DECK
- OPENING

FLOOR FRAMING PLAN NOTES

1. SEE GENERAL STRUCTURAL NOTE (III.D.8) AND DETAILS D3/SF502 FOR CONTROL JOINTS IN SUSPENDED SLABS OVER STEEL DECK.

2. SEE DETAILS D1/SF502 FOR MISCELLANEOUS FLOOR OPENINGS.

3. SEE GENERAL STRUCTURAL NOTE (V.J.7) FOR STEEL DECK REQUIREMENTS WHERE 3-SPAN CONDITIONS ARE NOT POSSIBLE.

4. PROVIDE 4.1/2" LONG HEADED STUD ANCHORS ON COMPOSITE BEAMS IN THE AREAS OF 1" SLAB RECESSES.

A1 SF102 LEVEL 3 FLOOR FRAMING PLAN

SCALE: 1/8" = 1'-0"

9/10/2013 8:43:24 AM

VCBO ARCHITECTURE
524 SOUTH 600 EAST
SALT LAKE CITY, UT 84102
Phone: (801) 575-8800
Fax: (801) 531-9850
Web: vcbo.com

PROFESSIONAL STRUCTURAL ENGINEER No. 299733 JEROD G. JOHNSON 9/15/13 STATE OF UTAH

REAVELEY ENGINEERS + ASSOCIATES
Consulting Structural Engineers
P: 801.486.3883
F: 801.485.0911
477 E 300 S, Suite 400
Salt Lake City, Utah 84102
www.reaveley.com

2nd District Juvenile Courthouse

Utah State Courts
08284150
165 West 20th Street, Ogden, Utah
BID DOCUMENTS

Rev #	Date	Description
3	09/10/2013	ADDENDUM #003

Job # 12500
Date August 15, 2013
Owner # 08284150
Ins. #

LEVEL 3 FLOOR FRAMING PLAN

SF102

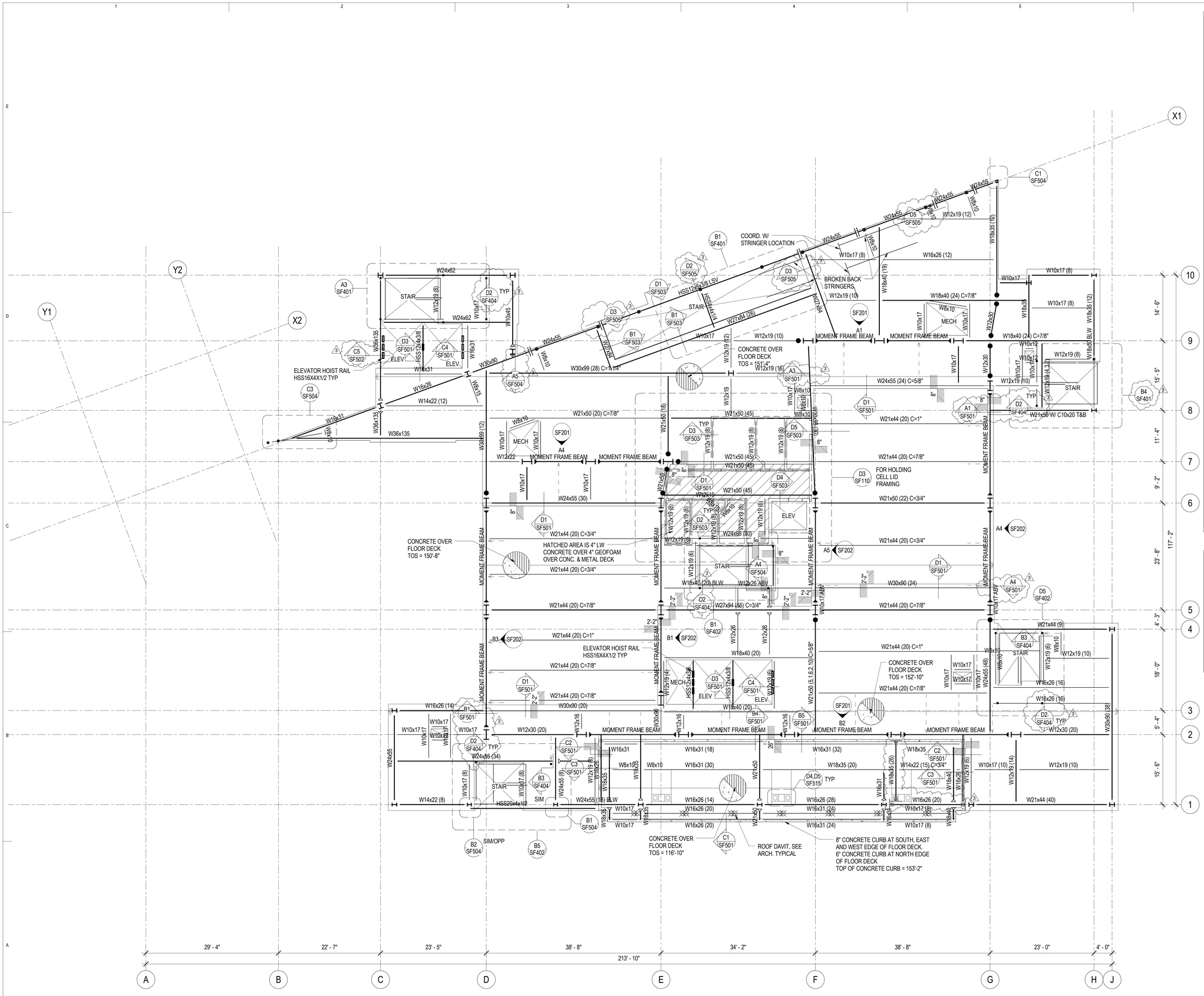

FLOOR FRAMING PLAN LEGEND

- CONCRETE WALL
- CONCRETE LINTEL IN CONCRETE WALL
- CONCRETE COLUMN IN CONCRETE WALL
- CONCRETE COLUMN
- CONCRETE JAMB COLUMN POURED MONOLITHIC WITH CONCRETE WALL
- MASONRY WALL
- MASONRY LINTEL IN MASONRY WALL
- MASONRY COLUMN IN MASONRY WALL
- STEEL COLUMN - TUBE
- STEEL COLUMN - WIDE FLANGE
- STEEL COLUMN - PIPE
- STEEL BRACED FRAME
- MOMENT CONNECTION
- CANTILEVER FULL PEN CONNECTION
- COLLECTOR CONNECTION SEE B1/SF602
- DOUBLE SHEAR CONNECTION SEE C1/SF602
- STEEL BEAM OR GIRDER
- STEEL JOIST OR PURLIN
- STEEL ANGLE BRACE / KICKER. SEE B1/SF502 FOR SLAB EDGE KICKER. SEE A4/SF503 FOR FRAME BRACE
- CROSS BRIDGING
- HORIZONTAL BRIDGING
- STEEL STUD WALL - STRUCTURAL
- STEEL HEADER IN STEEL STUD WALL
- CHANGE IN ELEVATION
- CONCRETE ON METAL DECK
- ROOF DECK
- SPECIAL DECK AREA
- RECESSED/DEPRESSED SLAB ON METAL DECK
- OPENING

FLOOR FRAMING PLAN NOTES

1. SEE GENERAL STRUCTURAL NOTE (III.D.8) AND DETAILS D3/SF502 FOR CONTROL JOINTS IN SUSPENDED SLABS OVER STEEL DECK.

2. SEE DETAILS D1/SF502 FOR MISCELLANEOUS FLOOR OPENINGS.

3. SEE GENERAL STRUCTURAL NOTE (V.J.7) FOR STEEL DECK REQUIREMENTS WHERE 3-SPAN CONDITIONS ARE NOT POSSIBLE.

4. PROVIDE 4.1/2" LONG HEADED STUD ANCHORS ON COMPOSITE BEAMS IN THE AREAS OF 1" SLAB RECESSES.

A1 / SF103 LEVEL 4 FLOOR FRAMING PLAN

SCALE: 1/8" = 1'-0"

VCBO ARCHITECTURE
524 SOUTH 600 EAST
SALT LAKE CITY, UT 84102
Phone: (801) 575-8800
Fax: (801) 531-9850
Web: vcbo.com

PROFESSIONAL STRUCTURAL ENGINEER No. 259733 JEROD G. JOHNSON 9/5/13 STATE OF UTAH

REAVELEY ENGINEERS + ASSOCIATES
Consulting Structural Engineers
P: 801.486.3883
F: 801.485.0911
670 E. 500 S. Suite 400
Salt Lake City, Utah 84102
www.reaveley.com

2nd District Juvenile Courthouse

Utah State Courts
08284150
165 West 20th Street, Ogden, Utah
BID DOCUMENTS

Rev #	Date	Description
3	09/10/2013	ADDENDUM #003

Job # 12500
Date August 15, 2013
Owner # 08284150
Ins. #

LEVEL 4 FLOOR FRAMING PLAN

SF103

9/10/2013 8:43:26 AM

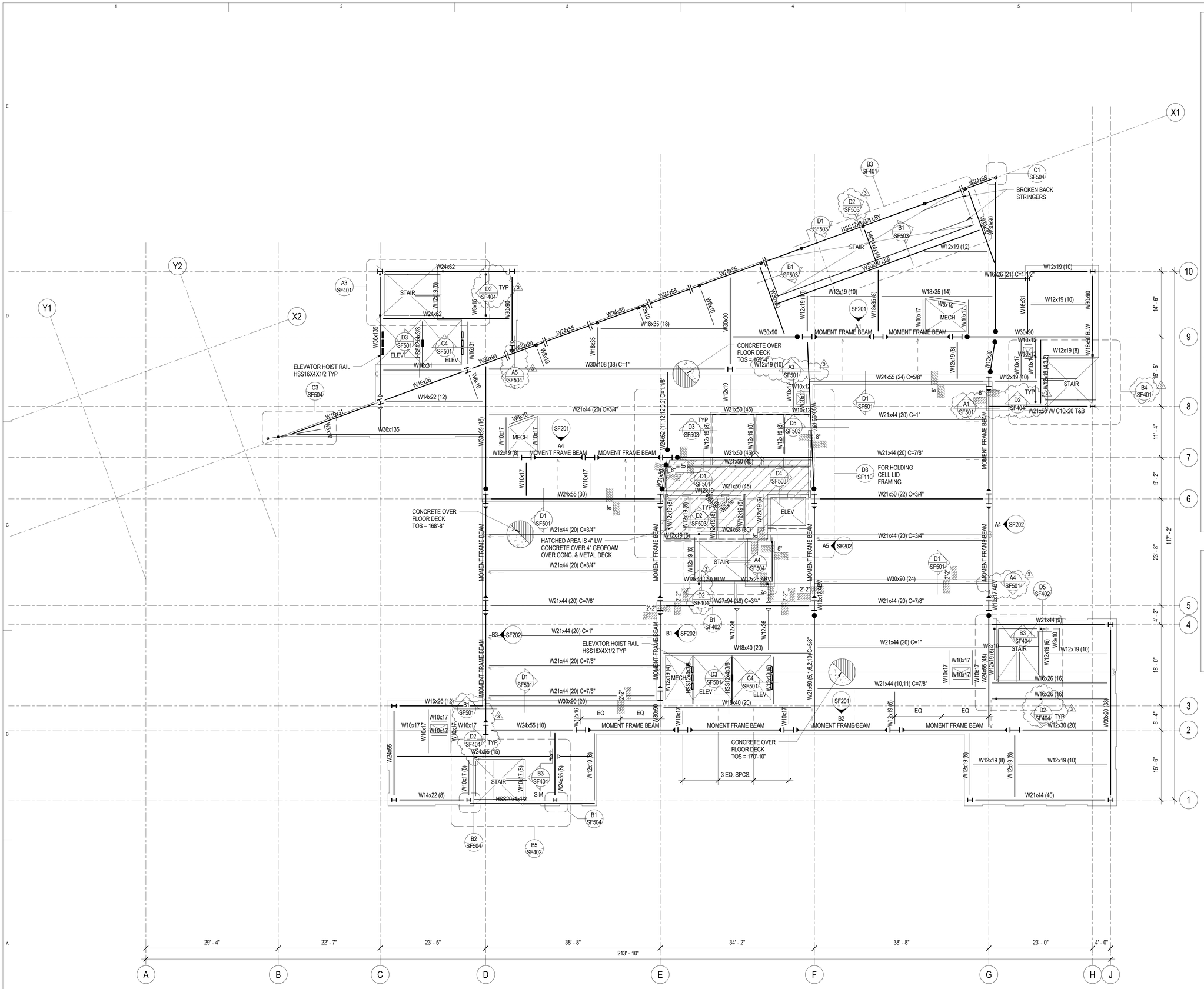

A1 SF104 LEVEL 5 FLOOR FRAMING PLAN

SCALE: 1/8" = 1'-0"

FLOOR FRAMING PLAN LEGEND

- CONCRETE WALL
- CONCRETE LINTEL IN CONCRETE WALL
- CONCRETE COLUMN IN CONCRETE WALL
- CONCRETE COLUMN
- CONCRETE JAMB COLUMN POURED MONOLITHIC WITH CONCRETE WALL
- MASONRY WALL
- MASONRY LINTEL IN MASONRY WALL
- MASONRY COLUMN IN MASONRY WALL
- STEEL COLUMN - TUBE
- STEEL COLUMN - WIDE FLANGE
- STEEL COLUMN - PIPE
- STEEL BRACED FRAME
- MOMENT CONNECTION
- CANTILEVER FULL PEN CONNECTION
- COLLECTOR CONNECTION SEE B1/SF602
- DOUBLE SHEAR CONNECTION SEE C1/SF602
- STEEL BEAM OR GIRDER
- STEEL JOIST OR PURLIN
- STEEL ANGLE BRACE / KICKER. SEE B1/SF502 FOR SLAB EDGE KICKER. SEE A4/SF503 FOR FRAME BRACE
- CROSS BRIDGING
- HORIZONTAL BRIDGING
- STEEL STUD WALL - STRUCTURAL
- STEEL HEADER IN STEEL STUD WALL
- CHANGE IN ELEVATION
- CONCRETE ON METAL DECK
- ROOF DECK
- SPECIAL DECK AREA
- RECESSED/DEPRESSED SLAB ON METAL DECK
- OPENING

FLOOR FRAMING PLAN NOTES

1. SEE GENERAL STRUCTURAL NOTE (III.D.8) AND DETAILS D3/SF502 FOR CONTROL JOINTS IN SUSPENDED SLABS OVER STEEL DECK.

2. SEE DETAILS D1/SF502 FOR MISCELLANEOUS FLOOR OPENINGS.

3. SEE GENERAL STRUCTURAL NOTE (V.J.7) FOR STEEL DECK REQUIREMENTS WHERE 3-SPAN CONDITIONS ARE NOT POSSIBLE.

4. PROVIDE 4.1/2" LONG HEADED STUD ANCHORS ON COMPOSITE BEAMS IN THE AREAS OF 1" SLAB RECESSES.

VCBO ARCHITECTURE
524 SOUTH 600 EAST
SALT LAKE CITY, UT 84102
Phone: (801) 575-8800
Fax: (801) 531-9850
Web: vcbo.com

PROFESSIONAL STRUCTURAL ENGINEER No. 259733 JEROD G. JOHNSON 10/15/13 STATE OF UTAH

REAVELEY ENGINEERS + ASSOCIATES
Consulting Structural Engineers
P: 801.486.3883
F: 801.485.0911
670 E. 500 S. Suite 400
Salt Lake City, Utah 84102
www.reaveley.com

2nd District Juvenile Courthouse

Utah State Courts
08284150
165 West 20th Street, Ogden, Utah
BID DOCUMENTS

Rev #	Date	Description
3	09/10/2013	ADDENDUM #003

Job # 12500
Date August 15, 2013
Owner # 08284150
Ins. #

LEVEL 5 FLOOR FRAMING PLAN

SF104

9/10/2013 8:43:27 AM

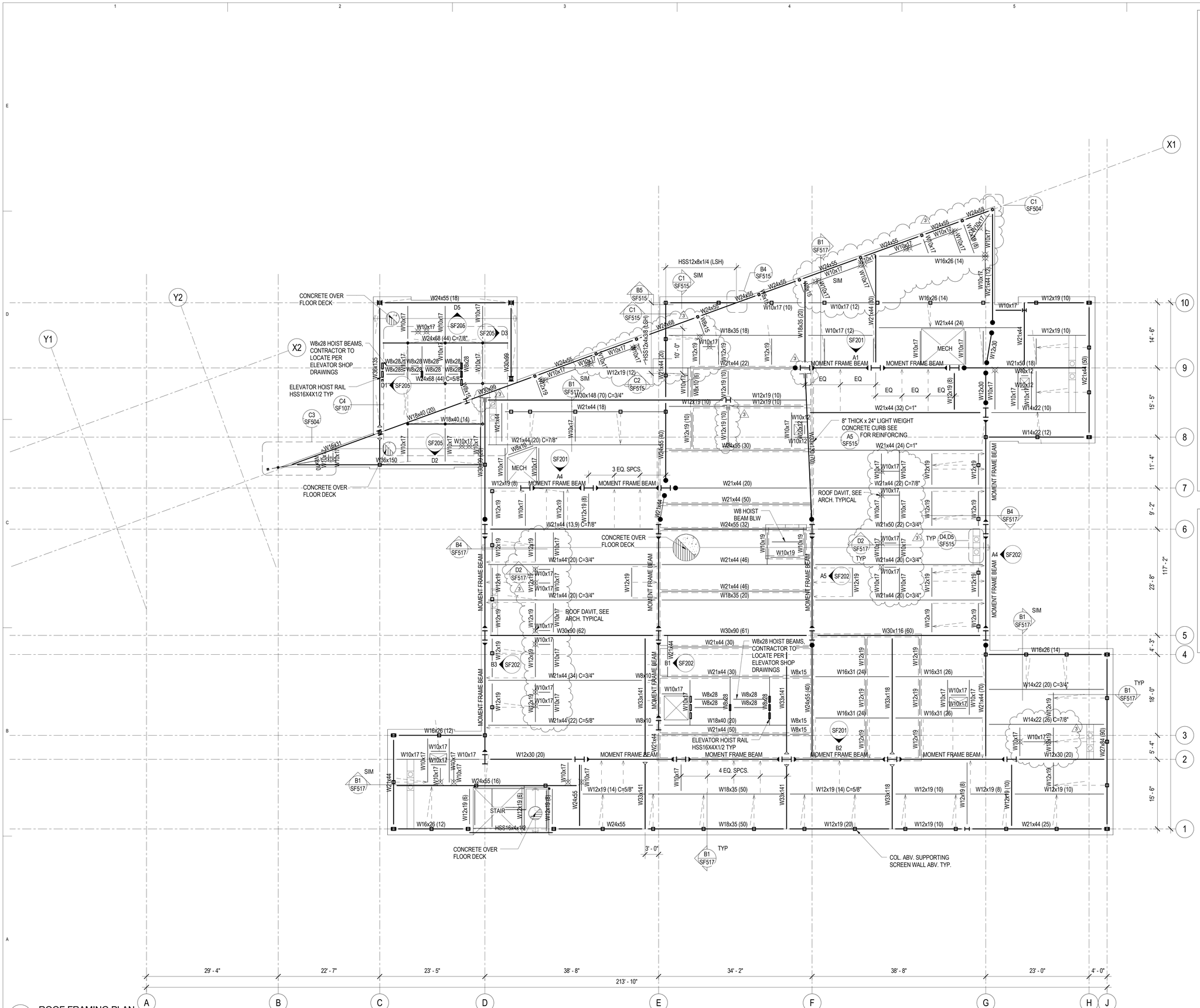

A1 SF105 ROOF FRAMING PLAN

SCALE: 1/8" = 1'-0"

ROOF FRAMING PLAN LEGEND

- CONCRETE WALL
- CONCRETE LINTEL IN CONCRETE WALL
- CONCRETE COLUMN IN CONCRETE WALL
- CONCRETE COLUMN
- CONCRETE JAMB COLUMN POURED MONOLITHIC WITH CONCRETE WALL
- MASONRY WALL
- MASONRY LINTEL IN MASONRY WALL
- MASONRY COLUMN IN MASONRY WALL
- STEEL COLUMN - TUBE
- STEEL COLUMN - WIDE FLANGE
- STEEL COLUMN - PIPE
- STEEL BRACED FRAME
- MOMENT CONNECTION
- CANTILEVER FULL PEN CONNECTION
- COLLECTOR CONNECTION SEE B1/SF602
- DOUBLE SHEAR CONNECTION SEE C1/SF602
- STEEL BEAM OR GIRDER
- STEEL JOIST OR PURLIN
- ROOF ANCHOR/DAVIT SEE DETAIL D2/SF517
- STEEL ANGLE BRACE / KICKER. SEE B1/SF502 FOR ROOF EDGE KICKER. SEE A4/SF503 FOR FRAME BRACE
- CHANGE IN ELEVATION
- CONCRETE ON METAL DECK
- ROOF DECK
- SPECIAL DECK AREA
- RECESSED/DEPRESSED SLAB ON METAL DECK
- OPENING

ROOF FRAMING PLAN NOTES

1. VERIFY SIZE, WEIGHT, LOCATION AND CONFIGURATION OF ALL ROOF TOP EQUIPMENT WITH ARCHITECT AND MECHANICAL ENGINEER. PROVIDE STEEL FRAMES FOR SUPPORT OF ROOF TOP EQUIPMENT AS INDICATED IN DETAIL D1/SF515 COORDINATE OPENINGS WITH MECHANICAL AND ELECTRICAL AND GENERAL CONTRACTORS.

2. ALL ROOF OPENINGS SHALL BE FRAMED AS INDICATED IN DETAIL D1/SF515. FOR ROUND OPENINGS WHICH ARE LESS THAN 12" DIA. SEE DETAIL D3/SF515.

3. SEE ARCHITECTURAL FOR ROOF SLOPES AND DRAINS. SEE D4 & D9/SF515 FOR ROOF DRAIN OPENING FRAME.

VCBO ARCHITECTURE
524 SOUTH 600 EAST
SALT LAKE CITY, UT 84102
Phone: (801) 575-8800
Fax: (801) 531-9850
Web: vcbo.com

PROFESSIONAL STRUCTURAL ENGINEER No. 259733 JEROD G. JOHNSON 1/15/13 STATE OF UTAH

REAVELEY ENGINEERS + ASSOCIATES
Consulting Structural Engineers
P: 801.486.3883
F: 801.485.0911
477 E 500 S, Suite 400
Salt Lake City, Utah 84102
www.reaveley.com

2nd District Juvenile Courthouse

Utah State Courts
08284150
165 West 20th Street, Ogden, Utah
BID DOCUMENTS

Rev #	Date	Description
3	09/10/2013	ADDENDUM #003

Job # 12500
Date August 15, 2013
Owner # 08284150
Ins. #

ROOF FRAMING PLAN

SF105

9/10/2013 8:43:29 AM

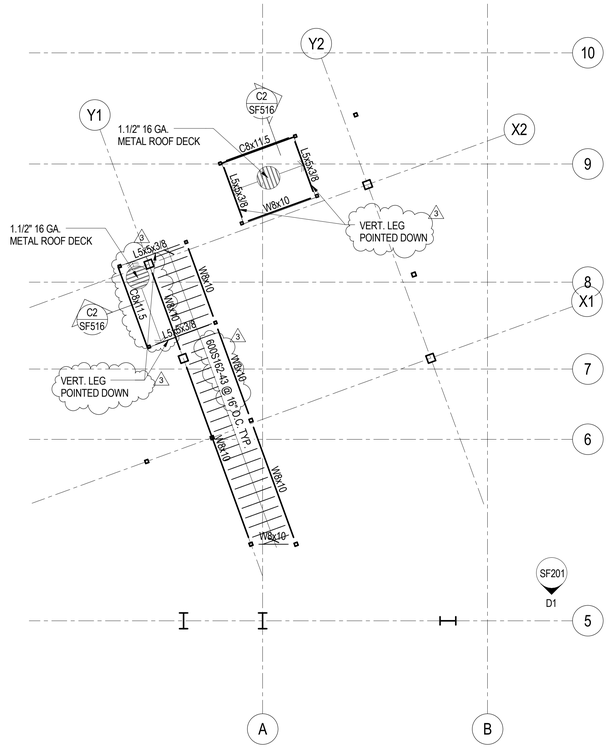

C2 / SF107 LOW ROOF FRAMING PLAN AT ENTRY

SCALE: 1/8" = 1'-0"

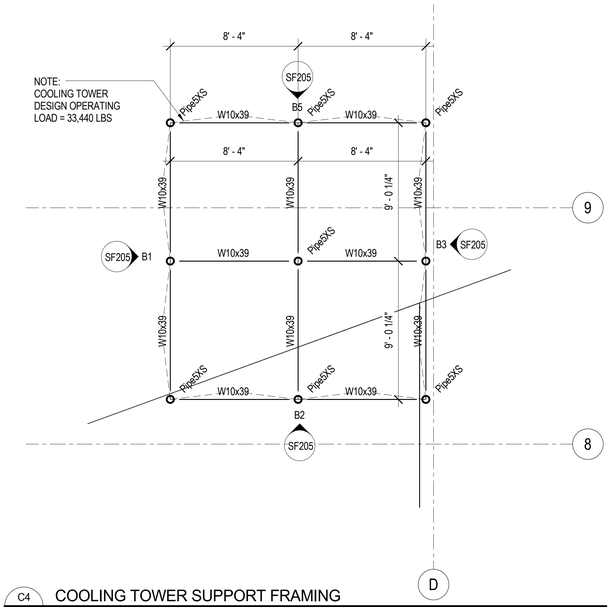

C4 / SF107 COOLING TOWER SUPPORT FRAMING

SCALE: 1/4" = 1'-0"

ROOF FRAMING PLAN LEGEND

- CONCRETE WALL
- CONCRETE LINTEL IN CONCRETE WALL
- CONCRETE COLUMN IN CONCRETE WALL
- CONCRETE COLUMN
- CONCRETE JAMB COLUMN POURED MONOLITHIC WITH CONCRETE WALL
- MASONRY WALL
- MASONRY LINTEL IN MASONRY WALL
- MASONRY COLUMN IN MASONRY WALL
- STEEL COLUMN - TUBE
- STEEL COLUMN - WIDE FLANGE
- STEEL COLUMN - PIPE
- STEEL BRACED FRAME
- MOMENT CONNECTION
- CANTILEVER FULL PEN CONNECTION
- COLLECTOR CONNECTION SEE B1/SF602
- DOUBLE SHEAR CONNECTION SEE C1/SF602
- STEEL BEAM OR GIRDER
- STEEL JOIST OR PURLIN
- ROOF ANCHOR/DAVIT SEE DETAIL D2/SF517
- STEEL ANGLE BRACE / KICKER. SEE B1/SF502 FOR ROOF EDGE KICKER. SEE A4/SF503 FOR FRAME BRACE
- 0" CHANGE IN ELEVATION
- CONCRETE ON METAL DECK
- ROOF DECK
- SPECIAL DECK AREA
- RECESSED/DEPRESSED SLAB ON METAL DECK
- OPENING

ROOF FRAMING PLAN NOTES

1. VERIFY SIZE, WEIGHT, LOCATION AND CONFIGURATION OF ALL ROOF TOP EQUIPMENT WITH ARCHITECT AND MECHANICAL ENGINEER. PROVIDE STEEL FRAMES FOR SUPPORT OF ROOF TOP EQUIPMENT AS INDICATED IN DETAIL D1/SF515 COORDINATE OPENINGS WITH MECHANICAL AND ELECTRICAL AND GENERAL CONTRACTORS.

2. ALL ROOF OPENINGS SHALL BE FRAMED AS INDICATED IN DETAIL D1/SF515. FOR ROUND OPENINGS WHICH ARE LESS THAN 12" DIA. SEE DETAIL D3/SF515.

3. SEE ARCHITECTURAL FOR ROOF SLOPES AND DRAINS. SEE D4 & D5/SF515 FOR ROOF DRAIN OPENING FRAME.

VCBO ARCHITECTURE
ARCHITECTURE

VCBO ARCHITECTURE
524 SOUTH 600 EAST
SALT LAKE CITY, UT 84102
Phone: (801) 575-8800
Fax: (801) 531-9850
Web: vcbo.com

PROFESSIONAL STRUCTURAL ENGINEER No. 259733 JEROD G. JOHNSON 9/15/13 STATE OF UTAH

REAVELEY ENGINEERS + ASSOCIATES
Consulting Structural Engineers
P: 801.486.3883
F: 801.485.0911
477 E 300 S, Suite 400
Salt Lake City, Utah 84102
www.reaveley.com

2nd District Juvenile Courthouse

Utah State Courts
08284150
165 West 20th Street, Ogden, Utah
BID DOCUMENTS

Rev #	Date	Description
3	09/10/2013	ADDENDUM #003

Job # 12500
Date August 15, 2013
Owner # 08284150
Ins. #

MISC. FRAMING PLANS

SF107

9/10/2013 8:43:31 AM

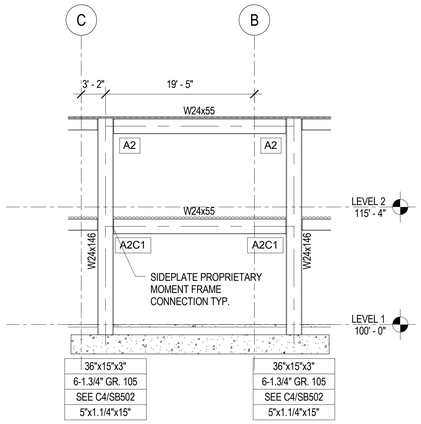

D1 SF201 MOMENT FRAME ELEVATION GRID 5

SCALE: 1/8" = 1'-0"

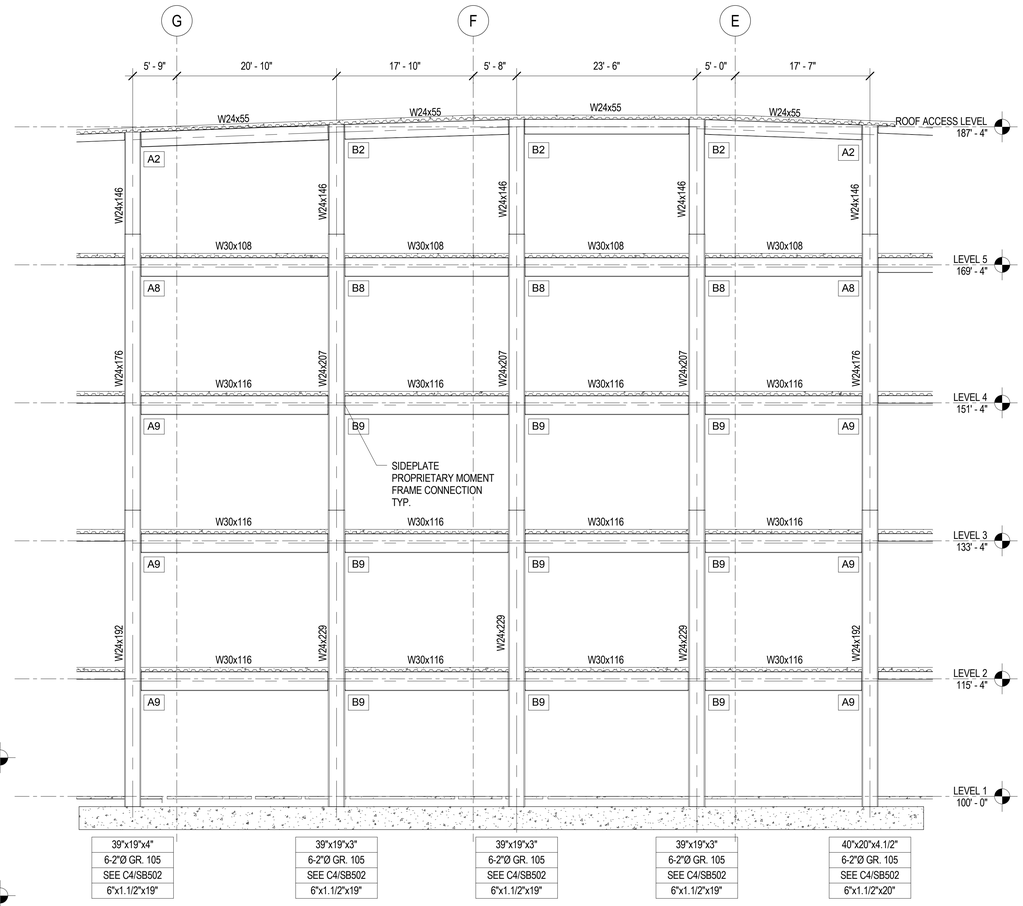

B2 SF201 MOMENT FRAME ELEVATION GRID 2

SCALE: 1/8" = 1'-0"

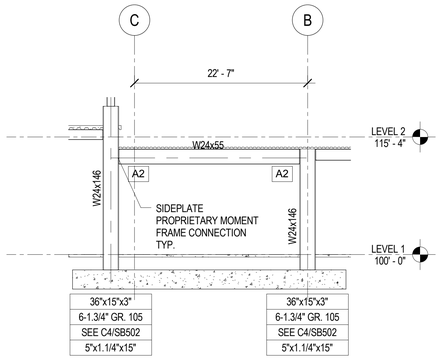

D4 SF201 MOMENT FRAME ELEVATION GRID 1

SCALE: 1/8" = 1'-0"

MOMENT FRAME ELEVATION NOTES AND LEGEND

1. ALL MOMENT FRAME HORIZONTAL FRAMING MEMBERS (BEAMS) SHALL BE ASTM A992 (Fy = 50KSI) STEEL U.N.O.

2. ALL MOMENT FRAME VERTICAL FRAMING MEMBERS (COLUMNS) SHALL BE ASTM A992 (Fy = 50KSI) STEEL U.N.O.

3. ADD 2-3/4" DIA x 5" LONG HEADED STUD ANCHOR AT 12" O.C. TO ALL MOMENT FRAME HORIZONTAL FRAMING MEMBERS (BEAMS) EXCEPT BEAM AT 1.1/2" ROOF DECK (NO CONCRETE).

4. ## SEE SIDEPLATE CONNECTION DETAILS.

5.

BP
AR
EB
SL

BP = BASE PLATE SIZE. (ASTM A572 GRADE 50)
AR = ANCHOR RODS. (ASTM F1554 GRADE 105)
EB = ANCHOR ROD EMBEDMENT LENGTH
SL = SHEAR LUG SEE STEEL SHEAR LUG DETAIL C4/SB502

6. SEE PLANS FOR ADDITIONAL MOMENT FRAME LOCATIONS.

7. VERIFY ALL DATUM ELEVATIONS W/ ARCHITECTURAL DRAWINGS.

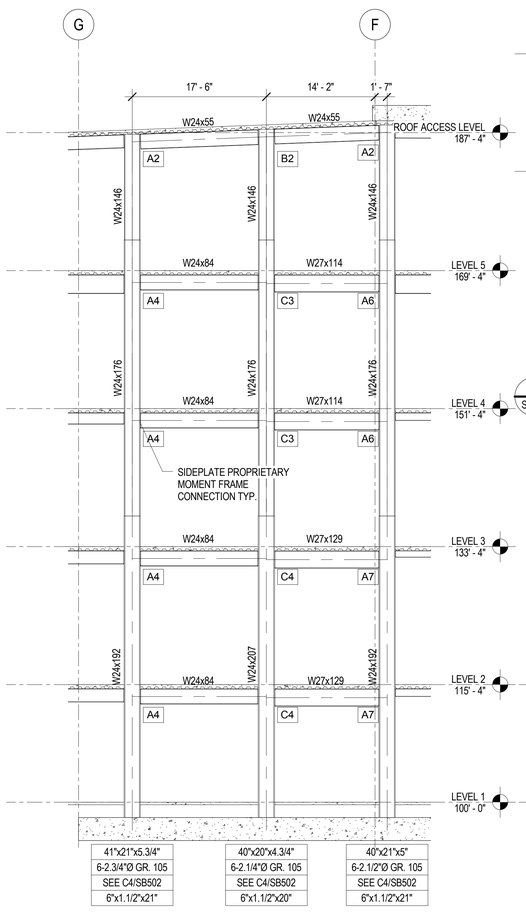

A1 SF201 MOMENT FRAME ELEVATION GRID 9

SCALE: 1/8" = 1'-0"

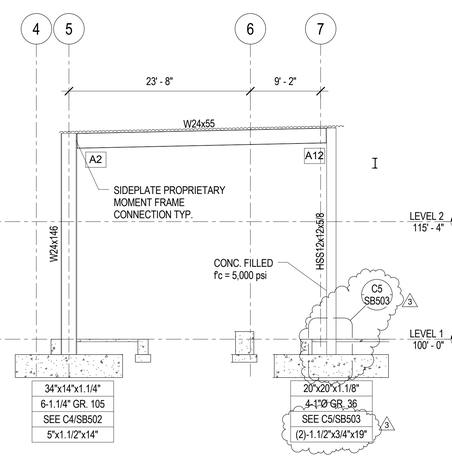

A2 SF201 MOMENT FRAME ELEVATION GRID -A.3

SCALE: 1/8" = 1'-0"

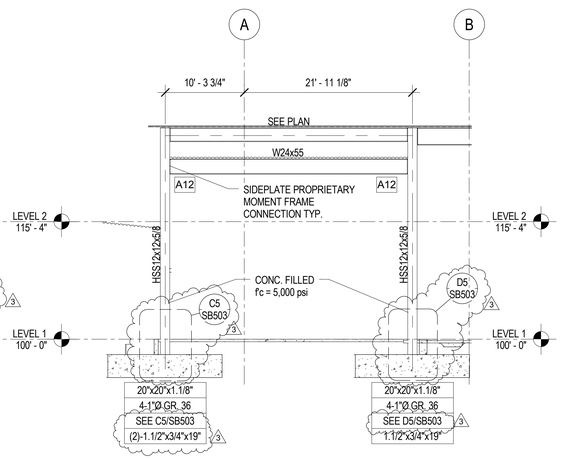

A3 SF201 MOMENT FRAME ELEVATION GRID 7.1

SCALE: 1/8" = 1'-0"

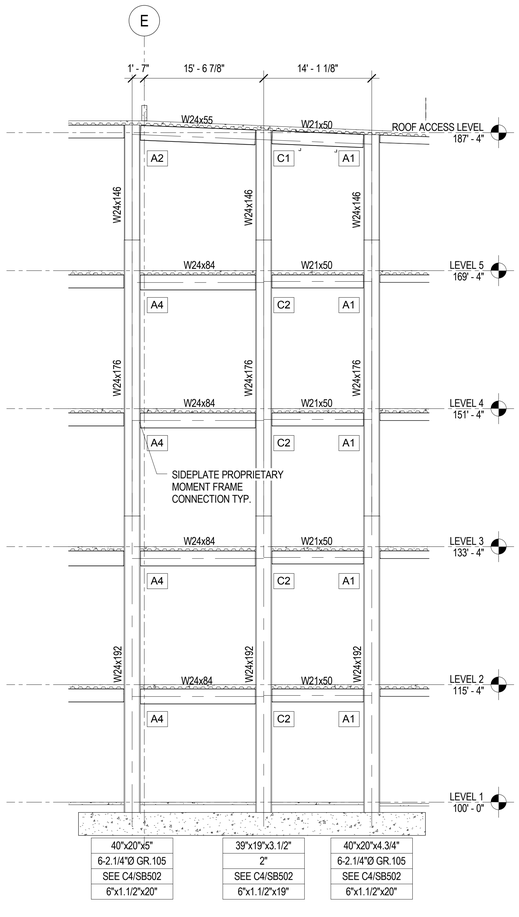

A4 SF201 MOMENT FRAME ELEVATION GRID 7

SCALE: 1/8" = 1'-0"

9/10/2013 8:43:40 AM

VCBO ARCHITECTURE
524 SOUTH 600 EAST
SALT LAKE CITY, UT 84102
Phone: (801) 575-8800
Fax: (801) 531-9850
Web: vcbo.com

REAVELEY ENGINEERS + ASSOCIATES
Consulting Structural Engineers
P: 801.486.3883
F: 801.485.0911
477 E. 500 S. Suite 400
Salt Lake City, Utah 84102
www.reaveley.com

2nd District Juvenile Courthouse

Utah State Courts
08284150
165 West 20th Street, Ogden, Utah
BID DOCUMENTS

Rev #	Date	Description
3	09/10/2013	ADDENDUM #003

Job # 12500
Date August 15, 2013
Owner # 08284150
Ins. #

MOMENT FRAME ELEVATIONS

SF201

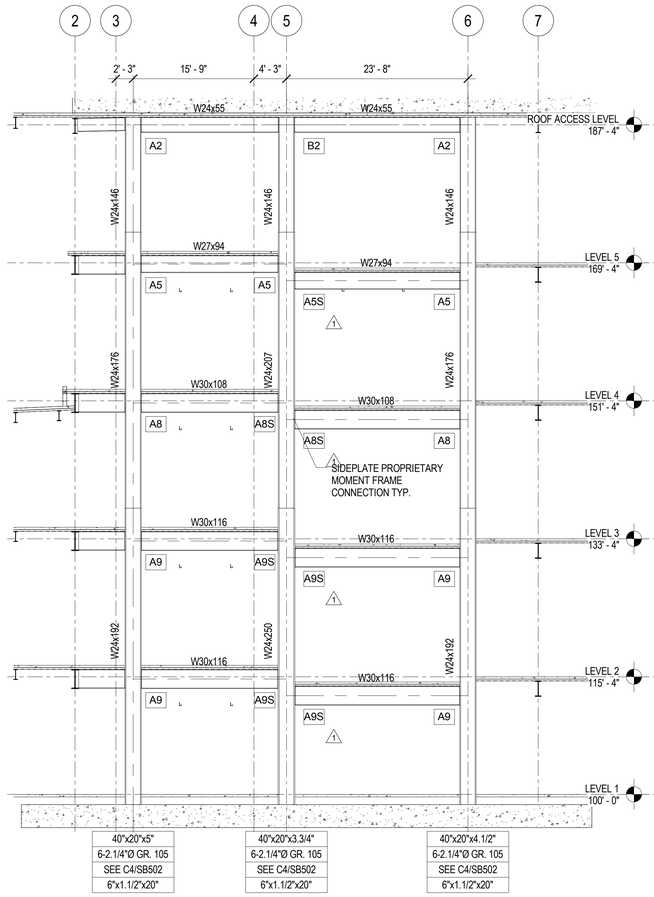

B1 SF202 MOMENT FRAME ELEVATION GRID E

SCALE: 1/8" = 1'-0"

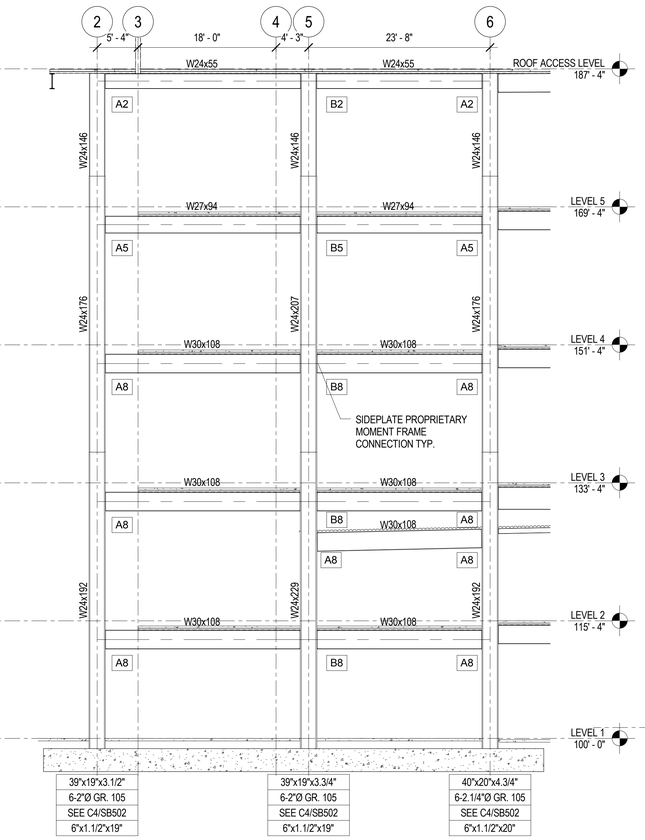

B3 SF202 MOMENT FRAME ELEVATION GRID D

SCALE: 1/8" = 1'-0"

MOMENT FRAME ELEVATION NOTES AND LEGEND

SCALE: NONE

1. ALL MOMENT FRAME HORIZONTAL FRAMING MEMBERS (BEAMS) SHALL BE ASTM A992 (Fy = 50KSI) STEEL U.N.O.

2. ALL MOMENT FRAME VERTICAL FRAMING MEMBERS (COLUMNS) SHALL BE ASTM A992 (Fy = 50KSI) STEEL U.N.O.

3. ADD 2-3/4" DIA x 5" LONG HEADED STUD ANCHOR AT 12" O.C. TO ALL MOMENT FRAME HORIZONTAL FRAMING MEMBERS (BEAMS) EXCEPT BEAM AT 1.1/2" ROOF DECK (NO CONCRETE).

4. ## SEE SIDEPLATE CONNECTION DETAILS.

5.

BP
AR
EB
SL

BP = BASE PLATE SIZE. (ASTM A572 GRADE 50)
AR = ANCHOR RODS. (ASTM F1554 GRADE 105)
EB = ANCHOR ROD EMBEDMENT LENGTH
SL = SHEAR LUG SEE STEEL SHEAR LUG DETAIL C4/SB502

6. SEE PLANS FOR ADDITIONAL MOMENT FRAME LOCATIONS.

7. VERIFY ALL DATUM ELEVATIONS W/ ARCHITECTURAL DRAWINGS.

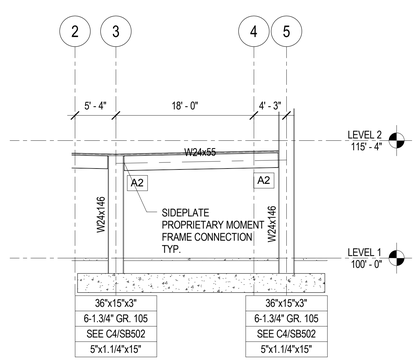

A1 SF202 MOMENT FRAME ELEVATION GRID A

SCALE: 1/8" = 1'-0"

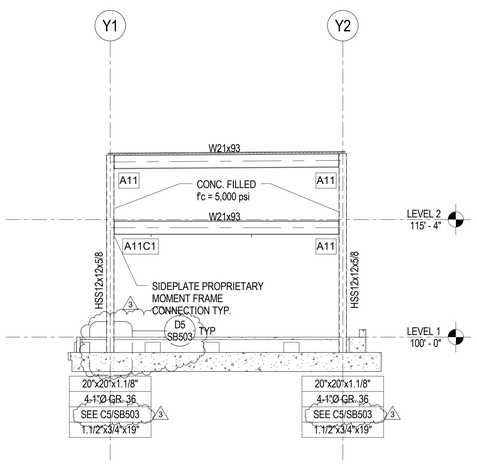

A2 SF202 MOMENT FRAME ELEVATION GRID X.2

SCALE: 1/8" = 1'-0"

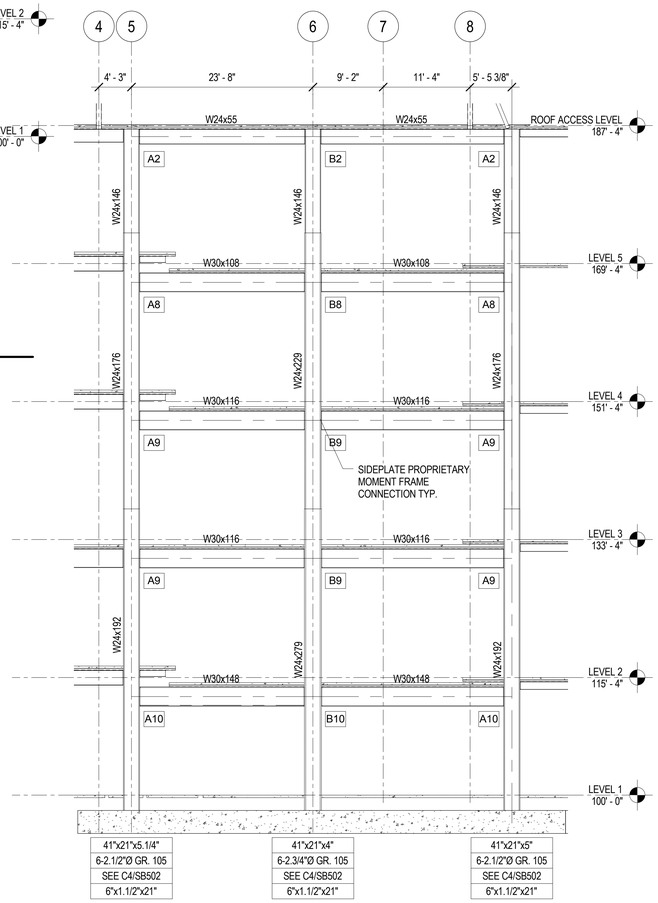

A4 SF202 MOMENT FRAME ELEVATION GRID G

SCALE: 1/8" = 1'-0"

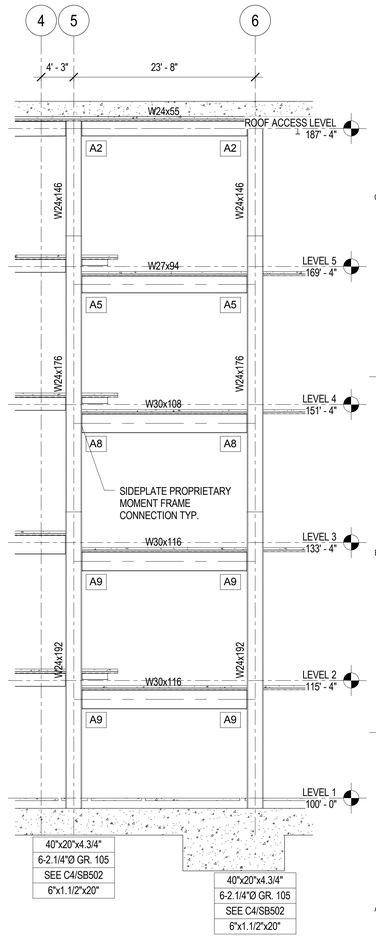

A5 SF202 MOMENT FRAME ELEVATION GRID F

SCALE: 1/8" = 1'-0"

VCBO ARCHITECTURE
524 SOUTH 600 EAST
SALT LAKE CITY, UT 84102
Phone: (801) 575-8800
Fax: (801) 531-9850
Web: vcbo.com

PROFESSIONAL STRUCTURAL ENGINEER No. 299733 JEROD G. JOHNSON 9/5/13 STATE OF UTAH

REAVELEY ENGINEERS + ASSOCIATES
Consulting Structural Engineers
P: 801.486.3883
F: 801.485.0911
477 E 300 S, Suite 400
Salt Lake City, Utah 84102
www.reaveley.com

2nd District Juvenile Courthouse

Utah State Courts
08284150
165 West 20th Street, Ogden, Utah
BID DOCUMENTS

Rev #	Date	Description
1	09/04/2013	ADDENDUM #002
3	09/10/2013	ADDENDUM #003

Job # 12500
Date August 15, 2013
Owner # 08284150
Ins. #

MOMENT FRAME ELEVATIONS

SF202

9/10/2013 8:43:44 AM

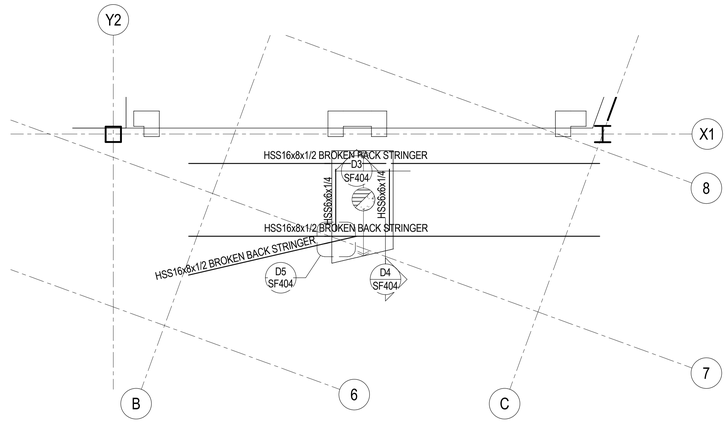

D1 / SF401 LEVEL 2 MAIN STAIR FRAMING PLAN

SCALE: 1/4" = 1'-0"

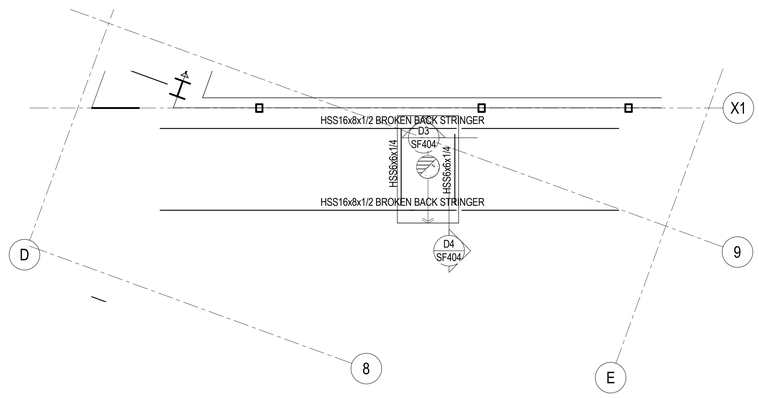

D3 / SF401 LEVEL 3 MAIN STAIR FRAMING PLAN

SCALE: 1/4" = 1'-0"

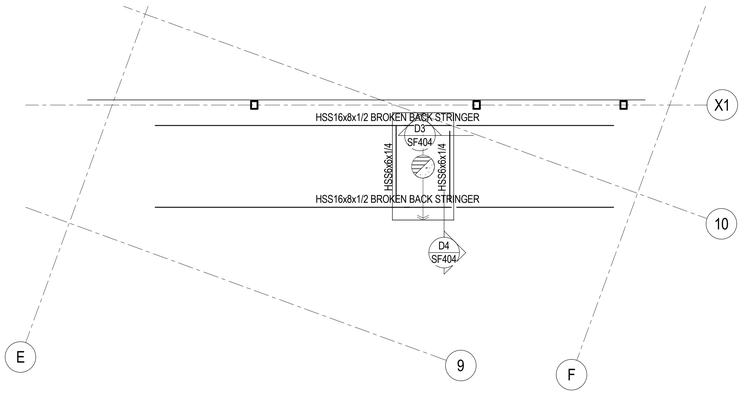

B1 / SF401 LEVEL 4 MAIN STAIR FRAMING PLAN

SCALE: 1/4" = 1'-0"

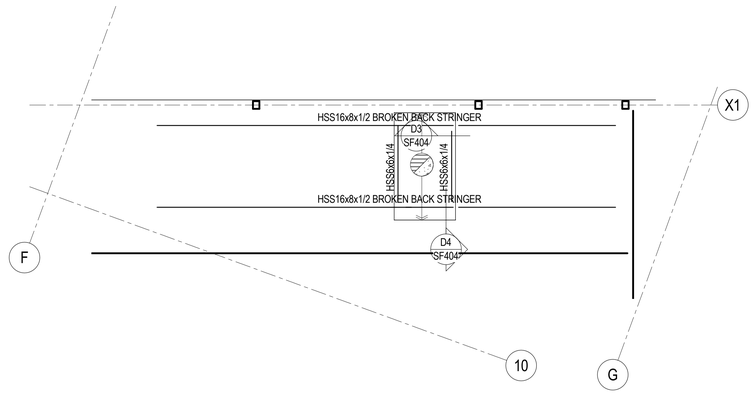

B3 / SF401 LEVEL 5 MAIN STAIR FRAMING PLAN

SCALE: 1/4" = 1'-0"

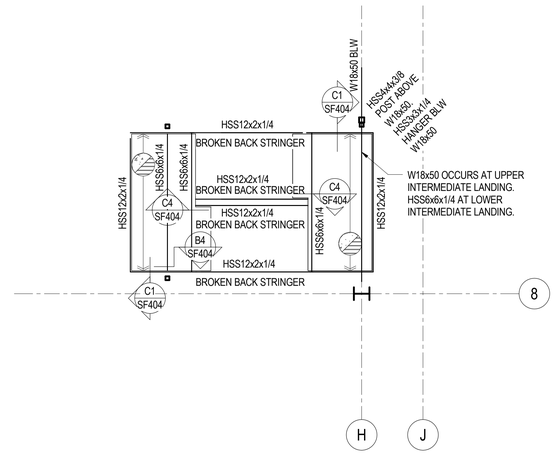

B4 / SF401 TYPICAL STAIR B FRAMING PLAN

SCALE: 1/4" = 1'-0"

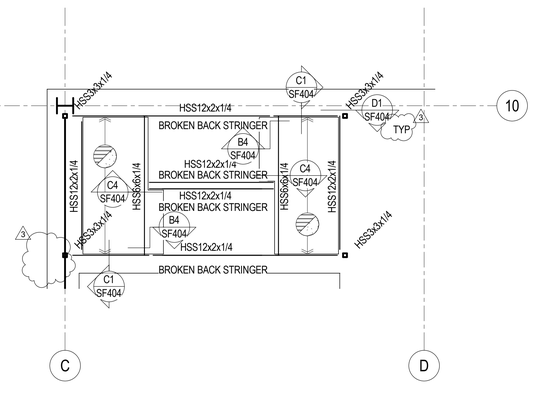

A1 / SF401 LEVEL 2 STAIR A FRAMING PLAN

SCALE: 1/4" = 1'-0"

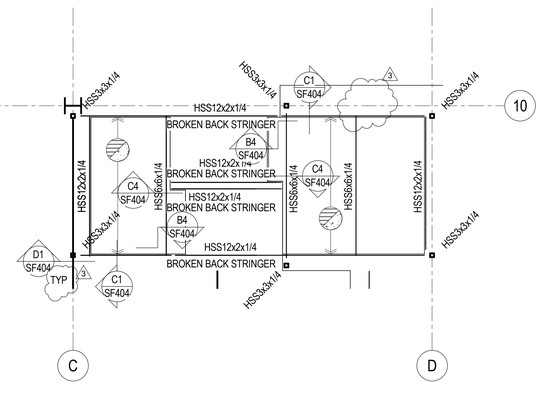

A3 / SF401 TYPICAL STAIR A FRAMING PLAN

SCALE: 1/4" = 1'-0"

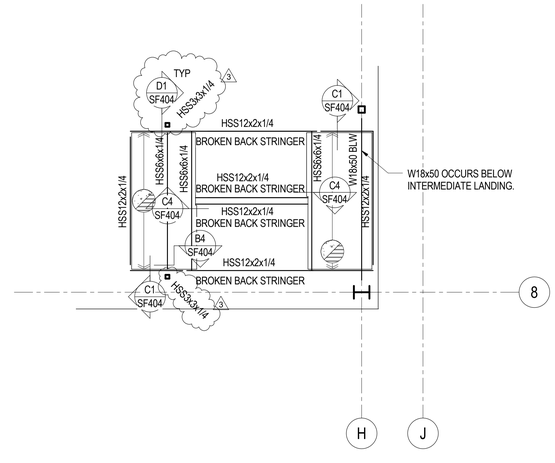

A4 / SF401 LEVEL 2 STAIR B FRAMING PLAN

SCALE: 1/4" = 1'-0"

VCBO ARCHITECTURE

VCBO ARCHITECTURE
524 SOUTH 600 EAST
SALT LAKE CITY, UT 84102
Phone: (801) 575-8800
Fax: (801) 531-9850
Web: vcbo.com

PROFESSIONAL STRUCTURAL ENGINEER No. 299733 JEROD G. JOHNSON 3/15/13 STATE OF UTAH

REAVELEY ENGINEERS + ASSOCIATES
Consulting Structural Engineers

P: 801.486.3883
F: 801.485.0911

477 E. 500 S. Suite 400
Salt Lake City, Utah 84102
www.reaveley.com

2nd District Juvenile Courthouse

Utah State Courts
08284150
165 West 20th Street, Ogden, Utah
BID DOCUMENTS

Rev #	Date	Description
3	09/10/2013	ADDENDUM #003

Job # 12500
Date August 15, 2013
Owner # 08284150
Ins. #

STAIR FRAMING PLANS

SF401

9/10/2013 8:43:49 AM

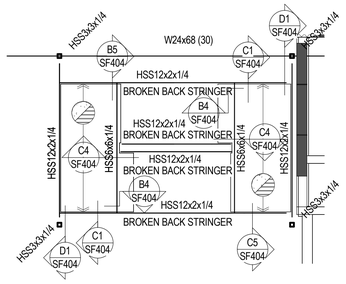

D1 / SF402 LEVEL 2 STAIR E FRAMING PLAN

SCALE: 1/4" = 1'-0"

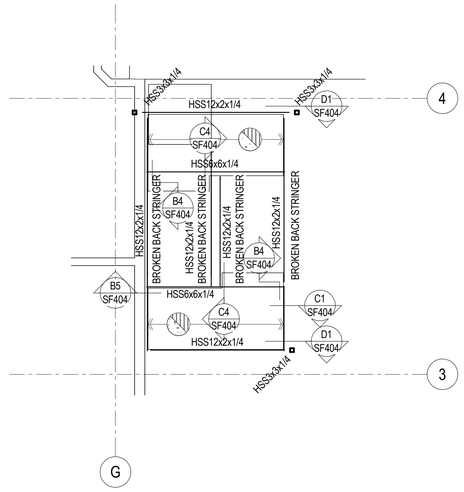

D4 / SF402 LEVEL 2 STAIR C FRAMING PLAN

SCALE: 1/4" = 1'-0"

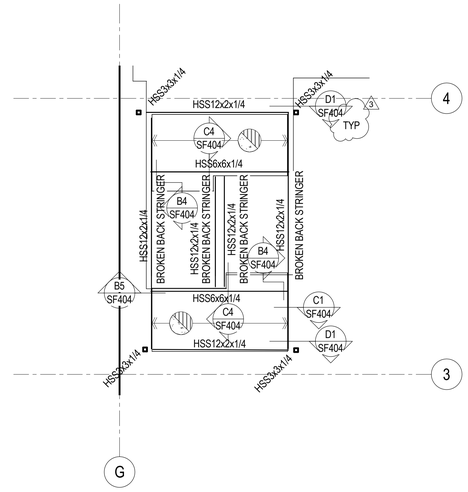

D5 / SF402 TYPICAL STAIR C FRAMING PLAN

SCALE: 1/4" = 1'-0"

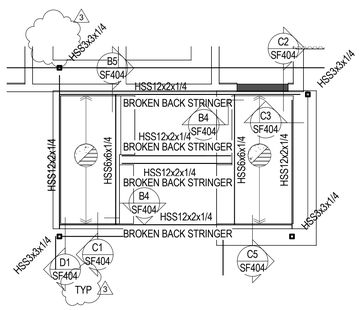

B1 / SF402 TYPICAL STAIR E FRAMING PLAN

SCALE: 1/4" = 1'-0"

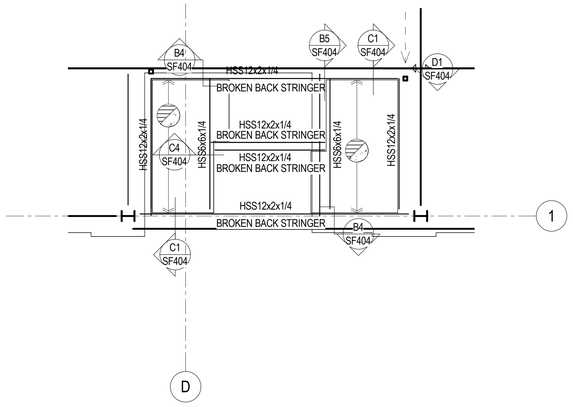

B3 / SF402 ROOF ACCESS LEVEL STAIR D FRAMING PLAN

SCALE: 1/4" = 1'-0"

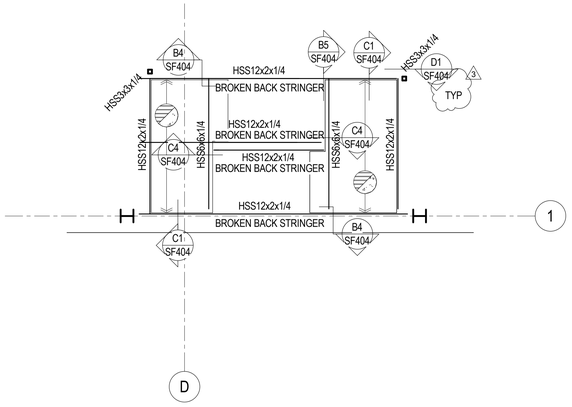

B5 / SF402 TYPICAL STAIR D FRAMING PLAN

SCALE: 1/4" = 1'-0"

VCBO
ARCHITECTURE
VCBO ARCHITECTURE
524 SOUTH 600 EAST
SALT LAKE CITY, UT 84102
Phone: (801) 575-8800
Fax: (801) 531-9850
Web: vcbo.com

PROFESSIONAL STRUCTURAL ENGINEER No. 299733 JEROD G. JOHNSON 9/15/13 STATE OF UTAH

REAVELEY ENGINEERS + ASSOCIATES
Consulting Structural Engineers
P: 801.486.3883
F: 801.485.0911
677 E 500 S, Suite 400
Salt Lake City, Utah 84102
www.reaveley.com

2nd District Juvenile Courthouse

Utah State Courts

08284150

165 West 20th Street, Ogden, Utah

BID DOCUMENTS

Rev #	Date	Description
3	09/10/2013	ADDENDUM #003

Job # 12500
Date August 15, 2013
Owner # 08284150
Ins. #

STAIR FRAMING PLANS

SF402

9/10/2013 8:43:51 AM

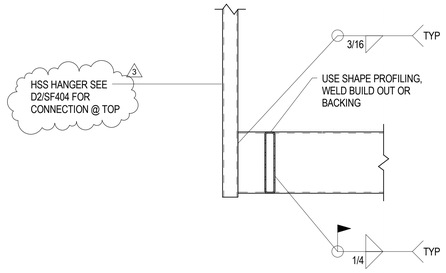

D1 / SF404 STAIR STRINGER TO STAIR HANGER CONNECTION
NO SCALE

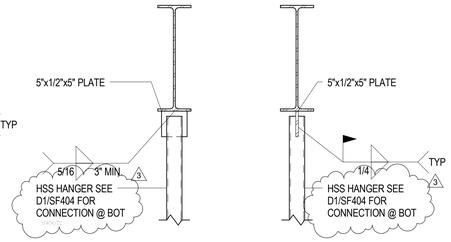

D2 / SF404 STAIR HANGER CONNECTION TO STEEL BEAM
NO SCALE

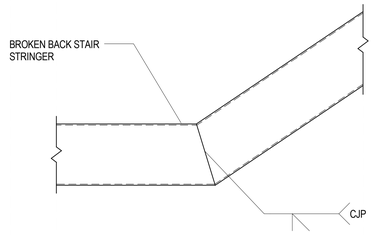

D3 / SF404 BROKEN BACK STRINGER DETAIL
NO SCALE

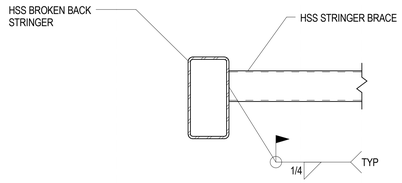

D4 / SF404 HSS TO HSS STRINGER CONNECTION
NO SCALE

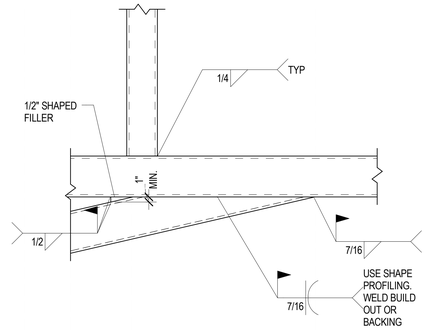

D5 / SF404 HSS STRINGER TO HSS STRINGER CONNECTION
NO SCALE

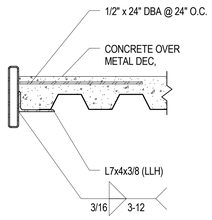

C1 / SF404 STAIR LANDING EDGE CONDITION
NO SCALE

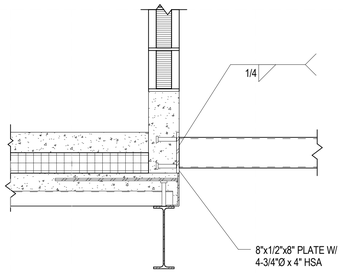

C2 / SF404 STAIR HSS TO CONCRETE CURB WALL
NO SCALE

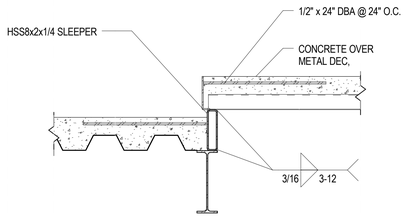

C3 / SF404 FLLOR STEP AT STAIR LANDING
NO SCALE

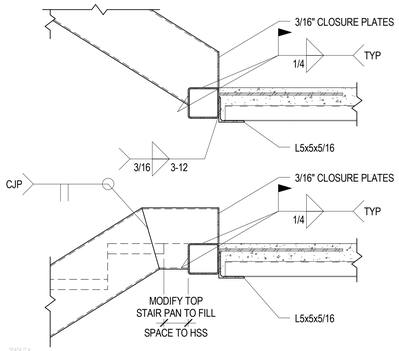

C4 / SF404 STAIR STRINGER AT INTERMIDIATE LANDINGS
NO SCALE

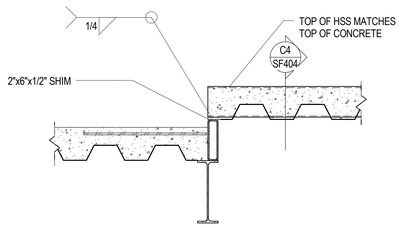

C5 / SF404 FLOOR STEP AT STAIR LANDING
NO SCALE

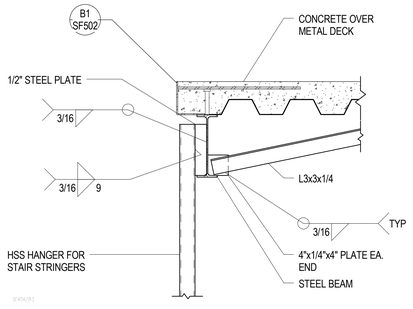

B3 / SF404 HSS HANGER FOR STAIR STRINGER
NO SCALE

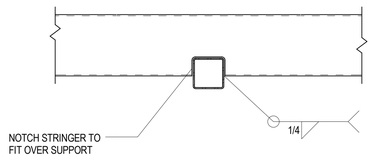

B4 / SF404 HSS STAIR STRINGER TO HSS SUPPORT
NO SCALE

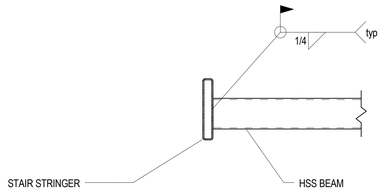

B5 / SF404 HSS BEAM TO HSS STRINGER
NO SCALE

VCBO ARCHITECTURE
ARCHITECTURE
VCBO ARCHITECTURE
524 SOUTH 600 EAST
SALT LAKE CITY, UT 84102
Phone: (801) 575-8800
Fax: (801) 531-9850
Web: vcbo.com

PROFESSIONAL STRUCTURAL ENGINEER No. 299733 JEROD G. JOHNSON 9/15/13 STATE OF UTAH

REAVELEY ENGINEERS + ASSOCIATES
Consulting Structural Engineers
P: 801.486.3883
F: 801.485.0911
477 E 300 S, Suite 400
Salt Lake City, Utah 84102
www.reaveley.com

2nd District Juvenile Courthouse

Utah State Courts
08284150
165 West 20th Street, Ogden, Utah
BID DOCUMENTS

Rev #	Date	Description
3	09/10/2013	ADDENDUM #003

Job # 12500
Date August 15, 2013
Owner # 08284150
Ins. #

STAIR FRAMING DETAILS

SF404

9/10/2013 8:43:53 AM

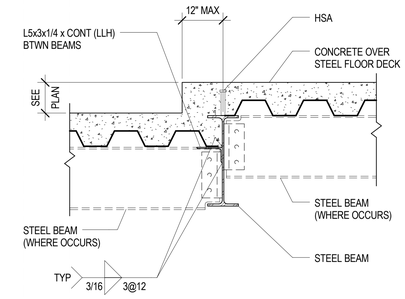

D1 / SF501 TYPICAL DETAIL AT STEP IN COMPOSITE FLOOR DECK
NO SCALE

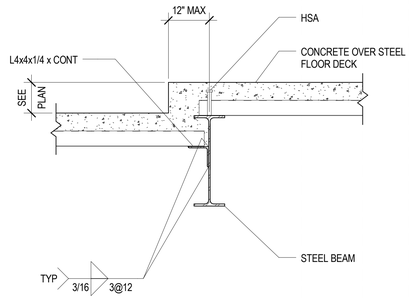

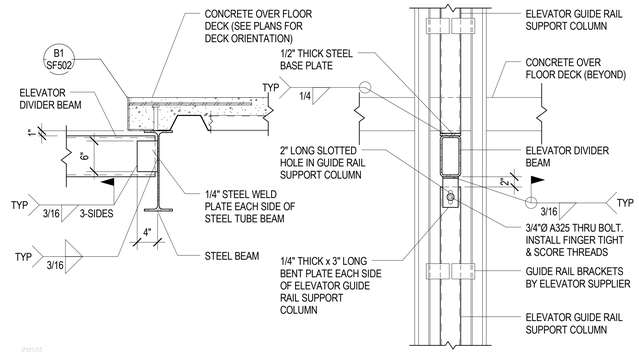

D3 / SF501 TYPICAL DETAIL AT ELEVATOR DIVIDER STEEL BEAM
NO SCALE

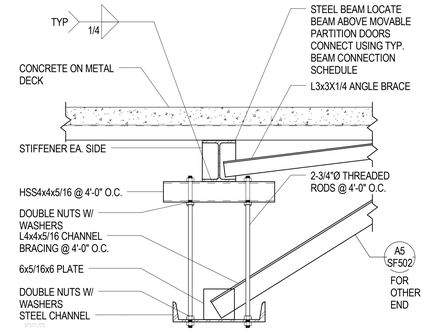

D5 / SF501 TYPICAL CHANNEL SUPPORT FOR MOVABLE PARTITION DOORS
NO SCALE

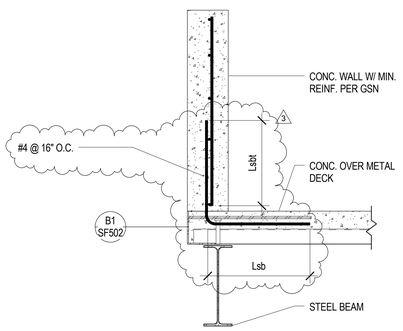

C1 / SF501 PLAZA DECK EDGE WITH CURB
NO SCALE

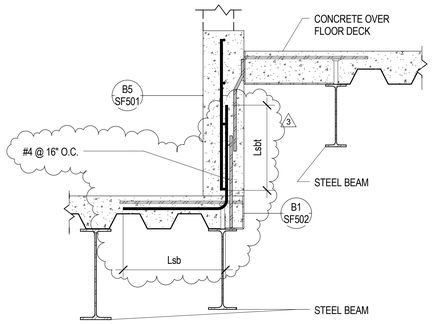

C2 / SF501 FLOOR STEP AT PLAZA
NO SCALE

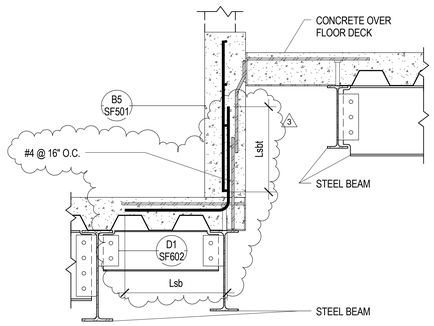

C3 / SF501 FLOOR STEP AT PLAZA
NO SCALE

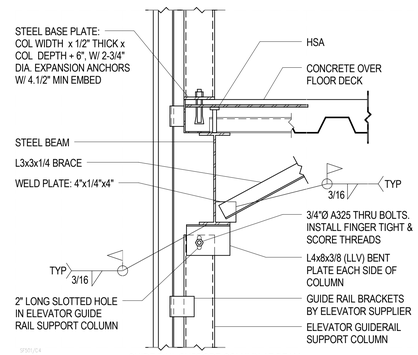

GUIDE RAIL SUPPORT COLUMN AT BEAM

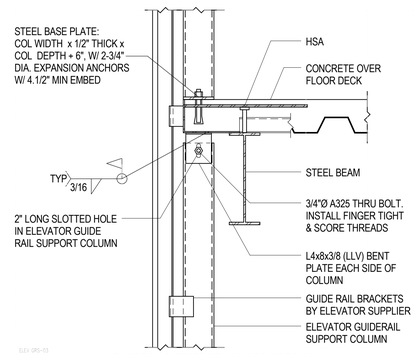

GUIDE RAIL SUPPORT COLUMN AT FLOOR SLAB

C4 / SF501 TYPICAL ELEVATOR GUIDE RAIL SUPPORT CONNECTIONS
NO SCALE

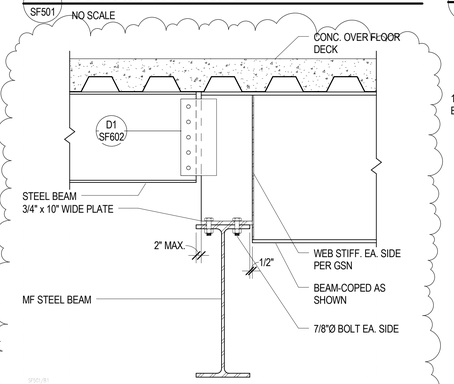

B1 / SF501 STEEL BEAM TO LOWERED STEEL MOMENT FRAME BEAM
NO SCALE

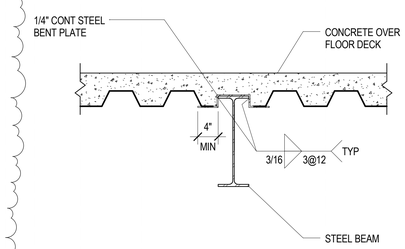

B2 / SF501 DETAIL AT LOWERED FLOOR DECK ON HIGH BEAM
NO SCALE

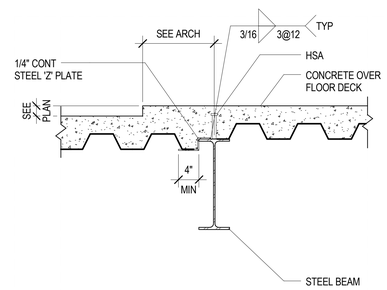

B3 / SF501 DETAIL AT STEP IN COMPOSITE FLOOR DECK
NO SCALE

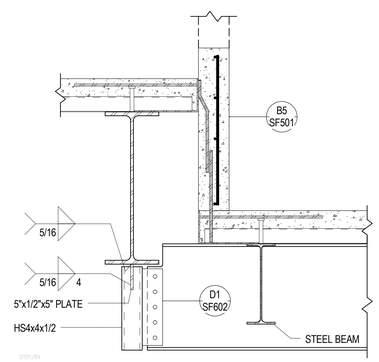

B4 / SF501 FLOOR STEP AT PLAZA
NO SCALE

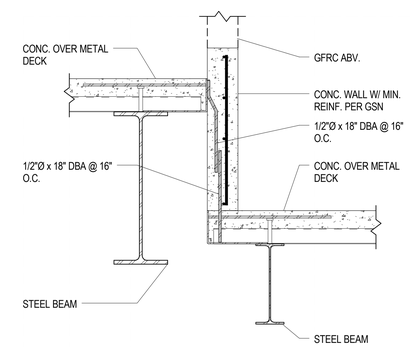

B5 / SF501 FLOOR STEP AT PLAZA
NO SCALE

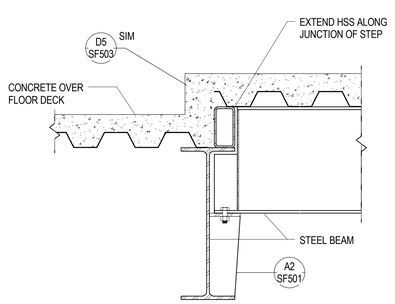

A1 / SF501 FLOOR STEP DETAIL
NO SCALE

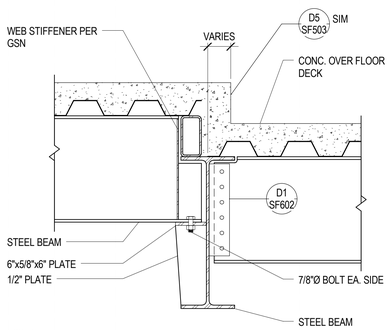

A2 / SF501 FLOOR STEP AT COURTROOM
NO SCALE

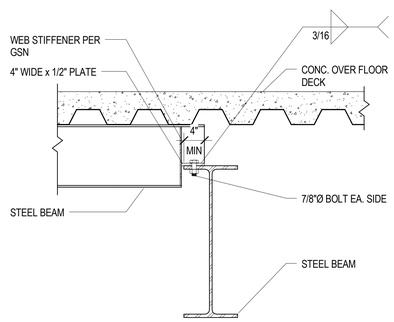

A3 / SF501 STEEL BEAM TO LOWER STEEL BEAM CONNECTION
NO SCALE

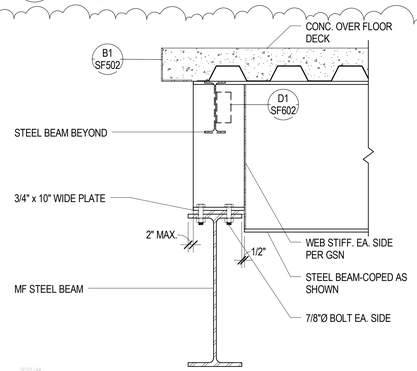

A4 / SF501 HIGH FLOOR DECK TO LOWER MF STEEL BEAM
NO SCALE

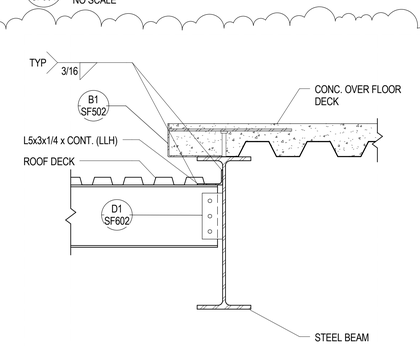

A5 / SF501 FLOOR DECK TO ROOF DECK STEP
NO SCALE

VCBO ARCHITECTURE
524 SOUTH 600 EAST
SALT LAKE CITY, UT 84102
Phone: (801) 575-8800
Fax: (801) 531-9850
Web: vcbo.com

PROFESSIONAL STRUCTURAL ENGINEER No. 299033 JEROD G. JOHNSON 3/15/13 STATE OF UTAH

REAVELEY ENGINEERS + ASSOCIATES
Consulting Structural Engineers
P: 801.486.3883
F: 801.485.0911
477 E. 500 S. Suite 400
Salt Lake City, Utah 84102
www.reaveley.com

2nd District Juvenile Courthouse

Utah State Courts
08284150
165 West 20th Street, Ogden, Utah
BID DOCUMENTS

Rev #	Date	Description
3	09/10/2013	ADDENDUM #003

Job # 12500
Date August 15, 2013
Owner # 08284150
Ins. #

FLOOR FRAMING DETAILS

SF501

9/10/2013 8:43:55 AM

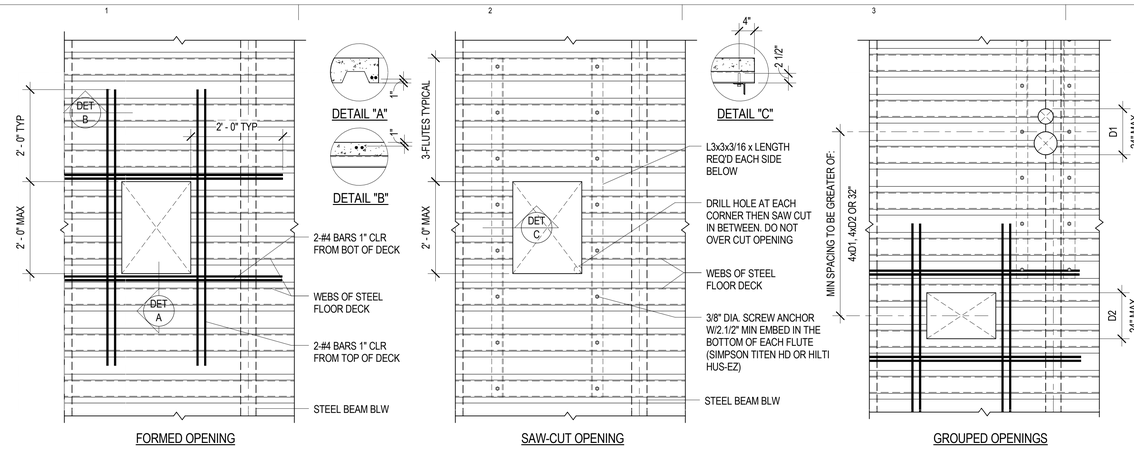

NOTES:
1. UNREINFORCED OPENINGS
A. OPENINGS UP TO 6" DIA. DO NOT REQUIRE REINFORCING PROVIDED THEY ARE NOT SPACED LESS THAN 32" O.C.

2. FORMED OPENINGS
A. LEAVE METAL DECK INTACT. PLACE REBAR & FORM OPENING. REMOVE METAL DECK ONCE CONCRETE REACHES 2500psi

3. SAW-CUT OPENINGS
A. SHIM GAPS BETWEEN ANGLE AND BOTTOM FLUTE.
B. INSTALL ANCHORS PER ICC REPORT.

4. GROUPED OPENINGS
A. OPENINGS SPACED CLOSER THAN THE MIN SPACING SHALL BE REINFORCED AS A SINGLE OPENING.
B. THE SIZE OF OPENINGS MEASURED PARALLEL TO THE DECK FLUTES IS NOT LIMITED.

D1 / SF502 TYPICAL MISCELLANEOUS FLOOR OPENING REINFORCING DETAIL FOR TYPE 'W' DECK (UP TO 24")
NO SCALE

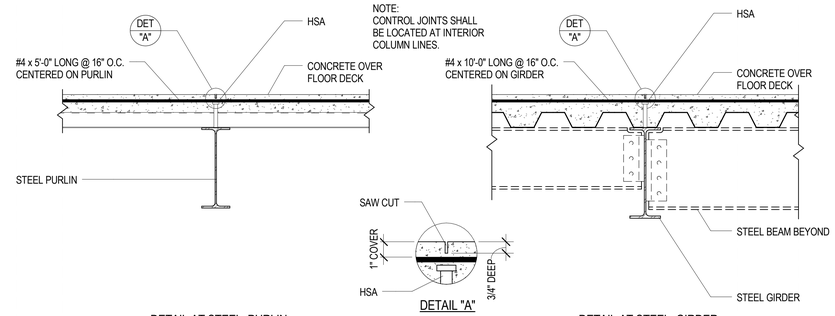

D3 / SF502 TYPICAL COMPOSITE DECK CONTOL JOINTS
NO SCALE

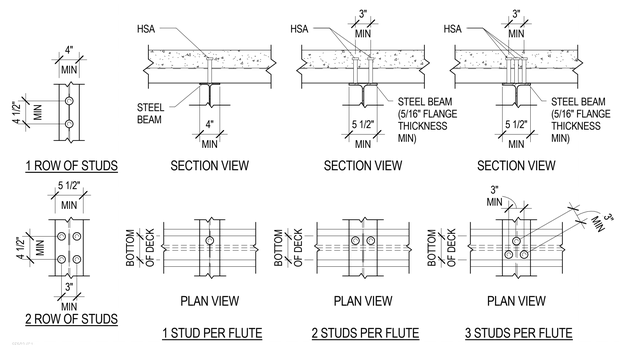

C1 / SF502 TYPICAL STUD PLACEMENT DIAGRAMS
NO SCALE

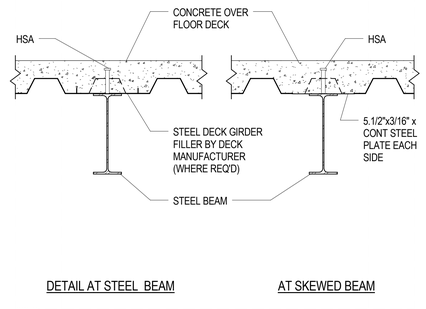

C2 / SF502 TYPICAL COMPOSITE DECK BEARING DETAIL AT STEEL BEAM (DECK GIRDER FILLER)
NO SCALE

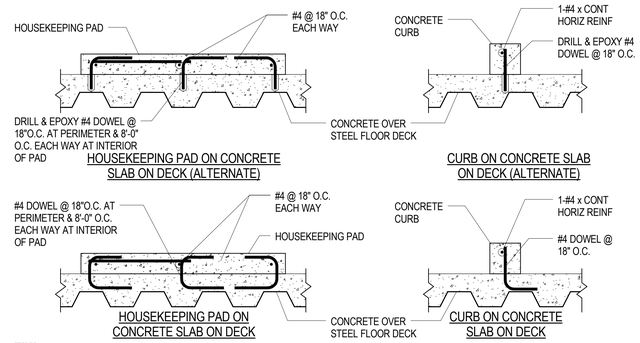

C3 / SF502 TYPICAL HOUSEKEEPING PAD & CURB DETAILS
NO SCALE

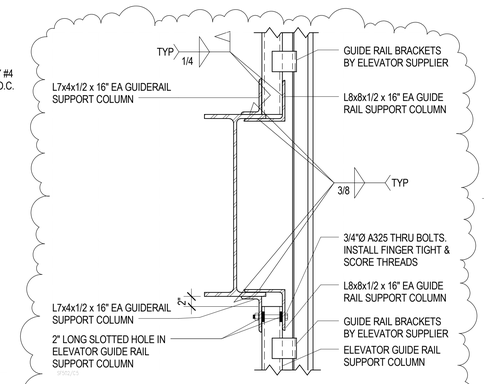

C5 / SF502 TYPICAL ELEVATOR GUIDE RAIL SUPPORT CONNECTION AT UNBRACED BEAM
NO SCALE

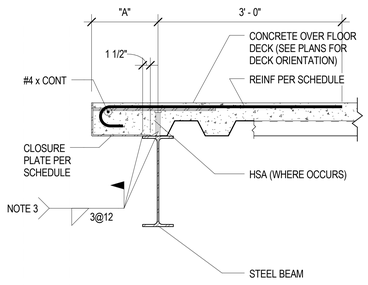

BENT PLATE SLAB EDGE DETAIL

DECK EDGE SCHEDULE			
"A"	DECK CLOSURE PLATE		REINFORCING
	THICKNESS	ANCHORS	
0" TO 6"	3/16"	1/2" Ø x 18" LONG DBA @ 24" O.C.	NONE
UP TO 12"	3/16"	1/2" Ø x 24" LONG DBA @ 24" O.C.	#4 @ 12" O.C.
UP TO 15"	1/4"	1/2" Ø x 24" LONG DBA @ 24" O.C.	#4 @ 12" O.C.
UP TO 18"	5/16"	1/2" Ø x 24" LONG DBA @ 24" O.C.	#4 @ 10" O.C.
UP TO 20"	3/8"	1/2" Ø x 24" LONG DBA @ 24" O.C.	#4 @ 8" O.C.
OVER 20"	USE BRACED SLAB EDGE		

NOTES:
1. CONTRACTOR SHALL VERIFY ALL DECK EDGE DIMENSIONS WITH ARCH. DRAWINGS PRIOR TO DETAILING AND FABRICATION OF CLOSURE PLATES.
2. COORDINATE CLOSURE ANGLES WITH EMBED BLOCKOUTS OR INSERTS THAT ARE REQ'D TO SUPPORT CLADDING, ELEVATOR RAILS & SILLS ETC.
3. CLOSURE PLATE WELD THICKNESS SHALL BE THE PLATE THICKNESS MINUS 1/16" (3/16" MIN)

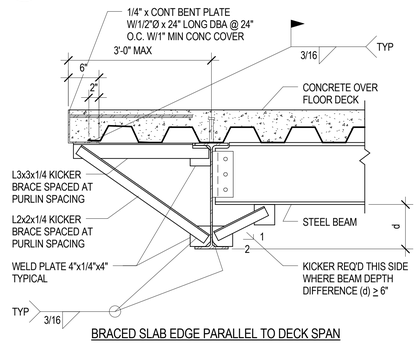

BRACED SLAB EDGE PARALLEL TO DECK SPAN

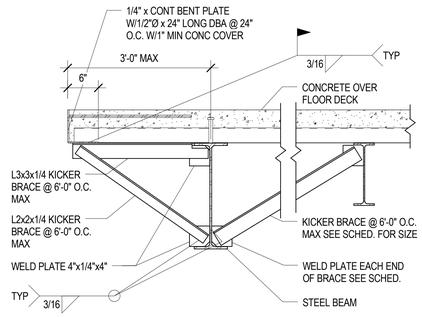

BRACED SLAB EDGE PERPENDICULAR TO DECK SPAN

ANGLE BRACE SCHEDULE		
BRACE LENGTH	ANGLE BRACE SIZE	WELD PLATE SIZE
UP TO 4'-0"	L2x2x1/4	4"x1/4"x4"
4'-0" TO 8'-0"	L3x3x1/4	4"x1/4"x4"
8'-0" TO 12'-0"	2-L2.1/2x2.1/2x1/4	4"x3/8"x4"
OVER 12'-0"	2-L3x3x1/4	5"x3/8"x5"

NOTE:
1. WHERE DOUBLE ANGLES ARE USED PROVIDE 3"x3/8" SPACER PLATES AT THIRD POINTS.

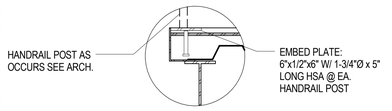

DETAIL @ HANDRAIL POST

B1 / SF502 TYPICAL CONCRETE OVER STEEL FLOOR DECK SLAB EDGE DETAILS AT STEEL BEAMS
NO SCALE

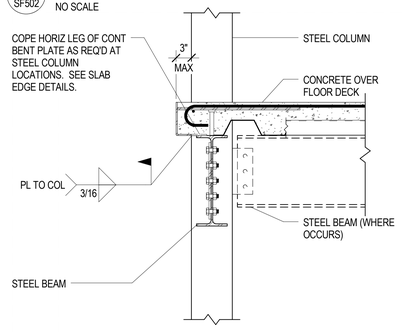

BENT PLATE SLAB EDGE DETAIL

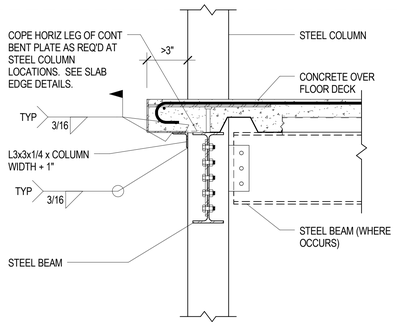

BENT PLATE SLAB EDGE DETAIL

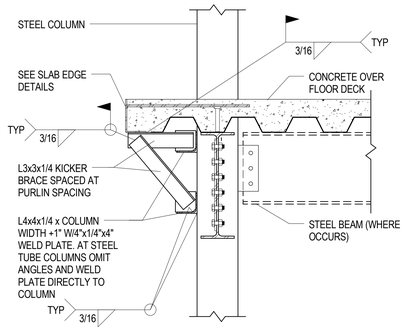

AT BRACED SLAB EDGE

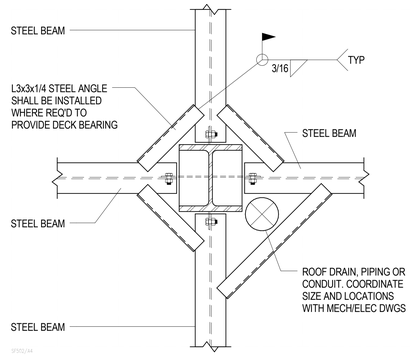

B5 / SF502 TYPICAL DETAIL AT HANDRAIL POST
NO SCALE

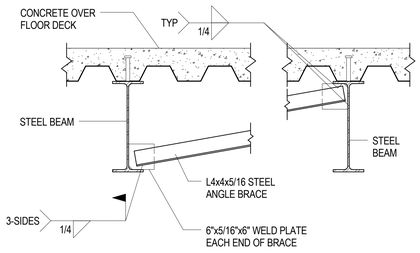

A1 / SF502 TYPICAL CONCRETE OVER STEEL FLOOR DECK SLAB EDGE DETAILS AT STEEL COLUMNS
NO SCALE

A4 / SF502 TYPICAL DECK BEARING AT STEEL COLUMN (PLAN VIEW)
NO SCALE

A5 / SF502 TYPICAL STEEL BEAM BOTTOM FLANGE BRACE DETAIL
NO SCALE

VCBO ARCHITECTURE
524 SOUTH 600 EAST
SALT LAKE CITY, UT 84102
Phone: (801) 575-8800
Fax: (801) 531-9850
Web: vcbo.com

PROFESSIONAL STRUCTURAL ENGINEER No. 299733 JEROD G. JOHNSON 3/15/13 STATE OF UTAH

REAVELEY ENGINEERS + ASSOCIATES
Consulting Structural Engineers
P: 801.486.3883
F: 801.485.0911
477 E. 500 S. Suite 400
Salt Lake City, Utah 84102
www.reaveley.com

2nd District Juvenile Courthouse

Utah State Courts
08284150
165 West 20th Street, Ogden, Utah
BID DOCUMENTS

Rev #	Date	Description
3	09/10/2013	ADDENDUM #003

Job # 12500
Date August 15, 2013
Owner # 08284150
Ins. #

FLOOR FRAMING DETAILS

SF502

9/10/2013 8:43:57 AM

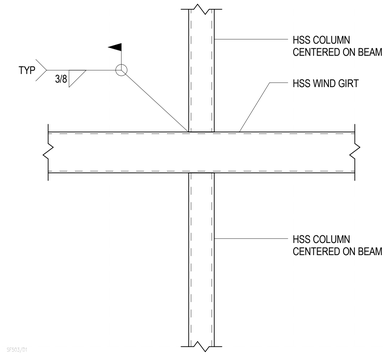

D1 / SF503 — WIND GIRT TO COLUMN CONNECTION
NO SCALE

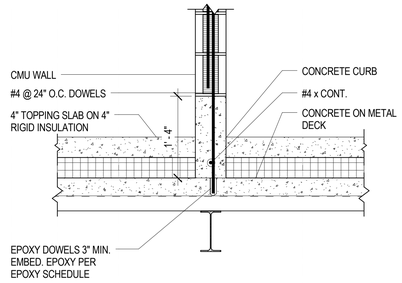

D2 / SF503 — CONCRETE CURB FOR FOR HOLDING CELL AT RAISED FLOOR
NO SCALE

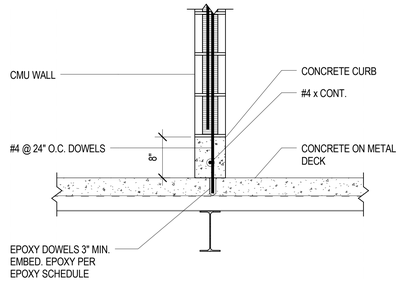

D3 / SF503 — CONCRETE CURB FOR HOLDING CELL
NO SCALE

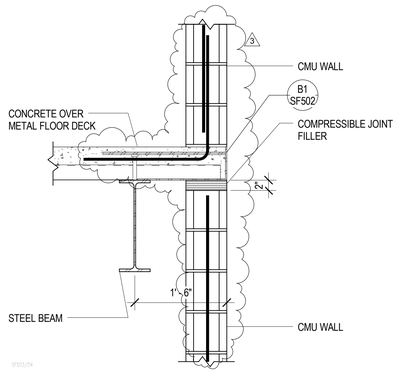

D4 / SF503 — SLAB EDGE AT ELEVATOR SHAFT
NO SCALE

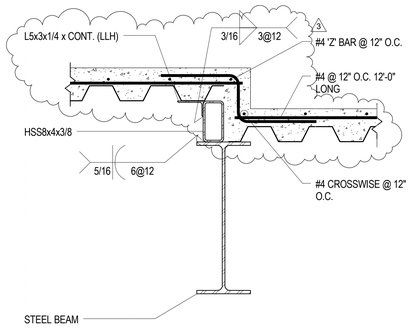

D5 / SF503 — FLOOR STEP AT STEEL BEAM
NO SCALE

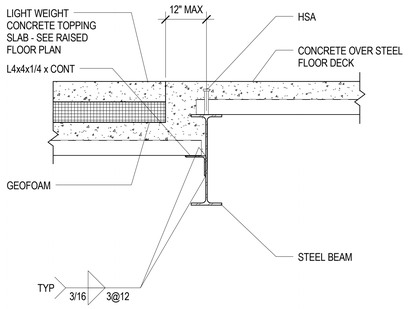

C1 / SF503 — TYPICAL CONCRETE TOPPING SLAB TO CONCRETE OVER STEEL FLOOR DECK AT STEP
NO SCALE

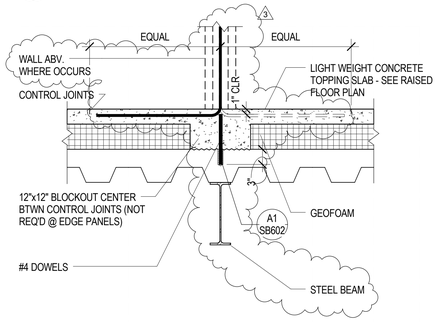

C2 / SF503 — TYPICAL CONCRETE TOPPING SLAB OVER RIGID INSULATION TO CONCRETE OVER STEEL FLOOR DECK
NO SCALE

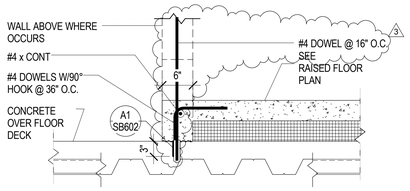

C3 / SF503 — CONCRETE TOPPING SLAB AT EDGE
NO SCALE

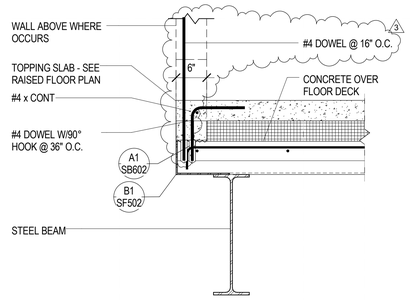

C4 / SF503 — TOPPING CONCRETE OVER CONCRETE OVER FLOOR DECK AT EDGE
NO SCALE

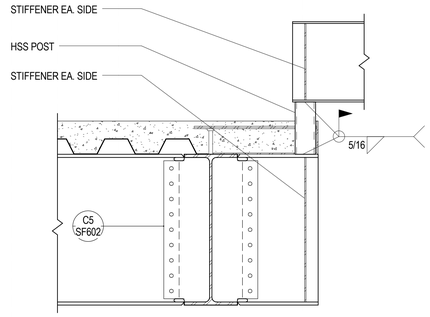

C5 / SF503 — CANTILEVERED BEAM TO BEAM CONNECTION AT STAIR BEAM AND COLUMN
NO SCALE

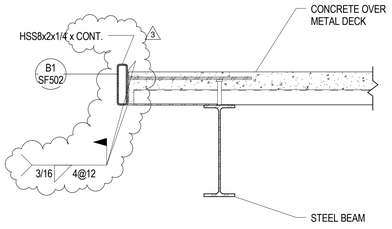

B1 / SF503 — DECK EDGE AT MAIN STAIR OPENING
NO SCALE

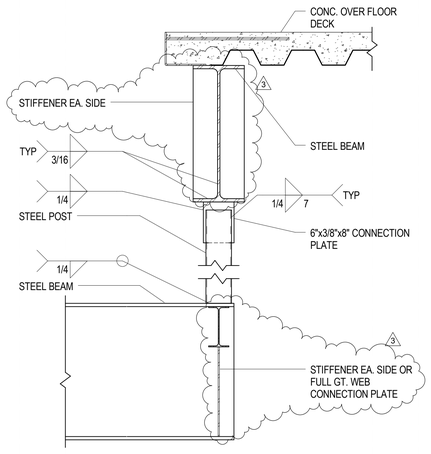

A2 / SF503 — STEEL BEAM AT STEEL POST HANGER
NO SCALE

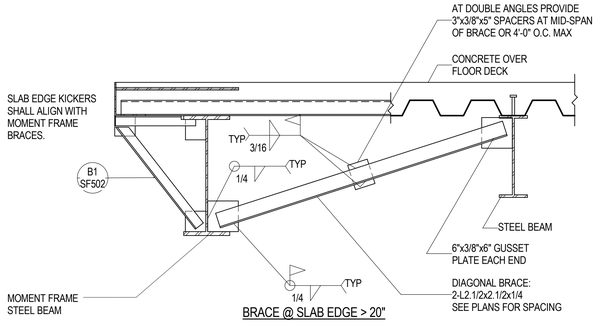

BRACE @ SLAB EDGE > 20"

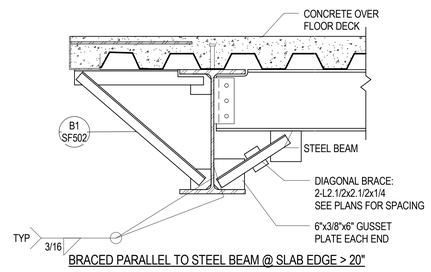

BRACED PARALLEL TO STEEL BEAM @ SLAB EDGE > 20"

NOTES:

1. AT CONTRACTOR'S OPTION, BRACING ANGLES MAY BE ATTACHED TO GUSSET PLATES WITH TWO A325 BOLTS EACH END IN LIEU OF WELDING.

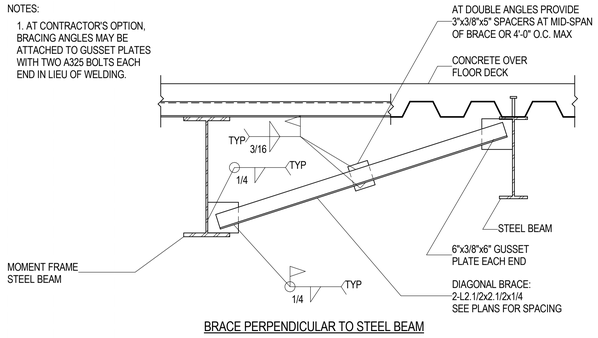

BRACE PERPENDICULAR TO STEEL BEAM

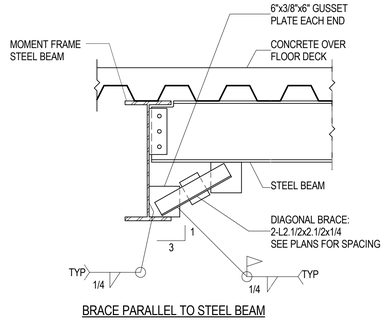

BRACE PARALLEL TO STEEL BEAM

A4 / SF503 — TYPICAL MOMENT FRAME ANGLE BRACE DETAIL
NO SCALE

VCBO ARCHITECTURE
524 SOUTH 600 EAST
SALT LAKE CITY, UT 84102
Phone: (801) 575-8800
Fax: (801) 531-9850
Web: vcbo.com

PROFESSIONAL STRUCTURAL ENGINEER No. 259733 JEROD G. JOHNSON 9/15/13 STATE OF UTAH

REAVELEY ENGINEERS + ASSOCIATES
Consulting Structural Engineers
P: 801.486.3883
F: 801.485.0911
677 E 500 S, Suite 400
Salt Lake City, Utah 84102
www.reaveley.com

2nd District Juvenile Courthouse

Utah State Courts
08284150
165 West 20th Street, Ogden, Utah
BID DOCUMENTS

Rev #	Date	Description
3	09/10/2013	ADDENDUM #003

Job # 12500
Date August 15, 2013
Owner # 08284150
Ins. #

FLOOR FRAMING DETAILS

SF503

9/10/2013 8:43:58 AM

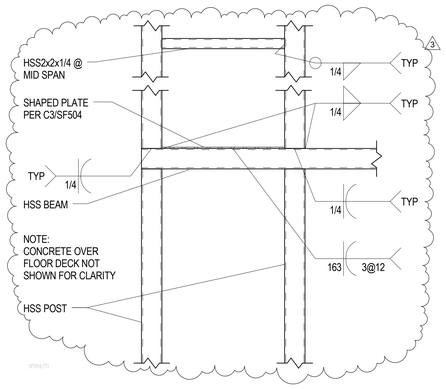

D1 SF504 HSS COLUMN TO HSS BEAM CONNECTION
NO SCALE

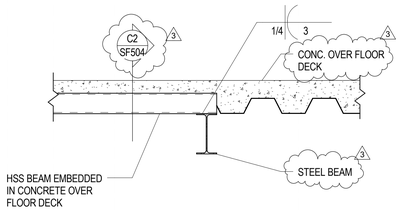

D2 SF504 HSS EMBEDED IN CONCRETE OVER METAL FLOOR DECK
NO SCALE

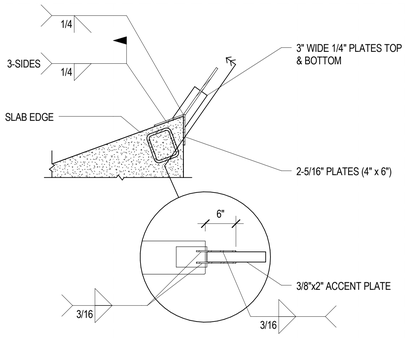

C1 SF504 HSS COLUMN TO FLOOR DECK EDGE - PLAN VIEW
NO SCALE

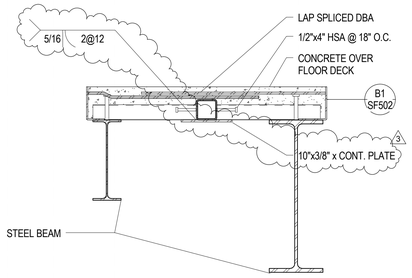

C2 SF504 HSS EMBEDED IN CONCRETE OVER METAL FLOOR DECK
NO SCALE

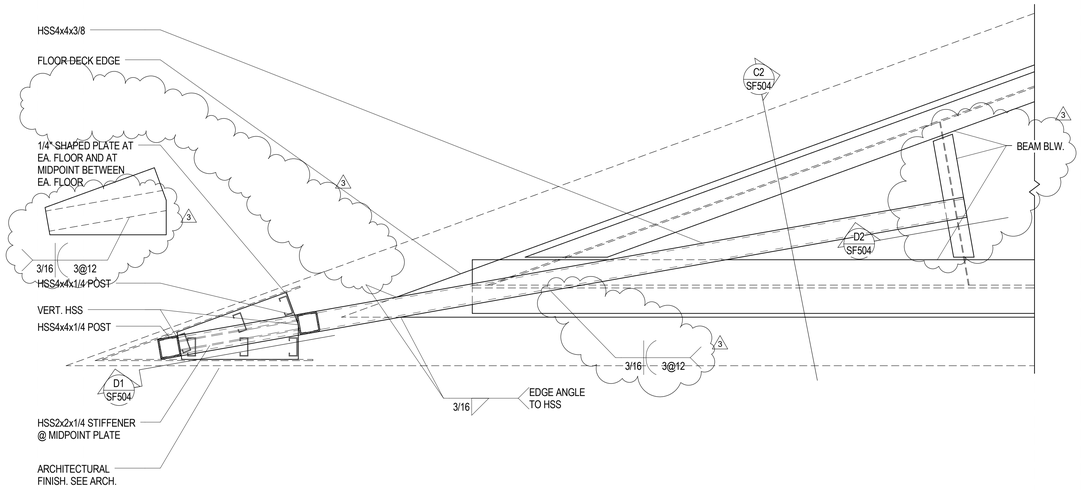

C3 SF504 CANTILEVERED KNIFE EDGE PLAN VIEW
NO SCALE

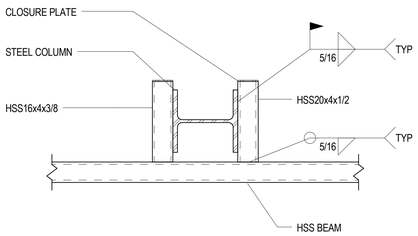

B1 SF504 HSS CONNECTION TO WF COLUMN - PLAN VIEW
NO SCALE

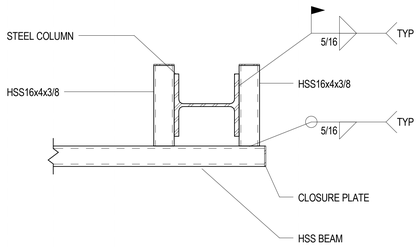

B2 SF504 HSS CONNECTIN TO WF COLUMN - PLAN VIEW
NO SCALE

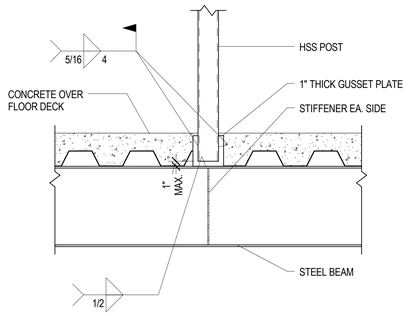

B3 SF504 TYPICAL HANGER DETAIL
NO SCALE

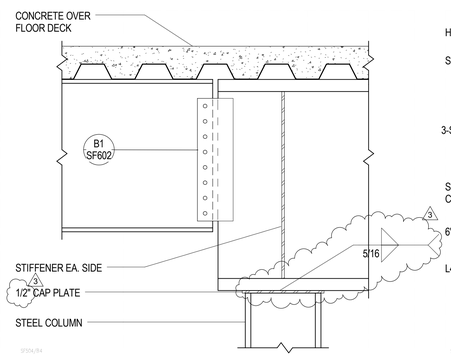

B4 SF504 DROP IN BEAM TO STEEL BEAM CONNECTION
NO SCALE

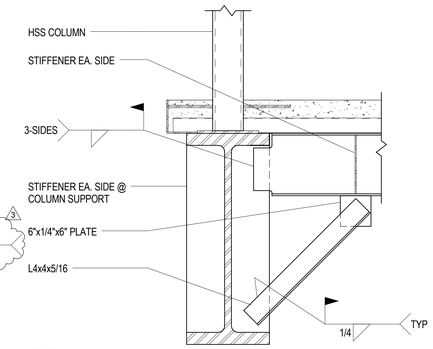

B5 SF504 HSS TO STEEL BEAM
NO SCALE

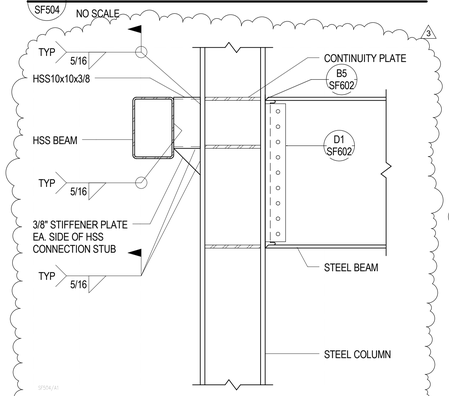

A1 SF504 SKEWED HSS BEAM CONNECTION
NO SCALE

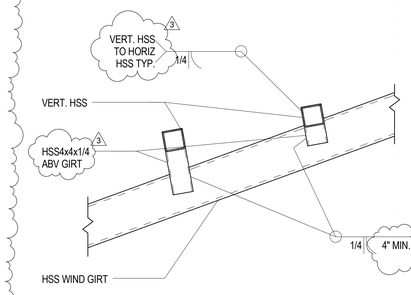

A2 SF504 HSS COLUMN SUPPORT AT WIND GIRT - PLAN VIEW
NO SCALE

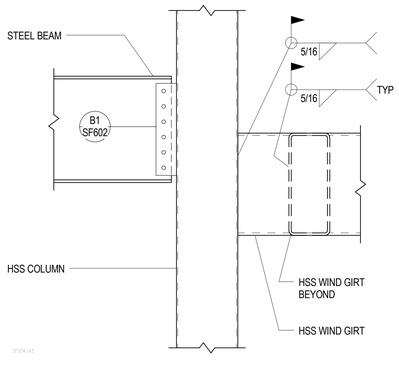

A3 SF504 HSS BEAM TO HSS COLUMN
NO SCALE

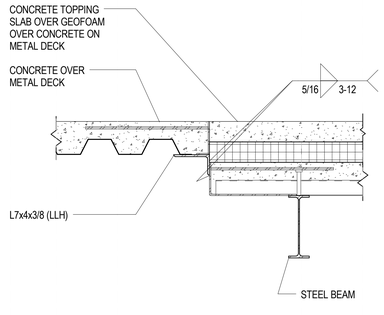

A4 SF504 STEP AT FLOOR DECK
NO SCALE

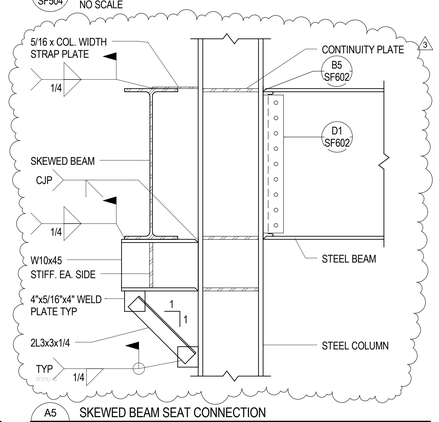

A5 SF504 SKEWED BEAM SEAT CONNECTION
NO SCALE

9/10/2013 8:44:00 AM

VCBO ARCHITECTURE
524 SOUTH 600 EAST
SALT LAKE CITY, UT 84102
Phone: (801) 575-8800
Fax: (801) 531-9850
Web: vcbo.com

PROFESSIONAL STRUCTURAL ENGINEER No. 299033 JEROD G. JOHNSON 3/15/13 STATE OF UTAH

REAVELEY ENGINEERS + ASSOCIATES
Consulting Structural Engineers
P: 801.486.3883
F: 801.485.0911
477 E. 500 S. Suite 400
Salt Lake City, Utah 84102
www.reaveley.com

2nd District Juvenile Courthouse

Utah State Courts
08284150
165 West 20th Street, Ogden, Utah
BID DOCUMENTS

Rev #	Date	Description
3	09/10/2013	ADDENDUM #003

Job # 12500
Date August 15, 2013
Owner # 08284150
Ins. #

FLOOR FRAMING DETAILS

SF504

C1 SF505 TYPICAL DECK BEARING AT MASONRY WALL
NO SCALE

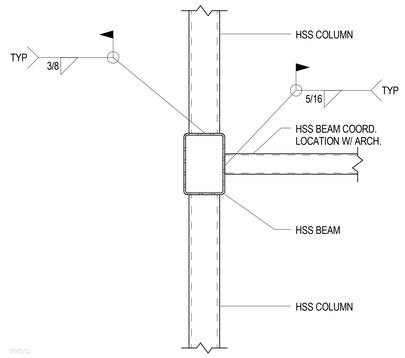

D2 SF505 HSS BEAM TO HSS BEAM AT STACKED COLUMN
NO SCALE

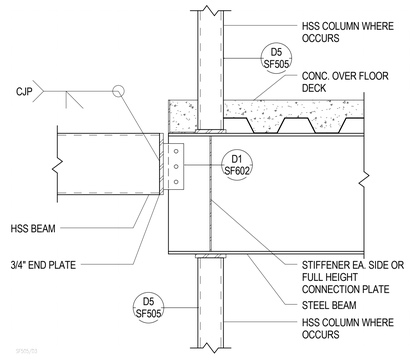

D3 SF505 TYPICAL WF BEAM TO HSS CONNECTION
NO SCALE

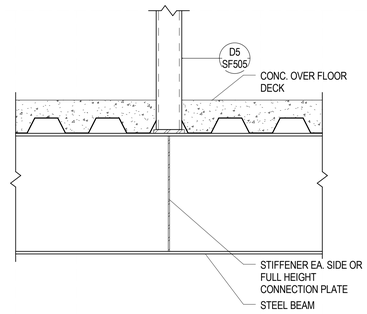

D4 SF505 TYPICAL COLUMN ON WF BEAM
NO SCALE

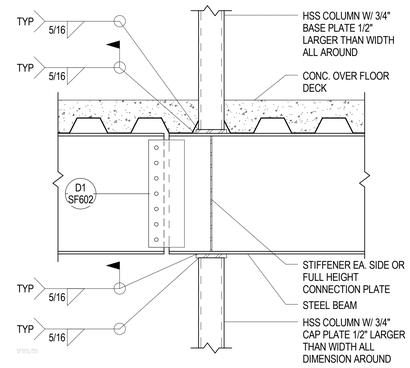

D5 SF505 TYPICAL STACKED COLUMN ON WF BEAM
NO SCALE

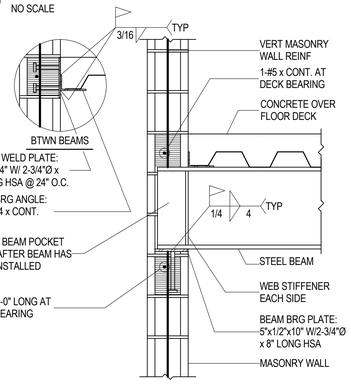

C2 SF505 TYPICAL BEAM/DECK BEARING AT MASONRY WALL
NO SCALE

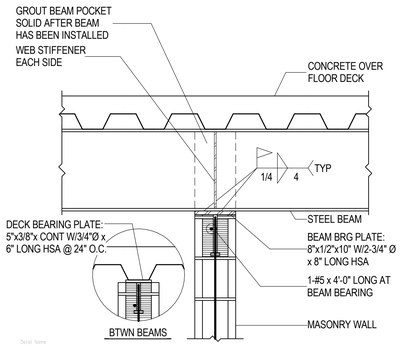

C3 SF505 TYPICAL BEAM/DECK BEARING AT MASONRY WALL
NO SCALE

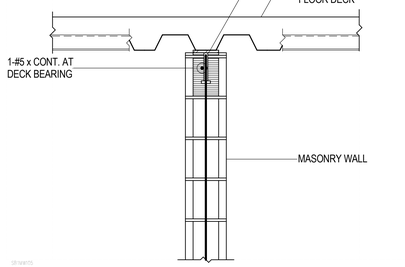

C4 SF505 TYPICAL DECK BEARING AT MASONRY WAL
NO SCALE

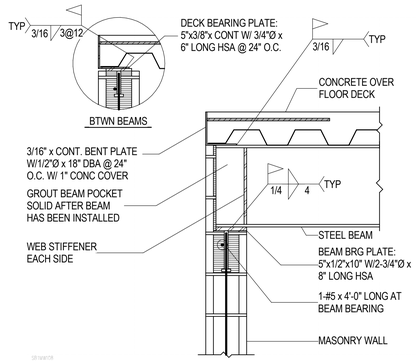

C5 SF505 TYPICAL BEAM/DECK BEARING AT MASONRY WALL
NO SCALE

VCBO
ARCHITECTURE
VCBO ARCHITECTURE
524 SOUTH 600 EAST
SALT LAKE CITY, UT 84102
Phone: (801) 575-8800
Fax: (801) 531-9850
Web: vcbo.com

PROFESSIONAL STRUCTURAL ENGINEER
No. 299133
JEROD G. JOHNSON
9/15/13
STATE OF UTAH

REAVELEY
ENGINEERS + ASSOCIATES
Consulting Structural Engineers
P: 801.486.3883
F: 801.485.0911
477 E. 500 S. Suite 400
Salt Lake City, Utah 84102
www.reaveley.com

2nd District Juvenile Courthouse

Utah State Courts
08284150
165 West 20th Street, Ogden, Utah
BID DOCUMENTS

Rev #	Date	Description
3	09/10/2013	ADDENDUM #003

Job # 12500
Date August 15, 2013
Owner # 08284150
Ins. #

FLOOR FRAMING
DETAILS

3

SF505

9/10/2013 8:44:02 AM

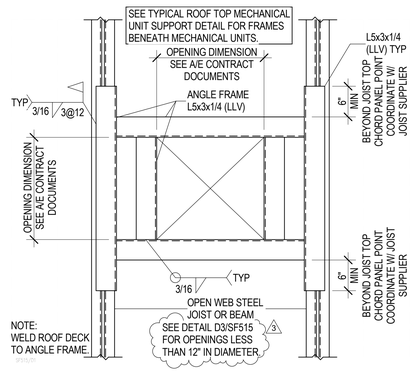

D1 / SF515 TYPICAL ROOF OPENING DETAIL (PLAN VIEW)
NO SCALE

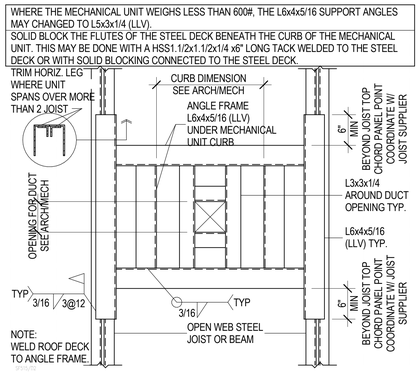

D2 / SF515 TYP ROOF TOP MECHANICAL UNIT SUPPORT DETAIL (PLAN VIEW)
NO SCALE

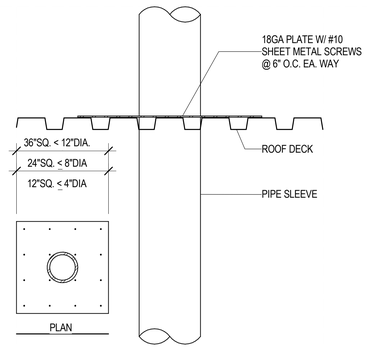

D3 / SF515 TYPICAL PIPE SLEEVE HOLE THRU ROOF DECK
NO SCALE

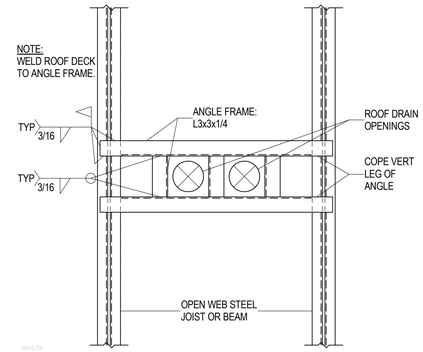

D4 / SF515 TYPICAL ROOF DRAIN OPENING (PLAN VIEW)
NO SCALE

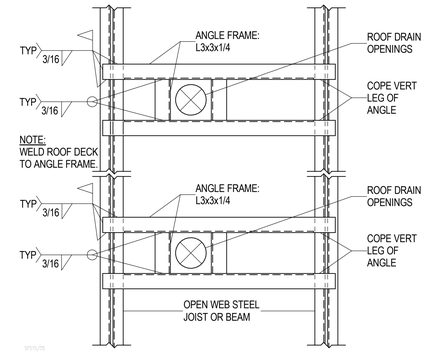

D5 / SF515 TYPICAL ROOF DRAIN OPENING (PLAN VIEW)
NO SCALE

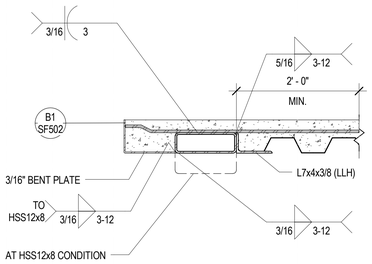

C1 / SF515 HSS CANTILEVERED AT FLOOR EDGE
NO SCALE

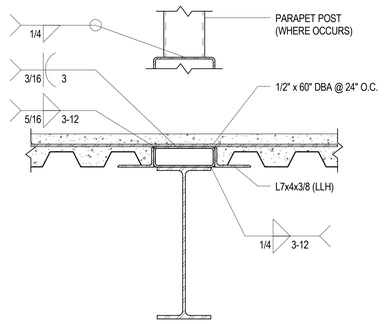

C2 / SF515 HSS OUTRIGGER FOR CANTILEVERED ROOF EDGE
NO SCALE

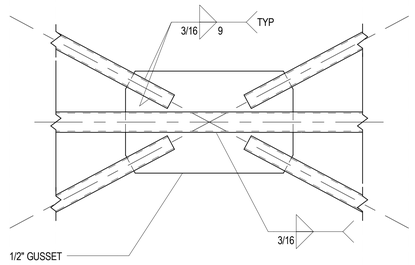

C3 / SF515 HSS BRACE TO HSS BEAM AT PARAPET SUPPORT
NO SCALE

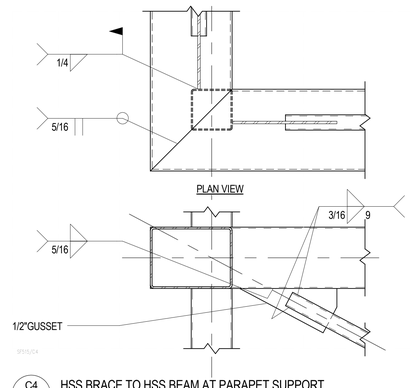

C4 / SF515 HSS BRACE TO HSS BEAM AT PARAPET SUPPORT
NO SCALE

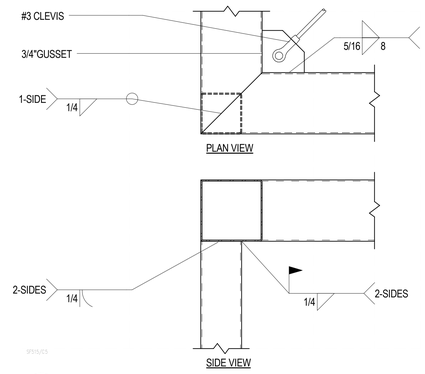

C5 / SF515 HSS BEAM TO HSS COLUMN AT PARAPET SUPPORT
NO SCALE

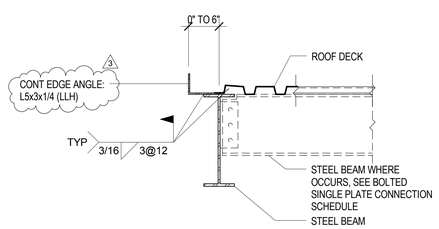

ROOF EDGE FOR 0" UP TO 6"

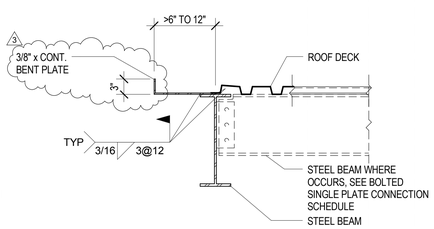

ROOF EDGE FOR >6" UP TO 12"

C2 / SF515 HSS OUTRIGGER FOR CANTILEVERED ROOF EDGE
NO SCALE

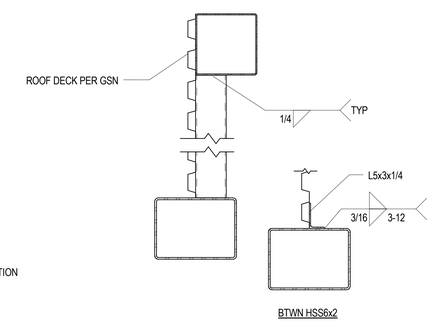

B3 / SF515 INTERMEDIATE HSS FOR PARAPET SUPPORT CONNECTION
NO SCALE

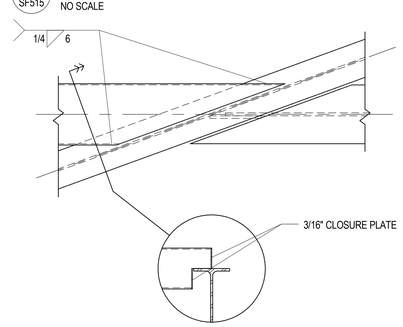

B4 / SF515 HSS OUTRIGGER TO STEEL GIRDER CONNECTION
NO SCALE

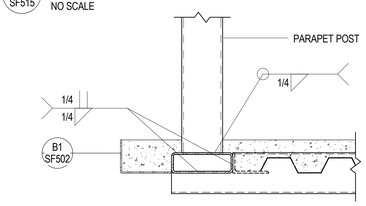

B5 / SF515 PARAPET POST AT CANTILEVERED ROOF EDGE
NO SCALE

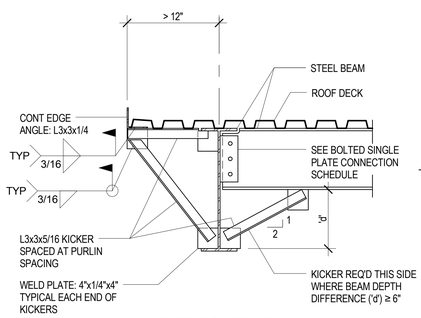

ROOF EDGE FOR >12"

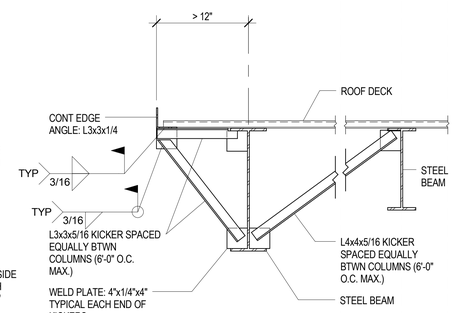

ROOF EDGE FOR >12"

A1 / SF515 TYPICAL ROOF EDGE DETAILS AT STEEL BEAMS
SCALE: 1" = 1'-0"

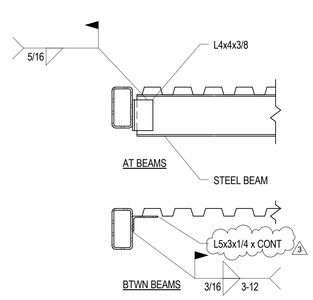

A3 / SF515 HSS TO BEAM AT ROOF EDGE
NO SCALE

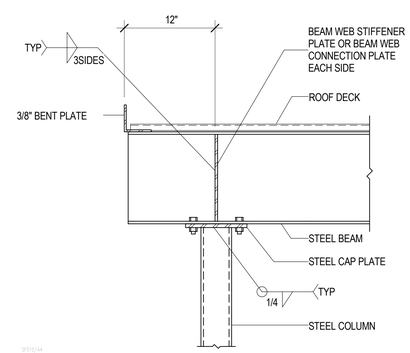

A4 / SF515 TYPICAL STEEL COLUMN/BEAM AT ROOF EDGE DETAIL FOR 12" DIMENSION
NO SCALE

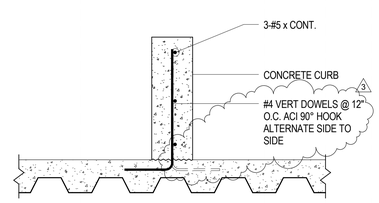

A5 / SF515 CONCRETE CURB FOR MECHANICAL EQUIPMENT
NO SCALE

9/10/2013 8:44:03 AM

VCBO ARCHITECTURE
ARCHITECTURE
VCBO ARCHITECTURE
524 SOUTH 600 EAST
SALT LAKE CITY, UT 84102
Phone: (801) 575-8800
Fax: (801) 531-9850
Web: vcbo.com

PROFESSIONAL STRUCTURAL ENGINEER No. 299733 JEROD G. JOHNSON 9/10/13 STATE OF UTAH

REAVELEY ENGINEERS + ASSOCIATES
Consulting Structural Engineers
P: 801.486.3883
F: 801.485.0911
677 E 500 S, Suite 400
Salt Lake City, Utah 84102
www.reaveley.com

2nd District Juvenile Courthouse

Utah State Courts
08284150
165 West 20th Street, Ogden, Utah
BID DOCUMENTS

Rev #	Date	Description
3	09/10/2013	ADDENDUM #003

Job # 12500
Date August 15, 2013
Owner # 08284150
Ins. #

ROOF FRAMING DETAILS

SF515

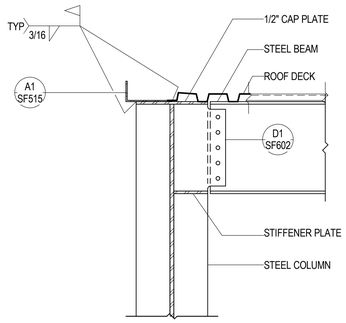

D1 SF516 TYPICAL BOLTED ROOF BEAM CONNECTION TO COLUMN WEB - ONE SIDE
NO SCALE

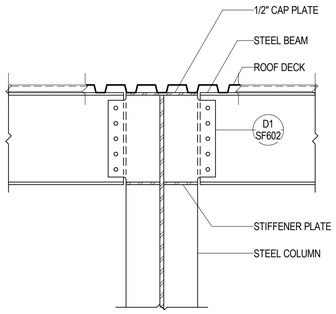

D2 SF516 TYPICAL BOLTED ROOF BEAM CONNECTION TO COLUMN WEB - TWO SIDES
NO SCALE

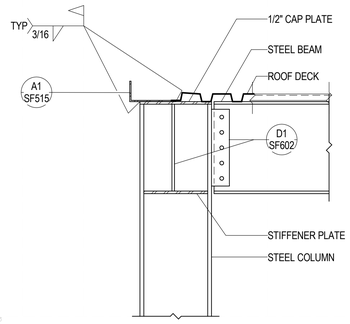

D3 SF516 TYPICAL BOLTED ROOF BEAM CONNECTION TO COLUMN WEB - ONE SIDE
NO SCALE

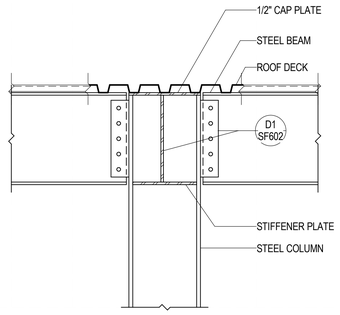

D4 SF516 TYPICAL BOLTED ROOF BEAM CONNECTION TO COLUMN WEB - TWO SIDES
NO SCALE

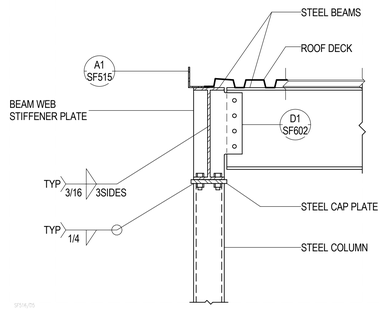

D5 SF516 TYPICAL STEEL BEAM TO STEEL COLUMN
NO SCALE

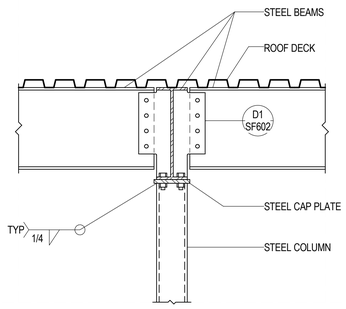

C1 SF516 TYPICAL STEEL BEAM TO STEEL COLUMN
NO SCALE

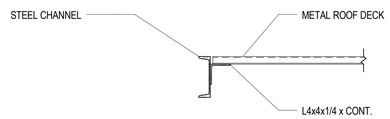

C2 SF516 ROOF DECK EDGE AT STEEL CHANNEL
NO SCALE

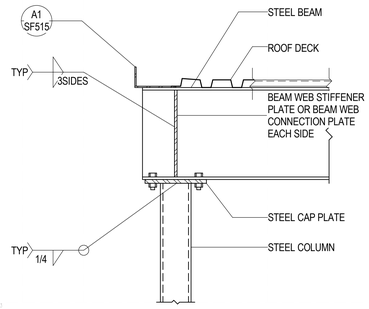

C3 SF516 TYPICAL STEEL BEAM TO STEEL COLUMN
NO SCALE

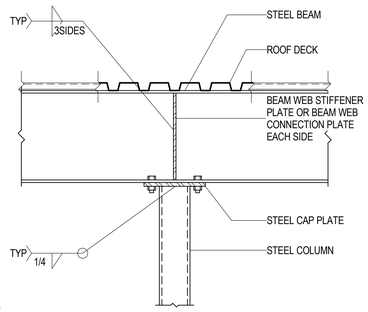

C4 SF516 TYPICAL STEEL BEAM TO STEEL COLUMN
NO SCALE

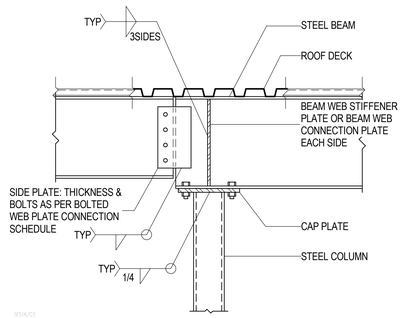

C5 SF516 TYPICAL STEEL BEAM TO STEEL COLUMN AT DROP-IN BEAM
NO SCALE

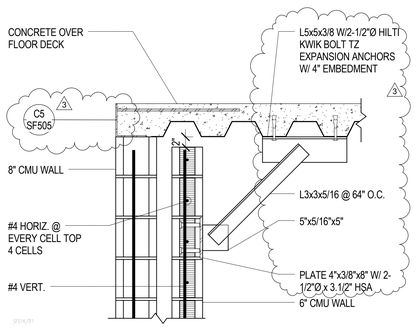

B1 SF516 ROOF BEARING AT DOUBLE MASONRY WALL
NO SCALE

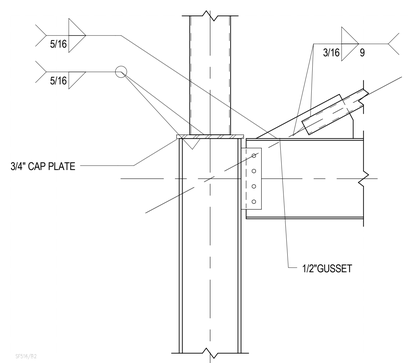

B2 SF516 HSS BRACE TO HSS BEAM AT PARAPET SUPPORT
NO SCALE

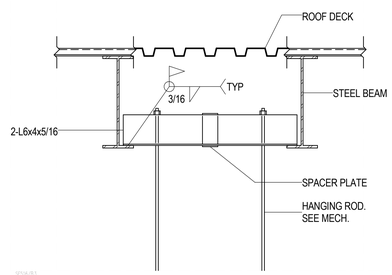

B3 SF516 TYPICAL HANGING MECHANICAL UNIT SUPPORT DETAIL
NO SCALE

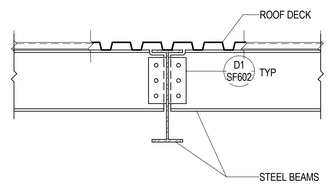

B4 SF516 TYP STEEL ROOF BEAM CONNECTION - TWO SIDES
NO SCALE

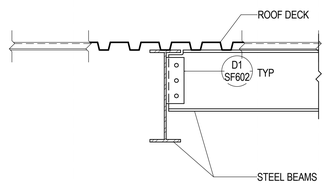

B5 SF516 TYPICAL STEEL ROOF BEAM CONNECTION - ONE SIDE
NO SCALE

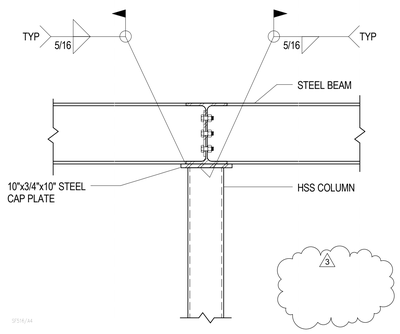

A4 SF516 MECHANICAL UNIT PLATFORM
NO SCALE

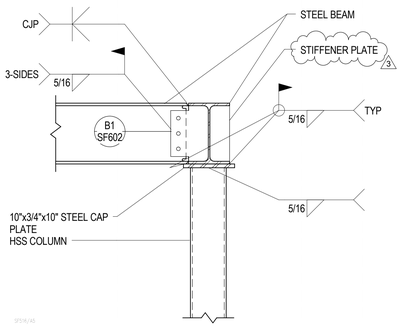

A5 SF516 MECHANICAL UNIT PLATFORM
NO SCALE

9/10/2013 8:44:06 AM

VCBO ARCHITECTURE
524 SOUTH 600 EAST
SALT LAKE CITY, UT 84102
Phone: (801) 575-8800
Fax: (801) 531-9850
Web: vcbo.com

PROFESSIONAL STRUCTURAL ENGINEER No. 299033 JEROD G. JOHNSON 9/5/13 STATE OF UTAH

REAVELEY ENGINEERS + ASSOCIATES
Consulting Structural Engineers
P: 801.486.3883
F: 801.485.0911
477 E. 500 S. Suite 400
Salt Lake City, Utah 84102
www.reaveley.com

2nd District Juvenile Courthouse

Utah State Courts
08284150
165 West 20th Street, Ogden, Utah
BID DOCUMENTS

Rev #	Date	Description
3	09/10/2013	ADDENDUM #003

Job # 12500
Date August 15, 2013
Owner # 08284150
Ins. #

ROOF FRAMING DETAILS

SF516

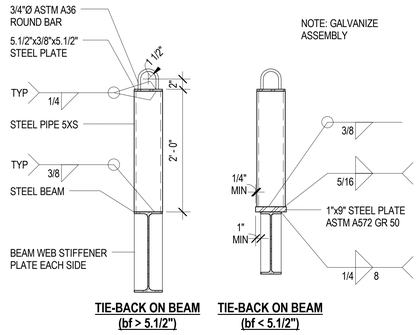

D1 SF517 TYPICAL WINDOW WASHING TIE-BACK
NO SCALE

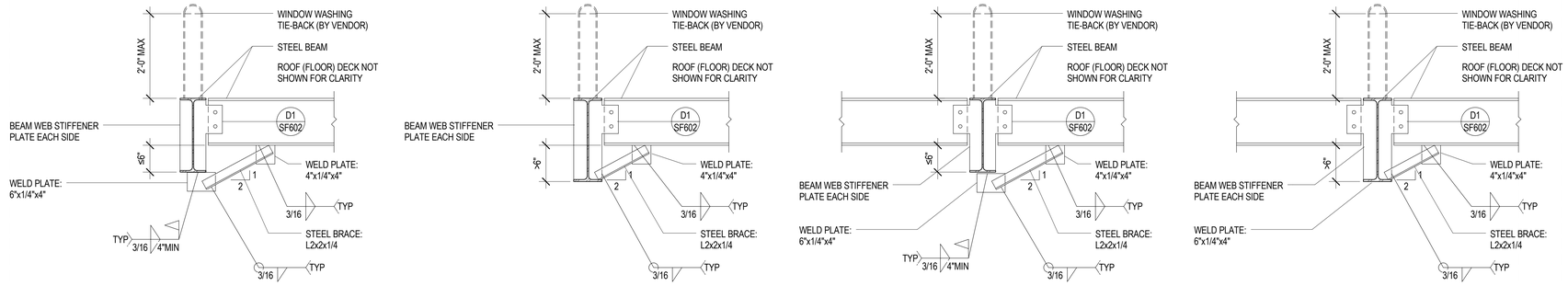

D2 SF517 TYPICAL WINDOW WASHING TIE-BACK CONNECTION TO STEEL BEAM
NO SCALE

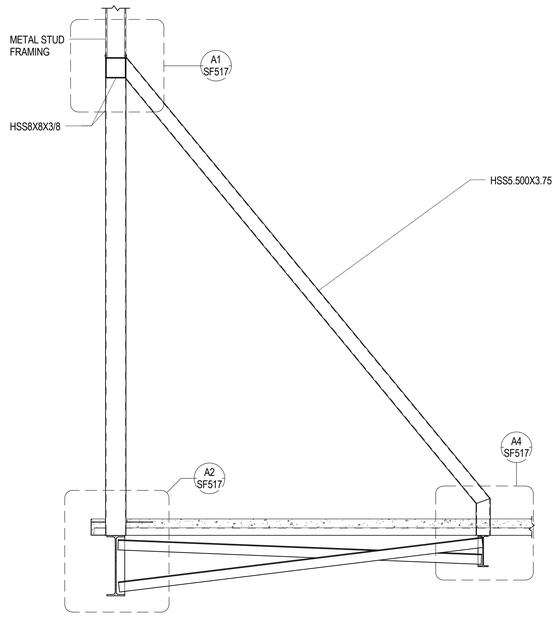

B1 SF517 PARAPET SUPPORT SECTION AT GFRC
NO SCALE

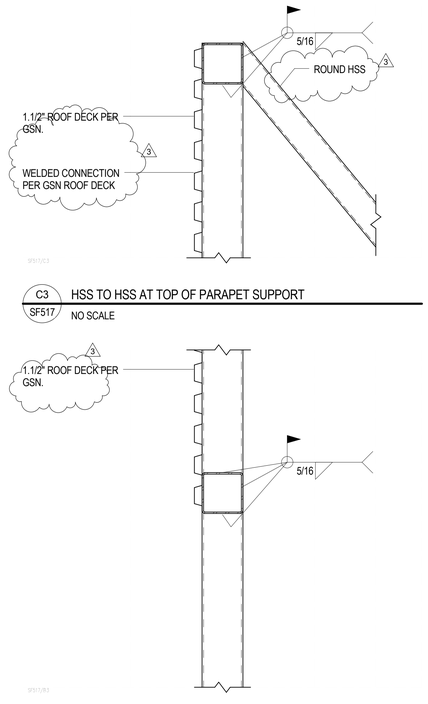

C3 SF517 HSS TO HSS AT TOP OF PARAPET SUPPORT
NO SCALE

B3 SF517 HSS TO HSS CONNECTION
NO SCALE

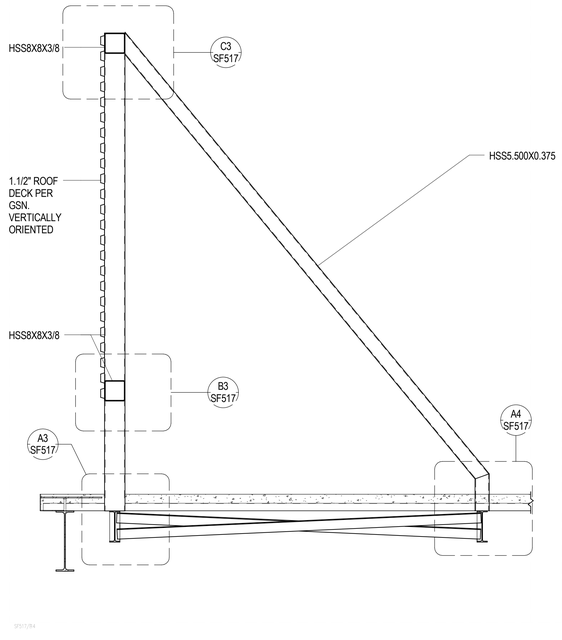

B4 SF517 PARAPET SUPPORT SECTION AT METAL PANEL
SCALE: 1/2" = 1'-0"

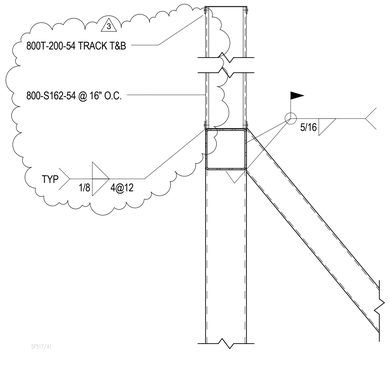

A1 SF517 HSS TO HSS AT TOP OF PARAPET SUPPORT
NO SCALE

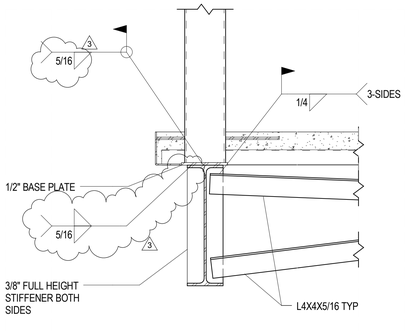

A2 SF517 HSS TO STEEL BEAM CONNECTION
NO SCALE

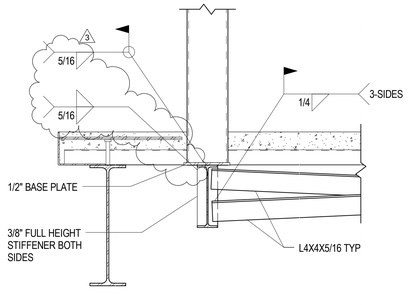

A3 SF517 HSS TO STEEL BEAM CONNECTION
NO SCALE

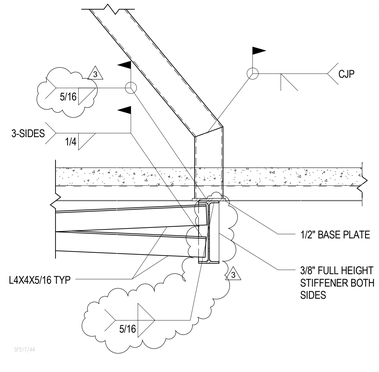

A4 SF517 HSS TO STEEL BEAM CONNECTION
NO SCALE

9/10/2013 8:44:07 AM

VCBO ARCHITECTURE
524 SOUTH 600 EAST
SALT LAKE CITY, UT 84102
Phone: (801) 575-8800
Fax: (801) 531-9850
Web: vcbo.com

PROFESSIONAL STRUCTURAL ENGINEER No. 299033 JEROD G. JOHNSON 9/10/13 STATE OF UTAH

REAVELEY ENGINEERS + ASSOCIATES
Consulting Structural Engineers
P: 801.486.3883
F: 801.485.0911
677 E 500 S, Suite 400
Salt Lake City, Utah 84102
www.reaveley.com

2nd District Juvenile Courthouse

Utah State Courts
08284150
165 West 20th Street, Ogden, Utah
BID DOCUMENTS

Rev #	Date	Description
3	09/10/2013	ADDENDUM #003

Job # 12500
Date August 15, 2013
Owner # 08284150
Ins. #

ROOF FRAMING DETAILS

SF517

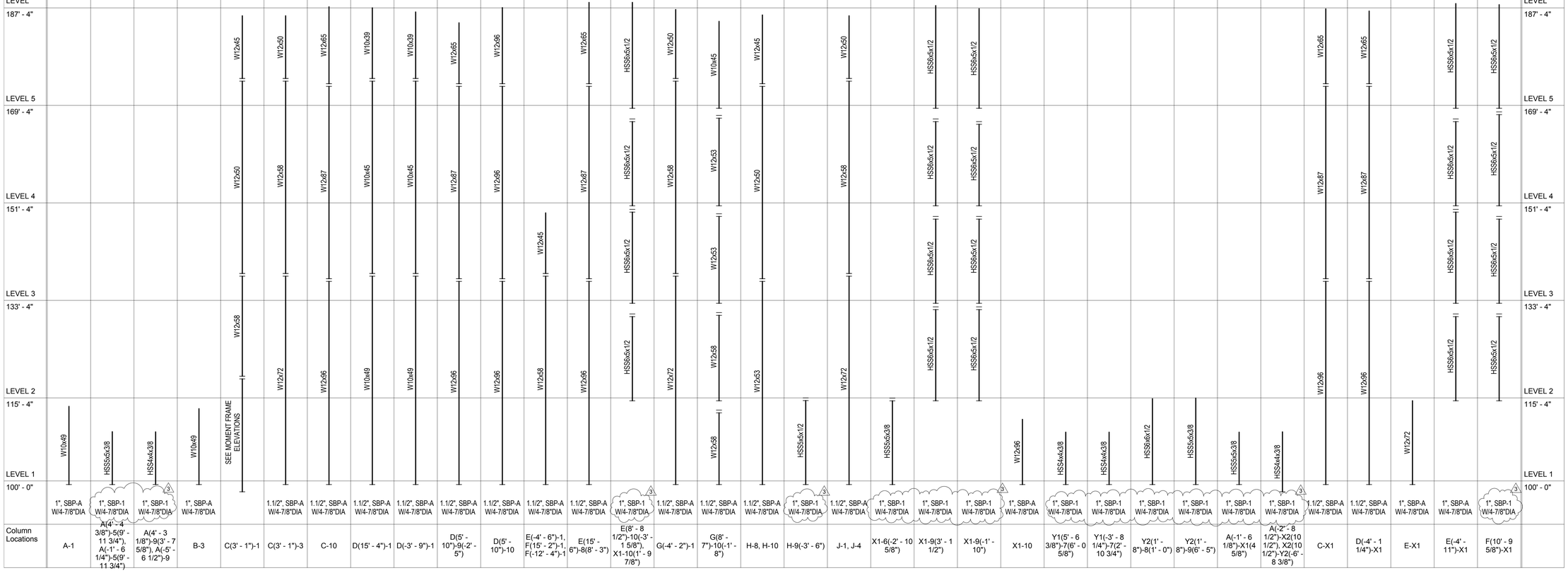

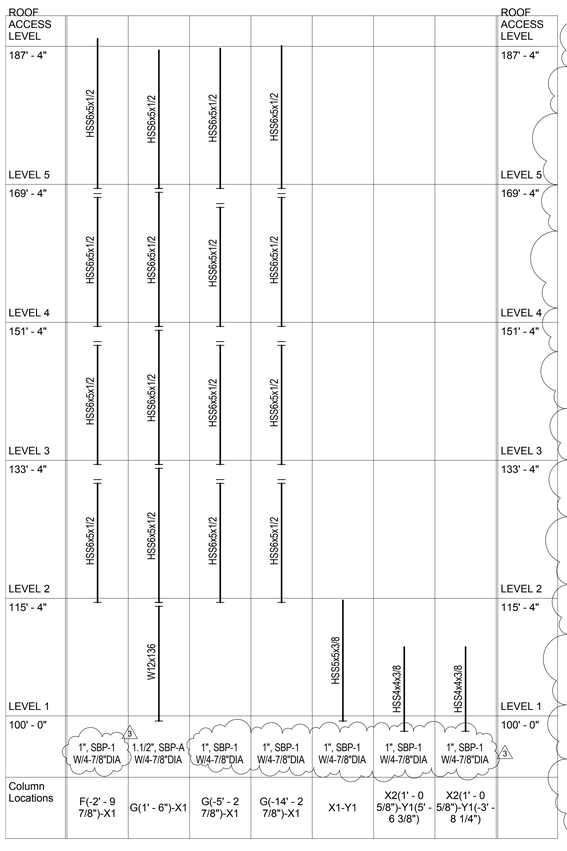

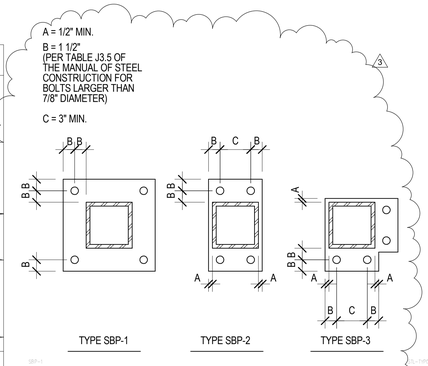

B2 SF601 TYPICAL STEEL BASE PLATES - PLAN VIEW
NO SCALE

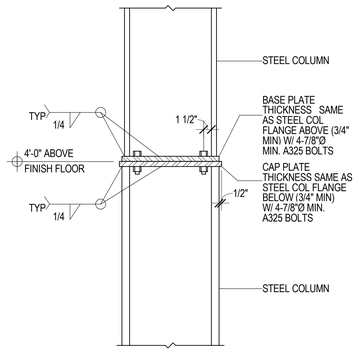

B3 SF601 TYPICAL STEEL COLUMN SPLICE FOR GRAVITY COLUMNS WITH SAME NOMINAL DEPTH
NO SCALE

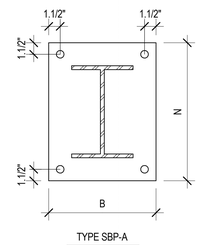

BASE PLATE SIZE SCHEDULE

COLUMN SIZE	N	B
W10x49-W10x100	18"	17"
W12x65-W12x106	19"	19"
W12x120-W12x152	20"	19"

B4 SF601 TYPICAL GRAVITY COLUMN STEEL BASE PLATE - TYPE SBP-A
NO SCALE

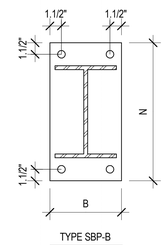

BASE PLATE SIZE SCHEDULE

COLUMN SIZE	N	B
W10X49-W10x100	8	12
W12X65-W12x106	19	14
W12X120-W12x152	20	14

B5 SF601 TYPICAL GRAVITY COLUMN STEEL BASE PLATE - TYPE SBP-B
NO SCALE

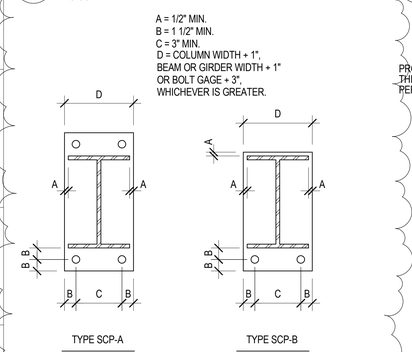

A2 SF601 TYPICAL STEEL CAP PLATES - REFLECTED PLAN VIEW
NO SCALE

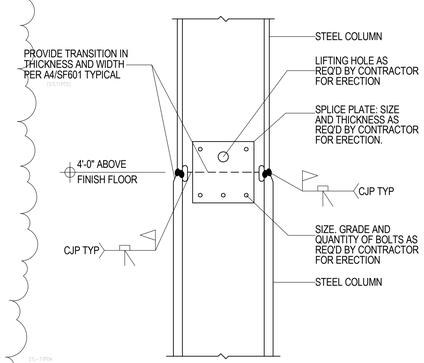

A3 SF601 TYPICAL MOMENT FRAME & BRACED FRAME STEEL COLUMN SPLICE
NO SCALE

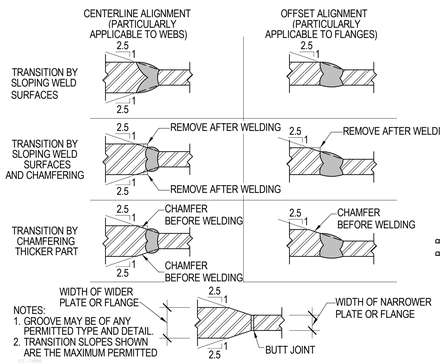

A4 SF601 TYPICAL TRANSITION OF BUTT JOINTS IN PARTS OF UNEQUAL THICKNESS AND WIDTH
NO SCALE

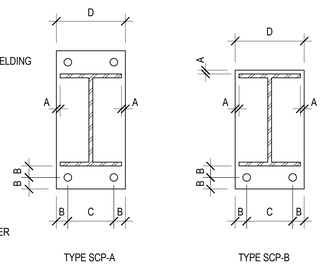

A5 SF601 TYPICAL STEEL CAP PLATES - REFLECTED PLAN VIEW
NO SCALE

VCBO ARCHITECTURE
VCBO ARCHITECTURE
524 SOUTH 600 EAST
SALT LAKE CITY, UT 84102
Phone: (801) 575-8800
Fax: (801) 531-9850
Web: vcbo.com

PROFESSIONAL STRUCTURAL ENGINEER No. 299033 JEROD G. JOHNSON 9/10/13 STATE OF UTAH

REAVELEY ENGINEERS + ASSOCIATES
Consulting Structural Engineers
P:801.486.3883
F:801.485.0911
470 E.500 S. Suite 400
Salt Lake City, Utah 84102
www.reaveley.com

2nd District Juvenile Courthouse

Utah State Courts
165 West 20th Street, Ogden, Utah
08284150
BID DOCUMENTS

Rev #	Date	Description
3	09/10/2013	ADDENDUM #003

Job # 12500
Date August 15, 2013
Owner # 08284150
Ins. #

STRUCTURAL SCHEDULES

SF601

9/10/2013 8:44:10 AM

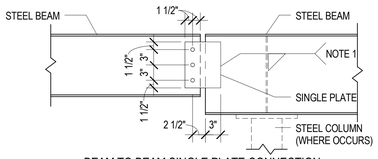

BEAM TO BEAM SINGLE PLATE CONNECTION

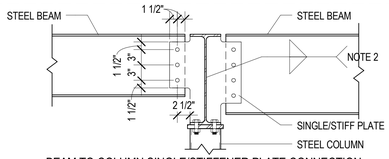

BEAM TO COLUMN SINGLE/STIFFENER PLATE CONNECTION

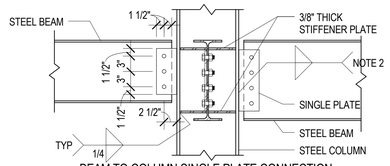

BEAM TO COLUMN SINGLE PLATE CONNECTION

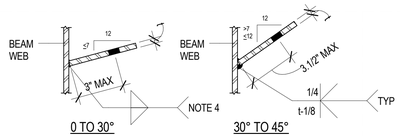

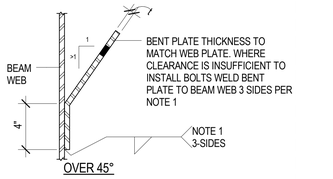

SKEWED SINGLE PLATE CONNECTION (PLAN VIEW)

SINGLE PLATE CONNECTION SCHEDULE			
BEAM SIZE	WEB PLATE THICKNESS (t)	A325N BOLTS	
		NUMBER	SIZE
W8 AND W10	3/8"	2	7/8"Ø
W12 AND W14	3/8"	3	7/8"Ø
W16	3/8"	4	7/8"Ø
W18	3/8"	5	7/8"Ø
W21	1/2"	6	7/8"Ø
W24	1/2"	7	7/8"Ø
W27	1/2"	8	7/8"Ø
W30	1/2"	9	7/8"Ø
W33	1/2"	10	7/8"Ø
W36	1/2"	11	7/8"Ø

NOTES:
1. FILLET WELDS ONE SIDE SHALL EQUAL THE PLATE THICKNESS MINUS 1/16" (1/4" MIN.)
2. FILLET WELDS TWO SIDES SHALL BE 5/8 THE PLATE THICKNESS (1/4" MIN.) EACH SIDE
3. BOLT EDGE DISTANCE SHALL BE 1.1/2" AT ALL EDGES. BOLT SPACING SHALL BE 3" MIN.
4. AT SKEWED JOINTS PROVIDE AN EQUIVALENT LEG SIZE TO NOTE 2 PER AWS D1.1.

D1 / SF602 TYPICAL SINGLE PLATE CONNECTION DETAILS AND SCHEDULE
NO SCALE

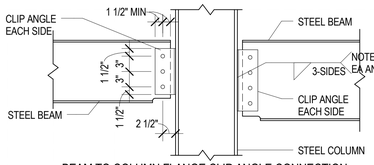

BEAM TO COLUMN FLANGE CLIP ANGLE CONNECTION

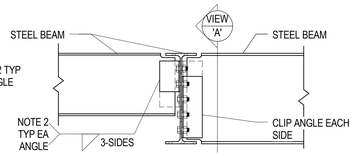

BEAM TO BEAM CLIP ANGLE CONNECTION

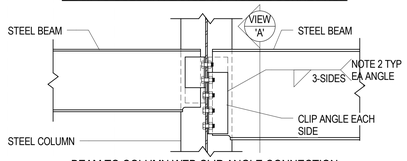

BEAM TO COLUMN WEB CLIP ANGLE CONNECTION

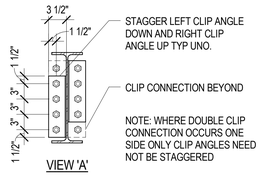

VIEW 'A'

DOUBLE CLIP CONNECTION SCHEDULE		
BEAM SIZE	A325N BOLTS	
	NO. PER LEG	SIZE
W8, W10	2	7/8"Ø
W12, W14	3	7/8"Ø
W16	4	7/8"Ø
W18	5	7/8"Ø
W21	6	7/8"Ø
W24, W27	7	7/8"Ø
W30	8	7/8"Ø
W33	9	7/8"Ø
W36	10	7/8"Ø

NOTES:
1. CLIP ANGLES: 2-L4x3.1/2. THICKNESS SHALL BE EQUAL TO ONE HALF THE BEAM WEB THICKNESS PLUS 1/16" (1/4" MIN.). FOR TWO ROWS OF BOLTS OR SKEWED CONNECTIONS, USE BENT PLATES.
2. FILLET WELDS SHALL BE ANGLE THICKNESS MINUS 1/16" (1/4" MIN.)
3. CONTRACTOR HAS OPTION TO BOLT CLIP ANGLES AT EITHER BEAM WEB IN BEAM TO BEAM CONNECTIONS.
4. BOLT EDGE DISTANCE SHALL BE 1.1/2" MIN. AT ALL BEAM AND CLIP ANGLE EDGES. BOLT SPACING SHALL BE 3" O.C. MIN.

C1 / SF602 TYPICAL DOUBLE ANGLE CONNECTION DETAILS AND SCHEDULE
NO SCALE

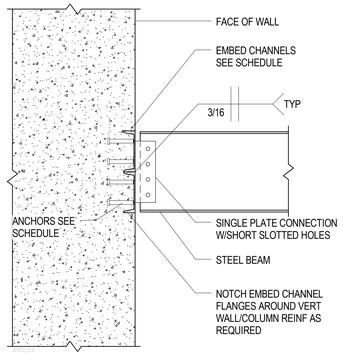

CONNECTION SCHEDULE		
BEAM DEPTH	EMBED CHANNEL	ANCHORS
TO 10"	1-C8x18.75x12"	4-3/4"Ø x 5" LONG HSA
TO 16"	2-C8x18.75x12"	8-3/4"Ø x 5" LONG HSA
TO 24"	3-C8x18.75x12"	12-3/4"Ø x 5" LONG HSA

NOTES:
1. WELD MULTIPLE EMBEDS TOGETHER WITH BUTT WELD EACH SIDE, FULL LENGTH.

C3 / SF602 TYPICAL EMBED CHANNEL CONNECTION SCHEDULE
NO SCALE

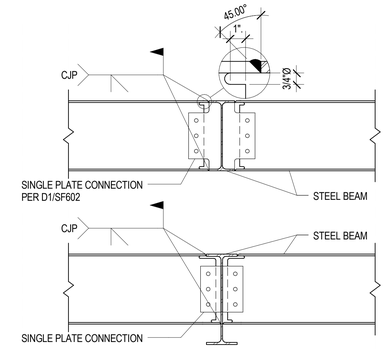

C5 / SF602 TYPICAL CANTILEVERED BEAM FULL PEN CONNECTION TO BEAM
NO SCALE

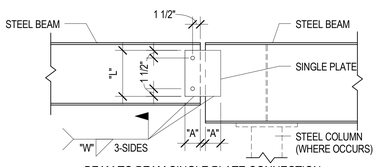

BEAM TO BEAM SINGLE PLATE CONNECTION

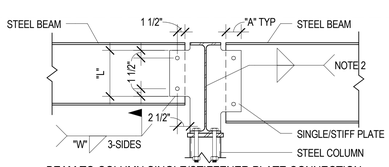

BEAM TO COLUMN SINGLE/STIFFENER PLATE CONNECTION

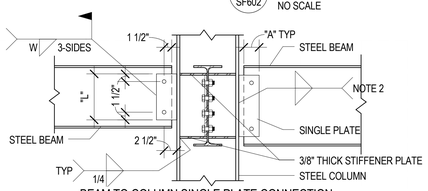

BEAM TO COLUMN SINGLE PLATE CONNECTION

SINGLE PLATE COLLECTOR/CHORD CONNECTION SCHEDULE				
BEAM SIZE	WEB PLATE			ERECTION BOLTS
	"L"	"A"	WELD "W"	THICKNESS	
W8	6"	4"	3/8"	1/2"	2
W10	8"	4"	3/8"	1/2"	2
W12	9"	4"	3/8"	1/2"	2
W14	11"	4"	3/8"	1/2"	2
W18	15"	4"	3/8"	1/2"	2
W21	18"	4"	3/8"	1/2"	2
W24	20"	4"	3/8"	1/2"	2
W30	26"	4"	3/8"	1/2"	2
W33	29"	4"	1/2"	9/16"	2

NOTES:
1. ERECTION BOLT SHALL BE 7/8"Ø A325N BOLTS.
2. FILLET WELDS TWO SIDES SHALL BE 3/4 THE PLATE THICKNESS (1/4" MIN.) EACH SIDE
3. BOLT EDGE DISTANCE SHALL BE 1.1/2" AT ALL EDGES U.N.O.

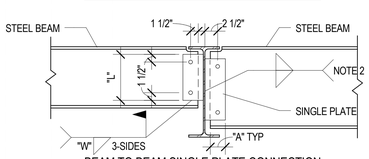

BEAM TO BEAM SINGLE PLATE CONNECTION

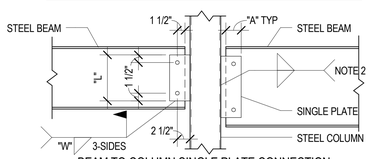

BEAM TO COLUMN SINGLE PLATE CONNECTION

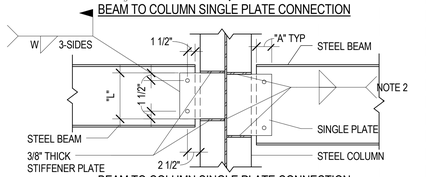

BEAM TO COLUMN SINGLE PLATE CONNECTION

B1 / SF602 TYPICAL WELD SINGLE PLATE COLLECTOR/CHORD CONNECTION DETAILS AND SCHEDULE
NO SCALE

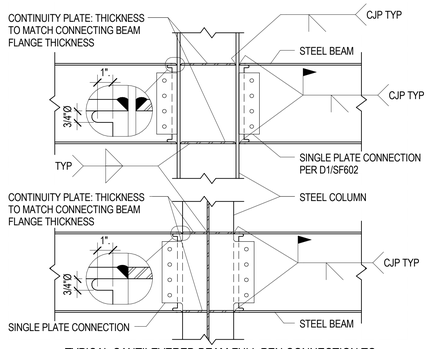

B5 / SF602 TYPICAL CANTILEVERED BEAM FULL PEN CONNECTION TO COLUMN
NO SCALE

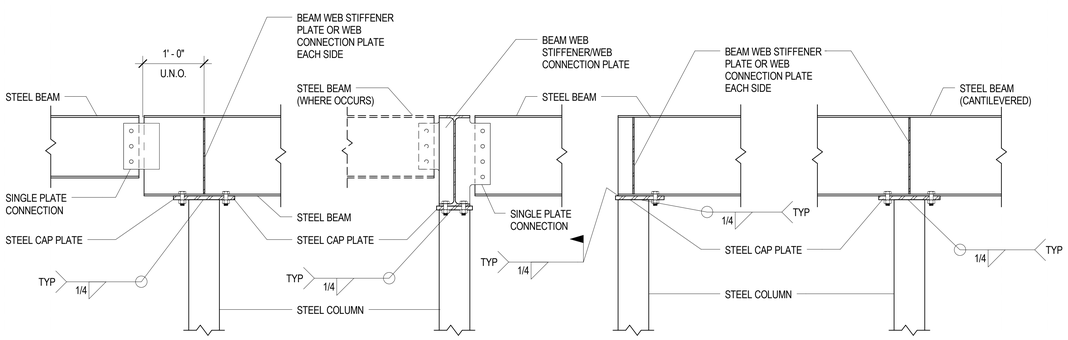

A1 / SF602 TYPICAL STEEL BEAM BEARING ON STEEL COLUMN
NO SCALE

9/10/2013 8:44:11 AM

VCBO ARCHITECTURE
524 SOUTH 600 EAST
SALT LAKE CITY, UT 84102
Phone: (801) 575-8800
Fax: (801) 531-9850
Web: vcbo.com

PROFESSIONAL STRUCTURAL ENGINEER No. 299033 JERROD G. JOHNSON 3/15/13 STATE OF UTAH

REAVELEY ENGINEERS + ASSOCIATES
Consulting Structural Engineers
P: 801.486.3883
F: 801.485.0911
677 E 500 S, Suite 400
Salt Lake City, Utah 84102
www.reaveley.com

2nd District Juvenile Courthouse

Utah State Courts
08284150
165 West 20th Street, Ogden, Utah
BID DOCUMENTS

Rev #	Date	Description
3	09/10/2013	ADDENDUM #003

Job # 12500
Date August 15, 2013
Owner # 08284150
Ins. #

STRUCTURAL SCHEDULES

SF602

ELECTRICAL ADDENDEUM

Ogden 2nd District Juvenile Courthouse
Addendum #3

September 10, 2013

ELECTRICAL – DIV 26, 27, 28

SPECIFICATIONS

Section 281300 – ACCESS CONTROL SYSTEM:

1. Paragraph 1.2, Item A. Add the following sentence to these paragraph:
   "*The access control system shall be compatible with the proposed master electronic control system software submitted as specified in Section 284623".*

2. Paragraph 2.1, item A. Revise the item as follows:
   "Manufacturers: Subject to compliance with requirements *and compatibility with Section 284623*, provide products by one of the following:"

Section 282300 – VIDEO SURVEILLANCE :

1. Paragraph 2.5. Add the following as item #9.:
   9. "*Provide total system recording storage capacity for 90 days at a minimum of 10 fps with 70% activity."*

DRAWINGS

Sheet EY101B:

1. Sheet Keynote #6 shall be revised as follows:
   "Provide 2 floor standing racks for all enterprise security system equipment, ie. *ACS0, ACS1,* SEC, *VSS1,* intercom and duress. Coordinate with State DTS and AV systems installers."

2. Cameras in Elevator 2 are Type #1.

3. Camera in Juvenile Hall 1150 by Door 1162 is a Type #1.

Sheet EY102B:

1. Door type for Door 2123 is Type # 1.

Sheet EY103:

1. Door type for Door 3123 is Type # 1.

Sheet EY105:

1. Door type for Door 5121 is Type # 1

QUESTIONS AND ANSWERS

The following questions were received, and responses are provided:

Question: Spec Section 08 7100: Some power supplies to be provided by Div 28 and some by hardware contractor. We propose that all electrified panic hardware power supplies be provided and installed by hardware contractor

Answer: Power supplies will remain as specified in the respective divisions.

Question: This section also refers to the power supply for the interlock to be provided by Div 28. Div 28 bidders need to know what kind of interlock is being provided and how it is intended to function with the security controls, thus we propose that all interlock power supplies be provided and installed by the contractor who is providing and installing the interlock devices

Answer: Div. 28 shall provide interlocked as specified and coordinate with other divisions as required.

Question: Neither section 08 7100 (hardware schedule) nor drawing A601 reference which door types/groups get card readers. Please modify to ensure all affected parties are on the same page.

Answer: Sufficient information is provided in drawings and specifications.

Question: Who is responsible to provide the control room workstations, monitors, etc…?

Answer: Sufficient information is provided in drawings and specifications.

Question: Unable to find security panel locations: ACS0, ACS1, VSS1

Answer: This is addressed in this addendum.

Question: Missing security door types and camera types on the following drawings: EY101B (elevator cameras), EY102B, EY103, EY104alt, EY105

Answer: This is addressed in this addendum.

Question: Spec sections 28 1300 and 28 4621 contradict each other. Please clarify. Security control panels are specified AMAG, Genetec, and S2 but the access control systems specification refers to a lot more than just these.

Answer: This is addressed in this addendum.

END OF ELECTRICAL ADDENDUM