MULTI-STEP BIDDING PROCESS
FOR
GENERAL CONTRACTORS

Single Project---Short-Listing

Request for Submittals

March 24, 2009

SCOFIELD MAINTENANCE STATION IMPROVEMENTS

UTAH DEPARTMENT OF TRANSPORTATION

SCOFIELD, UTAH

DFCM Project Number 08300900

Archiplex Group
255 Crossroad Square
Salt Lake City, Utah 84115

TABLE OF CONTENTS

	Page #
Title Sheet	1
Table of Contents	2
Notice to Contractors	3
Description of Work	4
Multi-Step Bidding Process	5
Multi-Step Project Schedule	12
Bid Form	13
Bid Bond	15
Instructions and Subcontractors List Form	16
Contractor's Agreement	19
Performance Bond	24
Payment Bond	25

DFCM Supplemental Conditions dated July 15, 2008 – By Reference
DFCM General Conditions dated May 25, 2005 --- By Reference

NOTICE TO CONTRACTORS

The State of Utah - Division of Facilities Construction and Management (DFCM) is requesting submissions for the following project:

Project Name: **UDOT – Scofield Maintenance Station Improvements**

Project No. **08300900**

Project Description: **Demolish existing maintenance building and construct new building based on specifications and drawings.**

Cost Estimate: **$900,000.00**

DFCM is entering into a Multi-Step Bidding Process for Construction services. A short-listing of contractors will be based on the selection criteria outlined in the bidding documents contained herein. Short-listed contractors will be invited to submit bids on the project described above. **The only contractors allowed to bid on this project will be contractors short-listed by the selection committee.**

All contractors responding to this procurement must comply with and require all of their subcontractors to comply with the license laws as required by the State of Utah.

The bidding documents including plans and specification, short-listing requirements and schedule will be available at **12:00 PM on Tuesday, March 24, 2009** on the DFCM web page at http://dfcm.utah.gov and from DFCM, 4110 State Office Building, Salt Lake City, Utah 84114, telephone (801) 538-3018. For questions regarding this solicitation, please contact **Michael Ambre**, DFCM, at (801) 209-9104. No others are to be contacted regarding this solicitation.

A **mandatory** pre-submittal meeting to discuss the multi-step bidding process will be held at **10:00 AM on Monday, March 30, 2009** at the DFCM Office, 4110 State Office Building, Salt Lake City, Utah.

When bidding on this project, short-listed contractors will be required to submit a Bid Bond in the amount of five percent (5%) of the bid amount, made payable to the Division of Facilities Construction and Management on DFCM's Bid Bond Form. A Bid Bond must accompany each bid.

The Division of Facilities Construction & Management reserves the right to reject any or all submittals/bids or to waive any formality or technicality in any submittal/bid in the interest of the State.

DIVISION OF FACILITIES CONSTRUCTION AND MANAGEMENT
JOANNA REESE, CONTRACT COORDINATOR
4110 State Office Bldg., Salt Lake City, Utah 84114

DESCRIPTION OF WORK

The only contractors allowed to bid on this project will be contractors short-listed by the selection committee.

Project Description:
Demolish the existing maintenance building and construct new building on site. The new maintenance station resembles other recently constructed UDOT stations. This project includes a CMU structure, electrical, mechanical, re-construction of the detention pond, earth work, landscaping, and architectural finishes.

Individual contractors or alliances between two or more contractors are allowed in this process to form a team. However, one contractor or firm MUST be declared as the lead firm representing the team. If the team is short-listed through this multi-step process, the state will only enter into contracts with the lead contractor or firm. The lead contractor or firm must be licensed by the State of Utah and comply with and require all of its subcontractors to comply with the license laws as required by the State of Utah.

MULTI-STEP BIDDING PROCESS
SHORT-LISTING OF GENERAL CONTRACTORS

The short-listing of contractors will be based on the selection criteria outlined in this document.

1. Multi-Step Bidding Documents

The Multi-Step bidding documents consist of all of the information contained in this solicitation and all documents listed in the Table of Contents. All said documents are incorporated in this document by reference.

2. Availability of Documents

Bidding documents are available free of charge at the locations stated on the Schedule. The bidding documents are also available at DFCM's internet web site at http://dfcm.utah.gov.

3. Drawings and Specifications and Interpretations

Drawings, specifications and other contract documents may be obtained as stated in the Notice to Contractors. If any firm is in doubt as to the meaning or interpretation of any part of the drawings, specifications, scope of work or contract documents, they shall submit, in writing, a request for interpretation to the authorized DFCM representative by the deadline identified in the schedule. Answers to questions and interpretations will be made via addenda issued by DFCM. Neither DFCM nor the designer shall be responsible for incorrect information obtained by contractors from sources other than the official drawings/specifications and addenda issued by DFCM.

4. Contact Information

Except as authorized by the DFCM Representative or as otherwise stated in the bidding documents or the pre-submittal meeting, communication during the multi-step bidding process shall be directed to the specified DFCM's Representative. In order to maintain the fair and equitable treatment of everyone, contractors shall not unduly contact or offer gifts or gratuities to owners, users or selection committee members in an effort to influence the selection process or in a manner that gives the appearance of influencing the selection process. This prohibition applies before the bidding documents are issued as the project is developed, and extends through the award of a contract. Failure to comply with this requirement may result in a disqualification from the multi-step bidding process. Contractors should be aware that selection committee members will be required to certify that they have not been contacted by any of the contractors in an attempt to influence the selection process.

5. Requests for Information

All requests for information shall be in writing and directed to:

Project Manager Michael Ambre
Division of Facilities Construction and Management
4110 State Office Building
Salt Lake City, Utah 84114
E-mail: **amabre@utah.gov**
Phone: **801-209-9104**
Facsimile: (801) 538-3267

6. Schedule

The Schedule lists the important events, dates, times and locations of meetings and submittals that must be met by the contractor.

7. Pre-Submittal Meeting

A **mandatory** pre-submittal meeting will be held on the date and time and at the location listed on the Schedule. During the meeting, questions will be answered about the multi-step bidding process. Questions about the project, plans and specifications will also be addressed. Attendance at this meeting is mandatory for General Contractors.

8. Submittal Due Dates and Times

All required submittals must be delivered to, and received by, the Division of Facilities Construction and Management by the time deadline established in the Schedule. Submittals received after the specified time deadline will not be accepted. Please allow adequate time for delivery. If using a courier service, the contractor is responsible for ensuring that delivery will be made directly to the required location prior to the deadline.

9. Last Day to Submit Questions

Questions must be submitted in writing to the DFCM project manager by the deadline listed on the Schedule.

10. Addendum

All clarifications will be in writing and issued as addenda to the RFS. Addenda will be posted on DFCM's web site at http://dfcm.utah.gov. **Contractors are responsible for obtaining information contained in the addenda from the web site. Any addenda issued prior to the submittal deadline shall become part of the multi-step bidding process and any information required must be included in the contractor's submittal.** Addenda issued prior to the submittal deadline shall become part of the bidding process and must be acknowledged on the bid form. Failure to acknowledge addenda may result in disqualification from bidding. DFCM shall not be responsible for incorrect information obtained by contractors from sources other than official addenda issued by DFCM.

11. Bid Bond Requirements

Short-listed contractors will be required to submit a bid bond in the amount of five percent (5%) of the bid amount made payable to the Division of Facilities Construction and Management on all bids. **The bid bond must be on the "Bid Bond Form" provided in this RFS (procurement documents) in order to be considered an acceptable bid.** If the bid bond security is submitted on a form other than DFCM's required "Bid Bond Form" and the bid security meets all other legal requirements, the contractor will be allowed to provide an acceptable bid bond by the close of business on the next business day following notification by DFCM of submission of a defective bid bond security.

12. Performance and References

DFCM will rate each firm's performance on every project worked on (rating scale: 1 = low; 5 = high). The rating may include comments from agencies. The firm will have an opportunity to review and comment on their ratings. Ratings on DFCM projects over the previous five years will be provided to the selection committee for their consideration in evaluating and scoring the past performance of each firm. If a firm has not completed at least three DFCM projects in the last five years, they shall provide by the time indicated on the Schedule, a list of references on additional projects for a total of five projects. References should include: (a) name and address of the project; (b) name and phone number of the person able to answer questions about the project; (c) date of when the work was completed; (d) the cost of the project and the type of project (school, office, warehouse, etc).

13. Statement of Qualifications

The Contractor (firm) shall provide five copies of a statement of qualifications by the time indicated on the Schedule. The statement should describe: (a) the financial viability of your firm; (b) the experience, skill level and qualifications of your firm - identify the specific project manager and site superintendent that will be assigned to this project; (c) provide examples of similar projects completed by your firm and the specific project manager and site superintendent that will be assigned to this project; (d) describe your firm's areas of expertise and other special qualifications as they pertain to this project; (e) document your firm's track record of completing projects on time and within budget; (f) explain your firm's reputation and commitment to high-quality workmanship; and (g) document your firm's ability to comply with the bonding requirements outlined earlier in this document. The statement of qualifications should be concise **(limit three pages)** yet contain sufficient information for evaluation by the selection committee. Note: If multiple firms combine to form a team, only the lead contractor or firm will be allowed to bid on projects. In addition, if any member of the team (contractor or firm) withdraws from the team, the entire team is disqualified and will not be allowed to bid.

14. Termination or Debarment Certification

Each firm must submit a certification that neither it nor its principals are presently debarred, suspended, proposed for debarment, declared ineligible, or voluntarily excluded from soliciting work by any governmental department or agency. The firm must also certify that neither the firm nor its principals have been terminated during the performance of a contract or withdrew from a contract to avoid termination. If the firm cannot certify to these statements, the firm shall submit a written explanation. Firms are to submit the certifications with their Statement of Qualifications.

15. Project Management Plan

Each Contractor (firm) shall provide five copies of a document describing their management plan by the time indicated on the Schedule. The document should include: (a) the process used for selecting and managing subcontractors; (b) a description of how the your firm is organized - pertaining to this project, document who will be in charge with decision making authority; (c) a project schedule detailing your firm's plan to ensure that the project will be completed on time (include timeline for ordering long lead materials and equipment); (d) a description of the process (action plan) your firm will take to bring the project back on schedule if it falls behind; (e) the procedures your firm has in place to minimize change orders; (f) the methodology used to ensure the accuracy of your bid; (g) your firm's approach to site security and project safety; (h) your firm's understanding of DFCM's construction general conditions and contract requirements; and (i) any other information that will assist the selection committee in evaluating your firm's approach to project management.

Include an organization chart of key personnel and a description of their duties. The management plan document should be concise **(limit three pages)** yet contain sufficient information for evaluation by the selection committee. The organization chart is a separate document and is not counted as one of the three pages.

16. Selection Committee

The selection committee will evaluate and score each firm/team. Committee members may include individuals from DFCM, User Agency/Institution, and a representative from the design or construction disciplines.

17. Interviews.

If interviews are required, firms will be notified of the date and time of their interview. Otherwise, the selection committee reserves the right to short-list firms/teams based on their submitted past performance ratings/references, statement of qualifications and project management plan.

If necessary, interviews will be conducted with all responsive and responsible contractors. Firms that are late or do not appear for the interview may be disqualified by the committee. The evaluation will be made using the selection criteria contained in this document. Information provided by the past performance/references, statement of qualifications, project management plan and the interview will be evaluated using the selection criteria as the basis for the selection. The purpose of the interview is to allow contractors an opportunity to present their qualifications, discuss past performance/references and describe their project management plan. It will also provide an opportunity for the selection committee to ask questions about these items. Firms may elect to have management personnel, project managers and superintendents in attendance. Attendance of subcontractors is at the discretion of the contractor. The method of presentation is at the discretion of the contractor.

18. Selection Criteria

The following criteria and weighting will be used in evaluating each firm/team. The selection committee will consider all criteria in performing a comprehensive evaluation of each firm/team. Each firm/team will be scored by each selection committee member in the categories listed below.

A. Performance Rating/References. The committee will receive a past performance rating and/or reference score for each firm/team. DFCM will compute the score for each firm/team based upon the information outlined earlier in this document. **Possible Points: 35**

B. Statement of Qualifications. The committee will evaluate and score each firm's/team's qualifications in accordance with the information outlined earlier in this document as well as additional information about the firm's/team's qualifications presented during the interview. **Possible Points: 35**

C. Project Management Plan. The committee will evaluate and score each firm's/team's project management approach in accordance with the information outlined earlier in this document as well as additional information about the firm's/team's project management approach presented during the interview. **Possible Points: 30**

TOTAL POINTS = 100 POINTS

19. Short-Listing

DFCM will **short-list up to six firms** receiving the highest score above the minimum score of 85 points from the selection committee. No firms receiving fewer than 85 points will be short-listed. Only short-listed firms will be invited to bid on this project. During the bidding process, the final contractor selection will be based on the lowest responsive and responsible bidder.

20. Product Approvals

Where reference is made to one or more proprietary products in the contract documents, but restrictive descriptive materials of one or more manufacturer(s) is referred to in the contract documents, the products of other manufacturers will be accepted, provided they equal or exceed the standards set forth in the drawings and specifications and are compatible with the intent and purpose of the design, subject to the written approval of the Designer. Such written approval must occur prior to the deadline established for the last scheduled addendum to be issued. The Designer's written approval will be included as part of the addendum issued by DFCM. If the descriptive material is not restrictive, the products of other manufacturers specified will be accepted without prior approval provided they are compatible with the intent and purpose of the design as determined by the Designer.

21. Trade Secrets or Confidential Matters

Any submitter may designate those portions of the submittals which contain trade secrets or other confidential matters that the Governmental Records and Access Management Act (GRAMA) would allow to be a protected record. Any disclosure of submittals or portions thereof shall be in accordance with GRAMA and State law.

22. Financial Responsibility of Contractors, Subcontractors and Sub-subcontractors

Contractors shall respond promptly to any inquiry in writing by DFCM to any concern of financial responsibility of the Contractor, Subcontractor or Sub-subcontractor. Failure to respond may result in the Contractor (firm) receiving a poor performance rating on this project.

23. Licensure

The Contractor shall comply with and require all of its Subcontractors to comply with the license laws as required by the State of Utah.

24. Permits

In concurrence with the requirements for permitting in the General Conditions, it is the responsibility of the Contractor to obtain the fugitive dust plan requirements from the Utah Division of Air Quality and the SWPPP requirements from the Utah Department of Environmental Quality and submit the completed forms and pay any permit fee that may be required for this specific project. Failure to obtain the required permit may result in work stoppage and/or fines from the regulating authority that will be the sole responsibility of the Contractor. Any delay to the project as a result of any such failure to obtain the permit or noncompliance with the permit shall not be eligible for any extension in the Contract Time.

25. Time is of the Essence

Time is of the essence in regard to all the requirements of the contract documents.

26. Bids

Before submitting a bid, each bidder shall carefully examine the contract documents; shall visit the site of the work; shall fully inform themselves as to all existing conditions and limitations; and shall include in the bid the cost of all items required by the contract documents including those added via addenda. If the bidder observes that portions of the contract documents are at variance with applicable laws, building codes, rules, regulations or contain obvious erroneous or uncoordinated information, the bidder shall promptly notify the DFCM Project Manager. Changes necessary to correct these issues will be made via addenda issued by DFCM.

The bid, bearing original signatures, must be typed or handwritten in ink on the Bid Form provided in the procurement documents and submitted in a sealed envelope at the location specified by the Notice to Contractor's prior to the published deadline for the submission of bids.

Bid bond security, in the amount of five percent (5%) of the bid, made payable to the Division of Facilities Construction and Management, shall accompany bid. THE BID BOND MUST BE ON THE BID BOND FORM PROVIDED IN THE PROCUREMENT DOCUMENTS IN ORDER TO BE CONSIDERED AN ACCEPTABLE BID.

If the bid bond security is submitted on a form other than the Owner's required bid bond form, and the bid security meets all other legal requirements, the bidder will be allowed to provide an acceptable bid bond by the close of business on the next business day following notification by DFCM of submission of a defective bid bond security. **A cashier's check cannot be used as a substitute for a bid bond.**

27. Listing of Subcontractors

Listing of Subcontractors shall be as summarized in the "Instructions and Subcontractors List Form", included as part of the contract documents. The Subcontractors List shall be delivered to DFCM or faxed to DFCM at (801)538-3677 within 24 hours of the bid opening. Requirements for listing additional subcontractors will be listed in the contract documents.

DFCM retains the right to audit or take other steps necessary to confirm compliance with requirements for the listing and changing of subcontractors. Any contractor who is found to not be in compliance with these requirements may receive a poor performance rating on this project.

28. Contract and Bond

The Contractor's Agreement will be in the form found in the specifications. The contract time will be as indicated in the bid. The successful bidder, simultaneously with the execution of the Contract Agreement, will be required to furnish a performance bond and a payment bond, both bearing original signatures, upon the forms provided in the procurement documents. The performance and payment bonds shall be for an amount equal to one hundred percent (100%) of the Contract Sum and secured from a company that meets the requirements specified in the requisite forms. Any bonding requirements for Subcontractors will be specified in the Supplementary General Conditions.

29. Award of Contract

The Contract will be awarded as soon as possible to the lowest, responsive and responsible bidder, based on the lowest combination of base bid and acceptable prioritized alternates, provided the bid is reasonable, is in the interests of DFCM to accept and after applying the Utah Preference Laws in U.C.A. Title 63, Chapter 56. DFCM reserves the right to waive any technicalities or formalities in any bid or in the bidding. Alternates will be accepted on a prioritized basis with Alternate 1 being highest priority, Alternate 2 having second priority, etc.

30. Right to Reject Bids

DFCM reserves the right to reject any or all Bids.

31. Withdrawal of Bids

Bids may be withdrawn on written request received from bidders within 24 hours after the bid opening if the contractor has made an error in preparing the bid.

STATE OF UTAH - DEPARTMENT OF ADMINISTRATIVE SERVICES

Division of Facilities Construction and Management

DFCM

MULTI-STEP PROJECT SCHEDULE

PROJECT NAME: **SCOFIELD MAINTENANCE STATION IMPROVEMENTS**
UTAH DEPARTMENT OF TRANSPORTATION – SCOFIELD, UTAH
DFCM PROJECT NO. : **08300900**

Event	Day	Date	Time	Place
Document Available, including Plans and Specifications	Tuesday	March 24, 2009	12:00 PM	DFCM 4110 State Office Building SLC, UT and DFCM web site*
Mandatory Pre-Submittal Meeting	Monday	March 30, 2009	10:00 AM	DFCM 4110 State Office Building SLC, UT
Last Day to Submit Questions on Shortlisting (In Writing)	Thursday	April 2, 2009	4:00 PM	Michael Ambre - DFCM E-mail mambre@utah.gov
Addendum on Shortlisting	Monday	April 6, 2009	2:00 PM	DFCM web site*
List of References, Statement of Qualifications, Project Management Plan, and Termination/Debarment Certification Due	Wednesday	April 8, 2009	12:00 NOON	DFCM 4110 State Office Building SLC, UT
Interviews by Selection Committee (if necessary)	Monday	April 13, 2009	To Be Announced	
Short-List Announced	ASAP			
Notice: Only Short-Listed Firms Will Be Allowed To Bid On This Project				
Mandatory Pre-Bid Meeting	Thursday	April 16, 2009	10:00 AM	Scolfield Maintenance Station 50 Front Street Scolfield, UT (On Site Meeting)
Last Day to Submit Questions (In Writing)	Tuesday	April 21, 2009	12:00 PM	Michael Ambre - DFCM E-mail mambre@utah.gov
Final Addendum (exception for bid delays)	Thursday	April 23, 2009	2:00 PM	DFCM web site*
Prime Contractors Turn in Bid and Bid Bond/Bid Opening in DFCM Conference Room	Tuesday	April 28, 2009	2:30 PM	DFCM 4110 State Office Building SLC, UT
Subcontractors List Due	Wednesday	April 29, 2009	2:30 PM	DFCM 4110 State Office Building SLC, UT Fax (801)-538-3677
Project Completion Date	Friday	October 23, 2009	5:00 PM	

*** DFCM's web site address is http://dfcm.utah.gov**

BID FORM

NAME OF BIDDER _____ DATE _____

To the Division of Facilities Construction and Management
4110 State Office Building
Salt Lake City, Utah 84114

The undersigned, responsive to the "Notice to Contractors" and in accordance with the "Instructions to Bidders", in compliance with your invitation for bids for the **Scofield Maintenance Station - Utah Department of Transportation – Scofield, Utah – DFCM Project No. 08300900** and having examined the Contract Documents and the site of the proposed Work and being familiar with all of the conditions surrounding the construction of the proposed Project, including the availability of labor, hereby proposes to furnish all labor, materials and supplies as required for the Work in accordance with the Contract Documents as specified and within the time set forth and at the price stated below. This price is to cover all expenses incurred in performing the Work required under the Contract Documents of which this bid is a part:

I/We acknowledge receipt of the following Addenda: _____

For all work shown on the Drawings and described in the Specifications and Contract Documents, I/we agree to perform for the sum of:

_____ DOLLARS ($_____)
(In case of discrepancy, written amount shall govern)

I/We guarantee that the Work will be Substantially Complete by October 23, 2009 should I/we be the successful bidder, and agree to pay liquidated damages in the amount of **$400.00** per day for each day after expiration of the Contract Time as stated in Article 3 of the Contractor's Agreement.

This bid shall be good for 45 days after bid opening.

Enclosed is a 5% bid bond, as required, in the sum of _____

The undersigned Contractor's License Number for Utah is _____.

Upon receipt of notice of award of this bid, the undersigned agrees to execute the contract within ten (10) days, unless a shorter time is specified in the Contract Documents, and deliver acceptable Performance and Payment bonds in the prescribed form in the amount of 100% of the Contract Sum for faithful performance of the contract.

The Bid Bond attached, in the amount not less than five percent (5%) of the above bid sum, shall become the property of the Division of Facilities Construction and Management as liquidated damages for delay and additional expense caused thereby in the event that the contract is not executed and/or acceptable l00% Performance and Payment bonds are not delivered within the time set forth.

Type of Organization:

_____
(Corporation, Partnership, Individual, etc.)

Any request and information related to Utah Preference Laws:

_____

Respectfully submitted,

_____
Name of Bidder

ADDRESS:

_____

_____

_____
Authorized Signature

BID BOND

(Title 63, Chapter 56, U. C. A. l953, as Amended)

KNOW ALL PERSONS BY THESE PRESENTS:

That _____ hereinafter referred to as the "Principal," and_____, a corporation organized and existing under the laws of the State of _____, with its principal office in the City of _____ and authorized to transact business in this State and U. S. Department of the Treasury Listed, (Circular 570, Companies Holding Certificates of Authority as Acceptable Securities on Federal Bonds and as Acceptable Reinsuring Companies); hereinafter referred to as the "Surety," are held and firmly bound unto the STATE OF UTAH, hereinafter referred to as the "Obligee," in the amount of $_____(5% of the accompanying bid), being the sum of this Bond to which payment the Principal and Surety bind themselves, their heirs, executors, administrators, successors and assigns, jointly and severally, firmly by these presents.

THE CONDITION OF THIS OBLIGATION IS SUCH that whereas the Principal has submitted to Obligee the accompanying bid incorporated by reference herein, dated as shown, to enter into a contract in writing for the _____Project.

NOW, THEREFORE, THE CONDITION OF THE ABOVE OBLIGATION IS SUCH, that if the said principal does not execute a contract and give bond to be approved by the Obligee for the faithful performance thereof within ten (10) days after being notified in writing of such contract to the principal, then the sum of the amount stated above will be forfeited to the State of Utah as liquidated damages and not as a penalty; if the said principal shall execute a contract and give bond to be approved by the Obligee for the faithful performance thereof within ten (10) days after being notified in writing of such contract to the Principal, then this obligation shall be null and void. It is expressly understood and agreed that the liability of the Surety for any and all defaults of the Principal hereunder shall be the full penal sum of this Bond. The Surety, for value received, hereby stipulates and agrees that obligations of the Surety under this Bond shall be for a term of sixty (60) days from actual date of the bid opening.

PROVIDED, HOWEVER, that this Bond is executed pursuant to provisions of Title 63, Chapter 56, Utah Code Annotated, 1953, as amended, and all liabilities on this Bond shall be determined in accordance with said provisions to same extent as if it were copied at length herein.

IN WITNESS WHEREOF, the above bounden parties have executed this instrument under their several seals on the date indicated below, the name and corporate seal of each corporate party being hereto affixed and these presents duly signed by its undersigned representative, pursuant to authority of its governing body.

DATED this _____ day of _____, 20_____ .

Principal's name and address (if other than a corporation):

_____

By:_____

Title: _____

Principal's name and address (if a corporation):

_____

By _____

Title: _____

(Affix Corporate Seal)

Surety's name and address:

_____

_____

By:_____

Attorney-in-Fact (Affix Corporate Seal)

STATE OF _____)
) ss.
COUNTY OF _____)

On this ____ day of _____, 20_____, personally appeared before me _____, whose identity is personally known to me or proved to me on the basis of satisfactory evidence, and who, being by me duly sworn, did say that he/she is the Attorney-in-fact of the above-named Surety Company, and that he/she is duly authorized to execute the same and has complied in all respects with the laws of Utah in reference to becoming sole surety upon bonds, undertakings and obligations, and that he/she acknowledged to me that as Attorney-in-fact executed the same.

Subscribed and sworn to before me this _____ day of _____, 20_____.
My Commission Expires: _____
Resides at: _____

_____

NOTARY PUBLIC

Agency: _____
Agent: _____
Address: _____
Phone: _____

Approved As To Form: May 25, 2005
By Alan S. Bachman, Asst Attorney General

INSTRUCTIONS AND SUBCONTRACTORS LIST FORM

The three low bidders, as well as all other bidders that desire to be considered, are required by law to submit to DFCM within 24 hours of bid opening a list of **ALL** first-tier subcontractors, including the subcontractor's name, bid amount and other information required by Building Board Rule and as stated in these Contract Documents, based on the following:

DOLLAR AMOUNTS FOR LISTING

PROJECTS UNDER $500,000: ALL FIRST-TIER SUBS $20,000 OR OVER MUST BE LISTED
PROJECTS $500,000 OR MORE: ALL FIRST-TIER SUBS $35,000 OR OVER MUST BE LISTED

- Any additional subcontractors identified in the bid documents shall also be listed.
- The DFCM Director may not consider any bid submitted by a bidder if the bidder fails to submit a subcontractor list meeting the requirements of State law.
- List subcontractors for base bid as well as the impact on the list that the selection of any alternate may have.
- Bidder may not list more than one subcontractor to perform the same work.
- If there are no subcontractors for the job that are required to be reported by State law (either because there are no subcontractors that will be used on the project or because there are no first-tier subcontractors over the dollar amounts referred to above), then you do not need to submit a sublist. If you do not submit a sublist, it will be deemed to be a representation by you that there are no subcontractors on the job that are required to be reported under State law. At any time, DFCM reserves the right to inquire, for security purposes, as to the identification of the subcontractors at any tier that will be on the worksite.

LICENSURE:

The subcontractor's name, the type of work, the subcontractor's bid amount, and the subcontractor's license number as issued by DOPL, if such license is required under Utah Law, shall be listed. Bidder shall certify that all subcontractors, required to be licensed, are licensed as required by State law. A subcontractor includes a trade contractor or specialty contractor and does not include suppliers who provide only materials, equipment, or supplies to a contractor or subcontractor.

'SPECIAL EXCEPTION':

A bidder may list 'Special Exception' in place of a subcontractor when the bidder intends to obtain a subcontractor to perform the work at a later date because the bidder was unable to obtain a qualified or reasonable bid under the provisions of U.C.A.Section 63A-5-208(4). The bidder shall insert the term 'Special Exception' for that category of work, and shall provide documentation with the subcontractor list describing the bidder's efforts to obtain a bid of a qualified subcontractor at a reasonable cost and why the bidder was unable to obtain a qualified subcontractor bid. The Director must find that the bidder complied in good faith with State law requirements for any 'Special Exception' designation, in order for the bid to be considered. If awarded the contract, the Director shall supervise the bidder's efforts to obtain a qualified subcontractor bid. The amount of the awarded contract may not be adjusted to reflect the actual amount of the subcontractor's bid. Any listing of 'Special Exception' on the sublist form shall also include amount allocated for that work.

GROUNDS FOR DISQUALIFICATION:

The Director may not consider any bid submitted by a bidder if the bidder fails to submit a subcontractor list meeting the requirements of State law. Director may withhold awarding the contract to a particular bidder if one or more of the proposed subcontractors are considered by the Director to be unqualified to do the Work or for

such other reason in the best interest of the State of Utah. Notwithstanding any other provision in these instructions, if there is a good faith error on the sublist form, at the sole discretion of the Director, the Director may provide notice to the contractor and the contractor shall have 24 hours to submit the correction to the Director. If such correction is submitted timely, then the sublist requirements shall be considered met.

CHANGES OF SUBCONTRACTORS SPECIFICALLY IDENTIFIED ON SUBLIST FORM:

Subsequent to twenty-four hours after the bid opening, the contractor may change its listed subcontractors only after receiving written permission from the Director based on complying with all of the following criteria.

(1) The contractor has established in writing that the change is in the best interest of the State and that the contractor establishes an appropriate reason for the change, which may include, but not is not limited to, the following reasons: the original subcontractor has failed to perform, or is not qualified or capable of performing, and/or the subcontractor has requested in writing to be released.
(2) The circumstances related to the request for the change do not indicate any bad faith in the original listing of the subcontractors.
(3) Any requirement set forth by the Director to ensure that the process used to select a new subcontractor does not give rise to bid shopping.
(4) Any increase in the cost of the subject subcontractor work is borne by the contractor.
(5) Any decrease in the cost of the subject subcontractor work shall result in a deductive change order being issued for the contract for such decreased amount.
(6) The Director will give substantial weight to whether the subcontractor has consented in writing to being removed unless the Contractor establishes that the subcontractor is not qualified for the work.

EXAMPLE:

Example of a list where there are only four subcontractors:

TYPE OF WORK	SUBCONTRACTOR, "SELF" OR "SPECIAL EXCEPTION"	SUBCONTRACTOR BID AMOUNT	CONTRACTOR LICENSE #
ELECTRICAL	ABCD Electric Inc.	$350,000.00	123456789000
LANDSCAPING	"Self" *	$300,000.00	123456789000
CONCRETE (ALTERNATE #1)	XYZ Concrete Inc	$298,000.00	987654321000
MECHANICAL	"Special Exception" (attach documentation)	Fixed at: $350,000.00	(TO BE PROVIDED AFTER OBTAINING SUBCONTRACTOR)

* Bidders may list "self", but it is not required.

PURSUANT TO STATE LAW - SUBCONTRACTOR BID AMOUNTS CONTAINED IN THIS SUBCONTRACTOR LIST SHALL NOT BE DISCLOSED UNTIL THE CONTRACT HAS BEEN AWARDED.

STATE OF UTAH - DEPARTMENT OF ADMINISTRATIVE SERVICES

Division of Facilities Construction and Management

DFCM

SUBCONTRACTORS LIST

FAX TO 801-538-3677

PROJECT TITLE: _____

Caution: You must read and comply fully with instructions.

TYPE OF WORK	SUBCONTRACTOR, "SELF" OR "SPECIAL EXCEPTION"	SUBCONTRACTOR BID AMOUNT	CONT. LICENSE #

We certify that:

l. This list includes all subcontractors as required by the instructions, including those related to the base bid as well as any alternates.
2. We have listed "Self" or "Special Exception" in accordance with the instructions.
3. All subcontractors are appropriately licensed as required by State law.

FIRM: _____

DATE: _____ SIGNED BY: _____

NOTICE: FAILURE TO SUBMIT THIS FORM, PROPERLY COMPLETED AND SIGNED, AS REQUIRED IN THESE CONTRACT DOCUMENTS, SHALL BE GROUNDS FOR OWNER'S REFUSAL TO ENTER INTO A WRITTEN CONTRACT WITH BIDDER. ACTION MAY BE TAKEN AGAINST BIDDERS BID BOND AS DEEMED APPROPRIATE BY OWNER. ATTACH A SECOND PAGE IF NECESSARY.

300/300/____/FVA/____/_____/__/_
Project No. _____

CONTRACTOR'S AGREEMENT

FOR:

_____
_____
_____

THIS CONTRACTOR'S AGREEMENT, made and entered into this __ day of _____, 2006, by and between the DIVISION OF FACILITIES CONSTRUCTION AND MANAGEMENT, hereinafter referred to as "DFCM", and _____, incorporated in the State of Utah and authorized to do business in the State of Utah, hereinafter referred to as "Contractor", whose address is _____Utah _____.

WITNESSETH: WHEREAS, DFCM intends to have _____ Work performed at _____
_____

WHEREAS, Contractor agrees to perform the Work for the sum stated herein.

NOW, THEREFORE, DFCM and Contractor for the consideration provided in this Contractor's Agreement, agree as follows:

ARTICLE 1. SCOPE OF WORK. The Work to be performed shall be in accordance with the Contract Documents prepared by _____ and entitled "_____."

The DFCM General Conditions ("General Conditions") dated May 25, 2005 and Supplemental General Conditions dated July 15, 2008 (also referred to as "General Condition"), on file at the office of DFCM and available on the DFCM website, are hereby incorporated by reference as part of this Agreement and are included in the specifications for this Project. All terms used in this Contractor's Agreement shall be as defined in the Contract Documents, and in particular, the General Conditions.

The Contractor Agrees to furnish labor, materials and equipment to complete the Work as required in the Contract Documents which are hereby incorporated by reference. It is understood and agreed by the parties hereto that all Work shall be performed as required in the Contract Documents and shall be subject to inspection and approval of DFCM or its authorized representative. The relationship of the Contractor to the DFCM hereunder is that of an independent Contractor.

ARTICLE 2. CONTRACT SUM. The DFCM agrees to pay and the Contractor agrees to accept in full performance of this Contractor's Agreement, the sum of _____**DOLLARS AND NO CENTS ($_____)**, which is the base bid, and includes the cost of a 100%

Performance Bond and a 100% Payment Bond as well as all insurance requirements of the Contractor. Said bonds have already been posted by the Contractor pursuant to State law. The required proof of insurance certificates have been delivered to DFCM in accordance with the General Conditions before the execution of this Contractor's Agreement.

ARTICLE 3. TIME OF COMPLETION AND DELAY REMEDY. The Work shall be Substantially Complete by _____ after the date of the Notice to Proceed. Contractor agrees to pay liquidated damages in the amount of _____ per day for each day after expiration of the Contract Time until the Contractor achieves Substantial Completion in accordance with the Contract Documents, if Contractor's delay makes the damages applicable. The provision for liquidated damages is: (a) to compensate the DFCM for delay only; (b) is provided for herein because actual damages can not be readily ascertained at the time of execution of this Contractor's Agreement; (c) is not a penalty; and (d) shall not prevent the DFCM from maintaining Claims for other non-delay damages, such as costs to complete or remedy defective Work.

No action shall be maintained by the Contractor, including its or Subcontractor or suppliers at any tier, against the DFCM or State of Utah for damages or other claims due to losses attributable to hindrances or delays from any cause whatsoever, including acts and omissions of the DFCM or its officers, employees or agents, except as expressly provided in the General Conditions. The Contractor may receive a written extension of time, signed by the DFCM, in which to complete the Work under this Contractor's Agreement in accordance with the General Conditions.

ARTICLE 4. CONTRACT DOCUMENTS. The Contract Documents consist of this Contractor's Agreement, the Conditions of the Contract (DFCM General Conditions, Supplementary and other Conditions), the Drawings, Specifications, Addenda and Modifications. The Contract Documents shall also include the bidding documents, including the Notice to Contractors, Instructions to Bidders/Proposers and the Bid/Proposal, to the extent not in conflict therewith and other documents and oral presentations that are documented as an attachment to the contract.

All such documents are hereby incorporated by reference herein. Any reference in this Contractor's Agreement to certain provisions of the Contract Documents shall in no way be construed as to lessen the importance or applicability of any other provisions of the Contract Documents.

ARTICLE 5. PAYMENT. The DFCM agrees to pay the Contractor from time to time as the Work progresses, but not more than once each month after the date of Notice to Proceed, and only upon Certificate of the A/E for Work performed during the preceding calendar month, ninety-five percent (95%) of the value of the labor performed and ninety-five percent (95%) of the value of materials furnished in place or on the site. The Contractor agrees to furnish to the DFCM invoices for materials purchased and on the site but not installed, for which the

Contractor requests payment and agrees to safeguard and protect such equipment or materials and is responsible for safekeeping thereof and if such be stolen, lost or destroyed, to replace same.

Such evidence of labor performed and materials furnished as the DFCM may reasonably require shall be supplied by the Contractor at the time of request for Certificate of Payment on account. Materials for which payment has been made cannot be removed from the job site without DFCM's written approval. Five percent (5%) of the earned amount shall be retained from each monthly payment. The retainage, including any additional retainage imposed and the release of any retainage, shall be in accordance with UCA 13-8-5 as amended. Contractor shall also comply with the requirements of UCA 13-8-5, including restrictions of retainage regarding subcontractors and the distribution of interest earned on the retention proceeds. The DFCM shall not be responsible for enforcing the Contractor’s obligations under State law in fulfilling the retention law requirements with subcontractors at any tier.

ARTICLE 6. INDEBTEDNESS. Before final payment is made, the Contractor must submit evidence satisfactory to the DFCM that all payrolls, materials bills, subcontracts at any tier and outstanding indebtedness in connection with the Work have been properly paid. Final Payment will be made after receipt of said evidence, final acceptance of the Work by the DFCM as well as compliance with the applicable provisions of the General Conditions.

Contractor shall respond immediately to any inquiry in writing by DFCM as to any concern of financial responsibility and DFCM reserves the right to request any waivers, releases or bonds from Contractor in regard to any rights of Subcontractors (including suppliers) at any tier or any third parties prior to any payment by DFCM to Contractor.

ARTICLE 7. ADDITIONAL WORK. It is understood and agreed by the parties hereto that no money will be paid to the Contractor for additional labor or materials furnished unless a new contract in writing or a Modification hereof in accordance with the General Conditions and the Contract Documents for such additional labor or materials has been executed. The DFCM specifically reserves the right to modify or amend this Contractor's Agreement and the total sum due hereunder either by enlarging or restricting the scope of the Work.

ARTICLE 8. INSPECTIONS. The Work shall be inspected for acceptance in accordance with the General Conditions.

ARTICLE 9. DISPUTES. Any dispute, PRE or Claim between the parties shall be subject to the provisions of Article 7 of the General Conditions. DFCM reserves all rights to pursue its rights and remedies as provided in the General Conditions.

ARTICLE 10. TERMINATION, SUSPENSION OR ABANDONMENT. This Contractor’s Agreement may be terminated, suspended or abandoned in accordance with the General Conditions.

ARTICLE 11. DFCM'S RIGHT TO WITHHOLD CERTAIN AMOUNT AND MAKE USE THEREOF. The DFCM may withhold from payment to the Contractor such amount as, in DFCM's judgment, may be necessary to pay just claims against the Contractor or Subcontractor at any tier for labor and services rendered and materials furnished in and about the Work. The DFCM may apply such withheld amounts for the payment of such claims in DFCM's discretion. In so doing, the DFCM shall be deemed the agent of Contractor and payment so made by the DFCM shall be considered as payment made under this Contractor's Agreement by the DFCM to the Contractor. DFCM shall not be liable to the Contractor for any such payment made in good faith. Such withholdings and payments may be made without prior approval of the Contractor and may be also be prior to any determination as a result of any dispute, PRE, Claim or litigation.

ARTICLE 12. INDEMNIFICATION. The Contractor shall comply with the indemnification provisions of the General Conditions.

ARTICLE 13. SUCCESSORS AND ASSIGNMENT OF CONTRACT. The DFCM and Contractor, respectively bind themselves, their partners, successors, assigns and legal representatives to the other party to this Agreement, and to partners, successors, assigns and legal representatives of such other party with respect to all covenants, provisions, rights and responsibilities of this Contractor’s Agreement. The Contractor shall not assign this Contractor’s Agreement without the prior written consent of the DFCM, nor shall the Contractor assign any moneys due or to become due as well as any rights under this Contractor’s Agreement, without prior written consent of the DFCM.

ARTICLE 14. RELATIONSHIP OF THE PARTIES. The Contractor accepts the relationship of trust and confidence established by this Contractor's Agreement and covenants with the DFCM to cooperate with the DFCM and A/E and use the Contractor's best skill, efforts and judgment in furthering the interest of the DFCM; to furnish efficient business administration and supervision; to make best efforts to furnish at all times an adequate supply of workers and materials; and to perform the Work in the best and most expeditious and economic manner consistent with the interests of the DFCM.

ARTICLE 15. AUTHORITY TO EXECUTE AND PERFORM AGREEMENT. Contractor and DFCM each represent that the execution of this Contractor's Agreement and the performance thereunder is within their respective duly authorized powers.

ARTICLE 16. ATTORNEY FEES AND COSTS. Except as otherwise provided in the dispute resolution provisions of the General Conditions, the prevailing party shall be entitled to reasonable attorney fees and costs incurred in any action in the District Court and/or appellate body to enforce this Contractor's Agreement or recover damages or any other action as a result of a breach thereof.

IN WITNESS WHEREOF, the parties hereto have executed this Contractor's Agreement on the day and year stated hereinabove.

CONTRACTOR:

_____
Signature Date

Title: _____

_____
Please type/print name clearly

State of _____)
)
County of _____)

On this ____ day of _____, 20____, personally appeared before me, _____, whose identity is personally known to me (or proved to me on the basis of satisfactory evidence) and who by me duly sworn (or affirmed), did say that he (she) is the _____ (title or office) of the firm and that said document was signed by him (her) in behalf of said firm.

_____
Notary Public

(SEAL)

My Commission Expires _____

APPROVED AS TO AVAILABILITY OF FUNDS:

_____
David D. Williams, Jr. Date
DFCM Administrative Services Director

DIVISION OF FACILITIES CONSTRUCTION AND MANAGEMENT

_____
Lynn A. Hinrichs Date
Assistant Director Construction Management

APPROVED AS TO FORM:
ATTORNEY GENERAL
July 15, 2008
By: Alan S. Bachman
Asst Attorney General

APPROVED FOR EXPENDITURE:

_____
Division of Finance Date

PERFORMANCE BOND

(Title 63, Chapter 56, U. C. A. 1953, as Amended)

That _____ hereinafter referred to as the "Principal" and _____, a corporation organized and existing under the laws of the State of _____, with its principal office in the City of _____ and authorized to transact business in this State and U. S. Department of the Treasury Listed (Circular 570, Companies Holding Certificates of Authority as Acceptable Securities on Federal Bonds and as Acceptable Reinsuring Companies); hereinafter referred to as the "Surety," are held and firmly bound unto the State of Utah, hereinafter referred to as the "Obligee, " in the amount of _____ DOLLARS ($_____) for the payment whereof, the said Principal and Surety bind themselves and their heirs, administrators, executors, successors and assigns, jointly and severally, firmly by these presents.

WHEREAS, the Principal has entered into a certain written Contract with the Obligee, dated the _____ day of _____, 20____, to construct _____ in the County of _____, State of Utah, Project No. _____, for the approximate sum of _____ _____ Dollars ($_____), which Contract is hereby incorporated by reference herein.

NOW, THEREFORE, the condition of this obligation is such that if the said Principal shall faithfully perform the Contract in accordance with the Contract Documents including, but not limited to, the Plans, Specifications and conditions thereof, the one year performance warranty, and the terms of the Contract as said Contract may be subject to Modifications or changes, then this obligation shall be void; otherwise it shall remain in full force and effect.

No right of action shall accrue on this bond to or for the use of any person or corporation other than the state named herein or the heirs, executors, administrators or successors of the Owner.

The parties agree that the dispute provisions provided in the Contract Documents apply and shall constitute the sole dispute procedures of the parties.

PROVIDED, HOWEVER, that this Bond is executed pursuant to the Provisions of Title 63, Chapter 56, Utah Code Annotated, 1953, as amended, and all liabilities on this Bond shall be determined in accordance with said provisions to the same extent as if it were copied at length herein.

IN WITNESS WHEREOF, the said Principal and Surety have signed and sealed this instrument this _____ day of _____, 20_____.

WITNESS OR ATTESTATION:

_____

PRINCIPAL:

_____

By: _____

(Seal)

Title: _____

WITNESS OR ATTESTATION:

_____

SURETY:

_____

By: _____
Attorney-in-Fact

(Seal)

STATE OF _____)
) ss.
COUNTY OF _____)

On this _____ day of _____, 20___, personally appeared before me _____, whose identity is personally known to me or proved to me on the basis of satisfactory evidence, and who, being by me duly sworn, did say that he/she is the Attorney in-fact of the above-named Surety Company and that he/she is duly authorized to execute the same and has complied in all respects with the laws of Utah inreference to becoming sole surety upon bonds, undertakings and obligations, and that he/she acknowledged to me that as Attorney-in-fact executed the same.

Subscribed and sworn to before me this _____ day of _____, 20_____.
My commission expires: _____
Resides at: _____

_____
NOTARY PUBLIC

Agency: _____
Agent: _____
Address: _____
Phone: _____

Approved As To Form: May 25, 2005
By Alan S. Bachman, Asst Attorney General

PAYMENT BOND

(Title 63, Chapter 56, U. C. A. l953, as Amended)

KNOW ALL PERSONS BY THESE PRESENTS:

That _____ hereinafter referred to as the "Principal," and _____ _____, a corporation organized and existing under the laws of the State of _____authorized to do business in this State and U. S. Department of the Treasury Listed (Circular 570, Companies Holding Certificates of Authority as Acceptable Securities on Federal Bonds and as Acceptable Reinsuring Companies); with its principal office in the City of _____, hereinafter referred to as the "Surety," are held and firmly bound unto the State of Utah hereinafter referred to as the "Obligee," in the amount of _____ _____ Dollars ($_____) for the payment whereof, the said Principal and Surety bind themselves and their heirs, administrators, executors, successors and assigns, jointly and severally, firmly by these presents.

WHEREAS, the Principal has entered into a certain written Contract with the Obligee, dated the _____ day of _____, 20____, to construct _____ in the County of _____, State of Utah, Project No. _____ for the approximate sum of _____ _____ Dollars ($_____), which contract is hereby incorporated by reference herein.

NOW, THEREFORE, the condition of this obligation is such that if the said Principal shall pay all claimants supplying labor or materials to Principal or Principal's Subcontractors in compliance with the provisions of Title 63, Chapter 56, of Utah Code Annotated, l953, as amended, and in the prosecution of the Work provided for in said Contract, then, this obligation shall be void; otherwise it shall remain in full force and effect.

That said Surety to this Bond, for value received, hereby stipulates and agrees that no changes, extensions of time, alterations or additions to the terms of the Contract or to the Work to be performed thereunder, or the specifications or drawings accompanying same shall in any way affect its obligation on this Bond, and does hereby waive notice of any such changes, extensions of time, alterations or additions to the terms of the Contract or to the Work or to the specifications or drawings and agrees that they shall become part of the Contract Documents.

PROVIDED, HOWEVER, that this Bond is executed pursuant to the provisions of Title 63, Chapter 56, Utah Code Annotated, 1953, as amended, and all liabilities on this Bond shall be determined in accordance with said provisions to the same extent as if it were copied at length herein.

IN WITNESS WHEREOF, the said Principal and Surety have signed and sealed this instrument this _____ day of _____, 20____.

WITNESS OR ATTESTATION:

_____

(Seal)

PRINCIPAL:

_____

By: _____

Title: _____

WITNESS OR ATTESTATION:

_____

SURETY:

_____

By: _____

Attorney-in-Fact (Seal)

STATE OF _____)
) ss.
COUNTY OF _____)

On this _____ day of _____, 20_____, personally appeared before me _____ _____, whose identity is personally known to me or proved to me on the basis of satisfactory evidence, and who, being by me duly sworn, did say that he/she is the Attorney-in-fact of the above-named Surety Company, and that he/she is duly authorized to execute the same and has complied in all respects with the laws of Utah in reference to becoming sole surety upon bonds, undertakings and obligations, and that he/she acknowledged to me that as Attorney-in-fact executed the same.

Subscribed and sworn to before me this _____ day of _____, 20_____.
My commission expires: _____
Resides at: _____

_____
NOTARY PUBLIC

Agency: _____
Agent: _____
Address: _____
Phone:

Approved As To Form: May 25, 2005
By Alan S. Bachman, Asst Attorney General

UTAH DEPARTMENT OF TRANSPORTATION
MAINTENANCE STATION #4435A

SCOFIELD, UTAH

PROJECT MANUAL

February 2009

Prepared By

Archiplex Group

DFCM Project No. 08300900

UDOT MAINTENANCE BUILDING – STATION #4435A
Scofield, Utah

February 2009

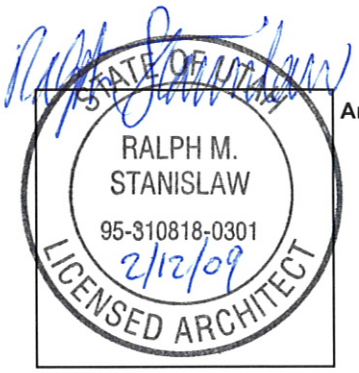

Architect

ARCHIPLEX GROUP
255 Crossroad Square
Salt Lake City, Utah 84115
(801) 961-7070
Fax: (801) 961-7373

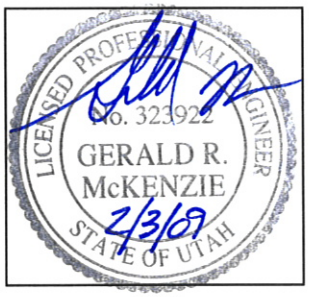

Structural Engineer

BHB Consulting Engineers
2766 South Main
Salt Lake City, UT 84115
(801) 355-5656
Fax: (801) 355-5950

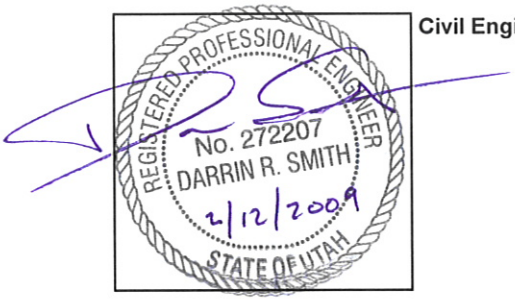

Civil Engineer

PEPG Engineering
8805 S. Sandy Parkway
Sandy, UT 84070
Ph. (801) 562-2521
Fax: (801) 562-2551

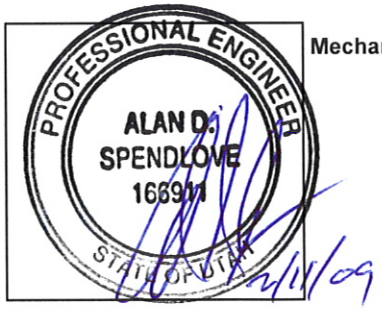

Mechanical Engineer

PVE Engineering
1040 North 2200 West, Suite 100
Salt Lake City, UT 84116
(801) 359-3158
Fax: (801) 521-4114

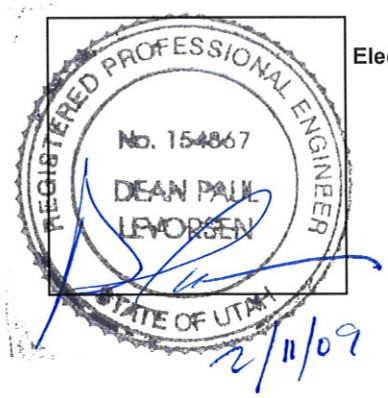

Electrical Engineer

PVE Engineering
1040 North 2200 West, Suite 100
Salt Lake City, UT 84116
(801) 359-3158
Fax: (801) 521-4114

Professional Stamps

LIST OF WARRANTIES

NOTE: The following is a listing and brief description of warranties and certifications required by the specification sections. It does not supersede the requirements of the sections nor is it necessarily complete. Refer to each section for actual requirements. Warranties are to be completed in behalf of the End User and submitted to the Project Manager / General Contractor as part of Project Close -out.

Section Title	Section Article	Description
Concrete Waterproofing Admixture	03053 4.1	5-year manufacturer warranty
Cast In place Concrete	03300 - 1.5	Two-Year defective concrete guarantee.
Structural Steel	05120 - 1.4	Welder Certification
Steel Joists and Joist Girders	05220 - 1.3	Manufacturer's certification that joists comply with SJI "Specifications".
	05220 - 1.4	Qualify welding processes and welding operators.
Steel Deck	05310 - 1.4	Use qualified welding processes and welding operators.
Cold-formed Metal Framing	05400 - 1.4	Use qualified welders and comply with American Welding Society (AWS) D1.3.
Metal - Fabrications	05500 - 1.3	Welder certificates signed by Contractor.
	05500 - 1.4	Certify that each welder has satisfactorily passed AWS qualifications.
Metal Stairs	05510 - 1.4	Welder certificates signed by Contractor.
	05510 - 1.5	Certify that each welder has satisfactorily passed AWS qualifications.
Gratings	05530 - 1.4	Welders certificates.
Miscellaneous Carpentry	06105 - 1.3	Preservative Treatment certification for wood. Waterborne Preservative Treatment certification for wood.
Interior Architectural Woodwork	06402 - 1.3	Product certificates signed by woodwork manufacturer.
Solid Surface Fabrications	06651 -1.7 B.	Windowsills - Ten years from date of substantial completion.
Sheet Membrane Waterproofing	07710 - 1.4	Certification that products comply with local VOC regulations.
Joint Sealants	07901 - 1.4	Certificate attesting compliance with specification requirements and suitable for the use indicated.
Aluminum Windows	08520 - 1.8	Three-year aluminum window warranty.

Vinyl Windows	08521 - 1.8	Three-year vinyl window warranty.
Glazing	08800 - 1.9	Ten-year warranty on insulating glass.
Visual Display Boards	10100 - 1.3,	Certification that tackboard materials comply with requirements specified for flame spread ratings.
Toilet and Bath Accessories	10800 - 1.6	15-year warranty for silver spoilage of mirrors. 1-year mechanical parts and accessories.
Metal Building Systems	13125 - 1.5 E	Letter of Design Certification
	13125 - 1.5 F	Welding Certificates
	13125 - 1.5 G	Erector Certificates
	13125 - 1.5 H	Manufacturer Certificates
	13125 - 1.5 K	Product Test Reports
	13125 1.10 A	General Warranty
	13125 1.10 B	Special Warranty on Panels 5 years
	13125 1.10 C	Special Warranty on Panel Finishes 20 years
	13125 1.10 D	Special Warranty on Standing Seam Roof Panel Weather Tightness 20 years
Pipe and Pipe Fittings	15060 - 3.28	Welders certification.
Air-cooled Condensing Unit	15671 - 1.4	Five-year warranty on compressors.
Refrigerant Piping Systems	15753 - 1.3	Refrigerant piping installation by state licensed contractor.
Electrical General Provisions	16001 - 1.9	Certificate of approval from inspection authority at completion of the work.

TABLE OF CONTENTS

DOCUMENTS
COVER SHEET
PROFESSIONAL STAMPS
LIST OF WARRANTIES
TABLE OF CONTENTS

TECHNICAL SPECIFICATIONS

DIVISION 1 - GENERAL REQUIREMENTS

01010 SUMMARY OF WORK
01027 APPLICATIONS FOR PAYMENT
01035 MODIFICATION PROCEDURES
01040 PROJECT COORDINATION
01045 CUTTING AND PATCHING
01050 FIELD ENGINEERING
01095 REFERENCE STANDARDS AND DEFINITIONS
01096 MATERIAL KEYNOTE LEGEND
01200 PROJECT MEETINGS
01300 SUBMITTALS
01400 QUALITY CONTROL SERVICES
01500 TEMPORARY FACILITIES
01600 MATERIALS AND EQUIPMENT
01631 PRODUCT SUBSTITUTIONS
01700 PROJECT CLOSEOUT
01740 WARRANTIES AND BONDS

DIVISION 2 - SITEWORK

02050 DEMOLITION
02051 GENERAL SITE CONSTRUCTION REQUIREMENTS
02110 SITE CLEARING
02200 EARTHWORK
02513 ASPHALT CONCRETE PAVING
02514 PORTLAND CEMENT CONCRETE PAVING
02530 SANITARY SEWERAGE
02666 POTABLE WATER SYSTEMS
02720 STORM SEWERAGE SYSTEMS
02765 PAVEMENT MARKINGS
02822 CHAIN LINK FENCES
02831 SLIDING GATES

DIVISION 3 - CONCRETE

03052 CONCRETE WATERPROOFING SYSTEM
03053 CONCRETE WATERPROOFING ADMIXTURE
03054 OLIOPHOBIC SEALER
03055 SALT GUARD
03300 CAST-IN-PLACE CONCRETE

DIVISION 4 · MASONRY

04200 UNIT MASONRY

DIVISION 5 - METALS

05120 STRUCTURAL STEEL
05220 STEEL JOISTS AND JOIST GIRDERS
05310 STEEL DECK
05400 COLD-FORMED METAL FRAMING
05500 METAL FABRICATIONS

DIVISION 6 - WOOD AND PLASTICS

06105 MISCELLANEOUS CARPENTRY
06402 INTERIOR ARCHITECTURAL WOODWORK
06651 SOLID SURFACE FABRICATIONS

DIVISION 7 - THERMAL AND MOISTURE PROTECTION

07190 WATER REPELLENTS
07210 BUILDING INSULATION
07410 MANUFACTURED ROOF PANELS
07729 ROOF SNOW GUARDS
07901 JOINT SEALANTS

DIVISION 8 - DOORS AND WINDOWS

08111 STANDARD STEEL DOORS AND FRAMES
08360 SECTIONAL OVERHEAD DOORS
08521 HORIZONTAL SLIDING VINYL WINDOWS (PVC)
08710 DOOR HARDWARE
08800 GLAZING

DIVISION 9 - FINISHES

09255 GYPSUM BOARD ASSEMBLIES
09300 TILE
09511 ACOUSITCAL PANEL CEILINGS
09660 RESILIENT TILE FLOORING
09678 RESILIENT WALL BASE AND ACCESSORIES
09900 PAINTING

DIVISION 10 - SPECIALTIES

10100 VISUAL DISPLAY BOARDS
10155 TOILET PARTITIONS
10425 SIGNS
10500 METAL LOCKERS AND STORAGE CABINETS
10522 FIRE EXTINGUISHERS, CABINETS, AND ACCESSORIES
10800 TOILET AND BATH ACCESSORIES

DIVISION 11 - EQUIPMENT

NOT USED

DIVISION 12 - FURNISHINGS

12511 HORIZONTAL LOUVER BLINDS

DIVISION 13 · SPECIAL CONSTRUCTION

NOT USED

DIVISION 14 - CONVEYING SYSTEMS

14620 TROLLEY HOISTS

DIVISION 15 - MECHANICAL

15000 GENERAL MECHANICAL
15050 BASIC MATERIALS & METHODS
15060 PIPE AND PIPE FITTINGS
15170 MOTORS
15180 PIPE AND EQUIPMENT IDENTIFICATION
15191 AIR SYSTEM TESTING AND BALANCING
15200 VIBRATION, NOISE CONTROL AND SEISMIC PROTECTION
15250 INSULATION
15251 HOT WATER AND COLD WATER PIPE INSULATION
15258 DUCT INSULATION
15400 PLUMBING SYSTEMS
15410 PLUMBING FIXTURES
15411 HOT AND COLD WATER SYSTEMS AND DRAIN PAN PIPING SYSTEMS
15412 EMERGENCY PLUMBING FIXTURES
15413 SOIL, WASTE AND VENT PIPING SYSTEM
15452 DRINKING WATER COOLING SYSTEM
15460 PROPANE GAS FIRED STORAGE-TYPE WATER HEATERS
15490 WASTE OIL PIPING
15491 LUBRICATION EQUIPMENT
15576 FLUES
15577 FURNACE AIR PIPING
15600 RADIANT TUBE HEATERS
15611 GAS-FIRED FURNACES AND HEATERS
15670 CONDENSING UNITS
15820 DUCT ACCESSORIES
15838 POWER VENTILATORS
15855 DIFFUSERS, REGISTERS, AND GRILLES
15861 STEEL DUCTWORK
15862 ROUND DUCTWORK
15867 DUCTWORK TESTING
15887 LOUVERS AND VENTILATORS
15970 CONTROL SYSTEMS
15985 SEQUENCE OF OPERATION

DIVISION 16 - ELECTRICAL

16001 ELECTRICAL GENERAL PROVISIONS
16060 GROUNDING AND BONDING
16070 ELECTRICAL HANGERS AND SUPPORTS
16123 BUILDING WIRE AND CABLE
16128 LOW VOLTAGE DE-ICING / SNOW MELTING SYSTEM
16129 ELECTRICAL HEAT ROOF GUTTER MELT SYSTEM
16130 RACEWAY AND BOXES
16140 WIRING DEVICES GENERAL
16210 ELECTRICAL UTILITY SERVICES
16411 ENCLOSED SWITCHES
16421 ENCLOSED CONTROLLERS
16442 PANELBOARDS
16510 INTERIOR LUMINAIRES
16520 EXTERIOR LUMINAIRES
16740 TELEPHONE/DATA RACEWAY SYSTEMS

GEOTECHNICAL REPORT

COMCHECK REPORTS

SECTION 01010 - SUMMARY OF WORK

PART 1 - GENERAL

1.1 RELATED DOCUMENTS

A. Drawings and general provisions of Contract, including General and Supplementary Conditions and other Division-1 Specification Sections, apply to this Section.

1.2 PROJECT DESCRIPTION

A. The project consists of improvements to the maintenance station located in Scofield, UT, as described in the Contract Documents prepared by Archiplex Group, dated February 2009.

1. The following description is an outline of the work to be accomplished and not meant to be a definitive scope of work; scope of work is defined by the complete set of contract documents.

B. The Work consists of construction of a new CMU Maintenance Building, with demolition of existing Maintenance building and new detention pond, as indicated in the Contract Documents prepared by Archiplex Group. The Maintenance Building consists of a one-story structure designed to store and provide facilities for the maintenance of vehicles. Installation of fixed equipment (provided as part of the work unless otherwise noted), utility connections and fees, excavation, grading and other site improvements are required as part of the work.

1. The work includes site preparation, excavation, concrete, structural steel, CMU building with standing seam metal roof and accessories, hollow metal doors and frames, hardware, vinyl windows & glazing, interior finishes and furnishings, plumbing, heating and ventilation systems.
2. Interior finishing and related construction, including interior partitions and permanent doors, architectural woodwork, casework, equipment, and mechanical and electrical installations are required.
3. Exterior work includes utilities, membrane lined detention pond, fence installation, and other site work as defined in the Contract Documents.

1.3 CONTRACTOR USE OF PREMISES

A. General: During the construction period the Contractor and subcontractors shall have use of the premises for construction operations. The use of the premises is limited only by the End User's right to perform construction operations with its own forces or to employ separate contractors on portions of the project.

1. Confine operations to areas within Contract limits indicated. Portions of the site beyond areas in which construction operations are indicated are not to be disturbed.

2. Keep driveways and entrances serving the premises clear and available to the Owner and the Owner's employees at all times. Do not use these areas for parking or storage of materials. Schedule deliveries to minimize space and time requirements for storage of materials and equipment on site.

1.4 END USER OCCUPANCY

A. Partial Occupancy: The End User reserves the right to occupy and to place and install equipment in completed areas of the building, prior to Substantial Completion provided that such occupancy does not interfere with completion of the Work. Such placing of equipment and partial occupancy shall not constitute acceptance of the

total Work.

B. Prior to End User occupancy, mechanical and electrical systems shall be fully operational. Required inspections and tests shall have been successfully comp leted. Upon occupancy the End User will provide operation and maintenance of mechanical and electrical systems in occupied portions of the building.

1.5 END USER CONSTRUCTED WORK

A. Coordinate with the Owner and Project Manager/General Contractor where construction in this contract interfaces with work performed by the End User.

B. Repair any damage to End User constructed items which occurs during the course of construction as a result of construction activ ity. Replace damaged items when repair is not possible to restore to the original undamaged condition or when required by Owner.

PART 2 - PRODUCTS (Not Applicable)

PART 3 - EXECUTION (Not Applicable)

END OF SECTION 01010

SECTION 01027 - APPLICATIONS FOR PAYMENT

PART 1 - GENERAL

1.1 RELATED DOCUMENTS

A. Drawings and general provisions of Contract, including General and Supplementary Conditions and other Division-1 Specification Sections, apply to this Section.

1.2 SUMMARY

A. This Section specifies administrative and procedural requirements governi ng Applications for Payment submitted to Project Manager/General Contractor.
   1. Coordinate the Schedule of Values and Applications for Payment with the Construction Schedule and Submittal Schedule.

B. The Construction Schedule and Submittal Schedule are included in Section "Submittals".

1.3 SCHEDULE OF VALUES

A. Coordinate preparation of the Schedule of Values with preparation of the Contractors' Construction Schedule.

   1. Correlate line items in the Schedule of Values with other required administrative schedules and forms, including:
      a. Contractor's construction schedule.
      b. Application for Payment form.
      c. List of products.
      d. List of principal suppliers and fabricators.
      e. Schedule of submittals.

   2. Submit the Schedule of Values to the Project Manager/General Contractor at the earliest feasible date, but in no case later than 7 days before the date scheduled for submittal of the initial Application for Payment.

   3. Sub-Schedules: Where the Work is separated into phases that require separately phased payments, provide sub-schedules showing values correlated with each phase of payment.

B. Format and Content: Use the Project Manual Table of Contents a s a guide to establish the format for the Schedule of Values.

   1. Identification: Include the following Project identification on the Schedule of Values:
      a. Project name and location.
      b. Project Manager/ General Contractor's name and address.
      c. Date of submittal.

   2. Arrange the Schedule of Values in a tabular form with separate columns to indicate the following for each item listed:
      a. Generic name.
      b. Related Specification Section.
      c. Name of manufacturer or fabricator.
      d. Name of supplier.
      e. Change Orders (numbers) that have affected value.
      f. Dollar value.

3. Round amounts off to the nearest whole dollar; the total shall equal the subcontractor s Contract Sum.
4. For each part of the Work where an Application for Payment may include materials or equipment, purchased or fabricated and stored, but not yet installed, provide separate line items on the Schedule of Values for initial cost of the materials, for each subsequent stage of completion, and for total installed value of that part of the Work.
5. Schedule Updating: Update and resubmit the Schedule of Values when Change Orders or Construction Change Directives result in a change in the Contra ct Sum.

1.4 APPLICATIONS FOR PAYMENT:

A. Each Application for Payment shall be consistent with previous applications and payments.

B. Payment Application Times: The date to submit initial application for payment is at the subcontractor s discretion, and subsequent applications for payment as set forth by the Project Manager/General Contractor but no later than 30 days thereafter.

C. Payment Application Format: Use format consistent with Schedule of Values.

1. Entries shall match data on the Schedule of Values and Contractor's Construction Schedule. Use updated schedules if revisions have been made.
2. Include amounts of Change Orders issued prior to the last day of the construction period covered by the application.

D. Transmittal: Submit 3 executed copies of each Application for Payment to the Project Manager/General Contractor by means ensur ing receipt within 24 hours; one copy shall be complete, including waivers of lien and similar attachments, when required.

1. Transmit each copy with a transmittal form listing attachments, and recording appropriate information re lated to the application in a manner acceptable to the Project Manager/General Contractor.

E. Waivers of Mechanics Lien: With each Application for Payment submit waivers of mechanics liens from subcontractors or sub - subcontractors and suppliers for the construction period covered by the previous application.

1. Submit partial waivers on each item for the amount requested, prior to deduction for retainage, on each item.

2. When an application shows completion of an item, submit final or full waivers.

3. The Owner reserves the right to designate which entities involved in the Work must submit waivers.

4. Waiver Delays: Submit each Applic ation for Payment with the Contractor's waiver of mechanics lien for the period of construction covered by the application.
   a. Submit final Application for Payment with or preceded by final waivers from every entity involved with performance of Work covere d by the application who could lawfully be entitled to a lien.

5. Waiver Forms: Submit waivers of lien on forms, and executed in a manner, acceptable to Owner.

F. Initial Application for Payment: Adminis trative actions and submittals that must precede or coincide with submittal of the first Application for Payment include the following:

1. List of principal suppliers and fabricators.
2. Schedule of Values.
3. Schedule of principal products.
4. Submittal Schedule (preliminary if not final).
5. List of staff assignments.
6. Certificates of insurance and insurance policies as applicable.

G. Final Payment Application: Administrative actions and submittals which must precede or coincide with submittal of the final payment Application for Payment include the following:

1. Completion of Project closeout requirements.
2. Completion of items specified for completion after Substantial Compl etion.
3. Assurance that unsettled claims will be settled.
4. Assurance that Work not complete and accepted will be completed without undue delay.
5. Transmittal of required Project cons truction records to Owner.
6. Proof that taxes, fees and similar obligations have been paid.
7. Removal of temporary facilities and services.
8. Removal of surplus materials, rubbish and similar elements.

PART 2 - PRODUCTS (Not Applicable)

PART 3 - EXECUTION (Not Applicable)

END OF SECTION 01027

SECTION 01035 - MODIFICATION PROCEDURES

PART 1 - GENERAL

1.1 RELATED DOCUMENTS

A. Drawings and general provisions of Contract, including General and Supplementary Conditions and other Division 1 Specification sections, apply to this section.

1.2 SUMMARY

A. This section specifies administrative and procedural requirements for subcontractors for handling and processing Contract modifications to be submitted to Project Manager/General Contractor.

B. Related Sections: The following sections contain requirements that relate to this section:
1. Division 1 Section "Application for Payment" for administrative procedures governing applications for payment.
2. Division 1 Section "Product Substitutions" for administrative procedures for handling requests for substitutions made after award of the Contract.

1.3 CHANGE ORDER PROPOSAL REQUESTS

B. Owner-Initiated Proposal Requests: Proposed changes in the Work that will require adjustment to the Contract Sum or Contract Time will be issued by the Project Manager/General Contractor, with a detailed description of the proposed change and supplemental or revised Drawings and Specifications, if necessary.

1. Proposal requests issued by the Project Manager/General Contractor are for information only. Do not consider an them instruction either to stop work in progress, or to execute the proposed change.
2. Unless otherwise indicated in the proposal request, within 15 days of receipt of the proposal request, submit to the Project Manager/General Contractor for review an estimate of cost necessary to execute the proposed change.

a. Include a list of quantities of products to be purchased and unit costs, along with the total amount of purchases to be made. Where requested, furnish survey data to substantiate quantities.
b. Indicate applicable taxes, delivery charges, equipment rental, and amounts of trade discounts.
c. Include a statement indicating the effect the proposed change in the Work will have on the Contract Time.

C. Subcontractor-Initiated Change Order Proposal Requests: When latent or other unforseen conditions require modifications to the Contract, the subcontractor may propose changes by submitting a request for a change to the Project Manager/General Contractor.

1. Include a statement outlining the reasons for the change and the effect of the change on the Work. Provide a complete description of the proposed change. Indicate the effect of the proposed change on the Contract Sum and Contract Time.
2. Include a list of quantities of products to be purchased and unit costs along with the total amount of purchases to be made. Where requested, furnish survey data to substantiate quantities.
3. Indicate applicable taxes, delivery charges, equipment rental, and amounts of trade discounts.

4. Comply with requirements in Section "Product Substitutions" if the proposed change in the Work requires the substitution of one product or system for a product or system specified.

PART 2 - PRODUCTS (Not Applicable)

PART 3 - EXECUTION (Not Applicable)

END OF SECTION 01035

SECTION 01040 - PROJECT COORDINATION

PART 1 - GENERAL

1.1 RELATED DOCUMENTS

A. Drawings and general provisions of Contract, including General and Supplementary Conditions and other Division-1 Specification Sections, apply to this Section.

1.2 SUMMARY

A. This Section specifies administrative and supervisory requirements necessary for Project coordination including, but not necessarily limited to:

1. Coordination.
2. General installation provisions.
3. Cleaning and protection.

B. Field engineering is included in Section "Field Engineering".

C. Coordination meetings and pre-installation conferences are included in Section "Project Meetings".

1.3 COORDINATION

A. Coordination: Coordinate construction activities included under various Sections of these Specifications to assure efficient and orderly installation of each part of the Work. Coordinate construction operations included under different Sections of the Specifications that are dependent upon each other for proper installation, connection, and operation.

1. Where installation of one part of the Work is dependent on installation of other components, either before or after its own installation, schedule construction activities in the sequence required to obtain the best results.

2. Where availability of space is limited, coordinate installation of different components to assure maximum accessibility for required maintenance, service and repair.

3. Make adequate provisions to accommodate items scheduled for later installation.

B. Where necessary, prepare memoranda for distribution to each party involved to be submitted to Project Manager/General Contractor, outlining special procedures required for coordination.

C. Administrative Procedures: Coordinate scheduling and timing of required administrative procedures with other construction activities to avoid conflicts and ensure orderly progress of the Work. Such administrative activities include, but are not limited to, the following:
1. Installation and removal of temporary facilities.
2. Delivery and processing of submittals.
3. Project Close-out activities.

D. Conservation: Coordinate construction activities to ensure that operations are carried out with consideration given to conservation of energy, water, and materials.

1.4 SUBMITTALS

A. Coordination Drawings: Prepare and submit coordination Drawings where close and careful coordination is required for installation of products and materials fabricated off-site by separate entities, and where limited space availability necessitates maximum utilization of

space for efficient installation of different components.

1. Show the interrelationship of components shown on separate Shop Dr awings.
2. Indicate required installation sequences.
3. Comply with requirements contained in Section "Submittals."
4. Refer to Division-15 Section "Basic Mechanical Requirements," and Di vision-16 Section "Basic Electrical Requirements" for specific coordination Drawing requirements for mechanical and electrical installations.

B. Staff Names: Within 15 days of Notice to Proceed, submit a list of principal staff assignments, including the trade Foreman and other personnel in attendance at the site; identify individuals, their duties and responsibilities; list their addresses and telephone numbers.

PART 2 - PRODUCTS (Not Applicable).

PART 3 - EXECUTION

3.1 GENERAL INSTALLATION PROVISIONS

A. Inspection of Conditions: Require the Installer of each major component to inspect both the substrate and conditions under which Work is to be performed. Do not proceed until unsatisfactory conditions have been corrected in an acceptable manner.

B. Manufacturer's Instructions: Comply with manufacturer's installation instru ctions and recommendations, to the extent that those instructions and recommendations are more explicit or stringent than requirements contained in Contract Documents.

C. Inspect materials or equipment immediately upon delivery and again prior to installation. Reject damaged and defective items.

D. Provide attachment and connection devices and methods necessary for securing Work. Secure Work true to line and level. Allow for expansion and building movement.

E. Visual Effects: Provide uniform joint widths in exposed Work. Arrange joints in exposed Work to obtain the best visual effect. Refer questionable choices to the Architect for final decision.

F. Recheck measurements and dimensions, before starting each installation.

G. Install each component during weather conditions and Project status that will ensure the best possible results. Isolate each part of the comp leted construction from incompatible material as necessary to prevent deterioration.

H. Coordinate temporary enclosures with required inspections and tests, to minimize the necessity of uncovering completed construction for that purpose.

I. Mounting Heights: Where mounting heights are not indicated, install individual components at standard mounting heights recognized within the industry for the particular application indicated. Refer questionable mo unting height decisions to the Architect for final decision.

3.2 CLEANING AND PROTECTION

A. During handling and installation, clean and protect construction in progress and adjoin ing materials in place. Apply protective covering where required to ensure protection from

damage or deterioration at Substantial Completion.

B. Clean and maintain completed construction as frequently as necessary through the remainder of the construction period. Adjust and lubricate operable components to ensure operability without damaging effects.

C. Limiting Exposures: Supervise construction activities to ensure that no part of the construction, completed or in progress, is subject to harmful, dangerous, damaging, or otherwise deleterious exposure during the construction period. Where applicable, such exposures include, but are not limited to, the following:

1. Excessive static or dynamic loading.
2. Excessive internal or external pressures.
3. Excessively high or low temperatures.
4. Thermal shock.
5. Air contamination or pollution.
6. Water.
7. Solvents.
8. Chemicals.
9. Light.
10. Puncture.
11. Abrasion.
12. Heavy traffic.
13. Soiling, staining and corrosion.
14 Bacteria.
15. Rodent and insect infestation.
16. Combustion.
17. Electrical current.
18. High speed operation,
19. Improper lubrication,
20. Unusual wear or other misuse.
21. Contact between incompatible materials.
22. Destructive testing.
23. Misalignment.
24. Excessive weathering.
25. Unprotected storage.
26. Improper shipping or handling.
27. Theft.
28. Vandalism.

END OF SECTION 01040

SECTION 01045 - CUTTING AND PATCHING

PART 1 - GENERAL

1.1 RELATED DOCUMENTS

A. Drawings and general provisions of Contract, including General and Supplementary Conditions and other Division-1 Specification Sections, apply to this Section.

1.2 SUMMARY

A. This Section specifies administrative and procedural requirements for cutting and patching.

B. Refer to other Sections for specific requirements and limitations applicable to cutting and patching individual parts of the Work.

1. Requirements of this Section apply to mechanical and electrical installations. Refer to Division-15 and Division-16 Sections for other requirements and limitations applicable to cutting and patching mechanical and electrical installations.

1.3 SUBMITTALS

A. Cutting and Patching Proposal: Where approval of procedures for cutting and patching is required before proceeding, submit a proposal describing procedures well in advance of the time cutting and patching will be performed and request approval to proceed. Include the following information, as applicable, in the proposal:

1. Describe the extent of cutting and patching required and how it is to be performed; indicate why it cannot be avoided.
2. Describe anticipated results in terms of changes to existing construction; include changes to structural elements and operating components as well as changes in the building's appearance and other significant visual elements.
3. List products to be used and firms or entities that will perform Work.
4. Indicate dates when cutting and patching is to be performed.
5. List utilities that will be disturbed or affected, including those that will be relocated and those that will be temporarily out-of-service. Indicate how long service will be disrupted.
6. Where cutting and patching involves addition of reinforcement to structural elements, submit details and engineering calculations to show how reinforcement is integrated with the original structure.
7. Approval by the Architect to proceed with cutting and patching does not waive the Architect's right to later require complete removal and replacement of a part of the Work found to be unsatisfactory.

1.4 QUALITY ASSURANCE

A. Requirements for Structural Work: Do not cut and patch structural elements in a manner that would reduce their load-carrying capacity or load-deflection ratio.

B. Operational and Safety Limitations: Do not cut and patch operating elements or safety related components in a manner that would result in reducing their capacity to perform as intended, or result in increased maintenance, or decreased operational life or safety.

C. Visual Requirements: Do not cut and patch construction exposed on the exterior or in occupied spaces, in a manner that would, in the Architect's opinion, reduce the building's

aesthetic qualities, or result in visual evidence of cutting and patching. Remove and replace Work cut and patched in a visually unsatisfactory manner.

PART 2 - PRODUCTS

2.1 MATERIALS

A. Use materials that are identical to existing materials. If identical materials are not available or cannot be used where exposed surfaces are involved, use materials that match existing adjacent surfaces to the fullest extent possible with regard to visual effect. Use materials whose installed performance will equal or surpass that of existing materials.

PART 3 - EXECUTION

3.1 INSPECTION

A. Before cutting existing surfaces, examine surfaces to be cut and patched and conditions under which cutting and patching is to be performed. Take corrective action before proceeding, if unsafe or unsatisfactory conditions are encountered.

3.2 PREPARATION

A. Temporary Support: Provide temporary support of Work to be cut.

B. Protection: Protect existing construction during cutting and patching to prevent damage. Provide protection from adverse weather conditions for portions of the Project that might be exposed during cutting and patching operations.

C. Avoid interference with use of adjoining areas or interruption of free passage to adjoining areas.

D. Take all precautions necessary to avoid cutting existing pipe, conduit or ductwork serving the building, but scheduled to be removed or relocated until provisions have been made to bypass them.

3.3 PERFORMANCE

A. General: Employ skilled workmen to perform cutting and patching. Proceed with cutti ng and patching at the earliest feasible time and complete without delay.

1. Cut existing construction to provide for installation of other components or performance of other construction activities and the subsequent fitting and patching required to restore surfaces to their original condition.

B. Cutting: Cut existing construction using methods least likely to damage elements to be retained or adjoining construction. Where possible review proposed procedures with the original installer; comply with the original installer's recommendations.

1. In general, where cutting is required use hand or small power tools designed for sawing or grinding, not hammering and chopping. Cut holes and slots neatly to size required with minimum disturbance of adjacent surfaces. Temporarily cover openings when not in use.
2. To avoid marring existing finished surfaces, cut or drill from the exposed or finished side into concealed surfaces.

3. Cut through concrete and masonry using a cutting machine such as a carborundum saw or diamond core drill.
4. Comply with requirements of applicable Sections of Division -2 where cutting and patching requires excavating and backfilling.

C. Patching: Patch with durable seams that are as invisible as possible. Comply with specified tolerances.

1. Where feasible, inspect and test patched areas to demonstrate integrity of the installation.
2. Restore exposed finishes of patched areas and extend finish restoration into retained adjoining construction in a manner that will eliminate evidence of patching and refinishing.
3. Where removal of walls or partitions extends one finished area into another, patch and repair floor and wall surfaces in the new space to provide an even surface of uniform color and appearance. Remove existing floor and wall cove rings and replace with new materials, if necessary to achieve uniform color and appearance.

   a. Where patching occurs in a smooth painted surface, extend final paint coat over entire unbroken containing the patch, after the patched area has received primer and second coat.

4. Patch, repair or rehang existing ceilings as necessary to provide an even plane surface of uniform appearance.

3.4 CLEANING

A. Thoroughly clean areas and spaces where cutting and patching is performed or used as access. Remove completely paint, mortar, oils, putty and items of similar nature. Thoroughly clean piping, conduit and similar features before painting or other finishing is applied. Restore damaged pipe covering to its original condition.

END OF SECTION 01045

SECTION 01050 - FIELD ENGINEERING

PART 1 - GENERAL

1.1 RELATED DOCUMENTS

A. Drawings and general provisions of the Contract, including General and Sup plementary Conditions and other Division-1 Specification Sections, apply to this Section.

1.2 SUMMARY

A. General: This Section specifies administrative and procedural requirements for field engineering services, including, but not necessarily limited to, the following:

1. Land survey Work.
2. Civil engineering services.
3. Structural engineering services.

1.3 SUBMITTALS

A. Certificates: Submit a certificate signed by the Land Surveyor or Professional Engineer certifying that the location and elevation of improvements comply with the Contr act Documents.

B. Final Property Survey: Submit 6 copies of the final property survey, one reproducible copy, and the CAD files on CD;s. Software format as required by Owner.

C. Project Record Docum ents: Submit a record of Work performed and record survey data as required under provisions of Sections "Submittals" and "Project Closeout".

1.4 QUALITY ASSURANCE

A. Surveyor: Engage a Registered Land Surveyor registered in the State where the project is located, to perform land surveying services required.

B. Engineer: Engage a Professional Engineer of the discipline required, registered in the state in which the Project is located, to perform required engineering services.

PART 2 - PRODUCTS (Not Applicable)

PART 3 - EXECUTION

3.1 EXAMINATION

A. Existing control points are noted on Contract Documents.

B. Verify layout information shown on the Drawings, in relation to the property survey and existing benchmarks before proceeding to layout the Work. Locate and protect existing benchmarks and control points. Preserve permanent reference points during construction.

1. Do not change or relocate benchmarks or control points without prior written approval. Promptly report lost or destroyed reference points, or requirements to relocate reference points because of necessary changes in grades or locations.
2. Promptly replace lost or destroyed project control points. Base replacements on the

original survey control points.

C. Establish and maintain a minimum of two permanent benchmarks on the site, referenced to data established by survey control points.

1. Record benchmark locations, with horizontal and vertical data, on Project Record Documents.

D. Existing utilities and equipment: The existence and location of underground and other utilities and construction indicated as existing are not guaranteed. Before beginning sitework, investigate and verify the existence and location of underground utilities and other construction.

1. Prior to construction, verify the location and invert elevation at points of connection of sanitary sewer, storm sewer and water service piping.

3.2 PERFORMANCE

A. Working from lines and levels established by the property survey, establish benchmarks and markers to set lines and levels at each story of construction and elsewhere as needed to properly locate each element of the Project. Calculate and measure required dimensions within indicated or recognized tolerances. Do not scale Drawings to determine dimensions.

1. Advise entities engaged in construction activities, of marked lines and levels provided for their use.
2. As construction proceeds, check every major element for line, level and plumb.

B. Surveyor's Log: Maintain a surveyor's log of control and other survey Work. Make this log available for reference.

1. Record deviations from required lines and levels, and advise the Architect when deviations that exceed indicated or recognized tolerances are detected. On Project Record Drawings, record deviations that are accepted and not corrected.
2. On completion of foundation walls, major site improvements, and other Work requiring field engineering services, prepare a certified survey showing dimensions, locations, angles and elevations of construction and sitework.

C. Site Improvements: Locate and lay out site improvements, including pavements, stakes for grading, fill and topsoil placement, utility slopes and invert elevations by instrumentation and similar appropriate means.

D. Building Lines and Levels: Locate and lay out batter boards for structures, building foundations, column grids and locations, floor levels and control lines and levels required for mechanical and electrical Work.

E. Existing Utilities: Furnish information necessary to adjust, move or relocate existing lines, services or other appurtenances located in, or affected by construction. Coordinate with local authorities having jurisdiction.

F. Final Property Survey: Before Substantial Completion, prepare a final property survey showing significant features (real property) for the Project. Include on the survey a certification, signed by the Surveyor, to the effect that principal metes, bounds, lines and levels of the Project are accurately positioned as shown on the survey.

END OF SECTION 01050

SECTION 01095 - REFERENCE STANDARDS AND DEFINITIONS

PART 1 - GENERAL

1.1 RELATED DOCUMENTS

A. Drawings and general provisions of the Contract, including General and Supplementary Conditions and all other Division 1 Specification Sections, apply to this Section.

B. References to standards are incorporated into Project Manuel by reference and each reference is the latest edition at date shown on Contract Documents, including amendments and supplements.

1.2 DEFINITIONS

A. General: Basic Contract definitions are included in the Conditions of the Contract.

B. Indicated: The term indicated refers to graphic representations, notes, or schedules on the Drawings, or other Paragraphs or Schedules in the Specifications, and similar requirements in the Contract Documents. Terms such as "shown", "noted", "scheduled", and "specified" are used to help the reader locate the reference. There is no limitation on location.

C. Approved: When used in conjunction with the A/E's action on the Contractor's submittals, applications and requests "approval" is limited to the Architect's duties and responsibilities as stated in the General Conditions.

C. Regulations: The term regulations includes laws, ordinances, statutes, and lawful orders issued by authorities having jurisdiction, as well as rules, conventions, and agreements within the construction industry that control performance of the Work.

D. Furnish: The term furnish means supply and deliver to the Project site, ready for unloading, unpacking, assembly, installation, and similar operations but not installation.

E. Install: The term install describes operations at the Project site including the actual unpacking, assembly, erection, placing, anchoring, applying, working to dimension, finishing, curing, protecting, cleaning, and similar operations.

F. Provide: The term provide means to furnish and install, complete and ready for the intended use.

G. Installer: An Installer is the Contractor or another entity engaged by the Contractor, either as an employee, subcontractor, or contractor of lower tier, to perform a particular construction activity, including installation, erection, application, and similar operations. Installers are required to be experienced in the operations they are engaged to perform.
   1. Trades: Using terms such as carpentry is not intended to imply that certain construction activities must be performed by accredited or unionized individuals of a corresponding generic name, such as carpenter. It also does not imply that requirements specified apply exclusively to trades persons of the corresponding generic name.
   2. Experienced: When used with the term Installer, requires minimum of five previous projects similar in size and scope to this project, being familiar with the special requirements indicated and having complied with requirements of the authority having jurisdiction.

H. Project site: is the space available to the Contractor for performing construction activities either exclusively or in conjunction with others perf orming other work as part of the Project. The extent of the Project site is shown on the Drawings and may or may not be identical with the description of the land on which the Project is to be built.

I. Testing Agencies: A testing agency is an independen t entity engaged to perform specific inspections or tests, either at the Project site or elsewhere, and to report on and, if required, to interpret results of those inspections or tests.

K. Exposed: An item or surface, interior or exte rior which is visible outside or inside building usable space, during building normal activity.

L. Including and such as: To be used in the most inclusive sense; example, "including, but not necessarily limited to", and "such as, but not necessarrily limited to".

M. Not-in Contact (NIC): Work not included in this contract.

N. Product: Material, equipment or system.

O. Reinstall: Operation involving existing materials and equipment, including handli ng, assembly, setting, placing, anchoring, protecting, cleaning and similar operations as applicable in each instance.

P. Remove: Disassemble, dismantle or demolish and transport away from Project site or Owners property.

Q. Salvage: Contractor shall dismantle existing materials or assemblies carefully, provide protection suitable for maintaining existing conditions of materials and store salvaged materials for re-installation or other use as directed by Owner.

R. Shown and indicated: Used as a cross reference to information on Drawings or Specifications elsewhere in project manual. No limitation of location is intended except as may be specifically noted.

S. Suitable Reasonable – Proper – Correct – Necessary: As stated for purpose intended by Contract Documents, subject to interpretation of Architect.

1.3 SPECIFICATION FORMAT AND CONTENT EXPLANATION

A. Specification Format: These Specifications are organized into Divisions and Sections based on the Construction Specifications Institute's 16-Division format and MASTERFORMAT numbering system.

B. Specification Content: This Specification uses certain conventions regarding the style of language and the intended meaning of certain terms, words, and phrases when used in particular situations or circumstances. These conventions are explained as follows:

1. Abbreviated Language: Language used in Specifications and other Contract Documents is abbreviated. Words and meanings shall be interpreted as appropriate. Words that are implied, but not stated, shall be interpolated as the sense requires. Singular words will be interpreted as plural and plural words interpreted as singular where applicable as the context of the Contract Documents indicates.

2. Imperative and streamlined language is used generally in the Specifications. Requirements expressed in the imperative mood are to be performed by the

Contractor. At certain locations in the Text, subjective language is used for clarity to describe responsibilities that must be fulfilled indirectly by the Contractor, or by others when so noted.

a. The words "shall be" are implied wherever a colon (:) is used within a sentence or phrase.

1.4 INDUSTRY STANDARDS

A. Applicability of Standards: Except where the Contract Documents include more stringent requirements, applicable construction industry standards have the same force and effect as if bound or copied directly into the Contract Documents to the extent referenced. Such standards are made a part of the Contract Documents by reference.

B. Publication Dates: Comply with the standards in effect as of the date of the Contract Documents.

C. Conflicting Requirements: Where compliance with two or more standards is specified and where the standards may establish different or conflicting requirements for minimum quantities or quality levels, refer requirements that are different but apparently equal and other uncertainties to the Architect for a decision before proceeding.
General: In case of an inconsistency between Drawings and Specifications or within either Document not clarified specifically by the Architect; more specific provision will take precedence over less specific; more stringent will take precedence over less stringent. Better quality or greater quantity of Work shall be provided in compliance with Architect's interpretation.

1. Minimum Quantity or Quality Levels: The quantity or quality level shown or specified shall be the minimum provided or performed. The actual installation may comply exactly with the minimum quantity or quality specified, or it may exceed the minimum within reasonable limits. To comply with these requirements, indicated numeric values are minimum or maximum, as appropriate, for the context of the requirements. Refer uncertainties to the Architect for a decision before proceeding.

D. Copies of Standards: Each entity engaged in construction on the Project is required to be familiar with industry standards applicable to its construction activity. Copies of applicable standards are not bound with the Contract Documents.

1. Where copies of standards are needed to perform a required construction activity, the Contractor shall obtain copies directly from the publication source.

E. Abbreviations and Names: Trade association names and titles of general standards are frequently abbreviated. The following acronyms or abbreviations, as referenced in Contract Documents, are defined to mean the associated names. Names and addresses are subject to change and are believed, but not ensured, to be accurate and up to date as of the date of Contract Documents. The following is a partial list consisting of names most frequently used. For those not listed, refer to the "Encylopedia of Associations," published by Gale Research Co., available in most libraries.

AA Aluminum Association, 900 19th St., NW, Suite 300, Washington, DC 20006 , (202) 862-5100

AABC Associated Air Balance Council, 1518 K St., NW, Washington, DC 20005, (202) 737-0202

AAMA American Architectural Manufacturers Assoc., 1540 E. Dundee Road, Suite 310, Palatine, IL 60067, (708) 202-1350

AASHTO American Association of State Highway, and Transportation Officials, 444 North Capitol St., Suite 225, Washington, DC 20001 (202) 624-5800

ACI American Concrete Institute, P.O. Box 19150, Detroit, MI 48219 (313) 532-2600

ACPA American Concrete Pipe Assoc. , 8300 Boone Blvd., Suite 400, Vienna, VA 22182 (703) 821-1990

ADC Air Diffusion Council, One Illinois Center, Suite 200, 11 East Wacker Drive, Chicago, IL 60601-4298,(312) 616-0800

AI Asphalt Institute, Research Park Drive, P.O. Box 14052, Lexington, KY 40512 -4052, (606) 288-4960

AIA American Institute of Architects, 1735 New York Ave., NW, Washington, DC 20006 (202) 626-7300

AISC American Institute of Steel Construction, One East Wacker Drive, Suite 3100, Chicago, IL 60601 -2001 (312) 670-2400

AISI American Iron and Steel Institute, 1101 17th Street, NW, Suite 1300, Washington, DC 20036 -4700, (202) 463-6573

ALSC American Lumber Standards Committee, P.O. Box 210, Germantown, MD 20875, (301) 972-1700

AMCA Air Movement and Control Assoc., 30 W. University Drive, Arlington Heights, IL 60004 -1893, (708) 394-0150

ANSI American National Standards Institute, 11 West 42nd Street, 13th Floor, New York, NY, 0036, (212) 642-4900

APA American Plywood Assoc., P.O. Box 11700, Tacoma, WA 98411, (206) 565 -6600

ARI Air Conditioning and Refrigeration Institute, 1501 Wilson Blvd., 6th Floor, Arlington, VA 22209, (703) 524-8800

ASA Acoustical Society of America, 500 Sunnyside Blvd., Woodbury, NY 11797 (516) 349-7800

ASC Adhesive and Sealant Council, 1627 K Street, NW, Suite 1000, Washington, DC 20006 -1707, (202) 452-1500

ASHRAE American Society of Heating, Refrigerating, and Air -Conditioning Engineers, 1791 Tullie, Circle, NE, Atlanta, GA 30329, (404) 636 -8400

ASME American Society of Mechanical Engineers, 345 East 47th St., New York, NY 10017 (212) 705-7722

ASPE American Society of Plumbing Engineers, 3617 Thousand Oaks Blvd. , Suite 210, Westlake, CA 91362, (805) 495-7120

ASSE American Society of Sanitary Engineering, P.O. Box 40362, Bay Village, OH 44140 (216) 835-3040

ASTM American Society for Testing and Materials, 1916 Race St., Philadelphia, PA 19103 -1187, (215) 977-9679

AWI Architectural Woodwork Institute, P.O. Box 1550, 13924 Braddock Rd., Suite 100, Centreville, VA 22020 , (703) 222-1100

AWPA American Wood-Preservers' Assoc., 4128-1/2 California Ave. SW, No. 171, Seattle, WA 98116, (206) 937-5338

AWPB American Wood Preservers Bureau, 4 E. Washington St., Newnan, GA 30263, (404) 254 -9877

AWS American Welding Society, 550 LeJeune Road, NW, P.O. Box 351040, Miami, FL 33135, (305) 443-9353

AWWA American Water Works Assoc., 6666 W. Quincy Ave., Denver, CO 80235, (303) 794-7711

BHMA Builders' Hardware Manufacturers Assoc., 355 Lexington Ave., 17th Flr, New York, NY 10017, (212) 661-4261

CISPI Cast Iron Soil Pipe Institute, 5959 Shallowford Road, Suite 419, Chattanooga, TN 37421, 615) 892-0137

CRS Concrete Reinforcing Steel Institute, 933 Plum Grove Rd., Schaumburg, IL 60173, (708) 517-1200

CTI Ceramic Tile Institute of America, 700 N. Virgil Ave., Los Angeles, CA 90029, (213) 660-1911

DHI Door and Hardware Institute, 14170 New Brook D rive, Chantilly, VA 22022, (703) 222-2010

DLPA Decorative Laminate Products Assoc., 600 S. Federal St., Suite 400, Chicago, IL 60605, (312) 922-6222

EIA Electronic Industries Assoc., 2001 Pennsylvania Ave., NW, Washington, DC 20006 -1813, (202) 457-4900

EJMA Expansion Joint Manufacturers Assoc., 25 N. Broadway, Tarrytown, NY 10591, (914) 332-0040

FGMA Flat Glass Marketing Assoc., White Lakes Professional Bldg., 3310 S.W. Harrison, Topeka, KS 66611-2279, (913) 266-7013

FM Factory Mutual Research Organization, 1151 Boston-Providence Turnpike, P.O. Box 9102, Norwood, MA 02062, (617) 762-4300

GA Gypsum Association, 810 First Street, NE, Suite 510, Washington, DC 20002 (202) 289-5440

HMA Hardwood Manufacturers Assoc., 400 Penn Center Blvd., Pittsbur gh, PA 15235, (412) 829-0770

HPMA Hardwood Plywood Manufacturers Assoc., 1825 Michael Farraday Drive, P.O. Box 2789 Reston, VA 22090-2789 (703) 435-2900

ICEA Insulated Cable Engineers Association, Inc., P.O. Box 440, South Yarmouth, MA 02664 (508) 394-4424

IEC International Electrotechnical Commission, (Available from ANSI), 1430 Broadway, New York, NY 10018, (212) 354-3300

IEEE Institute of Electrical and Electronic Engineers, 345 E. 47th St., New York, NY 10017 (212) 705-7900

IESNA Illuminating Engineering Society of North America, 345 E. 47th St., New York, NY 10017 (212) 705-7926

IGCC Insulating Glass Certification Council, c/o ETL Testing Laboratories, Inc., P.O. Box 2040, Route 11, Industrial Park, Cortland, NY 13045, (607) 753-6711

ISA Instrument Society of America, P.O. Box 12277, 67 Alexander Drive, Research Triangle Park, NC 27709, (919) 549-8411

LPI Lightning Protection Institute, 365 North Arlington Heights Rd., Suite J, Arlington Heights, IL 60004, (708) 255-3003

MBMA Metal Building Manufacturer's Assoc., c/o Charles M. Stockinger, Thomas Associates, Inc. 1300 Sumner Ave. Cleveland, OH 44115-2851, (216) 241-7333

NAAMM National Association of Architectural Metal Manufacturers, 600 S. Federal St., Suite 400 Chicago, IL 60605, (312) 922-6222

NAIMA North American Insulation Manufacturers Assoc., 44 Canal Center Plaza, Suite 310, Alexandria, VA 22314 (703) 684-0084

NAPA National Asphalt Pavement Assoc., NAPA Building, 5100 Forbes Blvd., Lanham, MD 20706-4413, (301) 731-4748

NCMA National Concrete Masonry Assoc., P.O. Box 781, Herndon, VA 22070-0781 (703) 435-4900

NEC National Electrical Code (from NFPA)

NECA National Electrical Contractors Assoc., 7315 Wisconsin Ave., Bethesda, MD 20814 (301) 657-3110

NEMA National Electrical Manufacturers Assoc., 2101 L St., NW, Suite 300, Washington, DC 20037, (202) 457-8400

NETA International Electrical Testing Assoc., P.O. Box 687, Morrison, CO 80465, (303) 467-0526

NFPA National Fire Protection Assoc., One Batterymarch Park, P.O. Box 9101, Quincy, MA, 2269-9101, (617) 770-3000, (800) 344-3555

N.F.P.A. National Forest Products Assoc., 1250 Connecticut Ave., NW, Suite 200, Washington, DC 20036, (202) 463-2700

NLGA National Lumber Grades Authority, 1055 W. Hastings St., Suite 260, Vancouver, British Columbia, Canada V6E 2E9 (604) 687-2171

NPA National Particleboard Assoc., 18928 Premiere Court, Gaithersburg, MD 20879, (301) 670-0604

NRCA National Roofing Contractors Assoc., 10255 W. Higgins Rd., Suite 600, Rosemont, IL, 60018-5607, (708) 299-9070

NSF National Sanitation Foundation, 3475 Plymouth Rd. P.O. Box 1468, Ann Arbor, MI 48106, (313) 769-8010

PCA Portland Cement Assoc., 5420 Old Orchard Road, Skokie, IL 60077, (708) 966-6200

RFCI Resilient Floor Covering Institute, 966 Hungerford Drive, Suite 12-B, Rockville, MD 20805, (301) 340-8580

RMA Rubber Manufacturers Assoc., 1400 K St., NW, Washington DC 20005, (202) 682-4800

SDI Steel Deck Institute, P.O. Box 9506, Canton, OH 44711 (216) 493-7886

S.D.I. Steel Door Institute, 30200 Detroit Road, Cleveland, OH 44145 (216) 889-0010

SGCC Safety Glazing Certification Council c/o ETL Testing Laboratories, Route 11, Industrial Park Cortland, NY 13045, (607) 753-6711

SIGMA Sealed Insulating Glass Manufacturers Assoc., 401 N. Michigan, Chicago, IL 60611, (312) 644-6610

SJI Steel Joist Institute, 1205 48th Avenue North, Suite A, Myrtle Beach, SC 29577 (803) 449-0487

SMACNA Sheet Metal and Air Conditioning, Contractors National Association, 4201 Lafayette Center Dr. Chantilly, VA 22021, (703) 803-2980

SSPC Steel Structures Painting Council, 4400 Fifth Ave., Pittsburgh, PA 15213-2683, (412) 268-3327

TCA Tile Council of America, P.O. Box 326, Princeton, NJ 08542, (609) 921-7050

TIMA Thermal Insulation Manufacturers Assoc., 29 Bank Street, Stamford, CT 06901, (203) 324-7533 (Standards now issued by NAIMA)

UL Underwriters Laboratories, Inc., 333 Pfingsten Rd., Northbrook, IL 60062, (708) 272-8800\
WCLIB West Coast Lumber Inspection Bureau, P.O. Box 23145, Portland, OR 97223, (503) 639-0651

WRI Wire Reinforcement Institute, 1101 Connecticut Ave. NW, Suite 700, Washington, DC, 20036-4303, (202) 429-5125

WSC Water Systems Council, 600 S. Federal St., Suite 400, Chicago, IL 60605, (312) 922-6222

WWPA Western Wood Products Assoc., Yeon Building, 522 SW 5th Avenue, Portland, OR 97204-212 (503) 224-3930

W.W.P.A. Woven Wire Products Assoc., 2515 N. Nordica Ave., Chicago, IL 60635, (312) 637-1359

F. Federal Government Agencies: Names and titles of federal government standard- or Specification-producing agencies are often abbreviated. The following acronyms or abbreviations referenced in the Contract Documents indicate names of standard- or Specification-producing agencies of the federal government. Names and addresses are subject to change but are believed to be, but are not assured to be, accurate and up to date as of the date of the Contract Documents.

CFR Code of Federal Regulations, (Available from the Government Printing Office), N. Capitol St. between G and H St. NW, Washington, DC 20402 (202) 783-3238,
(Material is usually first published in the "Federal Register")

CPSC Consumer Product Safety Commission, 5401 Westbard Ave., Bethesda, MD 20207, (301) 492-6580, (800) 638-2772

DOC U.S. Department of Commerce, 14th St. and Constitution Ave., NW, Washington, DC 20230 (202) 482-2000

DOT Department of Transportation, 400 Seventh St., SW, Washington, DC 20590, (202) 366-4000

EPA Environmental Protection Agency, 401 M St., SW, Washington, DC 20460, (202) 382-2090

FCC Federal Communications Commission, 1919 M St., NW, Washington, DC 20554 (202) 632-7000

FS Federal Specification (from GSA), Specifications Unit (WFSIS), 7th and D St., SW, Washington, DC 20407 (202) 708-9205

GSA General Services Administration, , F St. and 18th St., NW, Washington, DC 20405, (202) 708-5082

NIST National Institute of Standards and Technology, (U.S. Department of Commerce), Gaithersburg, MD 20899, (301) 975-2000

OSHA Occupational Safety and Health Administration, (U.S. Department of Labor), N3647, 200 Constitution Ave., NW, Washington, DC 20210, (202) 219-8148

USDA U.S. Department of Agriculture, 14th St. and Independence Ave., SW, Washington, DC 20250 (202) 447-2791

1.5 SUBMITTALS

A. Permits, Licenses, and Certificates: For the Owner's and End User's records, submit copies of permits, licenses, certifications, inspection reports, releases, jurisdictional settlements, notices, receipts for fee payments, judgments, and similar documents, correspondence, and records established in conjunction with compliance with standards and regulations bearing upon performance of the Work.

PART 2 - PRODUCTS (Not Applicable)

PART 3 - EXECUTION (Not Applicable)

END OF SECTION 01095

SECTION 01096 - MATERIAL KEYNOTE LEGEND

PART 1 - GENERAL

1.1 RELATED DOCUMENTS

A. Drawings and general provisions of Contract, including General and Supplementary Conditions and other Division 1 Specification Sections, apply to this Section.

1.2 EXAMPLES

A. Examples used herein are for illustrative purposes only, the keynote, no tes and descriptions do not necessarily correspond to those used on the drawings.

1.3 KEYNOTE EXPLANATION AND FORMAT

A. Keynote Explanation: The Drawings utilize a keynoting system which references the keynote to the 5-digit specification section in which the item is specified. Such reference is for keynote clarity and organization; and does not restrict or control the Contractor in dividing the Work among subcontractors or in estab lishing the extent of Work to be performed by any trade.

B. Keynote Format: The keynote system uses a format which includes a prefix and suffix. The prefix is the 5-digit specification section that specifies the material or pro duct. The suffix is an alphanumeric designation connected only to the material or product through the Keynote Legends on the drawings. The suffix has no symbolic connection to the specifications.

1. Example: 06100.D is the keyn ote placed on the drawings (plan, elevation, section, detail). The Material Keynote Legend identifies the material as 2 x 4 STUD. Section 06100, Rough Carpentry, is the section in which studs are specified. D is the suffix used to distinguish 2 x 4 STUD from other materials specified in Section 06100 and does not reference any specific paragraph within the specification section.

C. Keynote Qualifiers: Many keynotes are qualified by information placed in parentheses following the keynote. The type of information is indicated on the Material Keynote Legend and includes, but is not limited to, the following: SIZE, SPACING, THICKNESS, GAGE, WEIGHT, FINISH. Information is presented in this format to reduce the complexity of the keynoting system.

1. Example: 09255.A1 (5/8") is a keynote placed on the drawings. The Material Keynote Legend identifies the material as GYPSUM BOARD (THICKNESS). Alphanumeric characters, such as A1 in this example, are used to group similar materials, products, and systems. The qualifier, (THICKNESS), in the keynote description indicates information which further clarifies the material or product, and is found on the drawing following the keynote. In this example, the keynote requires 5/8" Gypsum Board.

2. Keynote descriptions which indicate a qualifier do not always have the qualifying information placed adjacent the keynote on the drawing, but remain valid keynotes. Where the qualifier is not included , the information is to be found elsewhere on the drawings or in the specifications.

1.4 GENERAL NOTES AND NOTES

A. Project General Notes: Notes on the drawings related to the en tire project are organized by discipline: Civil, Architectural, Structural, Mechanical, Electrical, etc. and are placed at or near the front of each section of the drawings under the heading PROJECT GENERAL NOTES.

1. Example:
   1. Unless noted otherwise, dimensioning on plans is to face of studs (F.O.S.).
   2. Contractor to verify all dimensioning and conditions at site.

B. General Notes: Notes that are specific to individual sheets within the set of drawin gs are referred to as GENERAL NOTES and listed in the title block below the Material Keynote Legend. These notes are often used to reference and facilitate the process of finding the information.

1. Example:
   1. Re: A901 for Partition Types.
   2. Re: A1001 for Door Schedule.

C. Notes: Notes that are specific to a drawing (plan, elevation, section, detail, etc.) are referred to as NOTES and are located in the title block under the Material Keynote Legend and/ or the General Notes. This type of note is used to further clarify a specific drawing on the sheet and is indicated on the actual drawing as NOTE followed by a number with a leader drawn to the applicable location.

PART 2 - PRODUCTS (Not Applicable)

PART 3 - EXECUTION (Not Applicable)

END OF SECTION 01096

SECTION 01200 - PROJECT MEETINGS

PART 1 - GENERAL

1.1 RELATED DOCUMENTS

A. Drawings and general provisions of the Contract, including General and Supplementary Conditions and other Division-1 Specification Sections, apply to this Section.

1.2 SUMMARY

A. This Section specifies administrative and procedural requirements for project meetings including but not limited to:

1. Pre-Construction Conference.
2. Coordination Meetings.

B. Construction schedules are specified in another Division-1 Section.

1.3 PRE-CONSTRUCTION CONFERENCE

A. Attend a pre-construction conference and organizational meeting, scheduled by Owner, at the project site or other convenient location no later than 5 days after execution of the Agreement and prior to commencement of construction activities. Conduct the meeting to review responsibilities and personnel assignments.

B. Attendees: The Owner, Project Manager/General Contractor, Architect and their consultants, major subcontractors, manufacturers, suppliers and other concerned parties shall each be represented at the conference by persons familiar with and authorized to conclude matters relating to the Work.

C. Proposed Agenda: Parties attending the Pre-Construction Meeting shall be familiar with the project to discuss items of significance that could affect progress including such topics as:

1. Tentative construction schedule.
2. Critical Work sequencing.
3. Designation of responsible personnel.
4. Procedures for processing field decisions and Change Orders.
5. Procedures for processing Applications for Payment.
6. Distribution of Contract Documents.
7. Submittal of Shop Drawings, Product Data and Samples.
8. Preparation of record documents.
9. Use of the premises.
10. Office, Work and storage areas.
11. Equipment deliveries and priorities.
12. Safety procedures.
13. First aid.
14. Security.
15. Housekeeping.
16. Working hours.

1.4 SUBCONTRACTOR COORDINATION MEETINGS

A. Participation in project coordination meetings i s required. Meeting shall be held at regularly scheduled times convenient for all parties involved. Project coordination meetings are in addition to specific meetings held for other purposes, such as regular progress meetings and special pre-installation meetings.

B. Project Manager/General Contractor will notify applicable subcontractor for representation at coordination meetings.

PART 2 - PRODUCTS (Not Applicable)

PART 3 - EXECUTION (Not Applicable)

END OF SECTION 01200

SECTION 01300 - SUBMITTALS

PART 1 - GENERAL

1.1 RELATED DOCUMENTS

A. Drawings and general provisions of Contract, including General and Supplementary Conditions and other Division-1 Specification Sections, apply to this Section.

1.2 SUMMARY

A. This Section specifies administrative and procedural requirements for submittals required for performance of the Work, including;

1. Submittal procedures.
2. Shop Drawings.
3. Product Data.
4. Samples.

B. Administrative Submittals: Refer to other Division-1 Sections and other Contract Documents for requirements for administrative submittals. Such submittals include, but are not limited to:

1. Permits.
2. Applications for payment.
3. Insurance certificates.

C. The Schedule of Values submittal is included in Section "Applications for Payment."

D. Inspection and test reports are included in Section " Quality Control Services."

1.3 SUBMITTAL PROCEDURES

A. Coordination: Coordinate preparation and processing of submittals with performance of construction activities. Transmit each submittal sufficiently in advance of performance of related construction activities to avoid delay.

1. Coordinate each submittal with fabrication, purchasing, testing, delivery, other submittals and related activities that require sequential activity.

2. Coordinate transmittal of different types of submittals for related elements of the Work so processing will not be delayed by the need to review submittals concurrently for coordination.

a. The Architect reserves the right to withhold action on a submittal requiring coordination with other submittals until related submittals are received.

3. Processing: Allow sufficient review time so that installation will not be delayed as a result of the time required to process submittals, including time for re-submittals.

a. Allow ten working days for initial review. Allow additional time if processing must be delayed to permit coordination with subsequent submittals. The Architect will promptly advise the Contractor when a submittal being processed must be delayed for coordination.
b. If an intermediate submittal is necessary, process the same as the initial submittal.
c. Allow ten working days for reprocessing each submittal.

d. If a second or third person needs to review the submittal, Allow ten working days for each discipline or agency required for review.
e. No extension of Contract Time will be authorized because of failure to transmit submittals to the Architect sufficiently in advance of the work to allow for required processing time.

B. Submittal Preparation: Place a permanent label or title block on each submittal for identification. Indicate the name of the entity that prepared each submittal on the label or title block.

1. Provide a space approximately 4" x 5" on the label or beside the title block on Shop Drawings to record the Contractor's review and approval markings and the action taken.

2. Include the following information on the label for processing and recording action taken.

a. Project name.
b. Date.
c. Name and address of Architect.
d. Name and address of Contractor.
e. Name and address of subcontractor.
f. Name and address of supplier.
g. Name of manufacturer.
h. Number and title of appropriate Specification Section.
i. Drawing number and detail references, as appropriate.

C. Submittal Transmittal: Package each submittal appropriately for transmittal and handling. Transmit each submittal from Contractor to Architect using a transmittal form. Submittals received from sources other than the Contractor will be returned without action.

1. Identify each submittal with a submittal number consisting of a chronological submittal number followed by the Specification Section number and an alphabetical submission designation letter. Designate initial submission with an "A". Example: 2-03300-A indicates second submittal for the project, item submitted is in section 03300, and it is the first submittal for the item.

2. On the transmittal record relevant information and requests for data. On the form, or separate sheet, record deviations from Contract Document requirements, including minor variations and limitations. Include Contractor's certification that information complies with Contract Document requirements.

3. Indicate required return date on transmittal form. For submittals needed prior to allotted review period specified above, mark clearly on transmittal form: "URGENT" and indicate return date.

4. Transmittal Form: Use the sample form at the end of this Section for transmittal of submittals.

D. Re-submittals: Indicate original submittal number with letter designation in alphabetical order for each re-submittal. "B" for first re-submittal, "C" for second re-submittal and so forth.

1.4 SHOP DRAWINGS

D. Submit newly prepared information, drawn to accurate scale. Highlight, encircle, or otherwise indicate deviations from the Contract Documents. Do not reproduce Contract Documents or

copy standard information as the basis of Shop Drawings. Standard information prepared without specific reference to the Project is not considered Shop Drawings.

E. Shop Drawings include fabrication and installation drawings, setting diagrams, schedules, patterns, templates and similar drawings. Include the following information:

1. Dimensions.
2. Identification of products and materials included.
3. Compliance with specified standards.
4. Notation of coordination requirements.
5. Notation of dimensions established by field measurement.
6. Sheet Size: Except for templates, patterns and similar full - size Drawings, submit Shop Drawings on 8-1/2" x 11", 11" X 17", or 24" x 36" sheets.
   a. One of the prints returned shall be marked-up and maintained as a "Record Document"
7. Number of Copies: Submit 4 opaque (bond) copies of each submittal. Architect will return two copies.
8. Do not use Shop Drawings without an appropriate final stamp indicating action taken in connection with construction.

1.5 PRODUCT DATA

A. Collect Product Data into a single submittal for each element of construction or system. Product Data includes printed information such as manufacturer's installation in structions, catalog cuts, standard color charts, roughing-in diagrams and templates, standard wiring diagrams and performance curves. Where Product Data must be specially prepared because standard printed data is not suitable for use, submit as "Shop Draw ings."

1. Mark each copy to show applicable choices and options. Where printed Product Data includes information on several products, some of which are not required, mark copies to indicate the applicable information. Include th e following information:

   a. Manufacturer's printed recommendations.
   b. Compliance with recognized trade association standards.
   c. Compliance with recognized testing agency st andards.
   d. Application of testing agency labels and seals.
   e. Notation of dimensions verified by field measurement.
   f. Notation of coordination requirements.

2. Do not submit Product Data until compliance with requirements of the Contract Documents has been confirmed.

3. Submittals: Submit 5 copies of each required submittal. The Architect will retain 1, and will return the oth er copies marked with action taken and corrections or modifications required.

4. Distribution: Furnish copies of reviewed submittal to installers, subcontractors, suppliers, manufacturers, fabricators, and others required for perfo rmance of construction activities. Show distribution on transmittal forms.

   a. Do not proceed with installation until an applicable copy of Product Data applicable is in the installer's possession.
   b. Do not permit use of unmarked copies of Product Data i n connection with construction.

B. Project Submittal Schedule: As required by the individual Specification Sections, prepare a written summary submittal schedule indicating types of products or processes and submittals

required for the Work and their intended timely delivery times to the Architect within the duration of construction. Effort shall be made to stagger the submittals so they can be reasonably processed by the Architect in a manner that follows the construction procurement requirements.

1. Number of copies: Submit three copies of product schedule or list, unless otherwise indicated. Architect will return two copies.

C. Samples: Submit Samples for review of kind, color, pattern, and texture for a check of these characteristics with other elements and for a comparison of these characteristics between submittal and actual component as delivered and installed.

1. Transmit Samples that contain multiple, related components such as accessories together in one submittal package.
2. Identification: Attach label on unexposed side of Samples that includes the following:
   a. Generic description of Sample.
   b. Product name and name of manufacturer.
   c. Sample source.
   d. Number and title of appropriate Specification Section.

3. Disposition: Maintain sets of approved Samples at Project site, available for quality-control comparisons throughout the course of construction activity. Sample sets may be used to determine final acceptance of construction associated with each set.

4. Samples for initial Selection: Submit manufacturer˘s color charts consisting of units or sections of units showing the full range of colors, textures, and patters available.

   a. Number of Samples: Submit two full set(s) of available choices where color, pattern, texture, or similar characteristics are required to be selected from manufacturer˘s product line. Architect will return one submittal with options selected and retain the other.

5. Samples for Verification: Submit full-size units or Samples of size indicated, prepared from same material to be used for the Work, cured and finished in manner specified, and physically identical with material or product proposed for use, and that show full range of color and texture variations expected. Samples include, but are not limited to, the following: partial sections of manufactured or fabricated components; small cuts or containers of materials; complete units of repetitively used materials; swatches showing color, texture and pattern; color range sets; and components used for independent testing and inspection.

   a. Number of Samples: Submit two sets of Samples. Architect will retain one Sample set; remainder will be returned.

1.6 ARCHITECT'S ACTION

A. Except for submittals for record, information or similar purposes, where action and return is required or requested, the Architect will review each submittal, mark to indicate action taken, and return promptly.

1. Compliance with specified characteristics is the Contractor's responsibility.

B. Action Stamp: The Architect will stamp each submittal with a uniform, self-explanatory action stamp. The stamp will be appropriately marked, as follows, to indicate the action taken:

1. Final Unrestricted Release: Where submittals are marked **"Reviewed, no exceptions noted,"** that part of the Work covered by the submittal may proceed provided it complies with requirements of the Contract Docu ments; final acceptance will depend upon that compliance.

2. Final-But-Restricted Release: When submittals are marked **"Reviewed, exceptions noted,"** that part of the Work covered by the submittal may proceed provided it complies with notations or corrections on the submittal and requirements of the Contract Documents; final acceptance will depend on that compliance.
   a. When marked **"Resubmission required,"** resubmission is for record, clarification, or for purposes of confirming the information contained in the submittal. The submittal shall be considered as not acceptable until such time as the written response is accepted by the Architect.
   b. When marked **"Resubmission not required,"** no further submittal action is required.

3. Returned for Re-submittal: When submittal is marked **"Rejected, resubmission required,"** do not proceed with that part of the Work covered by the submittal, including purchasing, fabrication, delivery, or other activity. Revise or prepare a new submittal in accordance with the notations; resubmit without delay. Repeat if necessary to obtain a different action mark.

   a. Do not permit submittals marked **"Rejected, re-submittal required"** to be used at the Project site, or elsewhere where Work is in progress.

4. Other Action: Where a submittal is primarily for information or record purposes, special processing or other activity, the subm ittal will be returned, marked "information received ˙ no review required."

PART 2 - PRODUCTS (Not Applicable).

PART 3 - EXECUTION (Not Applicable).

END OF SECTION 01300

CONTRACTOR SUBMITTAL FORM

CONTRACTOR:
ADDRESS:

PROJECT: UDOT Maintenance Station
Scofield, Utah

SUBMITTAL NO: _____

TO: Archiplex Group
255 Crossroad Square
Salt Lake City, Utah 84115

DATE: _____

Archiplex Group Project No. 0837.01

ATTN: Kathy Phillips

No. of Copies	Description	Source (Mfg., Supplier, Subcontractor)	Spec. Section or Drawing Reference

Remarks:

_____

_____

_____

_____

_____

Signature of the General Contractor certifies that the material or equipment contained in this submittal has been checked for compliance with the Contract Documents, and that dimensions have been checked.

_____
Signature

SECTION 01400 - QUALITY CONTROL SERVICES

PART 1 - GENERAL

1.1 RELATED DOCUMENTS

A. Drawings and general provisions of Contract, including General and Supplementary Conditions and other Division-1 Specification Sections, apply to this Section.

1.2 SUMMARY

A. This Section specifies administrative and procedural requirements for quality control services.

B. Quality control services include inspections and tests and related actions including reports, performed by independent agencies, governing authorities, and the Contractor. They do not include Contract enforcement activities performed by the Architect.

C. Inspection and testing services are required to verify compliance with requirements specified or indicated. These services do not relieve the Contractor of responsibility for compliance with Contract Document requirements.

D. Requirements of this Section relate to customized fabrication and installation procedures, not production of standard products.

1. Specific quality control requirements for individual construction activities are specified in the Sections that specify those activities. Those requirements, including inspections and tests, cover production of standard products as well as customized fabrication and installation procedures.

2. Inspections, test and related actions specified are not intended to limit the Contractor's quality control procedures that facilitate compliance with Contract Document requirements.

3. Requirements for the Contractor to provide quality control services required by the Architect, Owner, or authorities having jurisdiction are not limited by provisions of this Section.

1.3 RESPONSIBILITIES

A. Owner Responsibilities: The Owner will provide inspections, tests and similar quality control services, specified in individual Specification Sections and required by governing authorities, except where they are specifically indicated to be the Contractor's responsibility.

1. The Owner will engage and pay for the services of an independent agency to perform inspections and tests specified as the Owner's responsibility.

a. Where the Owner has engaged a testing agency or other entity for testing and inspection of a part of the Work, and the Contractor is also required to engage an entity for the same or related element, the Contractor shall not employ the entity engaged by the Owner, unless otherwise agreed in writing with the Owner.

2. Retesting: The Contractor is responsible for retesting where results of required inspections, tests or similar services prove unsatisfactory and do not indicate compliance with Contract Document requirements, regardless of whether the original test was the Contractor's responsibility.

a. Cost of retesting construction revised or replaced by the Contractor is the Contractor's responsibility, where required tests were performed on original construction.

3. Associated Services: The Contractor shall cooperate with agencies performing required inspections, tests and similar services and provide reasonable auxiliary services as requested. Notify the agency sufficiently in advance of operations to permit assignment of personnel. Auxiliary services required include but are not limited to:

a. Providing access to the Work and furnishing incidental labor and facilities necessary to facilitate inspections and tests.
b. Taking adequate quantities of representative samples of materials that require testing or assisting the agency in taking samples.
c. Providing facilities for storage and curing of test samples, and delivery of samples to testing laboratories.
d. Providing the agency with a preliminary design mix proposed for use for materials mixes that require control by the testing agency.
e. Security and protection of samples and test equipment at the Project site.

B. Owner Responsibilities: The Owner will provide inspections, tests and similar quality control services specified to be performed by independent agencies and not by the Contractor, except where they are specifically indicated as the Contractor's responsibility or are provided by another identified entity.

1. The Owner will employ and pay for the services of an independent agency, testing laboratory or other qualified firm to perform services which are the Owner's responsibility.

C. Duties of the Testing Agency: The independent testing agency engaged to perform inspections, sampling and testing of materials and construction specified in individual Specification Sections shall cooperate with the Architect and Contractor in performance of its duties, and shall provide qualified personnel to perform required inspections and tests.

1. The agency shall notify the Architect and Contractor promptly of irregularities or deficiencies observed in the Work during performance of its services.

2. The agency is not authorized to release, revoke, alter or enlarge requirements of the Contract Documents, or approve or accept any portion of the Work.

3. The agency shall not perform any duties of the Contractor.

D. Coordination: The Contractor and each agency engaged to perform inspections, tests and similar services shall coordinate the sequence of activities to accommodate required services with a minimum of delay. In addition the Contractor and each agency shall coordinate activities to avoid the necessity of removing and replacing construction to accommodate inspections and tests.

1. The Contractor is responsible for scheduling times for inspections, tests, taking samples and similar activities.

2. Contractor will be responsible for ordering tests on a timely basis. Delays in the work caused by Contractors failure to order testing on time or to make corrections due to faulty materials or installation for retesting will not be allowed as a basis for extending the contract time.

1.4 SUBMITTALS

A. The independent testing agency shall submit a Owner certified written report of each inspection, test or similar service, to the Owner & Architect, in duplicate, unless the Contractor is responsible for the service. If the Contractor is responsible for the service, submit a certified written report of each inspection, test or similar service through the Contractor, in duplicate.

1. Submit additional copies of each written report directly to the gover ning authority, when the authority so directs.

2. Report Data: Written reports of each inspection, test or similar service shall include, but not be limited to:
   a. Date of issue.
   b. Project title and number.
   c. Name, address and telephone number of testing agency.
   d. Dates and locations of samples and tests or inspections.
   e. Names of individuals making the inspection or test.
   f. Designation of the Work and test method.
   g. Identification of product and Specification Section.
   h. Complete inspection or test data.
   i. Test results and an interpretations of test results.
   j. Ambient conditions at the time of sample-taking and testing.
   k. Comments or professional opinion as to whether inspected or tested Work complies with Contract Document requirements.
   l. Name and signature of laboratory inspector.
   m. Recommendations on retesting.

3. Submittals List of required testing: Submit a list of tests to be provided as required by the Specifications or Drawings.

1.5 QUALITY ASSURANCE

A. Qualification for Service Agencies: For testing which is not the specific responsibility of the Owner, engage inspection and testing service agencies, including independent testing laboratories, which are pre-qualified as complying with "Recommended Requirements for Independent Laboratory Qualification" by the American Council of Independent Labo ratories, and which specialize in the types of inspections and tests to be performed.

1. Each independent inspection and testing agency engaged on the Project shall be authorized by authorities having jurisdiction to operate in th e State of Utah.

PART 2 - PRODUCTS (Not Applicable).

PART 3 - EXECUTION

3.1 REPAIR AND PROTECTION

A. General: Upon completion of inspection, testing, sample-taking and similar services, repair damaged construction and restore substrates and finishes to eliminate deficiencies, including deficiencies in visual qualities of exposed finishes. Comply with Contract Document requirements for "Cutting and Patching."

B. Protect construction exposed by or for quality control service activities, and protect repaired construction.

C. Repair and protection is the Contractor's responsibili ty, regardless of the assignment of responsibility for inspection, testing or similar services.

END OF SECTION 01400

SECTION 01500 - TEMPORARY FACILITIES

PART 1 - GENERAL

1.1 RELATED DOCUMENTS

A. Drawings and general provisions of the Contract, including General and Supplementary Conditions and other Division-1 Specification Sections, apply to this Section.

1.2 SUMMARY

A. This Section specifies requirements for temporary services and facilities , including utilities, construction and support facilities, security and protection.

B. Temporary utilities required include but are not limited to:

1. Water service and distribution.
2. Temporary electric power and light.
3. Telephone service and fax.

C. Temporary construction and support facilities required include but are not limited to:

1. Field office and storage sheds.
2. Sanitary facilities, including drinking water.
3. Dewatering facilities and drains.
4. Temporary project identification signs and bulletin boards.
5. Waste disposal services.
6. Construction aids and miscellaneous services and facilities.

D. Security and protection facilities required include but are not limited to:

1. Barricades, warning signs, lights.
2. Enclosure fence around buildings.
3. Environmental protection.

1.3 QUALITY ASSURANCE

A. Regulations: Comply with industry standards and applicable laws and regulations if authorities having jurisdiction, including but not limited to:

1. Building Code requirements.
2. Health and safety regulations.
3. Utility company regulations.
4. Police, Fire Department and Rescue Squad rules.
5. Environmental protection regulations.

B. Standards: Comply with NFPA Code 241, "Building Construction and Demolition Operations", ANSI-A10 Series standards for "Safety Requirements for Construction and Demolition", and NECA Electrical Design Library "Temporary Electrical Facilities."

1. Refer to "Guidelines for Bid Conditions for Temporary Job Utilities and Services", prepared jointly by AGC and ASC, for industry recommendations.
2. Electrical Service: Comply with NEMA, NECA and UL standards and regulations for temporary electric service. Install service in compliance with National Electric Code (NFPA 70).

C. Inspections: Arrange for authorities having jurisdiction to inspect and test each temporary utility before use. Obtain required certifications and permits.

1.4 PROJECT CONDITIONS

A. Temporary Utilities: Prepare a schedule indicating dates for implementation and termination of each temporary utility. At the earliest feasible time, when acceptable to the Owner, change over from use of temporary service to use of the permanent service.

B. Conditions of Use: Keep temporary services and facilities clean and neat in appearance. Operate in a safe and efficient manner. Take necessary fire prevention measures. Do not overload facilities, or permit them to interfere with progress. Do not allow hazardous dangerous or unsanitary conditions, or public nuisances to develop or persist on the site.

PART 2 - PRODUCTS

2.1 MATERIALS

A. General: Provide new materials; if acceptable to the Architect, undamaged previously used materials in serviceable condition may be used. Provide materials suitable for the use intended.

B. Lumber and Plywood: Comply with requirements in Division -6 Section "Rough Carpentry."

1. For job-built temporary sheds within the construction area, provide UL labeled, fire treated lumber and plywood for framing, sheathing and siding.
2. For signs and directory boards, provide exterior type, Grade B -B High Density Concrete Form Overlay Plywood conforming to PS -1, of sizes and thickness indicated.
3. For safety barriers and similar uses, provide minimum 5/8" thick exterior plywood.

C. Roofing Materials: Provide UL Class "A" standard weight asphalt shingles complying with ASTM D3018, or UL Class "C" mineral surfaced roll roofing complying with ASTM D 249 on roofs of job-built temporary offices, shops and sheds.

D. Paint: Comply with requirements of Division 9 Section "Finish Painting."

1. For sign panels and applying graphics, provide exterior grade alkyd gloss enamel over exterior primer.

E. Tarpaulins: Provide waterproof, fire-resistant, UL labeled tarpaulins with flame-spread rating of 15 or less. For temporary enclosures provide translucent nylon reinforced laminated polyethylene or polyvinyl chloride fire retardant tarpaulins.

F. Water: Provide potable water approved by local health authorities.

2.2 EQUIPMENT

A. General: Provide new equipment; if acceptable to the Architect, undamaged, previously used equipment in serviceable condition may be used. Provide equipment suitable for use intended.

B. Water Hoses: Provide 3/4" heavy-duty, abrasion-resistant, flexible rubber hoses 100 ft. long, with pressure rating greater than the maximum pressure of the water distribution system; provide adjustable shut-off nozzles at hose discharge.

C. Electrical Outlets: Provide properly configured NEMA polarized outlets to prevent insertion of 110-120 volt plugs into higher voltage outlets. Provide receptacle outlets equipped with ground-fault circuit interrupters, reset button and pilot light, for connection of power tools and equipment.

D. Electrical Power Cords: Provide grounded extension cords; use "hard-service" cords where exposed to abrasion and traffic. Provide waterproof connectors to connect separate lengths of electric cords, if single lengths will not reach areas where construction activities are in progress.

E. Lamps and Light Fixtures: Provide general service incandescent lamps of wattage required for adequate illumination. Provide guard cages or tempered glass enclosures, where exposed to breakage. Provide exterior fixtures where exposed to moisture.

F. Temporary Offices: Provide mobile unit (trailer) with lockable entrances, operable windows, and serviceable finishes. Provide heated and air-conditioned units on foundations adequate for normal loading.

G. Temporary Toilet Units: Provide self-contained single-occupant toilet units of the chemical, aerated recirculation, or combustion type, properly vented and fully enclosed with a glass fiber reinforced polyester shell or similar nonabsorbent material.

H. First Aid Supplies: Comply with governing regulations.

I. Fire Extinguishers: Provide hand-carried, portable UL-rated, class "A" fire extinguishers for temporary offices and similar spaces. In other locations provide hand-carried, portable, UL-rated, class "ABC" dry chemical extinguishers, or a combination of extinguishers of NFPA recommended classes for the exposures.

1. Comply with NFPA 10 and 241 for classification, extinguishing agent and size required by location and class of fire exposure.

PART 3 - EXECUTION

3.1 INSTALLATION

A. Use qualified personnel for installation of temporary facilities. Locate facilities where they will serve the Project adequately and result in minimum interference with performance of the Work. Relocate and modify facilities as required.

B. Provide each facility ready for use when needed to avoid delay. Maintain and modify as required. Do not remove until facilities are no longer needed, or are replaced by authorized use of completed permanent facilities.

3.2 TEMPORARY UTILITY INSTALLATION

A. General: Engage the appropriate local utility company to install temporary service or connect to existing service. Where the company provides only part of the service, provide the remainder with matching, compatible materials and equipment; comply with the company's recommendations.

1. Arrange with the company and existing users for a time when service can be interrupted, where necessary, to make connections for temporary services.
2. Provide adequate capacity at each stage of construction. Prior to temporary utility availability, provide trucked-in services.
3. Obtain easements to bring temporary utilities to the site, where the Owner's easements cannot be used for that purpose.
4. Use Charges: Cost or use charges for temporary facilities are not chargeable to the Owner or Architect, and will not be accepted as a basis of claims for a Change Order.

B. Water Service: Install water service and distribution piping of sizes and pressures adequate for construction using permanent water service on-site.

1. Sterilization: Sterilize temporary water piping prior to use.

C. Temporary Electric Power Service: Provide weatherproof, grounded electric power service and distribution system of sufficient size, capacity, and power characteristics during construction period or earlier if existing service is available. Include meters, transformers, overload protected disconnects, automatic ground-fault interrupters and main distribution switch gear.

1. Except where overhead service must be used, install electric power service underground.
2. Power Distribution System: Install wiring overhead, and rise vertically where least exposed to damage. Where permitted, wiring circuits not exceeding 125 Volts, AC 20 ampere rating, and lighting circuits may be nonmetallic sheathed cable where overhead and exposed for surveillance.

D. Temporary Lighting: Whenever overhead floor or roof deck has been installed, provide temporary lighting with local switching.

1. Install and operate temporary lighting that will fulfill security and protection requirements, without operating the entire system, and will provide adequate illumination for construction operations and traffic conditions.

E. Temporary Telephones: Provide temporary telephone service for all personnel engaged in construction activities, throughout the construction period. Install telephone on a separate

line for each temporary office and first aid station. Where an office has more than two occupants, install a telephone for each additional occupant or pair of occupants.

1. At each telephone, post a list of important telephone numbers.

3.3 TEMPORARY CONSTRUCTION AND SUPPORT FACILITIES INSTALLATION

A. Locate field offices, storage sheds, sanitary facilities and other temporary construction and support facilities for easy access.

1. Maintain temporary construction and support facilities until near Substantial Completion. Remove prior to Substantial Completion. Personnel remaining after Substantial Completion will be permitted to use permanent facilities, under conditions acceptable to the Owner.

B. Provide incombustible construction for offices, shops and sheds located within the construction area, or within 30 feet of building lines. Comply with requirements of NFPA 241.

C. Field Offices: Provide insulated, weathertight temporary offices of sufficient si ze to accommodate required office personnel at the Project site. Keep the office clean and orderly for use for small progress meetings. Furnish and equip offices as follows:

1. Furnish with a desk and chairs (for 8-10 persons), plan table and plan rack.

D. Storage and Fabrication Sheds: Install storage and fabrication sheds, sized, furnished and equipped to accommodate materials and equipment involved, including temporary utility service. Sheds may be open shelters or fully enclosed spaces within the building or elsewhere on the site.

E. Sanitary facilities include temporary toilets, wash facilities and drinking water fixtures. Comply with regulations and health codes for the type, number, locatio n, operation and maintenance of fixtures and facilities. Install where facilities will best serve the Project's needs.

1. Provide toilet tissue, paper towels, paper cups and similar disposable materials for each facility. Provide covered waste containers for used material.

F. Toilets: Install self-contained toilet units. Shield toilets to ensure privacy. Use of pit -type privies will not be permitted.

G. Drinking Water Facilities: Provide containerized tap-dispenser bottled-water type drinking water units, including paper supply.

1. Where power is accessible, provide electric water coolers to maintain dispensed water temperature at 45 to 55 deg F (7 to 13 deg C).

H. Dewatering Facilities and Drains: For temporary drainage and dewatering facilities and operations not directly associated with construction activities included under individual Sections, provide dewatering proce dures, temporary trenches and field drains as needed to maintain the site, excavations and construction free of water.

I. Temporary Enclosures: Provide temporary enclosure for protection of construction in progress and completed, from exposure, foul weather, other construction operations and similar activities.

1. Where heat is needed and the permanent building enclosure is not complete, provide temporary enclosures where there is no provision for contain ment of heat.

Coordinate enclosure with ventilating and material drying or curing requirements to avoid dangerous conditions and effects.

2. Install tarpaulins securely, with incombustible wood framing and other materials. Close openings of 25 square feet or less with plywood or similar materials.

3. Close openings through floor or roof decks and horizontal surfaces with load -bearing wood-framed construction.

J. Temporary Exterior Lighting: Install exterior yard and sign lights so that signs are visible when Work is being performed.

K. Collection and Disposal of Waste: Collect waste from construction areas and elsewhere daily. Comply with requirements of NFPA 241 for removal of combustible waste material and debris. Enforce requirements strictly. Do not hold materials more than 7 days during normal weather or 3 days when the temperature is expected to rise above 80 deg F (27 deg C). Handle hazardous, dangerous, or unsanitary waste materials separately from other waste by containerizing properly. Dispose of material in a lawful manner.

3.4 SECURITY AND PROTECTION FACILITIES INSTALLATION

A. Except for use of permanent fire protection as soon as available, do not change over from use of temporary security and protection facilities to permanent facilities until Substantial Completion, or longer as requested by the Architect.

B. Temporary Fire Protection: Until fire protection needs are supplied by permanent facilities, install and maintain temporary fire protection facilities of the types needed to protect against reasonably predictable and controllable fire losses. Comply with NFPA 10 "Standard for Portable Fire Extinguishers," and NFPA 241 "Standard for Safeguarding Construction, Alterations and Demolition Operations."

1. Locate fire extinguishers where convenient and effective for their intended purpose, but not less than one extinguisher on each floor at or near each usable stairwell.

2. Store combustible materials in containers in fire-safe locations.

3. Maintain unobstructed access to fire extinguishers, fire hydrants, temporary fire protection facilities, stairways and other access routes for fighting fires. Prohibit smoking in hazardous fire exposure areas.

4. Provide supervision of welding operations, combustion type temporary heating units, and similar sources of fire ignition.

C. Barricades, Warning Signs and Lights: Comply with standards and code requirements for erection of structurally adequate barricades. Paint with appropriate colors, graphics and warning signs to inform personnel and the public of the hazard being protected against. Where appropriate and needed provide lighting, including flashing red or amber lights.

D. Environmental Protection: Provide protection, operate temporary facilities and conduct construction in ways and by methods that comply with environmental regulations, and minimize the possibility that air, waterways and subsoil might be contaminated or polluted, or that other undesirable effects might result. Avoid use of tools and equipment which produce harmful noise. Restrict use of noise making tools and equipment to hours that will minimize complaints from persons or firms near the site.

3.5 OPERATION, TERMINATION AND REMOVAL

A. Supervision: Enforce strict discipline in use of temporary facilities. Limit availability of temporary facilities to essential and intended uses to minimize waste and abuse.

B. Maintenance: Maintain facilities in good operating condition until removal. Protect from damage by freezing temperatures and similar elements.

1. Maintain operation of temporary enclosures, heating, cooling, humidity control, ventilation and similar facilities on a 24-hour day basis where required to achieve indicated results and to avoid possibility of damage.

2. Protection: Prevent water filled piping from freezing. Maintain markers for underground lines. Protect from damage during excavation operations.

C. Termination and Removal: Unless the Architect requests that it be maintained longer, remove each temporary facility when the need has ended, or when replaced by authorized use of a permanent facility, or no later than Substantial Completion. Complete or, if necessary, restore permanent construction that may have been delayed because of interference with the temporary facility. Repair damaged Work, clean exposed surfaces and replace construction that cannot be satisfactorily repaired.

1. Materials and facilities that constitute temporary facilities are property of the Contractor. The Owner reserves the right to take possession of Project identification signs.

2. At Substantial Completion, clean and renovate permanent facilities that have been used during the construction period, including but not limited to:
   a. Replace air filters and clean inside of ductwork and housings.
   b. Replace significantly worn parts and parts that have been subject to unusual operating conditions.
   c. Replace lamps that are burned out or noticeably dimmed by substantial hours of use.

END OF SECTION 01500

SECTION 01600 - MATERIALS AND EQUIPMENT

PART 1 - GENERAL

1.1 RELATED DOCUMENTS

A. Drawings and general provisions of Contract, including General and Supplementary Conditions and other Division-1 Specification Sections, apply to this Section.

1.2 SUMMARY

A. This Section specifies administrative and procedural requirements governing the Contractor's selection of products for use in the Project.

B. The Contractor's Construction Schedule and the Schedule of Submittals are included under Section "Submittals."

C. Standards: Refer to Section "Definitions and Standards" for applicability of industry standards to products specified.

D. Administrative procedures for handling requests for substitutions made after award of the Contract are included under Section "Product Substitutions."

1.3 DEFINITIONS

A. Definitions used in this Article are not intended to change the meaning of other terms used in the Contract Documents, such as "specialties," "systems," "structure," "finishes," "accessories," and similar terms. Such terms such are self-explanatory and have well recognized meanings in the construction industry.

1. "Products" are items purchased for incorporation in the Work, whether purchased for the Project or taken from previously purchased stock. The term "product" includes the terms "material," "equipment," "system," and terms of similar intent.

a. "Named Products" are items identified by manufacturer's product name, including make or model designation, indicated in the manufacturer's published product literature, that is current as of the date of the Contract Documents.

2. "Materials" are products that are substantially shaped, cut, worked, mixed, finished, refined or otherwise fabricated, processed, or installed to form a part of the Work.

3. "Equipment" is a product with operational parts, whether motorized or manually operated, that requires service connections such as wiring or piping.

1.4 QUALITY ASSURANCE

A. Source Limitations: To the fullest extent possible, provide products of the same kind, from a single source.

1. When specified products are available only from sources that do not or cannot produce a quantity adequate to complete project requirements in a timely manner, consult with the Architect for a determination of the most important product qualities before proceeding. Qualities may include attributes relating to visual appearance, strength, durability, or compatibility. When a determination has been made, select products from sources that produce products that possess these qualities, to the fullest extent possible.

B. Compatibility of Options: When the Contractor is given the option of selecting between two or more products for use on the Project, the product selected shall be compatible with products previously selected, even if previously selected products were also options.

C. Nameplates: Except for required labels and operating data, do not attach or imprint manufacturer's or producer's nameplates or trademarks on exposed surfaces of products which will be exposed to view in occupied spaces or on the exterior.

1. Labels: Locate required product labels and stamps on a concealed surface or, where required for observation after installation, on an accessible surface that is not conspicuous.

2. Equipment Nameplates: Provide a permanent nameplate on each item of service-connected or power-operated equipment. Locate on an easily accessible surface which is inconspicuous in occupied spaces. The nameplate shall contain the following information and other essential operating data:
   a. Name of product and manufacturer.
   b. Model and serial number.
   c. Capacity.
   d. Speed.
   e. Ratings.

1.5 PRODUCT DELIVERY, STORAGE, AND HANDLING

A. Deliver, store and handle products in accordance with the manufacturer's recommendations, using means and methods that will prevent damage, deterioration and loss, including theft.

1. Schedule delivery to minimize long-term storage at the site and to prevent overcrowding of construction spaces.
2. Coordinate delivery with installation time to ensure minimum holding time for items that are flammable, hazardous, easily damaged, or sensitive to deterioration, theft and other losses.
3. Deliver products to the site in the manufacturer's original sealed container or other packaging system, complete with labels and instructions for handling, storing, unpacking, protecting and installing.

4. Inspect products upon delivery to ensure compliance with the Contract Documents, and to ensure that products are undamaged and properly protected.
5. Store products at the site in a manner that will facilitate inspection and measurement of quantity or counting of units.
6. Store heavy materials away from the Project structure in a manner that will not endanger the supporting construction.
7. Store products subject to damage by the elements above ground, under cover in a weathertight enclosure, with ventilation adequate to prevent condensation. Maintain temperature and humidity within range required by manufacturer's instructions.

PART 2 - PRODUCTS

2.1 PRODUCT SELECTION

A. General Product Requirements: Provide products that comply with the Contract Documents, that are undamaged and, unless otherwise indicated, unused at the time of installation.

1. Provide products complete with all accessories, trim, finish, safety guards and other devices and details needed for a complete installation and for the intended use and effect.
2. Standard Products: Where available, provide standard products of types that have been produced and used successfully in similar situations on other projects.

B. Product Selection Procedures: Product selection is governed by the Contract Documents and governing regulations, not by previous project experience. Procedures governing product selection include the following:

1. Semiproprietary Specification Requirements: Where two or more products or manufacturers are named, provide one of the products indicated. No substitutions will be permitted.
   a. Where products or manufacturers are specified by name, accompanied by the term "or equal," or "or approved equal" comply with the Contract Document provisions concerning "substitutions" to obtain approval for use of an unnamed product.

2. Non-Proprietary Specifications: When the Specifications list products or manufacturers that are available and may be incorporated in the Work, but do not restrict the Contractor to use of these products only, the Contractor may propose any available product that complies with Contract requirements. Comply with Contract Document provisions concerning "substitutions" to obtain approval for use of an unnamed product.

3. Descriptive Specification Requirements: Where Specifications describe a product or assembly, listing exact characteristics required, with or without use of a brand or trade name, provide a product or assembly that provides the characteristics and otherwise complies with Contract requirements.

4. Performance Specification Requirements: Where Specifications require compliance with performance requirements, provide products that comply with these requirements, and are recommended by the manufacturer for the application indicated. General overall performance of a product is implied where the product is specified for a specific application.
   a. Manufacturer's recommendations may be contained in published product literature, or by the manufacturer's certification of performance.

5. Compliance with Standards, Codes and Regulations: Where the Specifications only require compliance with an imposed code, standard or regulation, select a product that complies with the standards, codes or regulations specified.

6. Visual Matching: Where Specifications require matching an established Sample, the Architect's decision will be final on whether a proposed product matches satisfactorily.
   a. Where no product available within the specified category matches satisfactorily and also complies with other specified requirements, comply with provisions of the Contract Documents concerning "substitutions" for selection of a matching product in another product category, or for noncompliance with specified requirements.

PART 3 - EXECUTION

3.1 INSTALLATION OF PRODUCTS:

A. Comply with manufacturer's instructions and recommendations for installation of products in the applications indicated. Anchor each product securely in place, accurately located and aligned with other Work.

1. Clean exposed surfaces and protect as necessary to ensure freedom from damage and deterioration at time of Substantial Completion.

END OF SECTION 01600

SECTION 01631 - PRODUCT SUBSTITUTIONS

PART 1 - GENERAL

1.1 RELATED DOCUMENTS

A. Drawings and general provisions of Contract, including General and Su pplementary Conditions and other Division-1 Specification Sections, apply to this Section.

1.2 SUMMARY

A. This Section specifies administrative and procedural requirements for handl ing requests for substitutions made after award of the Contract.

B. The Contractor's Construction Schedule and the Schedule of Submittals are included under Section "Submittals."

C. Standards: Refer to Section "Definitions and Standards" for applicability of industry standards to products specified.

D. Procedural requirements governing the Contractor's selection of products and product options are included under Section "Ma terials and Equipment."

1.3 DEFINITIONS

A. Definitions used in this Article are not intended to change or modify the meaning of other terms used in the Contract Documents.

B. Substitutions: Requests for changes in products, materials, equipment, and methods of construction required by Contract Documents proposed by the Contractor after award of the Contract are considered requests for "substitutions." T he following are not considered substitutions:

1. Substitutions requested by Bidders during the bidding period, and accepted prior to award of Contract, are considered as included in the Contract Documents and are not subject to requirements specified in this Section for substitutions.
2. Revisions to Contract Documents requested by the Owner or Architect.
3. Specified options of products and construction methods included in Contract Documents.
4. The Contractor's determination of and compliance with governing regulations and orders issued by governing authorities.

1.4 SUBMITTALS

A. Substitution Request Submittal: Requests for substitution will be considered if received within 10 days after commencement of the Work. Requests received more than 10 days after commencement of the Work may be considered or rejected at the discretion of the Architect.

1. Submit 3 copies of each request for substitution for consideration. Submit requests in the form and in accordance with procedures required for Change Order proposals.

2. Identify the product, or the fabrication or installation method to be replaced in each

request. Include related Specification Section and Drawing numbers. Provide complete documentation showing compliance with the requirements for substitutions, and the following information , as appropriate:

a. Product Data, including Drawings and descriptions of products, fabrication and installation procedures.
b. Samples, where applicable or requested.
c. A detailed comparison of significant qualities of the proposed substitution with those of the Work specified. Significant qualities may include elements such as size, weight, durability, performance and visual effect.
d. Coordination information, including a list of changes or modifications needed to other parts of the Work and to construction performed by the Owner and separate Contractors, that will become necessary to accommodate the proposed substitution.
e. A statement indicating the substitution's effect on the Contractor's Construction Schedule compared to the schedule without approval of the substitution. Indicate the effect of the proposed substitution on overall Contract Time.
f. Cost information, including a proposal of the net change, if any in the Contract Sum.
g. Certification by the Contractor that the substitution proposed is equal -to or better in every significant respect to that requi red by the Contract Documents, and that it will perform adequately in the application indicated. Include the Contractor's waiver of rights to additional payment or time, that may subsequently become necessary because of the failure of the substitution to perform adequately.

3. Architect's Action: Within one week of receipt of the request for substitution, the Architect will request additional information or documentation necessary for evaluation of the request. Within one weeks of receipt of the request, or one week of receipt of the additional information or documentation, which ever is later, the Architect will notify the Contractor of acceptance or rejection of the proposed substitution. If a decision on use of a proposed subst itute cannot be made or obtained within the time allocated, use the product specified by name. Acceptance will be in the form of a Change Order.

PART 2 - PRODUCTS

2.1 SUBSTITUTIONS

A. Conditions: The Contractor's substitution request will be received and considered by the Architect when one or more of the following conditions are satisfied, as determined by the Architect; otherwise requests will be returne d without action except to record noncompliance with these requirements.

1. Extensive revisions to Contract Documents are not required.

2. Proposed changes are in keeping with the general intent of Contrac t Documents.

3. The request is timely, fully documented and properly submitted.

4. The request is directly related to an "or equal" clause or similar language in the Contract Documents.

5. The specified product or method of construction cannot be provided within the Contract Time. The request will not be considered if the product or method cannot be provided as a result of failure to pursue the Work promptly or coordinate activities

properly.

6. The specified product or method of construction cannot receive necessary approval by a governing authority, and the requested substitution can be approved.

7. A substantial advantage is offered the Owner, in terms of cost, time, energy conservation or other considerations of merit, after deducting offsetting responsibilities the Owner may be required to bear. Additional responsibilities for the Owner may include additional compensation to the Architect for redesign and evaluation services, increased cost of other construction by the Owner or separate Contractors, and similar considerations.

8. The specified product or method of construction cannot be provided in a manner that is compatible with other materials, and where the Contractor certifies that the substitution will overcome the incompatibility.

9. The specified product or method of construction cannot be coordinated with other materials, and where the Contractor certifies that the proposed substitution can be coordinated.

10. The specified product or method of construction cannot provide a warranty required by the Contract Documents and where the Contractor certifies that the proposed substitution provide the required warranty.

B. The Contractor's submittal and Architect's acceptance of Shop Drawings, Product Data or Samples that relate to construction activities not complying with the Contract Documents does not constitute an acceptable or valid request for substitution, nor does it constitute approval.

PART 3 - EXECUTION (Not Applicable)

END OF SECTION 01631

SECTION 01700 - PROJECT CLOSEOUT

PART 1 - GENERAL

1.1 RELATED DOCUMENTS

A. Drawings and general provisions of Contract, including General and Supplementary Conditions and other Division-1 Specification Sections, apply to this Section.

1.2 SUMMARY

A. This Section specifies administrative and procedural requirements for project closeout, including but not limited to:

1. Inspection procedures.
2. Project record document submittal.
3. Operating and maintenance manual submittal.
4. Submittal of warranties.
5. Final cleaning.

B. Closeout requirements for specific construction activities are included in the appropriate Sections in Divisions-2 through -16.

1.3 SUBSTANTIAL COMPLETION

A. Preliminary Procedures: Before requesting inspection for certification of Substantial Completion, complete the following. List exceptions in the request.

1. In the Application for Payment that coincides with, or first follows, the date Substantial Completion is claimed, show 100 percent completion for the portion of the Work claimed as substantially complete. Include supporting documentation for completion as indicated in these Contract Documents and a statement showing an accounting of changes to the Contract Sum.

a. If 100 percent completion cannot be shown, include a list of incomplete items, the value of incomplete construction, and reasons the Work is not complete.

2. Advise Owner of pending insurance change-over requirements.

3. Submit specific warranties, workmanship bonds, maintenance agreements, final certifications and similar documents.

4. Obtain and submit releases enabling the Owner unrestricted use of the Work and access to services and utilities; include occupancy permits, operating certificates and similar releases.

5. Submit record drawings, maintenance manuals, final project photographs, damage or settlement survey, property survey, and similar final record information.

6. Deliver tools, spare parts, extra stock, and similar items.

7. Make final change-over of permanent locks and transmit keys to the Owner. Advise the Owner's personnel of change-over in security provisions.

8. Complete start-up testing of systems, and instruction of the Owner's operating and maintenance personnel. Discontinue or change over and remove temporary facilities from the site, along with construction tools, mock-ups, and similar elements.

9. Complete final clean up requirements, including touch-up painting. Touch-up and otherwise repair and restore marred exposed finishes.

B. Inspection Procedures: On receipt of a request for inspection, the Architect will either proceed with inspection or advise the Contractor of unfilled requirements. The Architect will prepare the Certificate of Substantial Completion following inspection, or advise the Contractor of construction that must be completed or corrected before the certificate will be issued.

1. The Architect will repeat inspection when requested and assured that the Work has been substantially completed.

2. Results of the completed inspection will form the basis of requirements for final acceptance.

1.4 FINAL ACCEPTANCE

A. Preliminary Procedures: Before requesting final inspection for certification of final acceptance and final payment, complete the following. List exceptions in the request.

1. Submit the final payment request with releases and supporting documentation not previously submitted and accepted. Include certificates of insurance for products and completed operations where required.

2. Submit an updated final statement, accounting for final additional changes to the Contract Sum.

3. Submit a certified copy of the Architect's final inspection list of items to be completed or corrected, stating that each item has been completed or otherwise resolved for acceptance, and the list has been endorsed and dated by the Architect.

4. Submit final meter readings for utilities and similar data as of the date of Substantial Completion, or when the Owner took possession of and responsibility for corresponding elements of the Work.

5. Submit consent of surety to final payment.

6. Submit a final liquidated damages settlement statement.

7. Submit evidence of final, continuing insurance coverage complying with insurance requirements.

B. Reinspection Procedure: The Architect will reinspect the Work upon receipt of notice that the Work, including inspection list items from earlier inspections, has been completed, except items whose completion has been delayed because of circumstances acceptable to the Architect.

1. Upon completion of reinspection, the Architect will prepare a certificate of final acceptance, or advise the Contractor of Work that is incomplete or of obligations that have not been fulfilled but are required for final acceptance.
2. If necessary, reinspection will be repeated.

1.5 RECORD DOCUMENT SUBMITTALS

A. General: Do not use record documents for construction purposes; protect from deterioration and loss in a secure, fire-resistive location; provide access to record documents for the Architect's reference during normal working hours.

B. Record Drawings: Maintain a clean, undamaged set of blue or black line white-prints of Contract Drawings and Shop Drawings. Mark the set to show the actual installation where the installation varies substantially from the Work as originally shown. Mark whichever drawing is most capable of showing conditions fully and accurately; where Shop Drawings are used, record a cross-reference at the corresponding location on the Contract Drawings. Give particular attention to concealed elements that would be difficult to measure and record at a later date.

1. Mark record sets with red erasable pencil; use other colors to distinguish between variations in separate categories of the Work.

2. Mark new information that is important to the Owner, but was not shown on Contract Drawings or Shop Drawings.

3. Note related Change Order numbers where applicable.

4. Organize record drawing sheets into manageable sets, bind with durable paper cover sheets, and print suitable titles, dates and other identification on the cover of each set.

C. Record Specifications: Maintain one complete copy of the Project Manual, including addenda, and one copy of other written construction documents such as Change Orders and modifications issued in printed form during construction. Mark these documents to show substantial variations in actual Work performed in comparison with the text of the Specifications and modifications. Give particular attention to substitutions, selection of options and similar information on elements that are concealed or cannot otherwise be readily discerned later by direct observation. Note related record drawing information and Product Data.

1. Upon completion of the Work, submit record Specifications to the Architect for the Owner's records.

D. Record Product Data: Maintain one copy of each Product Data submittal. Mark these documents to show significant variations in actual Work performed in comparison with information submitted. Include variations in products delivered to the site, and from the manufacturer's installation instructions and recommendations. Give particular attention to concealed products and portions of the Work which cannot otherwise be readily discerned later by direct observation. Note related Change Orders and mark-up of record drawings and Specifications.

1. Upon completion of mark-up, submit complete set of record Product Data to the Architect for the Owner's records.

E. Record Sample Submitted: Immediately prior to the date or dates of Substantial Completion, the Contractor will meet at the site with the Architect and the Owner's personnel to determine which of the submitted Samples that have been maintained during progress of the Work are to be transmitted to the Owner for record purposes. Comply with delivery to the Owner's Sample storage area.

F. Miscellaneous Record Submittals: Refer to other Specification Sections for requirements of miscellaneous record-keeping and submittals in connection with actual performance of the Work. Immediately prior to the date or dates of Substantial Completion, complete miscellaneous records and place in good order, properly identified and bound or filed, ready for continued use and reference. Submit to the Architect for the Owner's records.

G. Maintenance Manuals: Provide CD of O&M manuals as describe in Specification 15000.1.7. Also provide hard copies of O&M manuals. Organize operating and maintenance data into

suitable sets of manageable size. Bind properly indexed data in individual heavy-duty 2-inch, 3-ring vinyl-covered binders, with pocket folders for folded sheet information. Mark appropriate identification on front and spine of each binder. Submit 5 copies. Include the following types of information:

1. Emergency instructions.
2. Spare parts list.
3. Copies of warranties.
4. Wiring diagrams.
5. Recommended "turn around" cycles.
6. Inspection procedures.
7. Shop Drawings and Product Data.
8. Fixture lamping schedule.

PART 2 - PRODUCTS (Not Applicable)

PART 3 - EXECUTION

3.1 CLOSEOUT PROCEDURES

A. Operating and Maintenance Instructions: Arrange for each installer of equipment that requires regular maintenance to meet with the Owner's personnel to provide instruction in proper operation and maintenance. If installers are not experienced in procedures, provide instruction by manufacturer's representatives. Include a detailed review of the following items:

1. Maintenance manuals.
2. Record documents.
3. Spare parts and materials.
4. Tools.
5. Lubricants.
6. Identification systems.
7. Control sequences.
8. Hazards.
9. Cleaning.
10. Warranties and bonds.
11. Maintenance agreements and similar continuing commitments.

B. As part of instruction for operating equipment, demonstrate the following procedures:

1. Start-up.
2. Shutdown.
3. Emergency operations.
4. Noise and vibration adjustments.
5. Safety procedures.
6. Economy and efficiency adjustments.
7. Effective energy utilization.

3.2 FINAL CLEANING

A. General: General cleaning during construction is required by the General Conditions and included in Section "Temporary Facilities".

B. Cleaning: Employ experienced workers or professional cleaners for final cleaning. Clean each surface or unit to the condition expected in a normal, commercial building cleaning and maintenance program. Comply with manufacturer's instructions.

1. Complete the following cleaning operations before requesting inspection for Certification of Substantial Completion.

    a. Remove labels that are not permanent labels.
    b. Clean transparent materials, including mirrors and glass in doors and windows. Remove glazing compound and other substances that are noticeable vision-obscuring materials. Replace chipped or broken glass and other damaged transparent materials.
    c. Clean exposed exterior and interior hard-surfaced finishes to a dust-free condition, free of stains, films and similar foreign substances. Restore reflective surfaces to their original reflective condition. Leave concrete floors broom clean. Vacuum carpeted surfaces.
    d. Wipe surfaces of mechanical and electrical equipment. Remove excess lubrication and other substances. Clean plumbing fixtures to a sanitary condition. Clean light fixtures and lamps.
    e. Clean the site, including landscape development areas, of rubbish, litter and other foreign substances. Sweep paved areas broom clean; remove stains, spills and other foreign deposits. Rake grounds that are neither paved nor planted, to a smooth even-textured surface.

C. Removal of Protection: Remove temporary protection and facilities installed for protection of the Work during construction.

D. Compliance: Comply with regulations of authorities having jurisdiction and safety standards for cleaning. Do not burn waste materials. Do not bury debris or excess materials on the Owner's property. Do not discharge volatile, harmful or dangerous materials into drainage systems. Remove waste materials from the site and dispose of in a lawful manner.

    1. Where extra materials of value remaining after completion of associated Work have become the Owner's property, arrange for disposition of these materials as directed.

END OF SECTION 01700

SECTION 01740 - WARRANTIES AND BONDS

PART 1 - GENERAL

1.1 RELATED DOCUMENTS

A. Drawings and general provisions of Contract, including General and Suppl ementary Conditions and other Division-1 Specification Sections, apply to this Section.

1.2 SUMMARY

A. This Section specifies general administrative and procedural requirements for warranties and bonds required by the Contract Documents, including manufacturers standard warranties on products and special warranties.

1. Refer to the General Conditions for terms of the Contractor's special warranty of workmanship and materials.
2. General closeout requirements are included in Section "Project Closeout•.
3. Specific requirements for warranties for the Work and products and installations that are specified to be warranted, are included in the individual Sections of Divisions -2 through -16.
4. Certifications and other commitments and agreements for continuing services to Owner are specified elsewhere in the Contract Documents.

B. Disclaimers and Limitations: Manufacturer's disclaimers and limitations on product warranties do not relieve the Contractor of the warranty on the Work that incorporates the products, nor does it relieve suppliers, manufacturers, and subcontrac tors required to countersign special warranties with the Contractor.

1.3 DEFINITIONS

A. Standard Product Warranties are preprinted written warranties published by individual manufacturers for particular products and are specifically endorsed by the manufacturer to the Owner.

B. Special Warranties are written warranties required by or incorporated in the Contract Documents, either to extend time limits pr ovided by standard warranties or to provide greater rights for the Owner.

1.4 WARRANTY REQUIREMENTS

A. Related Damages and Losses: When correcting warranted Work that has failed, remove and replace other Work that has been damaged as a result of such failure or that must be removed and replaced to provide access for correction of warranted Work.

B. Reinstatement of Warranty: When Work covered by a warr anty has failed and been corrected by replacement or rebuilding, reinstate the warranty by written endorsement. The reinstated warranty shall be equal to the original warranty with an equitable adjustment for depreciation.

C. Replacement Cost: Upon determination that Work covered by a warranty has failed, replace or rebuild the Work to an acceptable condition complying with requirements of Contract Documents. The Contractor is responsible for the cost of replacing or rebuildin g defective Work regardless of whether the Owner has benefited from use of the Work through a portion of its anticipated useful service life.

D. Owner's Recourse: Written warranties made to the Owner are in addition to implied warranties, and shall not limit the duties, obligations, rights and remedies otherwise available under the law, nor shall warranty periods be interpreted as limitations on time in which the Owner can enforce such other duties, obligations, rights, or remed ies.

1. Rejection of Warranties: The Owner reserves the right to reject warranties and to limit selections to products with warranties not in conflict with requirements of the Contract Documents.

E. The Owner reserves the right to refuse to accept Work for the Project where a special warranty, certification, or similar commitment is required on such Work or part of the Work, until evidence is presented that entities required to countersign such commitme nts are willing to do so.

1.5 SUBMITTALS

A. Submit written warranties to the Architect prior to the date certified for Substantial Completion. If the Architect's Certificate of S ubstantial Completion designates a commencement date for warranties other than the date of Substantial Completion for the Work, or a designated portion of the Work, submit written warranties upon request of the Architect.

1. When a designated portion of the Work is completed and occupied or used by the Owner, by separate agreement with the Contractor during the construction period, submit properly executed warranties to the Architect within fifteen days of completion of that designated portion of the Work.

B. When a special warranty is required to be executed by the Contractor, or the Contractor and a subcontractor, supplier or manufacturer, prepare a written document that contains appropriate terms and ide ntification, ready for execution by the required parties. Submit a draft to the Owner through the Architect for approval prior to final execution.

1. Refer to individual Sections of Divisions -2 through -16 for specific content requirements, and particular requirements for submittal of special warranties.

C. Form of Submittal: At Final Completion compile three copies of each required warranty and bond properly executed by the Contractor, or by the Contrac tor, subcontractor, supplier, or manufacturer. Organize the warranty documents into an orderly sequence based on the table of contents of the Project Manual.

D. Bind warranties and bonds in heavy -duty, commercial quality, durab le 3-ring vinyl covered loose-leaf binders, thickness as necessary to accommodate contents, and sized to receive 8-1/2" by 11" paper.

1. Provide heavy paper dividers with celluloid covered tabs for each separate warranty. Mark the tab to identify the product or installation. Provide a typed description of the product or installation, including the name of the product, and the name, address and telephone number of the installer.
2. Identify each binder on the front and the spine with the typed or printed title "WARRANTIES AND BONDS, the Project title or name, and the name of the Contractor.
3. When operating and maintenance manuals are required for warranted construction, provide additional copies of each required warranty, as necessary, for inclusion in each required manual.

PART 2 - PRODUCTS (Not Applicable).

PART 3 - EXECUTION (Not Applicable).

END OF SECTION 01740

SECTION 02050 – DEMOLITION

PART 1 - GENERAL

1.1 SUMMARY:

A. Section includes requirement for demolition work.
   1. Verify existing utilities to be removed as well as site features to be demolished with owner and engineer.

B. Demolition includes, but is not limited to, the removal of the following items within the demolition limit lines:
   1. Sidewalks
   2. Curb and Gutter
   3. Paving
   4. Concrete Slabs
   5. Sod, Lawn and all irrigated wet soils
   6. Underground Structures including Septic Tanks, vaults, Basements, footings & foundation walls.
   7. Above ground buildings.
   8. Fencing

C. Related Sections
   1. Refer to Section 02200 for earthwork requirements.

D. Drawings and general provisions of contract, including general and supplementary Conditions and site clearing specifications apply to work in this section.

1.2 SUBMITTALS:

A. Schedule: Submit proposed methods and operations of demolition to review prior to start of work. Include in schedule coordination for shut-off, capping, and continuation of utility services as required.

B. Explosives: The use of explosives is not permitted.

C. Traffic: Conduct demolition operations and removal of debris to ensure minimum interference with roads, streets, walks, and other adjacent occupied or used facilities.
   1. Do not close or obstruct streets, walks or other occupied or used facilities without permission from authorities having jurisdiction. Provide alternate routes around closed or obstructed traffic ways if required by governing regulation.

D. Protections: Ensure safe passage of persons around area of demolition. Conduct operations to prevent injury to adjacent buildings, structures, other facilities, and persons.
   1. Erect temporary covered passageways as required by authorities having jurisdiction.
   2. Provide interior and exterior shoring, bracing, or support to prevent movement, settlement or collapse of structures to be demolished and adjacent facilities to remain.

E. Damage: Promptly repair damage caused to adjacent facilities by demolition operations.
   1. Do not interrupt existing utilities serving occupied or used facilities, except when authorized in writing by authorities having jurisdiction. Provide temporary services during interruptions to existing utilities, as acceptable to governing authorities.

F. Hazardous Materials Removal:

1. When hazardous materials are encountered, notify the Owner immediately. Comply with requirements of Division 1.
2. Asbestos removal is not part of this project. If asbestos is found, contact owner and comply with directions in Division 1.

PART 2 - PRODUCTS

Not used.

PART 3 - EXECUTION

A. Demolition:
   1. Pollution Controls: Use water sprinkling, temporary enclosures, and other suitable methods to limit dust and dirt rising and scattering in air to lowest practical level. Comply with governing regulations pertaining to environmental protection.
      a. Do not use water when it may create hazardous or objectionable conditions such as ice, flooding, and pollution.
      b. Clean adjacent structures and improvements of dust, dirt, and debris caused by demolition operations, as directed by Architect or governing authorities. Return adjacent areas to condition existing prior to start of work.

B. Cutting Asphalt, Concrete and Concrete Block: Saw cut asphalt paving, concrete slabs and concrete block walls with approved saws at lines and levels indicated on drawings. Saw cut concrete walks and curbs only if they cannot be removed to an existing control joint.

C. Capping and Abandonment: Cap all abandoned lines and conduits and drains in accordance with requirements of Utility Companies having jurisdiction. Remove abandoned lines, unless otherwise noted.

3.1 DISPOSAL OF DEMOLISHED MATERIALS:

A. General: remove from site debris, rubbish, and other materials resulting from demolition operations and dispose in a legal manner.

3.2 BACKFILL

A. Excavated areas associated with the removal of all substructures should be backfilled with a well-graded granular material having a maximum size of 2 inches and not more than 15 percent passing a #200 sieve. All earth materials placed in excavated areas should be placed in maximum eight inch loose lifts and densified to an in-place unit weight equal to 95% of the Maximum Laboratory Density as determined by ASTM D 1557-78.
   1. Refer to soils report for all backfilling and material placement operations. If discrepancies or differences arise, soils report shall take precedence in all cases
   2. Refer to section 02200 for placement and compaction requirements.

END OF SECTION 02050

SECTION 02051 £ GENERAL SITE CONSTRUCTION REQUIREMENTS

PART 1 GENERAL

1.1 SUMMARY

A. Includes But Not Limited to
1. General procedures and requirements for Site Work.

PART 2 PRODUCTS - Not Used

PART 3 EXECUTION

3.1 PREPARATION

A. Site Verification of Conditions
1. 48 hours minimum prior to performing any work on site, contact Dig Line to arrange for utility location services.

3.2 PREPARATION

A. Protection
1. Spillage -
a. Avoid spillage by covering and securing loads when hauling on or adjac ent to public streets or highways.
b. Remove spillage and sweep, wash, or otherwise clean project, streets, and highways.
2. Dust Control -
a. Take precautions necessary to prevent dust nuisance, both on -site and adjacent to public and private properties.
b. Correct or repair damage caused by dust.
3. Erosion Control -
a. Take precautions necessary to prevent erosion and transportation of soil downstream, to adjacent properties, and into on -site or off-site drainage systems.
b. Install, and maintain an erosion control plan as required by local and state law.
c. Repair and correct damage caused by erosion.
4. Protect site from fire caused by welding, cutting, smoking, or other sources of ignition.

B. If specified precautions are not taken or corrections and r epairs made promptly, Owner may take such steps as may be deemed necessary and deduct costs of such from monies due to Contractor. Such action or lack of action on Owner's part does not relieve Contractor from responsibility for proper protection of the W ork.

3.3 REPAIR / RESTORATION

A. Adjust existing covers, boxes, and vaults to grade.

B. Replace broken or damaged covers, boxes, and vaults.

C. Independently confirm size, location, and number of covers, boxes, and vaults which require adjustment.

3.4 FIELD QUALITY CONTROL

A. Notify Architect 48 hours prior to performing excavation or fill work.

B. If work has been interrupted by weather, scheduling, or other reason, notify Architect 24 hours minimum prior to intended resumption of grading or compactin g.

C. Owner reserves right to require additional testing to re -affirm suitability of completed work including compacted soils which have been exposed to adverse weather conditions.

END OF SECTION 02051

SECTION 02110 SITE CLEARING

PART 1 - GENERAL

1.1 DESCRIPTION OF WORK:

A. Extent of site clearing is shown on drawings.

B. Site clearing includes, but is not limited to:
1. Removal of trees and other vegetation.
2. Topsoil stripping.
3. Clearing and grubbing.

C. Drawings and general provisions of Contract, including General and Supplementary Conditions and Division - 1 Specification sections, and the Geotechnical Information in Section 02200.

1.2 JOB CONDITIONS:

A. Traffic: Conduct site clearing operations to ensure minimum interference with roads, streets, walks, and other adjacent occupied or used facilities. Do not close or obstruct streets, walks or other occupied or used facilities without permission from authorities having jurisdiction, Owner, and architect.

B. Protection of Existing Improvements: Provide protections necessary to prevent damage to existing improvements indicated to remain in place.
1. Protect improvements on adjoining properties and on Owner's property.

C. Improvements on Adjoining Property: Authority for performing removal and alteration work on property adjoining Owner's property will be obtained by Owner prior to award of contract.
1. Extent of work on adjacent property is indicated on Drawings.

PART 2 - PRODUCTS

Not used.

PART 3 - EXECUTION

3.1 SITE CLEARING:

A. Remove trees, shrubs, grass and other vegetation, improvements, or obstructions interfering with installation of new construction. Remove such items elsewhere on site or premises as specifically indicated. Removal includes digging out stumps and roots.

B. Topsoil: Topsoil is defined as silt and clay surface soil found in a depth of not less than 4". Satisfactory topsoil is reasonably free of subsoil, clay lumps, stones, and other objects over 2" in diameter, and without weeds, roots, and other objectionable material.
1. Strip topsoil to whatever depths in which organic materials are encountered in a manner to prevent intermingling with underlying subsoil or other objectionable material.

2. Remove heavy growths of grass from areas before stripping.

3. Dispose of unsuitable or excess topsoil same as waste material, herein specified.

C. Clearing and Grubbing: Clear site of trees, sh rubs and other vegetation, except for those indicated to be left standing.

1. Completely remove stumps, roots, and other debris protruding through ground surface.

2. Fill depressions caused by clearing and grubbing operations wit h satisfactory soil material, unless further excavation or earthwork is indicated.

3. Place fill material in horizontal layers not exceeding 6" loose depth, and thoroughly compact to a density equal to adjacent original ground.

3.2 DISPOSAL OF WASTE MATERIALS:

A. Burning is not permitted.

B. Remove and legally dispose waste materials and unsuitable and excess soil.

END OF SECTION 02110

SECTION 02200 - EARTHWORK

PART 1 - GENERAL

1.1 SUMMARY

A. Sections includes earthwork.
1. Preparation of subgrade for building slabs, walks, docks, and pavements.
2. Vapor retarder, granular fill layer (drainage fill).
3. Backfilling of trenches within the contract limit lines, including but not limited to docks, planters, and walks adjacent to building.
4. Footings and foundation backfilll.

B. Related Sections: Excavation for Mechanical/Electrical Work: Refer to Divisions 15 and 16 sections for excavation and backfill required in conjunction with underground mechanical and electrical utilities, and buried mechanical and electrical appurtenances; not work of this section.

C. Drawings and general provisions of the Contract, including General and Supplementary Conditions and Division-1 Specification sections, and the Uniform Standard Specifications and applicable details for Public Works Construction from authority having jurisdiction, apply to work of this section.

1.2 QUALITY ASSURANCE:

A. Codes and Standards: Perform excavation work in compliance with requirements of authorities having jurisdiction.

B. Testing and Inspection Service:
1. The owner shall engage a testing laboratory to perform soil testing, inspection and observation services for quality control testing during earthwork operations sufficient to enable Geotechnical engineer to prepare a written report that, in his opinion, the engineered fill has been constructed in accordance with the project specifications.
a. Coordinate scheduling of Geotechnical engineer with Owner's Representative to avoid delays in construction.

1.3 SUBMITTALS:

A. Test Reports: Submit following reports directly to Owner's Representative, Contractor and Architect from the testing agency, with copy to Contractor:
1. Test reports on borrow material.
2. Verification of each footing subgrade.
3. Field density test reports.
4. One optimum moisture-maximum density curve for each type of soil encountered.
5. Report of actual unconfined compressive strength and results of bearing tests of each strata tested for cohesive soils. Report results of shear angle test of remolded sample compacted to same density of on site material for non-cohesive soils.

1.4 JOB CONDITIONS:

A. Site Information: Data on indicated subsurface conditions are not intended as representations or warranties of accuracy or continuity between soil borings. It is expressly understood that Owner will not be responsible for interpretations or conclusions drawn by Contractor. Data are made available for convenience of Contractor.

1. Additional test borings and other exploratory operations may be made by Contractor at no cost to Owner.

B. Existing Utilities: Locate existing underground utilities in areas of work. If utilities are to remain in place, provide adequate means of support and protection during earthwork operations.
1. Should uncharted, or incorrectly charted, piping or other utilities be encountered during excavation, consult utility owner immediately for directions. Cooperate with owner and utility companies in keeping respective services and facilities in operation. Repair damaged utilities to satisfaction of utility owner.
2. Do not interrupt existing utilities serving facilities occupied and used by Owner or others, during occupied hours, except when permitted in writing by Project Engineer and then only after acceptable temporary utility services have been provided.
3. Provide minimum of 48-hour notice to Owner's Representative, and receive written notice to proceed before interrupting any utility.
4. Demolish and completely remove from site existing underground utilities indicated to be removed. Coordinate with utility companies for shut-off of services if lines are active.

C. Use of Explosives:
1. The use of explosives is not permitted.

D. Protection of Persons and Property: Barricade open excavations occurring as part of this work and post with warning lights.
1. Operate warning lights as recommended by authorities having jurisdiction.
2. Protect structures, utilities, sidewalks, pavements, and other facilities from damage caused by settlement, lateral movement, undermining, washout and other hazards created by earthwork operations.

PART 2 - PRODUCTS

2.1 MATERIALS

A. Definitions:
1. Subbase Material: Naturally or artificially graded mixture of natural or crushed gravel, crushed stone, crushed slag, natural or crushed sand to be placed under aggregate base course.
2. Drainage Fill: Washed, evenly graded mixture of crushed stone, or crushed or uncrushed gravel, with 100% passing a 1" sieve and not more than 5 % passing a No. 4 sieve.
3. Backfill and Fill Materials: Satisfactory soil materials, native or imported materials, free of clay, rock or gravel larger than 2" in any dimension, debris, waste, frozen materials, vegetable and other deleterious matter. Refer to soils report which takes precedence in material specifications in all instances.
   a. Structural fill: Well graded non-expansive granular material having a maximum size of 2" and not more than 15%, passing a #200 sieve, and a minimum dry density of at least 100 pounds per cubic foot (pcf).
   b. Natural soils meeting the requirements for structural fill may be used as structural fill.
   c. Pipe zone materials shall not be larger than 2¨ in any dimension for reinforced concrete pipe and ductile iron pipe. For PVC or other soft pipes the maximum dimension for pipe zone backfill shall be ¨.
   d. Drain rock: Gap graded non-expansive washed gravel having a maximum size of 1¨ with as little as practical quantity passing a #200

sieve, and a minimum dry density if at least 100 pounds per cubic foot (pcf).

4. Filter Fabric: Mirafi 140N or engineer approved equal.
5. Geofabric: Mirafi 600X or engineer approved equal

PART 3 - EXECUTION

3.1 EXCAVATION:

A. Unclassified Excavation: Excavation to subgrade elevations regardless of the character of surface and subsurface conditions encountered, including rock, soil materials, and obstructions.

B. Unauthorized excavation consists of removal of materials beyond indicated subgrade elevations or dimensions without specific direction of Architect. Unauthorized excavation, as well as remedial work directed by Architect, shall be at Contractor's expense.
   1. Under footings, foundation bases, or retaining walls, fill unauthorized excavation by extending indicated bottom elevation of footing or base to excavation bottom, without altering required too elevation. Lean concrete fill may be used to bring elevations to proper position, when acceptable to Engineer.
   2. Elsewhere, backfill and compact unauthorized excavations as specified for authorized excavations of same classification, unless otherwise directed by Engineer.

C. Additional Excavation: When excavation has reached required subgrade elevations, notify Owner's Representative who will make an inspection of conditions.
   1. If unsuitable bearing materials are encountered at required subgrade elevations, carry excavations deeper and replace excavated material as directed.
   2. Removal of unsuitable material and its replacement as directed will be paid on basis of contract conditions relative to changes in work.

D. Stability of Excavations: Slope sides of excavations to comply with local codes and ordinances having jurisdiction. Shore and brace where sloping is not possible because of space restrictions or stability of material excavated.
   1. Maintain sides and slopes of excavations in safe condition until completion of backfilling.

E. Shoring and Bracing: Provide materials for shoring and bracing, such as sheet piling, uprights, stringers and cross-braces, in good serviceable condition.
   1. Establish requirements for trench shoring and bracing to comply with local codes and authorities having jurisdiction.
   2. Maintain shoring and bracing in excavations regardless of time period excavations will be open. Carry down shoring and bracing as excavation progresses.

F. Dewatering: Prevent surface water and subsurface or groundwater from flowing into excavations and from flooding project site and surrounding area.
   1. Do not allow water to accumulate in excavations. Remove water to prevent softening of foundation bottoms, undercutting footings, and soil changes detrimental to stability of subgrades and foundations. Provide and maintain pumps, well points, sumps, suction and discharge lines, and other dewatering system components necessary to convey water away from excavations.
   2. Establish and maintain temporary drainage ditches and other diversions outside excavation limits to convey rain water and water removed from excavations to collecting or run-off areas. Do not use trench excavations as temporary drainage ditches.

G. Material Storage: Stockpile satisfactory excavated materials where directed, until required for backfill or fill. Place, grade and shape stockpiles for proper drainage.
   1. Locate and retain soil materials away from edge of excavations. Do not store within drip line of trees indicated to remain.
   2. Dispose of excess soil material and waste materials as herein specified.
   3. Sand shall be dry and protected as required.

H. Excavation for Structures: Conform to elevations and dimensions shown within a tolerance of plus or minus 0.10', and extending a sufficient distance from footings and foundations to permit placing and removal of concrete formwork, installation of services, other construction, and for inspection.
   1. Do not disturb bottom of excavation. Excavate by hand to final grade just before concrete reinforcement is placed. Trim bottoms to required lines and grades to leave solid base to receive other work.

I. Excavation for Pavements: Cut surface under pavements to comply with cross -sections, elevations grades as shown.

J. Excavation for Trenches: Dig trenches to the uniform width required for particular item to be installed. Provide 6" to 9" minimum clearance on both sides of pipe or conduit.
   1. Excavate trenches to depth indicated or required. Carry depth of trenches for piping to establish indicated flow lines and invert elevations. Beyond building perimeter, keep bottoms of trenches sufficiently below finish grade to avoid freeze-ups.
   2. Where rock is encountered, carry excavation 6" below required elevation and backfill with a 6" layer of crushed stone or gravel prior to installation of pipe.
   3. For pipes or conduit 5" or less in nominal size and for flat - bottomed multiple-duct conduit units, do not excavate beyond indicated depths. Hand excavate bottom cut to accurate elevations and support pipe or conduit on undisturbed soil.
   4. For pipes or conduit 6" or larger in nominal size, tanks and other mechanical/electrical work indicated to receive subbase, excavate to subbase depth or, if not otherwise indicated, to 6" below bottom of work to be supported.
   5. Except as otherwise indicated, excavate for exterior water - bearing piping (water, steam, condensate, drainage) so top of piping is not less than 4¸ below finished grade or to local standards whichever is deeper.
   6. Grade bottoms of trenches as indicated, notching under pipe bells to provide solid bearing for entire body of pipe.
   7. Backfill trenches with concrete where trench excavations pass within 18" of column or wall footings and which are carried below bottom of such footings, or which pass under wall footings. Place concrete to level of bottom of adjacent footing.
      a. Refer to Section 03300 for concrete requirements.
   8. Do not backfill trenches until tests and inspections have been made and backfilling authorized by Owner's Representative. Use care in backfilling to avoid damage or displacement of pipe systems.
   9. For piping or conduit less than 18" below surface of roadways, provide 4" thick concrete base slab support. After installation and testing of piping or conduit, provide minimum 4" thick encasement (sides and top) of concrete prior to backfilling or placement of roadway subbase.

K. Cold Weather Protection: Protect excavation bottoms against freezing when atmospheric temperature is less than 35 degrees F.

3.2 COMPACTION:

A. Control soil compaction during construction providing minimum percentage of density specified for each area classification indicated below.

B. Percentage of Maximum Density Requirements: Compact soil to not less than the following percentages of maximum dry density for soils which exhibit a well -defined moisture density relationship (cohesive soils) determined in accordance with ASTM D 1557; and not less than the following percentages of relative density, determined in accordance with ASTM D 2049, for soils which will not exhibit a well -defined moisture-density relationship (cohesionless soils). In all cases the specific soils report for the project takes precedence.
1. Structures, Building Slabs and Steps, Pavements: Compact top 12" of subgrade and each layer of backfill or fill material at 95% maximum dry density for cohesive material or 95% relative dry density for cohesionless material. Scarify and moisture condition to within 3% of optimum moisture and recompact subgrade.
2. Lawn or Unpaved Areas: Compact top 6" of subgrade and each layer of backfill or fill material at 85% maximum dry density for cohesive materials and 90% relative dry density for cohesionless soils.
3. Walkways: Compact top 6" of subgrade and each layer of backfill or fill material at 90% maximum dry density for cohesive material or 95% relative dry density for cohesionless material.

C. Moisture Control: Uniformly apply water to soil material in manner to prevent free water appearing on surface during or subsequent to compaction operations.
1. Remove and replace, or scarify and air dry, soil material that is too wet to permit compaction to specified density.
2. Soil material that has been removed because it is too wet to permit compaction may be stockpiled or spread and allowed to dry. Assist drying by discing, ripping, harrowing or pulverizing until moisture content is reduced to a satisfactory value.

3.3 BACKFILL AND FILL:

A. General: Place acceptable soil material in layers to required subgrade elevations, for each area classification listed below.
1. In excavations, use satisfactory excavated or borrow material.
2. Under grassed areas, use satisfactory excavated or borrow material.
3. Under walks and pavements, use subbase material or satisfactory excavated or borrow material, or combination of both.
4. Under steps, use subbase material.
5. Under building slabs, use drainage fill material or free draining gravel, (less than 10% passing No. 4 sieve and less than 2% passing No. 200 sieve).
6. Under piping and conduit, use subbase material where subbase is indicated under piping or conduit, shape to fit bottom of pipe.

B. Backfill excavations as promptly as work permits, but not until completion of the following:
1. Acceptance of construction below finish grade including, where applicable, damp proofing, waterproofing, and perimeter insulation.
2. Inspection, testing, approval, and recording locations of underground utilities. Removal of concrete formwork.
3. Removal of shoring and bracing, and backfilling of voids with satisfactory materials. Cut off temporary sheet piling driven below bottom of structures and remove in manner to prevent settlement of the structure or utilities, or leave in place if required.

4. Removal of trash and debris.

5. Permanent or temporary horizontal bracing is in place on horizontally supported walls.
6. Ground Surface Preparation: Remove vegetation, debris, unsatisfactory soil materials, obstructions, and deleterious materials from ground surface prior to placement of fills. Plow, strip, or break-up sloped surfaces steeper than 1 vertical to 4 horizontal so that fill material will bond with existing surface.
7. When existing ground surface has a density less than that specified under "Compaction" for particular area classification, break up ground surface, pulverize, moisture-condition to optimum moisture content, and compact to required depth and percentage of maximum density.

C. Placement and Compaction: Place backfill and fill materials in layers not more than 8" in loose depth for material compacted by heavy compaction equipment, and not more than 4" in loose depth for material compacted by hand-operated tampers.
1. Before compaction, moisten or aerate each layer as necessary to provide optimum moisture content. Compact each layer to required percentage of maximum dry density or relative dry density for each area classification. Do not place backfill or fill material on surfaces that are muddy, frozen, or contain frost or ice.
2. Place backfill and fill materials evenly adjacent to structures, piping or conduit to required elevations. Take care to prevent wedging action of backfill against structures or displacement of piping or conduit by carrying material uniformly around structure, piping or conduit to approximately same elevation in each lift.

D. Vapor retarder installation: Place vapor retarder sheeting in position with longest dimension parallel with direction of pour.
1. Lap joints 6 inches and seal with manufacturer's recommended mastic or pressure-sensitive tape.

3.4 GRADING:

A. Uniformly grade areas within contract limits under this section, including adjacent transition areas. Smooth finished surface within specified tolerances, compact with uniform levels or slopes between points where elevations are indicated, or between such points and existing grades.

B. Grading Outside Building Lines: Grade areas adjacent to building lines to drain away from structures and to prevent ponding.

C. Finish surfaces free from irregular surface changes, and as follows:
1. Lawn or Unpaved Areas: Finish areas to receive topsoil to within not more than 1/2" above or below required subgrade elevations.
2. Walks: Shape surface of areas under walks to line, grade and cross-section, with finish surface not more than 1/2" above or below required subgrade elevation.
3. Pavements: Shape surface of areas under pavement to line, grade and cross-section, with finish surface not more than 1/2" above or below required subgrade elevation.
4. Grading Surface of Fill Under Building Slabs: Grade smooth and even, free of voids, compacted as specified, and to required elevation. Provide final grades within a tolerance of 1/2" when tested with a 10' straightedge.
5. Compaction: After grading, compact subgrade surfaces to the depth and indicated percentage of maximum or relative density for each area classification.

3.5 PAVEMENT SUBBASE COURSE:

A. Subbase course consists of placing subbase material, in layers of specified thickness, over subgrade surface to support a pavement base course. Subbase thickness shall not be less than 6-inches. Recycled asphalt can be used crushed to match gradation requirements.

B. Grade Control: During construction, maintain lines and grades including crown and cross-slope of subbase course.

C. Shoulders: Place shoulders along edges of subbase course to prevent lateral movement. Construct shoulders of acceptable soil materials, placed in such quantity to compact to thickness of each subbase course layer. Compact and roll at least a 12" width of shoulder simultaneously with compacting and rolling of each layer of subbase course.

D. Placing: Place subbase course material on prepared subgrade in layers of uniform thickness, conforming to indicated cross-section and thickness. Maintain optimum moisture content for compacting subbase material during placement operations.
   1. When a compacted subbase course is to be 6" thick or less, place material in a single layer. When more than 6" thick, place material in equal layers, except no single layer more than 6" or less than 3" in thickness when compacted.

3.6 FIELD QUALITY CONTROL

A. Quality Control Testing During Construction: All natural grades to be retained, all areas of cut and all areas of controlled fill or backfill shall be field tested by the testing laboratory for moisture content and density for compliance with specified values. Allow testing service to inspect subgrade and fill layers before further construction work is performed.
   1. Perform optimum moisture-maximum density determinations for each different type of soil encountered in accordance with ASTM 1557.

   2. Perform field density tests in accordance with ASTM D 1556 (sand cone method) or ASTM D 2167 (rubber balloon method), ASTM D 2922 (nuclear method) or AASHTO T-99, as applicable.

B. Testing: The number of tests performed shall be at the discretion of the testing laboratory except the number of field tests performed shall not be less than the minimum described below:
   1. Within the building area, perform one test for every 1,000 square feet of fill per lift.
   2. Paved Areas:
      Minimum of one compaction test for every 10,000 square feet of fill (per lift), natural grade or cut.
   3. Trenches: (Footings, etc.):
      Minimum of 1 compaction test for each lift each 100 linear feet.
   4. Perform test to verify minimum bearing capacity requirements at each column or spot footing.
   5. Continuous Foundation:
      Minimum of 1 compaction test per lift per each 100 linear feet
   6. Curbs, Gutters and Ramps:
      Minimum of 1 test per lift per each 250 linear feet
   7. Exterior Slabs:
      Minimum of 1 compaction test per each 2,000 square feet.

3.7 MAINTENANCE:

A. Protect newly graded areas from traffic and erosion. Keep free of trash and debris.
   1. Repair and re-establish grades in settled, eroded, and rutted areas too specified tolerances.

B. Reconditioning Compacted Areas: Where completed compacted areas are distu rbed by subsequent construction operations or adverse weather, scarify surface, re -shape, and compact to required density prior to further construction.

C. Settling: Where settling is measurable or observable at excavated areas during general project warranty period, remove surface (pavement, lawn or other finish), add backfill material, compact, and replace surface treatment. Restore appearance, quality, and condition of surface or finish to match adjacent work, and eliminate evidence of restoration to greatest extent possible.

3.8 DISPOSAL OF EXCESS AND WASTE MATERIALS:

A. Removal to Designated Areas on Owner's Property: Transport a cceptable excess excavated material to designated soil storage areas on Owner's property. Stockpile soil or spread as directed by Architect.

B. Removal from Owner's Property: Remove waste materials, including unacceptable excavated material, trash and debris, and dispose of it off Owner's property.

END OF SECTION 02200

SECTION 02513 ASPHALT CONCRETE PAVING

PART 1 - GENERAL

1.1 SUMMARY:

A. Section includes asphalt concrete paving work.

B. Related Sections: Prepared aggregate subbase is specified in earthwork section.

1.2 SUBMITTALS:

A. Material Certificates: Provide copies of materials certificates signed by material producer and Contractor, certifying that each material item complies with, or exceeds, specified requirements.

1.3 QUALITY ASSURANCE:

A. Codes and Standards: Comply with State highway or transportation department standard specifications, latest edition, and with local governing regulations if more stringent than herein specified.

1.4 SITE CONDITIONS:

A. Weather Limitations: Apply prime and tack coats when ambient temperature is above 50 deg.F (10 deg.C), and when temperature has not been below 35 deg.F (1 deg.C) for 12 hours immediately prior to application. Do not apply when base is wet or contains an excess of moisture.

1. Construct asphalt concrete surface course when atmospheric temperature is above 50 deg.F (4 deg.C), and when base is dry. Base course may be placed when air temperature is above 30 deg. F (-1 deg.C) and rising.

B. Grade Control: Establish and maintain required lines and elevations.

PART 2 - PRODUCTS

2.1 MATERIALS:

A. Use locally available materials and gradations, which exhibit a satisfactory record of previous installations.

B. Base Course Aggregate: Sound, non-expansive angular crushed stone, crushed gravel, or crushed slag, sand, stone or slag screenings, 3/4" Gradation minimum, 1-1/2 Gradation maximum (see chart below). Recycled asphalt can also be used for road base if crushed to meet the gradation table in 2.1.C.
   1. Uncrushed gravel may be used in base course mixture if required to suit local material availability.

C. Gradation Table The following table from the 2007 APWA presents the gradation options. The gradation shall be labeled to meet precisely one of the specifications.

US Sieve Size	Grading Band Limits			Target Tolerance Percent
	Grade 1-1/2	Grade 1	Grade 3/4	
1-1/2"	100	-	-	-
1"	90 - 100	100	-	-
3/4"	70 - 85	-	100*	+/- 9
1/2"	65 - 80	79 - 91	-	+/- 9
3/8"	55 - 75	-	78 - 92	+/- 9
No. 4	40 - 65	49 - 61	55 - 67	+/- 7
No. 16	25 - 40	27 - 35	28 - 38	+/- 5
No. 200	7 - 11	7 - 11	7 - 11	+/- 3

*Tolerance not applicable on sieve for gradation.

D. Base Course Thickness: to be not less than 6-inches and as shown on detail sheet.

E. Surface Course Aggregate: Crushed stone, crushed gravel, crushed slag, and sharp-edged natural sand.

F. Sand prepared from stone, blast-furnace slag, or gravel, or combinations thereof may be used if required to suit local material availability.

G. Mineral Filler: Rock or slag dust, hydraulic cement, or other inert material complying with AASHTO M 17 (ASTM D 242).

H. Asphalt Cement: AASHTO M 226 (ASTM D 3381) for viscosity-graded material and AASHTO M 20 (ASTM D 946) for penetration-graded material.

I. Prime Coat: Cut-back asphalt type; AASHTO M 82 (ASTM D 2027) MC-30, MC-70 or MC-250.

J. Tack Coat: Emulsified asphalt, AASHTO M 140 (ASTM D 997) or M 208 (D 2397); SS-1 SS-1h, CSS-1 or CSS-1h, diluted with one part water to one part emulsified asphalt.

2.2 ASPHALT-AGGREGATE MIXTURE:

A. Provide plant-mix, hot-laid asphalt-aggregate mixture complying with ASTM D 3515 and as recommended by local paving authorities to suit project conditions.

B. Provide minimum compacted asphalt thickness of 5-inches and as shown on detail sheet. Place asphalt in two lifts with a minimum thickness of not less than 1.5 . Do not exceed a compacted thickness of 3 -inches per lift.

C. The percentage of bituminous material by weight ad ded to aggregate will be between 4% and 7% of the weight of the bituminous mixture. Aggregate gradation shall be as follows:

Sieve Size	Ideal Gradation (Percent Passing)	Tolerance
3/4"	100	
1/2"	91	+/ - 5
3/8	83	+/- 8
No. 4	54	+/- 8
No. 16	28	+/- 6
No. 50	17	+/- 6
No. 200	5	+/- 2

PART 3 - EXECUTION

3.1 SURFACE PREPARATION:

A. Remove loose material from compacted base coarse surface immediately before applying herbicide treatment or prime coat.
1. Proof roll prepared base coarse surface to check for unstable areas

and areas requiring additional compaction.

2. Notify Engineer of unsatisfactory conditions. Do not begin paving work until deficient base coarse areas have been corrected and are ready to receive paving.

B. Herbicide Treatment: Not used.

C. Prime Coat: Not used.

D. Tack Coat: Apply to contact surfaces of previously constructed asphalt or Portland Cement Concrete and surfaces abutting or projecting into asphalt concrete pavement. Distribute at rate of 0.05 to 0.15 gal. per sq. yd. of surface.
   1. Allow drying until at proper condition to receive paving.

   2. Exercise care in applying bituminous materials to avoid smearing on adjoining concrete surfaces. Remove or clean damaged surfaces at discretion of architect.

3.2 PLACING MIX:

A. General: Place asphalt concrete mixture on prepared surface, spread and strike-off. Spread mixture at minimum temperature of 225 deg.F (107 deg.C). Place inaccessible and small areas by hand. Place each course to required grade, cross-section, and compacted thickness.

B. Paver Placing: Place in strips not less than 10' wide, unless otherwise acceptable to Engineer. After first strip has been placed and rolled, place succeeding strips and extend rolling to overlap previous strips. Complete base course for a section before placing surface course.

C. Joints: Make joints between old and new pavements or between successive days' work, to ensure continuous bond between adjoining work. Construct joints to have same texture, density and smoothness as other sections of asphalt concrete course. Clean contact surfaces and apply tack coat.

D. Asphalt adjacent to concrete curb and gutter, concrete waterways, catch basins or other drainage structures shall be compacted to an elevation of 1/4 inch above adjacent drainage structure (edge of concrete) except open face curb and gutter. Place asphalt even with the lip on open face curb and gutter.

3.3 COMPACTION:

A. Percentage of Maximum Density Requirements: Compact asphalt to not less than 95% of maximum laboratory density determined in accordance with ASTM D-2726-83 or ASTM D-1188-83.

3.4 ROLLING:

A. General: Begin rolling when mixture will bear roller weight without excessive displacement.
   1. Compact mixture with hot hand tampers or vibrating plate compactors in areas inaccessible to rollers.

B. Breakdown Rolling: Accomplish breakdown or initial rolling immediately following rolling of joints and outside edge. Check surface after breakdown rolling, and repair displaced areas by loosening and filling, if required, with hot material.

C. Second Rolling: Follow breakdown rolling as soon as possible, while mixture is hot. Continue second rolling until mixture has been thoroughly compacted.

D. Finish Rolling: Perform finish rolling while mixture is still warm enough for removal of roller marks. Continue rolling until roller marks are eliminated and course has attained maximum density.

E. Patching: Remove and replace paving areas mixed with foreign materials and defective areas. Cut-out such areas and fill with fresh, hot asphalt concrete. Compact by rolling to maximum surface density and smoothness.

F. Protection: After final rolling, do not permit vehicular traffic on pavement until it has cooled and hardened, or 24 hours, whichever is longer.

G. Erect barricades to protect paving from traffic until mixture has cooled enough not to become marked.

3.5 FIELD QUALITY CONTROL:

A. Test in-place asphalt concrete courses for compliance with requirements for thickness and surface smoothness. Repair or remove and replace unacceptable paving as directed by Engineer.

B. Thickness: In-place compacted thickness will not be acceptable if exceeding following allowable variation from required thickness:
   1. Base Course: 1/2-inch, plus or minus.

2. Surface Course: 1/4-inch, plus or minus.

C. Base Course Testing: Owner shall employ testing laboratory to perform at least one density test on aggregate base course for each 200 c.y. (1200 s.y. at 6-inch) of material placed.

D. Asphalt Testing: Owner shall employ testing laboratory to perform at least one (1) coring sample of asphalt taken for every 100 C.Y. (1200 S.Y. at 3-inches) of asphalt installed to verify asphalt density, temper ature and thicknesses are in conformance with specifications. The testing agency shall locate coring sites for owner. The asphalt contractor is responsible for repair of core holes. Owner shall employ testing laboratory to provide laboratory testing for materials check on bituminous materials, including but not limited to: gradation, extraction, compaction, marshall density, stability, flow and % AC.

E. Surface Smoothness: Test finished surface of each asphalt concrete courses for smoothness, using 10-foot straightedge applied parallel with, and at right angles to centerline of paved area. Surfaces will not be acceptable if exceeding the following tolerances for smoothness.
1. Base Course Surface: 1/4-inch.
2. Wearing Course Surface: 3/16-inch.
3. Check surface areas at intervals as directed by Engineer.

END OF SECTION 02513

SECTION 02514 ƒ PORTLAND CEMENT CONCRETE PAVING

PART 1 - GENERAL

1.1 SUMMARY

A. Section includes Portland cement concrete paving
1. Concrete Pavement
2. Valve Box Collars
3. Concrete Pads

B. Related Sections:
1. Prepared subbase is specified in "Earthwork" section.
2. Concrete and related materials are specified in Division 3.
3. Joint fillers and sealers are specified in Division 7.

1.2 QUALITY ASSURANCE:

A. Codes and Standards: Comply with local governing regulations if more stringent than herein specified.

1.3 SUBMITTALS:

A. Furnish samples, manufacturer's product data, test reports, and materials certifications as required in referenced sections for concrete and joint fillers and sealers.

1.4 JOB CONDITIONS:

A. Traffic Control: Maintain access for vehicular and pedestrian traffic as required for other construction activities.
1. Use flaggers, barricades, warning signs and warning lights as required.

PART 2 - PRODUCTS

2.1 MANUFACTURER:

A. Acceptable Manufacturers: Subject to compliance with requirements, provide products of one of the following:

1. Curing Compound:
a. "A-H 3 Way Sealer"; Anti-Hydro Waterproofing Co.
b. "Ecocure"; Euclid Chemical Co.
c. "Sure Cure"; Kaufman Products Inc.
d. "Kure-N-Seal"; Sonneborn-Contech.
e. "L&M Cure"; L & M Construction Chemicals.

2. Bonding Compound:
a. "J-40 Bonding Agent"; Dayton Superior Corp.
b. "Everbond"; L & M Construction Co.
c. "Sonocrete"; Sonneborn-Contech.
d. "Acrylic Bondcrete"; The Burke Co.

3. Bonding Adhesive:
   a. "Epoxtite"; A.C. Horn.
   b. "Edoco 2118 Epoxy Adhesive"; Edoco Technical Prod.
   c. "Silkadur Hi-Mod"; Sika Chemical Corp.
   d. "Euco Epoxy 463 or 615"; Euclid Chemical Co.
   e. "Patch and Bond Epoxy"; The Burke Co.
   f. "Sure-Poxy"; Kaufman Products Inc.

2.2 MATERIALS

A. Forms: Steel, wood, or other suitable material of size and strength to resist movement during concrete placement and to retain horizontal and vertical alignment until removal.
   1. Forms shall be straight free of distortion and defects.
   2. Use flexible spring steel forms or laminated boards to form radius bends as required.
   3. Coat forms with a non-staining form release agent that will not discolor or deface surface of concrete.

B. Joint Dowel Bars: Plain steel bars, ASTM A 615, Grade 60. Cut bars true to length with ends square and free of burrs.
   1. Metal Expansion Caps: Furnish on one end of each dowel bar in expansion joints. Design caps with one end closed and a minimum length of 3" to allow bar movement of not less than 1", unless otherwise indicated.

C. Concrete Materials: Comply with requirements of applicable Division 3 sections for concrete materials, admixtures, bonding materials, curing materials, and others as required.

D. Expansion Joint Materials: Comply with requirements of applicable Division 7 sections for preformed expansion joint fillers and sealers.

E. Anti-Spalling Compound: 50% (by volume) boiled linseed oil and 50% (by volume) mineral spirits, complying with AASHTO M-233.

F. Liquid-Membrane Forming Curing Compound: Complying with ASTM C 309, Type I, Class A unless other type acceptable to Architect. Moisture loss not more than 0.055 gr./sq. cm. when applied at 200 sq. ft./gal.

G. Bonding Compound: Polyvinyl acetate or acrylic base, rewettable type.

H. Epoxy Adhesive: ASTM C 881, two component material suitable for use on dry or damp surfaces. Provide material "Type", "Grade", and "Class" to suit project requirements.

2.3 CONCRETE MIX, DESIGN AND TESTING:

A. Comply with requirements of applicable Division 3 sections for concrete mix design, sampling and testing, and quality control, and as herein specified.

B. Design mix to produce standard-weight concrete consisting of portland cement, aggregate, water-reducing or high-range water- reducing admixture (super-plasticizer), air-entraining admixture and water to produce the following properties:
   1. Compressive Strength: 4000 psi, minimum at 28 days.
   2. Slump Range: 8" for concrete containing HRWR admixture (super-plasticizer); 3" for other concrete.
   3. Air Content: 5% to 8%.

PART 3 - EXECUTION

3.1 SURFACE PREPARATION:

A. Remove loose material from compacted subbase surface immediately before placing concrete.

B. Proof-roll prepared subbase surface to check for unstable areas and re-compact as required. Do not begin paving work until such conditions have been corrected and are ready to receive paving.

3.2 FORM CONSTRUCTION:

A. Set forms to required grades and lines, rigidly braced and secured. Install sufficient quantity of forms to allow continuous progress of work and so that forms can remain in place at least 24 hours after concrete placement.

B. Check completed formwork for grade and alignment to following tolerances:
1. Top of forms not more than 1/8" in 10'.
2. Vertical face on longitudinal axis, not more than 1/4" in 10'.
3. Clean forms after each use, and coat with form release agent as often as required to ensure separation from concrete without damage.

3.3 CONCRETE PLACEMENT:

A. Comply with requirements of Division 3 sections for mixing and placing concrete, and as herein specified.

B. Do not place concrete until subbase and forms have been checked for line and grade. Moisten subbase if necessary to provide a uniform dampened condition at time concrete is placed.

C. Place concrete using methods which prevent segregation of mix. Consolidate concrete along face of forms and adjacent to transverse joints with internal vibrator. Keep vibrator away from joint assemblies, reinforcement, or side forms. Use only square-faced shovels for hand-spreading and consolidation. Consolidate with care to prevent dislocation of reinforcing, dowels, and joint devices.
1. Use bonding agent at locations where fresh concrete is placed against hardened or partially hardened concrete surface.
2. Deposit and spread concrete in a continuous operation between transverse joints, as far as possible. If interrupted for more than 1/2-hour, place a construction joint.
3. When adjacent pavement lanes are placed in separate pours, do not operate equipment on concrete until pavement has attained sufficient strength to carry loads without injury.

3.4 JOINTS:

A. Construct expansion, weakened-plane (contraction), and construction joints true-to-line with face perpendicular to surface of concrete. Construct transverse joints at right angles to the centerline, unless otherwise indicated.
4. When joining existing structures, place transverse joints to align with previously placed joints, unless otherwise indicated.

B. Weakened-Plane (Contraction) Joints: Provide weakened-plane (contraction) joints, sectioning concrete into areas 12 ft. wide by 12 ft. long unless shown on drawings. Construct weakened-plane joints for a depth equal to at least 1/4 concrete thickness, as follows:

C. Tooled Joints: Form weakened-plane joints in fresh concrete by grooving top portion with a recommended cutting tool and finishing edges with a jointer.

D. Sawed Joints: Form weakened-plane joints using powered saws equipped with shatterproof abrasive or diamond-rimmed blades. Cut joints into hardened concrete as soon as surface will not be torn, abraded, or otherwise damaged by cutting action.

E. Inserts: Use embedded strips of metal or sealed wood to form weakened-plane joints. Set strips into plastic concrete and carefully remove strips after concrete has hardened.

F. Construction Joints: Place construction joints at end of placements and at locations where placement operations are stopped for a period of more than 1/2-hour, except where such pours terminate at expansion joints. Construct joints as shown or, if not shown, use standard metal keyway-section forms.

G. Expansion Joints: Provide premolded joint filler for expansion joints abutting concrete curbs, catch basins, manholes, inlets, structures, walks and other fixed objects, unless otherwise indicated.
   1. Locate expansion joints at 50' o.c. for each pavement lane, unless otherwise indicated.
   2. Extend joint fillers full-width and depth of joint, and not less than 1/2" or more than 1" below finished surface where joint sealer is indicated.
   3. Furnish joint fillers in one-piece lengths for full width being placed, wherever possible. Where more than one length is required, lace or clip joint filler sections together.
   4. Protect top edge of joint filler during concrete placement with a metal cap or other temporary material. Remove protection after concrete has been placed on both sides of joint.

H. Fillers and Sealants: Comply with the requirements of applicable Division 7 sections for preparation of joints, materials, installation, and performance.

3.5 CONCRETE FINISHING:

A. After striking-off and consolidating walkway concrete, smooth surface by screeding and floating. At parking and driveway concrete, smooth surface by bull-float only. Use hand methods only where mechanical floating is not possible. Adjust floating to compact surface and produce uniform texture.

B. After floating, test surface for trueness with a 10' straightedge. Distribute concrete as required to remove surface irregularities, and refloat repaired areas to provide a continuous smooth finish.

C. Work edges of slabs, gutters, back top edge of curb, and formed joints with an edging tool, and round to 1/2" radius, unless otherwise indicated. Eliminate tool marks on concrete surface.

D. After completion of floating and troweling when excess moisture or surface sheen has disappeared, complete surface finishing, as follows:
   1. Broom finish, by drawing a fine-hair broom across concrete surface,

perpendicular to line of traffic. Repeat operation if required to provide a fine line texture acceptable to Architect.

2. On inclined slab surfaces, provide a coarse, non-slip finish by scoring surface with a stiff-bristled broom, perpendicular to line of traffic.
3. Do not remove forms for 24 hours after concrete has been placed. After form removal, clean ends of joints and point-up any minor honeycombed areas. Remove and replace areas or sections with major defects, as directed by Architect.

3.6 CURING:

A. Protect and cure finished concrete paving, complying with applicable requirements of Division 3 sections. Use membrane-forming curing and sealing compound or approved moist-curing methods.

B. Anti-Spalling Treatment: A second coat of curing and sealing compound may be used or an anti-spalling compound applied over concrete cured by continuous moist curing methods. Apply compounds to concrete surfaces no sooner than 28 days after placement, to clean, dry concrete free of oil, dirt, and other foreign material. Apply curing and sealing compound at a maximum coverage rate of 300 sq. ft./gallon. Apply anti-spalling compound in two sprayed applications. First application at rate of 40 sq. yds. per gal; second application, 60 sq. yds. per gallon. Allow complete drying between applications.

3.7 REPAIRS AND PROTECTIONS:

A. Repair or replace broken or defective concrete, as directed by Architect.

B. Drill test cores where directed by Architect, when necessary to determine magnitude of cracks or defective areas. Fill drilled core holes in satisfactory pavement areas with portland cement concrete bonded to pavement with epoxy adhesive.

C. Protect concrete from damage until acceptance of work. Exclude traffic from pavement for at least 14 days after placement. When construction traffic is permitted, maintain pavement as clean as possible by removing surface stains and spillage of materials as they occur.
   1. Sweep concrete pavement and wash free of stains, discolorations, dirt and other foreign material just prior to final inspection.

3.8 FIELD QUALITY CONTROL

A. The Owner will employ a testing laboratory to perform sampling and testing of concrete only in accordance with Section 03310 with the following exception:
   1. Compressive strength tests shall be obtained at a rated of one set of four (4) per 150 yards of concrete placement or a minimum of one set of four (4) for each day's concrete placement.

END OF SECTION 02514

SECTION 02530 £ SANITARY SEWERAGE

PART 1 - GENERAL

1.1 SUMMARY

A. Section includes sanitary sewage systems.

B. Related Sections:
1. Refer to Division-2 section "Earthwork" for excavation and backfill required for sanitary sewage systems; not work of this section.
2. Refer to Division-15 section "Soil and Waste Systems" for interior building systems including drain, waste, and vent piping; not work of this section.

1.2 QUALITY ASSURANCE:

A. Codes and Standards:
1. Plumbing Code Compliance: Comply with applicable portions of National Standard Plumbing Code pertaining to selection and installation of sanitary sewage system materials and products.
2. State of Utah DEQ Compliance: Comply with State of Utah requirements, Rule 317-4 for sanitary sewer systems.

1.3 SUBMITTALS:

None

PART 2 - PRODUCTS

2.1 MANUFACTURER:

A. Acceptable Manufacturer: Subject to compliance with requirements, prov ide products of one of the following:
1. Line Markers:
a. American Marking Corp.
b. Emed Co., Inc.
c. Seton Name Plate Corp.

2.2 IDENTIFICATION:

A. Underground-Type Plastic Line Markers: Manufacturer's standard permanent, bright-colored, continuous-printed plastic tape, intended for direct-burial service; not less than 6" wide x 4 mils thick. Provide green tape with black printing reading "CAUTION SEWER LINE BURIED BELOW".

2.3 PIPES AND PIPE FITTINGS:

A. Provide pipe fittings and accessories of same material and weight/class as pipes, with joining method as indicated.
1. Cast-Iron Soil Pipe: ASTM A 74, hub and spigot ends, servic e weight unless otherwise indicated.
a. Fittings: Cast-iron hub and spigot ends, standard strength unless otherwise indicated.
2. Polyvinyl Chloride (PVC) Sewer Pipe: ASTM D 3034, Type PSM, SDR 35.
a. Fittings: ASTM 3034, bell and spigot joints.

2.4 SANITARY SEWER MANHOLES:

A. Provide precast reinforced concrete sanitary manholes as indicated, and complying with ASTM C 478.
   1. Top: Precast concrete, of concentric cone, eccentric cone, or flat slab top type, as indicated.
   2. Base: Precast concrete, with base riser section and separate base slab, or base riser section with integral floor, as indicated.
   3. Steps: Ductile-iron or aluminum, integrally cast into manhole sidewalls.
   4. Frame and Cover: Ductile-iron, heavy-duty, indented top design, with lettering cast into top reading "SANITARY SEWER".
   5. Pipe Connectors: Resilient, complying with ASTM C 923.

2.5 CLEANOUTS:

A. Pipe extension to grade with ferrule and countersunk cleanout plug. Round cast -iron access frame over cleanout, with heavy-duty secured scoriated cover with lifting device in a concrete collar.

PART 3 - EXECUTION

3.1 INSTALLATION OF IDENTIFICATION:

A. During back-filling/top-soiling of sanitary sewage systems, install continuous underground-type plastic line marker, located directly over buried line at 6" to 8" below sub grade.

3.2 INSTALLATION OF PIPE AND FITTINGS:

A. Install piping in accordance with governing authorities having jurisdiction, except where more stringent requirements are indicated.
   1. Inspect piping before installation to detect apparent defects. Mark defective materials with white paint and promptly remove from site.
   2. Lay piping beginning at low point of system, true to grades and alignment indicated, with unbroken continuity of invert.
   3. Place bell ends or groove ends of piping facing upstream.
   4. Install gaskets in accordance with manufacturer's recommendations for use of lubricants, cements, and other special installation requirements.

B. Pipe:
   1. Cast-Iron Pipe: Install in accordance with applicable provisions of CISPI "Cast Iron Soil Pipe and Fittings Handbook".
   2. Plastic Pipe: Install in accordance with manufacturer's installation recommendations, and in accordance with ASTM D 2321.

C. Cleaning Pipe: Clear interior of piping of dirt and other superfluous material as work progresses. Maintain swab or drag in line and pull past each joint as it is completed.
   1. In large, accessible piping, brushes and brooms may be used for cleaning.
   2. Place plugs in ends of uncompleted conduit at end of day or whenever work stops.
   3. Flush lines between manholes if required to remove collected debris.

D. Joint Adapters: Make joints between different types of pipe with standard manufactured adapters and fittings intended for that purpose.

E. Interior Inspection: Inspect piping to determine whether line displacement or other damage has occurred.
   1. Make inspections after lines between manholes, or manhole locations, have been installed and approximately 2-ft of backfill is in place, and again at completion of project.
   2. If inspection indicates poor alignment, debris, displaced pipe, infiltration, or other defects, correct such defects, and reinspect.

3.3 SANITARY MANHOLES:

A. Place precast concrete sections as indicated. Where manholes occur in pavements, set tops of frames and covers flush with finish surface. Elsewhere, set tops 3" above finish surface, unless otherwise indicated.
   1. Install in accordance with ASTM C 891.
   2. Apply bituminous mastic coating at joints of sections.

3.4 TAP CONNECTIONS:

A. Make connections to existing piping and underground structures, so that finished work will conform as nearly as practicable to requirements specified for new work.

B. Use commercially manufactured wyes for branch connections. Field cutting into piping will not be permitted.

C. Take care while making tap connections to prevent concrete or debris from entering existing piping or structure. Remove debris, concrete, or other extraneous material which may accumulate.

3.5 BACKFILLING:

A. Conduct backfilling operations of open-cut trenches closely following laying, jointing, and bedding or pipe, and after initial inspection and testing are completed.

3.6 FIELD QUALITY CONTROL:

A. Testing: Perform testing of completed piping in accordance with local authorities having jurisdiction.

END OF SECTION 02530

SECTION 02666 ¥ POTABLE WATER SYSTEMS

PART 1 - GENERAL

1.1 SUMMARY

A. Section includes potable water systems work.

B. Related Sections:
1. Refer to Division-2 section "Earthwork for Site" for excavati on and backfill required for potable water systems; not work of this section.
2. Refer to Division-3 sections for concrete work required for potable water systems; not work of this section.
3. Refer to Division-15 section "Potable Water Systems" for interior building systems including interior piping, fixtures, and equipment; not work of this section.

1.2 QUALITY ASSURANCE:

A. Codes and Standards:
1. Plumbing Code Compliance: Comply with applicable portions of National Standard Plumbing Code pertaining to selection and installation of potable water system materials and products.
2. Water Purveyor Compliance: Comply with requirements of Purveyor supplying water to project, obtain required permits and inspections.

1.3 SUBMITTALS:

A. Product Data: Submit manufacturer's technical product data and installation instructions for potable water system materials and products.

B. Maintenance Data: Submit maintenance data and parts list for p otable water system materials and products. Include this data, product data, shop drawings, and record drawings in maintenance manual; in accordance with requirements of Division 1.

PART 2 - PRODUCTS

2.1 MANUFACTURER:

A. Approved Manufacturers: Subject to compliance with requirements, provide products of one of the following:
1. Plastic line markers
   a. American Marking Corp.
   b. Seton Name Plate Corp.
2. Gate Valves:
   a. Clow Corp; Valve Div.
   b. Dresser Mfg.; Div. of Dresser Industries.
   c. Fairbanks Co.
   d. Kennedy Valve; Div. of ITT Grinnell Valve Co. Inc.
   e. Stockham Valves and Fittings Inc.
   f. Waterous Co.
3. Yard Hydrants
   a. Josam Mfg. Co.
   b. Smith (Jay R.) Mfg. Co.
   c. Tyler Pipe.
   d. Zurn Industries, Inc.; Hydromechanics Div.

2.2 IDENTIFICATION:

A. Underground-Type Plastic Line Markers: Manufacturer's standard permanent, bright-colored, continuous-printed plastic tape, intended for direct-burial service; not less than 6" wide x 4 mils thick. Provide blue tape with black printing reading "CAUTION WATER LINE BURIED BELOW".

B. Nonmetallic Piping Label: If nonmetallic piping is used for water service, provide engraved plastic laminate, label permanently affixed to main electrical meter panel stating "THIS STRUCTURE HAS A NONMETALLIC WATER SERVICE".

2.3 PIPES AND PIPE FITTINGS:

A. Provide piping materials and factory-fabricated piping products of sizes, types, pressure ratings, and capacities indicated. Where not indicated, provide proper selection as determined by Installer to comply with installation requirements. Provide sizes and types matching piping and equipment connections; provide fittings of materials which match pipe materials used in potable water systems. Where more than one type of materials or products are indicated, selection is Installer's option.

B. Piping: Provide pipe fittings and accessories of same material and weight/class as pipes, with joining method as indicated.
1. PVC Water-Service Pipe and Fittings: ASTM D 1785, Schedule 80 pipe, with plain ends for solvent-cemented joints with ASTM D 2467, Schedule 80, socket-type fittings
2. PVC Pipe: Ultra Blue AWWA C909 Class 200 Pipe with ductile iron fittings.

2.4 VALVES:

A. Gate Valves: AWWA C500, 175 psi working pressure, threaded, flanged, hub, or other end configurations to suit size of value and piping connection. Provide inside screw type for use with curb valve box, iron body, bronze-mounted, double disc, parallel seat, non-rising stem.

2.5 ACCESSORIES:

A. Anchorages: Provide anchorages for tees, wyes, crosses, plugs, caps, bends, valves, and hydrants. After installation, apply full coat of asphalt or other acceptable corrosion-retarding material to surfaces of ferrous anchorages.
1. Clamps, Straps, and Washers: Steel, ASTM A 506.
2. Rods: Steel, ASTM A 575.
3. Rod Couplings: Malleable-iron, ASTM A 197.
4. Bolts: Steel, ASTM A 307.
5. Cast-Iron Washers: Gray-iron, ASTM A 126.
6. Thrust Blocks: Concrete, 2,500 psi.
7. Yard Hydrants: Non-freeze yard hydrants, inlet and outlet as inidicated, bronze casing, cast-iron or cast-aluminum casing guard, key-operated, and tapped drain port in valve housing.
8. Valve Pits: Valve pits as indicated, constructed of poured-in-place or precast concrete. Construct of dimensions indicated with manhole access, ladder, and drain. Provide sleeves for pipe entry and exit, provide waterproof sleeve seals.
9. Valve Boxes: 2 piece, cast iron, screw adjustable sleeves, 5-1/4 inch shaft, with drop lid.

2.6 WATER METER:

A. Meter Set and Lid will be provided by Water purveyor after payment of connection fees.

B. Contractor to supply Concrete Meter Box, water meter, and Accessories needed to make installation of Meter.

PART 3 - EXECUTION

3.1 EXAMINATION:

A. Examine areas and conditions under which potable water system's materials and products are to be installed. Do not proceed with work until unsatisfactory conditions have been corrected in manner acceptable to Installer.

3.2 INSTALLATION OF IDENTIFICATION:

A. During back-filling/top-soiling of underground potable water piping, install continuous underground-type plastic line markers, located directly over buried lines at 6" to 8" below sub grade

3.3 INSTALLATION OF PIPE AND PIPE FITTINGS:

A. Pipe:
1. Install PVC pressure piping according to AWWA M23 or ASTM D 2774 and ASTM F 1668 and in accordance with instructions from water purveyor.
2. Install PVC water-service piping according to ASTM D 2774 and ASTM F 1668

B. Depth of Cover: Provide minimum cover over piping of 12" below average local frost depth or 42" below finished grade, whichever is greater.

C. Water Main Connection: Arrange and pay for tap in water main, of size and in location as indicated, from water Purveyor.

D. Water Service Termination: Terminate potable water piping 5'-0" from building foundation in location and invert as indicated. Provide temporary pipe plug for piping extension into building, by work of Division 15.
1. Mark location with surface marker.

3.4 INSTALLATION OF VALVES:

A. Install valves with stems pointing up. Provide valve box over underground valves.

3.5 INSTALLATION OF WATER METER AND VAULT:

A. Install Water Meter and Vault to comply with Water Department Standards.

3.6 FIELD QUALITY CONTROL:

A. Piping Tests: Conduct piping tests before joints are covered, and after thrust blocks have sufficiently hardened. Fill pipeline 24-hrs. prior to testing, and apply test pressure to stabilize system. Use only potable water.

B. Hydrostatic Tests: Test at not less than 200 pounds per square inch for 2-hrs.

1. Test fails if leakage exceeds 2-qts per hour per 100 gaskets or joints, irrespective of pipe diameter.
2. Increase pressure in 50 psi increments and inspect each joint between increments. Hold at test pressure for one hour, decrease to 0 psi. Slowly increase again to test pressure and hold for one more hour.

3.7 ADJUSTING AND CLEANING:

A. Disinfection of Potable Water System: Flush pipe system with clean potable water until no dirty water appears at point of outlet. Fill system with water-chlorine solution containing at least 50 ppm of chlorine. Valve off system and let stand for 24 - hrs minimum. Flush with clean potable water until no chlorine remains in water coming from system.
   1. Repeat procedure if contamination is present in bacteriological examination.

B. Disinfection of Water Mains: Flush and disinfect in accordance with AWWA C651 "Standard for Disinfecting Water Mains".
   1. Contractor shall submit written verification to Project Manager stating, Disinfection has been completed in strict compliance with specification for this project and with jurisdiction having authority over water system.

END OF SECTION 02666

SECTION 02720 £ STORM SEWERAGE SYSTEMS

PART 1 - GENERAL

1.1 SUMMARY

A. Section includes storm sewage systems.

B. Related Sections:
1. Refer to Division-2 section "Earthwork" for excavation and backfill required for storm sewage systems; not work of this section.
2. Refer to Division-3 sections for concrete work required for storm sewage systems; not work of this section.
3. Refer to Division-15 section "Storm Water Systems" for interior building systems including conductors, horizontal branches, and connections to roof and deck drains; not work of this section.
4. Refer to Section 02200 »Earthwork…for information regarding percolation tests.

1.2 QUALITY ASSURANCE:

A. Codes and Standards:
1. Plumbing Code Compliance: Comply with applicable portions of National Standard Plumbing Code pertaining to selection and installation of storm sewage system's materials and products.
2. Environmental Compliance: Comply with applicable portions of local Environmental Agency regulations pertaining to storm sewage systems.
3. National Pollution Discharge Elimination System (NPDES) Compliance: Comply with NPDES requirements and Storm Water Pollution Prevention Plan (SWPPP).

PART 2 - PRODUCTS

2.1 MANUFACTURER:

A. Approved Manufacturers: Subject to compliance with requirements, provide products of one of the following:
1. Identification Markers
a. Allen Systems Inc.
b. Emed Co., Inc.
c. Seton Mane Plate Corp.

2.2 IDENTIFICATION:

A. Underground-Type Plastic Line Markers: Manufacturer's standard permanent, bright-colored, continuous-printed plastic tape, intended for direct-burial service; not less than 6" wide x 4 mils thick. Provide green tape with black printing reading "CAUTION STORM SEWER LINE BURIED BELOW".

2.3 PIPES AND PIPE FITTINGS:

A. Provide pipe fittings and accessories of same material and weight/class as pipes, with joining method as indicated.
1. Polyvinyl Chloride (PVC) Sewer Pipe: ASTM D 3034, Type PSM SDR 35 up to 10" diameter pipe.
a. Fitting: PVC ASTM 3034, bell and spigot joints.

2. Reinforced Concrete Pipe: ASTM C 76, Class III unless otherwise indicated.
   a. Fittings: Reinforced concrete, same strength as adjoining pipe, tongue-and-groove gasketed joints complying with ASTM C 443.
3. Concrete Pipe: ASTM C 14, Class III nonreinforced concrete pipe unless otherwise indicated.
   a. Fittings: Concrete, same strength as adjoining pipe, tongue-and-groove gasketed joints complying with ASRM C 443.

2.4 STORM SEWER MANHOLES

A. Provide precast reinforced concrete storm sewer manholes as indicated, complying with ASTM C 478.
   1. Top: Precast concrete, of concentric cone, eccentric cone, or flat slab top type, as indicated.
   2. Base: Precast concrete, with base riser section and separate base slab, or base riser section with integral floor, as indicated. For sumps, precast ring with base riser section as indicated.
   3. Steps: Ductile-iron or aluminum, integrally cast into manhole sidewalls.
   4. Frame and Cover: Ductile-iron, heavy-duty, indented top design, with lettering cast into top reading "STORM SEWER", conforming to ASTM A-48.
   5. Pipe Connections: Resilient, complying with ASTM C 923.

2.5 CATCH BASINS:

A. Precast or cast in place reinforced concrete catch basins as indicated.
   1. Basin: Precast or cast in place reinforced concrete, flat slab top.
   2. Frame and Grate: Ductile-iron or galvanized steel grate, heavy-duty, bicycle proof.
   3. Pipe Connectors: Resilient, complying with ASTM C 923.

PART 3 - EXECUTION

3.1 INSTALLATION OF IDENTIFICATION:

A. During back-filling/top-soiling of storm sewage systems, install continuous underground-type plastic line marker, located directly over buried line at 6" to 8" below sub grade.

3.2 INSTALLATION OF PIPE AND PIPE FITTINGS:

A. Install piping in accordance with governing authorities having jurisdiction, except where more stringent requirements are indicated.
   1. Inspect piping before installation to detect apparent defects. Mark defective materials with white paint and promptly remove from site.
   2. Lay piping beginning at low point of system, true to grades and alignment indicated, with unbroken continuity of invert.
   3. Place bell ends or groove ends of piping facing upstream.
   4. Install gaskets in accordance with manufacturer's recommendations for use of lubricants, cements, and other special installation requirements.

B. Pipe:
   1. Polyvinyl Chloride (PVC) pipe: Install in accordance with manufacturer's installation recommendations, and in accordance with ASTM D 2321.
   2. Concrete Pipe: Install in accordance with applicable provisions of ACPA "Concrete Pipe Installation Manual".

C. Cleaning Piping: Clean interior of piping of dirt and other superfluous material as work progresses. Maintain swab or drag in line and pull past each joint as it is completed.
   1. In large, accessible piping, brushes and brooms may be used for cleaning.
   2. Place plugs in ends of uncompleted conduit at end of day or whenever work stops.
   3. Flush lines between manholes if required to remove collected debris.

D. Joint Adapters: Make joints between different types of pipe with standard manufactured adapters and fittings intended for that purpose.

E. Closing Abandoned Utilities: Close open ends of abandoned underground utilities, which are indicated to remain in place. Provide sufficiently strong closures to withstand hydro-static or earth pressure which may result after ends of abandoned utilities have been closed.

F. Close open ends of piping with threaded metal caps, plastic plugs, or other acceptable methods suitable for size and type of materials being closed. Wood plugs are not acceptable.

G. Interior Inspection: Inspect piping to determine whether line displacement or other damage has occurred.
   1. If inspection indicated poor alignment, debris, displaced pipe, infiltration or other defects, correct such defects, and reinspect.

3.3 CATCH BASINS:

A. Construct catch basins to sizes and shapes indicated.

B. Set frames and grates to elevations indicated.

3.4 TAP CONNECTIONS:

C. Make connections to existing piping and underground structures, so that finished work will conform as nearly as practicable to requirements specified for new work.

D. Use commercially manufactured wyes for branch connections. Field cutting into piping will not be permitted.
   1. For branch connections from side into existing 24" or larger piping, or to underground structures, cut opening into unit sufficiently large to allow 3" of concrete to be packed around entering connections. Cut ends of connection passing through pipe or structure wall to conform to shape of and be flush with inside wall, unless otherwise indicated. On outside of pipe or structure wall, encase entering connection in 6" of concrete for minimum length of 12" to provide additional support or collar from connection to undisturbed ground.
   3. Use epoxy-bonding compound as interface between new and existing concrete and piping materials.
   4. Take care while making tap connections to prevent concrete or debris from entering existing piping or structure. Remove debris, concrete, or other extraneous material, which may accumulate.

C. Connections under the building: use MJ type connections, reducers, tees etc. as needed to connect the roof drain to the storm drain under the building.

3.5 BACKFILLING:

A. Conduct backfill operations of open-cut trenches closely following laying, jointing, and bedding of pipe, and after initial inspection and testing are completed.
   1. To minimize local area traffic interruptions, allow no more than 100' between pipe laying and point of complete backfilling.
   2. Backfill sections under the building or adjacent to footings with structural fill.

3.6 FIELD QUALITY CONTROL:

A. Testing: Perform testing of completed piping in accordance with local authorities having jurisdiction.

END OF SECTION 02720

SECTION 02765 ƒ PAVEMENT MARKINGS

PART 1 - GENERAL

1.1 RELATED DOCUMENTS

A. Drawings and general provisions of the Contract, including General and Supplementary Conditions and Division 1 Specification Sections, apply to this Section.

B. Section Includes
   1. Painted pavement markings.

C. Related Sections:
   1. Section 02513 ƒ Asphalt Concrete Paving.
   2. Section 02714 ƒ Cement Concrete Paving.

1.2 SUBMITTALS

A. General: Submit the following in accordance with Section 01330.

B. Manufacturer,s product data and installation instructions.

1.3 QUALITY ASSURANCE

A. Installer: Having a minimum of 2 years experience in the layout and striping of parking lots.

B. Job Conditions: Do not apply marking paint when weather is foggy or rainy, or ambient or pavement temperatures are below 40 degrees F., nor when such conditio ns are anticipated during 8 hours after application.

1.4 DELIVERY, STORAGE, AND HANDLING

A. Deliver pavement-marking materials to Project site in original packages with seals unbroken and bearing manufacturer's labels containing brand name and type of material, d ate of manufacture, and directions for storage.

B. Store pavement-marking materials in a clean, dry, protected location within temperature range required by manufacturer. Protect stored materials from direct sunlight.

1.5 PROJECT CONDITIONS

A. Environmental Requirements: Apply paint when ambient temperature is 50 °F. or above, and relative humidity is below 85%.

B. Do not apply marking paint when weather is foggy or rainy, or ambient or pavement temperatures are below 40 degrees F., nor when such conditions are anticip ated during eight hours after application.

C. Allow concrete pavement to cure for 28 days and be dry before starting pavement marking.

D. Allow asphalt pavement to cure for 30 days and be dry before starting pavement marking.

PART 2 - PRODUCTS

2.1 MATERIALS

A. Traffic Marking Paint:

1. Type: Solvent borne alkyd resin; durable and weather -resistant; high solids; fast drying; VOC compliant; meeting requirements of Federal Paint Specifications TT -P-115F and TT-P-85E.
2. Application Thickness per Coat: 15 mils wet (7 mils dry).
3. Application Rate per Coat: 300 to 320 linear feet of 4 inches wide line per gallon.
4. Colors:
   a. Yellow: Parking stall stripping, directional emblems, restricted parking zone striping, disabled accessibility paths.
   b. Blue with White Copy: Disabled parking emblems.
   c. Red: Fire lanes.

B. Acceptable Products: Subject to compliance with requirements, provide products by one of the following:
   1. S275 Traffic Paint Alkyd 4900 Series by ICI Dulux.
   2. Substitutions: Submit in accordance with Section 01600.

2.2 APPLICATION EQUIPMENT

A. Pressurized, self-contained paint machine capable of applying a straight line from 2 to 6 inch wide, with consistent coverage.

PART 3 - EXECUTION

3.1 INSPECTION AND PREPARATION

A. Surface Conditions: Clean and dry free from dirt, loose paint, oil, grease, wax, and other contaminants.

B. Locate markings as indicated on Drawings. Provide qualified technician to supervise equipment and application of markings. Lay out markings using guide lines, templates and forms.

C. Do not apply traffic and lane marking paint until layout and placemen t has been verified with Owner,s Representative

D. Thoroughly clean pavement surfaces free of dirt, sand, gravel, oil and other foreign materials.

E. Allow paving to cure before painting as required by manufacturer of traffic paint.

3.2 APPLICATION

A. Apply in accordance with manufacturer's written instructions.

B. Apply 2 coats to paving.

C. Using approved equipment, apply paint to a minimum thickness of 15 mils. Marking edges of stripes and symbols shall be sharply outlined.

D. Restrict traffic on pavement until stripping is fully cured.

END OF SECTION 02765

SECTION 02822 £ CHAIN LINK FENCES

PART 1 - GENERAL

1.1 SECTION INCLUDES

A. Chain Link Fences

1.2 RELATED DOCUMENTS

A. Drawings and general provisions of Contract, including General and Supplementary Conditions.

1.3 RELATED SECTIONS

A. Division 1 Specification Sections including, but not limited to following:

1. Section 01335 Shop Drawings, Product Data and Samples.

B. Section 02200 Earthwork.

C. Section 03300 Cast-In-Place Concrete

1.4 SUBMITTALS

A. Product data in form of manufacturer•s technical data, specifications, and installation instructions for fence and gate posts, fabric, gates, and accessories.

B. Shop drawings showing location of fence, gates, each post, and details of post installation, extension arms, gate swing, hardware, and accessories.

1.5 QUALITY ASSURANCE

A. Installer Qualifications: Engage Installed with minimum 5 years• experience and has completed at least 5 chain link fence projects with same material and of similar scope to that indicated for this Project with successful construction record of in-service performance.

B. Single-Source Responsibility: Obtain chain link fences, including accessories, fittings, and fastenings, from single source.

1.6 PROJECT CONDITIONS AND PREPARTION FOR FENCING

A. Soil and Rock: See soils report (attached to specifications).

B. Grubbing and Clearing: All vegetation and debris within 3 feet of the new fence line, on both sides, shall be removed by the Contractor. All roots will be removed I the top 10 inches of soil.

C. Grading: A six-foot wide strip, centered on the new fence line, shall be smoothed and graded, so that no rocks will project above the plane surface more than 1 foot and no depressions will project below the plane surface more than one foot.

1.7 PREPARATION FOR FENCING

A. Field Measurements: Verify layout information for fences indicated on Drawings in relation to property survey and existing structures. Verify dimensions by field measurements.

PART 2 - PRODUCTS

2.1 FABRIC

A. Steel Chain-Link Fence Fabric: Fabricated in one-piece widths for fencing 12 feet and less in height to comply with Chain Link Fence Manufactures Institute (CLFMIO) ´Product Manualˆ and with requirements indicated below:

1. Mesh and Wire Size: 2-inch mesh, o.120-inch diameter (11 gage).
2. Coating: ASTM A 817, Type 2, Class 1, zinc-coated (galvanized) applied after weaving.

2.2 FRAMING

A. Round member sizes are given in actual outside diameter (OD) to nearest thousandth of inch. Round fence posts and rails are often referred to in ASTM standard specifications by nominal pipe sizes (NPS) or equivalent trade sizes in inches. Following indicates these equivalents all measured in inches:

Actual Outside Diameter (OD)	NPS Size	Trade Size
1.900	1-1/2	2
2.375	2	2-1/2
2.875	2-1/2	3
3.500	3	3-1/2
4.000	3-1/2	4

B. Type I Round Posts: Standard weight (schedule 40) galvanized-steel pipe conforming to ASTM F 1083, according to heavy industrial requirements of ASTM F 669, Group 1A, with minimum yield strength of 25,000 phi, not less than 1.8 ounces of zinc per square foot. Type A coating inside and outside according to ASTM F 1234, as determined by ASTM A 90, and weights per foot as follows:

Actual Outside Diameter (OD)	Weight (pounds per foot)	NPS Size
1.900	2.72	1-1/2
2.375	3.65	2
2.875	5.79	2-1/2
3.500	7.58	3
4.000	9.11	3-1/2

C. Roll-Formed Steel: Rolled form steel shapes (e.g., C section) produced from structural-quality steel conforming to ASTM A 570, grade 45, or ASTM A 446, grade D, galvanized, conforming to heavy industrial requirements of ASTM F 669, Group II, with minimum yield strength of 45,000 psi. Protective coating system according to ASTM F 1234, Type A, hot-

dip galvanized with minimum of 2.0 ounces of zinc per square foot according to ASTMA A 123, 4.0 ounces of zinc per square foot according to ASTM A 525; or Type C, minimum of 1.0 ounce of zinc £ 5 percent aluminum-mischmetal alloy per square foot according to ASTM A 875.

D. Roll-Formed Steel: Hot-rolled steel shape H section with minimum yield strength of 45 ,000 psi conforming to ASTM F 669, group III. Protective coating system according to ASTM F 1234, Type A, hot-dip galvanized with minimum of 2.0 ounces of zinc per square foot according to ASTM A 123, or 4.0 ounces of zinc per square foot according to AST M A 525.

E. Square Tubing: Cold-formed steel structural tubing conforming to ASTM A 500, Grade B with minimum yield strength of 42,000 psi and not less than 1.8 ounces of zinc per square foot Type A coating inside and outside according to ASTM F 1234, as de termined by ASTM A 90.

F. Bottom Rail: Manufacturer•s longest lengths (17 to 21 feet) with swedged-end or expansion-type coupling. Approximately 6 inches long for joining. Provide rail ends or other means for attaching rail securely to each gate corner, pu ll, and end post. Bottom rail shall be 1.90-inch outside diameter Type I and II steel pipe.

G. Steel posts for fabric heights up to (and including) 6 feet:

1. Round Line or Intermediate posts: 3.5-inch outside diameter Type I or II steel Pipe.
2. Round End, Corner, and Pull Posts: 4.0 inches outside diameter Type I or II steel pipe.

H. Swing Gate Posts: Finish posts to support single gate leaf, or 1 leaf of double -gate installation, according to ASTM F 900, sized as follows for fabric up to and including 6 feet and gates up to 10• in width: 4.0 inch OD pipe weighting at least 8.65 pounds per foot.

2.3 FITTINGS AND ACCESSORIES

A. Material: Comply with ASTM F 626. Galvanized iron or steel to suit manufacturer•s standards.

1. Steel and Iron: Unless specified otherwise, hot-dip galvanize pressed steel or cast-iron fence fittings and accessories with at least 1.2 ounces zinc per square foot as determined by ASTM A 90.

B. Post and Line Caps: Provide weather tight closure cap for each post. Provide line post caps with loop to receive tension wire.

C. Post Brace Assembly: Manufacturer•s standard adjustable brace. Use material specified below for brace, and truss to line posts with 3/8-iknch diameter rod and adjustable tightener. Provide manufacturer•s standard galvanized-steel, cast-iron or cast-aluminum cap for each end.

1. Round Steel: 1.900-inch OD Type I or II steel pipe.
2. Roll-Formed Steel: C section weighing minimum o f2.72 pounds per linear foot.

D. Bottom (and Center Rail, if required): 1.900-inch OD Type I or II steel pipe. Provide manufacturer•s standard galvanized-steel, cast-iron or cast-aluminum cap for each end.

E. Tension or Stretcher Bars: Hot-dip galvanized steel with minimum length 2 inches less than full height of fabric, minimum cross section of 3/16 inch by inch, and minimum of 1.2 ounces of zinc coating per square foot. Provide one bar for each gate and end post, and two for each corner and pull post, except where fabric is integrally woven into post.

F. Tension and Brace Bands: 3/4 inch wide minimum hot-dip galvanized steel with minimum of 1.2 ounces of zinc coating per square foot.

1. Tension Bands: 0.74 inch thick (14 gage) minimum
2. Brace Bands: 0.1056 inch thick (12 gage) minimum

G. Tension Wire: 0.177-inch-diameter metallic-coated tension wire conforming to ASTM A 824 with finish to match fabric.
1. Coating Type II zinc in following class as determined by ASTM A 90: Class 2, with minimum coating weight of 1.20 ounce per square foot of uncoated wire surface.

2.4 CONCRETE

A. Concrete: Provide concrete consisting of Portland cement per ASTM C 150, aggregate per ASTM C 33, and potable water. Mix materials to obtain concrete with minimum 28-day compressive strength of 3000 psi. Use at least four sacks of cement per cu. Yd., 1-inch maximum size aggregate, 3-inch maximum slump.

PART 3 - EXECUTION

3.1 INSTALLATION

A. General: Install fence to comply with ASTM F 567. Do not begin installation and erection before final grading is completed, unless otherwise permitted.

B. Excavation: Drill holes for posts to diameters and spacings indicated.

1. Unless otherwise indicated, excavate hole depths approximately 3 inches lower than post bottom, with bottom of posts set not less than 36 inches below finish grade surface or greater if required to exceed frostline.

C. Setting Posts: Center and align posts in holes 3 inches above bottom of excavation. Space maximum of 10 feet on center, unless otherwise indicated.

1. Protect portion of posts above ground from concrete splatter. Place concrete around posts and vibrate or tamp for consolidation. Check each post for vertical and top alignment, and hold in position during placement and finishing operations.
   a. Unless otherwise indicated, extend concrete footings 2 inches above grade and trowel to crown to shed water.

D. Bottom Rails: Run rail continuously to line posts, bending to radius for curved runs and at other posts terminating into rail end attached to posts. Provide expansion couplings as recommended by fencing manufacturer. Bottom rail must be not more than 3ˆ and not less than 1ˆ above the soil. Localized grading by the contractor will be required to accomplish this.

E. Brace Assemblies: Install braces at gate posts and at both sides of corner and pull posts. Locate horizontal braces at mid-height of fabric on gate (which has top rail) and at fabric

height on both sides of corners. Install so posts are plumb when diagonal rod is under proper tension.

F. Top Tension Wire: Install tension wire within 6 inches of top of fabric before stretching fabric and tie to each post with not less than same gage and type of wire. Pull wire taut, without sags. Fasten fabric to tension wire with 0.120-inch-diameter (11-gage) hog rings of same material and finish as fabric wire, spaced maximum of 24 inches on center.

G. Fabric: Leave approximately 2 inches between finish grade and bottom selvage unless otherwise indicated. Pull fabric taut and tie to posts, rails, and tension wires. Install fabric on outside of security area, and anchor to framework so that fabric remains under tension after pulling force is released.

H. Tension or Stretcher Bars: Thread through fabric and secure to end, corner, pull, and gate posts with tension bands spaced not over 15 inches on center.

I. Tie Wires: Use wire or proper length to secure fabric firmly to posts and rails. Bend ends of wire to minimize hazard to persons or clothing.

1. Maximum Spacing: Tie fabric to line posts 12 inches on center and to rails and braces 24 inches on center.

J. Fasteners: Install nuts for tension bands and carriage bolts on side of fence opposite fabric side. Peen ends of bolts or score threads to prevent removal of nuts for added security.

END OF SECTION 02822

SECTION 02831 ƒ HORIZONTAL SLIDING GATE OPERATORS

PART 1 - GENERAL

1.1 SECTION INCLUDES

A. Pre-wired, self-contained, slide gate operator for horizontal cantilever sliding gates, including selected attachments and accessory equipment.

1.2 RELATED DOCUMENTS

A. Drawings and general provisions of contract, including General and Supplementary Conditions.

1.3 RELATED SECTIONS

A. Division 1 Specification Sections including, but not limited to, following:
   1. Section 01330 Submittal Procedures.

B. Fencing: See Section 02822.

C. Cast-in-Place Concrete: See Section 03300

D. Division 16 Electrical: Electrical service and connections.

1.4 SUBMITTALS

A. General: Comply with requirements of Section 01330.

B. Shop drawings: Submit drawings showing connections to adjacent construction, range of travel, and all electrical and mechanical connections to operator. Drawings shall also show size and location of concrete mounting pad

C. Installation instructions.

D. Test reports:
   1. Submit affidavit(s) from manufacturer demonstrating that gate mechanism has been tested to 200,000 cycles without breakdown.
   2. Each Operator shall bear label indicating that operator mechanism has been tested for full power and pressure of all hydraulic components, full stress tests of all mechanical components and electrical tests of overload de vices.

a. Operations and Maintenance Manual: Identify parts of equipment for future procurement.

1.5 QUALITY ASSURANCE

b. Manufacturer: company specializing in manufacture of hydraulic security gate operators of type specified, with minimum of 7 years experience with gate operators of this type and design.

c. Installer: Minimum of 3 years experience installing similar equipment.

d. Fence installer and gate operator installer are responsible to provide a coordinated and completely operational sliding gate design and ins tallation with selected horizontal gate operator and accessories, and functionality requested.

1.6 CODES AND REGULATORY REQUIREMENTS

A. Operators shall be built to standards of Underwriters Laboratories UL325 Class III and bear U.L. Listed Label. Complete electrical work according to applicable codes including local codes and National Electrical code. Field work shall be performed in neat and professional manner, completed to journeyman standards.

B. Current safety standards require the use of multiple external se nsors to be capable of reversing the gate in either direction upon sensing an obstruction.

1.7 PRODUCT DELIVERY AND STORAGE

A. Store products upright in the original sh ipping containers, covered, ve ntilated and protected from all weather conditions.

1.8 WARRANTY

A. Provide 5-year limited warranty against defects in materials or workmanship. Replace defective materials with comparable materials furnished by manufacturer at no cost to Owner.

PART 2 - PRODUCTS

2.1 GATE OPERATORS

A. Acceptable Manufacturers: Subject to compliance with req uirements, manufacturers offering products that may be incorporated into Work include following:
1. Hy-Security Gate Operators 222 EX-ST.
2. The Tymetal Corporation.
3. or equal.

B. Basis for Design: Model 222 EX-ST Class III by Hy-Security Gate Operators.

2.2 OPERATION

A. Operation shall be by means of metal rail passing between pair of solid aluminum wheels with polyurethane threads. Operator motors shall be hydraulic, geroller type, and system shall not include belts gears, pulleys, roller chains or sprockets to transfer power from operator to gate panel. Operator shall generate minimum horizontal pull of 300 pounds without drive wheels slipping and without distortion of supporting arms. Gate panel velocity shall not be less than 3.3 feet per second and shall be stopped gradually to prevent shock loads to gate and operator assembly. ˜Soft stop¯ feature of fate operator shall be adjustable from minimum of 1 second, to accommodate gates.

B. Standard mechanical components shall include as minimum:
1. Supporting arms: Cast alumin um channel. Arms shall incorporate fully bushed, 1 -1/2 inch bearing surface.
2. Arm pivots: ˙ inch diameter, stainless steel pins, in hinge configuration with supporting arm channel.
3. Tension spring: 2-1/2 inch heavy duty, 800 pound capacity.
4. Tension adjustment: Finger tightened nut, not requiring us of tools.
5. Drive release: instant release tension of both drive wheels and be capable of disengaging from contact with rail in single motion, for manual operation.
6. Push-button operation: 3 button station mounted p ermanently on exterior of electrical panel.
7. Limit switches: Fully adjustable, toggle type, NEMA 4.
8. Electrical enclosure: Oversized metal type with hinged lid and gasketed to provide protection from intrusion of foreign objects.
9. Chassis base: ¨ inch steel plate, welded and ground edges, powder paint finish smooth to touch.

10. Cover: 10 gage galvanized steel metal with zinc flame spray finish. Joints welded, filled and ground smooth. Finished corners square and true with no visible joints.
11. Drive wheels: Aluminum hub with polyurethane tread and durometer hardness not less than 80.
12. Drive rail: Extruded 6061 T6, not less than 1/8 inch thick. Incorporate alignment pins for ease of replacement, splicing and for break-away design. Pins shall provide perfect butt splice.
13. Hydraulic hose: ¨ inch synthetic, rated to 2750 psi.
14. Hydraulic valves: Individually replaceable in integrated hydraulic manifold.
15. Hose fittings: At manifold shall be quick disconnect type, swivel type at other locations.
16. Hydraulic fluids: High performance type with viscosity index greater than 375.

C. Minimum standard electrical components: Operator assembly shall be ˜Listed¯ by Underwriters Laboratories, Inc.
1. Pump motor: Minimum service factor of 1.15 HP. Standard voltages available, single or 3-phase.
2. Components: Overload protected.
3. Controls: Industrial grade relays, hard-wired with individually numbered wires.
4. Transformer: 75 VA, non jumpered taps, for common voltages.
5. Maximum run timer: Included in operators.
6. Control Circuit: 24 VAC.
7. Two pole ˜dry contact¯ output for interlocking 2 gate operators, and/or output for operation of secure/unsecured indication lights.
8. Sensitive, low current interface for connection of remotely located control stations.
9. Output contact to initiate unlocking operation of external solenoid locks.
10. Input terminals to allow interface connection of external solenoid interlocking contacts.
11. Start delay timer to allow external locks time to release before gate moves.

D. Safety devices: Provide all safety devices as necessary for compliance with applicable codes and regulations for intended use, including but not limited to: reversing edge, and for stopping or reversing gate travel: photo cell beams.

E. Adjustable brake valves to effect soft stop control for gates weighing up to 4000 pounds.

F. Additional Features:
1. Heater with thermostat control for cold or damp climates.
2. Weather-stripped operator covers.
3. Remote Control gate release devices. Places operator in ˜Manual mode¯ from remote location.
4. Remote control gate operators to automatically open and close the gates: 10 remotes for north gate, 2 remotes for south gate.
5. Special controls for extra duty or gates weighing in excess of 1000 pounds.
6. High speed operations for more than 1 foot per second travel.
7. Electrical 208 VAC, 3-phase
8. One Keypad ƒ at north gate.
9. One Intercom at north gate to receiving unit in office.
10. Ground obstruction safety loops for exit calls on west side of both south and north gates.
11. All controls necessary to operate features provided including controls which allow for systems functionality to be flexibly modified by User as their security and operational needs require.

2.3 FACTORY TESTING

A. Fully assemble and test, at factory, each gate operator to assure smooth operation, sequencing and electrical connection integrity. Apply physical loads to operator to simulate field conditions. Tests shall simulate physical and electrical loads equal to fully rated capacity of operator components.

B. Check mechanical connections for tightness and alignment. Check welds for completen ess and continuity. Check welded corners and edges to assure they are square and straight.

C. Inspect painted finish for completeness and gloss. Touch up any imperfections prior to shipment.

D. Check hydraulic hoses and electrical wires to assure that chafing cannot occur during shipping or operation.

PART 3 - EXECUTION

3.1 SITE EXAMINATION

A. Locate on existing concrete mounting pad in accordance with approved shop drawings.

B. Make sure that gate is operating smoothly under manual conditions before installation of gate operators. Do not proceed until gate panel is properly aligned and operates without binding.

C. Operators shall be built to standards of Underwriters Laboratories and bear U.L. Listed Label. Complete electrical work according to local codes and National Electrical code. Field work shall be performed in neat and professional manner, completed to journeyman standards.

3.2 INSTALLATION

A. Install gate operator in accordance with manufacturers printed instruction, current at the time of installation. Coordinate locations of operators with contract drawings, other trades and shop drawings.

B. Installer shall insure that electric service delivered to operator is at least 20 AMP

3.3 FIELD QUALITY CONTROL

A. Test gate operator through 10 full cycles and adjust for operation without binding, scraping or uneven motion. Test limit switches for proper ˜at rest¯ gate position. Installer shall return 6 months after substantial completion and fully adjust gates, operator and related components to function within manufacturer¸s tolerances and opti mum operating condition and safety.

B. Anchor bolts shall be fully concealed in finished installation.

3.4 CONTINUED SERVICE AND DOCUMENTATION

A. Train owner¸s personnel in general maintenance of gate operator and accessories

END OF SECTION 02831

SECTION 03052 ¤ CONCRETE WATERPROOFING SYSTEM

PART 1 - GENERAL

1.01 DESCRIPTION

A. SECTION INCLUDES:

1. This section specifies an integral concrete waterproofing system that can be used as a contractor's option entirely in lieu of the 03053 CONCRETE WATERPROOFING ADMIXTURE previously specified.

2. This section includes: Furnishing of all labor, materials, services and equipment necessary for the supply and installation of cementitious crystalline waterproofing mixed in concrete prior to placement as indicated on drawings and/or as specified.

3. This section includes crystalline waterproofing treatment of construction joints between successive concrete pours.

4. This section includes: Cleaning of concrete surface.

1.02 RELATED SECTIONS:

A. Section 03300 ¤ Cast In Place Concrete
B. REPLACES - Section 03053 ¤ Concrete Waterproofing Admixture
C. Section 03054 ¤ Oliophobic Sealer
D. Section 07901 ¤ Caulking and Sealants

1.03 SYSTEM DESCRIPTION

A. The complete systems include Cementitious Crystalline Waterproofing a blend of Portland cement, fine treated silica sand and active proprietary chemicals. When mixed with water and applied as an integral admixture, the active chemicals cause a catalytic reaction which generates a non-soluble crystalline formation of dendritic fibers within the pores and capillary tracts of concrete. This process causes concrete to become permanently sealed against the penetration of liquids from any direction in conjunction with the crystalline waterproofing treatment of construction joints between successive concrete pours. In addition, the completed system shall be warranted for five (5) years as a total and complete system. When appropriately cured the system shall be sealed using the product as described in Section 03054 ¤ Oliophobic Sealer.

1.04 REFERENCES

A. ACI 305R - Hot Weather Concreting; 1999.

B. ACI 306R - Cold Weather Concreting; 1988.

C. ACI 308 - Standard Practice for Curing Concrete; 1992 (Re-approved 1997).

D. ASTM C 39/C 39M - Standard Test Method for Compressive Strength of Cylindrical Concrete Specimens; 1999.

E. ASTM C 309 - Standard Specification for Liquid Membrane-Forming Compounds for Curing Concrete; 1998a.

F. ASTM C 666 - Standard Test Method for Resistance of Concrete to Rapid Freezing and Thawing; 1997.

G. ASTM E 329 - Standard Specification for Agencies Engaged in the Testing and/or Inspection of Materials Used in Construction; 1998a.

H. COE CRD-C 48 - Standard Test Method for Water Permeability of Concrete; 1992.

I. NSF 61 - Drinking Water System Components - Health Effects; 2000a.

1.05 SUBMITTALS

A. Submittals shall comply with the General Conditions and Division -1 Specification Sections. Submit the following:

1. Submit under provisions of Section 01300.

2. Product Data: Manufacturer's printed data sheet, for specified products.

3. Test Reports: Certified test reports showing compliance with specified performance characteristics and physical properties.

   i. Testing Agency: Independent laboratory meeting the requirements of ASTM E329 and certified by the United States Bureau of Standar ds, Army Corp of Engineers, and American Concrete Institute.

4. Certificates: Product certificates notarized by manufacturer certifying that:

   i. Materials comply with specified performance characteristics and physical requirements.

   ii. Installer is qualified and approved by manufacturer.

5. Manufacturer's installation instructions.

1.06 QUALITY ASSURANCE

A. MANUFACTURER QUALIFICATIONS: Minimum 10 years experience manufacturing and having at least 10 finished installations of crystalline waterproofing of the type and approximate project scope or greater specified.

B. CONCRETE BATCH OPERATOR QUALIFICATIONS: Certified by Manufacturer for mixing and use of Crystalline Waterproofing Admixture Products.

C. PRE-INSTALLATION MEETING: Prior to installation, conduct a meeting wit h the General Contractor, owner's representative, Architect, concrete installer, installers of adjacent work and work penetrating concrete, and admixture waterproofing manufacturer's representative to verify project requirements, substrate conditions, manu facturer's installation instructions, and manufacturer's warranty requirements; notify the Owner and Architect at least one week in advance of meeting.

D. APPLICATOR: Waterproofing applicator shall be experienced in the installation of cementitious crystalline waterproofing materials as demonstrated by at least 10 previous successful installations, and shall be approved by the manufacturer in writing.

E. TECHNICAL CONSULTATION: Provide minimum of 1 person who shall be present during execution of Work, who shall be thoroughly experienced in installation of specified

materials, and who shall direct Work performed under this section. The waterproofing manufacturer's representative shall provide technical consultation on waterproofing application.

F. INSTALLER CERTIFICATION: Upon completion of application of waterproofing, submit certification that specified materials were applied in accordance with approved manufacturer's recommended procedures.

1.07 DELIVERY, STORAGE AND HANDLING

A. DELIVERY: Deliver packaged waterproofing materials to project site in original undamaged containers, with manufacturer's name, labels, product identification and seals intact.

B. STORAGE: Store all material in a secure, dry and temperature controlled area on pallets maintaining temperatures as recommended by the manufacturer's until installed.

C. HANDLING: A sufficient quantity of all materials including but not limited to waterproofing and construction joint products shall be stored on site or be readily available prior to starting the work to insure that the work will be continuous from start to completion without delay due to material shortage or unavailability.

1.08 WARRANTY

A. MANUFACTURER'S WARRANTY: Manufacturer's Warranty: Provide manufacturer's standard warranty document executed by authorized company official; warranty period: minimum Ten (10) years, commencing on Date of Substantial Completion.

B. APPLICATOR'S WARRANTIES: Applicator shall warrant the waterproofing and construction joint system(s) against defects caused by faulty workmanship or materials for a period of Five (5) years from Date of Substantial Completion. The warranty will cover the surfaces treated and will bind the applicator to repair, at his expense, any and all leaks through the treated surfaces which are not due to structural weaknesses or other causes beyond applicator's control such as fire, earthquake, tornado and hurricane.

PART 2 - PRODUCTS

2.01 MANUFACTURERS/ MATERIALS

A. The following candidate manufacturers are capable of producing equipment and/or products that will satisfy the requirements of this Section. This statement, however, shall not be construed as an endorsement of a particular manufacturer's product, nor shall it be construed that a named manufacturer's standard product will comply with the requirements of this Section. Candidate manufacturers include, listed below.

1. ACCEPTABLE MANUFACTURERS:
Xypex Chemical Corporation
13731 Mayfield Place
Richmond, B.C., Canada
V6V 2G9
Tel: 800-961-4477 or 604-273-5265
Fax: 604-270-0451

2. Approved equals will be considered in accordance with provisions set forth in

section 1600 of the project specifications.

3. Obtain all waterproofing products from a single source.

2.02 PRODUCTS:

A. Waterproofing Admixture: Xypex Admix C-500, C-1000 or C-2000; compound of Portland cement, fine treated silica sand and active chemicals; provide product and mix ratio of at least 2% Xypex with up to 15% fly ash that produce concrete that complies with specified requirements in Section 03300 and the following:

1. Chemically Resistant for pH Levels of 3 to 11 constant contact and pH Levels of 2 to 12 periodic contact per ASTM C267-77, ASTM C672-76.

2. Potable Water Approved per National Safety Foundation (ANSI/NSF) 61.

3. Freeze-Thaw and De-icing Chemical Resistance per ASTM C672-76.

4. Radiation Resistance per USANI N69-1967

5. Crack Sealing ability for re-sealing cracks up to .04 mm (1/64¨) per ASTM C856-88.

6. Withstand 175 PSI water pressure penetration test per U.S. Army Corps of Engineers CRD-C-48-73.

7. Concrete Admixture shall not decrease the compressive strength of the concrete mix design (28 day compressive strength test), ASTM C 39/C 39M.

2.03 MIXES

A. GENERAL: Mix waterproofing material by volume with clean water which is free from salt and deleterious materials. Mix waterproofing material in quantities that can be applied within 20 to 30 minutes from time of mixing. As mixture thickens, stir frequently, but do not add additional water. Do not mix bonding agents or admixtures with crystalline waterproofing materials.

PART 3 - EXECUTION

3.01 CONCRETE MIXING AND PLACING

A. Comply with requirements of Section 03300.

B. Add waterproofing admixture at time of batching and blend thoroughly, following manufacturer's instructions.

C. Hot weather comply with ACI 305R; Cold weather comply with ACI 306R.

D. Moist cure concrete in accordance with ACI 308; if moist curing is not possible, use Xypex Gamma Cure curing compound complying with ASTM C 309.

E. Consult Manufacturer for mixing instructions, set times and retardation applications.

3.02 CONSTRUCTION JOINTS

A. Comply with manufacturer's instructions, including product data, technical bulletins, catalog installation instructions, and product packaging labels.

B. Verify substrate conditions, which have been previously installed under other sections, are acceptable for product installation in accordance with manufacturer's instructions,

C. Mix materials in accordance with manufacturer's instructions.

D. Wet cold joint surface and saturate with clean water to enhance the crystalline formation process within concrete; remove excess surface water before application of slurry coat.

E. Apply slurry coat if needed uniformly with semi-stiff bristle brush or spray under conditions and application rate recommended by manufacturer.

F. Place subsequent pour while slurry coat is still green, but after reaching initial set.

3.03 FIELD QUALITY CONTROL

A. Do not cover admixture treated concrete with other construction until it has been observed by Manufacturer's field representative and Architect/Engineer.

B. After removal of forms, repair honeycombing, rock pockets, tie holes, faulty construction joints, cold joints, and cracks using waterproofing admixture Manufacturer's products and recommended procedures.

C. MANUFACTURER'S FIELD SERVICES: Provide Manufacturer's field service consisting of product use recommendations and periodic site visits for inspection of concrete batching and product installation in accordance with Manufacturer's and Engineer's instructions.

D. FLOOD TESTING:

1. Plug or dam drains and fill area with water to a depth of two inches (50 mm) or to within 0.5 inch (12.5 mm) of top of waterproofing treatment.
2. Let water stand for 24 hours.
3. If leaks are discovered, make repairs and repeat test until no leaks are observed.

3.04 CLEANING AND PROTECTION

A. Protect installed concrete from damage during construction.

B. Do not apply paint or other coatings for at least 21 days; before applying coatings neutralize waterproofed surface as recommended by waterproofing manufacturer.

C. CLEANING: Clean spillage and soiling from adjacent surfaces using appropriate cleaning agents and procedures.

D. PROTECTION: Take measures to protect completed treated concrete from damage after application.

END OF SECTION 03052

SECTION 03053 – CONCRETE WATERPROOFING ADMIXTURE

PART 1 - GENERAL

1.1 DESCRIPTION

A. SECTION INCLUDES:

1. This section specifies an integral concrete waterproofing system of the slab on grade, wall curbs, and stem walls of the facility. This system utilizes a concrete densifier and sealer in an admixture Floor Treatment: A combination of chemicals that produces complete hydration resulting in a denser cement paste that produces an impermeable concrete that is hard non-dusting and safe for portable water.

2. This section includes: Furnishing of all labor, materials, services and equipment necessary for the supply and installation of waterproofing placement as indicated on drawings and as specified. Related Work: Documents affecting work of this Section include, but are not necessarily limited to: General Conditions, Supplementary Conditions, and Sections in Division 1 of these specifications.

3. This section includes: provision of concrete curing, hardening, and sealing and cleaning of concrete surface.

B. RELATED SECTIONS:

1. Section 03300 – Cast In Place Concrete
2. Section 03054 – Oliphobic Sealer
2. Section 07901 - Caulking and Sealants

C. Contractor may use Specification section 03052 in place of this Specification. Either section has been provided for the Contractors choice/preference.

1.2 QUALITY ASSURANCE:

A. Use adequate numbers of skilled workmen who are thoroughly trained and experienced in the necessary crafts, and who are completely familiar with the specified requirements and the methods needed for proper performance of the work of this section.

B. No satisfactory chemical or cleaning procedure is available to remove petroleum stains from the concrete surface. Prevention is therefore essential.

1. All hydraulic powered equipment must be diapered to avoid staining of the concrete.

2. No trade will park vehicles on the inside slab. If necessary to complete their scope of work, drop cloths will be placed under vehicles at all times.

3. No pipe cutting machine will be used on the inside floor slab.

4. Steel will not be placed on interior slab to avoid rust staining.

1.3 SUBMITTALS

A. Comply with pertinent provisions of Section 01300.

B. Product data: Within 35 calendar days after the contractor has received the owner's notice to proceed, submit the following material:

1. Materials list of items proposed to be provided under this section.

2. Manufacturer's specifications, test data and other data required to prove compliance with the specified requirements.

3. Manufacturer's recommended installation procedures which, when approved by the Architect, will become the basis for accepting or rejecting actual installation procedures used on the work.

1.4 PRODUCT HANDLING:

A. Protect the materials of this Section before and after installation. Protect the work and materials of all other trades.

B. In the event of damage, immediately make replacements and repairs to the approval of the Architect and at no additional cost to the owners.

C. Store materials in clean, dry area in accordance with manufacturer's instructions. Keep containers sealed until ready for use. Keep from freezing.

D. Safety – Use approved safety glasses, rubber gloves, coveralls and work boots. Protect animals, vegetation and food items. Refer to the Material Safety Data Sheet (MSDS) for details.

PART 2- PRODUCTS

2.1 CURING/HARDENING/SEALING AGENT:

A. Where concrete cure, hardener and sealer is called for on the Drawing or is specified herein, provide one of the products as follows:

1. "Anti-Hydro" or "Anti-Hydro R" Waterproof Concrete
Anti-Hydro International
45 River Road
Flemington, NJ
800-777-1773

Salt Lake City:
Bruce Hutchinson
(801) 518-3770

2. Or, pre-approved equal.

B. Chemical Resistance: The manufacturer shall provide a chemical resistance guide listing test results by independent laboratories.

PART 3 - EXECUTION

3.1 SURFACE CONDITIONS:

A. Examine the areas and conditions under which work of this section will be performed. Correct conditions detrimental to timely and proper completion of the work. Do not proceed until unsatisfactory conditions are corrected.

3.2 MIXING:

A. The mix shall consist of Type I/II portland cement, clean, well grated, fine and coarse aggregates designed for maximum strength and denseness with a minimum of 3,000 psi compressive strength. Each cubic yard shall contain a minimum of 5.6 bags of Type I/II portland cement and 1-1/2 gallons of Concrete Waterproofing Admixture. The Concrete Waterproofing Admixture shall be added with the mixing water or the concrete while partially mixed and mixed for a minimum 1 minute per cubic yard.

3.3 INSTALLATION:

A. Placing Concrete: All concrete shall be properly vibrated or consolidated and wood spreaders must be removed as the concrete rises in the forms. Whenever possible, concrete shall be placed continuously until the placement is completed. Construction joints shall be keyed with a 2”x4” key. When placing is about to be resumed, the joint shall be thoroughly cleaned and treated with a slush coat composed of 1 part Concrete Waterproof Admixture, 3 parts water and sufficient Type I/II portland cement to form a thick, creamy mixture. Concrete shall be placed before the slush coat dries. Refer to A.C.I. 201 “Guide to Durable Concrete” for recommended concreting practices.

B. Wall Finishing: After the forms are removed, all ties or spreaders shall be cut back on both walls faces to a depth of approximately 1-1/2”. Any cracks or honey combed concrete shall be cut back to sound concrete. These areas shall be treated with Concrete Waterproofing Admixture slush coat, then filled with a mortar consisting of 1 part Type I/II portland cement and 2 parts sand, mixed with a solution of 1 part Concrete Waterproofing Admixture to 10 parts water.

C. No concrete shall be placed on wet or soggy ground without first laying and compacting a bed of broken stone or gravel of adequate thickness to prevent the mud from mixing with the concrete. A pump of sufficient capacity to keep water below the placement and for a least 24 hours thereafter. The excavated area must be so prepared that the water will easily drain to the pump without washing cement out of the newly placed concrete.

D. If saw cutting is required, as soon as it is completed, the curing compound applied, and the area is clean and dry, apply masking tape over all saw cuts to keep dirt and debris out. Wait 28 days for sufficient vapor reduction and fill all saw cuts with approved crack filler.

E. For greater slump than 4”, add Concrete Waterproofing Admixture or approved equal in lieu of additional water.

F. Water Pressure: In dealing with any structure subject to hydrostatic pressure, careful consideration must be given to the design of the members. Thickness and reinforcing must be capable of withstanding maximum potential heads. Possibly flotation should be checked.

G. Placing and Curing Under Adverse Conditions: If concrete slabs are to be placed at temperatures over 80 degrees F, in the direct rays of the sun, or exposed to drying winds, care should be taken to prevent water loss and premature setting of the concrete. “Anti-Hydro R” should be used to maintain a normal concrete set time. Additionally, dampen sub-base, erect wind barriers, finish concrete promptly, and start curing immediately by

the use of curing compound, water curing, or sheet materials. Continue curing for a minimum of 14 days.

4.1 WARRANTY:

Upon Completion of the work, as a condition of its acceptance, furnish the owner a written 5 year warranty signed by an officer of the manufacturer.

END OF SECTION

SECTION 03054 ¥ OLIOPHOBIC SEALER

PART 1 - GENERAL

1.1 DESCRIPTION

A. SECTION INCLUDES:

1. This section specifies a topical concrete waterproofing system of the slab on grade, wall curbs, equipment pads of the Maintenance Building and the interior su rfaces of the waste oil containment basin. This system utilizes a clear, breathable, high performance silane concrete sealer with an oliophobic additive for protecting new concrete surfaces. This low VOC compliant treatment forms an effective chloride scr een that reduces surface erosion and corrosion of rebar and seals out water, chloride ions, and acids thereby reducing staining caused by motor oils and grease.

2. This section includes: Furnishing of all labor, materials, services and equipment necessary for the supply and installation of waterproofing placement as indicated on drawings and as specified. Related Work: Documents affecting work of this Section include, but are not necessarily limited to: General Conditions, Supplementary Conditions, and Sections in Division 1 of these specifications.

3. This section includes: provision of concrete curing, hardening, and sealing and cleaning of concrete surface.

B. RELATED SECTIONS:

1. Section 03300 ¥ Cast In Place Concrete
2. Section 03053 ¥ Concrete Waterproofing Admixture
3. Section 07901 - Caulking and Sealants

1.2 QUALITY ASSURANCE:

A. Use adequate numbers of skilled workmen who are thoroughly trained and experienced in the necessary crafts, and who are completely familiar w ith the specified requirements and the methods needed for proper performance of the work of this section.

B. No satisfactory chemical or cleaning procedure is available to remove petroleum stains from the concrete surface. Prevention is therefore essentia l.

1. All hydraulic powered equipment must be diapered to avoid staining of the concrete.

2. No trade will park vehicles on the inside slab. If necessary to complete their scope of work, drop cloths will be placed under vehicles at all ti mes.

3. No pipe cutting machine will be used on the inside floor slab.

4. Steel will not be placed on interior slab to avoid rust staining.

1.3 SUBMITTALS

A. Comply with pertinent provisions of Section 01300.

B. Product data: Within 35 calendar days after the contractor has received the owner's notice to proceed, submit the following material:

1. Materials list of items proposed to be provided under this section.

2. Manufacturer's specifications, test data and other data required to prove compliance with the specified requirements.

3. Manufacturer's recommended installation procedures which, when approved by the Architect, will become the basis for accepting or rejecting actual installation procedures used on the work.

1.4 PRODUCT HANDLING:

A. Protect the materials of this Section before and after installation. Protect the work and materials of all other trades.

B. In the event of damage, immediately make replacements and repairs to the approval of the Architect and at no additional cost to the owners.

C. Store materials in clean, dry area in accordance with manufacturer's instructions. Keep containers sealed until ready for use. Keep from freezing.

PART 2- PRODUCTS

2.1 HARDENING/SEALING AGENT:

A. Where concrete hardener and sealer is called for on the Drawing or is specified herein, provide one of the products as follows:

1. Hydrozo 100 Plus
Degussa Building Systems
889 Valley Park Drive
Shakopee, MN 55379
(800) 433-9517

2. Stand Off SLX 100
Prosoco, Inc.
3741 Greenway Circle,
Lawrence, KS 66046
(800) 255-4255
FX (785) 830-9797

B. Or, pre-approved equal.

C. Chemical Resistance: The manufacturer shall provide a chemical resistance guide listing test results by independent laboratories.

PART 3 - EXECUTION

3.1 SURFACE CONDITIONS:

A. Examine the areas and conditions under which work of this section will be performed. Correct conditions detrimental to timely and proper completion of the work. Do not proceed until unsatisfactory conditions are corrected.

3.2 PREPARATION:

A. Prepare the surface in strict accordance with the manufacturers recommendations as approved by the architect.

B. Cure concrete in accordance with manufacturer‰ instructions and as specified in Section 03300.

3.3 APPLICATION:

A. Test a small area of the surface at least 4‰ by 4‰ square on a representative area of concrete slab and stem wall. Allow 5 ¥ 7 days for the product to fully react before evaluating for the desired results and coverage rates. Keep test area available for evaluation throughout the sealing project.

B. Application should be made once the concrete has achieved 3000 psi strength.

C. Clean all surfaces of all sand, surface dust, and dirt, oil, grease, chemical films or coatings, and other contaminants prior to application. Use waterblast, sandblast, or shotblast as necessary to achieve a clean surface condition.

D. Crack control, caulking, patching, and expansion joint sealants should be installed prior to application of the sealer. Paint any line stripping prior to the application of product. Allow adequate curing time following sealant manufacturer‰ recommendations.

E. Application shall be made according to manufacturer‰ recommendations. Apply in a single, saturating application. Brush and/or broom drips and heavy runs thoroughly into the surface. All concrete surfaces shall be kept wet as required for complete coverage and penetration of product.

F. Achieve waterproofing without changing the natural appearance of the material, except for a latent waxy sheen on smooth troweled surfaces.

G. Do not dilute sealer.

H. Do not apply sealer if air temperature is expected to be above 90 degrees F or below 40 degrees F at the time of or within 24 hours after application or when rain is expected within 4 hours of application. Avoid application on hot, windy days.

I. Apply at least two applications of sealer. Apply the second coat within a few minutes after the first coat has penetrated and appears dry. Determine if additional applications of concrete sealer are necessary by testing surfaces in accordance with manufacturer‰ instructions.

J. Protect surfaces from traffic until sealer has cured.

4.1 WARRANTY:

Upon Completion of the work, as a condition of its acceptance, furnish the owner a written warranty signed by an officer of the manufacturer.

END OF SECTION

SECTION 03055 – SALT AND WATER BARRIER FOR EXTERIOR CONCRETE

PART 1 GENERAL

1.1 SECTION INCLUDES

A. Furnishing of all labor, materials, services and equipment necessary for the supply and application of Salt and Water barrier applied to exterior concrete slabs. Documents affecting work of this section include, but are not limited to General Conditions, Supplementary conditions and Sections of Divion 1 of these specifications.

1.2 QUALITY ASSURANCE

A. Use adequate numbers of skilled workmen who are thoroughly trained and experienced in the necessary crafts, and who are completely familiar with the specified requirements and the methods needed for proper performance of the work in this section.

1.3 SUBMITTALS

A. Comply with pertinent provisions of Section 01300.
B. Product data: Within 35 calendar days after the contractor has received the owner's notice to proceed, submit the following material:

1. Materials list of items proposed to be provided under this section.
2. Manufacturer's specifications, test data and other data required to prove compliance with the specified requirements.
3. Manufacturer's recommended installation procedures which, when approved by the Architect, will become the basis for accepting or rejecting actual installation procedures used on the work.

1.4 PRODUCT HANDLING:

A. Protect the materials of this Section before and after installation. Protect the work and materials of all other trades.
B. In the event of damage, immediately make replacements and repairs to the approval of the Architect and at no additional cost to the owners.
C. Store materials in clean, dry area in accordance with manufacturer's instructions. Keep containers sealed until ready for use. Keep from freezing.
D. Safety – Use approved safety glasses, rubber gloves, coveralls and work boots. Protect animals, vegetation and food items. Refer to the Material Safety Data Sheet (MSDS) for details.

PART 2 PRODUCTS

2.1 MANUFACTURER

A.

1. Basis of Design:. Consolideck SatlGuard manufactured by PROSOCO, Inc., 3741 Greenway Circle, Lawrence, KS 66046. Phone: (800) 255-4255; Fax: (785) 830-9797. E-Mail: Customercare@prosoco.com.

2. Or pre-approved equal

B. Product Description: A general-purpose silane / siloxane water repellent and chloride screen for concrete and masonry which protects horizontal and vertical surfaces from moisture

intrusion and chemical attack of chloride salts, reducing rebar corrosion and surface spalling.

C. Technical Data: Provide a product which has the same technical data as follows:

1. FORM: Clear liquid
2. SPECIFIC GRAVITY: 0.794
3. ACTIVE CONTENT: 11%
4. WT./GAL.: 6.61 lbs.
5. FLASH POINT: 127 degrees F (53 degrees C) ASTM D 3278
6. FREEZE POINT: N/D
7. VOC CONTENT: Manufactured and marketed in compliance with USEPA AIM VOC regulations (40 CFR 59.403). Not suitable for sale in states and districts with more restrictive AIM VOC regulations.

PART 3 - EXECUTION

3.1 EXAMINATION

A. Examine substrates, areas, and conditions under which waterproofing will be applied, with Installer present, for compliance with requirements. Do not proceed with installation until unsatisfactory conditions have been corrected.

1. Do not proceed with installation until after the minimum concrete curing period recommended by waterproofing manufacturer.
2. Verify substrate is visibly dry and free of moisture. Test for capillary moisture by the plastic sheet method according to ASTM D 4263.
3. Notify Architect in writing of anticipated problems using waterproofing over substrate.

3.2 PREPARATION

A. Clean and prepare substrate according to manufacturer's recommendations. Provide clean, dust-free, and dry substrate for product application.

B. Mask off adjoining surfaces not receiving product application to prevent spillage affecting other construction.

C. Close off deck drains and other deck penetrations to prevent spillage and migration of fluids.

D. Remove grease, oil, form release agents, paints, and other penetrating contaminants from concrete. Remove fins, ridges, and other projections and fill honeycomb, aggregate pockets, and other voids.

3.3 APPLICATION

A. Before applying, read “Preparation” and “Safety Information” sections in the Manufacturer’s Product Data Sheet for the product. Refer to the Product Data Sheet for additional information about application of the product. Do not dilute or alter.

B. Horizontal Application: Apply protective treatment in a single saturating application. Use enough to keep the surface wet for a few minutes before penetrating. Broom out all puddles thoroughly until they penetrate the surface.

C. Comply with all manufacturer's requirements and application instructions.

END OF SECTION

SECTION 03300 - CAST-IN-PLACE CONCRETE

PART 1 - GENERAL

1.1 RELATED DOCUMENTS

A. Drawings and general provisions of the Contract, including General and Supplementary Conditions and Division 1 Specification Sections, apply to this Section.

B. Related Work Specified Elsewhere:
1. 03053 Concrete Waterproofing Admixture.
2. 03054 Oliophobic Topical Concrete Sealer

1.2 SUMMARY

A. This Section specifies cast-in place concrete, including formwork, reinforcing, mix design, placement procedures, and finishes.

B. Cast-in-place concrete includes but is not limited to the following:

1. Foundations and footings.
2. Slabs-on-grade.
3. Stem walls.
4. Equipment pads and bases.
5. Suspended slabs.

1.3 SUBMITTALS

A. General: Submit the following according to Conditions of the Contract and Division 1 Specification Sections.

B. Product data for proprietary materials and items, including reinforcement and forming accessories, admixtures, patching compounds, joint systems, curing compounds, and others if requested by Architect.

1. Letter from concrete supplier, certifying type of cement to be used in concrete mix.

C. Shop drawings for reinforcement detailing fabricating, bending, and placing concrete reinforcement. Comply with ACI 315 "Manual of Standard Practice for Detailing Reinforced Concrete Structures" showing bar schedules, stirrup spacing, bent bar diagrams, and arrangement of concrete reinforcement. Include special reinforcing required for openings through concrete structures.

D. Samples of materials as requested by Architect, including names, sources, and descriptions, as follows:

1. Waterstops

E. Laboratory test reports for concrete materials and mix design test.

F. Material certificates in lieu of material laboratory test reports when permitted by Architect. Material certificates shall be signed by manufacturer and Contractor, certifying that each material item complies with or exceeds specified requirements. Provide certification from admixture manufacturers that chloride content complies with specification requirements.

1.4 QUALITY ASSURANCE

A. Codes and Standards: Comply with provisions of the following codes, specifications, and standards, except where more stringent requirements are shown or specified:

1. International Building Code, Chapter 19.
2. American Concrete Institute (ACI) 301, "Specifications for Structural Concrete for Buildings."
3. ACI 318, "Building Code Requirements for Reinforced Concrete."
4. Concrete Reinforcing Steel Institute (CRSI) "Manual of Standard Practice."

B. Concrete Testing Service: Provide a qualified testing agency , acceptable to Architect, to provide pre-construction testing and material evaluation tests.

C. Materials and installed work may require testing and retesting at any time during progress of Work. Retesting of rejected materials for installed Work, shall be done at Contractor's expense.

D. Special Inspection: Owner will provide special inspection services for concrete work as required by Contract Documents.

1. General: Contractor to coordinate work with the special inspection requirements of this section, the latest edition in practice of the International Building Code, Chapter 17, and specific requirements of the Owner.

1.5 WARRANTY

A. Provide two year written guarantee to the End User, in form approved by the Architect to promptly remove and/or repair defective concrete (cracking, spalling, pitting or honeycombing) as directed by Architect and at Contractor's expense. New replacement work shall carry a similar new two year written guarantee. Guarantee shall start from Date of Substantial Completion.

PART 2 - PRODUCTS

2.1 FORM MATERIALS

A. Forms for Exposed Finish Concrete: Plywood, metal, metal-framed plywood faced, or other acceptable panel-type materials to provide continuous, straight, smooth, exposed surfaces. Furnish in largest practicable sizes to minimize number of joints and to conform to joint system shown on drawings.

1. Use overlaid plywood complying with U.S. Product Standard PS-1 "A-C or B-B High Density Overlaid Concrete Form," Class I.

B. Forms for Unexposed Finish Concrete: Plywood, lumber, metal, or another acceptable material. Provide lumber dressed on at least two edges and one side for tight fit.

C. Form Release Agent: Provide commercial formulation form release agent with a maximum of 350 mg/l volatile organic compounds (VOCs) that will not bond with, stain, or adversely affect concrete surfaces and will not impair subsequent treatments of concrete surfaces.

D. Form Ties: Factory-fabricated, adjustable-length, removable or snap-off metal form ties designed to prevent form deflection and to prevent spalling of concrete upon removal. Provide units that will leave no metal closer than 1-1/2 inches to the plane of the exposed concrete surface.

1. Provide ties that, when removed, will leave holes not larger than 1 inch in diameter in

the concrete surface.

E. Chamfer exterior corners and edges of permanently exposed concrete 3/4ˆ by 3/4ˆ.

2.2 REINFORCING MATERIALS

A. Reinforcing Bars: ASTM A 615, Grade 60, deformed.

B. Epoxy-Coated Reinforcing Bars: ASTM A 615, Grade 60, deformed bars, epoxy coated, with less than 2 percent damaged coating in each 12-inch bar length.

C. Supports for Reinforcement: Bolsters, chairs, spacers, and other devices for spacing, supporting, and fastening reinforcing bars and welded wire fabric in place. Use wire bar -type supports complying with CRSI specifications.

1. For slabs-on-grade, use supports with sand plates or horizontal runners where base material will not support chair legs.
2. For epoxy-coated reinforcement, use epoxy-coated or other dielectric-polymer-coated wire bar supports.

2.3 CONCRETE MATERIALS

A. Portland Cement: ASTM C 150, Type I/II.

1. Use one brand of cement throughout Project unless otherw ise acceptable to Architect.

B. Fly Ash: Conform to ASTM C 618 Class C or F

C. Normal-Weight Aggregates: ASTM C 33 and as specified. Provide aggregates from a single source for exposed concrete.

1. For exposed exterior surfaces, do not use fine or coarse aggregates that contain substances that cause spalling.

D. Water: Potable.

E. Admixtures, General: Provide concrete a dmixtures that contain not more than 0.1 percent chloride ions.

F. Air-Entraining Admixture: ASTM C 260, certified by manufacturer to be compatible with other required admixtures.

1. Available Products: Subject to compliance with requirements, products that may be incorporated in the Work include, but are not limited to, the following:
   a. Air-Mix or Perma-Air, Euclid Chemical Co.
   b. Darex AEA or Daravair, W.R. Grace & Co.
   c. MB-VR or Micro-Air, Master Builders, Inc.
   d. Sika AER, Sika Corp.

G. Water-Reducing Admixture: ASTM C 494, Type A.

H. Water-Reducing, Accelerating Admixture: ASTM C 494, Type E.

I. Water-Reducing, Retarding Admixture: ASTM C 494, Type D.

2.4 RELATED MATERIALS

A. Sand Cushion: Clean, manufactured or natural sand.

B. Bonding Agent: Polyvinyl acetate or acrylic base.

1. Available Products: Subject to compliance with requirements, products that may be incorporated in the Work include, but are not limited to, the following:
   a. Polyvinyl Acetate (Interior Only):
      1) Euco Weld, Euclid Chemical Co.
      2) Everweld, L&M Construction Chemicals, Inc.
      3) Ready Bond, Symons Corp.

   b. Acrylic or Styrene Butadiene:
      1) SBR Latex, Euclid Chemical Co.
      2) Daraweld C, W.R. Grace & Co.
      3) Everbond, L&M Construction Chemicals, Inc.
      4) Acryl-Set, Master Builders Inc.

C. Epoxy Adhesive: ASTM C 881, two-component material suitable for use on dry or damp surfaces. Provide material type, grade, and class to suit Project requirements.
1. Available Products: Subject to compliance with requirements, products that may be incorporated in the Work include, but are not limited to, the following:
   a. Euco Epoxy System #452 or #620, Euclid Chemical Co.
   b. Concresive Standard Liquid, Master Builders, Inc.
   c. Sikadur 32 Hi-Mod, Sika Corp.

D. Dress Coat: Second coat of water-based acrylic membrane curing compound, same product used for curing; see para. C. above.

2.5 PROPORTIONING AND DESIGNING MIXES

A. Prepare design mixes for each type and strength of concrete by laboratory trial batch. For the trial batch method, use an independent testing agency acceptable to Architect for preparing and reporting proposed mix designs.

1. Do not use the same testing agency for field quality control testing.

B. Submit written reports to Architect of each proposed mix for each class of concrete at least 15 days prior to start of Work. Do not begin concrete production until proposed mix designs have been reviewed by Architect. Allow 14 days for review response.

C. Design mixes to provide normal weight concrete with the following properties as indicated on drawings and schedules:

1. Footings, 3,000-psi, 28-day compressive strength (minimum 5 bag mix); water-cement ratio: 0.53 maximum.
2. Foundations, 3,000-psi, 28-day compressive strength (minimum 5.6 bag mix); water-cement ratio: 0.53 maximum.
3. Slabs-on-grade and all other concrete: 4,000-psi, 28-day compressive strength (minimum 6 bag mix); water-cement ratio: 0.45 maximum.
4. Fly Ash Conform to ASTM C 618 Class C or F
5. For air-entrainment requirements see paragraph 2.6.C.

D. Slump Limits: Proportion and design mixes to result in concrete slump at point of placement

as described below. Modification of slump limi ts shall not be made without prior approval from the Engineer.

1. Slabs: Not more than 4 inches.
2. Reinforced foundation systems: Not less than 2 inch and not more than 4 inches.

E. Adjustment to Concrete Mixes: Mix design adjustments may be requested by Contractor when characteristics of materials, job conditions, weather, test results, or other circumstances warrant, as accepted by Architect. Laboratory test data for revised mix design and strength results must be submitted and accepted by Architect before using in Work.

2.6 ADMIXTURES

A. Use water-reducing admixture in concrete, as required, for pla cement and workability.

B. Use accelerating admixture in concrete slabs placed at ambient temperatures below 50 deg F (10 deg C).

C. Use air-entraining admixture in exterior exposed concrete including foundation stem walls, unless otherwise indicated. Add air-entraining admixture at manufacturer's prescribed rate to result in concrete at point of placement having total air content of 6 -1/2 percent plus or minus 1-1/2 percent.

D. Use admixtures for water reduction and set accelerating or retarding in strict compliance with manufacturer's directions.

2.7 CONCRETE MIXING

A. Ready-Mixed Concrete: Comply with requirements of ASTM C 94, and as specified.

1. When air temperature is between 85 deg F (30 deg C) and 90 deg F (32 deg C), reduce mixing and delivery time from 1-1/2 hours to 75 minutes, and when air temperature is above 90 deg F (32 deg C), reduce mixing and delivery time to 60 minutes.

PART 3 - EXECUTION

3.1 GENERAL

A. Coordinate the installation of joint materials, vapor barrier, and other related materials with placement of forms and reinforcing steel.

3.2 FORMS

A. General: Design, erect, support, brace, and maintain formwork to support vertical, lateral, static, and dynamic loads that might be applied until concrete structure can support such loads. Construct formwork so concrete members and structures are of correct size, shape, alignment, elevation, and position. Maintain formwork constructio n tolerances and surface irregularities complying with the following ACI 347 limits:

1. Provide Class A tolerances for concrete surfaces exposed to view.
2. Provide Class C tolerances for other concrete surfac es.

B. Construct forms to sizes, shapes, lines, and dimensions shown and to obtain accurate alignment, location, grades, level, and plumb work in finished structures. Provide for openings, offsets, sinkages, keyways, recesses, moldings, rustications, reglets, chamfers, blocking, screeds, bulkheads, anchorages and inserts, and other features required in the

Work. Use selected materials to obtain required finishes. Solidly butt joints and provide backup at joints to prevent cement paste from leaking.

C. Fabricate forms for easy removal without hammering or prying against concrete surfaces. Provide crush plates or wrecking plates where stripping may damage cast concrete surfaces. Provide top forms for inclined surfaces where slope is too steep to place concrete with bottom forms only. Kerf wood inserts for forming keyways, reglets, recesses, and the like for easy removal.

D. Provide temporary openings for clean-outs and inspections where interior area of formwork is inaccessible before and during concrete placement. Securely brace temporary openings and set tightly to forms to prevent losing concrete mortar. Locate temporary openings in forms at inconspicuous locations.

E. Chamfer all exposed corners and edges unless noted otherwise, using wood, metal, PVC, or rubber chamfer strips fabricated to produce uniform smooth lines and tight edge joints.

F. Provisions for Other Trades: Provide openings in concrete formwork to accommodate work of other trades. Determine size and location of openings, recesses, and chases from trades providing such items. Accurately place and securely support items built into forms.

G. Cleaning and Tightening: Thoroughly clean forms and adjacent surfaces to receive concrete. Remove chips, wood, sawdust, dirt, or other debris just before placing concrete. Retighten forms and bracing before placing concrete, as required, to prevent mortar leaks and maintain proper alignment.

3.3 PLACING REINFORCEMENT

A. General: Comply with Concrete Reinforcing Steel Institute's recommended practice for "Placing Reinforcing Bars," for details and methods of reinforcement placement and supports and as specified.

B. Clean reinforcement of loose rust and mill scale, earth, ice, and other materials that reduce or destroy bond with concrete.

C. Accurately position, support, and secure reinforcement against displacement. Locate and support reinforcing by metal chairs, runners, bolsters, spacers, and hangers, as approved by Architect.

D. Place reinforcement to maintain minimum coverages as indicated for concrete protection. Arrange, space, and securely tie bars and bar supports to hold reinforcement in position during concrete placement operations. Set wire ties so ends are directed into concrete, not toward exposed concrete surfaces.

3.4 JOINTS

A. Construction Joints: Locate and install construction joints so they do not impair strength or appearance of the structure, as acceptable to Architect.

B. Isolation Joints in Slabs-on-Grade: Construct isolation joints in slabs-on-grade at points of contact between slabs-on-grade and vertical surfaces, such as column pedestals, foundation walls, grade beams, and other locations, as indicated.

1. Joint fillers and sealants are specified in Division 7 Section "Joint Sealants."

C. Shrinkage (Control) Joints in Slabs-on-Grade: Construct contraction joints in slabs-on-grade

to form panels of patterns as shown on drawings. Depth and width of saw cut per details on drawings.

1. Contraction joints in unexposed floor slabs may be formed by saw cuts as soon as possible after slab finishing as may be safely done without dislodging aggregate.
2. If joint pattern is not shown, provide joints not exceeding 15 feet in either direction and located to conform to bay spacing wherever possible (at column centerlines, half bays, third bays).
3. Joint fillers and sealants are specified in Division 7 Section "Joint Sealants."

3.5 INSTALLING EMBEDDED ITEMS

A. General: Set and build into formwork anchorage devices and other embedded items required for other work that is attached to or supported by cast-in-place concrete. Use setting drawings, diagrams, instructions, and directions provided by suppliers of items to be attached.

B. Forms for Slabs: Set edge forms, bulkheads, and intermediate screed strips for slabs to achieve required elevations and contours in finished surfaces. Provide and secure units to support screed strips using strike-off templates or compacting-type screeds.

3.6 PREPARING FORM SURFACES

A. General: Coat contact surfaces of forms with an approved, non-residual, low-VOC, form-coating compound before placing reinforcement.

B. Do not allow excess form-coating material to accumulate in forms or come into contact with in-place concrete surfaces against which fresh concrete will be placed. Apply according to manufacturer's instructions.

1. Coat steel forms with a non-staining, rust-preventative material. Rust-stained steel formwork is not acceptable.

3.7 CONCRETE PLACEMENT

A. Inspection: Before placing concrete, inspect and complete formwork installation, reinforcing steel, and items to be embedded or cast in. Notify other trades to permit installation of their work.

B. General: Comply with ACI 304, "Guide for Measuring, Mixing, Transporting, and Placing Concrete," and as specified.

C. Deposit concrete continuously or in layers of such thickness that no new concrete will be placed on concrete that has hardened sufficiently to cause seams or planes of weakness. If a section cannot be placed continuously, provide construction joints as specified. Deposit concrete to avoid segregation at its final location.

D. Placing Concrete in Forms: Deposit concrete in forms in horizontal layers no deeper than 24 inches and in a manner to avoid inclined construction joints. Where placement consists of several layers, place each layer while preceding layer is still plastic to avoid cold joints.

1. Consolidate placed concrete by mechanical vibrating equipment supplemented by hand-spading, rodding, or tamping. Use equipment and procedures for consolidation of concrete complying with ACI 309.
2. Do not use vibrators to transport concrete inside forms. Insert and withdraw vibrators vertically at uniformly spaced locations no farther than the visible effectiveness of the machine. Place vibrators to rapidly penetrate placed layer and

at least 6 inches into preceding layer. Do not insert vibrators into lower layers of concrete that have begun to set. At each insertion, limit duration of vibration to time necessary to consolidate concrete and complete embedment of reinforcement and other embedded items without causing mix to segregate.

E. Placing Concrete Slabs: Deposit and consolidate concrete slabs in a continuous operation, within limits of construction joints, until completing placement of a panel or section.

1. Consolidate concrete during placement operations so that concrete is thoroughly worked around reinforcement, other embedded items and into corners.
2. Bring slab surfaces to correct level with a straightedge and strike off. Use bull floats or darbies to smooth surface free of humps or hollows. Do not disturb slab surfaces prior to beginning finishing operations.
3. Maintain reinforcing in proper position on chairs during concrete placement.

F. Cold-Weather Placement: Comply with provisions of ACI 306 and as follows. Protect concrete work from physical damage or reduced strength that could be caused by frost, freezing actions, or low temperatures.

G. When air temperature has fallen to or is expected to fall below 40 deg F (4 deg C), uniformly heat water and aggregates before mixing to obtain a concrete mixture temperature of not less than 50 deg F (10 deg C) and not more than 80 deg F (27 deg C) at point of placement.

1. Do not use frozen materials or materials containing ice or snow. Do not place concrete on frozen subgrade or on subgrade containing frozen materials.
2. Do not use calcium chloride, salt, or other materials containing antifreeze agents or chemical accelerators unless otherwise accepted in mix designs.

H. Hot-Weather Placement: When hot weather conditions exist that would impair quality and strength of concrete, place concrete complying with ACI 305 and as specified. Concrete should not be placed when temperature is above 95 □F unless approved by the Architect.

1. Cool ingredients before mixing to maintain concrete temperature at time of placement to below 90 deg F (32 deg C). Mixing water may be chilled or chopped ice may be used to control temperature, provided water equivalent of ice is calculated to total amount of mixing water. Using liquid nitrogen to cool concrete is Contractor's option.
2. Cover reinforcing steel with water-soaked burlap if it becomes too hot, so that steel temperature will not exceed the ambient air temperature immediately before embedding in concrete.
3. Fog spray forms, reinforcing steel, and subgrade just before placing concrete. Keep subgrade moisture uniform without puddles or dry areas.
4. Use water-reducing retarding admixture when required by high temperatures, low humidity, or other adverse placing conditions, as acceptable to Architect.

I. Notify Architect/Engineer minimum 24 hours prior to commencement of operations.

3.8 FINISHING FORMED SURFACES

A. Rough-Formed Finish: Provide a rough-formed finish on formed concrete surfaces not exposed to view in the finished Work or concealed by other construction. This is the concrete surface having texture imparted by form-facing material used, with tie holes and defective areas repaired and patched, and fins and other projections exceeding 1/4 inch in height rubbed down or chipped off.

B. Smooth-Formed Finish: Provide a smooth-formed architectural finish on formed concrete surfaces exposed to view or to be covered with a coating material applied directly to

concrete, or a covering material applied directly to concrete, such as waterproofing, dampproofing, veneer plaster, painting, or another similar system. This is an as-cast concrete surface obtained with selected form-facing material, arranged in an orderly and symmetrical manner with a minimum of seams. Repair and patch defective areas per Section 3.15 with fins and other projections completely removed and smoothed and voids repaired when forms are removed. Refer to drawings for tie pattern and placement.

C. Related Unformed Surfaces: At tops of walls, horizontal offsets, and similar unformed surfaces adjacent to formed surfaces, strike-off smooth and finish with a texture matching adjacent formed surfaces. Continue final surface treatment of formed surfaces uniformly across adjacent unformed surfaces unless otherwise indicated.

3.9 MONOLITHIC SLAB FINISHES

A. Scratch Finish: Apply scratch finish to monolithic slab surfaces to receive concrete floor topping or mortar setting beds for tile, and other bonded applied cementitious finish flooring material, and where indicated.

1. After placing slabs, finish surface to tolerances of F(F) 15 (floor flatness) and F(L) 13 (floor levelness) measured according to ASTM E 1155. Slope surfaces uniformly to drains where required. After leveling, roughen surface before final set with stiff brushes, brooms, or rakes.

2. Do not apply curing compounds to surfaces which receive tile finishes or in any way interfere with concrete performance.

B. Trowel Finish: Apply a trowel finish to monolithic slab surfaces exposed to view and slab surfaces to be covered with resilient flooring, carpet, ceramic or quarry tile, paint, or another thin film-finish coating system.

1. After floating, begin first trowel-finish operation using a power-driven trowel. Begin final troweling when surface produces a ringing sound as trowel is moved over surface. Consolidate concrete surface by final hand-troweling operation, free of trowel marks, uniform in texture and appearance, and finish surfaces to tolerances of F(F) 20 (floor flatness) and F(L) 17 (floor levelness) measured according to ASTM E 1155. Grind smooth any surface defects that would telegraph through applied floor covering system.

C. Non-slip Broom Finish: Apply a non-slip broom finish to exterior concrete platforms, steps, and ramps, and elsewhere as indicated.

1. Immediately after float finishing, roughen concrete surface by brooming with fiber-bristle broom perpendicular to main traffic route. Coordinate required final finish with Architect before application.

3.10 MISCELLANEOUS CONCRETE ITEMS

A. Filling In: Fill in holes and openings left in concrete structures for passage of work by other trades, unless otherwise shown or directed, after work of other trades is in place. Mix, place, and cure concrete as specified to blend with in-place construction. Provide other miscellaneous concrete filling shown or required to complete Work.

3.11 CONCRETE CURING AND PROTECTION

A. General: Protect freshly placed concrete slabs from premature drying and excessive cold or hot temperatures. In hot, dry, and windy weather protect concrete from rapid moisture loss before and during finishing operations with an evaporation-control material. Apply according

to manufacturer's instructions after screeding and bull floating, but before power floating and troweling.

B. Start initial slab curing as soon as free water has disappeared from concrete surface after placing and finishing. Weather permitting, keep continuously moist for not less than 7 days.

C. Curing Methods: Wet cure all unformed concrete surfaces. Curing compound may be used only where its use will not adversely affect the application of hardners/sealers or finish floor covering, as approved by the Architect by submittal documenting compatibility prior to the application of the curing compound.

D. Provide moisture curing by the following methods:

1. Moisture-Retaining-Cover Curing: Cover concrete surfaces with moisture-retaining cover for curing concrete, placed in widest practicable width, with sides and ends lapped at least 12 inches (300 mm), and sealed by waterproof tape or adhesive. Cure for not less than seven days. Immediately repair any holes or tears during curing period using cover material and waterproof tape.

   a. Moisture cure or use moisture-retaining covers to cure concrete surfaces to receive floor coverings.
   b. Moisture cure or use moisture-retaining covers to cure concrete surfaces to receive penetrating liquid floor treatments.

2. Apply curing compound on exposed interior slabs and on exterior slabs, walks, and curbs as follows:

   a. Apply curing compound to concrete slabs as soon as final finishing operations are complete (within 2 hours and after surface water sheen has disappeared). Apply uniformly in continuous operation by power spray or roller according to manufacturer's directions. Recoat areas subjected to heavy rainfall within 3 hours after initial application. Maintain continuity of coating and repair damage during curing period.
   b. Use membrane curing compounds that will not affect surfaces to be covered with finish materials applied directly to concrete. Fugitive dye required in all curing compounds.

E. Curing Formed Surfaces: Cure formed concrete surfaces, including underside of beams, supported slabs, and other similar surfaces by leaving forms in place for the full curing period. Forms may be removed, but continue curing by an approved moisture curing method.

3.12 REMOVING FORMS

A. General: Formwork not supporting weight of concrete, such as sides of beams, walls, columns, and similar parts of the work, may be removed after maintaining not less than 50 deg F (10 deg C) for 24 hours after placing concrete, provided concrete is sufficiently hard to not be damaged by form-removal operations, and provided curing operations are started and protection operations are maintained.

3.13 REUSING FORMS

A. Clean and repair surfaces of forms to be reused in the Work. Split, frayed, delaminated, or otherwise damaged form-facing material will not be acceptable for exposed surfaces. Apply new form-coating compound as specified for new formwork.

B. When forms are extended for successive concrete placement, thoroughly clean surfaces, remove fins and laitance, and tighten forms to close joints. Align and secure joint to avoid offsets. Do not use patched forms for exposed concrete surfaces except as acceptable to Architect.

3.14 CONCRETE SURFACE REPAIRS

A. Patching Defective Areas: Repair and patch defective areas with cement mortar immediately after removing forms to satisfaction of Architect.

B. Mix dry-pack mortar, consisting of one part portland cement to 2-1/2 parts fine aggregate passing a No. 16 mesh sieve, using only enough water as required for handling and placing.

1. Cut out honeycombs, rock pockets, voids over 1/4 inch in any dimension, and holes left by tie rods and bolts down to solid concrete but in no case to a depth less than 1 inch. Make edges of cuts perpendicular to the concrete surface. Thoroughly clean, dampen with water, and brush-coat the area to be patched with bonding agent. Place patching mortar before bonding agent has dried.

2. For surfaces exposed to view, blend white portland cement and standard portland cement so that, when dry, patching mortar will match surrounding color. Provide test areas at inconspicuous locations to verify mixture and color match before proceeding with patching. Compact mortar in place and strike-off slightly higher than surrounding surface.

C. Repairing Formed Surfaces: Remove and replace concrete having defective surfaces if defects cannot be repaired to satisfaction of Architect. Surface defects include color and texture irregularities, cracks, spalls, air bubbles, honeycomb, rock pockets, fins and other projections on the surface, and stains and other discolorations that cannot be removed by cleaning. Flush out form tie holes and fill with dry-pack mortar or precast cement cone plugs secured in place with bonding agent.

1. Repair concealed formed surfaces, where possible, containing defects that affect the concrete's durability. If defects cannot be repaired, remove and replace the concrete.

D. Repairing Unformed Surfaces: Test unformed surfaces, such as monolithic slabs, for smoothness and verify surface tolerances specified for each surface and finish. Correct low and high areas as specified. Test unformed surfaces sloped to drain for trueness of slope and smoothness by using a template having the required slope.

1. Repair finished unformed surfaces containing defects that affect the concrete's durability. Surface defects include crazing and cracks in excess of 0.01 inch wide or that penetrate to the reinforcement or completely through nonreinforced sections regardless of width, spalling, popouts, honeycombs, rock pockets, and other objectionable conditions.
2. Correct high areas in unformed surfaces by grinding after concrete has cured at least 14 days.
3. Repair defective areas, except random cracks and single holes not exceeding 1 inch in diameter and areas retaining more than 1/8" deep liquid to nearest designated joint, by cutting out and replacing with new concrete. Remove defective areas with clean, square cuts and expose reinforcing steel with at least 3/4-inch clearance all around. Dampen concrete surfaces in contact with patching concrete and apply bonding agent. Mix patching concrete of same materials to provide concrete of same type or class as original concrete. Place, compact, and finish to blend with adjacent finished concrete. Cure in same manner as adjacent concrete.

E. Repair isolated random cracks and single holes 1 inch or less in diameter by dry-pack method. Groove top of cracks and cut out holes to sound concrete and clean of dust, dirt, and loose particles. Dampen cleaned concrete surfaces and apply bonding compound. Place dry-pack before bonding agent has dried. Compact dry-pack mixture in place and finish to match adjacent concrete. Keep patched area continuously moist for at least 72 hours.

F. Perform structural repairs with prior approval of Architect for method and procedure, using specified epoxy adhesive and mortar.

G. Repair methods not specified above may be used, subject to acceptance of Architect.

3.15 QUALITY CONTROL TESTING DURING CONSTRUCTION

A. General: Owner to provide a testing agency to perform material tests, special inspections and to submit test reports. Contractor to coordinate with testing agency for sequence of work and inform testing agency when work is ready for testing and inspections.

B. Sampling and testing for quality control during concrete placement to include the following:

1. Sampling Fresh Concrete: ASTM C 172, except modified for slump to comply with ASTM C 94.

a. Slump: ASTM C 143; one test at point of discharge for each 20 cu. yd. of each type of concrete; additional tests when concrete consistency seems to have changed.
b. Air Content: ASTM C 173, volumetric method for lightweight or normal weight concrete; ASTM C 231, pressure method for normal weight concrete; one for each 20 cu. yd. of each type of air-entrained concrete.
c. Concrete Temperature: ASTM C 1064; one test hourly when air temperature is 40 deg F (4 deg C) and below, when 80 deg F (27 deg C) and above, and one test for each set of compressive-strength specimens.
d. Compression Test Specimen: ASTM C 31; one set of three standard cylinders for each compressive-strength test, unless otherwise directed. Mold and store cylinders for laboratory-cured test specimens except when field-cured test specimens are required.
e. Compressive-Strength Tests: ASTM C 39; one set of three cylinders for each 20 cu. yd. of each concrete class placed in any one day; one specimen tested at 7 days, one specimen tested at 28 days, and one specimen retained in reserve for later testing if required.

C. When strength of field-cured cylinders is less than 85 percent of companion laboratory-cured cylinders, evaluate current operations and provide corrective procedures for protecting and curing the in-place concrete.

1. Strength level of concrete will be considered satisfactory if averages of sets of three consecutive strength test results equal or exceed specified compressive strength and no individual strength test result falls below specified compressive strength by more than 500 psi.

D. Test results will be reported in writing to Owner, Architect, Structural Engineer, ready-mix producer, and Contractor within 24 hours after tests. Reports of compressive strength tests shall contain the Project identification name and number, date of concrete placement, name of concrete testing service, concrete type and class, location of concrete batch in structure,

design compressive strength at 28 days, concrete mix proportions and materials, compressive breaking strength, and type of break for both 7-day tests and 28-day tests.

E. Nondestructive Testing: Impact hammer, sonoscope, or other nondestructive device may be permitted but shall not be used as the sole basis for acceptance or rejection.

F. Additional Tests: The testing agency will make additional tests of in-place concrete when test results indicate specified concrete strengths and other characteristics have not been attained in the structure, as directed by Architect. Testing agency may conduct tests to determine adequacy of concrete by cored cylinders complying with ASTM C 42, or by other methods as directed (see 1.4.C).

END OF SECTION 03300

SECTION 04200 - UNIT MASONRY

PART 1 - GENERAL

1.1 RELATED DOCUMENTS

A. Drawings and general provisions of Contract, including General and Supplementar y Conditions and Division 1 Specification Sections, apply to this Section.

B. Related Work Specified Elsewhere: Water repellent to be applied to masonry wall surfa ces is specified in Section 07190.

1.2 SUMMARY

A. This Section includes the following:

1. Concrete unit masonry.

2. Products installed but not furnished under this Section include the following:

a. Hollow metal frames in unit masonry openings are specified in Division 8 Section "Steel Doors and Frames."

1.3 SYSTEM PERFORMANCE REQUIREMENTS

A. Provide unit masonry system that develops the following installed compressive strengths (f'm):

1. For concrete unit masonry: As follows:

a. f'm = 2000 psi.

1.4 SUBMITTALS

A. General: Submit the following in accordance with Conditions of Contract and Division 1 Specification Sections.

B. Product data for each different masonry unit, accessory, and other manufactured product indicated.

C. Shop drawings for reinforcing detailing fabrication, bending, and placement of unit masonry reinforcing bars. Comply with ACI 315 "Details and Detailing of Concrete Reinforcing" showing bar schedules, stirrup spacing, diagrams of bent bars, and arrangement of mason ry reinforcement.

D. Samples for verification purposes of the following:

1. Full-size units for each different exposed masonry unit required showing full range of exposed color, texture, and dimensions to be expected in completed construction.
2. Colored masonry mortar samples for each color required showing the full range of colors expected in the finished construction. Label samples to indicate type and amount of colorant used.
3. Accessories embedded in the masonry.

E. Material certificates for the following signed by manufacturer and Contractor certifying that each material complies with requirements.

1. Each different cement product required for mortar and grout including name of manufacturer, brand, type, and weight slips at time of delivery.
2. Each material and grade indicated for reinforcing bars.
3. Each type and size of joint reinforcement.
4. Each type and size of anchors, ties, and metal accessories.

F. Material test reports from a qualified independent testing laboratory employed and paid by Contractor or supplier indicating and interpreting test results relative to compliance of the following proposed masonry materials with requirements indicated:

1. Mortar complying with property requirements of ASTM C 270.
2. Grout mixes. Include description of type and proportions of grout ingredients complying with UBC Standard 21-15 and compressive strength test in accordance with UBC Standard 21-18.
3. Masonry units.

G. Qualification data for firms and persons specified in "Quality Assurance" Article to demonstrate their capabilities and experience. Include list of completed projects with project names, addresses, telephone numbers, names of Architects and Owners , and other information specified.

H. Results from tests and inspections performed by Owner's representatives will be reported promptly and in writing to Architect and Contractor.
1. Hot weather installation plan approved by Architect prior to masonry construction when temperature reaches 90´F or 80´F with a 10 MPH wind.

1.5 QUALITY ASSURANCE

A. All materials, design, and construction shall comply with the International Building Code, 2006, Chapter 21, Masonry.

B. Inspecting Laboratory Qualifications: To qualify for employment in performing tests and inspection specified in this Section, an independent testing laboratory must demonstrate to Architect's satisfaction, based on evaluation of laboratory-submitted criteria conforming to ASTM C 1093, that it has the experience and capability to conduct satisfactorily the testing indicated without delaying the progress of the Work.

C. Preconstruction Testing: Owner to provide an independent testing laboratory, to perform the following preconstruction testing indicated as well as other inspecting and testing services required by referenced unit masonry standard or indicated herein for source and field quality control:

1. Concrete Masonry Unit Tests: For each different concrete masonry unit indicated, units will be tested for strength, absorption, and moisture content per ASTM C 140.

2. Prism Tests: For each type of wall construction indicated, masonry prisms will be tested per ASTM E 447, Method B. As an option and at the prior approval of the Architect, masonry prism test records may be provided in lieu of prism testing per UBC Paragraph 2405(c)2.

3. Mortar properties will be tested per property specification of ASTM C 270.

4. Grout compressive strength will be tested per ASTM C 1019.

D. Single-Source Responsibility for Masonry Units: Obtain exposed masonry units of uniform texture and color, or a uniform blend within the ranges accepted for these characteristics, from one manufacturer for each different product required for each continuous surface or visually related surfaces.

E. Single-Source Responsibility for Mortar Materials: Obtain mortar ingredients of uniform quality, including color for exposed masonry, from one manufacturer for each cementitious component and from one source and producer for each aggregate.

F. Preinstallation Conference: Conduct conference at Project site to comply with requirements of Division 1 Section "Project Meetings."

1.6 DELIVERY, STORAGE, AND HANDLING

A. Deliver masonry materials to project in undamaged condition.

B. Store and handle masonry units off the ground, under cover, and in a dry location to prevent their deterioration or damage due to moisture, temperature changes, contaminants, corrosion, and other causes. If units become wet, do not place until units are in an air-dried condition.

C. Store cementitious materials off the ground, under cover, and in dry location.

D. Store aggregates where grading and other required characteristics can be maintained and contamination avoided.

E. Store masonry accessories including metal items to prevent corrosion and accumulation of dirt and oil.

1.7 PROJECT CONDITIONS

A. Protection of Masonry: During erection, cover tops of walls, projections, and sills with waterproof sheeting at end of each day's work. Cover partially completed masonry when construction is not in progress.

1. Extend cover a minimum of 24 inches down both sides and hold cover securely in place.

B. Do not apply uniform floor or roof loads for at least 12 hours and concentrated loads for at least 3 days after building masonry walls or columns.

C. Stain Prevention: Prevent grout, mortar, and soil from staining the face of masonry to be left exposed or painted. Remove immediately any grout, mortar, and soil that come in contact with such masonry.

1. Protect base of walls from rain-splashed mud and mortar splatter by means of coverings spread on ground and over wall surface.
2. Protect sills, ledges, and projections from mortar droppings.
3. Protect surfaces of window and door frames, as well as similar products with painted and integral finishes from mortar droppings.

D. Cold-Weather Construction: Comply with the following and the Uniform Building Code, 1997, Section 2104.3 except as noted otherwise:

1. Do not lay masonry units that are wet or frozen.
2. Remove masonry damaged by freezing conditions.
3. When the air temperature is 25´F and below masonry temperature shall be maintained above 32´F by enclosure and supplement heat by approved means.

E. Hot-Weather Construction: Comply with referenced unit masonry standard. Contractor to provide plan for protection of masonry when temperature is above 90´F or above 80´F with a 10 MPH wind. Plan to be in compliance of ACI 530.1 except procedures shall begin at the

conditions stated.

PART 2 - PRODUCTS

2.1 MATERIALS, GENERAL

A. Comply with referenced unit masonry standard and other requirements specified in this Section applicable to each material indicated.

2.2 CONCRETE MASONRY UNITS

A. General: Comply with requirements indicated below applicable to each form of concrete masonry unit required.

1. Provide special shapes where indicated and as follows:
   a. For lintels, bond beams, corners, jambs, sash, control joints, headers, bonding, and other special conditions.
   b. Square edged units for outside corners, except where indicated as bullnose.

2. Size: Provide concrete masonry units complying with requirements indicated below for size that are manufactured to specified face dimensions within tolerances specified in the applicable referenced ASTM specification for concrete masonry units.
   a. Concrete Masonry Units: Manufactured to specified dimensions of 3/8 inch less than nominal widths by nominal heights by nominal lengths indicated on drawings.

3. Provide Type I, moisture-controlled units.

4. Exposed Faces: Integrally colored block as selected by Architect from manufacturer's standard colors, unless otherwise indicated.
   a. Where special finishes are indicated, provide units with exposed faces of the general description matching color and texture of Architect's sample.

.

B. Hollow Load-Bearing Concrete Masonry Units: ASTM C 90, and as follows:
1. Unit Compressive Strength: Provide units with minimum average net area compressive strength indicated below:
   a. 2800 psi.

2. Weight Classification: Normalweight.

2.3 MORTAR AND GROUT MATERIALS

A. Portland Cement: ASTM C 150, Type I or II, except Type III may be used for cold -weather construction. Provide natural color or white cement as required to produce required mortar color.

B. Hydrated Lime: ASTM C 207, Type S.

C. Aggregate for Mortar: ASTM C 144, except for joints less than 1/4 inch use aggregate graded with 100 percent passing the No. 16 sieve.

D. Aggregate for Grout to be for fine grout only: ASTM C 404.

E. Colored Mortar Pigments: Natural and synthetic iron oxides and chromium oxides,

compounded for use in mortar mixes. Use only pigments with record of satisfactory performance in masonry mortars.

F. Water: Clean and potable.

G. Available Products: Subject to compliance with requirements, products that may be incorporated in the Work include, but are not limited to, the following:

1. Colored Mortar Pigments:
   a. "Centurion Pigments," Centurion.
   b. "True Tone Mortar Colors," Davis Colors, A Subsidiary of Rockwood Industries, Inc.
   c. "SGS Mortar Colors," Solomon Grind-Chem Services, Inc.

2.4 REINFORCING STEEL

A. General: Provide reinforcing steel complying with requirements of referenced unit masonry standard and this article.

B. Steel Reinforcing Bars: Material and grade as follows:

1. Grade 60,

C. Deformed Reinforcing Wire: ASTM A 496.

D. Plain Welded Wire Fabric: ASTM A 185.

2.5 TIES AND ANCHORS, GENERAL

A. General: Provide ties and anchors specified in subsequent articles and drawings that comply with requirements for metal and size of referenced unit masonry standard and of this article.

B. Galvanized Carbon Steel Wire: ASTM A 82, coating class as required by referenced unit masonry standard for application indicated.

C. Galvanized Steel Sheet: ASTM A 366 (commercial quality) cold-rolled carbon steel sheet, hot-dip galvanized after fabrication to comply with ASTM A 525, Class B2 (for unit lengths over 15 inches) and Class B3 (for unit lengths under 15 inches), for sheet metal ties and anchors.

1. Thickness of Steel Sheet Galvanized After Fabrication: Uncoated thickness of steel sheet hot-dip galvanized after fabrication:
   a. 0.598 inch (16 gage).

2.6 MISCELLANEOUS ANCHORS

A. Anchor Bolts: Steel bolts complying with A 307, Grade A; with ASTM A 563 hex nuts and, where indicated, flat washers; hot-dip galvanized to comply with ASTM A 153, Class C; of diameter and length indicated and in the following configurations:

1. Nonheaded bolts, bent in manner indicated.

2.7 MISCELLANEOUS MASONRY ACCESSORIES

A. Preformed Control Joint Gaskets: Material as indicated below, designed to fit standard sash block and to maintain lateral stability in masonry wall; size and configuration as indicated.

1. Styrene-Butadiene Rubber Compound: ASTM D 2000, Designation 2AA-805.

B. Bond Breaker Strips: Asphalt-saturated organic roofing felt complying with ASTM D 226, Type I (No. 15 asphalt felt).

2.8 MASONRY CLEANERS

A. Job-Mixed Muriatic Solution: Solution of 1 part muriatic acid and 10 parts clean water, mixed in a nonmetallic container with acid added to water, as appropriate for the masonry and mortar joints.

2.9 MORTAR AND GROUT MIXES

A. General: Do not add admixtures including coloring pigments, air-entraining agents, accelerators, retarders, water repellent agents, antifreeze compounds, or other admixtures, unless otherwise indicated.

1. Do not use calcium chloride in mortar or grout.

B. Mortar for Unit Masonry: Comply with ASTM C 270, C150, and C161, Proportion Specification, for types of mortar indicated below:

1. Limit cementitious materials in mortar to portland cement-lime.

2. For all reinforced masonry use type indicated below:
a. Type S, 1800 psi minimum.

C. Grout for Unit Masonry: Comply with ASTM C 476, C404, and referenced unit masonry standard. Comply with Chapter 21 of IBC, 2800 psi minimum, slump 8 inches to 10 inches, low lift grouting to 4 feet maximum. High lift grouting not permitted unless approved by Engineer.

2.10 STORAGE

A. Construction materials should be received, stored, and protected in ways that prevent water from entering the materials.

PART 3 - EXECUTION

3.1 EXAMINATION

A. Examine conditions, with Installer present, for compliance with requirements for installation tolerances and other specific conditions, and other conditions affecting performance of unit masonry. Verify reinforcing dowels provided at footings and walls are correct in size, number and location.

B. Examine rough-in and built-in construction to verify actual locations of piping connections prior to installation.

C. Do not proceed until unsatisfactory conditions have been corrected.

3.2 INSTALLATION, GENERAL

A. Comply with referenced unit masonry standard and other requirements indicated applicable to each type of installation included in Project.

B. Thickness: Build cavity and composite walls and other masonry construction to the full thickness shown. Build single-wythe walls to the actual thickness of the masonry units, using units of nominal thickness indicated.

C. Build chases and recesses as shown or required to accommodate items specified in this and other Sections of the Specifications. Provide not less than 8 inches of masonry between chase or recess and jamb of openings and between adjacent chases and recesses.

D. Leave openings for equipment to be installed before completion of masonry. After installation of equipment, complete masonry to match construction immediately adjacent to the opening.

E. Cut masonry units with motor-driven saws to provide clean, sharp, unchipped edges. Cut units as required to provide continuous pattern and to fit adjoining construction. Use full-size units without cutting where possible.

F. High-lift grouting is not allowed unless approved by Engineer. Maximum lift before grouting is 4'-0". Grout the current 4'-0" lift at the location of each bond beam.

G. All masonry walls shown as to be connected at floor or roof levels shall be braced until such connections are made and the designed lateral wall support is provided. Extent of wall bracing required is dependent on wall height and exposure and shall be designed and provided by mason.

3.3 CONSTRUCTION TOLERANCES

A. Comply with construction tolerances of referenced unit masonry standard.

3.4 LAYING MASONRY WALLS

A. Lay out walls in advance for accurate spacing of surface bond patterns with uniform joint widths and for accurate locating of openings, movement-type joints, returns, and offsets. Avoid the use of less-than-half-size units at corners, jambs, and where possible at other locations.

B. Lay up walls to comply with specified construction tolerances, with courses accurately spaced and coordinated with other construction.

C. Bond Pattern for Exposed Masonry: Lay exposed masonry in the following bond pattern; do not use units with less that nominal 4-inch horizontal face dimensions at corners or jambs.

1. One-half running bond with vertical joint in each course centered on units in courses above and below.

D. Lay concealed masonry with all units in a wythe in running bond. Bond and interlock each course of each wythe at corners. Do not use units with less than nominal 4-inch horizontal face dimensions at corners or jambs.

E. Stopping and Resuming Work: In each course, rack back 1/2-unit length for one-half running bond; do not tooth. Clean exposed surfaces of set masonry, wet clay masonry units lightly (if required), and remove loose masonry units and mortar prior to laying fresh masonry.

F. Built-In Work: As construction progresses, build-in items specified under this and other Sections of the Specifications. Fill in solidly with masonry around built-in items.

1. Fill space between hollow metal frames and masonry solidly with mortar, unless otherwise indicated.
2. Where built-in items are to be embedded in cores of hollow masonry units, place a layer of metal lath in the joint below and rod mortar or grout into core.

3. Fill cores in hollow concrete masonry units with grout 3 courses (24 inches) under bearing plates, beams, lintels, posts, and similar items, unle ss otherwise indicated.

3.5 MORTAR BEDDING AND JOINTING

A. Lay hollow concrete masonry units as follows:

1. With full mortar coverage on horizontal and v ertical face shells.
2. Bed webs in mortar in starting course on footings and in all courses of piers, columns, and pilasters, and where adjacent to cells or cavities to be filled with grout.
3. For starting course on footings where cells are not grouted, spread out full mortar bed including areas under cells.

B. Cut joints flush for masonry walls to be concealed or to be covered by other materials, unless otherwise indicated.

3.6 CAVITIES/AIR SPACES

A. Keep cavities/air spaces clean of mortar droppings and other materials during construction. Strike joints facing cavities/air spaces flush.

3.7 CONTROL JOINTS

A. General: Install control joints in unit masonry where indicated. Build in related items as the masonry progresses. Do not form a continuous span through control joints unless provisions are made to prevent in-plane restraint of wall or partition movement.

B. Form control joints in concrete masonry as shown on the plans.

3.8 LINTELS

A. Provide masonry lintels where sh own and wherever openings of more than 2'-0" for block size units are shown. Provide formed-in-place masonry lintels. Temporarily support formed-in-place lintels.

1. For hollow concrete masonry unit walls, use specially formed b ond beam units with reinforcement bars placed as indicated and filled with coarse grout.

2. Unless indicated otherwise, provide solid bottom units at all lintels to be exposed in the finish work.

3.9 INSTALLATION OF REINFORCED UNIT MASONRY

A. General: Install reinforced unit masonry to comply with requirements of referenced unit masonry standard.

B. Temporary Formwork: Construct formwork and shores to support reinforced masonry elements during construction.

1. Construct formwork to conform to shape, line, and dimensions shown. Make sufficiently tight to prevent leakage of mortar and grout. Brace, tie, and support forms to maintain position and shape during construction and curing of reinforced masonry.

C. Do not place grout until entire height of masonry to be grouted has attained sufficient strength to resist grout pressure.

D. Do not remove forms and shores until reinforced masonry members have hardened

sufficiently to carry their own weight and other temporary loads that may be placed on them during construction.

3.10 FIELD QUALITY CONTROL

A. Owner will provide an independent testing laboratory to perform the following tests.

B. Testing Frequency: Tests and evaluations listed in this article will be performed during construction for each 5000 sq. ft. of wall area or portion thereof.

1. Mortar properties will be tested per property specification of ASTM C 270.
2. Grout compressive strength will be sampled and tested per ASTM C 1019.

C. Prism Test Method: For each type of wall construction indicated, masonry prisms will be tested per ASTM E 447, Method B, and as follows:

1. Prepare one set of prisms for testing at 7 days and one set for testi ng at 28 days.

D. Evaluation of Quality Control Tests: In absence of other indications of noncompliance with requirements, masonry will be considered satisfactory if results from construction quality control tests comply with minimum requirements indicated.

E. Architect may request testing throughout masonry contruction, including additional prism samples for testing provided by contractor during cold and hot weather conditions.

3.11 REPAIRING, POINTING, AND CLEANING

A. Remove and replace masonry units that are loose, chipped, broken, stained, or otherwise damaged or if units do not match adjoining units. Install new units to match adjoining units and in fresh mortar or grout, pointed to eliminate evidence of replacement.

B. Pointing: During the tooling of joints, enlarge any voids or holes, except weep holes, and completely fill with mortar. Point-up all joints including corners, openings, and adjacent construction to provide a neat, uniform appearance, prepared for application of sealants.

C. Final Cleaning: After mortar is thoroughly set and cured, clean exposed masonry as follows:

1. Remove large mortar particles by hand with wooden paddles and nonmetallic scrape hoes or chisels.
2. Test cleaning methods on sample wall panel; leave 1/2 panel uncleaned for comparison purposes. Obtain Architect's approval of sample clea ning before proceeding with cleaning of masonry.
3. Protect adjacent nonmasonry surfaces from contact with cleaner by covering them with liquid strippable masking agent, polyethylene film, or waterproof masking tape.
4. Wet wall surfaces with water prior to application of cleaners; remove cleaners promptly by rinsing thoroughly with clear water.
5. Clean concrete masonry by means of cleaning method indicated in NCMA TEK 8 -2 applicable to type of stain present on exposed surfaces.

D. Protection: Provide final protection and maintain conditions, in a manner acceptable to Installer, that ensure unit masonry is without damage and deterioration at time of Substantial Completion.

END OF SECTION 04200

SECTION 05120 - STRUCTURAL STEEL

PART 1 - GENERAL

1.1 SUMMARY

A. Extent of structural steel work is shown on drawings, including schedules, notes and details to show size and location of members, typical connec tions, and type of steel required.

B. Related Sections:
1. Drawings and general provisions of Contract, including General and Supplementary Conditions and Division-1 Specification sections, apply to work of this section.
2. Miscellaneous Metal Fabrications are specified elsewhere in Division 5.

C. Definitions: Structural steel is that work defined in American Institute of Steel Construction (AISC) "Code of Standard Practice" and as otherwise shown o n drawings.

1.2 SUBMITTALS

A. Product Data: Submit producer's or manufacturer's specifications and installation instructions for following products. Include laboratory test reports and other data to show compliance with specifications (including specified standards).
1. High-strength bolts (each type), including nuts and washers.
2. Structural steel primer paint.
3. Shrinkage-resistant grout.

B. Shop Drawings: Submit shop drawings, including complete details and schedules for fabrication and assembly of structural steel members, procedures and diagrams.
1. Include details of cuts, connections, camber, holes, and other pertinent data. Indicate welds by standard AWS A2.1 and A2.4 symbols, and show size, length, and type of each weld.
a. Provide setting drawings, templates, and directions for installation of anchor bolts and other anchorages to be installed as work of others sectio ns.

C. Test Reports: Submit copies of reports of tests conducted on shop and field bolted and welded connections. Include data on type(s) of tests conducted and test results.

D. Surveys: Submit certified copies of each surv ey conducted by a registered professional engineer, showing elevations and locations of base plates and anchor bolts to receive structural steel, and final elevations and locations for major members. Indicate discrepancies between actual installation and contract documents.

1.3 QUALITY ASSURANCE

A. Source Quality Control: Materials and fabrication procedures are subject to inspection and tests in mill, shop, and field, conducted by a qualified inspection agency. Such ins pections and tests will not relieve Contractor of responsibility for providing materials and fabrication procedures in compliance with specified requirements.
1. Promptly remove and replace materials or fabricated components which do not comply.

B. Fabricator Qualifications: Engage a firm experienced in fabricating structural steel similar to that indicated for this Project and with a record of successful in -service performance, as well as sufficient production capacity to fabricate structural steel without delaying the Work.

1. Fabricator must participate in the AISC Quality Certification Program and be designated an AISC-Certified Plant as follows:
   a. Category: Category Cbd, complex steel building structures.
2. Fabricators without AISC Certification shall provide special inspectors and conduct special inspections as required by Authorities having jurisdication.
3. Other Certifications, other than AISC, may be acceptable but must be submitted and approved by Authorities having jurisdication prior to fabrication of any steel.

C. Design of Members and Connections: Details shown are typical; similar details apply to similar conditions, unless otherwise indicated. Verify dimensions at site whenever possible without causing delay in the work.

D. Promptly notify Architect whenever design of members and connections for any portion of structure are not clearly indicated.

E. Codes and Standards:
1. Comply with provisions of following, except as otherwise indicated:
   a. AISC "Code of Standard Practice for Steel Buildings and Bridges", AISC "Code of Standard Practice for Steel Buildings and Bridges", excluding the following: Section 1.5.1, Section 3.3 (first sentence and last sentence), Section 3.4, Section 4.2, Section 4.2.1, Section 4.2.2, Section 6.3.2, Section 7.5.4, and Section 7.11.5.
2. AISC "Specifications for the Design, Fabrication, and Erection of Structural Steel for Buildings", including "Commentary" and Supplements thereto as issued.
3. AISC "Specifications for Architecturally Exposed Structural Steel".
4. AISC "Specifications for Structural Joints using ASTM A 325 or A 490 Bolts" approved by the Research Council on Riveted and Bolted Structural Joints of the Engineering Foundation.
5. American Welding Society (AWS) D1.1 "Structural Welding Code - Steel".
6. ASTM A 6 "General Requirements for Delivery of Rolled Steel Plates, Shapes, Sheet Piling and Bars for Structural Use".

F. Qualifications for Welding Work: Qualify welding processes and welding operators in accordance with AWS "Standard Qualification Procedure".
1. Provide certification that welders to be employed in work have satisfactorily passed AWS qualification tests within the last 12 months.
2. If recertification of welders is required, retesting will be Contractor's responsibility.

1.4 DELIVERY, STORAGE AND HANDLING

A. Deliver materials to site at such intervals to ensure uninterrupted progress of work.
1. Deliver anchor bolts and anchorage devices, which are to be embedded in cast-in-place concrete or masonry, in ample time to not to delay work.

B. Store materials to permit easy access for inspection and identification. Keep steel members off ground, using pallets, platforms, or other supports. Protect steel members and packaged materials from erosion and deterioration.
1. Do not store materials on structure in a manner that might cause distortion or damage to members or supporting structures. Repair or replace damaged materials or structures as directed.

PART 2 - PRODUCTS

2.1 MANUFACTURER

A. Approved Manufacturers: Subject to compliance with requirements, provide one of the following:
1. Non-shrink Non-metallic Grout.
a. Euco N.S.; Euclid Chemical Co.
b. Masterflow 713; Master Builders
c. Five Star Grout; U.S. Grout Corp.

2.2 MATERIALS

A. Metal Surfaces, General: For fabrication of work which will be exposed to view, use only materials which are smooth and free of surface blemishes including pitting, rust and scale seam marks, roller marks, rolled trade names and roughness. Remove such blemishes by grinding, or by welding and grinding, prior to cleaning, treating and application of surface finishes.

B. Wide Flange Structural Steel Shapes: ASTM A 572, Grade 50 enhanced.
1. Other Structural Steel Shapes, Plates and Bars: ASTM A 36.

C. Cold-Formed Steel Tubing: ASTM A 500, Grade B.

D. Hot-Formed Steel Tubing: ASTM A 501.
1. Steel Pipe: ASTM A 53, Type E or S, Grade B; or ASTM A 501.
a. Finish: Black, except where indicated to be galvanized.

E. Steel Castings: ASTM A 27, Grade 65-35, medium-strength carbon steel.

F. Anchor Bolts: ASTM A 307, headed type unless otherwise indicated.

G. Unfinished Threaded Fasteners: ASTM A 307, Grade A, regular low-carbon steel bolts and nuts.
1. Provide hexagonal heads and nuts for all connections.
2. Provide either hexagonal or square, heads and nuts, except use only hexagonal units for exposed connections.

H. High-Strength Threaded Fasteners: Heavy hexagon structural bolts, heavy hexagon nuts, and hardened washers, as follows:
1. Quenched and tempered medium-carbon steel bolts, nuts and washers, complying with ASTM A 325.
2. Direct tension indicator washers may be used at Contractor's option.

I. Electrodes for Welding: Comply with AWS Code.

J. Structural Steel Primer Paint: SSPC - Paint 13.

K. Cement Grout: Portland cement (ASTM C 150, Type I or Type III) and clean, uniformly graded, natural sand (ASTM C 404, Size No. 2). Mix at a ratio of 1.0 part cement to 3.0 parts sand, by volume, with minimum water required for placement and hydration.

L. Non-metallic Shrinkage-Resistant Grout: Pre-mixed, non-metallic, non-corrosive, non-staining product containing selected silica sands, portland cement, shrinkage compensating agents, plasticizing and water reducing agents, complying with CE -CRD-C621.

2.3 FABRICATION

A. Shop Fabrication and Assembly: Fabricate and assemble structural assemblies in shop to greatest extent possible. Fabricate items of structural steel in accordance with AISC Specifications and as indicated on final shop drawings. Provide camber in structural members where indicated.
   1. Properly mark and match-mark materials for field assembly. Fabricate for delivery sequence which will expedite erection and minimize field handling of materials.
   2. Where finishing is required, complete assembly, including welding of units, before start of finishing operations. Provide finish surfaces of members exposed in final structure free of markings, burrs, and other defects.

B. Connections: Weld or bolt shop connections, as indicated.
   1. Bolt field connections, except where welded connections or other connections are indicated.
   2. Provide high-strength threaded fasteners for principal bolted connections, except where unfinished bolts are indicated.
   3. Provide unfinished threaded fasteners for only bolted connections of secondary framing members to primary members (including purlins, girts, and other framing members taking only nominal stresses) and for temporary bracing to facilitate erection.

C. High-Strength Bolted Construction: Install high-strength threaded fasteners in accordance with AISC "Specifications for Structural Joints using ASTM A 325 or A 490 Bolts" (RCRBSJ).

D. Welded Construction: Comply with AWS Code for procedures, appearance and quality of welds, and methods used in correcting welding work.
   1. Assemble and weld built-up sections by methods which will produce true alignment of axes without warp.

E. Shear Connectors: Prepare steel surfaces as recommended by manufacturer of shear connectors. Where possible shop weld shear connectors, spaced as shown, to beams and girders in composite construction. Use automatic end welding of headed stud shear connectors in accordance with manufacturer's printed instructions.

2.4 SHOP PAINTING

A. General: Shop paint structural steel, except those members or portions of members to be embedded in concrete or mortar. Paint embedded steel which is partially exposed on exposed portions and initial 2" of embedded areas only.

B. Do not paint surfaces which are to be welded or high-strength bolted with friction-type connections.

C. Apply 2 coats of paint to surfaces which are inaccessible after assembly or erection. Change color of second coat to distinguish it from first.

D. Surface Preparation: After inspection and before shipping, clean steelwork to be painted. Remove loose rust, loose mill scale, and spatter, slag or flux deposits. Clean steel in accordance with Steel Structures Painting Council (SSPC) as follows:
   1. SP-1 "Solvent Cleaning".
   2. At all exposed exterior steel and exposed interior steel prepare surface in accordance with commercial blast cleaning SSPC-SP6 with median surface profile of 1.5 to 2.0 mils.

E. Painting: Provide a one-coat shop applied paint system complying with Steel Structures Painting Council (SSPC)-Paint System Guide No. 7.00. Refer to Section 09900, Painting, for specific primer required on identified steel items.

PART 3 - EXECUTION

3.1 PREPARATION

A. Surveys: Employ a registered professional engineer or land surveyor for accurate erection of structural steel. Check elevations of concrete and masonry bearing surfaces, and locations of anchor bolts and similar devices, before erection work proceeds, and report discrepancies to Architect. Do not proceed with erection until corrections have been made, or until compensating adjustments to structural steel work have been agreed upon with Architect.

3.2 ERECTION

A. Temporary Shoring and Bracing: Provide temporary shoring and bracing members with connections of sufficient strength to bear imposed loads. Remove temporary members and connections when permanent members are in place and final connections are made. Provide temporary guy lines to achieve proper alignment of structures as erection proceeds. Do not shore cambered steel beams unless otherwise indicated on drawings.
   1. Temporary Planking: Provide temporary planking and working platforms as necessary to effectively complete work.

B. Setting Bases and Bearing Plates: Clean concrete and masonry bearing surfaces of bond-reducing materials and roughen to improve bond to surfaces. Clean bottom surface of base and bearing plates.
   1. Set loose and attached base plates and bearing plates for structural members on wedges or other adjusting devices.

C. Tighten anchor bolts after supported members have been positioned and plumbed. Do not remove wedges or shims, but if protruding, cut off flush with edge of base or bearing plate prior to packing with grout. Install high strength washers under nuts at all anchor bolts.

D. Pack grout solidly between bearing surfaces and bases or plates to ensure that no voids remain. Finish exposed surfaces, protect installed materials, and allow to cure.
   1. Comply with manufacturer's instructions.

E. Field Assembly: Set structural frames accurately to lines and elevations indicated. Align and adjust various members forming part of complete frame or structure before permanently fastening. Clean bearing surfaces and other surfaces which will be in permanent contact before assembly. Perform necessary adjustments to compensate for discrepancies in elevations and alignment.
   1. Level and plumb individual members of structure within specified AISC tolerances.
   2. Establish required leveling and plumbing measurements on mean operating temperature of structure. Make allowances for difference between temperature at time of erection and mean temperature at which structure will be when completed and in service.
   3. Splice members only where indicated and accepted on shop drawings.

F. Erection Bolts: On exposed welded construction, remove erection bolts, fill holes with plug welds and grind smooth at exposed surfaces.

G. Comply with AISC Specifications for bearing, adequacy of temporary connections, alignment, and removal of paint on surfaces adjacent to field welds.
   1. Do not enlarge unfair holes in members by burning or by use of drift pins, except in secondary bracing members. Ream holes that must be enlarged to admit bolts.

H. Gas Cutting: Do not use gas cutting torches in field for correcting fabrication errors in primary structural framing. Cutting will be permitted only on secondary members which are not under stress, as acceptable to Architect. Finish gas-cut sections equal to a sheared appearance when permitted.

I. Touch-Up Painting: Immediately after erection, clean field welds, bolted connections, and abraded areas of shop paint. Apply paint to areas using same material as used for shop painting.
   1. Apply by brush or spray to provide minimum dry film thickness of 1.5 mils.

3.3 QUALITY CONTROL

A. Testing Agency: Owner will employ and pay a qualified independent testing agency to perform field quality-control testing services specified in this section.

B. Testing agency shall conduct and interpret tests and state in each report whether test specimens comply with requirements, and specifically state any deviations therefrom.

C. Provide access for testing agency to places where structural steel work is being fabricated or produced so that required inspection and testing can be accomplished.

D. Testing agency may inspect structural steel at plant before shipment; howe ver, Architect reserves right, at any time before final acceptance, to reject material not complying with specified requirements.

E. Correct deficiencies in structural steel work which inspections and laboratory test reports have indicated to be not in compliance with requirements. Perform additional tests, at Contractor's expense, as may be necessary to reconfirm any non-compliance of original work, and as may be necessary to show compliance of corrected work.

F. Shop Bolted Connections: Inspect or test in accordance with AISC specifications.

G. Shop Welding: Inspect and test during fabrication of structural steel assemblies, as follows:
   1. Certify welders and conduct inspections and tests as required. Record types and locations of defects found in work. Record work required and performed to correct deficiencies.
   2. Perform visual inspection of all welds.
   3. Perform tests of welds as follows. Inspection procedures listed are to be used at Contractor's option.
      a. Radiographic Inspection: ASTM E 94 and ASTM E 142; minimum quality level "2-2T".
      b. Ultrasonic Inspection: ASTM E 164.
   4. Inspection of shop welding is not required if the fabricator complies with Section 1704.2.2 of the 2003 IBC.

H. Field Bolted Connections: Inspect in accordance with 2003 IBC Section 1704.3.3.

I. Field Welding: Inspect and test during erection of structural steel as follows:

1. Comply with 2003 IBC Section 1704.3 and Table 1704.3.
2. Certify welders and conduct inspections and tests as required. Record types and locations of defects found in work. Record work required and per formed to correct deficiencies.
3. Perform visual inspection of all welds.
4. Perform tests of welds as follows:
   a. Radiographic Inspection: ASTM E 94 and ASTM E 142; minimum quality level "2-2T".
   b. Ultrasonic Inspection: ASTM E 164.

3.4 CLEANUP

A. Refer to Section 01700.

END OF SECTION 05120

SECTION 05220 - STEEL JOISTS AND JOIST GIRDERS

PART 1 - GENERAL

1.1 RELATED DOCUMENTS

A. Drawings and general provisions of Contract, including General and Supplementary Conditions and Division 1 Specification Sections, apply to this Section.

1.2 SUMMARY

A. This Section includes steel joists for roof framing. Types of joists required include the following:

1. LH-Series Open Web Steel Joists

B. Refer to Division 3 Sections for installation of anchors set in concrete.

C. Refer to Division 4 Sections for installation of anchors set in masonry.

1.3 SUBMITTALS

A. General: Submit the following in accordance with Conditions of Contract and Division 1 Specification Sections.

B. Product data and installation instructions for each type of joist and accessories.

1. Include manufacturer's certification that joists comply with SJI "Specifications."

C. Shop drawings showing layout of joist and joist girder members, special connections, joining and accessories. Include mark, number, type, location and spacing of joists and bridging.

1. Provide templates or location drawings for installation of anchor bolts and metal bearing plates.

D. Calculating of joist and joist girder design showing mark, span, and loads used in design. Calculations shall be stamped and signed by a Professional Engineer registered in the State of Utah.

1.4 QUALITY ASSURANCE

A. General: Provide joists fabricated in compliance with Steel Joist Institute (SJI) "Standard Specifications, Load Tables and Weight Tables for Steel Joists and Joist Girders."

B. Qualification of Field Welding: Qualify welding processes and welding operators in accordance with American Welding Society (AWS) "Structural Welding Code - Steel," AWS D1.1.

C. Inspection: Inspect joists and girders in accordance with SJI "Specifications."

1.5 DELIVERY, STORAGE AND HANDLING

A. Deliver, store and handle steel joists as recommended in SJI "Specifications." Handle and store joists in a manner to avoid deforming members and to avoid excessive stresses.

PART 2 - PRODUCTS

2.1 MATERIALS

A. Steel: Comply with SJI "Specifications" for chord and web sections.

B. Steel Bearing Plates: ASTM A 36.

C. Unfinished Threaded Fasteners: ASTM A 307, Grade A, regular hexagon type, low carbon steel.

D. Steel Prime Paint: Comply with SJI "Specifications."

2.2 FABRICATION

A. General: Fabricate steel joists in accordance with SJI "Specification."

B. Bridging: Provide horizontal or diagonal type bridging for joists and joist girders, complying with SJI "Specifications" with minimum locations and details as shown on the drawings.

1. Provide bridging anchors for ends of bridging lines terminating at walls or beams.

C. Bearing Plates: Steel bearing plates, to secure joists to adjacent construction, provided and specified in Division 5 Section "Metal Fabrications."

D. Shop Painting: Remove loose scale, heavy rust, and other foreign materials from fabricated joists and accessories before application of shop paint.

1. Apply one shop coat of steel prime paint to joists and accessories, by spraying, dipping, or other method to provide a continuous dry paint film thickness of not less than 0.50 mil.

PART 3 - EXECUTION

3.1 ERECTION

A. Place and secure steel joists in accordance with SJI "Specifications," final shop drawings, and as herein specified.

B. Anchors: Anchor bolts, steel bearing plates, and other devices to be built into masonry construction provided and specified in Division 5 Section "Metal Fabrications."

C. Placing Joists: Do not start placement of steel joists until supporting work is in place and secured. Place joists on supporting work, adjust and align in accurate locations and spacing before permanently fastening.

D. Provide temporary bridging, connections, and anchors to ensure lateral stability during construction.

E. Bridging: Install bridging simultaneously with joist erection, before construction loads are applied. Anchor ends of bridging lines at top and bottom chords where terminating at walls or beams.

F. Fastening Joists: Comply with the following:

1. Field weld joists to supporting steel framework and steel bearing plates where indicated in accordance with SJI "Specifications" for type of joists used. Coordinate welding sequence and procedure with placing of joists.

G. Touch-Up Painting: After joist installation, wire brush welded areas, abraded or rusty surfaces, and clean with solvent. Paint field-applied bolt heads and nuts and prepared surfaces on joists and steel supporting members. Use same type of paint as used for shop painting.

END OF SECTION 05220

SECTION 05310 - STEEL DECK

PART 1 - GENERAL

1.1 RELATED DOCUMENTS

A. Drawings and general provisions of the Contract, including General and Supplementary Conditions and Division 1 Specification Sections, apply to this Section.

1.2 SUMMARY

A. This Section includes the following:

1. Noncomposite form deck.

B. Related Sections include the following:

1. Division 3 Section "Cast-in-Place Concrete" for concrete fill.
2. Division 5 Section "Structural Steel" for shop- and field-welded shear connectors.
3. Division 5 Section "Metal Fabrications" for framing deck openings with miscellaneous steel shapes.
4. Division 9 painting Sections for repair painting of primed deck.
5. Division 16 Section "Underfloor Raceways" for preset inserts, activation kits, afterset inserts, service fittings, header ducts, and trench header ducts used with cellular floor-deck systems.

1.3 SUBMITTALS

A. Product Data: For each type of deck, accessory, and product indicated.

B. Shop Drawings: Show layout and types of deck panels, anchorage details, reinforcing channels, pans, cut deck openings, special jointing, accessories, and attachments to other construction.

C. Product Certificates: For each type of steel deck, signed by product manufacturer.

D. Welding certificates.

E. Field quality-control test and inspection reports.

F. Product Test Reports: Based on evaluation of comprehensive tests performed by a qualified testing agency, indicating that each of the following complies with requirements:

1. Power-actuated mechanical fasteners.

G. Research/Evaluation Reports: For steel deck.

1.4 QUALITY ASSURANCE

A. Testing Agency Qualifications: An independent agency qualified according to ASTM E 329 for testing indicated.

B. Source Limitations for Electrified Cellular Floor Deck: Obtain cellular floor-deck units and compatible electrical components, such as preset inserts, activation kits, afterset inserts, service fittings, header ducts, and trench header ducts, from same manufacturer.

C. Welding: Qualify procedures and personnel according to AWS D1.3, "Structural Welding Code - Sheet Steel."

D. Fire-Test-Response Characteristics: Where indicated, provide steel deck units identical to those tested for fire resistance per ASTM E 119 by a testing and inspecting agency acceptable to authorities having jurisdiction.

1. Fire-Resistance Ratings: Indicated by design designations of applicable testing and inspecting agency.
2. Steel deck units shall be identified with appropriate markings of applicable testing and inspecting agency.

E. AISI Specifications: Comply with calculated structural characteristics of steel deck according to AISI's "North American Specification for the Design of Cold-Formed Steel Structural Members."

F. Electrical Raceway Units: Provide UL-labeled cellular floor-deck units complying with UL 209 and listed in UL's "Electrical Construction Equipment Directory" for use with standard header ducts and outlets for electrical distribution systems.

G. FMG Listing: Provide steel roof deck evaluated by FMG and listed in its "Approval Guide, Building Materials" for Class 1 fire rating and Class 1-90 windstorm ratings.

1.5 DELIVERY, STORAGE, AND HANDLING

A. Protect steel deck from corrosion, deformation, and other damage during delivery, storage, and handling.

B. Stack steel deck on platforms or pallets and slope to provide drainage. Protect with a waterproof covering and ventilate to avoid condensation.

1. Protect and ventilate acoustical cellular roof deck with factory-installed insulation to maintain insulation free of moisture.

PART 2 - PRODUCTS

2.1 MANUFACTURERS

A. Available Manufacturers: Subject to compliance with requirements, manufacturers offering products that may be incorporated into the Work include, but are not limited to, the following:

B. Manufacturers: Subject to compliance with requirements, provide products by one of the following:

1. Steel Deck:

    a. ASC Profiles, Inc.
    b. Canam Steel Corp.;The Canam Manac Group.
    c. Consolidated Systems, Inc.
    d. DACS, Inc.
    e. D-Mac Industries Inc.
    f. Epic Metals Corporation.
    g. Marlyn Steel Decks, Inc.
    h. New Millennium Building Systems, LLC.
    i. Nucor Corp.; Vulcraft Division.
    j. Roof Deck, Inc.
    k. United Steel Deck, Inc.
    l. Valley Joist; Division of EBSCO Industries, Inc.
    m. Verco Manufacturing Co.
    n. Wheeling Corrugating Company; Div. of Wheeling-Pittsburgh Steel Corporation.

2.2 ROOF DECK

A. Steel Roof Deck: Fabricate panels, without top-flange stiffening grooves, to comply with "SDI Specifications and Commentary for Steel Roof Deck," in SDI Publication No. 30, and with the following:

1. Prime-Painted Steel Sheet: ASTM A 1008/A 1008M, Structural Steel (SS), Grade 38 minimum, shop primed with manufacturer's standard baked-on, rust-inhibitive primer.

    a. Color: Manufacturer's standard

2. Deck Profile: As indicated
3. Profile Depth: As indicated
4. Design Uncoated-Steel Thickness: As indicated

2.3 ACCESSORIES

A. General: Provide manufacturer's standard accessory materials for deck that comply with requirements indicated.

B. Mechanical Fasteners: Corrosion-resistant, low-velocity, power-actuated or pneumatically driven carbon-steel fasteners; or self-drilling, self-threading screws.

C. Side-Lap Fasteners: Corrosion-resistant, hexagonal washer head; self-drilling, carbon-steel screws, No. 10 minimum diameter.

D. Flexible Closure Strips: Vulcanized, closed-cell, synthetic rubber.

E. Miscellaneous Sheet Metal Deck Accessories: Steel sheet, minimum yield strength of 33,000 psi, not less than 0.0359-inch design uncoated thickness, of same material and finish as deck; of profile indicated or required for application.

F. Pour Stops and Girder Fillers: Steel sheet, minimum yield strength of 33,000 psi, of same material and finish as deck, and of thickness and profile indicated.

G. Column Closures, End Closures, Z-Closures, and Cover Plates: Steel sheet, of same material, finish, and thickness as deck, unless otherwise indicated.

H. Piercing Hanger Tabs: Piercing steel sheet hanger attachment devices for use with floor deck.

I. Recessed Sump Pans: Single-piece steel sheet, 0.0747 inch thick, of same material and finish as deck, with 3-inch- wide flanges and sloped recessed pans of 1-1/2-inch minimum depth. For drains, cut holes in the field.

J. Flat Sump Plate: Single-piece steel sheet, 0.0747 inch thick, of same material and finish as deck. For drains, cut holes in the field.

K. Repair Paint: Manufacturer's standard rust-inhibitive primer of same color as primer.

PART 3 - EXECUTION

3.1 EXAMINATION

A. Examine supporting frame and field conditions for compliance with requirements for installation tolerances and other conditions affecting performance.

3.2 INSTALLATION, GENERAL

A. Install deck panels and accessories according to applicable specifications and commentary in SDI Publication No. 30, manufacturer's written instructions, and requirements in this Section.

B. Install temporary shoring before placing deck panels, if required to meet deflection limitations.

C. Locate deck bundles to prevent overloading of supporting members.

D. Place deck panels on supporting frame and adjust to final position with ends accurately aligned and bearing on supporting frame before being permanently fastened. Do not stretch or contract side-lap interlocks.

1. Align cellular deck panels over full length of cell runs and align cells at ends of abutting panels.

E. Place deck panels flat and square and fasten to supporting frame without warp or deflection.

F. Cut and neatly fit deck panels and accessories around openings and other work projecting through or adjacent to deck.

G. Provide additional reinforcement and closure pieces at openings as required for strength, continuity of deck, and support of other work.

H. Comply with AWS requirements and procedures for manual shielded metal arc welding, appearance and quality of welds, and methods used for correcting welding work.

I. Mechanical fasteners may be used in lieu of welding to fasten deck. Locate mechanical fasteners and install according to deck manufacturer's written instructions.

3.3 FIELD QUALITY CONTROL

A. Testing Agency: Owner will engage a qualified independent testing and inspecting agency to perform field tests and inspections and prepare test reports.

B. Field welds will be subject to inspection.

C. Testing agency will report inspection results promptly and in writing to Contr actor and Architect.

D. Remove and replace work that does not comply with specified requirements.

E. Additional inspecting, at Contractor's expense, will be performed to determine compliance of corrected work with specified requirements.

3.4 REPAIRS AND PROTECTION

A. Galvanizing Repairs: Prepare and repair damaged galvanized coatings on both surfaces of deck with galvanized repair paint according to ASTM A 780 and manufacturer's written instructions.

B. Repair Painting: Wire brush and clean rust spots, and abraded areas on both surfaces of prime-painted deck immediately after installation, and apply repair paint.

1. Apply repair paint, of same color as adjacent shop -primed deck, to bottom surfaces of deck exposed to view.
2. Wire brushing, cleaning, and repair painting of bottom deck surfaces are included in Division 9.

C. Repair Painting: Wire brushing, cleaning, and repair painting of rust spots, welds, and abraded areas of both deck surfaces are included in Division 9.

D. Provide final protection and maintain conditions to ensure that steel deck is without damage or deterioration at time of Substantial Completion.

END OF SECTION 05310

SECTION 05400 - COLD-FORMED METAL FRAMING

PART 1 - GENERAL

1.1 RELATED DOCUMENTS

A. Drawings and general provisions of the Contract, including General and Supplementary Conditions and Division 1 Specification Sections, apply to this Section.

1.2 SUMMARY

A. This Section includes the following:
   1. Interior load-bearing wall framing.
   2. Exterior non-load-bearing wall framing.
   3. Floor joist framing.
   4. Roof trusses.
   5. Roof rafter framing.
   6. Ceiling joist framing.

B. Related Sections include the following:

   1. Division 5 Section "Metal Fabrications" for masonry shelf angles and connections.
   2. Division 9 Section "Gypsum Board Assemblies" for interior non-load-bearing, metal-stud framing and ceiling-suspension assemblies.
   3. Division 9 Section "Gypsum Board Shaft-Wall Assemblies" for interior non-load-bearing, metal-stud-framed, shaft-wall assemblies.

1.3 PERFORMANCE REQUIREMENTS

A. Structural Performance: Provide cold-formed metal framing capable of withstanding design loads within limits and under conditions indicated.

   1. Design Loads: As indicated.

   2. Deflection Limits: Design framing systems to withstand design loads without deflections greater than the following:
      a. Interior Load-Bearing Wall Framing: Horizontal deflection of 1/240 of the wall height under a horizontal load of 5 lbf/sq. ft..
      b. Floor Joist Framing: Vertical deflection of 1/480 for live loads and l/240 for total loads of the span.
      c. Ceiling Joist Framing: Vertical deflection of 1/240 of the span.

   3. Design framing systems to provide for movement of framing members without damage or overstressing, sheathing failure, connection failure, undue strain on fasteners and anchors, or other detrimental effects when subject to a maximum ambient temperature change of 120 deg F .
   4. Design framing system to maintain clearances at openings, to allow for construction tolerances, and to accommodate live load deflection of primary building structure as follows:

a. Upward and downward movement of 1/2 inch.

B. Cold-Formed Steel Framing, General: Design according to AISI's "Standard for Cold -Formed Steel Framing - General Provisions."

1. Headers: Design according to AISI's "Standard for Cold -Formed Steel Framing - Header Design."

1.4 SUBMITTALS

A. Product Data: For each type of cold-formed metal framing product and accessory indicated.

B. Shop Drawings: Show layout, spacings, sizes, thicknesses, and types of cold -formed metal framing; fabrication; and fastening and anchorage details, including mechanical fasteners. Show reinforcing channels, opening framing, supplemental framing, strapping, bracing, bridging, splices, accessories, connection details, and attachment to adjoining work.

1. For cold-formed metal framing indicated to comply with design loads, include structural analysis data signed and sealed by the qualified professional engineer responsible for their preparation.

C. Welding certificates.

D. Qualification Data: For professional engineer and testing agency.

E. Product Test Reports: From a qualified testing agency, unless otherwise stated, indicating that each of the following complies with requirements, based on evaluation of comprehensive tests for current products:

1. Steel sheet.
2. Power-actuated anchors.
3. Mechanical fasteners.
4. Vertical deflection clips.
5. Horizontal drift deflection clips
6. Miscellaneous structural clips and accessories.

F. Research/Evaluation Reports: For cold -formed metal framing.

1.5 QUALITY ASSURANCE

A. Engineering Responsibility: Preparation of Shop Drawings, design calculations, and other structural data by a qualified professional engineer.

B. Professional Engineer Qualifications: A professional engineer who is legally qualified to practice in jurisdiction where Project is located and who is experienced in providing engineering services of the kind indicated. Engineering services are defined as those performed for installations of cold -formed metal framing that are similar to those indicated for this Project in material, design, and extent.

C. Testing Agency Qualifications: An independent testing agency, acceptable to authorities having jurisdiction, qualified according to ASTM E 329 to conduct the testing indicated.

D. Product Tests: Mill certificates or data from a qualified independent testing agency , or in-house testing with calibrated test equipment indicating steel sheet complies with requirements, including base-metal thickness, yield strength, tensile strength, total elongation, chemical requirements, ductility, and metallic-coating thickness.

E. Welding: Qualify procedures and personnel according to AWS D1.1/D1.1M, "Structural Welding Code--Steel," and AWS D1.3, "Structural Welding Code--Sheet Steel."

F. Fire-Test-Response Characteristics: Where indicated, provide cold-formed metal framing identical to that of assemblies tested for fire resistance per ASTM E 119 by a testing and inspecting agency acceptable to authorities having jurisdiction.

G. AISI Specifications and Standards: Comply with AISI's "North American Specification for the Design of Cold-Formed Steel Structural Members" and its "Standard for Cold-Formed Steel Framing - General Provisions."

1. Comply with AISI's "Standard for Cold-Formed Steel Framing - Truss Design."
2. Comply with AISI's "Standard for Cold-Formed Steel Framing - Header Design."

H. Comply with AISI's "Standard for Cold-Formed Steel Framing - Prescriptive Method for One and Two Family Dwellings."

I. Preinstallation Conference: Conduct conference at Project site to comply with requirements in Division 1 Section "Project Management and Coordination."

1.6 DELIVERY, STORAGE, AND HANDLING

A. Protect cold-formed metal framing from corrosion, deformation, and other damage during delivery, storage, and handling.

B. Store cold-formed metal framing, protect with a waterproof covering, and ventilate to avoid condensation.

PART 2 - PRODUCTS

2.1 MANUFACTURERS

A. Available Manufacturers: Subject to compliance with requirements, manufacturers offering cold-formed metal framing that may be incorporated into the Work include, but are not limited to, the following:

B. Manufacturers: Subject to compliance with requirements, provide cold-formed metal framing by one of the following:

1. Allied Studco.
2. AllSteel Products, Inc.
3. California Expanded Metal Products Company.
4. Clark Steel Framing.
5. Consolidated Fabricators Corp.; Building Products Division.
6. Craco Metals Manufacturing, LLC.
7. Custom Stud, Inc.

8. Dale/Incor.
9. Design Shapes in Steel.
10. Dietrich Metal Framing; a Worthington Industries Company.
11. Formetal Co. Inc. (The).
12. Innovative Steel Systems.
13. MarinoWare; a division of Ware Industries.
14. Quail Run Building Materials, Inc.
15. SCAFCO Corporation.
16. Southeastern Stud & Components, Inc.
17. Steel Construction Systems.
18. Steeler, Inc.
19. Super Stud Building Products, Inc.
20. United Metal Products, Inc.

2.2 MATERIALS

A. Steel Sheet: ASTM A 1003/A 1003M, Structural Grade, Type H, metallic coated, of grade and coating weight as follows:

1. Grade: As required by structural performance.
2. Coating: G60 or equivalent.

B. Steel Sheet for Vertical Deflection Clips: ASTM A 653/A 653M, structural steel, zinc coated, of grade and coating as follows:

1. Grade: As required by structural performance.
2. Coating: G90.

2.3 LOAD-BEARING WALL FRAMING

A. Steel Studs: Manufacturer's standard C-shaped steel studs, of web depths indicated, punched, with stiffened flanges, and as follows:

1. Minimum Base-Metal Thickness: As indicated.
2. Flange Width: As indicated.
3. Section Properties: As indicated.

B. Steel Track: Manufacturer's standard U-shaped steel track, of web depths indicated, unpunched, with straight flanges, and as follows:

1. Minimum Base-Metal Thickness: As indicated.
2. Flange Width: As indicated.

C. Steel Box or Back-to-Back Headers: Manufacturer's standard C-shapes used to form header beams, of web depths indicated, punched, with stiffened flanges, and as follows:
1. Minimum Base-Metal Thickness: As indicated.
2. Section Properties: As indicated.

D. Steel Double-L Headers: Manufacturer's standard L-shapes used to form header beams, of web depths indicated, and as follows:
1. Minimum Base-Metal Thickness: As indicated.
2. Section Properties: As indicated.

2.4 FLOOR JOIST FRAMING

A. Steel Joists: Manufacturer's standard C-shaped steel joists, of web depths indicated, punched, with stiffened flanges, and as follows:

1. Minimum Base-Metal Thickness: As indicated.
2. Flange Width: As indicated..
3. Section Properties: As indicated.

B. Steel Joist Track: Manufacturer's standard U-shaped steel joist track, of web depths indicated, unpunched, with unstiffened flanges, and as follows:

1. Minimum Base-Metal Thickness: Matching steel joists.
2. Flange Width: 1-5/8 inches, minimum.

2.5 CEILING JOIST FRAMING

A. Steel Ceiling Joists: Manufacturer's standard C-shaped steel sections, of web depths indicated, punched with stiffened flanges, and as follows:

1. Minimum Base-Metal Thickness: As required by design.
2. Flange Width: As required by design.
3. Section Properties: As required by design.

2.6 FRAMING ACCESSORIES

A. Fabricate steel-framing accessories from steel sheet, ASTM A 1003/A 1003M, Structural Grade, Type H, metallic coated, of same grade and coating weight used for framing members.

B. Provide accessories of manufacturer's standard thickness and configuration, u nless otherwise indicated, as follows:

1. Supplementary framing.
2. Bracing, bridging, and solid blocking.
3. Web stiffeners.
4. Anchor clips.
5. End clips.
6. Foundation clips.
7. Gusset plates.
8. Stud kickers, knee braces, and girts.
9. Joist hangers and end closures.
10. Hole reinforcing plates.
11. Backer plates.

2.7 ANCHORS, CLIPS, AND FASTENERS

A. Steel Shapes and Clips: ASTM A 36/A 36M, zinc coated by hot-dip process according to ASTM A 123/A 123M.

B. Anchor Bolts: ASTM F 1554, Grade 36, threaded carbon-steel headless, hooked bolts and carbon-steel nuts; and flat, hardened-steel washers; zinc coated by hot-dip process according to ASTM A 153/A 153M, Class C.

C. Power-Actuated Anchors: Fastener system of type suitable for application indicated, fabricated from corrosion-resistant materials, with capability to sustain, without failure, a load equal to 10 times design load, as determined by testing per ASTM E 1190 conducted by a qualified independent testing agency.

D. Mechanical Fasteners: ASTM C 1513, corrosion-resistant-coated, self-drilling, self-tapping steel drill screws.

1. Head Type: Low-profile head beneath sheathing, manufacturer's standard elsewhere.

E. Welding Electrodes: Comply with AWS standards.

2.8 MISCELLANEOUS MATERIALS

A. Galvanizing Repair Paint: SSPC-Paint 20 or DOD-P-21035.

B. Cement Grout: Portland cement, ASTM C 150, Type I; and clean, natural sand, ASTM C 404. Mix at ratio of 1 part cement to 2-1/2 parts sand, by volume, with minimum water required for placement and hydration.

C. Nonmetallic, Nonshrink Grout: Premixed, nonmetallic, noncorrosive, nonstaining grout containing selected silica sands, portland cement, shrinkage-compensating agents, and plasticizing and water-reducing agents, complying with ASTM C 1107, with fluid consistency and 30-minute working time.

D. Shims: Load bearing, high-density multimonomer plastic, nonleaching.

E. Sealer Gaskets: Closed-cell neoprene foam, 1/4 inch thick, selected from manufacturer's standard widths to match width of bottom track or rim track members.

2.9 FABRICATION

A. Fabricate cold-formed metal framing and accessories plumb, square, and true to line, and with connections securely fastened, according to referenced AISI's specifications and standards, manufacturer's written instructions, and requirements in this Section.

1. Fabricate framing assemblies using jigs or templates.
2. Cut framing members by sawing or shearing; do not torch cut.
3. Fasten cold-formed metal framing members by welding, screw fastening, clinch fastening, or riveting as standard with fabricator. Wire tying of framing members is not permitted.

a. Comply with AWS D1.3 requirements and procedures for welding, appearance and quality of welds, and methods used in correcting welding work.
b. Locate mechanical fasteners and install according to Shop Drawings, with screw penetrating joined members by not less than three exposed screw threads.

4. Fasten other materials to cold-formed metal framing by welding, bolting, or screw fastening, according to Shop Drawings.

B. Reinforce, stiffen, and brace framing assemblies to withstand handling, delivery, and erection stresses. Lift fabricated assemblies to prevent damage or permanent distortion.

C. Fabrication Tolerances: Fabricate assemblies level, plumb, and true to line to a maximum allowable tolerance variation of 1/8 inch in 10 feet and as follows:

1. Spacing: Space individual framing members no more than plus or minus 1/8 inch from plan location. Cumulative error shall not exceed minimum fastening requirements of sheathing or other finishing materials.
2. Squareness: Fabricate each cold-formed metal framing assembly to a maximum out-of-square tolerance of 1/8 inch.

PART 3 - EXECUTION

3.1 EXAMINATION

A. Examine supporting substrates and abutting structural framing for compliance with requirements for installation tolerances and other conditions affecting performance.

1. Proceed with installation only after unsatisfactory conditions have been corrected.

3.2 PREPARATION

A. Before sprayed fire-resistive materials are applied, attach continuous angles, supplementary framing, or tracks to structural members indicated to receive sprayed fire-resistive materials.

B. After applying sprayed fire-resistive materials, remove only as much of these materials as needed to complete installation of cold-formed framing without reducing thickness of fire-resistive materials below that are required to obtain fire-resistance rating indicated. Protect remaining fire-resistive materials from damage.

C. Install load bearing shims or grout between the underside of wall bottom track or rim track and the top of foundation wall or slab at stud or joist locations to ensure a uniform bearing surface on supporting concrete or masonry construction.

D. Install sealer gaskets to isolate the underside of wall bottom track or rim track and the top of foundation wall or slab at stud or joist locations.

3.3 INSTALLATION, GENERAL

A. Cold-formed metal framing may be shop or field fabricated for installation, or it may be field assembled.

B. Install cold-formed metal framing according to AISI's "Standard for Cold-Formed Steel Framing - General Provisions" and to manufacturer's written instructions unless more stringent requirements are indicated.

C. Install shop- or field-fabricated, cold-formed framing and securely anchor to supporting structure.

1. Screw, bolt, or weld wall panels at horizontal and vertical junctures to produce flush, even, true-to-line joints with maximum variation in plane and true position between fabricated panels not exceeding 1/16 inch.

D. Install cold-formed metal framing and accessories plumb, square, and true to line, and with connections securely fastened.

1. Cut framing members by sawing or shearing; do not torch cut.
2. Fasten cold-formed metal framing members by welding, screw fastening, clinch fastening, or riveting. Wire tying of framing members is not permitted.

a. Comply with AWS D1.3 requirements and procedures for welding, appearance and quality of welds, and methods used in correcting welding work.
b. Locate mechanical fasteners and install according to Shop Drawings, and complying with requirements for spacing, edge distances, and screw penetration.

E. Install framing members in one-piece lengths unless splice connections are indicated for track or tension members.

F. Install temporary bracing and supports to secure framing and support loads comparable in intensity to those for which structure was designed. Maintain braces and supports in place, undisturbed, until entire integrated supporting structure has been completed and permanent connections to framing are secured.

G. Do not bridge building expansion and control joints with cold-formed metal framing. Independently frame both sides of joints.

H. Install insulation, specified in Division 7 Section "Building Insulation," in built-up exterior framing members, such as headers, sills, boxed joists, and multiple studs at openings, that are inaccessible on completion of framing work.

I. Fasten hole reinforcing plate over web penetrations that exceed size of manufacturer's standard punched openings.

J. Erection Tolerances: Install cold-formed metal framing level, plumb, and true to line to a maximum allowable tolerance variation of 1/8 inch in 10 feet and as follows:

1. Space individual framing members no more than plus or minus 1/8 inch from plan location. Cumulative error shall not exceed minimum fastening requirements of sheathing or other finishing materials.

3.4 LOAD-BEARING WALL INSTALLATION

A. Install continuous top and bottom tracks sized to match studs. Align tracks accurately and securely anchor at corners and ends, and at spacings as follows:

1. Anchor Spacing: As indicated.

B. Squarely seat studs against top and bottom tracks with gap not exceeding of 1/8 inch between the end of wall framing member and the web of track. Fasten both flanges of studs to top and bottom tracks. Space studs as follows:

1. Stud Spacing: 16 inches.

C. Set studs plumb, except as needed for diagonal bracing or required for nonplumb walls or warped surfaces and similar configurations.

D. Align studs vertically where floor framing interrupts wall-framing continuity. Where studs cannot be aligned, continuously reinforce track to transfer loads.

E. Align floor and roof framing over studs. Where framing cannot be aligned, continuously reinforce track to transfer loads.

F. Anchor studs abutting structural columns or walls, including masonry walls, to supporting structure as indicated.

G. Install headers over wall openings wider than stud spacing. Locate headers above openings as indicated. Fabricate headers of compound shapes indicated or required to transfer load to supporting studs, complete with clip-angle connectors, web stiffeners, or gusset plates.

1. Frame wall openings with not less than a double stud at each jamb of frame as indicated on Shop Drawings. Fasten jamb members together to uniformly distribute loads.
2. Install runner tracks and jack studs above and below wall openings. Anchor tracks to jamb studs with clip angles or by welding, and space jack studs same as full-height wall studs.

H. Install supplementary framing, blocking, and bracing in stud framing indicated to support fixtures, equipment, services, casework, heavy trim, furnishings, and similar work requiring attachment to framing.

1. If type of supplementary support is not indicated, comply with stud manufacturer's written recommendations and industry standards in each case, considering weight or load resulting from item supported.

I. Install horizontal bridging in stud system, spaced 48 inches. Fasten at each stud intersection.

1. Bridging: Cold-rolled steel channel, welded or mechanically fastened to webs of punched studs with a minimum of 2 screws into each flange of the clip angle for framing members up to 6 inches deep.
2. Bridging: Combination of flat, taut, steel sheet straps of width and thickness indicated and stud-track solid blocking of width and thickness to match studs. Fasten flat straps to stud flanges and secure solid blocking to stud webs or flanges.
3. Bridging: Proprietary bridging bars installed according to manufacturer's written instructions.

J. Install steel sheet diagonal bracing straps to both stud flanges, terminate at and fasten to reinforced top and bottom tracks. Fasten clip-angle connectors to multiple studs at ends of bracing and anchor to structure.

K. Install miscellaneous framing and connections, including supplementary framing, web stiffeners, clip angles, continuous angles, anchors, and fasteners, to provide a complete and stable wall-framing system.

3.5 JOIST INSTALLATION

A. Install perimeter joist track sized to match joists. Align and securely anchor or fasten track to supporting structure at corners, ends, and spacings indicated on Shop Drawings.

B. Install joists bearing on supporting frame, level, straight, and plumb; adjust to final position, brace, and reinforce. Fasten joists to both flanges of joist track.

1. Install joists over supporting frame with a minimum end bearing of 3 inches.
2. Reinforce ends and bearing points of joists with web stiffeners, end clips, joist hangers, steel clip angles, or steel-stud sections as indicated on Shop Drawings.

C. Space joists not more than 2 inches from abutting walls, and as follows:

1. Joist Spacing: As indicated.

D. Frame openings with built-up joist headers consisting of joist and joist track, nesting joists, or another combination of connected joists if indicated.

E. Install joist reinforcement at interior supports with single, short length of joist section located directly over interior support, with lapped joists of equal length to joist reinforcement, or as indicated.

1. Install web stiffeners to transfer axial loads of walls above.

F. Install bridging at intervals indicated on Shop Drawings. Fasten bridging at each joist intersection as follows:

1. Bridging: Joist-track solid blocking of width and thickness indicated, secured to joist webs.
2. Bridging: Combination of flat, taut, steel sheet straps of width and thickness indicated and joist-track solid blocking of width and thickness indicated. Fasten flat straps to bottom flange of joists and secure solid blocking to joist webs.

G. Secure joists to load-bearing interior walls to prevent lateral movement of bottom flange.

H. Install miscellaneous joist framing and connections, including web stiffeners, closure pieces, clip angles, continuous angles, hold-down angles, anchors, and fasteners, to provide a complete and stable joist-framing assembly.

3.6 FIELD QUALITY CONTROL

A. Testing: Owner will engage a qualified independent testing and inspecting agency to perform field tests and inspections and prepare test reports.

B. Field and shop welds will be subject to testing and inspecting.

C. Testing agency will report test results promptly and in writing to Contractor and Architect.

D. Remove and replace work where test results indicate that it does not comply with specified requirements.

E. Additional testing and inspecting, at Contractor's expense, will be performed to determine compliance of replaced or additional work with specified requirements.

3.7 REPAIRS AND PROTECTION

A. Galvanizing Repairs: Prepare and repair damaged galvanized coatings on fabricated and installed cold-formed metal framing with galvanized repair paint according to ASTM A 780 and manufacturer's written instructions.

B. Provide final protection and maintain conditions, in a manner acceptable to manufacturer and Installer, that ensure that cold-formed metal framing is without damage or deterioration at time of Substantial Completion.

END OF SECTION 05400

SECTION 05500 - METAL FABRICATIONS

PART 1 - GENERAL

1.1 RELATED DOCUMENTS

A. Drawings and general provisions of the Contract, including General and Supplementary Conditions and Division 1 Specification Sections, apply to this Section.

1.2 SUMMARY

A. This Section includes the following metal fabrications:
B. Rough hardware.
C. Loose bearing and leveling plates.
D. Shelf and relieving angles.
E. Miscellaneous framing and supports for the following:

1. Overhead doors.
2. Hoist track and bracing. (Provided under Section 14620)
3. Applications where framing and supports are not specified in other sections.
4. Miscellaneous steel trim, including the following:

a. Edgings.
b. Loading dock edge angles.
c. Floor plate and supports.
d Pipe guards.
e. Pipe bollards.

F. Related Sections: The following Sections contain requirements that relate to this Section:

1. Division 5 Section 05521 "Pipe and Tube Railings" for steel pipe and tube railing systems.
2. Division 5 Section 05510 ”Metal Stairs»for metal framed stairs with metal pan, metal plate or grating treads and for pipe and railing systems.
3. Division 5 Section 05530 "Gratings" for metal gratings and frames.

1.3 SUBMITTALS

A. General: Submit each item in this Article according to the Conditions of the Contract and Division 1 Specification Sections.

B. Product data for prefabricated building columns, steel floor plate, paint p roducts and grout.

C. Shop drawings detailing fabrication and erection of each metal fabrication indicated. Include plans, elevations, sections, and details of metal fabrications and their connections. Show anchorage and accessory items. Provide templa tes for anchors and bolts specified for installation under other Sections.
D. Samples representative of materials and finished products as may be requested by Architect.

E. Welder certificates signed by Contractor certifying that welders comply with requi rements specified under the "Quality Assurance" Article.

F. Qualification data for firms and persons specified in the "Quality Assurance" Article to demonstrate their capabilities and experience. Include a list of completed projects with project name, addresses, names of architects and owners, and other information specified.

1.4 QUALITY ASSURANCE

A. Fabricator Qualifications: Firm experienced in producing metal fabrications similar to those indicated for this Project with a record of successful in-service performance, and with sufficient production capacity to produce required units without delaying the Work.

B. Welding Standards: Comply with applicable provisions of AWS D1.1 "Structural Welding Code--Steel," AWS D1.2 "Structural Welding Code--Aluminum," and AWS D1.3 "Structural Welding Code--Sheet Steel."

1. Certify that each welder has satisfactorily passed AWS qualification tests for welding processes involved and, if pertinent, has undergone recertification.

1.5. PROJECT CONDITIONS

A. Field Measurements: Check actual locations of walls and other construction to which metal fabrications must fit by accurate field measurements before fabrication. Show recorded measurements on final shop drawings. Coordinate fabrication schedule with construction progress to avoid delaying the Work.

1. Where field measurements cannot be made without delaying the Work, guarantee dimensions and proceed with fabricating products without field measurements. Coordinate construction to ensure that actual dimensions correspond to guaranteed dimensions. Allow for trimming and fitting.

PART 2 - PRODUCTS

2.1 FERROUS METALS

A. Metal Surfaces, General: For metal fabrications exposed to view in the completed Work, provide materials selected for their surface flatness, smoothness, and freedom from surface blemishes. Do not use materials with exposed pitting, seam marks, roller marks, rolled trade names, or roughness.

B. Wide Flange Shapes: ASTM A992 (50ksi)

C. Other Shapes, Plates and Bars: ASTM A 36/A 36M.

D. Rolled Steel Floor Plates: ASTM A 786/A 786M.

E. Steel Tubing: Product type (manufacturing method) and as follows:

1. Cold-Formed Steel Tubing: ASTM A 500.
   a. For exterior installations and where indicated, provide tubing with hot-dip galvanized coating per ASTM A 53.

F. Steel Pipe: ASTM A 53, standard weight (schedule 40), unless otherwise indicated, or another weight required by structural loads.

1. Galvanized finish for exterior installations and where indicated.

G. Gray-Iron Castings: ASTM A 48, Class 30.

H. Malleable-Iron Castings: ASTM A 47, Grade 32510 (ASTM A 47M, Grade 22010).

I. Cast-in-Place Anchors in Concrete: Anchors of type indicated below, fabricated from

corrosion-resistant materials capable of sustaining, without failure, the load imposed within a safety factor of 4, as determined by testing per ASTM E 488, conducted by a qualified independent testing agency.

1. Threaded or wedge type; galvanized ferrous castings, either ASTM A 47 (ASTM A 47M) malleable iron or ASTM A 27/A 27M cast steel. Provide bolts, washers, and shims as required, hot-dip galvanized per ASTM A 153.

J. Welding Rods and Bare Electrodes: Select according to AWS specifications for the metal alloy to be welded.

2.2 ALUMINUM

A. Aluminum Extrusions: ASTM B 221 (ASTM B 221M), alloy 6063-T6.

B. Aluminum-Alloy Rolled Tread Plate: ASTM B 632 (ASTM B 632M) Pattern 1, alloy 6061-T6.

2.3 PAINT

A. Shop Primer for Ferrous Metal: Fast-curing, lead- and chromate-free, universal modified-alkyd primer complying with performance requirements of FS TT-P-664, selected for good resistance to normal atmospheric corrosion, compatibility with finish paint systems indicated, and capability to provide a sound foundation for field-applied topcoats despite prolonged exposure.

B. Galvanizing Repair Paint: High-zinc-dust-content paint for regalvanizing welds in galvanized steel, with dry film containing not less than 94 percent zinc dust by weight, and complying with DOD-P-21035 or SSPC-Paint 20.

C. Bituminous Paint: Cold-applied asphalt mastic complying with SSPC-Paint 12, except containing no asbestos fibers.

2.4 FASTENERS

A. General: Provide plated fasteners complying with ASTM B 633, Class Fe/Zn 25 for electrodeposited zinc coating, for exterior use or where built into exterior walls. Select fasteners for the type, grade, and class required.

B. Bolts and Nuts: Regular hexagon-head bolts, ASTM A 307, Grade A (ASTM F 568, Property Class 4.6), with hex nuts, ASTM A 563 (ASTM A 563M), and, where indicated, flat washers.

C. Machine Screws: ANSI B18.6.3.

D. Lag Bolts: ANSI B18.2.1 (ANSI B18.2.3.8M).

E. Wood Screws: Flat head, carbon steel, ANSI B18.6.1.

F. Plain Washers: Round, carbon steel, ANSI B18.22.1 (ANSI B18.22M).

G. Lock Washers: Helical, spring type, carbon steel, ANSI B18.21.1.

H. Expansion Anchors: Anchor bolt and sleeve assembly of material indicated below with capability to sustain, without failure, a load equal to 6 times the load imposed when installed in unit masonry and equal to 4 times the load imposed when installed in concrete as determined by testing per ASTM E 488 conducted by a qualified independent testing agency.

1. Material: Carbon steel components zinc-plated to comply with ASTM B 633, Class

Fe/Zn 5.

2. Material: Group 1 alloy 304 or 316 stainless-steel bolts and nuts complying with ASTM F 593 (ASTM F 738M) and ASTM F 594 (ASTM F 836M).

I. Toggle Bolts: FS FF-B-588, tumble-wing type, class and style as required.

2.5 GROUT

A. Nonshrink, Nonmetallic Grout: Factory-packaged, nonstaining, noncorrosive, nongaseous grout complying with ASTM C 1107. Provide grout specifically recommended by manufacturer for interior and exterior applications.

B. Available Products: Subject to compliance with requirements, products that may be incorporated in the Work include, but are not limited to, the following:

1. Nonshrink, Nonmetallic Grouts:

a. B-6 Construction Grout; W. R. Bonsal Co.
b. Euco N-S Grout; Euclid Chemical Co.
c. Five Star Grout; Five Star Products.
d. Crystex; L & M Construction Chemicals, Inc.
e. Masterflow 928 and 713; Master Builders Technologies, Inc.

2.6 CONCRETE FILL

A. Concrete Materials and Properties: Comply with requirements of Division 3 Section "Cast-in-Place Concrete" for normal-weight, air-entrained, ready-mix concrete with a minimum 28-day compressive strength of 3000 psi (20 MPa), unless higher strengths are indicated.

2.7 FABRICATION, GENERAL

A. Form metal fabrications from materials of size, thickness, and shapes indicated but not less than that needed to comply with performance requirements indicated. Work to dimensions indicated or accepted on shop drawings, using proven details of fabrication and support. Use type of materials indicated or specified for various components of each metal fabrication.

B. Form exposed work true to line and level with accurate angles and surfaces and straight sharp edges.

C. Allow for thermal movement resulting from the following maximum change (range) in ambient temperature in the design, fabrication, and installation of installed metal assemblies to prevent buckling, opening up of joints, and overstressing of welds and fasteners. Base design calculations on actual surface temperatures of metals due to both solar heat gain and nighttime sky heat loss.

1. Temperature Change (Range): 100 deg F (55.5 deg C).

D. Shear and punch metals cleanly and accurately. Remove burrs.

E. Ease exposed edges to a radius of approximately 1/32 inch (1 mm), unless otherwise indicated. Form bent-metal corners to smallest radius possible without causing grain separation or otherwise impairing work.

F. Remove sharp or rough areas on exposed traffic surfaces.

G. Weld corners and seams continuously to comply with the following:

1. Use materials and methods that minimize distortion and develop strength and corrosion resistance of base metals.
2. Obtain fusion without undercut or overlap.
3. Remove welding flux immediately.
4. At exposed connections, finish exposed welds and surfaces smooth and blended so that no roughness shows after finishing, and contour of welded surface matches those adjacent.

H. Form exposed connections with hairline joints, flush and smooth, using concealed fasteners wherever possible. Use exposed fasteners of type indicated or, if not indicated, Phillips flat-head (countersunk) screws or bolts. Locate joints where least conspicuous.

I. Provide for anchorage of type indicated; coordinate with supporting structure. Fabricate and space anchoring devices to secure metal fabrications rigidly in place and to support indicated loads.

J. Shop Assembly: Preassemble items in shop to greatest extent possible to minimize field splicing and assembly. Disassemble units only as necessary for shipping and handling limitations. Use connections that maintain structural value of joined pieces. Clearly mark units for reassembly and coordinated installation.

K. Cut, reinforce, drill, and tap metal fabrications as indicated to receive finish hardware, screws, and similar items.

L. Fabricate joints that will be exposed to weather in a manner to exclude water, or provide weep holes where water may accumulate.

2.8 ROUGH HARDWARE

A. Furnish bent, or otherwise custom-fabricated, bolts, plates, anchors, hangers, dowels, and other miscellaneous steel and iron shapes as required for framing and supporting woodwork, and for anchoring or securing woodwork to concrete or other structures. Straight bolts and other stock rough hardware items are specified in Division 6 Sections.

B. Fabricate items to sizes, shapes, and dimensions required. Furnish malleable-iron washers for heads and nuts that bear on wood structural connections, and furnish steel washers elsewhere.

2.9 LOOSE BEARING AND LEVELING PLATES

A. Provide loose bearing and leveling plates for steel items bearing on masonry or concrete construction, made flat, free from warps or twists, and of the required thickness and bearing area. Drill plates to receive anchor bolts and for grouting as required. Galvanize after fabrication.

2.10 MISCELLANEOUS FRAMING AND SUPPORTS

A. General: Provide steel framing and supports for applications indicated that are not a part of structural steel framework as required to complete the Work.

B. Fabricate units to sizes, shapes, and profiles indicated and required to receive other adjacent construction retained by framing and supports. Fabricate from structural steel shapes, plates, and steel bars of welded construction using mitered joints for field connection. Cut, drill, and tap units to receive hardware, hangers, and similar items.

1. Equip units with integrally welded anchors for casting into concrete or building into

masonry. Furnish inserts if units must be installed after concrete is placed.

a. Except as otherwise indicated, space anchors 24 inches (600 mm) o.c. and provide minimum anchor units in the form of steel straps 1-1/4 inches (32 mm) wide by 1/4 inch (6 mm) thick by 8 inches (200 mm) long.

C. Galvanize miscellaneous framing and supports at exterior and interior locations.

2.11 FLOOR PLATE

A. Fabricate raised-pattern floor plates from rolled-steel floor plat of thickness and in pattern indicated below:

1. Thickness: 1/2 inch.
2. Pattern: As selected from manufacturer's standard patterns.

2.12 MISCELLANEOUS STEEL TRIM

A. Unless otherwise indicated, fabricate units from structural steel shapes, plates, and bars of profiles shown with continuously welded joints, and smooth exposed edges. Miter corners and use concealed field splices wherever possible.

B. Provide cutouts, fittings, and anchorages as required to coordinate assembly and installation with other work. Provide anchors, welded to trim, for embedding in concrete or masonry construction, spaced not more than 6 inches (150 mm) from each end, 6 inches (150 mm) from corners, and 24 inches (600 mm) o.c., unless otherwise indicated.

C. Galvanize miscellaneous steel trim at exterior and interior locations.

2.13 **CHAIN NOT REQUIRED THIS PROJECT.**

~~A. Provide electric-welded, heat-treated alloy steel chain and hooks at sander racks.~~

~~1. Lead capacity: 1,500 pounds per chain.~~

2.14 FINISHES, GENERAL

A. Comply with NAAMM "Metal Finishes Manual" for recommendations relative to applying and designing finishes.

B. Finish metal fabrications after assembly.

2.15 STEEL AND IRON FINISHES

A. Galvanizing: For those items indicated for galvanizing, apply zinc coating by the hot-dip process complying with the following requirements:

1. ASTM A 153 for galvanizing iron and steel hardware.
2. ASTM A 123 for galvanizing both fabricated and unfabricated iron and steel products made of uncoated rolled, pressed, and forged shapes, plates, bars, and strip 0.0299 inch (0.76 mm) thick or thicker.

B. Preparation for Shop Priming: Prepare uncoated ferrous metal surfaces to comply with minimum requirements indicated below for SSPC surface preparation specifications and environmental exposure conditions of installed metal fabrications:

1. Exteriors (SSPC Zone 1B): SSPC-SP 6 "Commercial Blast Cleaning."
2. Interiors (SSPC Zone 1A): SSPC-SP 3 "Power Tool Cleaning."

C. Apply shop primer to uncoated surfaces of metal fabrications, except those with galvanized finishes or to be embedded in concrete, sprayed-on fireproofing, or masonry, unless otherwise indicated. Comply with requirements of SSPC-PA 1 "Paint Application Specification No. 1" for shop painting.

PART 3 - EXECUTION

3.1 PREPARATION

A. Coordinate and furnish anchorages, setting drawings, diagrams, templates, instructions, and directions for installing anchorages, including concrete inserts, sleeves, anchor bolts, and miscellaneous items having integral anchors that are to be embedded in concrete or masonry construction. Coordinate delivery of such items to Project site.

3.2 INSTALLATION, GENERAL

A. Fastening to In-Place Construction: Provide anchorage devices and fasteners where necessary for securing miscellaneous metal fabrications to in-place construction. Include threaded fasteners for concrete and masonry inserts, toggle bolts, through-bolts, lag bolts, wood screws, and other connectors as required.

B. Cutting, Fitting, and Placement: Perform cutting, drilling, and fitting required for installing miscellaneous metal fabrications. Set metal fabrication accurately in location, alignment, and elevation; with edges and surfaces level, plumb, true, and free of rack; and measured from established lines and levels.

C. Provide temporary bracing or anchors in formwork for items that are to be built into concrete masonry or similar construction.

D. Fit exposed connections accurately together to form hairline joints. Weld connections that are not to be left as exposed joints but cannot be shop-welded because of shipping size limitations. Do not weld, cut, or abrade the surfaces of exterior units that have been hot-dip galvanized after fabrication and are intended for bolted or screwed field connections.

E. Field Welding: Comply with the following requirements:

1. Use materials and methods that minimize distortion and develop strength and corrosion resistance of base metals.
2. Obtain fusion without undercut or overlap.
3. Remove welding flux immediately.
4. At exposed connections, finish exposed welds and surfaces smooth and blended so that no roughness shows after finishing, and contour of welded surface matches those adjacent.

F. Corrosion Protection: Coat concealed surfaces of aluminum that will come into contact with grout, concrete, masonry, wood, or dissimilar metals with a heavy coat of bituminous paint.

3.3 SETTING LOOSE PLATES

A. Clean concrete and masonry bearing surfaces of bond-reducing materials, and roughen to improve bond to surfaces. Clean bottom surface of bearing plates.

B. Set loose leveling and bearing plates on wedges or other adjustable devices. After the bearing members have been positioned and plumbed, tighten the anchor bolts. Do not remove wedges or shims, but if protruding, cut off flush with the edge of the bearing plate

before packing with grout.

1. Pack grout solidly between bearing surfaces and plates to ensure that no voids remain.

3.4 INSTALLING PIPE BOLLARDS

A. Anchor bollards in concrete as indicated on drawings.

B. Fill bollards solidly with concrete, mounding top surface.

3.5 ADJUSTING AND CLEANING

A. Touchup Painting: Immediately after erection, clean field welds, bolted connections, and abraded areas of shop paint, and paint exposed areas with same material as used for shop painting to comply with SSPC-PA 1 requirements for touching up shop-painted surfaces.

1. Apply by brush or spray to provide a 2.0-mil (0.05-mm) minimum dry film thickness.

B. Touchup Painting: Cleaning and touchup painting of field welds, bolted connections, and abraded areas of the shop paint on miscellaneous metal is specified in Division 9 Section "Painting."

C. For galvanized surfaces, clean welds, bolted connections, and abraded areas, and apply galvanizing repair paint to comply with ASTM A 780.

END OF SECTION 05500

SECTION 06105 - MISCELLANEOUS CARPENTRY

PART 1 - GENERAL

1.1 RELATED DOCUMENTS

A. Drawings and general provisions of the Contract, including General a nd Supplementary Conditions and Division 1 Specification Sections, apply to this Section.

1.2 SUMMARY

A. This Section includes the following:

1. Rough carpentry work not specified elsewhere and generally intended for support of other work.
2. Sheathing.
3. Miscellaneous blocking, grounds, nailers, and panels.

B. Related Sections: The following Sections contain requirements that relate to this Section:
1. Division 6 Section "Interior Architectural Woodwork" for interior casework elements specially fabricated for this Project.

1.3 SUBMITTALS

A. General: Submit the following according to Conditions of Contract and Division 1 Specification Sections.

B. Wood treatment data from chemical treatment manufacturer. I nclude chemical treatment manufacturer's instructions for handling, storing, installing, and finishing treated material.

1. Preservative Treatment: Include certification by treatment plant stating type of solution and pressure proc ess used, net amount of preservative retained, and compliance with applicable standards.
2. Waterborne Preservative Treatment: Include certification that moisture content of treated wood was reduced to levels specified prior to ship ment to Project site.
3. Fire-Retardant Treatment: Include certification by treating plant that treated wood complies with specified requirements.
4. Warranty: Include warranty of chemical treatment manufactu rer for each type of treatment.

1.4 DELIVERY, STORAGE, AND HANDLING

A. Delivery and Storage: Keep materials under cover and dry. Protect against exposure to weather and contact with damp or wet surfaces. Stack material above ground level on uniformly spaced supports to prevent deformation.
1. For material pressure treated with waterborne chemicals, place spacers between each bundle for air circulation.

PART 2 - PRODUCTS

2.1 LUMBER, GENERAL

A. Standards: Furnish lumber manufactured to comply with PS 20 "American Softwood Lumber Standard" and graded in accordance with the Western Lumber Grading Rules (WWPA).

B. Grade Stamps: Furnish lumber with each piece factory-marked with grade stamp of inspection agency that indicates grading agency, grade, species, moisture content at time of surfacing, and mill.

C. Sizes: Provide nominal sizes indicated, complying with PS 20 except where actual sizes are specifically noted as being required.

D. Surfacing: Dressed lumber, S4S, unless otherwise indicated.

E. Kiln-dry material after treatment to a maximum moisture content of 19 percent for lumber and 15 percent for plywood. Do not use material that is warped or does not comply with requirements for untreated material.

2.2 DIMENSION LUMBER FOR CONCEALED CONDITIONS

A. Species: Douglas-fir.

B. Moisture Content: S-DRY, KD 19 or MC 19 (19 percent maximum moisture content).

C. Grade: No. 2 or better.

2.3 CONSTRUCTION PANELS

A. Standards: Comply with requirements of PS 1 Voluntary Product Standard "Construction and Industrial Plywood" for veneer plywood and APA PRP-108 "Performance Standards and Policies for Structural-Use Panels" for performance-rated panels.

1. Trademark: Furnish construction panels that are each factory-marked with APA trademark for grade specified.

C. Miscellaneous Exposed Interior Plywood Wall Panels: DOC PS 1, C-D Interior, thickness as indicated.

D. Electrical/Telephone Backing Panels: APA-RATED SHEATHING, Exposure 1, fire-retardant treated, thickness as indicated but not less than 15/32 in ch.

2.4 FASTENERS

A. General: Provide fasteners with a hot-dip zinc coating per ASTM A 153 or of AISI Type 304 stainless steel.

B. Nails, Wire, Brads and Staples: FS FF-N-105.

C. Bolts: ASTM A 307, Grade A; with ASTM A 563 hex nuts and flat washers.

2.5 PRESERVATIVE WOOD TREATMENT BY PRESSURE PROCESS

A. General: Obtain preservative-treated lumber complying with AWPA Standard C2. Mark each treated item with AWPB or SPIB Quality Mark Requirements. Coat surfaces cut after treatment to comply with AWPA M4.

B. Above-Ground Wood Treatment: Pressure treat with CCAC preservatives to a minimum retention of 0.25 pcf.
1. Kiln-dry interior dimension lumber after treatment to 19 percent maximum moisture content.
2. Treat wood items indicated and in the following circumstances:
a. In contact with roofing, flashing, or waterproofing.

b. In contact with masonry or concrete.
c. Within 18 inches of grade.

2.6 FIRE RETARDANT TREATMENT BY PRESSURE PROCESS

A. General: Identify treated wood with appropriate classification marking of Underwriters Laboratories Inc. or other testing and inspection agency acceptable to authorities having jurisdiction.

PART 3 - EXECUTION

3.1 INSTALLATION, GENERAL

A. Discard units of material with defects that impair quality of miscellaneous carpentry and in sizes that would require an excessive number or poor arrangement of joints.

B. Cut and fit miscellaneous carpentry accurately. Install members plumb and true to line and level.

C. Coat cut edges of preservative-treated wood to comply with AWPA M4.

D. Securely fasten miscellaneous carpentry as indicated and according to applicable codes and recognized standards.

E. Use fasteners of appropriate type and length. Pre-drill members when necessary to avoid splitting wood.

3.2 WOOD GROUNDS, NAILERS, BLOCKING, AND SLEEPERS

A. Install where shown and where required for screeding or attachment of other work. Cut and shape to required size. Coordinate location with other work involved.

B. Attach to substrates as required to support applied loading. Countersink bolts and nuts flush with surfaces, unless otherwise indicated.

END OF SECTION 06105

SECTION 06402 - INTERIOR ARCHITECTURAL WOODWORK

PART 1 - GENERAL

1.1 RELATED DOCUMENTS

A. Drawings and general provisions of Contract, including General and Supplementary Conditions and Division 1 Specification Sections, apply to this Section.

1.2 SUMMARY

A. This Section includes the following:

1. Laminate clad cabinets (plastic-covered casework).

B. Related Sections: The following sections contain requirements that relate to this section:

1. Division 6 Section "Miscellaneous Carpentry" for furring, blocking, exposed interior plywood panels, and other carpentry work which may or may not be exposed to view.

1.3 SUBMITTALS

A. General: Submit the following in accordance with Conditions of Contract and Division 1 Specification Sections.

B. Shop drawings showing location of each item, dimensioned plans and elevations, large-scale details, attachment devices, and other components.

C. Samples for initial selection purposes of the following in form of manufacturer's color charts consisting of actual units or sections of units showing full range of colors, textures, and patterns available for each type of material indicated.

1. Plastic laminate.

D. Samples for verification purposes of the following:

1. Laminate clad panel products, manufacturer standard sample for each type, color, pattern, and surface finish.
2. Corner pieces as follows:

a. Cabinet front frame joints between stiles and rail as well as exposed end pieces, 18 inches high by 18 inches wide by 6 inches deep.

3. Exposed cabinet hardware, one unit of each type and finish.

E. Product certificates signed by woodwork manufacturer certifying that products comply with specified requirements.

F. Qualification data for firms and persons specified in "Quality Assurance" article to demonstrate their capabilities and experience. Include list of completed projects with project names, addresses, names of Architects and Owners, and other information specified.

1.4 QUALITY ASSURANCE

A. Manufacturer Qualifications: Firm experienced in successfully producing architectural woodwork similar to that indicated for this Project, with sufficient production capacit y to produce required units without causing delay in the Work.

B. Single-Source Manufacturing and Installation Responsibility: Engage a qualified Manufacturer to assume undivided responsibility for woodwork specified in this se ction, including fabrication, finishing, and installation.

C. Installer Qualifications: Arrange for installation of architectural woodwork by a firm that can demonstrate successful experience in installing architectural woodwor k items similar in type and quality to those required for this project.

D. AWI Quality Standard: Comply with applicable requirements of "Architectural Woodwork Quality Standards" published by the Architectural Woodwork Institut e (AWI) except as otherwise indicated.

1.5 DELIVERY, STORAGE, AND HANDLING

A. Protect woodwork during transit, delivery, storage, and handling to prevent damage, soilage, and deterioration.

B. Do not deliver woodwork until painting, wet work, grinding, and similar operations that could damage, soil, or deteriorate woodwork have been completed in installation areas. If woodwork must be stored in other th an installation areas, store only in areas whose environmental conditions meet requirements specified in "Project Conditions."

1.6 PROJECT CONDITIONS

A. Environmental Conditions: Obtain and comply with Woodwork Manufacturer's and Installer's coordinated advice for optimum temperature and humidity conditions for woodwork during its storage and installation. Do not install woodwork until these conditions have been attained and stabilized so that woodwork is within plus or minus 1.0 percent of optimum moisture content from date of installation through remainder of construction period.

B. Field Measurements: Where woodwork is indicated to be fitted to othe r construction, check actual dimensions of other construction by accurate field measurements before manufacturing woodwork; show recorded measurements on final shop drawings. Coordinate manufacturing schedule with construction progress to avoid delay of W ork.

1. Where field measurements cannot be made without delaying the Work, guarantee dimensions and proceed with manufacture of woodwork without field measurements. Coordinate other construction to ensure that actual dimensions c orrespond to guaranteed dimensions.

PART 2 - PRODUCTS

2.1 HIGH PRESSURE DECORATIVE LAMINATE MANUFACTURERS

A. Available Manufacturers: Subject to compli ance with requirements, manufacturers offering high pressure decorative laminates which may be incorporated in the work include but are not limited to the following:

1. Formica Corp.
2. Nevamar Corp.

3. Ralph Wilson Plastics Co.
4. Wilsonart

2.2 MATERIALS

A. General: Provide materials that comply with requirements of the AWI woodworking standard for each type of woodwork and quality grade indicated and, where the following products are part of woodwork, with requirements of the referenced product standards, that apply to product characteristics indicated:

1. Hardboard: ANSI/AHA A135.4
2. High Pressure Laminate: NEMA LD 3.
3. Particleboard: ANSI A208.1

2.3 FABRICATION, GENERAL

A. Wood Moisture Content: Comply with requirements of referenced quality standard for moisture content of lumber in relation to relative humidity conditions existing during time of fabrication and in installation areas.

B. Fabricate woodwork to dimensions, profiles, and details indicated. Ease edges to radius indicated for the following:

1. Edges of solid wood (lumber) members less than 1 inch in nominal thickness: 1/16 inch.
2. Edges of rails and similar members more than 1 inch in nominal thickness: 1/8 inch.

C. Complete fabrication, including assembly, finishing, and hardware application, before shipment to project site to maximum extent possible. Disassemble components only as necessary for shipment and installation. Where necessary for fitting at site, provide ample allowance for scribing, trimming, and fitting.

D. Factory-cut openings, to maximum extent possible, to receive hardware, appliances, plumbing fixtures, electrical work, and similar items. Locate openings accurately and use templates or roughing-in diagrams to produce accurately sized and shaped openings. Smooth edges of cutouts and, where located in countertops and similar exposures, seal edges of cutouts with a water-resistant coating.

2.4 LAMINATE CLAD CABINETS (PLASTIC-COVERED CASEWORK)

A. Quality Standard: Comply with AWI Section 400 and its Division 400B "Laminate Clad Cabinets."

B. Grade: Custom.

C. AWI Type of Cabinet Construction: Flush overlay.

D. Laminate Cladding: High pressure decorative laminate complying with the following requirements:

1. Colors, Patterns, and Finishes: Provide materials and products that result in colors and textures of exposed laminate surfaces complying with the following requirements:

a. Match Architect's sample.

2. Laminate Grade for Exposed Surfaces: Provide laminate cladding complying with the following requirements for type of surface and grade.

   a. Horizontal Surfaces Other Than Tops: GP-50 (0.050-inch nominal thickness).
   b. Post-formed Surfaces: PF-42 (0.042-inch nominal thickness).
   c. Vertical Surfaces: GP-50 (0.050-inch nominal thickness).
   d. Edges: GP-50 (0.050-inch nominal thickness).

3. Semi-exposed Surfaces: Provide surface materials indicated below:

   a. High pressure laminate, GP-28.

E. Provide dust panels of 1/4-inch plywood or tempered hardboard above compartments and drawers except where located directly under tops.

2.5 CABINET HARDWARE AND ACCESSORY MATERIALS

A. General: Provide cabinet hardware and accessory materials associated with architectural cabinets, except for items specified in Division 8 Section "Finish Hardware."

B. Cabinet Hardware Schedule: Refer to schedule at end of this section for cabinet hardware required for architectural cabinets.

C. Exposed Hardware Finishes: For exposed hardware, provide finish that complies with ANSI/BHMA A156.18 for BHMA code number indicated.

1. Satin Stainless Steel, Stainless Steel Base: BHMA 630.

D. For concealed hardware provide manufacturer's standard finish that complies with product class requirements of ANSI/BHMA A156.9.

2.6 FASTENERS AND ANCHORS

A. Screws: Select material, type, size, and finish required for each use. Comply with FS FF-S-111 for applicable requirements.

1. For metal framing supports, provide screws as recommended by metal framing manufacturer.

B. Nails: Select material, type, size, and finish required for each use. Comply with FS FF-N-105 for applicable requirements.

C. Anchors: Select material, type, size, and finish required by each substrate for secure anchorage. Provide nonferrous metal or hot-dip galvanized anchors and inserts on inside face of exterior walls and elsewhere as required for corrosion resistance. Provide toothed steel or lead expansion bolt devices for drilled-in-place anchors. Furnish inserts and anchors, as required, to be set into concrete or masonry work for subsequent woodwork anchorage.

2.7 FACTORY FINISHING OF INTERIOR ARCHITECTURAL WOODWORK

A. Quality Standard: Comply with AWI Section 1500 unless otherwise indicated.

B. General: The entire finish of interior architectural woodwork is specified in this section, regardless of whether factory applied or applied after installation.

1. Factory Finishing: To the greatest extent possible, finish architectural woodwork at factory. Defer only final touch-up, cleaning, and polishing until after installation.

C. Preparations for Finishing: Comply with referenced quality standard for sanding, filling countersunk fasteners, sealing concealed surfaces and similar preparations for finishing of architectural woodwork, as applicable to each unit of work.

PART 3 - EXECUTION

3.1 PREPARATION

A. Condition woodwork to average prevailing humidity conditions in installation areas before installing.

B. Deliver concrete inserts and similar anchoring devices to be built into substrates well in advance of time substrates are to be built.

C. Before installing architectural woodwork, examine shop-fabricated work for completion and complete work as required, including back priming and removal of packing.

3.2 INSTALLATION

A. Quality Standard: Install woodwork to comply with AWI Section 1700 for same grade specified in Part 2 of this section for type of woodwork involved.

B. Install woodwork plumb, level, true, and straight with no distortions. Shim as required with concealed shims. Install to a tolerance of 1/8 inch in 8'-0" for plumb and level (including tops) and with no variations in flushness of adjoining surfaces.

C. Scribe and cut woodwork to fit adjoining work and refinish cut surfaces or repair damaged finish at cuts.

D. Anchor woodwork to anchors or blocking built in or directly attached to substrates. Secure to grounds, stripping and blocking with countersunk, concealed fasteners and blind nailing as required for a complete installation. Except where prefinished matching fastener heads are required, use fine finishing nails for exposed nailing, countersunk and filled flush with woodwork and matching final finish where transparent finish is indicated.

E. Cabinets: Install without distortion so that doors and drawers fit openings properly and are accurately aligned. Adjust hardware to center doors and drawers in openings and to provide unencumbered operation. Complete the installation of hardware and accessory items as indicated. Maintain veneer sequence matching (if any) of cabinets with transparent finish.

F. Complete the finishing work specified in this section to whatever extent not completed at shop or before installation of woodwork.

3.3 ADJUSTMENT AND CLEANING

A. Repair damaged and defective woodwork where possible to eliminate defects functionally and visually; where not possible to repair, replace woodwork. Adjust joinery for uniform appearance.

B. Clean, lubricate, and adjust hardware.

C. Clean woodwork on exposed and semi-exposed surfaces. Touch up factory-applied finishes

to restore damaged or soiled areas.

3.4 PROTECTION

A. Provide final protection and maintain conditions, in a manner acceptable to manufacturer and Installer that ensures that woodwork is being without damage or deterioration at time of Substantial Completion.

3.5 HARDWARE SCHEDULE

A. Drawer Slides:
1. Type: Full extension, heavy duty.
2. Approved manufacturers:
a. Accuride
b. Knape and Vogt
c. Blum

B. Shelf Standards:
1. Type: Recessed.
2. Approved Manufacturers:
a. Knape and Vogt
b. Grant Hardware.
c. Or equal

C. Hinges:
1. Type: Self-closing concealed hinge.
2. Approved manufacturers:
a. Blum,
b. Mepla
c. Hafele

D. Pulls:
1. Type: "D" pull, 4 inch centers, dull chrome finish.
2. Approved manufacturers:
a. Baldwin
b. Stanley
c. Quality

END OF SECTION 06402

SECTION 06651 SOLID SURFACE FABRICATIONS

PART 1／ GENERAL

1.1 RELATED DOCUMENTS

A. Drawings and general provisions of the contract, including general and supplementary conditions and Division 1 Specification Sections, apply to this Section.

1.2 SUMMARY

A. This Section includes the following horizontal and trim solid surface product types:

1. Windowsills
2. Countertops
3. Backsplashes

B. Related Sections include the following:
1. Division 5 Section •Metal Fabrications, for supports.
2. Division 6 Section •Miscellaneous Carpentry, for Blocking.

1.3 DEFINITION

A. Solid surface is defined as nonporous, homogeneous material maintaining the same composition throughout the part with a composition of acrylic polymer, aluminum trihydrate filler and pigment.

1.4 SUBMITTALS

A. Product data:
1. For each type of product indicated.

B. Shop drawings:
1. Show location of each item, dimensioned plans and elevations, large -scale details, attachment devices and other components.
   a. Show full-size details, edge details, thermoforming requirements, attachments, etc.
   b. Show locations and sizes of furring, blocking, including concealed blocking and reinforcement specified in other Sec tions.

C. Samples:
1. For each type of product indicated.
   a. Submit minimum 6-inch by 6-inch sample in specified gloss.
   b. Cut sample and seam together for representation of inconspicuous seam.
   c. Indicate full range of color and pattern variation.
2. Approved samples will be retained as a standard for work.

D. Product data:
1. Indicate product description, fabrication information and compliance with specified performance requirements.

E. Product certificates:
1. For each type of product, signe d by product manufacturer.

F. Manufacturer certificates:

1. Signed by manufacturers certifying that they comply with requirements.

G. Maintenance data:
1. Submit manufacturer›s care and maintenance data, including repair and cleaning instructions.
a. Maintenance kit for finishes shall be submitted.
2. Include in project closeout documents.

1.5 QUALITY ASSURANCE

A. Qualifications:
1. Shop that employs skilled workers who custom fabricate products similar to those required for this project and whose products have a record of successful in-service performance.
B. Applicable standards:
1. Standards of the following, as referenced herein:
a. American National Standards Institute (ANSI)
b. American Society for Testing and Materials (ASTM)
c. National Electrical Manufacturers Association (NEMA)
d. NSF International
2. Fire test response characteristics:
a. Provide with the following Class A (Class I) surface burning characteristics as determined by testing identical products per UL 723 (ASTM E84) or another testing and inspecting agency acceptable to authorities having jurisdiction:
1) Flame Spread Index: 25 or less.
2) Smoke Developed Index: 450 or less.

1.6 DELIVERY, STORAGE AND HANDLING

A. Deliver no components to project site until areas are ready for installation.

B. Store components indoors prior to installation.

C. Handle materials to prevent damage to finished surfaces.
1. Provide protective coverings to prevent physical damage or staining following installation for duration of project.

1.7 WARRANTY

A. Provide manufacturer›s warranty against defects in materials.
1. Warranty shall provide material and labor to repair or replace defective materials.
2. Damage caused by physical or chemical abuse or damage from excessive heat will not be warranted.
3. Warranty shall be transferable to subsequent owner for remainder of warranty period.

B. Manufacturer›s warranty period:
1. Ten years from date of substantial completion.

1.8 MAINTENANCE

A. Provide maintenance requirements as specified by the manufacturer.

PART 2 – PRODUCTS

2.1 MANUFACTURERS

A. Manufacturers:

1. Subject to compliance with requirements, provide products by one of the following:
   a. Corian˘ surfaces from the DuPont company .
   b. Gibraltar from WilsonArt International
   c. Avonite surfaces from Aristech Acrylics LLC
   d. Others as approved by Architect prior to bidding.

2.2 MATERIALS

A. Solid polymer components
   1. Cast, nonporous, filled polymer, not coated, laminated or of composite construction with through body colors meeting ANSI Z124.3 or ANSI Z124.6, having minimum physical and performance properties specified.
   2. Superficial damage to a depth of 0.010 inch (.25 mm) shall be repairable by sanding and/or polishing.

B. Thickness: 1/2 inch

C. Edge treatment: As indicated on drawings.

D. Performance characteristics:

Property	**Typical Result**	**Test**
Tensile Strength	6,000 psi	ASTM D 638
Tensile Modulus	1.5×10^{-6} psi	ASTM D 638
Tensile Elongation	0.4% min.	ASTM D 638
Flexural Strength	10,000 psi	ASTM D 790
Flexural Modulus	1.2×10^{-6} psi	ASTM D 790
Hardness	>85	Rockwell •M, Scale ASTM D 785
	56	Barcol Impressor ASTM D 2583
Thermal Expansion	3.02×10^{-5} in./in./¸C (1.80×10^{-5} in./in./¸F)	ASTM D 696
Gloss (60¸ Gardner)	5⁄75 (matte – highly polished)	ANSI Z124
Light Resistance	(Xenon Arc) No effect	NEMA LD 3-2000 Method 3.3
Wear and Cleanability	Passes	ANSI Z124.3 & Z124.6
Stain Resistance: Sheets	Passes	ANSI Z124.3 & Z124.6
Fungus and Bacteria Resistance	Does not support microbial growth	ASTM G21&G22
Boiling Water Resistance	No visible change	NEMA LD 3-2000 Method 3.5
High Temperature Resistance	No change	NEMA LD 3-2000 Method 3.6
Izod Impact (Notched Specimen)	0.28 ft.-lbs./in. of notch	ASTM D 256 (Method A)

Property	**Typical Result**	**Test**
Ball Impact Resistance: Sheets	No fracture¯ 1¿2 lb. ball: 1¿4" slab¯ 36" drop 1¿2" slab¯ 144" drop	NEMA LD 3-2000 Method 3.8
Weatherability	–E*$_{94}$<5 in 1,000 hrs.	ASTM G 155
Specific Gravity ¢	1.7	
Water Absorption	Long-term 0.4% (3¿4") 0.6% (1¿2") 0.8% (1¿4")	ASTM D 570
Toxicity	99 (solid colors) 66 (patterned colors)	Pittsburgh Protocol Test (•LC50,Test)
Flammability	All colors (Class I and Class A)	ASTM E 84, NFPA 255 & UL 723
Flame Spread Index	<25	
Smoke Developed Index	<25	

¢ Approximate weight per square foot: 1¿4" (6 mm) 2.2 lbs., 1¿2" (12.3 mm) 4.4 lbs.
Shapes meet or exceed the ANSI Z124.3 and ANSI Z124.6 standards for plastic sinks and lavatories.
NEMA results based on the NEMA LD 3-2000

2.3 ACCESSORIES

A. Joint adhesive: Manufacturer»s standard one- or two-part adhesive kit to create inconspicuous, nonporous joints.

B. Sealant: Manufacturer»s standard mildew-resistant, FDA-compliant, NSF 51-compliant (food zone¯ any type), UL-listed silicone sealant in colors matching components.

2.4 FACTORY FABRICATION

A. Shop assembly
1. Fabricate components to greatest extent practical to sizes and shapes indicated, in accordance with approved shop drawings and manufacturer»s printed instructions and technical bulletins.
2. Form joints between components using manufacturer»s standard joint adhesive without conspicuous joints.
   a. Reinforce with strip of solid polymer material, 2" wide.
3. Provide factory cutouts for plumbing fittings and bath accessories as indicated on the drawings.
4. Rout and finish component edges with clean, sharp returns.
   a. Rout cutouts, radii and contours to template.
   b. Smooth edges.
   c. Repair or reject defective and inaccurate work.

2.5 FINISHES

A. Select from the manufacturer»s standard color chart.
1. Color: As selected by Architect from manufacturer»s standard colors.

B. Finish:
1. Provide surfaces with a uniform finish.
   a. Matte; gloss range of 5/20.

PART 3 ¯ EXECUTION

3.1 EXAMINATION

A. Examine substrates and conditions, with fabricator present for compliance with requirements for installation tolerances and other conditions affecting performance of work.

B. Proceed with installation only after unsatisfactory conditions have been corrected.

3.2 INSTALLATION

A. Install components plumb, level and rigid, scribed to adjacent finishes, in accordance with approved shop drawings and product data.
1. Provide product in the largest pieces available.
2. Form field joints using manufacturer»s recommended adhesive, with joints inconspicuous in finished work.
   a. Exposed joints/seams shall not be allowed.
3. Reinforce field joints with solid surface strips extending a minimum of 1 inch on either side of the seam with the strip being the same thickness as the top.
4. Cut and finish component edges with clean, sharp returns.
5. Anchor securely to base cabinets or other supports.
6. Align adjacent countertops and form seams to comply with manufacturer»s written recommendations using adhesive in color to match countertop.
7. Carefully dress joints smooth, remove surface scratches and clean entire and clean entire surface.

3.3 REPAIR

A. Repair or replace damaged work which cannot be repaired to architect»s satisfaction.

3.4 CLEANING AND PROTECTION

A. Keep components clean during installation.

B. Remove adhesives, sealants and other stains.

END OF SECTION 06651

SECTION 07190 - WATER REPELLENTS

PART 1 - GENERAL

1.1 RELATED DOCUMENTS

A. Drawings and general provisions of the Contract, including General and Supplementary Conditions and Division 1 Specification Sections, apply to this Section.

1.2 SUMMARY

A. This Section includes penetrating water-repellent coatings for the following vertical surfaces:

1. Concrete (unpainted).
2. Concrete unit masonry (unpainted and unglazed).

B. Related Sections include the following:

1. Division 3 Section "Cast-in-Place Concrete" for curing compounds, curing and sealing compounds, and penetrating liquid floor treatments.
2. Division 4 Section "Unit Masonry" for integral water-repellent admixture for unit masonry assemblies.
3. Division 7 Section "Joint Sealants."
4. Division 9 painting Sections for paints and coatings.

1.3 PERFORMANCE REQUIREMENTS

A. Performance Testing: Provide water repellents that comply with test-performance requirements indicated, as evidenced by reports of tests performed by manufacturer by a qualified independent testing agency on manufacturer's standard products applied to substrates simulating those on Project using same application methods to be used for Project.

B. Absorption: Minimum 80 percent reduction of absorption after 24 hours in comparison of treated and untreated specimens.

1. Concrete Unit Masonry: ASTM C 140..
2. Hardened Concrete: ASTM C 642.

C. Water-Vapor Transmission: Maximum 10 percent reduction in rate of vapor transmission in comparison of treated and untreated specimens, per ASTM E 96.

D. Permeability: Minimum 80 percent water-vapor transmission in comparison of treated and untreated specimens, per ASTM D 1653.

E. Water Penetration and Leakage through Masonry: Maximum 90 percent reduction in leakage rate in comparison of treated and untreated specimens, per ASTM E 514.

F. Durability: Maximum 5 percent loss of water repellency after 2500 hours of weathering in comparison to specimens before weathering, per ASTM G 154.

G. Chloride-Ion Intrusion in Concrete: NCHRP Report 244, Series II tests.

1. Reduction of Water Absorption: 80 percent.
2. Reduction in Chloride Content: 80 percent.

1.4 SUBMITTALS

A. Product Data: For each type of product indicated.

B. Manufacturer Certificates: Signed by manufacturers certifying that water repellents comply with requirements.

C. Qualification Data: For Installer.

D. Product Test Reports: Based on evaluation of comprehensive tests performed by a qualified testing agency, for assemblies.

E. Warranty: Special warranty specified in this Section.

1.5 QUALITY ASSURANCE

A. Installer Qualifications: An employer of workers trained and approved by manufacturer.

B. Testing Agency Qualifications: An independent agency qualified according to ASTM E 548 for testing indicated.

C. Test Application: Apply a finish sample for each type of water repellent an d substrate required. Duplicate finish of approved sample.

1. Locate each test application as directed by Architect.
2. Size: 25 sq. ft. (2.3 sq. m).
3. Final approval by Architect of water-repellent application will be from test applications.

D. Preinstallation Conference: Conduct conference at Project site to comply with requirements in Division 1 Section "Project Management and Coordination."

1.6 PROJECT CONDITIONS

A. Limitations: Proceed with application only when the following existing and forecasted weather and substrate conditions permit water repellents to be applied according to manufacturers' written instructions and warranty requirements:

1. Ambient temperature is above 40 deg F (4.4 deg C).
2. Concrete surfaces and mortar have cured for more than 28 days.
3. Concrete or brick masonry walls are not treated prior to 30 days after building close - in.
4. Rain or snow is not predicted within 24 hours.
5. Application proceeds more than seven days after surfaces have been wet.
6. Substrate is not frozen, or surface temperature is above 40 deg F (4.4 deg C).
7. Windy conditions do not exist that may cause water repellent to be blown onto vegetation or surfaces not intended to be treated.

1.7 WARRANTY

A. Special Warranty: Manufacturer's standard form in which manufacturer [and] Applicator] agree(s) to repair or replace materials that fail to maintain water repellency specified in Part 1 "Performance Requirements" Article within specified warranty period.

1. Warranty Period: Five years from date of Substantial Completion.

PART 2 - PRODUCTS

2.1 MANUFACTURERS

A. Available Products: Subject to compliance with requirements, products that may be incorporated into the Work include, but are not limited to, products listed in other Part 2 articles.

2.2 PENETRATING WATER REPELLENTS

A. Siloxane, Penetrating Water Repellent: Clear, oligomerous alkylalkoxysiloxanes containing 10 percent or more solids; with alcohol, ethanol, mineral spirits, water, or other proprietary solvent carrier; and with 3.3 lb/gal. (400 g/L) or less of VOCs. Provide repellents that are compatible with concrete masonry units containing integral water repellent, where occurs.

1. Products:

a. Chemical Products Industries, Inc.; CP-500W.
b. ChemMasters; Spall Guard WB 10%.
c. Chemprobe Coating Systems, L. P.; Prime A Pell H_2O.
d. Diedrich Technologies, Inc.; 303-S.
e. Euclid Chemical Company (The); Weatherguard.
f. Hydrozo, a division of ChemRex; Enviroseal 40.
g. ProSoCo, Inc.; Siloxane PD.
h. SaverSystems, Div. of Meredith, Inc.; Masonry Saver WB.
i. Specco Industries, Inc.; Waterstopper S-10 WB Siloxane.
j. Wacker Chemical Corp.; 290, 2001, SMK 1311.

PART 3 - EXECUTION

3.1 PREPARATION

A. Clean substrate of substances that might interfere with penetration or performance of water repellents. Test for moisture content, according to water-repellent manufacturer's written instructions, to ensure that surface is dry enough.

1. Cast-in-Place Concrete: Remove oil, curing compounds, laitance, and other substances that could prevent adhesion or penetration of water repellents.
2. Clay Brick Masonry: Clean clay brick masonry per ASTM D 5703.

B. Test for pH level, according to water-repellent manufacturer's written instructions, to ensure chemical bond to silicate minerals.

C. Protect adjoining work, including sealant bond surfaces, from spillage or blow -over of water repellent. Cover adjoining and nearby surfaces of aluminum and glass if there is the possibility of water repellent being deposited on surfaces. Cover live plants and grass.

D. Coordination with Sealants: Do not apply water repellent until sealants for joints adjacent to surfaces receiving water-repellent treatment have been installed and cured.

1. Water-repellent work may precede sealant application only if sealant adhesion and compatibility have been tested and verified using substrate, water repellent, and sealant materials identical to those used in the work.

E. Proceed with installation only after unsatisfactory conditions have been corrected.

3.2 APPLICATION

A. Manufacturer's Field Service: Engage a factory-authorized service representative to inspect the substrate before application of water repellent and to instruct Applicator on the product and application method to be used.

B. Apply a heavy-saturation spray coating of water repellent on surfaces indicated for treatment using low-pressure spray equipment. Comply with manufacturer's written instructions for using airless spraying procedure, unless otherwise indicated.

1. Precast Concrete: At Contractor's option, first application of water repellent on precast concrete units may be completed before installing units. Mask sealant-bond surfaces to prevent water repellent from migrating onto joint surfaces.

C. Apply a second saturation spray coating, repeating first application. Comply with manufacturer's written instructions for limitations on drying time between coats and after rainstorm wetting of surfaces between coats. Consult manufacturer's technical representative if written instructions are not applicable to Project conditions.

3.3 CLEANING

A. Immediately clean water repellent from adjoining surfaces and surfaces soiled or damaged by water-repellent application as work progresses. Repair damage caused by water-repellent application. Comply with manufacturer's written cleaning instructions.

END OF SECTION 07190

SECTION 07210 - BUILDING INSULATION

PART 1 - GENERAL

1.1 RELATED DOCUMENTS

A. Drawings and general provisions of the Contract, including General and Supplementary Conditions and Division 1 Specification Sections, apply to this Section.

1.2 SUMMARY

A. This Section includes the following:

1. Perimeter wall insulation (supporting backfill).
2. Concealed building insulation.
3. Exposed building insulation.
4. Vapor retarders.

1.3 SUBMITTALS

A. Product Data: For each type of product indicated.

B. Product Test Reports: Based on evaluation of comprehensive tests performed by a qualified testing agency for insulation products.

C. Research/Evaluation Reports: For foam-plastic insulation.

1.4 QUALITY ASSURANCE

A. Source Limitations: Obtain each type of building insulation through one source from a single manufacturer.

B. Fire-Test-Response Characteristics: Provide insulation and related materials with the fire-test-response characteristics indicated, as determined by testing identical products per test method indicated below by UL or another testing and inspecting agency acceptable to authorities having jurisdiction. Identify materials with appropriate markings of applicable testing and inspecting agency.

1. Surface-Burning Characteristics: ASTM E 84.
2. Fire-Resistance Ratings: ASTM E 119.
3. Combustion Characteristics: ASTM E 136.

1.5 DELIVERY, STORAGE, AND HANDLING

A. Protect insulation materials from physical damage and from deterioration by moisture, soiling, and other sources. Store inside and in a dry location. Comply with manufacturer's written instructions for handling, storing, and protecting during installation.

B. Protect plastic insulation as follows:

1. Do not expose to sunlight, except to extent necessary for period of installation and concealment.
2. Protect against ignition at all times. Do not deliver plastic insulating materials to Project site before installation time.
3. Complete installation and concealment of plastic materials as rapidly as possible in each area of construction.

PART 2 - PRODUCTS

2.1 MANUFACTURERS

A. In other Part 2 articles where titles below introduce lists, the following requirements apply to product selection:

1. Available Products: Subject to compliance with requirements, products that may be incorporated into the Work include, but are not limited to, products specified.
2. Available Manufacturers: Subject to compliance with requirements, manufacturers offering products that may be incorporated into the Work include, but are not limited to, manufacturers specified.

2.2 FOAM-PLASTIC BOARD INSULATION

A. Extruded-Polystyrene Board Insulation: ASTM C 578, of type and density indicated below, with maximum flame-spread and smoke-developed indexes of 75 and 450, respectively:

1. Manufacturers:

a. DiversiFoam Products.
b. Dow Chemical Company.
c. Owens Corning.
d. Pactiv Building Products Division.
e. Or, pre-approved equal.

2. Type V, 3.00 lb/cu. ft.

2.3 GLASS-FIBER BLANKET INSULATION

A. Manufacturers:

1. CertainTeed Corporation.
2. Guardian Fiberglass, Inc.
3. Johns Manville.
4. Knauf Fiber Glass.
5. Owens Corning.
6. Or, pre-approved equal.

B. Glass-Fiber-Blanket Insulation: Thermal insulation, complying with ASTM C 991, Type II, of 0.5-lb/cu. ft. density, thickness as indicated, with a flame-spread rating of 25 or less, and 2-inch wide, continuous, vapor-tight edge tabs.

1. Type II: Faced one side with nonreflective vapor-retarder membrane.
   Class A: Membrane-faced surface with a flame-spread rating of 25 or less.

2. Type II: 1.35-lb/cu. ft. minimum density.

3. Type II: Applied with a water based liquid adhesive.

C. Vapor-Retarder Facing: Complying with ASTM C 1136, with permeance not greater than the following when tested according to ASTM E 96, Desiccant Method:

1. Composition: Semi-gloss White Polypropylene-faced, scrim-reinforced foil, with permeance not greater than 0.02 perm.

2. Available Manufacturers: Subject to compliance with requirements, manufacturers offering products that may be incorporated into the Work include, but are not limited to, the following:

   a. CGI Silvercote, Inc.
   b. Lamtec Corporation.
   c. Owens-Corning Fiberglas Corporation.
   d. Simple Saver System as designed by Thermal design, Inc. (800-255-0776).

D. Retainer Strips: 0.019-inch thick, formed, galvanized steel or PVC retainer clips colored to match insulation facing (White).

2.4 AUXILIARY INSULATING MATERIALS

A. Adhesive for Bonding Insulation: Product with demonstrated capability to bond insulation securely to substrates indicated without damaging insulation and substrates.

2.5 INSULATION FASTENERS

A. Adhesively Attached, Spindle-Type Anchors: Plate welded to projecting spindle; capable of holding insulation of thickness indicated securely in position indicated with self-locking washer in place; and complying with the following requirements:

1. Products:

   a. AGM Industries, Inc.; Series T TACTOO Insul-Hangers.
   b. Eckel Industries of Canada; Stic-Klip Type N Fasteners.
   c. Gemco; Spindle Type.
   d. Or, pre-approved equal.

2. Plate: Perforated galvanized carbon-steel sheet, 0.030 inch thick by 2 inches square.
3. Spindle: Copper-coated, low carbon steel; fully annealed; 0.105 inch in diameter; length to suit depth of insulation indicated.

PART 3 - EXECUTION

3.1 EXAMINATION

A. Examine substrates and conditions, with Installer present, for compliance with requirements of Sections in which substrates and related work are specified and for other conditions affect ing performance.

1. Proceed with installation only after unsatisfactory conditions have been corrected.

3.2 PREPARATION

A. Clean substrates of substances harmful to insulation or vapor retarders, including removing projections capable of puncturing vapor retarders o r of interfering with insulation attachment.

3.3 INSTALLATION, GENERAL

A. Comply with insulation manufacturer's written instructions applicable to products and application indicated.

B. Install insulation that is undamaged, dry, and unsoiled and that has not been le ft exposed at any time to ice, rain, and snow.

C. Extend insulation in thickness indicated to envelop entire area to be insulated. Cut and fit tightly around obstructions and fill voids with insulation. Remove projections that interfere with placement.

D. Water-Piping Coordination: If water piping is located within insulated exterior walls, coordinate location of piping to ensure that it is placed on warm side of insulation and insulation encapsulates piping.

E. For preformed insulating units, provide sizes to fi t applications indicated and selected from manufacturer's standard thicknesses, widths, and lengths. Apply single layer of insulation units to produce thickness indicated unless multiple layers are otherwise shown or required to make up total thickness.

3.4 INSTALLATION OF PERIMETER INSULATION

A. On vertical surfaces, set insulation units in adhesive applied according to manufacturer's written instructions. Use adhesive recommended by insulation manufacturer.

1. If not otherwise indicated, extend insulation a minimum of 24 inches below exterior grade line.

B. Protect below-grade insulation on vertical surfaces from damage during backfilling by applying protection course with joints butted. Set in adhesive according to insulation manufacturer's written instructions.

3.5 INSTALLATION OF GENERAL BUILDING INSULATION

A. Apply insulation units to substrates by method indicated, complying with manufacturer's written instructions. If no specific method is indicated, bond units to substrate with adhesive or use mechanical anchorage to provide permanent placement and support of units.

B. Seal joints between foam-plastic insulation units by applying adhesive, mastic, or sealant to edges of each unit to form a tight seal as units are shoved into place. Fill voids in completed installation with adhesive, mastic, or sealant as recommended by insulation manufacturer.

C. Set vapor-retarder-faced units with vapor retarder to warm-in winter side of construction, unless otherwise indicated.

1. Tape joints and ruptures in vapor retarder, and seal each continuous area of insulation to surrounding construction to ensure airtight installation.

3.6 INSTALLATION OF VAPOR RETARDERS

A. General: Extend vapor retarder to extremities of areas to be protected from vapor transmission. Secure in place with adhesives or other anchorage system as indicated. Extend vapor retarder to cover miscellaneous voids in insulated substrates, including those fil led with loose-fiber insulation.

B. Seal vertical joints in vapor retarders over framing by lapping not less than two wall studs. Fasten vapor retarders to wood framing at top, end, and bottom edges; at perimeter of wall openings; and at lap joints. Space fasteners 16 inches o.c.

C. Before installing vapor retarder, apply urethane sealant to flanges of metal framing including runner tracks, metal studs, and framing around door and window openings. Seal overlapping joints in vapor retarders with vapor-retarder tape according to vapor-retarder manufacturer's written instructions. Seal butt joints with vapor-retarder tape. Locate all joints over framing members or other solid substrates.

D. Firmly attach vapor retarders to metal framing and solid substrates with vapor -retarder fasteners as recommended by vapor-retarder manufacturer.

E. Seal joints caused by pipes, conduits, electrical boxes, and similar items penetrating vapor retarders with vapor-retarder tape to create an airtight seal between penetrating objects and vapor retarder.

F. Repair tears or punctures in vapor retarders immediately before concealment by other work. Cover with vapor-retarder tape or another layer of vapor retarder.

3.7 PROTECTION

A. Protect installed insulation and vapor retarders from damage due to harmful weather exposures, physical abuse, and other causes. Provide temporary coverings or enclosures where insulation is subject to abuse and cannot be concealed and protected by permanent construction immediately after installation.

END OF SECTION 07210

SECTION 07410 - MANUFACTURED ROOF PANELS, GUTTER & FLASHING

PART 1 - GENERAL

1.1 RELATED DOCUMENTS

A. Drawings and general provisions of Contract, including General and Supplementary Conditions and Division 1 Specification Sections, apply to this Section.

1.2 SUMMARY

A. This Section includes manufactured roof panels and accessories of the following type:

1. Standing seam roof panels to be machine seamed.
2. Fascias, copings, flashing, gutters, downspouts and other miscellaneous roof accessories.

B. Related Sections: The following sections contain requirements that relate to this Section:

1. Division 5 Sections for Structural Steel and Cold-Formed Metal framing.
2. Division 6 Section “Miscellaneous Carpentry
2. Division 7 Section "Building Insulation" for roof and wall insulation.
3. Division 7 Section "Joint Sealants" for field-applied panel sealants.
4. Division 7 Section “Roof Snow Guards.
5. Division 16 Section “Snow Melting System.

1.3 SYSTEM PERFORMANCE REQUIREMENTS

A. Provide certified test results by a recognized testing laboratory or agency in accordance with specified test methods for each system.

B. Conform to SMACNA Architectural Sheet Metal Manual for sizing components for rainfall intensity determined by a storm occurrence of 1 in 5 years.

1.4 REFERENCE STANDARDS

A. AAMA 2604 - Voluntary Specification, Performance Requirements and Test Procedures for High Performance Organic Coatings on Aluminum Extrusions and Panels; 2005.

B. ASTM A 653/A 653M - Standard Specification for Steel Sheet, Zinc-Coated (Galvanized) or Zinc-Iron Alloy-Coated (Galvannealed) by the Hot-Dip Process; 2007.

C SMACNA (ASMM) - Architectural Sheet Metal Manual; Sheet Metal and Air Conditioning Contractors' National Association; 2003.

D. AAMA 2603 - Voluntary Specification, Performance Requirements and Test Procedures for Pigmented Organic Coatings on Aluminum Extrusions and Panels; 2002

1.5 SUBMITTALS

A. General: Submit the following in accordance with Conditions of Contract and Division 1 Specification Sections.

B. Product data including manufacturer's product specifications, standard details, certified product test results, installation instructions, and general recommendations, as applicable to

materials and finishes for each component and for total panel system.

C. Samples for initial selection purposes in form of manufacturer's color charts or chips showing full range of colors, textures, and patterns available for roof panels with factory-applied finishes.

D. Shop Drawings showing layouts of panels on roofs, wall, details of edge conditions, joints, corners, panel profiles, supports, anchorages, trim, flashings, closures, and special details. Distinguish between factory and field assembly work.

1.6 QUALITY ASSURANCE

A. Wind Uplift: Provide roof panel system including supports meeting requirements of Underwriters Laboratories, Inc. for Class 90 wind uplift resistance UL 580, Fourth Edition for the construction specified.

B. Field Measurements: Where possible, prior to fabrication of panels, take field measurements of structure or substrates to receive panel system. Allow for trimming panel units where final dimensions cannot be established prior to fabrication.

C. Perform work in accordance with SMACNA Architectural Sheet Metal Manual requirements and standard details, except as otherwise indicated.

1.7 WARRANTY

A. Finish Warranty: Furnish panel manufacturer's written warranty covering failure of the factory-applied exterior finish on metal roof panels within the warranty period. This warranty shall be in addition to and not a limitation of other rights the End User may have against the Contractor under the Contract Documents.
1. Warranty period for factory-applied exterior finishes on roof panels is 20 years after the date of Substantial Completion.
2. In addition to the Guarantee required by the General Conditions, the installer/supplier shall provide a 5 year material and labor guarantee against leaks or other failures in the preformed roofing panel system.

1.7 DELIVERY, STORAGE AND HANDLING

A. Stack material to prevent twisting, bending, or abrasion, and to provide ventilation. Slope to drain.

B. Prevent contact with materials that could cause discoloration, staining, or damage.

PART 2 - PRODUCTS

2.1 MANUFACTURERS

A. Available Manufacturers: Subject to compliance with requirements, manufacturers offering metal roof panel systems that may be incorporated in the work include:
1. Steel Roof Panels:
a. Galvalume (BEIC International)
b. BHP Steel Building Products USA Inc.
c. Metal Buildings Components Inc. (MBCI)
d. Or, Approved Equal

2. Gutters and Downspouts:

a. ATAS International, Inc; www.atas.com.
b. Cheney Flashing Company; www.cheneyflashing.com.
c. Perimeter Systems; www.perimeter-systems.com.
d. Substitutions: See Section 01631 - Product Substitutions.

2.2 MATERIALS

A. Roof Panel: Commercial Quality Galvanized Steel Sheet: Comply with ASTM A 526 with G90 coating complying with ASTM A 525.

B. Gutters & Downspouts: Pre-Finished Galvanized Steel Sheet: ASTM A 653/A 653M, with G90/Z275 zinc coating; minimum 0.02 inch (0.6 mm) thick base metal.
1. Finish: Shop pre-coated with modified silicone coating.
2. Color: As scheduled.

C. Flashing: Pre-Finished Galvanized Steel: ASTM A 653/A 653M, with G90/Z275 zinc coating; minimum 0.02 inch (0.6 mm) thick base metal, shop pre-coated with modified silicone coating.
1. Modified Silicone Polyester Coating: Pigmented Organic Coating System, AAMA 2603; baked enamel finish system; color as scheduled.

2.3 ROOF PANELS

A. Structural Standing-Seam Roof Panels: Manufacturer's standard panels complying with the following:

1. Ribbed Roof Panels: Fabricate from galvanized unpainted alloy coated steel sheets, factory formed to provide 24-inch coverage; with 3-inch high (including seam), raised trapezoidal major ribs at panel edges, and intermediate stiffening ribs symmetrically spaced between major ribs for full length of panel with concealed fasteners as manufactured by MBCI, Model Double-Lok or prior approved equal. Comply with the following:

a. Material: Zinc-Coated (Galvanized) Steel Sheet ASTM A 653/A 653M, G90 coating designation; structural quality.
b. Yield Strength: 50 ksi.
c. Metal Thickness: 0.0239 inch minimum (24 gauge)
d. Joint Type: Folded, mechanically seamed type.
e. Surface: Smooth, flat, mill finish.
f. Clip System: Floating to accommodate thermal movement (high clip system).

B. Roof Panel Accessories: Provide components required for a complete roof panel assembly including trim, copings, fasciae, mullions, sills, corner units, ridge closures, clips, seam covers, battens, flashings, gutters, sealants, gaskets, fillers, closure strips, and similar items. Color to be selected by Architect.

1. Closures: Provide closures at eave and ridge, fabricated of same metal and color as roof panels.
2. Clips: Minimum 0.0625-inch thick, stainless-steel panel clips designed to withstand negative-load requirements.
3. Cleats: Mechanically seamed cleats formed from minimum 0.0250-inch thick, stainless-steel or nylon-coated aluminum sheet.
4. Backing Plates: Provide metal backing plates at panel end splices, fabricated from material recommended by manufacturer.

C. Exterior Finish: Apply the following coil coating:

1. Silicone Polyester Two-Coat System: Manufacturer's standard two-coat, thermocured system consisting of specially formulated inhibitive primer and siliconized polyester color topcoat containing not less than 75 percent polyvinylidene fluoride resin by weight, with a total minimum dry film thickness of 1 mil and 30 percent reflective gloss when tested according to ASTM D 523.
   a. Durability: Provide coating field tested under normal range of weather conditions for a minimum of 20 years without significant peel, blister, flake, chip, crack, or check in finish; without chalking in excess of a chalk rating of 8 according to ASTM D 4214; and without fading in excess of five Hunter units.

2. Colors, Textures, and Glosses: As selected by Architect from manufacturer's full range for these characteristics.

D. Concealed Finish: Apply pretreatment and manufacturer's standard white or light-colored backer finish, consisting of prime coat and wash coat with a total minimum dry film thickness of 0.5 mil.

E. MISCELLANEOUS MATERIALS

1. Fasteners: Self-tapping screws, bolts, nuts, self-locking rivets, self-locking bolts, end-welded studs, and other suitable fasteners designed to withstand design loads.

   a. Use aluminum, corrosion-resistant steel, or stainless steel fasteners for exterior application and galvanized or cadmium-plated fasteners for interior applications.
   b. Provide exposed fasteners with heads matching color of roof or wall panel by means of plastic caps or factory-applied coating.
   c. Provide metal-backed neoprene washers under heads of exposed fasteners bearing on weather side of panels.
   d. Locate and space exposed fasteners in true vertical and horizontal alignment. Use proper tools to obtain controlled uniform compression for positive seal without rupture of neoprene washer.

2. Felts: Provide asphalt-saturated organic felts conforming to the requirements of ASTM D 226, Type II (No. 30).

3. Waterproof Membrane: 40 mil, self-adhering membrane of rubberized asphalt integrally bonded to embossed slip-resistant polyethylene sheeting.
   a. Products: Subject to compliance with requirements, products that may be incorporated in the work include but are not limited to "Ice & Water Shield," as manufactured by W.R. Grace & Co.

4. Accessories: Except as indicated as work of another specification section, provide components required for a complete roof or wall panel system, including trim, copings, fascias, corner units, ridge closures, clips, seam covers, battens, flashings, sealants, gaskets, fillers, closure strips, and similar items. Match materials and finishes of panels.

   a. Closure Strips: Closed-cell, self-extinguishing, expanded cellular rubber or cross-linked polyolefin foam flexible closure strips. Cut or premold to match configuration of roof and wall panels. Provide closure strips where indicated or necessary to ensure weathertight construction.
   b. Sealing Tape: Pressure-sensitive 100 percent solids polyisobutylene compound sealing tape with release paper backing. Provide permanently elastic, nonsag,

nontoxic, nonstaining tape.

c. Joint Sealant: One-part elastomeric polyurethane, polysulfide, or silicone rubber sealant as recommended by the building manufacturer.

F. PANEL FABRICATION

1. General: Fabricate and finish panels and accessories at the factory to greatest extent possible, by manufacturer's standard procedures and processes, as required to fulfill indicated performance requirements demonstrated by laboratory testing. Comply with indicated profiles and dimensional requirements and with structural requirements.
2. Apply bituminous coating or other permanent separation materials on concealed panel surfaces where panels would otherwise be in direct contact with substrate materials that are non-compatible or could result in corrosion or deterioration of either material or finishes.
3. Fabricate panel joints with captive gaskets or separator strips, which provide a tight seal and prevent metal-to-metal contact in a manner that will minimize noise from movements within panel system.

2.4 GUTTERS & DOWNSPOUTS

A. COMPONENTS

1. Gutters: SMACNA rectangular style profile.
2. Downspouts: SMACNA Rectangular profile.
3. Anchors and Supports: Profiled to suit gutters and downspouts.
   a. Anchoring Devices: In accordance with SMACNA requirements.
   b. Gutter Supports: Straps.
   c. Downspout Supports: Brackets.
4. Fasteners: Galvanized steel, with soft neoprene washers.

B. FABRICATION

1. Form gutters and downspouts of profiles and size indicated.
2. Fabricate with required connection pieces.
3. Form sections square, true, and accurate in size, in maximum possible lengths, free of distortion or defects detrimental to appearance or performance. Allow for expansion at joints.
4. Hem exposed edges of metal.
5. Fabricate gutter and downspout accessories; seal watertight.

C. FACTORY FINISHING

1. Fluoropolymer Coating: High Performance Organic Finish, AAMA 2604; multiple coat, thermally cured fluoropolymer finish system; color as scheduled.

2.5 FLASHING

A. ACCESSORIES:

1. Fasteners: Galvanized steel, with soft neoprene washers.
2. Primer: Zinc chromate type.
3. Protective Backing Paint: Zinc molybdate alkyd.
4. Sealant: Type “ES2” specified in Section 07900.
5. Plastic Cement: ASTM D 4586, Type I.

B. FABRICATION

1. Form sections true to shape, accurate in size, square, and free from distortion or defects.
2. Form pieces in longest possible lengths.
3. Hem exposed edges on underside 1/2 inch (13 mm); miter and seam corners.
4. Form material with flat lock seams, except where otherwise indicated. At moving joints, use sealed lapped, bayonet-type or interlocking hooked seams.
5. Fabricate corners from one piece with minimum 18 inch (450 mm) long legs; seam for rigidity, seal with sealant.
6. Fabricate vertical faces with bottom edge formed outward 1/4 inch (6 mm) and hemmed to form drip.

PART 3 - EXECUTION

3.1 ROOF PANEL

A. General: Comply with manufacturers' instructions and recommendations for installation, as applicable to project conditions and supporting substrates. Anchor panels and other components of the work securely in place, with provisions for thermal and structural movement.

1. Field cutting of exterior panels by torch is not permitted.
2. Install panels with concealed fasteners.
3. Install roof panels over minimum 1:12 pitch solid substrate with one ply of felt installed from lower edge up with at least 3-inch side laps and 4-inch end laps.
   a. Install waterproof membrane under felt from lower edge up at least 6 feet prior to installing roof panels. Lap ends 6-inches minimum and sides 3-1/2-inches minimum.

B. Accessories: Install components required for a complete roof system, including trim, copings, fascias, gravel stops, mullions, sills, corner unite, ridge closures, clips, seam covers, battens, flashings, gutters, louvers, sealants, gaskets, fillers, closure strips, and similar items.

C. Joint Sealers: Install gaskets, joint fillers, and sealants where indicated and where required for weatherproof performance of panel systems. Provide types of gaskets, sealants, and fillers indicated or, if not otherwise indicated, types recommended by panel manufacturer.

1. Provide weatherseal under ridge cap. Flash and seal roof panels at eave and rake with rubber, neoprene, or other closures to exclude weather.
2. Refer to other sections of these specifications for product and installation requirements applicable to indicated joint sealers.

D. Standing Seam Roof Panel System: Fasten roof panels to supports with concealed clip in accordance with the manufacturer's instructions.

1. Install clips at each support with self-drilling/self-tapping fasteners.
2. At end laps of panels, install tape caulk between panels.
3. Seaming: Complete seaming of panel joints by operation of portable power-driven equipment of type recommended by panel manufacturer to provide a weathertight joint.

E. ROOF PANEL CLEANING AND PROTECTION

1. Damaged Units: Replace panels and other components of the work that have been damaged or have deteriorated beyond successful repair by means of finish touch-up or similar minor repair procedures.
2. Cleaning: Remove temporary protective coverings and strippable films (if any) as soon as each panel is installed. Upon completion of panel installation, clean finished surfaces as recommended by panel manufacturer, and maintain in a clean condition during construction.

3.2 GUTTERS AND DOWNSPOUTS

A. EXAMINATION: Verify existing conditions before starting work.

B. PREPARATION - Paint concealed metal surfaces and surfaces in contact with dissimilar metals with protective backing paint to a minimum dry film thickness of 15 mil (0.4 mm).

C. INSTALLATION:
1. Install gutters, downspouts, and accessories in accordance with manufacturer's instructions.
2. Sheet Metal: Join lengths with formed seams sealed watertight. Flash and seal gutters to downspouts and accessories.
3. Slope gutters 1/16 inch per foot (6.35 mm/m).

3.3 FLASHING

A. EXAMINATION:

1. Verify roof openings, curbs, pipes, sleeves, ducts, and vents through roof are solidly set, reglets in place, and nailing strips located.
2. Verify roofing termination and base flashings are in place, sealed, and secure.

B. PREPARATION:

1. Install starter and edge strips, and cleats before starting installation.
2. Back paint concealed metal surfaces with protective backing paint to a minimum dry film thickness of 15 mil (0.4 mm).

C. INSTALLATION:

1. Secure flashings in place using concealed fasteners. Use exposed fasteners only where permitted.
2. Apply plastic cement compound between metal flashings and felt flashings.
3. Fit flashings tight in place. Make corners square, surfaces true and straight in planes, and lines accurate to profiles.

END OF SECTION 07410

SECTION 07729 – ROOF SNOW GUARDS

PART 1 GENERAL

1.1 SECTION INCLUDES

A. Snow rail for standing seam metal roofs.

1. Snow Guard system consists of snow guard block and flag assembly set screws.
2. Aluminum Tubing
3. Couplings.
4. End Plugs.
5. Ice Flags.
6. End Collars

1.2 RELATED SECTIONS

A. Section 07410 - Manufactured Roof Panels, Gutters and Flashing

1.3 SUBMITTALS

A. Submit under provisions of Section 01300.

B. Product Data: Manufacturer's data sheets on each product to be used, including:

1. Preparation instructions and recommendations.
2. Storage and handling requirements and recommendations.
3. Installation methods.

C. Shop Drawings: Snow guard placement layout for pitch and run of roof as required to retain snow in place.

D. Color Selection Samples: For each application specified, provide two complete sets of color chips to match roof color..

1.4 DELIVERY, STORAGE, AND HANDLING

A. Store products in manufacturer's unopened packaging until ready for installation.

B. Store and dispose of solvent-based materials, and materials used with solvent-based materials, in accordance with requirements of local authorities having jurisdiction.

1.5 PROJECT CONDITIONS

A. Maintain environmental conditions (temperature, humidity, and ventilation) within limits recommended by manufacturer for optimum results. Do not install products under environmental conditions outside manufacturer's absolute limits.

PART 2 PRODUCTS

2.1 MANUFACTURERS

A. Basis for Design: Alpine Snow Guards, A Division of Vermont Slate and Copper Services, Inc., which is located at: 289 Harrell St., Morrisville, VT; Toll Free Tel: 888-766-4273; Fax:

888-766-9994; Email: info@alpinesnowguards.com; Web: www.alpinesnowguards.com

B. Substitutions: The similar products of other manufacturers will be considered in accordance with provisions of Section 01631.

2.2 MATERIALS

A. Snow Guard block and flag: Extruded and milled 6061-T6 aluminum, non-penetrating attachment to standing seam.
B. Tubing: 6061-T6, 1" outside diameter and 1/8" wall thickness extruded aluminum.
C. Couplings: 6061-T6 aluminum 5" long.
D. End Caps: 302 stainless steel.
E. Ice Flags: 6061-T6 aluminum, 3" wide and depth as required. 2 per panel space
F. End Collars: 6061-T6 aluminum.
G. Fasteners: 304 stainless steel.

2.3 FINISH

A. Coating by manufacturer to match color of metal roof panels.

PART 3 EXECUTION

3.1 EXAMINATION

A. Do not begin installation until the metal roofing system has been completely installed.

B. If metal roof system installation is the responsibility of another installer, notify Contractor and Architect of unsatisfactory conditions before proceeding.

3.2 INSTALLATION

A. Comply with Architectural drawings and with manufacturer's instructions and recommendations for installation.

B. Seam Mounting: Place snow guard over roof panel seams in the approved layout pattern. Tighten set-screws with hex bit sockets and 3/8 inch (9.5 mm) drive ratchet until fully engaged.

3.3 PROTECTION

A. Protect installed products until completion of project.

B. Touch-up, repair or replace damaged products before Substantial Completion.

END OF SECTION 07729

SECTION 07901 - JOINT SEALANTS

PART 1 - GENERAL

1.1 RELATED DOCUMENTS

A. Drawings and general provisions of Contract, including General and Supplementary Conditions and Division 1 Specification Sections, apply to this Section.

1.2 SUMMARY

A. This Section includes joint sealants for the following locations:

1. Exterior joints in vertical surfaces as indicated below:

a. Control and expansion joints in cast-in-place concrete.

2. Exterior joints in horizontal traffic surfaces as indicated below:

a. Control, expansion, and isolation joints in cast-in-place concrete slabs.
b. Other joints as indicated.

3. Interior joints in vertical surfaces and horizontal nontraffic surfaces as indicated below:

a. Perimeter joints of exterior openings where indicated.
b. Tile control and expansion joints.
c. Perimeter joints between interior wall surfaces and frames of interior doors and windows.
d. Perimeter joints of toilet fixtures.
e. Other joints as indicated.

4. Interior joints in horizontal traffic surfaces as indicated below:

a. Control and expansion joints in cast-in-place concrete slabs.
b. Control and expansion joints in tile flooring.
c. Other joints as indicated.

B. Related Sections: The following Sections contain requirements that relate to this Section:

1. Division 8 "Glazing" for sealants used in glazing.
2. Division 9 Section "Tile" for sealing tile joints.

1.3 SYSTEM PERFORMANCE REQUIREMENTS

A. Provide elastomeric joint sealants that have been produced and installed to establish and to maintain watertight and airtight continuous seals without causing staining or deterioration of joint substrates.

1.4 SUBMITTALS

A. General: Submit the following in accordance with Conditions of Contract and Division 1 Specification Sections.

B. Product data from manufacturers for each joint sealant product required.

C. Samples for initial selection purposes in form of manufacturer's standard bead samples, consisting of strips of actual products showing full range of colors available, for each product exposed to view.

D. Certificates from manufacturers of joint sealants attesting that their products comply with specification requirements and are suitable for the use indicated.

E. Qualification data complying with requirements specified in "Quality Assurance" article. Include list of completed projects with project names addresses, names of Architects and Owners, plus other information specified.

F. Compatibility and adhesion test reports from elastomeric sealant manufacturer indicating that materials forming joint substrates and joint sealant backings have been tested for compatibility and adhesion with joint sealants. Include sealant manufacturer 's interpretation of test results relative to sealant performance and recommendations for primers and substrate preparation needed to obtain adhesion.

G. Product test reports for each type of joint sealants indicated, evidencing compliance with requirements specified.

H. Preconstruction field test reports indicating which products and joint preparation methods demonstrate acceptable adhesion to joint substrates.

1.5 QUALITY ASSURANCE

A. Installer Qualifications: Engage an experienced Installer who has completed joint sealant applications similar in material, design, and extent to that indicated for Project that have resulted in construction with a record of successful in-service performance.

B. Single Source Responsibility for Joint Sealant Materials: Obtain joint sealant materials from a single manufacturer for each different product required.

1.6 DELIVERY, STORAGE, AND HANDLING

A. Deliver materials to Project site in original unopened containers or bundles with labels indicating manufacturer, product name and designation, color, expiration period for use, pot life, curing time, and mixing instructions for multi-component materials.

B. Store and handle materials in compliance with manufacturer's recommendations to prevent their deterioration or damage due to moisture, high or low temperatures, contaminants, or other causes.

1.7 PROJECT CONDITIONS

A. Environmental Conditions: Do not proceed with installation of joint sealants under the following conditions:

1. When ambient and substrate temperature conditions are outside the limits permitted by joint sealant manufacturer.
2. When joint substrates are wet.

B. Joint Width Conditions: Do not proceed with installation of joint sealants where joint widths are less than allowed by joint sealant manufacturer for application indicated.

C. Joint Substrate Conditions: Do not proceed with installation of joint sealants until contaminants capable of interfering with their adhesion are removed from joint substrates.

1.8 SEQUENCING AND SCHEDULING

A. Sequence installation of joint sealants to occur not less than 21 or more than 30 days after completion of waterproofing, unless otherwise indicated.

PART 2 - PRODUCTS

2.1 MATERIALS, GENERAL

A. Compatibility: Provide joint sealants, joint fillers, and other related materials that are compatible with one another and with joint substrates under conditions of service and application, as demonstrated by sealant manufacturer based on testing and field experience.

B. Colors: Provide color of exposed joint sealants to comply with the following:

1. Provide selections made by Architect from manufacturer's full range of standard colors for products of type indicated.

2.2 ELASTOMERIC JOINT SEALANTS

A. Elastomeric Sealant Standard: Provide manufacturer's standard chemically curing elastomeric sealants that comply with ASTM C 920 and other requirements indicated on each Elastomeric Joint Sealant Data Sheet at end of this Section, including those requirements referencing ASTM C 920 classifications for Type, Grade, Class, and Uses.

1. Additional Movement Capability: Where additional movement capability is specified in Elastomeric Joint Sealant Data Sheet, provide products with the capability, when tested for adhesion and cohesion under maximum cyclic movement per ASTM C 719, to withstand the specified percentage change in the joint width existing at time of installation and remain in compliance with other requirements of ASTM C 920 for Uses indicated.

B. Available Products: Subject to compliance with requirements, elastomeric sealants that may be incorporated in the Work include, but are not limited to, the products specified in each Elastomeric Sealant Data Sheet.

2.3 LATEX JOINT SEALANTS

A. General: Provide manufacturer's standard one-part, nonsag, mildew-resistant, paintable latex sealant of formulation indicated that is recommended for exposed applications on interior and protected exterior locations and that accommodates indicated percentage change in joint width existing at time of installation without failing either adhesively or cohesively.

B. Acrylic-Emulsion Sealant: Provide product complying with ASTM C 834 that accommodates joint movement of not more than 5 percent in both extension and compression for a total of 10 percent.

C. Available Products: Subject to compliance with requirements, latex joint sealants that may be incorporated in the Work include, but are not limited to, the following:

1. Acrylic-Emulsion Sealant:

a. "AC-20," Pecora Corp.
b. "Sonolac," Sonneborn Building Products Div., ChemRex, Inc.
c. "Tremco Acrylic Latex 834," Tremco, Inc.

2.4 JOINT SEALANT BACKING

A. General: Provide sealant backings of material and type that are nonstaining; are compatible with joint substrates, sealants, primers and other joint fillers; and are approved for applications indicated by sealant manufacturer based on field experience and laboratory testing.

B. Plastic Foam Joint Fillers: Preformed, compressible, resilient, nonstaining, nonwaxing, nonextruding strips of flexible plastic foam of material indicated below and of size, shape, and density to control sealant depth and otherwise contribute to producing optimum sealant performance:

1. Open-cell polyurethane foam.

2.5 JOINT FILLERS FOR CONCRETE PAVING

A. General: Provide joint fillers of thickness and widths indicated.

B. Bituminous Fiber Joint Filler: Performed strips of composition below, complying with ASTM D 1751:

1. Asphalt saturated fiberboard.

2.6 MISCELLANEOUS MATERIALS

A. Primer: Material recommended by joint sealant manufacturer where required for adhesion of sealant to joint substrates indicated, as determined from preconstruction joint sealant-substrate tests and field tests.

B. Cleaners for Nonporous Surfaces: Chemical cleaners acceptable to manufacturers of sealants and sealant backing materials, free of oily residues or other substances capable of staining or harming in any way joint substrates and adjacent nonporous surfaces, and formulated to promote optimum adhesion of sealants with joint substrates.

C. Masking Tape: Non-staining, nonabsorbent material compatible with joint sealants and surfaces adjacent to joints.

PART 3 - EXECUTION

3.1 EXAMINATION

A. Examine joints indicated to receive joint sealants, with Installer present, for compliance with requirements for joint configuration, installation tolerances, and other conditions affecting joint sealant performance. Do not proceed with installation of joint sealants until unsatisfactory conditions have been corrected.

3.2 PREPARATION

A. Surface Cleaning of Joints: Clean out joints immediately before installing joint sealants to comply with recommendations of joint sealant manufacturer and the following requirements:

1. Remove all foreign material from joint substrates that could interfere with adhesion of joint sealant, including dust, paints (except for permanent, protective coatings tested and approved for sealant adhesion and compatibility by sealant manufacturer), old joint sealants, oil, grease, waterproofing, water repellents, water, surface dirt, and frost.
2. Clean concrete, masonry, unglazed surfaces of ceramic tile, and similar porous joint substrate surfaces by brushing, grinding, blast cleaning, mechanical abrading, or a

combination of these methods to produce a clean, sound substrate capable of developing optimum bond with joint sealants. Remove loose particles remaining from above cleaning operations by vacuuming or blowing out joints with oil-free compressed air.

3. Remove laitance and form release agents from concrete.
4. Clean metal, glass, porcelain enamel, glazed surfaces of ceramic tile, and other nonporous surfaces with chemical cleaners or other means that do not stain, harm substrates, or leave residues capable of interfering with adhesion of joint sealants.

B. Joint Priming: Prime joint substrates where indicated or where recommended by joint sealant manufacturer based on preconstruction joint sealant-substrate tests or prior experience. Apply primer to comply with joint sealant manufacturer's recommendations. Confine primers to areas of joint sealant bond; do not allow spillage or migration onto adjoining surfaces.

C. Masking Tape: Use masking tape where required to prevent contact of sealant with adjoining surfaces that otherwise would be permanently stained or damaged by such contact or by cleaning methods required to remove sealant smears. Remove tape immediately after tooling without disturbing joint seal.

3.3 INSTALLATION OF JOINT SEALANTS

A. General: Comply with joint sealant manufacturer's printed installation instructions applicable to products and applications indicated, except where more stringent requirements apply.

B. Sealant Installation Standard: Comply with recommendations of ASTM C 1193 for use of joint sealants as applicable to materials, applications, and conditions indicated.

C. Installation of Sealant Backings: Install sealant backings to comply with the following requirements:

1. Install joint fillers of type indicated to provide support of sealants during application and at position required to produce the cross-sectional shapes and depths of installed sealants relative to joint widths that allow optimum sealant movement capability.
   a. Do not leave gaps between ends of joint fillers.
   b. Do not stretch, twist, puncture, or tear joint fillers.
   c. Remove absorbent joint fillers that have become wet prior to sealant application and replace with dry material.

D. Installation of Sealants: Install sealants by proven techniques that result in sealants directly contacting and fully wetting joint substrates, completely filling recesses provided for each joint configuration, and providing uniform, cross-sectional shapes and depths relative to joint widths that allow optimum sealant movement capability. Install sealants at the same time sealant backings are installed.

E. Tooling of Nonsag Sealants: Immediately after sealant application and prior to time skinning or curing begins, tool sealants to form smooth, uniform beads of configuration indicated, to eliminate air pockets, and to ensure contact and adhesion of sealant with sides of joint. Remove excess sealants from surfaces adjacent to joint. Do not use tooling agents that discolor sealants or adjacent surfaces or are not approved by sealant manufacturer.

1. Provide concave joint configuration per Figure 5A in ASTM C 1193, unless otherwise indicated.

3.4 CLEANING

A. Clean off excess sealants or sealant smears adjacent to joints as work progresses by methods and with cleaning materials approved by manufacturers of joint sealants and of products in which joints occur.

3.5 PROTECTION

A. Protect joint sealants during and after curing period from contact with contaminating substances or from damage resulting from construction operations or other causes so that they are without deterioration or damage at time of Substantial Completion. If, despite such protection, damage or deterioration occurs, cut out and remove damaged or deteriorated joint sealants immediately so that and installations with repaired areas are indistinguishable from original work.

ELASTOMERIC JOINT SEALANT DATA SHEET

Elastomeric Joint Sealant Designation: ES-1

Base Polymer: Urethane.

Type: S (single component).

Grade: P (pourable).

Class: 25.

Use Related to Exposure: T (traffic).

Uses Related to Joint Substrates: M, A, and, as applicable to joint substrates indicated.

Use O Joint Substrates: Galvanized steel, brick, concrete, ceramic tile, and wood.

Available Products: "NR-201 Urexpan," Pecora Corp.; "Vulkem 45," Mameco; "Sonolastic SL 1, " Sonneborn Building Products Division.

ELASTOMERIC JOINT SEALANT DATA SHEET

Elastomeric Joint Sealant Designation: ES-2

Base Polymer: Urethane silicone.

Type: M (multi component).

Grade: NS (nonsag).

Class: 25.

Additional Movement Capability: 50 percent movement in extension and 50 percent in compression for a total of 100 percent movement.

Use Related to Exposure: NT (nontraffic).

Uses Related to Joint Substrates: M, G, A, and, as applicable to joint substrates indicated, O.

Use O Joint Substrates: Coated glass, color anodized aluminum, aluminum coated with a high-performance coating, galvanized steel, brick, ceramic tile, and wood.

Available Products: "Dynatrol II," Pecora Corp.; "Vulkem 922," Mameco; Sonolastic NP2," Sonneborn Building Products Division.

ELASTOMERIC JOINT SEALANT DATA SHEET

Elastomeric Joint Sealant Designation: ES-3

Base Polymer: Acid-curing silicone.

Type: S (single component).

Grade: NS (nonsag).

Class: 25.

Use Related to Exposure: NT (nontraffic).

Uses Related to Joint Substrates: G, A, and, as applicable to joint substrates indicated, O.

Use O Joint Substrates: Coated glass, color anodized aluminum, aluminum coated with a high-performance coating, galvanized steel, brick, and ceramic tile.

Available Products: "786 Mildew Resistant," Dow Corning; "Sanitary 1700," GE Silicones.

JOINT SEALANT SCHEDULE		
SEALANT DESIGNATIONS	JOINT SEALERS	DESCRIPTION OF JOINT CONSTRUCTION AND LOCATION WHERE SEALANT IS TYPICALLY APPLIED*.
ES1	One-Part Pourable Urethane Sealant	Exterior and interior joints in horizontal surfaces of concrete; between metal and concrete, mortar and masonry.
ES2	Multi-Part Nonsag Urethane Sealant	Exterior and interior joints in vertical surfaces of concrete and masonry; between metal and concrete or mortar; interior and exterior perimeter joints of metal frames in exterior walls; exterior overhead joints.
ES3	One-Part Mildew-Resistant Silicone Sealant	Interior joints in vertical surfaces of ceramic tile in toilet rooms, and perimeter of plumbing fixture/ceramic tile joints.
LS	Acrylic-Emulsion Sealant	Interior joints in field-painted vertical and overhead surfaces at perimeter of hollow metal door frames; in gypsum drywall, plaster, concrete, and concrete masonry; and all other interior joints not indicated otherwise.
* Install sealant indicated in joints fitting descriptions listed.		

END OF SECTION 07901

SECTION 08111 - STANDARD STEEL DOORS AND FRAMES

PART 1 - GENERAL

1.1 RELATED DOCUMENTS

A. Drawings and general provisions of Contract, including General and Supplementary Conditions and Division 1 Specification Sections, apply to this Section.

1.2 SUMMARY

A. This Section includes the following products manufactured in accordance with SDI Recommended Standards:

1. Doors: Seamless, hollow or composite construction standard steel doors for interior and exterior locations.
2. Frames: Pressed steel frames for doors, transoms, sidelights, mullions, interior glazed panels, and other interior and exterior openings of following type:
   a. Welded unit type.

3. Assemblies: Provide thermal rated (insulated) doors where indicated.

4. Provide factory primed doors and frames to be field painted.

B. Painting primed doors and frames is specified in Division 9 Section "Painting."

C. Door hardware is specified in another Division 8 Section.

D. Glass and Glazing are specified in another Division 8 Section.

E. Division 13 „Metal Building Systems” to coordinate installation.

1.3 SUBMITTALS

A. General: Submit the following in accordance with Conditions of Contract and Division 1 Specification Sections.

B. Product data for each type of door and frame specified, including details of construction, materials, dimensions, hardware preparation, core, label compliance, sound ratings, profiles, and finishes.

C. Shop drawings showing fabrication and installation of standard steel doors and frames. Include details of each frame type, elevations of door design types, conditions at openings, details of construction, location and installation requirements of door and frame hardware and reinforcements, and details of joints and connections. Show anchorage and accessory items.

1. Provide schedule of doors and frames using same reference numbers for details and openings as those on contract drawings.

2. Indicate coordinate of glazing frames and stops with glass and glazing requirements.

1.4 QUALITY ASSURANCE

A. Provide doors and frames complying with Steel Door Institute "Recommended Specifications Standard Steel Doors and Frames" ANSI/SDI-100 and as herein specified.

1.5 DELIVERY, STORAGE, AND HANDLING

A. Deliver doors and frames cardboard-wrapped or crated to provide protection during transit and job storage. Provide additional protection to prevent damage to finish of factory-finished doors and frames.

B. Inspect doors and frames upon delivery for damage. Minor damages may be repaired provided refinished items are equal in all respects to new work and acceptable to Architect; otherwise, remove and replace damaged items as directed.

C. Store doors and frames at building site under cover. Place units on minimum 4-inches high wood blocking. Avoid use of non-vented plastic or canvas shelters which could create humidity chamber. If cardboard wrapper on door becomes wet, remove carton immediately. Provide 1/4-inches spaces between stacked doors to promote air circulation.

PART 2 - PRODUCTS

2.1 ACCEPTABLE MANUFACTURERS

A. Available Manufacturers: Subject to compliance with requirements, manufacturers offering standard steel doors and frames which may be incorporated in the work include; but are not limited to, the following:

1. Standard Steel Doors and Frames:

a. Amweld Building Products, Inc.
b. Ceco Corp.
c. Fenestra Corp.
d. Republic Builders Products.
e. Steelcraft Manufacturing Co.
f. Curries
g. Or, pre-approved equal.

2.2 MATERIALS

A. Hot-Rolled Steel Sheets and Strip: Commercial quality carbon steel, pickled and oiled, complying with ASTM A 569 and ASTM A 568.

B. Cold-Rolled Steel Sheets: Commercial quality carbon steel, complying with ASTM A 366 and ASTM A 568.

C. Galvanized Steel Sheets: Zinc-coated carbon steel sheets of commercial quality, complying with ASTM A 526, or drawing quality, ASTM A 642, hot dipped galvanized in accordance with ASTM A 525, with A60 or G60 coating designation, mill phosphatized.

D. Supports and Anchors: Fabricate of not less than 18-gage sheet steel; galvanized where used with galvanized frames.

E. Inserts, Bolts, and Fasteners: Manufacturer's standard units. Where items are to be built into exterior walls, hot-dip galvanize in compliance with ASTM A 153, Class C or D as applicable.

F. Shop Applied Paint: Apply after fabrication.

1. Primer: Rust-inhibitive enamel or paint, either air-drying or baking, suitable as a base for specified finish paints complying with ANSI A224.1, "Test Procedure and Acceptance Criteria for Prime Painted Steel Surfaces for Steel Doors and Frames."

2.3 DOORS

A. Provide metal doors of SDI grades and models specified below or as indicated on drawings or schedules:

1. Interior Doors: ANSI/SDI-100, Grade II, heavy-duty, Model 3 or 4, minimum 18-gage cold-rolled sheet steel faces.
2. Exterior Doors: ANSI/SDI-100, Grade III, extra heavy-duty, Model 4, minimum 16-gage galvanized steel faces.

2.4 FRAMES

A. Provide metal frames for doors, transoms, sidelights, borrowed lights, and other openings, of types and styles as shown on drawings and schedules. Conceal fastenings, unless otherwise indicated. Fabricate frames of minimum 18-gage cold-rolled steel.

1. Fabricate frames with mitered or coped corners, welded construction for all applications.
2. Form exterior frames from 14-gage galvanized steel.

B. Door Silencers: Except on weatherstripped frames, drill stops to receive 3 silencers on strike jambs of single-door frames and 2 silencers on heads of double-door frames.

C. Plaster Guards: Provide minimum 26-gage steel plaster guards or mortar boxes at back of hardware cutouts where mortar or other materials might obstruct hardware operation and to close off interior of openings.

2.5 FABRICATION

A. Fabricate steel door and frame units to be rigid, neat in appearance and free from defects, warp or buckle. Wherever practicable, fit and assemble units in manufacturer's plant. Clearly identify work that cannot be permanently factory- assembled before shipment, to assure proper assembly at project site. Comply with ANSI/SDI-100 requirements.

1. Internal Construction: Manufacturer's standard honeycomb, polyurethane, polystyrene, unitized steel grid, vertical steel stiffeners, or rigid mineral fiber core with internal sound deadener on inside of face sheets where appropriate in accordance with SDI standards.
2. Clearances: Not more than 1/8 inch at jambs and heads except between non-fire-rated pairs of doors not more than 1/4 inch. Not more than 3/4 inch at bottom.

B. Fabricate exposed faces of doors and panels, including stiles and rails of non-flush units, from only cold-rolled steel.

C. Tolerances: Comply with SDI 117 "Manufacturing Tolerances Standard Steel Doors and Frames."

D. Fabricate frames, concealed stiffeners, reinforcement, edge channels, louvers and moldings from either cold-rolled or hot-rolled steel.

E. Fabricate exterior doors, panels, and frames from galvanized sheet steel in accordance with

SDI-112. Close top and bottom edges of exterior doors as integral part of door construction or by addition of minimum 16-gage inverted steel channels.

F. Exposed Fasteners: Unless otherwise indicated, provide countersunk flat or oval heads for exposed screws and bolts.

G. Thermal-Rated (Insulating) Assemblies: At exterior locations and elsewhere as shown or scheduled, provide doors fabricated as thermal insulating door and frame assemblies and tested in accordance with ASTM C 236 or ASTM C 976 on fully operable door assemblies.

1. Unless otherwise indicated, provide thermal-rated assemblies with U factor of 0.41 Btu/(hr x sq ft x deg F.) or better.

H. Hardware Preparation: Prepare doors and frames to receive mortised and concealed hardware in accordance with final Door Hardware Schedule and templates provided by hardware supplier. Comply with applicable requirements of ANSI A115 Series Specifications for door and frame preparation for hardware.

I. Reinforce doors and frames to receive surface-applied hardware. Drilling and tapping for surface-applied hardware may be done at project site.

J. Locate hardware as indicated on final shop drawings or, if not indicated, in accordance with "Recommended Locations for Builder's Hardware on Standard Steel Doors and Frames," published by Door and Hardware Institute.

K. Shop Painting: Clean, treat, and paint exposed surfaces of steel door and frame units, including galvanized surfaces.

1. Clean steel surfaces of mill scale, rust, oil, grease, dirt, and other foreign materials before application of paint.
2. Apply shop coat of prime paint of even consistency to provide a uniformly finished surface ready to receive finish paint.

L. Glazing Stops: Minimum 20 gage steel or .040-inch-thick aluminum.

1. Provide non-removable stops on outside of exterior doors and on secure side of interior doors for glass, louvers, and other panels in doors.
2. Provide screw applied removable glazing beads on inside of glass, louvers, and other panels in doors.

PART 3 - EXECUTION

3.1 INSTALLATION

A. General: Install standard steel doors, frames, and accessories in accordance with final shop drawings, manufacturer's data, and as herein specified.

B. Placing Frames: Comply with provisions of SDI-105 "Recommended Erection Instructions For Steel Frames," unless otherwise indicated.

1. Place frames prior to construction of enclosing walls and ceilings. Set frames accurately in position, plumbed, aligned, and braced securely until permanent anchors are set. After wall construction is completed, remove temporary braces and spreaders leaving surfaces smooth and undamaged.

2. In masonry construction, locate 3 wall anchors per jamb adjacent to hinge location on hinge jamb and at corresponding heights on strike jamb. Acceptable anchors include masonry wire anchors and masonry Tee anchors.

C. Door Installation: Fit hollow metal doors accurately in frames, within clearances specified in ANSI/SDI-100.

3.2 ADJUST AND CLEAN

A. Prime Coat Touch-up: Immediately after erection, sand smooth any rusted or damaged areas of prime coat and apply touch-up of compatible air-drying primer.

B. Protection Removal: Immediately prior to final inspection, remove protective plastic wrappings from pre-finished doors.

C. Final Adjustments: Check and readjust operating hardware items, leaving steel doo rs and frames undamaged and in complete and proper operating condition.

END OF SECTION 08111

SECTION 08360 - SECTIONAL OVERHEAD DOORS

PART 1 - GENERAL

1.1 RELATED DOCUMENTS

A. Drawings and general provisions of the Contract, including General and Supplementary Conditions and Division 1 Specification Sections, apply to this Section.

1.2 SUMMARY

A. This Section includes steel frame and steel panel sectional overhead doors, electric motor-operated.

1.3 SUBMITTALS

A. General: Submit the following according to Conditions of the Contract and Division 1 Specification Sections.

B. Product data, roughing-in diagrams, and installation instructions for each type and size of overhead door. Include manufacturer's operating instructions and maintenance data.

C. Shop drawings for special components and installations which are not fully dimensioned or detailed in manufacturer's data.

1.4 QUALITY ASSURANCE

A. Manufacturer Qualifications: Provide each sectional overhead door as a complete unit produced by a single manufacturer, including frames, sections, brackets, guides, tracks, counterbalance mechanisms, hardware, operators, and installation accessories.

B. Inserts and Anchorages: Furnish inserts and anchoring devices that must be set in concrete or built into masonry for unit installation. Provide setting drawings, templates, and directions for installation of anchorage devices. Coordinate delivery with other work to avoid delay.

C. See concrete and masonry Sections for instruction on installing inserts and anchorage devices.

D. Wind Loading: Design and reinforce sectional overhead doors to withstand a 20-psf wind-loading pressure.

PART 2 - PRODUCTS

2.1 ACCEPTABLE MANUFACTURERS

A. Available Manufacturers: Subject to compliance with requirements, manufacturers offering products that may be incorporated in the Work include, but are not limited to, the following:

1. Overhead Door Corp.
2. Raynor Garage Door Co.
3. Ceco/Windsor Door.
4. Or, pre-approved equal

2.2 STEEL SECTIONS

A. Construct door sections from galvanized, structural-quality carbon steel sheets complying

with ASTM A 446, Grade A, or ASTM A 526, with a minimum yield strength of 33,000 psi, and a minimum G60 zinc coating complying with ASTM A 525.

1. Steel Sheet Thickness: 0.0396 inch (20 gage).

B. Fabricate sections from a single sheet to provide units not more than 24 inches high, and nominally 1-5/8 inches deep. Roll horizontal meeting edges to a continuous shiplap, rabbeted, or keyed weather seal, with a reinforcing flange return.

C. Enclose open section with 16-gage galvanized steel channel, end stiles welded in place. Provide intermediate stiles, cut to door section profile, spaced at not more than 48 inches o.c. and welded in place.

D. Reinforce bottom section with a continuous channel or angle conforming to bottom section profile.

E. Reinforce sections with continuous horizontal and diagonal reinforcing, as required by door width and design wind loading. Provide galvanized steel bars, struts, trusses or strip steel, formed to depth, and bolted or welded in place.

F. Insulate inner core of steel sections with manufacturer's standard foam type insulation.

1. Enclose insulation with manufacturer's standard steel sheet secured to door panel.
2. U-value: 0.067 BTU. = R-Value 14.92

G. Finish door sections as follows:

1. Apply manufacturer's standard prime coat, applied to both door faces after forming. Finish door with 2 coats baked on finish. See drawings for color selection.

2.3 TRACKS, SUPPORTS, AND ACCESSORIES

A. Tracks: Provide manufacturer's 3˜ heavy duty, galvanized-steel track system, and designed for clearances shown. Provide complete track assembly including brackets, bracing and reinforcing for rigid support of ball-bearing roller guides for required door type and size. Slot vertical sections of track at 2 inches o.c. for door-drop safety device. Slope tracks at proper angle from vertical, or otherwise design to ensure tight closure at jambs when door unit is closed. Weld or bolt to track supports.

B. Track Reinforcement and Supports: Provide galvanized-steel track reinforcement and support members. Secure, reinforce and support tracks as required for size and weight of door to provide strength and rigidity without sag, sway, and vibration during opening and closing of doors.

C. Support and attach tracks to opening jambs with continuous angle welded to tracks and attached to wall. Support horizontal (ceiling tracks) with continuous angle welded to track and supported by laterally braced attachments to overhead structural members at curve and end of tracks.

D. Weather Seals: Provide continuous rubber, neoprene, or flexible vinyl adjustable weatherstrip gasket at tops and compressible astragal on bottoms of each overhead door. Provide continuous flexible seals at door jamb edges for a fully weathertight installation

E. Insulated Vision Panels: Provide pre-assembled clear float-glass or plastic vision panels in arrangement shown. Set glass in rubber or neoprene channel glazing strips. Provide removable stops of same material at door section frames.

1. Vision Panel Thickness: 5/8 inches.

2.4 HARDWARE

A. General: Provide heavy-duty, rust-resistant hardware, with galvanized or cadmium-plated or stainless steel fasteners, to suit type of door.

B. Hinges: Provide heavy steel hinges at each end stile and at each intermediate stile, per manufacturer's recommendations for size of door. Attach hinges to door sections through stiles and rails with bolts and lock nuts or lock washers and nuts. Use rivets or self-tapping fasteners where access to nuts is not possible. Provide double-end hinges, where required, for doors exceeding 16 feet in width, unless otherwise recommended by door manufacturer.

C. Rollers: Provide heavy-duty rollers, with steel ball bearings in case-hardened steel races, mounted with varying projections to suit slope of track. Extend roller shaft through both hinges where double hinges are required. Provide roller tires to suit size of track 3-inch diameter for 3-inch track; and as follows:

1. Case-hardened steel tires for normal installations.

2.5 COUNTERBALANCING MECHANISM

A. Torsion Spring: Operation by torsion-spring counterbalance mechanism, consisting of adjustable-tension, tempered-steel torsion springs mounted on a case hardened steel shaft. Connect to door with galvanized aircraft-type lift cables. Provide springs calibrated for 10,000 cycles minimum.

B. Provide cast-aluminum or grey-iron casting cable drums, grooved to receive cable. Mount counterbalance mechanism with manufacturer's standard ball-bearing brackets at each end of shaft. Provide one additional midpoint bracket for shafts up to 16 feet long and two additional brackets at one-third points to support shafts over 16 feet long, unless closer spacing recommended by door manufacturer.

C. Include a spring-loaded, steel or bronze cam mounted to bottom door roller assembly on each side, designed to automatically stop door if either cable breaks.

D. Provide a spring bumper at each horizontal track to cushion door at end of opening operation.

2.6 ELECTRIC DOOR OPERATORS

A. General: Furnish electric door-operator assembly of size and capacity recommended and provided by door manufacturer; complete with electric motor and factory-prewired motor controls, gear-reduction unit, solenoid-operated brake, clutch, remote-control stations and control devices.

B. Provide hand-operated disconnect or mechanism for automatically engaging sprocket-chain operator and releasing brake for emergency manual operation. Include interlock device to automatically prevent motor from operating when emergency sprocket is engaged.

C. Design operator so that motor may be removed without disturbing limit-switch adjustment and without affecting emergency auxiliary operator.

D. Door Operator Type: Provide the following:

1. Jack Shaft Operator with solenoid activated primary drive and chain and sprocket secondary drive.

E. Electric Motors: Provide high-starting torque, reversible, constant-duty, Class A-insulated electric motors with overload protection, sized to move door in either direction, from any position, at not less than 2/3 foot or more than 1 foot per second.

1. Coordinate wiring requirements and current characteristics of motors with building electrical system.
2. Provide totally enclosed, non-ventilated-type motors, fitted with plugged drain, and controller with NEMA Type 4 enclosure where required.

F. Remote Control Station: Provide momentary-contact, three-button control station with push button controls labeled "Open," "Close," and "Stop."

1. Provide interior units, full-geared, surface-mounted, heavy-duty, with general purpose NEMA Type 1 enclosure.
2. Provide remote control transmitters.
   a. Quantity: 2 per door.

H. Obstruction Detection Device: Provide each motorized door with indicated external automatic safety sensors able to protect full width of door opening. Activation of sensor immediately stops and reverses downward door travel.

1. Photoelectric Sensor: Manufacturer s standard system designed to detect an obstruction in door opening without contact between door and obstr uction.

   a. Self-Monitoring Type: Provide self-monitoring sensor designed to interface with door operator control circuit to detect damage to or disconnection of sensing device. When self-monitoring feature is activated, door operates to close only with constant pressure on close button.

PART 3 - EXECUTION

3.1 INSTALLATION

A. General: Install door, track, and operating equipment complete with necessar y hardware, jamb and head mold stops, anchors, inserts, hangers, and equipment supports according to shop drawings, manufacturer's instructions, and as specified.

B. Fasten vertical track assembly to framing at not less than 24 inches o.c. Hang horizontal track from structural overhead framing with angle or channel hangers, welded and bolt-fastened in place. Provide sway bracing, diagonal bracing, and reinforcing as required for rigid installation of track and door-operating equipment.

C. After completing installation, including work by other trades, lubricate, test, and adjust doors to operate easily, free from warp, twist, or distortion and fitting weathertight for entire perimeter.

END OF SECTION 08360

SECTION 08521 - HORIZONTAL SLIDING VINYL (PVC) WINDOWS

PART 1 GENERAL

1.1 SCOPE OF WORK:

Scope of work shall include but not be limited to the following.

1. Furnish and install new windows.
2. All other work, materials and labor required for a complete installation.

1.2 SECTION INCLUDES

A. Horizontal Sliding Window Units.

1.3 RELATED WORK

A. Joint Sealers.

1. Sealant around windows shall be class 25, nonsag, multi component urethane silicone with 50 percent movement in extension and compression. Available products are Dynatrol II, Vulkem 922 and Sonolastic NP2.

1.4 REFERENCES

A. AAMA/NWWDA 101/I.S. 2-97 - Voluntary Standard for Aluminum and Poly (Vinyl Chloride) (PVC) Prime Windows and Glass Doors.

B. NFRC 100 - Thermal Properties; National Fenestration Rating Council.

C. NFRC 200 - Solar Heat Gain; National Fenestration Rating Council.

D. ASTM D 3656 - Standard Specification for Insect Screening and Louver Cloth Woven from Vinyl-Coated Glass Fiber Yarn.

E. ASTM D 3678 - Standard Specification for Rigid Poly (Vinyl Chloride) (PVC) Interior Profile Extrusions.

F. ASTMD 4726-02 Standard Specification for Rigid Poly (Vinyl Chloride((PVC) Exterior Profile Extrusions.

G. ASTM D 4028 - Standard Specification for Solar Screening Woven from Vinyl-Coated Fiber Glass Yarn.

H. ASTM E 774 - Standard Specification for Sealed Insulating Glass.

I. IGCC - Classification of Insulating Glass Units; Insulated Glass Certification Council.

J. U.S. Department of Energy - Energy Star(R) Windows Program.

1.5 SUBMITTALS

A. Submit product data.

B. Product Data: Manufacturer's standard details and catalog data demonstrating compliance with referenced standards; include manufacturer's standard installation instructions.

C. Drawings: Manufacturer's product drawings showing details of fabrication, hardware, weatherstripping, fasteners, screens, glazing, accessories, and related item s.

D. Test Reports: For each window type specified, furnish test reports from accredited independent testing laboratory certifying that identical or larger window units meet requirements specified for air infiltration, water penetration and structural pe rformance by AAMA/NWWDA 101/I.S. 2-97, for thermal performance by NFRC-97, and for seal integrity of insulating glass units by IGCC.
   1. Test reports to test standards other than those listed will not be accepted.

E. Closeout Submittals: Warranty documents, properly executed.

1.6 QUALITY ASSURANCE

A. Manufacturer Qualifications: Minimum ten (10) years experience producing vinyl (PVC) windows.

1.7 DELIVERY, STORAGE AND HANDLING

A. Deliver windows to project site in undamaged co ndition; handle windows to prevent damage to components and to finishes.

B. Store windows out of contact with ground; protect windows from weather and construction traffic in well-ventilated area.

1.8 WARRANTY

A. Warranty Period: 3 years after the date of Substantial Completion.

B. The warranty shall not deprive the Owner of other rights or remedies that the Owner may have under other provisions of the Contract Document and is in addition to and runs concurrent with other warranties made by the Contrac tor under requirements of the Contract Documents.

PART 2 PRODUCTS

2.1 MANUFACTURERS

A. Acceptable Manufacturers
   1. Alside Window Systems
   2. CertainTeed Corp.
   3. Kolbe & Kolbe
   4. Marvin
   5. Milgard Windows
   6. Viking
   7. Weather Shield
   8. Or, pre-approved equal.

2.2 HORIZONTAL SLIDING WINDOW UNITS

A. Product Requirements
   1. Grade: AAMA/NWWDA 101/I.S. 2-97, HS-C30, for 71-inch wide by 59-inch high window unit; exceeding grade requirements as follows:

      a. Water test pressure: 6.75 pounds per square foot.

b. Air infiltration: 0.10 cubic feet per minute per linear foot at 25 miles per hour.
c. Structural test pressure: 60 pounds per square foot.

2. Thermal performance, in accordance with NFRC 100-97, for 72-inch wide by 48-inch high window unit: U-Value 0.32.
3. Solar Heat Gain Coefficient, in accordance with NFRC 200-97, for 60-inch wide by 36-inch high window unit shall not exceed 0.32.
4. Glazing: Low-e sealed insulating glass unit, 1 inch unit thickness, with DSB glass and argon gas fill; U.S. Department of Energy Energy Star(R) conformance labeled.
5. Sealed Insulating Glass Units: Conform to ASTM E 774, Level CBA.
6. Frame: PVC extrusions, butt-joint construction at corners, joined with screws into integral screw ports; multi-chambered weep system with wind-blocking covers.
7. Sash: PVC extrusions, aluminum-reinforced vertical members for window units over 29-1/2 inches high, lift-out operation of both operable sash units, with nylon-encased metal dual-roller system, full-interlocking meeting rails, full sash capture at jamb, sash vent lock, theft-deterrent blocks, and cam-type sweep locks and keepers.
8. Insect screening: Roll-formed or extruded aluminum channel frames, with 18 by 16 fiberglass mesh secured with continuous vinyl gasket, removable for screen replacement.

2.3 FABRICATION

A. Window Units: Assemble units completely in factory, including operating hardware and glazing. Comply with glass and glazing requirements of the ¨Glazing section of these specifications and AAMA 101.

PART 3 EXECUTION

3.1 EXAMINATION

A. Verification of Conditions: Openings are in correct location, and of correct size, in accordance with approved shop drawings and manufacturer's installation instructions.

B. Installer's Examination:
1. Have installer of this section examine conditions under which construction activities of this section are to be performed, then submit written notification if such conditions are unacceptable.
2. Transmit two copies of installer's report to Owner within 24 hours of receipt.
3. Beginning construction activities of this section before unacceptable conditions have been corrected is prohibited.
4. Beginning construction activities of this section indicates installer's acceptance of conditions.

3.2 INSTALLATION

A. Install products specified in this section square, plumb and level, in accordance with approved shop drawings and manufacturer's installation instructions.

B. Install joint sealers as specified.

3.3 ADJUSTING

A. Adjust operating hardware for correct operation in accordance with manufacturer's installation instructions.

3.4 CLEANING

A. Clean interior and exterior surfaces free of labels, mortar, plaster, paint, joint sealers, and other foreign matter to prevent damage to weatherstrip, and to prevent interference with operation of hardware.

3.5 PROTECTION

A. Protect ventilators and operating parts from dirt and damage caused by subsequent construction activities.

B. Replace units damaged by subsequent construction activities.

END OF SECTION 08521

SECTION 08710 - DOOR HARDWARE

PART 1 - GENERAL

1.1 RELATED DOCUMENTS

A. Drawings and general provisions of Contract, including General and Supplem entary Conditions and Division 1 Specification Sections, apply to this Section.

1.2 SUMMARY

A. This Section includes items known commercially as finish or door hardware that are required for swing doors, except special types of unique hardware specified in the same sections as the door frames on which they are installed.

B. Related Sections: The following Sections contain requirements that relate to t his Section:

1. Division 6 Section "Interior Architectural Woodwork" for cabinet hardware.
2. Division 8 Section "Standard Steel Doors and Frames" for silencers integral with hollow metal frames.

C. Products furnished but not installed under this Section include:

1. Cylinders for locks on entrance doors.
2. Final replacement cores and keys to be installed by End User.

1.3 SUBMITTALS

A. General: Submit the following in accordance with Conditions of Contract and Division 1 Specification sections.

B. Product data including manufacturers' technical product data for each item of door hardware, installation instructions, maintenance of operating parts and finish, and other information necessary to show compliance with requirements.

C. Final hardware schedule coordinated with doors, frames, and related work to ensure proper size, thickness, hand, function, and finish of door hardware.

1. Final Hardware Schedule Content: Based on hardware indicated, organize schedule into "hardware sets" indicating complete designations of every item required for each door or opening. Include the following information:
   a. Type, style, function, size, and finish of each hardware item.
   b. Name and manufacturer of each item.
   c. Fastenings and other pertinent information.
   d. Location of each hardware set cross referenced to indications on Drawings both on floor plans and in door and frame schedule.
   e. Explanation of all abbreviations, symbols, and codes contained in schedule.
   f. Mounting locations for hardware.
   g. Door and frame sizes and materials.
   h. Keying information.

2. Submittal Sequence: Submit final schedule at earliest possible date particularly where acceptance of hardware schedule must precede fabrication of other work that is critical in the Project construction schedule. Include with schedule the product data, samples, shop drawings of other work affected by door hardware, and other information essential to the coordinated review of schedule.

3. Keying Schedule: Submit separate detailed schedule indicating clearly how the End User's final instructions on keying of locks has been fulfilled.

D. Templates for doors, frames, and other work specified to be factory prepared for the installation of door hardware. Check shop drawings of other work to confirm that adequate provisions are made for locating and installing door hardware to comply with indicated requirements.

1.4 QUALITY ASSURANCE

A. Single Source Responsibility: Obtain each type of hardware (latch and lock sets, hinges, closers, etc.) from a single hardware supplier.

1.5 PRODUCT HANDLING

A. Inventory door hardware jointly with representatives of hardware supplier and hardware installer until each is satisfied that count is correct.

B. Deliver individually packaged door hardware items promptly to pl ace of installation (shop or Project site).

1.6 MAINTENANCE

A. Maintenance Tools and Instructions: Furnish a complete set of specialized tools and maintenance instructions as needed for End User's continued adjustment, maintenance, and removal and replacement of door hardware.

PART 2 - PRODUCTS

2.1 MANUFACTURERS

A. Available Manufacturers: Subject to compliance with requirements, manufacturers offering products that may be incorporated in the Work include, but are not limited to, the following:

1. Butts and Hinges:

a. Hager Hinge Co.
b. H. Soss & Company.
c. Stanley Hardware, Div. Stanley Works.
d. Mckinney
e. Or, pre-approved equal.

2. Cylinders and Locks:

a. Best Lock Corp.
b. Corbin & Russwin Architectural Hardware, Div. Black & Decker Corp.
c. Falcon Lock Co.
d. Sargent Manufacturing Company.
e. Schlage Lock, Div. Ingersoll-Rand Door Hardware Group.
f. Yale Security Inc.
g. Hagar
h. Hadrian Metal Lockers
i. Brad Steele & Associates
j. Or, pre-approved equal.

3. Overhead Closers:

    a. Dorma Door Controls International.
    b. LCN, Div. Ingersoll-Rand Door Hardware Group.
    c. Monarch Hardware & Mfg. Co., Div Newman Tonks, Inc.
    d. Rixson-Firemark, Div. Yale Security Inc.
    e. Sargent Manufacturing Company.
    f. Russwin
    g. Hagar
    h. Or, pre-approved equal.

4. Door Trim Units (Kickplates):

    a. Baldwin Hardware Corp.
    b. Builders Brass Works Corp.
    c. Hager Hinge Co.
    d. H. B. Ives, A Harrow Company.
    e. Triangle Brass Manufacturing Company (Trimco).
    f. Quality
    g. Or, pre-approved equal.

5. Door Stripping and Seals:

    a. Hager Hinge Co.
    b. National Guard Products, Inc.
    c. Pemko Manufacturing Co., Inc.
    d. Reese Enterprises, Inc.
    e. Zero International, Inc.
    f. Ultra
    g. Or, pre-approved equal.

6. Thresholds:

    a. Hager Hinge Co.
    b. National Guard Products, Inc.
    c. Pemko Manufacturing Co., Inc.
    d. Reese Enterprises, Inc.
    e. Zero International, Inc.
    f. Ultra
    g. Or, pre-approved equal.

2.2 SCHEDULED HARDWARE

A. Requirements for design, grade, function, finish, size, and other distinctive qualities of each type of finish hardware are indicated in the "Hardware Schedule" at the end of this Section. Products are identified by using hardware designation numbers of the following:

1. Manufacturer's Product Designations: The product designation and name of one manufacturer are listed for each hardware type required for the purpose of establishing minimum requirements. Provide either the product designated or, where more than one manufacturer is specified under the Article "Manufacturers" in Part 2 for each hardware type, the comparable product of one of the other manufacturers that complies with requirements.

2.3 MATERIALS AND FABRICATION

A. Manufacturer's Name Plate: Do not use manufacturers' products that have manufacturer's name or trade name displayed in a visible location (omit removable nameplates) except in conjunction with required fire-rated labels and as otherwise acceptable to Architect.

1. Manufacturer's identification will be permitted on rim of lock cylinders only.

B. Base Metals: Produce hardware units of basic metal and forming method indicated using manufacturer's standard metal alloy, composition, temper, and hardness, but in no case of lesser (commercially recognized) quality than specified for applicable hardware units for finish designations indicated.

C. Fasteners: Provide hardware manufactured to conform to published templates, generally prepared for machine screw installation. Do not provide hardware that has been prepared for self-tapping sheet metal screws, except as specifically indicated.

D. Furnish screws for installation with each hardware item. Provide Phillips flat -head screws except as otherwise indicated. Finish exposed (exposed under any condition) screws to match hardware finish or, if exposed in surfaces of other wo rk, to match finish of this other work as closely as possible including "prepared for paint" surfaces to receive painted finish.

E. Provide concealed fasteners for hardware units that are exposed when door is closed except to the extent no standard units of type specified are available with concealed fasteners. Do not use thru-bolts for installation where bolt head or nut on opposite face is exposed in other work unless their use is the only means of reinforcing the work adequa tely to fasten the hardware securely. Where thru-bolts are used as a means of reinforcing the work, provide sleeves for each thru-bolt or use sex screw fasteners.

2.4 HINGES, BUTTS, AND PIVOTS

A. Templates: Provide only template-produced units.

B. Screws: Provide Phillips flat-head screws complying with the following requirements:

1. For metal doors and frames install mach ine screws into drilled and tapped holes.
2. Finish screw heads to match surface of hinges or pivots.

C. Hinge Pins: Non-removable pins.

1. Tips: Flat button and matching plu g, finished to match leaves.

D. Number of Hinges: Provide number of hinges indicated but not less than 3 hinges per door leaf for doors 90 inches or less in height and one additional hinge for each 30 inches of additional height.

2.5 LOCK CYLINDERS AND KEYING

A. Review the keying system with the Owner and provide the type required (master, grandmaster or great-grandmaster), either new or integrated with Owner's existing system.

B. Equip locks with cylinders for interchangeable-core pin tumbler inserts. Furnish only temporary inserts for the construction period, and remove these when directed. Final replacement cores and keys to be installed by End User.

C. Metals: Construct lock cylinder parts from brass or bronze, stainless steel, or nickel silver.

D. Comply with End User's instructions for masterkeying and, exce pt as otherwise indicated,

provide individual change key for each lock that is not designated to be keyed alike with a group of related locks.

1. Permanently inscribe each key with number of lock that identifies cylinder manufacturer's key symbol, and notation, "DO NOT DUPLICATE."

E. Key Material: Provide keys of nickel silver only.

F. Key Quantity: Furnish 3 change keys for each lock, 5 master keys for each master system, and 5 grandmaster keys for each grandmaster system.

1. Furnish one extra blank for each lock.
2. Deliver keys to Owner.

2.6 KEY CONTROL SYSTEM

A. Provide a key control system including envelopes, labels, tags with self-locking key clips, receipt forms, 3-way visible card index, temporary markers, permanent markers, and standard metal cabinet, all as recommended by system manufactu rer, with capacity for 150 percent of the number of locks required for the Project.

1. Provide complete cross index system set up by key control manufacturer, and place keys on markers and hooks in the cabinet as determined by th e final key schedule.
2. Provide hinged-panel type cabinet for wall mounting.

2.7 LOCKS, LATCHES, AND BOLTS

A. Strikes: Provide manufacturer's standard w rought box strike for each latch or lock bolt, with curved lip extended to protect frame, finished to match hardware set, unless otherwise indicated.

1. Provide flat lip strikes for locks with 3-piece, antifriction latchbolts as recommended by manufacturer.
2. Provide recess type top strikes for bolts locking into head frames, unless otherwise indicated.
3. Provide dust-proof strikes for foot bolts, except where special threshold con struction provides nonrecessed strike for bolt.
4. Provide roller type strikes where recommended by manufacturer of the latch and lock units.

B. Lock Throw: Provide 5/8-inch minimum throw of latch on pa irs of doors. Comply with UL requirements for throw of bolts and latch bolts on rated fire openings.

1. Provide 1/2-inch minimum throw of latch for other bored and preassembled types of locks and 3/4-inch minimum throw of latch for mortise locks. Provide 1-inch minimum throw for all dead bolts.

C. Exit Device Dogging: Equip the units with keyed dogging device to keep the latch bolt retracted, when engaged.

D. Rabbeted Doors: Where rabbeted door stiles are indicated, provide special rabbeted front on lock and latch units and bolts.

2.8 CLOSERS AND DOOR CONTROL DEVICES

A. Size of Units: Except as otherwise specifically indicated, comply with the manufacturer's recommendations for size of door control unit depending on size of door, exposure to weather, and anticipated frequency of use.

1. Provide parallel arms for all overhead closers, except as otherwise indicated.
2. Provide metal enclosure plate.
3. Color & finish of all exposed surfaces to match and to be selected by Architect from manufacturers standard colors.

B. Access-Free Manual Closers: Where manual closers are indicated for doors required to be accessible to the physically handicapped, provide adjustable units complying with ANSI A117.1 provisions for door opening force and delayed action closing.

C. Provide grey resilient parts for exposed bumpers.

2.9 DOOR TRIM UNITS

A. Fasteners: Provide manufacturer's standard exposed fasteners for door trim units consisting of either machine screws or self-tapping screws.

B. Fabricate protection plates not more than 1-1/2 inches less than door width on hinge side and not more than 1/2 inch less than door width on pull side by height indicated.

1. Metal Plates: Stainless steel, 0.050 inch (U.S. 18 gage).

2.10 WEATHERSTRIPPING AND SEALS

A. General: Provide continuous weatherstripping on exterior doors. Provide noncorrosive fasteners.

B. Replaceable Seal Strips: Provide only those units where resilient or flexible seal strip is easily replaceable and readily available from stocks maintained by manufacturer.

C. Weatherstripping at Jambs and Heads: Provide bumper-type resilient insert and metal retainer strips, surface applied unless shown as mortised or semimortised, and of following metal, finish, and resilient bumper material:

1. Extruded aluminum with clear anodized finish as selected from manufacturer's standard color range, 0.062-inch minimum thickness of main walls and flanges.
2. Sponge neoprene conforming to MIL R 6130, Class II (Closed Cell).
   a. Grade C (67 deg F to 170 deg F, low temperature).

D. Weatherstripping at Door Bottoms: Provide threshold consisting of contact-type resilient insert and metal housing of design and size shown and of following metal, finish, and resilient seal strip:

1. Extruded aluminum with clear anodized finish as selected from manufacturer's standard color range, 0.062-inch minimum thickness of main walls and flanges.
2. Solid neoprene wiper or sweep seal complying with MIL R 6855, Class II, Grade 40.

2.11 THRESHOLDS

A. General: Except as otherwise indicated, provide standard metal threshold unit of type and profile as shown or scheduled. Width of threshold shall match width of door frame.

B. Exterior Hinged or Pivoted Doors: Provide units not less than 3 inches wide, formed to accommodate change in floor elevation where indicated, fabricated to accommodate door hardware and to fit door frames, and as follows:

1. For out-swinging doors provide thermal barrier saddle type with black rigid vinyl between extrusions.

2.12 HARDWARE FINISHES

A. Match items to the manufacturer's standard color and texture finish for the latch and lock sets (or push-pull units if no latch or lock sets).

B. Provide finishes that match those established by BHMA or, if none established, match the Architect's sample.

C. Provide quality of finish, including thickness of plating or coating (if any), composition, hardness, and other qualities complying with manufacturer's standards, but in no case less than specified by referenced standards for the applicable units of hardware.

D. Provide protective lacquer coating on all exposed hardware finishes of bras s, bronze, and aluminum, except as otherwise indicated. The suffix " -NL" is used with standard finish designations to indicate "no lacquer."

E. The designations used in schedules and elsewhere to indicate hardware finishes are those listed in ANSI/BHMA A156.18, "Materials and Finishes," including coordination with the traditional U.S. finishes shown by certain manufacturers for their products.

PART 3 - EXECUTION

3.1 INSTALLATION

A. Mount hardware units at heights indicated in following applicable publications, except as specifically indicated or required to comply with governing regulations and except as otherwise directed by Architect.

1. "Recommended Locations for Builders Hardware for Standard Steel Doors and Frames" by the Door and Hardware Institute.

B. Install each hardware item in compliance with the manufacturer' s instructions and recommendations. Where cutting and fitting is required to install hardware onto or into surfaces that are later to be painted or finished in another way, coordinate removal, storage, and reinstallation or application of surface protecti on with finishing work specified in the Division 9 Sections. Do not install surface -mounted items until finishes have been completed on the substrates involved.

C. Set units level, plumb, and true to line and location. Adjust and reinforce the attachment substrate as necessary for proper installation and operation.

D. Drill and countersink units that are not factory prepared for anchorage fasteners. Space fasteners and anchors in accordance with i ndustry standards.

E. Set thresholds for exterior doors in full bed of butyl -rubber or polyisobutylene mastic sealant complying with requirements specified in Division 7 Section "Joint Sealers."

F. Weatherstripping and Seals: Comply with manufacturer's instructions and recommendations to the extent installation requirements are not otherwise indicated.

3.2 ADJUSTING, CLEANING, AND DEMONSTRATING

A. Adjust and check each operating item of hardware and each door to ensure proper operation or function of every unit. Replace units that cannot be adjusted to operate freely and smoothly or as intended for the application made.

1. Where door hardware is installed more than one month prior to acceptance or occupancy of a space or area, return to the installation during the week prior to acceptance or occupancy and make final check and adjustment of all ha rdware items in such space or area. Clean operating items as necessary to restore proper function and finish of hardware and doors. Adjust door control devices to compensate for final operation of heating and ventilating equipment.

B. Clean adjacent surfaces soiled by hardware installation.

C. Instruct End User's personnel in the proper adjustment and maintenance of door hardware and hardware finishes.

D. Six-Month Adjustment: Approximately six months after the date of Substantial Completion, the Installer, accompanied by representatives of the manufacturers of latchsets and locksets and of door control devices, and of other major hardware suppliers, shall return to the Project to perform the following work:

1. Examine and re-adjust each item of door hardware as necessary to restore function of doors and hardware to comply with specified requirements.

2. Consult with and instruct End User's personnel in recommended additions to the maintenance procedures.

3. Replace hardware items that have deteriorated or failed due to faulty design, materials, or installation of hardware units.

4. Prepare a written report of current and predictable problems (of substantial nature) in the performance of the hardware.

3.3 HARDWARE SCHEDULE

A. General: Provide hardware for each door to comply with requirements of Section "Door Hardware," hardware set numbers indicated in door schedule, and in the following schedule of hardware sets.
1. Hardware sets indicate quantity, item, manufacturer and product designation, size and finish or color, as applicable.
2. Provide hardware with US26D finish, unless indicated otherwise.
3. Lockset Designs: Provide the lockset designs designated in the Hardware Schedule or, if by another manufacturer, one tha t matches those designated:
4. Provide locks with interchangeable cores per requirements of this section.

3.3 Hardware Schedule:

B. Hardware Set No. 1: Door D101A

1.5 pr.	Hinges	Stanley	FBB199 4.5 x 4.5 NRP	US32D
1	Lock	Yale	AU 5407L	US26D
1	Closer	LCN	4041	ALUM
1	Kickplate	Quality	8 x 1.5 LDW	US32D
1	Stop	Quality	119ES	US26D
1	Threshold	Pemko	169A	ALUM
1	Door Sweep	Pemko	315CN	ALUM
1 Set	Weatherstrip	Pemko	303AV	ALUM

C. Hardware Set No. 2: Door D102A

1.5 pr.	Hinges	Stanley	FBB179 4.5 x 4.5	US26D
1	Lock	Yale	AU5407L	US26D
1	Stop	Quality	307	US26D
3	Silencers			
1	Kickplate	Quality	8 x 1.5 LDW	US32D

D. Hardware Set No. 3: Door D103A.

1.5 pr.	Hinges	Stanley	FBB179 4.5 x 4.5	US26D
1	Privacy	Yale	AU5404L	US26D
1	Closer	LCN	4041	ALUM
1	Kickplate	Quality	8 x 1.5 LDW	US32D
1	Stop	Quality	307	US26D
3	Silencers			

E. Hardware Set No. 4: Door D101B, D101C, D101D, D101E, D101F, D101G & D104A, All hardware by door supplier.

END OF SECTION 08710

SECTION 08800 - GLAZING

PART 1 - GENERAL

1.1 RELATED DOCUMENTS

A. Drawings and general provisions of the Contract, including General and Supplementary Conditions and Division 1 Specification Sections, apply to this Section.

1.2 SUMMARY

A. This Section includes glazing for the following products, including those specified in other Sections where glazing requirements are specified by reference to this Section:

1. Division 8 Section ‡Standard Steel Doors and Frames· for door vision lites and borrowed lites.
2. Division 8 Section ‡Sectional Overhead Doors· for factory installed glazing in vision panels of doors.
3. Division 8 Section ‡Horizontal Sliding Vinyl (PVC) Windows· for factory installed glass in vinyl windows.

1.3 DEFINITIONS

A. Manufacturer is used in this Section to refer to a firm that produces primary glass or fabricated glass as defined in the referenced glazing standard.

B. Deterioration of Insulating Glass: Failure of the hermetic seal under normal use due to causes other than glass breakage and improper practices for maintaining, and cleaning insulating glass. Evidence of failure is the obstruction of vision by dust, moisture, or film on the interior surfaces of glass. Improper practices for maintaining and cleaning glass do not comply with the manufacturer's directions.

1.4 SYSTEM PERFORMANCE REQUIREMENTS

A. General: Provide glazing systems that are produced, fabricated, and installed to withstand normal thermal movement, wind loading, and impact loading (where applicable), without failure including loss or glass breakage attributable to the following: defective manufacture, fabrication, and installation; failure of sealants or gaskets to remain watertight and airtight; deterioration of glazing materials; and other defects in construction.

B. Glass Design: Glass thicknesses indicated on Drawings are for detailing only. Confirm glass thicknesses by analyzing Project loads and in-service conditions. Provide glass lites for the various size openings in the thicknesses and strengths (annealed or heat-treated) to meet or exceed the following criteria:

1. Wind pressure of 20-psf.
2. Minimum glass thickness, nominally, of lites in exterior walls is 6.0 mm (0.23 inch).
3. Tinted glass thicknesses for each tint indicated are the same throughout Project.
4. Minimum glass thicknesses of lites, whether composed of annealed or heat-treated glass, are selected so the worst-case probability of failure does not exceed the following:

a. 8 lites per 1000 for lites set vertically or not over 15 degrees off vertical and under wind action. Determine minimum thickness of monolithic annealed glass according to ASTM E 1300. For other than monolithic annealed glass,

determine thickness per glass manufacturer's standard method of analysis including applying adjustment factors to ASTM E 1300 based on type of glass.

C. Normal thermal movement results from the following maximum change (range) in ambient and surface temperatures acting on glass-framing members and glazing components. Base engineering calculation on materials' actual surface temperatures due to both solar heat gain and nighttime sky heat loss.

1. Temperature Change (Range): 120 deg F (67 deg C), ambient; 180 deg F (100 deg C), material surfaces.

1.5 SUBMITTALS

A. General: Submit the following according to Conditions of Contract and Division 1 Specification Sections.

B. Product data for each glass product and glazing material indicated.

C. Samples for verification purposes of 12-inch-square samples of each type of glass indicated except for clear monolithic glass products, and 12-inch-long samples of each color required (except black) for each type of sealant or gasket exposed to view. Install sealant or gasket sample between two strips of material representative in color of the adjoining framing system.

D. Product certificates signed by glazing materials manufacturers certifying that their products comply with specified requirements.
1. Separate certifications are not required for glazing materials bearing manufacturer's permanent labels designating type and thickness of glass, provided labels represent a quality control program of a recognized certification agency or independent testing agency acceptable to authorities having jurisdiction.

E. Compatibility and adhesion test reports from sealant manufacturer indicating that glazing materials were tested for compatibility and adhesion with glazing sealants. Include sealant manufacturer's interpretation of test results relative to sealant performance and recommendations for primers and substrate preparation needed for adhesion.

F. Compatibility test report from manufacturer of insulating glass edge sealant indicating that glass edge sealants were tested for compatibility with other glazing materials including sealants, glazing tape, gaskets, setting blocks, and edge blocks.

G. Product test reports for each type of glazing sealant and gasket indicated, evidencing compliance with requirements specified.

H. Maintenance data for glass and other glazing materials to include in Operating and Maintenance Manual specified in Division 1.

1.6 QUALITY ASSURANCE

A. Glazing Publications: Comply with published recommendations of glass product manufacturers and organizations below, except where more stringent requirements are indicated. Refer to these publications for glazing terms not otherwise defined in this Section or in referenced standards.

1. FGMA Publications: "FGMA Glazing Manual."
2. SIGMA Publications: TM-3000 "Vertical Glazing Guidelines."

B. Safety Glass: Products complying with ANSI Z97.1 and testing requirements of 16 CFR Part 1201 for Category II materials.

1. Subject to compliance with requirements, provide safety glass permanently marked with certification label of Safety Glazing Certification Council (SGCC) or other certification agency acceptable to authorities having jurisdiction.

C. Glazier Qualifications: Engage an experienced glazier who has completed glazing similar in material, design, and extent to that indicated for Project with a record of successful in-service performance.

D. Single-Source Responsibility for Glass: Obtain glass from one source for each product indicated below:

1. Primary glass of each (ASTM C 1036) type and class indicated.
2. Heat-treated glass of each (ASTM C 1048) condition indicated.
3. Insulating glass of each construction indicated.

E. Single-Source Responsibility for Glazing Accessories: Obtain glazing accessories from one source for each product and installation method indicated.

F. Preconstruction Compatibility and Adhesion Testing: Submit to sealant manufacturers, samples of each glass, gasket, glazing accessory, and glass-framing member that will contact or affect glazing sealants for compatibility and adhesion testing as indicated below:

1. Use test methods standard with sealant manufacturer to determine if priming and other specific preparation techniques are required for rapid, optimum glazing sealants adhesion to glass and glazing channel substrates.

a. Perform tests under normal environmental conditions during installation.

2. Submit not less than nine pieces of each type and finish of glass-framing members and each type, class, kind, condition, and form of glass (monolithic, laminated, insulating units) for adhesion testing, as well as one sample of each glazing accessory (gaskets, setting blocks and spacers) for compatibility testing.
3. Schedule sufficient time to test and analyze results to prevent delay in the Work.
4. Investigate materials failing compatibility or adhesion tests and get sealant manufacturer's written recommendations for corrective measures, including using special primers.

5. Testing is not required when glazing sealant manufacturer can submit required preparation data that is acceptable to Architect and is based on previous testing of current sealant products for adhesion to and compatibility with submitted glazing materials.

1.7 DELIVERY, STORAGE, AND HANDLING

A. Protect glazing materials to comply with manufacturer's directions and as needed to prevent damage to glass and glazing materials from condensation, temperature changes, direct exposure to sun, or other causes.

1. Where insulating glass units will be exposed to substantial altitude changes, comply with insulating glass fabricator's recommendations for venting and sealing to avoid hermetic seal ruptures.

1.8 PROJECT CONDITIONS

A. Environmental Conditions: Do not proceed with glazing when ambient and substrate temperature conditions are outside the limits permitted by glazing materials manufacturer or when glazing channel substrates are wet from rain, frost, condensation, or other causes.

1. Install liquid sealants at ambient and substrate temperatures above 40 deg F (4.4 deg C).

1.9 WARRANTY

A. General: Warranties specified in this Article shall not deprive the Owner of other rights the Owner may have under other provisions of the Contract Documents and will be in addition to and run concurrent with other warranties made by the Contractor under requirements of the Contract Documents.

B. Manufacturer's Warranty on Insulating Glass: Submit written warranty signed by manufacturer of insulating glass agreeing to furnish replacements for insulating glass units that deteriorate as defined in "Definitions" article, f.o.b. point of manufacture, freight allowed Project site, within specified warranty period indicated below. Warranty covers only deterioration due to normal conditions of use and not to handling, installing, protecting, and maintaining practices contrary to glass manufacturer's published instructions.

1. Warranty Period: Manufacturer's standard but not less than 10 years after date of Substantial Completion.

PART 2 - PRODUCTS

2.1 MANUFACTURERS

A. Available Products: Subject to compliance with requirements, products that may be incorporated in the Work include, but are not limited to, the following companies:

1. AFG Industries
2. Guardian Industries
3. PPG Industries
4. Or, pre-approved equal.

2.2 PRIMARY FLOAT GLASS PRODUCTS

A. Float Glass: ASTM C 1036, Type I (transparent glass, flat), Class as indicated below, and Quality q3 (glazing select).

1. Class as indicated in each Product Data Sheet at end of this Section.

B. Refer to requirements for sealed insulating glass units for performance characteristics of assembled units composed of tinted glass, coated or uncoated, relative to visible light transmittance, U-values, shading coefficient, and visible reflectance.

2.3 HEAT-TREATED FLOAT GLASS PRODUCTS, GENERAL

A. Fabrication Process: By horizontal (roller-hearth) process with roll-wave distortion parallel to bottom edge of glass as installed, unless otherwise indicated.

2.4 HEAT-TREATED FLOAT GLASS

A. Uncoated, Clear, Heat-Treated Float Glass: ASTM C 1048, Condition A (uncoated surfaces), Type I (transparent glass, flat), Class 1 (clear), Quality q3 (glazing select), kind as indicated below.

1. Kind FT (fully tempered) where indicated.

B. Uncoated, Tinted, Heat-Treated Float Glass: ASTM C 1048, Condition A (uncoated surfaces), Type I (transparent glass, flat), Class 2 (tinted heat-absorbing and light-reducing), Quality q3 (glazing select), with tint color and performance characteristics for 6.0 -mm-thick (0.23-inch-thick) glass matching those indicated for annealed primary tinted float glass; kind as indicated below:

1. Kind FT (fully tempered) where indicated.

2.5 INSULATING GLASS PRODUCTS

A. Sealed Insulating Glass Units: Preassembled units consisting of organically sealed lites of glass separated by dehydrated air spaces complying with ASTM E 774 and with other requirements indicated, including those in Insulating Glass Product Data Sheet at the end of this Section.
1. For properties of individual glass lites making up units, refer to requirements specified elsewhere in this Section applicable to types, classes, kinds, and conditions of glass products comprising lites of insulating glass units.
2. Provide heat-treated, coated float glass of kind indicated or, if not otherwise indicated, Kind HS (heat strengthened) where recommended by manufacturer to comply with system performance requirements specified and Kind FT (fully tempered) where safety glass is designated or required.
3. U-values are expressed as Btu/hour x sq. ft. x deg F.

2.6 ELASTOMERIC GLAZING SEALANTS

A. General: Provide products of type indicated, complying with the following requirements:

1. Compatibility: Select glazing sealants and tapes of proven compatibility with other materials they will contact, including glass products, seals of insulating glass units, and glazing channel substrates, under conditions of installation and service, as demonstrated by testing and field experience.
2. Suitability: Comply with sealant and glass manufacturer's recommendations for selecting glazing sealants and tapes that are suitable for applications indicated and conditions existing at time of installation.
3. Colors: Provide color of exposed joint sealants to comply with the following:

a. Provide selections made by Architect from manufacturer's full range of standard colors for products of type indicated.

B. Elastomeric Glazing Sealant Standard: Provide manufacturer's standard chemically curing, elastomeric sealants of base polymer indicated that comply with ASTM C 920 requirements indicated on each Elastomeric Glazing Sealant Product Data Sheet at the end of this Section, including those referencing ASTM classifications for Type, Grade, Class and Uses.

1. Additional Movement Capability: Where additional movement capability is specified in Elastomeric Glazing Sealant Product Data Sheet, provide products, when tested for adhesion and cohesion under maximum cyclic movement per ASTM C 719, with the capability to withstand the specified percentage change in the joint width existing

at time of installation and remain in compliance with other requirements of ASTM C 920 for uses indicated.

2.7 GLAZING GASKETS

A. Lock-Strip Gaskets: Neoprene extrusions in size and shape indicated, fabricated into frames with molded corner units and zipper lock strips, complying with ASTM C 542, black.

B. Dense Compression Gaskets: Molded or extruded gaskets of material indicated below, complying with standards referenced with name of elastomer indicated below, and of profile and hardness required to maintain watertight seal:

1. EPDM, ASTM C 864.
2. Silicone, ASTM C 1115.
3. Any material indicated above.

C. Soft Compression Gaskets: Extruded or molded closed-cell, integral-skinned gaskets of material indicated below, complying with ASTM C 509, Type II, black, and of profile and hardness required to maintain watertight seal:

1. EPDM.
2. Silicone.
3. Any material indicated above.

2.8 MISCELLANEOUS GLAZING MATERIALS

A. General: Provide products of material, size, and shape complying with referenced glazing standard, requirements of manufacturers of glass and other glazing materials involved for glazing application indicated, and with a proven record of compatibility with surfaces contacted in installation.

B. Cleaners, Primers and Sealers: Type recommended by sealant or gasket manufacturer.

C. Setting Blocks: Elastomeric material with a Shore A durometer hardness of 85 plus or minus 5.

D. Spacers: Elastomeric blocks or continuous extrusions with a Shore A durometer hardness required by glass manufacturer to maintain glass lites in place for installation indicated.

E. Edge Blocks: Elastomeric material of hardness needed to limit glass lateral movement (side-walking).

2.9 FABRICATION OF GLASS AND OTHER GLAZING PRODUCTS

A. Fabricate glass and other glazing products in sizes required to glaze openings indicated for Project, with edge and face clearances, edge and surface conditions, and bite complying with recommendations of product manufacturer and referenced glazing standard as required to comply with system performance requirements.

PART 3 - EXECUTION

3.1 EXAMINATION

A. Examine glass framing, with glazier present, for compliance with the following:

1. Manufacturing and installation tolerances, including those for size, squareness, offsets at corners.
2. Presence and functioning of weep system.
3. Minimum required face or edge clearances.
4. Effective sealing between joints of glass-framing members.

B. Do not proceed with glazing until unsatisfactory conditions have been corrected.

3.2 PREPARATION

A. Clean glazing channels and other framing members receiving glass immediately before glazing. Remove coatings that are not firmly bonded to substrates.

3.3 GLAZING, GENERAL

A. Comply with combined recommendations of manufacturers of glass, sealants, gaskets, and other glazing materials, except where more stringent requirements are indicated, including those in referenced glazing publications.

B. Protect glass from edge damage during handling and installation as follows:

1. Use a rolling block in rotating glass units to prevent damage to glass corners. Do not impact glass with metal framing. Use suction cups to shift glass units within openings; do not raise or drift glass with a pry bar. Rotate glass lites with flares or bevels on bottom horizontal edges so edges are located at top of opening, unless otherwise indicated by manufacturer's label.
2. Remove damaged glass from Project site and legally dispose of off site. Damaged glass is glass with edge damage or other imperfections that, when installed, weaken glass and impair performance and appearance.

C. Install elastomeric setting blocks in sill rabbets, sized and located to comply with referenced glazing standard, unless otherwise required by glass manufacturer. Set blocks in thin course of compatible sealant suitable for heel bead.

D. Do not exceed edge pressures stipulated by glass manufacturers for installing glass lites.

E. Provide edge blocking to comply with requirements of referenced glazing publications, unless otherwise required by glass manufacturer.

F. Set glass lites in each series with uniform pattern, draw, bow, and similar characteristics.

G. Where wedge-shaped gaskets are driven into one side of channel to pressurize sealant or gasket on opposite side, provide adequate anchorage so gasket cannot walk out when installation is subjected to movement.

H. Square cut wedge-shaped gaskets at corners and install gaskets in manner recommended by gasket manufacturer to prevent corners from pulling away; seal corner joints and butt joints with sealant recommended by gasket manufacturer.

3.4 GASKET GLAZING (DRY)

A. Fabricate compression gaskets in lengths recommended by gasket manufacturer to fit openings exactly, with stretch allowance during installation.

B. Secure compression gaskets in place with joints located at corners to compress gaskets producing a weathertight seal without developing bending stresses in glass. Seal gasket

joints with sealant recommended by gasket manufacturer.

C. Install gaskets so they protrude past face of glazing stops.

3.5 LOCK-STRIP GASKET GLAZING

A. Comply with ASTM C 716 and gasket manufacturer's printed recommendations. Provide supplementary wet seal and weep system unless otherwise indicated.

3.6 PROTECTION AND CLEANING

A. Protect exterior glass from breakage immediately after installation by attaching crossed streamers to framing held away from glass. Do not apply markers to glass surface. Remove nonpermanent labels, and clean surfaces.

B. Protect glass from contact with contaminating substances resulting from construction operations including weld splatter. If, despite such protection, contaminating substances do come into contact with glass, remove them immediately as recommended by glass manufacturer.

C. Examine glass surfaces adjacent to or below exterior concrete and other masonry surfaces at frequent inter ,vals during construction, but not less than once a month, for build-up of dirt, scum, alkali deposits, or stains, and remove as recommended by glass manufacturer.

D. Remove and replace glass that is broken, chipped, cracked, abraded, or damaged in any way, including natural causes, accidents and vandalism, during construction period.

E. Wash glass on both faces in each area of Project not more than 4 days prior to date scheduled for inspections that establish date of Substantial Completion. Wash glass as recommended by glass manufacturer.

3.7 GLAZING SCHEDULE

A. Refer to Product Data Sheets which follow schedule for requirements.

Glass Designation	Nominal Thickness	Description
G-1	1"	Insulating glass consisting of clear, float glass indoor lite and tinted, float glass outdoor lite, with 1/2" air space at all exterior framed windows.
IG-2	1"	Insulating glass consisting of clear, tempered, float glass indoor lite and clear, tempered outdoor lite, with 1/2" air space at all man doors.

INSULATING GLASS PRODUCT DATA SHEET

Insulating Glass Unit Designation: IG-1

Classification of Units: Class CBA per ASTM E 774.

Air Space Width: Nominal 1/2 inch measured perpendicularly from surfaces of glass lites at unit's edge.

Gas Filling: Fill air space with argon.

Sealing System: Dual seal, primary and secondary sealants: manufacturer's standard sealants.

Spacer Specifications: Manufacturer's standard metal.

Dessicant: Either molecular sieve or silica gel or blend of both.

Corner Construction: Manufacturer's standard corner construction.

Color of Spacer: Color as selected by Architect from manufacturer's standard colors.

Glass Specifications: Comply with the following requirements:

Thickness of Each Lite: 6.0 mm (0.23 inch).

Uncoated Indoor Lite: Class 1 (clear) float glass.

Uncoated Tinted Outdoor Lite: Class 2 (tinted, heat-absorbing and light-reducing) float glass, Kind HS (heat strengthened), with a tint color of green, bronze or gray as selected by Architect.

Nominal Performance Characteristics are as indicated below:

Summer Daytime U-Value:	0.57
Winter Nighttime U-Value:	0.49
Shading Coefficient:	0.58

INSULATING GLASS PRODUCT DATA SHEET

Insulating Glass Unit Designation: IG-2

Classification of Units: Class CBA per ASTM E 774.

Air Space Width: Nominal 1/2 inch measured perpendicularly from surfaces of glass lites at unit's edge.

Gas Filling: Fill air space with argon.

Sealing System: Dual seal, primary and secondary sealants: manufacturer's standard sealants.

Spacer Specifications: Manufacturer's standard metal.

Dessicant: Either molecular sieve or silica gel or blend of both.

Corner Construction: Manufacturer's standard corner construction.

Color of Spacer: Color as selected by Architect from manufacturer's standard colors.

Glass Specifications: Comply with the following requirements:

Thickness of Each Lite: 6.0 mm (0.23 inch).

Uncoated Indoor Lite: Kind FT (fully tempered), Condition A (uncoated) Class 1 (clear) float glass.

Uncoated Outdoor Lite: Kind FT (fully tempered), Condition A (uncoated), Class 1 (clear) float glass.

ELASTOMERIC GLAZING SEALANT PRODUCT DATA SHEET

Base Polymer: Neutral-curing silicone.

Type: S (single component).

Grade: NS (nonsag).

Class: 25.

Additional Movement Capability: 50 percent movement in extension and 50 percent in compression for a total of 100 percent movement.

Use[s] Related to Exposure: NT (nontraffic).

Uses Related to Glazing Substrates: M, G, A, and, as applicable to glazing substrates indicated, O.
Use O Glazing Substrates: Coated glass, color anodized aluminum, aluminum coated with a high-performance coating, galvanized steel, wood, elastomeric glazing gaskets and glazing accessories.

Available Products: "795", Dow Corning; "Silglaze II 2800," GE silicones.

END OF SECTION 08800

SECTION 09255 - GYPSUM BOARD ASSEMBLIES

PART 1 - GENERAL

1.1 RELATED DOCUMENTS

A. Drawings and general provisions of the Contract, including General an d Supplementary Conditions and Division 1 Specification Sections, apply to this Section.

1.2 SUMMARY

A. This Section includes the following:
1. Non-load-bearing steel framing members for gypsum board assemblies.
2. Gypsum board assemblies attached to steel framing.
3. Cementitious Backer Units

1.3 DEFINITIONS

A. Gypsum Board Construction Terminology: Refer to ASTM C 11 and GA -505 for definitions of terms related to gypsum board assemblies not defined in this Section or in other referenced standards.

1.4 SUBMITTALS

A. General: Submit the following according to Conditions of the Contract and Division 1 Specification Sections.

B. Product data for each type of product specified.

C. Product certificates signed by manufacturers of gypsum board assembly components certifying that their products comply with specified requirements.

1.5 QUALITY ASSURANCE

A. Single-Source Responsibility for Steel Framing: Obtain steel framing members for gypsum board assemblies from a single manufacturer.

B. Single-Source Responsibility for Panel Products: Obtain each type of gypsum board and other panel products from a single manufacturer.

C. Single-Source Responsibility for Finishing Materials: Obtain finishing materials from either the same manufacturer that supplies gypsum board and other panel products or from a manufacturer acceptable to gypsum board manufacturer.

1.6 DELIVERY, STORAGE, AND HANDLING

A. Deliver materials in original packages, containers, or bundles bearing brand name and identification of manufacturer or supplier.

B. Store materials inside under cover and keep them dry and protected against damage from weather, direct sunlight, surface contamination, corrosion, construction traffic, and other causes. Neatly stack gypsum panels flat to prevent sagging.

C. Handle gypsum board to prevent damage to edges, ends, and surfaces. Do not bend or otherwise damage metal corner beads and trim.

1.7 PROJECT CONDITIONS

A. Environmental Conditions, General: Establish and maintain environmental conditions for applying and finishing gypsum board to comply with ASTM C 840 and with gypsum board manufacturer's recommendations.

B. Room Temperatures: For nonadhesive attachment of gypsum board to framing, maintain not less than 40 deg F (4 deg C). For adhesive attachment and finishing of gypsum board, maintain not less than 50 deg F (10 deg C) for 48 hours prior to application and continuously after until dry. Do not exceed 95 deg F (35 deg C) when using temporary heat sources.

C. Ventilation: Ventilate building spaces, as required, for drying joint treatment materials. Avoid drafts during hot dry weather to prevent finishing materials from drying too rapidly.

PART 2 - PRODUCTS

2.1 MANUFACTURERS

A. Available Manufacturers: Subject to compliance with requirements, manufacturers offering products that may be incorporated in the Work include, but are not limited to, the following:
1. Steel Framing and Furring:
a. Dale Industries, Inc.
b. Dietrich Industries, Inc.
c. Gold Bond Building Products Div., National Gypsum Co.
d. Or, pre-approved equal.
2. Gypsum Board:
a. Domtar Gypsum.
b. Georgia-Pacific Corp.
c. Gold Bond Building Products Div., National Gypsum Co.
d. United States Gypsum Co.
e. Or, pre-approved equal.
3. Cementitious Backer Units:
a. United States Gypsum Co.
b. Or, pre-approved equal.

2.2 STEEL FRAMING COMPONENTS FOR SUSPENDED AND FURRED CEILINGS

A. General: Provide components of sizes indicated but not less than that required to comply with ASTM C 754 for conditions indicated.

B. Wire for Hangers and Ties: ASTM A 641, Class 1 zinc coating, soft temper.

C. Channels: Cold-rolled steel, 0.05980-inch-minimum thickness of base (uncoated) metal and 7/16-inch-wide flanges, and as follows:
1. Carrying Channels: 1-1/2 inch deep, 475 lb per 1000 feet, unless otherwise indicated.
2. Finish: Rust-inhibitive paint, unless otherwise indicated.

D. Steel Rigid Furring Channels: ASTM C 645, hat-shaped, depth of 7/8 inch, and minimum thickness of base (uncoated) metal as follows:
1. Thickness: 0.0179 inch, unless otherwise indicated.

2.3 STEEL FRAMING FOR WALLS AND PARTITIONS

A. General: Provide steel framing members complying with the following requirements:
1. Component Sizes and Spacings: As indicated but not less than that required to comply with ASTM C 754 under the following maximum deflection and lateral loading

conditions:
a. Maximum Deflection: L/240 at 5 lbf per sq. ft.
2. Protective Coating: G40 hot-dip galvanized coating per ASTM A 525.

B. Steel Studs and Runners: ASTM C 645, with flange edges of studs bent back 90 deg and doubled over to form 3/16-inch-wide minimum lip (return) and complying with the following requirements for minimum thickness of base (uncoated) metal and for depth:
1. Thickness: 0.0179 inch, unless otherwise indicated.
2. Depth: 3-5/8 inches, unless otherwise indicated.
3. Spacing: 16 inches on center, unless otherwise indicated.

C. Fasteners for Metal Framing: Provide fasteners of type, material, size, corrosion resistance, holding power, and other properties required to fasten steel framing and furring members securely to substrates involved; complying with the recommendations of gypsum board manufacturers for applications indicated.

2.4 GYPSUM BOARD PRODUCTS

A. General: Provide gypsum board of types indicated in maximum lengths available to minimize end-to-end butt joints.

B. Gypsum Wallboard: ASTM C 36 and as follows:
1. Type: Regular for vertical surfaces, unless otherwise indicated.
2. Edges: Tapered.
3. Thickness: 5/8 inch unless otherwise noted

2.5 CEMENTITIOUS BACKER UNITS

A. Cementitious Backer Units: ANSI A118.9 and as follows:
1. Thickness: ˇ inch

2.5 TRIM ACCESSORIES

A. Accessories for Interior Installation: Corner beads, edge trim, and control joints complying with ASTM C 1047 and requirements indicated below:
1. Material: Formed metal, plastic, or metal combined with paper, with metal complying with the following requirement:
a. Sheet steel coated with zinc by hot-dip or electrolytic processes, or with aluminum or rolled zinc.
2. Shapes indicated below by reference to Fig. 1 designations in ASTM C 1047:
a. Cornerbead on outside corners, unless otherwise indicated.
b. LC-bead with both face and back flanges; face flange formed to receive joint compound. Use LC-beads for edge trim unless otherwise indicated.
c. One-piece control joint formed with V-shaped slot, with removable strip covering slot opening.

2.6 JOINT TREATMENT MATERIALS

A. General: Provide joint treatment materials complying with ASTM C 475 and the recommendations of both the manufacturers of sheet products and of joint treatment materials for each application indicated.

B. Joint Tape for Gypsum Board: Paper reinforcing tape, unless otherwise indicated.

C. Setting-Type Joint Compounds for Gypsum Board: Factory-packaged, job-mixed, chemical-hardening powder products formulated for uses indicated.

1. Where setting-type joint compounds are indicated as a taping compound only or for taping and filling only, use formulation that is compatible with other joint compounds applied over it.

D. Drying-Type Joint Compounds for Gypsum Board: Factory-packaged vinyl-based products complying with the following requirements for formulation and intended use.
1. Ready-Mixed Formulation: Factory-mixed product.
2. Taping compound formulated for embedding tape and for first coat over fasteners and face flanges of trim accessories.
3. Topping compound formulated for fill (second) and finish (third) coats.

E. Joint Tape and Joint Compound for Cement Board: Material recommended by cement board unit manufacturer

2.7 MISCELLANEOUS MATERIALS

A. General: Provide auxiliary materials for gypsum board construction that comply with referenced standards and recommendations of gypsum board manufacturer.

B. Spot Grout: ASTM C 475, setting-type joint compound recommended for spot grouting hollow metal door frames.

C. Steel drill screws complying with ASTM C 1002 for the following applications:
1. Fastening gypsum board to steel members less than 0.03 inch thick.
2. Fastening gypsum board to wood members.

D. Steel drill screws complying with ASTM C 954 for fastening gypsum board to steel members from 0.033 to 0.112 inch thick.

PART 3 - EXECUTION

3.1 EXAMINATION

A. Examine substrates to which gypsum board assemblies attach or abut, installed hollow metal frames, cast-in-anchors, and structural framing with Installer present for compliance with requirements for installation tolerances and other conditions affecting performance of assemblies specified in this Section. Do not proceed with installation until unsatisfactory conditions have been corrected.

3.2 INSTALLING STEEL FRAMING, GENERAL

A. Steel Framing Installation Standard: Install steel framing to comply with ASTM C 754 and with ASTM C 840 requirements that apply to framing installation.

B. Install supplementary framing, blocking, and bracing at terminations in gypsum board assemblies to support fixtures, equipment services, heavy trim, grab bars, toilet accessories, furnishings, or similar construction. Comply with details indicated and with recommendations of gypsum board manufacturer or, if none available, with "Gypsum Construction Handbook" published by United States Gypsum Co.

C. Isolate steel framing from building structure at locations indicated to prevent transfer of loading imposed by structural movement. Comply with details shown on Drawings.
2. Where building structure abuts ceiling perimeter or penetrates ceiling.
3. Where partition framing and wall furring abut structure except at floor.
a. Provide slip- or cushioned-type joints as detailed to attain lateral support and

avoid axial loading.

D. Do not bridge building expansion and control joints with steel framing or furring members. Independently frame both sides of joints with framing or furring members as indicated.

3.3 INSTALLING STEEL FRAMING FOR SUSPENDED CEILINGS

A. Suspend ceiling hangers from building structural members and as follows:
1. Install hangers plumb and free from contact with insulation or other objects within ceiling plenum that are not part of supporting structural or ceiling suspension system. Splay hangers only where required to miss obstructions and offset resulting horizontal forces by bracing, countersplaying, or other equally effective means.
2. Where width of ducts and other construction within ceiling plenum produces hanger spacings that interfere with the location of hangers required to support standard suspension system members, install supplemental suspension members and hangers in form of trapezes or equivalent devices. Size supplemental suspension members and hangers to support ceiling loads within performance limits established by referenced standards.
3. Secure wire hangers by looping and wire-tying, either directly to structures or to inserts, eyescrews, or other devices and fasteners that are secure and appropriate for substrate, and in a manner that will not cause them to deteriorate or otherwise fail due to age, corrosion, or elevated temperatures.
4. Do not attach hangers to steel deck or deck tabs. Attach hangers to structural members.
5. Do not connect or suspend steel framing from ducts, pipes or conduit.

B. Install suspended steel framing components in sizes and at spacings indicated but not less than that required by the referenced steel framing installation standard.
1. Carrying Channels (Main Runners): 1-1/2 inch, 4 feet o.c.
2. Rigid Furring Channels (Furring Members): 16 inches o.c.

C. Installation Tolerances: Install steel framing components for suspended ceilings so that cross-furring members or grid suspension members are level to within 1/8 inch in 12 feet as measured both lengthwise on each member and transversely between parallel members.

3.4 INSTALLING STEEL FRAMING FOR WALLS AND PARTITIONS

A. Install runners (tracks) at floors, ceilings, and structural walls and columns where gypsum board stud assemblies abut other construction.
1. Where studs are installed directly against exterior walls, install asphalt felt strips between studs and wall.

B. Installation Tolerances: Install each steel framing and furring member so that fastening surfaces do not vary more than 1/8 inch from the plane formed by the faces of adjacent framing.

C. Extend partition framing full height to structural supports or substrates above suspended ceilings, except where partitions are indicated to terminate at suspended ceilings. Cut studs 1/2 inch short of full height. Continue framing over frames for doors and openings and frame around ducts penetrating partitions above ceiling to provide support for gypsum board.

D. Terminate partition framing at suspended ceilings where indicated.

E. Install steel studs and furring in sizes and at spacings indicated but not less than that required by the referenced steel framing installation standard to comply with maximum deflection and minimum loading requirements specified.

F. Install steel studs so that flanges point in the same direction and so that leading edges or ends of each gypsum board can be attached to open (unsupported) edges of stud flanges first.

G. Frame door openings to comply with details indicated, with GA-219, and with applicable published recommendations of gypsum board manufacturer. Attach vertical studs at jambs with screws either directly to frames or to jamb anchor clips on door frames; install runner track section (for cripple studs) at head and secure to jamb studs.

H. Frame openings other than door openings to comply with details indicated or, if none indicated, in same manner as required for door openings. Install framing below sills of openings to match framing required above door heads.

3.5 APPLYING AND FINISHING GYPSUM BOARD, GENERAL

A. Gypsum Board Application and Finishing Standards: Install and finish gypsum panels to comply with ASTM C 840 and GA-216.

B. Install ceiling board panels across framing to minimize the number of abutting end joints and avoid abutting end joints in the central area of each ceiling. Stagger abutting end joints of adjacent panels not less than one framing member.

C. Install wall/partition board panels to minimize the number of abutting end joints or avoid them entirely. Stagger abutting end joints not less than one framing member in alternate courses of board. At stairwells and other high walls, install panels horizontally with end abutting joints over studs and staggered.

D. Install gypsum panels with face side out. Do not install imperfect, damaged, or damp panels. Butt panels together for a light contact at edges and ends with not more than 1/16 inch of open space between panels. Do not force into place.

E. Locate both edge or end joints over supports, except in ceiling applications where intermediate supports or gypsum board back-blocking is provided behind end joints. Position adjoining panels so that tapered edges abut tapered edges, and field-cut edges abut field-cut edges and ends. Do not place tapered edges against cut edges or ends. Stagger vertical joints over different studs on opposite sides of partitions. Avoid joints at corners of framed openings where possible.

F. Attach gypsum panels to steel studs so that the leading edge or end of each panel is attached to open (unsupported) edges of stud flanges first.

G. Attach gypsum panels to framing provided at openings and cutouts.

H. Spot grout hollow metal door frames. Apply spot grout at each jamb anchor clip and immediately insert gypsum panels into frames.

I. Form control joints and expansion joints at locations indicated and as detailed, with space between edges of adjoining gypsum panels, as well as supporting framing behind gypsum panels.

J. Cover both faces of steel stud partition framing with gypsum panels in concealed spaces (above ceilings, etc.).
   1. Except where concealed application is indicated or required for sound, fire, air, or smoke ratings, coverage may be accomplished with scraps of not less than 8 sq. ft. in area.
   2. Fit gypsum panels around ducts, pipes, and conduits.

K. Isolate perimeter of non-load-bearing gypsum board partitions at structural abutments, except floors, as detailed. Provide 1/4-inch-to-1/2-inch-wide spaces at these locations and trim edges with U-bead edge trim where edges of gypsum panels are exposed. Seal joints between edges and abutting structural surfaces with acoustical sealant.

L. Space fasteners in gypsum panels according to referenced gypsum board application and finishing standard and manufacturer's recommendations.

3.6 GYPSUM BOARD APPLICATION METHODS

A. Single-Layer Application: Install gypsum wallboard panels as follows:
1. On ceilings, apply gypsum panels prior to wall/partition board application to the greatest extent possible and at right angles to framing, unless otherwise indicated.
2. On partitions/walls, apply gypsum panels vertically (parallel to framing), unless otherwise indicated, and provide panel lengths that will minimize end joints.

B. Single-Layer Fastening Methods: Apply gypsum panels to supports as follows:
1. Fasten with screws.

3.7 INSTALLING TRIM ACCESSORIES

A. General: For trim accessories with back flanges, fasten to framing with the same fasteners used to fasten gypsum board. Otherwise, fasten trim accessories according to accessory manufacturer's directions for type, length, and spacing of fasteners.

B. Install corner beads at external corners.

C. Install edge trim where edge of gypsum panels would otherwise be exposed or semi-exposed. Provide edge trim type with face flange formed to receive joint compound except where other types are indicated.
1. Install LC-bead where gypsum panels are tightly abutted to other construction and back flange can be attached to framing or supporting substrate.
2. Install other accessories where indicated.

D. Install control joints at locations indicated, and where not indicated according to ASTM C 840, and in locations approved by Architect for visual effect.

3.8 FINISHING GYPSUM BOARD ASSEMBLIES

A. General: Apply joint treatment at gypsum board joints (both directions); flanges of corner bead, edge trim, and control joints; penetrations; fastener heads, surface defects, and elsewhere as required to prepare gypsum board surfaces for decoration and levels of gypsum board finish indicated.

B. Prefill open joints, rounded or beveled edges, and damaged areas using setting-type joint compound.

C. Apply joint tape over gypsum board joints except those with trim accessories having concealed face flanges not requiring taping to prevent cracks from developing in joint treatment at flange edges.

D. Levels of Gypsum Board Finish: Provide the following levels of gypsum board finish per GA-214.
1. Level 4 for gypsum board surfaces unless otherwise indicated.

E. For level 4 gypsum board finish, embed tape in joint compound and apply three separate coats of joint compound over joints, angles, fastener heads, and accessories. Touch up and sand between coats and after last coat as needed to produce a surface free of visual defects and ready for decoration. Use following joint compound combination:
   1. Embedding and First Coat: Setting-type joint compound or ready-mixed, drying-type, topping compound.
   2. Fill (Second) Coat: Setting-type joint compound or ready-mixed, drying-type, topping compound.
   3. Finish (Third) Coat: Ready-mixed, drying-type, topping compound.

3.9 CLEANING AND PROTECTION

A Promptly remove any residual joint compound from adjacent surfaces.

B. Provide final protection and maintain conditions, in a manner suitable to Installer that ensures gypsum board assemblies remain without damage or deterioration at time of Substantial Completion.

END OF SECTION 09255

SECTION 09300 - TILE

PART 1 - GENERAL

1.1 RELATED DOCUMENTS

A. Drawings and general provisions of Contract, including General and Supplementary Conditions and Division 1 Specification Sections, apply to this Section.

1.2 SUMMARY

A. This Section includes the following:
1. Unglazed ceramic mosaic tile.
2. Glazed wall tile.

B. Related Sections: The following sections contain requirements that relate to this Section:
1. Division 3 Section "Cast in Place Concrete" for monolithic slab fi nishes specified for tile substrates.
2. Division 7 Section "Joint Sealants" for tile control and expansion joints.
3. Division 9 Section ‚Gypsum Board Assemblies„ for cement boards tile backer.

1.3 SUBMITTALS

A. General: Submit the following in accordance with Conditions of Contract and Division 1 Specification Sections.

B. Product data for each type of product specified.

C. Shop drawings indicating tile patterns and locations and widths of expansion, contraction, control, and isolation joints in tile substrates and finished tile surfaces.
1. Locate precisely each joint and crac k in tile substrates by measuring, record measurements on shop drawings, and coordinate them with tile joint locations, in consultation with Architect.

D. Samples for initial selection purposes in form of manufacturer’s color ch arts consisting of actual tiles or sections of tile showing full range of colors, textures, and patterns available for each type and composition of tile indicated. Include samples of grout and accessories involving color selection.

E. Samples for verification purposes of each item listed below, prepared on samples of size and construction indicated, products involve color and texture variations, in sets showing full range of variations expected.
1. Each type and composition of tile and for each color and texture required, at least 12 inches square, mounted on plywood or hardboard backing and grouted.
2. Full-size units of each type of trim and accessory for each color required.
3. Marble thresholds in 6-inch lengths.

F. Master grade certificates for each shipment, type, and composition of tile, signed by tile manufacturer and Installer.

G. Material test reports from qualified independent testing laboratory indicating and interpreting test results relative to compliance of tile and tile setting and grouting products with requirements indicated.

H. Qualification data for firms and p ersons specified in "Quality Assurance" article to demonstrate their capabilities and experience. Include list of completed projects with project names, addresses, names of Architects and Owners, plus other information specified.

1.4 QUALITY ASSURANCE

A. Single-Source Responsibility for Tile: Obtain each color, grade, finish, type, composition, and variety of tile from a single source with resources to provide products of consiste nt quality in appearance and physical properties without delaying progress of the Work.

B. Single-Source Responsibility for Setting and Grouting Materials: Obtain ingredients of a uniform quality from one manufacturer for each c ementitious and admixture component and from one source or producer for each aggregate.

C. Installer Qualifications: Engage an experienced Installer who has successfully completed tile installations similar in material, design, and extent to that indicated for Project.

1.5 DELIVERY, STORAGE, AND HANDLING

A. Deliver and store packaged materials in original containers with seals unbroken and labels intact until time of use. Comply with requirement of ANSI A137.1 for labeling sealed tile packages.

B. Prevent damage or contamination to materials by water, freezing, foreign matter, and other causes.

1.6 PROJECT CONDITIONS

A. Maintain environmental conditions and protect work during and after installation to comply with referenced standards and manufacturer's printed recommendations.

B. Vent temporary heaters to exterior to prevent damage to tile work from carbon dioxide buildup.

C. Maintain temperatures at 50 deg F (10 deg C) or more in tiled areas during installation and for 7 days after completion, unless higher temperatures are required by referenced installation standard or manufacturer's instructions.

1.7 EXTRA MATERIALS

A. Deliver extra materials to Owner. Furnish extra materials that match products installed as described below, packaged with protective covering for storage and identified with labels clearly describing contents.
   1. Tile and Trim Units: Furnish quantity of full-size units equal to 3 percent of amount installed, for each type, composition, color, pattern, and size.

PART 2 - PRODUCTS

2.1 MANUFACTURERS

A. Available Manufacturers: Subject to compliance with requirements, manufacturers offering products that may be incorporated in the Work, include, but are not limited to, the following:
   1. Unglazed Ceramic Mosaic Tile:
      a. American Olean Tile Co., Inc.
      b. Dal-Tile Corp.
      c. Or, pre-approved equal.
   2. Glazed Wall Tile:
      a. American Olean Tile Co., Inc.
      b. Dal-Tile Corp.

c. Or, pre-approved equal.

3. Latex-Emulsion-Based Latex-Portland Cement Mortars:
   a. Bostik Construction Products Div.
   b. Custom Building Products
   c. Laticrete International Inc.
   d. Mapei Corp.
   e. Or, pre-approved equal.

2.2 PRODUCTS, GENERAL

A. ANSI Standard for Ceramic Tile: Comply with ANSI A137.1 "American Nationa l Standard Specifications for Ceramic Tile" for types, compositions, and grades of tile indicated.
   1. Furnish tile complying with "Standard Grade" requirements unless otherwise indicated.

B. ANSI Standard for Tile Installation Materials: Comply with ANSI standard referenced with products and materials indicated for setting and grouting.

C. Colors, Textures, and Patterns: Where manufacturer's standard products are indicated fo r tile, grout, and other products requiring selection of colors, surface textures, patterns, and other appearance characteristics, provide specific products or materials complying with the following requirements:
   1. Provide selections made by Architect from manufacturer's full range of standard colors, textures, and patterns for products of type indicated.
   2. Provide tile trim and accessories that match color and finish of adjoining flat tile.

D. Factory Blending: For tile exhibiting color variations within the ranges selected during sample submittals, blend tile in factory and package accordingly so that tile units taken from one package show the same range in colors as those taken f rom other packages and match approved samples.

2.3 TILE PRODUCTS

A. Unglazed Ceramic Mosaic Tile: Provide factory -mounted flat tile complying with the following requirements:
   1. Composition: Porcelain with abrasive admixture.
   2. Nominal Facial Dimensions: 2 inches by 2 inches.
   3. Nominal Thickness: 1/4 inch.
   4. Face: Plain with cushion edges.
   5. Aesthetic Effect: Provide tile from Dal -Tile price groups as follows, or comparable price group from other manufacturers:
      a. Price Group 1: 100 percent for field tile.

B. Glazed Wall Tile: Provide flat tile complying with the following requirements:
   1. Nominal Facial Dimensions: 4 -1/4 inches by 4-1/4 inches.
   2. Nominal Thickness: 5/16 inch.
   3. Face: Plain with cushion edge, unless pattern indicated.
   4. Aesthetic Effect: Provide tile from Dal -Tile price groups as follows, or comparable price group from other manufacturers:
      a. Price Group 1: 100% for field tile.

C. Trim Units: Provide tile trim units to match characteristics of adjoining flat tile and to comply with following requirements:
   1. Size: As indicated, coordinated with sizes and coursing of adjoining flat tile where applicable.
   2. Shapes: As follows, selected from manufacturer's standard shapes:
      a. Base for Portland Cement Mortar Installations: 4„ Coved base of the same

material as the unglazed floor tile.
b. Wainscot Cap for Thinset Mortar Installations: Surface bullnose.
c. External corners for Portland Cement Mortar Installations: Bullnose shape with a radius of at least 3/4 inch unless otherwise indicated.
d. External Corners for Thinset Installations: Surface bullnose.
e. Internal Corners: Field-butted square corners, except use coved base and cap angle pieces designed to member with stretcher shapes.

2.4 SETTING MATERIALS

A. Portland Cement Mortar Installation Materials: Provide materials complying with ANSI A108.1 and as specified below.
1. Latex additive (water emulsion) described below, serving as replacement for part or all of gauging water, of type specifically recommended by latex additive manufacturer for use with job-mixed portland cement and aggregate mortar bed.
a. Latex Additive: Manufacturer's standard.

B. Latex-Portland Cement Mortar: ANSI A118.4, composition as follows:
1. Prepackaged dry mortar mix composed of portland cement, graded aggregate, and the following dry polymer additive in the form of a reemulsifiable powder to which only water is added at job site.
a. Dry Polymer Additive: Polyvinyl acetate or ethylene vinyl acetate.

2. Latex additive (water emulsion) of type described below, serving as replacement for part or all of gauging water, combined at job site with prepackaged dry mortar mix supplied or specified by latex additive manufacturer.
a. Latex Type: Styrene butadiene rubber.

2.5 GROUTING MATERIALS

A. Latex-Portland Cement Grout: ANSI A118.6, color as indicated, composition as follows:
1. Prepackaged dry grout mix composed of portland cement, graded aggregate, and the following dry polymer additive in the form of a reemulsifiable powder to which only water is added at job site.
a. Dry Polymer Additive: Polyvinyl acetate or ethylene vinyl acetate.
2. Latex additive (water emulsion) serving as replacement for part or all of gauging water, added at job site with dry grout mixture, with type of latex and dry grout mix as follows:
a. Latex Type: Manufacturer's standard.
b. Dry Grout Mixture: Commercial portland cement specified or supplied by latex additive manufacturer.
1) Application: Use commercial portland cement grout combined with latex additive for grouting joints in floor tile unless otherwise indicated.

2.6 MISCELLANEOUS MATERIALS

A. Floor Sealer: Penetrating silicone sealer, compatible with tile and grout.

2.7 MIXING MORTARS AND GROUT

A. Mix mortars and grouts to comply with requirements of referenced standards and manufacturers including those for accurate proportioning of materials, water, or additive content; type of mixing equipment, selection of mixer speeds, mixing containers, mixing time, and other procedures needed to produce mortars and grouts of uniform quality with optimum performance characteristics for application indicated.

PART 3 - EXECUTION

3.1 EXAMINATION

A. Examine substrates and areas where tile will be installed, with Installer present, for compliance with requirements for installation tolerances and other conditions affecting performance of installed tile.
   1. Verify that substrates for setting tile are firm, dry, clean, and free from oil or waxy films and curing compounds.
   2. Verify that installation of grounds, anchors, recessed frames, electrical and mechanical units of work, and similar items located in or behind tile has been completed before installing tile.

B. Do not proceed with installation until unsatisfactory conditions have been corrected.

3.2 PREPARATION

A. Blending: For tile exhibiting color variations within the ranges selected during sample submittals, verify that tile has been blended in factory and packaged accordingly so that tile units taken from one package show the same range in colors as those taken from other packages and match approved samples. If not factory blended, either return to manufacturer or blend tiles at Project site before installing.

3.3 INSTALLATION, GENERAL

A. ANSI Tile Installation Standard: Comply with parts of ANSI 108 series of tile installation standards included under "American National Standard Specifications for the Installation of Ceramic Tile" that apply to type of setting and grouting materials and methods indicated.

B. TCA Installation Guidelines: TCA "Handbook for Ceramic Tile Installation"; comply with TCA installation methods indicated.

C. Extend tile work into recesses and under or behind equipment and fixtures to form a complete covering without interruptions except as otherwise shown. Terminate work neatly at obstructions, edges, and corners without disrupting pattern or joint alignments.

D. Accurately form intersections and returns. Perform cutting and drilling of tile without marring visible surfaces. Carefully grind cut edges of tile abutting trim, finish, or built-in items for straight aligned joints. Fit tile closely to electrical outlets, piping, fixtures, and other penetrations so that plates, collars, or covers overlap tile.

E. Jointing Pattern: Unless otherwise shown, lay tile in grid pattern. Align joints when adjoining tiles on floor, base, walls, and trim are same size. Lay out tile work and center tile fields in both directions in each space or on each wall area. Adjust to minimize tile cutting. Provide uniform joint widths unless otherwise shown.
   1. For tile mounted in sheets, make joints between tile sheets same width as joints within tile sheets so that extent of each sheet is not apparent in finished work.

F. Lay out tile wainscots to next full tile beyond dimensions indicated.

G. Expansion Joints: Locate expansion joints and other sealant-filled joints, including control, contraction, and isolation joints, where indicated during installation of setting materials, mortar beds, and tile. Do not saw cut joints after installation of tiles.
   1. Locate joints in tile surfaces directly above joints in concrete substrates.

H. Grout tile to comply with the requirements of the following installation standards:
   1. For ceramic tile grouts (sand-portland cement, dry-set, commercial portland cement, and latex-portland cement grouts), comply with ANSI A108.10.

3.4 FLOOR INSTALLATION METHODS

A. Ceramic Mosaic Tile: Install tile to comply with requirements indicated below for setting bed methods, TCA installation methods related to types of subfloor construction, and grout types:
   1. Portland Cement Mortar: ANSI A108.1
      a. Bond Coat: Portland cement paste or dust coat on plastic bed or the following thin-set mortar on cured bed, ANSI A108.5, at Contractor's option:
         1) Latex-portland cement mortar.
      b. Concrete Subfloors, Interior: TCA F112 (bonded).
      c. Grout: Latex-portland cement.

3.5 WALL TILE INSTALLATION METHODS

A. Install types of tile designated for wall application to comply with requirements indicated below for setting-bed methods, TCA installation methods related to subsurface wall conditions, and grout types:
   1. Latex-Portland Cement Mortar: ANSI A108.5.
      a. Masonry, Interior: TCA W202.
      b. Grout: Latex-portland cement.

3.6 CLEANING AND PROTECTION

A. Cleaning: Upon completion of placement and grouting, clean all ceramic tile surfaces so they are free of foreign matter.
   1. Remove latex-portland cement grout residue from tile as soon as possible.
   2. Apply sealer in accordance with manufacturer's recommenations. Allow grout to cure the minimum number of days recommended by the sealer manufacturer.

B. Finished Tile Work: Leave finished installation clean and free of cracked, chipped, broken, unbonded, and otherwise defective tile work.

C. Provide final protection and maintain conditions in a manner acceptable to manufacturer and installer that ensures that tile is without damage or deterioration at time of Substantial Completion.
   1. When recommended by tile manufacturer, apply a protective coat of neutral protective cleaner to completed tile walls and floors. Protect installed tile work with kraft paper or other heavy covering during construction period to prevent staining, damage, and wear.
   2. Prohibit foot and wheel traffic from tiled floors for at least 7 days after grouting is completed.

D. Before final inspection, remove protective coverings and rinse neutral cleaner from tile surfaces.

END OF SECTION 09300

SECTION 09511 - ACOUSTICAL PANEL CEILINGS

PART 1 - GENERAL

1.1 SUMMARY

A. This Section includes acoustical panels and exposed suspension systems for ceilings.

1.2 SUBMITTALS

A. Product Data: For each type of product indicated.

B. Coordination Drawings: Drawn to scale and coordinating acoustical panel ceiling installation with hanger attachment to building structure and ceiling mounted items:

C. Samples: For each exposed finish.

D. Product test reports.

E. Research/evaluation reports.

F. Maintenance data.

1.3 QUALITY ASSURANCE

A. Acoustical Testing Agency Qualifications: An independent testing laboratory or an NVLAP-accredited laboratory.

B. Seismic Standard: Comply with the following:
1. Standard for Ceiling Suspension Systems Requiring Seismic Restraint: Comply with ASTM E 580.
2. CISCA's Recommendations for Acoustical Ceilings: Comply with CISCA's "Recommendations for Direct-Hung Acoustical Tile and Lay-in Panel Ceilings--Seismic Zones 0-2."
3. CISCA's Guidelines for Systems Requiring Seismic Restraint: Comply with CISCA's "Guidelines for Seismic Restraint of Direct-Hung Suspended Ceiling Assemblies--Seismic Zones 3 & 4."
4. UBC Standard 25-2, "Metal Suspension Systems for Acoustical Tile and for Lay-in Panel Ceilings."
5. ASCE 7, "Minimum Design Loads for Buildings and Other Structures": Section 9, "Earthquake Loads."
6. Requirement of CBC Title 24.

1.4 EXTRA MATERIALS

A. Furnish extra materials described below that match products installed and that are packaged with protective covering for storage and identified with labels describing contents.
1. Acoustical Ceiling Panels: Full-size panels equal to [2.0] percent of quantity installed.
2. Suspension System Components: Quantity of each exposed component equal to [2.0] percent of quantity installed.

PART 2 - PRODUCTS

2.1 ACOUSTICAL PANEL CEILINGS, GENERAL

A. Acoustical Panel Standard: Comply with ASTM E 1264.

B. Metal Suspension System Standard: Comply with ASTM C 635.

C. Attachment Devices: Size for five times the design load indicated in ASTM C 635, Table 1, "Direct Hung," unless otherwise indicated. Comply with seismic design requirements.

D. Wire Hangers, Braces, and Ties: Zinc-coated carbon-steel wire; ASTM A 641/A 641M, Class 1 zinc coating, soft temper.
1. Size: Select wire diameter so its stress at 3 times hanger design load (ASTM C 635, Table 1, "Direct Hung") will be less than yield stress of wire, but provide not less than 0.106-inch- (2.69-mm-) diameter wire.

E. Seismic perimeter stabilizer bars, seismic struts, and seismic clips.

F. Metal Edge Moldings and Trim: Type and profile indicated or, if not indicated, manufacturer's standard moldings for edges and penetrations that comply with seismic design requirements; formed from sheet metal of same material, finish, and color as that used for exposed flanges of suspension system runners.

2.2 ACOUSTICAL PANELS FOR ACOUSTICAL PANEL CEILING

A. Available Products: Subject to compliance with requirements, products that may be incorporated into the Work include, but are not limited to, the following:

B. Products: Subject to compliance with requirements, provide one of the following:
1. Armstrong World Industries, Inc.;
2. Chicago Metallic Corporation;
3. Ecophon CertainTeed, Inc.;
4. USG Interiors, Inc.

C. Basis-of-Design Product: Subject to compliance with product:
1. Armstrong Altima with a tegular edge
2. Color: White.
3. Edge/Joint Detail: Square and reveal sized to fit flange of exposed suspension system members.
4. Thickness: 5/8 inch (15 mm).
5. Modular Size: 2x4
6. Grid: 15/16¸ Exposed Grid

2.3 METAL SUSPENSION SYSTEM FOR ACOUSTICAL PANEL CEILING

A. Available Products: Subject to compliance with requirements, products that may be incorporated into the Work include, but are not limited to, the following:

B. Products: Subject to compliance with requirements, provide one of the following:
1. Armstrong World Industries, Inc.;
2. Chicago Metallic Corporation;
3. USG Interiors, Inc.

C. Double-Web, Steel Suspension System: Main and cross runners roll formed from cold-rolled steel sheet, prepainted, electrolytically zinc coated, or hot-dip galvanized according to ASTM A 653/A 653M, not less than G30 (Z90) coating designation, with prefinished 15/16-inch- (24-mm-) and 9/16¸ (14mm).
1. Structural Classification: Intermediate duty system.

2. End Condition of Cross Runners: Override (stepped) or butt-edge type.
3. Cap Material: Steel or aluminum cold-rolled sheet.
4. Cap Finish: Painted white.

PART 3 - EXECUTION

3.1 INSTALLATION

A. Comply with UBC Standard 25-2 and seismic design requirements indicated, per manufacturer's written instructions and CISCA's "Ceiling Systems Handbook."

B. Measure each ceiling area and establish layout of acoustical panels to balance border widths at opposite edges of each ceiling. Avoid using less-than-half-width panels at borders.

C. Suspend ceiling hangers from building's structural members, plumb and free from contact with insulation or other objects within ceiling plenum. Splay hangers only where required to miss obstructions; offset resulting horizontal forces by bracing, countersplaying, or other equally effective means. Where width of ducts and other construction within ceiling plenum produces hanger spacings that interfere with location of hangers, use trapezes or equivalent devices. When steel framing does not permit installation of hanger wires at spacing required, install carrying channels or other supplemental support for attachment of hanger wires.

D. Install edge moldings and trim of type indicated at perimeter of acoustical ceiling area and where necessary to conceal edges of acoustical panels. Screw attach moldings to substrate at intervals not more than 16 inches (400 mm) o.c. and not more than 3 inches (75 mm) from ends, leveling with ceiling suspension system to a tolerance of 1/8 inch in 12 feet (3.2 mm in 3.6 m). Miter corners accurately and connect securely.

E. Install suspension system runners so they are square and securely interlocked with one another. Remove and replace dented, bent, or kinked members.

F. Install acoustical panels with undamaged edges and fit accurately into suspension system runners and edge moldings. Scribe and cut panels at borders and penetrations to provide a neat, precise fit.

END OF SECTION 09511

SECTION 09660 - RESILIENT TILE FLOORING

PART 1 - GENERAL

1.1 RELATED DOCUMENTS

A. Drawings and general provisions of the Contract, including General an d Supplementary Conditions and Division 1 Specification Sections, apply to this Section.

1.2 SUMMARY

A. This Section includes the following:
1. Vinyl composition floor tile.

B. Resilient wall base, reducer strips, and other accessories installed with resilient floor tiles are specified in Division 9 Section "Resilient Wall Base and Accessories."

1.3 SUBMITTALS

A. General: Submit the following in accordance with Conditions of Contract and Division 1 Specification Sections.

B. Product data for each type of product specified.

C. Samples for initial selection purposes in form of manufacturer's color charts consisting of actual tiles or sections of tiles showing full range of colors and patterns available for each type of resilient floor tile indicated.

D. Samples for verification purposes in full-size tiles of each different color and pattern of resilient floor tile specified, showing full range of variations expected in these characteristics.

E. Maintenance data for resilient floor tile, to include in Operating and Maintenance Manual specified in Division 1.

1.4 QUALITY ASSURANCE

A. Single-Source Responsibility for Floor Tile: Obtain each type, color, and pattern of tile from a single source with resources to provide products of consistent quality in appearance and physical properties without delaying progress of the Work.

1.5 DELIVERY, STORAGE, AND HANDLING

A. Deliver tiles and installation accessories to Project site in original manufacturer's unopened cartons and containers each bearing names of product and manufacturer, Project identification, and shipping and handling instructions.

B. Store flooring materials in dry spaces protected from the weather with ambient temperatures maintained between 50 deg F (10 deg C) and 90 deg F (32 deg C).

C. Store tiles on flat surfaces.

D. Move tiles and installation accessories into spaces where they will be installed at least 48 hours in advance of installation.

1.6 PROJECT CONDITIONS

A. Maintain a minimum temperature of 70 deg F (21 deg C) in spaces to receive tiles for at least 48 hours prior to installation, during installation, and for not less than 48 hours after

installation. After this period, maintain a temperature of not le ss than 55 deg F (13 deg C).

B. Do not install tiles until they are at the same temperature as the space where they are to be installed.

C. Close spaces to traffic during tile installation.

1.7 SEQUENCING AND SCHEDULING

A. Install tiles and accessories after other finishing operations, including painting, have been completed.

B. Do not install tiles over concrete slabs until the slabs have cured and are sufficiently dry to bond with adhesive as determined by tile manufacturer's recommended bond and moisture test.

1.8 EXTRA MATERIALS

A. Deliver extra materials to Owner. Furnish extra materials matching products installed as described below, packaged with protective covering for storage and identified with labels clearly describing contents.
1. Furnish not less than one box for each 50 boxes or fraction thereof, of each class, wearing surface, color, pattern and size of resilient floor tile installed.

PART 2 - PRODUCTS

2.1 MANUFACTURERS

A. Available Products: Subject to compliance with requirements, resilient floor tiles that may be incorporated in the Work include, but are not limited to, the products specified in each Product Data Sheet at end of this S ection.

B. Vinyl Composition Floor Tile: Products complying with ASTM F 1066, Composition 1 (nonasbestos formulated), and with requirements specified in Vinyl Composition Floor Tile Product Data Sheet at end of this Section.

2.2 INSTALLATION ACCESSORIES

A. Concrete Slab Primer: Nonstaining type as recommended by flooring manufacturer.

B. Trowelable Underlayments and Patching Compounds: Latex-modified, portland-cement-based formulation provided or approved by tile manufacturer for applications indicated.

C. Adhesives (Cements): Water-resistant type recommended by tile manufacturer to suit resilient floor tile products and substrate conditions indicated.

PART 3 - EXECUTION

3.1 EXAMINATION

A. General: Examine areas where installation of tiles will occur, with Installer present, to verify that substrates and conditions are satisfactory for tile installation and comply with tile manufacturer's requirements and those specified in this Section.

B. Concrete Subfloors: Verify that concrete slabs comply with ASTM F 710 and the following:

1. Slab substrates are dry and free of curing compounds, sealers, hardeners, and other materials whose presence would interfere with bonding of adhesive. Determine adhesion and dryness characteristics by performing bond and moisture tests recommended by tile manufacturer.

2. Finishes of subfloors comply with tolerances and other requirements specified in Division 3 Section "Cast-In-Place Concrete" for slabs receiving resilient flooring.

3. Subfloors are free of cracks, ridges, depressions, scale, and foreign deposits of any kind.

C. Do not proceed with installation until unsatisfactory conditions have been corrected.

3.2 PREPARATION

A. General: Comply with manufacturer's installation specifications to prepare substrates indicated to receive tile.

B. Use trowelable leveling and patching compounds per tile manufacturer's directions to fill cracks, holes, and depressions in substrates.

C. Remove coatings, including curing compounds, and other substances that are incompatible with flooring adhesives and that contain soap, wax, oil, or silicone, by using a terrazzo or concrete grinder, a drum sander, or a polishing machine equipped with a heavy-duty wire brush.

D. Broom or vacuum clean substrates to be covered by tiles immediately before tile installation. Following cleaning, examine substrates for moisture, alkaline salts, carbonation, or dust.

E. Apply concrete slab primer, if recommended by flooring manufacturer, prior to applying adhesive. Apply according to manufacturer's directions.

3.3 INSTALLATION

A. General: Comply with tile manufacturer's installation directions and other requirements indicated that are applicable to each type of tile installation included in Project.

B. Lay out tiles from center marks established with principal walls, discounting minor offsets, so tiles at opposite edges of room are of equal width. Adjust as necessary to avoid using cut widths at perimeter that equal less than one-half of a tile. Install tiles square with room axis, unless otherwise indicated.

C. Match tiles for color and pattern by selecting tiles from cartons in same sequence as manufactured and packaged, if so numbered. Cut tiles neatly around all fixtures. Discard broken, cracked, chipped, or deformed tiles.

1. Lay tiles with grain running in one direction.

D. Where items are indicated for installing on top of finished tile floor, install tile before these items are installed.

E. Scribe, cut, and fit tiles to butt tightly to vertical surfaces, permanent fixtures, built-in furniture including cabinets, pipes, outlets, edgings, thresholds, and nosings.

F. Extend tiles into toe spaces, door reveals, closets, and similar openings.

G. Maintain reference markers, holes, or openings that are in place or plainly marked for future cutting by repeating on finish flooring as marked on subfloor. Use chalk or other nonpermanent marking device.

H. Adhere tiles to flooring substrates without producing open cracks, voids, raising and puckering at joints, telegraphing of adhesive spreader marks, or other surface imperfections in completed tile installation.

I. Use full spread of adhesive applied to substrate in compliance with tile manufacturer's directions including those for trowel notching, adhesive mixing, and adhesive open and working times.

J. Hand roll tiles where required by tile manufacturer.

3.4 CLEANING AND PROTECTION

A. Perform the following operations immediately after completing tile installation:
   1. Remove visible adhesive and other surface blemishes using cleaner recommended by tile manufacturers.
   2. Sweep or vacuum floor thoroughly.
   3. Do not wash floor until after time period recommended by resilient floor tile manufacturer.
   4. Damp-mop tile to remove black marks and soil.

B. Protect flooring against mars, marks, indentations, and other damage from construction operations and placement of equipment and fixtures during remainder of construction period. Use protection methods indicated or recommended by tile manufacturer.
   1. Apply protective floor polish to tile surfaces that are free from soil, visible adhesive, and surface blemishes.
      a. Use commercially available, metal, cross-linked acrylic product acceptable to tile manufacturer.
      b. Coordinate selection of floor polish with Owner's maintenance service.
   2. Cover tiles with undyed, untreated building paper until inspection for Substantial Completion.
   3. Do not move heavy and sharp objects directly over tiles. Place plywood or hardboard panels over tiles and under objects while they are being moved. Slide or roll objects over panels without moving panels.

VINYL COMPOSITION FLOOR TILE PRODUCT DATA SHEET

Vinyl Composition Floor Tile Designation: VCT Type 1.

Class:	Class 2 (through pattern tile).
Wearing Surface:	Smooth.
Thickness:	1/8 inch.
Size:	12-by-12 inches.
Color and Pattern:	As selected by product designation below.
Available Products:	"Premium Excelon - Companion Square," Armstrong World Industries, Inc.; "Collage," Tarkett Inc., Mannington VCT, or pre-approved equal.

END OF SECTION 09660

SECTION 09678 - RESILIENT WALL BASE AND ACCESSORIES

PART 1 - GENERAL

1.1 RELATED DOCUMENTS

A. Drawings and general provisions of the Contract, including General and Supplementary Conditions and Division 1 Specification Sections, apply to this Section.

1.2 SUMMARY

A. This Section includes the following:
1. Resilient wall base.
2. Vinyl accessories.

B. Related Sections: The following Sections contain requirements that relate to this Section:
1. Division 9 Section "Resilient Tile Flooring."

1.3 SUBMITTALS

A. General: Submit the following in accordance with Conditions of Contract and Division 1 Specification Sections.

B. Product data for each type of product specified.

C. Samples for initial selection purposes of manufacturer's standard sample sets in form of pieces cut from each type of product specified showing full range of colors and patterns available.

D. Samples for verification purposes in manufacturer's standard sizes, but not less than 12 inches long, of each different color and pattern of product specified.

1.4 QUALITY ASSURANCE

A. Single-Source Responsibility for Products: Obtain each type and color of product specified from a single source with resources to provide products of consistent quality in appearance and physical properties without delaying progress of the Work.

1.5 DELIVERY, STORAGE, AND HANDLING

A. Deliver products to Project site in original manufacturer's unopened cartons and containers, each bearing names of product and manufacturer, Project identification, and shipping and handling instructions.

B. Store products in dry spaces protected from the weather with ambient temperatures maintained between 50 deg F (10 deg C) and 90 deg F (32 deg C).

C. Move products into spaces where they will be installed at least 48 hours in advance of installation.

1.6 PROJECT CONDITIONS

A. Maintain a minimum temperature of 70 deg F (21 deg C) in spaces to receive products specified in this Section for at least 48 hours prior to installation, during installation, and for not less than 48 hours after installation. After this period, maintain a temperature of not less than 55 deg F (13 deg C).

B. Do not install products until they are at the same temperature as that of the space where they are to be installed.

C. Close spaces to traffic during installation of products specified in this Section.

1.7 SEQUENCING AND SCHEDULING

A. Sequence installing products specified in this Section with other construction to minimize possibility of damage and soiling during remainder of construction period.

1.8 EXTRA MATERIALS

A. Deliver extra materials to Owner. Furnish extra materials matching products installed as described below, packaged with protective covering for storage, and identified with labels clearly describing contents.
   1. Furnish not less than 10 linear feet for each 500 linear feet or fraction thereof of each different type and color of resilient wall base installed.

PART 2 - PRODUCTS

2.1 MANUFACTURERS

A. Available Products: Subject to compliance with requirements, products that may be incorporated in the Work include, but are not limited to, those specified in each Product Data Sheet at end of this Section.

2.2 RESILIENT WALL BASE

A. Rubber Wall Base: Products complying with FS SS-W-40, Type I, and requirements specified in the Rubber Wall Base Product Data Sheet at end of this Section.

2.3 RESILIENT ACCESSORIES

A. Vinyl Accessories: Products complying with requirements specified in Vinyl Accessory Product Data Sheet at end of this Section.

2.4 INSTALLATION ACCESSORIES

A. Concrete Slab Primer: Nonstaining type as recommended by flooring manufacturer.

B. Trowelable Underlayments and Patching Compounds: Latex-modified, portland-cement-based formulation provided or approved by flooring manufacturer for applications indicated.

C. Adhesives: Water-resistant type recommended by manufacturer to suit resilient flooring product and substrate conditions indicated.

PART 3 - EXECUTION

3.1 EXAMINATION

A. Examine areas where installation of products specified in this Section will occur, with Installer present, to verify that substrates and conditions are satisfactory for installation and comply with manufacturer's requirements and those specified in this Section.

3.2 PREPARATION

A. General: Comply with manufacturer's installation specifications for preparing substrates indicated to receive products indicated.

B. Use trowelable leveling and patching compounds per manufacturers directions to fill cracks, holes, and depressions in substrates.

C. Remove coatings, including curing compounds, and other substances that are incompatible with flooring adhesives and that contain soap, wax, oil, or silicone, by using a terrazzo or concrete grinder, a drum sander, or a polishing machine equipped with a heavy -duty wire brush.

D. Broom or vacuum clean substrates to be covered immediately before installing products specified in this Section. Following cleaning, examine substrates for moisture, alkaline salts, carbonation, or dust.

E. Apply concrete slab primer, if recommended by flooring manufacturer, prior to applying adhesive. Apply according to manufacturer's directions.

3.3 INSTALLATION

A. General: Install products specified in this Section using methods indicated according to manufacturer's installation directions.

B. Apply resilient wall base to walls, columns, pilasters, casework, and other permanent fixtures in rooms and areas where base is required. Install wall base in lengths as long as practicable. Tightly adhere wall base to substrate throughout length of each piece, with base in continuous contact with horizontal and vertical substrates.
   1. Install inside and exterior corners before installing straight pieces.

C. Place resilient accessories so they are butted to adjacent materials of type indicated and bond to substrates with adhesive. Install reducer strips at edges of flooring that otherwise would be exposed.

3.4 CLEANING AND PROTECTION

A. Perform the following operations immediately after completing installation:

   1. Remove visible adhesive and other surface blemishes using cleaner recommended by manufacturers of resilient product involved.
   2. Sweep or vacuum floor thoroughly.
   3. Do not wash floor until after time period recommended by manufacturer.
   4. Damp-mop resilient accessories to remove black marks and soil.

B. Protect flooring against mars, marks, indentations, and other damage from construction operations and placement of equipment and fixtures during remainder of construction period. Use protection methods indicated or recommended by manufacturer of resilient product involved.
   1. Apply protective floor polish to resilient accessories that are free from soil, visible adhesive, and surface blemishes.
      a. Use commercially available metal, cross-linked, acrylic product acceptable to resilient accessory manufacturer.
      b. Coordinate selection of floor polish with Owner's maintenance service.

RUBBER WALL BASE PRODUCT DATA SHEET

Style:	Cove with top-set toe.
Minimum Nominal Thickness:	1/8 inch.
Height:	4 inches.
Lengths:	Coils in lengths standard with manufacturer but not less than 100 feet.
Exterior Corners:	Premolded.
Interior Corners:	Premolded or formed on job.
Ends:	Premolded.
Color and Pattern:	As selected by Architect from manufacturer's full range of colors and patterns produced for rubber wall base complying with requirements indicated.
Available Products:	Burke; Flexco Co.; Roppe Corp.; Johnsonite; or pre-approved equal.

VINYL ACCESSORY PRODUCT DATA SHEET

Product Description:	Binder bar edging reducer.
Profile and Dimensions:	As indicated.
Color:	As selected by Architect from manufacturer's full range of colors produced for vinyl accessories complying with requirements indicated.
Available Products:	"Vinyl Underslung Reducer," #168, Roppe Corp., or pre-approved equal.

END OF SECTION 09678

SECTION 09900 - PAINTING

PART 1 - GENERAL

1.1 RELATED DOCUMENTS

A. Drawings and general provisions of the Contract, including General and Supplementary Conditions and Division 1 Specification Sections, apply to this Section.

1.2 SUMMARY

A. This Section includes surface preparation, painting, and finishing of exposed interior and exterior items and surfaces.
   1. Surface preparation, priming, and finish coats specified in this Section are in addition to shop-priming and surface treatment specified under other Sections.

B. Paint exposed surfaces whether or not colors are designated in schedules, except where a surface or material is specifically indicated not to be painted or is to remain natural. Where an item or surface is not specifically mentioned, paint the same as similar adjac ent materials or surfaces. If color or finish is not designated, provide custom color as selected by the Architect.
   1. Painting includes field-painting exposed bare and covered pipes and ducts (including color coding), hangers, expo sed steel and iron work, and primed metal surfaces of mechanical and electrical equipment.
   2. Painting includes touch-up of factory primed surfaces prior to application of finish coats.

C. Painting is not required on prefinished items, finished metal surfaces, concealed surfaces, operating parts, and labels.
   1. Prefinished items not to be painted include the following factory-finished components:
      a. Architectural woodwork and casework unless otherwise noted.
      b. Finished mechanical and electrical equipment.
      c. Light fixtures.
      d. Switchgear.
      e. Distribution cabinets.
      f. Concrete slab or stem walls.
   2. Concealed surfaces not to be painted include wall or ceiling surfaces in the following generally inaccessible areas:
      a. Foundation spaces.
      b. Furred areas.
      c. Pipe spaces.
      d. Duct shafts.
      e. Concrete stemwalls.
   3. Finished metal surfaces not to be painted include:
      a. Anodized aluminum.
      b. Stainless steel.
   4. Operating parts not to be painted include moving parts of operating equipment, such as the following:
      a. Valve and damper operators.
      b. Linkages.
      c. Sensing devices.
      d. Motor and fan shafts.
   5. Labels: Do not paint over Underwriters Laboratories, Factory Mutual or other code-required labels or equipment name, identification, performance rating, or nomenclature plates.

D. Related Sections: The following Sections contain requirements that relate to this Section:
1. Division 5 Section "Metal Fabrications" for shop-priming ferrous metal.
2. Division 5 Section "Metal Stairs" for shop priming ferrous metal.
3. Division 5 Section "Pipe and Tube Railings" for shop priming.
4. Division 6 Section "Interior Architectural Woodwork" for shop-priming interior architectural woodwork.
5. Division 6 Section Miscellaneous Carpentry¿ for painting exposed lumber and plywood panels.
6. Division 8 Section "Standard Steel Doors and Frames" for shop-priming steel doors and frames.
7. Division 13 Section Metal Building Systems¿for shop priming metal.
8. Divisions 15 and 16: Painting mechanical and electrical work is specified in Divisions 15 and 16, respectively.

1.3 SUBMITTALS

A. General: Submit the following according to Conditions of the Contract and Division 1 Specification Sections.

B. Product data for each paint system specified, including block fillers and primers.
1. Provide the manufacturer's technical information including label analysis and instructions for handling, storage, and application of each material proposed for use.
2. List each material and cross-reference the specific coating, finish system, and application. Identify each material by the manufacturer's catalog number and general classification.

C. Samples for initial color selection in the form of manufacturer's color charts.
1. After color selection, the Architect will furnish color chips for surfaces to be coated.

D. Samples for Verification Purposes: Provide samples of each color and material to be applied, with texture to simulate actual conditions, on representative samples of the actual substrate.
1. Provide stepped samples, defining each separate coat, including block fillers and primers. Use representative colors when preparing samples for review. Resubmit until required sheen, color, and texture are achieved.
2. Provide a list of material and application for each coat of each sample. Label each sample as to location and application.
3. Submit samples on the following substrates for the Architect's review of color and texture only:
a. Ferrous Metal: Provide two 4-inch-square samples of flat metal and two 8-inch-long samples of solid metal for each color and finish.

1.4 QUALITY ASSURANCE

A. Applicator Qualifications: Engage an experienced applicator who has completed painting system applications similar in material and extent to those indicated for the Project that have resulted in a construction record of successful in-service performance.

B. Single-Source Responsibility: Provide primers and undercoat paint produced by the same manufacturer as the finish coats.

1.5 DELIVERY, STORAGE, AND HANDLING

A. Deliver materials to the job site in the manufacturer's original, unopened packages and containers bearing manufacturer's name and label, and the following information:
1. Product name or title of material.
2. Product description (generic classification or binder type).

3. Manufacturer's stock number and date of manufacture.
4. Contents by volume, for pigment and vehicle constituents.
5. Thinning instructions.
6. Application instructions.
7. Color name and number.

B. Store materials not in use in tightly covered containers in a well-ventilated area at a minimum ambient temperature of 45 deg F (7 deg C). Maintain containers used in storage in a clean condition, free of foreign materials and residue.
   1. Protect from freezing. Keep storage area neat and orderly. Remove oily rags and waste daily. Take necessary measures to ensure that workers and work areas are protected from fire and health hazards resulting from handling, mixing, and application.

1.6 JOB CONDITIONS

A. Apply water-based paints only when the temperature of surfaces to be painted and surrounding air temperatures are between 50 deg F (10 deg C) and 90 deg F (32 deg C).

B. Apply solvent-thinned paints only when the temperature of surfaces to be painted and surrounding air temperatures are between 45 deg F (7 deg C) and 95 deg F (35 deg C).

C. Do not apply paint in snow, rain, fog, or mist; or when the relative humidity exceeds 85 percent; or at temperatures less than 5 deg F (3 deg C) above the dew point; or to damp or wet surfaces.
   1. Painting may continue during inclement weather if surfaces and areas to be painted are enclosed and heated within temperature limits specified by the manufacturer during application and drying periods.

PART 2 - PRODUCTS

2.1 MANUFACTURERS

A. Available Manufacturers: Subject to compliance with requirements, manufacturers offering products that may be incorporated in the Work include, but are not limited to, the following:
   1. ICI Dulux Paints (ICI).
   2. PPG Industries, Pittsburgh Paints (PPG).
   3. Pratt and Lambert (P & L).
   4. The Sherwin-Williams Company (S-W).
   5. KWAL Howells.

2.2 PAINT MATERIALS, GENERAL

A. Material Compatibility: Provide block fillers, primers, finish coat materials, and related materials that are compatible with one another and the substrates indicated under conditions of service and application, as demonstrated by the manufacturer based on testing and field experience.

B. Material Quality: Provide the manufacturer's best-quality trade sale paint material of the various coating types specified. Paint material containers not displaying manufacturer's product identification will not be acceptable.
   1. Proprietary Names: Use of manufacturer's proprietary product names to designate colors or materials is not intended to imply that products named are required to be used to the exclusion of equivalent products of other manufacturers. Furnish the manufacturer's material data and certificates of performance for proposed substitutions.

C. Colors: Provide custom color selections made by the Architect.

2.3 PRIMERS

A. Primers: Provide the manufacturer's recommended factory-formulated primers that are compatible with the substrate and finish coats indicated.

B. Available Products: Subject to compliance with requirements, prime coat materials that may be incorporated in the Work include, but are not limited to, the following:

1. Gypsum Drywall / Interior Plywood Primer: White, interior, latex-based primer.
   a. ICI: 1030-Ultra Hide PVA Primer Sealer.
   b. PPG: 6-2 Quick-Dry Latex Primer Sealer.
   c. P & L: Latex Wall Primer Z30001.
   d. S-W: Pro-Mar 200 Latex Wall Primer B28W200.

2. Ferrous Metal Primers: Synthetic, quick-drying, rust-inhibiting primers.
   a. ICI: 4160 Devguard Tank & Structural Metal Primer.
   b. PPG: 6-208 Red Inhibitive Metal Primer.
   c. P & L: Effecto Rust-Inhibiting Primer.
   d. S-W: Kem Kromik Metal Primer B50N2/B50W1.

3. Ferrous Metal Primers: Alkyd-type primers.
   a. ICI: 4160 Devguard Tank & Structural Metal Primer..
   b. PPG: 6-612 Speedhide Inhibitive White Primer.
   c. P & L: Effecto Primer Red or White.
   d. S-W: Kem Kromik Metal Primer B50N2/B50W1.

4. Galvanized Metal Primers:
   a. ICI: 4120 All purpose Metal & Galvanized Primer.
   b. PPG: 6-215/216 Speedhide Galvanized Steel Primer.
   c. P & L: P & L Interior Trim Primer.
   d. S-W: Galvite B50W3.

2.4 UNDERCOAT MATERIALS

A. Undercoat Materials: Provide the manufacturer's recommended factory formulated undercoat materials as required in lieu of one of two finish coats that are compatible with the substrate and finish coats indicated.

B. Available Products: Subject to compliance with requirements, undercoat materials that may be incorporated in the Work include, but are not limited to, the following:

1. Interior & Exterior Enamel Undercoat: Ready-mixed enamel.
   a. ICI: 1120 Ultra Hide Alkyd Int. undercoater.
   b. PPG: 6-6 Speedhide Quick-Dry Enamel Undercoater.
   c. P & L: Interior Trim Primer.
   d. S-W: Pro-Mar 200 Alkyd Semi-Gloss Enamel B34W200.

2.5 EXTERIOR FINISH PAINT MATERIAL

A. Finish Paint: Provide the manufacturer's recommended factory-formulated finish-coat materials that are compatible with the substrate and undercoats indicated.

B. Available Products: Subject to compliance with requirements, finish coat materials that may be incorporated in the Work include, but are not limited to, the following:

1. Alkyd Gloss Enamel: Weather-resistant, air-drying, high-gloss enamel.
   a. ICI: 4308 Devguard Alkyd Industrial gloss Enamel.
   b. PPG: 54 Line Quick-Dry Enamel.
   c. P & L: Effecto Enamel.
   d. S-W: Industrial Enamel B-54 Series.

2.6 INTERIOR FINISH PAINT MATERIAL

A. Finish Paint: Provide the manufacturer's recommended factory-formulated finish-coat materials that are compatible with the substrate and undercoats indicated.

B. Available Products: Subject to compliance with requirements, finish coat materials that may be incorporated in the Work include, but are not limited to, the following:

1. Interior, Semigloss, Alkyd Enamel: Semigloss, low-odor, alkyd enamel.
   a. ICI: 1516 Ultra Hide Alkyd Semigloss Enamel.
   b. PPG: 27 Line Wallhide Semigloss Enamel.
   c. P & L: Cellu-Tone Alkyd Satin Enamel.
   d. S-W: ProMar 200 Alkyd Semigloss Enamel B34 Series.

2. Interior, Flat, Latex-Based Paint: Ready-mixed, latex-based paint.
   a. ICI: 1210 Ultra Hide Latex flat.
   b. PPG: 50-35 Latex Ceiling Paint.
   c. P & L: Vapex Latex Flat Wall Finish.
   d. S-W: ProMar 200 Laytex Flat Wall Paint B30 Series

3. Exterior, Gloss, Alkyd Enamel:
   a. ICI: 4380 Devguard Alkyd Industrial Gloss Enamel.
   b. PPG: 54 Line Quick-Dry Enamel.
   c. P & L: Effecto Enamel.
   d. S-W: Industrial Enamel B-54 Series.

2.7 DRY FOG/FALL COATINGS

A. Latex Dry Fog/Fall: MPI #118.

1. VOC Content: E Range of E2.
2. Environmental Performance Rating: EPR1

PART 3 - EXECUTION

3.1 EXAMINATION

A. Examine substrates and conditions under which painting will be performed for compliance with paint application requirements. Surfaces receiving paint must be thoroughly dry before paint is applied.
   1. Do not begin to apply paint until unsatisfactory conditions have been corrected.
   2. Start of painting will be construed as the Applicator's acceptance of surfaces and conditions within a particular area.

B. Coordination of Work: Review other Sections in which primers are provided to ensure compatibility of the total system for various substrates. On request, furnish information on characteristics of finish materials to ensure use of compatible primers.

1. Notify the Architect about anticipated problems using the materials specified over substrates primed by others.

3.2 PREPARATION

A. General: Remove hardware and hardware accessories, plates, machined surfaces, lighting fixtures, and similar items already installed that are not to be painted, or provide surface-applied protection prior to surface preparation and painting. Remove these items, if necessary, to completely paint the items and adjacent surfaces. Following completion of painting operations in each space or area, have items reinstalled by workers skilled in the trades involved.

B. Cleaning: Before applying paint or other surface treatments, clean the substrates of substances that could impair the bond of the various coatings. Remove oil and grease prior to cleaning. Schedule cleaning and painting so dust and other contaminants from the cleaning process will not fall on wet, newly painted surfaces.

C. Surface Preparation: Clean and prepare surfaces to be painted according to the manufacturer's instructions for each particular substrate condition and as specified.
1. Provide barrier coats over incompatible primers or remove and re-prime. Notify Architect in writing about anticipated problems using the specified finish-coat material with substrates primed by others.
2. Ferrous Metals: Clean ungalvanized ferrous metal surfaces that have not been shop-coated; remove oil, grease, dirt, loose mill scale, and other foreign substances. Use solvent or mechanical cleaning methods that comply with recommendations of the Steel Structures Painting Council (SSPC).
   a. Blast steel surfaces clean as recommended by the paint system manufacturer and according to requirements of SSPC specification SSPC-SP 6.
   b. Treat bare and sandblasted or pickled clean metal with a metal treatment wash coat before priming.
   c. Touch up bare areas and shop-applied prime coats that have been damaged. Wire-brush, clean with solvents recommended by the paint manufacturer, and touch up with the same primer as the shop coat.
3. Galvanized Surfaces: Clean galvanized surfaces with nonpetroleum-based solvents so that the surface is free of oil and surface contaminants. Remove pretreatment from galvanized sheet metal fabricated from coil stock by mechanical methods.

D. Materials Preparation: Carefully mix and prepare paint materials according to manufacturer's directions.
1. Maintain containers used in mixing and applying paint in a clean condition, free of foreign materials and residue.
2. Stir material before application to produce a mixture of uniform density; stir as required during application. Do not stir surface film into material. Remove film and, if necessary, strain material before using.
3. Use only thinners approved by the paint manufacturer and only within recommended limits.

3.3 APPLICATION

A. General: Apply paint according to manufacturer's directions. Use applicators and techniques best suited for substrate and type of material being applied.

B. Do not paint over dirt, rust, scale, grease, moisture, scuffed surfaces, or conditions detrimental to formation of a durable paint film.
1. Paint colors, surface treatments, and finishes are indicated in the schedules.
2. Provide finish coats that are compatible with primers used.

3. The number of coats and the film thickness required are the same regardless of the application method. Do not apply succeeding coats until the previous coat has cured as recommended by the manufacturer. Sand between applications where sanding is required to produce a smooth even surface according to the manufacturer's directions.
4. Apply additional coats if undercoats, stains, or other conditions show through final coat of paint until paint film is of uniform finish, color, and appearance. Give special attention to ensure that surfaces, including edges, corners, crevices, welds, and exposed fasteners, receive a dry film thickness equivalent to that of flat surfaces.
5. The term exposed surfaces includes areas visible when permanent or built-in fixtures, convector covers, covers for finned tube radiation, grilles, and similar components are in place. Extend coatings in these areas, as required, to maintain the system integrity and provide desired protection.
6. Paint surfaces behind movable equipment and furniture the same as similar exposed surfaces. Before the final installation of equipment, paint surfaces behind permanently fixed equipment or furniture with prime coat only.
7. Paint interior surfaces of ducts, where visible through registers or grilles, with a flat, nonspecular black paint.
8. Paint back sides of access panels and removable or hinged covers to match exposed surfaces.
9. Finish exterior doors on tops, bottoms, and side edges same as exterior faces.
10. Sand lightly between each succeeding enamel or varnish coat.
11. Omit primer on metal surfaces that have been shop-primed and touch-up painted.

C. Scheduling Painting: Apply first coat to surfaces that have been cleaned, pretreated, or otherwise prepared for painting as soon as practicable after preparation and before subsequent surface deterioration.
1. Allow sufficient time between successive coats to permit proper drying. Do not recoat until paint has dried to where it feels firm, does not deform or feel sticky under moderate thumb pressure, and where application of another coat of paint does not cause the undercoat to lift or lose adhesion.

D. Application Procedures: Apply paints and coatings by brush, roller, spray, or other applicators according to the manufacturer's directions.
1. Brushes: Use brushes best suited for the material applied.
2. Rollers: Use rollers of carpet, velvet back, or high-pile sheep's wool as recommended by the manufacturer for the material and texture required.
3. Spray Equipment: Use airless spray equipment with orifice size as recommended by the manufacturer for the material and texture required.

E. Minimum Coating Thickness: Apply materials no thinner than the manufacturer's recommended spreading rate. Provide the total dry film thickness of the entire system as recommended by the manufacturer.

F. Block Fillers: Apply block fillers to concrete at a rate to ensure complete coverage with pores filled.

G. Prime Coats: Before applying finish coats, apply a prime coat of material, as recommended by the manufacturer, to material that is required to be painted or finished and that has not been prime-coated by others. Recoat primed and sealed surfaces where evidence of suction spots or unsealed areas in first coat appears, to ensure a finish coat with no burn-through or other defects due to insufficient sealing.

H. Completed Work: Match approved samples for color, texture, and coverage. Remove, refinish, or repaint work not complying with specified requirements.

3.4 CLEANING

A. Cleanup: At the end of each work day, remove empty cans, rags, rubbish, and other discarded paint materials from the site.
   1. After completing painting, clean glass and paint-spattered surfaces. Remove spattered paint by washing and scraping. Be careful not to scratch or damage adjacent finished surfaces.

3.5 PROTECTION

A. Protect work of other trades, whether being painted or not, against damage by painting. Correct damage by cleaning, repairing or replacing, and repainting, as acceptable to Architect.

B. Provide "Wet Paint" signs to protect newly painted finishes. Remove temporary protective wrappings provided by others to protect their work after completing painting operations.
   1. At completion of construction activities of other trades, touch up and restore damaged or defaced painted surfaces.

3.6 EXTERIOR PAINT SCHEDULE

A. General: Provide the following paint systems for the various substrates indicated excluding of pre-finished metal building components. Sherwin-Williams products are listed below to indicate paint system types, but are not intended to limit the choice of manufacturers.

B. Ferrous Metal: Primer is not required on shop-primed items.
   1. Full-Gloss Alkyd Enamel: Two finish coats over primer.
      a. Primer: Synthetic rust-inhibiting primer.
         1) Kem Kromik Metal Primer B50N2/B50W1.
         2) ICI: 4160 Devguard Tank & Structural Metal Primer.
      b. First and Second Coats: Gloss alkyd enamel.
         1) Industrial Enamel B-54 Series.
         2) ICI: 4308 Devguard Alkyd Industrial gloss Enamel.

C. Zinc-Coated Metal:
   1. High-Gloss Alkyd Enamel: Two finish coats over primer.
      a. Primer: Galvanized metal primer.
         1) Galvite B50W3.
         2) ICI: 4120 All purpose Metal & Galvanized Primer.
      b. First and Second Coats: Gloss alkyd enamel.
         1) Industrial Enamel B-54 Series.
         2) ICI: 4308 Devguard Alkyd Industrial gloss Enamel.

3.7 INTERIOR PAINT SCHEDULE

A. General: Provide the following paint systems for the various substrates, as indicated. Sherwin-Williams products are listed below to indicate paint system types, but are not intended to limit the choice of manufacturers.

B. Gypsum Drywall Systems / Painted Plywood Panels:
   1. Semigloss Alkyd Enamel Finish: Three coats with total dry film thickness not less than 2.5 mils.
      a. Primer: White, interior, latex-based primer.
         1) Pro-Mar 200 Latex Wall Primer B28W200.
         2) ICI: 1030-Ultra Hide PVA Primer Sealer.
      b. First and Second Coats: Interior, semigloss, odorless, alkyd enamel.
         1) Pro-Mar 200 Alkyd Semi-Gloss Enamel B34 W200.
         2) ICI: 1516 Ultra Hide Alkyd Semigloss Enamel.

C. Ferrous Metal:
   1. Full-Gloss Enamel Finish: Two coats over primer with total dry film thickness not less than 2.5 mils.
      a. Primer: Synthetic, quick-drying, rust-inhibiting primer.
         1) Kem Kromik Metal Primer B50N2/B50W1.
         2) ICI: 4160 Devguard Tank & Structural Metal Primer.
      b. First and Second Coats: Exterior, gloss, alkyd enamel.
         1) Industrial Enamel B-54 Series.
         2) ICI: 4308 Devguard Alkyd Industrial gloss Enamel.

D. Zinc-Coated Metal:

   1. Full-Gloss Enamel Finish: Two coats over primer with total dry film thickness not less than 2.5 mils.
      a. Primer: Galvanized metal primer.
         2) Galvite B50W3.
         2) ICI: 4120 All purpose Metal & Galvanized Primer.
      b. First and Second Coats: Exterior, gloss, alkyd enamel.
         3) Industrial Enamel B-54 Series.
         2) ICI: 4308 Devguard Alkyd Industrial gloss Enamel.

E. Steel Joists, beams and decking:

   1. Semi-Gloss laytex Finish: Two coats over primer with total dry film thickness not less than 2.5 mils.

      a. Prime Coat: Alkyd anticorrosive metal primer.
      b. Topcoat: Latex dry fog/fall.

END OF SECTION 09900

SECTION 10100 - VISUAL DISPLAY BOARDS

PART 1 - GENERAL

1.1 RELATED DOCUMENTS

A. Drawings and general provisions of the Contract, including General and Supplementary Conditions and Division 1 Specification Sections, apply to this Section.

1.2 SUMMARY

A. This Section includes the following types of visual display boards:
1. Porcelain enamel markerboards (for liquid chalk).

B. Related Sections: The following sections contain requirements that relate to this section:
1. Division 6 Section "Miscellaneous Carpentry" for wood blocking and grounds.

1.3 SUBMITTALS

A. General: Submit the following in accordance with Conditions of the Contract and Division 1 Specification Sections.

B. Product Data: Include motor capacities, and individual panel weights for sliding chalkboard or markerboard units.

C. Shop Drawings: Provide shop drawings for each type of chalkboard and/or markerboard required. Include sections of typical trim members and dimensioned elevations. Show anchors, grounds, reinforcement, accessories, layout, and installation details.

D. Samples: Provide the following samples of each product for initial selection of colors, patterns, and textures, as required, and for verification of compliance with requirements indicated.
1. Samples for initial selection of color, pattern, and texture:
a. Porcelain Enamel Markerboard: Manufacturer's color charts consisting of actual sections of porcelain enamel finish showing the full range of colors available for each type of board required.
2. Samples for verification of color, pattern, and texture selected, and compliance with requirements indicated.
a. Markerboards: Sample panels not less than 8-1/2 inches by 11 inches for each type board indicated. Include a sample panel for each color, texture, and pattern required.

1.4 QUALITY ASSURANCE

A. Design Criteria: The drawings indicate size, profiles, and dimensional requirements of visual display boards and are based on the specific type and model indicated. Other visual display boards having equal performance characteristics by other manufacturers may be considered provided that deviations in dimensions and profiles are minor and do not change the design concept or intended performance as judged by the Architect. The burden of proof of equality is on the proposer.

PART 2 - PRODUCTS

2.1 MANUFACTURERS

A. Manufacturer: Subject to compliance with requirements, provide products of one of the following:
1. Porcelain Enamel Marker Boards:
a. Claridge Products and Equipment, Inc.
b. Greensteel, Inc.
c. ADP Lemco
d. Brad Steele & Associates
e. Or, pre-approved equal.

.2 MATERIALS

A. Porcelain Enamel Marker Boards: Provide balanced, high-pressure-laminated porcelain enamel marker boards of 3-ply construction consisting of face sheet, core material, and backing.
1. Face Sheet: Provide face sheet of 24-gage enameling grade steel especially processed for temperatures used in coating porcelain on steel. Coat the exposed face and exposed edges with a 3-coat process consisting of primer, ground coat, and color cover coat, and the concealed face with a 2-coat process consisting of primer and ground coat. Fuse cover and ground coats to steel at the manufacturer's standard firing temperatures, but not less than 1200 deg F (649 deg C).
a. Cover Coat: Provide the manufacturer's standard light-colored special writing surface with gloss finish intended for use with liquid felt-tipped markers.
2. Core: Provide the manufacturer's standard 3/8-inch-thick particleboard core material complying with the requirements of ANSI A208.1, Grade 1-M-1.
3. Backing Sheet: Provide the manufacturer's standard 0.015-inch-thick aluminum sheet backing.
4. Laminating Adhesive: Provide the manufacturer's standard moisture-resistant thermoplastic-type adhesive.

.3 ACCESSORIES

A. Metal Trim and Accessories: Fabricate frames and trim of not less than 0.062-inch-thick aluminum alloy, size and shape as indicated, to suit type of installation. Provide straight, single-length units wherever possible; keep joints to a minimum. Miter corners to a neat, hairline closure.
4. Where the size of boards or other conditions exist that require support in addition to the normal trim, provide structural supports or modify the trim as indicated or as selected by the Architect from the manufacturer's standard structural support accessories to suit the condition indicated.
5. Field-Applied Trim: Provide the manufacturer's standard screw-on trim with Phillips flat-head screws.
3. Chalktray: Furnish the manufacturer's standard continuous, solid extrusion-type aluminum chalktray with ribbed section and smoothly curved exposed ends, for each chalkboard.

2.4 FABRICATION

A. Porcelain Enamel Marker Boards: Laminate facing sheet and backing sheet to core material under pressure with manufacturer's recommended flexible, waterproof adhesive.

B. Assembly: Provide factory-assembled marker board units, except where field-assembled units are required.
1. Make joints only where total length exceeds maximum manufactured length.

Fabricate with the minimum number of joints, balanced around the center of the board, as acceptable to the Architect.

2. Provide the manufacturer's standard vertic al joint system between abutting sections of marker board.

2.5 FINISHES

A. General: Comply with NAAMM "Metal Finishes Manual" for recommendations relative to application and designations of finishes.

B. Finish designations prefixed by "AA" conform to the system established by the Aluminum Association for designating aluminum finishes.

C. Class II Clear Anodized Finish: AA-M12C22A31 (Mechanical Finish: as fabricated, nonspecular; Chemical Finish: etched, medium matte; Anodic Coating: Class II Architectural, clear film thicker than 0.4 mil).

PART 3 - EXECUTION

3.1 INSTALLATION

A. Deliver factory-built marker boards completely assembled in one piece without joints, wherever possible. Where dimensions exceed panel size, provide 2 or more pieces of equal length as acceptable to the Architect. When overall dimensions require delivery in separate units, pre-fit components at the factory, disassemble for delivery, and make final joints at the site. Use splines at joints to maintain surface alignment.

B. Install units in locations and at mounting heights indicated and in accordance with the manufacturer's instructions. Keep perimeter lines straight, plumb, and level. Provide grounds, clips, backing materials, adhesives, brackets, anchors, trim, and a ccessories necessary for a complete installation.

C. Coordinate job-site assembled units with grounds, trim, and accessories. Join parts with a neat, precision fit.

3.2 ADJUST AND CLEAN

A. Verify that accessories required for each unit have been properly installed and that operating units function properly.

B. Clean units in accordance with the manufacturer's instructions. Br eak in marker boards only as recommended by the manufacturer.

END OF SECTION 10100

SECTION 10155 - TOILET COMPARTMENTS

PART 1 - GENERAL

1.1 RELATED DOCUMENTS

A. Drawings and general provisions of the Contract, including General and Supplementary Conditions and Division 1 Specification Sections, apply to this Section.

1.2 SUMMARY

A. Section Includes:

1. Phenolic solid core toilet compartments configured as shown on drawings.

B. Related Sections:

1. Division 9 Section "Gypsum Board Assemblies" for blocking.

1.3 SUBMITTALS

A. Product Data: For each type of product indicated. Include construction details, material descriptions, dimensions of individual components and profiles, and finishes .

B. Shop Drawings: For toilet compartments. Include plans, elevations, sections, details, and attachments to other work.

1. Show locations of centerlines of toilet fixtures.
2. Show dimensions of required support and blocking locations.

C. Samples for Verification: For the following products, in manufacturer's standard sizes unless otherwise indicated:

1. Each type of material, color, and finish required for units of same thickness and material indicated for Work.

D. Product Certificates: For each type of toilet compartment, from manufacturer.

E. Maintenance Data: For toilet compartments to include in maintenance manuals.

1.4 QUALITY ASSURANCE

A. Comply with requirements in GSA's CID-A-A-60003, "Partitions, Toilets, Complete."

B. Regulatory Requirements: Comply with applicable provisions in the U.S. Architectural & Transportation Barriers Compliance Board's "Americans with Disabilities Act (ADA) ICC/ANSI A117.1 for toilet compartments designated as accessible.

1.5 PROJECT CONDITIONS

A. Field Measurements: Verify actual locations of toilet fixtures, walls, columns, ceilings, and other construction contiguous with toilet compartments by field measurements before fabrication.

PART 2 - PRODUCTS

2.1 PHENOLIC-CORE UNITS

A. Manufacturers: Subject to compliance with requirements, provide products by one of the following:

1. Accurate Partitions Corporation.
2. American Sanitary Partition Corporation.
3. Ampco, Inc.
4. Bobrick Washroom Equipment, Inc.
5. Bradley Corporation; Mills Partitions.
6. Knickerbocker Partition Corporation.
7. Metpar Corp.
8. Approved equal.

B. Toilet-Enclosure Style: Floor and wall anchored.

C. Entrance-Screen Style: Floor anchored.

D. Urinal-Screen Style: Wall hung.

E. Door, Panel, Screen, and Pilaster Construction: Solid phenolic-core panel material with melamine facing on both sides fused to substrate during panel manufacture (not separately laminated), and with eased and polished edges and no-sightline system. Provide minimum 3/4-inch- (19-mm-) thick doors and pilasters and minimum 1/2-inch- (13-mm-) thick panels.

F. Pilaster Shoes: Fabricated from stainless-steel sheet, not less than 3 inches (76 mm) high, finished to match hardware.

G. Brackets (Fittings):

1. Stirrup Type: Ear or U-brackets, stainless steel.
2. Full-Height (Continuous) Type: Manufacturer's standard design; stainless steel.

H. Phenolic-Panel Finish: Facing sheet of one color and pattern in each room.

1. Color and Pattern: As selected by Architect from manufacturer's full range, with manufacturer's standard through-color core matching face sheet.

PART 3 - EXECUTION

3.1 INSTALLATION

A. General: Comply with manufacturer's written installation instructions. Install units rigid , straight, level, and plumb. Secure units in position with manufacturer's recommended anchoring devices.

1. Maximum Clearances:

a. Pilasters and Panels: 1/2 inch.
b. Panels and Walls: 1 inch.

2. Stirrup Brackets: Secure panels to walls and to pilasters with no fewer than three brackets attached at midpoint and near top and bottom o f panel.

a. Locate wall brackets so holes for wall anchors occur in masonry or tile joints.

3.2 ADJUSTING

A. Hardware Adjustment: Adjust and lubricate hardware according to hardware manufacturer's written instructions for proper operation. Set hinges on in -swinging doors to hold doors open approximately 30 degrees from closed position when unlatched. Set hinges on out -swinging doors and doors in entrance screens to return doors to fully closed position.

END OF SECTION 10155

SECTION 10425 - SIGNS

PART 1 - GENERAL

1.1 RELATED DOCUMENTS

A. Drawings and general provisions of the Contract, including General and Supplementary Conditions and Division 1 Specification Sections, apply to this Section.

1.2 SUMMARY

A. This Section includes the following types of signs:
1. Panel signs, Dimensional letters and numbers.

1.3 SUBMITTALS

A. General: Submit the following according to the Conditions of the Contract and Division 1 Specification Sections.

B. Product data for each type of sign specified, including details of construction relative to materials, dimensions of individual components, profiles, and finishes.

C. Shop drawings showing fabrication and erection of signs. Include plans, elevations, and large-scale sections of typical members and other components. Show anchors, grounds, layout, reinforcement, accessories, and installation details.
1. Provide message list for each sign required, including large-scale details of wording and lettering layout.
2. For signs supported by or anchored to permanent construction, provide setting drawings, templates, and directions for installation of anchor bolts and other anchors to be installed as a unit of Work in other Sections.

D. Samples: Provide the following samples of each sign component for initial selection of color, pattern and surface texture as required and for verification of compliance with requirements indicated.
1. Samples for initial selection of color, pattern, and texture:
a. Cast Acrylic Sheet and Plastic Laminate: Manufacturer's color charts consisting of actual sections of material including the full range of colors available for each material required.
2. Samples for verification of color, pattern, and texture selected and compliance with requirements indicated:
a. Cast Acrylic Sheet and Plastic Laminate: Provide a sample panel not less than 8 inches by 8 inches for each material, color, texture, and pattern required. On each panel include a representative sample of the graphic image process required, showing graphic style, and colors and finishes of letters, numbers, and other graphic devices.

1.4 QUALITY ASSURANCE

A. Sign Fabricator Qualifications: Firm experienced in producing signs similar to those indicated for this Project, with a record of successful in-service performance, and sufficient production capacity to produce sign units required without causing delay in the Work.

B. Single-Source Responsibility: For each separate sign type required, obtain signs from one source of a single manufacturer.

C. Design Concept: The Drawings indicate sizes, profiles, and dimensional requirements of signs and are based on the specific types and models indicated. Sign units by other manufacturers may be considered provided deviations in dimensions and profiles do not change the design concept as judged by the Architect. The burden of proof of equality is on the Proposer.

1.5 PROJECT CONDITIONS

A. Field Measurements: Take field measurements prior to preparation of shop drawings and fabrication to ensure proper fitting. Coordinate fabrication schedule with construction progress to avoid delay.

PART 2 - PRODUCTS

2.1 MANUFACTURERS

A. Manufacturers: Subject to compliance with requirements, manufacturers offering products that may be incorporated in the Work include, but are not limited to, the following:
1. Manufacturers of Panel Signs:
a) Utah Correctional Industries
b) Allenite Signs; Allen Marking Products, Inc.
c) American Graphics Inc.
d) Andco Industries Corp.
e) APCO Graphics, Inc.
f) ASI Sign Systems, Inc.
g) Best Manufacturing Co.
h) Grimco, Inc.
i) Innerface Sign Systems, Inc.
j) Kaltech Industries Group, Inc.
k) Mills Manufacturing, Inc.
l) Mohawk Sign Systems.
m) Seton Identification Products.
n) Signature Signs, Inc.
o) Supersine Company (The).
p) Or, pre-approved equal.

2.2 MATERIALS

A. Cast Acrylic Sheet: Provide cast (not extruded or continuous cast) methyl methacrylate monomer plastic sheet, in sizes and thicknesses indicated, with a minimum flexural strength of 16,000 psi when tested according to ASTM D 790, with a minimum allowable continuous service temperature of 176 deg F (80 deg C), and of the following general types:
1. Transparent Sheet: Where sheet material is indicated as "clear," provide colorless sheet in matte finish, with light transmittance of 92 percent, when tested according to the requirements of ASTM D 1003.
2. White Translucent Sheet: Where sheet material is indicated as "white," provide white translucent sheet of density required to produce uniform brightness and minimum halation effects.
3. Opaque Sheet: Where sheet material is indicated as "opaque," provide colored opaque acrylic sheet in colors and finishes as selected from the manufacturer's standards.

B. Fasteners: Use concealed fasteners fabricated from metals that are not corrosive to the sign material and mounting surface.

C. Anchors and Inserts: Use nonferrous metal or hot-dipped galvanized anchors and inserts for exterior installations and elsewhere as required for corrosion resistance.

D. Colored Coatings for Acrylic Plastic Sheet: Use colored coatings, including inks and paints for copy and background colors that are recommended by acrylic manufacturers for optimum adherence to acrylic surface and are non-fading for the application intended.

2.3 PANEL SIGNS

A. Panel Signs: Comply with requirements indicated for materials, thicknesses, finishes, colors, designs, shapes, sizes, and details of construction.
   1. Produce smooth, even, level sign panel surfaces, constructed to remain flat under installed conditions within a tolerance of plus or minus 1/16 inch measured diagonally.

B. Unframed Panel Signs: Fabricate signs with edges mechanically and smoothly finished to conform with the following requirements:
   1. Edge Condition: Square cut.
   2. Corner Condition: Corners rounded to 3/4-inch radius unless indicated otherwise.

C. Graphic Content and Style: Provide sign copy that complies with the requirements indicated for size, style, spacing, content, position, material, finishes, and colors of letters, numbers, and other graphic devices.

D. Raised Copy: Machine-cut copy characters from matte-finished opaque acrylic sheet and chemically weld onto the acrylic sheet forming sign panel face. Produce precisely formed characters with square cut edges free from burrs and cut marks.
   1. Panel Material: Matte-finished opaque acrylic sheet.
   2. Raised Copy Thickness: Not less than 1/32 inch.

2.4 INFORMATION FOR SIGNS AS FOLLOWS:

A.
   1. Message: "OFFICE"
   2. Letter Height: 1 1/4 inches.
   3. Letter Style: Helvetica.

B.
   1. Message: "GREASE"
   2. Letter Height: 1 1/4 inches.
   3. Letter Style: Helvetica.

C.
   1. Message: "MOTOR OIL "
   2. Letter Height: 1 1/4 inches.
   3. Letter Style: Helvetica.

D.
   1. Message: "HYDRAULIC FLUIDˇ
   2. Letter Height: 1 1/4 inches.
   3. Letter Style: Helvetica.

E.
   1. Message: "RESTROOM"
   2. Letter Height: 3/4 inches.
   3. Letter Style: Helvetica.
   4. Provide all ADA Compliant graphics & Braille Text

F.
   1. Message: "ENTRANCE"
   2. Letter Height: 3/4 inches.

3. Letter Style: Helvetica.
4. Provide all ADA Compliant graphics & Braille Text
5. 2 signs required. 1 exterior & 1 interior.

G. 1. Message: "DURING THE USE OF A TORCH OR WELDING DEVICE A FIRE EXTINGUISHER SHALL BE LOCATED NEAR THE WELDING / CUTTING OPERATION AND A ˚*FIRE WATCH*˘ PERSON SHALL OVERSEE OPERATION˘
2. Letter Height: 1 1/4 inches.
3. Letter Style: Helvetica.

2.5 FINISHES

A. Colors and Surface Textures: For exposed sign material that requ ires selection of materials with integral or applied colors, surface textures or other characteristics related to appearance, provide color matches indicated, or if not indicated, as selected by the Architect from the manufacturer's standards.

PART 3 - EXECUTION

3.1 INSTALLATION

A. General: Locate sign units and accessories where indicated, using mounting methods of the type described and in compliance with the manufacturer's instructions.
1. Install signs level, plumb, and at the height indicated, with sign surfaces free from distortion or other defects in appearance.

B. Wall-Mounted Panel Signs: Attach panel signs to wall su rfaces using the methods indicated below:
1. Vinyl-Tape Mounting: Use double-sided foam tape to mount signs to smooth, nonporous surfaces. Do not use this method for vinyl-covered or rough surfaces.
2. Silicone-Adhesive Mounting: Use liquid silicone adhesive recommended by the sign manufacturer to attach sign units to irregular, porous, or vinyl-covered surfaces. Use double-sided vinyl tape where recommended by the sign manufacturer to hold the sign in place until the adhesive has fully cured.

3.2 CLEANING AND PROTECTION

A. After installation, clean soiled sign surfaces according to the manufacturer's instructions. Protect units from damage until acceptance by the Owner.

END OF SECTION 10425

SECTION 10500 - METAL LOCKERS AND STORAGE CABINETS

PART 1 - GENERAL

1.1 RELATED DOCUMENTS

A. Drawings And general provisions of the Contract, including General And Supplementary Conditions And Division 1 Specification Sections, apply to this Section.

1.2 SUMMARY

A. This Section includes the following:
   1. Wardrobe lockers, including the following:
      a. Single-tier.
   2. Metal storage cabinets

B. Related Sections: The following Sections contain requirements that relate to this Section:
   1. Division 3 Section "Cast-in-Place Concrete" for concrete base.
   2. Division 6 Section "Miscellaneous Carpentry" for wood furring and grounds.

1.3 SUBMITTALS

A. General: Submit each item in this Article according to the Conditions of the Contract And Division 1 Specification Sections.

B. Product Data: Manufacturer's printed data including materials, accessories, construction , finishes, assembly, and installation instructions for lockers And cabinets.

C. Shop Drawings: Layout and dimensions of metal lockers and cabinets. Indicate relationship to adjoining surfaces. Show locker And cabinet elevations And details, fillers, trim, base, sloping tops, And accessories. Include locker and cabinet numbering sequence. Indicate installation and anchorage requirements.

D. Samples for Initial Color Selection: Manufacturer's color charts showing a full range of available colors.

E. Samples for Color Verification: Samples showing actual colors prepared on same material to be used for the Work.

F. Maintenance Instructions: Instructions for cleaning lockers and cabinets And for adjusting, repairing, And replacing locker And cabinet doors And latching mechanisms.

1.4 QUALITY ASSURANCE

A. Single-Source Responsibility: Obtain locker And cabinet units And accessories from one manufacturer.

1.5 DELIVERY, STORAGE, AND HANDLING

A. Do not deliver lockers And cabinets until spaces to receive them are clean, dry, and ready for locker And cabinet installation.

B. Protect lockers and cabinets from damage during delivery, handling, storage, and installation.

C. Deliver master keys, control keys, And combination control charts to Owner.

PART 2 - PRODUCTS

2.1 MANUFACTURERS

A. Manufacturer: Subject to compliance with requirements, provide products by one of the following:
1. The Interior Steel Equipment Co.
2. List Industries Inc.
3. Lyon Metal Products Inc.
4. Medart, Inc.
5. Penco Products.
6. Republic Storage Systems Co., Inc.
7. Hadrian Metal Lockers
8. Brad Steele & Associates

2.2 MATERIALS

A. Steel Sheet: ASTM A 366 (A 366M), commercial-quality, stretcher-leveled, cold-rolled carbon steel sheet, stretcher leveled, free of buckling, scale, And surface imperfections.

B. Hot-Dip Zinc-Coated Steel Sheet: ASTM A 526/A 526M, commercial-quality, zinc-coated, carbon-steel sheet, hot-dip galvanized according to ASTM A 525 (A 525M) with A 60 (ZF 180) or G 60 (Z 180) coating designation.

C. Electrolytic Zinc-Coated Steel Sheet: ASTM A 591/A 591M, with Class C zinc coating, mill phosphatized.

D. Fasteners: Zinc- or nickel-plated steel; slotless-type exposed bolt heads; self-locking nuts or lock washers for nuts on moving parts.

E. Equipment: Manufacturer's standard plated steel hooks or coat rods.

2.3 WARDROBE LOCKERS

A. Arrangement: Single-tier.

B. Size: 72 inches high by 15 inches wide by 18 inches deep.

C. Body: Form backs, tops, bottoms, sides, And intermediate partitions of flanged 0.0239-inch (24 ga) (0.61-mm) minimum steel sheet.
1. Form exposed ends of non recessed lockers of 0.0598-inch (16 ga) (1.5-mm) minimum steel sheet.

D. Frames: Form channel frames of 0.0598-inch (16 ga) (1.5-mm) minimum steel sheet. Form continuous integral strike on vertical frame members or weld 0.0897-inch (13 ga) (2.3-mm) minimum latch hooks to latch strike frame.
1. Cross Frames: Form intermediate channel cross frames to double- or triple-tier lockers of 0.0598-inch (16 ga) (1.5-mm) minimum steel sheet.

E. Shelf: Form 0.0239-inch (24 ga) (0.61-mm) minimum steel sheet hat shelf in single-tier units.

F. Door: One-piece steel sheet, flanged at all edges, constructed to prevent springing when opening or closing. Fabricate to swing 180 degrees.
1. Thickness: 0.0598 inch (16 ga) (1.5 mm) minimum.
2. Style: Louvered vents.

G. Reinforcing Sound-Dampening Panels: Brace or reinforce inner face of doors with

manufacturer's standard reinforcing angles, channels, or stiffener panels.

H. Acoustical Treatment: Fabricate lockers for quiet operation with manufacturer's standard rattle-free latching mechanism with moving components isolated to prevent metal -to-metal contact.

I. Louvered Vents: Stamped, louvered vents in door face, as follows:
1. Single-Tier Lockers: No fewer than 6 louver openings top and bottom.

J. Security Vents: Manufacturer's standard arrangement of stamped horizontal or vertical security vents on door face.

K. Hinges: Steel, full-loop, 5- or 7-knuckle tight pin, 2 inches (51 mm) high minimum. Weld to inside of frame and secure to door with not fewer than 2 factory -installed fasteners that are completely concealed and tamperproof when door is closed.
1. Provide at least 3 hinges for each door over 42 inches (1067 mm) high; at least 2 hinges for each door 42 inches (1067 mm) high or less.

L. Recessed Housing for Latch: Manufacturers' standard housing to form recess for latch lifter locking devices; nonprotruding latch lifter containing strike eye for padlock; automatic, prelocking, pry-resistant latch mechanism with latching action as follows:
1. Single-Tier Lockers: Not less than 3-point latching.

2.4 METAL STORAGE CABINETS

A. Size: 78 inches high by 36 inches wide by 18 inches deep.

B. Shelving: 4 shelves adjustable every 2 inches

C. Storage: Minimum 180 lbs. per shelf storage requirement

D. Finish: All surfaces to receive manufacturer s stock finish

2.4 LOCKS

A. Fabricate lockers to receive the following locking devices:
1. Combination padlock.

B. Fabricate cabinets to receive the following locking devices:
1. Built-in key lock

2.5 LOCKER ACCESSORIES

A. Equipment: Furnish each locker with:
1. 2 single-prong wall hooks.
2. Coat Rod.

B. Number Plates: Manufacturer's standard etched, embossed, or stamped, nonferrous -metal number plates with numerals not less than 3/8 inch (9 mm) high. Number lockers in sequence indicated. Attach plates to each locker door, near top, centered, with at least 2 fasteners of same finish as number plate.

C. Recess Trim: Manufacturer's standard 0.0478 -inch (18 ga) (1.2-mm) minimum steel sheet trim with concealed fastening clips.

D. Filler Panels: 0.0478-inch (18 ga) (1.2-mm) minimum steel sheet, factory fabricated.

2.6 FABRICATION

A. Fabricate lockers square, rigid, without warp, with metal faces flat, free of dents or distortion. Make exposed metal edges free of sharp edges, burrs, safe to touch. Weld frame members together to form a rigid, 1-piece structure.
   1. Form locker body panels, doors, shelves and accessories from 1 -piece steel sheet unless otherwise indicated.
   2. Preassemble lockers by welding all joints, seams, connections. Grind exposed welds flush.

2.7 FINISHES, GENERAL

A. Comply with NAAMM "Metal Finishes Manual" for recommendations relative to applying And designating finishes.

B. Finish all steel surfaces, accessories, except pre finished stainless-steel or chrome-plated surfaces.

C. Protect mechanical finishes on exposed surfaces from damage by applying strippable, temporary protective covering prior to shipment.

D. Appearance of Finished Work: Variations in appearance of abutting or adjacent pieces are acceptable if they are within 1/2 of the range of approved samples. Noticeable variations in the same piece are not acceptable. Variations in appearance of other components are acceptable if they are within the range of approved samples and they are assembled or installed to minimize contrast.

2.8 GALVANIZED-STEEL SHEET FINISHES

A. Surface Preparation: Clean surfaces of dirt, grease, other contaminants followed by a conversion coating of type suited to organic coating applied over it. Clean welds, mechanical connections, abraded areas follow with an application of the galvanizing repair paint, specified below, to comply with ASTM A 780.
   1. Galvanizing Repair Paint: High-zinc-dust-content paint for regalvanizing welds in steel, complying with SSPC-Paint 20.

B. Baked-Enamel Finish: Immediately after cleaning/pretreating, apply manufacturer's standard baked-enamel finish consisting of a thermosetting topcoat. Comply with paint manufacturer's instructions for application and baking to achieve a minimum dry film thickness of 1.1 mils (0.028 mm) on doors, frames, legs, and 0.7 mil (0.018 mm) elsewhere.
   1. Color and Gloss: As selected by Architect from manufacturer's standard choices for color and gloss.

PART 3 - EXECUTION

3.1 INSTALLATION

A. Install metal lockers and cabinets complete with accessories according to manufacturer's recommendations. Install plumb, level, rigid, and flush.

B. Connect together welded locker and cabinet groups with standard fasteners according to manufacturer's recommendations, with no exposed fasteners on face frames.

C. Anchor lockers and cabinets to floors and walls at intervals recommended by manufacturer but no greater than 36 inches (910 mm). Install anchors through back -up reinforcing plates where necessary to avoid metal distortion, using concealed fasteners.

D. Install recess trim to recessed lockers using concealed fasteners. Provide hairline joints and concealed splice plates.

3.2 ADJUSTING, CLEANING, AND PROTECTION

A. Adjust doors and latches to operate easily without binding. Verify that integral locking devices are operating properly.

B. Clean interior and exposed exterior surfaces And polish stainless -steel and nonferrous metal surfaces.

C. Protect lockers and cabinets from damage, abuse, dust, dirt, stain, or paint. Do not permit locker use during construction.

D. Touch up marred finishes, or replace locker and cabinet units that cannot be restored to factory-finished appearance. Use only materials And procedures recommended or furnished by locker and cabinet manufacturer.

END OF SECTION 10500

SECTION 10522 - FIRE EXTINGUISHERS AND ACCESSORIES

PART 1 - GENERAL

1.1 RELATED DOCUMENTS

A. Drawings and general provisions of the Contract, includin g General and Supplementary Conditions and Division 1 Specification Sections, apply to this Section.

1.2 SUMMARY

A. This Section includes the following:
1. Fire extinguishers.
2. Fire extinguisher mounting brackets.

1.3 SUBMITTALS

A. General: Submit the following according to the Conditions of the Contract and D ivision 1 Specification Sections.

1.4 QUALITY ASSURANCE

A. Single-Source Responsibility: Obtain extinguishers and cabinets from one source from a single manufacturer.

B. UL-Listed Products: Fire extinguishers shall be UL listed with UL listing mark for type, rating, and classification of extinguisher.

PART 2 - PRODUCTS

2.1 MANUFACTURERS

A. Available Manufacturers: Subject to compliance with requirements, manufacturers offering products that may be incorporated in the Work include, but are not limited to, the following:
1. J.L. Industries.
2. Larsen's Manufacturing Co.
3. Potter-Roemer, Inc.
4. Or, pre-approved equal.

2.2 FIRE EXTINGUISHERS

A. General: Provide fire extinguishers for each location indicated, in colors and finishes selected by Architect from manufacturer's standard, that comply with authorities having jurisdiction.

B. Multipurpose Dry Chemical Type: UL -rated 4-A:80-B:C, 10-lb nominal capacity, in enameled steel container.

2.3 MOUNTING BRACKETS

A. Brackets: Designed to prevent accidentally dislodging extinguisher, of sizes required for type and capacity of extinguisher indicated, with red enamel finish.
1. Provide brackets for extinguishers not located in cabinets.

PART 3 - EXECUTION

3.1 INSTALLATION

A. Follow manufacturer's printed instructions for installation.

B. Install in locations and at mounting heights indicated or, if not indicated, at heights to comply with applicable regulations of governing authorities.

END OF SECTION 10522

SECTION 10800 - TOILET AND BATH ACCESSORIES

PART 1 - GENERAL

1.1 RELATED DOCUMENTS

A. Drawings and general provisions of the Contract, including General and Supplementary Conditions and Division 1 Specification Sections, apply to this Section.

1.2 SUMMARY

A. This Section includes toilet and bath accessory items as indicated on drawings.

1.3 SUBMITTALS

A. General: Submit the following according to Conditions of Contract and Division 1 Specifications Sections.

B. Product data for each toilet accessory item specified, including construction details relative to materials, dimensions, gages, profiles, mounting method, specified options, and finishes.

C. Setting drawings where cutouts are required in other work, including templates, substrate preparation instructions, and directions for preparing cutouts and installing anchorage devices.

D. Maintenance instructions including replaceable parts and service recommendations.

1.4 QUALITY ASSURANCE

A. Inserts and Anchorages: Furnish accessory manufacturers' standard inserts and anchoring devices that must be set in concrete or built into masonry. Coordinate delivery with other work to avoid delay.

B. Single-Source Responsibility: Provide products of same manufacturer for each type of accessory unit and for units exposed to view in same areas, unless otherwise acceptable to Architect.

1.5 PROJECT CONDITIONS

A. Coordination: Coordinate accessory locations, installation, and sequencing with other work to avoid interference with and ensure proper installation, operation, adjustment, cleaning, and servicing of toilet accessory items.

1.6 WARRANTY

A. Warranty: Submit a written warranty executed by mirror manufacturer, agreeing to replace any mirrors that develop visible silver spoilage defects within warranty period.

B. Warranty Period: 15 years from date of Substantial Completion.

C. The warranty shall not deprive the Owner of other rights the Owner may have under other provisions of the Contract Documents and will be in addition to and run concurrent with other warranties made by the Contractor under requirements of the Contract Documents.

PART 2 - PRODUCTS

2.1 ACCEPTABLE MANUFACTURERS

A. Available Manufacturers: Subject to compliance with requirements, manufacturers offering toilet accessories that may be incorporated in the Work include, but are not limited to, the following:
1. Bobrick Washroom Equipment, Inc.
2. Bradley Corporation.
3. American Specialties Inc.
4. Gamco

2.2 MATERIALS, GENERAL

A. Stainless Steel: AISI Type 302/304, with polished No. 4 finish, 0.034-inch (22-gage) minimum thickness.

B. Mirror Glass: Nominal 6.0-mm (0.23-inch) thick, conforming to ASTM C 1036, Type I, Class 1, Quality q2, and with silvering, electro-plated copper coating, and protective organic coating.

C. Galvanized Steel Mounting Devices: ASTM A 153, hot-dip galvanized after fabrication.

D. Fasteners: Screws, bolts, and other devices of same material as accessory unit, or of galvanized steel where concealed.

2.3 COMBINATION TOWEL DISPENSER/WASTE RECEPTACLE UNITS

A. Recessed Unit: Stainless steel combination unit fabricated for nominal 4-inch wall depth with continuous, seamless wall flange. Towel compartment in upper portion of unit designed to dispense not less than 400 C-fold or 700 multifold paper towels. Waste receptacle in lower portion of unit provided with reusable, heavy-duty vinyl liner, minimum 4-gallon capacity. Provide flush doors with piano hinges and tumbler locks on upper and lower compartments.

2.4 COMBINATION TOILET TISSUE DISPENSER/SANITARY NAPKIN DISPOSAL UNITS

A. Recessed Unit: Fabricate of stainless steel with satin finish for recessed mounting in nominal 4-inch wall depth. Provide complete with drywall mounting clamp. Clearance between grab bar and unit required.
1. Size: Unit to accommodate two separate core-type tissue rolls up to 5 inches in diameter.

2.5 GRAB BARS

A. Stainless Steel Type: Provide grab bars with wall thickness not less than 0.05 inch (18 gage) and as follows:

1. Mounting: Concealed, manufacturer's standard flanges and anchorages.
2. Clearance: 1-1/2-inch clearance between wall surface and inside face of bar.
3. Gripping Surfaces: Manufacturer's standard nonslip texture.
4. Heavy-Duty Size: Outside diameter of 1-1/2 inches.

2.6 SOAP DISPENSERS

A. Liquid Soap Dispenser, Horizontal-Tank Type: Fabricate for surface mounting, sized for 40-fluid-ounce minimum capacity. Provide stainless steel piston, springs, and internal parts

designed to dispense soap in measured quantity by pump action. Provide cover of type 304 stainless steel in No. 4 finish, with unbreakable window-type refill indicator.

1. Equip unit with push-type valve for dispensing soap in liquid form.

2.7 MISCELLANEOUS ACCESSORIES

A. Mop and Broom Holder: 0.05-inch (18-gage), Type 304, stainless steel hat channel with spring-loaded, rubber, cam-type mop/broom holders. Provide unit 24 inches long and complete with three holders.

B. Double-Prong Robe Hook: Heavy-duty satin finished stainless steel double-prong robe hook; rectangular wall bracket with backplate for concealed mounting.

2.8 MIRROR UNITS

A. Standard Stainless Steel Framed Mirror Units: Fabricate frame with channel shapes not less than 0.04 inch (20 gage), with square corners carefully mitered to hairline joints and mechanically interlocked. Provide in Type 430 bright polished finish.

2.9 FABRICATION

A. General: Only a maximum 1-1/2-inch-diameter, unobtrusive stamped manufacturer logo, as approved by Architect, is permitted on exposed face of toilet or bath accessory units. On either interior surface not exposed to view or back surface, provide additional identification by either a printed, waterproof label or a stamped nameplate, indicating manufacturer's name and product model number.

B. Surface-Mounted Toilet Accessories, General: Except where otherwise indicated, fabricate units with tight seams and joints, exposed edges rolled. Hang doors or access panels with continuous stainless steel piano hinge. Provide concealed anchorage wherever possible.

C. Recessed Toilet Accessories, General: Except where otherwise indicated, fabricate units of all-welded construction, without mitered corners. Hang doors or access panels with full-length, stainless steel piano hinge. Provide anchorage that is fully concealed when unit is closed.

D. Framed Mirror Units, General: Fabricate frames for glass mirror units to accommodate wood, felt, plastic, or other glass edge protection material. Provide mirror backing and support system that will permit rigid, tamperproof glass installation and prevent moisture accumulation, as follows:

1. Provide galvanized-steel backing sheet, not less than 0.034 inch (22 gage) and full mirror size, with nonabsorptive filler material. Corrugated cardboard is not an acceptable filler material.

E. Mirror Unit Hangers: Provide system for mounting mirror units that will permit rigid, tamperproof, and theftproof installation, as follows:

1. One-piece, galvanized-steel, wall-hanger device with spring-action locking mechanism to hold mirror unit in position with no exposed screws or bolts.

F. Keys: Provide universal keys for access to toilet accessory units requiring internal access for servicing, re-supply, etc. Provide minimum of six keys to Owner's representative.

PART 3 - EXECUTION

3.1 INSTALLATION

A. Install toilet accessory units according to manufacturers' instructions, using fasteners appropriate to substrate as recommended by unit manuf acturer. Install units plumb and level, firmly anchored in locations and at heights indicated.

B. Secure mirrors to walls in concealed, tamperproof manner with special hangers, toggle bolts, or screws. Set units plumb, level, and square at locations indicated, according to manufacturer's instructions for type of substrate involved.

C. Install grab bars to withstand a downward load of at least 250 lbf, complying with ASTM F 446.

3.2 ADJUSTING AND CLEANING

A. Adjust toilet accessories for proper operation and verify that mechanisms function smoothly. Replace damaged or defective items.

B. Clean and polish all exposed surfaces strictly according to manufacturer's recommendations after removing temporary labels and protective coatings.

3.3 SCHEDULE OF ACCESSORIES

A. Manufacturer: The following catalog numbers refer to products of Bobrick Washroom Equipment, Inc. and these scheduled products serve as the standard of quality required for the project. Provide these or comparable products from specified manufacturers if they meet or exceed this standard of quality.

1. Semi-Recessed Paper Towel Dispenser and Waste Receptacle: #B -3944.
2. Paper Towel Dispenser: #B-262.
3. Toilet Tissue Dispenser & Sanitary Napkin Disposal: #B-3094.
4. Grab Bars: #B-6806.99, #B-68616
5. Soap Dispenser: #B-2112.
6. Mop & Broom Holder: #B-223 x 24".
7. Robe Hook: #B-682.
8. Mirror: #B-166 2436

END OF SECTION 10800

SECTION 12511 - HORIZONTAL LOUVER BLINDS

PART 1 - GENERAL

1.1 RELATED DOCUMENTS

A. Drawings and general provisions of the Contract, including General and Supplementary Conditions and Division 1 Specification Sections, apply to this Section.

1.2 SUMMARY

A. This Section includes horizontal louver blinds.

1.3 SUBMITTALS

A. General: Submit the following in accordance with Conditions of Contract and Division 1 Specification Sections.

B. Product data for each type of horizontal louver blind specified. Include printed data on physical characteristics.

C. Samples for initial selection purposes in manufacturer's standard sizes showing full range of colors available for each type of blind indicated.

D. Maintenance data to include in Operating and Maintenance Manual specified in Division 1.

1.4 QUALITY ASSURANCE

A. Installer Qualifications: Engage an experienced Installer who has specialized in installing horizontal louver blinds similar to those required for this Project.

B. Surface Burning Characteristics: Provide blinds identical to those tested for the following fire performance characteristics as determined by UL or another testing and inspecting agency acceptable to authorities having jurisdiction.
1. Test Method: NFPA 701, Small Scale Vertical Burn Test.

C. Single-Source Responsibility: Obtain horizontal louver blinds from one source of a single manufacturer.

1.5 PROJECT CONDITIONS

A. Field Measurements: Check openings by field measurements before fabrication. Show recorded measurements on shop drawings. Coordinate fabrication schedule with construction progress to avoid delay in the Work.

PART 2 - PRODUCTS

2.1 MANUFACTURERS

A. Available Products: Subject to compliance with requirements, horizontal louver blinds that may be incorporated in the Work include, but are not limited to, the products specified in each Horizontal Louver Blind Product Data Sheet at the end of this Section.

2.2 MATERIALS AND FABRICATION

A. Product Standard and Description: American Window Covering Manufacturers Association (AWCMA) Document 1029. Each horizontal louver blind unit consists of slats, rails, cord lock, tilting mechanism, tapes, and installation hardware complying with referenced product standard and requirements indicated on each Horizontal Louver Blind Product Data Sheet at the end of this Section.

B. Lifting and Tilting Mechanisms: Noncorrosive, self-lubricating materials.

C. Unit Sizes: Obtain units fabricated in sizes to fill window and other openings as follows, measured at 74 deg F (23 deg C):
   1. Blind Units Installed Between (Inside) Jambs: Width and length equal to 1/2 inch less than opening dimensions formed by jamb, head, and sill members of opening in which each blind is installed.

D. Installation Fasteners: Not less than two fasteners per bracket, fabricated from metal noncorrosive to blind hardware and adjoining construction and to support blind units under conditions of normal use.

PART 3 - EXECUTION

3.1 EXAMINATION

A. Examine openings where horizontal louver blinds will be installed prior to beginning installation. Verify that critical dimensions are correct and surface conditions acceptable.
   1. Complete all finishing operations, including painting, before beginning installation.

B. Do not proceed with installation until unsatisfactory conditions have been corrected.

3.2 INSTALLATION

A. Install blinds level, plumb, and located so exterior slat edges in any position are not closer than 1 inch to interior face of glass lites, gaps between slat ends and jambs do not exceed 1/4 inch plus or minus 1/8 inch, and bottom rail in fully lowered position is within 1/2 inch of bottom of window or other opening.

3.3 CLEANING

A. After completing the installation, clean blind surfaces according to the manufacturer's instructions.

B. Remove surplus materials, packaging, rubbish and debris resulting from the installation. Leave areas where installation occurred neat, clean, and ready for use.

HORIZONTAL LOUVER BLIND PRODUCT DATA SHEET

Slat Description: Perforated slats complying with the following requirements:

Openness Factor: 180 degrees

Nominal Slat Width: 1 inch (mini blinds.)

Tilt Operation: Manual with wand.

Position of Tilter Control: Left side unless otherwise indicated.

Tilt: Full.

Cord Lock Operation: Cord lock, locks pull cord to stop blind at any position in ascending or descending travel.

Position: Right unless otherwise indicated.

Cord Equalizers: Self-aligning to maintain horizontal blind position.

Valance: Match color of slats.

Mounting: Wall.

Color: As selected by Architect from manufacturer's full range of colors produced for horizontal blinds specified.

Product(s): As follows:

"Bali Classic Mini" - Carey-McFall

"Riveria" ˇ Levolor

Or pre-approved equal.

END OF SECTION 12511

SECTION 14620 - MONORAIL TROLLEY HOISTS

PART 1 - GENERAL

1.1 RELATED DOCUMENTS

A. Drawings and general provisions of Contract, including General and Supplementary Conditions and Division 1 Specification Sections, apply to this Section.

1.2 SUMMARY

A. This Section includes the complete monorail trolley hoist system, including mon orail beam and bracing, trolley, hoist, all appurtenances, and installation.

B. Related Sections:
1. Division 5 Section · Metal Fabrications for fabrications and erection requirements for monorail beam and bracing.
2. Division 16 Electrical.

1.3 SUBMITTALS

A. General: Submit the following in accordance with Conditions of Contract and Division 1 Specification Sections.

B. Product Data for each trolley hoist unit, indicating capacities, sizes, pe rformances, operations, safety features, controls, finishes, and similar information. Indicate any variations from specified requirements.

C. Shop Drawings including dimensioned drawings showing plans, elevations, sections and large-scale details showing monorail beams, trolley, monorail beam bracing, hoist and all appurtenances.

1.4 QUALITY ASSURANCE

A. Installer Qualifications: Engage the hoist manuf acturer or an installer approved by the manufacturer and who has completed crane and hoist installations similar in material, design, and extent to that indicated for Projects which have resulted in installations with a record of successful in-service performance

B. Regulatory Requirements: Comply with local governing regulations and the requirements of OSHA, the standards of the Crane Manufacturer's Association of America (CMAA), and the Hoist Manufacturer's Institute (HMI).

PART 2 - PRODUCTS

2.1 ACCEPTABLE MANUFACTURERS

A. Available Manufacturers: Subject to compliance with requirements, manufacturers offering trolley hoists that may be incorporated in the Work include but are not limited to the following:

1. Five ton motorized trolley hoist:

a. ACCO Hoists
b. R & M Material Handling ´ SX Series Hoists
c. Yale Hoists - EW

2.2 MATERIALS AND COMPONENTS

A. Five ton motorized trolley hoist:

1. Trolley: Adjustable for 6-inch to 18-inch flange width.

a. Wheels: Cast iron with sealed, lifetime lubricated ball bearings.
b. Provide sideplates with heavy-duty bumpers to protect wheels.
c. Capacities: 5 tons
d. Operation: motorized
e. Motor: 1/3 hp min.
f. Speed: 45 fpm min.
g. Provide hoist rail seismic bracing per 2006 IBC

2. Hoist: electric wire rope operation.

a. Configuration: Single reeved, low headroom wire rope
b. Brakes: Provide a dc rectified magnetic disc motor brake rated at 250% of motor torque. In addition, provide regenerative control braking.
c. Motor: 5 hp min. 30 min, Class · F , TENV or TEFC motors
d. Speed: 20 fpm min. Single or two speed
f. H4 duty rating
g. Provide an overload limit switch set at 115% of rated capacity.
h. Upper and lower limit switches
il. NEMA 3R control enclosure
j. Helical-spur gear train
k. Cast alloy gear case
l. Metallic sheaves
m. Vertical lift: 18'-0" feet min. Coordinate with plans.

3. Hoist Beam: ASTM A-992. Hoist manufacturer shall size the beams using acceptable engineering practices. Provide beam calculations stamped by a Utah Professional Engineer. Provide straight beams with minimal sweep . Orient the beams so that the natural camber will be up. Provide proper splices that will not interfere with the operation of the trolley hoist. Weld the tread line at each splice and grind smooth to provide an even transition without a · bump . Monorail hangers will be sized to meet the requirements of the trolley hoist capacity and duty cycle. All -thread rod will not be allowed. Beams shall be braced to prevent lateral movement due to trolley loads.

4. Electrification: Provide rolled galvanized insulated steel conductor system. 4 conductor (3 phase, 1 ground) mounted 2 on each side of monorail for bottom contact. Provide conductor hangers and all necessary hardware required for installation and operation of complete system (See plans for length).

PART 3 - EXECUTION

3.1 INSTALLATION

A. General: Comply with manufacturer's instructions and recommendations for work during installation.

B. Provide permanent / removable stops on the beam to prevent trolley overrun.

C. Provide final electrical connection from junction box adjacent to monorail to conductor system (See plans for length).

3.2 LOAD TEST

A. Upon completion of the installation, instal ler will provide a 125% of capacity load test of the equipment using test weights provided by the installer. The load test will comply with OSHA and a certificate of satisfactory completion will be issued by the installer.

END OF SECTION 14620

MECHANICAL SPECIFICATION

TABLE OF CONTENTS

DIVISION 15 - MECHANICAL

Section	Title
15000	General
15050	Basic Materials & Methods
15060	Pipe & Pipe Fittings
15170	Motors
15180	Pipe & Equipment Identification
15191	Air System Testing & Balancing
15200	Vibration Noise Control & Seismic Protection
15250	Insulation
15251	Hot Water & Cold Water Pipe Insulation
15258	Duct Insulation
15400	Plumbing Systems
15410	Plumbing Fixtures
15411	Hot and Cold Water Systems and Drain Pan Piping System
15412	Emergency Plumbing Fixtures
15413	Soil Waste and Vent Piping System
15452	Drinking Water Cooling System
15460	Propane Gas Fired Storage Type Water Heaters
15490	Waste Oil Piping
15491	Lubrication Equipment
15576	Flues
15577	Furnace Air Piping
15600	Heat Generation
15611	Propane Gas Fired Furnace
15670	Condensing Units
15820	Duct Accessories
15838	Power Ventilators
15855	Diffusers, Registers and Grilles
15861	Steel Duct
15862	Round Ductwork
15867	Ductwork Testing
15887	Louvers
15970	Control Systems
15985	Sequence of Operation

END OF DOCUMENT

SECTION 15000 – GENERAL

PART 1 - GENERAL

1.1 GENERAL

A. General Conditions and Division 01 apply to this Division.

1.2 SCOPE

A. Includes -

1. Furnish all labor, materials, and equipment necessary for completion of the mechanical and plumbing work as indicated in the project documents.
2. Furnish and install all motors specified in this Division and be responsible for the proper operation of electrical powered equipment furnished by this Division.
3. Furnish exact location of electrical connections and information on motor controls to Division 16.
4. Placing the air conditioning, heating, ventilating, and exhaust systems into full operation and continuing their operation during each working day of testing and balancing.
5. Making changes in pulleys, belts, and dampers, or adding dampers, as required for the correct balance as recommended by Balancing Contractor at no additional cost to Owner.
6. Air and water balance, final adjustment and test run.
7. The satisfactory performance of the completed systems is a requirement of this specification.

B. Related Work Specified Elsewhere -

1. Conduit (unless specified otherwise), line voltage wiring, outlets, and disconnect switches specified in Division 16.
2. Magnetic starters and thermal protective devices (heaters) not a factory mounted integral part of packaged equipment are specified in Division 16.

1.3 SITE INSPECTION

A. The Contractor shall examine the site and understand the conditions which may affect the performance of work of this Division before submitting proposals for this work.

B. Contractor shall familiarize himself with all locations where existing utilities and tunnel will be effected.

C. No subsequent allowance for time or money will be considered for any consequence related to failure to examine existing site conditions.

1.4 DRAWINGS

A. Mechanical drawings show general arrangement of piping, ductwork, equipment, etc; however, locations are to be regarded as shown diagrammatically only. Follow as closely as actual building construction and work of other trades will permit.

B. Consider architectural and structural drawings part of this work insofar as these drawings furnish information relating to design and construction of building. These drawings take precedence over mechanical drawings.

C. Because of the small scale of mechanical drawings, it is not possible to indicate all offsets, fittings, and accessories which may be required. Investigate structural and finished

conditions affecting this work and arrange work accordingly, providing such fittings, valves, and accessories required to meet conditions.

D. Before any equipment is purchased or fabricated and before running and/or fabricating any lines of piping or ductwork, the Mechanical Contractor and his Subcontractors shall assure themselves that they can be run as contemplated. Because of the small scale of the drawings, it is not possible to indicate all offsets, fitting, and accessories that may be required. The Mechanical Contractor and his Subcontractors shall carefully investigate all mechanical, electrical and structural drawings, along with the finish conditions affecting all of their work, furnishing any required fittings, valves, duct transitions, offsets and accessories as may be required to meet such conditions, at no additional cost.

E. If changes in location of piping, equipment, ducts, etc. are required due to lack of coordination of work under this division, such changes shall be made without charge. Contractor shall review drawings with local and state agencies having jurisdiction and any changes required by them shall be brought to the attention of the architect prior to bidding or commencement of work.

1.5 SHOP DRAWINGS

A. Submit shop drawings in accordance with Division General Conditions.

B. Shop drawings of various contractors shall be coordinated to eliminate interferences and to provide sufficient space for installation of equipment, piping, ductwork, insulation, valves, controls, etc. Prefabrication will not exempt contractor from fitting work to on-site job conditions.

C. The contract drawings shall not be scaled for rough-in measurements, nor be used as shop drawings. Where drawings are required for these purposes, the Contractor shall obtain data from the architectural drawings and take the necessary field measurements. Drawings required by the General Conditions shall include such information as needed to satisfy the Architect on the methods of construction.

1.6 CODE REQUIREMENTS, FEES, AND PERMITS

A. The work shall be installed in accordance with the following applicable codes, ordinances and standards unless otherwise specified. The codes and standards shall include but not be limited to and be of the latest and current editions.

1. American Gas Association (AGA)
2. American Society of Heating, Refrigeration and Air Conditioning Engineers (ASHRAE)
3. American Society of Mechanical Engineers (ASME)
4. American Society of Testing Materials (ASTM)
5. American Standards Association (ASA)
6. American Water Works Association (AWWA)
7. American Welding Society (AWS)
8. Associated Air Balance Council (AABC)
9. Heat Exchange Institute (HEI)
10. Hydraulic Institute (HI)
11. National Electrical Code
12. National Fire Protection Association (NFPA)
13. International Plumbing Code (IPC)
14. Sheet Metal and Air Conditioning contractors National Association (SMACNA)
15. Underwriters Laboratories (UL)
16. International Building Code (IBC)

17. International Mechanical Code (IMC)
18. Utah State Safety Orders (OSHA/UOSH)
19. Utah Fire Rating Bureau
20. Utah Boiler and Pressure Vessel Law
21. Utah Air Conservation Regulations/Waste Disposal regulations.
22. ASHRAE Ventilation STD.62-1981-R.
23. Model Energy Code, and ASHRAE 90.1 - 1989.

B. Should drawings conflict with any code, the code shall govern. If drawings and specifications establish a quality exceeding the code, the drawings and specifications shall govern. If conflicts do exist among the drawings, specifications and codes, the same shall be brought to the attention of the Architect in writing prior to bidding, otherwise Contractor shall comply with applicable codes.

C. The latest edition of all codes adopted by The State of Utah shall be used.

D. Mechanical Contractor shall give all notices, obtain all necessary permits, file necessary plans, prepare documents and obtain approvals, and pay all fees required for completion of the mechanical and plumbing work outlined in this Division of the specifications and shown on the Mechanical and Plumbing Drawings.

1.7 OPERATING AND MAINTENANCE DATA ON CD-ROM

A. An intuitive CD-ROM instructional manual shall be provided to give the owners representative the information they need to care, adjust, maintain and operate all of the equipment within the building , to include but not limited to, the heating, air conditioning, ventilating, plumbing automatic temperature control systems, kitchen equipment, stage and theatrical equipment, electrical equipment and building products requiring maintenance.

B. CD-ROM manual preparation shall be under the direction of an individual or organization that has demonstrated expertise in the preparation of a comprehensive and complete CD-ROM operation and maintenance manual. Qualifications shall be submitted for approval.

C. All CD-ROM's shall be authored with Adobe Acrobat. The authoring shall, but not be limited to include the following:

a) All design drawings and documentation shall be included on the CD-ROM in a PDF format. These drawings shall be provided in an electronic format to the company contracted to create the CD-ROM and shall include the civil engineering, architectural, structural, electrical and mechanical sections
b) Icons shall be located on the PDF plans to link test and balance reports and mechanical operation and maintenance information to the design drawings.
c) All information on the CD-ROM shall be printable on 8.5" x 11" plain paper with the design drawings and automatic temperature control drawings printable on plain paper.
d) Linked information such that the user can key word search for information.
e) Provide a hyper-text alphabetical index of all equipment and building products as outlined in item 1 above.

f) Use of multimedia formatting (text, pictures, graphics and sound etc.) will be used to make the information more accessible and understandable.

g) All documentation shall be converted to an unchangeable Portable Document Format (.PDF).

h) The CD-ROM shall start automatically when inserted in the drive under the Windows or higher operation system. Any directions to continue will be observable on the screen.

I) Operation and maintenance information to be supplied to the company contracted to do the CD-ROM by the contractor and suppliers providing the materials and equipment.

D. At the beginning or start-up of the CD-ROM there shall be a General Information index screen to direct the user to the portion of the manual desired. This index screen will consist of five (5) major groups. The groups will include:

a) Names of architects, engineers and contractors with address and telephone number.

b) Warranties List: This section to include:

c) A list of all the contractors with a link to their warranty for their part of the job.

d) Design drawings

E. Manufacturer's Operation and Maintenance Manuals:

a) Architectural or General Contractor section:

b) Kitchen Section:

c) Mechanical section:

d) Electrical section:

F. The company selected to produce the CD-ROM is to insure that there is a computer at the job site. If there is not a computer available on the site one should be provided.

a) The minimum computer requirements to run the CD-ROM will be the following:

- Pentium Processor 100 Mhz
- 16 Meg RAM
- 4x CD-ROM drive
- Sound Card
- 64 bit 2 meg video card
- Windows XP/Vista
- Mouse
- SVGA monitor
- Monitor set to 800 x 600 resolution

G. Four (4) copies of the CD will provided to the owner's representative and one copy to the Mechanical Engineer.

1.8 OPERATION AND MAINTENANCE INSTRUCTIONS

A. Contractor shall instruct building maintenance personnel in the operation and maintenance of the installed mechanical systems utilizing the Operation and Maintenance Manual when so doing.

B. Minimum instruction periods shall be as follows -

1. Mechanical - Four hours.
2. Temperature Control - Two hours.
3. Plumbing - Two hours.

C. Instruction periods shall occur before final inspection when systems are properly working and before final payment is made.

D. None of these instructional periods shall overlap each other.

E. An additional two hours of instruction will be provided by each contractor after 60 days of system operation by owner to insure proper system operation and answer questions.

1.9 RECORD DRAWINGS

A. Mechanical Contractor shall keep an up-to-date set of mechanical and plumbing drawings in his custody showing all changes in red, clearly defined and neatly drafted by him. At the end of construction, he shall turn these drawings over to the General Contractor who will combine with other record drawings for submission to the Architect. Record drawings must be completed and submitted prior to final inspection.

1.10 REPORTS

A. Following are items to be submitted to the Owner and Architect for review prior to requesting a substantial completion walk-thru and substantial completion.

1. Plumbing Disinfectant Reports (Ref. Specifications 15060.3.30.C, and 15411.3.8)
2. Air Balance Reports (Ref. Specification 15191.3.6.)

END OF SECTION 15000

SECTION 15050 - BASIC MATERIALS & METHODS

PART 1 - GENERAL

1.1 GENERAL

A. Division 15000 General applies to this Section.

1.2 COORDINATION OF WORK

A. It is understood that while Drawings are to be followed as closely as circumstances permit, this Division will be held responsible for the installation of systems according to the true intent and meaning of the Contract Documents. Anything not clear or in conflict will be explained by making application to the Architect in writing. Should conditions arise where certain changes would be advisable, secure Owner's and Architect's approval for these changes before proceeding with work.

B. Coordinate work of various trades in installing interrelated work. Before installation of mechanical items, make proper provision to avoid interference's in a manner approved by Architect. Changes required in work specified in Division 15 caused by neglect to secure approval shall be made at no cost to Owner.

C. Arrange piping, ductwork, and equipment to permit ready access to valves, unions, traps, starters, motors, control components, and to clear openings of doors and access panels. Mechanical Contractor shall provide all necessary access doors and/or panels to provide complete access to all mechanical equipment valves or accessories. Coordinate openings in walls and hard ceilings with general contractor to provide access doors and provide access doors where this coordination or other provisions have not been made. Doors for valves, piping, dampers, etc. shall be minimum 12" x 12" and doors for mechanical equipment shall be minimum 24" x 24".

D. Furnish and install inserts and supports required by Division 15 unless otherwise noted. Furnish sleeves, inserts, supports, and equipment that are an integral part of other Divisions involved in sufficient time to be built into the construction as the Work proceeds. Locate these items and see that they are properly installed. Expense resulting from improper location or installation of items above shall be borne by Division 15.

E. Be responsible for required digging, cutting, and patching incident to work of this Division and make required repairs afterwards to satisfaction of Owner and Architect. Cut carefully to minimize necessity for repairs to existing work. Do not cut beams, columns, or trusses.

1. Patch and repair walls, floors, ceilings, and roofs with materials of same quality and appearance as adjacent surfaces unless otherwise shown. Surface finishes shall exactly match existing finishes of same materials.
2. This Division shall bear expense of cutting, patching, repairing, and replacing of work of other Divisions because of its fault, error, tardiness, or because of damage done by it.
3. Provide the necessary cutting, patching, repairing, and replacing pavements, sidewalks, roads, and curbs to permit installation of work of this Division.

F. Adjust locations of piping, ductwork, equipment, fixtures, etc, to accommodate work from interference's anticipated and encountered. Determine exact route and location of each pipe and cut prior to fabrication.

1. Make offsets, transitions, and changes in direction of piping, ductwork, and electrical raceways as required to maintain proper head room and pitch of sloping lines whether or not indicated on Drawings. Furnish and install traps, air vents, sanitary

vents, pull boxes, etc, as required to effect these offsets, transitions, and changes in direction.

G. Slots and openings through floors, walls, ceiling, and roofs shall be provided by other Divisions, but this Division shall see that they are properly located and do any cutting and patching caused by its neglect to do so.

H. This Contractor shall schedule his work, store his equipment and materials, and work in harmony with other Contractors so as to not delay or jeopardize the construction.

I. This Division shall coordinate with electrical contractor to insure that all required components of control work are included and fully understood. Any discrepancies shall be called to the attention of the Architect before completion of bids. No additional cost shall accrue to the Owner as a result of lack of such coordination.

1.3 EQUIPMENT & MATERIALS

A. Requests for substitution shall be received in writing a minimum of seven days prior to bidding. Prior acceptance shall be by Manufacturer's name only. Items not listed in this specification or subsequent addendum's shall not be considered. No oral approvals will be acceptable. Manufacturers listed in this specification are acceptable only for items listed. All other items manufacturer wishes to bid must be prior approved. This includes plumbing items. All equipment shall be subject to final review in accordance with "Project Submittals".

B. Product Approvals -

1. If approval is received to use other than specified items, responsibility for specified capacities and insuring that items to be furnished will fit space available lies with this Division.
2. In the event other than specified equipment is used and will not fit job site conditions, this Division assumes responsibility for replacement with items named in Specification.

C. Use <u>domestic made</u> pipe, pipe fittings, and motors on Project.

D. Motor and equipment name plates as well as applicable UL labels shall be in place when Project is turned over to Owner.

E. Insure that items to be furnished fit spaces available. Make necessary field measurements to ascertain space requirements including those for connections and furnish and install equipment of size and shape so final installation shall suit true intent and meaning of Contract Documents. Do not scale off drawings.

F. All materials shall be of the best commercial quality obtainable, consistent with specified materials and for the purpose or function intended. Materials shall be new unless specifically excepted.

G. Equipment catalog or model numbers shown define the basic equipment types and quality standard only. Catalog numbers shall not be considered as all inclusive and shall be verified to include all devices, controls, operators, and appurtenances necessary for the satisfactory and complete operation of the equipment.

H. Follow manufacturer's directions in delivery, storage, protection, and installation of equipment and materials.

1. Promptly notify Architect in writing of conflicts between requirements of Contract Documents and Manufacturer's directions and obtain Architect's written instructions

before proceeding with work. Contractor shall bear all expenses arising from correcting deficiencies of work that does not comply with Manufacturer's directions or such written instructions from Architect.

I. Deliver equipment and material to site and tightly cover and protect against dirt, water, and chemical or mechanical injury but have readily accessible for inspection. Store items subject to moisture damage (such as controls) in a dry, heated space.

1.4 PROJECT SUBMITTALS

A. Furnish complete catalog data for manufactured items of equipment to be used in the Work to Architect for review within 30 days after award of Contract.

B. Submittal shall include, but not be limited to the following:

1. equipment scheduled
2. valves
3. insulation and duct liner
4. registers, grilles, and diffusers
5. automatic temperature controls
6. certificates of guarantee
7. plumbing fixtures, trim and specialties
8. any item for which more than one manufacturer is mentioned

C. Submit a minimum of five copies of data in binders and index in same order and name as they appear in Specification.

1. State sizes, capacities, brand names, motor HP, electrical requirements, accessories, materials, gauges, dimensions, and other pertinent information.
2. List on catalog covers page numbers of submitted items.
3. Underline applicable data.

D. If material or equipment is not as specified or submittal is not complete, it will be rejected by Architect.

E. Catalog data or shop drawings for equipment which are noted as being reviewed by Architect or his Engineer shall not supercede Contract Documents.

F. Review comments of Architect shall not relieve this Division from responsibility for deviations from Contract Documents unless Architect's attention has been called to such deviations in writing at time of submission, nor shall they relieve this Division from responsibility for errors in items submitted.

G. Check work described by catalog data with Contract Documents for deviations and errors.

H. All items other than first named specified equipment shall show and state all exceptions and deviations taken and shall include design calculations.

I. The Contractor shall review the submittals prior to submission to the Architect to make sure that the submittals are complete in all details. No submittal will be reviewed which does not bear the contractor's notation that such checking has been made.

J. No partial submittals will be considered unless approved by the engineer.

K. Manufacturers' names shall be mentioned as acceptable prior to bidding. See paragraph 3a above.

L. Mechanical Contractor shall verify equipment dimensions to fit the spaces provided with sufficient clearance for servicing the equipment.

M. Mechanical Contractor shall review equipment submittals for compliance with schedules, specifications, and drawing plans and details. Equipment submittal shall show the proper arrangements to suit installation and maintenance such as motor location, access doors, filter removal, piping connections, etc.

N. Equipment submittal sheets shall be clearly marked indicating equipment symbol and exact selection of proposed equipment. Submittals shall clearly indicate name of manufacturer of each item.

O. For unacceptable items, the right shall be reserved to require the first named specified items.

1.5 CLEANING & FINISHING

A. Contractor shall, at all times, keep the premises free from waste material and rubbish. Upon completion of this Section of the work, Mechanical Contractor shall remove all surplus materials and rubbish; clean all spots resulting from the mechanical work from hardware, floors, glass, walls, etc.; do all required patching up and repair all work of other trades damaged by Mechanical Contractor under this Section of the work, and leave the premises in a clean orderly condition. Clean heating and cooling coils, internally and externally, and replace all air filters prior to
final mechanical inspection. Remove rust, plaster, dirt, grease and oil before painting, insulating, or exposing to view the equipment, piping, ductwork, etc. in completed structure. Refinish any damaged surfaces and leave in proper working order at final completion.

1.6 EQUIPMENT SERVICING

A. Prior to starting mechanical equipment, all motors, bearings and moving parts shall be properly oiled, greased and lubricated as required. Full and adequate maintenance service shall be given and upon completion all equipment shall be cleaned and checked and placed in perfect condition for the Owner.

B. Provide lubrication for the following:

1. Furnaces and radiant heaters
2. Exhaust fans
3. Damper motors

C. Amount and type of lubricant shall be per manufacturer's specification.

1.7 SUPERVISION

A. The Contractor shall supervise and direct the work with his best skill and attention. He will be solely responsible for the means, methods, techniques, sequences and procedures of construction. The Contractor will be responsible to see that the finished work complies accurately with the Contract Documents.

1.8 SAFETY REGULATIONS

A. Contractor shall provide equipment, supervision, construction, procedures, and everything necessary to assure safety of life or property.

B. Refer also to General Condition and Special Conditions for protection clauses.

1.9 LEAK DAMAGE

A. Mechanical Contractor shall be responsible for damages to the work of other Contractors or to the building, or to its contents, people, etc., caused by leaks in any of the equipment or piping installed by him through equipment or material failures, leaking joints or disconnected pipes, fittings, or by overflows and shall make at his own expense all repairs to fixtures, building interior, contents, paint, rugs, furniture, ceiling tile, and equipment so damaged.

1.10 TOOLS AND STORAGE OF EQUIPMENT

A. The Mechanical Contractor shall furnish all necessary tools, staging and whatever may be necessary for the installation of this work and shall at all times protect this work and others, and the materials to be used therein from damage by the weather, accident and other causes, and shall repair and make good any damage thus occurring.

1.11 WORKMANSHIP

A. Workmanship shall be the best quality of its kind for respective industries, trades, crafts and practices and shall be acceptable in every respect to the Owner and Architect. Nothing contained herein shall relieve the Mechanical Contractor from performing good work, perfect in all details of construction.

1.12 TEMPORARY FACILITIES

A. Furnishing of temporary water, space heating, sanitary facilities, drainage lines, light and power will be as specified in Division 01 General Conditions. Mechanical Contractor shall arrange with the General Contractor to bring facilities to required location of premises. All expenses involved shall be paid by the Contractor as described in General and Special Conditions.

1.13 PAINTING BY MECHANICAL CONTRACTOR

A. See section 09 900 for painting requirements. See also section 15 180 for color code requirements.
B. Painting shall be by persons experienced in painting. Mechanical Contractor shall use the project painting Contractor as his Subcontractor for painting under this section.

C. All exposed, insulated, and bare piping, equipment, metal stands and supports shall be painted as follows:

1. The prime coat on heating units, grilles, and diffusers shall be factory applied. The finish coats shall be applied under this Section of these specifications.
2. All equipment which is to be furnished in finished painted condition by Mechanical Contractor shall be left without mark, scratch or impairment to finish upon completion and acceptance of job. Any necessary refinishing to match original shall be done by Mechanical Contractor. Do not paint over name plates, serial numbers or other identifying marks.
3. All piping run exposed in equipment rooms, shall be painted as required in Section 15 180. Paint colors shall conform to color code requirements as specified in 15 180 "Identification of Piping and Equipment".

1.14 EQUIPMENT BASES

A. Provide reinforced concrete bases under furnace units, and air compressor. Coordinate work with Division 03.
B. Bases shall be 4" high, above the finish grade. The base shall extend beyond the equipment 4" in all directions, where possible. Inserts and vibration isolation systems shall be provided

and installed by the Mechanical Contractor at the time the concrete is poured to accommodate and anchor the equipment used. Coordinate with vibration isolation manufacturer's requirements and Section 15 200.

1.15 BELT GUARDS

A. Shall be provided, properly enclosing each belt drive system. Guards shall be easily removable, constructed of expanded metal with suitable frames corresponding with SMACNA standard and with tachometer openings. Coordinate with equipment suppliers to avoid duplication of belt guards supplied with equipment.

B. Guards shall comply with OSHA Regulations.

1.16 ELECTRICAL WORK

A. Power wiring to all electrically driven apparatus shall be done under the electrical contract. See Electrical Specifications.

B. Unless specifically noted otherwise on mechanical documents, Electrical Contractor shall furnish and install all magnetic starters including properly sized heaters, and disconnect switches as indicated on drawings or required by code.

C. The Mechanical Contractor shall verify the proper operation of equipment furnished by him. Costs for repair, replacing, re-wiring and re-testing shall be borne by the Mechanical Contractor without additional costs to the Owner.

D. Motors shall be as specified in Section 15 170.

E. Submit all data on electrical control equipment not included by the automatic temperature control diagrams. Information shall include the manufacturer's name, circuit drawings, ratings, voltage, and other operating characteristics and locations. Wiring diagrams and control equipment shown on the drawings are for the first named specified equipment. Any changes or additions required to accommodate the furnished equipment shall be the responsibility of the Mechanical Contractor.

1.17 CONTRACTOR'S USE OF BUILDING EQUIPMENT

A. The Contractor may use equipment such as electric motors, fans, filters, etc. when permanently installed as part of the project and with the written permission of the Owner. As each piece of equipment is used, maintenance procedures approved by the manufacturer shall be followed, a careful record shall be kept of the time used, maintenance procedure followed and of any difficulty experienced with equipment. The Contractor's records on the equipment shall be submitted to the Owner upon acceptance of project. All fan belts and filter media shall be new at the beginning of the Mechanical System Operating Test Run and System Balancing. Wearing surfaces (such as bearings) shall be carefully inspected just prior to acceptance. Any excessive wear noted shall require replacement.

1.18 INSPECTION NOTICE

A. The following is a basic list of guideline items so that the Architect, local plumbing inspector and Owner can be at job site for these inspections as the building progresses. Mechanical Contractor shall inform these people one week in advance of test time.

1. Water tests on all sewer, waste, and rainwater piping prior to piping being concealed.
2. Pressure tests on all water service piping and gas piping.

3. **All duct work prior to installation of finished ceilings, including ductwork pressure testing. Underground ductwork prior to covering with concrete.**
4. **The initial start-up of mechanical equipment, etc.**
5. **Any changes or problems occurring at job site.**
6. **Inspect all vent flashings on roof prior to roofing.**
7. **Periodic inspection at their discretion will be made to insure compliance to Contract Documents and codes. Contractor shall provide ladders, access and other assistance as requested during inspections.**
8. **Final inspection before giving approval for final payment.**

1.19 EXCAVATION AND BACKFILLING

A. All excavation and backfilling shall be done as described in Division 02.

B. Trenches for underground pipe lines shall be excavated to the required depth. Rocks, trash, or other debris will not be allowed in trench or backfill and shall be removed before pipe is laid in place. After piping has been tested, inspected and approved, piping shall be backfilled.

1.20 WARRANTY GUARANTEE

A. The Contractor shall warrant all materials and equipment to be of quality consistent with specifications as represented by manufacturer's published data.

B. The Contractor shall guarantee that the installation and operation of the equipment shall be free from defects for a period of one year beginning at date of substantial completion and acceptance. The Contractor shall replace or repair any part of the installation that is found to be defective or incomplete within the guarantee period.

C. The one year guarantee on equipment and systems shall commence when equipment has been demonstrated to work and has been accepted. (Example: If an equipment item fails to perform and it takes 9 months after substantial completion to correct, then the guarantee shall commence after the item has been demonstrated to perform and has been accepted.)

D. Substantial completion and acceptance in no way relieves the Contractor from providing the systems and equipment as specified.

1.21 COMPLETION SCHEDULE

A. Start-up and verification of basic equipment items shall be done prior to the date of substantial completion with sufficient time to allow balancing and adjusting to be performed.

B. At the time of the final inspection a date shall be agreed upon for completion of any remaining items. At least double the estimated cost of the work will be withheld from the Contractor's payment.

C. The air balance reports, duct pressure test reports and plumbing disinfectant reports shall be submitted to the Owner and Architect prior to substantial completion.

END OF SECTION 15050

SECTION 15060 - PIPE & PIPE FITTINGS

PART 1 - GENERAL

1.1 Division 01 General and Sections 15000 and 15050 are part of this Section.

1.2 SCOPE

A. Includes -

1. General piping installation, materials and procedures for all piping systems.

B. Related Work Specified Elsewhere -

1. Type of pipe and fittings for culinary hot and cold water, refrigerant, gas, drainage, etc. shall be specified in that particular Section.
2. Section 15251 for calcium silicate blocks for insulated pipes.

PART 2 - PRODUCTS

2.1 HANGERS

A. Provide one of the following types of hangers for horizontal piping. Comparable products of Grinnell, B-Line, Fee and Mason or Crane considered equal.

B. Except as otherwise specified hereinafter: Clevis type, Grinnell figure 260.

C. Where pipe exceeds maximum loading recommended for Clevis type Hangers, provide steel pipe clamp, Grinnell Fig. 212 or Fig. 216, depending on loading.

D. Provide trapeze hangers where several pipes can be installed parallel and at the same level. Trapeze hangers shall consist of 2 steel channels bolted back to back spaced for rod hangers at each end. Use roller chairs Fee and Mason Fig. 169 or pipe roll stands Fee and Mason Fig. 160 where provision for expansion is required.

E. Supporting rods shall be attached to concrete by inserts placed before concrete is poured. Grinnell Fig. 282 for pipes up to 8 inches.

F. Supporting rods over 18 inches long shall be braced at every fourth hanger with diagonal bracing attached to slab or beam.

G. Spring hangers shall be used for support of pipe within 100 diameters distance of coils, or pumps, as needed to isolate vibration. Springs shall be sized 1" static deflection. Grinnell Type A or Elcen No. 425 adjustable spring hangers.

H. For copper tubing use copper hanger; or dielectrically isolate with 20 mil thick minimum PVC isolation tape,

2.2 ANCHORS

A. Provide anchors consisting of wide flange beams imbedded in concrete and welded to reinforcing. Pipes shall be attached to the anchor with a 1/4" plate welded to pipe and to anchor with sufficient space to accommodate insulation. See drawings for tunnel pipe anchors.

2.3 FLOOR SUPPORTS

A. Provide one of the following means of supporting horizontal piping from floor:

B. Cast Iron pipe resets, Fee and Mason, Fig. 295 with pipe nipples to suit. Fasten to floor.

C. Where provision for expansion are required, pipe-roll stands, Fee and Mason Fig. 160 without vertical adjustment, Fee and Mason Fig. 161 with vertical adjustment as required. Provide concrete piers, fasten stands to piers.

2.4 WALL SUPPORTS

A. Provide one of the following means of supporting horizontal piping from wall:

B. Pipe clamp bolted to wall B-Line B-2000 series for pipe located close to wall and up to 3-inch pipe.

C. For hanger suspension, 750 pound maximum loading, light welded steel bracket with hole for one rod, 3/4 inch diameter. Fee and Mason Fig. 153.

D. For pipe roll stand support, welded-steel bracket, light for 700 pound maximum loading, Fee and Mason Fig. 150, medium for 15000 pound maximum loading Fig. 151, heavy for 3000 pound maximum loading Fig. 155.

2.5 VERTICAL PIPING SUPPORTS

A. Vertical pipe supports shall be steel extension pipe clamps, Grinnell Fig. 261, refer to manufacturer's rated maximum loading for each size pipe. Bolt clamp securely to pipe, rest clamp-end extension on building structure.

B. Where pipe sleeves extend above floor, place pipe clamps at ceiling below, support clamp-end extension from inserts.

2.6 CLAMPS

A. Beam clamps shall be malleable iron, Grinnell Fig. 217 for 3/8 inch hanger rods; forged steel beam clamp, Grinnell Fig. 228 for hanger rod up to 1-1/2 inches.

2.7 PIPE COVERING PROTECTION

A. Provide approved galvanized form shields to protect insulation at areas of contact with hangers and supports. 18-gauge material 8 inches long for pipes up to 3 inches and 14 gauge material 12 inches long for pipes 3-1/2 inches and larger.

2.8 INSERTS

A. Furnish and set inserts in concrete forms; provide reinforcing rods for pipes sizes over 3 inches and for duct sizes as directed.

B. Concrete inserts shall be as follows: Black malleable iron Universal type for threaded connections with lateral adjustment, Grinnell Fig. 279 for pipe sizes up to 3-1/2 inches; Grinnell Fig. 282 for pipe sizes up to 8 inches.

2.9 WALL AND CEILING PLATES

A. Fit pipes passing through walls, floors, and ceiling with wall plates of proper size to cover

openings around pipes. Plates will not be required at floor slabs where sleeves project above floor and space between pipe and sleeve is caulked and sealed. Plates shall be equal to Beaton and Cadwell No. 10, pressed steel plates. Floor plates shall be chromium plated. Wall and ceiling plates shall be prime coated.

2.10 UNIONS AND COUPLINGS

A. Unions: Malleable iron, brass to iron seat, ground joint, same materials as pipe. Crane, Walworth, or approved equal.

B. Dielectric Unions: Mechanical Contractor shall install dielectric union or couplings whenever copper pipe connects to steel pipe or other items of equipment. Couplings and unions shall be as manufactured by the Water Vallot Company of Detroit, Michigan, or approved equal.

2.11 PIPING SPECIALTIES

A. Provide thermometers, pressure gages, vents, tank fittings, and other miscellaneous piping specialties as shown or as may be required by usual good practices for a complete system.

B. Thermometers shall be 9" scale, red reading, glass covered, immersion type with separable sockets. Marshall-Town, Moeller, Trerice, Weskler, or Weiss, with neck extension to accommodate insulation.

C. Pressure gages shall be 4-1/2" diameter dial, molded case dust proof, phosphor bronze, courdon tube type installed with integral check screw or pressure snubber. Marshalltown 224, U.S., Ashcroft, or Marsh.

D. Manual air vents shall be installed at all high points in piping system and drain valves at system low points. Manual air vents shall be 3/8" globe valves on 6" long pipe nipple with 1/4" copper tubing to near floor. Drain valves shall be fitted for 3/4" hose connection and vacuum breaker. Provide access for valves. See section 15050.

2.12 STRAINERS

A. Walworth 3699 - 1/2 Sarco SB; bronze, smaller than 2-1/2 inches. Bailey 125 pound No. 100; Zurn 125 pound No. 540 FPS; or Crane No. 989-1/2, cast iron 2-1/2 inches and larger. Water straining element shall be perforated 20 mesh monel screen. Strainers shall be designed for the same working pressure as the control valves. Provide strainer blowoff port with line size hose bibb and vacuum breaker.

2.13 VALVES

A. Provide on each valve a name plate showing manufacturer, valve size, grade, and pressure temperature service rating. Valve fluid bore shall match pipe size. All valves shall have renewable seats and discs, large deep stuffing boxes, packing glands and back seat on steam for re-packing under pressure. Valves 1-1/2" and smaller shall be screwed or soldered connections. Valves 2" and larger shall be flanged. Manufacturers may be Crane, Walworth, Powell, or prior approved equal.

B. General Purpose -

1. Globe Valves Smaller than 2-1/2 Inches: Crane 7
2. Globe Valves 2-1/2 Inches and Larger: Crane 351
3. Ball Valves: Bronze body, in line serviceable, ethylenepropylene O-ring and seat, Crane "Accesso" or equal by Watts, Walworth, or Stockham.
4. Valve shall be of proper size and type for temperature, pressure, and fluid encountered.
5. Use ball or globe valves where possible.

PART 3 - EXECUTION

3.1 Furnish and install a complete system of piping, valved as indicated or as necessary to completely control entire apparatus. Pipe drawings are diagrammatic and indicate general location and connections. Piping may have to be offset, lowered, or raised as required or directed at site. This does not relieve this Division from responsibility for proper erection of systems of piping in every respect.

3.2 Properly support piping and make adequate provision for expansion, contraction, slope, and anchorage.

A. Cut piping accurately for fabrication to measurements established at site and work into place without springing or forcing.

B. Do not use pipe hooks, chains, or perforated metal for pipe support.

C. Remove burr and cutting slag from pipes.

3.3 Piping shall not interfere with removal of other equipment, ducts, or devices, or block access to doors, windows, or access openings. Provide accessible, ground joint unions in piping at connections to equipment.

3.4 Make connections of dissimilar metals with insulating couplings.

3.5 **Provide sleeves around pipes passing through floors, walls, partitions, or structural members.**

A. Seal sleeves with plastic or other acceptable material.

B. All piping passing through floors and outside walls and foundations shall have a water tight sleeve and water tight caulking around pipe. Extend pipe sleeve minimum of 3 inch above floor.

C. Pipes passing thru fire rated walls and ceilings shall be sealed per the provisions of Section 07270 of the specifications and as detailed on the architectural drawings.

D. Reference drawings for pipe sleeve details.

3.6 Cap or plug open ends of pipes and equipment to keep dirt and other foreign materials out of systems. Do not use plugs of rags, wool, cotton waste, or similar materials.

3.7 Install piping systems so they may be easily drained.

3.8 Do not place water piping within building perimeter in contact with earth.

3.9 Valves of same type shall be of same Manufacturer.

3.10 Do not use reducing bushings, street elbows, or close nipples.

3.11 Make changes in direction with proper fittings. Bending of pipe is not approved.

3.12 Hanger rods shall be of a diameter adequate to support pipe size.

3.13 Install additional supports as required.

3.14 Suspend all piping in building except that underground. Laying of piping on any building member is not allowed.

3.15 Design all hangers to support the required loads. Where necessary, supports shall be designed to permit movement due to expansion and contraction. Where drawings show details of supports and anchors, conform to details shown. Where details are not shown, conform to General Requirements specified in sub-paragraph.

3.16 Horizontal Piping Support Schedule: Support horizontal piping of steel, cast iron and plastic as follows:

Pipe Size	Rod Diameter	Maximum Spacing
Up to 1-1/4"	3/8"	8'-0"
1-1/2" and 2"	3/8"	10'-0"
2-1/2" and 3"	1/2"	10'-0"
4" and up	5/8"	12'-0"

3.17 Piping with non-pressure type joints such as Soil and Waste Piping shall be supported with a minimum of two hangers per pipe section.

3.18 Support horizontal lines of copper tubing with hangers. Space not more than 8 feet center to center.

3.19 Cutting or other weakening of the building structure to facilitate installation will not be permitted. The Contractor shall demonstrate that no weight or stress is placed upon the equipment by the piping and that piping and connection of equipment are in perfect alignment. When so directed, disconnection and reconnection of piping shall be done by Contractor for designated pipe section to properly demonstrate stress; this shall be at no cost to Owner.

3.20 Flanges or unions as applicable for the type of piping specified shall be provided in the piping at connections to all items of equipment. All piping shall be installed to insure noiseless circulation. All valves and specialties shall be placed, packed and adjusted at the completion of the work before final acceptance.

3.21 Operating Valves shall be accessible for operation from floors or platforms where feasible, and handwheels shall not be more than 4'-6" above the floor or platform. In other cases, valves and cocks shall be equipped with chain operated handwheels or extension stems, or other suitable means of remote control.

A. Tighten glands and add additional gland packing as required before final inspection.

3.22 Provide sufficient clearance for insulated piping and fittings to permit application of insulation without cutting either pipe line covering or fitting coverings.

3.23 PIPE PROTECTION

A. Do not run piping in outside wall, or where freezing may occur. Piping in attic spaces shall be run on the interior side of building insulation.

B. No water piping in building shall be in contact with earth. Insulate all burried piping with in building.

C. All piping as installed shall be plugged or capped until equipment has been permanently connected.

3.24 GRADE AND DRAINAGE

A. All piping shall be erected to insure proper draining. Grade soil, waste, and drainage lines

not less than 1/4" per foot unless noted otherwise on drawings.

B. Domestic hot and cold water lines shall be graded so as to drain system with as few drains as possible. Drains shall be located in convenient and accessible places. All drainage piping shall extend to floor drains.

C. Provide hose bibbs for drainage at all low points of water systems and air vents at all high points.

3.25 CROSS CONNECTIONS

A. No plumbing fixture, device or piping shall be installed which will provide a cross-connection or interconnection between a distributing water supply for drinking or domestic purposes and polluted source.

B. Provide all hose bibbs and other vent or drain valves equipped with a hose connection with a vacuum breaker.

C. Contractor shall provide all necessary backflow preventors and vacuum breakers to meet requirements of State and local codes.

3.26 FLEXIBLE CONNECTIONS

A. Shall be provided wherever pipe connects to motor operated equipment.

3.27 DIELECTRIC FITTINGS

A. Shall be used to connect dissimilar metals (such as steel and copper) to prevent electrolytic action.

3.28 PIPE JOINTING

A. All steel pipe shall be joined by coupled, flanged, or screwed connections or by welding. Where welding is employed, welding type fittings with beveled ends shall be used. The mitering of pipes to form elbows and the notching of straight runs to form tees will not be allowed. All galvanized pipe shall be screwed. Copper pipe shall be soldered. All piping shall be cut to length by hack-saw or pipe cutter. Cutting of pipe with a torch will not be allowed.

B. Threaded Piping:

1. Threading shall be American-Standard taper pipe threads. Ream pipe ends and remove burrs after threading. Limit number of threads so that not more than two (2) threads will show beyond fitting.
2. All pipe joints shall be properly sealed with thread coatings applied to the male thread. Sealer for culinary water piping shall be Teflon tape. Sealer for steel pipe in heating, waste and vent lines shall be powdered graphite and Linseed oil or plumbage and linseed oil or "Type-Unyte", or Teflon tape.

C. Soldered Piping:

1. Tubing shall be cut square and burrs removed. Both inside of fittings and outside of tubing shall be well cleaned with steel wool before sweating. Care shall be taken to prevent annealing of fittings and hard drawn tubing when making connections. Joints for sweated fittings shall be made with a non-corrosive paste flux and solid wire solder. Use 95-5 or 96-4 Tin-Antimony solder. Cored solder and tin lead solder will not be permitted.

D. Welding:

1. Welders shall be certified -
   a. Welders shall be certified and shall bear evidence of certification within 30 days prior to commencing work on this project.
   b. If there is any doubt as to the proficiency of the welder, the Owner may require the welder to take another test. This shall be done at no additional expense to the Owner.
   c. Welders shall be certified in accordance with section IX of the ASME Boiler and Pressure Vessel Code by Pittsburgh Testing Laboratories or other Testing Agency acceptable to the Owner.
2. All concealed or buried lp gas piping and all piping over 2-1/2" diameter shall be welded. Welding shall be done using either gas or electric welding equipment. No electric welding shall be done when the atmospheric temperature is below 40 degrees F. without first preheating the ends of the pipe. Thoroughly clean all piping surfaces before welding. Each joint shall be beveled before welding. The width of circumferential welds shall be 2-1/2 times the wall thickness of the pipe. Piping shall be securely aligned and spaced. The deposited metal shall form a gradual increase in thickness from the outside surface to the center of the weld. Make welds in at least two beads. Each shall be cleaned using stiff wire brushes or pointed de-scaling tools. The final beads shall be similarly cleaned for inspection.

3. Fittings -
   a. All fittings shall be ASA Standard fittings and shall be of standard pipe thickness.
   b. All elbows shall be long radius.
   c. Wherever tee connections are made to piping systems on the main run, welding sockets shall be installed for the branch connections up to one half the size of the main run. On connections larger than one half the size of the main run, welding tees shall be used.
   d. The use of fittings formed from welded pipe sections and or notching of pipe will not be permitted.
   e. All welding fittings used in welded system shall be manufactured by Tube Turns Inc., Taylor Forge and Pipe Works, Midwest Piping and Supply Co, or Bonney Forge and Tool Works, for "Weld-O-Lot" or "Thread-O-Lot", or approved equal fittings and shall match the pipe in which they are installed.

4. Safety precautions -
   a. The contractor shall provide a fire proof mat or blanket to protect the structure, and adequate fire protection at all locations where welding is done.

5. Testing and acceptance -
   a. Engineer and Owners Representative shall at their disgression shall inspect welds. If welds are found to be suspect, contractor shall provide testing of questionable welds at contractors expense.
   b. Testing shall be by radiograph, ultrasonic, sectioning or a combination of these methods at the option of the Owner.
   c. The contractor shall test a minimum of 6 welds up to a maximum of 1/4 of all welds on project as selected by Engineer.
   d. Tests shall be preformed by a recognized independent testing agency acceptable to all parties. Agency shall submit a test report.
   e. If defective joints are discovered Owner shall have right to require all welds removed and redone or remaining welds tested and all defective welds replaced. All work to test, remove and replace welds shall be at contractor expense.

3.29 FLASHINGS

A. Wherever roof is pierced by work installed by this Contractor, he shall furnish proper flashings to be installed by the Roofing Contractor. All piercing of roof shall be sealed air and watertight.

B. Provide proper flashings, counter flashings, metal collars or other work as required to make weathertight seal at all fan connections, duct piercing, etc., as shown and/or required for work installed under this Contract.

C. All pipes passing through the roof shall be neatly flashed with Stonemen Stormtite four pound seamless lead flashing assembly, with reinforced conical boot, complete with vandal-proof hooded cast iron counter flashing and Permaseal waterproofing compound. Hood shall have a minimum of 2 to 1 free area to vent pipe size. Flashing flanges shall be an 18 inch square base. Coordinate work with Roofing Contractor to avoid duplication of flashings and work.

D. 16 oz sheet copper flashings may be used in lieu of lead. Flashing shall be fitted snugly around pipe. Caulk between flashing and pipe to seal. Make water and air tight using a flexible waterproof compound. Base shall be 24" square.

3.30 PIPE CLEANING AND DISINFECTION

A. All piping shall be flushed clean before connection to equipment. Domestic water lines shall be thoroughly flushed out with an alkaline detergent solution to remove pipe dope, oil, loose mill scale, and other extraneous materials.

B. After the water system has been flushed clean, the shutoff valve to the water main shall be closed. All fixture outlets shall be opened slightly. A solution of sodium hypochlorite and clean water shall be introduced into the system until residual chlorine is detected at all water faucets, outlets, etc. The solution shall consist of 1 gallon of 5 percent sodium hypochlorite (Clorox or Purex) to 200 gallons of water. The solution shall be flushed and all aerators and strainers shall be removed, cleaned and replaced. See also Section 15411, paragraphs 6 thru 9 for reports.

C. **Contractor shall furnish to Owner and Architect a written report certifying completion that pipe cleaning and disinfect has been completed and accepted prior to substantial completion request walk-thru.**

3.31 PIPE TESTING

A. Test all piping prior to painting, insulating, backfilling or other concealment. Valve off or isolate controls, fittings, equipment or other piping, which may be damaged by testing pressures. Provide relief valves set to avoid bursting pressure during test.

B. Soil, waste and vent systems shall be filled to roof level with water and show no leaks over a 24 hour period.

C. Domestic water shall be hydrostatically tested at 100 psig with less than a four percent drop in pressure over a six hour period.

D. Gas piping shall be tested at 1-1/2 times working pressure or requirements of National Plumbing Code whichever is greater.

END OF SECTION 15060

SECTION 15170 - MOTORS

PART 1 - GENERAL

1.1 SCOPE

A. Includes -

1. All motors used in Division 15.

1.2 RELATED SECTIONS:

A. Division 01 General and Sections 15000 and 15050 are part of this Section.

PART 2 - PRODUCTS

2.1 Motors shall be quiet in operation and speed shall not exceed 1800 rpm unless otherwise noted.

2.2 All motors shall be domestic made motors regardless of size.

2.3 All motors for equipment specified or provided under this Section of work shall be furnished, handled and set in place by Mechanical Contractor.

2.4 All motors shall be designed, wound, and nameplate for the voltage shown and the service indicated on the drawings. All two speed motors shall be variable torque, two winding type. All motors operating outdoors shall be fully weather and waterproof.

2.5 All motors shall be re-rated or adjusted for service in job site altitude atmosphere.

2.6 All motors shall be copper wound and have overload protection on all legs.

2.7 Motors with ball bearings shall comply with noise level standards as set by NEMA Standard MG1-12.47. Motor bearings shall be rated at 20,000 hours B-10 bearing life. All motors shall be ball bearing type.

2.8 After all motor driven equipment is installed and in proper operating condition, Mechanical Contractor, jointly with the Electrical Contractor, shall make load, speed and rotation tests. Any motor which fails to comply with requirements of the specifications or to operate satisfactorily, shall be adjusted or replaced as directed.

END OF SECTION 15170

SECTION 15180 - PIPE AND EQUIPMENT IDENTIFICATION

PART 1 - GENERAL

1.1 RELATED SECTIONS

A. Division 01 and Sections 15000 and 15050 are part of this Section.

1.2 SCOPE

A. Piping Identification

1. All pipes are to be labeled and color coded with contents clearly identified and arrows indicating direction of flow. This applies to piping run above the ceilings and in pipe tunnels as well as pipe exposed in equipment rooms and finished areas. Pipes shall be identified at the following locations:
   a. Adjacent to each valve.
   b. At every point of entry and exit where piping passes through a wall or floor.
   c. On each riser and junction.
   d. A maximum of every 50 feet on long continuous lines fully exposed to view. Less spacing if one cannot see one code from the adjacent.
   e. Adjacent to all special fittings or devices (regulating valves, etc).
   f. Connection to equipment.

B. Duct Identification

1. Ductwork shall be identified at or near the fan.

C. Equipment Identification

1. Identify all equipment including gauges, meters, thermometers, mechanical equipment, ATC panels, junction boxes, and all other devices.

D. Valve Tagging

1. All valves shall be designated by distinguishing numbers and letters on required charts and diagrams. The Contractor shall furnish and install approved brass tags for all designated items, with numbers and letters on the tags corresponding to those on the charts and diagrams.
2. Each valve shall have an identifying number identifying the unit. Standard identifications may be used for identifying type of service or fluid in pipe. The Contractor shall submit his system of identification to the Architect for approval prior to ordering. Any work done without this approval is done at the Contractor's own risk.
3. Charts of all valves shall be furnished to Owner in duplicate by the Contractor. Charts shall indicate the following items:
   a. Valve identification number
   b. Location
   c. Service or purpose
   d. Normal Position

PART 2 - PRODUCTS

2.1 PIPING IDENTIFICATION

A. Labels and markers shall be of the self-sticking, all-temperature permanent type as manufactured by W. H. Brady Co., 727 West Glendale Ave., Milwaulkee, Wisconsin; or Seton Name Plate Corp., 592 Boulevard, New Havan, Connecticut.

B. Pipe color coding shall be uniform and in strict accordance with ANSI A13.1 1981.

C. All paint to be Enamel, Moore Impervo and Iron Clad.

D. Letters of identification legend and directional flow arrows shall be 2" high for pipes 3" and larger, and 1" high for pipes 2-1/2" and under.

E. Proposed identification system shall be approved by Architect prior to installation.

2.2 DUCT IDENTIFICATION

A. Ductwork shall be identified at or near the fan, with stenciled signs or by engraved laminated plastic signs secured with rust proof screws. Sign shall indicate area served and direction of air flow. Proposed identification system shall be approved by Architect prior to installation.

2.3 EQUIPMENT IDENTIFICATION

A. Equipment shall be identified with signs made of laminated plastic with 1/8" or larger engraved letters. Signs shall be securely attached by rust proof screws or some other permanent means (no adhesives).

B. Information on sign shall include name of equipment, identification on plans and schedules, rating, maintenance instructions and any other important data not included on factory attached name plate.

C. Proposed identification system shall be approved by Architect prior to installation.

2.4 VALVE TAGGING

A. Brass tags shall not be less than 1-1/2" diameter with depressed black-filled numbers not less than 1/2" high and black-filled letters not less than 1/4" high. Tags shall be securely fastened to valves with approved brass "S" hooks, or brass jack chain, in a manner to permit easy reading. Do not attach to valve wheel. Brass tags shall be as manufactured by Seton Name Plate Company, New Haven, Connecticut or approved equal.

B. Permanent plastic cover for chart shall have two (2) holes to be punched at top of plastic closure to allow for affixing approximately an 8" length of nickel plated bead chain. Each hole to be reinforced by means of a small brass or nickel grommet. Plastic closure shall be as manufactured by Seton Name Plate Company, New Haven, Connecticut, or equal.

PART 3 - EXECUTION

3.1 PIPING IDENTIFICATION

A. Markers shall be installed in strict accordance with manufacturer's instructions. Use vinyl tape first and stick markers over tape. This procedure assures that the tape will not fall off.

B. On chalky and loose insulation, soft, porous, fiber-filled or fiberglass covering, a spiral wrap of pipe banding tape shall be made around the circumference of the pipe. Sufficient spiral wraps shall be made to accommodate the horizontal dimension of the pipe marker.

C. On bare pipes, painted pipes, and pipes insulated with a firm covering pipe banding tape

matching the background color of the marker shall be used. After applying pipe markers, wrap pipe banding tape around pipe at each end of marker. Tape should cover 1/4" to 1/2" to 1" on itself. Be sure pipe surface is dry and free of dirt or grease before applying markers or banding tape.

D. Stenciling may be used in lieu of the above labels and markers if finished application gives the same overall appearance, that is that stenciling is applied over a background color. If stenciling is used, letter heights, background colors, banding and arrows shall be as specified above. Submit sample to Architect before proceeding with work.

E. Apply markers so they can be read from floor.

3.2 DUCT IDENTIFICATION

A. Identify all ducts exposed in mechanical equipment room. A sample duct identification shall be as follows: "Supply Hot/Cold Duct-Air Conditioning-Lobby".

3.3 EQUIPMENT IDENTIFICATION

A. Signs shall be attached to equipment so they can be easily read. Attachment shall be by screws or rivets. Glue shall not be used.

B. A sample identification sign for equipment shall be as follows:

Furnace - F-1
Rating: cfm @ s.p. (at ft. elev.)
Maintenance: Check bearings for lubrication every 30 days and lubricate as required with S.A.E. 30 oil.

C. NOTE: Avoid using only the engineers designations as used on plans; identify equipment as to area or zone served.

3.4 VALVE TAGGING

A. Provide one valve chart mounted in a frame with clear glass front, and secured on a wall in the equipment rooms, or in a location as otherwise directed by the Architect.

B. Provide a second valve chart for use outside of the equipment room. Chart shall be provided with an approved heavy transparent plastic closure for permanent protection.

C. Identify all valves. A sample identification as follows:

VALVE #1
COLD WATER
OPEN

D. Sample Identification Chart is as follows:

The room numbers used on the actual chart shall be the room numbers actually used. Do not use architectural room numbers shown on plans.

SAMPLE VALVE IDENTIFICATION CHART

Number	Description	Location	Normal Position
1.	Cold Water Supply to Hose Bibb	Room #Open	
2.	Hot Water Supply to Toilet Room	Chase #	Open

END OF SECTION 15180

SECTION 15191 - AIR SYSTEM TESTING & BALANCING

PART 1 - GENERAL

1.1 SCOPE

A. Includes -

1. Testing, balancing and adjusting of the following systems:
   a. Heating
   b. Air Conditioning
   c. Ventilation
   d. Exhaust
   e. Relief
2. Test Report bound in Operating and Maintenance Manuals.
3. Mechanical Contractor shall make changes in pulleys, belts, motors and dampers or add dampers as required for correct balance as recommended by Air Balance & Testing Agency at no additional cost to Owner.

1.2 RELATED SECTIONS

A. Division 01 General and Sections 15000 and 15050 are part of this Section.

1.3 AGENCY

A. Contractor shall procure services of an independent Air Balance & Testing Agency which specializes in balancing and testing of heating, ventilating, and cooling systems to balance, adjust, and test air moving equipment, air distribution, and exhaust systems.

B. Agency shall provide proof of having successfully completed at least five projects of similar size and scope and be a certified AABC or NEBB agency. Work by this Agency shall be done under direct supervision of a qualified registered professional heating and ventilating engineer employed by Agency. Agency shall maintain an office within 100 miles of project.

C. Instruments used by Agency shall be accurately calibrated and maintained in good working order.

D. If requested, conduct tests in presence of Architect's Mechanical Engineer.

E. Agency shall be approved in writing by the Architect. Neither Architect's Engineer or anyone performing other work on this Project under Division 15 shall be permitted to do this work.

F. Contractor shall award test and balance contract to the approved agency upon receipt of his contract to proceed to allow Agency to schedule this work in cooperation with other Sections involved and comply with completion date.

G. Balancing agency shall be represented at final inspection meeting by qualified testing personnel with balancing equipment and two copies of the Air Balancing Test Report.

H. Architect's Engineer will choose and direct spot balancing of one zone. Differences between the spot balance and test report will be justification for requiring repeat of testing and balancing for entire project.

I. Re-balancing shall be done in presence of Architect's Engineer and subject to his approval.

J. Spot balance and rebalance shall be performed at no additional cost to Owner.

K. Approved Balancing Agencies

1. RSAnalysis, Inc
2. BTC Services
3. Certified Balance
4. Prior Approved Equal

PART 3 - EXECUTION

3.1 Begin air balance and testing upon completion of the mechanical installation of air conditioning, ventilation, heating, exhaust systems, and controls including installation of all specialties and devices.

3.2 PROCEDURES

A. Before any adjustments are made, the system is to be checked for items such as dirty filters, filter leakage, major duct sections, zones, etc.

B. Contractor shall place heating, cooling, exhaust and ventilating systems and equipment into full operation and continue their operation during each working day of testing and balancing.

C. Air Balance & Testing Agency shall perform tests specified, compile test data, and submit four copies of complete test data to Contractor for forwarding to Architect for evaluation and approval.

1. Approved copies of report shall be bound in Operations & Maintenance Manuals. See Division 15 000 General.

D. Systems shall be completely balanced and all reports submitted to Architect prior to test run and final inspection.

E. System performance shall be checked when outside weather is at or near design conditions, if practicable. Heating and/or cooling thermometers or sensors shall be placed in the areas served by each fan system. Temperature readings shall be taken at half hour intervals, and further adjustments or corrections made as required to obtain uniform temperatures. All occupied spaces shall be checked for drafts and noises caused by the ventilating systems, and any unsatisfactory conditions corrected.

F. Balancing shall be performed during normal project working hours when project construction foreman is present on the job site to provide access and see his mechanical sub contractor is available to operate system and make necessary corrections.

3.3 STANDARDS

A. Balance shall be preformed in complete accordance with the following standards as applicable to the agency certification:

1. HVAC Systems Testing, Adjusting, and Balancing, SMACNA 1983.
2. Testing, Balancing, and Adjusting of Environmental Systems, SMACNA 1974.
3. Procedural Standards for Testing, Adjusting, and Balancing of Environmental Systems, NEBB 1983.
4. AABC National Standards, Fourth Edition 1982.
5. Procedural Standard for Measuring Sound and Vibration, NEBB 1977.

B. Balancing Agency's National Certification shall warrant the system balance and performance. A copy of guarantee certificate shall be included in each test and balance report.

3.4 TESTING PROCEDURE

A. Air Balance & Testing Agency shall perform following tests and balance system in accordance with following requirements:

B. Test and adjust blower rpm to design requirements.

C. Test and record motor full load amperes.

D. Make Pitot Tube tranverse of main supply and obtain design cfm.

E. Test and record system static pressures, suction, and discharge.

F. Test and adjust system for design cfm air.

G. Test and adjust system for design cfm outside air.

H. Test and record entering air temperatures (db heating and cooling).

I. Test and record entering air temperatures (wb cooling).

J. Test and record leaving air temperatures (db heating and cooling).

K. Test and record leaving air temperatures (wb cooling).

L. Adjust main supply and return air ducts to proper design cfm, + or - 5%.

M. Adjust zones to proper design cfm, supply and return, + or - 5%.

N. Test and adjust each diffuser, grille, and register to design requirements. Individual air outlets, when one of three or more are serving one space, may have a tolerance of 10% from the average.

O. Identify each diffuser, grille, and register as to location and area served.

P. Identify and list size, type, and Manufacturer of diffusers, grilles, registers, and testing equipment. Use Manufacturer's rating on equipment to make required calculations.

Q. In readings and tests of diffusers, grilles, and registers, include required cfm and fpm velocity & test cfm and fpm after adjustments.

R. In cooperation with Section 15 900, set adjustments of automatically operated dampers to operate as specified, indicated, or noted.

S. Adjust diffusers, grilles, and registers to minimize drafts.

3.5 EXHAUST AIR SYSTEMS

A. Systems are to be adjusted to same tolerance as supply systems. Each space is to be checked to see that it is positive, neutral or negative as indicated by quantities of supply and exhaust air shown on contract documents. Any discrepancies shall be investigated and corrected, and the proper pressure relationship established.

B. Building pressure shall be checked at outside doors, and exhaust fan speeds revised as required to leave building neutral or under slight positive pressure.

3.6 REPORT

A. Report shall include:

1. Record test data on AABC standard forms or facsimile thereof.
2. A set of black and white or blue line prints with all air openings marked to correspond with data sheets and with temperature clearly marked.
3. Show on final report the percent of design CFM to the actual CFM of each diffuser represents.
4. The certified report shall include for each air handling system the data listed below:
   a. Equipment
      a) Installation data
      b) Manufacturer and model
      c) Size
      d) Arrangement, discharge, and class
      e) Motor hp, voltage, phase, cycles, and full load amps
      f) Location and local identification data
   2) Design data
      a) Data listed in schedules on drawings and specifications.
   3) Fan recorded (test) data
      a) cfm
      b) Static Pressure
      c) rpm
      d) Motor operating amps
      e) Motor operating bhp
   1) Duct systems
      a) Duct air quantities (maximum and minimum) - main, submains, branches, outdoor (outside) air, total air, and exhaust.
      b) Duct size(s)
      c) Number of Pitot tube (pressure) measurements.
      d) Sum of velocity measurements (Note: Do not add pressure measurements)
      e) Average velocity
      f) Recorded (test) cfm
      g) Design cfm
   2) Individual air terminals
      a) Terminal identification (supply or exhaust, location and number designation)
      b) Type size, manufacturer and catalog identification
      c) Applicable factor for application, velocity, area, etc., and designated area
      d) Design and recorded velocities - fpm
      e) Design and recorded quantities - cfm

B. Balance reports are to be submitted to the Owner and Architect prior to substantial completion.

END OF SECTION 15191

SECTION 15200 - VIBRATION, NOISE CONTROL AND SEISMIC PROTECTION

PART 1 - GENERAL

1.1 REQUIREMENTS

A. The General Provision of the Contract, including General and Supplementary Conditions and General Requirements apply to the work specified in this section.

B. Requirements of Section 15 000 apply to this section.

C. Requirements of Section 15 050 apply to this section.

1.2 SCOPE

A. The work shall include all labor, materials, equipment, accessories, transportation and services included in installing all necessary seismic and vibration equipment.

1.3 QUALIFICATIONS

A. The Mechanical Contractor shall be responsible for supplying and installing equipment, vibration isolators, flexible connections, rigid steel frames, etc. for all mechanical items to comply with the Uniform Building Code and requirements of this specification.

B. All supports, hangers, bases and bracing shall be designed by a professional engineer, with seismic experience in bracing for mechanical equipment.

C. The contractor shall require all of the equipment suppliers to furnish equipment that meets the seismic code. All equipment, etc. shall be designed to meet seismic zone III.

D. Manufacturer and supplier of restraint and vibration isolation equipment and system approved for use by the contractor are, Amber Booth Co., Korfund, Mason Industries, and Vibration Mounting and Control Co.

E. The approved manufacturer or supplier shall be totally responsible for the design, fabrication, installation and operation of the vibration and seismic bracing system specified.

F. The manufacturer and supplier of restraint and vibration isolation equipment shall submit prior to fabrication the following data:

1. Complete engineering calculations and shop drawings for all seismic requirements.
2. Detail of seismic bracing with snubbers proposed installation instruction.
3. Size and location of pipe and duct restraints.

PART 2 - PRODUCTS

2.1 VIBRATION AND NOISE CONTROL

A. Equipment connected to piping, ductwork, floor, wall or overhead structure of building shall have flexible connections to prevent the transmission of vibration and mechanically transmitted sound to the building structure.

B. Vibration isolators shall be selected in accordance with the weight distribution so as to produce reasonably uniform deflection. Deflection recommendations shall be noted in submittal. Submittal shall include spring metal diameters, deflections, unloaded spring height, loaded spring height, solid spring height, clearance around housing and restraining bolts.

C. Fans shall be mounted on rail-type isolating bases providing support and adjustment for belt center distance between motor and fan. Use steel spring isolators with air handling units. Mason type SLC spring and neoprene pad mounts.

D. Steel Spring Isolators: Shall be free standing open coil type, rated for 95% efficiency or show 2" static deflection. All dimensionally stable; that is, loaded height shall be equal to spring diameter.

E. Piping within 100 diameters or approximately 20 feet of piping run from motorized equipment shall be suspended on spring hangers with 1" deflection on natural pipe weight. Unions must be broken and deflection demonstrated when requested. Mason Type PDNHS.

F. Where non-insulated pipes in which vibration may occur pass through walls, floors, or partitions, encase pipe within sleeve with one-inch thick sheet cork or other approved equal.

G. Piping connection to all pumps, fans, etc. shall be isolated with a flexible hose. Flexible hoses, Mason Industries, Inc., Type RFH or RFM shall be used.

H. Duct connections to all equipment shall be made with 3" fabric connector made for the purpose intended. Fabric shall be UL labeled flame resistant, airtight, waterproof, and rated to withstand temperatures to 250 degrees F. Manufacturers shall be Ventglas, Durodyne, Glasseal, or approved equivalent.

I. Isolating hangers shall be open coil combination steel spring and neoprene in shear with deflection indication. Springs shall be selected for 95% efficiency. Mason Type TDNHS.

J. Vibration Isolators

1. General Properties
   a. All vibration isolators shall have either known un-deflected heights or other markings so that, after adjustment, when carrying their load, the deflection under load can be verified, thus determining that the load is within the proper range of the device and that the correct degree of vibration isolation is being provided according to the design.
   b. All isolators shall operate in the linear portion of their load versus deflection curve. Load versus deflection curves shall be furnished by the manufacturer and must be linear over a deflection range of 50% above the design deflections.
   c. The ratio of lateral to vertical stiffness shall not be less than 1.0 or greater than + or - 10%.
   d. Water motion through the isolator shall be reduced to the following extent: Isolation above the resonant frequency shall follow the theoretical prediction based upon an un-damped single degree of freedom system, with a minimum isolation of 50 decibels above 150 cycles per second.
   e. All neoprene mounting shall have a shore hardness of 50 to 60 after minimum aging of 20 days or corresponding over aging.

2.2 SEISMIC RESTRAINTS

A. General Requirements: Seismic restraints shall be provided for all vibration isolated equipment, both supported and suspended, and all vibration isolated piping and all other piping, ductwork, or equipment required by latest addition of UBC.

B. For Supported Equipment: The seismic restraints shall consist of interlocking steel members restrained by shock absorbent neoprene materials compounded to bridge bearing specifications. The elastomeric materials shall be replaceable and be a minimum 3/4" thick. Snubbers shall be

manufactured with an air gap between hard and resilient material of not less than 1/8", nor more than 1/4". Each snubber shall be capable of restraint in all three mutually orthogonal directions.

C. Submittals shall include load versus deflection curves up to 1/2" in the x, y and z planes. Tests shall be conducted in an independent laboratory or under the signed supervision of an independent registered engineer. The snubber assemblies shall be bolted to the test machine as the snubber is normally installed. Test reports shall certify that neither the neoprene elements nor the snubber body has sustained any obvious deformation after release of the load.

D. For Suspended Equipment and Piping:

1. The seismic restraint shall consist of a combination of stranded steel aircraft cable and the specified vibration isolation hanger with an added nut and neoprene and steel washer. The cable resists lateral and downward motion. The modified vibration hanger resists upward motion.
2. Cable attachment details, cable size and the neoprene and steel washers shall be sized by a structural engineer.

E. The contractor shall not install any equipment or pipe which makes rigid contact with the "building" unless it is approved in this specification or by the architect. "Building" includes slabs, beams, studs, walls, lath, etc.

F. The installation or use of vibration isolators must not cause any change of position of equipment or piping which would result in stresses in piping connections or misalignment of shafts or bearings. In order to meet this objective, equipment and piping shall be maintained in a rigid position during installation. The load shall not be transferred to the isolator until the installation is complete and under full operational load.

G. The contractor shall correct, at no additional cost, all installations which are deemed defective in workmanship or materials by the architect.

PART 3 - EXECUTION

3.1 EQUIPMENT ISOLATOR INSTALLATION

A. The equipment to be isolated shall be supported by a structural steel frame or by brackets attached directly to the machine where no frame is required.

B. Brackets shall be provided to accommodate the isolator and provide a mechanical stop. The vertical position and size of the bracket shall be specified by the isolator manufacturer.

C. The operating clearance between the bracket and the pad or floor shall be 3/4" + or - 1/16". The minimum operating clearance between the frame and the pad or floor shall be 1".

D. The frame shall be placed in position and the brackets supported temporarily by 3/8" shims prior to the installation of the machine or isolators.

E. After the entire system installation is completed and under full operational load, the isolator shall be adjusted so that the load is transferred from the shims to the isolator. When all isolators are properly adjusted, the shims will be barely free and shall be removed. Thereafter, the shims shall be used as a gauge to check that the 3/8" clearance is maintained so that the system will remain free of stress.

F. Piping Isolator Installation - Vertical Riser or Horizontally Supported Piping:

1. The isolators shall be installed with the isolator hanger box as close as possible to the structure.
2. The isolators shall be suspended from overhead beams, never from slab diaphragms

between beams unless specifically approved.

3. Hanger rods shall be aligned to clear the hanger box.
4. Load transfer isolators, when utilized, shall temporarily maintain the piping in a rigid position until installation is complete and fully loaded.

3.2 SEISMIC RESTRAINTS

A. General: All seismic restraints must be installed and adjusted so that the equipment and piping vibration isolation is not degraded by utilization of the restraints.

B. Supported Equipment: Each vibration isolation frame for supported equipment shall have a minimum of four seismic snubbers mounted as close as possible to the vibration isolators and/or the frame extremities. Care must be taken so that a minimum 1/8" air gap in the seismic restraint snubber is preserved on all sides in order that the vibration isolation potential of the isolator is not compromised. This requires that the final snubber adjustment shall not be completed until the vibration isolators are properly installed and the installation approved.

C. Suspended Equipment and Piping: (Cable Method) The cables shall be adjusted to a degree of slackness approved by the structural engineer. The uplift and downward restraint nuts and washers for the Type HST Hangers shall be adjusted so that there is a minimum 1/4" clearance.

END OF SECTION 15200

SECTION 15250 - INSULATION

PART 1 - GENERAL

1.1 Division 15000 General applies to this Section.

1.2 The insulation products used on the project shall be of one manufacturer, unless specifically excepted. All pipe insulation shall meet the requirements of IBC Section 700.

1.3 Insulation products on this project shall be installed by a licensed insulation contractor using materials, and methods described in this section. Installation by other than an experienced licensed contractor shall not be acceptable.

END OF SECTION 15250

SECTION 15251 - HOT WATER AND COLD WATER PIPE INSULATION

PART 1 - GENERAL

1.1 SCOPE

A. Includes -

1. Insulating of all above ground culinary hot and cold water lines and fittings and underside of lavatories for handicapped.

PART 2 - PRODUCTS

2.1 INSULATION

A. Snap-On glass fiber pipe insulation with surface burning characterics as determined by ASTM E84 with flame spread rating not to exceed 25 and smoke developed not to exceed 50.

B. Concealed Areas: Snap-On glass fiber pipe insulation. Heavy density pipe insulation with a factory applied vapor barrier jacket.

C. Exposed Areas: Equal to Owens-Corning Fiberglass 25; H-P for hot water and C-P for cold water, pipe insulation with pre-sized glass cloth cover for hot and cold water respectively.

D. Approved Manufacturers:

1. Owens-Corning
2. Johns-Manville
3. CSG
4. Knauf

E. Thickness shall be as noted in Table 1.

2.2 COVERING

A. Where piping is susceptible to damage, provide with .016" aluminum jacket. Additionally, exposed insulation lower than 8’ shall be covered with aluminum jacket.

PART 3 - EXECUTION

3.1 PIPING

A. General

1. Pipe insulation shall be continuous through sleeves.
2. An aluminum jacket shall be provided over the insulation wherever caulking is required.
3. Insulation shall be continuous through hangers. Provide calcium silicate blocks at all hangers for piping 1" and larger in lieu of fiberglass insulation to prevent crushing of insulation.
4. Support points such as hangers or rollers shall have a galvanized protection shield.

B. Cold Lines

1. Insulation shall be applied to clean, dry pipe with joints tightly butted and the ends of the insulation sealed off with vapor barrier coating at intervals not to exceed 15 feet.

2. Longitudinal laps of the jacket material shall overlap not less than 1-1/2 inches. Butt strips 3 inches wide shall be provided for circumferential joints.
3. All laps and butt strips shall be secured with adhesive and stapled on 4-inch centers.
4. Staples and seams, including those on self-sealing lap systems shall be coated with a vapor barrier coating.
5. Breaks and punctures in the jacket material shall be patched by wrapping a strip of jacket material around the pipe and securing it with adhesive, stapling, and coating as specified for butt strips. The patch shall extend not less than 1-1/2 inches past the break.
6. At penetrations such as thermometers, the void in the insulation shall be filled with vapor barrier coating and the penetration shall be sealed with a brush coat of the same coating.

C. Hot Lines

1. Insulation shall be applied to clean, dry pipe with joints tightly butted.
2. Longitudinal laps of the jacket material shall overlap not less than 1-1/2 inches, and butt strips 3 inches wide shall be provided for circumferential joints.
3. Laps and butt strips shall be secured with adhesive and stapled on 4-inch centers. Adhesive may be omitted where pipe is concealed.
4. Breaks and punctures in the jacket material shall be patched by wrapping a strip of jacket material around the pipe and cementing, stapling, and coating as noted for butt strips. Patch shall extend not less than 1-1/2 inches past the break.
5. The run of the line pipe insulation shall have the ends brought up to the item.

3.2 FITTINGS

A. Insulate fittings with same type and thickness of insulation as pipe, with ends of insulation tucked snugly into throat of fitting and edges adjacent to pipe insulation tufted and tucked in.

B. Cover insulation with one piece "Zeston" PVC fitting cover secured by stapling or taping ends to adjacent pipe covering.

C. Alternate Method -

1. Insulate fittings with one inch of insulating cement and vapor seal with two 1/8 inch wet coats of vapor barrier mastic reinforced with glass fabric extending two inches onto adjacent insulation.

TABLE 1

Pipe Insulation Thickness

Pipe System Pipe Size	1" or less	1-1/4" or 2"	2-1/2" to 4"
Hot Water Culinary	1"	1"	1-1/2"
Cold Water Culinary	1/2"	1/2"	1"

END OF SECTION 15251

SECTION 15258 - DUCT INSULATION

PART 1 - GENERAL

1.1 SCOPE

A. Includes -

1. Insulating of round above grade supply air ducts and rectangular ducts routed outside of the building insulation envelope and fresh air ducts not lined.

B. Related Work specified Elsewhere -

1. Acoustical insulation inside air ducts is specified in Section 15800.
2. Insulated flex duct specified in Section 15800.

PART 2 - PRODUCTS

2.1 INSULATION

A. 1-1/2 inch thick fiberglass with aluminum foil scrim kraft facing and have a density of one lb./cu ft. with surface burning characteristics as determined by ASTM E-84 with flame spread rating not to exceed 25 and smoke developed not to exceed 50.

B. Approved Manufacturers:

1. Johns-Manville Microlite FSK
2. CSG Type IV standard duct insulation
3. Owens-Corning FRK-25
4. Knauf (Duct Wrap FSK)

PART 3 - EXEUCTION

3.1 Install duct wrap in accordance with Manufacturer's recommendations.

3.2 Do not compress insulation except in areas of structural interference.

3.3 Joints shall be completely sealed using manufacturer supplied and recommended materials and procedures.

3.4 Do not use duct tape to make up joints.

END OF SECTION 15258

SECTION 15400 - PLUMBING SYSTEMS

PART 1 - GENERAL

1.1 Division 01 General and Sections 15000, 15050 and 15060 apply to this Section.

1.2 Excavation and backfilling, where applicable, shall be as specified in Division 02.

PART 3 - EXECUTION

3.1 All piping installed shall be domestic made pipe.

3.2 All installation shall be in strict accordance with the latest adopted International Plumbing Code with Utah annotations.

END OF SECTION 15400

SECTION 15410 - PLUMBING FIXTURES

PART 1 GENERAL

1.1 SUMMARY

A. Section includes water closets, urinals, lavatories, faucets, sinks, service sinks, and electric water coolers.

B. Related Sections:
1. Section 15411 – Hot and Cold Water Systems: Supply connections to plumbing fixtures.
2. Section 15412 – Sanitary Waste and Vent Piping: Waste connections to plumbing fixtures.

1.2 REFERENCES

A. ARI 1010 (Air-Conditioning and Refrigeration Institute) - Drinking Fountains and self-contained Mechanically Refrigerated Drinking Water Coolers.

B. ASME A112.6.1 (American Society of Mechanical Engineers) - Supports for Off-the-Floor Plumbing Fixtures for Public Use.

C. ASME A112.18.1 (American Society of Mechanical Engineers) - Finished and Rough Brass Plumbing Fixture Fittings.

D. ASME A112.19.1 (American Society of Mechanical Engineers) - Enameled Cast Iron Plumbing Fixtures.

E. ASME A112.19.2 (American Society of Mechanical Engineers) - Vitreous China Plumbing Fixtures.

F. ASME A112.19.3 (American Society of Mechanical Engineers) - Stainless Steel Plumbing Fixtures.

G. ASME A112.19.4 (American Society of Mechanical Engineers) - Porcelain Enameled Formed Steel Plumbing Fixtures.

H. ASME A112.19.5 (American Society of Mechanical Engineers) - Trim for Water-Closet Bowls, Tanks, and Urinals.

1.3 SUBMITTALS

A. Submittal: Provide in accordance with the General Conditions of the Contract.

B. Product Data: Submit catalog illustrations of fixtures, sizes, rough-in dimensions, utility sizes, trim, and finishes.

C. Manufacturer's Installation Instructions: Submit installation methods and procedures.

1.4 CLOSEOUT SUBMITTALS

A. Provide in accordance with the General Conditions of the Contract.

B. Operation and Maintenance Data: Submit fixture, trim, exploded view and replacement parts lists.

1.5 DELIVERY, STORAGE, AND HANDLING

A. Accept fixtures on site in factory packaging. Inspect for damage.

B. Protect installed fixtures from damage by securing areas and by leaving factory packaging in place to protect fixtures and prevent use.

PART 2 PRODUCTS

2.1 FLUSH VALVE or TANK TYPE WATER CLOSETS

A. Manufacturers: Kohler, Eljer, Crane and American Standard.

B. Provide as scheduled on the Drawings.

2.2 WALL HUNG URINALS

A. Manufacturers: Kohler, Crane, American Standard, and Eljer.

B. Provide as scheduled on the Drawings.

2.3 LAVATORIES

A. Manufacturers: Kohler, Crane, American Standard, and Eljer.

B. Provide as scheduled on the Drawings.

2.4 FAUCETS

A. Manufacturers: Delany, Zurn, Symmons, Chicago Faucet, Kohler, and Just

B. Provide as scheduled on the Drawings.

2.5 SERVICE SINKS

A. Manufacturers: Kohler, Eljer, Just, Elkay, and American Standard.

B. Provide as scheduled on the Drawings.

2.6 SINKS

A. Manufacturers: Kohler, Eljer, Elkay, and American Standard.

B. Provide as scheduled on the Drawings

2.7 HOSE BIBB

A. Manufacturers: Chicago, JR Smith, and Zurn

B. Provide as scheduled on the Drawings

2.8 FLOOR DRAINS AND FLOOR SINKS

A. Manufacturers: Wade, Zurn, MiFab and JR Smith

B. Provide as scheduled on the Drawings

2.9 CLEANOUTS

A. Manufacturers: Wade, Zurn, MiFab and JR Smith

B. Provide as scheduled on the Drawings

2.10 TRAP PRIMER

A. Manufacturers: Zurn, MiFab and JR Smith

B. Provide as scheduled on the Drawing

2.11 TRENCH DRAIN

A. Manufacturers: Wade, Zurn, and JR Smith

B. Provide as scheduled on the Drawings

2.12 SHOWER

A. Manufacturers: Symmons, Chicago Faucet, T&S Brass, Kohler

B. Provide as scheduled on the Drawings

PART 3 EXECUTION

3.1 EXAMINATION

A. Verify walls and floor finishes are prepared and ready for installation of fixtures.

B. Verify electric power is available and of correct characteristics.

C. Confirm millwork is constructed with adequate provision for installation of counter top lavatories and sinks.

3.2 PREPARATION

A. Rough-in fixture piping connections in accordance with minimum sizes indicated in fixture rough-in schedule for particular fixtures.

3.3 INSTALLATION

A. Install Work in accordance with the 2003 International Plumbing Code and state / local jurisdiction codes.

B. Install each fixture with trap, easily removable for servicing and cleaning.

C. Provide chrome plated rigid or flexible supplies to fixtures with loose key stops, reducers, and escutcheons.

D. Install components level and plumb.

E. Install and secure fixtures in place with wall carriers and bolts.

F. Seal fixtures to countertop, walls, floors, wall and floor surfaces with sealant color to match fixture.

3.4 INTERFACE WITH OTHER PRODUCTS

A. Review millwork shop-drawings. Confirm location and size of fixtures and openings before rough in and installation.

3.5 ADJUSTING

A. Adjust stops or valves for intended water flow rate to fixtures without splashing, noise, or overflow.

3.6 CLEANING

A. Clean plumbing fixtures and equipment.

3.7 PROTECTION OF INSTALLED CONSTRUCTION

A. Do not permit use of fixtures before final acceptance.

END OF SECTION

SECTION 15411 - HOT & COLD WATER SYSTEMS AND DRAIN PAN PIPING SYSTEMS

PART 1 - GENERAL

1.1 SCOPE

A. Includes -

1. Furnish and install all culinary hot and cold water piping shown on the drawings complete with necessary valves, connections, and accessories and connect into existing cold water service piping where shown on the drawings.
2. Running of drain lines from drain pans to floor drains.

PART 2 - PRODUCTS

2.1 PIPE AND FITTINGS

A. Inside Building

1. Hot and cold water service and drain pan piping ASTM A-53 galvanized schedule 40 pipe with galvanized malleable iron fittings.
2. Hot and cold water service piping, Type L, copper, hard drawn with wrought copper fittings.
3. Drain pan piping, Type L, copper, hard drawn with wrought copper fittings.

2.2 VALVES

A. See Section 15060 for approved valves and manufacturers.

2.3 VACUUM BREAKERS AND BACKFLOW PREVENTERS

A. Backflow preventers and vacuum breakers shall be installed in water lines to provide protection against cross contamination. Such devices shall be of approved manufacture and installed in accordance with the International Plumbing Code and local codes. Provide backflow preventers for:

1. Hose bibbs
2. Any fixture that accommodates a hose or tubing connection (i.e. faucets, etc.)
3. Make-up water lines to mechanical equipment
4. Any item required by code to have same

B. Backflow preventers, vacuum breakers and completed assembly shall comply with the International Plumbing Code and local codes.

2.4 HYDRAULIC SHOCK (WATER HAMMER) CONTROLS

A. Provide hydraulic shock controls for flush valves and water header. Shock controls shall be Zurn, Wade, or Josam.

2.5 STOP AND WASTE VALVES

A. Approved Manufacturers -

1. Mueller - Mark 11 Oriseal stop and waste valve H15134
2. Mueller - Buffalo screw type crub box H-10350 complete with lid and H-10349 enlarged base.

PART 3 - EXECUTION

3.1 For general piping installation, see Section 15060.

3.2 Provide valves on hot and cold water lines to restrooms and other areas for zone control of system. Provide access for all valves.

3.3 Do not run piping in outside walls or ceiling space unless it is located on the building side of insulation envelope.

3.4 Locate cold water piping a minimum of six inches from hot water piping.

3.5 Before pipes are covered, buried, etc. Contractor shall test the piping installation in the presence of the Architect, and Owners Representative. Piping shall be tested as described in Section 15060, paragraph 31.

3.6 Sterilize the new domestic water system as described in Section 15060, paragraph 30.

3.7 After sterilization, flush solution from system with clean water until residual chlorine content is less than 0.2 parts per million.

3.8 Water system will not be accepted until a negative bacteriological test is made on water taken from system. Chlorine dosing shall be repeated as necessary until such negative test is accomplished. **Submit written report of test to Architect and Owner for their approval prior to substantial completion.**

3.9 When connecting into existing water lines, Contractor shall properly protect and cap the existing piping or Contractor shall stand the cost of cleaning and disinfecting the existing piping system to Owner's satisfaction.

END OF SECTION 15411

SECTION 15412 - EMERGENCY PLUMBING FIXTURES

PART 1 - GENERAL

1.1 RELATED DOCUMENTS

A. Drawings and general provisions of the Contract, including General and Supplementary Conditions and Division 1 Specification Sections, apply to this Section.

1.2 SUMMARY

A. This Section includes the following emergency plumbing fixtures:

1. Combination units.
2. Water-tempering equipment.

1.3 DEFINITIONS

A. Accessible Fixture: Emergency plumbing fixture that can be approached, entered, and used by people with disabilities.

B. Cooled Water: Cooled potable water produced by water cooler.

C. Plumbed Emergency Plumbing Fixture: Fixture with fixed, potable-water supply.

D. PVC: Polyvinyl chloride plastic.

E. Self-Contained Emergency Plumbing Fixture: Fixture with flushing-fluid-solution supply.

F. Tepid: Approximately 85 deg F (29 deg C) temperature.

1. Allowable Variation: Plus or minus 5 deg F (3 deg C).

1.4 SUBMITTALS

A. Product Data: Include flow rates and capacities; shipping, installed, and operating weights; furnished specialties; and accessories for each product indicated.

B. Shop Drawings: Diagram power, signal, and control wiring and differentiate between manufacturer-installed and field-installed wiring.

C. Product Certificates: Submit certificates of performance testing specified in "Source Quality Control" Article.

D. Field Test Reports: Indicate and interpret test results for compliance with performance requirements.

E. Maintenance Data: For emergency plumbing fixtures to include in maintenance manuals specified in Division 1.

1.5 QUALITY ASSURANCE

A. Electrical Components, Devices, and Accessories: Listed and labeled as defined in NFPA 70, Article 100, by a testing agency acceptable to authorities having jurisdiction, and marked for intended use.

B. ANSI Standard: Comply with ANSI Z358.1, "Emergency Eyewash and Shower Equipment."

C. Regulatory Requirements: Comply with requirements in ICC A117.1, "Accessible and Usable Buildings and Facilities"[; Public Law 90-480, "Architectural Barriers Act"; and Public Law 101-336, "Americans with Disabilities Act";] about plumbing fixtures for people with disabilities.

D. Regulatory Requirements: Comply with requirements in U.S. Architectural & Transportation Barriers Compliance Board's "Uniform Federal Accessibility Standards (UFAS), 1985-494-187" about plumbing fixtures for people with disabilities.

E. Regulatory Requirements: Comply with requirements in Public Law 102-486, "Energy Policy Act," about water flow and consumption rates for plumbing fixtures.

F. NSF Standard: Comply with NSF 61, "Drinking Water System Components--Health Effects," for fixture materials that will be in contact with potable water.

1.6 COORDINATION

A. Coordinate roughing-in and final plumbing fixture locations, and verify that fixtures can be installed to comply with original design and referenced standards.

PART 2 - PRODUCTS

2.1 COMBINATION UNITS

A. Combination Units: Owner provided and installed by Contractor, plumbed, accessible, freestanding type with emergency shower and eye/face wash equipment.

2.2 WATER-TEMPERING EQUIPMENT

A. Hot- and Cold-Water-Tempering Equipment, Factory-fabricated equipment including water thermostatic mixing valve designed to provide 85 deg F (29 deg C) potable water at emergency plumbing fixtures, to maintain temperature at plus or minus 5 deg F (3 deg C) throughout required 15-minute test period, and in case of unit failure to continue cold-water flow, with union connections, controls, corrosion-resistant metal piping, and enclosure.

1. Manufacturers:

a. Bradley Corporation.
b. Encon Safety Product
c. Haws Corporation
d. Lawler Manufacturing Co., Inc.
e. Leonard Valve Co..
f. Western Emergency Equipment.

2.3 SOURCE QUALITY CONTROL

A. Certify performance of plumbed emergency plumbing fixtures by independent testing agency acceptable to authorities having jurisdiction.

PART 3 - EXECUTION

3.1 EXAMINATION

A. Examine roughing-in for water piping systems to verify actual locations of piping connections before plumbed emergency plumbing fixture installation. Proceed with installation only after unsatisfactory conditions have been corrected.

3.2 EMERGENCY PLUMBING FIXTURE INSTALLATION

A. Assemble emergency plumbing fixture piping, fittings, control valves, and other components according to manufacturer's written instructions.

B. Install fixtures level and plumb.

C. Fasten fixtures to substrate.

D. Install shutoff valves in water-supply piping to fixtures. Use ball valve. Install valves chained or locked in open position if permitted. Install valves in locations where they can easily be reached for operation. Refer to Division 15 Section "Valves" for general-duty shutoff valves.

1. Exception: Omit shutoff valves on valved supplies to group of plumbing fixtures that includes emergency plumbing fixture.
2. Exception: Omit shutoff valves on supplies to emergency equipment if prohibited by authorities having jurisdiction.

E. Install dielectric fitting in supply piping to fixture if piping and fixture connections are made of different metals. Refer to Division 15 Section "Basic Mechanical Materials and Methods" for dielectric fittings.

F. Install escutcheons on piping wall and ceiling penetrations in exposed, finished locations. Refer to Division 15 Section "Basic Mechanical Materials and Methods" for escutcheons.

3.3 CONNECTIONS

A. Piping installation requirements are specified in other Division 15 Sections. Drawings indicate general arrangement of piping, fittings, and specialties.

B. Connect hot- and cold-water-supply piping to hot- and cold-water-tempering equipment. Connect output from water-tempering equipment to emergency plumbing fixtures.

3.4 FIELD QUALITY CONTROL

A. Mechanical-Component Testing: After plumbing connections have been made, test for compliance with requirements. Verify ability to achieve indicated capacities and temperatures.

3.5 ADJUSTING

A. Adjust or replace fixture flow regulators for proper flow.

B. Adjust equipment temperature settings.

END OF SECTION 15412

SECTION 15413 - SANITARY WASTE AND VENT PIPING

PART 1 - GENERAL

1.1 RELATED DOCUMENTS

A. Drawings and general provisions of the Contract, including General and Supplementary Conditions and Division 1 Specification Sections, apply to this Section.

1.2 SUMMARY

A. This Section includes the following for soil, waste, and vent piping inside the building:

1. Pipe, tube, and fittings.
2. Special pipe fittings.
3. Encasement for underground metal piping.

1.3 PERFORMANCE REQUIREMENTS

A. Components and installation shall be capable of withstanding the following minimum working pressure, unless otherwise indicated:

1. Soil, Waste, and Vent Piping: 10-foot head of water (30 kPa).

B. Seismic Performance: Soil, waste, and vent piping and support and installation shall be capable of withstanding the effects of seismic events determined according to ASCE 7, "Minimum Design Loads for Buildings and Other Structures."

1.4 SUBMITTALS

A. Product Data: For pipe, tube, fittings, and couplings.

B. Shop Drawings:

1. Design Calculations: Signed and sealed by a qualified professional engineer for selecting seismic restraints.
2. Sovent Drainage System: Include plans, elevations, sections, and details.

C. Field quality-control inspection and test reports.

1.5 QUALITY ASSURANCE

A. Piping materials shall bear label, stamp, or other markings of specified testing agency.

PART 2 - PRODUCTS

2.1 MANUFACTURERS

A. In other Part 2 articles where titles below introduce lists, the following requirements apply to product selection:

1. Manufacturers: Subject to compliance with requirements, provide products by one of the manufacturers specified.

2.2 PIPING MATERIALS

A. Refer to Part 3 "Piping Applications" Article for applications of pipe, tube, fitting, and joining materials.

2.3 HUB-AND-SPIGOT, CAST-IRON SOIL PIPE AND FITTINGS

A. Pipe and Fittings: ASTM A 74, Extra-Heavy class(es).

B. Gaskets: ASTM C 564, rubber.

C. Lead and Oakum: ASTM B 29, pure lead and oakum or hemp fiber.

2.4 HUBLESS CAST-IRON SOIL PIPE AND FITTINGS

A. Pipe and Fittings: ASTM A 888 or CISPI 301.

B. Shielded Couplings: ASTM C 1277 assembly of metal shield or housing, corrosion-resistant fasteners, and rubber sleeve with integral, center pipe stop.

1. Heavy-Duty, Shielded, Stainless-Steel Couplings: With stainless-steel shield, stainless-steel bands and tightening devices, and ASTM C 564, rubber sleeve.

a. Manufacturers:

1) ANACO.
2) Clamp-All Corp.
3) Ideal Div.; Stant Corp.
4) Mission Rubber Co.
5) Tyler Pipe; Soil Pipe Div.
6) Or approved equal

2.5 DUCTILE-IRON PIPE AND FITTINGS

A. Mechanical-Joint, Ductile-Iron Pipe: AWWA C151, with mechanical-joint bell and plain spigot end, unless grooved or flanged ends are indicated.

1. Mechanical-Joint, Ductile-Iron Fittings: AWWA C110, ductile- or gray-iron standard pattern or AWWA C153, ductile-iron compact pattern.

2. Glands, Gaskets, and Bolts: AWWA C111, ductile- or gray-iron glands, rubber gaskets, and steel bolts.

2.6 SPECIAL PIPE FITTINGS

A. Sovent Drainage System Fittings: ASME B16.45 or ASSE 1043, cast-iron aerator and deaerator fittings.

B. Flexible, Nonpressure Pipe Couplings: Comply with ASTM C 1173, elastomeric, sleeve-type, reducing or transition pattern. Include shear ring, ends of same sizes as piping to be joined, and corrosion-resistant-metal tension band and tightening mechanism on each end.

1. Manufacturers:

a. Dallas Specialty & Mfg. Co.
b. Fernco, Inc.
c. Logan Clay Products Company (The).
d. Mission Rubber Co.
e. NDS, Inc.
f. Plastic Oddities, Inc.

2. Sleeve Materials:

a. For Cast-Iron Soil Pipes: ASTM C 564, rubber.
b. For Plastic Pipes: ASTM F 477, elastomeric seal or ASTM D 5926, PVC.
c. For Dissimilar Pipes: ASTM D 5926, PVC or other material compatible with pipe materials being joined.

3. .

C. Wall-Penetration Fittings: Compound, ductile-iron coupling fitting with sleeve and flexing sections for up to 20-degree deflection, gaskets, and restrained-joint ends complying with AWWA C110 or AWWA C153. Include AWWA C111, ductile-iron glands, rubber gaskets, and steel bolts.

1. Manufacturers:

a. SIGMA Corp.
b. Or approved equal

PART 3 - EXECUTION

3.1 EXCAVATION

A. Refer to Division 2 Section "Earthwork" for excavating, trenching, and backfilling.

3.2 PIPING APPLICATIONS

A. Flanges and unions may be used on aboveground pressure piping, unless otherwise indicated.

B. Aboveground, soil and waste piping NPS 4 (DN 100) and smaller shall be the following:

1. Service class, cast-iron soil pipe and fittings; gaskets; and compression joints.
2. Hubless cast-iron soil pipe and fittings; heavy-duty shielded, stainless-steel rigid, unshielded couplings; and hubless-coupling joints.
3. Steel pipe, drainage fittings, and threaded joints.
4. Stainless-steel pipe and fittings, gaskets, and gasketed joints.

C. Aboveground, soil and waste piping NPS 5 (DN 125) and larger shall be the following:

1. Service class, cast-iron soil pipe and fittings; gaskets; and compression joints.
2. Hubless cast-iron soil pipe and fittings; heavy-duty shielded, stainless-steel couplings; and hubless-coupling joints.

D. Aboveground, vent piping NPS 4 (DN 100) and smaller shall be the following:

1. Service class, cast-iron soil pipe and fittings; gaskets; and compression joints.
2. Hubless cast-iron soil pipe and fittings; standard, shielded, stainless-steel and rigid, unshielded couplings; and hubless-coupling joints.

E. Aboveground, vent piping NPS 5 (DN 125) and larger shall be the following:

1. Service class, cast-iron soil pipe and fittings; gaskets; and compression joints.
2. Hubless cast-iron soil pipe and fittings; standard, shielded, stainless-steel couplings; and hubless-coupling joints.

F. Underground, soil, waste, and vent piping NPS 4 (DN 100) and smaller shall be the following:

1. Extra-Heavy class, cast-iron soil piping; gaskets; and gasketed joints.
2. Hubless cast-iron soil pipe and fittings; heavy-duty shielded, stainless-steel and rigid, unshielded couplings; and hubless-coupling joints.

G. Underground, soil and waste piping NPS 5 (DN 125) and larger shall be the following:

1. Extra-Heavy class, cast-iron soil piping; gaskets; and compression joints.
2. Hubless cast-iron soil pipe and fittings; heavy-duty shielded, stainless-steel couplings; and hubless-coupling joints.

3.3 PIPING INSTALLATION

A. Sanitary sewer piping outside the building is specified in Division 2 Section "Sanitary Sewerage."

B. Basic piping installation requirements are specified in Division 15 Section "Basic Mechanical Materials and Methods."

C. Install seismic restraints on piping. Seismic-restraint devices are specified in Division 15 Section "Mechanical Vibration and Seismic Controls."

D. Install cleanouts at grade and extend to where building sanitary drains connect to building sanitary sewers.

E. Install cleanout fitting with closure plug inside the building in sanitary force-main piping.

F. Install underground, steel, force-main piping. Install encasement on piping according to ASTM A 674 or AWWA C105.

G. Install underground, ductile-iron, piping according to AWWA C600. Install buried piping inside the building between wall and floor penetrations and connection to sanitary sewer piping outside the building with restrained joints. Anchor pipe to wall or floor. Install thrust-block supports at vertical and horizontal offsets.

1. Install encasement on piping according to ASTM A 674 or AWWA C105.

H. Install underground, ductile-iron, special pipe fittings according to AWWA C600.

1. Install encasement on piping according to ASTM A 674 or AWWA C105.

I. Install cast-iron sleeve with water stop and mechanical sleeve seal at each service pipe penetration through foundation wall. Select number of interlocking rubber links required to make installation watertight. Sleeves and mechanical sleeve seals are specified in Division 15 Section "Basic Mechanical Materials and Methods."

J. Install wall-penetration fitting at each service pipe penetration through foundation wall. Make installation watertight.

K. Install cast-iron soil piping according to CISPI's "Cast Iron Soil Pipe and Fittings Handbook," Chapter IV, "Installation of Cast Iron Soil Pipe and Fittings."

1. Install encasement on underground piping according to ASTM A 674 or AWWA C105.

L. Make changes in direction for soil and waste drainage and vent piping using appropriate branches, bends, and long-sweep bends. Sanitary tees and short-sweep 1/4 bends may be used on vertical stacks if change in direction of flow is from horizontal to vertical. Use long-turn, double Y-branch and 1/8-bend fittings if 2 fixtures are installed back to back or side by side with common drain pipe. Straight tees, elbows, and crosses may be used on vent lines. Do not change direction of flow more than 90 degrees. Use proper size of standard increasers and reducers if pipes of different sizes are connected. Reducing size of drainage piping in direction of flow is prohibited.

M. Lay buried building drainage piping beginning at low point of each system. Install true to grades and alignment indicated, with unbroken continuity of invert. Place hub ends of piping upstream. Install required gaskets according to manufacturer's written instructions for use of lubricants, cements, and other installation requirements. Maintain swab in piping and pull past each joint as completed.

N. Install soil and waste drainage and vent piping at the following minimum slopes, unless otherwise indicated:

1. Building Sanitary Drain: 2 percent downward in direction of flow for piping NPS 3 (DN 80) and smaller; 1 percent downward in direction of flow for piping NPS 4 (DN 100) and larger.
2. Horizontal Sanitary Drainage Piping: 2 percent downward in direction of flow.
3. Vent Piping: 1 percent down toward vertical fixture vent or toward vent stack.

O. Install engineered soil and waste drainage and vent piping systems as follows:

1. Combination Waste and Vent: Comply with standards of authorities having jurisdiction.
2. Reduced-Size Venting: Comply with standards of authorities having jurisdiction.

P. Sleeves are not required for cast-iron soil piping passing through concrete slabs-on-grade if slab is without membrane waterproofing.

Q. Do not enclose, cover, or put piping into operation until it is inspected and approved by authorities having jurisdiction.

3.4 JOINT CONSTRUCTION

A. Basic piping joint construction requirements are specified in Division 15 Section "Basic Mechanical Materials and Methods."

B. Join hub-and-spigot, cast-iron soil piping with gasket joints according to CISPI's "Cast Iron Soil Pipe and Fittings Handbook" for compression joints.

C. Join hub-and-spigot, cast-iron soil piping with calked joints according to CISPI's "Cast Iron Soil Pipe and Fittings Handbook" for lead and oakum calked joints.

D. Join hubless cast-iron soil piping according to CISPI 310 and CISPI's "Cast Iron Soil Pipe and Fittings Handbook" for hubless-coupling joints.

3.5 VALVE INSTALLATION

A. General valve installation requirements are specified in Division 15 Section "Valves."

B. Backwater Valves: Install backwater valves in piping subject to sewage backflow.

1. Floor Drains: Drain outlet backwater valves, unless drain has integral backwater valve.
2. Install backwater valves in accessible locations.
3. Backwater valve are specified in Division 15 Section "Plumbing Specialties."

3.6 HANGER AND SUPPORT INSTALLATION

A. Seismic-restraint devices are specified in Division 15 Section "Mechanical Vibration Controls and Seismic Restraints."

B. Pipe hangers and supports are specified in Division 15 Section "Hangers and Supports." Install the following:

1. Vertical Piping: MSS Type 8 or Type 42, clamps.
2. Install individual, straight, horizontal piping runs according to the following:

   a. 100 Feet (30 m) and Less: MSS Type 1, adjustable, steel clevis hangers.
   b. Longer Than 100 Feet (30 m): MSS Type 43, adjustable roller hangers.
   c. Longer Than 100 Feet (30 m), if Indicated: MSS Type 49, spring cushion rolls.

3. Multiple, Straight, Horizontal Piping Runs 100 Feet (30 m) or Longer: MSS Type 44, pipe rolls. Support pipe rolls on trapeze.
4. Base of Vertical Piping: MSS Type 52, spring hangers.

C. Install supports according to Division 15 Section "Hangers and Supports."

D. Support vertical piping and tubing at base and at each floor.

E. Rod diameter may be reduced 1 size for double-rod hangers, with 3/8-inch (10-mm) minimum rods.

F. Install hangers for cast-iron soil piping with the following maximum horizontal spacing and minimum rod diameters:

1. NPS 1-1/2 and NPS 2 (DN 40 and DN 50): 60 inches (1500 mm) with 3/8-inch (10-mm) rod.
2. NPS 3 (DN 80): 60 inches (1500 mm) with 1/2-inch (13-mm) rod.
3. NPS 4 and NPS 5 (DN 100 and DN 125): 60 inches (1500 mm) with 5/8-inch (16-mm) rod.
4. NPS 6 (DN 150): 60 inches (1500 mm) with 3/4-inch (19-mm) rod.
5. NPS 8 to NPS 12 (DN 200 to DN 300): 60 inches (1500 mm) with 7/8-inch (22-mm) rod.

G. Install supports for vertical cast-iron soil piping every 15 feet (4.5 m).

H. Install hangers for copper tubing with the following maximum horizontal spacing and minimum rod diameters:

1. NPS 1-1/4 (DN 32): 72 inches (1800 mm) with 3/8-inch (10-mm) rod.
2. NPS 1-1/2 and NPS 2 (DN 40 and DN 50): 96 inches (2400 mm) with 3/8-inch (10-mm) rod.
3. NPS 2-1/2 (DN 65): 108 inches (2700 mm) with 1/2-inch (13-mm) rod.
4. NPS 3 to NPS 5 (DN 80 to DN 125): 10 feet (3 m) with 1/2-inch (13-mm) rod.
5. NPS 6 (DN 150): 10 feet (3 m) with 5/8-inch (16-mm) rod.
6. NPS 8 (DN 200): 10 feet (3 m) with 3/4-inch (19-mm) rod.

I. Install supports for vertical copper tubing every 10 feet (3 m).

J. Support piping and tubing not listed above according to MSS SP-69 and manufacturer's written instructions.

3.7 CONNECTIONS

A. Drawings indicate general arrangement of piping, fittings, and specialties.

B. Connect soil and waste piping to exterior sanitary sewerage piping. Use transition fitting to join dissimilar piping materials.

C. Connect drainage and vent piping to the following:

1. Plumbing Fixtures: Connect drainage piping in sizes indicated, but not smaller than required by plumbing code.
2. Plumbing Fixtures and Equipment: Connect atmospheric vent piping in sizes indicated, but not smaller than required by authorities having jurisdiction.
3. Plumbing Specialties: Connect drainage and vent piping in sizes indicated, but not smaller than required by plumbing code.
4. Equipment: Connect drainage piping as indicated. Provide shutoff valve, if indicated, and union for each connection. Use flanges instead of unions for connections NPS 2-1/2 (DN 65) and larger.

3.8 FIELD QUALITY CONTROL

A. During installation, notify authorities having jurisdiction at least 24 hours before inspection must be made. Perform tests specified below in presence of authorities having jurisdiction.

1. Roughing-in Inspection: Arrange for inspection of piping before concealing or closing-in after roughing-in and before setting fixtures.
2. Final Inspection: Arrange for final inspection by authorities having jurisdiction to observe tests specified below and to ensure compliance with requirements.

B. Reinspection: If authorities having jurisdiction find that piping will not pass test or inspection, make required corrections and arrange for reinspection.

C. Reports: Prepare inspection reports and have them signed by authorities having jurisdiction.

D. Test sanitary drainage and vent piping according to procedures of authorities having jurisdiction or, in absence of published procedures, as follows:

1. Test for leaks and defects in new piping and parts of existing piping that have been altered, extended, or repaired. If testing is performed in segments, submit separate report for each test, complete with diagram of portion of piping tested.
2. Leave uncovered and unconcealed new, altered, extended, or replaced drainage and vent piping until it has been tested and approved. Expose work that was covered or concealed before it was tested.
3. Roughing-in Plumbing Test Procedure: Test drainage and vent piping, except outside leaders, on completion of roughing-in. Close openings in piping system and fill with water to point of overflow, but not less than 10-foot head of water (30 kPa). From 15 minutes before inspection starts to completion of inspection, water level must not drop. Inspect joints for leaks.
4. Finished Plumbing Test Procedure: After plumbing fixtures have been set and traps filled with water, test connections and prove they are gastight and watertight. Plug vent-stack openings on roof and building drains where they leave building. Introduce air into piping system equal to pressure of 1-inch wg (250 Pa). Use U-tube or manometer inserted in trap of water closet to measure this pressure. Air pressure must remain constant without introducing additional air throughout period of inspection. Inspect plumbing fixture connections for gas and water leaks.
5. Repair leaks and defects with new materials and retest piping, or portion thereof, until satisfactory results are obtained.
6. Prepare reports for tests and required corrective action.

3.9 CLEANING

A. Clean interior of piping. Remove dirt and debris as work progresses.

B. Protect drains during remainder of construction period to avoid clogging with dirt and debris and to prevent damage from traffic and construction work.

C. Place plugs in ends of uncompleted piping at end of day and when work stops.

END OF SECTION 15413

SECTION 15452 - DRINKING WATER COOLING SYSTEM

PART 1 - GENERAL

1.1 SUMMARY

A. Includes But Not Limited To

1. Furnish and install drinking water cooling system as described in Contract Documents.

B. Related Sections

1. General Conditions, Division 01, and Sections 15055 and 15060 apply to This Section.

PART 2 - PRODUCTS

2.1 MANUFACTURED UNITS

A. Double Level Handicapped Fountain

1. Vandal proof operating bar on front and both sides. 7-1/2 GPH of 50 deg F water with 90 deg F room temperature, 1/5 horsepower compressor motor, 120 V, 60 Hz, single phase. One piece stainless steel back splash and basin. Flexi-guard or chrome plated brass bubbler. ADA accessible
2. Approved Manufacturers & Models -
   a. Elkay, Halsey-Taylor, Haws, Oasis, and Sunroc
   b. Provide as scheduled on the Drawings.

PART 3 - EXECUTION

3.1 INSTALLATION

A. Handicapped Fountain
1. Anchor bottom of fountain to wall.
2. Top surface to be 32 inches above floor unless required otherwise by local code.
3. Install 3/8 inch IPS union connection and Chicago No. 376 stop to building supply line.
4. Install 1-1/4 inch IPS slip cast brass "P" trap. Install trap so it is concealed.

END OF SECTION 15452

SECTION 15460 – PROPANE GAS-FIRED STORAGE TYPE WATER HEATERS

PART 1 - GENERAL

1.1 SUMMARY

A. Includes But Not Limited To

1. Furnish and install water heater as described in Contract Documents.

B. Related Sections

1. General Conditions, Division 01, and Section 15050 and 15060 apply to this Section.

PART 2 - PRODUCTS

2.1 MANUFACTURED UNITS

A. Water Heaters

1. Glass lined storage tank, pressure tested and rated for 150 psig complete with thermostat, high limit control, gas valve, gas pressure regulator, 100% safety shut-off, and draft diverter. AGA approved for use with gas system.
2. Water Heater to meet National Appliance Energy Conversation Act (NAECA) and ASHREA 90 standard. Minimum efficiency of 80%.
3. Water heaters shall each have temperature-pressure relief valve sized to match heat input and set to relieve at 120 PSI.
4. 50 Gallon - (Standard Type)
   a. With five year tank warranty.
   b. Approved Manufacturers -
      1) A O Smith
      2) Bradford-White
      3) American Water Heating Co.
      4) Rheem

2.2 ACCESSORIES

A. Anchoring Components

1. 1" x 18 ga galvanized steel straps
2. #10 x 2 1/2" screws

PART 3 - EXECUTION

3.1 INSTALLATION

A. Install temperature-pressure relief valve on hot water heater and pipe discharge to floor drain/sink.

B. Anchor water heaters to wall using two anchoring straps and specified screws.

C. Install water heater on a 4” high concrete house-keeping pad. Pad to be 4” larger than the base of the water heater in all directions.

END OF SECTION 15460

SECTION 15490 - WASTE OIL PIPING

PART 1 - GENERAL

1.1 SUMMARY

A. Includes but not limited to

1. Furnish and install waste oil piping and fittings within the building and connecting to inlet to storage tank outside of building. All piping shall be routed exposed inside building or in trench outside of building. No piping shall be buried.
2. Tanks, pump, pump connections to compressed air and pump controls shall be furnished under other Divisions of this specification by other contractors.

B. Related Sections

1. General Conditions, Division 01, and Sections 15055 and 15060 apply to this Section.

1.2 RELATED SECTIONS

A. ASTM A53-90a "Specification for Pipe, Steel, Black and Hot Dipped Galvanized Zink Coated Welded and Seamless."

B. ASTM A 234-90A "Specification for Pipe Fittings of Wrought Carbon Steel and Alloy Steel for Moderate and Elevated Temperatures."

1.3 QUALITY ASSURANCE

A. Qualifications

1. Welders shall comply with requirements of Section 15060.

PART 2 - PRODUCTS

2.1 PIPE

A. Meet requirements of ASTM A 53, Carbon Steel, Butt Welded, Schedule 40 black steel pipe.

2.2 FITTINGS

A. Black pipe welded forged steel fittings meeting the requirements of ASTM A 234.

PART 3 - EXECUTION

3.1 INSTALLATION

A. Do not install buried or route in a concealed space.

B. All joints shall be welded.

C. Use fittings for changes in direction.

D. If routing buried underground becomes necessary consult architect, double walled FRP pipe and leak detection will be required.

END OF SECTION 15490

SECTION 15491 - LUBRICATION EQUIPMENT

PART 1 - GENERAL

1.1 RELATED DOCUMENTS

A. Drawings and general provisions of Contract, including General and Sup plementary Conditions and Division 1 Specification Sections, apply to this Section.

B. Division 5 Metals.

1.2 DESCRIPTION

A. This section includes the following:

1. Waste oil system including waste oil transfer pump, waste oil cart, complete piping and accessories.
2. Hose reels and pump.
3. Air compressor.
4. Shop equipment as shown on drawings.

B. Provide complete and functional installation in compliance with requirements of the state and local Fire Marshal offices, and all applicable codes and ordinances.

1. Design piping to meet operational pressures for each type of system.

1.3 SUBMITTALS

A. General: Submit the following in accordance with Conditions of Contract and Division 1 Specification Sections.

1. Diagram for bolt hole pattern for reel mounting.
2. Shop drawings indicating piping location and type of pipe used between barrels and reels.
3. Product data on reels, reel accessories, pumps, compressor, piping and necessary products for fully operational system.

PART 2 - PRODUCTS

2.1 MANUFACTURERS

A. Available Suppliers: Provide equipment, piping and access ories from a service station equipment supplier.

2.2 QUALITY ASSURANCE

A. Pre-approvals or equals 6 days prior to bid opening.

2.3 HOSE REELS

A. Provide hose reels and pumps.

B. Waste oil tank. UL 142 listed, meeting NFPA 30. 10 gauge, 280 gallon single-wall tank. Westech Lube Cube #LCAA1280SS000. 4'3" L x 2'8" W x 3'10" T. Skid mounted, emergency vent opening, lifting lugs, industrial epoxy coating, and interior coating.

1. Grease Service:

   a. 1 each - Air operated pump for 400 lb. drum, 50:1 ratio, with drum cover, follower plate, connecting hoses and air regulator with gauge. (Lincoln 926 or equal).
   b. 1 each - Reel package including reel, 50 ft. or 1/4 in. hose, ball stop, swivel, control valve and connecting hose. (Lincoln 85051 or equal).

2. Oil Service:

   a. Waste Oil Transfer Pump:
      1) 1 each - Air operated diaphragm pump, 1" x 1" with wall bracket (Roper Model 100B10AAL) or equal.
      2) 1 each – 3/8" x 3'-0" connect hose & 1 each – 3/4" x 5'-0" connect hose or equal.
      3) 1 each - Airline Trio – Air Regulator w/ Gauge, Filter & Lubricator (Watts Model C10-02FRLBJCB-1/4") or equal.
      4) 1 each – 3/8"x 3'-0" Min. Air Hose as needed.
      5) For above listed items: Or Balcrank Waste Oil Kit, #4140-015.
      6) For connection to waste oil tank provide & install 1 each Dry break coupler & Nipple. (¾" Balcrank 4140-003 & 4140-004) with 15'-0" ¾" x ¾" flexible oil hose and pipe nipple threaded connection at wall penetration (Balcrank #8261) or equal.
      7) 1 each - mobile oil reservoir- 24 gallon 19.25" bowl, dry-break hydraulic evacuation nipple, 45" to 72" height adjustment large diameter rubber wheels (Balcrank Spillguard premium duty drain #4110-012) or equal.

   b. 2 each - Air operated pump for 55 gal. drums, 4:1 ratio, with bung adaptor, connection hoses and air regulators with gauge. (Lincoln 424 or equal).

   c. Engine Oil :

      1) 1 each - Reel package including reel, 50 ft. of 1/2 in. hose, ball stop, metered control and connecting hose. (Lincoln 85057 or equal).

   d. Hydraulic:

      1) 1 each - Reel package including reel, 50 ft. of 1/2 in. hose, ball stop, metered control and connecting hose. (Lincoln 85057 or equal).

3. Air Service:

   a. 2 each - Air hose reel package including reel, 50 ft. of 3/8 inch hose, ball stop, air coupler and air chuck. (Lincoln 85063 or equal).

4. Water Service:

   a. 2 each - Water hose reel package including reel, 50 ft . of 3/8 inch hose, ball stop, water bib and connecting hose. (Lincoln 85065 or equal).

C. Manufacturer:

1. Graco hose reels (350 Series Heavy-Duty), pumps and accesssories are equal to Lincoln.

2. Balcrank hose reels (Premium Duty Series), pumps and a ccesssories are equal to Lincoln.

D. Piping.

1. Lube Oil: Hydraulic Carbon Steel Tubing, ASTM A179, 5/8", .049 wall for Oils and 5/8", .083 wall for grease.

   a. Fittings: SWAGELOK Tub Fittings (10,000 lb. compression).

2. Air and Water: Copper tube, ASTM B88, type L, drawn.

   a. Fittings: Brass compression type, ANSI B16.26.

E. Provide reel support framing as required for attachment to lube reel wall support.

2.4 AIR COMPRESSOR

A. Air compressor Owner provided, Contractor installed.

2.5 MISCELLANEOUS SHOP EQUIPMENT

A. Provide shop equipment, as specified and shown on the plans, complete with accessories.
B. Provide certified drawings for rough-in of all anchors and concrete forming.

PART 3 - EXECUTION

3.1 INSTALLATION

A. Comply with manufacturer's installation instructions. Install equipment and systems to facilitate safe, trouble-free operation and maintenance.

B. Install waster oil tank level inside containment as shown on Architect drawings.

C. Make final waste oil pipe connections

D. Installed manufacturer’s recommended vent pipe on waste oil tank.

E. Coordinate grades with the architectural plans.

F. Conform to requirements of the governing Fire Marshal.

G. Refer to Division 2 Section "Earthwork" for specifications on excavation and backfill.

3.2 COORDINATION

A. Coordinate all equipment with ductwork, plumbing fixtures, air lines , piping, etc.

B. All mounting and finish requirements.

B. Provide equipment as scheduled and shown on the plans.

END OF SECTION 11146

SECTION 15576 - FLUES

PART 1 - GENERAL

1.1 SUMMARY

A. Includes But Not Limited To

1. Furnish and install flues as described in Contract Documents.

B. Related Sections

1. Division 09 - Painting
2. Section 15000 - General Mechanical Requirements

PART 2 - PRODUCTS

2.1 MANUFACTURED UNITS

A. Flues Type B

1. Double wall, prefabricated sectional type 'B', of aluminum construction designed to handle combustion products of fuel being used. Provide with inspection cap as required by local code, roof flashing, and clean-out.
2. Size flues according to local codes except -
   a. No vertical flue shall have an area of less than 12-1/2 sq inches (4 inches in diameter).
   b. In no case shall vent connector be smaller than outlet collar provided by Manufacturer.
3. Horizontal flue connectors shall be double wall.
4. Fittings shall be pre-fabricated double wall.
5. Approved Manufacturers -
   a. Ameri-Vent
   b. Dura-Vent
   c. Metalbestos
6. Vent Caps

   1. Non-backdraft type for installation on top of flue, aluminum construction.
   2. Approved Manufacturers -
      a. Ameri-cap
      b. Breidert Type L
      c. Triangle AFL
      d. Acme Mastervent Type MVR.
      e. Dura-Vent

B. STEEL, DOUBLE-WALL VENTS – TYPE L

1. Description: Double-wall metal stacks complying with NFPA 211, suitable for use with building heating equipment burning gas, solid, or liquid fuels.
2. Construction: Inner and outer metal shells separated by at least 1-inch

airspace, with positive sealing joints.

3. Inner Shell: ASTM A 666, Type 304 stainless steel of the following thickness' 6- to 36-Inch. Size: 0.035 inch thick
4. Outer Jacket: Aluminum-coated steel of the following thickness: : 6- to 24-Inch Size: 0.025 inch thick.
5. Accessories: Tees, elbows, increasers, draft hood connectors, termination, adjustable roof flashing, storm collar, support assembly, thimbles, firestop spacers, and fasteners; fabricated of similar materials and designs as vent-pipe straight sections.

   a. Termination: Round chimney top designed to exclude 98 percent of rainfall

6. Type L Vent - Approved Manufacturers -
   a. Ameri-Vent
   b. Dura-Vent
   c. Metalbestos
   d. Metal-Fab

7. Type L Termination Caps – Approved Manufacturers
   a. Ameri-cap
   b. Breidert Type L
   c. Triangle AFL
   e. Dura-Vent

PART 3 EXECUTION

3.1 INSTALLATION

A. Height of flue above roof shall be as shown on Drawings unless local code requires it be higher.

B. Every portion of flue connector shall have rise of one inch per ft minimum from appliance to vertical flue.

C. Length of horizontal flues or flue connectors shall not be longer than 75% of height of vertical flue between points at which horizontal flue enters vertical flue to top of vertical flue. In no case shall horizontal run exceed 15 feet.

D. When two or more flue connections enter common vertical flue, smaller flue connector shall enter at higher level. Do not enter flue connectors in same horizontal plane.

E. Every gas appliance flue shall have a "backdraft preventer" installed at top of flue.

END OF SECTION 15576

SECTION 15577 - FURNACE AIR PIPING

PART 1 - GENERAL

1.1 SUMMARY

A. Includes But Not Limited To

1. Furnish and install furnace vent piping and combustion air intake piping as described in Contract Documents and manufacturer's recommendations.

B. Related Sections

1. Division 09 - Painting
2. Section 15055 - General Mechanical Requirements
3. Section 15060 - Pipe & Pipe Fittings
4. Section 15430 - Condensate drain piping

1.2 REFERENCES

A. American Society For Testing And Materials

1. ASTM D 1785-89, "Specification for Poly(Vinyl Chloride)(PVC) Plastic Pipe, Schedules 40, 80, and 120"
2. ASTM D 2564-88, "Specification for Solvent Cements for Poly(Vinyl Chloride)(PVC) Plastic Pipe and Fittings"
3. ASTM D 2661-90, "Specification for Acrylonitrile-Butadiene-Styrene (ABS) Plastic Drain, Waste, and Vent Pipe and Fittings"
4. ASTM D 2665-91, "Specification for Poly(Vinyl Chloride)(PVC) Plastic Drain, Waste, and Vent Pipe and Fittings"

PART 2 - PRODUCTS

2.1 MATERIALS

A. Air Piping - Schedule 40 pipe and fittings meeting requirements of ASTM D 1785, ASTM D 2661, or ASTM D 2665.

B. Primer & Cement - Meet requirements of ASTM D 2564.

PART 3 - EXECUTION

3.1 INSTALLATION

A. Do not combine furnace drain piping with cooling coil drain piping.
B. Run individual vent and individual combustion intake piping from each furnace to outdoors with location and formation recommended by Furnace Manufacturer. Slope lines downward toward furnaces.

C. Slope combustion chamber drain downward to funnel drain. Anchor to wall with wall clamps, allowing free movement through clamp for expansion.

D. Use vent terminal kit or clamping system provided by Furnace Manufacturer. Install vent and combustion air intake piping at clearance and distances required by Furnace Manufacturer.

E. Attach factory-supplied neoprene coupling to furnace combustion-air inlet connection and secure with clamp.

F. Ensure that factory-supplied perforated metal disc is installed in flexible coupling, unless its removal is required.

END OF SECTION 15577

SECTION 15600 - HEAT GENERATION

PART I- GENERAL

1.1 DESCRIPTION OF WORK

A. The work covered under this section consists of furnishing all materials, equipment and labor necessary to make the installation of the heat generating equipment, piping and specialties complete as indicated on the plans and as specified.

B. Types of heating system specified in this section include the following:

1. Propane Gas, Radiant Heaters.

PART II- PRODUCTS

2.1 RADIANT HEATERS

A. Approved Manufacturers:

1. Roberts-Gordan
2. Ambi-Rad
3. Superior Radiant
4. Detroit Radiant

B. General:

1. System shall be fired on Propane Gas.

2. System shall operate under negative pressure created by a vacuum pump, to preclude the possibility of gases escaping into the building.

3. System is to be the low intensity type to assure even heat distribution.

4. System shall operate in a non-condensing mode for standard efficiency.

5. System is to have aluminized or hot rolled steel combustion chambers and 4" aluminized steel pipe or hot rolled steel pipe.

6. A system shall consist of a number of burner units, utilizing one vacuum pump, radiant pipe, reflectors and a control system.

7. A building may require one or more of these systems as shown on the plans.

C. Standards:

1. The heating system shall be design certified by the American Gas Association and this per American National standards Z 83.6b “Vented Infrared Radiant Heaters.”

2. Combustion System: the combustion system will be the non-condensing type and the system shall meet or exceed American National Standards for a radiant pipe, non-condensing appliances.

3. Each burner shall have a name plate affixed bears the seal of the American Gas Association.

5. The manufacturer, on the requests of the Engineer, will supply a copy of the current design certification to cover the entire system. Manufacturer must comply by not altering the approved design certification.

6. To assure safe operation, clearances to combustibles must not exceed those measured from the surface of the radiant pipe as follows and as recommended by manufacturer:

    a. Top (above piping): 4”
    b. Below (under piping): 60”
    c. Sides: 36”
    d. Sides: 12” with side deflector
    e. Test results must be listed in current AGA Directory.

D. Pre-mix, Burner Units:

1. Each burner shall consist of a burner head, pre-wired gas controls, transformer, direct spark ignition (DSI) or hot surface igniter (HSI).

2. Combustion chamber shall have factory installed sight ports on the side of the combustion chamber.

3. Design firing rates shall be as called out on the drawing schedule. To assure even heat distribution, BTU size shall not exceed the size indicated on the Contract Drawings. The system shall employ the proper number of firing units as indicated on the plans.

4. Outside Air: When specified, the system shall be capable of supplying air from the outside to each burner and end vent assembly in order to support combustion in contaminated environments.

E. Burner Control:

1. All burners shall be factory wired for 110 volts with transformer for 24 volt direct spark ignition (DSI) or hot surface igniter (HSI) operation and supplied with grounded 18” three-wire pigtail located at rear of the burner.

2. To assure a high degree of fail safe operation, the design shall preclude main flow of gas if any or all of the following abnormal conditions occur.

    a. Vacuum pump motor fails (vacuum proving switch cuts power to burners).

    b. Power Fails (gas valves in burners close in safe position).

    c. Gas Regulator

F. Radiant Tubing – Heat Exchanger:

1. Tubing in the radiant tube section shall be 16 gauge aluminized or hot rolled steel.

2. Tailpipe shall be 4” tubing aluminized or porcelain coated inside and out steel with a minimum construction of 16 gauge.

3. Hanging of the system must be in accordance with the AGA manufacturer recommendations, local codes and be to professional trade standards.

4. Tubing in the radiant pipe section must be secured with a stainless steel coupler. Tubing in the tale pipe section must be secured with a 12” long stainless steel coupler that is lined for corrosion prevention. A pin in the coupler is required to assure each section of tubing is equally held in place. Short muffler type clamps are not acceptable means of fastening tube lengths.

H. Reflectors

1. Reflectors shall be of a highly reflective material (mirrored finish) such as aluminum with a minimum reflectivity of 0.91 (reference A.G.A. Research Bulletin #83 and Critical Table – Nat. Bureau of Standards).

2. Reflector shall provide continuous coverage over the entire system, from end burners up to the vacuum pump. All reflectors shall be overlapped a minimum of 9”, with no gaps.

3. To assure a minimum of convection loss, reflector end caps and joint pieces shall be used at elbows and tees.

4. Reflectors shall be of the “deep dish” design, effectively “wrapping” three sides of the piping.

5. When indicated; reflector side extensions shall be installed and secured to both the reflectors with “Z” Clips, and to piping with support brackets. Tilting of reflectors is not an acceptable alternative.

I. Vacuum Pump:

1. The system shall vent all products of combustion by means of a vacuum pump.

2. Vacuum pump shall be equipped with a ¾ HP, 60 Hz 120 Volt, 3450 RPM, 1 phase motor. This motor shall have thermal overload protection, and sealed ball bearings. Motor must have the same rotation as indicated on the fan scroll.

3. The scroll of the pump shall be cast iron or cast aluminum with a minimum thickness of 3/16 inch. The impeller wheel shall be cast 319 alloy aluminum with a minimum metal thickness of 3.32 inch. The scroll shall discharge in the vertical direction with a non-restrictive weather cap installed exterior of the building.

4. There shall be a low voltage (24 volt) two-wire circuit from the vacuum proving switch (located at the inlet of the vacuum pump) to the thermostat.

5. To further assure a high degree of safety, the system will be under negative pressure at all times during operation to preclude the possibility of the escape of combustion gases into the building.

J. System Controls:

1. All control circuits must be properly polarized. All burner units located on one radiant branch must be on the same zone. All burner units using the same tail pipe branch must also be on the same zone.

2. All vacuum pumps shall be provided with a vacuum proving switch to prevent opening of the gas valves until a vacuum in the pipe is established.

K. Warranty/Performance & Prior Approval Requirements:

1. The entire system shall have a minimum of a three year warranty on ALL components.

2. All warranties must be submitted, in writing, from the manufacturer.

PART III – EXECUTION

3.1 EQUIPMENT

A. Install all equipment in strict accordance with manufacturers recommendation, local codes and ordinances and installation standards.

B. Verify all equipment is installed with proper clearances around units to provide easy maintenance, service and repair.

C. Verify all electrical characteristics of equipment with manufacturer to make certain all wiring is in accordance with the national electric Code and coordinate size of motor loads and power service requirements with electrical contractor.

D. Install controls as recommended by manufacturer.

END OF SECTION - 15600

SECTION 15611 - PROPANE GAS- FIRED FURNACES

PART 1 - GENERAL

1.1 SUMMARY

A. Includes But Not Limited To

1. Furnish and install up-flow propane gas fired induced-draft type furnaces as described in Contract Documents.

B. Related Sections

1. General Conditions, Division 01, and Section 15050 apply to this Section.

1.2 SYSTEM DESCRIPTION

A. Performance Requirements

1. Rated at 90% minimum AFUE (Annual Fuel Utilization Efficiency) calculated in accordance with DOE test procedures.

PART 2 - PRODUCTS

2.1 MANUFACTURED UNITS

A. Furnaces

1. Factory assembled units certified by AGA for use with propane-gas complete with blower section, vertical flow furnace section, steel casing, piped, and wired.

2. Blower section shall consist of cabinet, blower, and motor.
   a. Cabinet shall be of 22 gauge minimum cold rolled steel and have finish coat of baked-on enamel.
   b. Blower shall be Class 1, full DIDW, statically and dynamically balanced.

3. Cooling coil shall consist of heavy gauge steel cabinet with baked-on enamel finish to match furnace.
   a. Coil shall have aluminum fins bonded to seamless copper tubing.
   b. Coil shall be ARI rated. Provide drain pans with connections at one end.
   c. Use thermal expansion valve in place of capillary tube metering device.
   d. Delete cooling coil and coil cabinet on zones where cooling is not provided.

4. Provide furnace with accessory side mounted filter box frame and factory available bottom closure.

5. Automatic controls shall consist of
   a. 100% cut-off safety pilot.
   b. Manual propane gas shut-off valve.
   c. Operating automatic natural gas valve.
   d. Solid state type fan and thermal limit controls.
   e. 24 volt transformer.
   f. Electronic ignition system.
   g. Pressure switch safety for induced draft fan, if required.
   h. Natural gas regulator.

6. Vertical Flow Units
   a. Blower shall be driven by motor with adjustable pitch V-belt drive or by a multi-speed direct driven motor.
   b. Furnace section shall be enclosed in 22 gauge minimum enameled steel casing lined with foil covered insulation.
   c. Heat Exchanger -
      1) Aluminized steel.
      2) 15-year minimum limited warranty.

   d. Propane gas burners shall be aluminized steel. Orifice size shall be properly size for propane-gas at altitude of project site.

   e. Furnish and install twinning kit for dual furnace operation where required.

7. Filters -
   a. Shall be throwaway type as furnished with furnace from manufacturer.

8. Approved Manufacturers -
   1. Trane
   2. Carrier
   3. Bryant
   4. Lennox

PART 3 - EXECUTION

3.1 FIELD QUALITY CONTROL

A. Manufacturer's Field Service

1. Furnace distributor's technical service representative shall start up and check out furnace equipment as follows -
   a. Verify proper propane gas orifice size.
   b. Clock gas meter for rated input.
   c. Verify and set propane gas pressure at furnace.
   d. Check and measure temperature rise.
   e. Check safety controls for proper operation.
   f. Check flue sizes and combustion air sizes.

END OF SECTION 15611

SECTION 15670 - CONDENSING UNITS

PART 1 - GENERAL

1.1 SUMMARY

A. Section includes:

1. Residential air-cooled condensing units.

1.2 SUBMITTALS

A. Submit the following:

1. Manufacturer's technical product data, including rated capacities of selected model clearly indicated, weights (shipping, installed, and operating), dimensions, required clearances, and methods of assembly of components, furnished specialties and accessories; and installation and start-up instructions.

2. Ladder-type wiring diagrams for power and control wiring required for final installation of condensing units and controls. Clearly differentiate between portions of wiring that are factory-installed and portions to be field-installed.

3. Maintenance data and parts list for each condensing unit, control and accessory, including A trouble shooting @ maintenance guide; plus servicing and preventative maintenance procedures and schedule. Include this data maintenance manual.

1.3 QUALITY ASSURANCE

1. Manufacturer's Qualifications: Firms regularly engaged in manufacture of condensing units, of types and capacities required, whose products have been in satisfactory use in similar service for not less than 5 years.

2. Codes and Standards:

1. Condensing units shall be listed by UL and have UL label affixed.

1.4 DELIVERY, STORAGE, AND HANDLING

1. Handle condensing units and components carefully to prevent damage. Follow manufacturer's written instructions for rigging. Replace damaged condensing units or components.

2. Store condensing units and components in clear dry place off the ground. Protect from weather, water, and physical damage.

1.5 SPECIAL PROJECT WARRANT

1. Warranty on Motor/Compressor: Provide written warranty, signed by manufacturer, agreeing to replace/repair, within warranty period, motors/compressors with inadequate or defective materials and workmanship, including leakage, breakage, improper assembly, or failure to perform as required; provided manufacturer's instructions for handling, installing, protecting, and maintaining units have been adhered to during warranty period. Replacement is limited to component replacement only, and does not include labor for removal and reinstallation.

1. Warranty Period: 5 years from date of substantial completion.

PART 2 - PRODUCTS

2.1 RESIDENTIAL AIR-COOLED CONDENSING UNITS

1. Manufacturers: Subject to compliance with requirements, provide residential air-cooled condensing units of one of the following:

   a. BDP co; Div Carrier corp.
   b. Trane
   c. Carrier Air Conditioning; Div Carrier Corp.
   d. Lennox Industries, Inc.

2. General: Factory-assembled and tested air-cooled condensing units, consisting of compressor, condenser coil, fan, motor, refrigerant reservoir, and operating controls. Capacity and electrical characteristics are scheduled (on the Drawings) (at the end of this Section).

3. Casing: galvanized steel finished with baked enamel, complete with removable panels for access to controls, weep holes for water drainage, and mounting holes in base. Unit shall be complete with brass service valves, fittings, and gage ports on exterior of casing.

4. Compressor: hermetically sealed with built-in overloads and vibration isolation. Compressor motor, shall have thermal and current sensitive overload devices, internal high-pressure protection, high and low pressure cutout switches, start capacitor and relay, 2-pole contractor, crankcase heater, and temperature actuated switch and timer to prevent compressor rapid cycle.

5. Condenser: coil shall have copper tubes and aluminum fins, or aluminum tubes and aluminum fins; complete with liquid accumulator and liquid subcooler. Aluminum propeller fan shall be direct driven, with permanently lubricated fan motor having thermal overload protection.

6. Accessories:

   1. Low-voltage thermostat and subbase to control condensing unit and evaporator fan.
   2. Pre-charged and insulated suction and liquid tubing of length indicated.
   3. Low-voltage control transformer.

PART 3 - EXECUTION

3.1 INSTALLATION

1. General: Install condensing units in accordance with manufacturer’s installation instructions. Install units plumb and level, firmly anchored in locations indicated, and maintain manufacturer’s recommended clearances.

2. Support:

   1. Install ground-mounted units on 4" thick reinforced concrete pad, 4" larger on each side than condensing unit. Concrete is specified in Division 3. Coordinate installation of anchoring devices.
   2. Residential Units: connect pre-charged refrigerant tubing to unit’s quick-connect fittings. Run tubing so as not to interfere with access to unit. Insulate suction line tubing. Paint insulation exterior to the building with latex paint to protect from UV light damage. Verify paint color with Architect.

a. Install furnished accessories.

3.2 FIELD QUALITY CONTROL

1. Testing:

a. Charge systems with refrigerant and oil, and test for leaks. Repair leaks and replace lost refrigerant and oil.

3.3 DEMONSTRATION

1. Start-up condensing units, in accordance with manufacturer's start-up instructions. Test controls and demonstrate compliance with requirements. Replace damaged or malfunctioning controls and equipment.

END OF SECTION 15670

SECTION 15820 - DUCT ACCESSORIES

PART 1 - GENERAL

1.1 RELATED DOCUMENTS

A. Drawings and general provisions of the Contract, including General and Supplementary Conditions and Division 1 Specification Sections, apply to this Section.

1.2 SUMMARY

A. This Section includes the following:

1. Backdraft dampers.
2. Volume dampers.
3. Motorized control dampers.
4. Turning vanes.
5. Flexible connectors.
6. Flexible ducts.
7. Duct accessory hardware.

B. Related Sections include the following:

1. Division 15 Section "HVAC Instrumentation and Controls" for electric and pneumatic damper actuators.

1.3 SUBMITTALS

A. Product Data: For the following:

1. Backdraft dampers.
2. Volume dampers.
3. Motorized control dampers.
4. Turning vanes.
5. Flexible connectors.
6. Flexible ducts.

B. Shop Drawings: Detail equipment assemblies and indicate dimensions, weights, loads, required clearances, method of field assembly, components, and location and size of each field connection.

1. Special fittings.
2. Manual-volume damper installations.
3. Motorized-control damper installations.
4. Wiring Diagrams: Power, signal, and control wiring.

1.4 QUALITY ASSURANCE

A. Comply with NFPA 90A, "Installation of Air Conditioning and Ventilating Systems," and NFPA 90B, "Installation of Warm Air Heating and Air Conditioning Systems."

PART 2 - PRODUCTS

2.1 MANUFACTURERS

A. In other Part 2 articles where titles below introduce lists, the following requirements apply to product selection:

1. Manufacturers: Subject to compliance with requirements, provide products by one of the manufacturers specified.

2.2 SHEET METAL MATERIALS

A. Comply with SMACNA's "HVAC Duct Construction Standards--Metal and Flexible" for acceptable materials, material thicknesses, and duct construction methods, unless otherwise indicated.

B. Galvanized Sheet Steel: Lock-forming quality; complying with ASTM A 653/A 653M and having G90 (Z275) coating designation; ducts shall have mill-phosphatized finish for surfaces exposed to view.

2.3 BACKDRAFT DAMPERS

A. Manufacturers:

1. Air Balance, Inc.
2. American Warming and Ventilating.
3. CESCO Products.
4. Duro Dyne Corp.
5. Penn Ventilation Company, Inc.
6. Ruskin Company.
7. Vent Products Company, Inc.
8. Air-Rite

B. Description: Multiple-blade, parallel action gravity balanced, with center-pivoted blades of maximum 6-inch (150-mm) width, with sealed edges, assembled in rattle-free manner with 90-degree stop, steel ball bearings, and axles; adjustment device to permit setting for varying differential static pressure.

C. Frame: 0.052-inch- (1.3-mm-) thick, galvanized sheet steel, with welded corners and mounting flange.

D. Blades: 0.050-inch- (1.2-mm-) thick aluminum sheet.

E. Blade Seals: Neoprene.

F. Blade Axles: Galvanized steel.

G. Tie Bars and Brackets: Galvanized steel.

H. Return Spring: Adjustable tension.

2.4 VOLUME DAMPERS

A. Manufacturers:

1. Air Balance, Inc.
2. American Warming and Ventilating.
3. McGill AirFlow Corporation.
4. METALAIRE, Inc.
5. Nailor Industries Inc.
6. Penn Ventilation Company, Inc.
7. Ruskin Company.
8. Air-Rite
9. Cesco

B. General Description: Factory fabricated, with required hardware and accessories. Stiffen damper blades for stability. Include locking device to hold single-blade dampers in a fixed position without vibration. Close duct penetrations for damper components to seal duct consistent with pressure class.

1. Pressure Classes of 3-Inch wg (750 Pa) or Higher: End bearings or other seals for ducts with axles full length of damper blades and bearings at both ends of operating shaft.

C. Standard Volume Dampers: Multiple- or single-blade, parallel- or opposed-blade design as indicated, standard leakage rating, with linkage outside airstream, and suitable for horizontal or vertical applications.

1. Steel Frames: Hat-shaped, galvanized sheet steel channels, minimum of 0.064 inch (1.62 mm) thick, with mitered and welded corners; frames with flanges where indicated for attaching to walls and flangeless frames where indicated for installing in ducts.
2. Roll-Formed Steel Blades: 0.064-inch- (1.62-mm-) thick, galvanized sheet steel.
3. Aluminum Frames: Hat-shaped, 0.10-inch- (2.5-mm-) thick, aluminum sheet channels; frames with flanges where indicated for attaching to walls; and flangeless frames where indicated for installing in ducts.
4. Extruded-Aluminum Blades: 0.050-inch- (1.2-mm-) thick extruded aluminum.
5. Blade Axles: Galvanized steel.
6. Bearings: Oil-impregnated bronze.
7. Tie Bars and Brackets: Galvanized steel.

D. Jackshaft: 1-inch- (25-mm-) diameter, galvanized-steel pipe rotating within pipe-bearing assembly mounted on supports at each mullion and at each end of multiple-damper assemblies.

1. Length and Number of Mountings: Appropriate to connect linkage of each damper in multiple-damper assembly.

E. Damper Hardware: Zinc-plated, die-cast core with dial and handle made of 3/32-inch- (2.4-mm-) thick zinc-plated steel, and a 3/4-inch (19-mm) hexagon locking nut. Include center hole to suit damper operating-rod size. Include elevated platform for insulated duct mounting.

2.5 MOTORIZED CONTROL DAMPERS

A. Manufacturers:

1. Air Balance, Inc.
2. American Warming and Ventilating.
3. CESCO Products.
4. Duro Dyne Corp.
5. McGill AirFlow Corporation.
6. METALAIRE, Inc.
7. Nailor Industries Inc.
8. Penn Ventilation Company, Inc.
9. Ruskin Company.
10. Air-Rite
11. Cesco

B. General Description: AMCA-rated, opposed-blade design; minimum of 0.1084-inch- (2.8-mm-) thick, galvanized-steel frames with holes for duct mounting; minimum of 0.0635-inch- (1.61-mm-) thick, galvanized-steel damper blades with maximum blade width of 8 inches (203 mm).

1. Secure blades to 1/2-inch- (13-mm-) diameter, zinc-plated axles using zinc-plated hardware, with nylon blade bearings, blade-linkage hardware of zinc-plated steel and brass, ends sealed against spring-stainless-steel blade bearings, and thrust bearings at each end of every blade.
2. Operating Temperature Range: From minus 40 to plus 200 deg F (minus 40 to plus 93 deg C).
3. Provide closed-cell neoprene edging opposed-blade design with inflatable seal blade edging, or replaceable rubber seals, rated for leakage at less than 10 cfm per sq. ft. (51 L/s per sq. m) of damper area, at differential pressure of 4-inch wg (995 Pa) when damper is being held by torque of 50 in. x lbf (5.6 N x m); when tested according to AMCA 500D].

2.6 TURNING VANES

A. Fabricate to comply with SMACNA's "HVAC Duct Construction Standards--Metal and Flexible" for vanes and vane runners. Vane runners shall automatically align vanes.

B. Manufactured Turning Vanes: Fabricate 1-1/2-inch- (38-mm-) wide, [single] [double]-vane, curved blades of galvanized sheet steel set 3/4 inch (19 mm) o.c.; support with bars perpendicular to blades set 2 inches (50 mm) o.c.; and set into vane runners suitable for duct mounting.

1. Manufacturers:

a. Ductmate Industries, Inc.
b. Duro Dyne Corp.
c. METALAIRE, Inc.
d. Ward Industries, Inc.
e. Air-Rite

2.7 FLEXIBLE CONNECTORS

A. Manufacturers:

1. Ductmate Industries, Inc.
2. Duro Dyne Corp.
3. Ventfabrics, Inc.
4. Ward Industries, Inc.
5. Thermaflex

B. General Description: Flame-retardant or noncombustible fabrics, coatings, and adhesives complying with UL 181, Class 1.

C. Metal-Edged Connectors: Factory fabricated with a fabric strip 3-1/2 inches (89 mm) wide attached to two strips of 2-3/4-inch- (70-mm-) wide, 0.028-inch- (0.7-mm-) thick, galvanized sheet steel or 0.032-inch- (0.8-mm-) thick aluminum sheets. Select metal compatible with ducts.

D. Indoor System, Flexible Connector Fabric: Glass fabric double coated with neoprene.

1. Minimum Weight: 26 oz./sq. yd. (880 g/sq. m).
2. Tensile Strength: 480 lbf/inch (84 N/mm) in the warp and 360 lbf/inch (63 N/mm) in the filling.
3. Service Temperature: Minus 40 to plus 200 deg F (Minus 40 to plus 93 deg C).

2.8 FLEXIBLE DUCTS

A. Manufacturers:

1. Flexmaster U.S.A., Inc.
2. Hart & Cooley, Inc.
3. McGill AirFlow Corporation.
4. Thermaflex

B. Insulated-Duct Connectors: UL 181, Class 1, 2-ply vinyl film supported by helically wound, spring-steel wire; fibrous-glass insulation; polyethylene or aluminized vapor barrier film.

1. Pressure Rating: 10-inch wg (2500 Pa) positive and 1.0-inch wg (250 Pa) negative.
2. Maximum Air Velocity: 4000 fpm (20.3 m/s).
3. Temperature Range: Minus 10 to plus 160 deg F (Minus 23 to plus 71 deg C).

C. Flexible Duct Clamps: Stainless-steel band with cadmium-plated hex screw to tighten band with a worm-gear action, in sizes 3 through 18 inches (75 to 450 mm) to suit duct size.

2.9 DUCT ACCESSORY HARDWARE

A. Instrument Test Holes: Cast iron or cast aluminum to suit duct material, including screw cap and gasket. Size to allow insertion of pitot tube and other testing instruments and of length to suit duct insulation thickness.

B. Adhesives: High strength, quick setting, neoprene based, waterproof, and resistant to gasoline and grease.

PART 3 - EXECUTION

3.1 APPLICATION AND INSTALLATION

A. Install duct accessories according to applicable details in SMACNA's "HVAC Duct Construction Standards--Metal and Flexible" for metal ducts and in NAIMA AH116, "Fibrous Glass Duct Construction Standards," for fibrous-glass ducts.

B. Provide duct accessories of materials suited to duct materials; use galvanized-steel accessories in galvanized-steel and fibrous-glass ducts, stainless-steel accessories in stainless-steel ducts, and aluminum accessories in aluminum ducts.

C. Install backdraft dampers on exhaust fans or exhaust ducts nearest to outside and where indicated.

D. Install volume dampers in ducts with liner; avoid damage to and erosion of duct liner.

E. Provide balancing dampers at points on supply, return, and exhaust systems where branches lead from larger ducts as required for air balancing. Install at a minimum of two duct widths from branch takeoff.

F. Provide test holes at fan inlets and outlets and elsewhere as indicated.

G. Label access doors according to Division 15 Section "Mechanical Identification."

H. Install flexible connectors immediately adjacent to equipment in ducts associated with fans and motorized equipment supported by vibration isolators.

I. For fans developing static pressures of 5-inch wg (1250 Pa) and higher, cover flexible connectors with loaded vinyl sheet held in place with metal straps.

J. Connect terminal units to supply ducts directly or with maximum 12-inch (300-mm) lengths of flexible duct. Do not use flexible ducts to change directions.

K. Connect flexible ducts to metal ducts with adhesive and draw bands.

L. Install duct test holes where indicated and required for testing and balancing purposes.

3.2 ADJUSTING

A. Adjust duct accessories for proper settings.

B. Final positioning of manual-volume dampers is specified in Division 15 Section "Testing, Adjusting, and Balancing."

END OF SECTION 15820

SECTION 15838 - POWER VENTILATORS

PART 1 - GENERAL

1.1 RELATED DOCUMENTS

A. Drawings and general provisions of the Contract, including General and Supplementary Conditions and Division 1 Specification Sections, apply to this Section.

1.2 SUMMARY

A. This Section includes the following:

1. Ceiling-mounting ventilators.
2. Propeller fans.

1.3 PERFORMANCE REQUIREMENTS

A. Project Altitude: Base air ratings on actual site elevations.

B. Operating Limits: Classify according to AMCA 99.

1.4 SUBMITTALS

A. Product Data: Include rated capacities, furnished specialties, and accessories for each type of product indicated and include the following:

1. Certified fan performance curves with system operating conditions indicated.
2. Certified fan sound-power ratings.
3. Motor ratings and electrical characteristics, plus motor and electrical accessories.
4. Material gages and finishes, including color charts.
5. Dampers, including housings, linkages, and operators.

B. Shop Drawings: Detail equipment assemblies and indicate dimensions, weights, loads, required clearances, method of field assembly, components, and location and size of each field connection.

1. Wiring Diagrams: Power, signal, and control wiring. Differentiate between manufacturer-installed and field-installed wiring.
2. Design Calculations: Calculate requirements for selecting vibration isolators and seismic restraints and for designing vibration isolation bases.
3. Vibration Isolation Base Details: Detail fabrication, including anchorages and attachments to structure and to supported equipment. Include auxiliary motor slides and rails, and base weights.

C. Coordination Drawings: Show roof penetration requirements and reflected ceiling plans drawn to scale and coordinating roof penetrations and units mounted above ceiling. Show the following:

1. Roof framing and support members relative to duct penetrations.
2. Ceiling suspension assembly members.
3. Size and location of initial access modules for acoustical tile.
4. Ceiling-mounted items including light fixtures, diffusers, grilles, speakers, sprinklers, access panels, and special moldings.

D. Maintenance Data: For power ventilators to include in maintenance manuals specified in Division 1.

1.5 QUALITY ASSURANCE

A. Electrical Components, Devices, and Accessories: Listed and labeled as defined in NFPA 70, Article 100, by a testing agency acceptable to authorities having jurisdiction, and marked for intended use.

B. AMCA Compliance: Products shall comply with performance requirements and shall be licensed to use the AMCA-Certified Ratings Seal.

C. NEMA Compliance: Motors and electrical accessories shall comply with NEMA standards.

D. UL Standard: Power ventilators shall comply with UL 705.

1.6 DELIVERY, STORAGE, AND HANDLING

A. Deliver fans as factory-assembled unit, to the extent allowable by shipping limitations, with protective crating and covering.

B. Disassemble and reassemble units, as required for moving to final location, according to manufacturer's written instructions.

C. Lift and support units with manufacturer's designated lifting or supporting points.

1.7 COORDINATION

A. Coordinate size and location of structural-steel support members.

PART 2 - PRODUCTS

2.1 MANUFACTURERS

1. Ceiling-Mounting Ventilators:
   a. Broan Mfg. Co., Inc.
   b. Carnes Company HVAC.
   c. Cook, Loren Company.
   d. ILG Industries, Inc./American Coolair Corp.
   e. JennFan; Div. of Breidert Air Products, Inc.
   f. NuTone Inc.
   g. Penn Ventilation Companies, Inc.

2. Propeller Fans:

   a. Acme Engineering & Mfg. Corp.
   b. Bayley Fans, Lau Commercial Industrial Fans/Lau Industries.
   c. Buffalo Forge Co./Howden Fan Co.
   d. Carnes Company HVAC.
   e. Chicago Blower Corp.
   f. Cincinnati Fan & Ventilator Co.
   g. Cook, Loren Company.
   h. ILG Industries, Inc./American Coolair Corp.
   i. New York Blower Company (The).
   j. Penn Ventilation Companies, Inc.

2.2 CEILING-MOUNTING VENTILATORS

A. Description: Centrifugal fans designed for installing in ceiling or wall or for concealed in-line applications.

B. Housing: Steel, lined with acoustical insulation.

C. Fan Wheel: Centrifugal wheels directly mounted on motor shaft. Fan shrouds, motor, and fan wheel shall be removable for service.

D. Grille: Stainless-steel, louvered grille with flange on intake and thumbscrew attachment to fan housing.

E. Electrical Requirements: Junction box for electrical connection on housing and receptacle for motor plug-in.

F. Accessories:
   1. Motion Sensor: Motion detector with adjustable shutoff timer.
   2. Isolation: Rubber-in-shear vibration isolators.
   3. Manufacturer's standard roof jack or wall cap, and transition fittings.

2.3 PROPELLER FANS

A. Description: Belt-driven or direct-driven propeller fans consisting of fan blades, hub, housing, orifice ring, motor, drive assembly, and accessories.

B. Housing: Galvanized steel sheet with flanged edges and integral orifice ring with baked-enamel finish coat applied after assembly.

C. Steel Fan Wheels: Formed-steel blades riveted to heavy-gage steel spider bolted to cast-iron hub.

D. Fan Wheel: Replaceable, extruded-aluminum, airfoil blades fastened to cast-aluminum hub; factory set pitch angle of blades.

E. Belt-Driven Drive Assembly: Resiliently mounted to housing, statically and dynamically balanced and selected for continuous operation at maximum rated fan speed and motor horsepower, with final alignment and belt adjustment made after installation.

   1. Service Factor Based on Fan Motor: 1.4.

2. Fan Shaft: Turned, ground, and polished steel; keyed to wheel hub.
3. Shaft Bearings: Permanently lubricated, permanently sealed, self-aligning ball bearings.

   a. Ball-Bearing Rating Life: ABMA 9, L_{10} of 100,000 hours.

4. Pulleys: Cast iron with split, tapered bushing; dynamically balanced at factory.
5. Motor Pulleys: Adjustable pitch for use with motors through 5 hp; fixed pitch for use with motors larger than 5 hp. Select pulley so pitch adjustment is at the middle of adjustment range at fan design conditions.
6. Belts: Oil resistant, nonsparking, and nonstatic; matched sets for multiple belt drives.
7. Belt Guards: Fabricate of steel for motors mounted on outside of fan cabinet.

F. Accessories:

1. Motorized Damper: Aluminum blades in aluminum frame; interlocked blades with nylon bearings.
2. Motor-Side Back Guard: Galvanized steel, complying with OSHA specifications, removable for maintenance.
3. Wall Sleeve: Galvanized steel to match fan and accessory size.
4. Disconnect Switch: Nonfusible type, with thermal-overload protection mounted inside fan housing, factory wired through an internal aluminum conduit.

2.4 MOTORS

A. Comply with requirements in Division 15 Section "Motors."

B. Enclosure Type: Guarded dripproof.

2.5 SOURCE QUALITY CONTROL

A. Sound-Power Level Ratings: Comply with AMCA 301, "Methods for Calculating Fan Sound Ratings from Laboratory Test Data." Factory test fans according to AMCA 300, "Reverberant Room Method for Sound Testing of Fans." Label fans with the AMCA-Certified Ratings Seal.

B. Fan Performance Ratings: Establish flow rate, pressure, power, air density, speed of rotation, and efficiency by factory tests and ratings according to AMCA 210, "Laboratory Methods of Testing Fans for Rating."

PART 3 - EXECUTION

3.1 INSTALLATION

A. Install power ventilators level and plumb.

B. Ceiling Units: Suspend units from structure; use steel wire or metal straps.

C. Install units with clearances for service and maintenance.

D. Label units according to requirements specified in Division 15 Section "Mechanical Identification."

3.2 CONNECTIONS

A. Duct installation and connection requirements are specified in other Division 15 Sections. Drawings indicate general arrangement of ducts and duct accessories. Make final duct connections with flexible connectors. Flexible connectors are specified in Division 15 Section "Duct Accessories."

B. Install ducts adjacent to power ventilators to allow service and maintenance.

C. Ground equipment.

D. Tighten electrical connectors and terminals according to manufacturer's published torque-tightening values. If manufacturer's torque values are not indicated, use those specified in UL 486A and UL 486B.

3.3 FIELD QUALITY CONTROL

A. Equipment Startup Checks:

1. Verify that shipping, blocking, and bracing are removed.
2. Verify that unit is secure on mountings and supporting devices and that connections to ducts and electrical components are complete. Verify that proper thermal-overload protection is installed in motors, starters, and disconnect switches.
3. Verify that cleaning and adjusting are complete.
4. Disconnect fan drive from motor, verify proper motor rotation direction, and verify fan wheel free rotation and smooth bearing operation. Reconnect fan drive system, align and adjust belts, and install belt guards.
5. Verify lubrication for bearings and other moving parts.
6. Verify that manual and automatic volume control and fire and smoke dampers in connected ductwork systems are in fully open position.
7. Disable automatic temperature-control operators.

B. Starting Procedures:

1. Energize motor and adjust fan to indicated rpm.
2. Measure and record motor voltage and amperage.

C. Operational Test: After electrical circuitry has been energized, start units to confirm proper motor rotation and unit operation. Remove malfunctioning units, replace with new units, and retest.

D. Test and adjust controls and safeties. Replace damaged and malfunctioning controls and equipment.

E. Shut unit down and reconnect automatic temperature-control operators.

F. Refer to Division 15 Section "Testing, Adjusting, and Balancing" for testing, adjusting, and balancing procedures.

G. Replace fan and motor pulleys as required to achieve design airflow.

H. Repair or replace malfunctioning units. Retest as specified above after repairs or replacements are made.

3.4 ADJUSTING

A. Adjust damper linkages for proper damper operation.

B. Adjust belt tension.

C. Lubricate bearings.

3.5 CLEANING

A. On completion of installation, internally clean fans according to manufacturer's written instructions. Remove foreign material and construction debris. Vacuum fan wheel and cabinet.

B. After completing system installation, including outlet fitting and devices, inspect exposed finish. Remove burrs, dirt, and construction debris and repair damaged finishes.

3.6 DEMONSTRATION

A. Engage a factory-authorized service representative to train Owner's maintenance personnel to adjust, operate, and maintain power ventilators.

1. Train Owner's maintenance personnel on procedures and schedules for starting and stopping, troubleshooting, servicing, and maintaining equipment and schedules.
2. Review data in maintenance manuals. Refer to Division 1 Section "Closeout Procedures."
3. Review data in maintenance manuals. Refer to Division 1 Section "Operation and Maintenance Data."
4. Schedule training with Owner, through Architect, with at least seven days' advance notice.

END OF SECTION 15838

SECTION 15855 - DIFFUSERS, REGISTERS, AND GRILLES

PART 1 - GENERAL

1.1 RELATED DOCUMENTS

A. Drawings and general provisions of the Contract, including General and Supplementary Conditions and Division 1 Specification Sections, apply to this Section.

1.2 SUMMARY

A. This Section includes ceiling- and wall-mounted diffusers, registers, and grilles.

B. Related Sections include the following:

1. Division 15 Section "Louvers and Vents" for fixed louvers, whether or not they are connected to ducts.
2. Division 15 Section "Duct Accessories" for volume-control dampers not integral to diffusers, registers, and grilles.

1.3 SUBMITTALS

A. Product Data: For each product indicated, include the following:

1. Data Sheet: Indicate materials of construction, finish, and mounting details; and performance data including throw and drop, static-pressure drop, and noise ratings.
2. Diffuser, Register, and Grille Schedule: Indicate Drawing designation, room location, quantity, model number, size, and accessories furnished.

B. Samples for Initial Selection: For diffusers, registers, and grilles with factory-applied color finishes.

C. Samples for Verification: For diffusers, registers, and grilles, in manufacturer's standard sizes to verify color selected.

PART 2 - PRODUCTS

2.1 MANUFACTURERS

A. In other Part 2 articles where titles below introduce lists, the following requirements apply to product selection:

1. Manufacturers: Subject to compliance with requirements, provide products by one of the manufacturers specified.

2.2 GRILLES AND REGISTERS

A. Fixed Face **Grille**:

1. Manufacturers:
   a. Carnes.
   b. Hart & Cooley, Inc.; Hart & Cooley Div.
   c. Krueger.
   d. Nailor Industries of Texas Inc.
   e. Price Industries.
   f. Tuttle & Bailey.

2. Material: **Steel**
3. Finish: **Baked enamel, color selected by Architect**.
4. Face Arrangement: **1/2-by-1/2-by-1/2-inch (13-by-13-by-13-mm) grid core**.
5. Frame: **1 inch (25 mm)** wide.
6. Mounting: **Countersunk screw** or **Lay in**, see schedule on drawings.

2.3 CEILING DIFFUSER OUTLETS

A. Rectangular and Square Ceiling Diffusers:

1. Manufacturers:

   a. Carnes.
   b. Hart & Cooley, Inc.; Hart & Cooley Div.
   c. Krueger.
   d. METALAIRE, Inc.; Metal Industries Inc.
   e. Nailor Industries of Texas Inc.
   f. Price Industries.
   g. Tuttle & Bailey.

2. Material: **Steel**.
3. Finish: **Baked enamel, color selected by Architect**.
4. Face Size: See Schedule
5. Face Style: **Three cone**
6. Mounting: **Surface** or **T-bar** see schedule.
7. Pattern: **Fixed**

2.4 SOURCE QUALITY CONTROL

A. Verification of Performance: Rate diffusers, registers, and grilles according to ASHRAE 70, "Method of Testing for Rating the Performance of Air Outlets and Inlets."

PART 3 - EXECUTION

3.1 EXAMINATION

A. Examine areas where diffusers, registers, and grilles are to be installed for compliance with requirements for installation tolerances and other conditions affecting performance of equipment.

B. Proceed with installation only after unsatisfactory conditions have been corrected.

3.2 INSTALLATION

A. Install diffusers, registers, and grilles level and plumb.

B. Ceiling-Mounted Outlets and Inlets: Drawings indicate general arrangement of ducts, fittings, and accessories. Air outlet and inlet locations have been indicated to achieve design requirements for air volume, noise criteria, airflow pattern, throw, and pressure drop. Make final locations where indicated, as much as practicable. For units installed in lay-in ceiling panels, locate units in the center of panel. Where architectural features or other items conflict with installation, notify Architect for a determination of final location.

C. Install diffusers, registers, and grilles with airtight connections to ducts and to allow service and maintenance of dampers, air extractors, and fire dampers.

3.3 ADJUSTING

A. After installation, adjust diffusers, registers, and grilles to air patterns indicated, or as directed, before starting air balancing.

END OF SECTION 15855

SECTION 15861 - STEEL DUCTWORK (PRESSURE CLASS 1/2" TO 2" WG SEAL CLASS C)

PART 1 - GENERAL

1.1 SCOPE

A. Includes -

1. Furnish and install the above-grade 1/2" to 2" wg Seal Class C ductwork and related items specified below and shown on the Drawings.
2. Ductwork shall be installed in strict accordance with SMACNA Standards (latest edition).

B. Related Work Specified Elsewhere -

1. Temperature control dampers, actuators and actuator linkages specified in Section 15 900, but shall be installed by this Section.
2. General Division 01 and Section 15000 and 15050 are a part of this Section.

PART 2 - PRODUCTS

2.1 DUCT MATERIAL

A. Fabricate of zinc-coated lockforming quality steel sheets meeting requirements of ASTM A 527-80 with Type G coating.

B. Use of aluminum or non-metal ducts is forbidden.

2.2 ACCESS DOORS IN DUCTS

A. Follow Figure 2-12 in SMACNA "HVAC Duct Construction Standards". Door shall be insulated, with two butt hinges and two sash locks.

B. Fire damper access doors shall have a minimum clear opening of 12"x12".

2.3 FLEXIBLE CONECTIONS

A. 30 oz closely woven UL approved glass fabric, double coated with neoprene. See Section 15 200 for coordination.

B. Fire retardant, waterproof, air-tight, resistant to acids and grease, and withstand constant temperatures of 250 deg F.

C. Approved Manufacturers -

1. Ventglas as manufactured by Ventfabrics.
2. Duro Dyne MFN.
3. Prior Approved Equal.

2.4 CONCEALED CEILING DAMPER REGULATORS

A. Approved Manufacturers -

1. Duro Dyne
2. Metco, Inc.
3. Vent-Lock #666
4. Young #303
5. Air-Rite

2.5 VOLUME DAMPERS

A. In Main Ducts -

1. 16 gauge galvanized steel, opposed blade type with 3/8 inch pins and end bearings. Blades shall have 1/8 inch clearance all around.
2. Damper shall operate within acoustical duct liner.
3. Provide a channel spacer equal to thickness of duct liner.
4. Approved Manufacturers -
   a. Air Balance Model
   b. American Warming
   c. Equal by Louvers and Dampers or Ruskin
   d. United Air
   e. Air-Rite

B. In Branch Ducts -

1. Extruded aluminum, opposed blade type. When in open position, shall not extend beyond damper frame.
2. Maximum blade length - Twelve inches.
3. Damper Regulator - Concealed type with operation from bottom or with 90 deg miter gear assembly from side.
4. Approved Manufacturers -
   a. Titus
   b. Young
   c. UTEMP
   d. Air-Rite

C. Dampers above removable ceiling and in Mechanical Rooms shall have a locking quadrant on bottom or side of duct. Otherwise, provide a concealed ceiling damper regulator and cover plate.

D. Volume dampers in round ducts shall be of a butterfly type.

2.6 AUTO DAMPERS

A. Damper Blades

1. 18 gauge galvanized steel or equivalent aluminum with replaceable rubber blade egdes, 9 inches wide maximum.
2. End seals shall be flexible metal compression type.
3. Approsed blade type

B. Make provision for damper actuators and actuator linkages to be mounted external to air flow.

C. Approved Manufacturers

1. Honeywell - D641
2. Air Balance
3. American Warming
4. Arrow
5. Johnson
6. Louvers and Dampers
7. Ruskin
8. U-Temp
9. Vent Products
10. Air-Rite

2.7 DUCT HANGERS

A. 1"x18" gauge galvanized steel straps or steel rods as per detail on Drawings, and spaced not more than eight feet apart. Do not use wire hangers or perforated steel tape.

PART 3 - EXECUTION

3.1 DUCTS

A. Straight and smooth on inside with joints neatly finished unless otherwise directed.

B. Duct panels through 48 inch dimension having acoustic duct liner need not be crossbroken or beaded.

C. Crossbreak unlined ducts and cut panels larger than 48 inches or bead twelve inches on center.

D. Securely anchor ducts to building structure with specified duct hangers attached to duct with screws.

E. Brace and install ducts so they shall be free of vibration under all conditions of operation.

F. Ducts shall not bear on the top of structural members.

G. Make duct take-offs to branches, registers, grilles, and diffusers as detailed on Drawings.

H. Ducts shall be large enough to accommodate inside acoustic duct liner. Dimension shown on drawings are inside clear dimension.

I. Properly flash where ducts protrude above roof.

J. Install internal ends of slip joints in direction of flow. Make joints air tight using mastic type duct sealer.

K. Cover horizontal and longitudinal joints on all ducts with two layers of hardcast tape installed with hardcast HC-20 adhesive according to manufacturer's recommendations.

3.2 Install flexible inlet and outlet duct connections to exhaust fan and air handling units.

3.3 Install concealed ceiling damper regulators.

A. Paint cover plates to match ceiling tile.

B. Damper regulators will not be required for dampers located above removable ceiling or in Mechanical Rooms. Provide locking quadrants for these areas.

3.4 Provide each duct take-off with an adjustable volume damper to balance that branch.

A. Anchor dampers securely to duct.

B. Install dampers in main ducts within insulation.

C. Dampers in branch ducts shall fit against sheet metal walls, bottom and top of duct, and be securely fastened. Cut duct liner to allow damper to fit against sheet metal.

D. Where concealed ceiling damper regulators are installed, provide a cover plate.

3.5 Install grilles, registers, and diffusers. Level floor grilles and anchor securely into floor.

3.6 AIR TURNS

A. Permanently installed, consisting of curved metal blades or vanes arranged to permit air to make abrupt turn without appreciable turbulence, in elbows of supply and above ground return ductwork.

B. Air turns shall be quiet and free from vibration when system is in operation.

3.7 ADJUSTABLE LOCK SPLITTER DAMPERS

A. Dampers in equipment rooms and above removable ceilings shall be complete with locking quadrant.

B. Other dampers shall have concealed ceiling damper regulator with plate.

3.8 Paint ductwork visible through registers, grilles, and diffusers flat black. Paint cover plates to match ceiling finish.

3.9 Install motorized dampers specified in Section 15900.

END OF SECTION 15861

SECTION 15862 - ROUND DUCTWORK (PRESSURE CLASS 1/2" TO 2" WG SEAL CLASS C)

PART 1 - GENERAL

1.1 RELATED SECTIONS

A. Division 01 General and Sections 15000 and 15050 are part of this Section.

PART 2 - PRODUCTS

2.1 MATERIAL

A. Ducts -

1. Fabricate of zinc-coated lockforming quality steel sheets meeting requirements of ASTM A 527-80, "Sheet Steel Zinc Coated (Galvanized) by the Hot-Dip Process, Lock Forming Quality", with Type G coating.
2. Use of aluminum or non-metal ducts is forbidden.

B. Joints

1. Mechanical type joints sealed with hardcast sealer.
2. Welded joints are acceptable.
3. Joints shall be as recommended in SMACNA HVAC Duct Construction Standards for round duct.

C. Fittings:

1. Ducts 8 inches or less in diameter shall be provided with 45 and 90 degree elbows of 2 piece die stamped construction, and over 8 inches in diameter shall be 5 mitered piece for 90 degrees and 3 mitered piece for 45 degrees.

2.2 Ductwork shall be spiral ductwork manufactured by a manufacturer regularly engaged in the manufacture of this type of ductwork. Ductwork shall meet all requirements of SMACNA and manufacturer be prior approved.

PART 3 - EXECUTION

3.1 PERFORMANCE

A. Ducts

1. Straight and smooth on inside with joints neatly finished unless otherwise directed.
2. Paint inside of ducts black as required for rectangular ducts in Section 15861.

END OF SECTION 15862

SECTION 15867 - DUCTWORK TESTING

PART 1 - GENERAL

1.1 RELATED SECTIONS

A. Division 01 General and Sections 15000 and 15050 are part of this Section.

PART 2 - GENERAL

2.1 All ductwork shall be tested prior to concealing or other work that may prevent repair of ductwork. Refer to "Inspection Notice", Section 15050.

2.2 Duct testing shall consist of pressurizing the duct system either with the main blower or in sections using a portable blower. Each portion of ductwork to be tested shall be sealed at all openings. The ductwork shall be subjected to an internal pressure not less than 2" W.G or 1-1/2 times working pressure whichever is larger. All ductwork shall be surveyed for audible leaks, and structural stability. Leaks shall be sealed, weak joints repaired, vibrations eliminated. A log shall be kept by the Contractor indicating date, conditions, repairs made, and name of individual(s) performing the test. A copy of the log shall be retained for observation at the request of the Owner or Architect. **Copy of test log shall be turned into the Architect for review prior to substantial completion.**

END OF SECTION 15867

SECTION 15887 - LOUVERS

PART 1 - GENERAL

1.1 SCOPE

A. Provide and install louvers as shown on the drawings.

PART 2 - MATERIALS

2.1 MECHANICAL LOUVERS

A. Extruded aluminum, with blades welded or screwed into frames and 1/2 inch mesh 16 gauge aluminum bird screen.

B. Frames shall have mitered corners.

C. Louvers shall be recessed, flanged, stationary, or removable as noted on drawings.

D. Finish -

1. Polyvinyledene Fluorise (PVF2) resin-base finish (Kynar 500 or Hylar 5000) for coil coating componenets contailing 70% minimum PVF2 in resin portion of formula. Thermo cured two coat system consisting of corrosion inhibiting epoxy or acrylic latex primer and top ocat facotry applied over properly pretreated metal.
2. Color as selected by Architect from Manufacturers standard colors.

E. Approved Manufacturers -

1. Airolite
2. Cesco
4 Carnes
7. Ruskin
8. Vent Products
9. United Air

PART 3 - EXECUTION

3.1 EXAMINATION

A. Examine substrates and openings, with Installer present, for compliance with requirements for installation tolerances and other conditions affecting performance. Proceed with installation only after unsatisfactory conditions have been corrected.

3.2 PREPARATION

A, Coordinate setting drawings, diagrams, templates, instructions, and directions for installation of anchorages that are to be embedded in concrete or masonry construction. Coordinate delivery of such items to Project site.

3.3 INSTALLATION

A. Locate and place louvers level, plumb, and at indicated alignment with adjacent work.

B. Use concealed anchorages where possible. Provide brass or lead washers fitted to screws where required to protect metal surfaces and to make a weathertight connection.

C. Form closely fitted joints with exposed connections accurately located and secured.

D. Provide perimeter reveals and openings of uniform width for sealants and joint fillers, as indicated.

E. Repair finishes damaged by cutting, welding, soldering, and grinding. Restore finishes so no evidence remains of corrective work. Return items that cannot be refinished in the field to the factory, make required alterations, and refinish entire unit or provide new units.

F. Protect galvanized and nonferrous-metal surfaces from corrosion or galvanic action by applying a heavy coating of bituminous paint on surfaces that will be in contact with concrete, masonry, or dissimilar metals.

G. Install concealed gaskets, flashings, joint fillers, and insulation as louver installation progresses, where weathertight louver joints are required. Comply with Division 7 Section "Joint Sealants" for sealants applied during louver installation.

3.4 ADJUSTING AND CLEANING

A. Test operation of adjustable louvers and adjust as needed to produce fully functioning units that comply with requirements.

B. Clean exposed surfaces of louvers and vents that are not protected by temporary covering, to remove fingerprints and soil during construction period. Do not let soil accumulate until final cleaning.

C. Before final inspection, clean exposed surfaces with water and a mild soap or detergent not harmful to finishes. Thoroughly rinse surfaces and dry.

D. Restore louvers damaged during installation and construction so no evidence remains of corrective work. If results of restoration are unsuccessful, as determined by Architect, remove damaged units and replace with new units.

E. Touch up minor abrasions in finishes with air-dried coating that matches color and gloss of, and is compatible with, factory-applied finish coating.

END OF SECTION 15887

SECTION 15970 - CONTROL SYSTEMS

PART 1 - GENERAL

1.1 SUMMARY

A. Includes but Not Limited To

1. Furnish and install office area automatic temperature control system as described in Contract Documents.
2. Furnish and install conductors and make connections to control devices and equipment.
3. Furnish and install raceway (conduit) for all control systems including low voltage wiring systems.

B. Related Sections

1. General Conditions, Division 01, and Section 15 055 apply to this Section.
2. Section 15055 - Instruction of Owner.
3. Section 15891 - Furnishing and installing of temperature control dampers.
4. Division 16 -
   a. Furnishing and installing of raceway (conduit) and junction boxes, including pull wires, for temperature control system except as noted above.
   b. Power wiring to magnetic starters, disconnect switches, and motors.
   c. Motor starters and disconnect switches, unless integral with packaged equipment.

1.2 SYSTEM DESCRIPTION

A. Performance Criteria

1. Install line and low voltage electrical wiring, raceway (conduit), and boxes in accordance with Division 16 of these Specifications. One-half inch conduit may be used for low voltage wiring systems.

1.3 SUBMITTALS

A. Shop Drawings

1. Provide three copies of shop drawing submittal data for review. See Section 01 340 for definitions and procedures.

B. Maintenance Data

1. Upon completion of work of this Section and prior to final inspection, schematics, catalog cuts, maintenance instructions, and written operating sequence for each boiler/fan coil system to be included in Operation & Maintenance Manual specified in Section 15055.

C. Project Record Documents

1. Provide two copies of record ATC diagrams.

PART 2 - PRODUCTS

2.1 COMPONENTS

A. Room Thermostats

1. Programmable low voltage type provided with seven day program with two starts and stops per day, and provisions for damper operators.
2. Approved Manufacturer & Model
   a. Honeywell
   b. Carrier
   c. Johnson Controls

3. Cooling only room thermostat with heat anticipation and low voltage operation.

B. Safety Controls

1. Ionization smoke detector mounted in supply air streams. Detector to operate on 24 volts AC.
2. Install on systems greater than 2000 CFM.
3. Approved Manufacturers -
   a. Series 2650-450 ionization type, duct mounted smoke detector by Robertshaw.
   b. MS Series ionization type duct mounted smoke detector by Air Products Controls Ltd.
   c. Model DH400 ACDC duct mounted smoke detector by System Sensor, a Division of Pittway

C. Switching Sub-Base

1. "Fan selector switch" with ON-AUTO modes for each fan system

D. Transformer

1. 120/24 volt, 75VA Johnson Y66AUD-1 (foot mount)

E. Damper Actuators

1. Electric type equipped for Class I wiring.
2. Shall not consume power during UNOCCUPIED cycle and shall not use chemicals or expandable media.
3. Have built in spring return.
4. Approved Manufacturer -
   1. Honeywell
   2. Johnson Controls
   3. Approved equal

F. Conductors

1. Color coded and #16 AWG Type TWN, TFN or THHN (stranded).
2. Thermostat Cable - 12 conductor or 8 conductor, 18AWG solid copper wire, insulated with high density polyethylene. Conductors parallel enclosed in brown PVC jacket (No 22 AWG cable allowed).

G. Carbon Monoxide Detector

1. Detector shall be fully electronic incorporating solid state circuitry with electronic board, factory calibrated at low of 35 PPM and high of 100 PPM CO levels. Electronic board shall incorporate visual indicators seen through unit cover for power on, operating status and sensor trouble functions.
2. The circuitry shall force the “LOW” CO level operating relay to energize a sensor trouble condition so that the fans will run until trouble is corrected.
3. The electronic board shall incorporate a microprocessor controlled automatic sensing element decontamination program which is repeated at fixed short intervals to remove water vapor and other miscellaneous contaminates.
4. The LOW CO operating level shall close an independent SPDT contact with visual status indicator on unit.
5. The HIGH CO operating level shall close another independent SPDT contact with additional visual indication on unit.
6. The HIGH CO level shall provide a visual and audible alarm. Nuisance alarms caused by temporary conditions shall be avoided by providing a 30-minute time delay between operation of high alarm levels.
7. Unit enclosure shall be gasketed, made of corrosion resistant PVC material with vandal proof cover screws.
8. Approved Manufacturer-
   a. ACME Engineering Products #01-01ES-R
   b. Approved equal

PART 3 - EXECUTION

3.1 INSTALLATION

A. Run conductors and thermostat cable in conduit. No exceptions.

B. Safety Controls

1. Mount smoke detector in return air duct of each heating system as shown on the Control Drawings and interlock to keep heating and cooling from operating if detector is energized.
   a. If it is physically impossible to mount smoke detector in return air duct, mount in mixed air plenum as close to return air duct as possible.
2. Interlock gas valves with supply air fan.
3. Gas valves shall obtain their electrical control power from same circuit as supply fan motor.
4. Check high limit thermostats furnished with heating equipment for correct operation. Gas valves shall close when duct thermpsature exceeds high limit

setting. Perform this work immediately after wiring burner controls.

5. Bonnet thermostatic switches furnished with heating equipment shall be wired to dissipate all heat in combustion chambers.
6. Fresh air damper shall close on fan shut-down, power failure, open fan motor disconnect switch, and when thermostat is in UNOCCUPIED mode.
7. Gas burner safety controls furnished with furnace units shall be incorporated in control circuits for all modes of operation.

C. Mount remote room temperature sensors and CO detectors 4'6" from floor to bottom of sensor.

D. Mount damper actuators and actuator linkages external of air flow.

E. Provide fresh battery (Mallory MN1604 9 volt alkaline type or equal) in each thermostat and instruct custodian in battery replacement.

3.2 FIELD QUALITY CONTROL

A. Field Service

1. Calibrate, adjust, and set controls for proper operation, operate systems and be prepared to prove operation of any part of control system. This work is to be completed before prefinal inspection.

3.3 ADJUSTING

A. Program minimum of one week operation into thermostat's memory function.

END OF SECTION 15970

SECTION 15985 - SEQUENCE OF OPERATION

PART 1 - GENERAL

1.1 SYSTEM DESCRIPTION

A. Performance Requirements

1. System -
   a. Programmable thermostat shall control unoccupied and occupied status of fan system based on adjustable seven day program. Fan shall cycle in unoccupied and occupied modes.
   b. Auxiliary fan cycle switch is provided by thermostat sub-base and is to be used to cycle fan in occupied mode.
   c. Adjustable heating set points shall control space temperature by activating heating equipment.
   d. Thermostat provides optional override of thermostat program by allowing three hour timed override of thermostat program at any time by pushing selected point on thermostat cover. This shall activate thermostat to occupied mode and system shall control to occupied set point.
   e. Minimum outside air damper (spring return type) shall open in occupied mode and remain closed in unoccupied mode in zones using outside air. Damper shall be normally closed.

2. Radiant heating systems shall operate in response to heating only thermostat provided by the manufacturer.

3. Building ventilation system: shall operate with a wall mounted AUTO/ON switch. When switch is in the “ON” position it shall activate the exhaust fan, or wall mounted exhaust fan and ventilation louver damper shall go to the full open position When switch is in the “AUTO” position the fan and louver damper shall by operated by a carbon monoxide (CO) monitor. When the CO monitor detects carbon monoxide it shall activate the louver damper open and the exhaust fan on.

4. Restroom exhaust fan shall be energized by restroom light switch.

END OF SECTION 15985

ELECTRICAL SPECIFICATIONS

TABLE OF CONTENTS

DIVISION 16 – ELECTRICAL

Section	Title
16001	Electrical General Provisions
16060	Grounding and Bonding
16070	Electrical Hangers and Supports
16123	Building Wire and Cable
16128	Low Voltage De-Icing Snow Melting System
16129	Electric Heat Gutter Melt Systems
16130	Raceway and Boxes
16140	Wiring Devices General
16210	Electrical Utility Services
16411	Enclosed Switches
16421	Enclosed Controllers
16442	Panelboards
16510	Interior Luminaires
16520	Exterior Luminaires
16740	Telephone/Data Raceway Systems

END OF DOCUMENT

SECTION 16001

ELECTRICAL GENERAL PROVISIONS

PART 1 GENERAL

1.1 RELATED DOCUMENTS

A. Drawing and general provisions of the Contract, including General and Supplementary Conditions and Division 1 Specification Sections, apply to this and ALL other sections of Division 16

B. Equipment requiring rough-ins and/or connections by Division 16 may be shown on the architectural drawings and/or specified in Sections 1 through 15 Division 16 is responsible for these rough-ins and/or connections whether shown on the electrical drawings or not.

1.2 SUMMARY

A. This Section includes general administrative and procedural requirements for electrical installations.
1. Product Substitutions.
2. Coordination Drawings.
3. Record Drawings and documentation.
4. Delivery, storage and handling.
5. Rough-ins
6. Electrical installations.
7. Cutting and patching.

1.3 PRODUCT SUBSTITUTIONS

A. Substitutions will be considered by submitting a duplicate written application (2-copies) to the offices of the Architect and Engineer five (5) working days prior to the day of the bidding. The application shall include:
1. A statement certifying that the proposed equipment proposed is equal to that specified; that it has the same electrical and physical characteristics, compatible dimensions, and meets the functional intent of the contract documents.
2. The specified and submittal catalog numbers of the equipment under consideration;
3. A pictorial and specification cut sheet or brochure.

B. All conflicts that arise from the use of substituted equipment shall be the responsibility of the Contractor, who shall bear all costs required to make the equipment comply with the intent of the contract documents or replace equipment with specified products.

1.4 SHOP/COORDINATION DRAWINGS

A. Prepare shop/coordination drawings which include product data cut sheets, performance data, wiring diagrams, dimensions, spatial/maintenance needs, etc along with 1/8” or larger detailed shop drawings as applicable denoting electrical equipment and materials in relationship with other systems, installations and building components. Coordinate with Division 15. Indicate locations where space is limited for installation and access and

where sequencing and coordination of installations are of importance to the efficient flow of the work, including but not limited to the following:

1. Indicate the proposed locations of equipment, motor controllers, disconnects, duct smoke detectors, control panels and control devices. Include the following:

    a. Control diagrams
    b. Clearances for servicing and maintaining equipment and space for equipment disassembly required for periodic maintenance.
    c. Equipment connections and support details
    d. Exterior wall and foundation penetrations.
    e. Fire rated wall and floor penetrations. (refer to architectural plans)
    f. Sizes and locations of required concrete pads and bases.

2. Indicate scheduling, sequencing, movement and positioning of large equipment in the building during construction.
3. Prepare floor plans, elevations and details to indicate penetrations in floors, walls and ceilings and their relationship to other penetrations and installations.
4. Coordinate “Lighting Fixture Schedule closely with architectural reflected ceiling plans. If device types shown on the electrical plans conflict with the architectural reflected ceiling plans, Architect shall be advised of discrepancies prior to fixture installation.

1.5 RECORD DRAWINGS/DOCUMENTS

A. Prepare record documents that indicate the following installed conditions.
    1. Equipment locations dimensioned from prominent building lines.
    2. Approved substitutions, Contract modifications and actual equipment and materials installed.
    3. Contract modifications , actual equipment and materials installed.
    4. All circuit designations as installed.
    5. All underground electrical lines.

1.6 DELIVERY, STORAGE AND HANDLING

A. Deliver products to the project properly identified with names, model numbers, types, grades compliance labels and other information needed for identification.

B. Handle carefully to prevent damage. Following manufacture’s written instructions foe rigging. Replace damaged products.

C. Store in clean dry place off the ground. Protect from weather, water and physical damage.

PART 2 PRODUCTS

A. Products are as specified by manufacturer name, description, and/or catalog number. Discrepancies between equipment specified and the intended function of equipment shall be brought to the attention of the Architect/Engineer in writing prior to bidding. Failure to report any conflict, including catalog numbers, discontinued products, etc., does not relieve the Contractor from meeting the intent of the contract documents nor shall it change the contract cost. If the Contractor is unable to interpret any part of the plans and/or specifications, or should he find discrepancies therein, he shall bring this to the attention of the Architect/Engineer who will issue interpretation and/or additional instructions to Bidders before the project is bid.

B. Manufacturers: Furnish and install electrical products from manufacturers as specified or accepted through methods specified here-in. The manufacturers descriptions and catalog numbers are to establish basic product quality required. Substitutions will be considered by submitting a duplicate written application (2-copies) to the offices of the Architect and Engineer five (5) working days prior to the day of the bidding. The application shall include the following: 1) A statement certifying that the equipment proposed is equal to that specified; that it has the same electrical and physical characteristics, compatible dimensions, and meets the functional intent of the contract documents; 2) The specified and submittal catalog numbers of the equipment under consideration; 3) A pictorial and specification brochure.

C. Any conflict arising from the use of substituted equipment shall be the responsibility of the Contractor, who shall bear all costs required to make the equipment comply with the intent of the contract documents.

D. Samples may be required for non-standard or substituted items before installation during construction. Provide all samples as required.

E. No materials or apparatus may be substituted after the bid opening except where the equipment specified has been discontinued.

F. Provide only equipment specified in the Contract Documents or approved by addendum.

G. Provide spare parts (fuses, diffusers, lamps, etc.) as specified. Transmit all spare parts to Owner's Representative prior to substantial completion.

PART 3 - EXECUTION

3.1 ROUGH-IN

A. Verify final locations for rough-ins with field measurements and with the requirements of the actual equipment to be connected.

B. Refer to equipment specifications in Divisions 2 through 16 for rough-in requirements, equipment requiring rough-in by Division 16 may be specified in sections other the Division 16.

C. Refer to architectural, civil, mechanical, security, telecommunications, kitchen, laundry etc drawings for equipment not shown on the Division 16 drawings that may require electrical connections by Division 16.

3.2 ELECTRICAL INSTALLATIONS

A. General: Sequence, coordinate and integrate the various elements of electrical systems, materials and equipment. Comply with the following requirements:

1. Coordinate electrical systems, equipment and materials installations with other build components.
2. Verify all dimensions by field measurement.
3. Arrange for chases, slots and openings in other building components during progress of construction, to allow for electrical installations.
4. Coordinate the installation of required supporting devices and sleeves to be set in poured-in place concrete and other structural components, as they are constructed.

5. Coordinate the installation of 4” concrete housekeeping pads for all floor mounted electrical equipment. Pads shall be 4” deep and 6” larger in each dimension than the equipment. Concrete requirements are as specified in Division 3.
6. Sequence, coordinate and integrate installations of electrical materials and equipment for efficient flow of work. Give particular attention to large equipment requiring positioning prior to closing in the building.
7. Where mounting heights are not detailed or dimensioned, install systems, materials and equipment to provide the maximum headroom possible.

8. Coordinate connection of electrical systems with exterior underground and overhead utilities and services. Comply with requirements of governing regulations, franchised service companies and controlling agencies. Provide required connection for each service.
9. Install systems, materials and equipment to conform with approved submitted data, including coordination drawings, to the greatest extent possible. Conform to arraignments indicated by the Contract Documents, recognizing that portions of the work are shown only in diagrammatic form. Where coordination requirements conflict with individual systems requirement, refer conflict to Engineer. Maintain manufacture’s recommended clearances.
10. Install systems, materials level and plumb, parallel ad perpendicular to other building systems and components, where installed expose in finished spaces.
11. Install electrical equipment to facilitate servicing maintenance and repair of replacement of equipment components. Connect equipment for ease of disconnecting, with minimum of interference with other installations.

    a. Comply with working clearances identified in Article 110-26 2005 NEC and coordinate with Division 15 subcontractor to insure that no piping, ductwork or equipment is installed in the exclusively dedicated space for switchboards or panelboards within the scope of Article 384.

12 Install access panel or doors where equipment is concealed behind finished surfaces.
13 Install systems, materials and equipment giving right-of-way priority to systems required to be install at a specific slope.
14 All penetrations of fire rated partitions by electrical services shall be fire stopped as required by the specifications and local codes. Refer to architectural drawings for locations fo fire rated partitions.

3.3 DEMOSTRATIONS

A. Provide start-up services and instruct Owners personnel if operation and maintenance of major items of equipment.

B. Start-up equipment, only in accordance with manufacture’s written instructions. Test controls and demonstrate compliance with requirements. Replace damaged or malfunctioning controls and equipment.

C. Train Owner’s personnel on start-up and shut-down procedures, troubleshooting procedures, servicing ad preventive maintenance scheduled procedures. Review with Owner’personnel the data contained in the Operating and Maintenance Manuals specified in this specification.

3,4 CUTTING AND PATCHING

A. General: Perform all cutting and patching in accordance with Division 1.

END OF SECTION

SECTION 16060

GROUNDING AND BONDING

PART 1 GENERAL

1.1 SUMMARY

A. Section Includes:
1. Rod electrodes.
2. Wire.
3. Grounding well components.
4. Mechanical connectors.
5. Exothermic connections.
6. Concrete encased electrode (UFER ground)

B. Related Sections:
1. Section 02590 - Site Grounding: Site related grounding components for buildings and facilities.
2. Section 03200 - Concrete Reinforcement: Bonding or welding bars when reinforcing steel is used for electrodes.
3. Section 10270 - Access Flooring: Grounding systems for access flooring.
4. Section 13100 - Lightning Protection: Grounding of lightning protection system.

1.2 REFERENCES

A. Institute of Electrical and Electronics Engineers:
1. IEEE 142 - Recommended Practice for Grounding of Industrial and Commercial Power Systems.
2. IEEE 1100 - Recommended Practice for Powering and Grounding Electronic Equipment.
3. NFPA 70 - National Electrical Code.
4. NFPA 99 - Standard for Health Care Facilities.

1.3 SYSTEM DESCRIPTION

A. Grounding systems use the following elements as grounding electrodes:

1. Metal underground water pipe.
2. Metal building frame.
3. Concrete-encased electrode. (UFER)
4. Metal underground gas piping system.
5. Rod electrode.
6. Plate electrode.
7. Separately derive system.

1.4 DESIGN REQUIREMENTS

A. Construct and test grounding systems for access flooring systems on conductive floors accordance with IEEE 1100. Refer to Architectural sections.

1.5 PERFORMANCE REQUIREMENTS

A. Grounding System Resistance: 5 ohms maximum.

1.6 SUBMITTALS

A. Product Data: Submit data on grounding electrodes and connections.

B. Test Reports: Indicate overall resistance to ground and resistance of each electrode.

C. Manufacturer's Installation Instructions:

1.7 CLOSEOUT SUBMITTALS

A. Submit test reports.

B. Project Record Documents: Record actual locations of components and grounding electrodes.

1.8 QUALITY ASSURANCE

A. Provide grounding materials conforming to requirements of NEC, IEEE 142, and UL labeled.

B. Perform Work in accordance with State Municipality of local code standards

1.9 COORDINATION

A. Section 01300 - Administrative Requirements: Requirements for coordination.

B. Complete grounding and bonding of building reinforcing steel prior concrete placement.

PART 2 PRODUCTS

2.1 ROD ELECTRODES

A. Manufacturers:
1. Apache Grounding/Erico Inc.
2. Copperweld, Inc.
3. Erico, Inc.
4. O-Z Gedney Co.
5. Thomas & Betts, Electrical.

B. Product Description:
1. Material: Copper-clad steel.
2. Diameter: 3/4 inch.
3. Length:10 feet (3.0 m).

C. Connector: Connector for exothermic welded connection. Or grounding clamp.

2.2 WIRE

A. Material: Stranded copper.

B. Foundation Electrodes: UFER 2/0 AWG 30”-0”

C. Grounding Electrode Conductor: Copper conductor.

D. Bonding Conductor: Copper conductor.

2.3 GROUNDING WELL COMPONENTS

A. Well Pipe: 8 inches x 24 inches long concrete pipe with belled end.

B. Well Cover: Fiberglass with legend "GROUND" embossed on cover.

2.4 MECHANICAL CONNECTORS

A. Manufacturers:
1. Apache Grounding/Erico Inc.
2. Copperweld, Inc. Model
3. Erico, Inc.
4. ILSCO Corporation.
5. O-Z Gedney Co.
6. Thomas & Betts, Electrical.

2.5 EXOTHERMIC CONNECTIONS

A. Manufacturers:
1. Apache Grounding/Erico Inc
2. Cadweld, Erico, Inc.
3. Copperweld, Inc.
4. ILSCO Corporation.
5. O-Z Gedney Co.
6. Thomas & Betts, Electrical.

B. Product Description: Provide exothermic materials, accessories, and tools for preparing and making permanent field connections between grounding system components.

PART 3 EXECUTION

3.1 EXAMINATION

A. Section 01300 - Administrative Requirements: Verification of existing conditions before starting work.

B. Verify final backfill and compaction has been completed before driving rod electrodes.

3.2 PREPARATION

A. Remove paint, rust, mill oils, surface contaminants etc at connection points.

3.3 INSTALLATION

A. Install in accordance with IEEE 142, 1100.

B. Install rod electrodes at locations as indicated on Drawings. Install additional rod electrodes to achieve specified resistance to ground.

C. Install grounding and bonding conductors concealed from view.

D. Install grounding well pipe with cover at each rod location rod locations as indicated on Drawings. Install well pipe top flush with finished grade.

E. Install 2/0 AWG bare copper wire in foundation footing as indicated on Drawings Ufer Ground.

F. Install grounding electrode conductor and connect to reinforcing steel in foundation footing as indicated on Drawings. Electrically bond steel together.

G. Bond together metal siding not attached to grounded structure; bond to ground.

H. Bond together reinforcing steel and metal accessories in pool and fountain structures.

I. Install ground grid under access floors as indicated on Drawings. Construct grid of 12 AWG bare copper wire installed on 24 inch centers both ways. Bond each access floor pedestal to grid.

J. Bond together each metallic raceway, pipe, duct and other metal object entering space under access floors. Bond to under floor ground grid. Install 8 AWG bare copper bonding conductor.

K. Install isolated grounding conductor for circuits supplying electronic cash registers, personal computers and telephone equipment in accordance with IEEE 1100.

L. Install grounding and bonding in patient care areas to meet requirements of NFPA 99.

M. Equipment Grounding Conductor: Install separate, insulated conductor within each feeder and branch circuit raceway. Terminate each end on suitable lug, bus, or bushing.

N. Connect to site grounding system. Refer to Section 02590.

O. Bond to lightning protection system. Refer to Section 13100 if installed.

P. Install continuous grounding using underground cold water system and building steel as grounding electrode. also, install artificial station ground by means of 2 driven rods or buried electrodes.

Q. Permanently ground entire light and power system in accordance with NEC, including service equipment, distribution panels, lighting panelboards, switch and starter enclosures, motor frames, grounding type receptacles, and other exposed non-current carrying metal parts of electrical equipment.

R. Install branch circuits feeding isolated ground receptacles with separate insulated grounding conductor, connected only at isolated ground receptacle, ground terminals, and at ground bus of serving panel.

S. Accomplish grounding of electrical system by using insulated grounding conductor installed with feeders and branch circuit conductors in conduits. Size grounding conductors in accordance with NEC. Install from grounding bus of serving panel to ground bus of served panel, grounding screw of receptacles, lighting fixture housing, light switch outlet boxes or metal enclosures of service equipment. Ground conduits by means of grounding bushings on terminations at panelboards with installed number 12 conductor to grounding bus.

T. Grounding electrical system using continuous metal raceway system enclosing circuit conductors in accordance with NEC.

U. Permanently attach equipment and grounding conductors prior to energizing equipment.

V. Install Work in accordance with State and local Municipality standards.

3.4 FIELD QUALITY CONTROL

A. Section 01400 - Quality Requirements 01700 - Execution Requirements: Field inspecting, testing, adjusting, and balancing.

B. Inspect and test in accordance with NETA ATS, except Section 4.

C. Grounding and Bonding: Perform inspections and tests listed in NETA ATS, Section 7.13.

D. Perform ground resistance testing in accordance with IEEE 142.

E. Perform leakage current tests in accordance with NFPA 99.

F. Perform continuity testing in accordance with IEEE 142.

G. When improper grounding is found on receptacles, check receptacles in entire project and correct. Perform retest.

END OF SECTION

SECTION 16070

ELECTRICAL HANGERS AND SUPPORTS

PART 1 GENERAL

1.1 SUMMARY

A. Section Includes:
1. Conduit supports.
2. Formed steel channel.
3. Spring steel clips.
4. Sleeves.
5. Mechanical sleeve seals.
6. Firestopping relating to electrical work.
7. Firestopping accessories.
8. Equipment bases and supports.

B. Related Sections:
1. Section 03300 - Cast-In-Place Concrete: Product requirements for concrete for placement by this section.

1.2 REFERENCES

A. ASTM International:
1. ASTM E84 - Standard Test Method for Surface Burning Characteristics of Building Materials.
2. ASTM E119 - Standard Test Methods for Fire Tests of Building Construction and Materials.
3. ASTM E814 - Standard Test Method for Fire Tests of Through-Penetration Fire Stops.

B. National Fire Protection Association:
1. NFPA 70 - National Electrical Code.

C. Underwriters Laboratories Inc.:
1. UL 263 - Fire Tests of Building Construction and Materials.
2. UL 723 - Tests for Surface Burning Characteristics of Building Materials.
3. UL 1479 - Fire Tests of Through-Penetration Firestops.
4. UL - Fire Resistance Directory.

1.3 DEFINITIONS

A. Firestopping (Through-Penetration Protection System): Sealing or stuffing material or assembly placed in spaces between and penetrations through building materials to arrest movement of fire, smoke, heat, and hot gases through fire rated construction.

1.4 SYSTEM DESCRIPTION

A. Firestopping Materials: ASTM E119, ASTM E814, UL 263, UL 1479, to achieve fire ratings of adjacent construction in accordance with FM UL.

B. Surface Burning: ASTM E84, UL 723 with maximum flame spread / smoke developed rating of 25/450.

C. Firestop interruptions to fire rated assemblies, materials, and components.

1.5 PERFORMANCE REQUIREMENTS

A. Firestopping: Conform to applicable code FM UL for fire resistance ratings and surface burning characteristics.

B. Firestopping: Provide certificate of compliance from authority having jurisdiction indicating approval of materials used.

1.6 SUBMITTALS

A. Section 01330 - Submittal Procedures: Requirements for submittals.

B. Shop Drawings: Indicate system layout with location and detail of trapeze hangers.

C. Product Data:
1. Hangers and Supports: Submit manufacturers catalog data including load capacity.
2. Firestopping: Submit data on product characteristics, performance and limitation criteria.

D. Firestopping Schedule: Submit schedule of opening locations and sizes, penetrating items, and required listed design numbers to seal openings to maintain fire resistance rating of adjacent assembly.

E. Design Data: Indicate load carrying capacity of trapeze hangers hangers and supports.

F. Manufacturer's Installation Instructions:
1. Hangers and Supports: Submit special procedures and assembly of components.
2. Firestopping: Submit preparation and installation instructions.

G. Manufacturer's Certificate: Certify products meet or exceed specified requirements.

1.7 QUALITY ASSURANCE

A. Perform Work in accordance with State and local Municipality standards.

1.8 QUALIFICATIONS

A. Manufacturer: Company specializing in manufacturing Products specified in this section with minimum five years experience.

B. Installer: Company specializing in performing work of this section with minimum five years experience.

1.9 PRE-INSTALLATION MEETINGS

A. Section 01300 - Administrative Requirements: Pre-installation meeting.

B. Convene minimum one week prior to commencing work of this section.

PART 2 PRODUCTS

2.1 CONDUIT SUPPORTS

A. Manufacturers:
1. Allied Tube & Conduit Corp.
2. Erico-Caddy Manufacturing Company.
3. O-Z Gedney Co.
4. Substitutions: Per approval process

B. Hanger Rods: Threaded high tensile strength galvanized carbon steel with free running threads.

C. Beam Clamps: Malleable Iron, with tapered hole in base and back to accept either bolt or hanger rod. Set screw: hardened steel.

D. Conduit clamps for trapeze hangers: Galvanized steel, notched to fit trapeze with single bolt to tighten.

E. Conduit clamps - general purpose: One hole malleable iron for surface mounted conduits.

F. Cable Ties: High strength nylon temperature rated to 185 degrees F (85 degrees C). Self locking.

2.2 FORMED STEEL CHANNEL

A. Manufacturers:
1. Allied Tube & Conduit Corp.
2. B-Line Systems Model.
3. Midland Ross Corporation, Electrical Products Division.
4. Unistrut Corp.
5. Erico-Caddy.
6. Substitutions: Per approval requirements.

B. Product Description: Galvanized 12 gauge thick steel. With holes 1-1/2 inches on center.

2.3 SPRING STEEL CLIPS

A. Manufacturers:
1. Erico-Caddy

B. Per approval requirements.

2.4 SLEEVES

A. Furnish materials in accordance with State and local Municipality standards.

B. Sleeves for conduits Through Non-fire Rated Floors: 18 gage (1.2 mm) thick galvanized steel.

C. Sleeves for conduit Through Fire Rated and Fire Resistive Floors and Walls, and Fire Proofing: Prefabricated fire rated sleeves including seals, UL listed.

D. Fire-stopping Insulation: Glass fiber type, non-combustible.

2.5 MECHANICAL SLEEVE SEALS

A. Manufacturers:
1. Thunderline Link-Seal, Inc.
2. NMP Corporation.
3. Substitutions: As per approval requirements.

B. Furnish materials in accordance with State and local Municipality standards.

C. Product Description: Modular mechanical type, consisting of interlocking synthetic rubber links shaped to continuously fill annular space between object and sleeve, connected with bolts and pressure plates causing rubber sealing elements to expand when tightened, providing watertight seal and electrical insulation.

2.6 FIRESTOPPING

A. Manufacturers:
1. Dow Corning Corp.
2. Fire Trak Corp.
3. Hilti Corp.
4. International Protective Coating Corp.
5. 3M fire Protection Products.
6. Specified Technology, Inc.
7. Substitutions: Per approval.

B. Furnish materials in accordance with State and local Municipality standards.

C. Product Description: Different types of products by multiple manufacturers are acceptable as required to meet specified system description and performance requirements; provide only one type for each similar application.

1. Silicone Firestopping Elastomeric Firestopping: Single or Multiple component silicone elastomeric compound and compatible silicone sealant.
2. Foam Firestopping Compounds: Multiple component foam compound.
3. Formulated Firestopping Compound of Incombustible Fibers: Formulated compound mixed with incombustible non-asbestos fibers.
4. Fiber Stuffing and Sealant Firestopping: Composite of mineral fiber stuffing insulation with silicone elastomer for smoke stopping.
5. Mechanical Firestopping Device with Fillers: Mechanical device with incombustible fillers and silicone elastomer, covered with sheet stainless steel jacket, joined with collars, penetration sealed with flanged stops.
6. Intumescent Firestopping: Intumescent putty compound which expands on exposure to surface heat gain.
7. Firestop Pillows: Formed mineral fiber pillows.

D. Color: [Dark gray] [Black] [As selected from manufacturer’s full range of colors].

2.7 FIRESTOPPING ACCESSORIES

A. Primer: Type recommended by firestopping manufacturer for specific substrate surfaces and suitable for required fire ratings.

B. Dam Material: Permanent:
1. Mineral fiberboard.
2. Mineral fiber matting.

3. Sheet metal.
4. Plywood or particleboard.
5. Alumina silicate fireboard.

C. Installation Accessories: Provide clips, collars, fasteners, temporary stops or dams, and other devices required to position and retain materials in place.

D. General:
1. Furnish UL listed products [or products tested by independent testing laboratory].
2. Select products with rating not less than rating of wall or floor being penetrated.

E. Non-Rated Surfaces:
1. Stamped steel, chrome plated, hinged, split ring escutcheons or floor plates or ceiling plates for covering openings in occupied areas where conduit is exposed.
2. For exterior wall openings below grade, furnish modular mechanical type seal consisting of interlocking synthetic rubber links shaped to continuously fill annular space between conduit and cored opening or water-stop type wall sleeve.

PART 3 EXECUTION

3.1 EXAMINATION

A. Section 01300 - Administrative Requirements: Verification of existing conditions before starting work.

B. Verify openings are ready to receive sleeves.

C. Verify openings are ready to receive firestopping.

3.2 PREPARATION

A. Clean substrate surfaces of dirt, dust, grease, oil, loose material, or other matter affecting bond of firestopping material.

B. Remove incompatible materials affecting bond.

C. Install backing damming materials to arrest liquid material leakage.

D. Obtain permission from Architect/Engineer before using powder-actuated anchors.

E. Do not drill or cut structural members.

F. Obtain permission from Architect/Engineer before drilling or cutting structural members.

3.3 INSTALLATION - HANGERS AND SUPPORTS

A. Anchors and Fasteners:
1. Concrete Structural Elements: Provide precast inserts, expansion anchors, powder actuated anchors and preset inserts.
2. Steel Structural Elements: Provide beam clamps, spring steel clips, steel ramset fasteners, and welded fasteners.
3. Concrete Surfaces: Provide self-drilling anchors and expansion anchors.
4. Hollow Masonry, Plaster, and Gypsum Board Partitions: Provide toggle bolts and hollow wall fasteners.
5. Solid Masonry Walls: Provide expansion anchors and preset inserts.

6. Sheet Metal: Provide sheet metal screws.
7. Wood Elements: Provide wood screws.

B. Inserts:
1. Install inserts for placement in concrete forms.
2. Install inserts for suspending hangers from reinforced concrete slabs and sides of reinforced concrete beams.
3. Provide hooked rod to concrete reinforcement section for inserts carrying pipe over 4 inches (100 mm).
4. Where concrete slabs form finished ceiling, locate inserts flush with slab surface.
5. Where inserts are omitted, drill through concrete slab from below and provide through-bolt with recessed square steel plate and nut flush with top of slab.

C. Install conduit and raceway support and spacing in accordance with NEC.

D. Do not fasten supports to pipes, ducts, mechanical equipment, or conduit.

E. Install multiple conduit runs on common hangers.

F. Supports:
1. Fabricate supports from structural steel or formed steel channel. Install hexagon head bolts to present neat appearance with adequate strength and rigidity. Install spring lock washers under nuts.
2. Install surface mounted cabinets and panelboards with minimum of four anchors.
3. In wet and damp locations install steel channel supports to stand cabinets and panelboards 1 inch (25 mm) off wall.
4. Support vertical conduit at every [other] floor.

3.4 INSTALLATION - FIRESTOPPING

A. Install material at fire rated construction perimeters and openings containing penetrating sleeves, piping, ductwork, conduit and other items, requiring firestopping.

B. Apply primer where recommended by manufacturer for type of firestopping material and substrate involved, and as required for compliance with required fire ratings.

C. Apply firestopping material in sufficient thickness to achieve required fire and smoke rating, to uniform density and texture.

D. Compress fibered material to maximum 40 percent of its uncompressed size.

E. Place intumescent coating in sufficient coats to achieve rating required.

F. Remove dam material after firestopping material has cured.

G. Fire Rated Surface:
1. Seal opening at floor, wall, partition, ceiling, and roof as follows:
   a. Install sleeve through opening and extending beyond minimum of 1 inch (25 mm) on both sides of building element.
   b. Size sleeve allowing minimum of 1 inch (25 mm) void between sleeve and building element.
   c. Pack void with backing material.
   d. Seal ends of sleeve with UL listed fire resistive silicone compound to meet fire rating of structure penetrated.

2. Where cable tray, bus, cable bus, conduit, wireway, or trough, penetrates fire rated surface, install firestopping product in accordance with manufacturer's instructions.

H. Non-Rated Surfaces:
1. Seal opening through non-fire rated wall, partition floor, ceiling, and roof opening as follows:
   a. Install sleeve through opening and extending beyond minimum of 1 inch (25 mm) on both sides of building element.
   b. Size sleeve allowing minimum of 1 inch (25 mm) void between sleeve and building element.
   c. Install type of firestopping material recommended by manufacturer.
2. Install escutcheons floor plates or ceiling plates where conduit, penetrates non-fire rated surfaces in occupied spaces. Occupied spaces include rooms with finished ceilings and where penetration occurs below finished ceiling.
3. Exterior wall openings below grade: Assemble rubber links of mechanical seal to size of conduit and tighten in place, in accordance with manufacturer's instructions.
4. Interior partitions: Seal pipe penetrations at clean rooms, laboratories, hospital spaces, computer rooms, telecommunication rooms or data rooms. Apply sealant to both sides of penetration to completely fill annular space between sleeve and conduit.

3.5 INSTALLATION - EQUIPMENT BASES AND SUPPORTS

A. Provide housekeeping pads of concrete, minimum 4” inches (100 mm) thick and extending 6 inches (150 mm) beyond supported equipment.

B. Using templates furnished with equipment, install anchor bolts, and accessories for mounting and anchoring equipment.

C. Construct supports of steel members formed steel channels. Brace and fasten with flanges bolted to structure.

3.6 INSTALLATION - SLEEVES

A. Exterior watertight entries: Seal with adjustable interlocking rubber links.

B. Conduit penetrations not required to be watertight: Sleeve and fill with silicon foam.

C. Set sleeves in position in forms. Provide reinforcing around sleeves.

D. Size sleeves large enough to allow for movement due to expansion and contraction. Provide for continuous insulation wrapping.

E. Extend sleeves through floors 4 inches 100 mm above finished floor level. Caulk sleeves.

F. Where conduit or raceway penetrates floor, ceiling, or wall, close off space between conduit or raceway and adjacent work with fire stopping insulation and caulk [airtight]. Provide close fitting metal collar or escutcheon covers at both sides of penetration.

3.7 FIELD QUALITY CONTROL

A. Section 01400 - Quality Requirements 01700 - Execution Requirements: Field inspecting, testing, adjusting, and balancing.

B. Inspect installed firestopping for compliance with specifications and submitted schedule.

3.8 CLEANING

A. Section 01700 - Execution Requirements: Requirements for cleaning.

B. Clean adjacent surfaces of firestopping materials.

3.9 PROTECTION OF FINISHED WORK

A. Section 01700 - Execution Requirements: Requirements for protecting finished Work.

B. Protect adjacent surfaces from damage by material installation.

END OF SECTION

SECTION 16123

BUILDING WIRE AND CABLE

PART 1 GENERAL

1.1 SUMMARY

A. Section includes building wire and cable; nonmetallic-sheathed cable; direct burial cable; service entrance cable; armored cable; metal clad cable; and wiring connectors and connections.

1.2 REFERENCES

A. International Electrical Testing Association:
1. NETA ATS - Acceptance Testing Specifications for Electrical Power Distribution Equipment and Systems.

1.3 SYSTEM DESCRIPTION

A. Product Requirements: Provide products as follows:
1. Solid conductor for feeders and branch circuits 10 AWG and smaller.
2. Stranded conductors for control circuits.
3. Conductor not smaller than 12 AWG for power and lighting circuits.
4. Conductor not smaller than 16 AWG for control circuits.
5. 10 AWG conductors for 20 ampere, 120 volt branch circuits longer than 75 feet
6. 10 AWG conductors for 20 ampere, 277 volt branch circuits longer than 200 feet.

B. Wiring Methods: Provide the following wiring methods:
1. Concealed Dry Interior Locations: Use only building wire , Type THHN/THWN or XHHW insulation, in raceway.
2. Exposed Dry Interior Locations: Use only building wire, Type THHN/THWN XHHW insulation, in raceway.
3. Above Accessible Ceilings: Use only building wire, Type THHN/THWN or XHHW insulation.
4. Wet or Damp Interior Locations: Use only building wire, Type THHN/THWN or XHHW in raceway.
5. Exterior Locations: Use only building wire, Type THHN/THWN or XHHW insulation, in raceway.
6. Underground Locations: Use only Type THHN/THWN or XHHW

1.4 DESIGN REQUIREMENTS

A. Conductor sizes are based on copper unless indicated as aluminum or "AL".

B. When aluminum conductor is substituted for copper conductor, size to match circuit requirements for conductor ampacity and voltage drop.

1.5 SUBMITTALS

A. Section 01330 - Submittal Procedures: Requirements for submittals.

B. Product Data: Submit for building wire.

C. Design Data: Indicate voltage drop and ampacity calculations for aluminum conductors substituted for copper conductors.

D. Test Reports: Indicate procedures and values obtained.

1.6 CLOSEOUT SUBMITTALS

A. Section 01700 - Execution Requirements: Requirements for submittals.

B. Project Record Documents: Record actual locations of components and circuits.

1.7 QUALIFICATIONS

A. Manufacturer: Company specializing in manufacturing products specified in this section with minimum 10 years documented experience.

1.8 FIELD MEASUREMENTS

A. Verify field measurements are as indicated on Drawings.

1.9 COORDINATION

A. Section 01300 - Administrative Requirements: Requirements for coordination.

B. Where wire and cable destination is indicated and routing is not shown, determine routing and lengths required.

C. Wire and cable routing indicated is approximate unless dimensioned. Include wire and cable lengths adequate for connection and expansion.

PART 2 PRODUCTS

‘2.1 BUILDING WIRE

A. Manufacturers:
1. Diamond Wire & Cable Co.
2. Essex Group Inc.
3. General Cable Co.
4. Substitutions: Pre approval.

B. Product Description: Single conductor insulated wire.

C. Conductor: Copper.

D. Insulation: 600 volt rating; thermoplastic material rated 75 degrees C.

E. Insulation: NFPA 70; Type THHN/THWN or XHHW insulation for feeders and branch circuits larger than 350 AWG]; Type TW, THHN/THWN insulation for feeders and branch circuits 250 AWG and smaller].

1.10 SERVICE ENTRANCE CABLE

A. Manufacturers:
1. Diamond Wire & Cable Co.
2. Essex Group Inc.
3. General Cable Co.
4. Substitutions: As per approval.

B. Conductor: Copper 600-Volt Rated.

C. Insulation: Type XHHW.

D.

1.11 WIRING CONNECTORS

A. Solderless Pressure Connectors:
1. Burndy

B. Spring Wire Connectors:
1. Ideal
2. Burndy
3. 3M

C. Compression Connectors:
1. Burndy
2. Ideal

PART 2 EXECUTION

2.1 EXAMINATION

A. Section 01300 - Administrative Requirements: Coordination and project conditions.

B. Verify interior of building has been protected from weather.

C. Verify mechanical work likely to damage wire and cable has been completed.

D. Verify raceway installation is complete and supported.

2.2 PREPARATION

A. Completely and thoroughly swab raceway before installing wire.

2.3 INSTALLATION

A. Route wire and cable to meet Project conditions.

B. Neatly train and lace wiring inside boxes, equipment, and panelboards.

C. Identify [and color code] wire and cable under provisions of Section 16075. Identify each conductor with its circuit number or other designation indicated.

D. Special Techniques--Building Wire in Raceway:
   1. Pull conductors into raceway at same time.
   2. Install building wire 4 AWG and larger with pulling equipment.

E. Special Techniques - Cable:
   1. Protect exposed cable from damage.
   2. Support cables above accessible ceiling, using spring metal clips or [metal] [plastic] cable ties to support cables from structure [or ceiling suspension system]. Do not rest cable on ceiling panels.
   3. Use suitable cable fittings and connectors.

F. Special Techniques - Wiring Connections:
   1. Clean conductor surfaces before installing lugs and connectors.
   2. Make splices, taps, and terminations to carry full ampacity of conductors with no perceptible temperature rise.
   3. Tape uninsulated conductors and connectors with electrical tape to 150 percent of insulation rating of conductor.
   4. Install split bolt connectors for copper conductor splices and taps, 6 AWG and larger.
   5. Install solderless pressure connectors with insulating covers for copper conductor splices and taps, 8 AWG and smaller.
   6. Install insulated spring wire connectors with plastic caps for copper conductor splices and taps, 10 AWG and smaller.

G. Install solid conductor for feeders and branch circuits 10 AWG and smaller.

H. Install stranded conductors for branch circuits 10 AWG and smaller. However, when stranded conductors are used in lieu of solid, then install crimp on fork terminals for device terminations. Do not place bare stranded conductors directly under screws.

2.4 WIRE COLOR

A. General
   1. For wire sizes 10 AWG and smaller, install wire colors in accordance with the following:
      a. Black and red for single phase circuits at 120/240 volts.
      b. Black, red, and blue for circuits at 120/208 volts single or three phase.
      c. Orange, brown, and yellow for circuits at 277/480 volts single or three phase.
   2. For wire sizes 8 AWG and larger, identify wire with colored tape at terminals, splices and boxes. Colors are as follows:
      a. Black and red for single phase circuits at 120/240 volts.
      b. Black, red, and blue for circuits at 120/208 volts single or three phase.
      c. Orange, brown, and yellow for circuits at 277/480 volts single or three phase.

B. Neutral Conductors: White. When two or more neutrals are located in one conduit, individually identify each with proper circuit number.

C. Branch Circuit Conductors: Install three or four wire home runs with each phase uniquely color coded.

D. Feeder Circuit Conductors: Uniquely color code each phase.

E. Ground Conductors:

1. For 6 AWG and smaller: Green.
2. For 4 AWG and larger: Identify with green tape at both ends and visible points including junction boxes.

2.5 FIELD QUALITY CONTROL

A. Quality Requirements: Testing and inspection services. Execution Requirements: Testing, adjusting, and balancing].

B. Inspect and test in accordance with NETA ATS, except Section 4.

C. Perform inspections and tests listed in NETA ATS, Section 7.3.1.

END OF SECTION

SECTION 16128 – LOW VOLTAGE

DE-ICING / SNOW MELTING SYSTEM UNDER METAL ROOFING

PART 1 GENERAL

1.1 SUMMARY

Section includes furnish and install a complete UL Listed, CSA Certified, and FM Approved system of specified heating cable, components, and controls listed specifically for keeping roof eaves from being clogged by ice and snow. See Section 16129 for Gutter & Downspout melting system.

Related Sections:

1. Section 16060 – Grounding and Bonding
2. Section 16070 – Electrical Hangers and Supports
3. Section 16123 - Building Wire and Cable.
4. Section 16129 – Electric Heat Gutter Melt System
5. Section 16130 - Raceway and Boxes.
6. Section 16442 - Panelboards

1.2 SYSTEM DESCRIPTION

A. The system shall consist of all equipment and materials for a complete roof de-icing system to be installed below the metal roof eaves per the electrical plans and details

B. The area covered and heat density (measured by Watts or BTU equivalent) per linear foot of heating element or square foot of area for each Heatizon System product are determined by the spacing between adjacent runs of heating element, the total length of heating element and size of the transformer. Consult the manufactures installation instructions for more detailed information

1.3 SUBMITTALS

Product Data: Submit manufacture's technical product data and written installation instructions for snow melting cabling system. Submit heating cable manufacturer's catalog information showing dimensions, configurations, controls and construction.

Shop Drawing: Submit drawings showing layout of the system heating cables, control box, activation device, and grounding connections required to provide a complete operating system.

Quality Control Submittals: Submit manufacture's written maintenance and operation instructions and copy of system manufactures standard warranty for the system.

1.4 QUALITY ASSURANCE

A. Manufactures Qualifications: Firm regularly engaged in manufacturing of electric cable heating elements, of type sizes and rating required, whose products have been in satisfactory use in similar service not less than five years.

B. Installer Qualifications: Licensed Contractor with a minimum of two years successful certified experience installing project utilizing heating cables systems equal to systems specified in the section.

C. Regulatory Requirements:

1. Comply with applicable local, state and national code requirements.

2. Provide product that are listed, recognized, and labeled by Nationally Recognized Testing Laboratory)NRTL) that include but are not limited to:

a. ETL Subsidiary of Intertek Testing Laboratories

b. Canadian Standards Association (CSA)

c. Underwriters Laboratories (UL)

3. Conform with requirements of "Safety for Electric Radiant Heat Panels and Heating Panels Sets" (UL 1693 1st Edition 12/11/96

4. Conform with requirements of "Outline of investigation for Roof and Gutter De-Icing Cables Units" (UL 1588 Issue 4 5/24/02 and IEEE Recommended Practice for Electrical Impedance, Inductive and Skin Effect Heating of Pipelines and Vessels"

5. Conform with the requirements of "Dry-Type General Purpose and Power Transformers" (UL 1561).

DELIVERY, STORAGE AND HANDLING

Deliver, store, and handle in accordance with manufacture's written instructions. Store all materials in indoor in a dry location off the ground.

Remove damaged materials from job site and replace with new at no additional cost to Owner.

WARRANTY

Proved Manufacture's Standard Warranty with Following Requirements

Control box Components – One Year

Power Transformer – Five Years

Heating Element – 25 Years

PART 2 PRODUCTS

2.1 MANUFACTURER

A. Heatizon Systems 4137 South 500 West Murray, Utah (888) 239-1232 www.heatizon.com.

1. Substitutions: Approved equals only.

2.2 COMPONETS

A. Heating Element:

1. Copper stranded cable insulated with chemical- and gasoline resistant `thermoplastic vinyl and sheathed with nylon jacket for corrosion and mechanical protection.

2. Rated for operating at variable output of 0 to 12 watts per linear foot.

3. Maximum operating Voltage: 0.116 volts per linear foot of heating element.

4. Maximum Secondary Voltage: Not to exceed 32 volts

5. Heating Element Operating Temperature: Not to exceed 90 degrees C

6. Heatizon Systems Tuff Cable Number E101 (UL E174340)

B. Heatsink Kit

1. Heatsink Board

a. Manufacture's standard pre cut strips.

b. Sizes:

1. Starting Strip 1" x 60" x ¼"

2. Middle Strip 5 ½” x 60 x ¼”

3. Ending Strip 3” x 60 x ¼”

4. Return Cap 3” x 35 ½” x ¼”

5. Original Cap 3” x 29 ¾” x ¼”

6. Large End Cap 3” x 2 7/8” x ¼”

7. Small End Caps 3” x 7/8” x ¼”

2. Grout: Manufactures standard premixed thin set mortar.

3 Attachments:

a. 7/8 “ Wood Screws

b. Contractors option: Stainless steel mail protectors

C. Heating Cable Power Transformer:

1. Properly sized so cable heating element operation is less the 96 Amps.

2. Multi tapped on the primary side to allow for proper operation of 120, 208, 240 and or 277 volts.

3. Multi tapped on the secondary side to allow proper operation when operating range of heating elements lengths.

4. Heatizon Options: S050 =.5Kva S101=1Kva S102=2Kva S103=3Kva S202=2 x 2Kva single Primary dual secondary (4Kva) S203=2 x 3Kva single primary dual secondary (6Kva)

D. Control Box: Provide Unit includes the following

a. Soft starts the transformer

b. Monitors overall system for proper and safe operation

c. Interfaces with activation device

d. Shuts system off in event of fault

e. Provides protection for overcurrent undercurrent and high temperature transformer

f. Provides means of faults and fault status.

g. Fitted with power service disconnect rated for system operating range.

h. 24VAC power supply for activation as per application.

E. Activation Device

a. Provide unit with dry contact fated for 1 amp @250volts AC

b. Provide control devices for the project application of the following types

1. Aerial Mounted Temperature – Moisture Sensor : Model M326 with Selector Box Model M329 or CBX6T / CBX23T

2. 12 hour Mechanical Timer: M324D

3. 24 hour Programmable Timer: M323

4. Electronic Temperature Contact: M336

5. Remote Temperature Controller: M322

6. Gutter Snow Switch: M335

F. System Accessories

a. Butt Splice Model E210BS

b. Gutter Controller Model M332 (starts Gutter system with roof system)

PART 3 EXECUTION

3.1 EXAMINATION

A. Examine roof deck for proper installation, cleanliness or conditions that may hinder successful installation of snow melt system.

1. Notify contractor in writing for items needing correction.

2. Do not install snow melt system until all pre installations requirements and conditions are met.

3.2 INSTALLATION

A. Install cable lengths as indicated on the drawings and per the manufacturer's d per approved shop drawings.

B. Coordinate the system installation with the General Contractor and Roofing contractor. Review the system installation requirements before roofing and De-Icing system shop drawings are prepared.

C. Install snow melting system including Heatsink Kit, Heating elements, Transformer, Control Box, and activation device only in accordance with manufactures written instructions and approved shop drawings.

D. Install moisture barrier on roof deck where Heatsink Kit will be installed. Install moisture barrier over all of Heatsink Kit once Tuff Cable element has been install to enclose element in water tight barrier.

3.3 FIELD QUALITY CONTROL

A. Testing to be as directed by system manufacture

1. Prior to covering, visually inspect heating elements and cold leads for cuts and damage and repair as necessary.

2. Check for continuity to any conductive material, including but not limited to metal. Correct problems before proceeding.

3. Conduct after Installation Element Test per manufactures installation instructions. Test system in the presents of the Architect, Engineer, Contractor and owners representative.

B. Verify that all heating elements are completely embedded.

C. Immediately prior to an d immediately following attachment of roofing material, check each cable element system for electrical continuity and check for electrical isolation (resistance) to ground and any metallic materials near cable heating element.

END OF SECTION

SECTION 16129 - ELECTRIC HEAT

ROOF GUTTER MELT SYSTEM

PART 1 GENERAL

1.1 SUMMARY

A. Section includes furnish and install a complete UL Listed, CSA Certified, and FM Approved system of specified heating cable, components, and controls listed specifically for keeping roof eaves, gutters, and downspouts from being clogged by ice and snow.

B. Related Sections:

1. Section 16060 – Grounding and Bonding

2. Section 16070 – Electrical Hangers and Supports

3. Section 16123 - Building Wire and Cable.

4. Section 16130 - Raceway and Boxes.

5. Section 16442 - Panelboards

1.2 SUBMITTALS

A. Section 01330 & 16001 - Submittal Procedures: Submittal procedures.

B. Product Data: Submit heating cable manufacturer's catalog information showing dimensions, configurations, controls and construction.

C. Manufacturer's installation instructions.

D. Manufacturer's testing parameters and instructions.

1.3 CLOSEOUT SUBMITTALS

A. Section 01700 - Execution Requirements: Submittal procedures.

B. Project Record Documents: Record actual locations, lengths, and configurations of cable layouts.

1.4 COORDINATION

A Section 01300 - Administrative Requirements: Coordination and project conditions.

B. Obtain and review shop drawings, product data, manufacturer's wiring diagrams, and manufacturer's instructions for installation.

C. Determine connection locations and requirements.

D. Sequence installation to coordinate with installation of roof gutters and down spouts.

PART 2 PRODUCTS

2.1 HEATING CABLE

A. Manufacturers:

1. Raychem – Model GM-2XT.

2. Thermon – Model RGS.

3. Easyheat - Model SR52J.

4. Chromalox - Model SRF-RG.

5. As indicated on drawings.

6. Substitutions: Approved equals only.

C. Description: Self-regulating heating cable consisting of two (2) 16 AWG nickel-coated copper bus wires embedded in a self-regulating polymer core that varies its power output to respond to temperature along its length, allowing the cable to be crossed over itself without overheating, to be used with wood, plastic, and asphalt building materials and to be cut-to-length in the field.

D. Power: The heating cable shall operate on 120 volts AC.

E. Components: All heating cable components shall be UL Listed, CSA Certified, or FM Approved for use as part of the system to provide roof and gutter de-icing. Component enclosure shall meet NEMA 4X requirements to prevent water ingress and corrosion.

F. Power: Heating cable shall have a nominal power output of 12 watts per foot in snow and ice and 5 watts per foot in air, per IEEE 515-1997.

G. Construction: heating-cable outer jacket shall be an abrasion-resistant fluoropolymer. The cable shall have a minimum impact resistance of 10 ft-lb at 0 deg. C installation temperature per IEEE 515-1997, and a crush resistance of 2000 lb per UL1588-1993.

H. UV Stability: Cable and components shall be qualified for prolonged exposure to the sun per IEEE 515.1-1995, Section 4.3.2, and UL1588-1993.

I. Water Submersion: The cable and components shall be qualified to withstand continuous submersion in water for 2000 hours per IEEE 515.1-1995, Section 4.3.1.

2.1 CONTROLLER

A. Manufacturers:

1. Same as cable manufacturer listed in 2.1 A.

B. Description: Controller/sensor for snow and ice melting systems on roof eves and in gutters and downspouts. Compact unit to provide automatic on/off control and will initiate operation of heaters between 38 deg F and 0 deg F. Once started, operation continues even if the temperature drops below this limit during deicing.

C. Power: 120 VAC with contact ampere rating as required for the length of cable powered. Provide a 30-mA trip ground-fault circuit breaker to feed each cable run.

2.2 ACCESSORIES

A. Manufacturers:

1. Same as cable manufacturer listed in 2.1 A.

B. Provide all necessary accessories required for a complete installation including, but not limited to:

1. Downspout cable hangers designed to secure the cable when entering long downspouts to prevent abrasion of the cable by the edge of the gutter/downspout. Hanger is to be secured to the building fascia in a similar manner to the gutters.

2. Power Feed: Provide one power feed connection boot and one end cap for cable termination and connection to power source. The connection shall be watertight and sealed with RTV sealant. Power connection must be made in a NEMA 4, UL Listed junction box.

3. Aluminum tape: Secure the cable to the bottom of the gutter with 2" wide aluminum tape designed to hold cable in place and prevent movement during heavy rains. Allow one foot of tape for each foot of heating cable.

PART 2 EXECUTION

3.1 EXAMINATION

A. Section 01300 - Administrative Requirements: Coordination and project conditions.

B. Verify equipment is ready for electrical connection, for wiring, and to be energized.

3.2 INSTALLATION

A. Install cable lengths as indicated on the drawings and per the manufacturer's specifications.

B. Install the heating cable in the bottom of the complete length of each gutter and down the complete length of each down spout, as indicated on the drawings, so that the cable comes out the end of the down spout as indicated on the drawings. Cable lengths shown on the plans including looping the cable down and back up inside the down spouts.

C. Install a single cable controller on each cable to energize the heating cable when the temperature drops below 32 deg. F.

D. Fasten the cable to the bottom of the entire length of each gutter with aluminum tape or adhesive as recommended by the manufacturer.

E. Secure the cables in the down spouts with down spout hangers designed for the cable.

3.3 ADJUSTING AND TESTING

A. Section 01700 - Execution Requirements: Testing, adjusting, and balancing.

B. Test every run of heat cable and confirm it operates properly including the controller/sensor. Replace any system component that does not function properly.

C. The heating cable shall be tested with at least a 500VDC megger. Do not use a megger with excess of 2500VDC or as required by the manufacturer.

1. Minimum acceptable readings shall be as specified by the manufacturer.

2. Provide a copy of the test results to the engineer and provide a copy in the Operation and Maintenance Manual.

3. Replace any cable that does not test out as specified by the manufacturer.

END OF SECTION

SECTION 16130

RACEWAY AND BOXES

PART 1 GENERAL

1.1 SUMMARY

A. Section includes conduit and tubing, surface raceways, wireways, outlet boxes, pull and junction boxes, and hand holes.

B. Related Sections:

1. Section 02581 - Underground Ducts and Manholes.
2. Section 16132 - Indoor Service Poles.
3. Section 16133 - Cable Trays.
4. Section 16134 - Underfloor Raceway Assemblies.
5. Section 16141 - Floor Boxes.

1.2 REFERENCES

A. American National Standards Institute:
1. ANSI C80.1 - Rigid Steel Conduit, Zinc Coated.
2. ANSI C80.3 - Specification for Electrical Metallic Tubing, Zinc Coated.
3. ANSI C80.5 - Aluminum Rigid Conduit - (ARC).

B. National Electrical Manufacturers Association:
1. NEMA 250 - Enclosures for Electrical Equipment (1000 Volts Maximum).
2. NEMA FB 1 - Fittings, Cast Metal Boxes, and Conduit Bodies for Conduit and Cable Assemblies.
3. NEMA OS 1 - Sheet Steel Outlet Boxes, Device Boxes, Covers, and Box Supports.
4. NEMA OS 2 - Nonmetallic Outlet Boxes, Device Boxes, Covers, and Box Supports.
5. NEMA RN 1 - Polyvinyl Chloride (PVC) Externally Coated Galvanized Rigid Steel Conduit and Intermediate Metal Conduit.
6. NEMA TC 2 - Electrical Polyvinyl Chloride (PVC) Tubing and Conduit.
7. NEMA TC 3 - PVC Fittings for Use with Rigid PVC Conduit and Tubing.

1.3 SYSTEM DESCRIPTION

A. Raceway and boxes located as indicated on Drawings, and at other locations required for splices, taps, wire pulling, equipment connections, and compliance with regulatory requirements. Raceway and boxes are shown in approximate locations unless dimensioned. Provide raceway to complete wiring system.

B. Underground outside Foundation Wall: Provide rigid steel conduit, intermediate or thick wall nonmetallic conduit. Provide cast metal boxes or nonmetallic boxes.

C. In or Under Slab on Grade: Provide rigid steel conduit, intermediate metal conduit, plastic coated conduit, thick wall nonmetallic conduit.

D. Outdoor Locations, Above Grade: Provide rigid steel and conduit.

E. In Slab Above Grade: Provide electrical metallic tubing or thick wall nonmetallic conduit.

1.4 DESIGN REQUIREMENTS

A. Minimum Raceway Size: ¾ inch unless otherwise specified.

1.5 COORDINATION

A. Section 01300 - Administrative Requirements: Coordination and project conditions.

B. Coordinate installation of outlet boxes for equipment connected under Section 16150.

C. Coordinate mounting heights, orientation and locations of outlets mounted above counters, benches, and backsplashes.

PART 2 PRODUCTS

2.1 METAL CONDUIT

A. Manufacturers:
1. Carlon Electrical Products.
2. Hubbell Wiring Devices.
3. Thomas & Betts Corp.
4. Walker Systems Inc.
5. The Wiremold Co.

B. Rigid Steel Conduit: ANSI C80.1.

C. Rigid Aluminum Conduit: ANSI C80.5.

D. Intermediate Metal Conduit (IMC): Rigid steel.

E. Fittings and Conduit Bodies: NEMA FB 1; material to match conduit.

2.2 FLEXIBLE METAL CONDUIT

A. Manufacturers:
1. Carlon Electrical Products.
2. Hubbell Wiring Devices.
3. Thomas & Betts Corp.
4. Walker Systems Inc.
5. The Wiremold Co.

2.3 WIREWAY

A. Manufacturers:
1. Carlon Electrical Products.
2. Hubbell Wiring Devices.
3. Thomas & Betts Corp.
4. Walker Systems Inc.
5. The Wiremold Co.

B. Product Description: General purpose Oiltight and dust-tight Raintight] type wireway.

C. Knockouts: Manufacturer's standard.

D. Size: 4 x 4 inch (100 x 100 mm) 6 x 6 inch (150 x 150 mm) 8 x 8 inch (200 x 200 mm) 12 x 12 inch (300 x 300 mm)]; length as indicated on Drawings.

E. Cover: Hinged cover.

F. Connector: Flanged.

G. Fittings: Lay-in type with removable top, bottom, and side; captive screws.

H. Finish: Rust inhibiting primer coating with gray enamel finish.

2.4 OUTLET BOXES

A. Manufacturers:
1. Carlon Electrical Products.
2. Hubbell Wiring Devices.
3. Thomas & Betts Corp.
4. Walker Systems Inc.
5. The Wiremold Co.

B. Sheet Metal Outlet Boxes: NEMA OS 1, galvanized steel.
1. Luminaire and Equipment Supporting Boxes: Rated for weight of equipment supported; furnish 1/2 inch (13 mm) male fixture studs where required.
2. Concrete Ceiling Boxes: Concrete type.

C. Nonmetallic Outlet Boxes: NEMA OS 2.

D. Cast Boxes: NEMA FB 1, Type FD, cast feralloy. Furnish gasketed cover by box manufacturer. Furnish threaded hubs as required.

E. Wall Plates for Finished Areas: As specified in Section 16140.

F. Wall Plates for Unfinished Areas: Furnish gasketed cover.

2.5 PULL AND JUNCTION BOXES

A. Manufacturers:
1. Carlon Electrical Products.
2. Hubbell Wiring Devices.
3. Thomas & Betts Corp.
4. Walker Systems Inc.
5. The Wiremold Co.

B. Sheet Metal Boxes: NEMA OS 1, galvanized steel.

C. Hinged Enclosures: As specified in Section 16131.

D. Surface Mounted Cast Metal Box: NEMA 250, Type 4, 4X or 6; flat-flanged, surface mounted junction box:
1. Material: Galvanized cast iron.
2. Cover: Furnish with ground flange, neoprene gasket, and stainless steel cover screws.

E. In-Ground Cast Metal Box: NEMA 250, Type 6, outside flanged, recessed cover box for flush mounting:
1. Material: Galvanized cast iron.

2. Cover:Nonskid cover with neoprene gasket and stainless steel cover screws.
3. Cover Legend: "ELECTRIC".

F. Fiberglass Concrete composite Boxes: Die-molded, glass-fiber or concrete composite boxes:
1. Cable Entrance: Pre-cut 6 inch x 6 inch (150 mm x 150 mm) cable entrance at center bottom of each side.
2. Cover: Glass-fiber concrete composite, weatherproof cover with nonskid finish.

PART 3 EXECUTION

3.1 EXAMINATION

A. Section 01300 - Administrative Requirements: Coordination and project conditions.

B. Verify outlet locations and routing and termination locations of raceway prior to rough-in.

3.2 INSTALLATION

A. Install Work in accordance with State or local Municipality standards.

B. Ground and bond raceway and boxes in accordance with Section 16060.

C. Fasten raceway and box supports to structure and finishes in accordance with Section 16070.

D. Identify raceway and boxes in accordance with Section 16075.

E. Arrange raceway and boxes to maintain headroom and present neat appearance.

3.3 INSTALLATION - RACEWAY

A. Raceway routing is shown in approximate locations unless dimensioned. Route to complete wiring system.

B. Arrange raceway supports to prevent misalignment during wiring installation.

C. Support raceway using coated steel or malleable iron straps, lay-in adjustable hangers, clevis hangers, and split hangers.

D. Group related raceway; support using conduit rack. Construct rack using steel channel specified in Section 16070 provide space on each for 25 percent additional raceways].

E. Do not support raceway with wire or perforated pipe straps. Remove wire used for temporary supports

F. Do not attach raceway to ceiling support wires or other piping systems.

G. Construct wireway supports from steel channel specified in Section 16070.

H. Route exposed raceway parallel and perpendicular to walls.

I. Route raceway installed above accessible ceilings parallel and perpendicular to walls.

J. Route conduit in and under slab from point-to-point.

K. Maximum Size Conduit in Slab Above Grade: 3/4 inch. Do not cross conduits in slab.

L. Maintain clearance between raceway and piping for maintenance purposes.

M. Maintain 12 inch (300 mm) clearance between raceway and surfaces with temperatures exceeding 104 degrees F (40 degrees C).

N. Cut conduit square using saw or pipe cutter; de-burr cut ends.

O. Bring conduit to shoulder of fittings; fasten securely.

P. Join nonmetallic conduit using cement as recommended by manufacturer. Wipe nonmetallic conduit dry and clean before joining. Apply full even coat of cement to entire area inserted in fitting. Allow joint to cure for minimum 20 minutes.

Q. Install conduit hubs or sealing locknuts to fasten conduit to sheet metal boxes in damp and wet locations and to cast boxes.

R. Install no more than equivalent of three 90 degree bends between boxes. Install conduit bodies to make sharp changes in direction, as around beams. Install [hydraulic one-shot bender to fabricate factory elbows for bends in metal conduit larger than 2 inch.

S. Avoid moisture traps; install junction box with drain fitting at low points in conduit system.

T. Install fittings to accommodate expansion and deflection where raceway crosses seismic control and expansion joints.

U. Install suitable pull string or cord in each empty raceway except sleeves and nipples.

V. Install suitable caps to protect installed conduit against entrance of dirt and moisture.

W. Surface Raceway: Install flat-head screws, clips, and straps to fasten raceway channel to surfaces; mount plumb and level. Install insulating bushings and inserts at connections to outlets and corner fittings.

X. Close ends and unused openings in wireway.

3.4 INSTALLATION - BOXES

A. Install wall mounted boxes at elevations to accommodate mounting heights as indicated on Drawings. Specified in section for outlet device.

B. Adjust box location up to 10 feet prior to rough-in to accommodate intended purpose.

C. Orient boxes to accommodate wiring devices oriented as specified in Section 16140.

D. Install pull boxes and junction boxes above accessible ceilings and in unfinished areas only.

E. In Accessible Ceiling Areas: Install outlet and junction boxes no more than 6 inches (150 mm) from ceiling access panel or from removable recessed luminaire.

F. Locate flush mounting box in masonry wall to require cutting of masonry unit corner only. Coordinate masonry cutting to achieve neat opening.

G. Do not install flush mounting box back-to-back in walls; install with minimum 6 inches (150 mm) separation. Install with minimum 24 inches (600 mm) separation in acoustic rated walls.

H. Secure flush mounting box to interior wall and partition studs. Accurately position to allow for surface finish thickness.

I. Install stamped steel bridges to fasten flush mounting outlet box between studs.

J. Install flush mounting box without damaging wall insulation or reducing its effectiveness.

K. Install adjustable steel channel fasteners for hung ceiling outlet box.

L. Do not fasten boxes to ceiling support wires or other piping systems.

M. Support boxes independently of conduit.

N. Install gang box where more than one device is mounted together. Do not use sectional box.

O. Install gang box with plaster ring for single device outlets.

3.5 INTERFACE WITH OTHER PRODUCTS

A. Install conduit to preserve fire resistance rating of partitions and other elements, using materials and methods in accordance with other Section.

B. Route conduit through roof openings for piping and ductwork or through suitable roof jack with pitch pocket. Coordinate location with roofing installation specified.

C. Locate outlet boxes to allow luminaires positioned as indicated on Drawings and reflected ceiling plan.

D. Align adjacent wall mounted outlet boxes for switches, thermostats, and similar devices.

3.6 ADJUSTING

A. Section 01700 - Execution Requirements: Testing, adjusting, and balancing.

B. Adjust flush-mounting outlets to make front flush with finished wall material.

C. Install knockout closures in unused openings in boxes.

3.7 CLEANING

A. Section 01700 - Execution Requirements: Final cleaning.

B. Clean interior of boxes to remove dust, debris, and other material.

C. Clean exposed surfaces and restore finish.

END OF SECTION

SECTION 16140

WIRING DEVICES GENERAL

1.1 SUMMARY

A. Section includes wall switches; wall dimmers; receptacles; multi-outlet assembly; and device plates and decorative box covers.

B. Related Sections:
1. Section 16134 - Underfloor Raceway Assemblies: Service fittings for receptacles installed in underfloor raceways.
2. Section 16130 - Raceway and Boxes: Outlet boxes for wiring devices.
3. Section 16141 - Floor Boxes: Service fittings for receptacles installed on floor boxes.
4. Section 16141 - Floor Boxes: Poke-through receptacles.

1.2 REFERENCES

A. National Electrical Manufacturers Association:
1. NEMA WD 1 - General Requirements for Wiring Devices.
2. NEMA WD 6 - Wiring Devices-Dimensional Requirements.

1.3 SUBMITTALS

A. Product Data: Submit manufacturer's catalog information showing dimensions, colors, configurations and ratings etc.

1.4 QUALIFICATIONS

A. Manufacturer: Company specializing in manufacturing products specified in this section with minimum 10 years experience.

1.5 EXTRA MATERIALS

A. Section 01700 - Execution Requirements: Spare parts and maintenance products.

B. Furnish 10 of each style, size, and finish wall plate.

PART 2 PRODUCTS

2.1 WALL SWITCHES

A. Manufacturers:
1. Hubbell
2. Pass Seymour
3. Leviton
4. Substitutions: Per approval.

B. Single Pole Switch:
1. Hubbell Model HBL 1221
2. Pass Seymour Model 20ACI.
3. Leviton Model 1221.

C. Three-way Switch:

1. Hubbell Model HBL 1223.
2. Pass Seymour Model 20AC3.
3. Leviton Model 1223

D. Four-way Switch:
1. Hubbell Model HBL 1221 PL
2. Pass Seymour Model 20AC-RDL
3. Leviton Model 1221 PL

E. Color: White or as selected.

2.2 WALL SWITCHES

A. Product Description: NEMA WD 1, [Heavy-Duty] [General-Duty], AC only general-use snap switch.

B. Body and Handle: White – Thermal plastic or with toggle handle.

C. Indicator Light: Lighted handle type switch Separate pilot strap; red color.

D. Ratings:
1. Voltage: 120 or 277volts, AC.
2. Current: 20 amperes minimum.

E. Ratings: Match branch circuit and load characteristics.

2.3 WALL DIMMERS

A. Manufacturers:
1. Leviton
2. Lutron
3. Pass Seymour

B. Product Description: NEMA WD 1; Semiconductor dimmer for incandescent lamps, Type as indicated on Drawings.

C. Body and Handle: White plastic with linear slide.

D. Voltage: 120 volts.

E. Power Rating: 600, 1000, 2000

F. Accessory Wall Switch: Match dimmer appearance.

2.4 RECEPTACLES

A. Duplex Convenience Receptacle:
1. Hubbell Model HBL 5252
2. Pass Seymour Model 5352
3. Leviton Model 5362
4. Substitutions: Per approval Requirements.

B. GFCI Receptacle:
1. Hubbell Model HBL 5252G
2. Pass Seymour Model 5352 GFI
3. Leviton Model 5362 GFI

4. Substitutions: Per approval Requirements.

C. Hospital Use Receptacle:
1. Hubbell Model 8300 HS
2. Pass Seymour Model 8300 X-SP
3. Substitutions: Requirements Not Permitted.

2.5 RECEPTACLES

A. Manufacturers:
1. Hubbell
2. Pass Seymour
3. Leviton

B. Product Description: NEMA WD 1, [Heavy-duty] [General-duty] general use receptacle.

C. Device Body: White nylon

D. Configuration: NEMA WD 6, type.

E. Convenience Receptacle: Type 5-20R.

F. GFCI Receptacle: Convenience receptacle with integral ground fault circuit interrupter to meet regulatory requirements.

2.6 WALL PLATES

A. Manufacturers:
1. Hubbell
2. Pass Seymour
3. Leviton

PART 3 EXECUTION

3.1 EXAMINATION

A. Section 01300 - Administrative Requirements: Coordination and project conditions.

B. Verify outlet boxes are installed at proper height.

C. Verify wall openings are neatly cut and completely covered by wall plates.

D. Verify branch circuit wiring installation is completed, tested, and ready for connection to wiring devices.

3.2 PREPARATION

A. Clean debris from outlet boxes.

3.3 INSTALLATION

A. Install devices plumb and level.

B. Install switches with OFF position down.

C. Install wall dimmers to achieve full rating specified and indicated after derating for ganging as instructed by manufacturer.

D. Do not share neutral conductor on load side of dimmers.

E. Install receptacles with grounding pole.

F. Connect wiring device grounding terminal to outlet box with bonding jumper and branch circuit equipment grounding conductor.

G. Connect wiring devices by wrapping solid conductor around screw terminal. Install stranded conductor for branch circuits 10 AWG and smaller. When stranded conductors are used in lieu of solid, use crimp on fork terminals for device terminations. Do not place bare stranded conductors directly under device screws.

H. Use jumbo size plates for outlets installed in masonry walls.

I. Install galvanized steel plates on outlet boxes and junction boxes in unfinished areas, above accessible ceilings, and on surface mounted outlets.

3.4 INTERFACE WITH OTHER PRODUCTS

A. Coordinate locations of outlet boxes provided under Section 16130 to obtain mounting heights [as specified and] as indicated on drawings.

B. Install wall switch 48 inches 1.2 m above finished floor.

C. Install convenience receptacle 18 inches 450 mm above finished floor.

D. Install convenience receptacle 4 inches 100 mm above counter back splash of counter.

E. Install dimmer 48 inches 1.2 m above finished floor.

F. Coordinate installation of wiring devices with floor box service fittings provided under Section 16135.

3.5 FIELD QUALITY CONTROL

A. Quality Requirements: Testing and inspection services - Execution Requirements: Testing, adjusting, and balancing.

B. Inspect each wiring device for defects.

C. Operate each wall switch with circuit energized and verify proper operation.

D. Verify each receptacle device is energized.

E. Test each receptacle device for proper polarity.

F. Test each GFCI receptacle device for proper operation.

3.6 ADJUSTING

A. Execution Requirements: Testing, adjusting, and balancing.

B. Adjust devices and wall plates to be flush and level.

3.7 CLEANING

A. Execution Requirements: Final cleaning.

B. Clean exposed surfaces to remove splatters and restore finish.

END OF SECTION

SECTION 16210

ELECTRICAL UTILITY SERVICES

PART 1 GENERAL

1.1 SUMMARY

A. Section includes arrangement with Utility Company for permanent electric service; payment of Utility Company charges for service; service provisions; and utility metering equipment.

1.2 SYSTEM DESCRIPTION

A. Utility Company: Rocky Mountain Power. (Utah Power)

B. System Characteristics: 240/120 volts, Single phase, Three-wire, 60 Hertz.

C. Service Entrance: Underground

D. Underground Service Provisions: Underground service entrance to building service entrance equipment.
1. Utility Raceway Connection: At Utility Company's pad-mounted transformer.
2. Utility Service-Entrance Conductor Connection: At Utility Company's pad-mounted transformer. Service-entrance equipment and metering equipment.

1.3 SUBMITTALS

A. Section 01330 - Submittal Procedures: Submittal procedures.

B. Submit Utility-Meter cabinets and bases.

C. All service entrance equipment such as meter main assemblies, service disconnects, pre-cast transformer pad/vault units etc.

1.4 QUALITY ASSURANCE

A. Perform Work in accordance with Utility Company written requirements.

B. Maintain one copy of each document on site.

1.5 FIELD MEASUREMENTS

A. Verify field measurements are as indicated on Drawings.

1.6 COORDINATION

A. Coordinate with utility company, relocation of overhead or underground lines interfering with construction. Where power lines are to be relocated, bill utility costs, directly to Owner.

B. Contact utility company regarding charges related to service installation.

C. Utility charges for service installation will be paid by Owner and are not part of this contract.

PART 2 PRODUCTS

2.1 UTILITY METERS

A. Furnished by Utility Company.

B. Product Description: Self-contained watt-hour meter with demand attachment, rated. 208Y/120 volts, three phase. Meters must meet power company standards.

2.2 UTILITY METER BASE

A. Furnished by Electrical Contractor

B. Product Description: Meter base continuous duty in accordance with power company standards

2.3 TRANSFORMER PAD/VAULT

A. Product Description: Pre-cast concrete transformer pad/vault sized as indicated on Drawings or as required by Rocky Mtn Power.

PART 3 EXECUTION

3.1 EXAMINATION

A. Section 01300 - Administrative Requirements: Coordination and project conditions.

B. Verify service equipment is ready to be connected and energized.

3.2 INSTALLATION

A. Install service rack and weatherhead at height in accordance with Utility Company requirements. Install drip loop in service conductors.

B. Install service entrance conduits to building service entrance equipment. Utility Company will connect service lateral conductors to service entrance conductors. Connect service lateral conductors to service entrance conductors.

C. Install Pre-cast concrete pad / vault for Utility Company transformer, in accordance with Utility Companies Requirements.

END OF SECTION

SECTION 16411

ENCLOSED SWITCHES

PART 1 GENERAL

1.1 SUMMARY

A. Section includes fusible and nonfusible switches.

B. Related Sections:
1. Section 16491 - Fuses.

1.2 REFERENCES

A. National Electrical Manufacturers Association:
1. NEMA FU 1 - Low Voltage Cartridge Fuses.
2. NEMA KS 1 - Enclosed and Miscellaneous Distribution Equipment Switches (600 Volts Maximum).

B. International Electrical Testing Association:
1. NETA ATS - Acceptance Testing Specifications for Electrical Power Distribution Equipment and Systems.

1.3 QUALIFICATIONS

A. Manufacturer: Company specializing in manufacturing products specified in this section with minimum 10 years documented experience.

PART 2 PRODUCTS

2.1 FUSIBLE SWITCH ASSEMBLIES

A. Manufacturers:
1. Square D
2. General Electric
3. Cutler Hammer
4. Siemens
5. Substitutions: as per approval.

B. Product Description: NEMA KS 1, Type HD or GD with externally operable handle interlocked to prevent opening front cover with switch in ON position], enclosed load interrupter knife switch. Handle lockable in OFF position.

C. Fuse clips: Designed to accommodate NEMA FU 1, Class R fuses.

D. Enclosure: NEMA KS 1, to meet conditions. Fabricate enclosure from steel finished with manufacturer's standard gray enamel.
1. Interior Dry Locations: Type 1.
2. Exterior Locations: Type 3R
3. Industrial Locations: Type 4.

E. Service Entrance: Switches identified for use as service equipment are to be labeled for this application. Furnish solid neutral assembly and equipment ground bar.

F. Furnish switches with entirely copper current carrying parts.

2.2 NONFUSIBLE SWITCH ASSEMBLIES

A. Manufacturers:
1. Square D
2. General Electric
3. Cutler Hammer
4. Siemens
5. Substitutions: as per approval.

B. Product Description: NEMA KS 1, Type HD GD with externally operable handle interlocked to prevent opening front cover with switch in ON position] enclosed load interrupter knife switch. Handle lockable in OFF position.

C. Enclosure: NEMA KS 1, to meet conditions. Fabricate enclosure from [steel finished with manufacturer's standard gray.
1. Interior Dry Locations: Type 1.
2. Exterior Locations: Type 3R.
3. Industrial Locations: Type 4.

D. Service Entrance: Switches identified for use as service equipment are to be labeled for this application. Furnish solid neutral assembly and equipment ground bar.

E. Furnish switches with entirely copper current carrying parts.

2.3 SWITCH RATINGS

A. Switch Rating: Horsepower rated for AC or DC as indicated on Drawings.

B. Short Circuit Current Rating: UL listed for [10,000 rms symmetrical amperes when used with or protected by Class H or K fuses (30-600 ampere)] [200,000 rms symmetrical amperes when used with or protected by Class R or Class J fuses (30-600 ampere switches employing appropriate fuse rejection schemes)]. [200,000 rms symmetrical amperes when used with or protected by Class L fuses (800-1200 ampere)].

PART 3 EXECUTION

3.1 INSTALLATION

A. Install enclosed switches plumb. Provide supports in accordance with Section 16070.

B. Height: 5 feet (1500 mm) to operating handle.

C. Install fuses for fusible disconnect switches. Refer to Section 16491 for product requirements.

D. Install engraved plastic nameplates in accordance with Section 16075.

E. Apply adhesive tag on inside door of each fused switch indicating NEMA fuse class and size installed.

3.2 FIELD QUALITY CONTROL

A. Quality Requirements: Testing and Inspection Services - Execution Requirements: Testing, adjusting, and balancing.

B. Inspect and test in accordance with NETA ATS, except Section 4.

C. Perform inspections and tests listed in NETA ATS, Section 7.5.

END OF SECTION

SECTION 16421

ENCLOSED CONTROLLERS

PART 1 GENERAL

1.1 SUMMARY

A. Section includes manual and magnetic motor controllers in individual enclosures.

B. Related Sections:
1. Section 16491 - Fuses.

1.2 REFERENCES

A. National Electrical Manufacturers Association:
1. NEMA AB 1 - Molded Case Circuit Breakers and Molded Case Switches.
2. NEMA FU 1 - Low Voltage Cartridge Fuses.
3. NEMA ICS 2 - Industrial Control and Systems: Controllers, Contactors, and Overload Relays, Rated Not More Than 2000 Volts AC or 750 Volts DC.
4. NEMA ICS 5 - Industrial Control and Systems: Control Circuit and Pilot Devices.
5. NEMA ICS 6 - Industrial Control and Systems: Enclosures.
6. NEMA KS 1 - Enclosed and Miscellaneous Distribution Equipment Switches (600 Volts Maximum).

B. International Electrical Testing Association:
1. NETA ATS - Acceptance Testing Specifications for Electrical Power Distribution Equipment and Systems.

1.3 SUBMITTALS

A. Section 01330 - Submittal Procedures: Submittal procedures.

B. Product Data: Submit catalog sheets showing voltage, controller size, ratings and size of switching and overcurrent protective devices, short circuit ratings, dimensions, and enclosure details.

C. Test Reports: Indicate field test and inspection procedures and test results.

1.4 CLOSEOUT SUBMITTALS

A. Project Record Documents: Record actual locations and ratings of enclosed controllers.

B. Operation and Maintenance Data: Submit Replacement parts list for controllers.

1.5 QUALIFICATIONS

A. Manufacturer: Company specializing in manufacturing products specified in this section with minimum three years [documented] experience.

PART 2 PRODUCTS

2.1 MANUAL MOTOR CONTROLLER

A. Manufacturers:
1. Siemens
2. General Electric
3. Square D
4. Cutler Hammer
5. Approved Equals

B. Product Description: NEMA ICS 2, AC general-purpose, Class A, manually operated, full-voltage controller with overload element, [red pilot light,] [[NO] [NC] auxiliary contact,] and [push button] [toggle] operator.

C. Enclosure: NEMA ICS 6, NEMA Type 1 or 3R to meet conditions of installation.

2.2 FRACTIONAL-HORSEPOWER MANUAL CONTROLLER

A. Manufacturers:
1. Siemens
2. General Electric
3. Square D
4. Cutler Hammer
5. Approved Equals

B. Product Description: NEMA ICS 2, AC general-purpose, Class A, manually operated, full-voltage controller for fractional horsepower induction motors, with thermal overload unit, [[red] [green] pilot light,] and [key] [toggle] operator.

C. Enclosure: NEMA ICS 6, Type [1] [1B] [4] [to meet conditions of installation].

2.3 MOTOR STARTING SWITCH

A. Manufacturers:
1. Siemens
2. General Electric
3. Square D
4. Cutler Hammer
5. Approved Equals

B. Product Description: NEMA ICS 2, AC general-purpose Class A manually operated, full-voltage controller for fractional horsepower induction motors, without thermal overload unit, with [[red] [green] pilot light and] [key] [toggle] operator.

C. Enclosure: NEMA ICS 6, Type [1] [1B] [4] [to meet conditions of installation].

2.4 FULL-VOLTAGE NON-REVERSING CONTROLLERS

A. Manufacturers:
1. Siemens
2. General Electric

3. Square D
4. Cutler Hammer
5. Approved Equals

B. Product Description: NEMA ICS 2, AC general-purpose Class A [magnetic] [solid-state] controller for induction motors rated in horsepower.

C. Control Voltage: 120 volts, 60 Hertz.

D. Overload Relay: NEMA ICS 2; bimetal.

E. Product Features:
1. Auxiliary Contacts: NEMA ICS 2, (1) each normally open closed field convertible contacts in addition to seal-in contact.
2. Cover Mounted Pilot Devices: NEMA ICS 5, heavy-duty oiltight type.
3. Pilot Device Contacts: NEMA ICS 5, Form Z, rated .
4. Pushbuttons: Recessed or Shrouded type.
5. Indicating Lights: Transformer Resistor or LED type.
6. Selector Switches: Rotary type.
7. Relays: NEMA ICS 2.
8. Control Power Transformers: 120 volt secondary, in each motor starter. Or as indicated on Drawings. Furnish fused primary and secondary, and bond un-fused leg of secondary to enclosure.

F. Combination Controllers: Combine motor controllers with disconnect in common enclosure, using thermal magnetic circuit breaker conforming to NEMA AB 1, with integral thermal and instantaneous magnetic trip in each pole.

G. Combination Controllers: Combine motor controllers with disconnect in common enclosure, using motor circuit protector conforming to NEMA AB 1, with integral instantaneous magnetic trip in each pole. Obtain IEC Class 2 coordinated component protection.

H. Combination Controllers: Combine motor controllers with disconnect in common enclosure, using non-fusible switch conforming to NEMA KS 1, enclosed knife switch with externally operable handle.

I. Combination Controllers: Combine motor controllers with disconnect in common enclosure, using fusible switch conforming to NEMA KS 1, enclosed knife switch with externally operable handle. Fuse clips: Designed to accommodate NEMA FU 1, Class R or J fuses. Obtain IEC Class 2 coordinated component protection.

J. Enclosure: NEMA ICS 6, to meet conditions. Fabricate enclosure from steel finished with manufacturer's standard gray enamel.
1. Interior Dry Locations: Type 1.
2. Exterior Locations: Type 3R.

2.5 TWO-SPEED CONTROLLERS

A. Manufacturers:
1. Siemens
2. General Electric
3. Square D
4. Cutler Hammer

5. Approved Equals

B. Product Description: NEMA ICS 2, AC general-purpose Class A [magnetic] [solid-state] controller for induction motors rated in horsepower. Include integral time delay transition between FAST and SLOW speeds.

C. Control Voltage: 120 volts, 60 Hertz.

D. Overload Relay: NEMA ICS 2; bimetal.

E. Product Features:
1. Auxiliary Contacts: NEMA ICS 2, (1) each normally open or closed field convertible contacts in addition to seal-in contact.
2. Cover Mounted Pilot Devices: NEMA ICS 5, duty oiltight type.
3. Pilot Device Contacts: NEMA ICS 5, Form Z, rated.
4. Pushbuttons: Unguarded Recessed or Shrouded type.
5. Indicating Lights: Transformer [Resistor or LED type.
6. Selector Switches: Rotary type.
7. Relays: NEMA ICS 2, .
8. Control Power Transformers: 120 volt secondary, in each motor starter or as indicated on Drawings. Furnish fused primary and secondary, and bond un-fused leg of secondary to enclosure.

F. Combination Controllers: Combine motor controllers with disconnect in common enclosure, using thermal magnetic circuit breaker conforming to NEMA AB 1, with integral thermal and instantaneous magnetic trip in each pole.

G. Combination Controllers: Combine motor controllers with disconnect in common enclosure, using motor circuit protector conforming to NEMA AB 1, with integral instantaneous magnetic trip in each pole. Obtain IEC Class 2 coordinated component protection.

H. Combination Controllers: Combine motor controllers with disconnect in common enclosure, using non-fusible switch conforming to NEMA KS 1, enclosed knife switch with externally operable handle.

I. Combination Controllers: Combine motor controllers with disconnect in common enclosure, using fusible switch conforming to NEMA KS 1, enclosed knife switch with externally operable handle. Fuse clips: Designed to accommodate NEMA FU 1, Class [R] [J] fuses. Obtain IEC Class 2 coordinated component protection.

J. Enclosure: NEMA ICS 6, to meet conditions. Fabricate enclosure from steel finished with manufacturer's standard gray enamel.
1. Interior Dry Locations: Type 1.
2. Exterior Locations: Type [3R] [4].

2.6 FULL-VOLTAGE REVERSING CONTROLLERS

A. Manufacturers:
1. Siemens
2. General Electric
3. Square D
4. Cutler Hammer

5. Approved Equals

B. Product Description: NEMA ICS 2, AC general-purpose Class A magnetic or solid-state controller for induction motors rated in horsepower. Include electrical interlock and integral time delay transition between FORWARD and REVERSE rotation.

C. Control Voltage: 120 volts, 60 Hertz.

D. Overload Relay: NEMA ICS 2; bimetal.

E. Product Features:
1. Auxiliary Contacts: NEMA ICS 2, (1) each normally open or closed field convertible contacts in addition to seal-in contact.
2. Cover Mounted Pilot Devices: NEMA ICS 5, heavy-duty oiltight type.
3. Pilot Device Contacts: NEMA ICS 5, Form Z, rated.
4. Pushbuttons: Recessed or Shrouded type.
5. Indicating Lights: Transformer Resistor or LED type.
6. Selector Switches: Rotary type.
7. Relays: NEMA ICS 2.
8. Control Power Transformers: 120 volt secondary, in each motor starter or as indicated on Drawings. Furnish fused primary and secondary, and bond un-fused leg of secondary to enclosure.

F. The following Controller Types as shown on the drawings.

G. Combination Controllers: Combine motor controllers with disconnect in common enclosure, using thermal magnetic circuit breaker conforming to NEMA AB 1, with integral thermal and instantaneous magnetic trip in each pole.

H. Combination Controllers: Combine motor controllers with disconnect in common enclosure, using motor circuit protector conforming to NEMA AB 1, with integral instantaneous magnetic trip in each pole. Obtain IEC Class 2 coordinated component protection.

I. Combination Controllers: Combine motor controllers with disconnect in common enclosure, using non-fusible switch conforming to NEMA KS 1, enclosed knife switch with externally operable handle.

J. Combination Controllers: Combine motor controllers with disconnect in common enclosure, using fusible switch conforming to NEMA KS 1, enclosed knife switch with externally operable handle. Fuse clips: Designed to accommodate NEMA FU 1, Class R or J fuses. Obtain IEC Class 2 coordinated component protection.

K. Enclosure: NEMA ICS 6, to meet conditions. Fabricate enclosure from [steel finished with manufacturer's standard gray enamel.
1. Interior Dry Locations: Type 1.
2. Exterior Locations: Type 3R 4.

PART 3 EXECUTION

3.1 INSTALLATION

A. Install enclosed controllers plumb. Provide supports in accordance with Section 16070.

B. Height: Maximum 6’-6” to operating handle.

C. Install fuses for fusible switches. Refer to Section 16491 for product requirements.

D. Select and install overload heater elements in motor controllers to match installed motor characteristics.

E. Install engraved plastic nameplates. Refer to Section 16075 for product requirements and location.

F. Neatly type label and place inside each motor controller door identifying motor served, nameplate horsepower, full load amperes, code letter, service factor, and voltage/phase rating. Place label in clear plastic holder.

3.2 FIELD QUALITY CONTROL

A. Inspect and test in accordance with NETA ATS, except Section 4.

B. Perform inspections and tests listed in NETA ATS, Section 7.16.1.

END OF SECTION

SECTION 16442

PANELBOARDS

PART 1 GENERAL

1.1 SUMMARY

A. Section includes distribution and branch circuit panelboards, electronic grade branch circuit panelboards, [and load centers].

B. Related Sections:
1. Section 16060 - Grounding and Bonding.
2. Section 16491 - Fuses.

1.2 REFERENCES

A. Institute of Electrical and Electronics Engineers:
1. IEEE C62.41 - Recommended Practice on Surge Voltages in Low-Voltage AC Power Circuits.

B. National Electrical Manufacturers Association:
1. NEMA AB 1 - Molded Case Circuit Breakers and Molded Case Switches.
2. NEMA FU 1 - Low Voltage Cartridge Fuses.
3. NEMA ICS 2 - Industrial Control and Systems: Controllers, Contactors, and Overload Relays, Rated Not More Than 2000 Volts AC or 750 Volts DC.
4. NEMA ICS 5 - Industrial Control and Systems: Control Circuit and Pilot Devices.
5. NEMA KS 1 - Enclosed and Miscellaneous Distribution Equipment Switches (600 Volts Maximum).
6. NEMA PB 1 - Panelboards.
7. NEMA PB 1.1 - General Instructions for Proper Installation, Operation, and Maintenance of Panelboards Rated 600 Volts or Less.

C. International Electrical Testing Association:
1. NETA ATS - Acceptance Testing Specifications for Electrical Power Distribution Equipment and Systems.

D. National Fire Protection Association:
1. NFPA 70 - National Electrical Code.

E. Underwriters Laboratories Inc.:
1. UL 67 - Safety for Panelboards.
2. UL 1283 - Electromagnetic Interference Filters.
3. UL 1449 - Transient Voltage Surge Suppressors.

1.3 SUBMITTALS

A. Shop Drawings: Indicate outline and support point dimensions, voltage, main bus ampacity, integrated short circuit ampere rating, circuit breaker and fusible switch arrangement and sizes.

B. Product Data: Submit catalog data showing specified features of standard products.

1.4 CLOSEOUT SUBMITTALS

A. Project Record Documents: Record actual locations of panelboards and record actual circuiting arrangements.

B. Operation and Maintenance Data: Submit spare parts listing; source and current prices of replacement parts and supplies; and recommended maintenance procedures and intervals.

1.5 QUALIFICATIONS

A. Manufacturer: Company specializing in manufacturing products specified in this section with minimum three years [documented] experience.

PART 2 PRODUCTS

2.1 DISTRIBUTION PANELBOARDS

A. Manufacturers:
1. Siemens
2. Square D
3. General Electric
4. Eaton – Cutler Hammer

B. Product Description: NEMA PB 1 panelboard.

C. Service Conditions:
1. Temperature: 105 degrees F.
2. Altitude: 4200 feet.

D. Panelboard Bus: Aluminum current carrying components, ratings as indicated on Drawings. Furnish copper ground bus in each panelboard.

E. Minimum integrated short circuit rating of: 10,000, 22,000, 65,000, 100,000, 200,000, amperes rms symmetrical for 240 or 208 volt panelboards; 14,000, 65,000, 100,000, 200,000 amperes rms symmetrical for 480 volt panelboards, as indicated on Drawings.

F. Fusible Switch Assemblies: NEMA KS 1, quick-make, quick-break, load interrupter enclosed knife switch with externally operable handle. Furnish interlock to prevent opening front cover with switch in ON position. Handle lockable in OFF position. Fuse clips: Designed to accommodate NEMA FU 1, Class R fuses.

G. Molded Case Circuit Breakers: NEMA AB 1, circuit breakers with integral thermal and instantaneous magnetic trip in each pole. Furnish circuit breakers UL listed as Type HACR for air conditioning equipment branch circuits.

H. Molded Case Circuit Breakers with Current Limiters: NEMA AB 1, circuit breakers with replaceable current limiting elements, in addition to integral thermal and instantaneous magnetic trip in each pole.

I. Current Limiting Molded Case Circuit Breakers: NEMA AB 1, circuit breakers with integral thermal and instantaneous magnetic trip in each pole, coordinated with automatically resetting current limiting elements in each pole. Interrupting rating 100,000 symmetrical amperes, let-through current and energy level less than permitted for same size NEMA FU 1, Class RK-5 fuse.

J. Controllers: NEMA ICS 2, AC general-purpose Class A magnetic or solid-state controller for induction motors rated in horsepower.
   1. Two-speed Controllers: Include integral time delay transition between FAST and SLOW speeds.
   2. Full-voltage Reversing Controllers: Include electrical interlock [and integral time delay transition] between FORWARD and REVERSE rotation.
   3. Control Voltage: 120 volts, 60 Hertz.
   4. Overload Relay: NEMA ICS 2; bimetal.
   5. Auxiliary Contacts: NEMA ICS 2, 2 one each normally open and closed contacts in addition to seal-in contact.
   6. Cover Mounted Pilot Devices: NEMA ICS 5, standard duty type.
   7. Pilot Device Contacts: NEMA ICS 5, Form Z.
   8. Pushbuttons: Recessed.
   9. Indicating Lights: LED type.
   10. Selector Switches: Rotary type.
   11. Relays: NEMA ICS 2.
   12. Control Power Transformers: 120 volt secondary, 50 VA minimum, in each motor starter as indicated on Drawings. Furnish fused primary and secondary, and bond unfused leg of secondary to enclosure.

K. Circuit Breaker Accessories: Trip units and auxiliary switches as indicated on Drawings.

L. Enclosure: NEMA PB 1, Type 1.

M. Cabinet Front: Surface type, fastened with concealed trim clamps hinged door with flush lock, metal directory frame, finished in manufacturer's standard gray enamel.

2.2 BRANCH CIRCUIT PANELBOARDS

A. Manufacturers:
   1. Siemens
   2. Square D
   3. General Electric
   4. Eaton – Cutler Hammer

B. Product Description: NEMA PB1, circuit breaker type, lighting and appliance branch circuit panelboard.

C. Panelboard Bus: Aluminum, current carrying components, ratings as indicated on Drawings. Furnish copper ground bus in each panelboard[; furnish insulated ground bus as indicated on Drawings].

D. For non-linear load applications subject to harmonics furnish 200 percent rated, plated copper, solid neutral.

E. Minimum Integrated Short Circuit Rating of: 10,000, 22,000, 65,000 amperes rms symmetrical for 240 volt panelboards; 14,000, 65,000 amperes rms symmetrical for 480 volt panelboards as indicated on Drawings.

F. Molded Case Circuit Breakers: NEMA AB 1, bolt-on type thermal magnetic trip circuit breakers, with common trip handle for all poles, listed as Type SWD for lighting circuits, Type HACR for air conditioning equipment circuits, Class A ground fault interrupter circuit breakers as indicated on Drawings. Do not use tandem circuit breakers.

G. Current Limiting Molded Case Circuit Breakers: NEMA AB 1, circuit breakers with integral thermal and instantaneous magnetic trip in each pole, coordinated with automatically resetting current limiting elements in each pole. Interrupting rating 100,000 symmetrical

amperes, let-through current and energy level less than permitted for same size NEMA FU 1, Class RK-5 fuse.

H. Enclosure: NEMA PB 1, Type 1 or Type 3R.

I. Cabinet Box: 6 inches deep, 20 inches wide for 240 volt and less panelboards, 6 inches deep, 20 inches wide for 480 volt panelboards.

J. Cabinet Front: Flush or Surface cabinet front with concealed trim clamps, concealed hinge, metal directory frame, and flush lock keyed alike. Finish in manufacturer's standard gray enamel.

PART 3 EXECUTION

3.1 INSTALLATION

A. Install panelboards in accordance with NEMA PB 1.1.

B. Install panelboards plumb.

C. Install recessed panelboards flush with wall finishes.

D. Height: 6 feet to top of panelboard install panelboards taller than 6 feet with bottom no more than 4 inches above floor.

E. Install filler plates for unused spaces in panelboards.

F. Provide typed circuit directory for each branch circuit panelboard. Revise directory to reflect circuiting changes to balance phase loads.

G. Install engraved plastic nameplates in accordance with Section 16075.

H. Install spare conduits out of each recessed panelboard to accessible location above ceiling. Minimum spare conduits: 5 empty 1 inch (DN27). Identify each as SPARE.

I. Ground and bond panelboard enclosure according to Section 16060. Connect equipment ground bars of panels in accordance with NFPA 70.

3.2 FIELD QUALITY CONTROL

A. Inspect and test in accordance with NETA ATS, except Section 4.

B. Perform circuit breaker inspections and tests listed in NETA ATS, Section 7.6.

C. Perform switch inspections and tests listed in NETA ATS, Section 7.5.

D. Perform controller inspections and tests listed in NETA ATS, Section 7.16.1.

3.3 ADJUSTING

A. Measure steady state load currents at each panelboard feeder; rearrange circuits in panelboard to balance phase loads to within 10% percent of each other. Maintain proper phasing for multi-wire branch circuits.

END OF SECTION

SECTION 16510

INTERIOR LUMINAIRES

PART 1 GENERAL

1.1 SUMMARY

A. Section includes interior luminaires, lamps, ballasts, and accessories.

1.2 REFERENCES

A. American National Standards Institute:
1. ANSI C82.1 - American National Standard for Lamp Ballast-Line Frequency Fluorescent Lamp Ballast.
2. ANSI C82.4 - American National Standard for Ballasts-for High-Intensity-Discharge and Low-Pressure Sodium Lamps (Multiple-Supply Type).

1.3 SUBMITTALS

A. Shop Drawings: Indicate dimensions and components for each luminaire not standard product of manufacturer.

B. Product Data: Submit dimensions, ratings, and performance data.

C. Samples: Submit two color Charts of product colors illustrating luminaire finish color where indicated in luminaire schedule as requiring color selection.

1.4 QUALIFICATIONS

A. Manufacturer: Company specializing in manufacturing products specified in this section with minimum three years [documented] experience.

1.5 FIELD MEASUREMENTS

A. Verify field measurements prior to fabrication.

1.6 MAINTENANCE MATERIALS

A. Furnish two of each plastic lens type with 1 per 10 fixture installed.

B. Furnish 10% replacement lamps for each lamp installed.

C. Furnish 2 of each ballast type.

PART 2 PRODUCTS

2.1 INTERIOR LUMINAIRES

A. Product Description: Complete interior luminaire assemblies, with features, options, and accessories as scheduled.

2.2 FLUORESCENT BALLASTS

A. Manufacturers:
1. Cooper Industries Inc.
2. General Electric Co.
3. Hubbell Lighting.
4. Magnetek Inc.
5. Philips Electronic North America.

B. Product Description: Electronic ballast rapid start or instant start less than 20 percent THD High-power-factor type electromagnetic ballast certified by Certified Ballast Manufacturers, Inc. to comply with ANSI C82.1], suitable for lamps specified, with voltage to match luminaire voltage.

2.3 HIGH INTENSITY DISCHARGE (HID) BALLASTS

A. Manufacturers:
1. General Electric Co.
2. Philips Electronics North America
3. Radiant Lamp Co.
4. Siemens Corp.
5. Venture Lighting International Inc

B. Product Description: ANSI C82.4, metal halide high pressure sodium lamp ballast, suitable for lamp specified, with voltage to match luminaire voltage.

2.4 INCANDESCENT LAMPS

A. Manufacturers:
1. General Electric Co.
2. Osram Sylvania
3. Philips Electronics North America

2.5 FLUORESCENT LAMPS

A. Manufacturers:
1. General Electric Co.
2. Philips Electronics
3. Venture

2.6 HID LAMPS

A. Manufacturers:
1. General Electric Co.
2. Philips Electronic North America
3. Venture
4. Osram/Sylvania

PART 3 EXECUTION

3.1 INSTALLATION

A. Install suspended luminaires using pendants supported from swivel hangers. Install pendant length required to suspend luminaire at indicated height.

B. Support luminaires larger than 2 x 4 foot (600 x 1200 mm) size independent of ceiling framing with 12 GA wires one in each corner.

C. Locate recessed ceiling luminaires as indicated on Drawings in coordination with architects reflected ceiling plan and mechanical drawings.

D. Install surface mounted luminaires plumb and adjust to align with building lines and with each other. Secure to prevent movement.

E. Exposed Grid Ceilings: Support surface-mounted luminaires on grid ceiling directly from building structure Install auxiliary members spanning ceiling grid members to support surface mounted luminaires Fasten surface mounted luminaires to ceiling grid members using bolts, screws, rivets, or suitable clips.

F. Install recessed luminaires to permit removal from below.

G. Install recessed luminaires using accessories and firestopping materials to meet regulatory requirements for fire rating.

H. Install clips to secure recessed grid-supported luminaires in place.

I. Install wall-mounted luminaires at height as indicated on Drawings provide all necessary backing for support and mounting of the fixture.

J. Install accessories furnished with each luminaire.

K. Connect luminaires to branch circuit outlets provided under Section 16130 using flexible conduit as indicated on Drawings.

L. Make wiring connections to branch circuit using building wire with insulation suitable for temperature conditions within luminaire.

M. Install specified lamps in each luminaire per schedule.

N. Ground and bond interior luminaires in accordance with Section 16060.

3.2 FIELD QUALITY CONTROL

A. Operate each luminaire after installation and connection. Inspect for proper connection and operation.

3.3 CLEANING

A. Remove dirt and debris from enclosures.

B. Clean photometric control surfaces as recommended by manufacturer.

C. Clean finishes and touch up damage.

3.4 PROTECTION OF FINISHED WORK

A. Relamp luminaires having failed lamps at Substantial Completion.

END OF SECTION

SECTION 16520

EXTERIOR LUMINAIRES

PART 1 GENERAL

1.1 SUMMARY

A. Section includes exterior luminaries, poles, and accessories.

1.2 REFERENCES

A. American National Standards Institute:
1. ANSI C82.1 - American National Standard for Lamp Ballast-Line Frequency Fluorescent Lamp Ballast.
2. ANSI C82.4 - American National Standard for Ballasts-for High-Intensity-Discharge and Low-Pressure Sodium Lamps (Multiple-Supply Type).
3. ANSI O5.1 - Wood Poles, Specifications and Dimensions.

1.3 SUBMITTALS

A. Shop Drawings: Indicate dimensions and components for each luminaire not standard Product of manufacturer.

B. Product Data: Submit dimensions, ratings, and performance data.

C. Samples: Submit two color Charts of product colors illustrating luminaire finish color where indicated in luminaire schedule as requiring color selection.

D.

1.4 QUALIFICATIONS

A. Manufacturer: Company specializing in manufacturing products specified in this section with minimum three years [documented] experience.

1.5 DELIVERY, STORAGE, AND HANDLING

A. Store and handle solid wood poles in accordance with ANSI O5.1.

PART 2 PRODUCTS

2.1 LUMINARIES

A. Product Description: Complete exterior luminaire assemblies, with features, options, and accessories as scheduled.

2.2 FLUORESCENT BALLASTS

A. Manufacturers:
1. General Electric Co.
2. Magnetek Inc.
3. Philips Electronic North America Model.

B. Product Description: [High-power-factor type electromagnetic ballast certified by Certified Ballast Manufacturers, Inc. to comply with ANSI C82.1], suitable for lamps and environmental conditions specified, with voltage to match luminaire voltage.

2.3 LAMPS

A. Manufacturers:
1. General Electric Co.
2. Philips Electronics North America.
3. Osram Sylvania
4. Venture

PART 3 EXECUTION

3.1 EXAMINATION

A. Verify foundations are ready to receive fixtures.

3.2 INSTALLATION

A. Install concrete bases for lighting poles at locations as indicated on Drawings.

B. Install poles plumb double nuts to adjust plumb. Grout around each base.

C. Install lamps in each luminaire.

D. Bond and ground luminaries, metal accessories and metal poles.

3.3 FIELD QUALITY CONTROL

A. Operate each luminaire after installation and connection. Inspect for improper connections and operation.

3.4 ADJUSTING

A. Aim and adjust luminaries to provide illumination levels and distribution as indicated on Drawings.

3.5 CLEANING

A. Clean photometric control surfaces as recommended by manufacturer.

B. Clean finishes and touch up damage.

3.6 PROTECTION OF FINISHED WORK

A. Relamp luminaries having failed lamps at Substantial Completion.

END OF SECTION

SECTION 16740

TELEPHONE/DATA RACEWAY SYSTEM

PART 1 - GENERAL

1.1 SUMMARY:

A. Section Includes:
1. Conduit supports.
2. Formed steel channel.
3. Spring steel clips.
4. Sleeves.
5. Mechanical sleeve seals.
6. Firestopping relating to electrical work.
7. Firestopping accessories.
8. Fire Retardant Telephone Terminal Boards

1.2 RELATED SECTIONS AND DOCUMENTS:

A. Drawings and general provisions of the Contract, including General and Supplementary Conditions and Division 1 Specification Sections, apply to this and ALL other sections of Division 16

B. Equipment requiring rough-ins and/or connections by Division 16 may be shown on the architectural drawings and/or specified in Sections 1 through 15 Division 16 is responsible for these rough-ins and/or connections whether shown on the electrical drawings or not.

1.3 DESCRIPTION OF WORK:

A. The extent of telephone system work is indicated by drawings and is hereby defined to include, but not be limited to raceway, outlets, device plates, backboards, grounding and miscellaneous items required for complete raceway system. All cabling is to be installed by the State Department of Information Technology Services (ITS).

B. Refer to other Division-16 sections for requirements for raceways, trays, boxes and fittings, wiring devices (plates), and supporting devices, and other sections, as applicable.

1.4 QUALITY ASSURANCE:

A. Comply with applicable portions of NEC as to type products used and installation of components. Provide products and materials which have been UL-listed and labeled.

PART 2 - PRODUCTS

2.1 GENERAL:

A. Provide complete raceway system for telephone including but not limited to, raceway, boxes, outlet and blank plates, backboards, grounding and miscellaneous items as required.

B. Provide 4" square box with appropriate plaster or tile ring.

C. Provide telephone coverplates for wall outlets to match color and material of wiring device plates; for floor outlets, match color and material of floor power outlet covers.

D. Provide fire treated, or hypalon coated plywood terminal backboards, 4' x 8' x ¾" unless noted otherwise.

E. Provide terminal cabinets of code gauge steel, flush or surface, as indicated, with concealed trim clamp, concealed hinges and flush lock, with gray baked enamel finish to match finish of panelboard covers. Construct back boxes of code gauge galvanized steel with removable end walls.

PART 3 - EXECUTION

3.1 INSTALLATION OF TELEPHONE SYSTEM RACEWAY:

A. Install raceway system as indicated to comply with NEC and recognized industry practices. Install a ¾" conduit from **each** telephone, data or combination telephone/data outlet to telephone/data terminal backboard, tray, or terminal cabinet unless otherwise noted on the drawings. Provide nylon pull cord in all empty raceway.

B. GROUNDING: Provide one #6 copper ground conductor from the Main Distribution Frame (MDF) and each Intermediate Distribution Frame (IDF) telephone terminal board to the service entrance ground. Enclose in suitable raceway for entire length. Provide a copper ground terminal buss at each telephone board with minimum of (6) Six terminal lugs to receive minimum of #10 ground conductor. Make connection at service entrance ground. See drawings for additional requirements.

C. POWER: Provide minimum of one duplex power receptacle on a dedicated circuits adjacent to each terminal backboard or cabinet. Provide additional outlets and circuits as shown or detailed on the drawings.

END OF SECTION 16740

PEPG ENGINEERING, L.L.C.

Civil Engineering
Land Surveying
Wetlands
Land Planning
Environmental
Construction
Services

GEOTECHNICAL STUDY

UDOT MAINTENANCE FACILITY
Scofield, UT

PREPARED FOR:

DFCM
4110 State Office Building
Salt Lake City, UT 84114

JOB NO.: 6822.0812

December 22, 2008

P:\6822.0812\cm\geo report - udot.doc

8805 Sandy Parkway • Sandy, Utah 84070 • Telephone (801) 562-2521 • Fax (801) 562-2551

TABLE OF CONTENTS
JOB NUMBER: 6822.0812

1.0	LIMITATIONS	1
2.0	SUMMARY	1
3.0	SITE OVERVIEW	2
4.0	CONCLUSIONS	2 - 3
5.0	ANALYSIS	3
6.0	TESTING	4
7.0	TESTING CONCLUSIONS	4 - 7
8.0	LIQUEFACTION POTENTIAL	7 - 9
9.0	STRUCTURE	9 - 10
	APPENDIX	

Geotechnical Study
UDOT Maintenance Facility
Scofield, Utah

1.0 LIMITATIONS

This report was prepared pursuant to The Utah Department of Transportation's desire to construct a new maintenance facility for UDOT (Utah Department of Transportation).

The geologic observations, findings, conclusions and recommendations presented in this report are based on (1) data from published and unpublished sources available at the time of study, (2) geological reconnaissance conducted at the project site, and (3) subsurface explorations of the parcel. The services provided by PEPG Engineering, LLC were performed according to generally accepted principals and standard practices used by members of the geotechnical profession in this locale at the time of this study.

It must be recognized that subsurface geologic conditions vary from place to place and from those found at locations where measurements or surveys are made by the investigator. No warranty or representation, either expressed or implied, is or should be construed regarding geologic conditions at locations other than those evaluated as part of this study.

The professional opinions, conclusions, and recommendations presented in this report relate only to the specific project and locations specified in this report. If any changes are made in this project, the conclusions and/or recommendations in the report will not be considered valid unless the changes are reviewed and the conclusions and recommendations of this study are modified and approved in writing by PEPG Engineering, LLC.

2.0 SUMMARY

It is our understanding that a UDOT Roadway Maintenance Facility will be constructed on the site. We understand that an asphalt surface will be created on the property for access and visitor parking, and concrete surfaces will be constructed in the maintenance buildings where trucks have access.

3.0 SITE OVERVIEW

The proposed project is located to the south of Highway U.S. 6, in the township of Scofield, Utah. The soil on the property, within the footprint of the proposed new structure, is comprised of 6 inches of asphalt surface overlying up to 12 inches of base gravel. The soil under the base gravel is fine-grained clay containing fine sand. It exhibits the pinhole structure common to collapsible soils, and extends to a depth of 5+ feet below the existing ground surface. From 5+ feet below the existing ground surface to the full depth of the excavated test pit (96 inches), the soil encountered was comprised of granular material, with a maximum rock size of 4 inches. Near the 5 foot elevation; the maximum rock size increases with depth to a maximum 8 inches at 8 feet below the existing ground surface. The granular material also contained sand, silt and some clay, a material that can be used as structural fill on the site. With the exception of the asphalt and base gravel layers, the soil appears to be native to the site. The collapsible soil has not settled to any great extent, but the loading on the site has been minimal. The construction of the building(s) proposed for the site will cause loading of the collapsible soil to the extent that movement will occur. Following the recommendations put forth in this document, the possibility of structural movement within the proposed site development will be mitigated.

The test pit encountered no ground water, nor evidence of groundwater. The ground water on the property is anticipated to be at a depth that will not have an impact on the proposed new construction.

The test pit was backfilled and the fill tamped into place using the backside of the bucket on the trackhoe employed to do the excavating. This was performed as a safety precaution, returning the ground surface to its original state, and to re-establish the surface where the asphalt is located. The site is currently a UDOT facility and is active, with trucks moving onto and off of the property. The currently planned project is to provide upgraded facilities for the use of UDOT.

4.0 CONCLUSIONS

a. The site will support the proposed end use provided recommendations contained in this report are adhered to.

b. The material on the site is comprised of up to 6 inches of asphalt underlain by sandy, silty clay extending to a maximum 66 inches below the existing ground surface. From 66 inches to 96 inches below existing ground level, the soil encountered is granular, with the size of rock in the soil increasing with depth. The granular soil appears to extend beyond the depth of the test pit. Groundwater is not an issue on this site.

c. The native materials at the anticipated footing elevation are not adequate to support the structural loads for the proposed construction. Structural fill must be placed and compacted as a support for the footings as specified in this report. If the recommended specifications are adhered to, the maximum allowable soil bearing pressure will be **1,950 PSF**.

d. The bottom of footing elevation should be sited to place the footings below the frost line.

e. Proper drainage should be included as part of the final surface development around the proposed structure(s).

f. Under paved surfaces it will be necessary to restore the material placed for the support of asphalt. This will require a 12 inch layer of structural fill, followed by a 6 inch layer of UTBC (untreated base course gravel), compacting the UTBC fully, and placing a 4 inch layer of HMA (hot mix asphalt) over the base gravel, placed as two 2 inch layers of minus ¾ inch HMA (hot mix asphalt).

5.0 ANALYSIS

The screen analysis for the bulk sample collected from the test pit at an elevation 3 feet below the existing ground surface shows this material to be fine-grained soil. By definition, where more than 50% of a sample passes the number 200 sieve, it is classified as fine-grained. The bulk sample collected at an elevation of 7 feet below the existing ground surface shows this material to be coarse grained, with less than 50% passing the number 200 sieve. Atterberg limits were established for the samples tested in the PEPG laboratory (ASTM D-2487). The test samples are entirely devoid of any organic constituents. The native soils extant on the site are thus identified as:

	Group Symbol	Group Name
Sample 1 (@ 3')	CL-ML	Sandy, silty clay
Sample 2 (@ 7')	GC	Well graded gravel with clay and sand

The general overall lay of the site, with checks on other native soil exposures, provides a high level of confidence the native soils described above, from separate layers in the soil column, are valid for the entirety of the property included in this report. The sandy, silty clay is a collapsible soil, and will vary over the site in the amount of collapse that can be expected. The well graded gravel with clay and sand can be used as structural fill. Placing footings on this material will require no remediation of the soil.

6.0 TESTING

The samples collected from the site were tested, and then analyzed, in the PEPG Engineering facilities. These tests comprised of:

a) Full gradation analysis (ASTM C 136 & C 117).
b) Determination of the Atterberg limits (ASTM D 4318).
c) Determining the Proctor number for the native soil.
Developing the equivalent hammer blows to drive a 3 inch sampling tube into the native soil. This number is used to determine the absolute load bearing capacity of the native soil.

7.0 TESTING CONCLUSIONS

Footings:

The material excavated from the test pit was not fully consolidated to a depth of 66 inches below the existing ground level. The native material below the 66 inch elevation provided no physical evidence for potential collapse. The top 12 inches comprised base course gravel capped by HMA (hot mix asphalt). The conditions will require the placement of structural fill for the support of footings should the decision be made to site the footings in the native soil above the 66 inch elevation below the existing ground surface. In this case, the footing excavation should be over excavated by 18 inches and brought back to footing sub grade using granular fill material (material containing minus 4 inch rock with less than 15% passing the number 200 sieve). The native soil excavated from the building site can be placed as fill under footings, provided the material is moisture conditioned to within ±2% of optimum moisture content, then placed in lifts not to exceed 1 foot in thickness and fully compacted to 95% of maximum dry density. This will **provide a load bearing capacity of 1450 PSF**. The proposed structure(s) for the site can be designed to use the 1450 PSF load bearing capacity, but this will require the design of larger than normal footings to not exceed the capacity of the soil. The better option is to over excavate the collapsible soil to a depth of 18 inches below the footing sub grade, scarify the exposed native soil in the bottom of the excavation, moisture condition the native soil, then re-compact the native soil to 95% of maximum dry density. The over excavated, and remediated, areas under footings should be filled with granular material consisting of minus 4 inch rock, well graded, with less than 15% passing the number 200 sieve. The granular fill should be a minimum of 18 inches in total depth under footings, placed in 9 inch lifts. **Each lift should be compacted to refusal. This will create the bridging necessary to achieve a 1950 PSF soil bearing capacity.** This option will not require oversized footings to keep the soil loading within the

load bearing capacity of the soil. Care must be taken in placing the structural fill in the bottom of the footing excavation, the material must be worked to assure interlocking of the larger rock in the structural fill.

If the option of removing the 66 inches of collapsible native soil from the footing areas is selected as the desired option, no remediation of the soil is required, the granular material native to the site below the 66 inch elevation below existing ground surface will provide the same load bearing capacity as the remediated soil where 18 inches of granular fill has been placed and compacted over prepared fine-grained soil.

Footings Minimum Requirements

Footing sub Grade (Native Soils)	Compacted structural fill (or equivalent) Thickness in inches
Sandy, silty clay	18" minimum of minus 4" structural fill containing less than 15% fines (sufficient to bring the excavation grade to bottom of footing elevation) to provide a load bearing capacity of 1950 PSF
Well graded gravel with sand and clay	Where the excavation is taken to a depth of 66+ inches, no remediation of the native soil is required

Floor/Truck Bearing Slabs:

We recommend a minimum of four inches of gravel be placed under non-truck bearing concrete slabs to assure uniform distribution of loads. The native soil, prior to the placement of gravel, must be free of all organic material and should be compacted to 95% of maximum dry density at ±2 % of optimum moisture (ASTM D-1557). The areas on the site that will have slabs that are not subject to active truck traffic should have the top 12 inches, the asphalt and base gravel (where it exists) removed, and the top 12 inches of the collapsible, native, soil scarified to a depth of 12 inches, moisture conditioned to ±2% of optimum moisture, then re-compacted to 95% of maximum dry density. The surface should be brought to floor slab sub grade by placing 9 inches of granular fill (minus 4 inch material with less than 15% passing a number 200 sieve), compacting the granular fill, then capping the fill with a minimum of 4 inches of ¾ inch gravel. The gravel will allow the stresses in the slab, created during the placement and curing process, to dissipate. The gravel will also provide a moisture barrier under the floor slab(s), (IBC 2006).

In areas where large trucks will be parked on, or move over, concrete surfaces, the base for the concrete should be prepared with a base of 12 inches of structural fill, placed on fully compacted native soil, and compacted to 95% of maximum dry density at ±2% of optimum moisture. The structural fill should be overlain by 8

inches of UTBC, fully compacted to 95% of maximum dry density at ±2% of optimum moisture content. The UTBC will serve as a moisture barrier, preventing vertical wicking of water into the slab (International Building Code, 2006). The concrete used in areas where trucks will be parked, or will move over the surface, will be a minimum 5,000 psi compressive strength concrete (28 day break) placed 8 inches thick with epoxy coated number 4 reinforcing bars placed 12 inches on center both ways. Expansion control joints should be cut on 6 foot centers, both ways, after the concrete has attained a full set (after 7 days).

Floor Slab Minimum Requirements

Floor slab sub grade (Native Soils)	Imported Fill
Silt, clay and sand	9 inches of minus 4 inch structural fill
	Minimum of 4 inches of ¾ inch gravel placed over the granular fill

Truck Bearing Concrete Surfaces

Pavement Type	Sub Grade Soil Type	Structural Fill (inches)	Base Gravel (inches)	Concrete Thickness (inches)
Concrete (5,000 psi compressive strength)	Clay, Sand with Silt and Gravel	12 inches minimum (after compaction)	8 inches (after compaction)	8 inches

Exterior Concrete:

Compaction of materials under exterior concrete flatwork (sidewalks, etc.) should be 95% of maximum density (ASTM D-1557). Under no circumstances should construction of any type be conducted using organic material (topsoil) as the substrata. Topsoil should be limited to use as a final grading material around completed structures. Backfill around foundation walls should be compacted to 95% of maximum density and should be devoid of topsoil or other organic materials (ASTM D-1557). The native, collapsible, soil can be used for backfill provided it is moisture conditioned and compacted to 95% of maximum dry density.

Asphalt Surfaces:

The parking and access areas should be constructed according to acceptable engineering practice.

Asphalt Surfaces Minimum Requirements

Pavement sub grade Soil Type	Compacted Asphalt Thickness (in)	Compacted Road Base Thickness (in)	Structural Fill Minimum (in)
Clay, Sand with Silt and Gravel	4 (placed in two 2" lifts)	8	12

In paved parking and access areas the existing top surface should be removed completely. The parking and access areas should then be brought to within 10 inches of final grade using imported structural fill (minimum depth 12"). The fill under the existing asphalt can be used, provided it can be salvaged and kept from contamination prior to re-use. The largest rock in this imported fill should not exceed four inches and the fines (passing a number 200 sieve) should not exceed 15%.

When the structural fill is placed and fully rolled (compacted), it should be required to pass a deflection test. When the structural fill is satisfactorily compacted, 8 inches of road base should be placed and compacted to 95% of maximum density with moisture content at ±2% of optimum. The 4-inch asphalt layer should consist of two 2" layers of minus ¾ inch hot mix asphalt, compacted to 95% of maximum density. (based on 50 blow Marshall number). The granular fill and the road base should also underlay any curb structure.

8.0 LIQUEFACTION POTENTIAL

Seismic Design

No faults or other geologic discontinuities are known to traverse the proposed building site. The nearest potentially hazardous geologic feature is the fault system to the west of the site, comprised of minor faults existing in the Wasatch Mountain Range east of the Wasatch Fault. These mountain faults are the result of the upward movement of the ground during the forming of the mountain range, a geological event known as the Laramide Orogeny. These faults are minor and will not provide a major seismic threat until the Wasatch Fault produces a seismic event. The potential for damage at the UDOT property is no more severe than for the west front of the Wasatch Mountain Range. The potential for damage is reflected in the Spectral Response Acceleration number contained in this report. The existing moisture of the substrata materials on the property is in the range of 12.2% to 17.0%. The soil on the site is comprised of 12 inches of asphalt and base gravel (combined), underlain by imported granular fill to a depth of 12

inches. The native soil, to a depth of 66 inches, is comprised of brown, sandy silt that has substantial pinholes and collapses when moistened with a vertical load applied. The collapsible soil, from 66 inches below the existing ground surface to a depth of 8 feet (the depth of the test pit), the native material is comprised of granular material, minus 3 inch material near the 66 inch elevation, and increasing to minus 8 inch material at 8 feet below the existing ground surface. The granular material is dense and well consolidated, and presented some difficulty for the small trackhoe employed for sampling. The test pit was terminated at the 8 foot depth due to difficulty in excavating the larger sized granular material encountered.

Spectral Response Acceleration

The summary of the site parameters according to IBC 2006 is as follows:

a) Site Class	D
b) Short Period Spectral Response Acceleration, Ss	0.765 g
c) One Second Period Spectral Response Acceleration, S1	0.381 g

The spectral response accelerations are taken from the USGS calculated values for the areas of the United States. They vary across even small incremental distances, and are called up using GPS coordinates. The full printout, from zero to 2 seconds, is included as part of the appendix along with the conditions used by the USGS in their calculations. A graphical definition of the spectral response acceleration is also included in the appendix.

Factor of Safety – Liquefaction

The printout of the methodology and calculations used by PEPG to develop the factor of safety against liquefaction are included in the appendix, both mathematical equations and input data. This system is based on the energy release concept put forth by Gutenberg-Richter that allows computation of the demand function; i.e., the loading applied to in-place soils by the release of seismic energy as a function of the Richter number and distance from the hypocenter of the energy release. The methodology also addresses the capacity function; i.e., the ability of soil to absorb the energy applied by a seismic event using the strength of the soil as measured by the number of hammer blows required to drive a sampling tube, or other sampling device, into the soil. The NCEER provides the formula required to adjust the hammer blows for the length of rod, depth of hole, size and type of sampling equipment, borehole diameter and overburden pressure. The methodology employed by PEPG is one of several acceptable to the NCEER.

We have opted to not use the stress driven, or the strain driven, calculations for

potential for liquefaction because these methodologies employ a number of assumptions that cannot be quantified.

PEPG believes, as is also identified in print on the subject, that the subject of liquefaction is still an empirically developed system of calculation. Every system in use today is the result of observations of damage caused by the discharge of seismic energy. The methodology employed in the determination of liquefaction potential is not a precise calculation, it is simply the best available at this time.

Liquefaction Disclosure

PEPG's calculations, based on NCEER accepted methodology, do not vary from the results for liquefaction potential obtained using charts and graphs currently published and available. The conditions for liquefaction, primarily assumed to be the need for complete water saturation of the soil, clean sand, or non-plastic fines, do not occur on the UDOT property. Based on calculations performed by PEPG geotechnical engineers, and compared to known data for the area, **the liquefaction potential for the UDOT property must be considered to be moderate.** The proper use of structural fill, as recommended in this document,

will mitigate the potential for significant structural damage during a seismic event with a magnitude of 7.5, or less, as measured on the Richter scale.

The total maximum settlement of the structure during a seismic event, when using the structural fill system recommended, will be approximately 1 inch maximum with the potential for differential settlement of up to ½ inch.

9.0 STRUCTURE

PEPG makes the following recommendations:

a) Spread footings should be placed on fully leveled and compacted imported structural fill.

b) Footing and foundation design should use an allowable bearing capacity of 1950 PSF, provided structural fill is used, or the soil is excavated to the elevation of the native granular soil.

c) All deleterious material be cleared from the building site (i.e., the footprint of each structure).

d) Foundation walls on continuous footings should be reinforced both near the top and the bottom with steel sufficient to carry a 10-foot span.

e) All exterior footings should be placed below the frost line.

f) All interior footings should be sited a minimum of one foot below existing grade to assure they will not be seated on collapsible, or deleterious, soils.

g) The asphalt parking area must be excavated a minimum of 18 inches below existing grade (remove underlying organic soil) and the parking area be brought to final grade using imported, acceptable fill materials.

h) Vehicle load bearing concrete surfaces require a minimum 12 inch layer of structural fill, covered by 8 inches of UTBC, and 8 inches of 5,000 psi concrete as a top layer, with reinforcing steel bars 12 inches on center both ways in the concrete.

If these recommendations are adhered to, settlement will be within acceptable limits. The acceptable limits are a 1-inch settlement and a differential settlement of 0.5 inch for a 25-foot span.

We appreciate the opportunity to be of service on this project. If we can be of further assistance, do not hesitate to contact us.

Prepared by:

Thomas A. Paulsen, PhD
Geomechanical Engineer

Reviewed by:

Darwin L. Christensen, PE
Senior Engineer

REGISTERED PROFESSIONAL ENGINEER
3436
6-Jan-09
State of Utah
DARWIN L. CHRISTENSEN

APPENDIX

PEPG ENGINEERING, L.L.C.
8805 S. SANDY PARKWAY • SANDY, UT 84070
PHONE: (801) 562-2521 • FAX: (801) 562-2551

DECEMBER 8, 2008	6600.0818	TEST_HOLE-01
PLOT DATE:	PROJECT NUMBER	DRAWING FILE

PEPG ENGINEERING, L.L.C.

TEST PIT #1

Location No: One

ject:	Scofield UDOT Maintenance Station	Project No.:	6822.0812
ent:	DFCM	Date:	02-Dec-08
ation:	Railroad Ave & Highway 96	City/State:	Scofield, Utah
rator:	J. Smith	Logged by:	Jay Smith
ment:	Cat 330.5C - CR	Elevation:	

Graphic Log	Description
	0-6" asphalt pavement, 6"-12" depth, base gravel
	12"-24" Granular fill, tan in color
	24"-66", Brown, sandy silt (collapsible) 5-7 ft, equivalent hammer blows - 16
	66"-96", Granular, rock size increasing with depth
	9-11 ft, equivalent hammer blows - 36 **Note: No ground water encountered**

Notes:

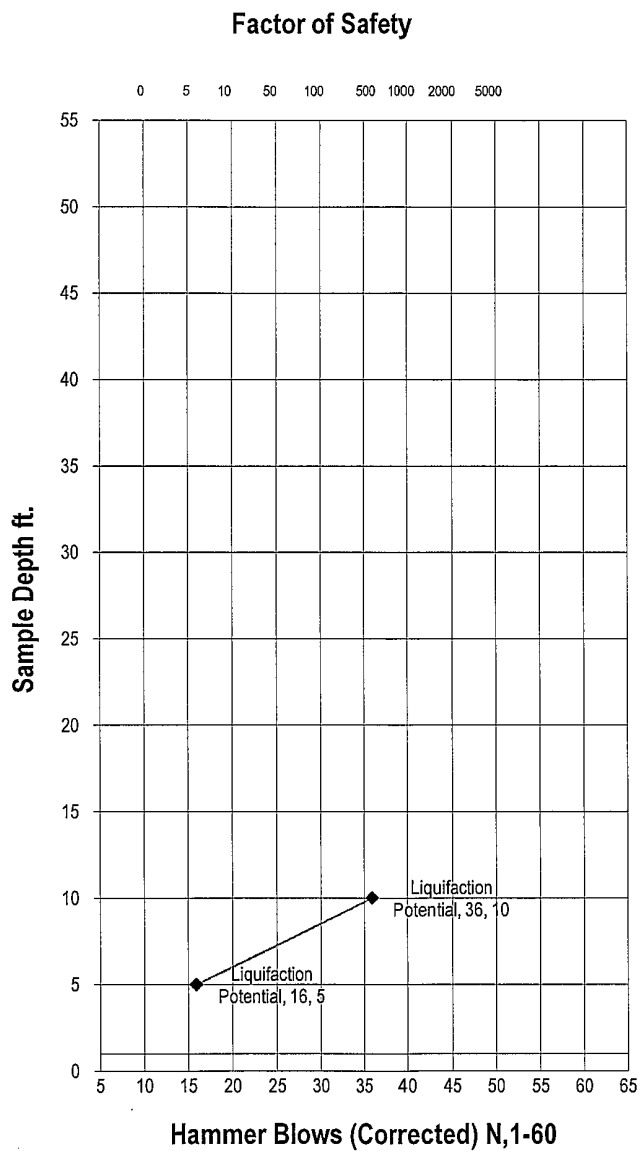

Liquifaction Potential	
Very Low	F.S. >500
Low	100 ≤F.S.≤500
Moderate	10 ≤F.S. ≤100
High	1 <F.S. <10
Very High	F.S. <1

PEPG ENGINEERING, L.L.C.

LIQUEFACTION POTENTIAL: Methodology, and calculations

Project Number:	6822.0812
Client/Project:	UDOT - Scofield
Sample Location:	Proposed UDOT Maintenance Facility - Test Pit #1
Depth:	4 ft

METHODOLOGY: GUTENBERG - RICHTER ENERGY RELATIONSHIP

MODIFIED BY LAW, CAO & HE (1990)

$$T = \frac{10^{1.5m}}{r^{4.3}}$$ **Demand**

m = Richter Number (7.5)
r = hypocenter distance (km) (Estimated to nearest known fault)
T = Seismic Energy Function, (Demand)

$$\eta, \text{sand} = 2.28\,(N\ 1\text{-}60)^{11.5} \times 10^{-10}$$

$$\eta, \text{silt} = 1.14\,(N\ 1\text{-}60)^{11.5} \times 10^{-9}$$

Capacity

N = Hammer Blows
η = Liquefaction Boundaries, (Capacity)

$$\text{Sand F.S.} = \frac{2.28 \times 10^{-10} \times (N\ 1\text{-}60)^{11.5} \times r^{4.3}}{10^{1.5m}}$$

$$\text{Silt F.S.} = \frac{1.4 \times 10^{-9} \times (N\ 1\text{-}60)^{11.5} \times r^{4.3}}{10^{1.5m}}$$

F.S. = Factor of Safety

Calculations:

Distance	**r:**
Hypocenter distance (km)	3.07

Boring Hammer Blows (sum)	**N**
Clean Sand:	36
Fine grained clay/Silt:	16

Corrected Hammer Blows	
Clean Sand:	160.2
Fine grained clay/Silt:	71.2

Seismic Energy Function, **Demand**
1429897759

Liquefaction Boundaries, **Capacity**
5146994831069030.00
2293109418750.64

*** Correction Factor:**	4.45

Sand F.S.	2024178.22

Silt F.S.	1107.50

*** Correction Factor NCEER (1997)**

1 Kilometer = 0.62 miles

421 West 12300 South, Suite 400 - Draper, Utah 84020 - Telephone (801) 562-2521 - Fax (801) 562-2551

PEPG ENGINEERING, L.L.C.

Sieve Analysis & Moisture Content
Lab Procedure: AASHTO T-11,T-27 / ASTM C117, C136

Project No:	6822.0812	Lab Sample #:	287
		Pan #:	0
Project:	Survey/Geotechnical Scofield UDOT Maintenance Station	Field Sample #:	0
Client:	DFCM	Station #:	3'
Roadway:	0	Sampled by:	Jay
Date Sampled:	02-Dec-08	Tested By:	Zach
Date Tested:	08-Dec-08	Reviewed By:	Jay
Material Use or Description:	Brown Sandy Silt		

Initial Sample Mass Wt.

Sample Wt. (g)	661.35

Sample Distribution

% Gravel	0.3
% Sand	30.7
% Silt & Clay (-200)	69.0

Classification

AASHTO M145:	A-4, Fair to Poor, Silty Soils
ASTM D2487:	CL-ML - Sandy, silty clay

Weights-Percentage

	Sieve Size	Weight Ret. (g.)	% Ret.	% Pass	% Retained Accumulation	Density Testing Note:
	150mm(6")	0.00	0	100	0	
ASTM D2487 Gravel	75mm(3")	0.00	0	100	0	
	63mm(2.5")	0.00	0	100	0	
	50mm(2")	0.00	0	100	0	
	37.5mm(1.5")	0.00	0	100	0	
	25mm(1")	0.00	0	100	0	
	19mm(3/4")	0.00	0	100	0	< 30, Note a;
	12.5mm(1/2")	0.00	0	100	0	
	9.5mm(3/8")	0.00	0	100	0	
	4.75mm(#4)	2.00	0	100	0	> 60, Note b:
Sand	2.36mm(#8)	2.40	0	99	1	
	2.00mm(#10)	0.70	0	99	1	> 65, Note b:
	1.18mm(#16)	2.70	0	99	1	
	.425mm(#40)	5.30	1	98	2	
	.300mm(#50)	5.60	1	97	3	
	.075mm(#200)	186.10	28.1	69.0	31.0	
Silt	Pan	37.20	5.6	63.4	36.6	
	Wash	419.35	63.4	0.0	100.0	
	Sum	661.35	100.00			

Fines: Loss/Gain (g) 0.00

T. Jay Smith, C.M.
Review by:

Note:

a: In accordance with ASTM D-1557 and AASHTO proctor testing shall be performed on materials if less than 30% of material is retained on the 3/4" sieve.

b: In accordance with UDOT testing guidelines and APWA section 02324 3.2,D.2. "No density determinations are required on any material containing more than 65% retained on the number 10 Sieve or more than 60-percent material retained on the number 4 sieve.

PEPG ENGINEERING, L.L.C.

AASHTO M-145 Classification

Project No.:	6822.0812
Client:	DFCM

Laboratory No.:	287
Liquid Limit:	0
Plastic Index:	0

Material:	Brown Sandy Silt

Table 1- Classification of Soils and Soil-Aggregate Mixtures

		Granular Materials (35 Percent or Less Passing 75 um)						Silt-Clay Materials (More Than 35 Percent Passing 75 um)							
	Actual %	A-1		A-3a		A-2		A-4		A-5		A-6		A-7	
Sieve	Pass	Target	A-1	Target	A-3a	Target	A-2	Target	A-4	Target	A5	Target	A6	Target	A-7
No 10	99.23	-	-	-	-	-	-	-	-	-	-	-	-	-	-
No 40	98.02	50 max	F	51 min	P	-	-	-	-	-	-	-	-	-	-
No. 200	69.03	25 max	F	10 max	F	35 max	F	36 min	P	36 min	P	36 min	P	36 min	P
Liquid Limit		-						40 max	P	41 min	F	40 max	P	41 min	F
Plasticity Index		6 max	P	NP	P	b		10 max	P	10 max	P	11 min	F	11 min	F
General Rating		Excellent to good						Fair to Poor							

b See Table 2 for values

Table 2- Classification of Soils and Soil-Aggregate Mixtures

		Granular Materials (35Percent or Less Passing 75um)													
	Actual %	A-1				A-3		A-2							
Sieve	Pass	Target	A-1-a	Target	A-1-b	Target	A-3	Target	A-2-4	Target	A-2-5	Target	A-2-6	Target	A-2-7
No 10	99.23	50 max	F	-	-	-	-	-	-	-	-	-	-	-	-
No 40	98.02	30 max	F	50 max	F	51 min	P	-	-	-	-	-	-	-	-
No. 200	69.03	15 max	F	25 max	F	10 max	F	35 max	F	35 max	F	35 max	F	35 max	F
Liquid Limit		-		-		-		40 max	P	41 min	F	40 max	P	41 min	F
Plasticity Index		6 max	P	6 max	P	NP	P	10 max	P	10 max	P	11 min	F	11 min	F
Types of materials		Stone Fragments, Gravel and sand				Fine Sand		Silty or clayey gravel and sand							
General Rating		Excellent to Good													

		Silt-Clay Materials (More Than 35 Percent Passing 75 um)							
	Actual %	A-4		A-5		A-6		A-7	
Sieve	Pass	Target	A-4	Target	A5	Target	A6	Target	A-7
No 10	99.23	-	-	-		-	-	-	-
No 40	98.02	-	-	-	-	-	-	-	-
No. 200	69.03	36 min	P	36 min	P	36 min	P	36 min	P
Liquid Limit		40 max	P	41 min	F	40 max	P	41 min	F
Plasticity Index		10 max	P	10 max	P	11 min	F	11 min	F
Types of materials		Silty Soils				Clayey Soils			
General Rating		Fair to Poor							

PEPG ENGINEERING, L.L.C.

Sieve Analysis & Moisture Content
Lab Procedure: AASHTO T-11,T-27 / ASTM C117, C136

Project No:	6822.0812	Lab Sample #:	288
		Pan #:	0
Project:	Survey/Geotechnical Scofield UDOT Maintenance Station	Field Sample #:	0
Client:	DFCM	Station #:	6-7'
Roadway:	0	Sampled by:	Jay
Date Sampled:	02-Dec-08	Tested By:	Zach
Date Tested:	09-Dec-08	Reviewed By:	Jay
Material Use or Description:	Tan 4"-minus Granular		

Initial Sample Mass Wt.

Sample Wt. (g)	19287.50

Sample Distribution

% Gravel	69.4
% Sand	20.4
% Silt & Clay (-200)	10.3

Classification

AASHTO M145:	A-1, Excelent to Good, Stone Fragments, Gravel and Sand
ASTM D2487:	GW-GC - Well graded gravel with clay and sand

Weights-Percentage

	Sieve Size	Weight Ret. (g.)	% Ret.	% Pass	% Retained Accumulation	Density Testing Note:
	150mm(6")	0.00	0	100	0	
ASTM D2487 Gravel	75mm(3")	2058.60	11	89	11	
	63mm(2.5")	1579.10	8	81	19	
	50mm(2")	723.40	4	77	23	
	37.5mm(1.5")	880.40	5	73	27	
	25mm(1")	2517.20	13	60	40	
	19mm(3/4")	1729.80	9	51	49	< 30, Note a;
	12.5mm(1/2")	1762.90	9	42	58	
	9.5mm(3/8")	794.00	4	38	62	
	4.75mm(#4)	1333.80	7	31	69	> 60, Note b:
Sand	2.36mm(#8)	431.11	2	28	72	
	2.00mm(#10)	98.50	1	28	72	> 65, Note b:
	1.18mm(#16)	291.70	2	26	74	
	.425mm(#40)	223.51	1	25	75	
	.300mm(#50)	484.91	3	23	77	
	.075mm(#200)	2395.75	12.4	10.3	89.7	
Silt	Pan	163.66	0.8	9.4	90.6	
	Wash	1819.16	9.4	0.0	100.0	
	Sum	19287.50	100.00			

Fines: Loss/Gain (g) 0.00

T. Jay Smith, C.M.
Review by:

Note:

a: In accordance with ASTM D-1557 and AASHTO proctor testing shall be performed on materials if less than 30% of material is retained on the 3/4" sieve.

b: In accordance with UDOT testing guidelines and APWA section 02324 3.2,D.2. "No density determinations are required on any material containing more than 65% retained on the number 10 Sieve or more than 60-percent material retained on the number 4 sieve.

PEPG ENGINEERING, L.L.C.

AASHTO M-145 Classification

Project No.:	6822.0812
Client:	DFCM

Laboratory No.:	288
Liquid Limit:	0
Plastic Index:	0

Material:	Tan 4"-minus Granular

Table 1- Classification of Soils and Soil-Aggregate Mixtures

		Granular Materials (35 Percent or Less Passing 75 um)						Silt-Clay Materials (More Than 35 Percent Passing 75 um)							
	Actual %	A-1		A-3a		A-2		A-4		A-5		A-6		A-7	
Sieve	Pass	Target	A-1	Target	A-3a	Target	A-2	Target	A-4	Target	A5	Target	A6	Target	A-7
No 10	27.89	-	-	-	-	-	-	-	-	-	-	-	-	-	-
No 40	25.22	50 max	P	51 min	F	-	-	-	-	-	-	-	-	-	-
No. 200	10.28	25 max	P	10 max	F	35 max	P	36 min	F	36 min	F	36 min	F	36 min	F
Liquid Limit		-						40 max	P	41 min	F	40 max	P	41 min	F
Plasticity Index		6 max	P	NP	P	b		10 max	P	10 max	P	11 min	F	11 min	F
General Rating		Excellent to good						Fair to Poor							

b See Table 2 for values

Table 2- Classification of Soils and Soil-Aggregate Mixtures

		Granular Materials (35Percent or Less Passing 75um)													
	Actual %	A-1				A-3		A-2							
Sieve	Pass	Target	A-1-a	Target	A-1-b	Target	A-3	Target	A-2-4	Target	A-2-5	Target	A-2-6	Target	A-2-7
No 10	27.89	50 max	P	-	-	-	-	-	-	-	-	-	-	-	-
No 40	25.22	30 max	P	50 max	P	51 min	F	-	-	-	-	-	-	-	-
No. 200	10.28	15 max	P	25 max	P	10 max	F	35 max	P	35 max	P	35 max	P	35 max	P
Liquid Limit		-		-		-		40 max	P	41 min	F	40 max	P	41 min	F
Plasticity Index		6 max	P	6 max	P	NP	P	10 max	P	10 max	P	11 min	F	11 min	F
Types of materials		Stone Fragments, Gravel and sand				Fine Sand		Silty or clayey gravel and sand							
General Rating		Excellent to Good													

		Silt-Clay Materials (More Than 35 Percent Passing 75 um)							
	Actual %	A-4		A-5		A-6		A-7	
Sieve	Pass	Target	A-4	Target	A5	Target	A6	Target	A-7
No 10	27.89	-	-	-		-	-	-	-
No 40	25.22	-	-	-	-	-	-	-	-
No. 200	10.28	36 min	F	36 min	F	36 min	F	36 min	F
Liquid Limit		40 max	P	41 min	F	40 max	P	41 min	F
Plasticity Index		10 max	P	10 max	P	11 min	F	11 min	F
Types of materials		Silty Soils				Clayey Soils			
General Rating		Fair to Poor							

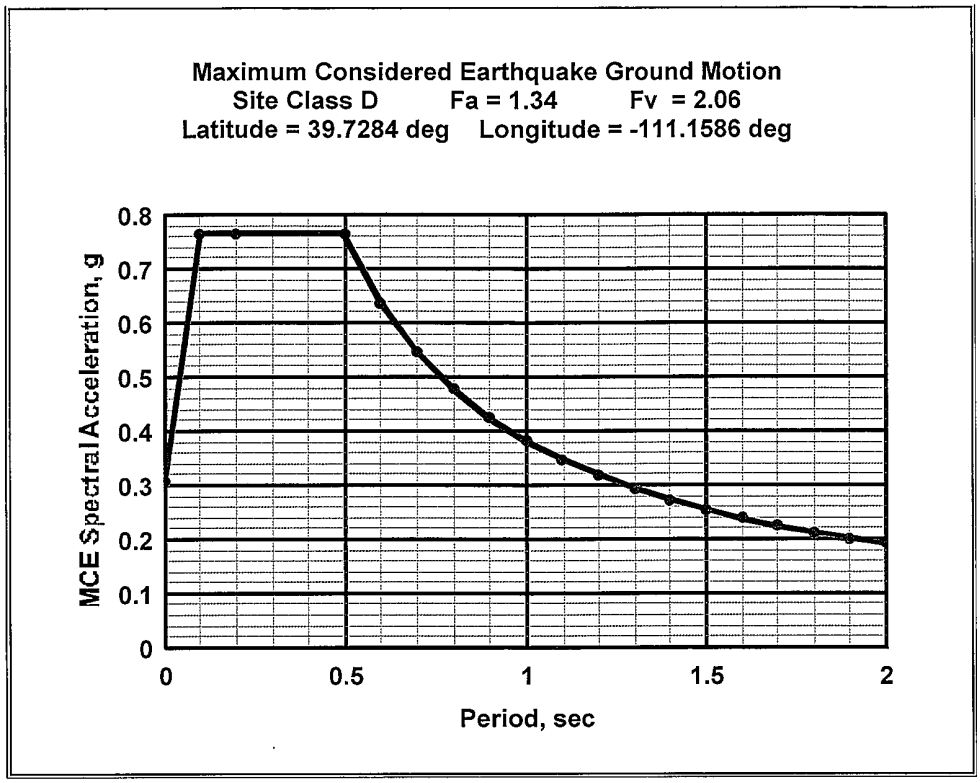

Period, sec	MCE Sa, g
0.00	0.306
0.10	0.765
0.20	0.765
0.50	0.765
0.50	0.763
0.60	0.636
0.70	0.545
0.80	0.477
0.90	0.424
1.00	0.381
1.10	0.347
1.20	0.318
1.30	0.293
1.40	0.272
1.50	0.254
1.60	0.238
1.70	0.224
1.80	0.212
1.90	0.201
2.00	0.191

UDOT Maintenance Shed, Scofield, Utah
Date and Time: 12/8/2008 5:08:14 PM

MCE Ground Motion - Conterminous 48 States
Latitude = 39.7284, Longitude = -111.1586

Period (sec)	MCE Sa (%g)	
0.2	057.1	MCE Value of Ss, Site Class B
1.0	018.5	MCE Value of S1, Site Class B

Spectral Parameters for Site Class D

0.2	076.4	Sa = FaSs, Fa = 1.34
1.0	038.1	Sa = FvS1, Fv = 2.06

Spectrum for Site Class D

Period (sec)	MCE Sa (%g)	
0.000	030.6	T = 0.0, Sa = 0.4FaSs
0.100	076.5	T = To, Sa = FaSs
0.200	076.5	T = 0.2, Sa = FaSs
0.499	076.5	T = Ts, Sa = FaSs
0.500	076.3	
0.600	063.6	
0.700	054.5	
0.800	047.7	
0.900	042.4	
1.000	038.1	T = 1.0, Sa = FvS1
1.100	034.7	
1.200	031.8	
1.300	029.3	
1.400	027.2	
1.500	025.4	
1.600	023.8	
1.700	022.4	
1.800	021.2	
1.900	020.1	
2.000	019.1	

ASTM D 2487

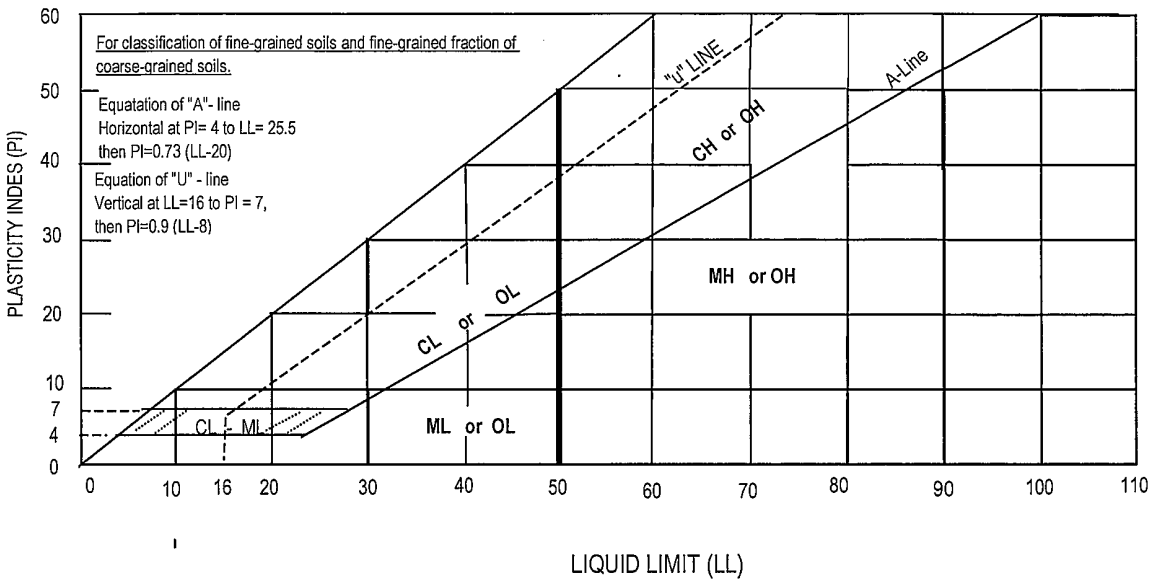

FIG.4 Plastiity Chart

PEPG ENGINEERING, L.L.C.

MAJOR DIVISIONS			GRAPH SYMBOLS	LETTER SYMBOL	TYPICAL DESCRIPTIONS	RELATIVE CBR (For compacted and soaked specimen)	comparable groups in AASHTO classification M-145	Value as foundation when not subject to frost action
COARSE GRAINED SOILS MORE THAN 50% OF MATERIAL IS LARGER THAN NO. 200 SIEVE	GRAVEL AND GRAVELLY SANDS MORE THAN 50% OF COARSE FRACTION RETAINED ON NO. 200 SIEVE	CLEAN GRAVELS (LITTLE OR NO FINES)		GW	WELL-GRADED GRAVELS, GRAVEL-SAND MIXTURES, LITTLE OR NO FINES	>50	A-3	EXCELLENT
				GP	POORLY-GRADED GRAVELS, GRAVEL-SAND MIXTURES, LITTLE OR NO FINES.	25-60	A-1	EXCELLENT
		GRAVELS WITH FINES (APPRECIABLE AMOUNT OF FINES)		GM	SILTY GRAVELS, GRAVEL-SAND-SILT MIXTURES	15-50	A-1	EXCELLENT
				GC	CLAYEY GRAVELS, GRAVEL-SAND-CLAY MIXTURES	>40	A-1	EXCELLENT
	SAND AND SANDY SOILS MORE THAN 50% OF COARSE FRACTION PASSING THE NO. 4 SIEVE AND RETAINED ON THE NO. 200 SIEVE.	CLEAN SAND (LITTLE OR NO FINES)		SW	WELL=GRADED SANDS, GRAVELLY SANDS, LITTLE OR NO FINES	20-60	A-3	EXCELLENT
				SP	POORLY=GRADES SANDS, GRAVELLY SAND, LITTLE OR NO FINES	10-30	A-3	GOOD
		SANDS WITH FINES (APPRECIABLE AMOUNT OF FINES)		SM	SILTY SANDS, SAND-SILT MIXTURES	20-60	A-2	EXCELLENT
				SC	CLAYEY SANDS, SAND-CLAY MIXTURES	20-60	A-1	EXCELLENT
FINE GRAINED SOILS MORE THAN 50% OF MATERIALS IS SMALLER THAN NO. 200 SIEVE	SILTS AND CLAYS (LIQUID LIMIT LESS THAN 50)			ML	INORGANIC SILTS AND VERY FINE SAND, ROCK FLOUR, SILTY FINE SAND OR CLAYEY SILTS	6-25	A-4	FAIR TO POOR
				CL	INORGANIC CLAYS OF LOW TO MEDIUM PLASTICITY, GRAVELLY OR SANDY OR SILTY CLAY. LEAN CLAY	4-15	A-4,A-6,A-7	FAIR TO POOR
				OL	ORGANIC SILTS AND ORGANIC SILTY CLAYS OF LOW PLASTICITY	3-8	A-4, A-7	POOR
	SILTS AND CLAYS (LIQUID LIMIT GREATER THAN 50)			MH	INORGANIC SILTS, MICACEOUS OR DIATAMACEOUS FINE SAND OR SILTY SOILS	<7	A-5	POOR TO VERY POOR
				CH	INORGANIC CLAYS OF HIGH PLASTICITY, FAT CLAYS	<6	A-6, A7	POOR TO VERY POOR
				OH	ORGANIC CLAYS OF MEDIUM TO HIGH PLASTICITY, ORGANIC SILTS	<4	A-7	VERY POOR
HIGHLY ORGANIC SOILS				PT	PEAT, HUMUS, SWAMP SOILS WITH HIGH ORGANIC CONTENTS, DARK IN COLOR, and ORGANIC ODOR			EXTREMELY POOR

SOIL CHARACTERISTICS

TABLE 3-5. Engineering Characteristics of Soils According to the Unified Classification (Airfield) System†

(3)	(7)	(8)		(9)	(10)	(11)	(12)	(13)	(14)	(15)
Group sym-bols	Value as foundation when not subject to frost action	Value as wearing surface for stage or emergency construction		Potential frost action	Compressi-bility and expansion	Drainage characteris-tics ‡	Field compaction characteristics and equipment	Solids at optimum compaction lb/ft^3,§ and void ratio $_e$	California bearing ratio for compacted and soaked specimen	Comparable groups in AASHTO classification
		With dust palliative	With bituminous surface treatment							
GW	Excellent	Fair to poor	Excellent	None to very slight	Almost none	Excellent	Excellent; crawler tractor, rubber-tired equipment	>125 $_e$<0.35	>50	A-3
GC	Excellent	Excellent	Excellent	Medium	Very slight	Practically impervious	Excellent; tamping roller: ¶ rubber-tired equipment	>130 $_e$<0.30	>40	A-1
GP	Excellent	Poor	Poor to fair	None to very slight	Almost none	Excellent	Good to excellent; crawler tractor, rubber-tired equipment	>115 $_e$<0.45	25-60	A-3
GF	Good to excellent	Poor to good	Fair to Good	Slight to medium	Almost none to slight	Fair to practically impervious	Good to excellent; crawler tractor, rubber-tired equipment, tamping roller ¶	>120 $_e$<0.40	>20	A-2
SW	Excellent	Poor	Good	None to very slight	Almost none	Excellent	Excellent; crawler tractor, rubber tired equipment	>120 $_e$<0.40	20-60	A-3
SC	Excellent	Excellent	Excellent	Medium	Very slight	Practically impervious	Excellent; tamping roller, rubber tired equipment	>125 $_e$<0.35	20-60	A-1
SP	Good to excellent	Poor	Poor to fair	None to very slight	Almost none	Excellent	Good to excellent: crawler tractor, rubber-tired equipment	>100 $_e$<0.70	10-30	A-3
ML	Fair to poor	Poor		Medium to very high	Slight to medium	Fair to poor	Good to poor close control essential; rubber-tired roller	>100 $_e$<0.70	6-25	A-4
CL	Fair to poor	Poor		Medium to high	Medium	Practically impervious	Fair to good; tamping roller ¶	>100 $_e$<0.70	4-15	A-4: A-6 A-7
OL	Poor	Very poor		Medium to high	Medium to high	Poor	Fair to poor; tamping roller ¶	>90 $_e$<0.90	3-8	A-4 A-7
MH	Poor to very poor	Very poor		Medium to high	High	Fair to poor	Poor to very poor	>100 $_e$<0.70	<7	A-5
CH	Poor to very poor	Very poor		Medium	High	Practically impervious	Fair to poor; tamping roller ¶	>90 $_e$<0.90	<6	A-6 A-7
OH	Very poor	Useless		Medium	High	Practically impervious	Poor to very poor	>100 $_e$<0.70	<4	A-7
Pt	Extremely poor	Useless		Slight to medium	Very high	Fair to poor	Compaction not practical			

† From Casagrande (Ref. 49). See also Table 3-4. ‡ These characteristics do not apply to undisturbed materials having fissures and root holes, such as most surface soils. § These weights apply only to soils having specific gravities from 2.65 to 2.75.

PEPG ENGINEERING, L.L.C.

IBC 2006 REFERENCE TABLE 1610.1
SOIL LATERAL LOAD

DESCRIPTION OF BACKFILL MATERIAL	UNIFIED SOIL CLASSIFICATION	DESIGN LATERAL SOIL LOAD[a] (POUND PER SQUARE FOOT PER FOOT OF DEPTH)	
		Active pressure	At-rest pressure
Well-graded, clean gravels: gravel-sand mixes	GW	30	60
Poorly graded clean gravels: gravel-sand mixes	GP	30	60
Silty gravels, poorly graded gravel-sand mixes	GM	40	60
Clayey gravels, poorly grade gravel-and-clay mixes	GC	45	60
Well-graded clean sands; gravelly sand mixes	SW	30	60
Poorly graded clean sands; sand-gravel mixes	SP	30	60
Silty sands, poorly graded sand-silt mixes	SM	45	60
Sand-silt clay mix with plastic fines	SM-SC	45	100
Clayey sands, poorly graded sand-clay mixes	SC	60	100
Inorganic silts and clayey silts	ML	45	100
Mixture of inorganic silt and clay	ML-CL	60	100
Inorganic clays of low to medium plasticity	CL	60	100
Organic silts and silt clays, low plasticity	OL	Note b	Note b
Inorganic clayey silts, elastic silts	MH	Note b	Note b
Inorganic clays of high plasticity	CH	Note b	Note b
Organic clays and silty clays	OH	Note b	Note b

For SI: 1 pound per square foot per foot of depth = 0.157kPa/m, 1 foot = 304.8 mm.

a. Design lateral soil loads are given for moist conditions for the specified soils at their optimum densities. Actual field conditions shall govern. Submerged or saturated soil pressures shall include the weight of the buoyant soil plus the hydrostatic loads.

b. Unsuitable as backfill material.

c. The definition and classification of soil materials shall be in accordance with ASTM D2487

2006 INTERNATIONAL BUILDING CODE

TABLE 1804.2
ALLOWABLE FOUNDATION AND LATERAL PRESSURE

CLASS OF MATERIALS		ALLOWABLE FOUNDAITION PRESSURE (psf)[d]	LATERAL BEARING (psf/f below natural grade)[d]	LATERAL SLIDING	
				Coefficient of friction [a]	Resistance (psf)[b]
1.	Crystalline bedrock	12,000	1,200	0.7	▯
2.	Sedimentary and foliated rock	4,000	400	0.35	▯
3.	Sandy gravel and/or gravel (GW and GP)	3,000	200	0.35	▯
4.	Sand, silty sand, clayey sand, silty gravel and clayey gravel (SW, SP, SM, SC, GM and GC)	2,000	150	0.25	▯
5.	Clay, sandy clay, silty clay, clayey silt, silt and sandy silt (CL, ML, MH and CH)	1,500[c]	100	-	130

For SI: 1 pound per square foot = 0.0479 kPa, 1 pound per square foot per foot = 0.157 kPa/m.

a. Coefficient to be multiplied by the dead load.

b. Lateral sliding resistance value to be multiplied by the contact area, as limited by Section 1804.3.

c. Where the building official determines that in-place soils with an allowable bearing capacity of less than 1,500 psf are likely to be present at the site, the allowable bearing capacity shall be determined by a soils investigation.

d. An increase of one-third is permitted when using the alternate load combinations in Section 1605.3.2 that include wind or earthquake loads.

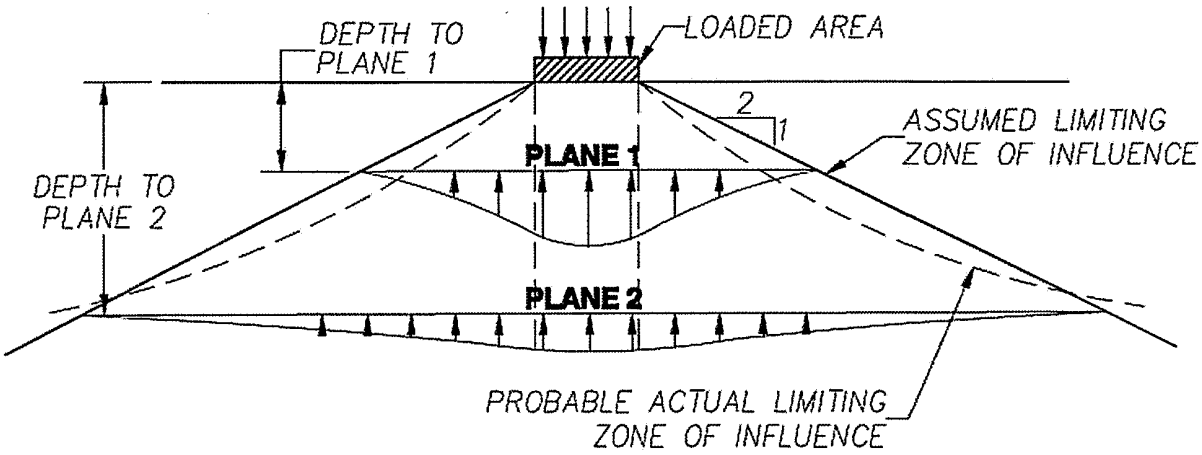
DEPTH TO
PLANE 1
LOADED AREA
2
1
ASSUMED LIMITING
ZONE OF INFLUENCE
PLANE 1
DEPTH TO
PLANE 2
PLANE 2
PROBABLE ACTUAL LIMITING
ZONE OF INFLUENCE

PEPG ENGINEERING, L.L.C.

Presumptive Bearing Capacity Values of Some Soils and Rocks,
$kg/cm^2 = ton/ft^2$

Material Description	Tons $ft.^2$
Clay, medium soft	1-1.5
Clay, dense	2
Clay, hard	5
Sand, loose	1
sand, fine	2
Sand, Coarse, dense	3
Gravel, dense	4-6
Rock, soft	8
Rock, medium hard	40
Rock, sound	60
Basalt, diabase, gneiss, traprock	20-100
Limestone	10-20
Marble	10-20
Sandstone	10-20
Shale	8-20

From: Jumiskis; Foundation Engineering; Intext Educational Publishers; ISBN 0-7002-231-8

TABLE 4-6

Mercalli-Cancani-Sieberg Earthquake Intensity Scale

Nature of intensity of Earthquake	Maximum Acceleration (Cancani). Cm/sec^2	Intensity Scale (Mercalli). Degrees	Remarks[21]	Seismic Factor $\lambda=a_{max}/g$. percent
Instrumental	<0.25	I	Microseismic tremors and shocks detectable by instruments only	<0.025
Very light	0.25-0.5	II	Noted only by a few sensitive people at rest	0.05-0.10
Light	0.5-1.0	III	Felt by people at rest: like passing truck	0.05-0.10
Perceptible or moderate	1.0-2.5	IV	Generally perceptible by people in motion: loose objects disturbed: glassware trembles: ceilings creak	0.1-0.25
Strong	2.5-5.0	V	Many awakened: dishes broken: bells rung: pendulum clocks stopped: oscillations of suspended objects	0.25-0.50
Very Strong	5.0-10.0	VI	Felt by all: some people frightened: damage slight: some plaster cracked: fall of objects: collapse of chimneys	0.5-1.0
Strongest	10.0-25.0	VII	Noticed by people in autos: damage to poor construction: light damage to brick buildings and light structures: light cracks in walls: falls of chimneys and tiles	1.0-2.5
Destructive	25.0-50	VIII	Chimneys fall: cracks in filled panel walls in steel lattice structures having no corner stiffeners: much damage in substantial buildings (1/4 of buildings): heavy furniture overturned	2.5-5.0
Devastating	50.0-100.0	IX a=(0.1)g	Great damage to substantial structures and to lattice-type steel structures (not frames): ground cracked : pipes broken	5-10
Disastrous	100.0-250.0	X	Crushing of column heads: many buildings (~3/4) destroyed: most of them collapse: rails bent: crevices in soil: damage to dams: landslides: light damage to aseismically designed steel and reinforced concrete structures	10-25
Catastrophic	250.0-500.0	XI	Few structures left standing: Damage to bridges and dams: wide cracks in ground: rock and landslides	25-50
Violent Catastrophe	500	XII	Total destruction of all structures: including foundations: nothing stands which is created by man's hands: ground deformations to a large extent: lakes run out: rivers are diverted	50

SEISMIC DESIGN CATEGORY

TABLE 1613.5.6(1)
SEISMIC DESIGN CATEGORY BASED ON SHORT-PERIOD RESPONSE ACCELERATIONS

VALUE OF S_{DS}	OCCUPANCY CATEGORY		
	I or II	III	IV
S_{DS} <0.167g	A	A	A
0.167g $\leq S_{DS}$ <0.33g	B	B	C
0.33g $\leq S_{DS}$ <0.50g	C	C	D
0.50g $\leq S_{DS}$	D	D	D

TABLE 1613.5.6(2)
SEISMIC DESIGN CATEGORY BASED ON 1-SECOND-PERIOD RESPONSE ACCELERATIONS

VALUE OF S_{DS}	OCCUPANCY CATEGORY		
	I or II	III	IV
S_{DS} <0.67g	A	A	A
0.067g $\leq S_{DS}$ <0.133g	B	B	C
0.133g $\leq S_{DS}$ <0.20g	C	C	D
0.20g $\leq S_{DS}$	D	D	D

INTERNATIONAL BUILDING CODE 2006

ASTM D 2487

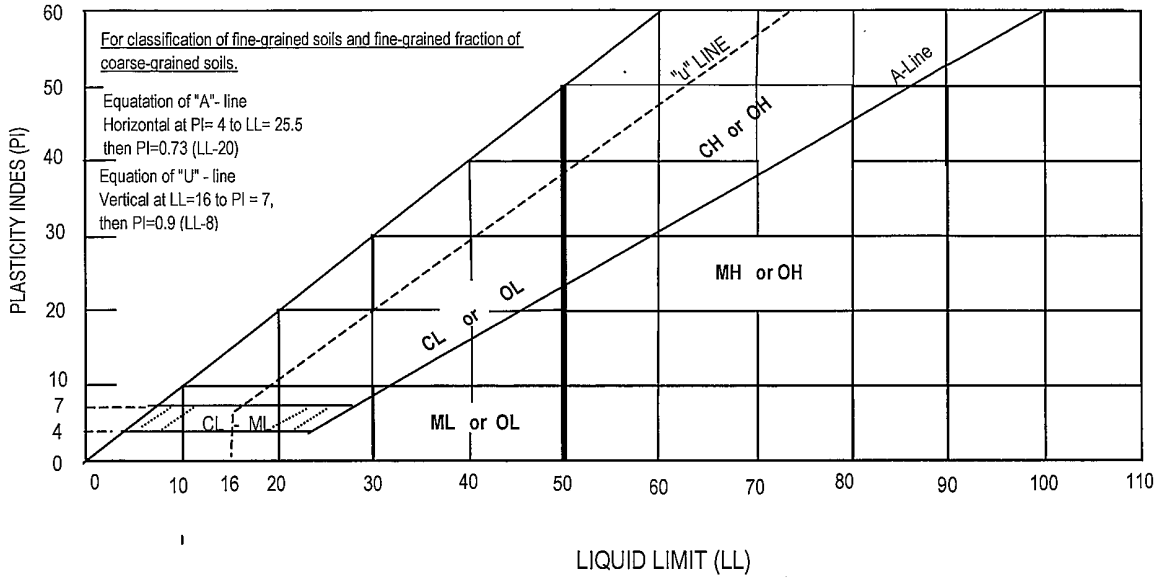

FIG.4 Plastiity Chart

PEPG ENGINEERING, L.L.C.

MAJOR DIVISIONS			GRAPH SYMBOLS	LETTER SYMBOL	TYPICAL DESCRIPTIONS	RELATIVE CBR (For compacted and soaked specimen)	comparable groups in AASHTO classification M-145	Value as foundation when not subject to frost action
COARSE GRAINED SOILS MORE THAN 50% OF MATERIAL IS LARGER THAN NO. 200 SIEVE	GRAVEL AND GRAVELLY SANDS MORE THAN 50% OF COARSE FRACTION RETAINED ON NO. 200 SIEVE	CLEAN GRAVELS (LITTLE OR NO FINES)		GW	WELL-GRADED GRAVELS, GRAVEL-SAND MIXTURES, LITTLE OR NO FINES	>50	A-3	EXCELLENT
				GP	POORLY-GRADED GRAVELS, GRAVEL-SAND MIXTURES, LITTLE OR NO FINES.	25-60	A-1	EXCELLENT
		GRAVELS WITH FINES (APPRECIABLE AMOUNT OF FINES)		GM	SILTY GRAVELS, GRAVEL-SAND-SILT MIXTURES	15-50	A-1	EXCELLENT
				GC	CLAYEY GRAVELS, GRAVEL-SAND-CLAY MIXTURES	>40	A-1	EXCELLENT
	SAND AND SANDY SOILS MORE THAN 50% OF COARSE FRACTION PASSING THE NO. 4 SIEVE AND RETAINED ON THE NO. 200 SIEVE.	CLEAN SAND (LITTLE OR NO FINES)		SW	WELL=GRADED SANDS, GRAVELLY SANDS, LITTLE OR NO FINES	20-60	A-3	EXCELLENT
				SP	POORLY=GRADES SANDS, GRAVELLY SAND, LITTLE OR NO FINES	10-30	A-3	GOOD
		SANDS WITH FINES (APPRECIABLE AMOUNT OF FINES)		SM	SILTY SANDS, SAND-SILT MIXTURES	20-60	A-2	EXCELLENT
				SC	CLAYEY SANDS, SAND-CLAY MIXTURES	20-60	A-1	EXCELLENT
FINE GRAINED SOILS MORE THAN 50% OF MATERIALS IS SMALLER THAN NO. 200 SIEVE	SILTS AND CLAYS (LIQUID LIMIT LESS THAN 50)			ML	INORGANIC SILTS AND VERY FINE SAND, ROCK FLOUR, SILTY FINE SAND OR CLAYEY SILTS	6-25	A-4	FAIR TO POOR
				CL	INORGANIC CLAYS OF LOW TO MEDIUM PLASTICITY, GRAVELLY OR SANDY OR SILTY CLAY. LEAN CLAY	4-15	A-4,A-6,A-7	FAIR TO POOR
				OL	ORGANIC SILTS AND ORGANIC SILTY CLAYS OF LOW PLASTICITY	3-8	A-4, A-7	POOR
	SILTS AND CLAYS (LIQUID LIMIT GREATER THAN 50)			MH	INORGANIC SILTS, MICACEOUS OR DIATAMACEOUS FINE SAND OR SILTY SOILS	<7	A-5	POOR TO VERY POOR
				CH	INORGANIC CLAYS OF HIGH PLASTICITY, FAT CLAYS	<6	A-6, A7	POOR TO VERY POOR
				OH	ORGANIC CLAYS OF MEDIUM TO HIGH PLASTICITY, ORGANIC SILTS	<4	A-7	VERY POOR
HIGHLY ORGANIC SOILS				PT	PEAT, HUMUS, SWAMP SOILS WITH HIGH ORGANIC CONTENTS, DARK IN COLOR, and ORGANIC ODOR			EXTREMELY POOR

SOIL CHARACTERISTICS

TABLE 3-5. Engineering Characteristics of Soils According to the Unified Classification (Airfield) System†

(3)	(7)	(8)		(9)	(10)	(11)	(12)	(13)	(14)	(15)
Group sym-bols	Value as foundation when not subject to frost action	Value as wearing surface for stage or emergency construction		Potential frost action	Compressi-bility and expansion	Drainage characteris-tics ‡	Field compaction characteristics and equipment	Solids at optimum compaction lb/ft^3,§ and void ratio $_e$	California bearing ratio for compacted and soaked specimen	Comparable groups in AASHTO classification
		With dust palliative	With bituminous surface treatment							
GW	Excellent	Fair to poor	Excellent	None to very slight	Almost none	Excellent	Excellent; crawler tractor, rubber-tired equipment	>125 $_e$<0.35	>50	A-3
GC	Excellent	Excellent	Excellent	Medium	Very slight	Practically impervious	Excellent; tamping roller: ¶ rubber-tired equipment	>130 $_e$<0.30	>40	A-1
GP	Excellent	Poor	Poor to fair	None to very slight	Almost none	Excellent	Good to excellent; crawler tractor, rubber-tired equipment	>115 $_e$<0.45	25-60	A-3
GF	Good to excellent	Poor to good	Fair to Good	Slight to medium	Almost none to slight	Fair to practically impervious	Good to excellent; crawler tractor, rubber-tired equipment, tamping roller ¶	>120 $_e$<0.40	>20	A-2
SW	Excellent	Poor	Good	None to very slight	Almost none	Excellent	Excellent; crawler tractor, rubber tired equipment	>120 $_e$<0.40	20-60	A-3
SC	Excellent	Excellent	Excellent	Medium	Very slight	Practically impervious	Excellent; tamping roller, rubber tired equipment	>125 $_e$<0.35	20-60	A-1
SP	Good to excellent	Poor	Poor to fair	None to very slight	Almost none	Excellent	Good to excellent: crawler tractor, rubber-tired equipment	>100 $_e$<0.70	10-30	A-3
ML	Fair to poor	Poor		Medium to very high	Slight to medium	Fair to poor	Good to poor close control essential; rubber-tired roller	>100 $_e$<0.70	6-25	A-4
CL	Fair to poor	Poor		Medium to high	Medium	Practically impervious	Fair to good; tamping roller ¶	>100 $_e$<0.70	4-15	A-4: A-6 A-7
OL	Poor	Very poor		Medium to high	Medium to high	Poor	Fair to poor; tamping roller ¶	>90 $_e$<0.90	3-8	A-4 A-7
MH	Poor to very poor	Very poor		Medium to high	High	Fair to poor	Poor to very poor	>100 $_e$<0.70	<7	A-5
CH	Poor to very poor	Very poor		Medium	High	Practically impervious	Fair to poor; tamping roller ¶	>90 $_e$<0.90	<6	A-6 A-7
OH	Very poor	Useless		Medium	High	Practically impervious	Poor to very poor	>100 $_e$<0.70	<4	A-7
Pt	Extremely poor	Useless		Slight to medium	Very high	Fair to poor	Compaction not practical			

† From Casagrande (Ref. 49). See also Table 3-4. ‡ These characteristics do not apply to undisturbed materials having fissures and root holes, such as most surface soils. § These weights apply only to soils having specific gravities from 2.65 to 2.75.

PEPG ENGINEERING, L.L.C.

IBC 2006 REFERENCE TABLE 1610.1
SOIL LATERAL LOAD

DESCRIPTION OF BACKFILL MATERIAL	UNIFIED SOIL CLASSIFICATION	DESIGN LATERAL SOIL LOAD[a] (POUND PER SQUARE FOOT PER FOOT OF DEPTH)	
		Active pressure	At-rest pressure
Well-graded, clean gravels: gravel-sand mixes	GW	30	60
Poorly graded clean gravels: gravel-sand mixes	GP	30	60
Silty gravels, poorly graded gravel-sand mixes	GM	40	60
Clayey gravels, poorly grade gravel-and-clay mixes	GC	45	60
Well-graded clean sands; gravelly sand mixes	SW	30	60
Poorly graded clean sands; sand-gravel mixes	SP	30	60
Silty sands, poorly graded sand-silt mixes	SM	45	60
Sand-silt clay mix with plastic fines	SM-SC	45	100
Clayey sands, poorly graded sand-clay mixes	SC	60	100
Inorganic silts and clayey silts	ML	45	100
Mixture of inorganic silt and clay	ML-CL	60	100
Inorganic clays of low to medium plasticity	CL	60	100
Organic silts and silt clays, low plasticity	OL	Note b	Note b
Inorganic clayey silts, elastic silts	MH	Note b	Note b
Inorganic clays of high plasticity	CH	Note b	Note b
Organic clays and silty clays	OH	Note b	Note b

For SI: 1 pound per square foot per foot of depth = 0.157kPa/m, 1 foot = 304.8 mm.

a. Design lateral soil loads are given for moist conditions for the specified soils at their optimum densities. Actual field conditions shall govern. Submerged or saturated soil pressures shall include the weight of the buoyant soil plus the hydrostatic loads.

b. Unsuitable as backfill material.

c. The definition and classification of soil materials shall be in accordance with ASTM D2487

2006 INTERNATIONAL BUILDING CODE

TABLE 1804.2
ALLOWABLE FOUNDATION AND LATERAL PRESSURE

CLASS OF MATERIALS		ALLOWABLE FOUNDAITION PRESSURE (psf)[d]	LATERAL BEARING (psf/f below natural grade)[d]	LATERAL SLIDING	
				Coefficient of friction [a]	Resistance (psf)[b]
1.	Crystalline bedrock	12,000	1,200	0.7	▯
2.	Sedimentary and foliated rock	4,000	400	0.35	▯
3.	Sandy gravel and/or gravel (GW and GP)	3,000	200	0.35	▯
4.	Sand, silty sand, clayey sand, silty gravel and clayey gravel (SW, SP, SM, SC, GM and GC)	2,000	150	0.25	▯
5.	Clay, sandy clay, silty clay, clayey silt, silt and sandy silt (CL, ML, MH and CH)	1,500[c]	100	-	130

For SI: 1 pound per square foot = 0.0479 kPa, 1 pound per square foot per foot = 0.157 kPa/m.

a. Coefficient to be multiplied by the dead load.

b. Lateral sliding resistance value to be multiplied by the contact area, as limited by Section 1804.3.

c. Where the building official determines that in-place soils with an allowable bearing capacity of less than 1,500 psf are likely to be present at the site, the allowable bearing capacity shall be determined by a soils investigation.

d. An increase of one-third is permitted when using the alternate load combinations in Section 1605.3.2 that include wind or earthquake loads.

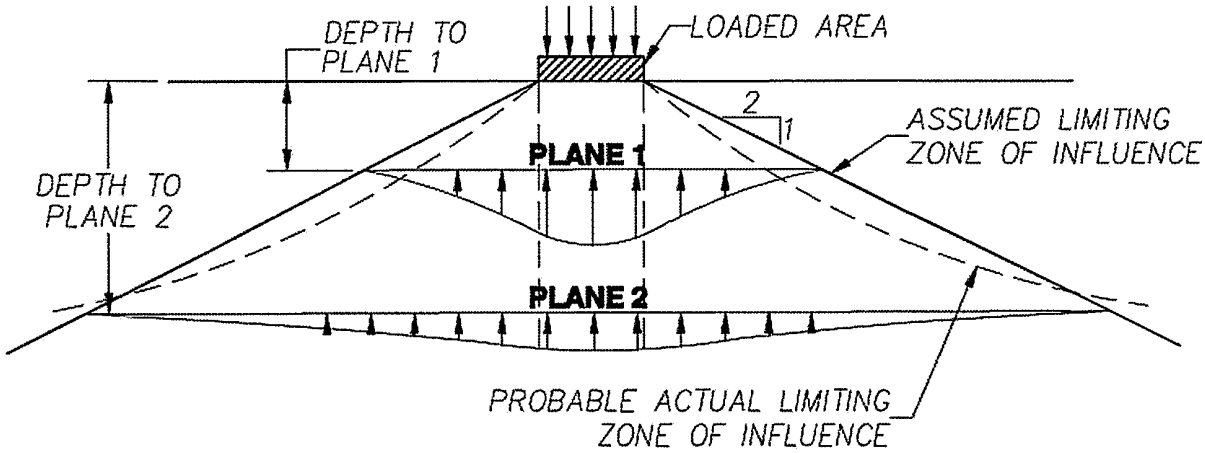
DEPTH TO
PLANE 1
LOADED AREA
2
1
ASSUMED LIMITING
ZONE OF INFLUENCE
PLANE 1
DEPTH TO
PLANE 2
PLANE 2
PROBABLE ACTUAL LIMITING
ZONE OF INFLUENCE

PEPG ENGINEERING, L.L.C.

Presumptive Bearing Capacity Values of Some Soils and Rocks,
$kg/cm^2 = ton/ft^2$

Material Description	Tons $ft.^2$
Clay, medium soft	1-1.5
Clay, dense	2
Clay, hard	5
Sand, loose	1
sand, fine	2
Sand, Coarse, dense	3
Gravel, dense	4-6
Rock, soft	8
Rock, medium hard	40
Rock, sound	60
Basalt, diabase, gneiss, traprock	20-100
Limestone	10-20
Marble	10-20
Sandstone	10-20
Shale	8-20

From: Jumiskis; Foundation Engineering; Intext Educational Publishers; ISBN 0-7002-231-8

TABLE 4-6

Mercalli-Cancani-Sieberg Earthquake Intensity Scale

Nature of intensity of Earthquake	Maximum Acceleration (Cancani). Cm/sec^2	Intensity Scale (Mercalli). Degrees	Remarks[21]	Seismic Factor $\lambda=a_{max}/g$. percent
Instrumental	<0.25	I	Microseismic tremors and shocks detectable by instruments only	<0.025
Very light	0.25-0.5	II	Noted only by a few sensitive people at rest	0.05-0.10
Light	0.5-1.0	III	Felt by people at rest: like passing truck	0.05-0.10
Perceptible or moderate	1.0-2.5	IV	Generally perceptible by people in motion: loose objects disturbed: glassware trembles: ceilings creak	0.1-0.25
Strong	2.5-5.0	V	Many awakened: dishes broken: bells rung: pendulum clocks stopped: oscillations of suspended objects	0.25-0.50
Very Strong	5.0-10.0	VI	Felt by all: some people frightened: damage slight: some plaster cracked: fall of objects: collapse of chimneys	0.5-1.0
Strongest	10.0-25.0	VII	Noticed by people in autos: damage to poor construction: light damage to brick buildings and light structures: light cracks in walls: falls of chimneys and tiles	1.0-2.5
Destructive	25.0-50	VIII	Chimneys fall: cracks in filled panel walls in steel lattice structures having no corner stiffeners: much damage in substantial buildings (1/4 of buildings): heavy furniture overturned	2.5-5.0
Devastating	50.0-100.0	IX a=(0.1)g	Great damage to substantial structures and to lattice-type steel structures (not frames): ground cracked : pipes broken	5-10
Disastrous	100.0-250.0	X	Crushing of column heads: many buildings (~3/4) destroyed: most of them collapse: rails bent: crevices in soil: damage to dams: landslides: light damage to aseismically designed steel and reinforced concrete structures	10-25
Catastrophic	250.0-500.0	XI	Few structures left standing: Damage to bridges and dams: wide cracks in ground: rock and landslides	25-50
Violent Catastrophe	500	XII	Total destruction of all structures: including foundations: nothing stands which is created by man's hands: ground deformations to a large extent: lakes run out: rivers are diverted	50

SEISMIC DESIGN CATEGORY

TABLE 1613.5.6(1)
SEISMIC DESIGN CATEGORY BASED ON SHORT-PERIOD RESPONSE ACCELERATIONS

VALUE OF S_{DS}	OCCUPANCY CATEGORY		
	I or II	III	IV
S_{DS} <0.167g	A	A	A
0.167g $\leq S_{DS}$ <0.33g	B	B	C
0.33g $\leq S_{DS}$ <0.50g	C	C	D
0.50g $\leq S_{DS}$	D	D	D

TABLE 1613.5.6(2)
SEISMIC DESIGN CATEGORY BASED ON 1-SECOND-PERIOD RESPONSE ACCELERATIONS

VALUE OF S_{DS}	OCCUPANCY CATEGORY		
	I or II	III	IV
S_{DS} <0.67g	A	A	A
0.067g $\leq S_{DS}$ <0.133g	B	B	C
0.133g $\leq S_{DS}$ <0.20g	C	C	D
0.20g $\leq S_{DS}$	D	D	D

INTERNATIONAL BUILDING CODE 2006