PX FACILITY ADDITION

CAMP W. G. WILLIAMS

UTAH NATIONAL GUARD

17800 CAMP WILLIAMS ROAD
BLUFFDALE, UTAH

State of Utah - Department of Administrative Services

DIVISION OF FACILITIES CONSTRUCTION AND MANAGEMENT

DFCM PROJECT #08310480

DRAWING INDEX

SHEET #	SHEET TITLE	SHEET #	SHEET TITLE	SHEET #	SHEET TITLE
GI001	COVER SHEET, MAPS, GENERAL INFORMATION	S202	ROOF FRAMING PLAN	ES102	LIGHTING PHOTOMETRICS SITE PLAN
GI002	GENERAL CODE INFORMATION	S301	SCHEDULES	ES103	OVERHEAD DISTRIBUTION REFERENCE PLAN
GI003	SIGNAGE	S302	SCHEDULES	ED101	ELECTRICAL DEMOLITION PLAN
GI004	SPEICAL INSPECTIONS AND TESTING	S501	FOOTING AND FOUNDATION DETAILS	EP101	POWER PLAN
		S502	FOOTING AND FOUNDATION DETAILS	EP401	ELECTRICAL EQUIPMENT PLAN & SCHEDULE
AS101	ARCHITECTURAL SITE PLAN	S701	ROOF FRAMING DETAILS	EP501	COMMUNICATIONS DETAIL
AS102	SITE DETAILS	S702	ROOF FRAMING DETAILS	EP601	ONE-LINE DIAGRAM
				EP602	ELECTRICAL SCHEDULES
AE001	GENERAL DEMOLITION,REMODELING,RENOVATION	P101	PLUMBING FLOOR PLAN	EL101	LIGHTING PLAN
	& CONSTRUCTION NOTES	P201	PLUMBING FLOOR PLAN	EL601	LIGHTING FIXTURE SCHEDULE
AE101	FLOOR PLAN/DEMOLITION PLAN/ROOF PLAN	P301	PLUMBING SCHEDULES & DETAILS	EY101	FIRE ALARM PLAN
AE102	REFLECTED CEILING PLAN / DETAILS			EY601	FIRE ALARM RISER
AE103	1/4" FLOOR PLAN / INTERIOR ELEVATIONS	M101	MECHANICAL FLOOR PLAN		
AE201	EXTERIOR ELEVATIONS / DETAILS	M201	MECHANICAL FLOOR PLAN		
AE301	SECTIONS / DETAILS	M301	MECHANICAL SCHEDULES & DETAILS		
AE302	SECTIONS / DETAILS				
AE601	DOOR SCHEDULE / DETAILS	EE001	ELECTRICAL NOTES, SYMBOL LEGEND		
AE602	WINDOW & FINISH SCHEDULE / DETAILS	EE501	DETAILS		
		EE502	DETAILS		
S101	GENERAL STRUCTURAL NOTES	EE503	DETAILS		
S102	GENERAL STRUCTURAL NOTES	ES100	ELECTRICAL SITE DEMOLITION PLAN		
S201	FOOTING AND FOUNDATION PLAN	ES101	ELECTRICAL SITE PLAN		

ARCHITECT:

L. K. SORENSEN ASSOCIATES, INC.
ARCHITECTS/PLANNERS
1332 DUEHL CIRCLE
TAYLORSVILLE, UTAH 84123
PHONE: (801)262-9393
FAX: (801)262-3511
Email: keith@lksorensenarchitects.com

STRUCTURAL ENGINEER:

DUNN ASSOCIATES, INC.
380 WEST 800 SOUTH, #100
SALT LAKE CITY, UTAH 84101
PHONE: (801) 575-8877
FAX: (801) 575-8875

MECHANICAL ENGINEER:

ADVANCED CONCEPT ENGINEERING
11851 VISTA GLEN COURT
SANDY, UTAH 84092
PHONE: (801) 572-3055
FAX: (801) 572-3075

ELECTRICAL ENGINEER:

SPECTRUM ENGINEERS
175 SOUTH MAIN, SUITE 300
SALT LAKE CITY, UTAH 84111
PHONE: (801) 328-5151
FAX: (801) 328-5155

CODES

APPLICABLE CODES

	Year		Year
International Building Code	2006	National Electrical Code	2008
International Mechanical Code	2006	Uniform Code for Building Conservation	N/A
International Plumbing Code	2006	ADA Accessibility Guidelines	ANSI 117
International Fire Code	2006		
International Energy Conservation Code	2006		

A. Occupancy and Group: M B

Change in Use: Yes ____ No X Mixed Occupancy: Yes X No ____
Special Use and Occupancy (e.g. High Rise, Covered Mall): N/A

B. Seismic Design Category: D Design Wind Speed: 120 mph

C. Type of Construction (circle one):

I/A I/B II/A II/B III/A III/B IV/HT V/A (V/B)

D. Fire Resistance Rating Requirements for the Exterior Walls based on the fire separation distance (in hours):

North: N/A South: N/A East: N/A West: N/A

E. Mixed Occupancies: YES Nonseparated Uses: NO

F: Sprinklers:

Required: NO Provided: ____ Type of Sprinkler System: ____

G: Number of Stories: 1 Building Height: 22 FEET

H: Actual Area per Floor (square feet): 7353 SF

I: Tabular Area: 9000 SF PER TABLE FOR M&B OCCUPANCIES

J: Area Modifications: NOT REQUIRED

a) 9000+[9000*0.55] = 13,950 SF 309.34'/385.35 = 0.803-0.025*1 = 0.55

b) Sum of the Ratio Calculations for Mixed Occupancies:

$$\frac{\text{Actual Area}}{\text{Allowable Area}} \leq 1 \qquad \frac{7353}{13950} = 0.53$$

c) Total Allowable Area for:
1) One Story: 13950 SF
2) Two Story: $A_a(2)$____
3) Three Story: $A_a(3)$____

d) Unlimited Area Building: Yes ____ No X Code Section: ____

K. Fire Resistance Rating Requirements for Building Elements (hours).

Element	Hours	Assembly Listing	Element	Hours	Assembly Listing
Exterior Bearing Walls	N		Floors - Ceiling Floors	N	
Interior Bearing Walls	N		Roofs - Ceiling Roofs	N	
Exterior Non-Bearing Walls	N		Exterior Doors and Windows	N	
Structural Frame	N		Shaft Enclosures	N	
Partitions - Permanent	N		Fire Walls	N	
Fire Barriers	N		Fire Partitions	N	
			Smoke Partitions		

L. Design Occupant Load: 237

Exit Width Required: 48" Exit Width Provided: 174

M. Minimum Number of Required Plumbing Facilities:

a) Water Closets - Required (m) 2 (f) 2 Provided (m) 2 (f) 2
b) Lavatories - Required (m) 2 (f) 2 Provided (m) 2 (f) 2
c) Bath Tubs or Showers: N/A
d) Drinking Fountains: 2 Service Sinks: 1

FOOTNOTES:

1) In case of conflict with the U.S. Department of Justice Federal Registers Parts I through V - ADA Guidelines and specific reference to the International Building Code Accessibility Chapters, the more restrictive requirement shall govern.
2) Additional Code Information shall be provided at the discretion of the Building Official for Complex Buildings, Including, but not limited to:
a) High Rise Requirements.
b) Atriums.
c) Performance Based Criteria.
d) Means or Egress Analysis.
e) Fire Assembly Locator Sheet.
f) Exterior and Interior Accessibility Route.
g) Fire Stopping, Including Tested Design Number.

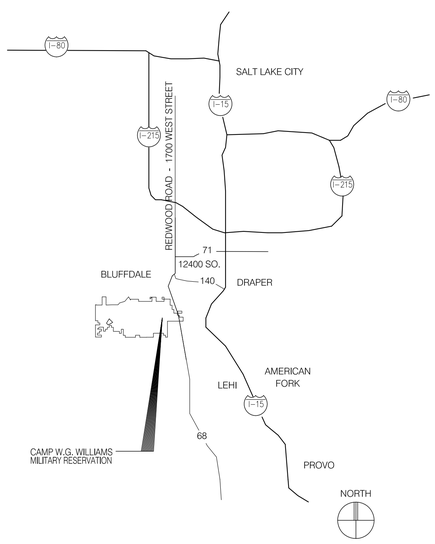

VICINITY MAP

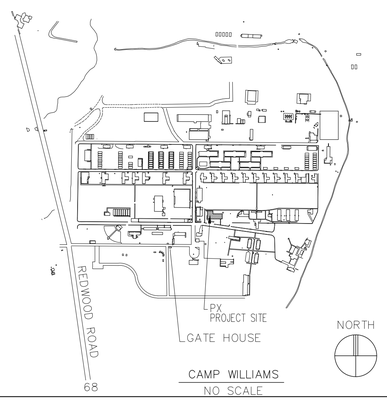

LOCATION MAP

SYMBOLS

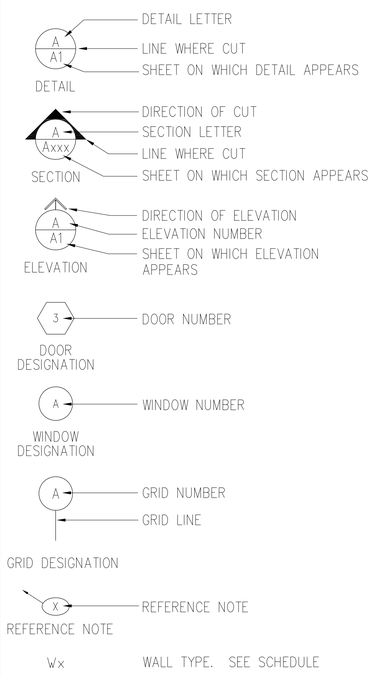

DEFERRED SUBMITALS

ALL DEFERRED SUBMITTALS TO BE PROVIDED TO ARCHITECT WITHIN 30 DAYS AFTER CONTRACTOR SELECTION OR BEFORE BEGINNING OF EXCAVATION

NOTE -REQUIRED DEFERRED SUBMITTALS SHALL INCLUDE THE FOLLOWING:

[ ] PREFABRICATED WOOD TRUSSES
[ ] CONCRETE MIX DESIGN
[ ] WOOD PLATE TREATMENT - PROVIDE FOUR (4) COPIES OF TREATMENT REPORTS PER SPECIFICATIONS
[ ] EIFS - PROVIDE FOUR (4) COPIES OF ICC TEST REPORTS AND OTHER INFORMATION REQUIRED BY SPECIFICATIONS
[ ] ALSO SEE STRUCTURAL DRAWING S103 FOR ADDITIONAL DEFERRED SUBMITTALS AND REQUIREMENTS.
[ ] FIRE ALARM DATA
[ ] TENANT IMPROVEMENTS INCLUDING CASEWORK AND SHELVING.
[ ] NAME OF SPECIAL INSPECTIONS AND TESTING FIRM FROM DFCM APPROVED FIRM LIST.
[ ] MOTORIZED RETRACTABLE DECK AWNING.

lks #0820

UTAH NATIONAL GUARD
PX FACILITY ADDITION
CAMP W.G. WILLIAMS, UTAH

SET NO.: ____ DATE PRINTED: ____

SHEET NUMBER

GI001

CODE ANALYSIS

PX (BUILDING 6200) ADDITION, CAMP W. G. WILLIAMS, UTAH
OWNER: DFCM, STATE OF UTAH
AGENCY: UTANG
CODE ANALYSIS AND COMPLIANCE INFORMATION – 2006 INTERNATIONAL BUILDING CODE
25 NOVEMBER 2009 REVISED 25 JANUARY 2010

****

BUILDING INFORMATION:
SITE AREA: 30,975 SF APPROXIMATE (0.71 ACRES)
BUILDING AREA: 7,353SF

****

APPLICABLE CODES:

INTERNATIONAL BUILIDNG CODE	2006	NATIONAL ELECTRICAL CODE	2008
INTERNATIONAL MECHANICAL CODE	2006	ADA ACCESSIBILITY GUIDELINE	ANSI 117, 2003
INTERNATIONAL PLUMBING CODE	2006	ENERGY CONSERVATION CODE –	COMCHECK 2006
INTERNATIONAL FIRE CODE	2006		

****

CHAPTER 5 OCCUPANCY DESIGNATION:

EXISTING PX BUILDING	M	RETAIL/WHOLESALE STORE
PX BUILDING ADDITION	M	RETAIL/WHOLESALE STORE
BARBER SHOP	B	BUSINESS

****

TABLE 503 CONSTRUCTION TYPE: TYPE V–B

AREA TABULATION		ALLOWABLE	ACTUAL	ACTUAL TOTAL
M	EXISTING PX	9,000 SF	3,648 SF	
M	PX ADDITION	9,000 SF	3,323 SF	
B	BARBER SHOP	9,000 SF	382 SF	7,353 SF

****

506 AREA MODIFICATIONS – AREA INCREASE FOR TYPE V–B CONSTRUCTION
506.1 AREA INCREASE:
EQUATION 5–1: 9000 + [9000 x 0.55] = 13950 SF ALLOWABLE BY MODIFICATION (NOTE THAT FIRE SPRINKLER SYSTEM IN NOT INCLUDED IN THIS BUILDING)

506.2 FRONTAGE INCREASE
EQUATION 5–2: 309.34?/385.35 = 0.803 – 0.25 = 0.55 x 30/30 = .55

NOTE: FRONTAGE ON 3 SIDES OF BUILDIING EXCEEDS 30–FEET

AREA INCREASE NOT REQUIRED DUE TO ACTUALL BUILDING AREA OF 7,353 SF BEING LESS THAN THE ALLOWABLE AREA OF 9,000 SF

****

508.3.3 TABLE – OCCUPANCY SEPARATION – NO FIRE SPINKLER SYSTEM PROVIDED
M (RETAIL/WHOLESALE STORE) TO B (BUSINESS) NO SEPARATION REQUIREMENT

****

601 TABLE – FIRE RESISTANCE RATINGS FOR BUILDING ELEMENTS
TYPE V–B CONSTRUCTION

DESCRIPTION	FIRE RATING (HOURS)
STRUCTURAL FRAME	NO RATING REQUIRED
BEARING WALLS – EXTERIOR (TABLE 602)	NO RATING REQUIRED
BEARING WALLS – INTERIOR	NO RATING REQUIRED
NONBEARING WALLS – EXTERIOR (TABLE 602)	NO RATING REQUIRED
NONBEARING WALLS – INTERIOR	NO RATING REQUIRED
FLOOR CONSTRUCTION	NO RATING REQUIRED
ROOF CONSTRUCTION	NO RATING REQUIRED

DESCRIPTION OF STRUCTURAL FRAME:
DESCRIPTION OF EXTERIOR BEARING AND NON–BEARING WALL CONSTRUCTION:
2" x 6" WOOD STUDS SPACED AT 16–INCHES O/C WITH EXTERIOR, 1–HOUR RATED DIAPHRAM SHEATHING. 5/8–INCH, 1–HOUR RATED, GWB FINISH ON INTERIOR SURFACE OF FRAMING.

DESCRIPTION OF INTERIOR WALL CONSTRUCTION (ALL ARE NON–BEARING):
WOOD STUD PARTITION FRAMING WITH 5/8–INCH, 1–HOUR RATED, GWB FINISH ON BOTH SIDES.

DESCRIPTION OF INTERIOR FLOOR CONSTRUCTION: CONCRETE SLAB ON GRAD.

DESCRIPTION OF ROOF CONSTRUCTION:
FACTORY FABRICATED PITCHED WOOD TRUSSES SPACED AT 24–INCHES O/C WITH WOOD PANEL SHEATHING. ROOFING WILL MEET CLASS ?B? DESIGNATION REQUIREMENTS.

****

602 TABLE – BUILDING SET–BACK FROM PROPERTY LINES AND ADJACENT BUILDING EXCEEDS 30–FEET. NO FIRE RESISTIVE RATING IS REQUIRED.

****

CHAPTER 9 FIRE PROTECTION SYSTEMS
ALLOWABLE AREA EXCEEDS THE ACTUAL AREA THUS NO FIRE SPRINKLER SYSTEM IS REQUIRED.

****

CHAPTER 10 MEANS OF EGRESS

1004 OCCUPANT LOAD REQUIREMENTS

RETAIL/WHOLESALE STORE (M)	30 SF GROSS FLOOR AREA PER OCCUPANT
BUSINESS AREAS (B)	100 SF GROSS FLOOR AREA PER OCCUPANT

M	6,971 SF DIVIDED BY 30 SF =	233 OCCUPANTS
B	382 SF DIVIDED BY 100 =	4 OCCUPANTS
TOTAL OCCUPANT LOAD		237 OCCUPANTS

1005.1 TABLE – EGRESS WIDTH
WITHOUT SPRINKLER SYSTEM FOR THIS OCCUPANCY 0.2–INCHES PER OCCUPANT
237 OCCUPANTS x 0.2–INCHES = 48–INCHES REQUIRED.
FOUR EXIT DOORS ARE PROVIDED WITH A TOTAL FUNCTIONAL WIDTH OF 174–INCHES. NOTE THAT ALL EXIT DOOR OPENINGS ARE 36–INCHES WIDE.

1016.1 TABLE – EXIT ACCESS TRAVEL DISTANCE – WITHOUT SPRINKLER SYSTEM:
M OCCUPANCY 200–FEET REQUIRED ACTUAL IS LESS THAN 75–FEET
B OCCUPANCY 200–FEET REQUIRED ACTUAL IS LESS THAN 60–FEET

CODE ANALYSIS (continued)

1017.1 CORRIDOR FIRE–RESISTANCE RATING ? WITHOUT SPRINKLER SYSTEM
M AND B OCCUPANCIES NO EXIT CORRIDORS ARE PROVIDED IN THE BUILDING

1017.2 CORRIDOR WIDTH
DETERMINED BY TABLE 1015.1 BUT NOT LESS THAN 44–INCHES.
EXISTING CORRIDOR IN EXISTING BUILD ACCESSES EXISTING TOILET ROOMS. WIDTH IS 60–INCHES.

1019.1 TABLE – MINIMUM NUMBER OF EXITS FOR OCCUPANT LOAD
OCCUPANT LOAD OF 1–500 PER STORY = MINIMUM OF 2 EXITS REQUIRED. 4 EXITS ARE PROVIDED

****

1100 ACCESSIBILITY IN ACCORDANCE WITH ANSI 117.1M 2003

1106.1 TABLE – ACCESSIBLE PARKING SPACES
1 TO 25 SPACES – PROVIDE 1 ACCESSIBLE SPACES
28 PARKING SPACES ARE PROVIDED. 1–VAN AND 1–AUTOMOBILE (2–TOTAL) ARE PROVIDED

****

2902.1 TABLE – MINIMUM NUMBER OF REQUIRED PLUMBING FIXTURES

BASED ON M OCCUPANCY REQUIREMENTS:
TOTAL BUILDING OCCUPANTS = 237. ASSUME 50% (120) MEN AND 50% (120) WOMEN

MEN – WATER CLOSETS	1/500 OCCUPANTS REQUIRED: 1 PROVIDED: 2
WOMEN – WATER CLOSETS	1/500 OCCUPANTS REQUIRED: 1 PROVIDED: 2
MEN – LAVATORIES	1/750 OCCUPANTS REQUIRED: 1 PROVIDED: 2
WOMEN – LAVATORIES	1/750 OCCUPANTS REQUIRED: 1 PROVIDED: 2
DRINKING FOUNTAINS	1/1000 OCCUPANTS REQUIRED: 1 PROVIDED: 2
SERVICE SINKS:	REQUIRED: 1 PROVIDED: 1 EXISTING

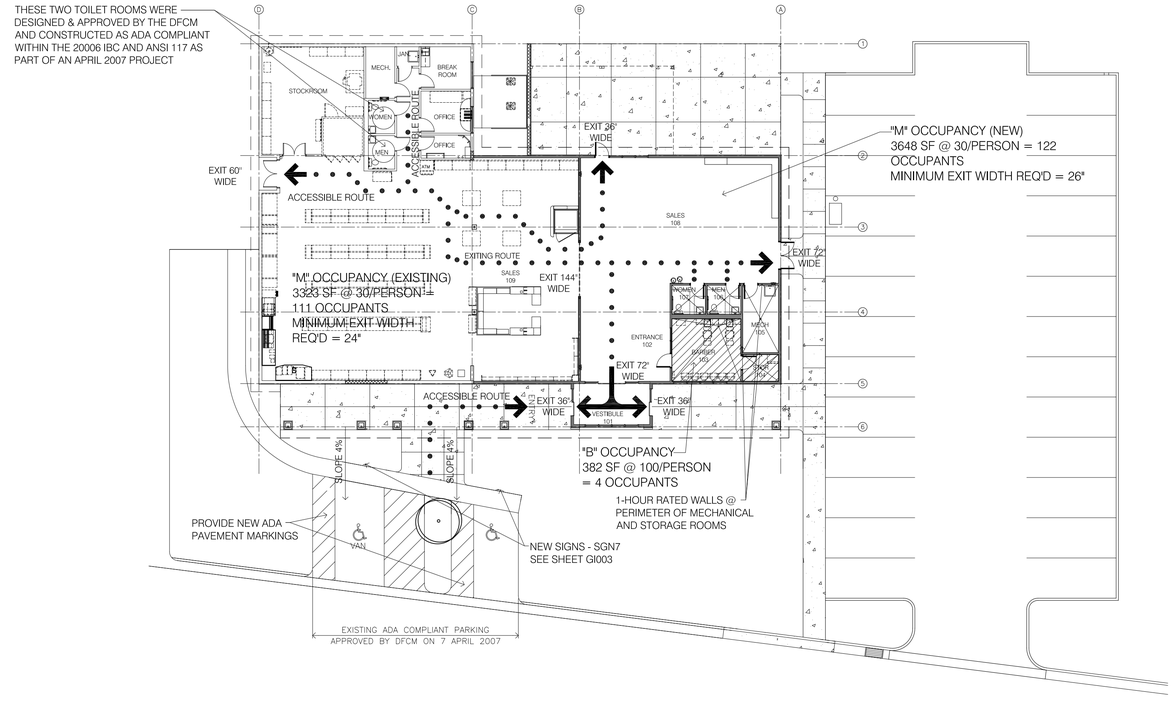

ACCESSIBLE ROUTE / CODE FLOOR PLAN

SCALE: 1/16"=1'–0"

NORTH

L. K. SORENSEN ASSOCIATES, INC.
ARCHITECTS / PLANNERS / LANDSCAPE ARCHITECTS
1332 DUFEHL CIRCLE
TAYLORSVILLE, UTAH 84123
(801)262-9393 Fax (801)262-3511

CONSULTANTS

UTAH NATIONAL GUARD
PX FACILITY ADDITION
Camp W. G. Williams
Bluffdale, Utah

MARK	DATE	DESCRIPTION

PROJECT NO:	08310480
DATE:	25 JANUARY 2010
CAD DWG FILE:	
DRAWN BY:	ajs
CHECKED BY:	lks
DESIGNED BY:	lks

COPYRIGHT:
THIS PRINT AND ALL INFORMATION HEREON IS SUBJECT TO COPYRIGHT LAWS AND IS THE PROPERTY OF L. K. SORENSEN ASSOCIATES, INC. AND SHALL NOT BE USED ON ANY OTHER PROJECT WITHOUT WRITTEN PERMISSION OF THE ARCHITECT.

SHEET TITLE

GENERAL CODE INFORMATION

GI002

SIGNAGE SCHEDULE

1	MEN
1	WOMEN
1	STORAGE
1	MECHANICAL – NO ADMITTANCE WITHOUT AUTHORIZATION
1	MAXIMUM OCCUPANCY: 49 PEOPLE
2	HANDICAPPED PARKING SIGNS

NOTE: SIGN DESIGN AND MOUNTING HEIGHT SHALL CONFORM TO 100/A117.1–2003 OR CURRENT EDITION.

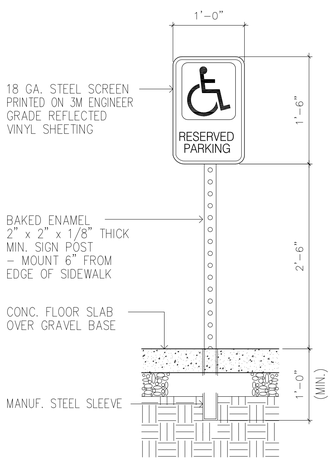

A2 ACCESSIBLE PARKING SIGN - SGN7
2 REQUIRED
SCALE: 1"=1'–0"

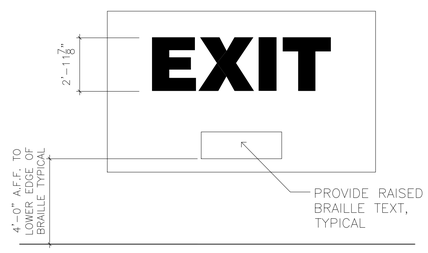

B3 TACTILE EXIT SIGN - SGN 1
6 REQUIRED
NO SCALE

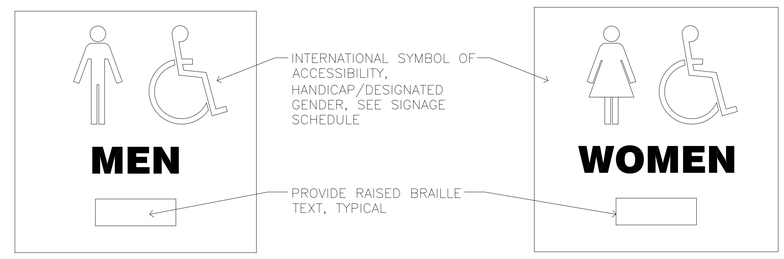

B4 TACTILE MEN'S TOILET SIGN - SGN 2
1 REQUIRED
NO SCALE

B5 TACTILE WOMEN'S TOILET SIGN - SGN 3
1 REQUIRED
NO SCALE

A3 TACTILE ROOM SIGN - SGN 4
1 REQUIRED
NO SCALE

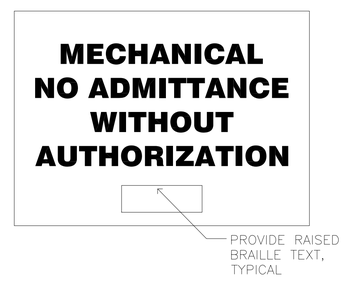

A4 TACTILE ROOM SIGN - SGN 5
1 REQUIRED
NO SCALE

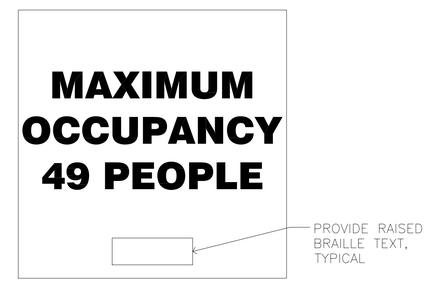

A5 TACTILE OCCUPANCY SIGN - SGN 6
2 REQUIRED
NO SCALE

L. K. SORENSEN ASSOCIATES, INC.
ARCHITECTS / PLANNERS / LANDSCAPE ARCHITECTS
1332 DUFEHL CIRCLE
TAYLORSVILLE, UTAH 84123
(801)262-9393 Fax (801)262-3511

CONSULTANTS

UTAH NATIONAL GUARD
PX FACILITY ADDITION
Camp W. G. Williams
Bluffdale, Utah

MARK	DATE	DESCRIPTION

PROJECT NO:	08310480
DATE:	25 JANUARY 2010
CAD DWG FILE:	
DRAWN BY:	ajs
CHECKED BY:	lks
DESIGNED BY:	lks

COPYRIGHT:
THIS PRINT AND ALL INFORMATION HEREON IS SUBJECT TO COPYRIGHT LAWS AND IS THE PROPERTY OF L. K. SORENSEN ASSOCIATES, INC. AND SHALL NOT BE USED ON ANY OTHER PROJECT WITHOUT WRITTEN PERMISSION OF THE ARCHITECT.

SHEET TITLE
SIGNAGE

GI003

SPECIAL INSPECTION AND TESTING (IBC 1704)

Indicate required special inspections for project by checking the appropriate boxes:

FABRICATORS (IBC1704.2)

☒ Approved Fabricator	Fabricators Name:
☐ Unapproved Fabricator	Fabricators Name:

In-plant inspections
☐ Steel Construction ☐ Welding ☐ Details

STEEL (IBC1704.3)

Item			Detailed Instructions and Frequencies
WELDING (1704.3.1)			
Single-pass fillet welds ≤ 5/16"	☐ Continuous	☒ Periodic	AWS D1.1, D1.3, D1.8 Verify the welding of structural steel complies with the approved design requirements while welding operations are taking place. It is expected that at least 25% of the welds noted below will be examined while welding operations are taking place.

CONCRETE CONSTRUCTION (IBC1704.4)

Item			Detailed Instructions and Frequencies
Materials (1704.4.1)	☐ Continuous	☒ Periodic	Show materials meet ACI 318 Chapter 3
Steel placement	☐ Continuous	☒ Periodic	Verify fabrication and placement of steel per ACI 318: 7.1-7.7
Use of required design mix	☐ Continuous	☒ Periodic	Verify approved mix is being used
Concrete placement	☒ Continuous	☐ Periodic	Verify proper placement per ACI 318: 5.9, 5.10
Curing temperature and techniques	☐ Continuous	☒ Periodic	Verify proper curing per ACI 318: 5.11-5.13
Form work	☐ Continuous	☒ Periodic	Inspect location, shape and dimensions of formwork.

MASONRY CONSTRUCTION (IBC1704.5)

Item			Detailed Instructions and Frequencies
As masonry construction begins:			
Site prepared mortar	☐ Continuous	☒ Periodic	Verify proper mixing per ACI 530.1/ASCE 6/TMS 602: Art. 2.6A
Construction of mortar joints	☐ Continuous	☒ Periodic	Verify proper techniques per ACI 530.1/ASCE 6/TMS 602: Art. 3.3B
Location of reinforcement, connectors,	☐ Continuous	☒ Periodic	Verify proper clearances and locations per ACI 530.1/ASCE 6/TMS 602: Art. 3.4, 3.6A
Inspection program verify:			
Size and location of structural elements	☐ Continuous	☒ Periodic	Follow requirements of ACI 530.1/ASCE 6/TMS 602: Art. 3.3G
Type, size and location of anchors	☐ Continuous	☒ Periodic	Follow requirements of ACI 530/ASCE 5/TMS 402: Sec 1.2.2(e), 2.1.4, 3.1.6
Size, grade and type of reinforcement	☐ Continuous	☒ Periodic	Follow requirements ofACI 530/ASCE 5/TMS 402: Sec 1.13, ACI 530.1/ASCE 6/TMS 602: Art. 2.4, 3.4
Cold and hot weather protection	☐ Continuous	☒ Periodic	Follow proper procedures per IBC 2104.3, 2104.4, ACI 530.1/ASCE 6/TMS 602: Art. 1.8C, 1.8D
Prior to grouting verify:			
Clean grout space	☐ Continuous	☒ Periodic	Follow requirements of ACI 530.1/ASCE 6/TMS 602: Art. 3.2D
Placement of reinforcement	☐ Continuous	☒ Periodic	Follow requirements of ACI 530/ASCE 5/TMS 402: Sec 1.13, ACI 530.1/ASCE 6/TMS 602: Art.3.4
Grout mix	☐ Continuous	☒ Periodic	Approved mix per ACI 530.1/ASCE 6/TMS 602: Art. 2.6B

MISCELLANEOUS AREAS

These inspections are recommended by the Architect/Engineer and approved by DFCM.

			Detailed Instructions and Frequencies
Suspended Ceiling Grid Clips	☐ Continuous	☐ Periodic	
Suspended Ceiling wire spacing (Seismic)	☐ Continuous	☒ Periodic	At 50% and 100% completion of grid installation prior to installing tile
Soils backfill (specify locations and frequency)	☐ Continuous	☒ Periodic	One inspection each lift
Soils for curb and gutter (specify locations and frequency)	☐ Continuous	☒ Periodic	One inspection prior to concrete pour
Soils for parking lots (specify locations and frequency)	☐ Continuous	☒ Periodic	One inspection entire area a completion of sub-base preparation and one inspection entire area after granular fill placement
Soils for utility trench backfill	☐ Continuous	☒ Periodic	One inspection each lift
Reinforcement for slab on grade sidewalks and drive approaches (specify locations and frequency)	☐ Continuous	☒ Periodic	Inspection at completion of reinforcing placement
Reinforcement for interior slab on grade (specify locations and frequency)	☐ Continuous	☐ Periodic	
Concrete testing for slab on grade sidewalks and drive approaches (specify locations and frequency)	☐ Continuous	☒ Periodic	One test for each mixer load
Concrete testing for interior slab on grade (specify locations and frequency)	☐ Continuous	☒ Periodic	One test for each mixer load
Masonry Veneer (specify locations and frequency)	☐ Continuous	☒ Periodic	One inspection each at 50% and 100% completion of installation
Asphalt inspection (specify locations and frequency)	☐ Continuous	☒ Periodic	One inspection entire area at completion of asphalt placement
Asphalt testing (specify locations and frequency)	☐ Continuous	☒ Periodic	One test for each 500 sf
Inspection of seismic resistance (specify locations and frequency)	☐ Continuous	☒ Periodic	At completion of installation
Steam and water line welding (specify locations and frequency)	☐ Continuous	☐ Periodic	
Seismic supports for duct work and sealing of joints for duct work	☐ Continuous	☒ Periodic	At completion of installation
Seismic supports for electrical raceways, cable trays and lights	☐ Continuous	☒ Periodic	At completion of installation
Seismic supports for plumbing lines including gas, water and steam and condensation	☐ Continuous	☒ Periodic	At completion of installation
Seismic bracing for mechanical units both on slab and suspended	☐ Continuous	☒ Periodic	At completion of installation

Special Inspectors Shall:

- Be approved by the Building Official prior to performing any duties;
- Provide proof of licensure as a special inspector by the State of Utah for each type of inspection;
- Inspection reports are to meet the requirements of IBC 1704.1.2 and DFCM standards;
- Inspection reports are to be submitted to the code consultant, architect, DFCM project manager, and the State of Utah Building Official within 48 hrs. of inspections;
- A final inspection report shall be submitted following completion of the project documenting the types of special inspections performed and a statement indicating that the structure is in compliance with the drawings, specifications and applicable codes. IBC 1704.1.2

Mortar joints	☐ Continuous	☒ Periodic	Verify mortar joints follow requirements of ACI 530.1/ASCE 6/TMS 602: Art. 3.3B
Grout placement	☒ Continuous	☐ Periodic	Placement per ACI 530.1/ASCE 6/TMS 602: Art. 3.5
Construction and submittal compliance verification	☐ Continuous	☒ Periodic	Verify submittals required by ACI 530.1/ASCE 6/TMS 602: Art. 1.5
Engineered masonry – Cat. I-III (1708.1.3)	☒ Continuous	☐ Periodic	Verify certificates of compliance. Verify f'm prior to construction.

SOILS CONSTRUCTION (IBC1704.7)

Item			Detailed Instructions and Frequencies
Site preparation	☐ Continuous	☒ Periodic	Verify soil acceptable to receive foundations
Structural fill material	☐ Continuous	☒ Periodic	Verify material satisfies material specification
Structural fill lift thickness	☒ Continuous	☐ Periodic	Only required for fill heights greater than 12"
Structural fill soil densities	☒ Continuous	☐ Periodic	Verify density meets specification
Backfill soils materials	☐ Continuous	☒ Periodic	Verify material satisfies material specification
Backfill soil densities	☒ Continuous	☐ Periodic	Verify density satisfies specification
Fill material under side walks and parking	☐ Continuous	☒ Periodic	Verify density satisfies specification
Fill soil densities under side walks and parking	☒ Continuous	☐ Periodic	Verify density satisfies specification

EXTERIOR INSULATION AND FINISH SYSTEMS (EIFS) (IBC1704.12)

Item			Detailed Instructions and Frequencies
Material and installation	☐ Continuous	☒ Periodic	See manufacturer's guidelines

ALTERNATIVE CONSTRUCTION METHODS OR MATERIALS (IBC1704.13)

Item			Detailed Instructions and Frequencies
Material and installation	☐ Continuous	☒ Periodic	See manufacturer's guidelines

EPOXY (IBC1704.13)

Item			Detailed Instructions and Frequencies
Material and installation	☒ Continuous	☐ Periodic	If required, special inspect all post-installed anchors per ICC report.

Special inspection for seismic resistance (IBC1707)

Item			Detailed Instructions and Frequencies
Structural Wood (1707.3)	☐ Continuous	☒ Periodic	Observe nail spacing, bolts and anchors
Architectural components (1707.7)	☐ Continuous	☒ Periodic	Observe fastening of nonbearing walls per IBC 1707.7
Designated systems verification (1707.9)	☐ Continuous	☒ Periodic	Verify installed system conforms to the certificate of compliance for systems required by IBC 1708.5

Inspection of seismic resistance are not required per IBC 1705.3 ☐

L. K. SORENSEN ASSOCIATES, INC.
ARCHITECTS / PLANNERS / LANDSCAPE ARCHITECTS
1332 DUFHL CIRCLE
TAYLORSVILLE, UTAH 84123
(801)262-9393 Fax (801)262-3511

CONSULTANTS

UTAH NATIONAL GUARD
PX FACILITY ADDITION
Camp W. G. Williams
Bluffdale, Utah

MARK	DATE	DESCRIPTION

PROJECT NO:	08310480
DATE:	25 JANUARY 2010
CAD DWG FILE:	
DRAWN BY:	ajs
CHECKED BY:	lks
DESIGNED BY:	lks

COPYRIGHT:
THIS PRINT AND ALL INFORMATION HEREON IS SUBJECT TO COPYRIGHT LAWS AND IS THE PROPERTY OF L. K. SORENSEN ASSOCIATES, INC. AND SHALL NOT BE USED ON ANY OTHER PROJECT WITHOUT WRITTEN PERMISSION OF THE ARCHITECT.

SHEET TITLE
SPECIAL INSPECTIONS AND TESTING

GI004

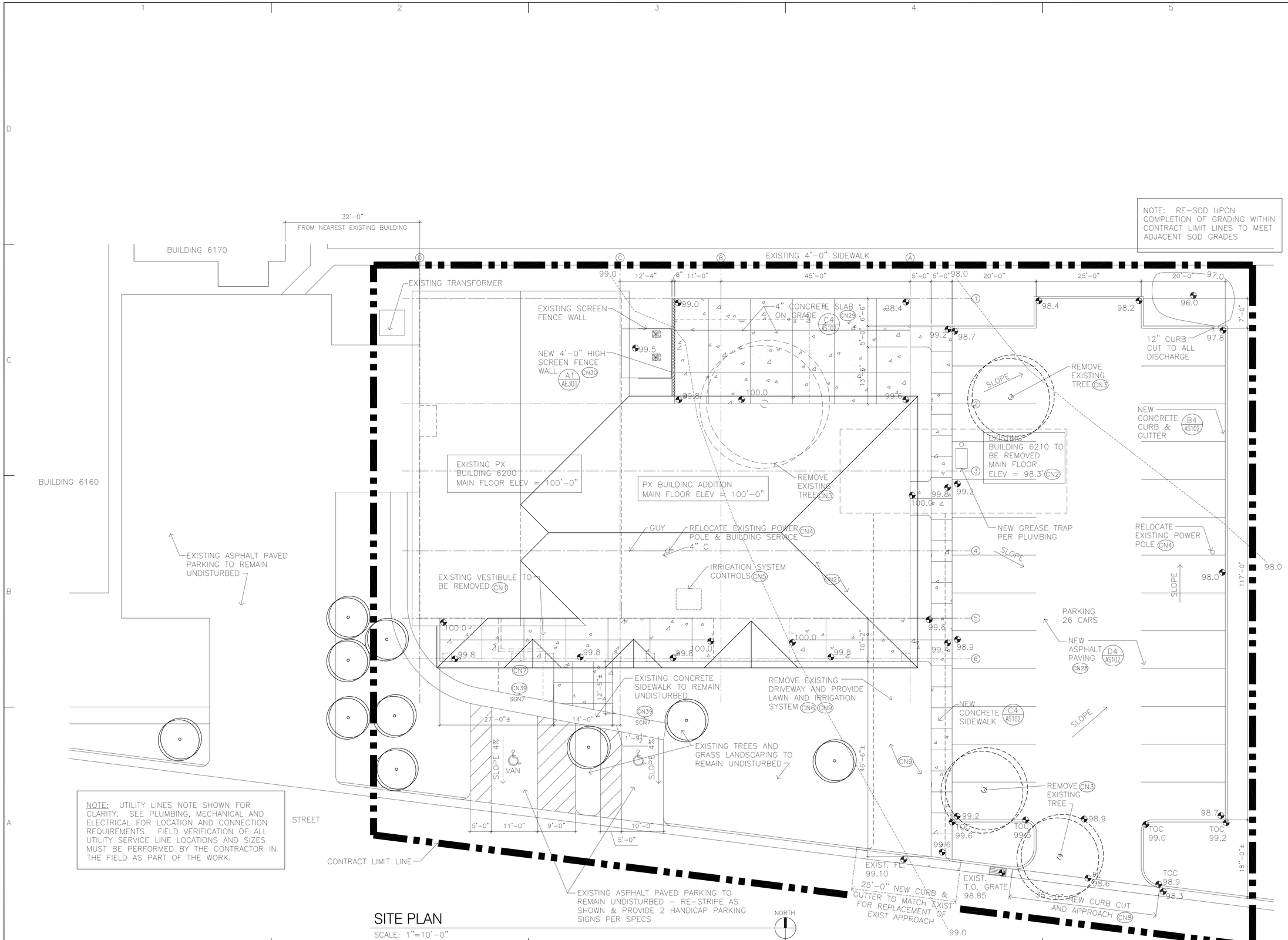

NOTE: RE-SOD UPON COMPLETION OF GRADING WITHIN CONTRACT LIMIT LINES TO MEET ADJACENT SOD GRADES

NOTE: UTILITY LINES NOTE SHOWN FOR CLARITY. SEE PLUMBING, MECHANICAL AND ELECTRICAL FOR LOCATION AND CONNECTION REQUIREMENTS. FIELD VERIFICATION OF ALL UTILITY SERVICE LINE LOCATIONS AND SIZES MUST BE PERFORMED BY THE CONTRACTOR IN THE FIELD AS PART OF THE WORK.

SITE PLAN

SCALE: 1"=10'-0"

L.K. SORENSEN ASSOCIATES, INC.
ARCHITECTS / PLANNERS / LANDSCAPE ARCHITECTS
1332 DUEHL CIRCLE
TAYLORSVILLE, UTAH 84123
(801)262-9393 Fax (801)262-3511

CONSULTANTS

UTAH NATIONAL GUARD

PX FACILITY ADDITION

Camp W. G. Williams
Bluffdale, Utah

MARK	DATE	DESCRIPTION

PROJECT NO:	08310480
DATE:	25 JANUARY 2010
CAD DWG FILE:	
DRAWN BY:	ajs
CHECKED BY:	lks
DESIGNED BY:	lks

COPYRIGHT:
THIS PRINT AND ALL INFORMATION HEREON IS SUBJECT TO COPYRIGHT LAWS AND IS THE PROPERTY OF L. K. SORENSEN ASSOCIATES, INC. AND SHALL NOT BE USED ON ANY OTHER PROJECT WITHOUT WRITTEN PERMISSION OF THE ARCHITECT.

SHEET TITLE

SITE PLAN

AS101

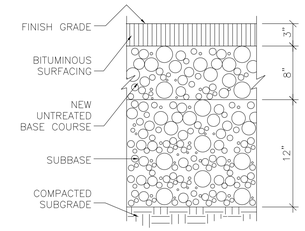

D4 PAVEMENT DETAIL
SCALE: 1-1/2"=1'-0"

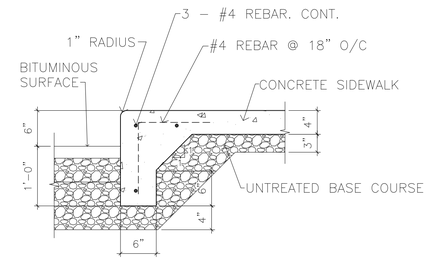

C4 SIDEWALK DETAIL
SCALE: 1"=1'-0"

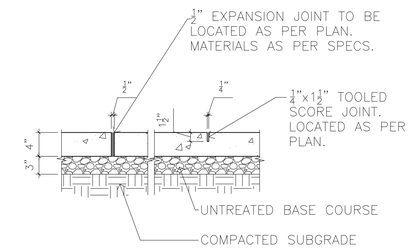

C5 SIDEWALK JOINT
SCALE: 1"=1'-0"

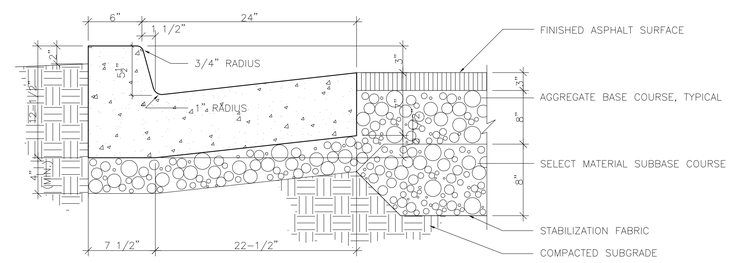

B4 CURB & GUTTER DETAIL
SCALE: 1-1/2"=1'-0"

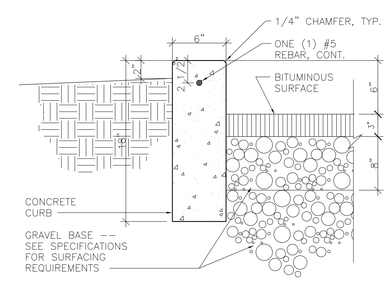

A4 STANDARD CURB DETAIL
SCALE: 1-1/2"=1'-0"

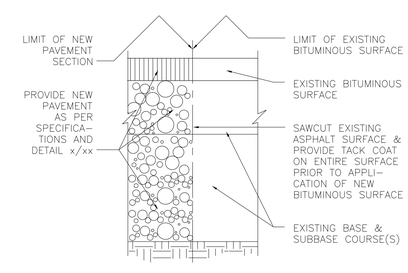

A5 NEATLINE SAWCUT

L. K. SORENSEN ASSOCIATES, INC.
ARCHITECTS / PLANNERS / LANDSCAPE ARCHITECTS
1332 DUEHL CIRCLE
TAYLORSVILLE, UTAH 84123
(801)262-9393 Fax (801)262-3511

CONSULTANTS

UTAH NATIONAL GUARD
PX FACILITY ADDITION
Camp W. G. Williams
Bluffdale, Utah

MARK	DATE	DESCRIPTION

PROJECT NO:	08310480
DATE:	25 JANUARY 2010
CAD DWG FILE:	
DRAWN BY:	ajs
CHECKED BY:	lks
DESIGNED BY:	lks

COPYRIGHT:
THIS PRINT AND ALL INFORMATION HEREON IS SUBJECT TO COPYRIGHT LAWS AND IS THE PROPERTY OF L. K. SORENSEN ASSOCIATES, INC. AND SHALL NOT BE USED ON ANY OTHER PROJECT WITHOUT WRITTEN PERMISSION OF THE ARCHITECT.

SHEET TITLE

SITE DETAILS

AS102

GENERAL DEMOLITION,REMODELING,RENOVATION & CONSTRUCTION NOTES:

THE FOLLOWING NOTES APPLY TO ALL WORK. NOTES INDEXED TO THE DRAWINGS ALSO APPLY TO SPECIFIC TASKS.

GN1 THE CONTRACTOR SHALL VISIT THE SITE PRIOR TO BIDDING TO EXAMINE AND UNDERSTAND THE SCOPE OF WORK AND ITS IMPACT ON THE SITE, EXISTING BUILDINGS AND THE CONTINUED OPERATIONS OF THE EXISTING PX FACILITY AND SITE AND BUILDING OCCUPANTS. QUESTIONS RESULTING FROM THE SITE VISIT SHALL BE DIRECTED TO THE ARCHITECT FOR RESPONSE PRIOR TO DESIGNATED DATE OF ISSUE FOR ANY ADDENDA FOR BIDDING.

THE GENERAL CONTRACTOR SHALL COORDINATE WITH AND ASSURE THAT SUBCONTRACTOR TRADES INCLUDED THIS SITE VISIT REQUIREMENT IN THE SCOPE OF THEIR WORK WHETHER OR NOT SHOWN ON SPECIFIC TRADE AND/OR OTHER CONTRACT DOCUMENTS.

GN2 ALL DEMOLITION WORK SHALL BE CONDUCTED WITH THE GREATEST OF CARE. PRIOR TO INITIATION OF DEMOLITION WORK, FIELD LOCATE EXISTING UTILITY SERVICE LINES, PIPING, CONTROLS, ETC., OF THE EXISTING BUILDING. FIELD LOCATE AND CONFIRM ALL BUILDING STRUCTURAL ELEMENTS, CONSTRUCTION TO REMAIN, CONSTRUCTION TO BE REMOVED, DEMOLITION REMOVAL ROUTES AND EQUIPMENT ACCESS, ETC, AS REQUIRED TO COMPLETE THE WORK IN IT'S ENTIRETY.

GN3 SAW CUTTING IS REQUIRED FOR ALL CONCRETE AND MASONRY WORK REMOVAL. DO NOT DAMAGE OR OTHERWISE COMPROMISE EXISTING STRUCTURE OR ADJACENT FINISHED SURFACES TO REMAIN. ALL NEW OPENINGS IN EXISTING FLOORS, WALLS, CEILINGS, ETC., SHALL BE CAREFULLY SAW CUT TO EXACT DIMENSIONAL REQUIREMENTS FOR REMOVAL.

GN4 CAREFULLY REMOVE EXISTING SURFACE FINISHES, FLOORS, WALLS, WINDOWS, DOORS, ETC., TO THE FULL EXTENT SHOWN ON THE DRAWINGS OR AS REQUIRED TO COMPLETE ALL NEW CONSTRUCTION WORK SHOWN OR REQUIRED.

GN5 ALL PENETRATIONS SHALL BE FIRE SEALED UPON COMPLETION OF INSTALLATION OF PIPING, CONDUIT, DUCTWORK, ETC.

GN6 ALL EXTERIOR BUILDING WALL PENETRATIONS SHALL BE FINISHED TO ORIGINAL CONDITION MATCHING ADJACENT SURFACES ON BOTH SIDES OF THE WALLS INCLUDING OPENINGS RESULTING FROM REMOVAL OF EXISTING DOORS, WINDOWS, PIPING, DUCTWORK, CONDUIT ETC. EXISTING WALL CONSTRUCTION INCLUDES EXPOSED MASONRY WALLS AND THEIR FINISH.

GN7 ALL EXISTING BUILDING COMPONENTS AFFECTED BY THE REMODELING OR NEW CONSTRUCTION WORK INCLUDING, BUT NOT LIMITED TO, CONTROL DEVICES, PIPING, CONDUIT, FIXTURES, DEVICES, OUTLETS, ETC., FOR MECHANICAL (HVAC), CONTROLS, PLUMBING, PIPING, FIXTURES, ELECTRICAL LIGHTING, ETC., SHALL BE SAFELY REMOVED, RELOCATED, OTHERWISE MODIFIED, OR CAPPED OR TERMINATED IN COMPLIANCE WITH GOVERNING CODES AS REQUIRED. INCLUDED THE COST OF THIS WORK IN ITS ENTIRETY FOR THIS PROJECT.

GN8 ALL WORK TO BE DEMOLISHED AND/OR REMOVED SHALL BE ACCOMPLISHED UTILIZING PROTECTIVE, DUST-PROOF BARRIERS BETWEEN EXISTING BUILDING AND THE DEMOLITION/REMODELING WORK.

GN9 THE CONTRACTOR SHALL CLOSE, SEAL AND FINISH EXPOSED ALL BUILDING FLOORS, WALLS, CEILINGS AND STRUCTURE AFFECTED BY THE DEMOLITION OR REMODELING TO MATCH ADJACENT SURFACES, MATERIALS, AND/OR FINISHES INCLUDING PREPARATION FOR FINISHES AND PAINTING.

GN10 SCHEDULE COORDINATION: THE UTANG WORKS FOUR, TEN HOUR WORK DAYS, MONDAY THRU THURSDAY. THE UTANG MAY CONDUCT ACTIVITIES THAT WOULD KEEP THE CONTRACTOR FROM THE PERFORMANCE OF WORK. ARRANGEMENTS CAN BE MADE TO ALLOW THE WORK TO CONTINUE DURING UTNG NON-WORKING PERIODS. THE CONTRACTOR SHALL COORDINATE ALL WORK SCHEDULE WITH DESIGNATED UTANG REPRESENTATIVES DURING THE CONSTRUCTION WORK WHEN AND AS REQUIRED.

GN11 MAXIMUM CARE WILL BE EXERCISED TO PROTECT PERSONS WHO WILL USE THE EXISTING BUILDING DURING THE PERFORMANCE OF THIS WORK. THIS WILL INCLUDE, BUT NOT BE LIMITED TO, PROTECTIVE BARRIERS, NOTIFICATION SIGNAGE, ENVIRONMENTAL CONTROLS, AIR, DUST, AND NOISE CONTROL, ETC.

GN12 WORK DESCRIBED WITHIN EITHER THE ARCHITECTURAL, STRUCTURAL, PLUMBING, MECHANICAL AND/OR ELECTRICAL DRAWINGS AND SPECIFICATIONS SHALL APPLY INCLUSIVELY TO RESPECTIVE TRADES. THE GENERAL CONTRACTOR SHALL ASSURE THAT EVERY TRADE IS FAMILIAR WITH EVERY ELEMENT OF THE CONSTRUCTION DOCUMENTS. IT IS PREREQUISITE THAT EACH TRADE UNDERSTANDS THE SCOPE OF WORK REQUIRED FOR OTHER TRADES TO COORDINATE AND/OR INTERFACE WITH ALL REQUIRED WORK.

GN13 THE CONTRACTOR SHALL NOTE ALL REQUIREMENTS FOR, COMPLETE REQUIRED WORK, AND/OR FACILITATE THE INSTALLATION OF NEW, EXISTING, OR OWNER PROVIDED EQUIPMENT INCLUDING, BUT NOT LIMITED TO, UTILITY SERVICE CONNECTIONS INCLUDING APPROPRIATE ELECTRICAL POWER COUPLINGS AND CONNECTION. THIS INCLUDES ALL OWNER PROVIDED AND INSTALLED EQUIPMENT, FIXTURES, AND APPLIANCES.

TASK SPECIFIC WORK

CN1 DEMOLITION OF EXISTING VESTIBULE – CAREFULLY REMOVE THE VESTIBULE FROM THE EXISTING BUILDING IN ITS ENTIRETY BEGINNING WITH THE SHED ROOF CONSTRUCTION, MASONRY WALLS, INTERIOR FINISHES, AND CONCRETE FLOOR SLAB AND FOUNDATION TO AN ELEVATION 6-INCHES BELOW THE FINISHED ELEVATION OF THE NEW SIDEWALK AT THE NEW PORTICO. REPAIR WALLS OF EXISTING BUILDING THAT ARE TO REMAIN IN PREPARATION FOR NEW FINISHES. REMOVE AND TERMINATE ALL ELEMENTS OF EXISTING ELECTRICAL SYSTEM INCLUDING LIGHT FIXTURES, EXIT DEVICES, OUTLETS, CONTROLS, ETC. REMOVE AND TERMINATE ALL ELEMENTS OF THE EXISTING HVAC AND SYSTEMS. CONFORM WITH THE REQUIREMENTS OF THE CONSTRUCTION DOCUMENTS INCLUDING THE SPECIFICATIONS.

CN2 DEMOLITION OF EXISTING BUILDING #6210 – CAREFULLY REMOVE EXISTING BUILDING #6210 IN ITS ENTIRETY. ALL CONSTRUCTION DEBRIS TO BE REMOVED FROM THE SITE AFTER DEMOLITION. BEGIN BY LOCATING AND TERMINATING ALL UTILITY SERVICE SYSTEMS INCLUDING, BUT NOT LIMITED TO, SANITARY SEWER, WATER, ELECTRICAL POWER, COMMUNICATIONS, AND NATURAL GAS. REMOVE CONCRETE FLOOR SLAB TO AN ELEVATION REQUIRED TO RECEIVE THE NEW BUILDING CONSTRUCTION, ASPHALT PAVED PARKING OR LANDSCAPING. THE FOUNDATIONS SHALL BE REMOVED IN ITS ENTIRETY. CONFORM WITH THE REQUIREMENTS OF THE CONSTRUCTION DOCUMENTS INCLUDING THE SPECIFICATIONS.

CN3 REMOVAL OF TREES – REMOVE EXISTING TREES COMPLETE IN THEIR ENTIRETY IN THE AREA OF NEW CONSTRUCTION. INCLUDE STUMPS AND MAIN ROOTS. ALSO SEE SITE PLAN.

CN4 REMOVAL OF POWER POLES, UNDERGROUND SERVICE CONDUIT AND GUY LINES – COORDINATE WITH AND OBTAIN APPROVAL FROM THE ELECTRICAL POWER SERVICE PROVIDER TO RELOCATE EXISTING POWER POLES THAT CONFLICT WITH THE NEW CONSTRUCTION. THE POWER POLE AND UNDERGROUND CONDUIT THAT SERVICES THE EXISTING PX BUILDING SHALL BE RELOCATED. PROVIDE CONDUCTORS AS REQUIRED FOR THIS RELOCATED POLE, 4-INCH CONDUIT AND POLE STABILIZATION GUYS. ALSO RELOCATE POLE IN NEW PAVED PARKING AREA. SEE ELECTRICAL DRAWINGS AND SITE PLAN.

GENERAL DEMOLITION, REMODELING, RENOVATION AND CONSTRUCTION NOTES (CONT.):

CN5 REMOVAL AND RELOCATION OF EXISTING SPRINKLER IRRIGATION CONTROLS AND BOXES – DURING SITE DEMOLITION, LOCATE TO THE MAXIMUM EXTENT POSSIBLE FROM INFORMATION PROVIDED BY THE OWNER OF FIELD INVESTIGATION, THE LOCATION EXISTING SPRINKLER SYSTEM CONTROLS, VALVES, AND BOXES. RELOCATE THESE SYSTEMS IN THEIR ENTIRETY AND INTERFACE WITH THE REMODELED SPRINKLER SYSTEM TO PROVIDE SYSTEM CONTROL FOR THE NEW AND EXISTING LANDSCAPING. THIS WORK INCLUDES DESIGN OF SYSTEM FOR APPROVAL BY THE ARCHITECT FOR THE CONTROLS WITH REQUIRED ELECTRICAL SERVICE AND BOXES AS REQUIRED FOR A FULLY FUNCTIONAL SYSTEM. NOTE THAT EXISTING VALVES AND CONTROL BOXES CAN BE REUSED WHEN PROPERLY CLEANED AND PREPARED.

CN6 REMODELING OF EXISTING SPRINKLER IRRIGATION SYSTEM – DURING SITE DEMOLITION, LOCATE TO THE MAXIMUM EXTENT POSSIBLE FROM INFORMATION PROVIDED BY THE OWNER OF FIELD INVESTIGATION, THE LOCATION EXISTING SPRINKLER HEADS, SERVICE PIPING, ETC. REMODEL THE EXISTING SPRINKLER SYSTEM TO PROVIDE COVERAGE TO NEW AND EXISTING LANDSCAPING. THIS WORK INCLUDES DESIGN OF SYSTEM FOR APPROVAL BY THE ARCHITECT, ALL NEW PIPING, HEADS, ETC., AS REQUIRED FOR A FULLY FUNCTIONAL SYSTEM.

CN7 REMOVAL OF EXISTING SIDEWALKS – CAREFULLY SAW CUT AND REMOVE EXISTING SIDEWALKS WHERE SHOWN OR REQUIRED FOR NEW CONSTRUCTION OR REPLACEMENT. REMOVE DEMOLISHED MATERIAL FROM SITE AS SPECIFIED. SEE DRAWINGS FOR ADDITIONAL LOCATION INFORMATION.

CN8 REMOVAL OF EXISTING CURB AND GUTTER – CAREFULLY SAW CUT AND REMOVE EXISTING CURB AND GUTTER WHERE SHOW OR REQUIRED FOR NEW CONSTRUCTION OR REPLACEMENT. REMOVE DEMOLISHED MATERIAL FROM SITE AS SPECIFIED. SEE DRAWINGS FOR ADDITIONAL LOCATION INFORMATION.

CN9 REMOVAL AND REPLACEMENT OF EXISTING LANDSCAPING AND LAWN AREAS – REMOVE THE EXISTING LAWN SOD FROM ALL AREAS WHERE NEW CONSTRUCTION IS PLANNED. SOD CAN BE RE-USED WITH PROPER PREPARATION AND STORAGE UPON APPROVAL BY THE ARCHITECT.

CN10 REMOVAL OF EXISTING SHINGLES IN AREA OF NEW CONSTRUCTION – CAREFULLY REMOVE EXISTING SHINGLES FROM THE EXISTING BUILDING IN THE AREA OF THE NEW ROOF "OVER-BUILD" TO A POINT THAT WILL ALLOW INSTALLATION OF MEMBRANE ICE-GUARD MATERIAL IN THE NEW VALLEY AS SPECIFIED. THE WIDTH OF THE VALLEY PROTECTION SHALL BE A MINIMUM OF 3-FEET EACH SIDE OF THE VALLEY IN PREPARATION FOR INSTALLATION OF NEW SHINGLES ON NEW ROOF AND OVER-BUILD AND TO BE WOVEN INTO THE SHINGLES ON THE EXISTING ROOF TO CREATE A WEATHER-SEALED ROOFING SYSTEM.

CN11 NEW METAL FLASHINGS AND DRIP EDGE ON EXISTING ROOF – PROVIDE AND INSTALL NEW METAL FLASHINGS AND DRIP EDGE ON EXISTING ROOFING WHERE REQUIRED FOR REMOVAL FOR NEW CONSTRUCTION. MATCH EXISTING MATERIALS AND COMPLY WITH SPECIFICATIONS FOR MATERIALS AND INSTALLATION.

CN12 MODIFICATION OF EXISTING ROOF BEARING WHERE EXISTING WALLS ARE REMOVED – PREPARE EXISTING ROOF TRUSSES TO RECEIVE NEW STRUCTURAL SUPPORT SYSTEM. ALSO REFER TO STRUCTURAL DRAWINGS.

CN13 INFILL EXISTING WINDOW OPENING – REMOVE EXISTING WINDOWS FROM WEST WALL OF EXISTING BUILDING DURING WALL REMOVAL. THE NORTH WINDOW OPENING IN THE EXISTING PX OFFICE SHALL BE REMOVED. THE EXITING MASONRY WINDOW SILL SHALL ALSO BE REMOVED. PROVIDE NEW 8-INCH CMU WALL INFILL IN EXISTING OPENING. PROVIDE #5 DOWELS DRILLED AND EPOXY ADHERED TO EXISTING CMU JAMB WALL. GROUT MASONRY FULL. NEW MASONRY WALL FINISH SHALL MATCH EXISTING ADJACENT SURFACE FINISH. ALSO REFER TO STRUCTURAL DRAWINGS.

CN14 MODIFICATIONS OF EXISTING FOOTINGS TO SUPPORT NEW STRUCTURE – PROVIDE MODIFICATIONS TO EXISTING FOOTING AND FOUNDATIONS FOR EXISTING BUILDING INCLUDING PREPARATION OF TOP OF FOUNDATION TO MAKE LEVEL AND UNIFORM WITH EXISTING BUILDING AND NEW FLOOR SLAB IN PREPARATION OF FLOOR FINISH AS SPECIFIED. ALSO REFER TO STRUCTURAL DRAWINGS.

CN15 REMOVAL OF EXISTING MASONRY WALLS – SHORE EXISTING ROOF TRUSSES FOR EXISTING BUILDING AS REQUIRED TO PREVENT MOVEMENT DURING WALL REMOVAL AND PLACEMENT OF NEW STRUCTURE. CAREFULLY SAW CUT EXISTING MASONRY IN SECTIONS FOR REMOVAL BY SECTIONS. REMOVAL WORK TO BE COMPLETED ONLY AFTER INSTALLATION OF NEW ROOF TRUSS STRUCTURAL SUPPORT SYSTEM. ALSO REFER TO STRUCTURAL DRAWINGS. EXPOSED MASONRY JAMBS TO BE FINISHED TO MATCH ADJACENT SURFACES OR FURRED WITH 2"x FURRING WITH 5/8-INCH GWB, PAINTED FINISH.

CN16 FLOOR FINISH IN EXISTING BUILDING – CAREFULLY REMOVE EXISTING FLOOR COVERINGS AND BASE AS REQUIRED IN AREAS AFFECTED BY DEMOLITION AND PREPARE FLOORS TO RECEIVE NEW FLOOR COVERINGS AND FINISHES AS SPECIFIED.

CN17 CEILING FINISH IN EXISTING BUILDING – CAREFULLY REMOVE EXISTING CEILING AS REQUIRED IN AREAS AFFECTED BY DEMOLITION AND PREPARE FOR AND RE-INSTALL AS SHOWN OR REQUIRED. INCLUDE ALL REQUIRED REPLACEMENT MATERIALS IN SCOPE OF WORK.

CN18 WALL FINISH IN EXISTING BUILDING – MODIFY AND/OR EXTEND EXISTING WALL FINISHES IN EXISTING BUILDING TO MATCH EXISTING MATERIALS AND FINISHES FOR COMPLETED WALL ASSEMBLY.

CN19 NEW INTERIOR WALLS IN BUILDING ADDITION – UNLESS OTHERWISE NOTED, ALL NEW WALLS SHALL BE CONSTRUCTED OF 2"x4" OR 2"x6" WOOD STUDS SPACED AT MAXIMUM 16-INCHES ON CENTER. PROVIDE 5/8-INCH, TYPE "X" GYPSUM WALL BOARD ON BOTH SIDES FROM FINISHED FLOOR TO ROOF DECK. MATERIALS, CONSTRUCTION AND FINISHES SHALL CONFORM WITH THE SPECIFICATIONS INCLUDING PAINTING

CN20 NOTE USED

CN21 PREPARATION OF SITE PRIOR TO CONSTRUCTION OF BUILDING ADDITION – PRIOR TO PERFORMING CONSTRUCTION WORK, LOCATE TO THE MAXIMUM EXTENT POSSIBLE FROM INFORMATION PROVIDED BY THE OWNER OF FIELD INVESTIGATION, ALL EXITING SITE IMPROVEMENTS AND/OR UTILITIES. BLUE STAKE ENTIRE PROJECT AREA.

CN22 SANITARY SEWER LINES – EXTEND OR RELOCATE EXISTING SANITARY SEWER LINE AS REQUIRED TO MAINTAIN SERVICE TO EXISTING BUILDING AND PROVIDE SERVICE TO NEW BUILDING. COORDINATE WITH UTANG CAMPUS REPRESENTATIVE. ALSO SEE MECHANICAL DRAWINGS AND SPECIFICATIONS.

GENERAL DEMOLITION, REMODELING, RENOVATION AND CONSTRUCTION NOTES (CONT.):

CN23 CULINARY WATER SERVICE – EXTEND OR RELOCATE EXISTING CULINARY WATER SERVICE LINE AS REQUIRED TO MAINTAIN SERVICE TO EXISTING BUILDING AND PROVIDE SERVICE TO NEW BUILDING. COORDINATE WITH UTANG CAMPUS REPRESENTATIVE. ALSO SEE MECHANICAL DRAWINGS AND SPECIFICATIONS.

CN24 NATURAL GAS SERVICE – EXTEND OR RELOCATE EXISTING NATURAL GAS SERVICE LINE AS REQUIRED TO MAINTAIN SERVICE TO EXISTING BUILDING AND PROVIDE SERVICE TO NEW BUILDING. COORDINATE WITH UTANG CAMPUS REPRESENTATIVE. ALSO SEE MECHANICAL DRAWINGS AND SPECIFICATIONS.

CN25 ELECTRICAL POWER SERVICE – EXTEND OR RELOCATE EXISTING ELECTRICAL POWER SERVICE LINES AS REQUIRED TO MAINTAIN SERVICE TO EXISTING BUILDING AND PROVIDE SERVICE TO NEW BUILDING. COORDINATE WITH UTANG CAMPUS REPRESENTATIVE. ALSO SEE ELECTRICAL DRAWINGS AND SPECIFICATIONS.

CN26 DATA/COMMUNICATIONS SYSTEM SERVICE – EXTEND OR RELOCATE EXISTING DATA/ COMMUNICATIONS SYSTEM SERVICE AS REQUIRED TO MAINTAIN SERVICE TO EXISTING BUILDING AND PROVIDE SERVICE TO NEW BUILDING. COORDINATE WITH UTANG CAMPUS REPRESENTATIVE. ALSO SEE ELECTRICAL DRAWINGS AND SPECIFICATIONS.

CN27 PROVIDE MARKER TAPE, FILL AND COMPACTION OF UTILITY TRENCHES IN ACCORDANCE WITH THE SPECIFICATIONS FOR ALL UTILITY SYSTEMS. ALL UTILITY LINE EXCAVATIONS MUST BE OBSERVED BY A UTNG ENVIRONMENTAL REPRESENTATIVE. OBSERVATION MUST BE ARRANGED THROUGH THE UTNG PROJECT REPRESENTATIVE.

CN28 NEW ASPHALT PAVED PARKING LOT TO BE LOCATED AND CONSTRUCTED AS SHOWN ON THE DRAWINGS AND SPECIFIED. PROVIDE PAVEMENT STRIPING AND MARKING AS SHOWN AND SPECIFIED.

CN29 CONCRETE PATIO – 5-INCH THICK CONCRETE SLAB ON GRADE. PROVIDE CONTROL JOINTS AS SHOWN ON THE DRAWINGS AND AS SPECIFIED.

CN30 PATIO SCREEN WALL – 8-INCH CMU WITH CULTURED STONE VENEER ON PATIO SIDE. SEE DETAILS ON DRAWINGS

CN31 BARBER SHOP EQUIPMENT – COORDINATE WITH THE BARBER SHOP TENANT THROUGH THE UTANG REPRESENTATIVE. NOTE THAT SOME EQUIPMENT IS FURNISHED AND INSTALLER BY THE TENANT. ALL UTILITY SERVICES TO EQUIPMENT REGARDLESS OF WHO PROVIDES, ARE INSTALLED BY THE CONTRACTOR. ALL CONNECTIONS TO ALL FIXTURES ARE TO BE PERFORMED BY THE CONTRACTOR.

CN32 OVER-BUILD OF NEW ROOF ON EXISTING ROOF WILL BE FRAMED AS SHOWN ON STRUCTURAL DRAWINGS OR AS A MINIMUM WITH 2"x8" JOISTS SPACED AT MAXIMUM 16-INCHES ON CENTER. PROVIDE A 2"x10" CONTINUOUS RIDGE. ANCHOR JOISTS ON BOTH ENDS WITH APPROPRIATE SIMPSON FRAMING ANCHORS. PROVIDE SOLID BLOCKING AT ALL BEARING. SHEATHING SHALL BE THE SAME AS THE NEW ROOF.

CN33 DORMERS WILL BE FRAMED AS SHOWN ON THE STRUCTURAL DRAWINGS OR AS A MINIMUM WITH 2"x6" JOISTS SPACED AT MAXIMUM 16-INCHES ON CENTER. PROVIDE A 2"x8" CONTINUOUS RIDGE. ANCHOR JOISTS ON BOTH ENDS WITH APPROPRIATE SIMPSON FRAMING ANCHORS. PROVIDE SOLID BLOCKING AT ALL BEARING. SHEATHING SHALL BE THE SAME AS THE NEW ROOF. PROVIDE GRILLES AS SHOWN AND SPECIFIED.

CN34 REPAIR EXISTING CEILING AFTER PLUMBING PIPING INSTALLATION – REMOVE EXISTING CEILING TILE AS REQUIRED TO INSTALL NEW PLUMBING PIPING FROM EXISTING TOILET AND MECHANICAL ROOM AREA. INSTALL PIPING AS SHOWN ON PLUMBING AND MECHANICAL DRAWINGS. RE-INSTALL CEILING TILE AND/OR REPLACE ALL DAMAGED CEILING TILE.

CN35 REPAIR EXISTING ROOF AFTER INSTALLATION OF ROOF TRUSS STRUCTURAL TIE – SEE STRUCTURAL DRAWINGS FOR ROOF TRUSS STRUCTURAL TIE REQUIREMENTS. WORK SHALL INCLUDE CAREFUL REMOVAL OF ROOF SHINGLES IN LIMITED AREA OF REQUIRED WORK, REMOVAL OF ROOF SHEATHING AT JOINTS ON TRUSSES TO ACCESS WORK AREA FOR ANCHORAGE SYSTEM PLACEMENT. REPLACE SHEATHING AND RE-ROOF WITH SHINGLES ON SNOW GUARD AS PART ON THE NEW ROOFING INSTALLATION. PROVIDE DRIP AND/OR SHEET METAL FLASHING AS REQUIRED.

CN36 NOT USED

CN37 ATTIC VENTILATION – IBC 1203.3: PROVIDE FACTORY MANUFACTURED DEVICE TO MAINTAIN MINIMUM 1-INCH CLEARANCE BETWEEN INSULATION AND PLYWOOD SHEATHING AT BUILDING ROOF PERIMETER AS SPECIFIED.

ATTIC VENTILATION AREA REQUIRED IS 3682 SF DIVIDED BY 300 = 12.27 SQUARE FEET = 1767 SQUARE INCHES.

VENTILATION AREA PROVIDED IS AS FOLLOWS:

PERIMETER EAVE VENTING 182 LF SOFFIT WITH TWO 2-INCH DIAMETER VENT @ 24-INCHES O/C @ 80%
FREE AREA = 914 SQUARE INCHES
RIDGE VENTING 48 LF x 6-INCHES @ 40% FREE AREA = 96 SQUARE INCHES
GRILLES 3 EACH x 100 SQUARE INCHES @ 50% FREE AREA = 180 SQUARE INCHES
TURTLES 8 EACH x 100 SQUARE INCHES @ 80% FREE AREA = 640 SQUARE INCHES

TOTAL ATTIC VENTILATION AREA: 1830 SQUARE INCHES PROVIDED

NOTE THAT MORE THAN 50% OF THE VENTILATION AREA EXCEEDS 3-FEET HEIGHT ABOVE CORNICE VENTS.

CN38 ATTIC DRAFT STOPS – IBC 717.4: PROVIDE AN ATTIC DRAFT STOP WHERE SHOWN ON REFLECTED CEILING PLAN AE102. DRAFT STOP SHALL BE CONSTRUCTED OF 5/8" TYPE "X" GWB ON ONE SIDE OF TRUSS FROM TOP OF CEILING TO UNDERSIDE OF ROOF SHEATHING. SEAL AROUND DUCTWORK AND PIPING PENETRATIONS.

CN39 PROVIDE TWO NEW ACCESSIBLE PARKING SIGNS AS SHOWN ON SITE PLAN AND PER DETAIL A2/GI003.

L.K. SORENSEN ASSOCIATES, INC.
ARCHITECTS / PLANNERS / LANDSCAPE ARCHITECTS
1332 DUFFHL CIRCLE
TAYLORSVILLE, UTAH 84123
(801)262-9393 Fax (801)262-3511

CONSULTANTS

UTAH NATIONAL GUARD
PX FACILITY ADDITION
Camp W. G. Williams
Bluffdale, Utah

MARK	DATE	DESCRIPTION

PROJECT NO:	08310480
DATE:	25 JANUARY 2010
CAD DWG FILE:	
DRAWN BY:	ajs
CHECKED BY:	lks
DESIGNED BY:	lks

COPYRIGHT:
THIS PRINT AND ALL INFORMATION HEREON IS SUBJECT TO COPYRIGHT LAWS AND IS THE PROPERTY OF L.K. SORENSEN ASSOCIATES, INC. AND SHALL NOT BE USED ON ANY OTHER PROJECT WITHOUT WRITTEN PERMISSION OF THE ARCHITECT.

SHEET TITLE

GENERAL DEMOLITION, REMODELING, RENOVATION & CONSTRUCTION NOTES

AE001

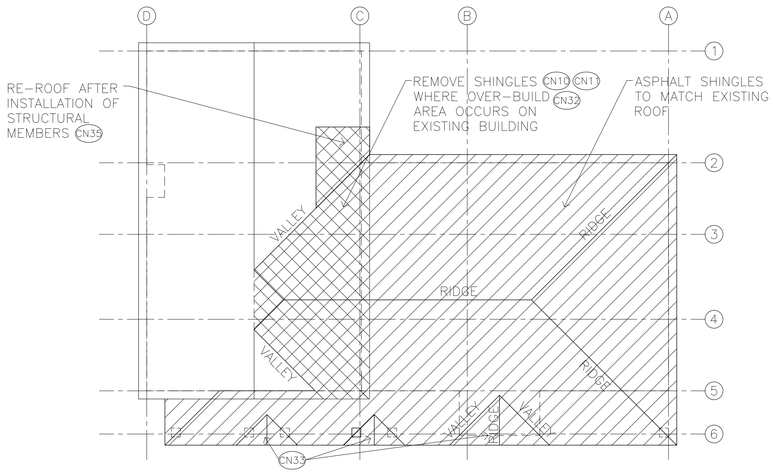

ROOF PLAN

SCALE: 1/16"=1'-0"

NORTH

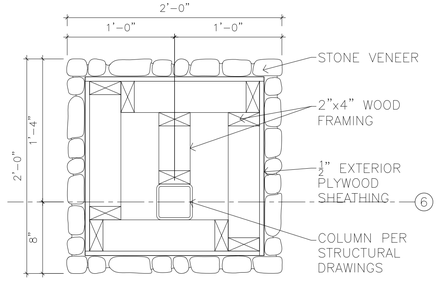

D3 DETAIL

SCALE: 1-1/2"=1'-0"

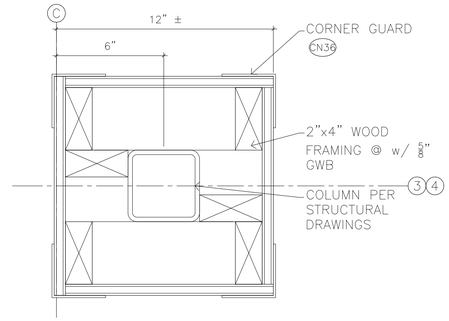

D4 DETAIL

SCALE: 3"=1'-0"

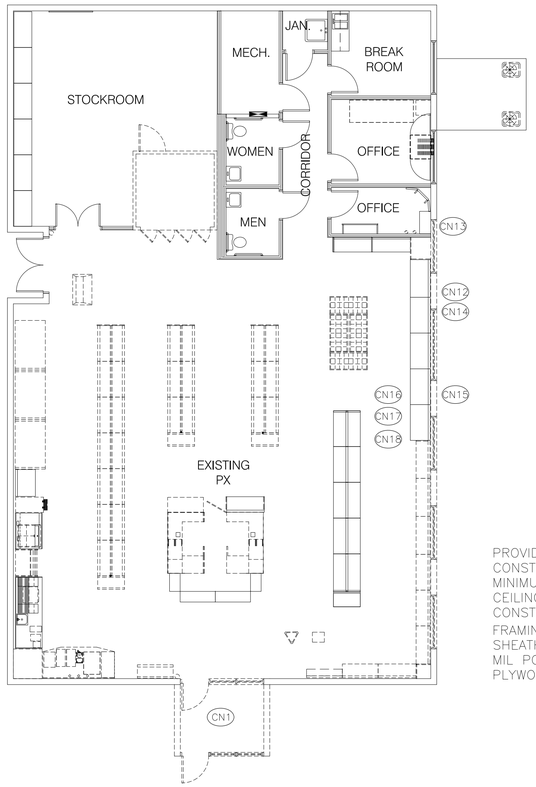

DEMOLITION FLOOR PLAN

SCALE: 1/8"=1'-0"

NORTH

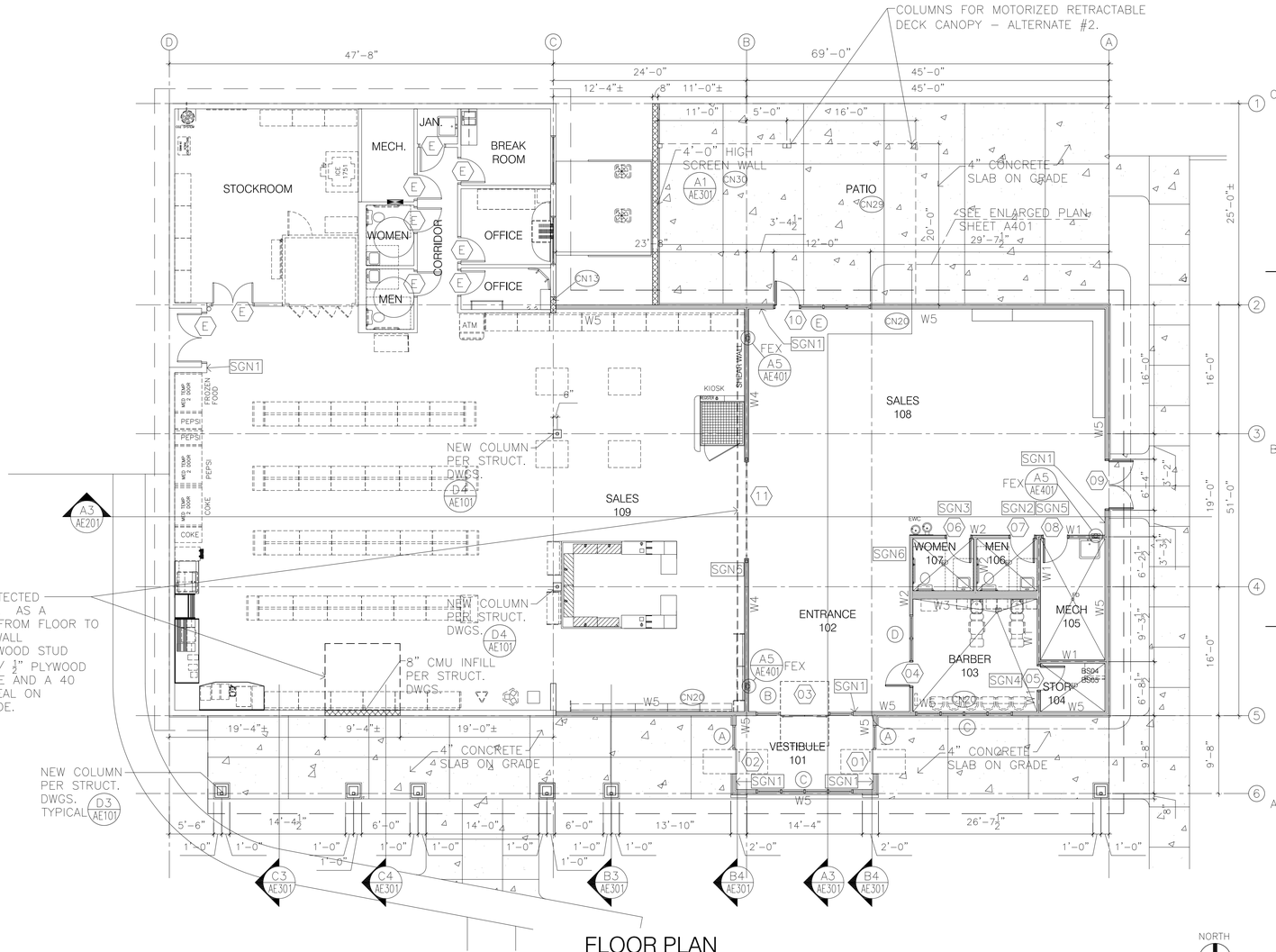

FLOOR PLAN

SCALE: 1/8"=1'-0"

NORTH

L. K. SORENSEN ASSOCIATES, INC.
ARCHITECTS / PLANNERS / LANDSCAPE ARCHITECTS
1332 DUFEHL CIRCLE
TAYLORSVILLE, UTAH 84123
(801)262-9393 Fax (801)262-3511

CONSULTANTS

UTAH NATIONAL GUARD

PX FACILITY ADDITION

Camp W. G. Williams
Bluffdale, Utah

MARK	DATE	DESCRIPTION

PROJECT NO:	08310480
DATE:	25 JANUARY 2010
CAD DWG FILE:	
DRAWN BY:	ajs
CHECKED BY:	lks
DESIGNED BY:	lks

COPYRIGHT:
THIS PRINT AND ALL INFORMATION HEREON IS SUBJECT TO COPYRIGHT LAWS AND IS THE PROPERTY OF L. K. SORENSEN ASSOCIATES, INC. AND SHALL NOT BE USED ON ANY OTHER PROJECT WITHOUT WRITTEN PERMISSION OF THE ARCHITECT.

SHEET TITLE

FLOOR PLAN / ELEVATION

AE101

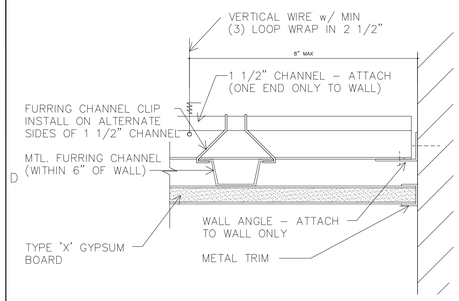

D1 TYPICAL SUSPENDED GYPSUM BOARD CEILING
SCALE: 6"=1'-0"

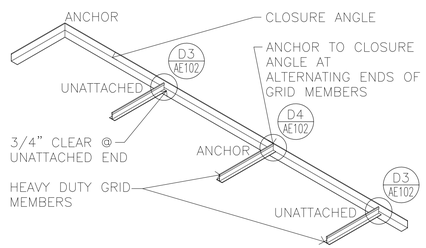

D2 DETAIL
NO SCALE

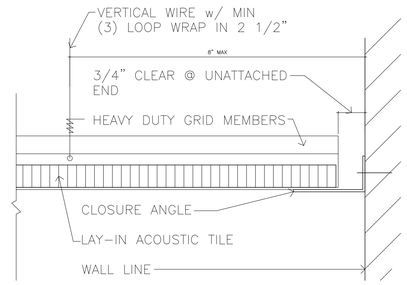

NO HORIZONTAL BRACING REQ'D FOR AREAS LESS THAN 1000 SF PER 1621.2.5

D3 UNATTACHED SUSPENDED LAY-IN TILE CEILING
SCALE: 6"=1'-0"

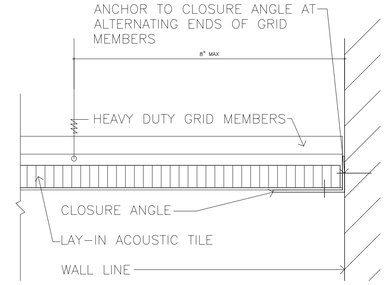

NO HORIZONTAL BRACING REQ'D FOR AREAS LESS THAN 1000 SF PER 1621.2.5

D4 ATTACHED SUSPENDED LAY-IN TILE CEILING
SCALE: 6"=1'-0"

REFLECTED CEILING LEGEND

NEW 2'x4' SUSPENDED CEILING GRID SEE D4 AE102 D3 AE102 D2 AE102

NEW SUSPENDED GYPSUM CEILING GRID SEE D1 AE102

2'x4' RECESSED FLUORESCENT FIXTURE

1'x4' SURFACE-MOUNTED FLUORESCENT FIXTURE

EMERGENCY EXIT LIGHT

RETURN AIR DIFFUSER SUPPLY AIR DIFFUSER

NOTES:

* SEE ELECTRICAL DRAWINGS AND SPECIFICATIONS FOR LIGHT LOCATION & INFORMATION

** SEE MECHANICAL DRAWINGS AND SPECIFICATIONS FOR GRILLE AND DIFFUSER LOCATION & INFORMATION.

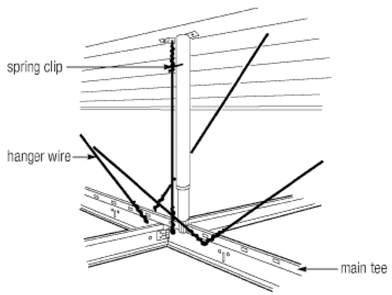

NOTE: STIFFENERS @ 96" O/C EACH WAY

C1 TYPICAL CEILING STIFFENER DETAIL
NO SCALE

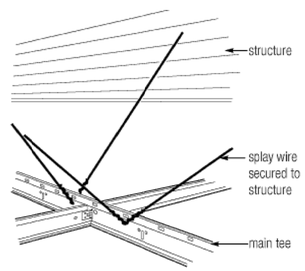

C2 TYPICAL CEILING BRACING DETAIL
SCALE: 6"=1'-0"

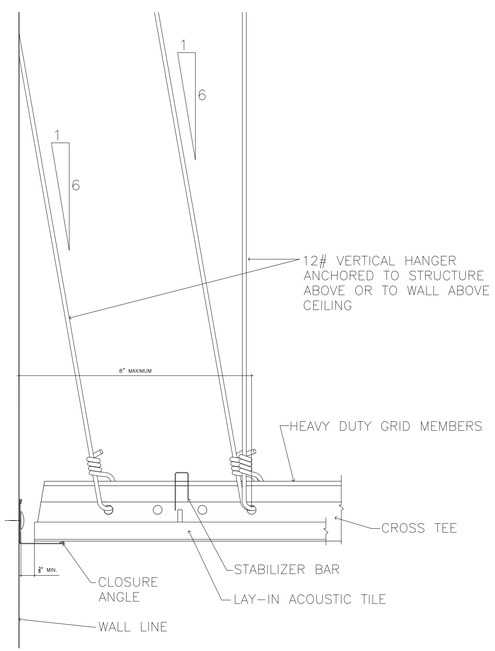

A1 SUSPENDED LAY-IN TILE CEILING BRACING DETAIL
SCALE: 6"=1'-0"

NOTE!!
IBC 2006 EDITION 803.9.1.1
SUSPENDED CEILING SYSTEMS SHALL BE INSTALLED IN ACCORDANCE WITH THE PROVISIONS OF ASTM C635 AND ASTM 636

REFLECTED CEILING PLAN
SCALE: 1/8"=1'-0"

NORTH

L.K. SORENSEN ASSOCIATES, INC.
ARCHITECTS / PLANNERS / LANDSCAPE ARCHITECTS
1332 DUFFHL CIRCLE
TAYLORSVILLE, UTAH 84123
(801)262-9393 Fax (801)262-3511

CONSULTANTS

UTAH NATIONAL GUARD
PX FACILITY ADDITION
Camp W. G. Williams
Bluffdale, Utah

MARK	DATE	DESCRIPTION

PROJECT NO:	08310480
DATE:	25 JANUARY 2010
CAD DWG FILE:	
DRAWN BY:	ajs
CHECKED BY:	lks
DESIGNED BY:	lks

COPYRIGHT:
THIS PRINT AND ALL INFORMATION HEREON IS SUBJECT TO COPYRIGHT LAWS AND IS THE PROPERTY OF L. K. SORENSEN ASSOCIATES, INC. AND SHALL NOT BE USED ON ANY OTHER PROJECT WITHOUT WRITTEN PERMISSION OF THE ARCHITECT.

SHEET TITLE
REFLECTED CEILING PLAN / DETAILS

AE102

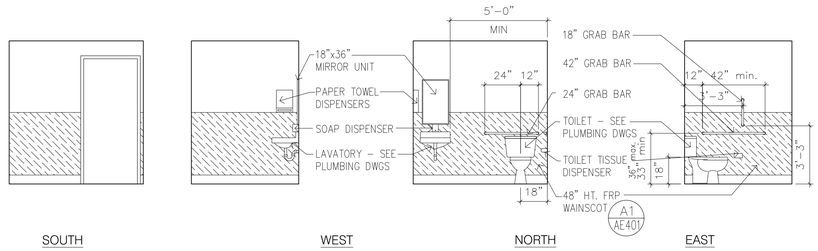

D1 WOMEN 110 qnd MEN 109
SCALE: 1/4"=1'-0"

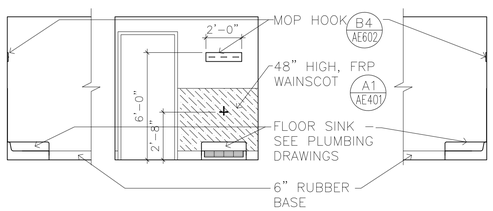

C1 JANITOR 109
SCALE: 1/4"=1'-0"

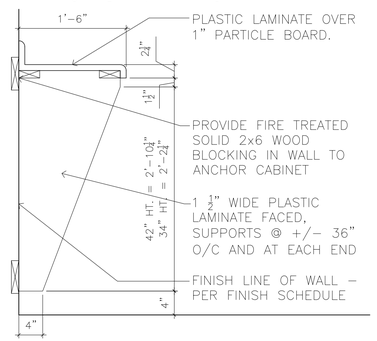

C2 DETAIL
SCALE: 1"=1'-0"

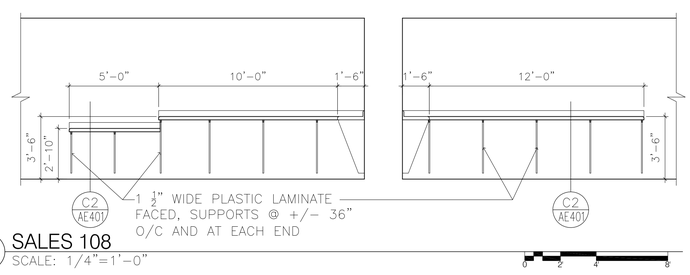

B1 SALES 108
SCALE: 1/4"=1'-0"

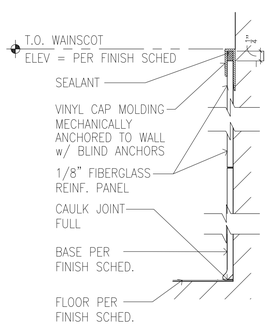

A1 FRP DETAIL
SCALE: HALF

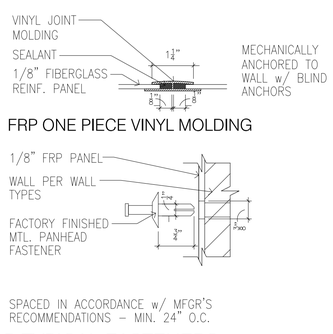

A2 FRP TYPICAL FASTENERS
SCALE: HALF

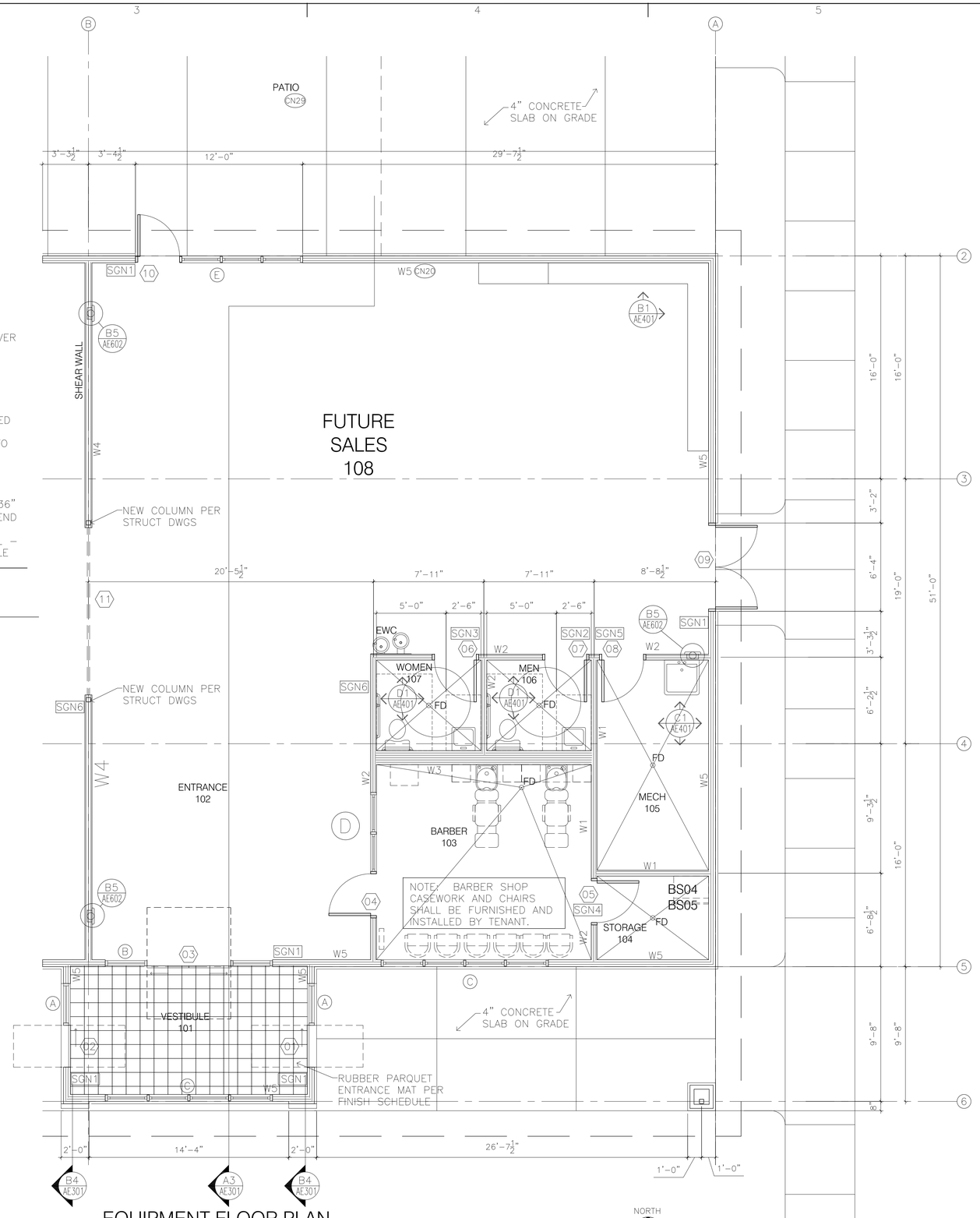

EQUIPMENT FLOOR PLAN
SCALE: 1/4"=1'-0"

L. K. SORENSEN ASSOCIATES, INC.
ARCHITECTS / PLANNERS / LANDSCAPE ARCHITECTS
1332 DUEHL CIRCLE
TAYLORSVILLE, UTAH 84123
(801)262-9393 Fax (801)262-3511

CONSULTANTS

UTAH NATIONAL GUARD
PX FACILITY ADDITION
Camp W. G. Williams
Bluffdale, Utah

MARK	DATE	DESCRIPTION

PROJECT NO:	08310480
DATE:	25 JANUARY 2010
CAD DWG FILE:	
DRAWN BY:	ajs
CHECKED BY:	lks
DESIGNED BY:	lks

COPYRIGHT:
THIS PRINT AND ALL INFORMATION HEREON IS SUBJECT TO COPYRIGHT LAWS AND IS THE PROPERTY OF L. K. SORENSEN ASSOCIATES, INC. AND SHALL NOT BE USED ON ANY OTHER PROJECT WITHOUT WRITTEN PERMISSION OF THE ARCHITECT.

SHEET TITLE
EQUIPMENT FLOOR PLAN & SCHEDULE

AE103

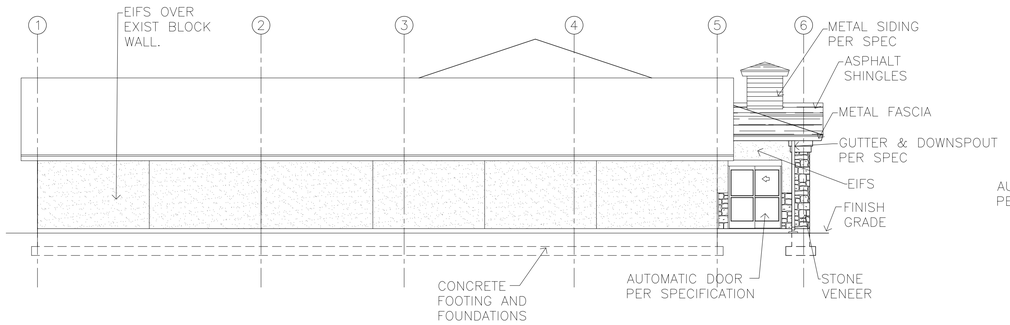

WEST ELEVATION
SCALE: 1/8"=1'-0"

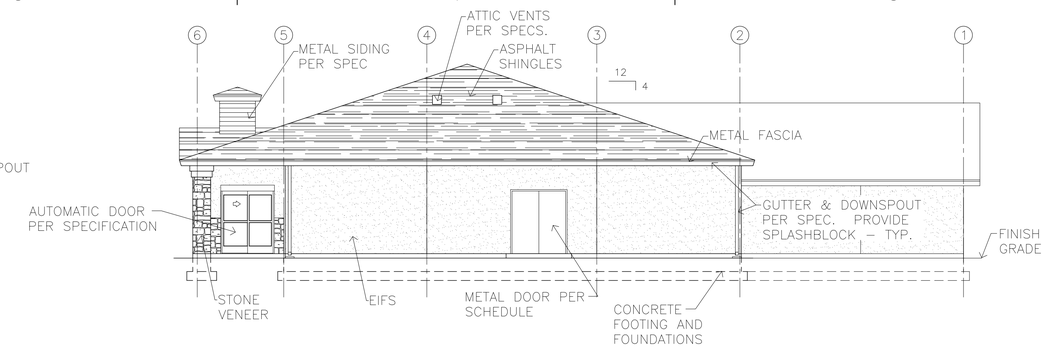

EAST ELEVATION
SCALE: 1/8"=1'-0"

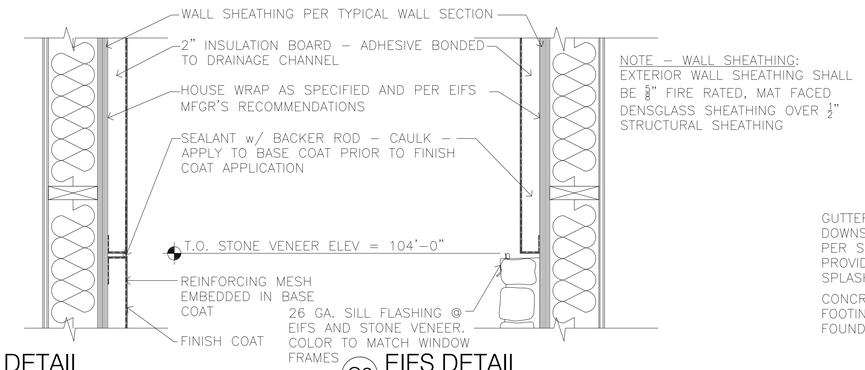

NOTE - WALL SHEATHING: EXTERIOR WALL SHEATHING SHALL BE 3/8" FIRE RATED, MAT FACED DENSGLASS SHEATHING OVER 1/2" STRUCTURAL SHEATHING

C1 EIFS DETAIL
SCALE: 1-1/2"=1'-0"

C2 EIFS DETAIL
SCALE: 1-1/2"=1'-0"

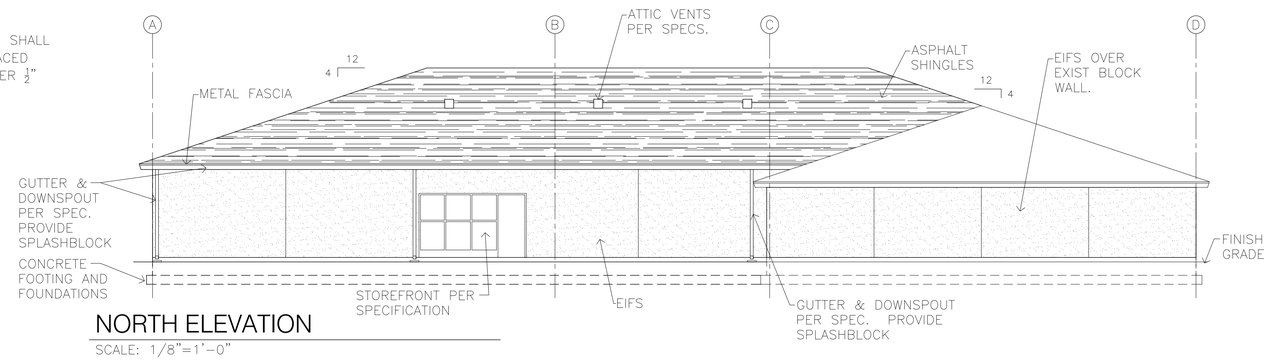

NORTH ELEVATION
SCALE: 1/8"=1'-0"

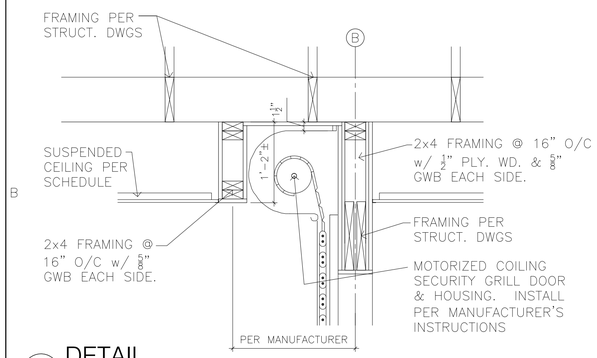

B1 DETAIL
SCALE: 1"=1'-0"

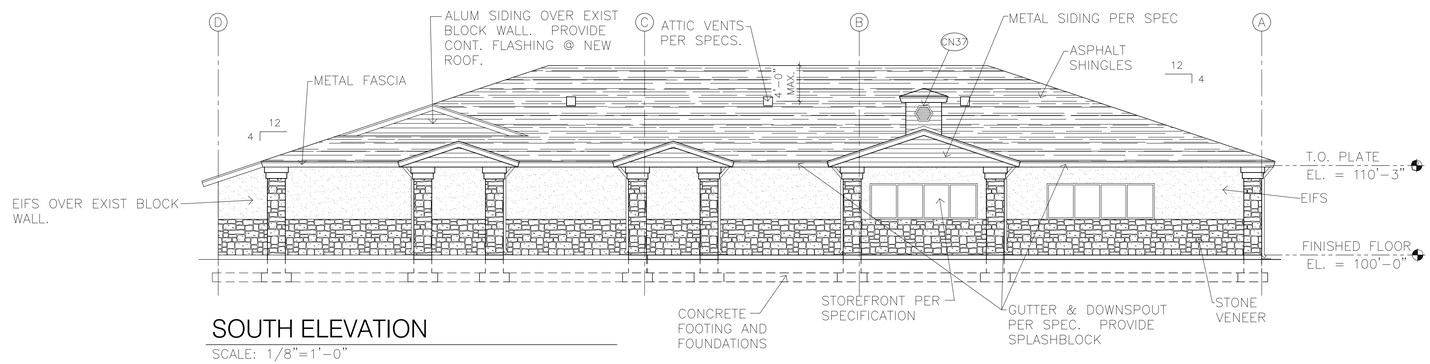

SOUTH ELEVATION
SCALE: 1/8"=1'-0"

NOTE: SPLASHBLOCKS TO BE 10"x20"x2" PRECAST CONCRETE - TYPICAL

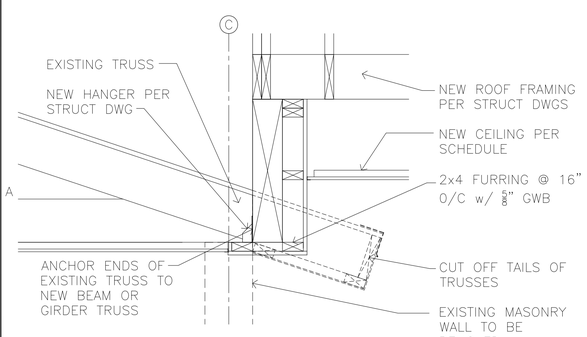

A1 DETAIL
SCALE: 1"=1'-0"

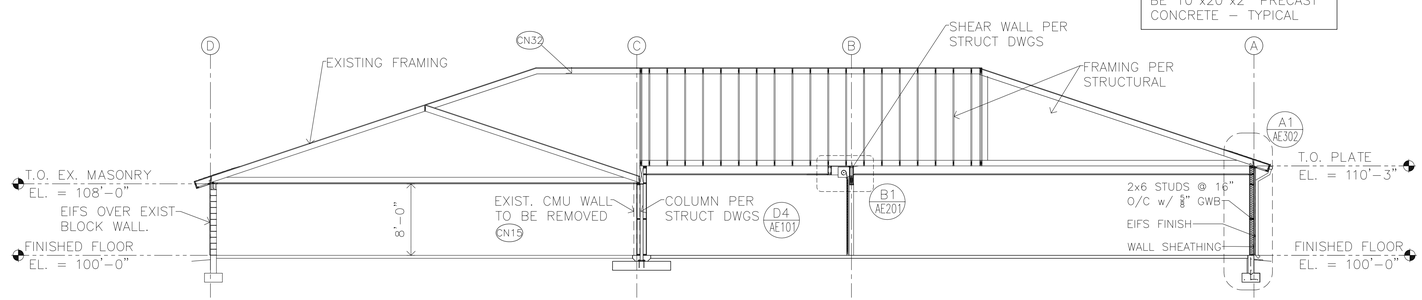

A3 BUILDING SECTION
SCALE: 1/8"=1'-0"

L.K. SORENSEN ASSOCIATES, INC.
ARCHITECTS / PLANNERS / LANDSCAPE ARCHITECTS
1332 DUEHL CIRCLE
TAYLORSVILLE, UTAH 84123
(801)262-9393 Fax (801)262-3511

CONSULTANTS

UTAH NATIONAL GUARD

PX FACILITY ADDITION

Camp W. G. Williams
Bluffdale, Utah

MARK	DATE	DESCRIPTION

PROJECT NO:	08310480
DATE:	25 JANUARY 2010
CAD DWG FILE:	
DRAWN BY:	ajs
CHECKED BY:	lks
DESIGNED BY:	lks

COPYRIGHT:
THIS PRINT AND ALL INFORMATION HEREON IS SUBJECT TO COPYRIGHT LAWS AND IS THE PROPERTY OF L. K. SORENSEN ASSOCIATES, INC. AND SHALL NOT BE USED ON ANY OTHER PROJECT WITHOUT WRITTEN PERMISSION OF THE ARCHITECT.

SHEET TITLE

BUILDING ELEVATIONS / SECTION

AE201

NOTE: SEAL AROUND ALL J-BOXES OR ANY OTHER PENETRATIONS w/ FIRE RATED SEALANT. TYPICAL.

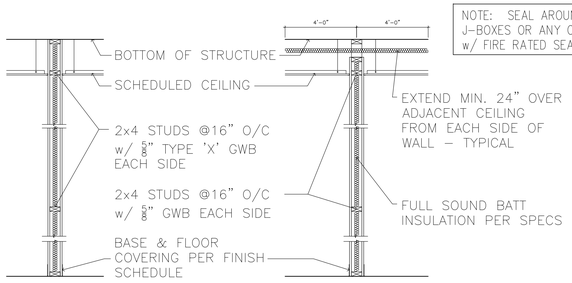

W1
1-HR RATED
FLOOR – TO – STRUCTURE

W2
NOT RATED
FLOOR – TO – STRUCTURE

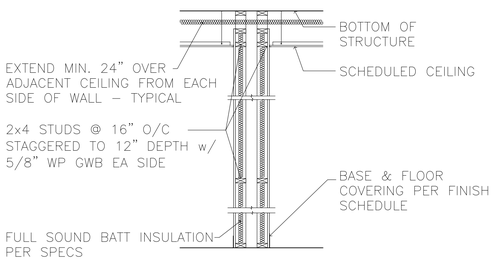

W3
12" PLUMBING WALL
FLOOR – TO – STRUCTURE

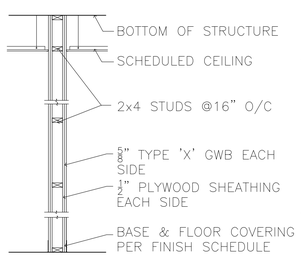

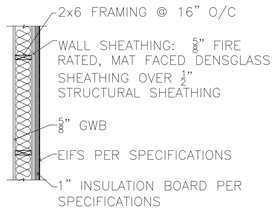

W4
SHEAR WALL
FLOOR – TO – STRUCTURE
1-HR RATED

W5
–
EXTERIOR WALL

B1 WALL TYPES
SCALE: 1/2" = 1'-0"

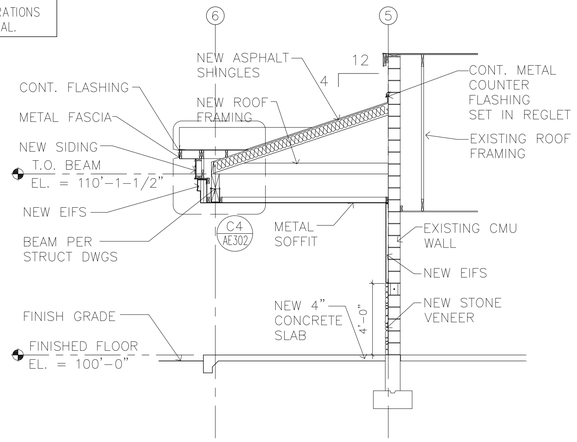

C3 SECTION
SCALE: 1/4"=1'-0"

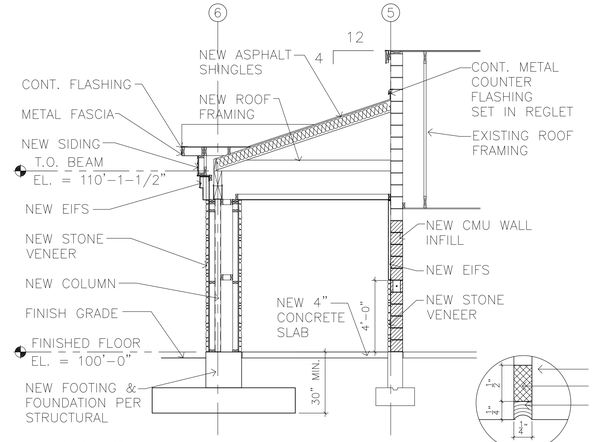

C4 SECTION
SCALE: 1/4"=1'-0"

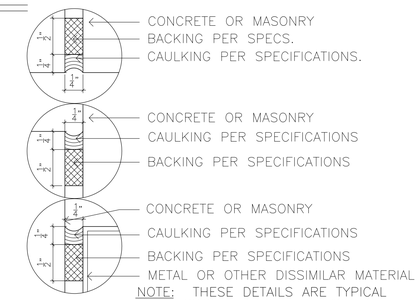

NOTE: THESE DETAILS ARE TYPICAL CONDITIONS & APPLY EVERYWHERE.

NOTE: THESE DETAILS APPLY TO ALL JOINTS IN NEW CONSTRUCTION

C5 TYPICAL CAULKING DETAIL
NO SCALE

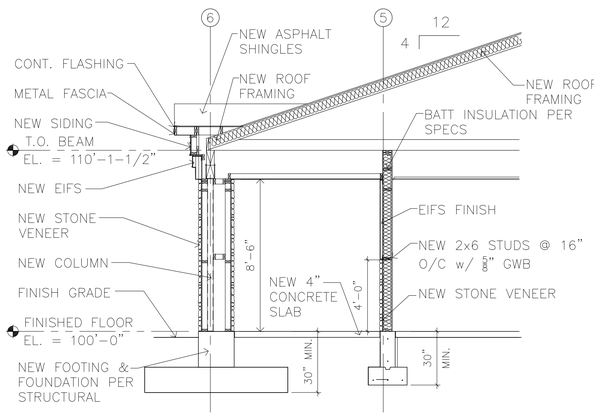

B3 SECTION
SCALE: 1/4"=1'-0"

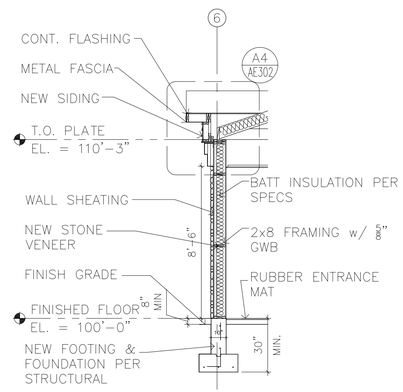

B4 SECTION
SCALE: 1/4"=1'-0"

NOTE – WOOD SILL PLATES: ALL WOOD SILL PLATES SHALL CONFORM WITH THE REQUIREMENTS OF IBC 2006 SECTION 2304.9.5 INCLUDING BUT NOT LIMITED TO THE FOLLOWING. SILL PLATES SHALL BE TREATED IN ACCORDANCE WITH THE SPECIFICATIONS. SEE STRUCTURAL DRAWINGS FOR ANCHOR BOLT SIZE AND SPACING. ALL NAILS TO PLATES SHALL BE GALVANIZED.

NOTE – INSULATION
R–30 @ TOP CHORD OF ROOF TRUSS
R–19 IN 2x6 EXTERIOR WALLS

NOTE – WALL SHEATHING:
EXTERIOR WALL SHEATHING SHALL BE 5/8" FIRE RATED, MAT FACED DENSGLASS SHEATHING OVER 1/2" STRUCTURAL SHEATHING

NOTE: SEE STRUCTURAL DRAWINGS AND GEOTECHNICAL REPORT FOR FILL AND COMPACTION REQUIREMENTS.

NOTE: STONE VENEER ANCHORAGE SHALL COMPLY w/ IBC SECTION 1405.6

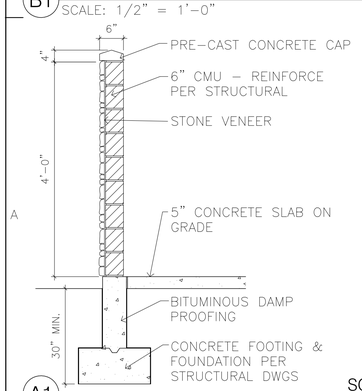

A1 SCREEN WALL
SCALE: 3"=1'-0"

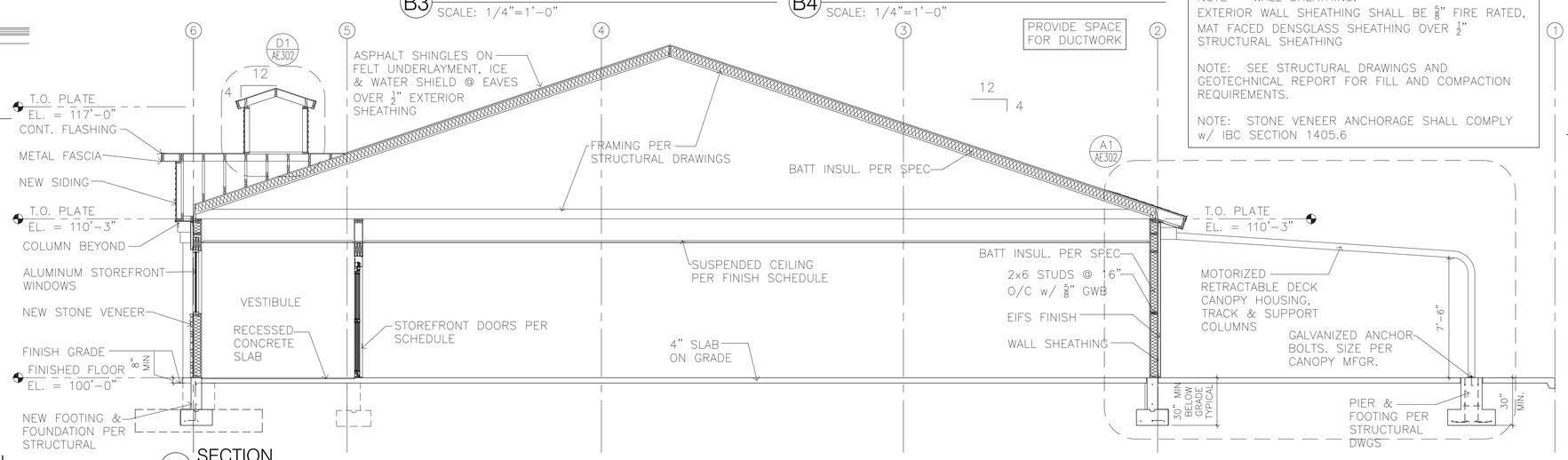

A3 SECTION
SCALE: 1/4"=1'-0"

L.K. SORENSEN ASSOCIATES, INC.
ARCHITECTS / PLANNERS / LANDSCAPE ARCHITECTS
1332 DUFHI CIRCLE
TAYLORSVILLE, UTAH 84123
(801)262-9393 Fax (801)262-3511

CONSULTANTS

UTAH NATIONAL GUARD
PX FACILITY ADDITION
Camp W. G. Williams
Bluffdale, Utah

MARK	DATE	DESCRIPTION

PROJECT NO:	08310480
DATE:	25 JANUARY 2010
CAD DWG FILE:	
DRAWN BY:	ajs
CHECKED BY:	lks
DESIGNED BY:	lks

COPYRIGHT:
THIS PRINT AND ALL INFORMATION HEREON IS SUBJECT TO COPYRIGHT LAWS AND IS THE PROPERTY OF L. K. SORENSEN ASSOCIATES, INC. AND SHALL NOT BE USED ON ANY OTHER PROJECT WITHOUT WRITTEN PERMISSION OF THE ARCHITECT.

SHEET TITLE
BUILDING SECTIONS

AE301

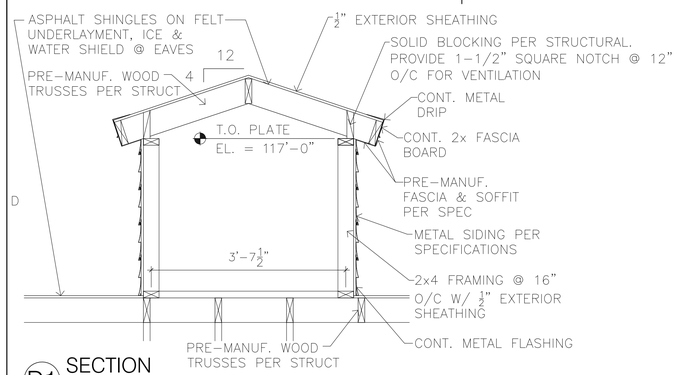

D1 SECTION
SCALE: 3/4"=1'-0"

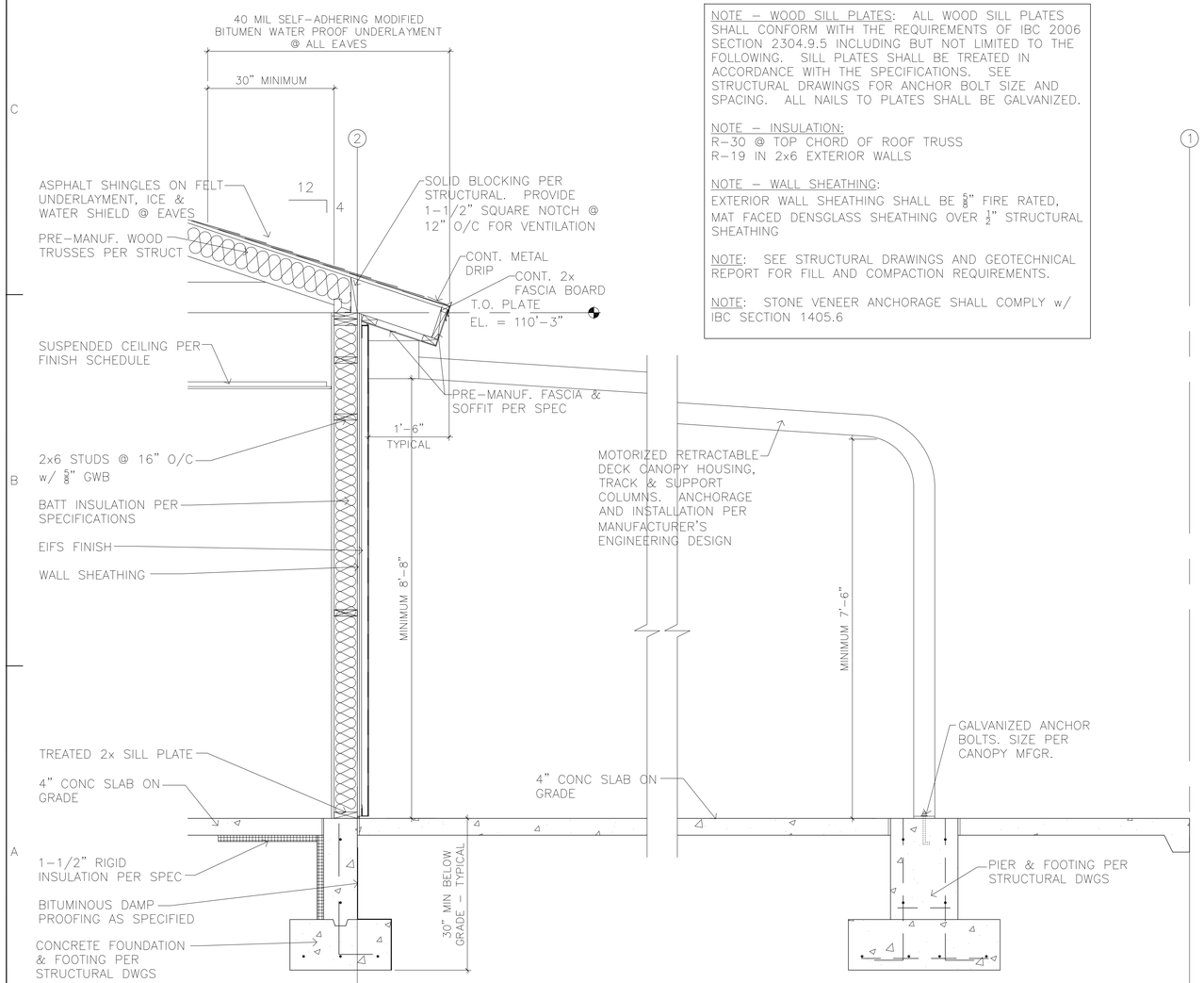

A1 TYPICAL EXTERIOR WALL SECTION
SCALE: 3/4"=1'-0"

NOTE – WOOD SILL PLATES: ALL WOOD SILL PLATES SHALL CONFORM WITH THE REQUIREMENTS OF IBC 2006 SECTION 2304.9.5 INCLUDING BUT NOT LIMITED TO THE FOLLOWING. SILL PLATES SHALL BE TREATED IN ACCORDANCE WITH THE SPECIFICATIONS. SEE STRUCTURAL DRAWINGS FOR ANCHOR BOLT SIZE AND SPACING. ALL NAILS TO PLATES SHALL BE GALVANIZED.

NOTE – INSULATION:
R-30 @ TOP CHORD OF ROOF TRUSS
R-19 IN 2x6 EXTERIOR WALLS

NOTE – WALL SHEATHING:
EXTERIOR WALL SHEATHING SHALL BE ⅝" FIRE RATED, MAT FACED DENSGLASS SHEATHING OVER ½" STRUCTURAL SHEATHING

NOTE: SEE STRUCTURAL DRAWINGS AND GEOTECHNICAL REPORT FOR FILL AND COMPACTION REQUIREMENTS.

NOTE: STONE VENEER ANCHORAGE SHALL COMPLY w/ IBC SECTION 1405.6

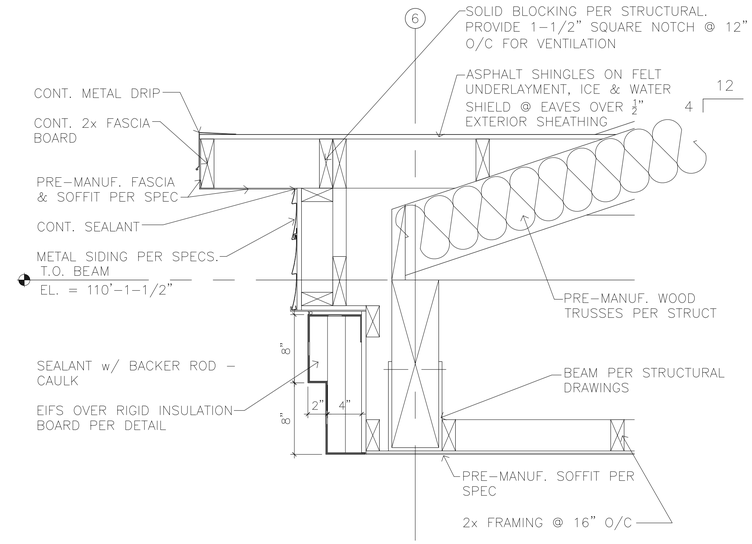

C4 SECTION
SCALE: 3/4"=1'-0"

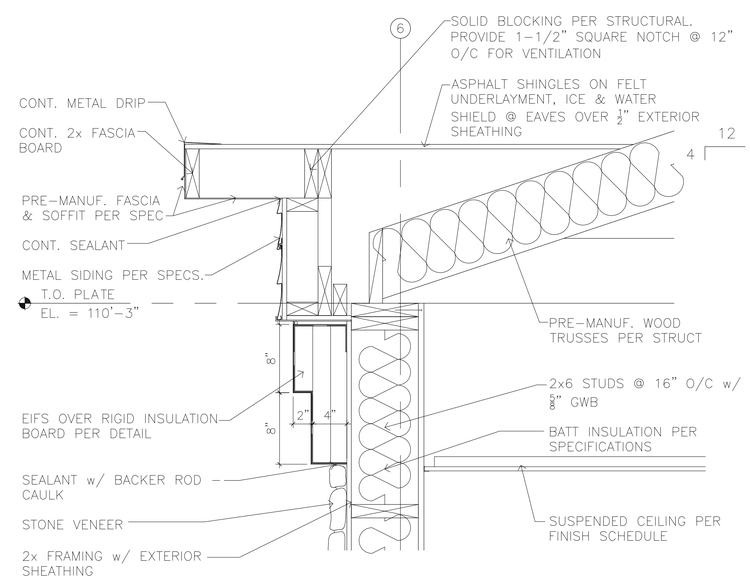

A4 SECTION
SCALE: 3/4"=1'-0"

L.K. SORENSEN ASSOCIATES, INC.
ARCHITECTS / PLANNERS / LANDSCAPE ARCHITECTS
1332 DUFHI, CIRCLE
TAYLORSVILLE, UTAH 84123
(801)262-9393 Fax (801)262-3511

CONSULTANTS

UTAH NATIONAL GUARD
PX FACILITY ADDITION
Camp W. G. Williams
Bluffdale, Utah

MARK	DATE	DESCRIPTION

PROJECT NO:	08310480
DATE:	25 JANUARY 2010
CAD DWG FILE:	
DRAWN BY:	ajs
CHECKED BY:	lks
DESIGNED BY:	lks

COPYRIGHT:
THIS PRINT AND ALL INFORMATION HEREON IS SUBJECT TO COPYRIGHT LAWS AND IS THE PROPERTY OF L. K. SORENSEN ASSOCIATES, INC. AND SHALL NOT BE USED ON ANY OTHER PROJECT WITHOUT WRITTEN PERMISSION OF THE ARCHITECT.

SHEET TITLE
SECTIONS / DETAILS

AE302

DOOR & FRAME SCHEDULE

DOOR No.	NEW OR EXIST.	ROOM NAME	DOOR TYPE	DOOR WIDTH	DOOR HEIGHT	DOOR THICK.	DOOR MAT'L.	FRAME TYPE	FRAME MAT'L.	FRAME DETAILS HEAD	FRAME DETAILS JAMB	FRAME DETAILS THRESH	HDWARE GROUP	LABEL	REMARKS
E	EXIST	EXISTING DOOR													
01	NEW	VESTIBULE 101	DT4	3'-0"	7'-0"		ALUM/GLS		ALUM	C3	B1	A1			DN1
02	NEW	VESTIBULE 101	DT5	3'-0"	7'-0"		ALUM/GLS		ALUM	C3	B1	A1			DN1
03	NEW	VESTIBULE 101	DT3	6'-0"	7'-0"		ALUM/GLS		ALUM	C1	B1	A1			DN1
04	NEW	BARBER 108	DT1	3'-0"	7'-0"	1 3/4"	SCWD		MTL	C5	B5	–			
05	NEW	STORAGE 107	DT1	3'-0"	7'-0"	1 3/4"	MTL		MTL	C5	B5	–		20 MIN	
06	NEW	WOMEN 110	DT1	3'-0"	7'-0"	1 3/4"	SCWD		MTL	C5	B5	A2			
07	NEW	MEN 109	DT1	3'-0"	7'-0"	1 3/4"	SCWD		MTL	C5	B5	A2			
08	NEW	MECHANICAL 106	DT1	3'-0"	7'-0"	1 3/4"	MTL		MTL	C5	B5	A4		20 MIN	
09	NEW	CORRIDOR 111	DT1	PR3'-0"	7'-0"	1 3/4"	MTL		MTL	C2	B2	A3			
10	NEW	DINING 103	DT2	3'-0"	7'-0"	1 3/4"	ALUM/GLS		ALUM	B4	B3	A5			
11	NEW	RETAIL 112	DT6	12'-0"	8'-0"		MTL		MTL	B1/AE201	C4	–			DN2
12															

NOTES:

DN1 AUTOMATIC SIDE SLIDING DOORS PER SPECIFICATIONS
DN2 MOTORIZED COILING SECURITY GRILL DOOR – SEE SPECIFICATIONS
NOTE: SEE SPECIFICATION SECTION 08 71 00 FOR DOOR HARDWARE SCHEDULE

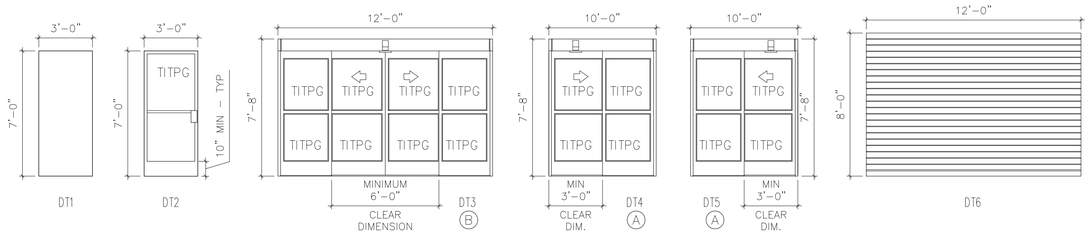

DOOR TYPES
SCALE: 1/4"=1'-0"

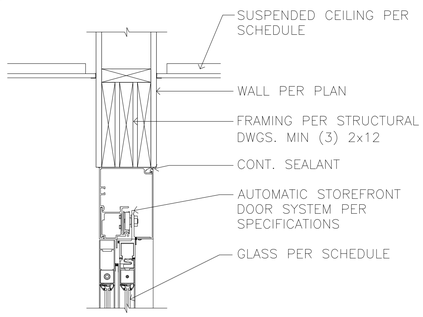

C1 HEAD
SCALE: 1-1/2"=1'-0"

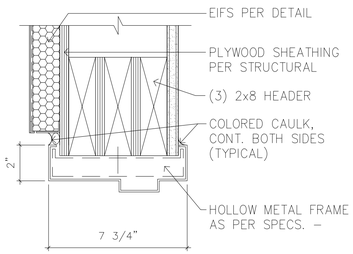

C2 HEAD
SCALE: 3"=1'-0"

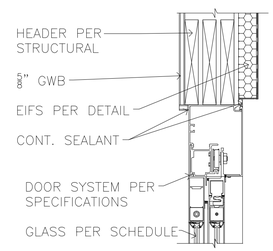

C3 HEAD
SCALE: 1-1/2"=1'-0"

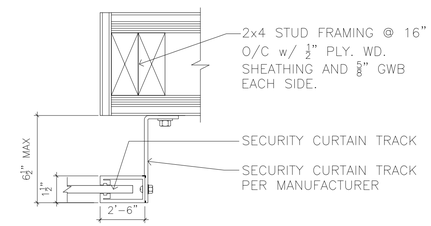

C4 HEAD
SCALE: 3"=1'-0"

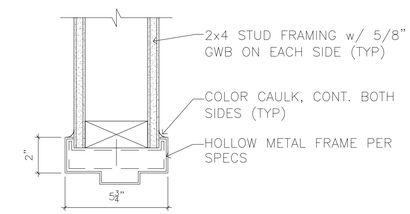

C5 HEAD
SCALE: 3"=1'-0"

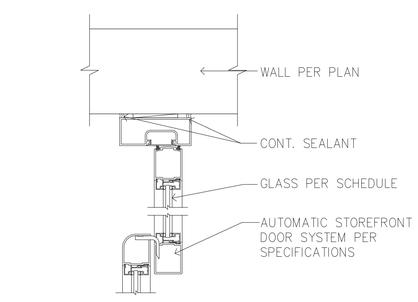

B1 JAMB
SCALE: 3"=1'-0"

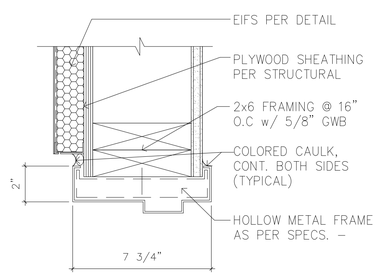

B2 JAMB
SCALE: 3"=1'-0"

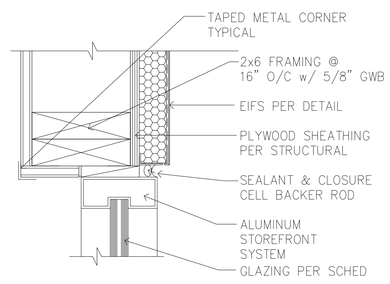

B3 JAMB
SCALE: 3"=1'-0"

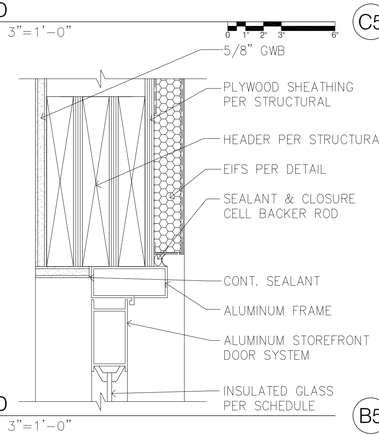

B4 HEAD
SCALE: 3"=1'-0"

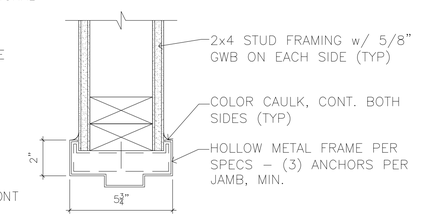

B5 JAMB
SCALE: 3"=1'-0"

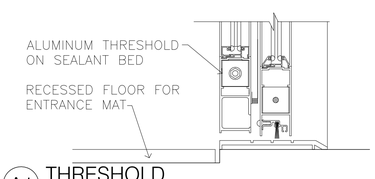

A1 THRESHOLD
SCALE: 3"=1'-0"

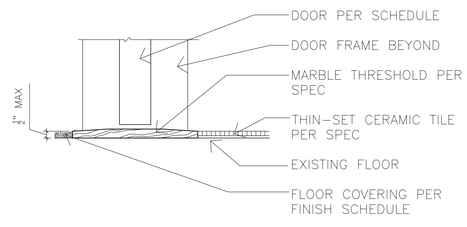

A2 THRESHOLD
SCALE: 3"=1'-0"

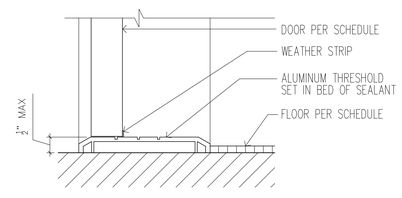

A3 THRESHOLD
SCALE: 3"=1'-0"

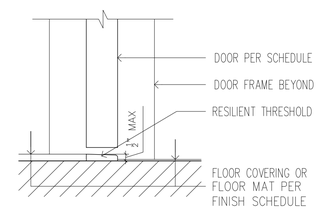

A4 THRESHOLD
SCALE: 3"=1'-0"

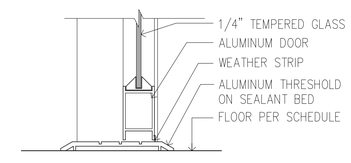

A5 THRESHOLD
SCALE: 3"=1'-0"

L. K. SORENSEN ASSOCIATES, INC.
ARCHITECTS / PLANNERS / LANDSCAPE ARCHITECTS
1332 DUFFHL CIRCLE
TAYLORSVILLE, UTAH 84123
(801)262-9393 Fax (801)262-3511

CONSULTANTS

UTAH NATIONAL GUARD
PX FACILITY ADDITION
Camp W. G. Williams
Bluffdale, Utah

MARK	DATE	DESCRIPTION

PROJECT NO:	08310480
DATE:	25 JANUARY 2010
CAD DWG FILE:	
DRAWN BY:	ajs
CHECKED BY:	lks
DESIGNED BY:	lks

COPYRIGHT:
THIS PRINT AND ALL INFORMATION HEREON IS SUBJECT TO COPYRIGHT LAWS AND IS THE PROPERTY OF L. K. SORENSEN ASSOCIATES, INC. AND SHALL NOT BE USED ON ANY OTHER PROJECT WITHOUT WRITTEN PERMISSION OF THE ARCHITECT.

SHEET TITLE
DOOR SCHEDULE / DETAILS

AE601

TITPG TINTED, INSULATED, TEMPERED PLATE GLASS
TIG TINTED, INSULATED GLASS
TPG TEMPERED PLATE GLASS

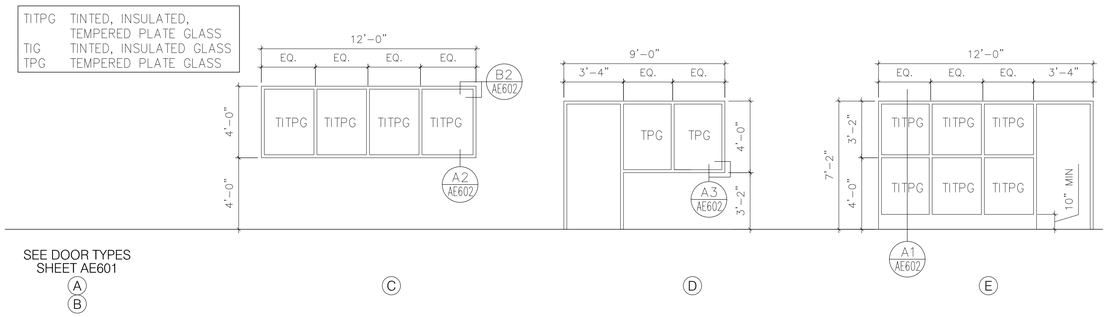

SEE DOOR TYPES SHEET AE601
A
B

NOTE: FIELD VERIFY ALL DIMENSIONS

WINDOW SCHEDULE

SCALE: 1/4"=1'-0"

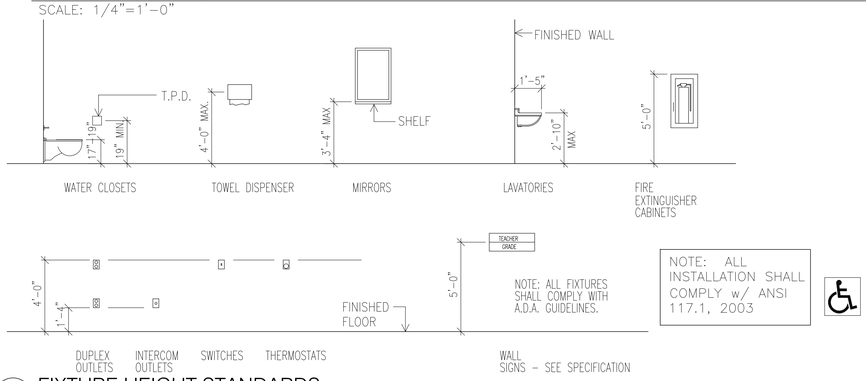

NOTE: ALL INSTALLATION SHALL COMPLY w/ ANSI 117.1, 2003

C1 FIXTURE HEIGHT STANDARDS

NO SCALE

ROOM FINISH SCHEDULE

ROOM No.	ROOM NAME	FLOOR		BASE		NORTH WALL		SOUTH WALL		EAST WALL		WEST WALL		CEILING			DOOR		DOOR FRAME		NOTES
		MAT'L	FINISH	MAT'L	FINISH	MAT'L	FINISH	MAT'L	FINISH	MAT'L	FINISH	MAT'L	FINISH	MAT'L	FINISH	HEIGHT	MAT'L	FINISH	MAT'L	FINISH	
101	VESTIBULE	RPEM	A	RB	A	GWB	B	GWB	B	GWB	B	GWB	B	GWB	B	9'-0"	ALUM	A	ALUM	A	FN4
102	ENTRANCE	VCT	A	RB	A	GWB	B	GWB	B	GWB	B	GWB	B	ACST	A	9'-0"	SCWD	C	MTL	B	
103	BARBER	VCT	A	RB	A	GWB	B	GWB	B	GWB	B	GWB	B	ACST	A	9'-0"	SCWD	C	MTL	B	
104	STORAGE	VCT	A	RB	A	GWB	B	GWB	B	GWB	B	GWB	B	ACST	A	9'-0"	SCWD	C	MTL	B	
105	MECHANICAL	CONC	E	RB	A	GWB	B	GWB	B	GWB	B	GWB	B	ACST	A	9'-0"	MTL	B	MTL	B	
106	MEN	CT	A	CT	A	GWB	E	GWB	E	GWB	E	GWB	E	GWB	E	8'-0"	SCWD	C	MTL	B	FN2, FN3
107	WOMEN	CT	A	CT	A	GWB	E	GWB	E	GWB	E	GWB	E	GWB	E	8'-0"	SCWD	C	MTL	B	FN2, FN3
108	FUTURE SALES	VCT	A	RB	A	GWB	B	GWB	B	GWB	B	GWB	B	ACST	A	9'-0"	MTL	B	MTL	B	
109	SALES	VCT	A	RB	A	GWB	B	GWB	B	GWB	B	GWB	B	ACST	A	9'-0"	SCWD	C	MTL	B	FN1, FN5

FINISH NOTES:

FN1 PROVIDE VCT MATCHING EXISTING RETAIN SALES AREA

FN2 PROVIDE SIX INCH HIGH CERAMIC TILE BASE ON ALL WALLS (A5 / AE602)

FN3 48" HIGH FIBERGLASS REINFORCED PANEL (FRP) WAINSCOT (A1 / AE401)

FN4 PROVIDE RUBBER ENTRANCE MAT PER SPECS. (A4 / AE602)

FN5 NEW FLOOR COVERING TO MATCH EXISTING

NOTE THAT ALL NOTES APPLY WHETHER USED ON FINISH SCHEDULE OR LOCATED ELSEWHERE IN PROJECT

FINISHES:

A. NO FINISH AFTER INSTALLATION – CLEAN ONLY

B. PAINT IN ACCORDANCE WITH THE SPECIFICATIONS.

C. STAIN IN ACCORDANCE WITH THE SPECIFICATIONS.

D. EPOXY PAINT IN ACCORDANCE WITH THE SPECIFICATIONS.

E. LIQUID HARDENER/SEALER IN ACCORDANCE WITH THE SPECIFICATIONS.

F. FINISH IN ACCORDANCE WITH THE MANUFACTURER'S RECOMMENDATIONS.

MATERIAL ABBREVIATIONS:

ACST	ACOUSTIC TILE
ALUM	ALUMINUM
CONC	CONCRETE
CMU	CONCRETE MASONRY UNIT
CPT	CARPET
CT	CERAMIC TILE
E	EXISTING
GLS	GLASS
GWB	GYPSUM WALL BOARD
MTL	METAL
N	NONE
RB	RUBBER
RPEM	RUBBER PARQUET ENTRANCE MAT
SCWD	SOLID CORE WOOD
STRUCT	STRUCTURE
TIG	TINTED, INSULATED GLASS
TITPG	TINTED, INSULATED, TEMPERED PLATE GLASS
TPG	TERMPERED PLATE GLASS
VCT	VINYL COMPOSITION TILE
WD	WOOD

SIGNS - SEE SIGNAGE SCHEDULE SHEET GI003

1 MEN
1 WOMEN
1 STORAGE
1 MECHANICAL – NO ADMITTANCE WITHOUT AUTHORIZATION
1 MAXIMUM OCCUPANCY: 49 PEOPLE
2 HANDICAPPED PARKING SIGNS

NOTE THAT ALL TO MEET SPECIFICATIONS

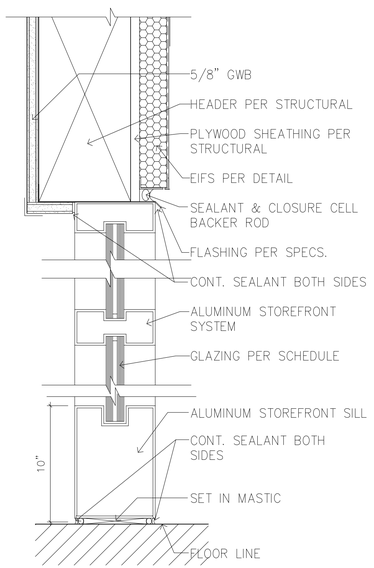

A1 SECTION @ STOREFRONT

SCALE: 3"=1'-0"

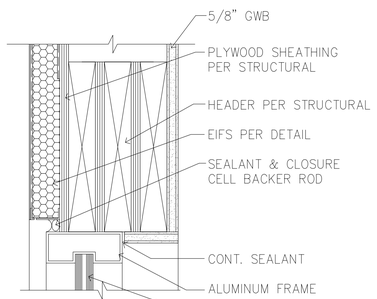

B2 HEAD (JAMB SIM)

SCALE: 3"=1'-0"

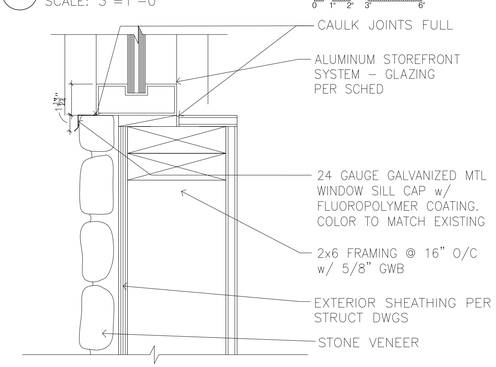

A2 SILL

SCALE: 3"=1'-0"

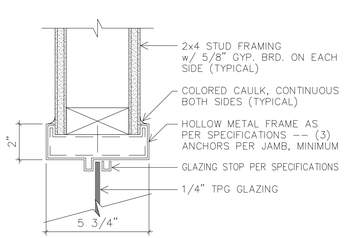

A3 HEAD / JAMB @ SIDELIGHT WINDOW

SCALE: 3"=1'-0"

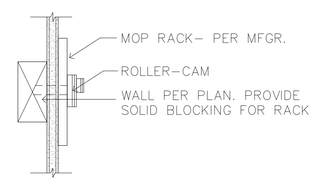

B4 MOP RACK

SCALE: 3"=1'-0"

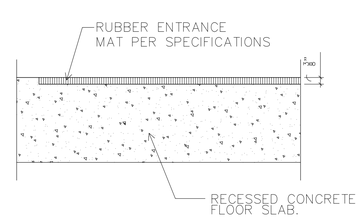

A4 RUBBER ENTRANCE MAT

SCALE: 3"=1'-0"

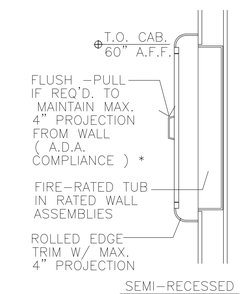

* COMPLY W/ ANSI A117.1–2003, "PROTRUDING OBJECTS"

B5 FIRE EXTINGUISHER CABINET

SCALE: 1" = 1'-0"

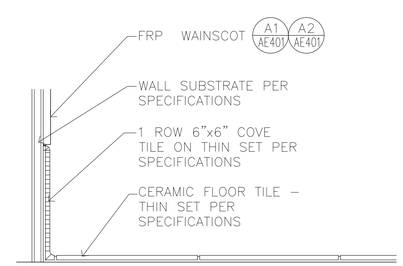

A5 CERAMIC TILE BASE

SCALE: 3"=1'-0"

L. K. SORENSEN ASSOCIATES, INC.
ARCHITECTS / PLANNERS / LANDSCAPE ARCHITECTS
1332 DUFFHL CIRCLE
TAYLORSVILLE, UTAH 84123
(801)262-9393 Fax (801)262-3511

CONSULTANTS

UTAH NATIONAL GUARD

PX FACILITY ADDITION

Camp W. G. Williams
Bluffdale, Utah

MARK	DATE	DESCRIPTION

PROJECT NO:	08310480
DATE:	25 JANUARY 2010
CAD DWG FILE:	
DRAWN BY:	ajs
CHECKED BY:	lks
DESIGNED BY:	lks

COPYRIGHT:
THIS PRINT AND ALL INFORMATION HEREON IS SUBJECT TO COPYRIGHT LAWS AND IS THE PROPERTY OF L. K. SORENSEN ASSOCIATES, INC. AND SHALL NOT BE USED ON ANY OTHER PROJECT WITHOUT WRITTEN PERMISSION OF THE ARCHITECT.

SHEET TITLE

WINDOW & FINISH SCHEDULE / DETAILS

AE602

GENERAL STRUCTURAL NOTES

GENERAL

1. The structural notes are intended to complement the project specifications. Specific notes and details in the drawings shall govern over the structural notes and typical details.
2. Typical details and sections shall apply where specific details are not shown.
3. The contractor shall verify all site conditions and dimensions. If actual conditions differ from those shown in the contract drawings, the contractor shall immediately notify the architect/engineer before proceeding with the fabrication or construction of any affected elements.
4. Changes to these contract drawings may be made only by an authorized representative of Dunn Associates, Inc. Dunn Associates, Inc. shall not be held responsible or liable for any claims arising directly or indirectly from changes made without written authorization by an authorized representative of Dunn Associates, Inc.
5. Omissions or conflicts between the contract drawings and/or specifications shall be brought to the attention of the architect/engineer before proceeding with any work involved. In case of conflict, follow the most stringent requirement as directed by the architect/engineer at no additional cost to the owner.
6. The contractor shall submit a written request to the architect/engineer before proceeding with any changes, substitutions, or modifications. Any work done by the contractor before receiving written approval will be at the contractor's risk.
7. The contractor shall coordinate with all trades any items that are to be integrated into the structural system such as openings, penetrations, mechanical and electrical equipment, etc. Sizes and locations of mechanical and other equipment that differs from those shown on the contract drawings shall be reported to the architect/engineer.
8. The contractor shall be responsible for means, methods, techniques, sequences, and procedures in order to comply with the contract drawings and specifications. The contractor shall provide adequate shoring and bracing as required for the chosen method of erection. Shoring and bracing shall remain in place until final connections for the permanent members are completed. The building shall not be considered stable until all connections are completed. Walls shall not be considered self-supporting and shall be braced until the floor/roof system is completed.
9. Site observations by a field representative of Dunn Associates, Inc. shall not be construed as approval of construction, the procedures, nor special inspection.
10. Detailing and shop drawing production for structural elements will require information (including dimensions) contained in the architectural, structural and/or other consultants' drawings. The structural drawings shall be used in conjunction with the architectural and other consultant's drawings. Most dimensions and most non-structural elements such as elevations, depressions, slopes, mechanical housekeeping pads, etc. are not shown in the structural drawings. See the Architectural Drawings for dimensions, doors, windows, non-bearing interior and exterior walls, elevations, slopes, stairs, curbs, drains, recesses, depressions, railings, waterproofing, finishes, chamfers, kerfs, etc.
11. Review of shop drawing submittals by Dunn Associates, Inc. is for general compliance only and is not intended for approval. The shop drawing review shall not relieve the contractor from the responsibility of completing the project according to the contract documents.
12. Shop drawings made from reproductions of the structural drawings will be rejected unless the contractor signs a release agreement prior to the shop drawings being reviewed. The contractor may also obtain electronic files of the plan sheets after signing a release agreement. Electronic files of the detail sheets and schedule sheets will not be made available.
13. All work shall be done in accordance with OSHA requirements. Potential conflicts between these documents and OSHA requirements shall be brought to the attention of the structural engineer before proceeding with the work.

BASIS OF DESIGN

1. Governing Building Code — International Building Code 2006
2. Occupancy Category — II
3. Roof Live Load* — 20 psf
   *(Not concurrent with Roof Snow Load)
4. Roof Snow Load
   - 4.1. Ground Snow Load — P_g = 46.5 psf
   - 4.2. Flat Roof Snow Load — P_f = 36 psf
   - 4.3. Snow Exposure Factor — C_e = 1.0
   - 4.4. Thermal Factor — C_t = 1.1
   - 4.5. Snow Load Importance Factor — I_s = 1.0
5. Wind Load
   - 5.1. Basic Wind Speed (3 Second Gust) — 90 mph
   - 5.2. Wind Importance Factor — 1.00
   - 5.3. Wind Exposure — C
   - 5.4. Internal Pressure Coefficient — ± 0.18
6. Seismic Design Criteria
   - 6.1. Mapped Spectral Response Accelerations
     - 6.1.1. Short Period Acceleration — S_S = 1.129
     - 6.1.2. 1-Second Acceleration — S_1 = 0.462
   - 6.2. Site Class (Soil Profile) — D
   - 6.3. Spectral Response Coefficients
     - 6.3.1. Short Period Acceleration — S_{DS} = 0.789
     - 6.3.2. 1-Second Acceleration — S_{D1} = 0.473
   - 6.4. Seismic Importance Factor — 1.0
   - 6.5. Seismic Design Category — D
   - 6.6. Effective Seismic Weight of the Structure — W
   - 6.7. Basic Seismic Force Resisting Systems — Wood & Masonry Shearwalls / SMF Cantilever Columns
     - 6.7.1. Response Modification Coefficient — R = 5 / 2.5
     - 6.7.2. System Over-Strength Factor — Ω_0 = 3 / 1.25
     - 6.7.3. Deflection Amplification Factor — C_D = 4 / 2.5
     - 6.7.4. Design Base Shear — $V = C_S{*}W = 0.12W$ / $0.32W$
   - 6.8. Analysis Procedure — Equivalent Lateral Force
7. Serviceability Criteria
   - 7.1. Deflection Limits — Live/Snow: L/360; Total: L/240
     Roof
   - 7.2. Interstory Seismic/Wind Drift — Δ_a < 0.02h ('h' is story height)

FOUNDATION

1. Soils Report by: GSH
   Dated: Dec. 17, 2009 #0128-052-09
2. Soil Bearing Pressure: 1500psf, on Compacted Fill.
3. Frost Protection: 30 inches minimum
4. Lateral Soil Pressure Fluid Equivalent Density:
   - 4.1. Passive — 300 pcf
5. Coefficient of Friction — 0.4
6. The soils engineer shall review all excavations and fill placement prior to placing concrete.

EARTHWORK

1. Clearing: The entire building area shall be scraped to remove the top 4" of soil including all vegetation and debris.
2. Proof rolling: The natural undisturbed soil below all footings shall be proof rolled prior to placing concrete. Remove all soft spots and replace with compacted structural fill.
3. Compacted structural fill: All fill material shall be a well-graded granular material with a maximum size less than 4" and with not more than 10% passing a #200 sieve. It shall be compacted to 95% of the maximum laboratory density as determined by ASTM D 1557. All fill shall be tested. Compacted structural fill shall be placed in lifts not exceeding 8" in uncompacted thickness.
4. Consult the project specifications and soils report for further earthwork requirements. The soils engineer shall review all excavations and fill placement prior to placing concrete.

CONCRETE

1. Materials unless noted otherwise:
   - 1.1. Normal Weight aggregates — ASTM C 33
   - 1.2. Fly Ash, Class F Pozzolan — ASTM C618
   - 1.3. Reinforcing Steel
     - 1.3.1. General — ASTM 615 Grade 60 (60 ksi)
   - 1.4. Anchor Bolts
     - 1.4.1. All Columns unless noted otherwise: ASTM F1554 Grade 36 (equiv to A36 or A307) with ASTM A563 heavy hex nuts with hardened washers Grade A.
   - 1.5. Admixtures: Air-entraining admixtures shall comply with ASTM C 260 (when used). Calcium chloride shall not be added to the concrete mix. Unreinforced concrete slabs on grade may have calcium chloride not exceeding one percent.
   - 1.6. Type II cement complying with ASTM C-150 shall be used for all concrete unless other types are required by the soils report.
   - 1.7. The water/cement ratio for concrete 4000 psi and greater shall not exceed 0.50 (grout mixes are excluded).
   - 1.8. The slump of all concrete shall be limited to 4" unless plasticizers are used.
   - 1.9. Provide air entraining as recommended by ACI 318.
   - 1.10. Air entrainment shall be adjusted for the use of admixtures and fly ash.
   - 1.11. Fly Ash shall be a maximum of 20% of the cementitious material.
   - 1.12. No aluminum conduit or product containing aluminum or any other material injurious to concrete shall be embedded in concrete.
2. Compressive strengths of concrete at 28 days shall be as follows:
   - 2.1. Footings — 4000 psi
   - 2.2. Interior Slabs on Grade — 4000 psi
   - 2.3. Walls — 4000 psi
   - 2.4. All Site Cast Concrete — 4000 psi
3. The contractor shall be responsible for the design, detailing, care, placement and removal of all formwork and shores.
   - 3.1. Supporting forms and shoring shall not be removed until structural members have acquired sufficient strength to safely support their own weight and any construction load to which they may be subjected. In no case, however, shall forms and shoring be removed in less than 24 hours after concrete placement.
4. Reinforcement shall have the following concrete cover:
   - 4.1. Cast-in-place Concrete — Clear Cover
     - 4.1.1. Cast against and permanently exposed to earth — 3"
     - 4.1.2. Formed concrete exposed to earth or weather:
       - #6 thru #18 bars — 2"
       - #5 and smaller bars — 1½"
     - 4.1.3. Concrete not exposed to weather or in contact with ground:
       - Slabs, Walls, Joists; #11 bars and smaller — ¾"
       - Beams, Columns: Primary Reinforcement, Ties, Stirrups, Spirals — 1½"
5. Construction Joints and Control Joints:
   - 5.1. Provide a beveled 2" x 4" x intermediate keyway that shall be installed in all horizontal and vertical construction joints including between top of footing and foundation walls. In addition, all joints shall be intentionally roughened to a full amplitude of approximately ¼".
   - 5.2. Control joints shall be installed in slabs on grade so the length to width ratio of the slab is no more than 1.25:1. Control joints shall be completed within 12 hours of concrete placement. Control joints may be installed by:
     - 5.2.1. Saw cut with depth of ¼ the thickness of the slab
     - 5.2.2. Tooled joints with depth of ¼ the thickness of the slab
   - 5.3. Install construction or control joints in slabs on grade at a spacing not to exceed 30 times the slab thickness in any direction, unless noted otherwise. Construction joints shall not exceed a distance of 125'-0" on center in any direction.
6. Construction
   - 6.1. Use chairs or other support devices recommended by the CRSI to support bar and tie reinforcement bars and WWF prior to placing concrete. WWF shall be continuously supported at 36" on center maximum. Reinforcing steel for slabs on grade shall be adequately supported on precast concrete units. Lifting the reinforcing off the grade during placement of concrete is not permitted.
   - 6.2. Contractor shall coordinate placement of all openings, curbs, dowels, sleeves, conduits, bolts, inserts and other embedded items prior to concrete placement.
   - 6.3. All embeds and dowels shall be securely tied to formwork or to adjacent reinforcing prior to the placement of concrete.
   - 6.4. No pipes, ducts, sleeves, etc. shall be placed in structural concrete unless specifically detailed or approved by the structural engineer. Penetrations through walls when approved shall be built into the wall prior to concrete placement. Penetrations will not be allowed in footings or grade beams unless detailed. Piping shall be routed around these elements and footings stepped to avoid piping.
   - 6.5. Reinforcing bars shall not be welded unless specifically shown on drawings. In such cases, use only AWS standards. Do not substitute reinforcing bars for DBAs or HSAs.
7. Detailing:
   - 7.1. Lap splice lengths shall be detailed to comply with the "Reinforcing Bar Lap Splice Schedule" contained within the contract drawings.
     - 7.1.1.1. Do not splice stirrups and ties. Do not splice vertical bars in retaining walls unless specifically shown.
   - 7.2. At joints provide reinforcing dowels to match the member reinforcing, unless noted otherwise.
   - 7.3. At all discontinuous control or construction slab on grade joints, provide (2) #4 x 48".
   - 7.4. Provide corner bars at intersecting wall corners using the same bar size and spacing as the horizontal wall reinforcing.
   - 7.5. All vertical reinforcing shall be doweled to footings, or to the structure below with the same size and spacing as the vertical reinforcing for the element above. Dowels extending into footings shall terminate with a 90° standard hook and shall extend to within 4" of the bottom of the footing. Footing dowels (#8 bars and smaller) with hooks need not extend more than 20" into footings.
   - 7.6. See details for reinforcing around miscellaneous openings (8" to 36" wide). For openings wider than 36", contact the engineer. All recesses that interrupt reinforcing shall be reinforced the same as an opening.

POST-INSTALLED ANCHORS

1. Follow all ICC Evaluation Report and manufacturers' requirements and recommendations for post-installed anchor installation. Where conflicts may exist, the most stringent requirement applies.
2. All holes in hollow, brick, or stone masonry shall be performed in the "rotary-only" mode with the hammer function off.
3. Follow manufacturer and ICC evaluation report requirements for installation temperature of adhesive anchors. Adhesive anchors shall not be installed or cured outside of approved temperature ranges.
   - 3.1. Adhesive anchors in concrete shall be
     - 3.1.1. HIT RE-500 SD by Hilti (ESR-2322) – normal weight concrete only
     - 3.1.2. SET-XP by Simpson (ESR-2508)
     - 3.1.3. PE1000+ by Powers Fasteners (ESR-2583) – ½" to ⅞" diameter only
   - 3.2. Adhesive anchors in grouted masonry shall be
     - 3.2.1. HIT HY-150 MAX by Hilti (ESR-1967)
     - 3.2.2. SET by Simpson (ESR-1772)
4. The Contractor may submit, for review and approval, the manufacturer's ICC evaluation report of alternate anchor systems. The alternate method shall provide minimum capacities equal to or greater than those in the above noted anchors. The alternate method shall be approved by the engineer of record prior to the substitution.

MASONRY

1. Materials, unless noted otherwise:
   - 1.1. Concrete Masonry Units (CMU): Lightweight Grade N, Type 1 (minimum unit strength of 1900 psi) f'm = 1500 psi
   - 1.2. Mortar: Type "S" (1800 psi minimum compressive strength)
   - 1.3. Grout shall attain a minimum compressive strength of 2000 psi at 28 days.
   - 1.4. Reinforcing Steel — ASTM 615 Grade 60 (F_y = 60 ksi)
2. Reinforcement shall have the following cover:
   - 2.1. Joint reinforcement shall have not less than ⅝" mortar coverage from the exposed face.
   - 2.2. Other reinforcement shall have a minimum coverage of one bar diameter over all the bars, but not less than ¾". When masonry is exposed to soil, minimum coverage shall be 1½".
3. Construction Requirements
   - 3.1. All units shall be laid with full mortar beds on the face shells. All head joints shall be filled solidly with mortar for a distance in from the face of the units not less than the thickness of the longitudinal face shells. Cells which are to be grouted shall have full head joints.
   - 3.2. Masonry walls, beams and columns shall be constructed with running bond unless noted otherwise.
   - 3.3. Solid grouting of walls is unacceptable except where specifically noted.
   - 3.4. All cells containing reinforcement, embeds, anchor bolts, etc. shall be filled solid with grout. Grout shall be placed by mechanical vibration during placing and revibrated after excess moisture has been absorbed but before workability is lost. Puddling or rodding of grout is not allowed.
   - 3.5. Where walls are not grouted solid, each grout pour shall terminate flush with the top of the uppermost unit except at cells with vertical reinforcing where the grout shall be 1½" below top of unit to provide construction key.
   - 3.6. Grout pours shall be limited to 4'-0" unless high lift grouting procedures are followed.
   - 3.7. All masonry below grade shall be solid grouted.
   - 3.8. Vertical cells to be filled with grout shall have vertical alignment sufficient to maintain a clear, unobstructed, vertical cell measuring not less than 2" by 3". All steel reinforcement shall be secured against displacement prior to grouting by wire positioners or other suitable devices at intervals not exceeding 200 bar diameters or 10'-0" maximum, or at bar splice locations. Vertical reinforcing shall be located at the center of the wall unless noted otherwise.
   - 3.9. Reinforcing bars shall not be welded unless specifically shown on drawings. In such cases, use only AWS standards. Do not substitute reinforcing bars for DBAs or HSAs.
   - 3.10. Control Joints: Spacing shall not exceed 26'-0". See architectural drawings for locations.
   - 3.11. Grout all beam and joist pockets solid after installation of beams and joists.
   - 3.12. Embed channels and plates shall be placed so as to create a flush surface with the face of the wall.
   - 3.13. Anchor bolts and headed stud anchors shall be set in a grouted cell. Anchor bolts and headed stud anchors shall have 1/2" grout surrounding the shank at its penetration. Grout shall be flush with the face or top of the masonry.
4. Detailing Requirements
   - 4.1. Lap all masonry reinforcing per the "Masonry Reinforcing Bar Lap Splice Schedule" contained within the contract drawings.
   - 4.2. All vertical reinforcing shall be doweled to the foundation wall, footing (structure below) and to the structure below with the same size dowel, spacing (and in the same core) as the vertical wall reinforcing above.
   - 4.3. Corner Bars: Horizontal reinforcement shall be continuous at all corners and at intersecting walls. Provide corner bars with the required lap splice length.
   - 4.4. Wall Openings 24" wide and wider: For unscheduled openings, provide reinforcing on all sides per details. Also, for all openings, provide horizontal bar at bottom of opening per details. Vertical bars shall extend from floor level below to the floor, or roof level above. Horizontal bars for all openings shall extend a minimum of 48 bar diameters beyond the corners of the opening. Where a 48 bar diameter extension is not possible, extend bars as far beyond the opening as possible and terminate the bar(s) with a 90° standard ACI hook.
   - 4.5. Horizontal wall reinforcing shall be continuous through joining concrete walls, masonry walls, columns, and pilasters. Provide a key between the wall and the column or pilaster. Horizontal wall reinforcing shall be placed inside the column vertical reinforcing.
   - 4.6. Horizontal reinforcing shall terminate with a standard hook at edge of openings and ends of walls without corner bars as shown in details.
   - 4.7. Horizontal wall reinforcing shall terminate with a standard 180° hook at each side of control joints except at floor and roof levels, lintels, beams and at top of parapetsas shown in details.
   - 4.8. All masonry column ties shall terminate with 135° hooks plus a 6 bar diameter extension (4" minimum).

JANUARY 20, 2010

NOTE:
THESE STRUCTURAL DRAWINGS ARE BASED ON ARCHITECTURAL DRAWINGS DATED 11.16.2009

DIMENSIONS AND ELEVATIONS, AS THEY RELATE TO THE BUILDING IN GENERAL, i.e. GRID TO GRID DIMENSIONS OR DECK BEARING ELEVATIONS, ARE SUPPLIED BY THE ARCHITECT. THEY ARE PROVIDED ON THE STRUCTURAL PLANS AND DETAILS FOR THE CONVENIENCE OF THE CONTRACTOR. VERIFY DIMENSIONS AND ELEVATIONS WITH ARCHITECTURAL DRAWINGS.

DUNN
DUNN ASSOCIATES, INC
Consulting Structural Engineers
EMAIL: ENG@DUNN-SE.COM
PH: 801-575-8877 FAX: 801-575-8875

This drawing, as an instrument of professional service, is the property of DUNN ASSOCIATES INC. and shall not be used, in whole or part, for any other project without the written permission of an authorized representative of DUNN ASSOCIATES INC. Unauthorized use will be prosecuted to the fullest extent of the law. Copyright © 2010 by DUNN ASSOCIATES INC.

L. K. SORENSEN ASSOCIATES, INC.
ARCHITECTS / PLANNERS / LANDSCAPE ARCHITECTS
1332 DUEHL CIRCLE
TAYLORSVILLE, UTAH 84123
(801)262-9393 Fax (801)262-3511

CONSULTANTS

UTAH NATIONAL GUARD
PX FACILITY ADDITION
Camp W. G. Williams
Bluffdale, Utah

MARK	DATE	DESCRIPTION

PROJECT NO:	09071
DATE:	20 JANUARY 2010
CAD DWG FILE:	
DRAWN BY:	A.B.
CHECKED BY:	F.P.
DESIGNED BY:	P.M.

COPYRIGHT:
THIS PRINT AND ALL INFORMATION HEREON IS SUBJECT TO COPYRIGHT LAWS AND IS THE PROPERTY OF L. K. SORENSEN ASSOCIATES. INC. AND SHALL NOT BE USED ON ANY OTHER PROJECT WITHOUT WRITTEN PERMISSION OF THE ARCHITECT.

SHEET TITLE
GENERAL STRUCTURAL NOTES

S101

GENERAL STRUCTURAL NOTES

STRUCTURAL STEEL

1. Material:
   - 1.1. Miscellaneous shapes & Plates — ASTM A36
   - 1.2. Hollow Structural Shapes
     - 1.2.1. Rectangular — ASTM A500 Grade B (46 ksi)
   - 1.3. Non-Shrink Grout — ASTM C1107 Grade B
     Non-shrink grout shall be prepackaged, non-metallic and non-gaseous with a fluid consistency (flow cone) of 20 to 30 seconds. Grout shall be bleed free and attain 7,500 psi compressive strength in 28 days of fluid consistency. Certified independent test data required.
2. Fabrication and construction shall comply with the latest edition of the following Codes and Standards:
   - 2.1. American Institute of Steel Construction (AISC), "Specification for the Design, Fabrication and Erection of Structural Steel for Buildings," with "Commentary".
   - 2.2. AISC "Code of Standard Practice" excluding the following: Section 3.4, Section 4.4, Section 4.4.1.
   - 2.3. AISC "Specification for Structural Joints Using ASTM A325 or A490 Bolts"
   - 2.4. American Welding Society (AWS), Structural Welding Code (specific items do not apply when they conflict with the AISC requirements).
3. Welding
   - 3.1. All welding and cutting shall be performed by AWS certified welders.
   - 3.2. Use E70 class electrodes only, unless noted otherwise. E60 class electrodes may be used for welding steel floor and roof decks. All electrodes to be low hydrogen.
   - 3.3. Field weld symbols indicate welds that may be performed in the field. The general contractor shall coordinate shop and field welds between the fabricator and erector.
   - 3.4. All intersecting steel shapes which are not bolted shall be connected by a fillet weld all around, unless noted otherwise. Where fillet weld sizes are not shown they shall be 1/16" less than the thinnest of the connected parts for thicknesses 1/4" and larger. Fillet welds on plates less than 1/4" shall be of the same size as the thinnest of the connected part.
   - 3.5. Reinforcing Bars: Do not weld rebar except as specifically detailed in the drawings. In such cases, use only AWS standards. Do not substitute reinforcing bars for deformed bar anchors, structural bolts, or headed stud anchors.
   - 3.6. Do not weld anchor bolts, including "tack" welds.

WOOD

1. Materials:
   - 1.1. Structural Glued Laminated Timber (GLB)
     - 1.1.1. Structural glued laminated timber shall be manufactured and identified as required in ANSI A190.1 and ASTM D3737.
     - 1.1.2. Glulam beams shall be Douglas-fir combination number 24F-V4 1.8E for simple span beams and 24F-V8 1.8E for continuous spans and cantilevers. Hybrid combination glulams with equivalent design properties may also be used with written approval from Dunn Associates, Inc.
     - 1.1.3. Appearance of members shall be Framing or Industrial appearance.
     - 1.1.4. Camber: unless otherwise noted on the drawings, all stock glulam beams shall be cambered to industry standard 3500'-0" radius. Stock beams with zero camber are acceptable where available.
   - 1.2. Dimension Lumber and Timbers (Sawn Lumber)
     - 1.2.1. All dimensioned lumber shall comply with USDOC PS20.
     - 1.2.2. Visually graded dimension lumber shall be Douglas Fir-Larch #2 or better.
     - 1.2.3. Visually graded timbers (5" x 5" and larger) shall be Douglas Fir-Larch #1 or better.
     - 1.2.4. Machine stress rated (MSR) lumber shall be 1600f-1.6E or better.
     - 1.2.5. Approved end jointed lumber may be used interchangeably with solid sawn members of the same species and grade.
   - 1.3. Laminated Veneer Lumber (LVL) & Laminated Strand Lumber (LSL, Rim Board)
     - 1.3.1. All rim boards shall be a minimum of 1 1/4" thick and shall be Versa-Strand Rim manufactured by Boise Cascade.
     - 1.3.2. All LVL shall be a minimum of 1 3/4" thick and shall be Versa-Lam manufactured by Boise Cascade. (F_b = 2800 psi; E = 2.0×10^6 psi).
     - 1.3.3. Handle, store and install all LVL per the manufacturer's guidelines.
     - 1.3.4. Connect multiple members together per the manufacturer's guidelines.
     - 1.3.5. LVL, LSL and Rim Board of equal design properties as determined by ASTM D5456 may be substituted with written approval from Dunn Associates, Inc.
   - 1.4. Wood Structural Panel Sheathing
     - 1.4.1. Wood structural panels shall conform to the requirements for its type in USDOC PS1 or USDOC PS2. The panels must be identified by the trademarks of the approving testing and inspection agency.
     - 1.4.2. Wood sheathing shall be APA rated sheathing Exposure 1 unless noted otherwise.
     - 1.4.3. Wood sheathing shall have the following minimum properties, unless noted otherwise:

Roof	1/2", 15/32" thick	32/16 span rating
Walls	1/2", 15/32", 7/16" thick	24/0 span rating

     - 1.4.4. Nails or other approved fasteners used to connect sheathing to the structure shall be driven such that their head or crown is flush with the surface of the sheathing. Do not overdrive fasteners.
   - 1.5. Nails
     - 1.5.1. All Nails shall conform with the tolerances specified in ASTM F1667, "Standard Specification of Driven Fasteners: Nails, Spikes and Staples."
     - 1.5.2. All nails shall be common nails with the following properties:

Nail Size	Shank Diameter	Min. Penetration into Support Member
6d	0.113"	1.25"
8d	0.131"	1.50"
10d	0.148"	1.63"
12d	0.148"	1.63"
16d	0.162"	1.75"

     - 1.5.3. Nails with properties less then those listed above shall not be used without prior written approval from Dunn Associates, Inc.
     - 1.5.4. Nails with "T", brad, finish or casing heads are not permitted. Nails with Round (full), Offset, Oval, Clipped or Notched heads are acceptable.
     - 1.5.5. Deformed shank nails shall have either a helical (screw) or an annular (ring) shank.
   - 1.6. Bolts
     - 1.6.1. Anchor Bolts: ASTM F1554 Grade 36 (or A307 of A36). All anchor bolts connecting the sill plate to the concrete foundation shall have a PL1/4"x3"x3" washer between the sill plate and the nut.
     - 1.6.2. Connection Bolts: ASTM A307 or A36
     - 1.6.3. Bolt holes shall be a minimum of 1/32" to a maximum of 1/16" larger than the bolt diameter. Holes shall be accurately aligned in main members and side plates or side members. Bolts shall not be forcibly driven.
     - 1.6.4. At all bolted connections, provide a standard cut or larger washer or metal plate between the wood and the bolt head and between the wood and the nut.
2. Connection Hardware
   - 2.1. All connection hardware shown shall be supplied by Simpson Strong-Tie Incorporated or USP structural connectors.
   - 2.2. Install all hardware per the manufacturer's guidelines.
   - 2.3. Connection hardware of equal design properties by other manufacturers may be substituted with written approval from Dunn Associates, Inc.
3. All fasteners in contact with pressure-treated or fire-treated wood shall be hot-dipped zinc-coated galvanized or stainless steel.
4. All wood in contact with concrete, masonry or soil shall be pressure treated or redwood.
5. General framing and carpentry shall be connected as per "THE MINIMUM NAILING SCHEDULE" unless noted otherwise.
6. Provide solid shaped blocking at least 2" (nominal) thick and full depth of joist at ends and at each support of joist. Provide approved bridging at an 8'-0" on center maximum between joist end supports. Solid blocking between joists shall be nailed to the wood plate at the top of the wall with one Simpson "A35" framing anchor per each piece of blocking. Fill all holes in the framing anchors with 8d x 1 1/2" nails (12 nails per A35), unless shown otherwise on the drawings.
7. Built-up beams of 2x members 12" or less in depth shall be spiked together with not less than 16d spikes at 12" on center, staggered. If the depth of beam is more than 12", the members shall be connected together with 1/2" diameter bolts at 24" on center. staggered. Bolts shall be placed 1/4 the depth of the member from the top and bottom of the member.
8. All bearing and shear walls shall have a minimum of 2 top plates. Splices in top plates shall be staggered a minimum of 4'-0" from the nearest splice in adjoining top plate and spiked together with a minimum of (20) 16d nails between splices unless noted otherwise.
9. Per IBC 2308.9.10, do not cut or notch any wood stud greater than 25% of its width.
10. Per IBC 2308.9.11, do not bore a hole in any wood stud greater in diameter than 40% of its width. The edge of any bore shall be greater than 5/8" from the edge of the stud. Bored holes shall not be located at the same section of stud as a cut or notch.

PREFABRICATED WOOD TRUSSES

1. The prefabricated metal plate wood trusses shall be designed, signed, and sealed by a Professional Engineer registered in the same state as the project location. They shall be designed to support the concentrated and other distributed loads as shown on the framing plans in addition to the following uniform loads:
   - 1.1. Dead Load (Top Chord)= 10 psf
   - 1.2. Dead Load (Bottom Chord)= 10 psf
   - 1.3. Snow Load* (Top Chord)= 36 psf
   - 1.4. Live Load** (Bottom Chord)= 10 psf
   - 56 psf Max Total Load

   *Does not include loads caused by drifting, unbalanced or sliding snow
   **Does not occur concurrently with top chord live load

   Designs shall include additional Dead Load of 9 psf at all overbuild framing locations. Correlate the truss design with all mechanical equipment, fire sprinkling systems and hanging walls supported by the trusses. Provide extra trusses where required. Design all wood trusses and bearing attachments for wind uplift, assuming a dead load of 8 psf to resist uplift.
2. The deflection of all prefabricated wood trusses shall be limited to L/240 for total load and L/360 for live load, unless noted otherwise.
3. No stress increase is allowed for snow loads.
4. All truss-to-truss connections shall be designed and provided by the truss manufacturer.
5. Design, handling, erection, and permanent bracing of metal plate connected wood trusses shall be in accordance with ANSI/TPI-1, National Design Standard for Metal Plated Connected Wood Truss Construction.
6. Steel Connector Plates: All steel gusset plates shall be galvanized and shall be approved by the "Research Committee for the International Conference of Building Officials." Submit a copy of the ICBO Report for the connector plate used. Values established by this committee must be indicated on the shop drawings.
   - 6.1. The minimum size for any connector shall be 8 square inches.
   - 6.2. All steel gusset plates shall be located on the joint as the stresses require and shall provide a minimum bite of 2.5" length on all tension members.
   - 6.3. Plates shall be pressed or rolled into member to obtain full penetration without crushing the outer surfaces of wood.
   - 6.4. All steel plate dimensions shall be increased by 10% above that required by analysis. Stress increases for steel connector plate values for duration of load are not allowed.
7. No wane, knots, skips, or other defects shall occur in the plated contact area or scarfed area of web members. Plates shall be centered with one required each side of wood truss.
8. The trusses shall be handled and stored in a manner to prevent moisture from being absorbed by the wood.
9. Requirements for truss stability and erection shall comply with the Truss Plate Institute publications entitled "Commentary and Recommendations for Bracing Wood Trusses" and "Commentary and Recommendations for Handling and Erecting Wood Trusses." The contractor shall have copies of these publications on site and shall be familiar with their contents.
10. Shop Drawings: Complete calculations and shop drawings indicating all member forces, stresses, duration factors, lumber grades, dimensions, truss to truss connections, steel truss plate sizes and locations shall be submitted and reviewed by the engineer before fabrication. Each connector shall be dimensioned on the shop drawings as to its exact location at the joint.

QUALITY ASSURANCE PLAN/SPECIAL INSPECTION REQUIREMENTS

1. Seismic/Wind-force-resisting systems:
   - 1.1. Wood shear walls
   - 1.2. Masonry shear walls
   - 1.3. Steel cantilevered columns
   - 1.4. Wood diaphragms
2. Special inspection and testing as required by the IBC shall be provided by an independent agency employed by the owner unless waived by the building official. The contractor shall coordinate and cooperate with the required inspections/tests as indicated below, referring to the IBC section indicated as appropriate. Special inspection reports from the inspector shall be sent to the engineer and building official, bringing any discrepancies to the contractor's immediate attention. Any uncorrected discrepancies shall be brought to the attention of the engineer and building official prior to completion of that phase of the work. A final report documenting required special inspections and corrections of any discrepancies shall be provided (1704.1.2).
3. Section 1704: Special Inspections
   - 3.1. Fabricators (1704.2): All offsite fabrication of structural members (structural steel, precast concrete, wood glulams, etc.) shall be special inspected as required by the IBC, except work performed by fabricators registered and approved to perform work without special inspection. Approved fabricators shall submit a certificate of compliance to building official at the completion of fabrication.
   - 3.2. Steel (1704.3): Steel construction, Welding, Details and high-strength bolts shall be special inspected according to Table 1704.3. Inspection of the steel fabrication process need not be required where the fabricator does not perform any welding, thermal cutting or heating operation of any kind during fabrication. Inspection of welding need not be continuous for single-pass fillet welds less than 5/16", floor and roof deck welding, welded studs in structural diaphragms, cold-formed steel framing or the welding of stair and railing systems.
   - 3.3. Concrete (1704.4): Concrete construction shall be special inspected according to Table 1704.4, except in buildings 3 stories or less where structural design of continuous concrete footings is based on compressive strength, f'c, no greater than 2500 psi. In the absence of sufficient data or documentation showing conformance to quality standards for materials, testing shall be required to determine material properties under the direction of the building official according to Chapter 3 of ACI 318.
   - 3.4. Masonry (1704.5): Engineered masonry in Occupancy Category I, II or III shall be special inspected according to Table 1704.5.1
   - 3.5. Soils (1704.7): Existing site soil conditions, fill placement and procedure and load-bearing requirements shall be special inspected to verify compliance with the approved soils report and Table 1704.7. Where total depth of controlled fill is 12" or less, special inspection is not required during fill placement.
   - 3.6. Special Cases (1704.13): Special inspect all post-installed anchors per ICC report.
4. Section 1705: See specific discipline drawings for additional seismic systems requiring special inspection which are not contained in the structural drawings.
5. Section 1708: Structural Testing for Seismic Resistance
   - 5.1. Engineered masonry in Occupancy Category I, II or III (1708.1.3):
     - 5.1.1. Certificates of compliance used in masonry construction shall be verified prior to construction.
     - 5.1.2. Compressive strength of masonry, f'm, shall be verified prior to construction per the Unit Strength or Prism Test Methods (2105).
6. Structural Observations for Seismic Resistance: Contractor shall notify the engineer at least 2 days prior to the following stages of construction so the engineer may have the opportunity to review the work. Observation reports shall be sent to architect, contractor and building official.
   - 6.1. Initial placing of any concrete, including but not limited to: footings, slabs on grade.
   - 6.2. Initial grout pours for masonry walls
   - 6.3. Completion of structural roof deck
   - 6.4. Initial wood framing
   - 6.5. Initial finish work

DEFERRED SUBMITTALS

1. Items requiring deferred submittals that are listed below are to be designed and fabricated by the manufacturer according to specifications given in structural and architectural drawings.
   - 1.1. Prefabricated Roof Trusses (by roof truss manufacturer)
   - 1.2. Concrete Mix Designs (by concrete supplier)
   - 1.3. Retractable Awning (optional, by manufacturer)
2. These deferred submittals shall first be submitted to the project architect and/or engineer for review and coordination. Upon completion of the architect/engineer review, a submittal to the DFCM Building Official shall be made (for review and approval). This submittal shall include a letter stating that the architect/engineer review has been performed and that the plans and calculations for the deferred submittal items are found to be acceptable (e.g., with regard to geometry, load conditions, etc.) with no exceptions.
3. The final submittal shall be signed and sealed by a Professional Engineer licensed in the state in which construction will occur and shall be available at the jobsite throughout construction.

LEGEND OF MARKS AND ABBREVIATIONS

AB	Anchor Bolt
ABV	Above
ALT	Alternate
ARCH	Architect
BLDG	Building
BLK	Blocking
BLW	Below
BM	Beam
BN	Boundary Nail
BOTT	Bottom
BRDG	Bridging
BRG	Bearing
BTWN	Between
CJ	Control Joint
CJP	Complete Joint Penetration
CL	Center Line
CMU	Concrete Masonry Unit
COL	Column
CONC	Concrete
CONN	Connection
CONT	Continuous
COORD	Coordinate
CS	Coil Strap
CTR	Center
DB	Deck Bearing
DBA	Deformed Bar Anchor
DBL	Double
DET	Detail
DIA	Diameter
DIM	Dimension
DWG	Drawing
(E)	Existing
EA	Each
EF	Each Face
EL	Elevation
ELEC	Electrical
EN	Edge Nail
ENGR	Engineer
EQ	Equal
EQUIP	Equipment
EQ SP	Equally Spaced
EW	Each Way
EJ	Expansion Joint
EXT	Exterior
FLR	Floor
FND	Foundation
FTG	Footing
ga	Gage
GALV	Galvanized
GLB	Glued Laminated Beam
GSN	General Structural Notes
GT	Girder Truss
HD	Hold-down
HORIZ	Horizontal
HSA	Headed Stud Anchor
HSS	Hollow Structural Section
ICBO	International Conference Of Building Officials
IBC	International Building Code
INT	Interior
JST	Joist
K	Kip(S) = 1000 Pounds
KLF	Kips Per Lineal Foot
KSF	Kips Per Square Foot
LB	Pounds (#)
LOC	Location
LVL	Laminated Veneer Lumber
MAS	Masonry
MAX	Maximum
MECH	Mechanical
MEZZ	Mezzanine
MFR	Manufacturer
MIN	Minimum
MISC	Miscellaneous
MTL	Metal
NTS	Not To Scale
oc	On Center
OPNG	Opening
OPP	Opposite
OSB	Orientated Strand Board
PCF	Pounds per Cubic Foot
PEN	Penetrate or Penetration
PERP	Perpendicular
PFT	Pre-Fabricated Truss
PL	Plate
PLF	Pounds per Lineal Foot
PREFAB	Prefabricated
PSF	Pounds per Square Foot
PSI	Pounds per Square Inch
PT	Post Tension
PT/DF	Pressure Treated Douglas Fir (or appropriate species for region)
REINF	Reinforce
REQD	Required
RTU	Roof Top Unit
SCHED	Schedule
SCW	Seismic Critical Weld
SIM	Similar
SOG	Slab on Grade
STD	Standard
STIFF	Stiffener
STL	Steel
STRUCT	Structural
SW	Shear Wall
T&B	Top and Bottom
T&G	Tongue and Groove
TEMP	Temperature
THRU	Through
T/	Top of
TYP	Typical
UNO	Unless Noted Otherwise
VERT	Vertical
W/	With
WWR	Welded Wire Reinforcement
WP	Working Point

JANUARY 20, 2010

NOTE:
THESE STRUCTURAL DRAWINGS ARE BASED ON ARCHITECTURAL DRAWINGS DATED 11.16.2009

DIMENSIONS AND ELEVATIONS, AS THEY RELATE TO THE BUILDING IN GENERAL, i.e. GRID TO GRID DIMENSIONS OR DECK BEARING ELEVATIONS, ARE SUPPLIED BY THE ARCHITECT. THEY ARE PROVIDED ON THE STRUCTURAL PLANS AND DETAILS FOR THE CONVENIENCE OF THE CONTRACTOR. VERIFY DIMENSIONS AND ELEVATIONS WITH ARCHITECTURAL DRAWINGS.

DUNN
DUNN ASSOCIATES, INC
Consulting Structural Engineers
EMAIL: ENG@DUNN-SE.COM
PH: 801-575-8877 FAX: 801-575-8875

This drawing, as an instrument of professional service, is the property of DUNN ASSOCIATES INC. and shall not be used, in whole or part, for any other project without the written permission of an authorized representative of DUNN ASSOCIATES INC. Unauthorized use will be prosecuted to the fullest extent of the law. Copyright © 2010 by DUNN ASSOCIATES INC.

L. K. SORENSEN ASSOCIATES, INC.
ARCHITECTS / PLANNERS / LANDSCAPE ARCHITECTS
1332 DUEHL CIRCLE
TAYLORSVILLE, UTAH 84123
(801)262-9393 Fax (801)262-3511

CONSULTANTS

UTAH NATIONAL GUARD
PX FACILITY ADDITION
Camp W. G. Williams
Bluffdale, Utah

MARK	DATE	DESCRIPTION

PROJECT NO:	09071
DATE:	20 JANUARY 2010
CAD DWG FILE:	
DRAWN BY:	A.B.
CHECKED BY:	F.P.
DESIGNED BY:	P.M.

COPYRIGHT:
THIS PRINT AND ALL INFORMATION HEREON IS SUBJECT TO COPYRIGHT LAWS AND IS THE PROPERTY OF L. K. SORENSEN ASSOCIATES, INC. AND SHALL NOT BE USED ON ANY OTHER PROJECT WITHOUT WRITTEN PERMISSION OF THE ARCHITECT.

SHEET TITLE
GENERAL STRUCTURAL NOTES

S102

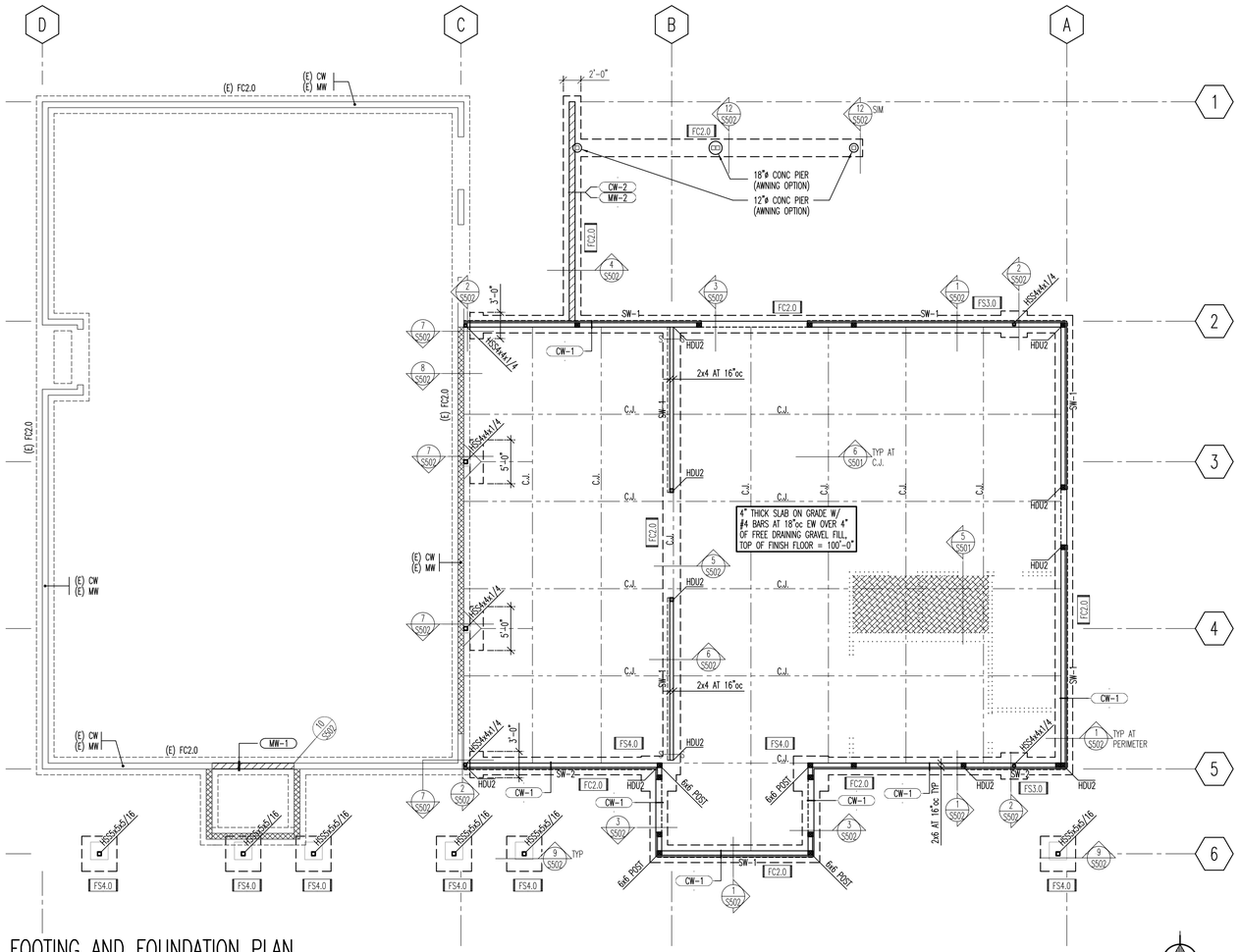

FOOTING AND FOUNDATION PLAN

FOOTING AND FOUNDATION PLAN NOTES:

1. COORDINATE LOCATION OF DEPRESSED SLABS, SLOPED SLABS, AND FLOOR DRAINS WITH ARCHITECTURAL AND MECHANICAL DRAWINGS.
2. SEE ARCHITECTURAL DRAWINGS AND CIVIL DRAWINGS FOR EXTERIOR CONCRETE WORK AT DOORS, SIDEWALKS, ETC.
3. CENTER ALL SPOT FOOTINGS UNDER COLUMNS AS SHOWN ON PLAN, TYPICAL UNO.
4. SEE ARCHITECTURAL DRAWINGS FOR DIMENSIONS TO ALL STEEL COLUMNS.
5. SEE FOOTING AND FOUNDATION DETAILS ON SHEET (S501) FOR BURIED PIPES RUNNING PARALLEL AND PERPENDICULAR TO FOOTINGS.
6. SEE FOOTING AND FOUNDATION DETAILS ON SHEET (S501) FOR TYPICAL CONSTRUCTION AND CONTROL JOINTS IN FLOOR SLABS.
7. FOR LOCATIONS WHERE CONTROL JOINTS ARE DISCONTINUOUS, SEE FOOTING AND FOUNDATION DETAILS ON SHEET (S501).
8. SEE FOOTING AND FOUNDATION DETAILS ON SHEET (S501) FOR FILL BENEATH FOOTINGS.
9. SEE FOOTING AND FOUNDATION DETAILS ON SHEET (S501) FOR REINFORCING AROUND MISCELLANEOUS OPENINGS IN MASONRY WALLS.
10. SEE FOOTING AND FOUNDATION DETAILS ON SHEET (S501) FOR TERMINATION OF HORIZONTAL WALL REINFORCING AT ENDS OF WALLS.
11. UNLESS NOTED OTHERWISE, ALL COLUMNS SHALL BE INSTALLED WITH 3/4"ø HEADED (OR DOUBLE NUT) ANCHOR BOLTS. PROJECT ANCHOR BOLTS 3" MINIMUM ABOVE THE TOP OF THE BASE PLATE. EMBEDMENT SHALL BE 9" MINIMUM. ALL BOLTS SHALL BE INSTALLED WITH HARDNED WASHERS BENEATH THE NUT. ANY BOLT HOLES LARGER THAN THE BOLT DIAMETER PLUS 5/16" SHALL HAVE PLATE WASHERS INSTALLED BENEATH THE HARDENED WASHERS.

DEMOLITION PLAN NOTES:

1. THE INFORMATION SHOWN IS TO BE FIELD VERIFIED. IT SHOULD BE ANTICIPATED THAT ADJUSTMENTS WILL BE NECESSARY.
2. INFORMATION REQUIRED FOR THE REMODELING OF THE BUILDING IS CONTAINED IN A SEPARATE SET OF STRUCTURAL PLANS.
3. INFORMATION FOR DIMENSIONS IS CONTAINED IN A SEPARATE SET OF ARCHITECTURAL PLANS.
4. THESE DRAWINGS HAVE BEEN PREPARED WITHOUT THE AID OF RECORD DRAWINGS. THE CONTRACTOR SHALL VERIFY THESE DRAWINGS WITH EXISTING CONDITIONS AND NOTIFY THE ARCHITECT/ENGINEER IMMEDIATELY OF INCONSISTENCIES BETWEEN THE DRAWINGS AND ACTUAL CONDITIONS BEFORE PROCEEDING WITH DEMOLITION OR CONSTRUCTION.
5. THE CONTRACTOR SHALL ALSO NOTIFY THE OWNER/ARCH IMMEDIATELY IF ANY WORK INDICATED IN THE CONTRACT DOCUMENTS CANNOT BE PERFORMED DUE TO EXISTING FIELD CONDITIONS.
6. REMOVE EXISTING CONSTRUCTION AS INDICATED. TYPICAL WALL REMOVAL INCLUDES FINISHES, MECHANICAL, PLUMBING, AND ELECTRICAL SYSTEMS CONTAINED THEREIN. REMOVE DOORS, CASEWORK, WINDOWS, FRAMES AND OTHER FIXTURES AS REQUIRED.
7. THE CONTRACTOR SHALL NOT CUT STRUCTURAL WORK IN A MANNER RESULTING IN A REDUCTION OF LOAD CARRYING CAPACITY OR LOAD/DEFLECTION RATIO. THE CONTRACTOR SHALL NOTIFY THE ENGINEER OF ALL STRUCTURAL CUTS PRIOR TO EXECUTION SO THAT APPROVAL CAN BE OBTAINED.
8. THE CONTRACTOR SHALL REPLACE OR REPAIR ANY DAMAGE TO EXISTING FINISHES WHICH ARE TO REMAIN (I.E. CEILING GRID, CEILING TILE, WALL COVERINGS, FLOOR COVERINGS, ETC).
9. INSTALLATION OF COLUMNS, GIRDER TRUSS AND HANGERS ARE REQUIRED BEFORE COMPLETE DEMOLITION OF WALL IS PERFORMED.

MARKS & SYMBOLS LEGEND

- SECTION MARK / SHEET NUMBER
- FTG — FTG DESIGNATION
- DEPRESSED FND WALL, POUR SLAB OVER, SEE FTG AND FND DETS ON (S502)
- S——S — FTG STEP, SEE FTG AND FND DETS ON (S501)
- DEPRESSED SLAB, SEE ARCH PLANS FOR EXACT LOCATION AND EL
- MAS WALL, SEE SCHED ON (S301)
- WOOD WALL, 2x6 AT 16"oc UNO
- SW LOCATION, DASHED LINE INDICATES SIDE OF SHEATHING
- (E) MAS WALL
- DEMOLITION WORK SEE ARCH FOR DETAILS
- NON-BRG ARCH WALL
- WOOD POST (2) 2x UNO SEE DETAIL ON (S701)
- STL COL
- MW-x — MAS WALL, SEE SCHED ON (S301)
- CW-x — CONC WALL, SEE SCHED ON (S301)
- CW-x / MW-x — CONC WALL BELOW AND MAS WALL ABOVE, SEE SCHED ON (S301)
- FC-x — CONT FTG, SEE SCHED ON (S301)
- FS-x — SPOT FTG, SEE SCHED ON (S301)
- CJ — CONTROL JOINT, SEE FTG AND FND DETS ON (S501)
- SW-x — WOOD SW, SEE SCHED ON (S302)
- HDU — HOLDOWN LOCATION, SEE SCHED ON (S302)

JANUARY 20, 2010

NOTE:
THESE STRUCTURAL DRAWINGS ARE BASED ON ARCHITECTURAL DRAWINGS DATED 11.16.2009

DIMENSIONS AND ELEVATIONS, AS THEY RELATE TO THE BUILDING IN GENERAL, i.e. GRID TO GRID DIMENSIONS OR DECK BEARING ELEVATIONS, ARE SUPPLIED BY THE ARCHITECT. THEY ARE PROVIDED ON THE STRUCTURAL PLANS AND DETAILS FOR THE CONVENIENCE OF THE CONTRACTOR. VERIFY DIMENSIONS AND ELEVATIONS WITH ARCHITECTURAL DRAWINGS.

DUNN ASSOCIATES, INC
Consulting Structural Engineers
EMAIL: ENG@DUNN-SE.COM
PH: 801-575-8877 FAX: 801-575-8875

This drawing, as an instrument of professional service, is the property of DUNN ASSOCIATES INC. and shall not be used, in whole or part, for any other project without the written permission of DUNN ASSOCIATES INC. Unauthorized use will be prosecuted to the fullest extent of the law. Copyright © 2010 by DUNN ASSOCIATES INC.

L. K. SORENSEN ASSOCIATES, INC.
ARCHITECTS / PLANNERS / LANDSCAPE ARCHITECTS
1332 DUEHL CIRCLE
TAYLORSVILLE, UTAH 84123
(801)262-9393 Fax (801)262-3511

CONSULTANTS

UTAH NATIONAL GUARD
PX FACILITY ADDITION
Camp W. G. Williams
Bluffdale, Utah

MARK	DATE	DESCRIPTION

PROJECT NO:	09071
DATE:	20 JANUARY 2010
CAD DWG FILE:	
DRAWN BY:	A.B.
CHECKED BY:	F.P.
DESIGNED BY:	P.M.

COPYRIGHT:
THIS PRINT AND ALL INFORMATION HEREON IS SUBJECT TO COPYRIGHT LAWS AND IS THE PROPERTY OF L. K. SORENSEN ASSOCIATES, INC. AND SHALL NOT BE USED ON ANY OTHER PROJECT WITHOUT WRITTEN PERMISSION OF THE ARCHITECT.

SHEET TITLE
FOOTING AND FOUNDATION PLAN

S201

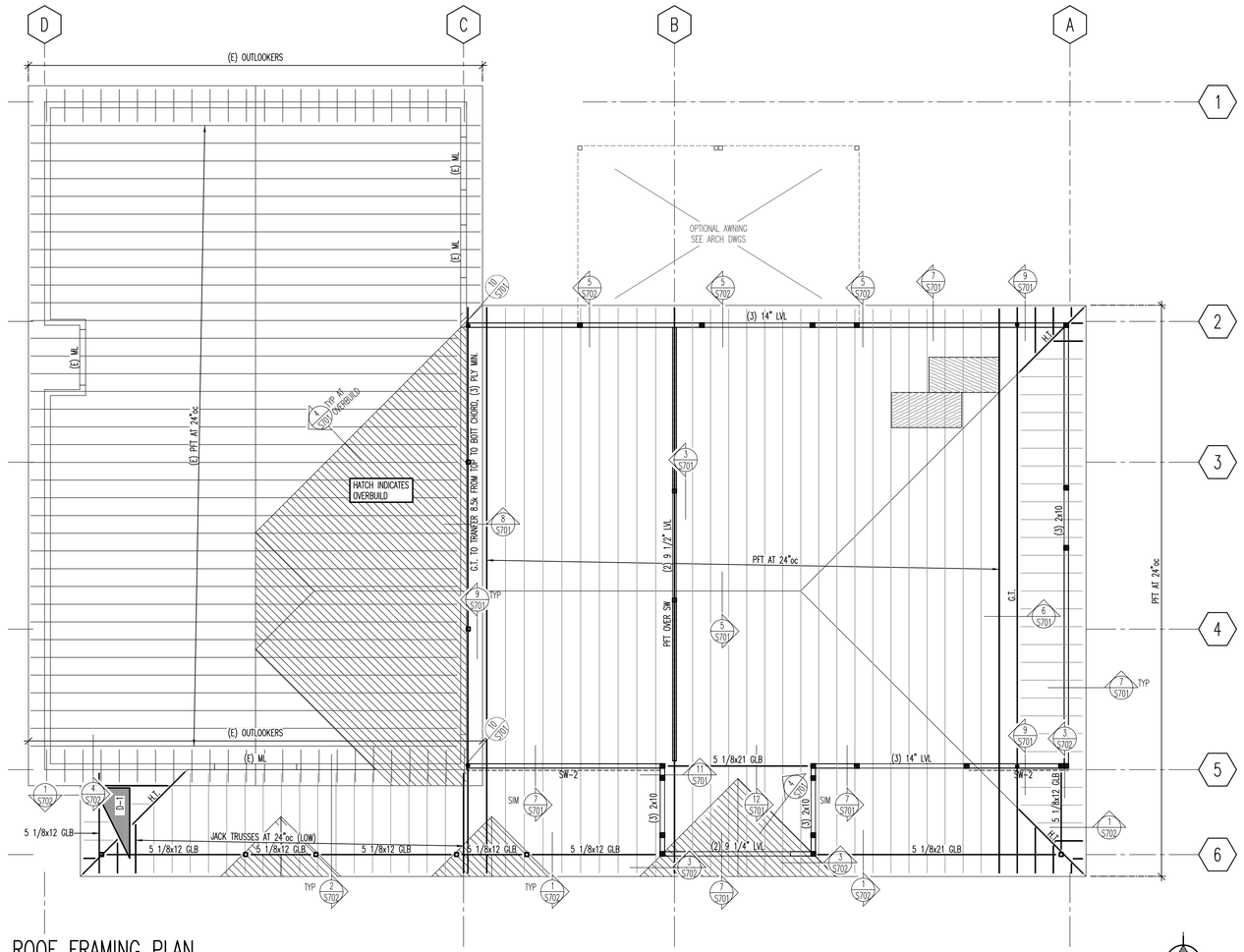

ROOF FRAMING PLAN

SCALE: 1/8"=1'-0"

ROOF FRAMING PLAN NOTES:

1. VERIFY ROOF SLOPES, DRAINS, AND DECK BEARING ELEVATIONS WITH ARCHITECTURAL DRAWINGS. SEE ROOF FRAMING DETAILS ON SHEET (S702).
2. REFER TO ARCHITECTURAL DRAWINGS FOR ALL CEILING ELEVATIONS AND SOFFIT ELEVATIONS AND DETAILS.
3. ALL ROOF SHEATHING SHALL HAVE FACE GRAIN PERPENDICULAR TO FRAMING MEMBERS. UNO. REFER TO SCHEDULE ON SHEET (S302).
4. TRUSS MANUFACTURER TO SUBMIT SHOP DRAWINGS FOR REVIEW OF ALL FRAMING MEMBERS.
5. REFER TO GENERAL STRUCTURAL NOTES ON SHEET (S101) FOR DESIGN LOADS OF ROOF TRUSSES.
6. ALL TRUSS DETAILS, AND TRUSS TO GIRDER TRUSS DETAILS SHALL BE PROVIDED BY THE TRUSS MANUFACTURER.
7. TRUSS MANUFACTURER SHALL VERIFY ALL CEILING ELEVATIONS AND SPECIAL CONDITIONS PRIOR TO FABRICATION.
8. ALL GIRDER TRUSS BEARING LOCATIONS SHALL BE MULTIPLE STUDS, OR POSTS, AND SHALL BE OF CONTINUOUS FRAMING TO THE FOUNDATION LEVEL. SEE PLANS AND SCHEDULE.
9. CONTRACTOR SHALL BE RESPONSIBLE TO PROPERLY BRACE BEAMS, TRUSSES, ETC. AS REQUIRED DURING CONSTRUCTION.

DEMOLITION PLAN NOTES:

1. THE INFORMATION SHOWN IS TO BE FIELD VERIFIED. IT SHOULD BE ANTICIPATED THAT ADJUSTMENTS WILL BE NECESSARY.
2. INFORMATION REQUIRED FOR THE REMODELING OF THE BUILDING IS CONTAINED IN A SEPARATE SET OF STRUCTURAL PLANS.
3. INFORMATION FOR DIMENSIONS IS CONTAINED IN A SEPARATE SET OF ARCHITECTURAL PLANS.
4. THESE DRAWINGS HAVE BEEN PREPARED WITHOUT THE AID OF RECORD DRAWINGS. THE CONTRACTOR SHALL VERIFY THESE DRAWINGS WITH EXISTING CONDITIONS AND NOTIFY THE ARCHITECT/ENGINEER IMMEDIATELY OF INCONSISTENCIES BETWEEN THE DRAWINGS AND ACTUAL CONDITIONS BEFORE PROCEEDING WITH DEMOLITION OR CONSTRUCTION.
5. THE CONTRACTOR SHALL ALSO NOTIFY THE OWNER/ARCH IMMEDIATELY IF ANY WORK INDICATED IN THE CONTRACT DOCUMENTS CANNOT BE PERFORMED DUE TO EXISTING FIELD CONDITIONS.
6. REMOVE EXISTING CONSTRUCTION AS INDICATED. TYPICAL WALL REMOVAL INCLUDES FINISHES, MECHANICAL, PLUMBING, AND ELECTRICAL SYSTEMS CONTAINED THEREIN. REMOVE DOORS, CASEWORK, WINDOWS, FRAMES AND OTHER FIXTURES AS REQUIRED.
7. THE CONTRACTOR SHALL NOT CUT STRUCTURAL WORK IN A MANNER RESULTING IN A REDUCTION OF LOAD CARRYING CAPACITY OR LOAD/DEFLECTION RATIO. THE CONTRACTOR SHALL NOTIFY THE ENGINEER OF ALL STRUCTURAL CUTS PRIOR TO EXECUTION SO THAT APPROVAL CAN BE OBTAINED.
8. THE CONTRACTOR SHALL REPLACE OR REPAIR ANY DAMAGE TO EXISTING FINISHES WHICH ARE TO REMAIN (I.E. CEILING GRID, CEILING TILE, WALL COVERINGS, FLOOR COVERINGS, ETC).
9. INSTALLATION OF COLUMNS, GIRDER TRUSS AND HANGERS ARE REQUIRED BEFORE COMPLETE DEMOLITION OF WALL IS PERFORMED.

MARKS & SYMBOLS LEGEND

	SECTION MARK SHEET NUMBER
	ROOF SHEATHING ORIENTATION, 15/32" THICK, W/ 32/16 APA SPAN RATING, FASTEN W/ 8d NAILS AT 6"oc ON EDGES AND 12"oc IN THE FIELD, SEE GSN ON (101)
	WOOD WALL BELOW
	BRG WALL BELOW
	MAS WALL, SEE SCHED ON (S301)
	(E) MAS WALL
	WOOD POST (2) 2x UNO SEE DETAIL ON (S701)
	STEEL COL
GLB	GLB, GSN ON (S101). SEE SCHED ON (S302) FOR TYPICAL CONNECTIONS
LVL	LVL BM, GSN ON (S101)
PFT OVER SW	PREFAB TRUSS OVER SW BELOW, TRUSS SHALL BE DESIGNED TO TRANSFER 200 PLF IN-PLANE,
PFT	PREFAB TRUSSES, SEE GSN ON (S101) FOR TRUSS LOADING REQUIREMENTS, SEE ARCH DWG FOR SPECIAL CEILING CONFIG, ROOF SLOPES AND OVERHANG CONDITIONS
RD	ROOF DRAIN, SEE ARCH AND MECH FOR EXACT LOCATION
H.T.	HIP TRUSS
G.T.	GIRDER TRUSS

SNOW DRIFT LOADING DIAGRAM

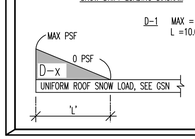

JANUARY 20, 2010

NOTE:
THESE STRUCTURAL DRAWINGS ARE BASED ON ARCHITECTURAL DRAWINGS DATED 11.16.2009

DIMENSIONS AND ELEVATIONS, AS THEY RELATE TO THE BUILDING IN GENERAL, i.e. GRID TO GRID DIMENSIONS OR DECK BEARING ELEVATIONS, ARE SUPPLIED BY THE ARCHITECT. THEY ARE PROVIDED ON THE STRUCTURAL PLANS AND DETAILS FOR THE CONVENIENCE OF THE CONTRACTOR. VERIFY DIMENSIONS AND ELEVATIONS WITH ARCHITECTURAL DRAWINGS.

DUNN ASSOCIATES, INC
Consulting Structural Engineers
EMAIL: ENG@DUNN-SE.COM
PH: 801-575-8877 FAX: 801-575-8875

This drawing, as an instrument of professional service, is the property of DUNN ASSOCIATES INC. and shall not be used, in whole or part, for any other project without the written permission of DUNN ASSOCIATES INC. Unauthorized use will be prosecuted to the fullest extent of the law. Copyright © 2010 by DUNN ASSOCIATES INC.

L. K. SORENSEN ASSOCIATES, INC.
ARCHITECTS / PLANNERS / LANDSCAPE ARCHITECTS
1332 DUEHL CIRCLE
TAYLORSVILLE, UTAH 84123
(801)262-9393 Fax (801)262-3511

CONSULTANTS

UTAH NATIONAL GUARD
PX FACILITY ADDITION
Camp W. G. Williams
Bluffdale, Utah

MARK	DATE	DESCRIPTION

PROJECT NO:	09071
DATE:	20 JANUARY 2010
CAD DWG FILE:	
DRAWN BY:	A.B.
CHECKED BY:	F.P.
DESIGNED BY:	P.M.

COPYRIGHT:
THIS PRINT AND ALL INFORMATION HEREON IS SUBJECT TO COPYRIGHT LAWS AND IS THE PROPERTY OF L. K. SORENSEN ASSOCIATES. INC. AND SHALL NOT BE USED ON ANY OTHER PROJECT WITHOUT WRITTEN PERMISSION OF THE ARCHITECT.

SHEET TITLE

ROOF FRAMING PLAN

S202

CONCRETE FOOTING SCHEDULE

MARK	WIDTH	LENGTH	DEPTH	REINFORCING CROSSWISE				REINFORCING LENGTHWISE				REMARKS
				NO	SIZE	LENGTH	SPACING	NO	SIZE	LENGTH	SPACING	
FC2.0	2'-0"	CONT.	12"	–	–	–	–	3	#4	CONT.	EQ.	
FS3.0	3'-0"	3'-0"	12"	3	#5	2'-6"	EQ.	3	#5	2'-6"	EQ.	
FS4.0	4'-0"	4'-0"	12"	4	#5	3'-6"	EQ.	4	#5	3'-6"	EQ.	

CONCRETE FOOTING NOTES:

1. PLACE ALL FOOTING REINFORCING IN BOTTOM OF FOOTING WITH 3" CLEAR CONCRETE COVER, UNLESS NOTED OTHERWISE.
2. TOP REINFORCING, WHERE SPECIFIED, SHALL BE PLACED IN THE TOP OF THE FOOTING WITH 2" MINIMUM CONCRETE COVER.
3. IF FOOTINGS ARE EARTH FORMED, FOOTING WIDTH AND LENGTH SHALL BE BE 6" WIDER AND LONGER THAN SCHEDULED.
4. SEE GENERAL STRUCTURAL NOTES FOR ALL OTHER REQUIREMENTS.
5. NOT ALL FOOTINGS ARE USED, SEE FOUNDATION PLAN FOR FOOTING MARKS.
6. RUN CONTINUOUS BARS IN 'FC' FOOTING THROUGH INTERSECTED 'FS' FOOTINGS.

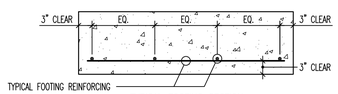

TYPICAL FOOTING SECTION

1 CONCRETE FOOTING SCHEDULE

NO SCALE

SCD_CONFD-0100

CONCRETE WALL SCHEDULE

WALL MARK	THICKNESS	REINFORCING			WALL TYPE	COMMENTS
		VERTICAL	HORIZONTAL	TOP AND BOTTOM		
CW-1	8"	(1) #5 AT 16"oc	(1) #5 AT 16"oc	(1) #5	A	.
CW-2	10"	(1) #5 AT 16"oc	(1) #5 AT 15"oc	(1) #5	A	

CONCRETE WALL NOTES:

1. SEE GENERAL STRUCTURAL NOTES FOR COVER AND OTHER REQUIREMENTS NOT NOTED IN SCHEDULE.
2. CONCRETE WALLS NOT DESIGNATED ON THE PLANS SHALL BE REINFORCED AS FOLLOWS:

THICKNESS	VERTICAL REINFORCING	HORIZONTAL REINFORCING
6"	#4 BARS AT 18"oc	#4 BARS AT 16"oc
8"	#4 BARS AT 18"oc	#4 BARS AT 12"oc
10"	#4 BARS AT 16"oc	#5 BARS AT 15"oc
12"	#4 BARS AT 18"oc EA FACE	#4 BARS AT 16"oc EA FACE

3. PLACE STEEL IN THE CENTER OF THE WALL (EXCEPT TYPE 'B' AND RETAINING WALLS). WALLS THICKER THAN 10" SHALL HAVE TWO CURTAINS OF REINFORCEMENT (PLACED NEAR EACH FACE OF THE WALL), UNLESS NOTED OTHERWISE ON THE STRUCTURAL DRAWINGS.

WALL REINFORCEMENT PLACEMENT TYPES:

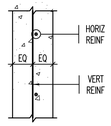

TYPE "A"

2 CONCRETE WALL SCHEDULE

NO SCALE

SCHED_CONC-03

CONCRETE REINFORCING BAR LAP SPLICE SCHEDULE

BAR SIZE	f'c = 3000 PSI				f'c = 4000 PSI				f'c = 5000 PSI				f'c = 6000 PSI			
	REGULAR		TOP		REGULAR		TOP		REGULAR		TOP		REGULAR		TOP	
	CLASS		CLASS		CLASS		CLASS		CLASS		CLASS		CLASS		CLASS	
	A	B	A	B	A	B	A	B	A	B	A	B	A	B	A	B
#3	17"	22"	22"	28"	15"	19"	19"	24"	13"	17"	17"	22"	12"	16"	16"	20"
#4	22"	29"	29"	38"	19"	25"	25"	33"	17"	22"	22"	29"	16"	21"	21"	27"
#5	28"	36"	36"	47"	24"	31"	31"	41"	22"	28"	28"	36"	20"	26"	26"	33"
#6	33"	43"	43"	56"	29"	37"	37"	49"	26"	34"	34"	43"	24"	31"	31"	40"
#7	49"	63"	63"	81"	42"	54"	54"	70"	37"	48"	48"	63"	35"	45"	45"	58"
#8	55"	72"	72"	93"	47"	62"	62"	80"	42"	55"	55"	71"	39"	51"	51"	66"
#9	62"	81"	81"	105"	53"	69"	69"	90"	48"	62"	62"	81"	44"	58"	58"	75"
#10	70"	91"	91"	118"	60"	78"	78"	101"	54"	70"	70"	91"	50"	65"	65"	84"
#11	78"	101"	101"	131"	67"	87"	87"	112"	60"	77"	77"	100"	55"	72"	72"	93"

NOTES:

1. THESE NOTES SHALL BE USED FOR ALL SPLICES, UNLESS NOTED OTHERWISE.
2. TOP BARS ARE CLASSIFIED AS HORIZONTAL BARS WHERE 12", OR MORE, OF FRESH CONCRETE IS CAST BELOW THE REINFORCING BAR.
3. CLASS 'B' SPLICES SHALL BE USED FOR ALL SPLICES UNLESS NOTED OTHERWISE.
4. TIES AND STIRRUPS SHALL NOT BE SPLICED.
5. FOR ALL LIGHTWEIGHT CONCRETE, LAP LENGTHS SHALL BE MULTIPLIED BY 1.3.
6. FOR ALL EPOXY COATED BARS, LAP LENGTHS SHALL BE MULTIPLIED BY 1.3 FOR TOP BARS AND 1.5 FOR REGULAR BARS.

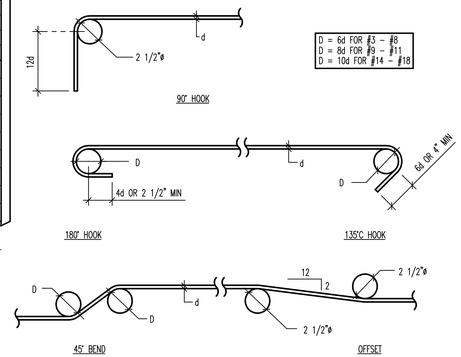

3 CONCRETE REINFORCING BAR LAP SPLICE SCHEDULE / BAR BENDING DIAGRAMS

NO SCALE

SCHED_REINF-01

MASONRY WALL SCHEDULE

WALL MARK	THICKNESS	MATERIALS	SOLID GROUT	REINFORCING			SPECIAL INSPECTION REQUIRED
				VERTICAL	HORIZONTAL	TYPE	JOINT	
MW-1	8"	CMU 1500	NO	(1) #5 AT 32"oc	(1) #4 AT 48"oc	A	NONE	YES
MW-2	6"	CMU 1500	NO	(1) #5 AT 32"oc	(1) #4 AT 48"oc	A	NONE	YES

MASONRY WALL NOTES:

1. COORDINATE WITH ARCHITECTURAL DRAWINGS, MASONRY WALL FINISHES, TYPES OF MATERIAL, COURSING, ETC.
2. DO NOT SOLID GROUT WALLS UNLESS NOTED OTHERWISE.
3. ALL MASONRY BELOW GRADE SHALL BE GROUTED SOLID.
4. VERTICAL REINFORCING SHALL BE CENTERED IN THE WALL UNLESS NOTED OTHERWISE.
5. (1) VERTICAL BARS MINIMUM AT ALL CORNERS AND END OF WALLS.
6. HORIZONTAL WALL REINFORCING SHALL BE PLACED BETWEEN VERTICAL MASONRY COLUMN REINFORCING BARS.
7. HORIZONTAL WALL REINFORCING SHALL CONTINUE THRU MASONRY LINTELS. WHERE BOTH HORIZONTAL WALL REINFORCING AND LINTEL REINFORCING OCCUR IN THE SAME COURSE, USE THE LARGER REINFORCING.
8. MASONRY WALLS NOT DESIGNATED ON THE PLANS SHALL BE REINFORCED AS FOLLOWS:

THICKNESS	VERTICAL REINFORCING	HORIZONTAL REINFORCING
6"	#5 BARS AT 32"oc	#4 BARS AT 48"oc
8"	#5 BARS AT 32"oc	#5 BARS AT 48"oc
10"	#6 BARS AT 32"oc	#6 BARS AT 48"oc
12"	#6 BARS AT 32"oc	(2) #5 BARS AT 48"oc

9. SEE GENERAL STRUCTURAL NOTES FOR ADDITIONAL REQUIREMENTS.

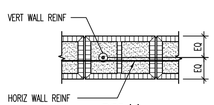

TYPE 'A'
(SINGLE MAT REINF)

4 MASONRY WALL SCHEDULE

NO SCALE

SCHED_MAS-07

MASONRY REINFORCING BAR LAP SPLICE SCHEDULE

REBAR SIZE	SINGLE BAR CENTERED IN CELL																	
	THICKNESS			THICKNESS			THICKNESS			THICKNESS			THICKNESS			THICKNESS		
	8"	10"	12"	8"	10"	12"	8"	10"	12"	8"	10"	12"	8"	10"	12"	8"	10"	12"
	f'm = 1500 psi			f'm = 1800 psi			f'm = 2000 psi			f'm = 2500 psi			f'm = 3000 psi			f'm = 3500 psi		
#3	16"			15"			15"			15"			15"			15"		
#4	22"			20"			20"			20"			20"			20"		
#5	26"			25"			25"			25"			25"			25"		
#6	43"	40"		40"	36"		38"	34"		34"	31"		31"	30"		30"		
#7	60"	46"		55"	42"		52"	40"		46"	36"		42"	35"		39"	35"	
#8	72"	72"	61"	72"	64"	56"	72"	61"	53"	71"	55"	47"	56"	50"	43"	60"	46"	40"
#9	82"	82"	74"	82"	82"	68"	82"	79"	64"	82"	71"	57"	82"	64"	52"	82"	60"	48"
	FLUSH WALL PILASTER OR COLUMN, TWO BARS IN EACH CELL WITH 2 1/2" COVER.																	
#3	16"			15"			15"			15"			15"			15"		
#4	22"			20"			20"			20"			20"			20"		
#5	32"			29"			28"			25"			25"			25"		
#6	54"			54"			51"			46"			42"			39"		
#7	63"			63"			63"			63"			57"			53"		
#8	72"			72"			72"			72"			72"			72"		
#9	82"			82"			82"			82"			82"			82"		

NOTES:

1. MECHANICAL SPLICES ARE REQUIRED FOR BARS IN MASONRY GREATER THAN #9 BARS.
2. MECHANICAL SPLICES MAY BE USED IN LIEU OF LAP SPLICES SHOWN.
3. MECHANICAL SPLICES SHALL DEVELOP 125% OF SPECIFIED YIELD STRENGTH OF BAR.
4. MASONRY DEVELOPMENT LENGTHS SHOWN SHALL BE INCREASED BY 50% WHERE REBAR IS COATED WITH EPOXY.

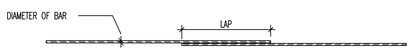

5 MASONRY REINFORCING BAR LAP SPLICE SCHEDULE

NO SCALE

SCHED_MAS-03

JANUARY 20, 2010

NOTE:
THESE STRUCTURAL DRAWINGS ARE BASED ON ARCHITECTURAL DRAWINGS DATED 11.16.2009

DIMENSIONS AND ELEVATIONS, AS THEY RELATE TO THE BUILDING IN GENERAL, i.e. GRID TO GRID DIMENSIONS OR DECK BEARING ELEVATIONS, ARE SUPPLIED BY THE ARCHITECT. THEY ARE PROVIDED ON THE STRUCTURAL PLANS AND DETAILS FOR THE CONVENIENCE OF THE CONTRACTOR. VERIFY DIMENSIONS AND ELEVATIONS WITH ARCHITECTURAL DRAWINGS.

DUNN

DUNN ASSOCIATES, INC
Consulting Structural Engineers

EMAIL: ENG@DUNN-SE.COM
PH: 801-575-8877 FAX: 801-575-8875

This drawing, as an instrument of professional service, is the property of DUNN ASSOCIATES INC. and shall not be used, in whole or part, for any other project without the written permission of an authorized representative of DUNN ASSOCIATES INC. Unauthorized use will be prosecuted to the fullest extent of the law. Copyright © 2010 by DUNN ASSOCIATES INC.

L. K. SORENSEN ASSOCIATES, INC.
ARCHITECTS / PLANNERS / LANDSCAPE ARCHITECTS
1332 DUEHL CIRCLE
TAYLORSVILLE, UTAH 84123
(801)262-9393 Fax (801)262-3511

CONSULTANTS

UTAH NATIONAL GUARD
PX FACILITY ADDITION
Camp W. G. Williams
Bluffdale, Utah

MARK	DATE	DESCRIPTION

PROJECT NO:	09071
DATE:	20 JANUARY 2010
CAD DWG FILE:	
DRAWN BY:	A.B.
CHECKED BY:	F.P.
DESIGNED BY:	P.M.

COPYRIGHT:
THIS PRINT AND ALL INFORMATION HEREON IS SUBJECT TO COPYRIGHT LAWS AND IS THE PROPERTY OF L. K. SORENSEN ASSOCIATES, INC. AND SHALL NOT BE USED ON ANY OTHER PROJECT WITHOUT WRITTEN PERMISSION OF THE ARCHITECT.

SHEET TITLE

SCHEDULES

S301

WOOD SHEATHING SHEARWALL SCHEDULE

MARK	WOOD SHEATHING THICKNESS	NAIL SIZE	EDGE NAIL	FIELD NAIL	JOINT STUD, BLOCKING, SILL	SILL NAILING TO WOOD	SILL BOLTING TO CONCRETE
SW-1	7/16"	8d	6"oc	12"oc	2x	16d AT 8"oc	5/8"ø AT 48"oc
SW-2	7/16"	8d	3"oc	12"oc	3x	16d AT 8"oc	5/8"ø AT 24"oc

WOOD SHEATHING SHEARWALL NOTES:

1. MINIMUM NAIL PENETRATION INTO FRAMING, 8d = 1 1/2", 10d = 1 5/8"
2. USE COMMON NAILS. (8d DIAMETER = 0.131", 10d DIAMETER = 0.148")
3. ALL ANCHOR BOLTS SHALL HAVE A 1/4"x3"x3" SQUARE WASHER BETWEEN THE SILL PLATE AND THE NUT.

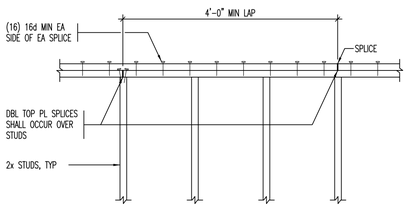

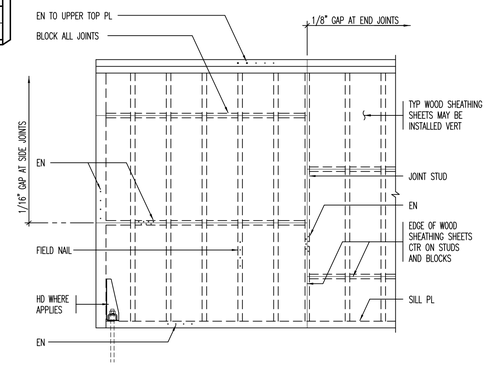

1 WOOD SHEATHING SHEARWALL SCHEDULE

NO SCALE

SCHED_WD-08

'HDU' TYPE HOLDDOWN SCHEDULE

MARK	HOLDDOWN POST	WOOD SCREWS "SIMPSON" SDS 1/4"	ANCHOR BOLT DIAMETER	EMBEDMENT DEPTH
HDU2	(2) 2x	(6)	5/8"	0'-9"

'HDU' TYPE HOLDDOWN NOTES:

1. ALL HOLDDOWNS SPECIFIED ARE "SIMPSON - STRONG TIE", SEE GENERAL STRUCTURAL NOTES FOR SUBSTITUTIONS.
2. LAG SCREWS SHALL NOT BE USED.

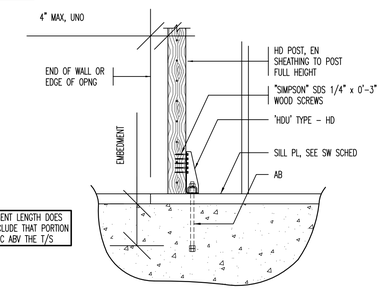

2 'HDU' TYPE HOLDDOWN SCHEDULE

NO SCALE

SCHED_WD-04

MINIMUM NAILING SCHEDULE

CONNECTION	NAILING	NAILING	CONNECTION
SOLE PL TO JST OR BLK, FACE NAIL	16d AT 1'-4"oc	COLLAR TIE TO RAFTER, FACE NAIL	(3) 10d
BRDG TO JST, TOENAIL EA END	(2) 8d	JACK RAFTER TO HIP, TOE NAIL	(3) 10d
BLK BTWN JST OR RAFTERS TO TOP PL, TOE NAIL	(3) 8d	FACE NAIL	(2) 16d
RIM JST TO TOP PL, TOE NAIL	8d AT 0'-6"oc	ROOF RAFTER TO 2x RIDGE BM, TOE NAIL	(2) 16d
TOP PL TO STUD, END NAIL	(2) 16d	FACE NAIL	(2) 16d
STUD TO SOLE PL, END NAIL	(2) 16d	JST TO BAND JST, FACE NAIL	(3) 16d
DBL STUDS, FACE NAIL	16d AT 2'-0"oc	LEDGER STRIP, FACE NAIL	(3) 16d
DBL TOP PL, FACE NAIL	16d AT 1'-4"oc	PLYWOOD AND PARTICLEBOARD:	
TOP PL, LAPS AT WALL INTERSECTION, FACE NAIL	(2) 16d	SUBFLOOR, ROOF AND WALL SHEATHING (TO FRAMING)	
CONT HEADER, TWO PIECES	16d AT 1'-4oc along ea edge	1/2" AND LESS	8d
CEILING JST TO PL, TOENAIL	(3) 8d	19/32" - 1"	8d or 10d
CONT HEADER TO STUD, TOENAIL	(4) 8d	1 1/8" - 1 1/4"	10d
CEILING JST, LAPS OVER PARTITIONS, FACE NAIL	(3) 16d	COMBINATION SUBFLOOR-UNDERLAYMENT (TO FRAMING)	
CEILING JST TO PARALLEL RAFTERS, FACE NAIL	(3) 16d	3/4" AND LESS	8d
RAFTER TO PL, TOENAIL	(3) 8d	7/8" - 1"	8d or 10d
1" BRACE TO EA STUD AND PL, FACE NAIL	(2) 8d	1 1/8" - 1 1/4"	10d
BUILT-UP CORNER STUDS	16d AT 2'-0"oc		
BUILT-UP GIRDER AND BM	20d AT 32"oc AT top & BOTT AND STAGGERED, (2) 20d AT ENDS AND AT EA SPLICE		

MINIMUM NAILING NOTES:

1. NAILING SCHEDULE IS PER TABLE 2304.9.1 OF THE I.B.C. 2006.
2. NAILING REQUIREMENTS SHOWN HERE DO NOT REPLACE HARDWARE SHOWN ON THE PLANS OR DETAILS.
3. ALL NAILS USED ARE COMMON NAILS.

NAILS SPACED AT 6 INCHES ON CTR AT EDGES, 12 INCHES AT INTEMEDIATE SUPPORTS, EXCEPT 6 INCHES AT ALL SUPPORTS WHERE SPANS ARE 48 INCHES OR MORE. FOR NAILING OF DIAPHRAGMS AND SHEAR WALLS, REFER TO THE APPROPRIATE SCHED

3 MINIMUM NAILING SCHEDULE

NO SCALE

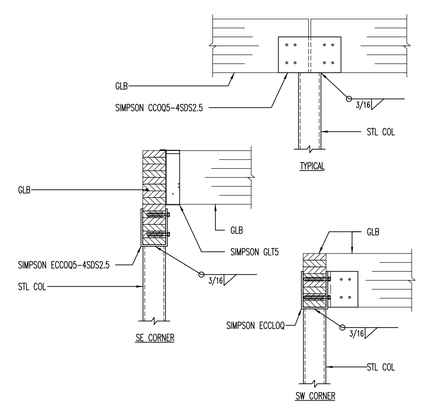

4 GLULAM BEAM END BEARING SEAT

NO SCALE

090715302

PLYWOOD SHEATHING NOTES:

1. MINIMUM NAIL PENETRATION INTO FRAMING 8d-1 1/2", 10d- 1 5/8".
2. USE SCREW SHANK NAILS AT FLOOR PLYWOOD.
3. USE COMMON NAILS. (8d DIAMETER = 0.131", 10d DIAMETER = 0.148")

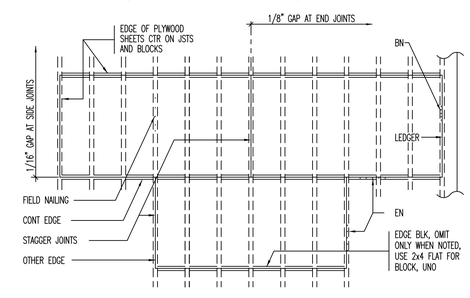

5 SHEATHING SCHEDULE AT ROOF AND FLOOR

NO SCALE

SCHED_WD-03

JANUARY 20, 2010

NOTE:
THESE STRUCTURAL DRAWINGS ARE BASED ON ARCHITECTURAL DRAWINGS DATED 11.16.2009

DIMENSIONS AND ELEVATIONS, AS THEY RELATE TO THE BUILDING IN GENERAL, i.e. GRID TO GRID DIMENSIONS OR DECK BEARING ELEVATIONS, ARE SUPPLIED BY THE ARCHITECT. THEY ARE PROVIDED ON THE STRUCTURAL PLANS AND DETAILS FOR THE CONVENIENCE OF THE CONTRACTOR. VERIFY DIMENSIONS AND ELEVATIONS WITH ARCHITECTURAL DRAWINGS.

DUNN

DUNN ASSOCIATES, INC
Consulting Structural Engineers

EMAIL: ENG@DUNN-SE.COM
PH: 801-575-8877 FAX: 801-575-8875

This drawing, as an instrument of professional service, is the property of DUNN ASSOCIATES INC. and shall not be used, in whole or part, for any other project without the written permission of an authorized representative of DUNN ASSOCIATES INC. Unauthorized use will be prosecuted to the fullest extent of the law. Copyright © 2010 by DUNN ASSOCIATES INC.

L. K. SORENSEN ASSOCIATES, INC.
ARCHITECTS / PLANNERS / LANDSCAPE ARCHITECTS
1332 DUEHL CIRCLE
TAYLORSVILLE, UTAH 84123
(801)262-9393 Fax (801)262-3511

CONSULTANTS

UTAH NATIONAL GUARD
PX FACILITY ADDITION
Camp W. G. Williams
Bluffdale, Utah

MARK	DATE	DESCRIPTION

PROJECT NO:	09071
DATE:	20 JANUARY 2010
CAD DWG FILE:	
DRAWN BY:	A.B.
CHECKED BY:	F.P.
DESIGNED BY:	P.M.

COPYRIGHT:
THIS PRINT AND ALL INFORMATION HEREON IS SUBJECT TO COPYRIGHT LAWS AND IS THE PROPERTY OF L. K. SORENSEN ASSOCIATES. INC. AND SHALL NOT BE USED ON ANY OTHER PROJECT WITHOUT WRITTEN PERMISSION OF THE ARCHITECT.

SHEET TITLE

SCHEDULES

S302

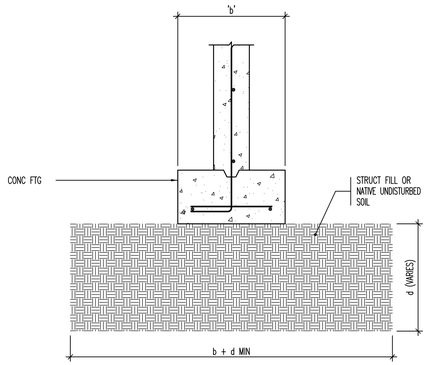

1 TYPICAL COMPACTED STRUCTURAL FILL
NO SCALE
TC501-01

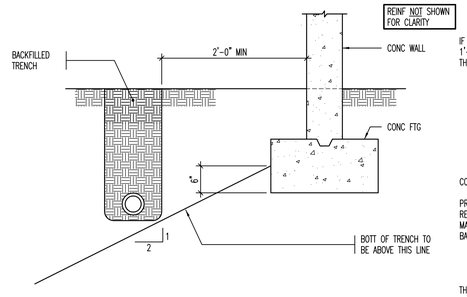

2 TYPICAL PIPE PARALLEL TO FOOTING
NO SCALE
TC501-02

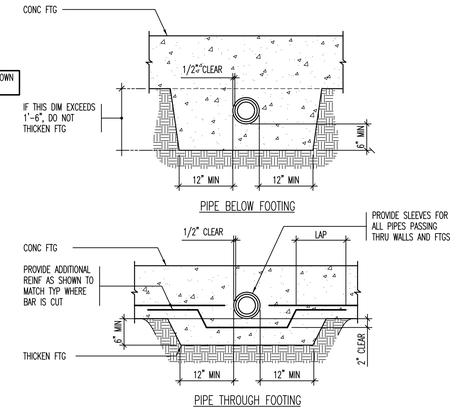

3 TYPICAL PIPE PERPENDICULAR TO FOOTING
NO SCALE
TC501-03

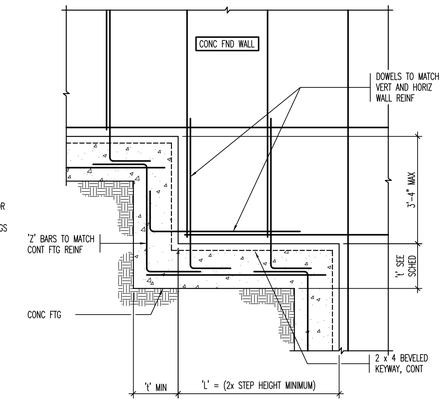

4 TYPICAL FOOTING STEP AT CONCRETE FOUNDATION WALL
NO SCALE
TC501-04

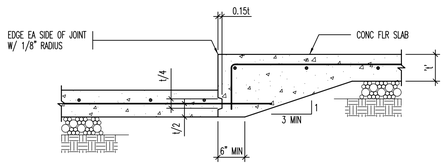

CONSTRUCTION JOINT

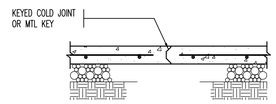

CONSTRUCTION JOINT
4" SLAB ON GRADE

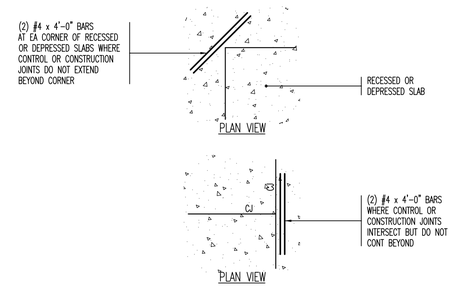

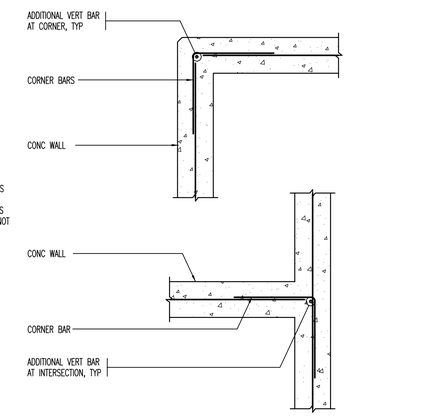

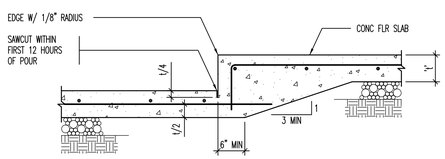

CONTROL JOINT

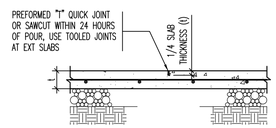

CONTROL JOINT
4" SLAB ON GRADE

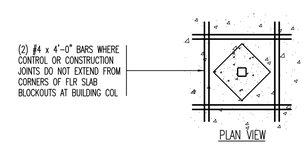

5 TYPICAL SLAB DEPRESSION
NO SCALE
TC501-05

6 TYPICAL SLAB ON GRADE JOINT
NO SCALE
TC501-06

7 TYPICAL LOCATIONS REQUIRING ADDITIONAL SLAB REINFORCING STEEL
NO SCALE
TC501-07

8 TYPICAL CORNER WALL REINFORCING FOR SINGLE REINFORCED CONCRETE WALLS (PLAN VIEW)
NO SCALE
TC501-09

JANUARY 20, 2010

NOTE:
THESE STRUCTURAL DRAWINGS ARE BASED ON ARCHITECTURAL DRAWINGS DATED 11.16.2009

DIMENSIONS AND ELEVATIONS, AS THEY RELATE TO THE BUILDING IN GENERAL, i.e. GRID TO GRID DIMENSIONS OR DECK BEARING ELEVATIONS, ARE SUPPLIED BY THE ARCHITECT. THEY ARE PROVIDED ON THE STRUCTURAL PLANS AND DETAILS FOR THE CONVENIENCE OF THE CONTRACTOR. VERIFY DIMENSIONS AND ELEVATIONS WITH ARCHITECTURAL DRAWINGS.

DUNN
DUNN ASSOCIATES, INC
Consulting Structural Engineers
EMAIL: ENG@DUNN-SE.COM
PH: 801-575-8877 FAX: 801-575-8875

This drawing, as an instrument of professional service, is the property of DUNN ASSOCIATES INC. and shall not be used, in whole or part, for any other project without the written permission of an authorized representative of DUNN ASSOCIATES INC. Unauthorized use will be prosecuted to the fullest extent of the law. Copyright © 2010 by DUNN ASSOCIATES INC.

L. K. SORENSEN ASSOCIATES, INC.
ARCHITECTS / PLANNERS / LANDSCAPE ARCHITECTS
1332 DUEHL CIRCLE
TAYLORSVILLE, UTAH 84123
(801)262-9393 Fax (801)262-3511

CONSULTANTS

UTAH NATIONAL GUARD
PX FACILITY ADDITION
Camp W. G. Williams
Bluffdale, Utah

MARK	DATE	DESCRIPTION

PROJECT NO:	09071
DATE:	20 JANUARY 2010
CAD DWG FILE:	
DRAWN BY:	A.B.
CHECKED BY:	F.P.
DESIGNED BY:	P.M.

COPYRIGHT:
THIS PRINT AND ALL INFORMATION HEREON IS SUBJECT TO COPYRIGHT LAWS AND IS THE PROPERTY OF L. K. SORENSEN ASSOCIATES, INC. AND SHALL NOT BE USED ON ANY OTHER PROJECT WITHOUT WRITTEN PERMISSION OF THE ARCHITECT.

SHEET TITLE
FOOTING AND FOUNDATION DETAILS

S501

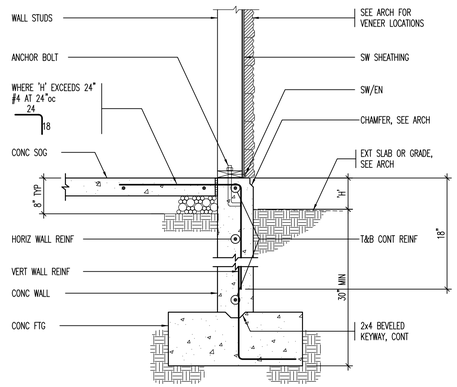

1 TYPICAL WOOD WALL AT PERIMETER

NO SCALE

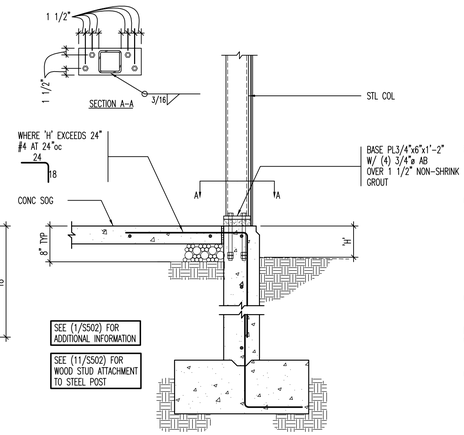

2 STL COL AT PERIMETER ON CONCRETE FOUNDATION WALL

NO SCALE

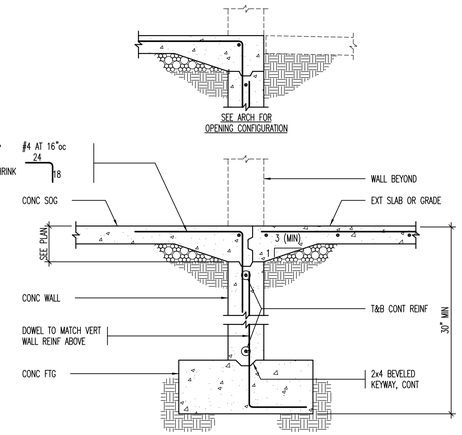

3 TYPICAL FOUNDATION WALL OPENING

NO SCALE

T2502-01

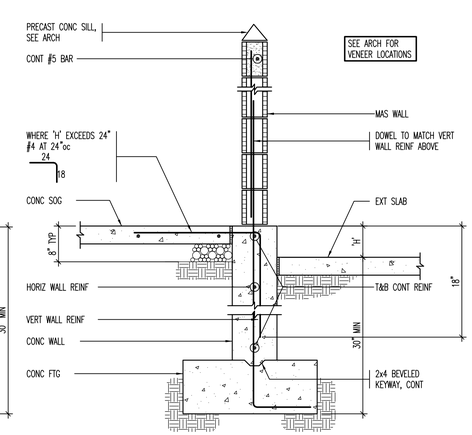

4 TYPICAL SINGLE MAT REINFORCING MASONRY WALL ON CONCRETE FOUNDATION WALL

NO SCALE

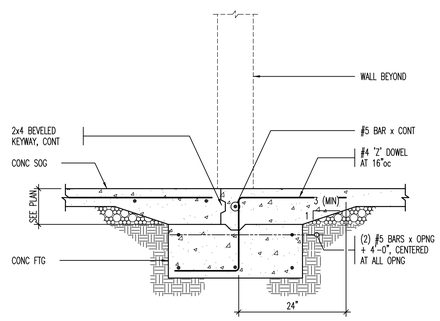

5 TYPICAL INTERIOR WALL OPENING

NO SCALE

T2502-02

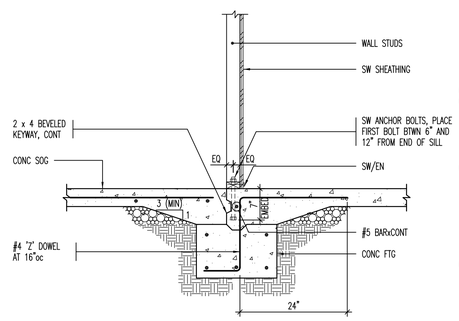

6 INTERIOR SHEARWALL AT FOOTING

NO SCALE

090715502
TS501-02

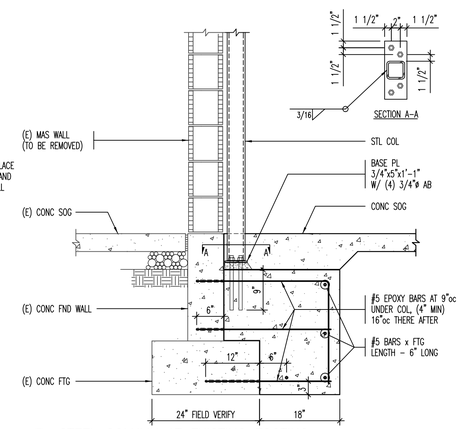

7 STEEL COLUMN AT EXISTING FOOTING

NO SCALE

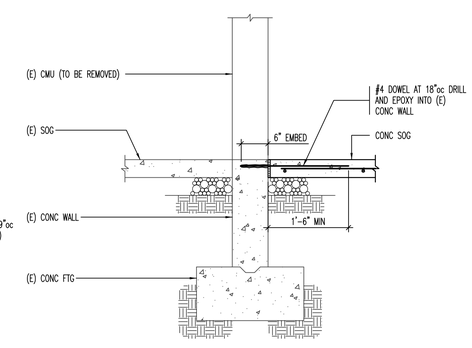

8 NEW SLAB AT EXISTING SLAB

NO SCALE

090715502

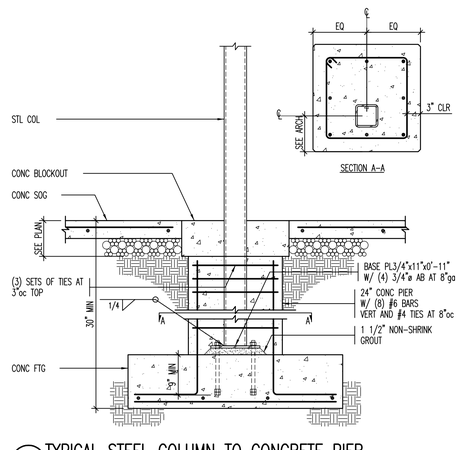

9 TYPICAL STEEL COLUMN TO CONCRETE PIER

NO SCALE

TS501-01

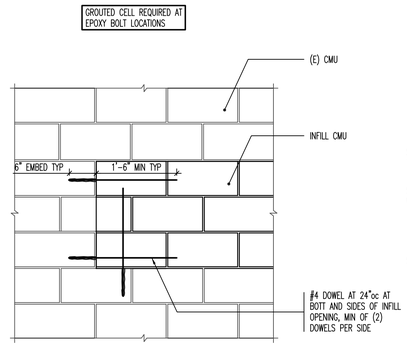

10 MASONRY WALL INFILL

NO SCALE

090715502

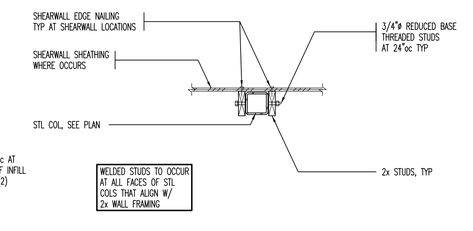

11 TYPICAL PLAN VIEW OF STEEL COLUMNS IN WOOD STUD WALLS

NO SCALE

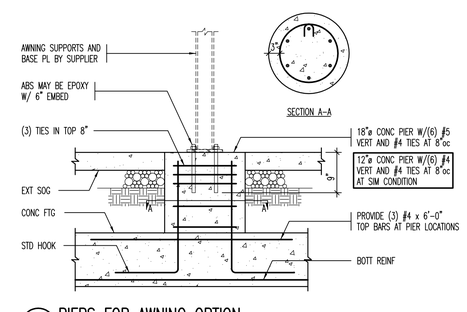

12 PIERS FOR AWNING OPTION

NO SCALE

090715502

JANUARY 20, 2010

NOTE:
THESE STRUCTURAL DRAWINGS ARE BASED ON ARCHITECTURAL DRAWINGS DATED 11.16.2009

DIMENSIONS AND ELEVATIONS, AS THEY RELATE TO THE BUILDING IN GENERAL, i.e. GRID TO GRID DIMENSIONS OR DECK BEARING ELEVATIONS, ARE SUPPLIED BY THE ARCHITECT. THEY ARE PROVIDED ON THE STRUCTURAL PLANS AND DETAILS FOR THE CONVENIENCE OF THE CONTRACTOR. VERIFY DIMENSIONS AND ELEVATIONS WITH ARCHITECTURAL DRAWINGS.

DUNN

DUNN ASSOCIATES, INC
Consulting Structural Engineers

EMAIL: ENG@DUNN-SE.COM
PH: 801-575-8877 FAX: 801-575-8875

This drawing, as an instrument of professional service, is the property of DUNN ASSOCIATES INC. and shall not be used, in whole or part, for any other project without the written permission of an authorized representative of DUNN ASSOCIATES INC. Unauthorized use will be prosecuted to the fullest extent of the law. Copyright © 2010 by DUNN ASSOCIATES INC.

L. K. SORENSEN ASSOCIATES, INC.
ARCHITECTS / PLANNERS / LANDSCAPE ARCHITECTS
1332 DUEHL CIRCLE
TAYLORSVILLE, UTAH 84123
(801)262-9393 Fax (801)262-3511

CONSULTANTS

UTAH NATIONAL GUARD
PX FACILITY ADDITION
Camp W. G. Williams
Bluffdale, Utah

MARK	DATE	DESCRIPTION

PROJECT NO:	09071
DATE:	20 JANUARY 2010
CAD DWG FILE:	
DRAWN BY:	A.B.
CHECKED BY:	F.P.
DESIGNED BY:	P.M.

COPYRIGHT:
THIS PRINT AND ALL INFORMATION HEREON IS SUBJECT TO COPYRIGHT LAWS AND IS THE PROPERTY OF L. K. SORENSEN ASSOCIATES, INC. AND SHALL NOT BE USED ON ANY OTHER PROJECT WITHOUT WRITTEN PERMISSION OF THE ARCHITECT.

SHEET TITLE

FOOTING AND FOUNDATION DETAILS

S502

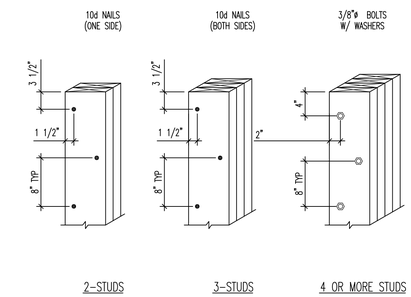

1 TYPICAL BUILT-UP WOOD COLUMN CONNECTION
NO SCALE
TW501-01

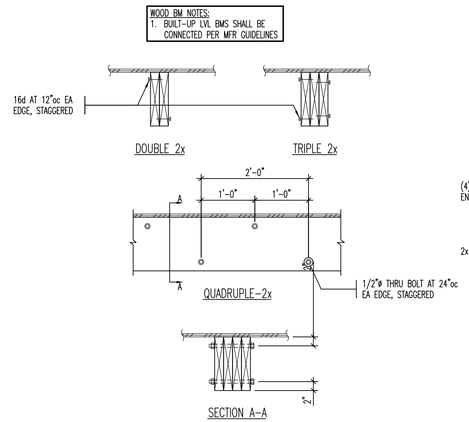

2 TYPICAL BUILT UP WOOD BEAM CONNECTIONS
NO SCALE
TW501-02

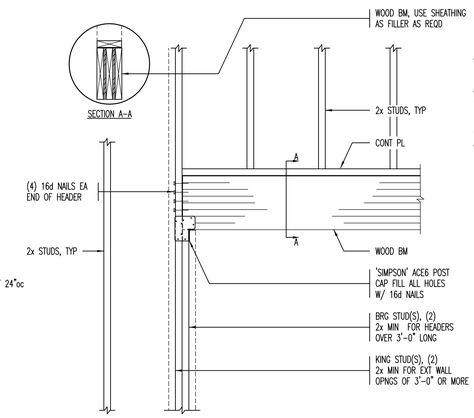

3 TYPICAL HEADER BEARING
NO SCALE
TW501-05

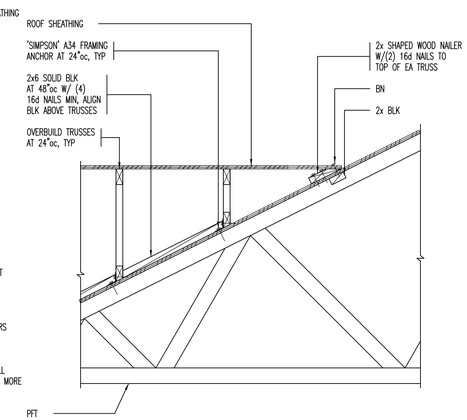

4 TYPICAL ROOF FRAMING AT OVERBUILD
NO SCALE
TW701-05

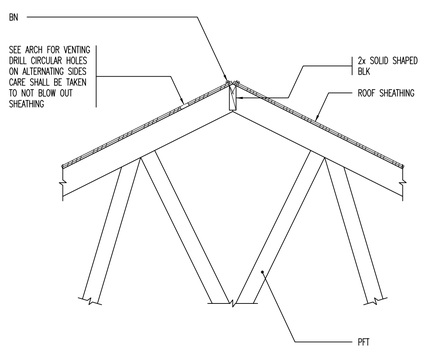

5 TYPICAL BLOCKING AT RIDGE AND HIP
NO SCALE
TW701-03

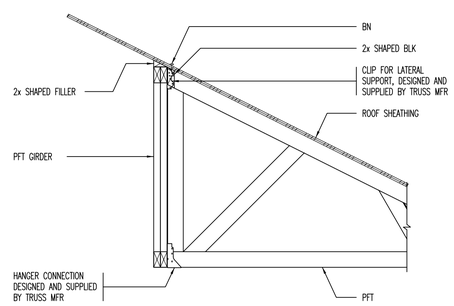

6 TYPICAL JACK TRUSS AT GIRDER TRUSS
NO SCALE
TW701-04

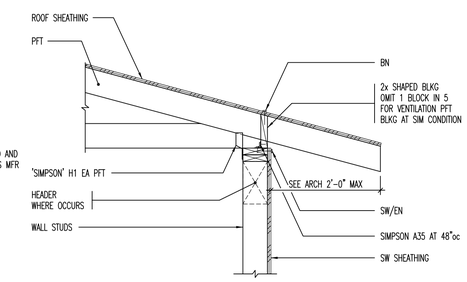

7 TYPICAL PFT AT PERIMETER WALL
NO SCALE
09071S701

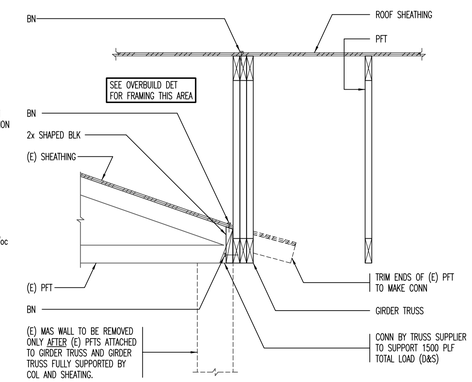

8 GIRDER TRUSS RECEIVING EXISTING TRUSSES
NO SCALE
09071S701

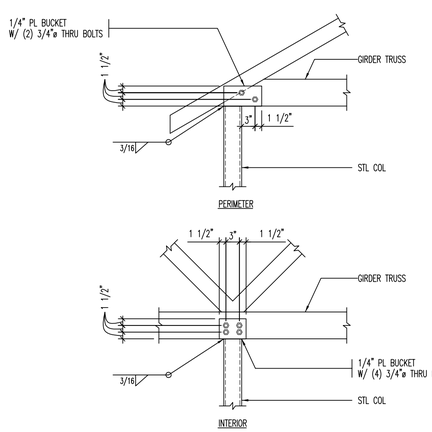

9 STEEL COLUMN AT GIRDER TRUSS
NO SCALE
09071S701

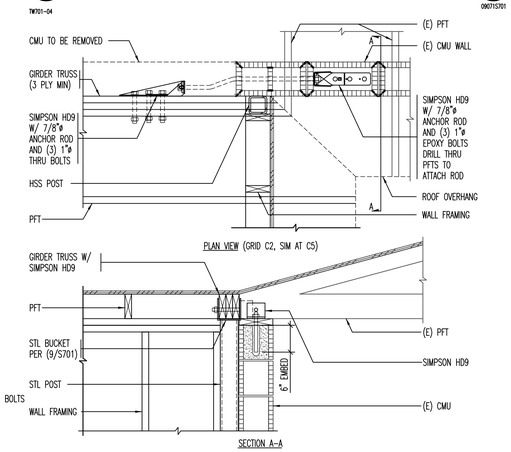

10 GIRDER TRUSS TIE
NO SCALE
09071S701

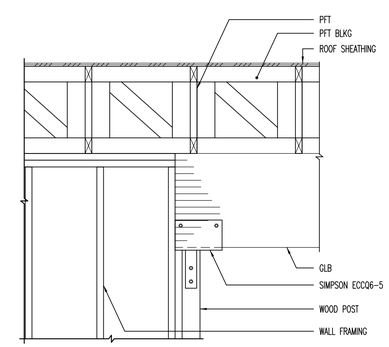

11 GLULAM BEAM POCKET IN WOOD WALL
NO SCALE
09071S701

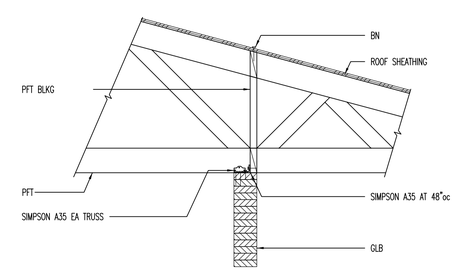

12 TRUSS OVER GLULAM BEAM INTERIOR
NO SCALE
09071S701

JANUARY 20, 2010

NOTE:
THESE STRUCTURAL DRAWINGS ARE BASED ON ARCHITECTURAL DRAWINGS DATED 11.16.2009

DIMENSIONS AND ELEVATIONS, AS THEY RELATE TO THE BUILDING IN GENERAL, i.e. GRID TO GRID DIMENSIONS OR DECK BEARING ELEVATIONS, ARE SUPPLIED BY THE ARCHITECT. THEY ARE PROVIDED ON THE STRUCTURAL PLANS AND DETAILS FOR THE CONVENIENCE OF THE CONTRACTOR. VERIFY DIMENSIONS AND ELEVATIONS WITH ARCHITECTURAL DRAWINGS.

DUNN
DUNN ASSOCIATES, INC
Consulting Structural Engineers
EMAIL: ENG@DUNN-SE.COM
PH: 801-575-8877 FAX: 801-575-8875

This drawing, as an instrument of professional service, is the property of DUNN ASSOCIATES INC. and shall not be used, in whole or part, for any other project without the written permission of an authorized representative of DUNN ASSOCIATES INC. Unauthorized use will be prosecuted to the fullest extent of the law. Copyright © 2010 by DUNN ASSOCIATES INC.

L. K. SORENSEN ASSOCIATES, INC.
ARCHITECTS / PLANNERS / LANDSCAPE ARCHITECTS
1332 DUEHL CIRCLE
TAYLORSVILLE, UTAH 84123
(801)262-9393 Fax (801)262-3511

CONSULTANTS

UTAH NATIONAL GUARD
PX FACILITY ADDITION
Camp W. G. Williams
Bluffdale, Utah

MARK	DATE	DESCRIPTION

PROJECT NO:	09071
DATE:	20 JANUARY 2010
CAD DWG FILE:	
DRAWN BY:	A.B.
CHECKED BY:	F.P.
DESIGNED BY:	P.M.

COPYRIGHT:
THIS PRINT AND ALL INFORMATION HEREON IS SUBJECT TO COPYRIGHT LAWS AND IS THE PROPERTY OF L. K. SORENSEN ASSOCIATES, INC. AND SHALL NOT BE USED ON ANY OTHER PROJECT WITHOUT WRITTEN PERMISSION OF THE ARCHITECT.

SHEET TITLE
ROOF FRAMING DETAILS

S701

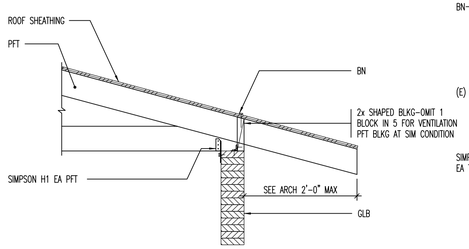

1 TRUSS OVER GLULAM BEAM EXTERIOR
090715702
NO SCALE

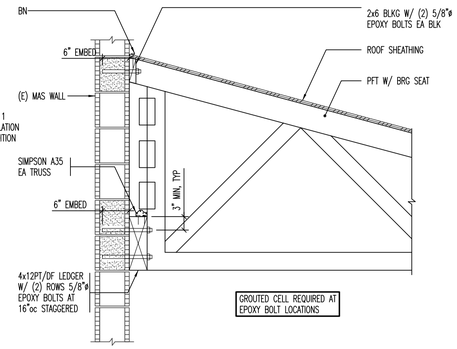

2 WALKWAY CANOPY AT EXISTING BUILDING
090715702
NO SCALE

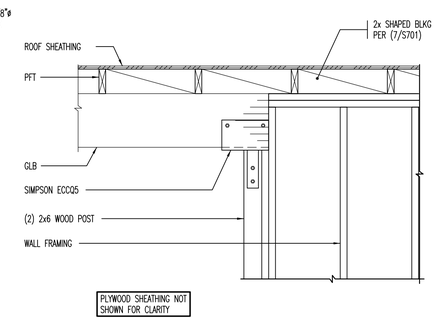

3 GLULAM BEAM SEAT
090715702
NO SCALE

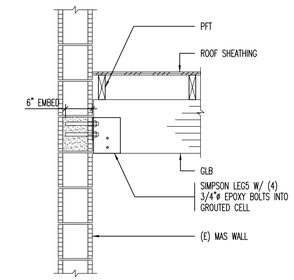

4 GLULAM POCKET AT EXISTING MASONRY WALL
090715702
NO SCALE

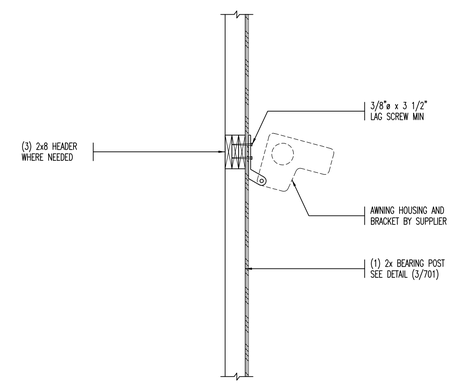

5 HEADER AT AWNING OPTION
090715702
NO SCALE

JANUARY 20, 2010

NOTE:
THESE STRUCTURAL DRAWINGS ARE BASED ON ARCHITECTURAL DRAWINGS DATED 11.16.2009

DIMENSIONS AND ELEVATIONS, AS THEY RELATE TO THE BUILDING IN GENERAL, i.e. GRID TO GRID DIMENSIONS OR DECK BEARING ELEVATIONS, ARE SUPPLIED BY THE ARCHITECT. THEY ARE PROVIDED ON THE STRUCTURAL PLANS AND DETAILS FOR THE CONVENIENCE OF THE CONTRACTOR. VERIFY DIMENSIONS AND ELEVATIONS WITH ARCHITECTURAL DRAWINGS.

DUNN
DUNN ASSOCIATES, INC
Consulting Structural Engineers
EMAIL: ENG@DUNN-SE.COM
PH: 801-575-8877 FAX: 801-575-8875

This drawing, as an instrument of professional service, is the property of DUNN ASSOCIATES INC. and shall not be used, in whole or part, for any other project without the written permission of an authorized representative of DUNN ASSOCIATES INC. Unauthorized use will be prosecuted to the fullest extent of the law. Copyright © 2010 by DUNN ASSOCIATES INC.

L. K. SORENSEN ASSOCIATES, INC.
ARCHITECTS / PLANNERS / LANDSCAPE ARCHITECTS
1332 DUEHL CIRCLE
TAYLORSVILLE, UTAH 84123
(801)262-9393 Fax (801)262-3511

CONSULTANTS

UTAH NATIONAL GUARD
PX FACILITY ADDITION
Camp W. G. Williams
Bluffdale, Utah

MARK	DATE	DESCRIPTION

PROJECT NO:	09071
DATE:	20 JANUARY 2010
CAD DWG FILE:	
DRAWN BY:	A.B.
CHECKED BY:	F.P.
DESIGNED BY:	P.M.

COPYRIGHT:
THIS PRINT AND ALL INFORMATION HEREON IS SUBJECT TO COPYRIGHT LAWS AND IS THE PROPERTY OF L. K. SORENSEN ASSOCIATES, INC. AND SHALL NOT BE USED ON ANY OTHER PROJECT WITHOUT WRITTEN PERMISSION OF THE ARCHITECT.

SHEET TITLE
ROOF FRAMING DETAILS

S702

General Plumbing Notes

1 - PLUMBING CONTRACTOR SHALL COORDINATE HIS WORK WITH THE WORK OF OTHER TRADES.

2 - INSTALLATION SHALL BE IN CONFORMANCE WITH THE IPC, 2006 EDITION; IBC, 2006 EDITION; IMC 2006 EDITION; IFGC, 2006 EDITION AND THE NEC, 2008 EDITION; ALL AS ADOPTED AND AMENDED BY THE STATE OF UTAH AND THE LOCAL JURISDICTION.

3 - THE PLUMBING CONTRACTOR SHALL BE RESPONSIBLE FOR THE CLEAN-UP AND REMOVAL OF WORK RELATED DEBRIS.

4 - ARRANGE AND SCHEDULE INSPECTIONS IN A TIMELY MANNER WITH THE CONSTRUCTION SCHEDULE.

5 - UNLESS NOTED OTHERWISE, WASTE AND VENT PIPING SHALL BE CAST IRON NO-HUB INSTALLED AS PER IPC STANDARDS FOR THE SERVICE INTENDED. SEE SPECIFICATIONS.

6 - UNLESS NOTED OTHERWISE, ALL DOMESTIC WATER PIPING SHALL BE TYPE "L" COPPER WITH SWEAT CONNECTIONS INSTALLED AS PER IPC STANDARDS FOR THE SERVICE INTENDED. SEE SPECIFICATIONS.

7 - PLUMBING EQUIPMENT AND PIPING SHALL BE SEISMICALY BRACED WHERE REQUIRED IN CONFORMANCE WITH THE IBC, 2006 EDITION.

8 - ALL PENETRATIONS OF THE CONCRETE FLOOR SLAB REQUIRED FOR PLUMBING INSTALLATIONS SHALL BE THE RESPONSIBILITY OF THE PLUMBING CONTRACTOR.

9 - ALL FLOOR, WALL AND ROOF PENETRATIONS SHALL BE SEALED SO AS TO MAINTAIN THE INTEGRITY OF THE BUILDING FIRE SAFETY REQUIREMENTS.

10 - REFER TO THE ARCHITECTURAL DIMENSIONED PLANS FOR THE EXACT LOCATION OF PLUMBING FIXTURES AND EQUIPMENT.

11 - ALL HOT AND COLD DOMESTIC WATER PIPING SHALL BE INSULATED WITH 1" THICK (MIN) PRE FORMED GLASS FIBER INSULATION W/ ALL SERVICE JACKET. SEE SPECIFICATIONS.

12 - ALL ROOFING WORK, FRAMING, AND INTERIOR FINISH WORK IS TO BE PERFORMED BY OTHERS UNDER THE DIRECTION OF THE PROJECT ARCHITECT AND THE SUPERVISION OF THE GENERAL CONTRACTOR.

13 - UNLESS NOTED OTHERWISE, ALL PLUMBING FIXTURES AND RELATED TRIM SHALL BE FURNISHED AND INSTALLED BY THE PLUMBING CONTRACTOR. SEE PLUMBING FIXTURE SCHEDULE AND SPECIFICATIONS.

Plumbing Symbols and Abbreviations

	DOMESTIC COLD WATER
	DOMESTIC HOT WATER
	HOT WATER RECIRC.
	WASTE (SANITARY SEWER)
	VENT (SEWER VENT)
A	COMPRESSED AIR
G	FUEL GAS (NATURAL GAS)
	90 DEG. ELBOW UP
	90 DEG. ELBOW DOWN
	90 DEG. TEE UP
	90 DEG. TEE DOWN
	BALL VALVE
	CAPPED PIPE
	REDUCER / INCREASER
	ELEVATION MARK
	POINT OF CONNECTION NEW TO EXISTING

A.F.F.	= ABOVE FINISH FLOOR
CA	= COMPRESSED AIR
COTG	= CLEAN OUT TO GRADE
CW	= DOMESTIC COLD WATER
DEMO.	= LINE TO BE REMOVED DURING DEMOLITION
DN	= DOWN
(E)	= EXISTING
FCO	= FLOOR CLEAN OUT
G	= FUEL GAS (NATURAL GAS)
G.C.	= GENERAL CONTRACTOR
HW	= DOMESTIC HOT WATER
(N)	= NEW PIPING
P-x	= PLUMBING FIXTURE TAG SEE PLUMBING FIXTURE SCHEDULE
V.	= VENT (SANITARY SEWER)
VTR	= SEWER VENT THRU ROOF
W.	= WASTE (SANITARY SEWER)
WCO	= WALL CLEAN OUT

Keyed Reference Notes

1. LOCATION OF EXISTING 5 LB (NOMINAL DELIVERY PRESSURE) NON-METERED FUEL GAS BUILDING SERVICE. EXISTING SERVICE TO BE FITTED WITH NEW 700 CFH CAPACITY 4 OZ. WORKING PRESSURE FUEL GAS METER. FIELD VERIFY EXACT CONDITION.
2. REMOVE EXISTING 1" FUEL GAS SERVICE ENTRANCE LINE AND REPLACE WITH NEW 2" FUEL GAS SERVICE ENTRANCE PIPING.
3. EXTEND NEW 2" FUEL GAS PIPING INTO BUILDING AND ROUTE OVERHEAD AS INDICATED. PROVIDE NEW 1-1/2" BRANCH LINE FOR EXISTING EQUIPMENT SERVICE. EXTEND 1-1/2" LINE FOR NEW BUILDING ADDITION SERVICE AS INDICATED.
4. EXTEND NEW 1-1/2", 4 OZ PRESSURE FUEL GAS BRANCH LINE INTO EXISTING MECHANICAL ROOM AND CONNECT INTO EXISTING FUEL GAS BRANCH PIPING TO EXISTING APPLIANCES.
5. EXTEND NEW 1-1/2", 4 OZ PRESSURE FUEL GAS PIPING IN ATTIC OVERHEAD TO SERVE EQUIPMENT IN NEW BUILDING ADDITION. SEE SHEET P102 FOR CONTINUATION.
6. EXTEND NEW 1" DOMESTIC WATER LINE INTO MECH. ROOM AND CONNECT TO EXISTING DOMESTIC COLD WATER SERVICE DOWNSTREAM OF PRV. PROVIDE FULL PORT SHUTOFF BALL VALVE AT POINT OF CONNECTION. FIELD VERIFY EXACT LOCATION AND CONDITION.
7. EXTEND NEW 1", DOMESTIC COLD WATER LINE IN INSULATED ATTIC OVERHEAD TO SERVE FIXTURES IN NEW BUILDING ADDITION. SEE SHEET P102 FOR CONTINUATION.
8. EXTEND AND CONNECT TO EXISTING SITE SANITARY SEWER MAIN. FIELD VERIFY EXACT LOCATION.

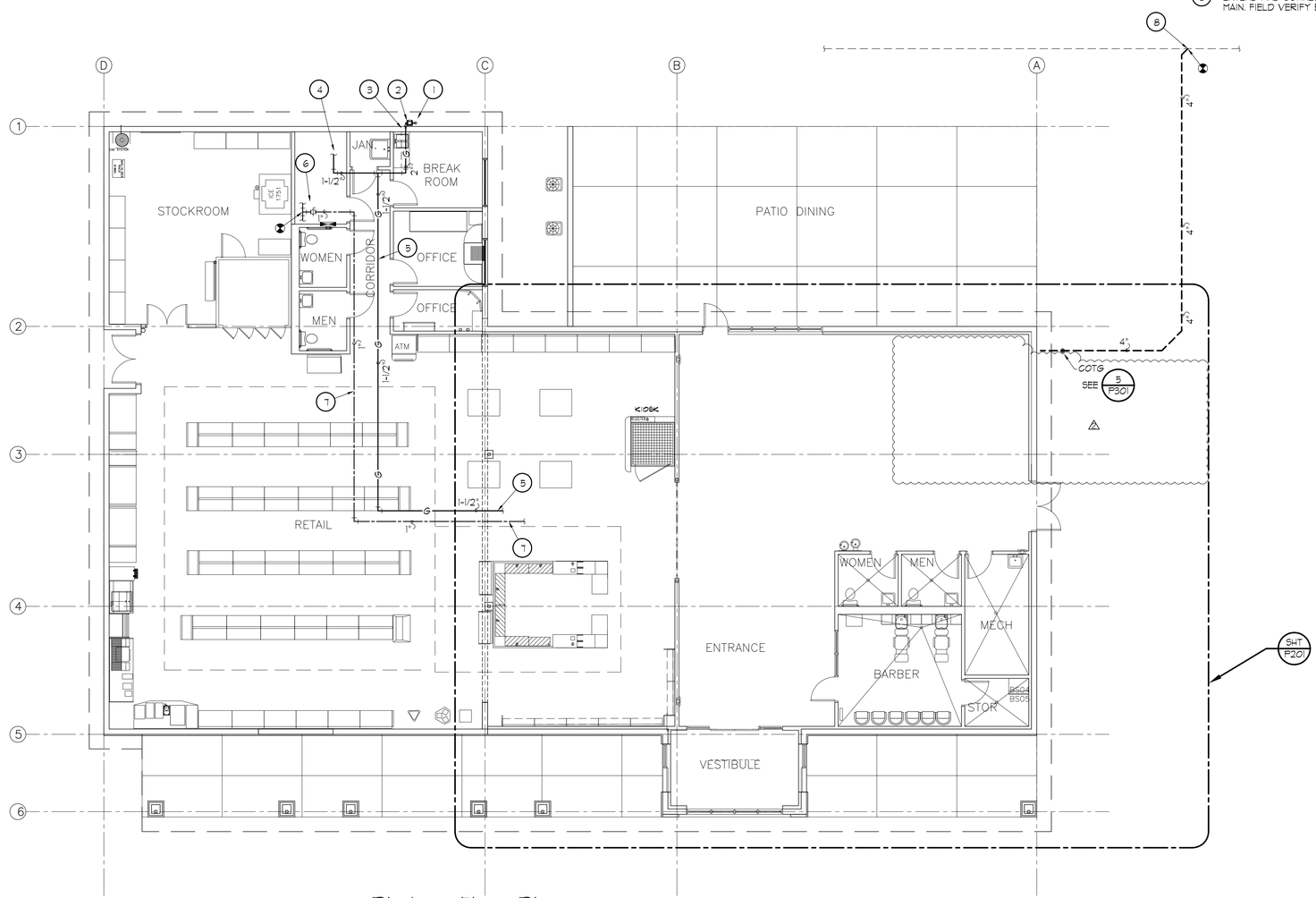

Plumbing Floor Plan

SCALE: 1/8"=1'-0"

L. K. SORENSEN ASSOCIATES, INC.
ARCHITECTS / PLANNERS / LANDSCAPE ARCHITECTS
1332 DUEHL CIRCLE
TAYLORSVILLE, UTAH 84123
(801)262-9393 Fax (801)262-3511

STATE OF UTAH LICENSED PROFESSIONAL ENGINEER CHARLES LUSH No. 155425

CONSULTANTS

ACE Advanced Concept Engineering, Inc.
11851 VISTA GLEN CT., SANDY, UT 84092
(801) 572-3055 FAX: (801) 572-3075

UTAH NATIONAL GUARD

PX FACILITY ADDITION

Camp W. G. Williams
Bluffdale, Utah

MARK	DATE	DESCRIPTION
2	11-20-09	PLAN REVISIONS
1	07-02-09	DFCM PLAN REVIEW

PROJECT NO:	08210480
DATE:	10 JUNE 2009
CAD DWG FILE:	
DRAWN BY:	pcs
CHECKED BY:	cl
DESIGNED BY:	cl

COPYRIGHT:
THIS PRINT AND ALL INFORMATION HEREON IS SUBJECT TO COPYRIGHT LAWS AND IS THE PROPERTY OF L.K. SORENSEN ASSOCIATES, INC. AND SHALL NOT BE USED ON ANY OTHER PROJECT WITHOUT WRITTEN PERMISSION OF THE ARCHITECT.

SHEET TITLE

PLUMBING FLOOR PLAN

P101

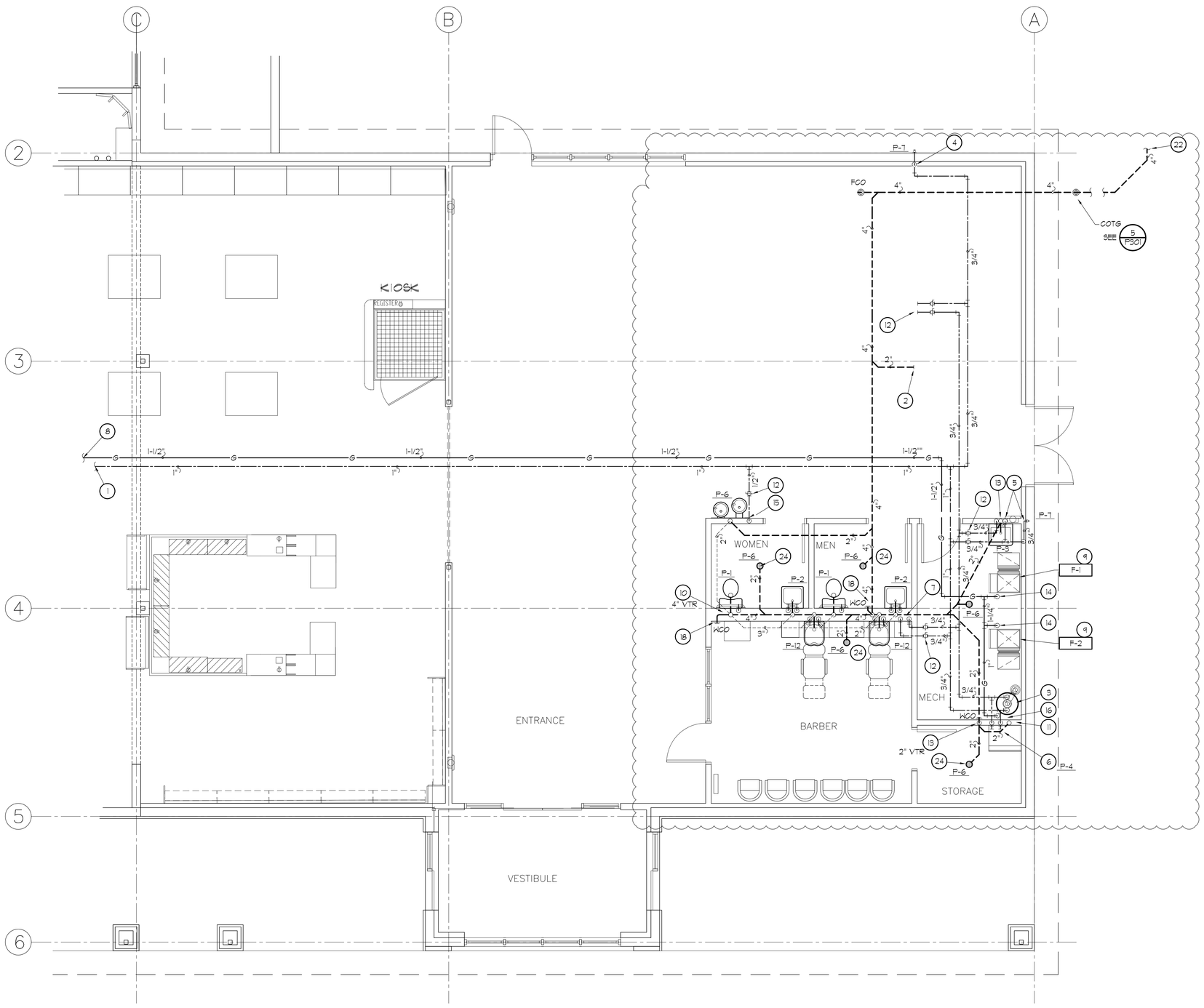

Plumbing Floor Plan

SCALE: 1/4"=1'-0"

Keyed Reference Notes

1. NEW 1" DOMESTIC COLD WATER LINE ROUTED FROM NEW POINT OF CONNECTION AT EXISTING PRV STATION. COORDINATE ROUTING LOCATION WITH NEW CONSTRUCTION AND STRUCTURE. SEE SHEET P101 FOR POINT OF CONNECTION TO EXISTING.
2. PROVIDE 2" LATERAL TO THIS POINT AND CAP OFF.
3. PROVIDE AND INSTALL GAS FIRED WATER HEATER WITH EXPANSION TANK. SEE PLUMBING EQUIPMENT SCHEDULES FOR ADDITIONAL INFORMATION.
4. DROP 3/4" COLD WATER TO SERVE EXTERIOR WALL HYDRANT.
5. DROP 3/4" HOT AND COLD WATER LINE DOWN IN WALL TO SERVE SERVICE SINK. EXTEND 3/4" COLD FROM DROPS TO EXTERIOR WALL HYDRANT.
6. PROVIDE CLOTHES WASHER UTILITIES SERVICE BOX. ROUTE 1/2" HOT AND COLD WATER LINE FROM MECHANICAL ROOM. PROVIDE 2" WASTE STAND PIPE.
7. DROP 3/4" COLD WATER AND 3/4" HOT WATER DOWN IN WALL TO SERVE FIXTURES. EXTEND 1/2" COLD WATER TO EACH FIXTURE, 1/2" HOT WATER TO EACH LAVATORY.
8. NEW 1-1/2" FUEL GAS (NATURAL GAS) LINE ROUTED FROM NEW POINT OF CONNECTION AT EXISTING BUILDING FUEL GAS SERVICE. COORDINATE ROUTING LOCATION WITH NEW CONSTRUCTION AND STRUCTURE. SEE SHEET P101 FOR POINT OF CONNECTION TO EXISTING.
9. 120 MBH GAS FIRED FURNACE. SEE MECHANICAL DRAWINGS.
10. COMBINE PLUMBING VENTS INTO 1 - 4" VENT UP THROUGH ROOF TO ATMOSPHERE.
11. EXTEND 3/4" FUEL GAS LINE FROM DROP IN MECHANICAL ROOM TO SERVE CLOTHES DRYER. PROVIDE SHUT-OFF VALVE, PLUGGED TEE AND FLEXIBLE CONNECTOR AT APPLIANCE.
12. PROVIDE NORMALLY OPEN SERVICE SHUT-OFF VALVES ABOVE FINISHED CEILING, AND PROVIDE CAP ON END OF PIPE. PROVIDE ACCESS DOOR(S) TO MATCH CEILING TYPE.
13. ROUTE 2" PLUMBING VENT UP THROUGH ROOF AND VENT TO ATMOSPHERE.
14. EXTEND 3/4" FUEL GAS LINE TO SERVE FURNACE. PROVIDE SHUT-OFF VALVE, PLUGGED TEE AND FLEXIBLE CONNECTOR AT FURNACE.
15. DROP 1/2" COLD WATER LINE DOWN AT WALL TO SERVE DRINKING FOUNTAIN.
16. EXTEND 3/4" FUEL GAS LINE TO SERVE WATER HEATER. PROVIDE SHUT-OFF VALVE, PLUGGED TEE AND FLEXIBLE CONNECTOR AT APPLIANCE.
17. DELETED.
18. DELETED.
19. DELETED.
20. DELETED.
21. DELETED.
22. EXTENSION AND CONNECTION OF NEW 4" SANITARY SEWER TO EXISTING MAIN LINE BY SITE UTILITIES CONTRACTOR.
23. DELETED.
24. PROVIDE TRAP PRIMERS FOR FLOOR DRAINS AS REQUIRED BY CODE. SEE DETAIL 1/P301.

L. K. SORENSEN ASSOCIATES, INC.
ARCHITECTS / PLANNERS / LANDSCAPE ARCHITECTS
1332 DUEHL CIRCLE
TAYLORSVILLE, UTAH 84123
(801)262-9393 Fax (801)262-3511

STATE OF UTAH LICENSED PROFESSIONAL ENGINEER
CHARLES LUSH
No. 155425

CONSULTANTS

ACE
Advanced Concept Engineering, Inc.
11851 VISTA GLEN CT., SANDY, UT 84092
(801) 572-3055 FAX (801) 572-3075

UTAH NATIONAL GUARD
PX FACILITY ADDITION
Camp W. G. Williams
Bluffdale, Utah

NATIONAL GUARD UTAH

MARK	DATE	DESCRIPTION
2	11-20-09	PLAN REVISIONS
1	07-02-09	DFCM PLAN REVIEW

PROJECT NO:	08310480
DATE:	10 JUNE 2009
CAD DWG FILE:	
DRAWN BY:	pcs
CHECKED BY:	cl
DESIGNED BY:	cl

COPYRIGHT:
THIS PRINT AND ALL INFORMATION HEREON IS SUBJECT TO COPYRIGHT LAWS AND IS THE PROPERTY OF L. K. SORENSEN ASSOCIATES, INC. AND SHALL NOT BE USED ON ANY OTHER PROJECT WITHOUT WRITTEN PERMISSION OF THE ARCHITECT.

SHEET TITLE

PLUMBING FLOOR PLAN

P201

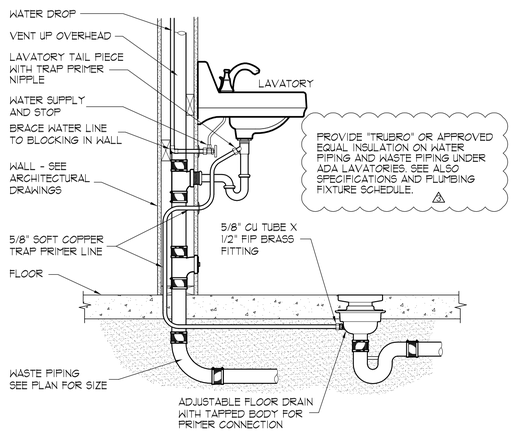

1 / P201 **Lavatory with Tail Piece Trap Primer**

NO SCALE

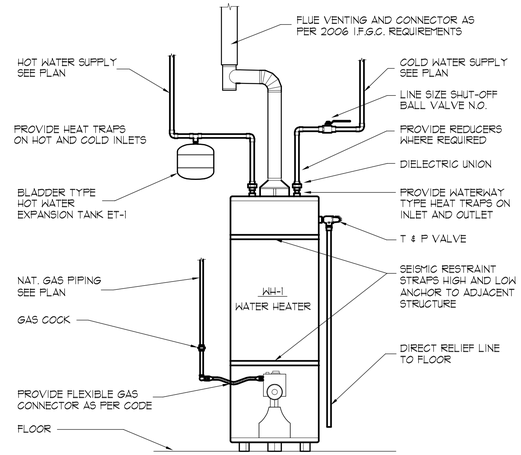

4 / P201 **Domestic Water Heater Detail**

NO SCALE

Plumbing Fixture Schedule

SYMBOL	FIXTURE	MANUFACTURER MODEL	WASTE	VENT	COLD	HOT	DESCRIPTION / ACCESSORIES
P-1	ADA WATER CLOSET	SEE SPECIFICATION	4"	2"	1/2"	-	TANK TYPE, FLOOR MOUNT, FLUSH TANK TYPE. PROVIDE OPEN FRONT SEAT W/O LID. WHITE
P-2	WALL HUNG LAVATORY	SEE SPECIFICATION	1-1/2"	1-1/2"	1/2"	1/2"	WALL HUNG HAND LAVATORY WITH ADA COMPLIANT TRIM AND INSULATION ON PIPES UNDER LAV'S
P-3	SERVICE SINK	SEE SPECIFICATION	2"	1-1/2"	3/4"	3/4"	VIT. CHINA TRAP STANDARD SERV. SINK W/ RIM GUARDS, PUNCHED BACK, BACK SUPPORTED FAUCET
P-4	WASHING MACHINE BOX	SEE SPECIFICATION	2"	2"	1/2"	1/2"	CLOTHES WASHER UTILITIES SERVICE CONNECTION BOX C/W VALVES AND WASTE CONNECTION.
P-5	DELETED						
P-6	FLOOR DRAIN	SEE SPECIFICATION	2"	1-1/2"	--	--	ADJ. MEDIUM DUTY ROUND GRATE DEEP SEAL P-TRAP.
P-7	WALL HYDRANT	SEE SPECIFICATION	--	--	3/4"	--	FROST PROOF, WALL MOUNTED C/W VACUUM BREAKER
P-8	HAND SINK	SEE SPECIFICATION	1-1/2"	1-1/2"	1/2"	1/2"	WALL MOUNT HAND SINK
P-9	DELETED						
P-10	DELETED						
P-11	DELETED						
P-12	SALON SINK	SEE SPECIFICATION	2"	2"	1/2"	1/2"	PROVIDED BY AND INSTALLED BY PLUMBING CONTRACTOR

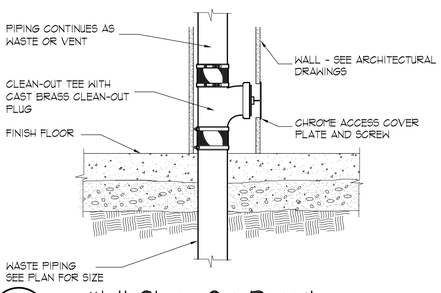

2 / P201 **Wall Clean Out Detail**

NO SCALE

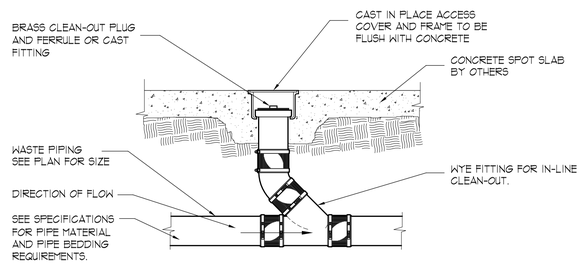

5 / P201 **Clean Out to Grade Detail**

NO SCALE

Domestic Water Heater Schedule

SYMBOL	MANUFACTURER MODEL	CAPACITY GALLONS	FUEL TYPE	INPUT CAP.	ELEC.	DESCRIPTION / ACCESSORIES
WH-1	BRADFORD WHITE 50-65FB-3N	50 GAL.	NAT. GAS	65 MBH	NONE	50 GALLON NATURAL GAS FIRED WATER HEATER. PROVIDE 3 GALLON (NOM) EXPANSION TANK AS REQUIRED BY CODE.

NOTES:

1 - INPUT CAPACITY SHOWN IS MANUFACTURERS AGA RATING. DERATE INPUT RATE AS REQUIRED FOR JOB SITE ELEVATION ACCORDING TO 2000 IFGC REQUIREMENTS.

Expansion Tank Schedule

SYMBOL	MANUFACTURER MODEL	SERVICE TYPE	TYPE	CAP'Y GAL.	DIMENSIONS AND FITTINGS
ET-1	THERM-X-TROL	BUILDING SYSTEM	BLADDER	4.4	11" X 15" WITH 3/4" NPTM FITTING

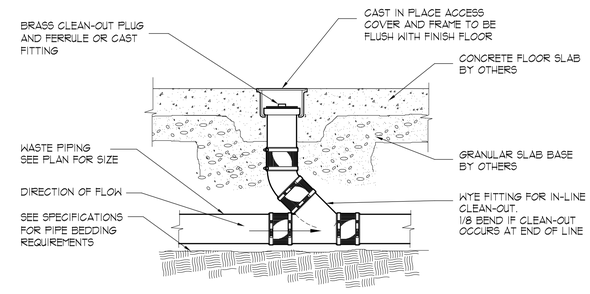

3 / P201 **Floor Clean Out Detail**

NO SCALE

Branch Water Line Schedule

SYMBOL	FIXTURE UNITS	QUANTITY OF FIXTURES SERVED BY: 1/2"	3/4"	1"	1-1/4"	1-1/2"	2"
WATER CLOSET (FLUSH VALVE)	10	---	---	1	3	5	15
WATER CLOSET (TANK TYPE)	3	1	2	4	10	---	---
URINAL (FLUSH VALVE)	5	---	1	2	6	10	---
LAVATORY OR HAND SINK	2	1	3	6	15	---	---
SERVICE SINK	4	1	3	6	---	---	---
QUANTITY OF FIXTURE UNITS SERVED BY:		3	6	12	30	50	150

NOTE:

WHERE PIPE SIZING SHOWN ON THE DRAWINGS SHALL BE FOLLOWED, OTHERWISE, PROVIDE SIZING ACCORDING TO SCHEDULE. WHERE FIXTURES ON A BRANCH ARE MIXED, USE THE SUM OF THE FIXTURE UNITS TO DETERMINE SIZING. THE BRANCHES SHALL BE REDUCED AS LOAD IS REDUCED. THE MINIMUM SIZE TO ANY ONE (1) FIXTURE SHALL BE 1/2".

L. K. SORENSEN ASSOCIATES, INC.
ARCHITECTS / PLANNERS / LANDSCAPE ARCHITECTS
1332 DUEHL CIRCLE
TAYLORSVILLE, UTAH 84123
(801)262-9393 Fax (801)262-3511

STATE OF UTAH LICENSED PROFESSIONAL ENGINEER CHARLES LUSH No. 155425

CONSULTANTS

ACE Advanced Concept Engineering, Inc.
11951 NISTA GLEN CT., SANDY, UT 84092
(801) 572-3055 FAX (801) 572-3075

UTAH NATIONAL GUARD

PX FACILITY ADDITION

Camp W. G. Williams
Bluffdale, Utah

MARK	DATE	DESCRIPTION
3	12-29-09	PLAN REVISIONS
2	11-20-09	PLAN REVISIONS
1	07-02-09	DFCM PLAN REVIEW

PROJECT NO:	08310480
DATE:	10 JUNE 2009
CAD DWG FILE:	
DRAWN BY:	pcs
CHECKED BY:	cl
DESIGNED BY:	cl

COPYRIGHT:
THIS PRINT AND ALL INFORMATION HEREON IS SUBJECT TO COPYRIGHT LAWS AND IS THE PROPERTY OF L. K. SORENSEN ASSOCIATES, INC. AND SHALL NOT BE USED ON ANY OTHER PROJECT WITHOUT WRITTEN PERMISSION OF THE ARCHITECT.

SHEET TITLE

PLUMBING SCHEDULES AND DETAILS

P301

Mechanical Symbols and Abbreviations

- SUPPLY AIR DIFFUSER
- RETURN AIR GRILLE
- RETURN AIR GRILLE
- RA GRILLES WITH SOUND BOOT
- EXHAUST AIR GRILLE
- ROUND BRANCH DUCT
- FLEXIBLE ROUND BRANCH DUCT
- DUCT W/ 1" DUCT LINER
- SUPPLY AIR DUCT TURNED UP
- SUPPLY AIR DUCT TURNED DOWN
- RETURN AIR DUCT TURNED UP
- RETURN AIR DUCT TURNED DOWN
- EXH. AIR DUCT TURNED UP
- EXH. AIR DUCT TURNED DOWN
- THERMOSTAT
- ELEVATION MARK
- POINT OF CONNECTION NEW TO EXISTING

A.F.F. = ABOVE FINISH FLOOR
ARCH. = ARCHITECT
CU = CONDENSING UNIT
DN = DOWN
E.A. = EXHAUST AIR
EF = EXHAUST FAN
FD = FIRE DAMPER
F/S = FIRE / SMOKE DAMPER
FURN. = FURNACE
G.C. = GENERAL CONTRACTOR
G.I. = GALVANIZED IRON / STEEL
HWR = HEATING WATER RETURN
HWS = HEATING WATER SUPPLY
MAU = MAKE-UP AIR UNIT
O.A. = OUTSIDE AIR
O.C. = ON CENTER
RA = RETURN AIR
SA = SUPPLY AIR
UH = UNIT HEATER

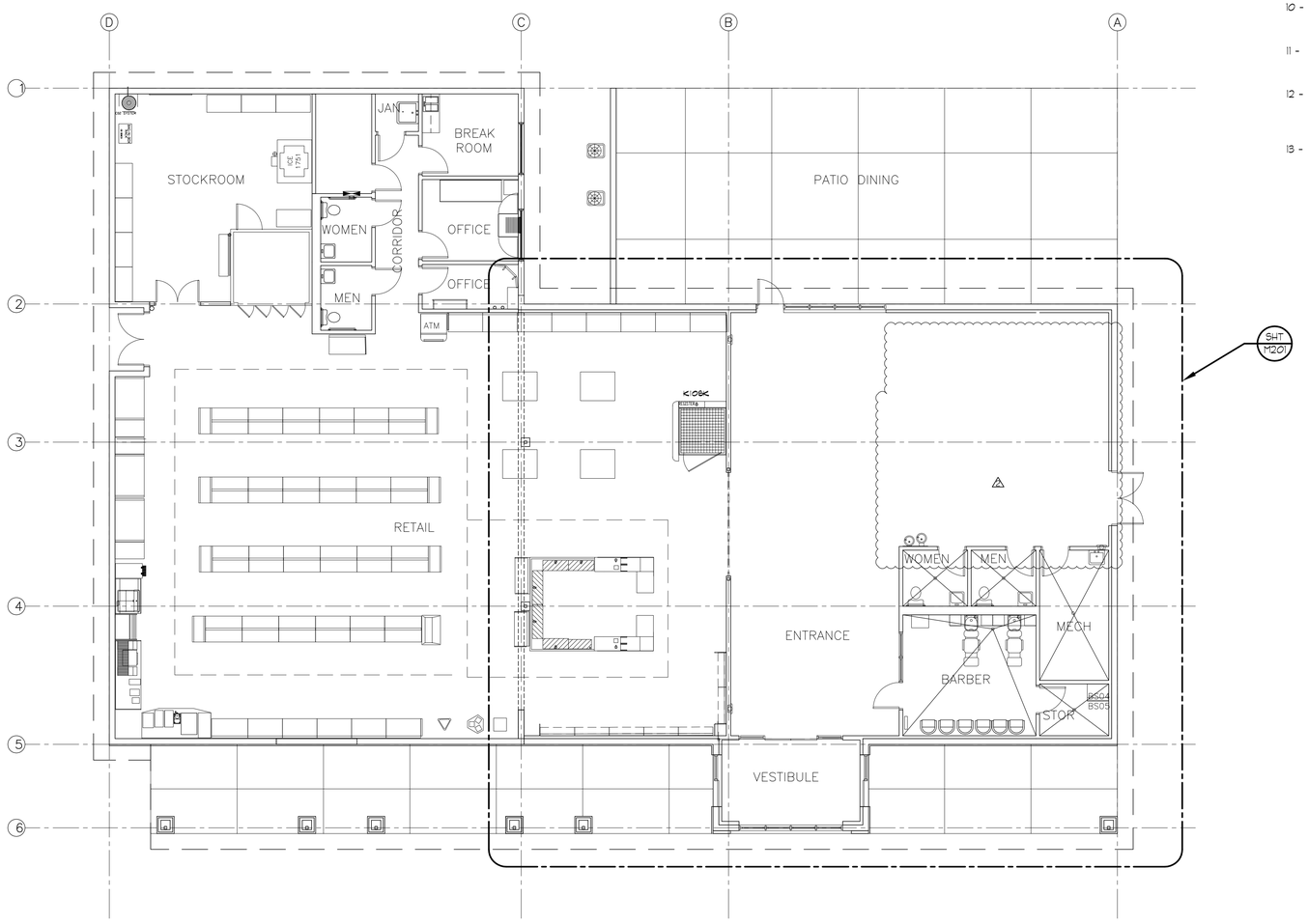

Mechanical Floor Plan

SCALE: 1/8"=1'-0"

General Mechanical Notes

1 - MECHANICAL CONTRACTOR SHALL COORDINATE HIS WORK WITH THE WORK OF OTHER TRADES.

2 - INSTALLATION SHALL BE IN CONFORMANCE WITH THE IBC, 2006 EDITION; IMC 2006 EDITION; IFGC, 2006 EDITION AND THE NEC, 2008 EDITION; ALL AS ADOPTED AND AMENDED BY THE STATE OF UTAH AND THE LOCAL JURISDICTION.

3 - THE MECHANICAL CONTRACTOR SHALL BE RESPONSIBLE FOR THE CLEAN-UP AND REMOVAL OF MECHANICAL DEBRIS.

4 - ARRANGE AND SCHEDULE INSPECTIONS IN A TIMELY MANNER WITH THE CONSTRUCTION SCHEDULE.

5 - UNLESS NOTED OTHERWISE, ALL DUCTWORK SHALL BE CONSTRUCTED OF GALVANIZED STEEL AND SHALL CONFORM WITH THE SMACNA AND ASHRAE STANDARDS FOR THE PRESSURE CLASS OF DUCT BEING INSTALLED. SEE SPECIFICATIONS.

6 - UNLESS NOTED OTHERWISE, ALL SUPPLY AIR, RETURN AIR AND MAKE-UP AIR DUCTWORK INSTALLED IN UNCONDITIONED AREAS OF THE BUILDING, (THIS EXCLUDES RETURN AIR PLENUMS) SHALL BE INSULATED WITH 1" THICK FOIL FACED DUCT WRAP. SEE SPECIFICATIONS.

7 - MECHANICAL EQUIPMENT, MECHANICAL PIPING AND DUCTING SHALL BE SEISMICALY BRACED WHERE REQUIRED IN CONFORMANCE WITH THE IBC, 2006 EDITION.

8 - ALL MECHANICAL EQUIPMENT SHALL BE UL LISTED.

9 - ALL REFRIGERATION EQUIPMENT SHALL BE ARI LISTED.

10 - REFER TO THE ARCHITECTURAL REFLECTED CEILING PLAN FOR THE EXACT LOCATION OF CEILING REGISTERS, GRILLES AND DIFFUSERS.

11 - UNLESS NOTED OTHERWISE, ALL DUCT SIZES SHOWN ARE INSIDE DIMENSIONS. INCREASE DUCT SIZES FOR LINER TYPE INSULATION.

12 - ALL CONCRETE WORK, ROOFING WORK, FRAMING, AND INTERIOR FINISH WORK IS TO BE PERFORMED BY OTHERS UNDER THE DIRECTION OF THE PROJECT ARCHITECT AND THE SUPERVISION OF THE GENERAL CONTRACTOR.

13 - LOW PRESSURE INSULATED FLEXIBLE DUCTWORK USED FOR RUN-OUTS TO DIFFUSERS AND GRILLES SHALL BE LIMITED TO 48" IN LENGTH AND SHALL ONLY BE USED FOR THE FINAL CONNECTION OF RUN-OUT TO DIFFUSERS AND GRILLES.

L. K. SORENSEN ASSOCIATES, INC.
ARCHITECTS / PLANNERS / LANDSCAPE ARCHITECTS
1332 DUEHL CIRCLE
TAYLORSVILLE, UTAH 84123
(801)262-9393 Fax (801)262-3511

STATE OF UTAH LICENSED PROFESSIONAL ENGINEER
CHARLES LUSH
No. 155425

CONSULTANTS

ACE
Advanced Concept Engineering, Inc.
11861 VISTA GLEN CT., SANDY, UT 84092
(801) 572-3055 FAX (801) 572-3075

UTAH NATIONAL GUARD
PX FACILITY ADDITION
Camp W. G. Williams
Bluffdale, Utah

NATIONAL GUARD UTAH

MARK	DATE	DESCRIPTION
2	11-20-09	PLAN REVISIONS
1	07-02-09	DFCM PLAN REVIEW

PROJECT NO:	08210480
DATE:	10 JUNE 2009
CAD DWG FILE:	
DRAWN BY:	pcs
CHECKED BY:	cl
DESIGNED BY:	cl

COPYRIGHT:
THIS PRINT AND ALL INFORMATION HEREON IS SUBJECT TO COPYRIGHT LAWS AND IS THE PROPERTY OF L.K. SORENSEN ASSOCIATES, INC. AND SHALL NOT BE USED ON ANY OTHER PROJECT WITHOUT WRITTEN PERMISSION OF THE ARCHITECT.

SHEET TITLE

MECHANICAL FLOOR PLAN

M101

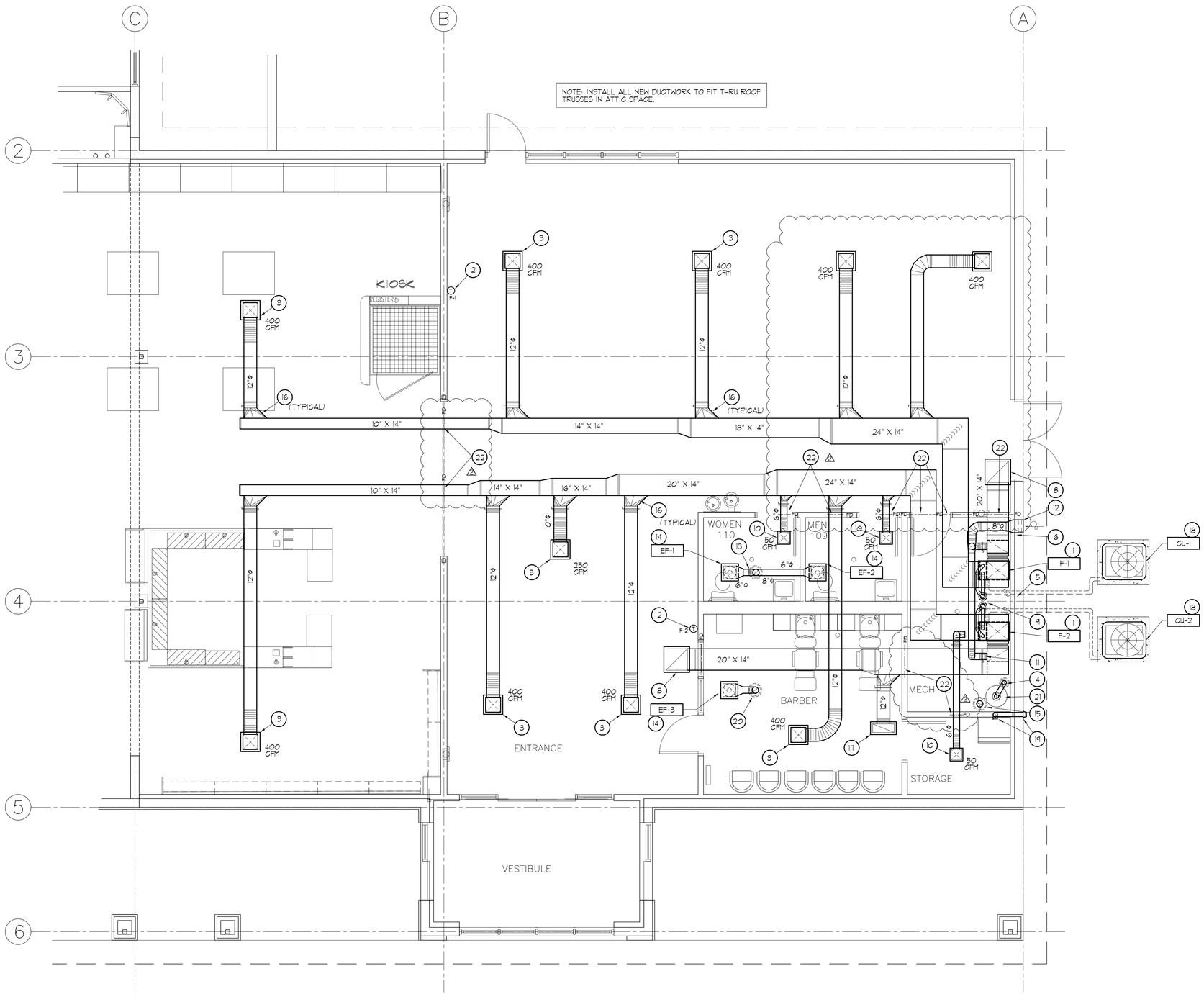

Mechanical Floor Plan

SCALE: 1/8"=1'-0"

Keyed Reference Notes

1. UP-FLOW, FLOOR MOUNTED, GAS FIRED WARM AIR FURNACE WITH A/C COOLING COIL. SEE MECHANICAL EQUIPMENT SCHEDULES FOR ADDITIONAL INFORMATION.
2. PROVIDE SINGLE STAGE HEAT / COOL THERMOSTAT WITH NIGHT SETBACK FUNCTION FOR FURNACE SYSTEM. INSTALL THERMOSTAT ON WALL IN THIS LOCATION AT APPROX. 54" A.F.F.
3. PROVIDE SUPPLY AIR DIFFUSER IN GYP. BD. CEILING. 4-WAY BLOW, SQUARE NECK SIZE EQUALS BRANCH DUCT SIZE. STANDARD WHITE FINISH. BALANCE TO CFM SHOWN. SEE REFLECTED CEILING PLAN FOR EXACT LOCATION.
4. ROUTE 4" DIA. FLUE VENTING FOR WATER HEATER UP THROUGH ROOF TO UL LISTED WEATHER CAP.
5. ROUTE DX REFRIGERATION PIPING DOWN AT BUILDING WALL AND OUT TO PAD MOUNTED CONDENSING UNIT.
6. COMBINE 2 - 6" DIA. OUTSIDE AIR DUCTS INTO 1 - 8" DIA. O.A. DUCT. ROUTE TO WALL INTAKE ASSEMBLY. MAINTAIN 120" CLEAR TO EXHAUST, FLUE AND PLUMBING VENTS AS PER CODE.
7. FUEL GAS FIRED WATER HEATER. SEE PLUMBING PLANS.
8. PROVIDE AND INSTALL 20" X 20" (NOM) EGGCRATE TYPE CEILING RETURN AIR GRILLE. PROVIDE DUCT CONNECTION PLENUM BOX AT GRILLE. SEE REFLECTED CEILING PLAN FOR EXACT LOCATION.
9. EXTEND COMBINATION INTAKE / EXHAUST FURNACE VENT ASSEMBLY UP THROUGH ROOF AND TERMINATE AS PER MANUFACTURERS RECOMMENDATIONS. FIELD VERIFY EXACT LOCATION.
10. PROVIDE SUPPLY AIR DIFFUSER IN GYP. BD. CEILING. 4-WAY BLOW, 8" X 8" NECK, STEP LOUVER TYPE. STANDARD WHITE FINISH. PROVIDE DUCT CONNECTION PLENUM. SEE REFLECTED CEILING PLAN FOR EXACT LOCATION.
11. DROP 1-6" DIA. OUTSIDE AIR DUCT DOWN AT EACH FURNACE AND CONNECT TO RETURN AIR PLENUM. PROVIDE MOTORIZED DAMPER AND BALANCING DAMPER AT PLENUM CONNECTION. SEE DETAIL.
12. PROVIDE 16" X 8" CLEAR ANODIZED ALUMINUM INTAKE GRILLE WITH BIRD SCREEN INSTALLED IN WALL SLEEVE. SAW CUT EXTERIOR MASONRY WALL AS REQUIRED. LOCATE GRILLE AT APPROX. 80" A.F.F. FIELD VERIFY EXACT CONDITION.
13. COMBINE 2- 6" DIA. EXHAUST DUCTS INTO 1 - 8" DIA. EXHAUST DUCT AND ROUTE UP THROUGH ROOF TO WEATHER CAP.
14. CEILING MOUNTED EXHAUST FAN. SEE EQUIPMENT SCHEDULE FOR ADDITIONAL INFORMATION.
15. PROVIDE AND INSTALL 6" DIA. COMBUSTION AIR DUCT DOWN THROUGH ROOF FROM INTAKE WEATHER CAP. TERMINATE DUCT IN UPPER 12" OF ROOM CAVITY AS PER CODE REQUIREMENTS.
16. PROVIDE AND INSTALL HIGH EFFICIENCY TYPE BRANCH DUCT CONNECTION WITH MANUAL BALANCING DAMPER. TYPICAL ALL BRANCH DUCT CONNECTIONS.
17. PROVIDE AND INSTALL 20" X 10" (NOM) EGGCRATE TYPE CEILING RETURN AIR GRILLE. PROVIDE DUCT CONNECTION PLENUM BOX AT GRILLE. SEE REFLECTED CEILING PLAN FOR EXACT LOCATION.
18. PROVIDE AND INSTALL NEW PAD MOUNTED DX CONDENSING UNIT FOR AIR CONDITIONING SYSTEM. SEE EQUIPMENT SCHEDULES FOR ADDITIONAL INFORMATION.
19. PROVIDE AND INSTALL 4" DRYER VENT FOR STACKED WASHER / DRYER APPLIANCE. EXTEND THROUGH WALL AND TERMINATE WITH DRYER VENT CAP.
20. 6" DIA. EXHAUST DUCT. ROUTE UP THROUGH ROOF TO WEATHER CAP.
21. WATER HEATER BY PLUMBING CONTRACTOR. SEE PLUMBING PLANS.
22. PROVIDE 1-1/2 FIRE DAMPER IN DUCT. PROVE DUCT ACCESS DOOR FOR SERVICING FIRE DAMPER.

NOTE: PROVIDE THE OWNER WITH A STARTUP REPORT INCLUDING GAS ORIFICE SIZE, MANIFOLD PRESSURE, AND FLUE GAS ANALYSIS FOR BOTH FURNACES.

L. K. SORENSEN ASSOCIATES, INC.
ARCHITECTS / PLANNERS / LANDSCAPE ARCHITECTS
1332 DUEHL CIRCLE
TAYLORSVILLE, UTAH 84123
(801)262-9393 Fax (801)262-3511

STATE OF UTAH LICENSED PROFESSIONAL ENGINEER
CHARLES LUSH
No. 155425

CONSULTANTS

ACE
Advanced Concept Engineering, Inc.
11851 WSTA GLEN CT., SANDY, UT 84092
(801) 572-3055 FAX (801) 572-3075

UTAH NATIONAL GUARD

PX FACILITY ADDITION

Camp W. G. Williams
Bluffdale, Utah

MARK	DATE	DESCRIPTION
2	11-20-09	PLAN REVISIONS
1	07-02-09	DFCM PLAN REVIEW

PROJECT NO:	08210480
DATE:	10 JUNE 2009
CAD DWG FILE:	
DRAWN BY:	pcs
CHECKED BY:	cl
DESIGNED BY:	cl

COPYRIGHT:
THIS PRINT AND ALL INFORMATION HEREON IS SUBJECT TO COPYRIGHT LAWS AND IS THE PROPERTY OF L. K. SORENSEN ASSOCIATES, INC. AND SHALL NOT BE USED ON ANY OTHER PROJECT WITHOUT WRITTEN PERMISSION OF THE ARCHITECT.

SHEET TITLE

MECHANICAL FLOOR PLAN

M201

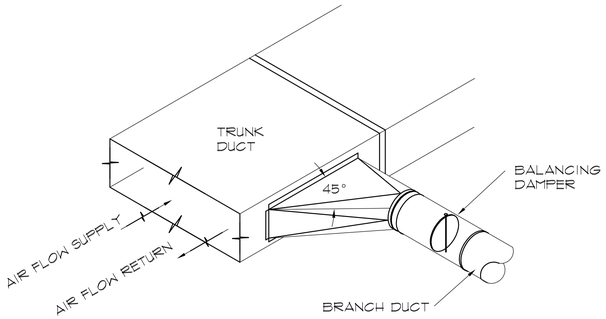

1 / M301 **BRANCH TAKE-OFF DETAIL**

NO SCALE

Exhaust Fan Schedule

SYMBOL	BASIS OF DESIGN *	TYPE	CFM	SP	FAN RPM	SONES	MOTOR HP.	MOTOR RPM	MOTOR VOLT./PH.	WEIGHT
EF-1	GREENHECK CO. SP-B110	CEILING FAN	80	5"	879	3.4	80W	DIRECT	115v./1	10#
EF-2	GREENHECK CO. SP-B110	CEILING FAN	80	5"	879	3.4	80W	DIRECT	115v./1	10#
EF-3	GREENHECK CO. SP-B110	CEILING FAN	80	5"	879	3.4	80W	DIRECT	115v./1	10#

* APPROVED MANUFACTURERS: PENN CO.; L.COOK CO.; GREENHECK CO.

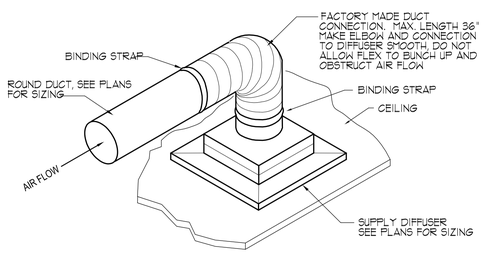

2 / M301 **Duct Connection to Diffuser**

NO SCALE

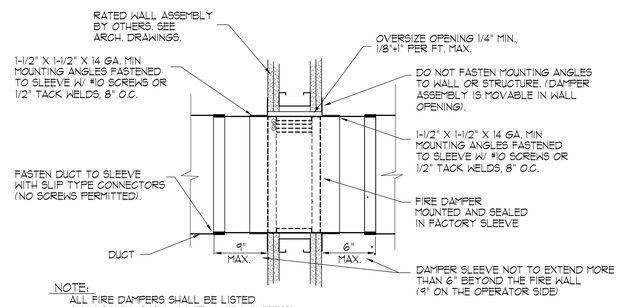

NOTE:
ALL FIRE DAMPERS SHALL BE LISTED AND LABLED, SHALL COMPLY WITH UL 555(S) AND SHALL BE INSTALLED IN ACCORDANCE WITH THE MANUFACTURER'S INSTALLATION INSTRUCTIONS.

5 / M301 **Fire Damper Detail** 3

NO SCALE

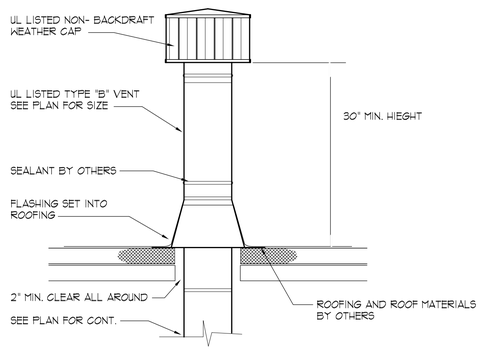

3 / M301 **Flue Through Roof Detail**

NO SCALE

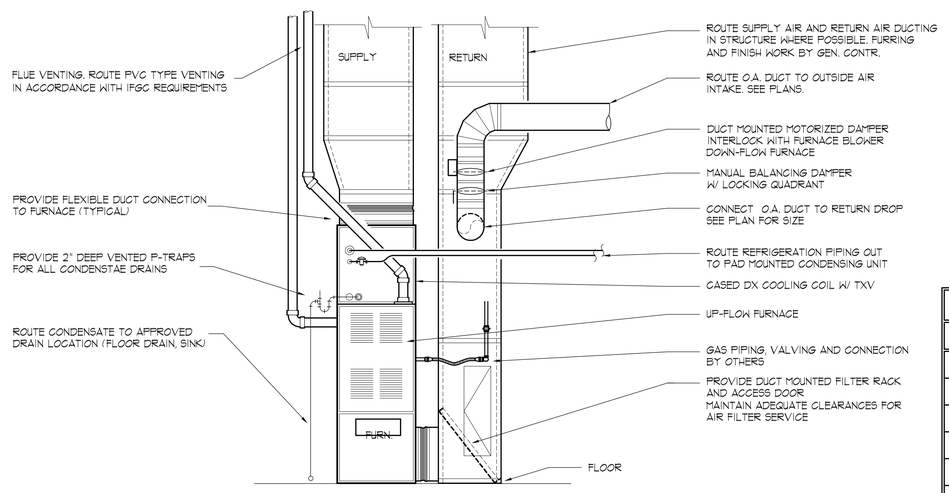

4 / M301 **Up-Flow Furnace Detail**

NO SCALE

Gas Fired Furnace / Split System

F-1

DESCRIPTION: UP-FLOW POSITION GAS FIRED WARM AIR FURNACE TO BE FURNISHED COMPLETE WITH: AUTOMATIC GAS VALVE, VENTER, ELECTRIC IGNITION, HEAT EXCHANGER, SAFETY CONTROLS, IN-SHOT BURNERS, DIRECT DRIVE BLOWER ASSEMBLY WITH HI EFF. 4 SPEED MOTOR, CABINET, FILTER RACK, ONE YEAR IGNITION PARTS WARRANTY. 193 LBS.

HEATING: 120 MBH INPUT, (90.0 MBH INPUT, 81.0 MBH OUTPUT AT 4300 ELEVATION) MULTI PORT BURNERS, ELECTRIC HOT SURFACE IGNITION. 92.1 AFUE.

SUPPLY BLOWER: 1990 CFM SUPPLY AIR, 200 CFM O.A., 1790 RETURN AIR AT 0.6 IN. ESP. 4 SPEED, DIRECT DRIVE BLOWER, 1100 RPM 3/4 HP, 115 V. 1 PHASE 4 SPEED MOTOR.

FILTERS: 1 - 24" X 25" X 1" DISPOSABLE GLASS MEDIA FILTER.

MANUFACTURERS: TRANE CO. MODEL # TUX1B060936 W/ 4TXCB060C OR ENGINEER APPROVED EQUAL.

CU-1

DESCRIPTION: HIGH EFFICIENCY SPLIT SYSTEM CONDENSING UNIT WITH MATCHED FURNACE EVAPORATOR COIL. UNIT INCLUDES: 410 REFRIGERANT, HERMETIC COMPRESSOR, MULTI-USE SERVICE VALVES, PROP. FAN, NOISE GUARD, INTERNAL COMPRESSOR OVERLOAD PROTECTION, HEAD PRESSURE CONTROL, CRANKCASE HEATER, LIQUID LINE FILTER DRIER, FIVE YEAR LIMITED COMPRESSOR WARRANTY. 267 LBS.

COOLING: 5.0 NOMINAL TONS, 55.6 MBH NET TOTAL OUTPUT, AT ARI STANDARD INPUT CONDITIONS. 13 SEER. RATING.

EVAP. COIL: PROVIDE 5.0 TON CASED COIL W/ TXV MATCHED TO FURNACE UNIT.

UNIT WIRING: 36.0 MCA, 60.0 AMP MAX FUSE AT 208-230 VOLT 1 PHASE.

DX PIPING: 3/8" LIQUID, 7/8" SUCTION. FIELD VERIFY LINE SIZES.

MANUFACTURERS: TRANE CO. MODEL # 4TTB3060A OR ENGINEER APPROVED EQUAL.

Gas Fired Furnace / Split System

F-2

DESCRIPTION: UP-FLOW POSITION GAS FIRED WARM AIR FURNACE TO BE FURNISHED COMPLETE WITH: AUTOMATIC GAS VALVE, VENTER, ELECTRIC IGNITION, HEAT EXCHANGER, SAFETY CONTROLS, IN-SHOT BURNERS, DIRECT DRIVE BLOWER ASSEMBLY WITH HI EFF. 4 SPEED MOTOR, CABINET, FILTER RACK, ONE YEAR IGNITION PARTS WARRANTY. 193 LBS.

HEATING: 120 MBH INPUT, (90.0 MBH INPUT, 81.0 MBH OUTPUT AT 4300 ELEVATION) MULTI PORT BURNERS, ELECTRIC HOT SURFACE IGNITION. 92.1 AFUE.

SUPPLY BLOWER: 1990 CFM SUPPLY AIR, 200 CFM O.A., 1790 RETURN AIR AT 0.6 IN. ESP. 4 SPEED, DIRECT DRIVE BLOWER, 1100 RPM 3/4 HP, 115 V. 1 PHASE 4 SPEED MOTOR.

FILTERS: 1 - 24" X 25" X 1" DISPOSABLE GLASS MEDIA FILTER.

MANUFACTURERS: TRANE CO. MODEL # TUX1B060936 W/ 4TXCB060C OR ENGINEER APPROVED EQUAL.

CU-2

DESCRIPTION: HIGH EFFICIENCY SPLIT SYSTEM CONDENSING UNIT WITH MATCHED FURNACE EVAPORATOR COIL. UNIT INCLUDES: 410 REFRIGERANT, HERMETIC COMPRESSOR, MULTI-USE SERVICE VALVES, PROP. FAN, NOISE GUARD, INTERNAL COMPRESSOR OVERLOAD PROTECTION, HEAD PRESSURE CONTROL, CRANKCASE HEATER, LIQUID LINE FILTER DRIER, FIVE YEAR LIMITED COMPRESSOR WARRANTY. 267 LBS.

COOLING: 5.0 NOMINAL TONS, 55.6 MBH NET TOTAL OUTPUT, AT ARI STANDARD INPUT CONDITIONS. 13 SEER. RATING.

EVAP. COIL: PROVIDE 5.0 TON CASED COIL W/ TXV MATCHED TO FURNACE UNIT.

UNIT WIRING: 36.0 MCA, 60.0 AMP MAX FUSE AT 208-230 VOLT 1 PHASE.

DX PIPING: 3/8" LIQUID, 7/8" SUCTION. FIELD VERIFY LINE SIZES.

MANUFACTURERS: TRANE CO. MODEL # 4TTB3060A OR ENGINEER APPROVED EQUAL..

NOTE: PROVIDE THE OWNER WITH A STARTUP REPORT INCLUDING GAS ORIFICE SIZE, MANIFOLD PRESSURE, AND FLUE GAS ANALYSIS FOR BOTH FURNACES.

Register, Grille and Diffuser Schedule

SYMBOL	BASIS OF DESIGN *	TYPE	SIZE	PATTERN	DESCRIPTION
CD-1	NAILOR IND. 4200 RNSL-24	CEILING DIFFUSER	SEE PLAN	4-WAY	LAY-IN SUPPLY AIR DIFFUSER STANDARD WHITE FINISH
CD-2	NAILOR IND. 6500 W/ OBD	CEILING DIFFUSER	SEE PLAN	4-WAY	SURFACE MTD. SUPPLY AIR DIFFUSER STANDARD WHITE FINISH
BV-1	NAILOR IND. 16 BVC	BRICK VENT	16" X 8"	FIXED DEFLECTION	EXTRUDED ALUMINUM BRICK VENT FOR O.A. INTAKE. CLEAR FINISH
RG-1	NAILOR IND. 61 EGA	CEILING RETURN	24" X 24"		LAY-IN EGG-CRATE TYPE GRILLE STANDARD WHITE FINISH
RG-2	NAILOR IND. 61 EGA	CEILING RETURN	24" X 12"		LAY-IN EGG-CRATE TYPE GRILLE STANDARD WHITE FINISH

* APPROVED MANUFACTURERS: NAILOR CO.; KRUEGER CO.; TITUS CO.

L. K. SORENSEN ASSOCIATES, INC.
ARCHITECTS / PLANNERS / LANDSCAPE ARCHITECTS
1332 DUEHL CIRCLE
TAYLORSVILLE, UTAH 84123
(801)262-9393 Fax (801)262-3511

STATE OF UTAH · LICENSED PROFESSIONAL ENGINEER · CHARLES LUSH · No. 155425

CONSULTANTS

ACE Advanced Concept Engineering, Inc.
11985 VISTA GLEN CT. SANDY, UT 84092
(801) 572-3055 FAX (801) 572-3076

UTAH NATIONAL GUARD

PX FACILITY ADDITION

Camp W. G. Williams
Bluffdale, Utah

MARK	DATE	DESCRIPTION
2	11-20-09	PLAN REVISIONS
1	07-02-09	DFCM PLAN REVIEW

PROJECT NO:	08210480
DATE:	10 JUNE 2009
CAD DWG FILE:	
DRAWN BY:	pcs
CHECKED BY:	cl
DESIGNED BY:	cl

COPYRIGHT:
THIS PRINT AND ALL INFORMATION HEREON IS SUBJECT TO COPYRIGHT LAWS AND IS THE PROPERTY OF L.K. SORENSEN ASSOCIATES, INC. AND SHALL NOT BE USED ON ANY OTHER PROJECT WITHOUT WRITTEN PERMISSION OF THE ARCHITECT.

SHEET TITLE

MECHANICAL SCHEDULES AND DETAILS

M301

SYMBOL LEGEND

SYMBOL	DESCRIPTION
REFERENCE AND LINE SYMBOLS	
A5 / E-501	DETAIL INDICATOR: A5 INDICATES DETAIL NUMBER, E-501 INDICATES DRAWING SHEET WHERE DETAIL IS SHOWN.
A5 / E-201	ELEVATION OR SECTION INDICATOR, EXTERIOR: A5 INDICATES ELEVATION OR SECTION NUMBER, E-201 INDICATES DRAWING SHEET WHERE ELEVATION OR SECTION IS SHOWN.
A5 / E-201	ELEVATION OR SECTION INDICATOR, INTERIOR: A5 INDICATES ELEVATION OR SECTION NUMBER, E-201 INDICATES DRAWING SHEET WHERE ELEVATION OR SECTION IS SHOWN.
100	ROOM OR SPACE NUMBER.
1	KEYNOTE INDICATOR.
1	REVISION INDICATOR.
CU-1	EQUIPMENT INDICATOR.
	BREAK, STRAIGHT: TO BREAK PARTS OF DRAWING.
	BREAK, ROUND.
	NEW LINE: MEDIUM LINE.
	HIDDEN FEATURES LINE: HIDDEN, THIN LINE.
	EXISTING TO REMAIN LINE: THIN LINE.
	DEMOLITION LINE: DASHED, MEDIUM LINE.
WIRING METHODS	
	WIRING.
A-1,3,5	BRANCH CIRCUIT HOME RUN TO PANELBOARD: NUMBER OF ARROWS INDICATES NUMBER OF CIRCUITS. LETTER AND NUMBER NOTATIONS IDENTIFY PANEL AND CIRCUIT NUMBERS. USE #12 CONDUCTORS, EXCEPT #10 CONDUCTORS SHALL BE INSTALLED IF DISTANCES EXCEED THOSE SPECIFIED IN THE ELECTRICAL SPECIFICATIONS.
1 A-1,3,5	BRANCH CIRCUIT HOME RUN TO PANELBOARD: NUMBER OF ARROWS INDICATES NUMBER OF CIRCUITS. LETTER AND NUMBER NOTATIONS IDENTIFY PANEL AND CIRCUIT NUMBERS. NUMBER IN BOX REFERS TO THE CONDUCTOR AND CONDUIT SCHEDULE. FOR BRANCH WIRING USE #12 CONDUCTORS, EXCEPT #10 CONDUCTORS SHALL BE INSTALLED IF DISTANCES EXCEED THOSE SPECIFIED IN THE ELECTRICAL SPECIFICATIONS.
— X —	WIRING AND/OR RACEWAY: THIN LINE. WHERE "X" = : CATV = CABLE TELEVISION — NC = NURSE CALL CCTV = CLOSED CIRCUIT TELEVISION — P = POWER RC = RIGID CONDUIT FA = FIRE ALARM — S = SOUND FO = FIBER OPTICS — T = TELEPHONE I = INTERCOM — TV = TELEVISION OTHERS AS NOTED IN OTHER SCHEDULES. RACEWAYS AND WIRING SHALL BE SIZED AS SHOWN AND/OR SPECIFIED.
	LOW VOLTAGE WIRING: DIVIDE, MEDIUM LINE.
	CONDUIT STUB. DIMENSION RECORD DRAWINGS AND MARK.
1	CONDUCTOR & CONDUIT ("CC") SCHEDULE INDICATOR. REFER TO ONE-LINE DIAGRAM.
	JUNCTION BOX.
SC	JUNCTION BOX, SYSTEMS FURNITURE COMMUNICATION CONNECTION.
SP	JUNCTION BOX, SYSTEMS FURNITURE POWER CONNECTION.
PB	PULL BOX.
	EARTH GROUND (ONE-LINE DIAGRAM).
STRUCTURED CABLING	
	OUTLET, BUILDING STANDARD COMBINATION TELEPHONE/ DATA COMMUNICATION.
	TELEPHONE TERMINAL BOARD, FIRE TREATED PLYWOOD PAINTED.
	EQUIPMENT CABINET, WALL MOUNTED.
D	DATA CABLE, CATEGORY 5 (ONE-LINE DIAGRAM).
V	VOICE CABLE, CATEGORY 3 (ONE-LINE DIAGRAM).
LIGHTING (REFER TO FIXTURE SCHEDULE FOR SYMBOLS)	
(W-3)	FIXTURE IDENTIFICATION: (W-3) INDICATES FIXTURE TYPE AS SCHEDULED.
(W-3)	FIXTURE IDENTIFICATION, EMERGENCY WITH BATTERY PACK, CONNECTED TO GENERATOR AS INDICATED: (W-3) INDICATES FIXTURE TYPE AS SCHEDULED.
EM	EMERGENCY.
NL	NIGHT LIGHT: DO NOT SWITCH.

SYMBOL LEGEND

SYMBOL	DESCRIPTION
LIGHTING CONTROL	
*	OCCUPANCY SENSOR, DUAL TECHNOLOGY, OMNI-DIRECTIONAL, CEILING.
	OCCUPANCY SENSOR, DUAL TECHNOLOGY, DIRECTIONAL.
P	PHOTOCELL.
TC	TIME CLOCK.
WIRING DEVICES	
	RECEPTACLE, DUPLEX: NEMA 5-20R.
A	RECEPTACLE, DUPLEX, ABOVE COUNTER: NEMA 5-20R.
C	RECEPTACLE, DUPLEX, CEILING: NEMA 5-20R.
D	RECEPTACLE, DUPLEX, DEDICATED CIRCUIT: NEMA 5-20R.
DF	RECEPTACLE, DUPLEX WITH GROUND FAULT CIRCUIT INTERRUPTER, DRINKING FOUNTAIN: CONCEAL WATER COOLER RECEPTACLE BEHIND WATER COOLER. SEE MECHANICAL/PLUMBING SHOP DRAWINGS FOR INSTALLATION REQUIREMENTS.
	RECEPTACLE, DUPLEX WITH GROUND FAULT CIRCUIT INTERRUPTER: NEMA 5-20R.
WP	RECEPTACLE, DUPLEX WITH GROUND FAULT CIRCUIT INTERRUPTER, WEATHERPROOF: NEMA 5-20R.
	RECEPTACLE, QUADRAPLEX: NEMA 5-20R.
	RECEPTACLE, SPECIAL PURPOSE. PROVIDE RECEPTACLE TO MATCH EQUIPMENT PLUG.
PP#	POWER POLE. "#" SHOWN ON DRAWINGS. REFER TO WIRING DEVICE SCHEDULE IN THE ELECTRICAL SPECIFICATIONS FOR CONFIGURATION AND DEVICES.
	SWITCH, DIMMER.
X $	SWITCH, SINGLE POLE ("x" INDICATES FIXTURES CONTROLLED).
X $3	SWITCH, THREE-WAY ("x" INDICATES FIXTURES CONTROLLED).
X $4	SWITCH, FOUR-WAY ("x" INDICATES FIXTURES CONTROLLED).
ELECTRICAL POWER AND DISTRIBUTION	
	CIRCUIT BREAKER, MOLDED CASE (ONE-LINE DIAGRAM).
	CIRCUIT BREAKER, SOLID STATE (ONE-LINE DIAGRAM).
	MOTOR.
	TRANSFORMER (ONE-LINE DIAGRAM).
225/3 "1H" 225/3 "1H"	PANELBOARD WITH SUB FEED LUGS (ONE-LINE DIAGRAM).
	CT CABINET PER UTILITY'S REQUIREMENTS (ONE-LINE DIAGRAM).
	SERVICE ENTRANCE SURGE PROTECTION (ONE-LINE DIAGRAM).
M	METER.
	DISCONNECT SWITCH, FUSED.
	DISCONNECT SWITCH, UNFUSED.
	STARTER, COMBINATION WITH DISCONNECT SWITCH.
	STARTER OR MOTOR CONTROLLER.
	PUSHBUTTON.
	PUSHBUTTONS, MOTOR CONTROL.
	PANELBOARD CABINET, SURFACE MOUNTED, 2 SECTION.
DP#—	DISTRIBUTION PANEL OR SWITCHBOARD.
$ST	SWITCH, TOGGLE MOTOR STARTER WITH OVERLOAD PROTECTION.
75	TRANSFORMER: NUMBER INDICATES kVA.

SYMBOL LEGEND

SYMBOL	DESCRIPTION
FIRE ALARM	
FSA	FIRE SYSTEM ANNUNCIATOR.
FCP	FIRE ALARM CONTROL PANEL, SEMI-RECESSED.
CM	CONTROL MODULE.
MM	MONITOR MODULE.
P	FIRE ALARM MANUAL PULL STATION.
R	SHUT DOWN RELAY: INSTALL RELAY IN CONTROL CIRCUIT OF EQUIPMENT TO BE CONTROLLED IN THE EVENT OF A FIRE.
	DETECTOR, SMOKE.
	DETECTOR, SMOKE, DUCT WITH HOUSING AND SAMPLING TUBE.
	DETECTOR, HEAT.
75	STROBE. SUBSCRIPT INDICATES CANDELA RATING.
WP	ALARM, HORN/SPEAKER, WEATHERPROOF.
75	ALARM, HORN/STROBE, ONE ASSEMBLY. SUBSCRIPT INDICATES CANDELA RATING.
75	ALARM, HORN/STROBE, ONE ASSEMBLY, CEILING MOUNTED. SUBSCRIPT INDICATES CANDELA RATING.
	DETECTOR, FLOW SWITCH: FLOW SWITCHES SHALL BE PROVIDED AND INSTALLED WITH FIRE SPRINKLER SYSTEM AND SHALL BE CONNECTED TO LOCATIONS SHOWN ON THE FIRE SPRINKLER SHOP DRAWINGS.
	DETECTOR, TAMPER SWITCH WITH VALVE: TAMPER SWITCHES SHALL BE PROVIDED AND INSTALLED WITH FIRE SPRINKLER SYSTEM AND SHALL BE CONNECTED TO LOCATIONS SHOWN ON THE FIRE SPRINKLER SHOP DRAWINGS.
FSD	FIRE AND SMOKE DAMPER.
	BELL (GONG).

ELECTRICAL SHEET INDEX

SHEET NO	SHEET TITLE
EE001	ELECTRICAL NOTES AND SYMBOL LEGEND
EE501	DETAILS
EE502	DETAILS
EE503	DETAILS
ES100	ELECTRICAL SITE DEMOLITION PLAN
ES101	ELECTRICAL SITE PLAN
ES102	LIGHTING PHOTOMETRICS SITE PLAN
ES103	OVERHEAD DISTRIBUTION REFERENCE PLAN
ED101	ELECTRICAL DEMOLITION PLAN
EP101	POWER PLAN
EP401	ELECTRICAL EQUIPMENT PLAN & SCHEDULE
EP501	COMMUNICATIONS DETAILS
EP601	ONE-LINE DIAGRAM
EL101	LIGHTING PLAN
EL601	LIGHTING FIXTURE SCHEDULE
FA101	FIRE ALARM PLAN
FA601	FIRE ALARM RISER

ABBREVIATIONS

NOTE: ALL ABBREVIATIONS MAY NOT BE USED.

1P	SINGLE POLE	KV	KILOVOLT
1PH	SINGLE-PHASE	KVA	KILOVOLT AMPERE
1WAY	ONE-WAY	kVAR	KILOVOLT AMPERE REACTIVE
2/C	TWO-CONDUCTOR		
2WAY	TWO-WAY	kW	KILOWATT
3/C	THREE-CONDUCTOR	kWh	KILOWATT HOUR
3PH	THREE-PHASE	LED	LIGHT EMITTING DIODE
3WAY	THREE-WAY	LFMC	LIQUID TIGHT FLEXIBLE METAL CONDUIT
4OUT	QUADRUPLE RECEPTACLE OUTLET	LFNC	LIQUID TIGHT FLEXIBLE NONMETALLIC CONDUIT
4PDT	FOUR-POLE DOUBLE THROW	LPS	LOW PRESSURE SODIUM
4PST	FOUR-POLE SINGLE THROW	LRA	LOCKED ROTOR AMPS
		LTG	LIGHTING
4W	FOUR-WIRE	LV	LOW VOLTAGE
4WAY	FOUR-WAY	MATV	MASTER ANTENNA TELEVISION SYSTEM
A	ABOVE COUNTER		
AC	ARMORED CABLE	MAX	MAXIMUM
ADA	AMERICANS WITH DISABILITIES ACT	MC	METAL CLAD
		MCA	MINIMUM CIRCUIT AMPS
ADJ	ADJACENT	MCB	MAIN CIRCUIT BREAKER
AFF	ABOVE FINISHED FLOOR	MCC	MOTOR CONTROL CENTER
AFG	ABOVE FINISHED GRADE	MCP	MOTOR CIRCUIT PROTECTION
AIC	AMPERE INTERRUPTING CAPACITY	MDP	MAIN DISTRIBUTION PANEL
ALUM	ALUMINUM		
AMP	AMPERE	MG	MOTOR GENERATOR
ANN	ANNUNCIATOR	MH	MANHOLE
AP	ACCESS POINT (WIRELESS DATA)	MIN	MINIMUM
		MLO	MAIN LUGS ONLY
AR	AS REQUIRED	MOCP	MAXIMUM OVERCURRENT PROTECTION
ASC	AMPS SHORT CIRCUIT		
ATS	AUTOMATIC TRANSFER SWITCH	NA	NOT APPLICABLE
		NC	NORMALLY CLOSED
AV	AUDIO VISUAL	NEC	NATIONAL ELECTRICAL CODE
AWG	AMERICAN WIRE GAGE		
BB XFMR	BUCK-BOOST TRANSFORMER	NEMA	NATIONAL ELECTRICAL MANUFACTURERS ASSOCIATION
C	CEILING MOUNTED		
CATV	COMMUNITY ANTENNA TELEVISION	NFC	NATIONAL FIRE CODE
		NFPA	NATIONAL FIRE PROTECTION ASSOCIATION
CB	CIRCUIT BREAKER		
CCBA	CUSTOM COLOR AS SELECTED BY ARCHITECT	NIC	NOT IN CONTRACT
		NL	NIGHT LIGHT
CCTV	CLOSED CIRCUIT TELEVISION	NO	NORMALLY OPEN
		NTS	NOT TO SCALE
CFBA	CUSTOM FINISH AS SELECTED BY ARCHITECT	OC	ON CENTER
		OCP	OVER CURRENT PROTECTION
CF/CI	CONTRACTOR FURNISHED/ CONTRACTOR INSTALLED	OF/CI	OWNER FURNISHED/ CONTRACTOR INSTALLED
CF/OI	CONTRACTOR FURNISHED/ OWNER INSTALLED	OF/OI	OWNER FURNISHED/ OWNER INSTALLED
CKT	CIRCUIT		
CM	CONSTRUCTION MANAGER	OFP	OBTAIN FROM PLANS
CND	CONDUIT	OH DR	OVERHEAD (COILING) DOOR
CO	CONVENIENCE OUTLET		
COR	CONTRACTING OFFICER'S REPRESENTATIVE	OL	OVERLOAD
		PB	PUSHBUTTON
CP	CONTROL PANEL	PF	POWER FACTOR
CT	CURRENT TRANSFORMER	PH	PHASE
CTV	CABLE TELEVISION	PNL	PANEL
CU	COPPER	PT	POTENTIAL TRANSFORMER
dBA	UNIT OF SOUND LEVEL	PTZ	PAN/TILT/ZOOM
DPDT	DOUBLE POLE DOUBLE THROW	QTY	QUANTITY
		R	REMOVE
DS	DISCONNECT SWITCH	RCP	REFLECTED CEILING PLAN
EA	EACH	RMC	RIGID METAL CONDUIT
EM	EMERGENCY	RNC	RIGID NONMETALLIC CONDUIT
EMT	ELECTRICAL METALLIC TUBING		
		RPM	REVOLUTIONS PER MINUTE
ENT	ELECTRICAL NONMETALLIC TUBING	RR	REMOVE AND RELOCATE
		SCA	SHORT CIRCUIT AMPS
EPO	EMERGENCY POWER OFF	SCBA	STANDARD COLOR AS SELECTED BY ARCHITECT
EQUIP	EQUIPMENT		
EX	EXISTING	SF	SQUARE FOOT (FEET)
F	FURNITURE MOUNTED	SFBA	STANDARD FINISH AS SELECTED BY ARCHITECT
FA	FIRE ALARM		
FCP	FIRE ALARM CONTROL PANEL	SPDT	SINGLE POLE, DOUBLE THROW
FLA	FULL LOAD AMPS	SPEC	SPECIFICATION
FMC	FLEXIBLE METALCONDUIT	SPST	SINGLE POLE, SINGLE THROW
FOB	FREIGHT ON BOARD		
FVNR	FULL VOLTAGE NON-REVERSING	S/S	START/STOP
		ST	SINGLE THROW
FVR	FULL VOLTAGE REVERSING	SWBD	SWITCHBOARD
G	GROUND	SWGR	SWITCHGEAR
GEN	GENERATOR	TL	TWIST LOCK
GFCI	GROUND FAULT CIRCUIT INTERRUPTER	TP	TELEPHONE POLE
		TP	TWISTED PAIR
GFP	GROUND FAULT PROTECTION	TTB	TELEPHONE TERMINAL BOARD
HD	HEAVY DUTY	TV	TELEVISION
HID	HIGH INTENSITY DISCHARGE	TVSS	TRANSIENT VOLTAGE SURGE SUPPRESSER
HOA	HAND-OFF-AUTOMATIC	TYP	TYPICAL
HP	HORSE POWER	UF	UNDERFLOOR
HPF	HIGH POWER FACTOR	UGND	UNDERGROUND
HPS	HIGH PRESSURE SODIUM	UPS	UNINTERRUPTIBLE POWER SUPPLY
HV	HIGH VOLTAGE		
HZ	HERTZ	V	VOLTS
IG	ISOLATED GROUND	VA	VOLT AMPERE
IMC	INTERMEDIATE METAL CONDUIT	VFC/VFD	VARIABLE FREQUENCY MOTOR CONTROLLER
IN/IS	INSULATED/ISOLATED	W/	WITH
I/O	INPUT/OUTPUT	W/O	WITHOUT
IR	INFRARED	WP	WEATHERPROOF
J-BOX	JUNCTION BOX	XFMR	TRANSFORMER

GENERAL ELECTRICAL NOTES

1. CLARIFICATION METHODS: AT THE TIME OF BIDDING, BIDDERS SHALL FAMILIARIZE THEMSELVES WITH THE DRAWINGS AND SPECIFICATIONS. ANY QUESTIONS, MISUNDERSTANDINGS, CONFLICTS, DELETIONS, DISCONTINUED PRODUCTS, CATALOG NUMBER DISCREPANCIES, DISCREPANCIES BETWEEN THE EQUIPMENT SUPPLIED AND THE INTENT OR FUNCTION OF THE EQUIPMENT, ETC, SHALL BE SUBMITTED TO THE ARCHITECT/ENGINEER IN WRITING FOR CLARIFICATION PRIOR TO ISSUANCE OF THE FINAL ADDENDUM AND BIDDING OF THE PROJECT. WHERE DISCREPANCIES OR MULTIPLE INTERPRETATIONS OCCUR, THE MOST STRINGENT (WHICH IS GENERALLY RECOGNIZED AS THE MOST COSTLY) THAT MEETS THE INTENT OF THE DOCUMENTS SHALL BE ENFORCED.

2. OWNER FURNISHED ITEMS: THE OWNER WILL FURNISH MATERIAL AND EQUIPMENT AS INDICATED IN THE CONTRACT DOCUMENTS TO BE INCORPORATED INTO THE WORK. THESE ITEMS ARE ASSIGNED TO THE INSTALLER AND COSTS FOR RECEIVING, HANDLING, STORAGE, IF REQUIRED, AND INSTALLATION ARE INCLUDED IN THE CONTRACT SUM.

   A. THE INSTALLER'S RESPONSIBILITIES ARE THE SAME AS IF THE INSTALLER FURNISHED THE MATERIALS OR EQUIPMENT.

   B. THE OWNER WILL ARRANGE AND PAY FOR DELIVERY OF OWNER FURNISHED ITEMS FREIGHT ON BOARD JOB SITE AND THE INSTALLER WILL INSPECT DELIVERIES FOR DAMAGE. IF OWNER FURNISHED ITEMS ARE DAMAGED, DEFECTIVE OR MISSING, DOCUMENT DAMAGED ITEMS WITH THE TRANSPORT COMPANY AND THE OWNER WILL ARRANGE FOR REPLACEMENT. THE OWNER WILL ALSO ARRANGE FOR MANUFACTURER'S FIELD SERVICES, AND THE DELIVERY OF MANUFACTURER'S WARRANTIES AND BONDS TO THE INSTALLER.

   C. THE INSTALLER IS RESPONSIBLE FOR DESIGNATING THE DELIVERY DATES OF OWNER FURNISHED ITEMS AND FOR RECEIVING, UNLOADING AND HANDLING OWNER FURNISHED ITEMS AT THE SITE. THE INSTALLER IS RESPONSIBLE FOR PROTECTING OWNER FURNISHED ITEMS FROM DAMAGE, INCLUDING DAMAGE FROM EXPOSURE TO THE ELEMENTS, AND TO REPAIR OR REPLACE ITEMS DAMAGED AS A RESULT OF HIS OPERATIONS.

3. EXPOSED STRUCTURE AREAS (EXCLUDING MECHANICAL, ELECTRICAL, AND COMMUNICATION SPACES): INSTALL RACEWAYS BETWEEN DECK AND STRUCTURE WHEREVER POSSIBLE IN EXPOSED STRUCTURE CEILING AREAS. ROUTE RACEWAYS IN CONCEALED AREAS WHEREVER POSSIBLE. REFER ALL CONDITIONS WHERE RACEWAYS MUST BE INSTALLED WHICH CANNOT COMPLY WITH THESE REQUIREMENTS TO THE ARCHITECT.

4. SUBMITTALS: PROVIDE SUBMITTALS IN THREE RING BINDERS WITH JOB NAME, SUBCONTRACTOR, AND VOLUME ON THE BINDING. PREPARE TABS FOR EACH SPECIFICATION SECTION REQUIRING SUBMITTALS. PREPARE INDEX OF EQUIPMENT SUBMITTED IN EACH TAB.

5. REFLECTED CEILING PLANS: COORDINATE THE LOCATION OF LIGHT FIXTURES WITH THE ARCHITECTURAL REFLECTED CEILING PLANS. REFER ALL DISCREPANCIES TO THE ARCHITECT AND ENGINEER.

DEFINITIONS

NOTE: ALL DEFINITIONS MAY NOT BE USED.

INDICATED: THE TERM "INDICATED" REFERS TO GRAPHIC REPRESENTATIONS, NOTES, OR SCHEDULES ON THE DRAWINGS, OTHER PARAGRAPHS OR SCHEDULES IN THE SPECIFICATIONS, AND SIMILAR REQUIREMENTS IN THE CONTRACT DOCUMENTS. WHERE TERMS SUCH AS "SHOWN", "NOTED", "SCHEDULED", AND "SPECIFIED" ARE USED, IT IS TO HELP THE READER LOCATE THE REFERENCE, NO LIMITATION ON LOCATION IS INTENDED.

DIRECTED: TERMS SUCH AS "DIRECTED", "REQUESTED", ,AUTHORIZED", "SELECTED", "APPROVED", "REQUIRED", AND "PERMITTED" MEAN "DIRECTED BY THE ENGINEER", "REQUESTED BY THE ENGINEER", AND SIMILAR PHRASES.

APPROVED: THE TERM "APPROVED", WHERE USED IN CONJUNCTION WITH THE ENGINEER'S ACTION ON THE CONTRACTOR'S SUBMITTALS, APPLICATIONS, AND REQUESTS, IS LIMITED TO THE ENGINEER'S DUTIES AND RESPONSIBILITIES AS STATED IN GENERAL AND SUPPLEMENTARY CONDITIONS.

FURNISH: THE TERM "FURNISH" IS USED TO MEAN "SUPPLY AND DELIVER TO THE PROJECT SITE, READY FOR UNLOADING, UNPACKING, ASSEMBLY, INSTALLATION, AND SIMILAR OPERATIONS."

INSTALL: THE TERM "INSTALL" IS USED TO DESCRIBE OPERATIONS AT PROJECT SITE INCLUDING THE ACTUAL "UNLOADING, UNPACKING, ASSEMBLY, ERECTION, PLACING, ANCHORING, APPLYING, WORKING TO DIMENSION, FINISHING, CURING, PROTECTING, CLEANING, AND SIMILAR OPERATIONS."

PROVIDE: THE TERM "PROVIDE" MEANS "TO FURNISH AND INSTALL, COMPLETE AND READY FOR THE INTENDED USE."

INSTALLER: AN "INSTALLER" IS THE CONTRACTOR OR AN ENTITY ENGAGED BY THE CONTRACTOR, EITHER AS AN EMPLOYEE, SUBCONTRACTOR, OR SUB-SUBCONTRACTOR, FOR PERFORMANCE OF A PARTICULAR CONSTRUCTION ACTIVITY, INCLUDING INSTALLATION, ERECTION, APPLICATION, AND SIMILAR OPERATIONS. INSTALLERS ARE REQUIRED TO BE EXPERIENCED IN THE OPERATIONS THEY ARE ENGAGED TO PERFORM.

TECHNOLOGY SYSTEMS: THE TERM "TECHNOLOGY SYSTEMS" IS USED TO DESCRIBE ALL LOW VOLTAGE SYSTEMS GENERALLY REFERRED TO AS "SPECIAL SYSTEMS". THESE SYSTEMS INCLUDE BUT ARE NOT NECESSARILY LIMITED TO ALL SYSTEMS WHICH UTILIZE VOLTAGES OF LESS THAN 71 VOLTS SUCH AS SOUND SYSTEMS, VIDEO SYSTEMS, TV SYSTEMS, SECURITY SYSTEMS, VOICE AND DATA CABLING SYSTEMS, ETC...

L. K. SORENSEN ASSOCIATES, INC.
ARCHITECTS / PLANNERS / LANDSCAPE ARCHITECTS
1332 DUEHL CIRCLE
TAYLORSVILLE, UTAH 84123
(801)262-9393 Fax (801)262-3511

LICENSED PROFESSIONAL ENGINEER
No. 7083854
DAVID L. ARTHUR
STATE OF UTAH
01-20-2010

CONSULTANTS

SPECTRUM ENGINEERS
324 S. State St., Suite 400
Salt Lake City, UT 84111
800-678-7077
801-328-5151
fax: 801-328-5155
www.spectrum-engineers.com

UTAH NATIONAL GUARD
PX FACILITY ADDITION
Camp W. G. Williams
Bluffdale, Utah
100% CONSTRUCTION DOCUMENTS

MARK	DATE	DESCRIPTION
2	11/24/09	
1	10/08/09	

PROJECT NO:	-
DATE:	20 JANUARY 2010
CAD DWG FILE:	
DRAWN BY:	cdn
CHECKED BY:	dla
DESIGNED BY:	scl

COPYRIGHT:
THIS PRINT AND ALL INFORMATION HEREON IS SUBJECT TO COPYRIGHT LAWS AND IS THE PROPERTY OF L. K. SORENSEN ASSOCIATES, INC. AND SHALL NOT BE USED ON ANY OTHER PROJECT WITHOUT WRITTEN PERMISSION OF THE ARCHITECT.

SHEET TITLE
ELECTRICAL NOTES AND SYMBOLS LEGEND

EE001

File Name: P:\2009\20090268\1Drawings\3Sheet\68EE-001.dwg Last Plotted: 2010/01/26 @ 2:49 PM By: cdn

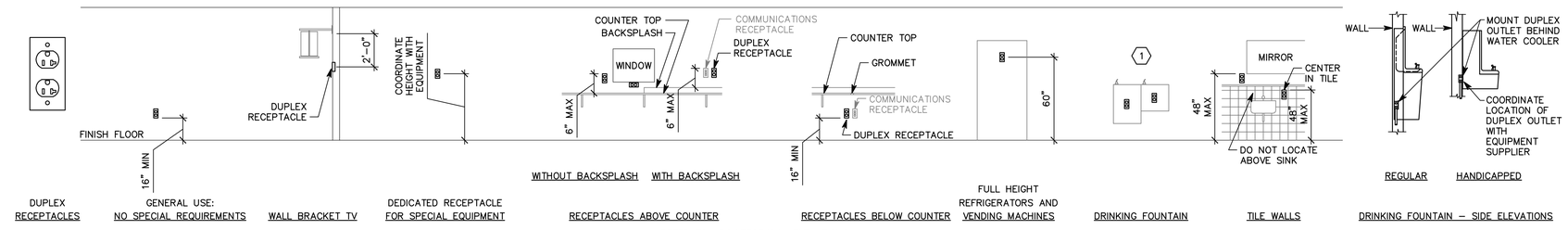

DUPLEX RECEPTACLES | GENERAL USE: NO SPECIAL REQUIREMENTS | WALL BRACKET TV | DEDICATED RECEPTACLE FOR SPECIAL EQUIPMENT | WITHOUT BACKSPLASH | WITH BACKSPLASH | RECEPTACLES ABOVE COUNTER | RECEPTACLES BELOW COUNTER | FULL HEIGHT REFRIGERATORS AND VENDING MACHINES | DRINKING FOUNTAIN | TILE WALLS | REGULAR | HANDICAPPED | DRINKING FOUNTAIN – SIDE ELEVATIONS

REFER TO ARCHITECTURAL ELEVATIONS FOR PLACEMENT OF OUTLETS.

D1 RECEPTACLE MOUNTING DETAILS

NTS

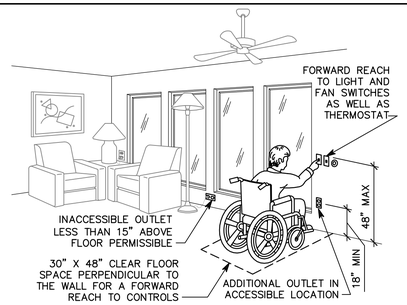

C1 ADA DETAIL

NTS

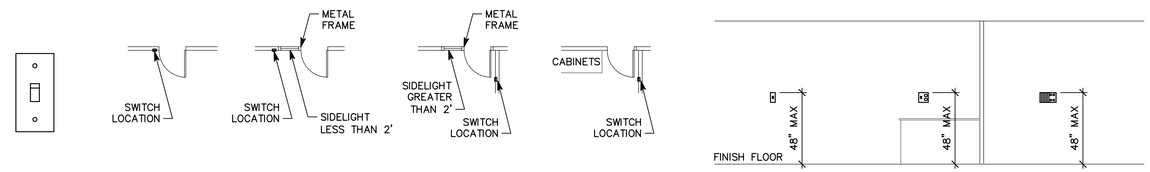

SWITCHES | STANDARD DOOR | DOOR WITH SIDELIGHT LESS THAN 2' | DOOR WITH SIDELIGHT GREATER THAN 2' | DOOR WITH NO PLACE FOR SWITCH AT LATCH SIDE | GENERAL USE: ADA | COMBINATION 48" MAX PLATE FOR SWITCH AND RECEPTACLE IN RESIDENTIAL BATHROOM | LIGHTING CONTROL STATION

C2 SWITCH MOUNTING DETAILS

NTS

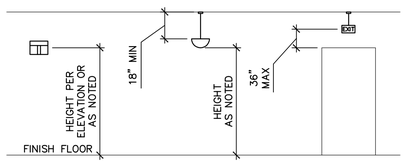

WALL MOUNTED LIGHT FIXTURE | PENDANT LIGHT FIXTURE | PENDANT EXIT SIGNS

B1 LIGHTING MOUNTING DETAILS

NTS

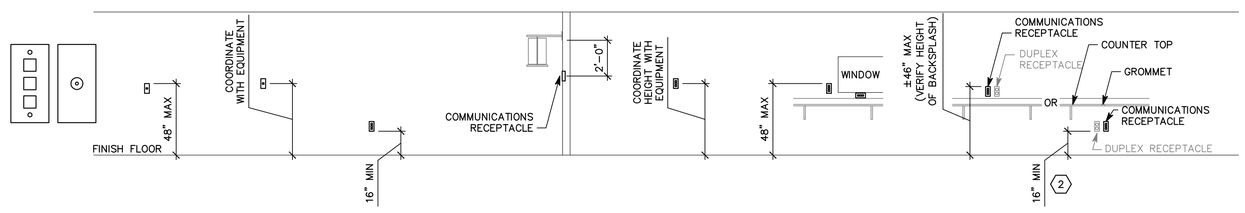

COMMUNICATION RECEPTACLES | WALL PHONE | PAY PHONE | GENERAL USE: NO SPECIAL REQUIREMENTS | WALL BRACKET TV | DEDICATED RECEPTACLE FOR SPECIAL EQUIPMENT | ABOVE COUNTER – TYPICAL | RECEPTACLES ABOVE OR BELOW COUNTER

B2 COMMUNICATION MOUNTING DETAILS

NTS

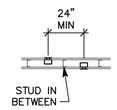

BOXES ON OPPOSITE SIDES OF WALL

B5 BOX MOUNTING DETAILS

NTS

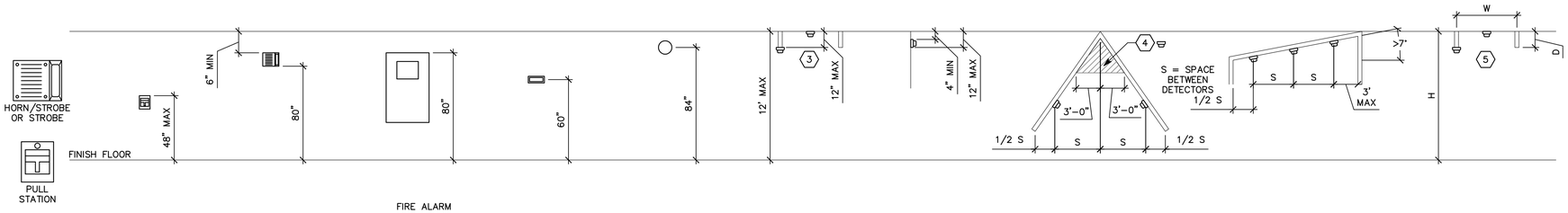

FIRE ALARM | PULL STATION | HORN, CHIME, OR STROBE | FIRE ALARM CONTROL PANEL "FCP" | FIRE SYSTEM ANNUNCIATOR "FSA" | BELL | SMOKE DETECTOR BETWEEN BEAMS | WALL MOUNTED SMOKE DETECTOR | SMOKE DETECTOR ON SLOPED CEILING (PEAKED) | SMOKE DETECTOR ON SLOPED CEILING (SHED) | HEAT DETECTOR BETWEEN BEAMS | SMOKE DETECTOR ADJACENT TO SUPPLY AIR

A1 FIRE ALARM MOUNTING DETAILS

NTS

GENERAL SHEET NOTES

1. DETERMINE MOUNTING HEIGHTS OF ELECTRICAL AND ELECTRONIC EQUIPMENT IN THE FOLLOWING ORDER OF PRIORITY:

   1 – ELEVATIONS (ARCHITECTURAL, ELECTRICAL, MECHANICAL, ETC).
   2 – EQUIPMENT SHOP DRAWINGS.
   3 – FIELD INSTRUCTIONS.

2. LOCATE RECEPTACLES SERVING THE SAME TYPE OF USE AT A UNIFORM HEIGHT UNLESS DIRECTED OTHERWISE.
3. MECHANICAL, ELECTRICAL, AND COMMUNICATION ROOMS: COORDINATE LOCATION OF LIGHTING AND POWER RECEPTACLES WITH EQUIPMENT, PIPING, AND DUCTWORK. DO NOT INSTALL RECEPTACLES BEHIND EQUIPMENT OR WHERE OTHERWISE INACCESSIBLE. POSITION LIGHTING REGARDLESS OF WHERE SHOWN ON DRAWING TO PROVIDE PROPER ILLUMINATION.
4. MOUNT RECEPTACLE BOXES FOR SWITCHES AND RECEPTACLES WITH LONG AXIS OF THE DEVICE VERTICAL UNLESS OTHERWISE INDICATED.
5. SET BOXES WITH PLASTER RINGS FLUSH WITH FINISHED SURFACE.
6. LOCATE BOX COVERS OR DEVICE PLATES SO THEY WILL NOT SPAN DIFFERENT TYPES OF BUILDING FINISHES EITHER VERTICALLY OR HORIZONTALLY.
7. VERIFY ALL DOOR CONDITIONS ON ARCHITECTURAL DRAWINGS PRIOR TO INSTALLING SWITCHES.
8. LOCATE WIRING DEVICES WHICH ARE ADJACENT AND ARE COMPATIBLE VOLTAGES IN ONE PLATE.

SHEET KEYNOTES

1. LOCATE RECEPTACLES BEHIND DRINKING FOUNTAINS.
2. REFER TO ARCHITECTURAL ELEVATIONS FOR PLACEMENT OF OUTLETS.
3. LOCATE AT BOTTOM OF BEAMS (OR JOISTS) OR AT CEILING. (REDUCE SPACING BY .5 PERPENDICULAR TO BEAM OR JOIST DIRECTION.) FOR OTHER CONDITIONS, REFER TO NFPA 72.
4. LOCATE SMOKE DETECTOR ANYWHERE IN SHADED AREA.
5. LOCATE AT BOTTOM OF BEAMS IF EITHER D/H < .1 OR W/H < .4; OTHERWISE, LOCATE IN BEAM POCKET.

L. K. SORENSEN ASSOCIATES, INC.
ARCHITECTS / PLANNERS / LANDSCAPE ARCHITECTS
1332 DUEHL CIRCLE
TAYLORSVILLE, UTAH 84123
(801)262-9393 Fax (801)262-3511

LICENSED PROFESSIONAL ENGINEER No. 7083854 DAVID L. APTECKER STATE OF UTAH 01-20-2010

CONSULTANTS

SPECTRUM ENGINEERS
324 S. State St., Suite 400
Salt Lake City, UT 84111
800-676-7077
801-328-5151
fax: 801-328-5155
www.spectrum-engineers.com

UTAH NATIONAL GUARD
PX FACILITY ADDITION
Camp W. G. Williams
Bluffdale, Utah
100% CONSTRUCTION DOCUMENTS

MARK	DATE	DESCRIPTION
2	11/24/09	
1	10/08/09	

PROJECT NO:	-
DATE:	20 JANUARY 2010
CAD DWG FILE:	
DRAWN BY:	cdn
CHECKED BY:	dla
DESIGNED BY:	scl

COPYRIGHT: THIS PRINT AND ALL INFORMATION HEREON IS SUBJECT TO COPYRIGHT LAWS AND IS THE PROPERTY OF L. K. SORENSEN ASSOCIATES, INC. AND SHALL NOT BE USED ON ANY OTHER PROJECT WITHOUT WRITTEN PERMISSION OF THE ARCHITECT.

SHEET TITLE

DETAILS

EE501

File Name: P:\2009\20090268\1Drawings\3Sheet\68EE-501.dwg Last Plotted: 2010/01/26 @ 2:49 PM By: cdn

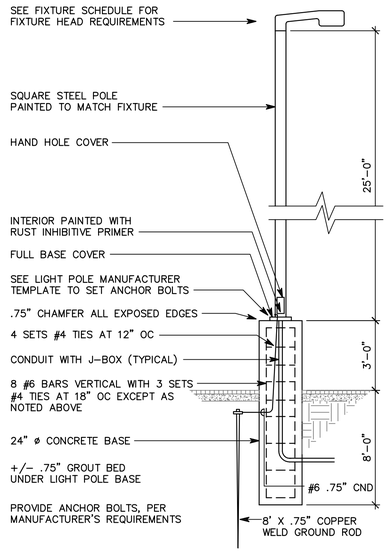

C1 LIGHT POLE BASE DETAIL

NTS

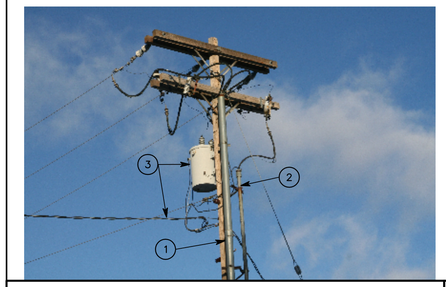

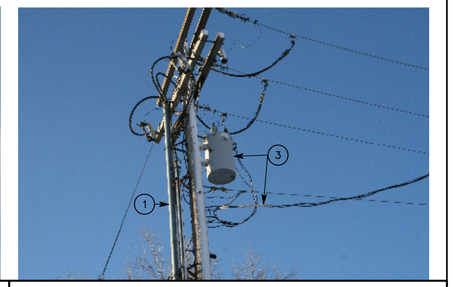

DETAIL GENERAL NOTES

1. LEAVE EXISTING CONDUIT IN PLACE UNTIL NEW CONDUIT AND CONDUCTOR ARE IN SERVICE..
2. BOND 15kV CONDUCTOR SHIELDS TO NEUTRAL/GROUND.

○DETAIL KEYNOTES

1. EXISTING CONDUIT TO BE REPLACED WITH NEW 3" CONDUIT AND 2 EACH #2 AWG, 15kV, TYPE MV-105 COPPER CONDUCTORS, WITH TAPED SHIELD. MOUNT NEW CONDUIT ON STAND OFFS AND PROVIDE SEAL IN END OF CONDUIT.
2. EXISTING FEEDER TO PX, TO REMAIN.
3. EXISTING EQUIPMENT AND CONDUCTOR TO REMAIN.

C2 POLE 117 DETAIL

NTS

NOTE: TIE WIRE SHALL NOT BE USED AS A COMPONENT OF ANY RACEWAY HANGER SYSTEM.

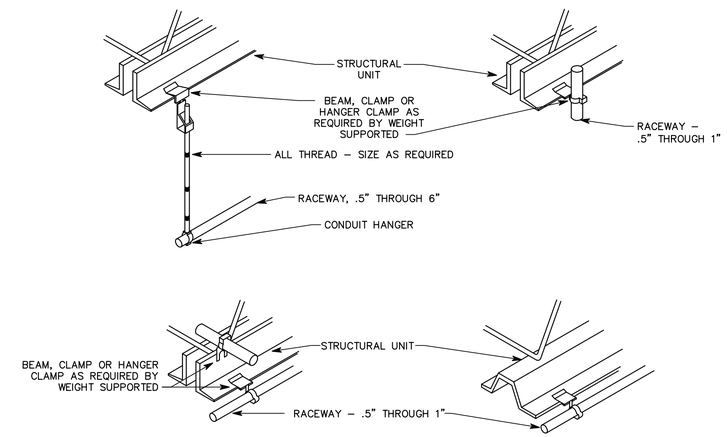

C4 TYPICAL RACEWAY SUPPORT METHODS DETAIL

NTS

○DETAIL KEYNOTES

1. BOND #6AWG TO 3/4" X 10' GROUND ROD USING CAD WELD CONNECTION.
2. PROVIDE GUY GUARD ON EACH GUY. ITEM #28 ON EQUIPMENT LIST.

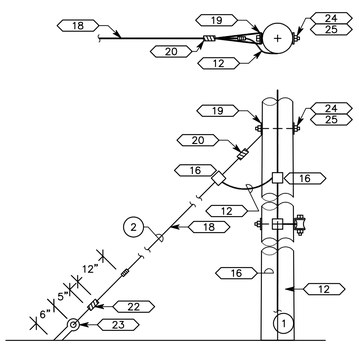

A1 SINGLE DOWN GUY DETAIL

NTS

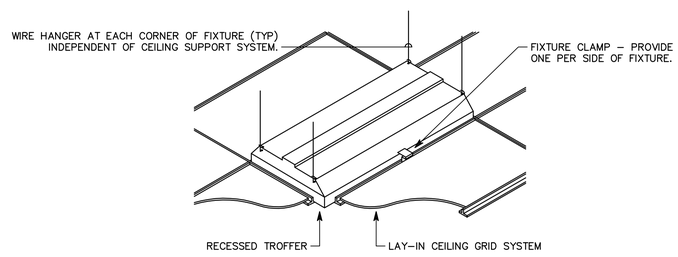

B2 RECESSED FIXTURE MOUNTING DETAIL

NTS

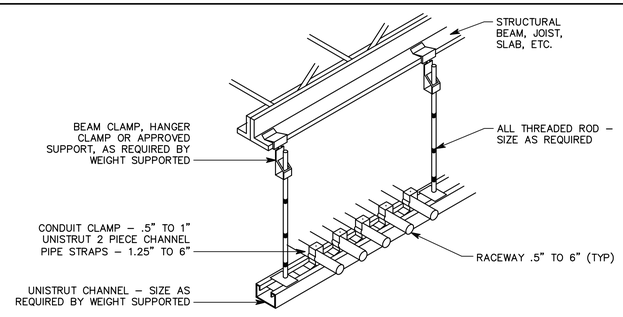

A2 TYPICAL CONDUIT RACK DETAIL

NTS

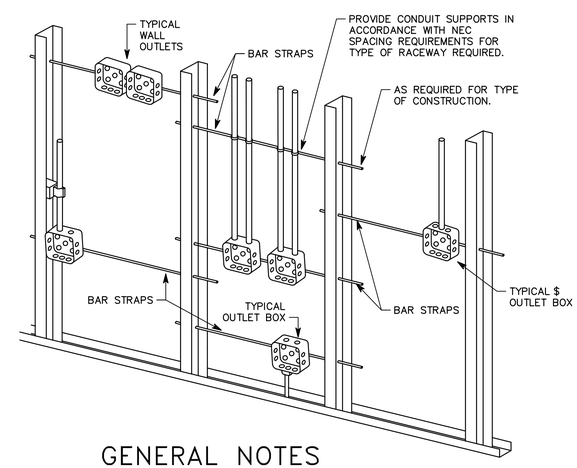

GENERAL NOTES

1. TYPICAL FOR WOOD AND METAL STUD ROUGH-IN.
2. PLASTER RINGS NOT SHOWN.
3. LOCATE ALL OUTLET BOXES IN ACCORDANCE WITH ARCHITECTURAL AND MECHANICAL DRAWINGS AND WITH ALL APPLICABLE SHOP DRAWINGS.
4. IN ACCORDANCE WITH IBC 711.3.2 EXCEPTION 1, OUTLETS ON OPPOSITE SIDES OF WALLS OR PARTITIONS IN THE SAME STUD SPACE IN A RATED FIRE SEPARATION WALL MUST BE SEPARATED BY A MINIMUM OF 24" HORIZONTAL DISTANCE.
5. IN NON-RATED WALLS, OUTLETS ON OPPOSITE SIDES OF WALLS OR PARTITIONS MUST BE SEPARATED BY 16" FOR SOUND ATTENUATION.

A4 TYPICAL ROUGH-IN REQUIREMENTS DETAIL

NTS

L. K. SORENSEN ASSOCIATES, INC.
ARCHITECTS / PLANNERS / LANDSCAPE ARCHITECTS
1332 DUEHL CIRCLE
TAYLORSVILLE, UTAH 84123
(801)262-9393 Fax (801)262-3511

LICENSED PROFESSIONAL ENGINEER
No. 7083854
DAVID L. ATTECKS
STATE OF UTAH
01-20-2010

CONSULTANTS

SPECTRUM ENGINEERS
324 S. State St., Suite 400
Salt Lake City, UT 84111
800-678-7077
801-328-5151
fax: 801-328-5155
www.spectrum-engineers.com

UTAH NATIONAL GUARD

PX FACILITY ADDITION

Camp W. G. Williams
Bluffdale, Utah

100% CONSTRUCTION DOCUMENTS

MARK	DATE	DESCRIPTION
2	11/24/09	
1	10/08/09	

PROJECT NO:	-
DATE:	20 JANUARY 2010
CAD DWG FILE:	
DRAWN BY:	cdn
CHECKED BY:	dla
DESIGNED BY:	scl

COPYRIGHT:
THIS PRINT AND ALL INFORMATION HEREON IS SUBJECT TO COPYRIGHT LAWS AND IS THE PROPERTY OF L.K. SORENSEN ASSOCIATES, INC. AND SHALL NOT BE USED ON ANY OTHER PROJECT WITHOUT WRITTEN PERMISSION OF THE ARCHITECT.

SHEET TITLE

DETAILS

EE502

File Name: P:\2009\20090268\1Drawings\3Sheet\68EE-502.dwg Last Plotted: 2010/01/26 @ 2:49 PM By: cdn

EQUIPMENT LIST

DISTRIBUTION EQUIPMENT LIST

EQUIP. NO.	QTY.	DESCRIPTION	MANUFACTURER	CATALOG NO.
100	AS REQ'D	3 A fuse for 15 kV Fused Cutout	S&C	TBD
105	AS REQ'D	15 kV Shielded Power Cable, Type MV-105, #2AWG 133% insulation, Copper Tape Shield. Provide #8 Ground	Okonite	140-23-3060
110	AS REQ'D	15 kv Distribution Dead End Insulator Clevis - tongue, 15,000 LBS	Hubble	4050021301-1400
115	AS REQ'D	Fused Custout Surge Arrester Combination Heavy Duty, 200 A, UltraSIL, 7.65 kV MCOV	COOPER	L4B2P1A00590A
120	AS REQ'D	15 kV Four Skirt Cold Shrink Termination Kit, #2 Conductor	3 M	5642
125	AS REQ'D	Crossarm 3 5/8" x 4 5/8" x 10'	TBD	TBD
191				

OH CONDUCTOR & HARDWARE EQUIPMENT LIST

EQUIP. NO.	QTY.	DESCRIPTION	MANUFACTURER	CATALOG NO.
10	AS REQ'D	Forged Steel Hot Line Y-Clevis Ball	Hubble	HYBC30
11	AS REQ'D	Ductile Iron Socket Eye, 20,000 LBS	Hubble	SA05
12	AS REQ'D	#6 AWG bare, solid copper conductor	Anixter	1A-0601
13	AS REQ'D	Two Hole Bi-Metallic Transition Plate	TBD	AS PER SPEC
14	AS REQ'D	Overhead Hotline Clamp, Aluminum to Aluminum 556.5 to 1510 ACSR	Hubble	P1545AGP
15	AS REQ'D	Cable Support, For rigid conduit with pOZi-grip? Wedging Plug for 4" Conduit	O-Z/GEDNEY	C-4004-2
16	AS REQ'D	Bronze Parallel Connector #6 AWG Solid - 4/0 Str. Main to #6 AWG Solid - 4/0 Str.Tap	TBD	AS PER SPEC
17	AS REQ'D	Thimble Eye Nut and Bolt 5/8" by required length	TBD	AS PER SPEC
18	AS REQ'D	Guy Wire, 7 strand, galvanized steel, 3/8"	TBD	AS PER SPEC
19	AS REQ'D	Guy Attachment - Two Bolt Formed Steel Type	Joslyn	J6505
20	AS REQ'D	Guy Wire Clamp - Three bolt	Joslyn	J930
20	AS REQ'D	Guy Wire Clamp - Three bolt	Joslyn	J930
21	AS REQ'D	Distribution Deadend Connector, Bolted Straight Line Clamp, Aluminum, Clevis Connection	Anderson	ADS130C w/ CA06
22	AS REQ'D	Guy Wire Strandvise	Reliable	5102
23	AS REQ'D	Expanding Guy Anchor with 3/4" x 10 foot rod Hot Dip Galvanized Steel	Joslyn	J8135G w/ J7530
24	AS REQ'D	Machine Bolt, 5/8" by Length required.	TBD	AS PER SPEC
25	AS REQ'D	Washer, 2 1/4" x 13/16"hole, w/ Lock Washer and locknut(s) as required.	TBD	AS PER SPEC
26	AS REQ'D	Oval Eye-Bolt 5/8" x length as required	Joslyn	J96??? length TBD
27	AS REQ'D	Clamp, Loop deadend	TBD	AS PER SPEC
28	AS REQ'D	Guy Wire Guard, yellow plastic	Joslyn	J1492Y
29	AS REQ'D	#4/0 Stranded Aluminum Conductor	TBD	AS PER SPEC
30	AS REQ'D	Ferrous straight-line dead -end clamp type SDE-F for 3/8" steel cable	Continental	SDE-46F

NOTES: 1) ph = PHASE spst = Single Pole Single Throw TBD = To Be Determined by Contractor based on equipment requirements and as per the specifications.

NOTE:
PROVIDE TRIPLEX SERVICE CABLE, TO POLE P42 FOR BUILDING 8040 AND TO POLE P45 FOR BUILDING 6220. EXISTING FEEDERS MAY BE REUSED IF THEY ARE SERVICEABLE AT CONTRACTORS RISK AND OPTION.

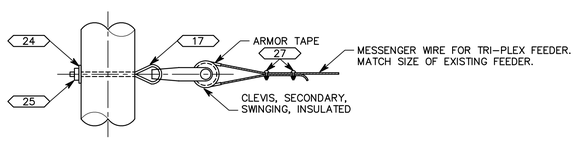

B2 SERVICE FEEDER DETAIL
NTS

○DETAIL KEYNOTES

1. TO TRIPLEX FEEDERS TO BUILDINGS 6220 & 8060.
2. RELOCATED TRANSFORMERS FROM POLE 118.

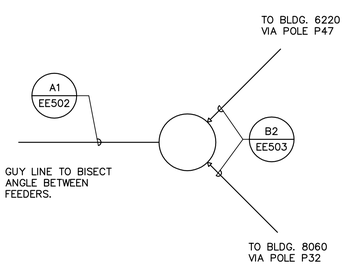

A1 POLE P118 SECTION 1
NTS

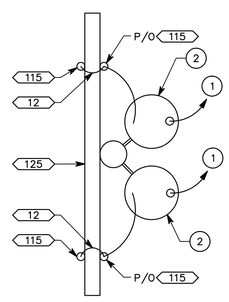

A2 POLE P118 SECTION 2
NTS

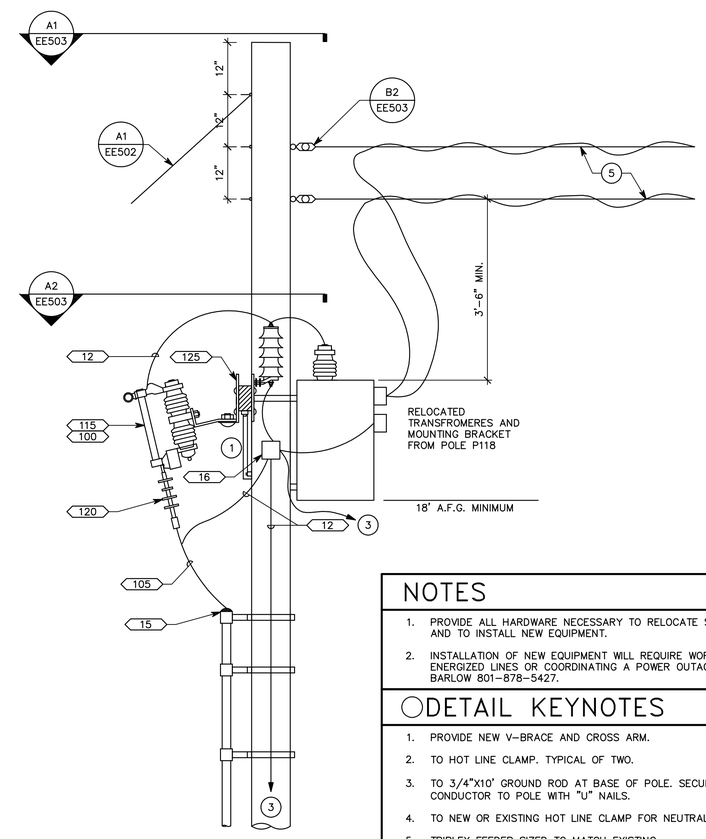

NOTES

1. PROVIDE ALL HARDWARE NECESSARY TO RELOCATE SURGE ARRESTOR AND TO INSTALL NEW EQUIPMENT.
2. INSTALLATION OF NEW EQUIPMENT WILL REQUIRE WORKING NEAR ENERGIZED LINES OR COORDINATING A POWER OUTAGE WITH KEN BARLOW 801-878-5427.

○DETAIL KEYNOTES

1. PROVIDE NEW V-BRACE AND CROSS ARM.
2. TO HOT LINE CLAMP. TYPICAL OF TWO.
3. TO 3/4"X10' GROUND ROD AT BASE OF POLE. SECURE GROUND CONDUCTOR TO POLE WITH "U" NAILS.
4. TO NEW OR EXISTING HOT LINE CLAMP FOR NEUTRAL.
5. TRIPLEX FEEDER SIZED TO MATCH EXISTING.

A4 POWER POLE P118 SIDE VIEW
NTS

L. K. SORENSEN ASSOCIATES, INC.
ARCHITECTS / PLANNERS / LANDSCAPE ARCHITECTS
1332 DUEHL CIRCLE
TAYLORSVILLE, UTAH 84123
(801)262-9393 Fax (801)262-3511

LICENSED PROFESSIONAL ENGINEER
No. 191471
TERRY L. TIPPETS
STATE OF UTAH
01-20-2010

CONSULTANTS

SPECTRUM ENGINEERS
324 S. State St., Suite 400
Salt Lake City, UT 84111
800-678-7077
801-328-5151
fax: 801-328-5155
www.spectrum-engineers.com

UTAH NATIONAL GUARD
PX FACILITY ADDITION
Camp W. G. Williams
Bluffdale, Utah
100% CONSTRUCTION DOCUMENTS

MARK	DATE	DESCRIPTION
2	11/24/09	
1	10/08/09	

PROJECT NO:	-
DATE:	20 JANUARY 2010
CAD DWG FILE:	
DRAWN BY:	cdn
CHECKED BY:	dla
DESIGNED BY:	scl

COPYRIGHT:
THIS PRINT AND ALL INFORMATION HEREON IS SUBJECT TO COPYRIGHT LAWS AND IS THE PROPERTY OF L.K. SORENSEN ASSOCIATES, INC. AND SHALL NOT BE USED ON ANY OTHER PROJECT WITHOUT WRITTEN PERMISSION OF THE ARCHITECT.

SHEET TITLE
DETAILS

EE503

File Name: P:\2009\20090268\1Drawings\3Sheet\68EE-503.dwg Last Plotted: 2010/01/26 @ 2:49 PM By: cdn

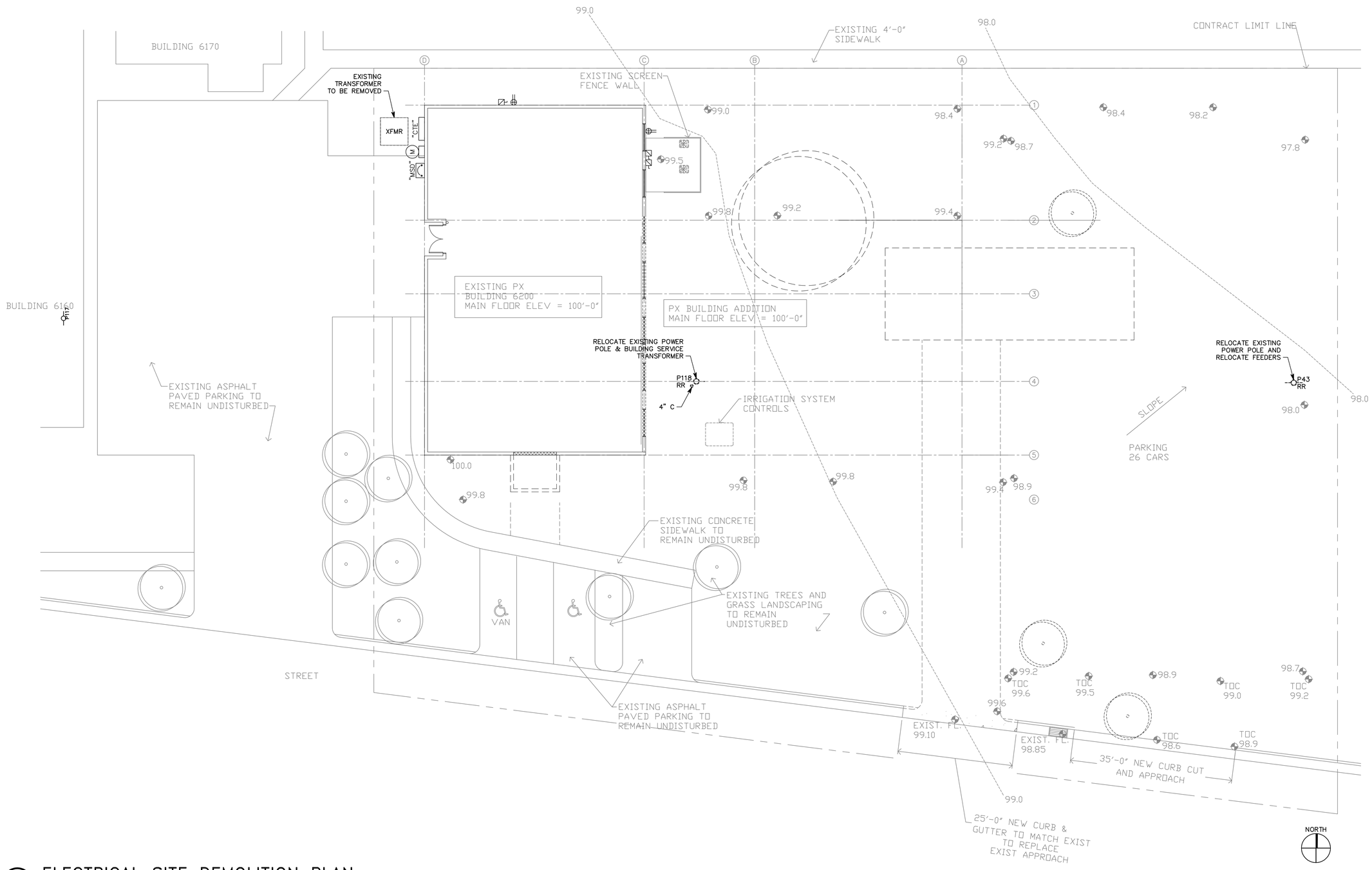

A1 ELECTRICAL SITE DEMOLITION PLAN

SCALE: 1" = 10'-0"

L. K. SORENSEN ASSOCIATES, INC.
ARCHITECTS / PLANNERS / LANDSCAPE ARCHITECTS
1332 DUEHL CIRCLE
TAYLORSVILLE, UTAH 84123
(801)262-9393 Fax (801)262-3511

LICENSED PROFESSIONAL ENGINEER
No. 191471
TERRY L. TIPPETS
STATE OF UTAH
01-26-2010

CONSULTANTS

SPECTRUM ENGINEERS
324 S. State St., Suite 400
Salt Lake City, UT 84111
800-678-7077
801-328-5151
fax: 801-328-5155
www.spectrum-engineers.com

UTAH NATIONAL GUARD

PX FACILITY ADDITION

Camp W. G. Williams
Bluffdale, Utah

100% CONSTRUCTION DOCUMENTS

MARK	DATE	DESCRIPTION
2	11/24/09	
1	10/08/09	

PROJECT NO:	-
DATE:	20 JANUARY 2010
CAD DWG FILE:	
DRAWN BY:	cdn
CHECKED BY:	dla
DESIGNED BY:	scl

COPYRIGHT:
THIS PRINT AND ALL INFORMATION HEREON IS SUBJECT TO COPYRIGHT LAWS AND IS THE PROPERTY OF L.K. SORENSEN ASSOCIATES, INC. AND SHALL NOT BE USED ON ANY OTHER PROJECT WITHOUT WRITTEN PERMISSION OF THE ARCHITECT.

SHEET TITLE

ELECTRICAL SITE DEMOLITION PLAN

ES100

File Name: P:\2009\20090268\1Drawings\3Sheet\68ES-100.dwg Last Plotted: 2010/01/26 @ 2:49 PM By: cdn

SHEET KEYNOTES

1. NEW PAD MOUNTED TRANSFORMER 7200–240/120V. COORDINATE WITH MASTER UNDERGROUND DISTRIBUTION PLAN.
2. DETAIL A3 WITH ONE 3" CONDUIT.
3. CONNECT TO NEW TIME CLOCK AND PHOTOCELL. PROVIDE ADDITIONAL CONTACTORS AS REQUIRED.

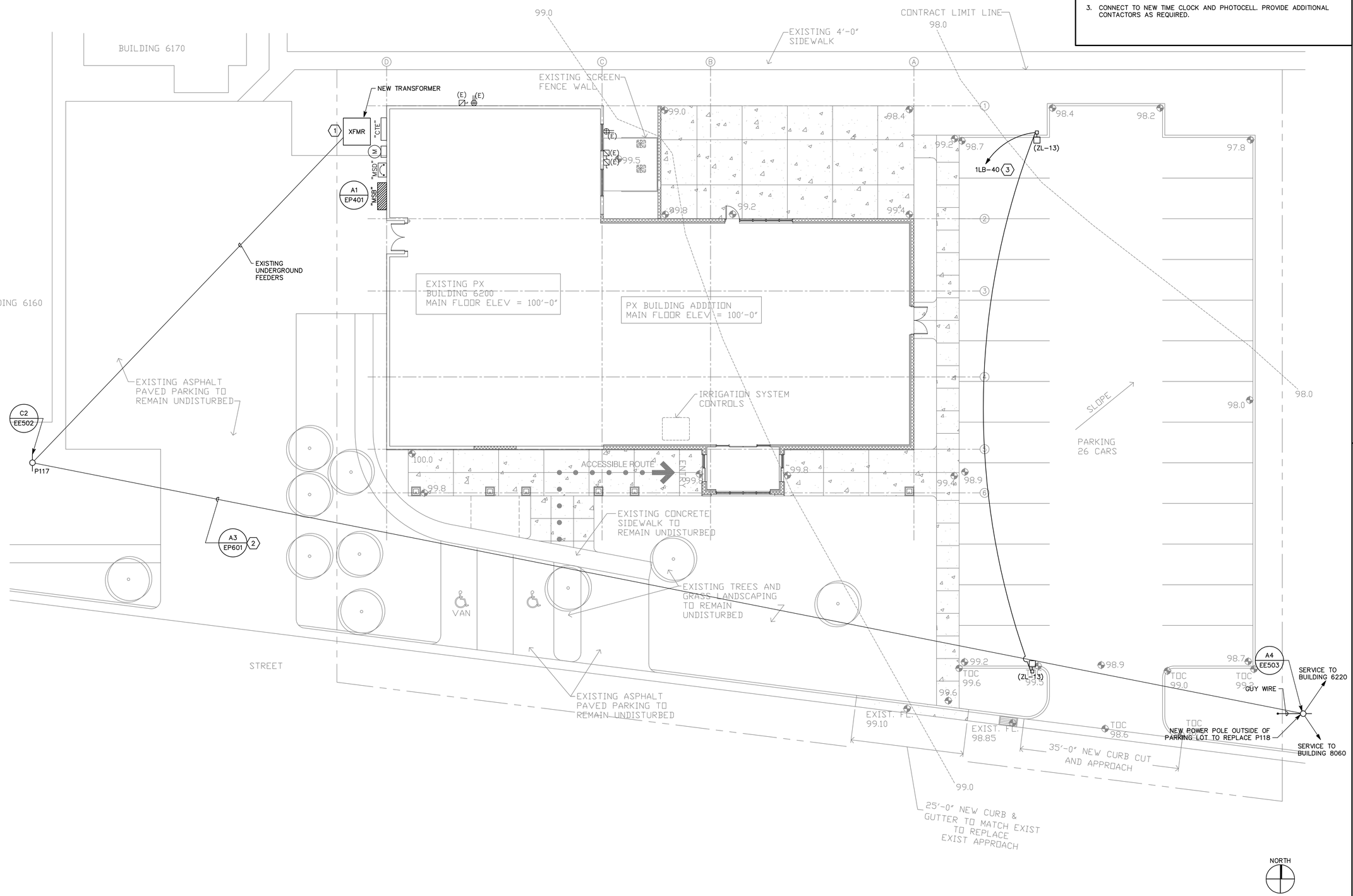

A1 ELECTRICAL SITE PLAN

SCALE: 1" = 10'-0"

L. K. SORENSEN ASSOCIATES, INC.
ARCHITECTS / PLANNERS / LANDSCAPE ARCHITECTS
1332 DUEHL CIRCLE
TAYLORSVILLE, UTAH 84123
(801)262-9393 Fax (801)262-3511

LICENSED PROFESSIONAL ENGINEER
No. 191471
TERRY L. TIPPETS
STATE OF UTAH
01-20-2010

CONSULTANTS

SPECTRUM ENGINEERS
324 S. State St., Suite 400
Salt Lake City, UT 84111
800-676-7077
801-328-5151
fax: 801-328-5155
www.spectrum-engineers.com

UTAH NATIONAL GUARD

PX FACILITY ADDITION

Camp W. G. Williams
Bluffdale, Utah

100% CONSTRUCTION DOCUMENTS

MARK	DATE	DESCRIPTION
2	11/24/09	
1	10/08/09	

PROJECT NO:	-
DATE:	20 JANUARY 2010
CAD DWG FILE:	
DRAWN BY:	cdn
CHECKED BY:	dla
DESIGNED BY:	scl

COPYRIGHT:
THIS PRINT AND ALL INFORMATION HEREON IS SUBJECT TO COPYRIGHT LAWS AND IS THE PROPERTY OF L. K. SORENSEN ASSOCIATES, INC. AND SHALL NOT BE USED ON ANY OTHER PROJECT WITHOUT WRITTEN PERMISSION OF THE ARCHITECT.

SHEET TITLE

ELECTRICAL SITE PLAN

ES101

File Name: P:\2009\20090268\1Drawings\3Sheet\68ES-101.dwg Last Plotted: 2010/01/26 @ 2:49 PM By: cdn

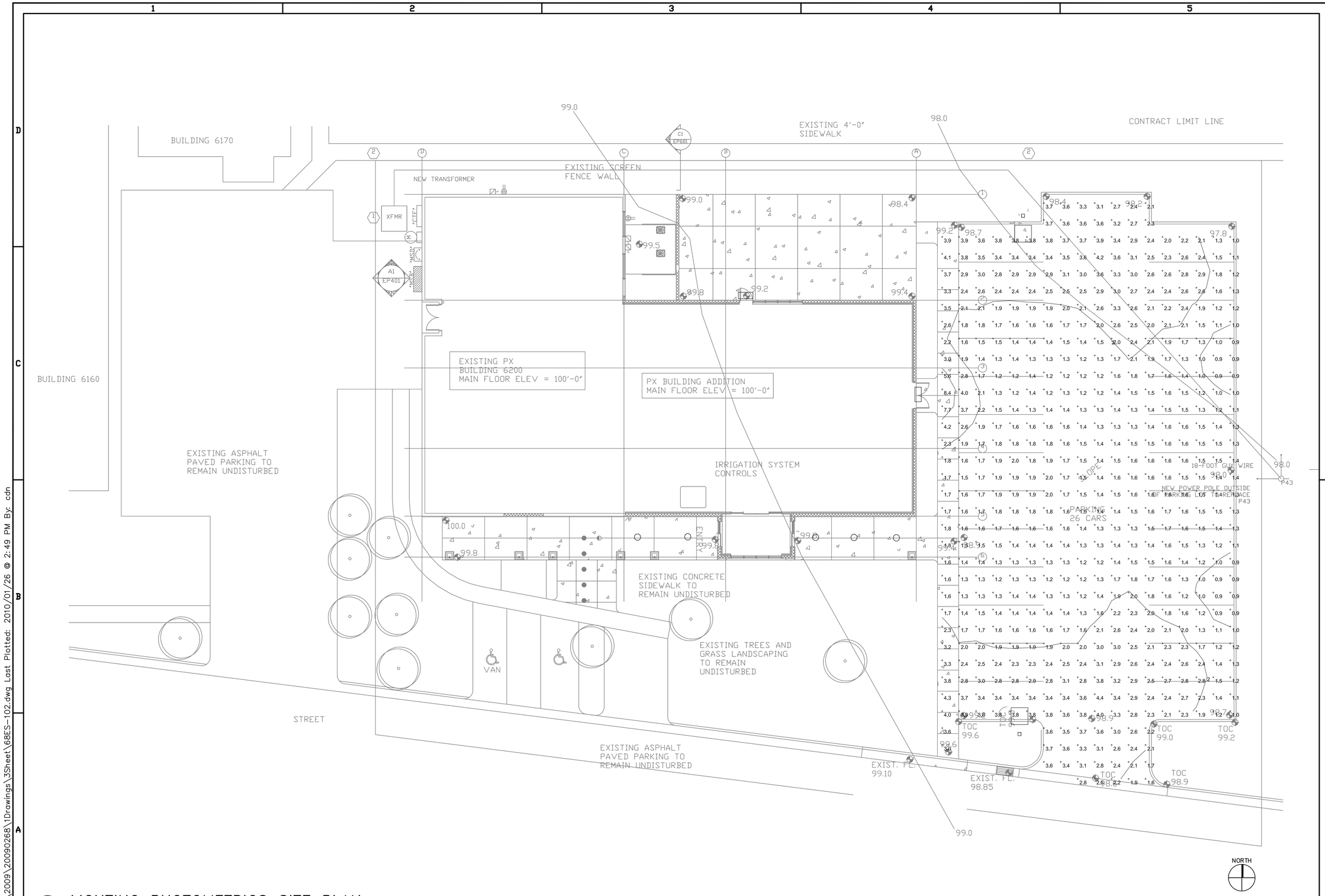

A1 LIGHTING PHOTOMETRICS SITE PLAN

SCALE: 1" = 10'-0"

L. K. SORENSEN ASSOCIATES, INC.
ARCHITECTS / PLANNERS / LANDSCAPE ARCHITECTS
1332 DUEHL CIRCLE
TAYLORSVILLE, UTAH 84123
(801)262-9393 Fax (801)262-3511

LICENSED PROFESSIONAL ENGINEER
No. 7083854
DAVID L. APTECKER
STATE OF UTAH
01-20-2010

CONSULTANTS

SPECTRUM ENGINEERS
324 S. State St., Suite 400
Salt Lake City, UT 84111
800-678-7077
801-328-5151
fax: 801-328-5155
www.spectrum-engineers.com

UTAH NATIONAL GUARD

PX FACILITY ADDITION

Camp W. G. Williams
Bluffdale, Utah

100% CONSTRUCTION DOCUMENTS

MARK	DATE	DESCRIPTION
2	11/24/09	
1	10/08/09	

PROJECT NO:	-
DATE:	20 JANUARY 2010
CAD DWG FILE:	
DRAWN BY:	cdn
CHECKED BY:	dla
DESIGNED BY:	scl

COPYRIGHT:
THIS PRINT AND ALL INFORMATION HEREON IS SUBJECT TO COPYRIGHT LAWS AND IS THE PROPERTY OF L. K. SORENSEN ASSOCIATES, INC. AND SHALL NOT BE USED ON ANY OTHER PROJECT WITHOUT WRITTEN PERMISSION OF THE ARCHITECT.

SHEET TITLE

LIGHTING PHOTOMETRICS SITE PLAN

ES102

File Name: P:\2009\20090268\1Drawings\3Sheet\6BES-102.dwg Last Plotted: 2010/01/26 @ 2:49 PM By: cdn

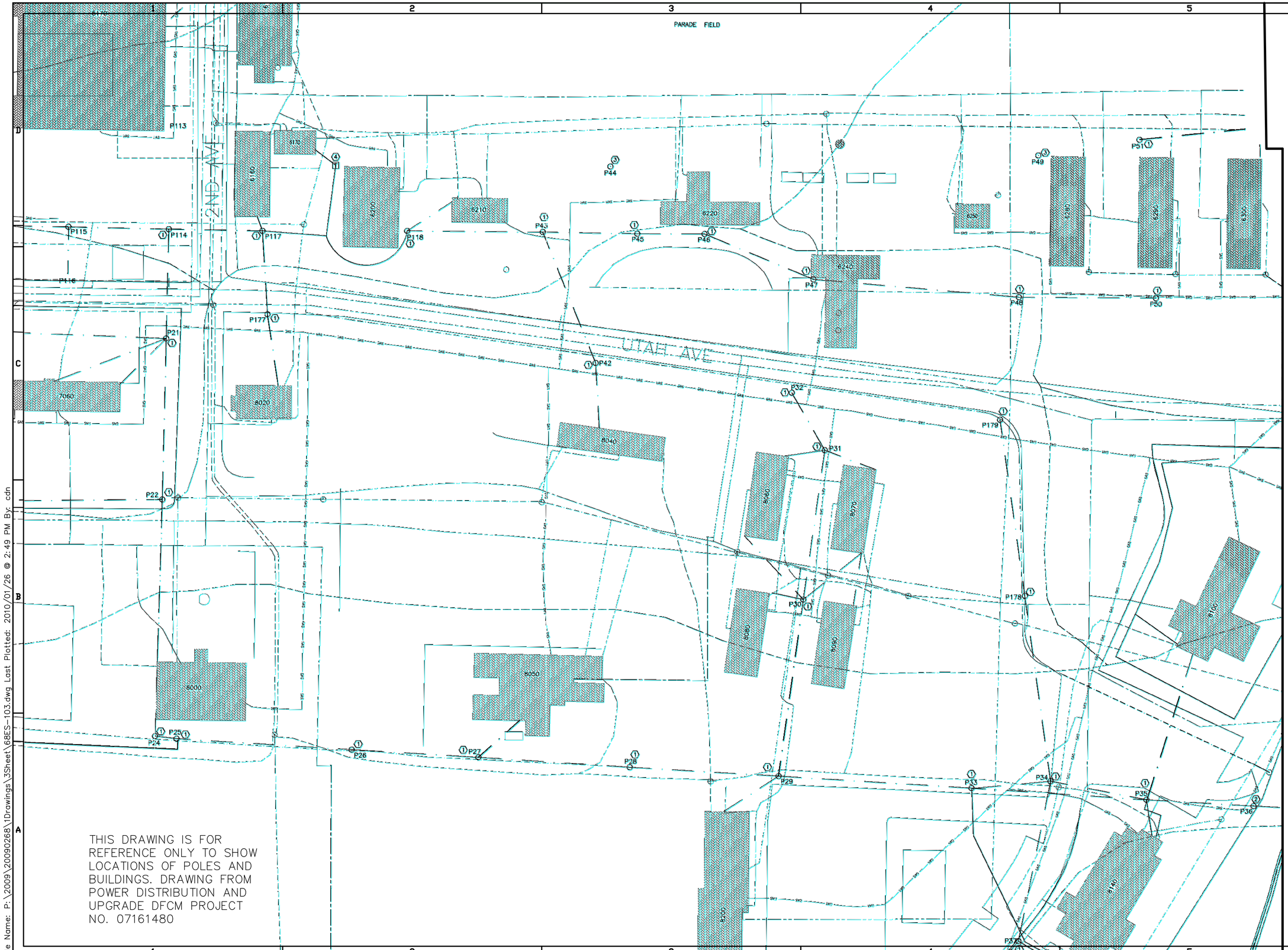

THIS DRAWING IS FOR REFERENCE ONLY TO SHOW LOCATIONS OF POLES AND BUILDINGS. DRAWING FROM POWER DISTRIBUTION AND UPGRADE DFCM PROJECT NO. 07161480

File Name: P:\2009\20090268\1Drawings\3Sheet\68ES-103.dwg Last Plotted: 2010/01/26 @ 2:49 PM By: cdn

L. K. SORENSEN ASSOCIATES, INC.
ARCHITECTS / PLANNERS / LANDSCAPE ARCHITECTS
1332 DUEHL CIRCLE
TAYLORSVILLE, UTAH 84123
(801)262-9393 Fax (801)262-3511

LICENSED PROFESSIONAL ENGINEER
No. 191471
TERRY L. TIPPETS
STATE OF UTAH
01-20-2010

CONSULTANTS

SPECTRUM ENGINEERS
324 S. State St., Suite 400
Salt Lake City, UT 84111
800-676-7077
801-328-5151
fax: 801-328-5155
www.spectrum-engineers.com

UTAH NATIONAL GUARD

PX FACILITY ADDITION

Camp W. G. Williams
Bluffdale, Utah

100% CONSTRUCTION DOCUMENTS

MARK	DATE	DESCRIPTION
2	11/24/09	
1	10/08/09	

PROJECT NO:	-
DATE:	20 JANUARY 2010
CAD DWG FILE:	
DRAWN BY:	cdn
CHECKED BY:	dla
DESIGNED BY:	scl

COPYRIGHT:
THIS PRINT AND ALL INFORMATION HEREON IS SUBJECT TO COPYRIGHT LAWS AND IS THE PROPERTY OF L. K. SORENSEN ASSOCIATES, INC. AND SHALL NOT BE USED ON ANY OTHER PROJECT WITHOUT WRITTEN PERMISSION OF THE ARCHITECT.

SHEET TITLE

OVERHEAD DISTRIBUTION REFERENCE PLAN

ES103

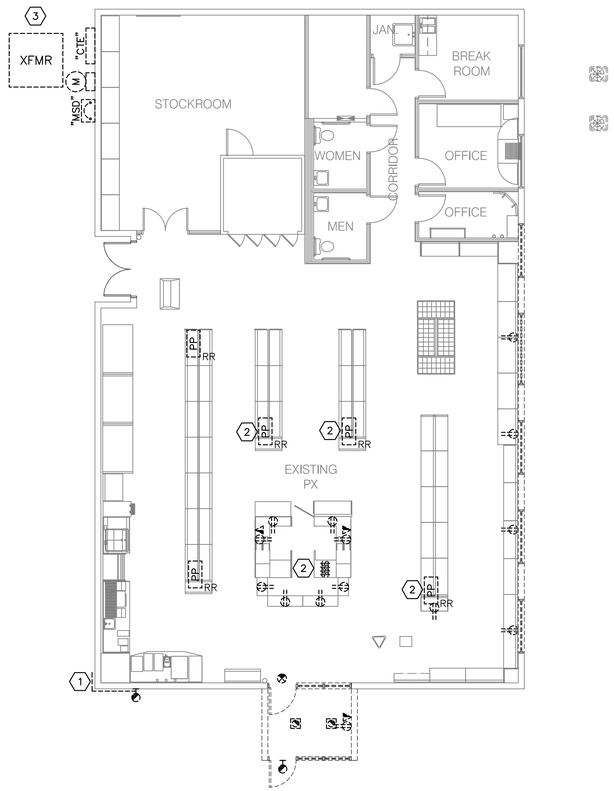

A1 ELECTRICAL DEMOLITION PLAN

SCALE: 1/8" = 1'-0"

NORTH

GENERAL SHEET NOTES

1. REMOVE AND DISCONNECT ALL LIGHT FIXTURES, DEVICES, AND EQUIPMENT AS SHOWN ON DRAWINGS ALONG WITH ASSOCIATED RACEWAYS AND CONDUCTORS FROM WALLS, CEILING AND FLOOR BACK TO LIVE JUNCTION BOX OUTSIDE AREA OF WORK.
2. COORDINATE WITH UTNG, CAMP WILLIAMS, AND THE PX FACILITY FOR ALL POWER SHUT DOWNS.

SHEET KEYNOTES

1. REMOVE CONDUIT AND CONDUCTORS BACK TO NEXT EXISTING LIGHT TO REMAIN.
2. PROVIDE A FINISHED FLOOR COVER PLATE FOR REMOVED POWER.
3. REMOVE EXISTING TRANSFORMER. NEW TRANSFORMER TO BE MOUNTED ON EXISTING CONCRETE PAD.

L. K. SORENSEN ASSOCIATES, INC.
ARCHITECTS / PLANNERS / LANDSCAPE ARCHITECTS
1332 DUEHL CIRCLE
TAYLORSVILLE, UTAH 84123
(801)262-9393 Fax (801)262-3511

LICENSED PROFESSIONAL ENGINEER
No. 7083854
DAVID L. ATTECKS
STATE OF UTAH
01-20-2010

CONSULTANTS

SPECTRUM ENGINEERS
324 S. State St., Suite 400
Salt Lake City, UT 84111
800-678-7077
801-328-5151
fax: 801-328-5155
www.spectrum-engineers.com

UTAH NATIONAL GUARD
PX FACILITY ADDITION
Camp W. G. Williams
Bluffdale, Utah
100% CONSTRUCTION DOCUMENTS

MARK	DATE	DESCRIPTION
2	11/24/09	
1	10/08/09	

PROJECT NO:	-
DATE:	20 JANUARY 2010
CAD DWG FILE:	
DRAWN BY:	cdn
CHECKED BY:	dla
DESIGNED BY:	scl

COPYRIGHT.
THIS PRINT AND ALL INFORMATION HEREON IS SUBJECT TO COPYRIGHT LAWS AND IS THE PROPERTY OF L. K. SORENSEN ASSOCIATES, INC. AND SHALL NOT BE USED ON ANY OTHER PROJECT WITHOUT WRITTEN PERMISSION OF THE ARCHITECT.

SHEET TITLE
ELECTRICAL DEMOLITION PLAN

ED101

File Name: P:\2009\20090268\1Drawings\3Sheet\68ED-101.dwg Last Plotted: 2010/01/26 @ 2:50 PM By: cdn

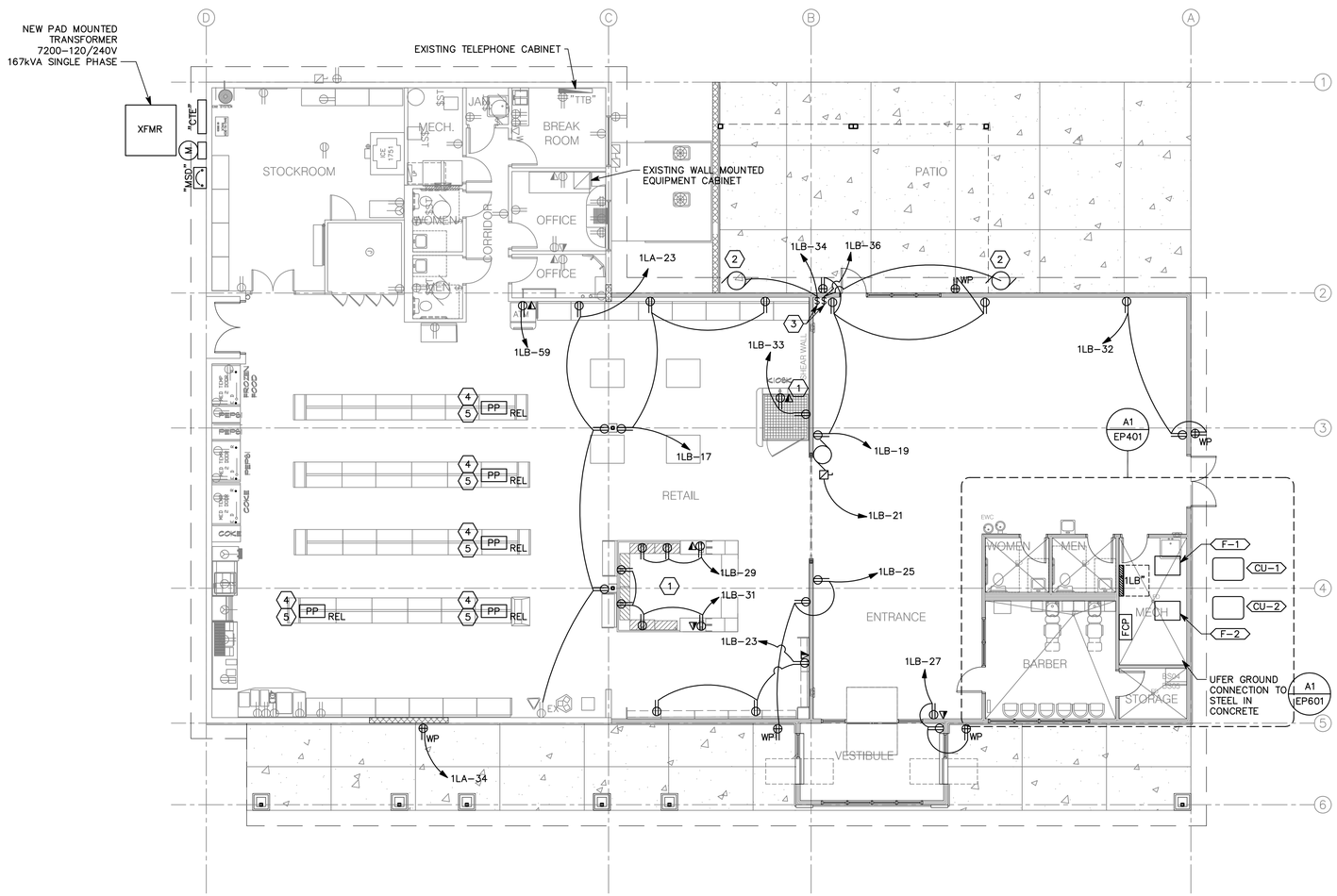

A1 POWER PLAN

SCALE: 1/8" = 1'-0"

SHEET KEYNOTES

1. COORDINATE EXACT LOCATION WITH MILL WORK.
2. MOTOR IS INTEGRAL TO AWNING SYSTEM. COORDINATE WITH AWNING INSTALLER FOR POWER REQUIREMENT.
3. PROVIDE CONTROL SWITCH FOR AWNING. COORDINATE WITH AWNING INSTALLER. SEE ARCHITECTURAL DRAWINGS FOR EXACT LOCATION OF AWNING CONTROLLER.
4. CONTRACTOR SHALL FIELD VERIFY EXISTING WIREMOLD POWER POLES AND PROVIDE ADDITIONAL RACEWAYS AND CONDUCTORS AS REQUIRED TO MOVE THE EXISTING POWER POLE INTO NEW LOCATIONS.
5. CONTRACTOR SHALL PROVIDE NEW WIREMOLD, OR EQUIVALENT, POWER POLE IF THE EXISTING POWER POLES ARE UNABLE TO BE REUSED OR IF THE NUMBER OF EXISTING POWER POLES DOES NOT EQUAL THE NUMBER OF POWER POLES TO BE RELOCATED. FIELD VERIFY PRIOR TO BID.

L. K. SORENSEN ASSOCIATES, INC.
ARCHITECTS / PLANNERS / LANDSCAPE ARCHITECTS
1332 DUEHL CIRCLE
TAYLORSVILLE, UTAH 84123
(801)262-9393 Fax (801)262-3511

LICENSED PROFESSIONAL ENGINEER
No. 7083854
DAVID L. ATTECKS
STATE OF UTAH
01-20-2010

CONSULTANTS

SPECTRUM ENGINEERS
324 S. State St., Suite 400
Salt Lake City, UT 84111
800-678-7077
801-328-5151
fax: 801-328-5155
www.spectrum-engineers.com

UTAH NATIONAL GUARD

PX FACILITY ADDITION

Camp W. G. Williams
Bluffdale, Utah

100% CONSTRUCTION DOCUMENTS

MARK	DATE	DESCRIPTION
2	11/24/09	
1	10/08/09	

PROJECT NO:	-
DATE:	20 JANUARY 2010
CAD DWG FILE:	
DRAWN BY:	cdn
CHECKED BY:	dla
DESIGNED BY:	scl

COPYRIGHT:
THIS PRINT AND ALL INFORMATION HEREON IS SUBJECT TO COPYRIGHT LAWS AND IS THE PROPERTY OF L.K. SORENSEN ASSOCIATES, INC. AND SHALL NOT BE USED ON ANY OTHER PROJECT WITHOUT WRITTEN PERMISSION OF THE ARCHITECT.

SHEET TITLE

POWER PLAN

EP101

File Name: P:\2009\20090268\1Drawings\3Sheet\68EP-101.dwg Last Plotted: 2010/01/26 @ 2:50 PM By: cdn

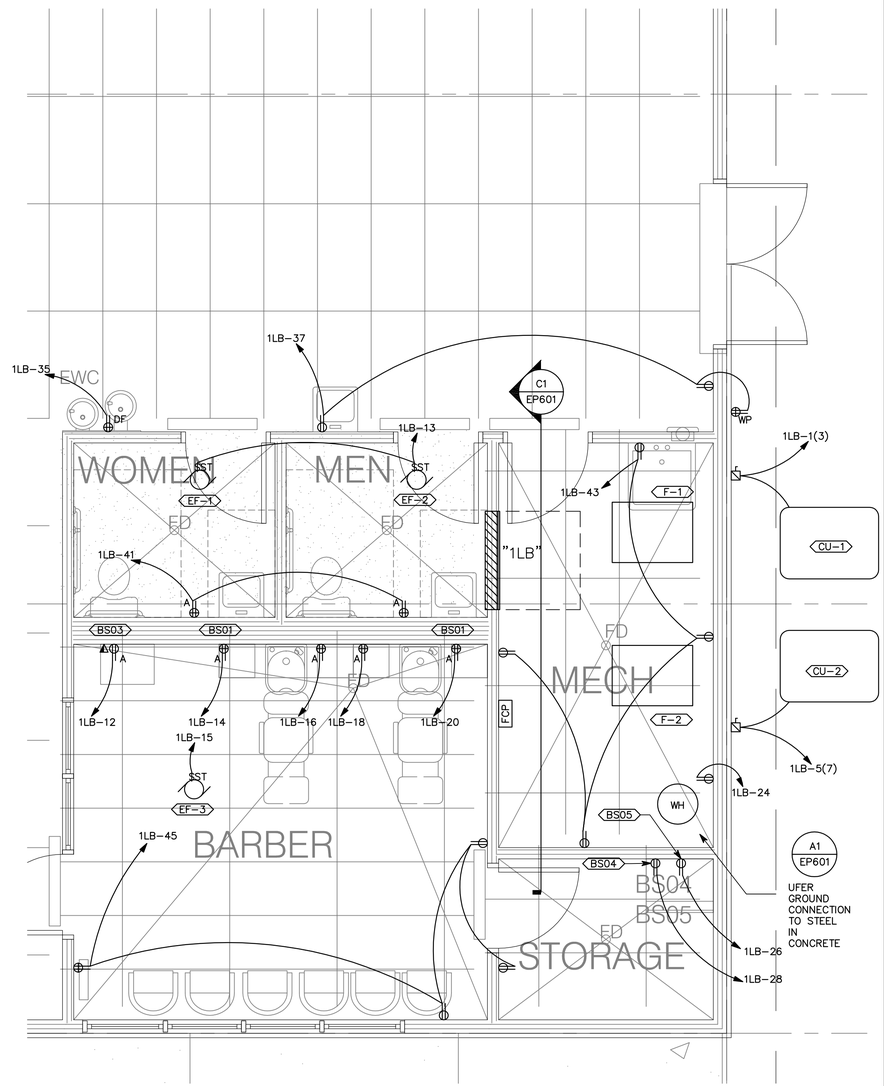

A3 ENLARGED POWER PLAN

SCALE: 3/8" = 1'-0"

GENERAL SHEET NOTES

1. COORDINATE ALL ELECTRICAL WORK WITH MILL WORK AND EQUIPMENT FOR BARBER SHOP.

L. K. SORENSEN ASSOCIATES, INC.
ARCHITECTS / PLANNERS / LANDSCAPE ARCHITECTS
1332 DUEHL CIRCLE
TAYLORSVILLE, UTAH 84123
(801)262-9393 Fax (801)262-3511

LICENSED PROFESSIONAL ENGINEER
No. 7083854
DAVID L. ADLECK
STATE OF UTAH
01-20-2010

CONSULTANTS

SPECTRUM ENGINEERS
324 S. State St., Suite 400
Salt Lake City, UT 84111
800-678-7077
801-328-5151
fax: 801-328-5155
www.spectrum-engineers.com

UTAH NATIONAL GUARD

PX FACILITY ADDITION

Camp W. G. Williams
Bluffdale, Utah

100% CONSTRUCTION DOCUMENTS

MARK	DATE	DESCRIPTION
2	11/24/09	
1	10/08/09	

PROJECT NO:	-
DATE:	20 JANUARY 2010
CAD DWG FILE:	
DRAWN BY:	cdn
CHECKED BY:	dla
DESIGNED BY:	scl

COPYRIGHT:
THIS PRINT AND ALL INFORMATION HEREON IS SUBJECT TO COPYRIGHT LAWS AND IS THE PROPERTY OF L.K. SORENSEN ASSOCIATES, INC. AND SHALL NOT BE USED ON ANY OTHER PROJECT WITHOUT WRITTEN PERMISSION OF THE ARCHITECT.

SHEET TITLE

ELECTRICAL EQUIPMENT PLAN & SCHEDULE

EP401

File Name: P:\2009\20090268\1Drawings\3Sheet\68EP-401.dwg Last Plotted: 2010/01/26 @ 2:50 PM By: cdn

VOICE/DATA EQUIPMENT/CABLE LIST

SYMBOL	ITEM DESCRIPTION	MANUFACTURERS
X C6 VOICE	VOICE CABLING, CATEGORY 6	SEE SPECIFICATIONS (CAT6 YELLOW PLENUM RATED) ('X' INDICATES QUANTITY)
X C6 DATA	DATA CABLING, CATEGORY 6	SEE SPECIFICATIONS (CAT6 BLUE PLENUM RATED) ('X' INDICATES QUANTITY)
PPL	PATCH PANEL	SEE SPECIFICATIONS

NOTE: ALL RACKS, LADDER, PATCH PANELS, AND ACCESSORIES SHALL BE BLACK IN COLOR. COORDINATE WITH OWNER FOR WHICH EQUIPMENT WILL BE PROVIDED BY OWNER.

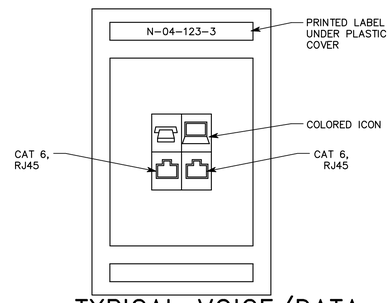

D3 TYPICAL VOICE/DATA PLATE DETAIL
NTS

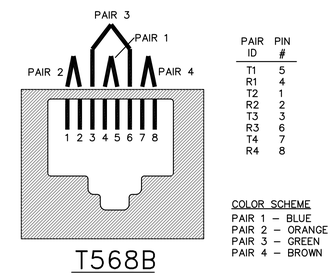

PAIR ID	PIN #
T1	5
R1	4
T2	1
R2	2
T3	3
R3	6
T4	7
R4	8

D4 RJ45 WIRING DETAIL
NTS

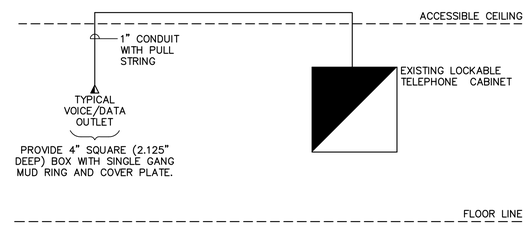

B3 VOICE/DATA RACEWAY RISER DIAGRAM
NTS

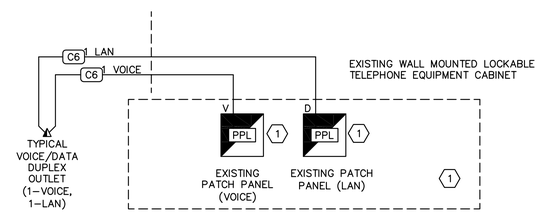

A3 TELECOMMUNICATIONS CABLING RISER DIAGRAM
NTS

GENERAL VOICE/DATA NOTES

1. PROVIDE PLENUM RATED CABLE IN ALL AIR PLENUMS. IF A PLENUM RATED CABLE IS NOT SPECIFIED, PROVIDE THE PLENUM RATED EQUIVALENT TO THE SPECIFIED CABLE.
2. ALL CABLE, REGARDLESS OF LENGTH, INSTALLED UNDER THIS CONTRACT ARE TO BE LABELED.
3. THE EQUIPMENT LABELING IDENTIFIED ON DETAILS IN THESE DRAWINGS ARE EXAMPLES ONLY OF THE ACTUAL LABELING WHICH IS REQUIRED AS PART OF THIS CONTRACT. PRIOR TO FABRICATION, SUBMIT THE NOMENCLATURE FOR ALL LABELS TO THE OWNER FOR REVIEW. THIS REQUIREMENT INCLUDES BUT IS NOT LIMITED TO ALL CABLE LABELING, AND ALL EQUIPMENT LABELING.
4. FOR EVERY CABLE PULL SPECIFIED, COIL 10' OF EXCESS CABLE AT THE AT THE CLOSET END, NEATLY COIL, AND LABEL.
5. GROUND ALL EQUIPMENT RACKS AS DETAILED.
6. ALL CABLE, FIBER, AND UTP TO TERMINATE ON BOTH ENDS.
7. COORDINATE RACK LAYOUTS WITH OWNER PRIOR TO INSTALLATION.
8. WELL IN ADVANCE OF INSTALLATION, COORDINATE WORK WITH ALL OTHER TRADES SO THAT ELECTRICAL EQUIPMENT, OR ITS INTENDED USE, IS NOT OBSTRUCTED BY EQUIPMENT BEING PROVIDED BY OTHER DIVISIONS.
9. INSTALL ALL ELECTRONIC SYSTEMS EQUIPMENT IN COMPLIANCE WITH THE MANUFACTURER'S WRITTEN INSTRUCTIONS, SEISMIC CODES, AND INDUSTRY WIDE ACCEPTED PRACTICES. SUPPORT EQUIPMENT WEIGHT FROM BUILDING STRUCTURE. DURING THE SUBMITTAL PROCESS, PROVIDE SHOP DRAWINGS WHICH DETAIL PROPOSED MOUNTING FOR ALL SUCH EQUIPMENT.
10. 'A' INDICATES MOUNTING ABOVE COUNTER. VERIFY HEIGHT OF POWER OUTLET AND MOUNT DATA OUTLET NEXT TO POWER OUTLET.
11. ALL WORK SHALL BE IN COMPLIANCE WITH UTNG STANDARD UT–G6–C.
12. ALL WORK SHALL BE COORDINATED WITH UTAH NATIONAL GUARD.
13. ALL CONDUIT FOR VOICE/DATA CABLE SHALL BE INSTALLED IN ACCORDANCE WITH ANSI/TIA/EIA569–A.

TELECOMMUNICATIONS CABLING – GENERAL NOTES

1. ALL WORK SHALL BE IN COMPLIANCE WITH UTNG STANDARD UT–G6–C.
2. ALL WORK SHALL BE COORDINATED WITH MIKE HANSEN 523–4844 (UTNG).

⬡SHEET KEYNOTES

1. RECONNECT NEW CABLES TO EXISTING EQUIPMENT. TERMINATE AND TEST. PROVIDE NEW PATCH PANELS AS REQUIRED.

L. K. SORENSEN ASSOCIATES, INC.
ARCHITECTS / PLANNERS / LANDSCAPE ARCHITECTS
1332 DUEHL CIRCLE
TAYLORSVILLE, UTAH 84123
(801)262-9393 Fax (801)262-3511

LICENSED PROFESSIONAL ENGINEER No. 7083854 DAVID L. ARTECHE STATE OF UTAH
01–20–2010

CONSULTANTS

SPECTRUM ENGINEERS
324 S. State St., Suite 400
Salt Lake City, UT 84111
800-678-7077
801-328-5151
fax: 801-328-5155
www.spectrum-engineers.com

UTAH NATIONAL GUARD
PX FACILITY ADDITION
Camp W. G. Williams
Bluffdale, Utah
100% CONSTRUCTION DOCUMENTS

MARK	DATE	DESCRIPTION
2	11/24/09	
1	10/08/09	

PROJECT NO:	-
DATE:	20 JANUARY 2010
CAD DWG FILE:	
DRAWN BY:	cdn
CHECKED BY:	dla
DESIGNED BY:	scl

COPYRIGHT:
THIS PRINT AND ALL INFORMATION HEREON IS SUBJECT TO COPYRIGHT LAWS AND IS THE PROPERTY OF L.K. SORENSEN ASSOCIATES, INC. AND SHALL NOT BE USED ON ANY OTHER PROJECT WITHOUT WRITTEN PERMISSION OF THE ARCHITECT.

SHEET TITLE
COMMUNICATIONS DETAILS

EP501

File Name: P:\2009\20090268\1Drawings\3Sheet\68EP–501.dwg Last Plotted: 2010/01/26 @ 2:50 PM By: cdn

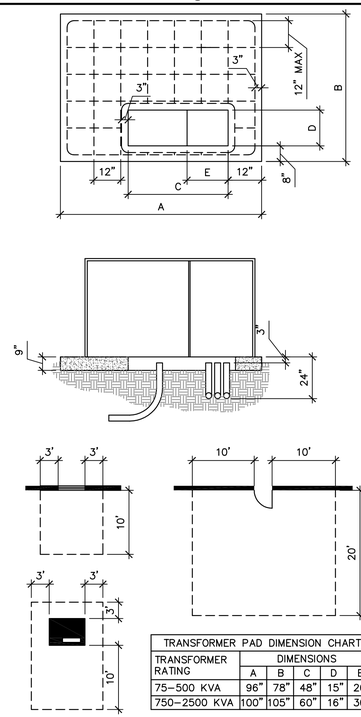

TRANSFORMER PAD DIMENSION CHART					
TRANSFORMER RATING	DIMENSIONS				
	A	B	C	D	E
75–500 KVA	96"	78"	48"	15"	20"
750–2500 KVA	100"	105"	60"	16"	30"

CONTRACTOR GENERAL NOTES:

1. SITE PREPARATION. ALL SOIL BENEATH THE PAD SITE MUST BE COMPACTED AND LEVEL PRIOR TO SETTING OR POURING THE PAD TO PREVENT SETTLING.
2. CONCRETE. STEEL REINFORCEMENT SHALL BE #4 BARS, PLACED ACCORDING TO THE DRAWING. THE PAD MUST BE POURED AT LEAST SEVEN FULL DAYS PRIOR TO SETTING THE TRANSFORMER. THE FINISHED SURFACE MUST BE COMPLETELY FLAT AND LEVEL. SEE STANDARD 73 036 FOR CONCRETE SPECIFICATIONS.
3. PREFABRICATION. THE PAD MAY EITHER BE CONSTRUCTED ON THE SITE OR PREFABRICATED ACCORDING TO SPECIFICATIONS.
4. CONDUIT WINDOW LAYOUT. LOW VOLTAGE CONDUITS SHALL BE FORMED AS TIGHTLY AS POSSIBLE AGAINST THE RIGHT SIDE OF THE OPENING AND SHALL IN NO CASE EXTEND FURTHER THAN 20" FROM THE RIGHT SIDE OF THE CONDUIT WINDOW ON THE SMALL PAD OR 30" ON THE LARGE PAD. NO MORE THAN 8 CONDUITS WILL BE USED ON THE LOW VOLTAGE SIDE (NOT INCLUDING THE METERING CONDUIT). DO NOT PUT ANY CONCRETE IN OR UNDER THE CONDUIT WINDOW. USE SOIL TO SEPARATE CONDUITS. BELL ENDS ARE REQUIRED FOR ALL METAL CONDUIT, BUT NOT FOR PLASTIC CONDUIT.
5. CLEARANCES. THE FRONT OF THE PAD SHOULD ALWAYS FACE AWAY FROM ADJACENT STRUCTURES AND BE FREE OF OBSTRUCTIONS. AT LEAST 3 FEET MUST SEPARATE THE EDGES OF THE PAD FROM ANY ADJACENT STRUCTURE. THE EDGES OF THE PAD MUST BE AT LEAST 10 FEET FROM ANY COMBUSTIBLE STRUCTURE. IF AN ADJACENT STRUCTURE HAS ANY OVERHANG OR EAVE WITHIN 27 VERTICAL FEET OF THE TOP OF THE PAD, CLEARANCES MUST BE MEASURED FROM THE OUTSIDE OF THE OVERHANG. THE PAD MUST NOT BE PLACED IN AN AREA 10 FEET IN LINE WITH OR 3 FEET TO EITHER SIDE OF ANY WINDOW IN AN ADJACENT STRUCTURE (SEE DETAIL "A"). CLEARANCE FOR A DOOR MUST BE 20 FEET IN LINE WITH IT AND 10 FEET ON THE SIDES (SEE DETAIL "B"). PADS MUST NOT BE PLACED WITHIN 15 FEET OF ANY VALVE OR WITHIN 20 FEET OF ANY PLUMBING OR STORAGE FACILITY CONTAINING FLAMMABLE MATERIAL. NO WALLS, FENCES, OR ANY OTHER OBSTRUCTIONS WILL BE PLACED WITHIN 3 FEET OF THE SIDES OR BACK OF THE PAD, OR WITHIN 10 FEET OF THE FRONT OF THE PAD (SEE DETAIL "C"). THE AREA IN FRONT OF THE PAD MUST HAVE 10 FEET OF CLEAR, LEVEL WORKING AREA FOR MAINTENANCE OF THE TRANSFORMER. THE PAD MAY NOT BE PLACED IN LINE WITH AN AIR INTAKE WITHIN 32 VERTICAL FEET OF THE SURFACE PAD. ALSO VERTICALLY, IT MUST NOT BE PLACED WITHIN 12 FEET OF A DOOR OR WINDOW.
6. BARRIERS. IF THE TRANSFORMER PAD IS TO BE LOCATED IN AREAS SUBJECT TO VEHICULAR TRAFFIC, (PARKING LOTS, DRIVEWAYS, ETC) CONTACT UTAH POWER & LIGHT FOR PROTECTIVE BARRIER REQUIREMENTS.
7. IF THE TRANSFORMER WILL NOT COVER THE CABLE OPENINGS ON THESE STANDARD PADS, SEAL THE SIDES OF THE CABLE OPENING TO FIT THE TRANSFORMER USING SAKRETE OR COMPARABLE.

C1 TRANSFORMER PAD DETAIL

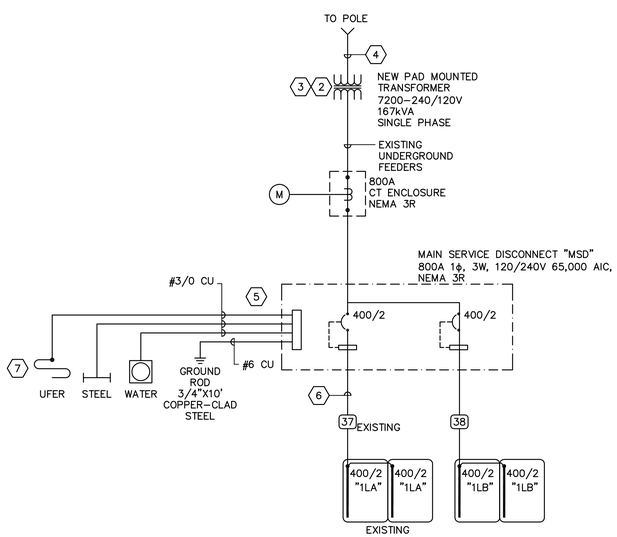

A1 ONE–LINE DIAGRAM

FAULT CURRENT TABLE

BUS	FAULT CURRENT
MSD	65,000 SCA
1LB	10,000 SCA

PROVIDE FULLY RATED CIRCUIT BREAKERS IN PANELBOARDS FOR THE FAULT CURRENT SHOWN. SERIES RATINGS WITH NEXT LEVEL UPSTREAM OVERCURRENT PROTECTIVE DEVICES ARE PERMITTED SUBJECT TO FACTORY UL DOCUMENTATION OF SERIES RATING SUBMITTED TO ENGINEER. IF DEVICE OR EQUIPMENT FAULT CURRENT RATING IS NOT SHOWN, ASSUME 100,000 AIC.

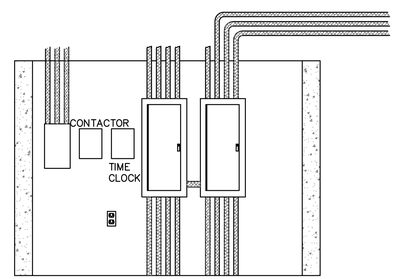

B3 PANEL WALL ELEVATION

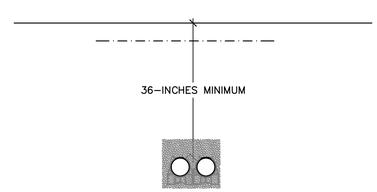

A3 UNDERGROUND CONDUIT DETAIL

CONDUCTOR AND CONDUIT SCHEDULE

(**) SCHEDULE NUMBER
SUBSCRIPT (NOTE 5)
(E.G.) (5) IG

SYM	AMP	CONDUIT SIZE	CONDUCTOR(NOTE 1) QTY	SIZE	G	IG	SE	NOTES
1	20	.75	2	12	12	12	8	2
2	20	.75	3	12	12	12	8	2,3
3	20	.75	4	12	12	12	8	2,3
4	30	.75	2	10	10	10	8	2
5	30	.75	3	10	10	10	8	2
6	30	.75	4	10	10	10	8	2
7	40	1	2	8	10	8	6	2
8	40	1	3	8	10	8	6	2
9	40	1	4	8	10	8	6	2
10	55	1	2	6	10	8	4	2
11	55	1	3	6	10	8	4	2
12	55	1.25	4	6	10	8	4	2
13	70	1	2	4	8	4	2	2
14	70	1.25	3	4	8	4	2	2
15	70	1.25	4	4	8	4	2	2
16	85	1.25	2	3	8	3	2	2
17	85	1.25	3	3	8	3	2	2
18	85	1.25	4	3	8	3	2	2
19	95	1.25	3	2	8	2	2	2
20	95	1.50	4	2	8	2	2	2
21	130	1.50	3	1	6	2	2	2
22	130	1.50	4	1	6	2	2	2
23	150	2	3	1/0	6	2	1/0	2
24	150	2	4	1/0	6	2	1/0	2
25	175	2	3	2/0	6	2	2/0	2
26	175	2	4	2/0	6	2	2/0	2
27	200	2	3	3/0	6	2	2/0	2
28	200	2.50	4	3/0	6	2	2/0	2
29	230	2.50	3	4/0	4	2	2/0	2
30	230	2.50	4	4/0	4	2	2/0	2
31	255	2.50	3	250	4	1	2/0	2
32	255	2.50	4	250	4	1	2/0	2
33	310	3	3	350	3	1/0	3/0	2
34	310	3	4	350	3	1/0	3/0	2
35	380	3.50	3	500	3	3/0	3/0	2
36	380	4	4	500	3	3/0	3/0	2
37	400	2 EA 2	3	3/0	3	3/0	3/0	2
38	400	2 EA 2.50	4	3/0	3	3/0	3/0	2
39	510	2 EA 2.50	3	250	1	4/0	3/0	2
40	510	2 EA 3	4	250	1	4/0	3/0	2
41	620	2 EA 3	3	350	1/0	4/0	3/0	2,4
42	620	2 EA 3	4	350	1/0	4/0	3/0	2,4
43	760	2 EA 3.50	3	500	1/0	4/0	3/0	2,4
44	760	2 EA 4	4	500	1/0	4/0	3/0	2,4
45	855	3 EA 3	3	300	2/0	4/0	3/0	2,4
46	855	3 EA 3	4	300	2/0	4/0	3/0	2,4
47	1000	3 EA 3.50	3	400	2/0	4/0	3/0	4
48	1000	3 EA 3.50	4	400	2/0	4/0	3/0	4
49	1140	3 EA 4	3	500	3/0	4/0	3/0	4
50	1140	3 EA 4	4	500	3/0	4/0	3/0	4
51	1240	4 EA 3	3	350	3/0	4/0	3/0	4
52	1240	4 EA 3	4	350	3/0	4/0	3/0	4
53	1675	5 EA 3.50	4	400	4/0	4/0	4/0	4
54	2010	6 EA 3.50	4	400	250	250	250	4
55	2660	7 EA 4	4	500	350	350	350	4
56	3040	8 EA 4	4	500	500	500	500	4
57	4180	11 EA 4	4	500	500	500	500	4
58		5 EA 4						6
59		5						6
60		10 EA 4						6

CONDUCTOR AND CONDUIT SCHEDULE NOTES

CONDUCTORS SHOWN ARE SHOWN FOR EACH CONDUIT WITH MODIFICATIONS AS NOTED IN NOTE 5. ALL CONDUCTORS SHOWN ARE THWN UNLESS OTHERWISE NOTED.

PROVIDE EQUIPMENT GROUND CONDUCTORS PER TABLE 250–122 WHEN CIRCUIT BREAKERS ARE SIZED GREATER THAN AMPERE RATING SHOWN IN TABLE.

PROVIDE #10 NEUTRALS FOR MULTIWIRE BRANCH CIRCUITS SERVING COMPUTERS.

GROUND (G) CONDUCTOR MAY BE DELETED ON SERVICE ENTRANCE CONDUCTORS.

WHEN SYMBOL SUBSCRIPT INDICATES "IG", INCLUDE "IG" OR INSULATED GROUND CONDUCTOR SCHEDULED ALONG WITH GROUND OR EQUIPMENT GROUND CONDUCTOR. WHEN SYMBOL SUBSCRIPT INDICATES "SE", SUBSTITUTE "SE" CONDUCTOR FOR "G" CONDUCTOR SHOWN WHICH IS SIZED FOR THE GROUNDING OF THE SECONDARY OF THE SEPARATELY DERIVED SYSTEMS.

RACEWAY ONLY. CONDUCTORS PROVIDED BY UTILITY.

GENERAL SHEET NOTES

1. PROVIDE NEMA 3R ENCLOSURES FOR EQUIPMENT LOCATED OUTDOORS. REFER TO PLANS FOR EQUIPMENT LOCATIONS.
2. REFER TO PLANS FOR CONSTRAINTS ON PHYSICAL DIMENSIONS AND CLEARANCE REQUIREMENTS OF EQUIPMENT. PROVIDE EQUIPMENT DIMENSIONS THAT FALL WITHIN THE CONSTRAINTS OF EACH SPECIFIC LOCATION.
3. ALL EQUIPMENT SHALL BE CONSTRUCTED AND BRACED FOR THE SEISMIC CONDITIONS OF THE PROJECT. REFER TO SPECIFICATIONS FOR REQUIREMENTS.

SHEET KEYNOTES

1. NOT USED.
2. SET NEW TRANSFORMER ON EXISTING CONCRETE PAD. EXTEND PAD AS REQUIRED.
3. USE EXISTING PRIMARY FEEDER.
4. EXISTING PRIMARY CONDUIT AND CONDUCTORS TO REMAIN.
5. GROUND CONNECTION. FIELD VERIFY EXISTING GROUNDED ELECTRONIC CONDUCTORS.
6. CONNECT TO EXISTING CONDUIT AND CONDUCTORS.
7. CONNECT UFER GROUNDING ELECTRODE TO THE RE–BAR IN THE FOOTINGS.

L. K. SORENSEN ASSOCIATES, INC.
ARCHITECTS / PLANNERS / LANDSCAPE ARCHITECTS
1332 DUEHL CIRCLE
TAYLORSVILLE, UTAH 84123
(801)262-9393 Fax (801)262-3511

LICENSED PROFESSIONAL ENGINEER
No. 7083854
DAVID L. ARTECHE
STATE OF UTAH
01–20–2010

CONSULTANTS

SPECTRUM ENGINEERS
324 S. State St., Suite 400
Salt Lake City, UT 84111
800-678-7077
801-328-5151
fax: 801-328-5155
www.spectrum-engineers.com

UTAH NATIONAL GUARD
PX FACILITY ADDITION
Camp W. G. Williams
Bluffdale, Utah
100% CONSTRUCTION DOCUMENTS

MARK	DATE	DESCRIPTION
2	11/24/09	
1	10/08/09	

PROJECT NO:	-
DATE:	20 JANUARY 2010
CAD DWG FILE:	
DRAWN BY:	cdn
CHECKED BY:	dla
DESIGNED BY:	scl

COPYRIGHT:
THIS PRINT AND ALL INFORMATION HEREON IS SUBJECT TO COPYRIGHT LAWS AND IS THE PROPERTY OF L.K. SORENSEN ASSOCIATES, INC. AND SHALL NOT BE USED ON ANY OTHER PROJECT WITHOUT WRITTEN PERMISSION OF THE ARCHITECT.

SHEET TITLE

ONE-LINE DIAGRAM

EP601

File Name: P:\2009\20090268\1Drawings\3Sheet\68EP–601.dwg Last Plotted: 2010/01/26 @ 2:50 PM By: cdn

PANEL "1LA" EXISTING

VOLTS/PHASE/WIRE:	PANEL SIZE & TYPE:	MAIN SIZE & TYPE:	LOCATION:	CABINET:	NOTES:
120/240 V, 1 PH 3 WIRE	22" W x 6" D, BOLT-ON	400 AMPERE MAIN LUG		SURFACE	

ACCESSORIES: PANEL DIRECTORY, IDENTIFICATION, GROUNDING BAR, SUBFEED LUGS

CKT NO	OCP AMP	OCP POLE	LOAD (kVA) LTG	LOAD (kVA) CO	LOAD (kVA) PWR	DESCRIPTION	LCL kVA	PHASEOAD A	PHASEOAD B	LCL kVA	DESCRIPTION	LOAD (kVA) LTG	LOAD (kVA) CO	LOAD (kVA) PWR	OCP AMP	OCP POLE	CKT NO
1	20	1	0.2			BUILDING LIGHTS	0.3	4.5		4.3	CU-1			4.3	50	2	2
3	20	1	1.1			OFFICES/STOCK RM	1.4		5.4	4.3	----			4.3	–	–	4
5	20	1	1.2			PX 102	1.5	5.5		4.3	CU-2			4.3	50	2	6
7	20	1	1.2			PX 102	1.5		5.5	4.3	----			4.3	–	–	8
9	20	1	0.3			DISPLAY SIGN	0.4	3.9		3.6	CU-3 (WALK-IN)			3.6	40	2	10
11	20	1	0.2			WALK-IN LIGHTS	0.3		3.8	3.6	----			3.6	–	–	12
13	20	1		0.4		RESTROOMS	0.4	2.1		1.7	F-1			1.7	20	1	14
15	20	1		0.2		STOCK ROOM	0.2		1.9	1.7	F-2			1.7	20	1	16
17	20	1			0.6	NESTLES COOLER PP	0.6	0.9		0.3	EF-1,2,3			0.3	20	1	18
19	20	1		0.6		PX 102 WEST WALL	0.6		0.8	0.2	BREAK		0.2		20	1	20
21	20	1		0.8		PX 102 EAST WALL	0.8	1.0		0.2	BREAK		0.2		20	1	22
23	20	1		0.8		PX 102 EAST WALL	0.8		1.2	0.4	TTB		0.4		20	1	24
25	20	1		0.8		OFFICE 110, 111	0.8	1.2		0.4	CASHIER		0.4		20	1	26
27	20	1		0.8		OFFICE 110	0.8		1.2	0.4	CASHIER		0.4		20	1	28
29	20	1			0.6	PX 102 PWR PLS EAST	0.6	1.0		0.4	TOBACCO CAB		0.4		20	1	30
31	20	1			0.6	PX 102 PWR PLS WEST	0.6		1.0	0.4	TOBACCO CAB		0.4		20	1	32
33	20	1				SPARE	0.0	1.2		1.2	ATM			1.2	20	1	34
35	20	1				SPARE	0.0		0.0	0.0	SPARE				20	1	36
37	20	1				SPARE	0.0	0.0		0.0	SPARE				20	1	38
39	20	1				SPARE	0.0		0.0	0.0	SPARE				20	1	40
41	20	1	0.5			EXIT SIGNS	0.6	0.5		0.0	SPARE				20	1	42
43	45	2			3.6	FRZN BEV ITM #1	3.6		4.8	1.2	STOCK ROOM		1.2		20	1	44
45	–	–			3.6	----	3.6	4.2		0.6	HALL/ELEC		0.6		20	1	46
47	20	1			1.8	DRNK DISPNSR ITM #3	1.8		3.8	2.0	ICE MACHINE			2.0	30	2	48
49	35	2			2.4	SAND. COOLER ITM #13	2.4	4.4		2.0	----			2.0	–	–	50
51	–	–			2.4	----	2.4		4.0	1.6	COOLER			1.6	20	1	52
53	30	1			2.4	MICROWAVE ITM #12	2.4	4.0		1.6	COOLER			1.6	20	1	54
55	20	1				SPARE	0.0		1.6	1.6	COOLER			1.6	20	1	56
57	20	1			1.4	CHILI/CHZ DISP ITM #10A	1.4	3.0		1.6	COOLER			1.6	20	1	58
59	20	1			1.8	CAPPUCCINO ITM #5	1.8		2.2	0.4	EXTERIOR OUTLETS		0.4		20	1	60
61	20	1			1.8	CAPPUCCINO ITM #5	1.8	1.8		0.0	SPARE				20	1	62
63	20	1			1.3	HOT DOG GRILL ITM #37	1.3		1.3	0.0	SPARE				20	1	64
65	20	1			1.5	COFFEE BREW ITM #4	1.5	1.5		0.0	SPARE				20	1	66
67	20	1	0.7			EXTERIOR LIGHTS	0.8		0.7	0.0	SPARE				20	1	68
69	20	1				SPARE	0.0	0.0		0.0	SPARE				20	1	70
71	20	1				SPARE	0.0		0.0	0.0	SPARE				20	1	72
73	20	1				SPARE	0.0	0.0		0.0	SPARE				20	1	74
75	20	1				SPARE	0.0		0.0	0.0	SPARE				20	1	76
77	20	1				SPARE	0.0	0.0		0.0	SPARE				20	1	78
79	20	1				SPARE	0.0		0.0	0.0	SPARE				20	1	80
81	20	1				SPARE	0.0	0.0		0.0	SPARE				20	1	82
83	20	1				SPARE	0.0		0.0	0.0	SPARE				20	1	84

TOTALS: kVA PER PHASE **41** **39** CONNECTED TOTAL kVA **79.9**
AMPS PER PHASE **339** **326** CONNECTED AVERAGE AMPS PER PHASE **333**

NEC DIVERSIFIED LOAD CALCULATIONS

LIGHTING 5kVA @125% =	7 kVA	ALL OTHER LOADS @100% =	66 kVA	DIVERSIFIED TOTAL kVA =	**81**
RECEPTACLES 9kVA @100% =	9 kVA	25% OF LARGEST MOTOR =	0 kVA	AVERAGE AMPS PER PHASE =	**338**
REMAINDER 0kVA @ 50% =	0 kVA				

PANEL "1LB"

VOLTS/PHASE/WIRE:	PANEL SIZE & TYPE:	MAIN SIZE & TYPE:	LOCATION:	CABINET:	NOTES:
120/240 V, 1 PH 3 WIRE	22" W x 6" D, BOLT-ON	400 AMPERE MAIN LUG		SURFACE	

ACCESSORIES: PANEL DIRECTORY, IDENTIFICATION, GROUNDING BAR, SUBFEED LUGS

CKT NO	OCP AMP	OCP POLE	LOAD (kVA) LTG	LOAD (kVA) CO	LOAD (kVA) PWR	DESCRIPTION	LCL kVA	PHASEOAD A	PHASEOAD B	LCL kVA	DESCRIPTION	LOAD (kVA) LTG	LOAD (kVA) CO	LOAD (kVA) PWR	OCP AMP	OCP POLE	CKT NO
1	50	2			4.3	CU-1	4.3	5.5		1.5	REGISTER LIGHTS	1.2			20	1	2
3	–	–			4.3	---	4.3		4.9	0.7	ENTERANCE LIGHTS	0.6			20	1	4
5	50	2			4.3	CU-2	4.3	4.6		0.4	SUB SHOP LIGHTS	0.3			20	1	6
7	–	–			4.3	---	4.3		4.7	0.5	BATH, MECH LIGHTS	0.4			20	1	8
9	20	1			1.7	F-1	1.7	2.1		0.5	BARBER SHOP LIGHTS	0.4			20	1	10
11	20	1			1.7	F-2	1.7		1.9	0.2	BARBER REGISTER			0.2	20	1	12
13	20	1			1.6	EF-1, EF-2	1.6	1.8		0.2	BS01			0.2	20	1	14
15	20	1			0.8	EF-3	0.8		1.0	0.2	BARBER OUTLETS			0.2	20	1	16
17	20	1		0.6		NORTH OUTLETS	0.6	0.8		0.2	BARBER OUTLETS			0.2	20	1	18
19	20	1		0.8		NORTH OUTLETS	0.8		1.0	0.2	BS01			0.2	20	1	20
21	20	1			0.8	OVERHEAD DOOR	0.8	1.0		0.2	FCP			0.2	20	1	22
23	20	1		0.6		SOUTH OUTLETS	0.6		1.2	0.6	WATER HEATER			0.6	20	1	24
25	20	1		0.6		ENTRY OUTLETS	0.6	1.0		0.4	WASHER BS04			0.4	20	1	26
27	20	1		0.6		ENTRY OUTLETS	0.6		1.0	0.4	DRYER BS05			0.4	20	1	28
29	20	1			0.6	REGISTER	0.6	1.6		1.3	DININEG LIGHTS	1.0			20	1	30
31	20	1			0.8	REGISTER	0.8		1.4	0.6	DINING OUTLETS		0.6		20	1	32
33	20	1			0.4	KIOSK	0.4	1.6		1.2	AWNING			1.2	20	1	34
35	20	1			0.8	DRINKING FOUNTAIN	0.8		2.0	1.2	AWNING			1.2	20	1	36
37	20	1		0.6		CORRIDOR 111 OUTLETS	0.6	1.3		0.9	EXTERIOR LIGHTS	0.7			20	1	38
39	20	1			0.8	DRINKING FOUNTAIN	0.8		1.7	1.1	PARKING LOT LIGHTS	0.9			20	1	40
41	20	1		0.4		TOILET OUTLETS	0.4	0.4		0.0	SPARE				20	1	42
43	20	1		0.8		MECH 106 OUTLETS	0.8		0.8	0.0	SPARE				20	1	44
45	20	1		1.0		BARBER 108 OUTLETS	1.0	1.0		0.0	SPARE				20	1	46
47	45	2				SPARE	0.0		0.0	0.0	SPARE				20	1	48
49	–	–				---	0.0	0.0		0.0	SPARE				20	1	50
51	40	2				SPARE	0.0		0.0	0.0	SPARE				20	1	52
53	–	–				---	0.0	0.0		0.0	SPARE				20	1	54
55	30	2				SPARE	0.0		0.0	0.0	SPARE				45	1	56
57	–	–				---	0.0	0.0		0.0	SPARE				45	1	58
59	20	1			0.5	ATM	0.5		0.5	0.0	SPARE				20	1	60
61	20	1				SPARE	0.0	0.0		0.0	SPARE				20	1	62
63	20	1				SPARE	0.0		0.0	0.0	SPARE				20	1	64
65	20	1				SPARE	0.0	0.0		0.0	SPARE				20	1	66
67	20	1				SPARE	0.0		0.0	0.0	SPARE				20	1	68
69	20	1				SPARE	0.0	0.0		0.0	SPARE				20	1	70
71	20	1				SPARE	0.0		0.0	0.0	SPARE				20	1	72
73	20	1				SPARE	0.0	0.0		0.0	SPARE				20	1	74
75	20	1				SPARE	0.0		0.0	0.0	SPARE				20	1	76
77	20	1				SPARE	0.0	0.0		0.0	SPARE				20	1	78
79	20	1				SPARE	0.0		0.0	0.0	SPARE				20	1	80
81	20	1				SPARE	0.0	0.0		0.0	SPARE				20	1	82
83	20	1				SPARE	0.0		0.0	0.0	SPARE				20	1	84

TOTALS: kVA PER PHASE **23** **22** CONNECTED TOTAL kVA **44.8**
AMPS PER PHASE **189** **184** CONNECTED AVERAGE AMPS PER PHASE **187**

NEC DIVERSIFIED LOAD CALCULATIONS

LIGHTING 5kVA @125% =	7 kVA	ALL OTHER LOADS @100% =	33 kVA	DIVERSIFIED TOTAL kVA =	**46**
RECEPTACLES 7kVA @100% =	7 kVA	25% OF LARGEST MOTOR =	0 kVA	AVERAGE AMPS PER PHASE =	**192**
REMAINDER 0kVA @ 50% =	0 kVA				

PANEL "MDS"

VOLTS/PHASE/WIRE:	PANEL SIZE & TYPE:	MAIN SIZE & TYPE:	LOCATION:	CABINET:	NOTES:
120/240 V, 1 PH 3 WIRE	22" W x 6" D, BOLT-ON	400 AMPERE MAIN LUG		SURFACE	

ACCESSORIES: PANEL DIRECTORY, IDENTIFICATION, GROUNDING BAR, SUBFEED LUGS

CKT NO	OCP AMP	OCP POLE	LOAD (kVA) LTG	LOAD (kVA) CO	LOAD (kVA) PWR	DESCRIPTION	LCL kVA	PHASEOAD A	PHASEOAD B	LCL kVA	DESCRIPTION	LOAD (kVA) LTG	LOAD (kVA) CO	LOAD (kVA) PWR	OCP AMP	OCP POLE	CKT NO
1	400	2	2.2	3.6	34.9	1LA	41.3	85.3		45.2	ILB	2.3	3.6	38.7	400	2	2
3	–	–	3.2	5.4	30.6	---	39.9		81.3	42.6	---	1.9	2.8	37.4	–	–	4

TOTALS: kVA PER PHASE **85** **81** CONNECTED TOTAL kVA **166.6**
AMPS PER PHASE **711** **677** CONNECTED AVERAGE AMPS PER PHASE **694**

NEC DIVERSIFIED LOAD CALCULATIONS

LIGHTING 10kVA @125% =	12 kVA	ALL OTHER LOADS @100% =	142 kVA	DIVERSIFIED TOTAL kVA =	**166**
RECEPTACLES 10kVA @100% =	10 kVA	25% OF LARGEST MOTOR =	0 kVA	AVERAGE AMPS PER PHASE =	**693**
REMAINDER 5kVA @ 50% =	3 kVA				

EQUIPMENT SCHEDULE KEY

E	DIVISION 16
Q	FURNISHED WITH THE EQUIPMENT
*	COORDINATE WITH THE DIVISION 15 TEMPERATURE CONTROL INSTALLER
**	AUTOMATIC CONTROL WIRING BY DIVISION 15

EQUIPMENT SCHEDULE

MARK	ITEM DESCRIPTION	LOAD DATA HP	LOAD DATA kW	LOAD DATA MCA	LOAD DATA FLA	LOAD DATA VOLT	LOAD DATA PH	LOAD DATA Hz	WIRE AND CONDUIT SIZE (CC-INDICATES CONDUCTOR AND CONDUIT SCHEDULE)	OVERCURRENT PROTECTION FURN BY	SWITCH TYPE	DISCONNECT SWITCH NEMA RATING	FUSED SWITCH	FUSE RATING	FUSE CLASS	CIRCUIT BREAKER CB	PANEL	RATING	NOTES	MARK
CU-1	CONDENSING UNIT		4.32	36		208	1	60	CC#7	E	60/2	3R	YES	40A	RK5	50/2	1LB-1,3	HACR	1	CU-1
CU-2	CONDENSING UNIT		4.32	36		208	1	60	CC#7	E	60/2	3R	YES	40A	RK5	50/2	1LB-5,7	HACR	1	CU-2
EF-1	EXHAUST FAN		80			120	1	60	CC#1	E	THERMAL SWITCH					20/1	1LB-13	HACR	1	EF-1
EF-2	EXHAUST FAN		80			120	1	60	CC#1	E	THERMAL SWITCH					20/1	1LB-15	HACR	1	EF-2
EF-3	EXHAUST FAN		80			120	1	60	CC#1	E	THERMAL SWITCH					20/1	1LB-9	HACR	1	EF-3
F-1	FURNACE	3/4	1.65		13.8	120	1	60	CC#4	E	THERMAL SWITCH					20/1	1LB-9	HACR	1	F-1
F-2	FURNACE	3/4	1.65		13.8	120	1	60	CC#4	E	THERMAL SWITCH					20/1	1LB-9	HACR	1	F-2

NOTES:
1. LOCATE DISCONNECT ADJACENT TO UNIT.
2. PROVIDE FUSING PER NAMEPLATE DATA OF EXISTING EQUIPMENT. FIELD VERIFY.

L. K. SORENSEN ASSOCIATES, INC.
ARCHITECTS / PLANNERS / LANDSCAPE ARCHITECTS
1332 DUEHL CIRCLE
TAYLORSVILLE, UTAH 84123
(801)262-9393 Fax (801)262-3511

LICENSED PROFESSIONAL ENGINEER No. 7083854 DAVID L. APPLEGATE STATE OF UTAH
01-20-2010

CONSULTANTS

SPECTRUM ENGINEERS
324 S. State St., Suite 400
Salt Lake City, UT 84111
800-676-7077
801-328-5151
fax: 801-328-5155
www.spectrum-engineers.com

UTAH NATIONAL GUARD
PX FACILITY ADDITION
Camp W. G. Williams
Bluffdale, Utah
100% CONSTRUCTION DOCUMENTS

MARK	DATE	DESCRIPTION
2	11/24/09	
1	10/08/09	

PROJECT NO:	-
DATE:	20 JANUARY 2010
CAD DWG FILE:	
DRAWN BY:	cdn
CHECKED BY:	dla
DESIGNED BY:	scl

COPYRIGHT:
THIS PRINT AND ALL INFORMATION HEREON IS SUBJECT TO COPYRIGHT LAWS AND IS THE PROPERTY OF L. K. SORENSEN ASSOCIATES. INC. AND SHALL NOT BE USED ON ANY OTHER PROJECT WITHOUT WRITTEN PERMISSION OF THE ARCHITECT.

SHEET TITLE
ELECTRICAL SCHEDULES

EP602

File Name: P:\2009\20090268\1Drawings\3Sheet\68EP-602.dwg Last Plotted: 2010/01/26 @ 2:50 PM By: cdn

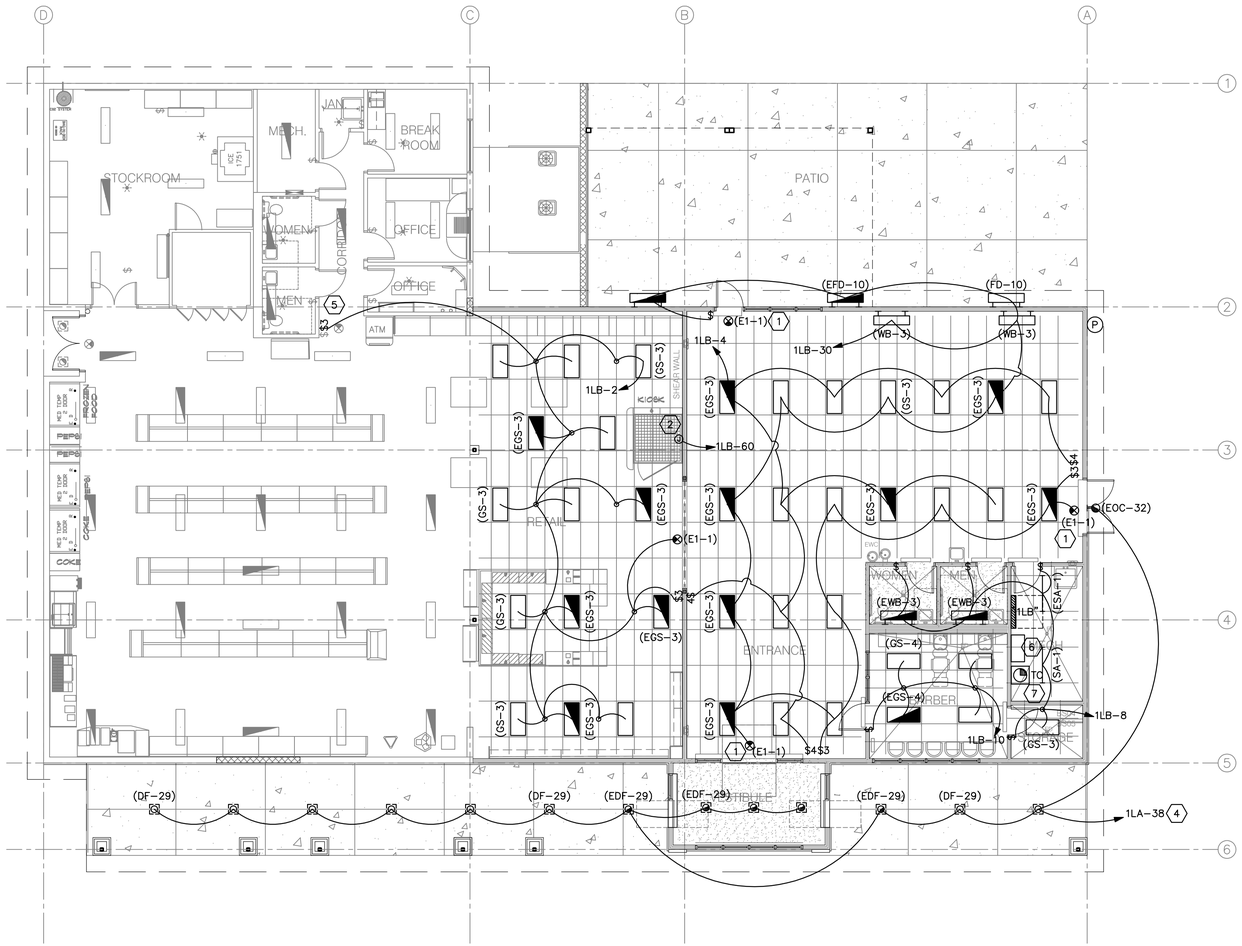

A1 LIGHTING PLAN

SCALE: 1/8" = 1'-0"

NORTH

GENERAL SHEET NOTES

1. CONNECT ALL BATTERY PACKS IN EMERGENCY FIXTURES (HALF SHADED) AND EXIT SIGNS TO UNSWITCHED LEG OF CIRCUIT.

SHEET KEYNOTES

1. CONNECT EXIT SIGN TO UNSWITCHED LEG OF LIGHTING CIRCUIT.
2. PROVIDE POWER TO JUNCTION BOX AT THE KIOSK.
3. PROVIDE LENSED LIGHT FIXTURES APPROVED FOR A FOOD PREPARATION AREA.
4. CONNECT TO NEW TIME CLOCK AND PHOTOCELL. PROVIDE ADDITIONAL CONTACTORS AS REQUIRED.
5. FISH IN EXISTING WALL TO INSTALL 3-WAY SWITCH. PROVIDE RECESSED CUT IN SWITCH BOX AND FLEXIBLE METAL CONDUIT AND CONDUCTORS. CONTRACTOR SHALL REPAIR ANY DAMAGE TO WALL FROM THIS INSTALLATION.
6. PROVIDE LIGHTING CONTACTOR AND ENCLOSURE FOR PARKING LOT LIGHTS.
7. PROVIDE AN NEW TIME CLOCK TO CONTROL THE PARKING LOT LIGHTS.

L. K. SORENSEN ASSOCIATES, INC.
ARCHITECTS / PLANNERS / LANDSCAPE ARCHITECTS
1332 DUEHL CIRCLE
TAYLORSVILLE, UTAH 84123
(801)262-9393 Fax (801)262-3511

LICENSED PROFESSIONAL ENGINEER
No. 7083854
DAVID L. ARTECHE
STATE OF UTAH
01-20-2010

CONSULTANTS

SPECTRUM ENGINEERS
324 S. State St., Suite 400
Salt Lake City, UT 84111
800-678-7077
801-328-5151
fax: 801-328-5155
www.spectrum-engineers.com

UTAH NATIONAL GUARD

PX FACILITY ADDITION

Camp W. G. Williams
Bluffdale, Utah

100% CONSTRUCTION DOCUMENTS

MARK	DATE	DESCRIPTION
2	11/24/09	
1	10/08/09	

PROJECT NO:	-
DATE:	20 JANUARY 2010
CAD DWG FILE:	
DRAWN BY:	cdn
CHECKED BY:	dla
DESIGNED BY:	scl

COPYRIGHT:
THIS PRINT AND ALL INFORMATION HEREON IS SUBJECT TO COPYRIGHT LAWS AND IS THE PROPERTY OF L. K. SORENSEN ASSOCIATES, INC. AND SHALL NOT BE USED ON ANY OTHER PROJECT WITHOUT WRITTEN PERMISSION OF THE ARCHITECT.

SHEET TITLE

LIGHTING PLAN

EL101

File Name: P:\2009\20090268\1Drawings\3Sheet\68EL-101.dwg Last Plotted: 2010/01/26 @ 2:50 PM By: cdn

LIGHTING FIXTURE SCHEDULE

NOTE TO BIDDERS: COMPLY WITH SECTIONS 16511, 16521, AND 16570 OF THE SPECIFICATIONS.
REFER TO SPECIFICATIONS FOR IMPORTANT TECHNICAL REQUIREMENTS FOR LIGHTING FIXTURES, BALLASTS, AND LAMPS. THE CATALOG NUMBERS LISTED BELOW HAVE BEEN CAREFULLY PREPARED TO ASSIST BIDDERS IN SELECTING PRODUCTS TO ACHIEVE THE DESIGN CONCEPT, HOWEVER, PRIOR TO BIDDING, EACH MANUFACTURER SHALL COMPARE THE CATALOG NUMBERS SHOWN WITH THE DESCRIPTION AND REQUIREMENTS ON THE DRAWINGS, AND SHALL NOTIFY THE ARCHITECT/ENGINEER OF ANY DISCREPANCIES. SPECIFICALLY INCLUDED IN THIS EVALUATION SHALL BE THE VERIFYING OF PROPER MOUNTING KITS OR ACCESSORIES TO FACILITATE INSTALLATION AS SHOWN AT EACH LOCATION ON THE DRAWINGS. NO ALLOWANCE OR REDRESS WILL BE ALLOWED FOR DISCREPANCIES THAT WERE NOT REPORTED TO THE ARCHITECT/ENGINEER IN TIME FOR CORRECTION OR CLARIFICATION BEFORE THE BID. THE REPORTING OF ANY AMBIGUITY IS THE RESPONSIBILITY OF THE BIDDER. PROVIDE UNIT PRICES AND FIXTURE BRAND SELECTED FOR ADD/DELETE CHANGES FOR EACH FIXTURE TYPES SHOWN WITHIN 48 BUSINESS HOURS OF THE BID DATE. FAILURE TO COMPLY WITH THIS REQUIREMENT MAY DISQUALIFY THE PRODUCTS AND EMPOWER THE ENGINEER TO DETERMINE FAIR VALUE FOR FIXTURE AND INSTALLATION CHANGES, WITHOUT FURTHER INPUT FROM THE CONTRACTOR OR INSTALLER. SUBMITTAL PACKAGE SHALL INCLUDE LAMP MANUFACTURER AND CATALOG NUMBER ON EACH FIXTURE SHEET. ON ALL PENDANT MOUNTED FIXTURES, PROVIDE A SECOND SET OF PENDANTS, OF A DIFFERENT LENGTH, AS DIRECTED BY THE ARCHITECT/ENGINEER, PROVIDED AND INSTALLED AT NO ADDITIONAL CHARGE. ALL FIXTURES SHALL BE APPROVED BY UL OR ANOTHER ACCEPTABLE TESTING LAB FOR THE PURPOSE INTENDED AND WITH THE LAMP AND BALLAST PROPOSED. CONTRACTOR ALLOWANCE PRICES ARE ACCURATE WHEN THIS JOB WAS SPECIFIED, CONTRACTOR AND ELECTRICAL DISTRIBUTOR SHALL VERIFY THIS ALLOWANCE AND REPORT ANY PROBLEMS TO THE ENGINEER BEFORE THE BID. ALLOWANCE PRICE MAY OR MAY NOT INCLUDE LAMP(S) OR FREIGHT AS NOTED, AND DO NOT INCLUDE ANY TAXES. UNIVERSAL VOLTAGE (120/277) BALLASTS REQUIRED UNLESS NOTED OTHERWISE. DIMENSION SEQUENCE = (LENGTH X WIDTH X DEPTH) IN INCHES.

SYMBOL MARK	FIXTURE CHARACTERISTICS BODY / AIR / MOUNTING / DOOR LENS/LOUVER/REFLECTOR/OTHER	LAMP	WATTS	VOLTS	MANUFACTURER	CATALOG NUMBER	NOTES
DF	FLUORESCENT DOWNLIGHT; THERMALLY PROTECTED HOUSING: TO ACCOMMODATE MULTIPLE TRIMS AND REFLECTOR ASSEMBLIES FOR LAMPS AS LISTED BELOW; ELECTRONIC BALLASTS; LOW IRIDESCENT REFLECTOR FINISH (EVEN IF NOT SHOWN IN CATALOG #); SELF FLANGING TRIM UNLESS NOTED.						
DF-29	RECESSED DOWNLIGHT; 6-7" APERTURE, HORIZONTAL, 32W CF-AMALGAM LAMP, CLEAR.	1-CF-A32 RE835	50W	277/120V	PORTFOLIO	C6132E-6151LI (13 X 11-1/2 X 6-1/2)	
					LIGHTOLIER	8031CLW/6132BU (12-3/4 X 10 X 6-7/8)	
					LITHONIA	AF 1/32TRT 6AR MVOLT (15-13/16 X 12-15/16 X 10-7/8)	
					OMEGA	S61H32-U-T61H-CS (11-11/16 X 11-7/16 X 5-3/4)	
					PRESCOLITE	CFT632HEB-STF602H (16-1/4 X 14-7/16 X 6-1/4)	
					INFINITY	PH60 132T-EB (GX24Q-3) 277 BH (16-1/4 X 12 X 5-1/4)	
E	E PREFIX INDICATES THAT FIXTURE IS PROVIDED WITH AN EMERGENCY BATTERY PACK TO PROVIDE POWER TO ANY 2, 3, 4 OR 8 FOOT FLOURESCENT LAMP COMPATIBLE WITH ALL STANDARD AND ELECTRONIC BALLASTS; COMPLETELY SELF-CONTAINED TO PROVIDE 90 MINUTES OF EMERGENCY POWER TO FIXTURE BALLAST; MINIMUM LIGHT OUTPUT FOR TYPICAL 4' LAMP SHALL BE 1100 LUMENS OR HIGHER;UNIVERSAL TRANSFORMER FOR 120 OR 277 VOLTS; LOW VOLTAGE PROTECTION, COMBINATION TEST SWITCH AND AC "ON" INDICATOR; 10 YEAR PRO-RATA WARRANTY; INSTALL TEST SWITCH IN A MANNER THAT REQUIRES NO DISASSEMBLY FOR TESTING.						
E	EMERGENCY BATTERY PACK.			120/277V	IOTA	I-80	
				3W	BODINE	B50	
					LITHONIA	PS-1400	
					PRESCOLITE	EFPS-5	
					EELP	EB1400 (CONTRACTOR INSTALLED)	
					CHLORIDE	CFP841	
					LIGHTOLIER	FBP50	
					SIDELITE	S60F	
E1	EXIT SIGN: THERMOPLASTIC HOUSING; UNIVERSAL MOUNTING; UNIVERSAL ARROWS PER PLANS; EMERGENCY BATTERY PACK WITH 10 YEAR PRO-RATA WARRANTY; LED, DIFFUSE LENS PANEL; GREEN LETTERS ON WHITE BACKGROUND. MUST MEET NFPA ILLUMINATION STANDARDS.						
E1-1	SINGLE FACE:	LED	1W	120/277V	MCPHILBEN	CXXL-1-GW	
					DUAL-LITE	LXSGWE	
					EELP	XE 1 GW EM	
					LITHONIA	LQM S W 1 G 120/277 ELN	
					SURE-LITES	LPX70DGW	
					DAY-BRITE	CXL-1-GW-EM	
					CHLORIDE	SLN1GW	
					LIGHTOLIER	LTN1GW	
FD	WET LOCATION FLUORESCENT; PLASTIC HOUSING; IMPACT RESISTANT ACRYLIC LENS.						
FD-10	4' 2 T8 FLUORESCENT LAMPS; INSTANT START BALLASTS; 0 DEGREE STARTING TEMPERATURE.	2-F32T8 RE835	70W	277/120V	LITHONIA	DMW 232T8 AR 120/277 PROGRAM START	
					METALUX	VT2-232T8/DR-PROG-WL	
					HUBBELL	EWL042-SPDR-U	
					COLUMBIA	LUN4-232T8-EB120/277 PROG	
					DAYBRITE	V2WAB232T8-1/2EB-LT	
					LIGHTOLIER	STW-232-U-SO	
GS	TROFFERS: RECESSED FOR LAY-IN GRID; STATIC; HINGED AND LATCHED STEEL DOOR; .125 ACRYLIC PRISMATIC LENS, MINIMUN 1/8"; EARTHQUAKE CLIPS; MAX 5" DEEP; SPECIFICATION GRADE; PROGRAM START ELECTRONIC BALLASTS, T8 LAMPS; ONE BALLAST PER FIXTURE WHERE POSSIBLE, UNLESS TWO LEVEL SWITCHING IS SHOWN ON THE PLANS.						
GS-3	2X4, 2 LAMP.	2-F32T8 RE835	65W	277/120V	LITHONIA	2 SP8G 232 A12125 MVOLT TUBRHP (4-1/2" DEPTH)	
					METALUX	2GP-232A125-UNV-EB81-PROGRAM START (3-3/4" DEPTH)	
					DAYBRITE	2DPG232-FS21-UNV-1/2EB-SPEC (4-3/8" DEPTH)	
					LSI	LA125 232 SD SS010PS UE (4" DEPTH)	
					LIGHTOLIER	XT2GVI232-UNV-SOP (3-5/8" DEPTH)	
					COLUMBIA	ST824-232G-FSA12.125-EB8LHPRUNV (3-3/4" DEPTH)	
GS-4	2X4, 3 LAMP.	3-F32T8 RE835	95W	277/120V	LITHONIA	2 SP8G 332 A12125 1/3 MVOLT TUBRHP (4-1/2" DEPTH)	
					METALUX	2GP-332A125-UNV-EB81-PROGRAM START (3-3/4" DEPTH)	
					DAYBRITE	2DPG332-FS21-UNV-1/3EB-SPEC (4-3/8" DEPTH)	
					COLUMBIA	ST824-332G-FSA12.125-3EB8LHPRUNV (3-3/4" DEPTH)	
					LIGHTOLIER	XT2GVI332-UNV-03P (3-5/8" DEPTH)	
					LSI	LA125 332 SD SS010PS UE (4" DEPTH)	
OC	WALL PACK: ADJUSTABLE CUT OFF; FULL PERIMETER GASKETING: WET LOCATION; STAINLESS STEEL HINGES AND LATCHES; PROJECTING LENS; HPF BALLAST; SEE ELEVATION FOR MOUNTING HEIGHT, COLOR AS SPECIFIED BY ARCHITECT.						
OC-32	CF42, RECESSED J BOX. MEDIUM THROW, SQUARE, DECORATIVE	CF42 RE835	50W	277/120V	MCPHILBEN	101MT-42TRF-CBA-DT	
					LSI	GBWS-FTM-42CFL-F-120/277-XX-NO	
					LITHONIA	WST 42TRT MD MVOLT	
					LUMARK	PLIP-T-42-MT-XX	
					LSI	GBWS FTM 42CFL F UE XXX W/LAMP	
EOC-32	CF42, RECESSED J BOX. MEDIUM THROW, SQUARE, DECORATIVE EMERGENCY BATTERY PACK.	CF42 RE835	50W	277/120V	MCPHILBEN	101MT-42TRF-CBA-DT	
					LSI	GBWS-FTM-42CFL-F-120/277-XX-NO	
					LITHONIA	WST 42TRT MD MVOLT	
					LUMARK	PLIP-T-42-MT-XX	
					LSI	GBWS FTM 42CFL F UE XXX W/LAMP	

LIGHTING FIXTURE SCHEDULE

SA	GENERAL PURPOSE INDUSTRIAL: WHITE ENAMEL, APERTURED REFLECTOR; PROGRAM START ELECTRONIC BALLASTS; T8 LAMPS; ONE BALLAST PER FIXTURE WHERE POSSIBLE; UNLESS TWO LEVEL SWITCHING IS SHOWN ON THE PLANS; STEM MOUNTED WITH TONG HANGERS.						
SA-1	4', 2-LAMP.	2-F32T8 RE835	65W	277/120V	LITHONIA	EJA232-MVOLT-TUBRHP-THUN	
					LIGHTOLIER	KWA232-U-SOP	
					METALUX	IA-232-UNV-PROGRAM START	
					HUBBELL	IG142R-PP10-UPS	
					COLUMBIA	CSR4-232U-EB8120/277 PROG-CSTH	
					DAYBRITE	IA232-UNV-1/2-EB-SPEC	
W	LOW PROFILE WRAPAROUND: SURFACE MOUNTED SUITABLE FOR MOUNTING ON LOW DENSITY CEILINGS WRAPAROUND ACRYLIC PRISMATIC DIFFUSER; WHITE ENAMEL ENDPLATES; MINIMUM CU OF 70 @ 80/50/20 AND RCR=1; PROGRAM START ELECTRONIC BALLASTS; T8 LAMPS; ONE BALLAST PER FIXTURE WHERE POSSIBLE, UNLESS TWO LEVEL SWITCHING IS SHOWN ON THE PLANS.						
W-3	NARROW BODY WRAPAROUND; 2-LAMP, APPROX; 3" X 10" X 48".	2-F32T8 RE835	65W	277/120V	LITHONIA	LB232-MVOLT-TUBPHP	
					DAYBRITE	CAN232-UNV-1/2-EB-SPEC	
					METALUX	WS-232A-UNV-PROGRAM START	
					LIGHTOLIER	WA232-U-SOP	
					LSI	PR 232 SS010PRS UE	
					COLUMBIA	WC4-232-EBPS120/277	
W-5	WIDE BODY WRAPAROUND; 3-LAMP, APPROX; 3" X 16" X 48".	3-F32T8 RE835	95W	277/120V	LITHONIA	LB332-1/3MVOLT-TUBPHP	
					DAYBRITE	CAW332-UNV-1/3-EB-SPEC	
					METALUX	WSA-332A-UNV-PROGRAM START	
					LIGHTOLIER	WB332-U-03P	
					LSI	PR 332 SS010PRS UE	
					COLUMBIA	WCW4-332-3EBPS120/277	
WB	WALL MOUNTED FLUORESCENT LOCATED ABOVE WALL ELEMENT (MIRROR/WHITEBOARD, ETC.): AS INDICATED ON DRAWINGS; WITH ACRYLIC INJECTION MOLDED; PROGRAM START ELECTRONIC BALLASTS; T8 LAMPS; ONE BALLAST PER FIXTURE WHERE POSSIBLE, UNLESS TWO LEVEL SWITCHING IS SHOWN ON THE PLANS.						
WB-3	2-LAMP, WALL MOUNT 48", STEEL ENCLOSURE, DOWNLIGHT ONLY; ACRYLIC INJECTION MOLDED PRISMATIC DIFFUSER.	2-F32T8 RE835	65W	277/120V	DAYBRITE	CD232W-UNV-1/2-EB-SPEC	
					LIGHTOLIER	CWB232-WB-U-SOP	
					METALUX	BI-232-UNV-PROGRAM START	
					L.A.L.	BSQ100-2-4R-INJ-WHT-T8EB-120/277-UPS	
					COLUMBIA	WAL4-232-EBPS120/277	
					LITHONIA	WP 232 DO MVOLT-TUBPHP	
					LSI	WB 232 SS010PRS UE	
ZL	LIGHT POLES: TOTALLY ENCLOSED RAINTIGHT, DUST-TIGHT AND CORROSION RESISTANT; POLE AS SHOWN IN DETAIL WITH HANDHOLE, COVER, BOLT COVER, AND BASE; PAINTED (COLOR TO BE SELECTED BY ARCHITECT / ENGINEER WHICH MAY DIFFER FROM CATALOG NUMBER SHOWN). MTB= 120,208,240,277 VOLT MULTI-TAP BALLAST. ALL BALLASTS HPF. ARM MOUNT. HORIZONTAL LAMP, SEGMENTED OPTICS.						
ZL-13	SHOEBOX STYLE, CUTOFF LUMINAIRE SINGLE HEAD, MULTI-TAP BALLAST; TYPE 4 DISTRIBUTION.400PSMH SEGMENTED REFLECTOR	400PSMH	450W	MTB	GARDCO	H-19-1-4-400PSMH-MT-CBA	
					SPERO	S6M-400PSMH-4M-A-MT-CBA	
					HUBBELL	MSQ-A400W-HP8-1 type 4 dist.	
					WIDELITE	S10P-400-4-QV-S-XXX	
					SPAULDING	CM-PM5-M400PS-IV-MT-SCBA	
					LITHONIA	KSF2 400M R4 TB SP04 SCWA	
					LSI	CHHM-4-400PSMH-F-MT-XXX	

L. K. SORENSEN ASSOCIATES, INC.
ARCHITECTS / PLANNERS / LANDSCAPE ARCHITECTS
1332 DUEHL CIRCLE
TAYLORSVILLE, UTAH 84123
(801)262-9393 Fax (801)262-3511

LICENSED PROFESSIONAL ENGINEER
No. 7083854
DAVID L. ATTECKS
STATE OF UTAH
01-20-2010

CONSULTANTS

SPECTRUM ENGINEERS
324 S. State St., Suite 400
Salt Lake City, UT 84111
800-678-7077
801-328-5151
fax: 801-328-5155
www.spectrum-engineers.com

UTAH NATIONAL GUARD
PX FACILITY ADDITION
Camp W. G. Williams
Bluffdale, Utah
100% CONSTRUCTION DOCUMENTS

MARK	DATE	DESCRIPTION
2	11/24/09	
1	10/08/09	

PROJECT NO:	-
DATE:	20 JANUARY 2010
CAD DWG FILE:	
DRAWN BY:	cdn
CHECKED BY:	dla
DESIGNED BY:	scl

COPYRIGHT:
THIS PRINT AND ALL INFORMATION HEREON IS SUBJECT TO COPYRIGHT LAWS AND IS THE PROPERTY OF L.K. SORENSEN ASSOCIATES, INC. AND SHALL NOT BE USED ON ANY OTHER PROJECT WITHOUT WRITTEN PERMISSION OF THE ARCHITECT.

SHEET TITLE
LIGHTING FIXTURE SCHEDULE

EL601

File Name: P:\2009\20090268\1Drawings\3Sheet\68EL-601.dwg Last Plotted: 2010/01/26 @ 2:50 PM By: cdn

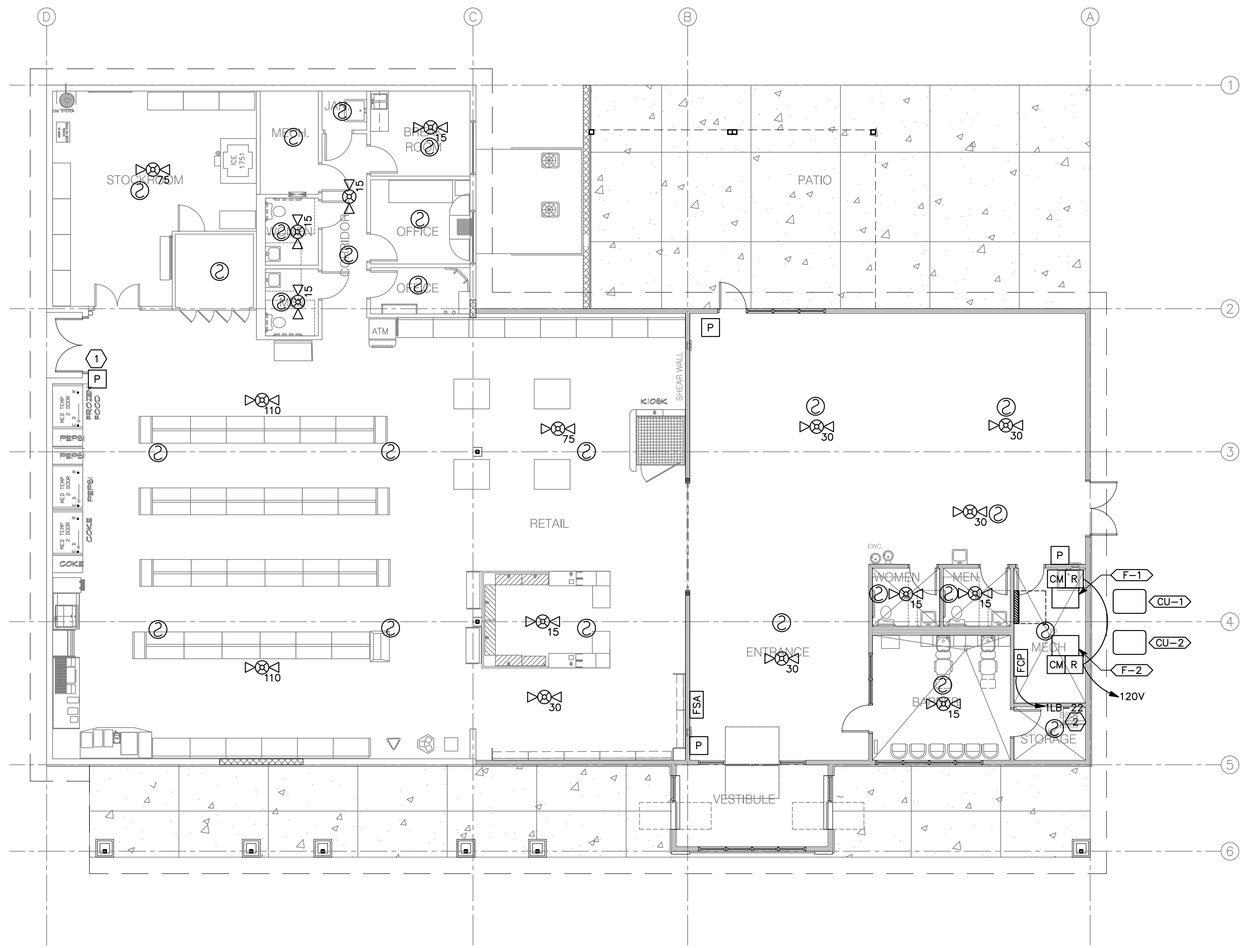

GENERAL SHEET NOTES

1. PROVIDE A NEW ADDRESSABLE FIRE ALARM PANEL. COORDINATE EQUIPMENT AND DEVICES WITH UTAH NATIONAL GUARD PRIOR TO INSTALLATION.
2. CONTRACTOR SHALL PROVIDE DUCT DETECTORS FOR ALL SUPPLY AND RETURN FANS OVER 2000 CFM. COORDINATE WITH MECHANICAL ENGINEER AND INSTALLER.

⬡SHEET KEYNOTES

1. FISH IN PULL STATION IN EXISTING. CONTRACTOR RESPONSIBLE TO PATCH DAMAGE TO EXISTING WALL. PROVIDE WIREMOLD OR EQUIVALENT IF DEVICE IS ON BLOCK WALL AND MUST BE SURFACE MOUNTED.
2. SEE EP401 AND EP602 FOR CIRCUITING.

NORTH

A1 FIRE ALARM PLAN
SCALE: 1/8" = 1'-0"

L. K. SORENSEN ASSOCIATES, INC.
ARCHITECTS / PLANNERS / LANDSCAPE ARCHITECTS
1332 DUEHL CIRCLE
TAYLORSVILLE, UTAH 84123
(801)262-9393 Fax (801)262-3511

LICENSED PROFESSIONAL ENGINEER
No. 7083854
DAVID L. ATTEBERY
STATE OF UTAH
01-20-2010

CONSULTANTS

SPECTRUM ENGINEERS
324 S. State St., Suite 400
Salt Lake City, UT 84111
800-678-7077
801-328-5151
fax: 801-328-5155
www.spectrum-engineers.com

UTAH NATIONAL GUARD
PX FACILITY ADDITION
Camp W. G. Williams
Bluffdale, Utah
100% CONSTRUCTION DOCUMENTS

MARK	DATE	DESCRIPTION
2	11/24/09	
1	10/08/09	

PROJECT NO:	-
DATE:	20 JANUARY 2010
CAD DWG FILE:	
DRAWN BY:	cdn
CHECKED BY:	dla
DESIGNED BY:	scl

COPYRIGHT:
THIS PRINT AND ALL INFORMATION HEREON IS SUBJECT TO COPYRIGHT LAWS AND IS THE PROPERTY OF L.K. SORENSEN ASSOCIATES, INC. AND SHALL NOT BE USED ON ANY OTHER PROJECT WITHOUT WRITTEN PERMISSION OF THE ARCHITECT.

SHEET TITLE
FIRE ALARM PLAN

FA101

File Name: P:\2009\20090268\1Drawings\3Sheet\68FA-101.dwg Last Plotted: 2010/01/26 @ 2:50 PM By: cdn

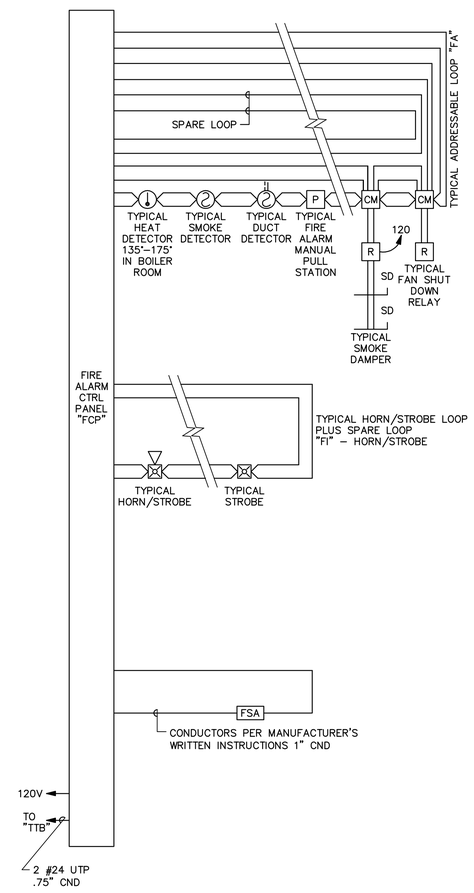

A3 ADDRESSABLE FIRE ALARM RISER

NO SCALE

GENERAL SHEET NOTES

1. PLANS ARE BASED UPON 99 MONITOR AND CONTROL DEVICES PER ADDRESSABLE LOOP. OTHER CONFIGURATIONS ARE ACCEPTABLE SUBJECT TO CONTRACTOR ALLOWING FOR INCREASED WIRING REQUIREMENTS AND SUBMITTAL DRAWINGS SHOWING NEW WIRING CONFIGURATION. MAXIMUM INITIAL DEVICES PER LOOP SHALL NOT EXCEED 75% MAXIMUM ALLOWABLE.
2. PLANS ARE BASED UPON THE WIRING SCHEDULE SHOWN. WHERE MANUFACTURER'S REQUIREMENTS EXCEED REQUIREMENTS SHOWN, INCLUDE ADDITIONAL ASSOCIATED COSTS AND SUBMITTAL DRAWINGS INDICATING NEW WIRING CONFIGURATION.
3. PLANS ARE BASED UPON 2 AMPS AT 24 VDC, NOT TO EXCEED 75% (1.50 AMPS AVAILABLE), POWER SUPPLY CAPACITY PER NOTIFICATION CIRCUIT. NOTIFICATION DEVICE LOADS ARE BASED UPON NOTIFICATION DEVICE SCHEDULE SHOWN. INCLUDE ADDITIONAL ASSOCIATED COSTS FOR INCREASED WIRING AND POWER SUPPLY CAPACITY IF LOADS OF ACTUAL DEVICES PROVIDED EXCEED CIRCUIT CAPACITY, OR IF LOAD OUTPUT OF ACTUAL POWER SUPPLIES PROVIDED IS SIZED DIFFERENTLY. PROVIDE SUBMITTAL DRAWINGS SHOWING NEW WIRING CONFIGURATION.
4. FLOW AND TAMPER CONFIGURATION BASED UPON FIRE SPRINKLER DESIGN CONCEPT. FIELD VERIFY ACTUAL REQUIREMENTS. INCLUDE ANY ADDITIONAL MONITOR MODULES REQUIRED BY ACTUAL DESIGN REQUIREMENTS.
5. HEAT DETECTORS WHEN INSTALLED IN ELEVATOR SHAFTS OR MECHANICAL ROOMS FOR ELEVATOR SHUT DOWN SHALL HAVE HEAT DETECTOR WITH LOWER RESPONSE TIME INDEX THAN SPRINKLER HEAD.
6. PROVIDE POWER SUPPLY CAPACITY AS REQUIRED FOR DOOR HOLD OPENS SHOWN.
7. BATTERY CAPACITY TO BE ADEQUATE TO OPERATE 5 MINUTES AFTER 24 HOURS PLUS 25% SPARE CAPACITY.
8. VFD REQUIRES TWO RELAYS, ONE FOR SMOKE CONTROL, ONE SPARE.
9. RUN SPARE LOOPS IN SAME CONDUIT. DO NOT EXCEED 40% AREA FILL OF CONDUITS.
10. PROVIDE DUCT DETECTORS FOR SUPPLY AND RETURN AIR SYSTEMS OVER 2000 CFM. INSTALL DUCT DETECTORS PER NFPA 72 REQUIREMENTS AND PROVIDE ADDITIONAL DUCT DETECTORS DEPENDING UPON FINAL DUCT ARRANGEMENT.
11. PROVIDE DUCT DETECTOR AT EACH FLOOR, PRIOR TO CONNECTION TO A COMMON RETURN AND PRIOR TO RECIRCULATING OR FRESH AIR INLET IN AIR RETURN SYSTEMS OVER 15,000 CFM CAPACITY AND SERVING MORE THAN ONE STORY.
12. PROVIDE MANUAL PULL STATIONS IN BOILER ROOMS AND KITCHENS.
13. PROVIDE ONE YEAR OFF SITE MONITORING INCLUDING ALL INTERFACE DEVICES AND MONITORING CHARGES. COORDINATE WITH BUILDING OWNER'S OFF SITE MONITORING COMPANY.
14. LOCATE SMOKE DETECTORS MINIMUM 3' FROM AIR SUPPLY AND RETURN LOUVERS.
15. PROVIDE SYNCHRONIZED STROBES THROUGHOUT FACILITY. PROVIDE SYNCHRONIZATION MODULES PER MANUFACTURER'S REQUIREMENTS. INCLUDE ADDITIONAL WIRING, IF REQUIRED.
16. INITIATING AND INDICATING LOOPS SHALL NOT SERVE AN AREA OF GREATER THAN 22,500 SQUARE FEET. PROVIDE ADDITIONAL LOOPS FOR AREAS LARGER THAN THIS.
17. ALL OUTPUT DEVICES ARE DESIGNED ON SYSTEMS WITH 2 AMP POWER SUPPLY.
18. HORN/STROBE BASED ON 120 MILLIAMPS, DOOR HOLDERS BASED ON 70 MILLIAMPS.
19. INSTALL DUCT DETECTORS PER NFPA 72 REQUIREMENTS AND PROVIDE ADDITIONAL DUCT DETECTORS DEPENDING UPON FINAL DUCT ARRANGEMENT.

WIRING SCHEDULE

FUNCTION	< 500'	< 1000'	1000'–3000'	> 3000'
ADDRESSABLE LOOP	#18 TSP	#18 TSP	#16 TSP	#14 TSP
POWER LOOP	#14 THWN	#14 THWN	#12 THWN	#10 THWN
SPARE LOOP	#14 THWN	#14 THWN	#12 THWN	#10 THWN
STROBE HORNS	#14 THWN	#14 THWN	#12 THWN	#10 THWN
MAGNETIC DOOR HOLDER	#12 THWN	#10 THWN		
SPEAKERS	#16 TSP	#16 TSP	#14 TSP	#14 TSP

NOTIFICATION SCHEDULE

SYMBOL	STROBE SIZE	COVERAGE	AVERAGE CURRENT	MAXIMUM PER CIRCUIT ALONE
15	15 CD	20'x20'	.085A	17
30	30 CD	30'x30'	.135A	11
75	75 CD	40'x40'	.200A	7
110	110 CD	50'x50'	.225A	6

L. K. SORENSEN ASSOCIATES, INC.
ARCHITECTS / PLANNERS / LANDSCAPE ARCHITECTS
1332 DUEHL CIRCLE
TAYLORSVILLE, UTAH 84123
(801)262-9393 Fax (801)262-3511

LICENSED PROFESSIONAL ENGINEER
No. 7083854
DAVID L. ATTEBERY
STATE OF UTAH
01–20–2010

CONSULTANTS

SPECTRUM ENGINEERS
324 S. State St., Suite 400
Salt Lake City, UT 84111
800-678-7077
801-328-5151
fax: 801-328-5155
www.spectrum-engineers.com

UTAH NATIONAL GUARD
PX FACILITY ADDITION
Camp W. G. Williams
Bluffdale, Utah
100% CONSTRUCTION DOCUMENTS

MARK	DATE	DESCRIPTION
2	11/24/09	
1	10/08/09	

PROJECT NO:	-
DATE:	20 JANUARY 2010
CAD DWG FILE:	
DRAWN BY:	cdn
CHECKED BY:	dla
DESIGNED BY:	scl

COPYRIGHT:
THIS PRINT AND ALL INFORMATION HEREON IS SUBJECT TO COPYRIGHT LAWS AND IS THE PROPERTY OF L.K. SORENSEN ASSOCIATES, INC. AND SHALL NOT BE USED ON ANY OTHER PROJECT WITHOUT WRITTEN PERMISSION OF THE ARCHITECT.

SHEET TITLE

FIRE ALARM RISER

FA601

File Name: P:\2009\20090268\1Drawings\3Sheet\68FA-601.dwg Last Plotted: 2010/01/26 @ 2:50 PM By: cdn