WEBER STATE UNIVERSITY
NEW INFORMATION BOOTH

OGDEN, UTAH

DFCM PROJECT NO. 08322810

State of Utah– Department of Administrative Services

DIVISION OF FACILITIES CONSTRUCTION AND MANAGEMENT

4110 State Office Building / Salt Lake City, Utah 84114 / 538–3018

May 5th, 2009

State of Utah
Department of Administrative Services
Division of Facilities Construction & Management
4110 State Office Building
Salt Lake City, Utah 84114
Phone: (801) 538 - 3018
Fax: (801) 538 - 3267
Internet: http://www.dfcm.state.ut.us

Weber State University

CREATED BY: P+A architects

P+A architects
821 East Kensington Ave.
Salt Lake City, Utah 84105
P: 801.484.1161
F: 801.485.4640
e-mail parchitects@comcast.net

STATE OF UTAH — 261110 — LICENSED ARCHITECT

architecture planning design

BUILDING NAME:

PROJECT TITLE:
WEBER STATE UNIVERSITY
OGDEN, UTAH

NEW INFORMATION BUILDING
CONSTRUCTION DOCUMENTS

MARK	DATE	DESCRIPTION

ISSUE TYPE: Construction Documents

ISSUE DATE: MAY 5th, 2009

DFCM PROJECT NO: 08322810
CAD PROJECT NO:
CAD DWG FILE:
DRAWN BY: BRIAN AND SCOTT
CHK'D BY: SCOTT
COPYRIGHT: STATE OF UTAH

SHEET TITLE

COVER SHEET

SHEET NUMBER

A-G1000

WEBER STATE UNIVERSITY
NEW INFORMATION BOOTH

OGDEN, UTAH

DFCM PROJECT NO. 08322810

ABBREVIATIONS

Reference to materials or methods have been made on the drawings in accordance with the following abbreviations:

#	NUMBER	GWB.	GYPSUM WALL BOARD
'	FEET	GYP. BD.	GYPSUM WALL BOARD
"	INCHES	HC.	HANDICAPPED
&	AND	HDW.	HARDWARE
@	AT	H.M.	HOLLOW METAL
Ø	DIAMETER	HORIZ.	HORIZONTAL
ADJ	ADJUSTABLE	HR.	HOUR
AFF	ABOVE FINISH FLOOR	HT.	HEIGHT
ALUM	ALUMINUM	HVAC	HEATING/VENTILATION/ AIR CONDITIONING
ASTM	AMERICAN SOCIETY FOR TESTING MATERIALS	HYD	HYDRANT
ATS	AUTOMATIC TRANSFER SWITCH	I.D.	INSIDE DIAMETER
		INFO	INFORMATION
BD	BOARD	INSUL.	INSULATION
BITUM.	BITUMINOUS	LAV.	LAVATORY
BLDG	BUILDING	LT.	LIGHT
B.M.	BENCHMARK	MATL.	MATERIAL
B.O.	BOTTOM OF	MAX.	MAXIMUM
BRG.	BEARING	MECH.	MECHANICAL
BTWN.	BETWEEN	MFR.	MANUFACTURER
CER.	CERAMIC	MIN.	MINIMUM
CJ	CONSTRUCTION JOINT	MISC.	MISCELLANEOUS
CLG.	CEILING	M.O.	MASONRY OPENING
CLR.	CLEAR	MTL.	METAL
CMU	CONCRETE MASONRY UNIT	NIC	NOT IN CONTRACT
COL.	COLUMN	NO.	NUMBER
CONC.	CONCRETE	N.T.S.	NOT TO SCALE
CONT.	CONTINUOUS	O.C.	ON CENTER
CONST.	CONSTRUCTION	O.D.	OUTSIDE DIAMETER
COORD.	COORDINATE	O.H.	OVERHEAD
CTJ	CONTRACTION JOINT	OPP.	OPPOSITE
DBL.	DOUBLE	PART.	PARTITION
DPW	DIRECTOR OF PUBLIC WORKS	PERP.	PERPENDICULAR
DIA.	DIAMETER	PL.	PLATE
DPG	DUGWAY PROVING GROUND	PNTD.	PAINTED
DTL.	DETAIL	PSI	POUNDS PER SQUARE INCH
DWGS.	DRAWINGS	R.D.	ROOF DRAIN
EA.	EACH	RAD.	RADIUS
EJ	EXPANSION JOINT	REINF.	REINFORCED
ELEV.	ELEVATION	REQ'D	REQUIRED
EQ.	EQUAL	RET.	RETURN
E.S.	EACH SIDE	REV.	REVERSED
EXIST.	EXISTING	RM.	ROOM
EXPAN.	EXPANSION	R.O.	ROUGH OPENING
EXT.	EXTERIOR	SCHED.	SCHEDULE
E.W.C.	ELECTRIC WATER COOLER	SHR.	SHOWER
F.D.	FLOOR DRAIN	SHT.	SHEET
FDN.	FOUNDATION	SIM.	SIMILAR
F.E.	FIRE EXTINGUISHER	SPEC.	SPECIFICATION
F.E.C.	FIRE EXTINGUISHER CABINET	STD.	STANDARD
F.F.	FINISH FLOOR	STR.	STRUCTURAL
FIN.	FINISH	SUSP.	SUSPENDED
FLR.	FLOOR	THRU	THROUGH
F.L.	FLOW LINE	T.O.	TOP OF
FTG.	FOOTING	T.O.A.	TOP OF ASPHALT
GA.	GAGE	T.O.C.	TOP OF CURB
GALV.	GALVANIZED	T.O.F.	TOP OF FOOTING
GF-CI	GOVERNMENT FURNISHED CONTRACTOR INSTALLED	T.O.S.	TOP OF SLAB OR SIDEWALK
		T.O.W.	TOP OF WALL
GF-GI	GOVERNMENT FURNISHED GOVERNMENT INSTALLED	TYP.	TYPICAL
		VERT.	VERTICAL
G.I.	GALVANIZED STEEL	VEST.	VESTIBULE
GND.	GROUND	W/	WITH
GOVT.	GOVERNMENT	WD	WOOD

DESIGN TEAM

ARCHITECT
P+A ARCHITECTS
CONTACT: SCOTT PRIOR
821 EAST KENSINGTON AVENUE
SALT LAKE CITY, UTAH 84105
PHONE: 801.484.1161
FAX: 801.485.4640

STRUCTURAL
VECTOR ENGINEERING
CONTACT: JACOB PROCTOR
9138 SOUTH STATE STREET, SUITE 101
SANDY, UTAH 84070
PHONE: 801.990.1775
FAX: 801.990.1776

ELECTRICAL
ENVISION ENGINEERING
CONTACT: RYAN VAN VOIST
244 WEST 300 NORTH, SUITE 100
SALT LAKE CITY, UTAH 84106
PHONE: 801.534.1130
FAX: 801.534.1080

MECHANICAL
CUNNING AND ASSOCIATES MECHANICAL
CONTACT: NORMAN CUNNING
591 NORTH MAIN
CLEARFIELD, UTAH 84015
PHONE: 801.776.4005
FAX: 801.797.0939

GRAPHIC KEY

CONCRETE · ASPHALT PAVING · FINISH LUMBER
GRAVEL · STEEL STUD PARTITION · WOOD FRAMING
MASONRY · CERAMIC TILE · PLYWOOD

01 / A-2 — DETAIL NUMBER; SHEET ON WHICH DETAIL APPEARS (DETAIL)

01 / A-2 — SECTION NUMBER; SHEET ON WHICH SECTION APPEARS

01 / A-2 — ELEVATION VIEW; DETAIL NUMBER; SHEET ON WHICH DETAIL APPEARS (INTERIOR ELEVATION)

01 — PARTITION TYPE

101 — DOOR NUMBER

A — WINDOW TYPE

LIST OF DRAWINGS

GENERAL	
AG-1000	COVER SHEET
AG-1001	COVER SHEET AND GENERAL INFORMATION
CIVIL ENGINEERING	
C-100	GRADING AND UTILITY PLAN
C101	SITE DETAILS
ARCHITECTURAL DRAWINGS	
A-SP100	SITE PLAN
A-FP100	ARCHITECTURAL FLOOR, ROOF, AND CEILING PLANS
A-EL200	BUILDING ELEVATIONS
A-BS300	BUILDING SECTIONS
A-BS301	BUILDING AND WALL SECTIONS
A-DT500	SCHEDULES AND DETAILS
A-DT501	WALL TYPES AND MISC. DETAILS
A-IE600	INTERIOR ELEVATIONS AND CASEWORK SECTIONS
STRUCTURAL	
S-100	STRUCTURAL GENERAL NOTES
S-101	STANDARD DETAILS AND SCHEDULES
S-200	FOUNDATION AND SHEAR WALL PLAN
S-201	ROOF FRAMING PLAN
S-300	FOUNDATION AND FRAMING DETAILS
S-301	SPECIAL INSPECTIONS
MECHANICAL/PLUMBING	
M-SH000	SHOP MECHANICAL /PLUMBING SCHEDULES AND DETAILS
M-HP100	MECHANICAL AND PLUMBING PLANS AND DETAILS
M-DT500	MECHANICAL AND PLUMBING DETAILS
M-DT501	MECHANICAL AND PLUMBING DETAILS
ELECTRICAL	
E-GE001	SYMBOLS AND SCHEDULE
E-GE002	SCHEDULES
E-GE003	SCHEDULES
E-ES101	SITE PLAN
E-EE100	POWER, ROOF POWER AND LIGHTING PLANS
E-GE501	DETAILS

VICINITY MAP

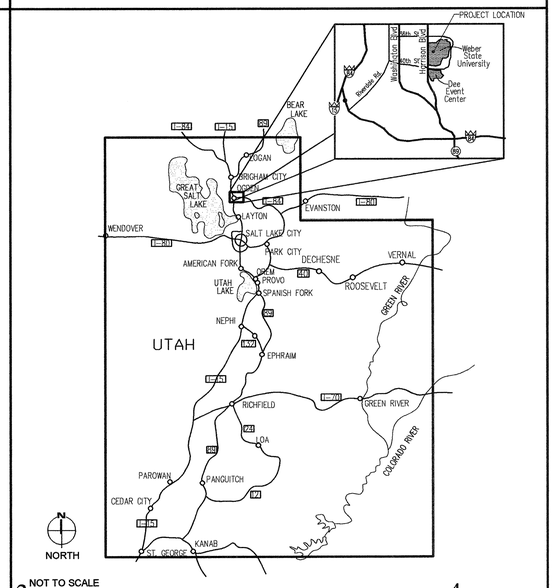

DFCM DESIGN AND CODE CRITERIA

APPLICABLE CODES

	Year		Year
International Building Code	2006	National Electrical Code	2008
International Mechanical Code	2006	Uniform Code for Building Conservation	N/A
International Plumbing Code	2006	ADA Accessibility Guidelines	ICC/ANSI A117.1
International Fire Code	2006		
International Energy Conservation Code	N/A		

A. Occupancy and Group: B
Change in Use: Yes ___ No NO Mixed Occupancy: Yes ___ No X
Special Use and Occupancy (e.g. High Rise, Covered Mall): NO

B. Seismic Design Category: D Design Wind Speed: 90 mph

C. Type of Construction (circle one):
I/A I/B II/A II/B III/A III/B IV/HT IV/A V/B

D. Fire Resistance Rating Requirements for the Exterior Walls based on the fire separation distance (in hours):
North: N/A South: N/A East: N/A West: N/A

E. Mixed Occupancies: NO Nonseparated Uses: NO

F: Sprinklers:
Required: NO Provided: NO Type of Sprinkler System: N/A

G: Number of Stories: 1 Building Height: 11'-10"

H: Actual Area per Floor (square feet): 184 SQUARE FEET

I: Tabular Area: 9000 SQ FT ALLOWABLE

J: Area Modifications:

a) $A_a = A_t + \left[\frac{A_t I_f}{100}\right] + \left[\frac{A_t I_a}{100}\right]$ $\quad I_f = 100\left[\frac{F}{P} - 0.25\right]\frac{W}{30}$

b) Sum of the Ratio Calculations for Mixed Occupancies:

$\frac{\text{Actual Area}}{\text{Allowable Area}} \leq 1$

c) Total Allowable Area for:
1) One Story: –
2) Two Story: $A_a(2)$ –
3) Three Story: $A_a(3)$ –

d) Unlimited Area Building: Yes ___ No X Code Section: N/A

K. Fire Resistance Rating Requirements for Building Elements (hours).

Element	Hours	Assembly Listing	Element	Hours	Assembly Listing
Exterior Bearing Walls	0	–	Floors - Ceiling Floors	0	–
Interior Bearing Walls	0	–	Roofs - Ceiling Roofs	0	–
Exterior Non-Bearing Walls	0	–	Exterior Doors and Windows	0	–
Structural Frame	0	–	Shaft Enclosures	N/A	–
Partitions - Permanent	0	–	Fire Walls	0	–
Fire Barriers	0	–	Fire Partitions	0	–
			Smoke Partitions	0	–

L. Design Occupant Load: 2
Exit Width Required: 32" Exit Width Provided: 32"

M. Minimum Number of Required Plumbing Facilities:
a) Water Closets - Required (m) 1 (f) ___ Provided (m) ___ (f) ___
b) Lavatories - Required (m) 1 (f) ___ Provided (m) ___ (f) ___
c) Bath Tubs or Showers: NONE
d) Drinking Fountains: SINK PROVIDED Service Sinks: SINK PROVIDED

FOOTNOTES:

1) In case of conflict with the U.S. Department of Justice Federal Registers Parts I through X - ADA Guidelines and specific reference to the International Building Code Accessibility Chapters, the more restrictive requirement shall govern.

2) Additional Code Information shall be provided at the discretion of the Building Official for Complex Buildings. Including, but not limited to:
a) High Rise Requirements.
b) Atriums.
c) Performance Based Criteria.
d) Means or Egress Analysis.
e) Fire Assembly Locator Sheet.
f) Exterior and Interior Accessibility Route.
g) Fire Stopping, Including Tested Design Number.

* 3) Deferred Submittals As Listed Below To Be Submitted To The Building Official
a) All submittals will be provided to the architect. There will be no deferred submittals.

State of Utah
Department of Administrative Services
Division of Facilities Construction & Management
4110 State Office Building
Salt Lake City, Utah 84114
Phone: (801) 538 - 3018
Fax: (801) 538 - 3267
Internet: http://www.dfcm.state.ut.us

Weber State University

CREATED BY: P+A architects

P+A architects
821 East Kensington Ave.
Salt Lake City, Utah 84105
P: 801.484.1161
F: 801.485.4640
e-mail parchitects@comcast.net

STATE OF UTAH — SCOTT A. PRIOR — 261110 — LICENSED ARCHITECT

☐ architecture ☐ planning ☐ design

CONSULTANT:

PROJECT TITLE:
WEBER STATE UNIVERSITY
OGDEN, UTAH

NEW INFORMATION BUILDING
CONSTRUCTION DOCUMENTS

MARK	DATE	DESCRIPTION

ISSUE TYPE: Construction Documents

ISSUE DATE: MAY 5th, 2009

DFCM PROJECT NO: 08322810
CAD PROJECT NO:
CAD DWG FILE:
DRAWN BY: BRIAN AND SCOTT
CHK'D BY: SCOTT

COPYRIGHT: STATE OF UTAH

SHEET TITLE

INDEX SHEET

SHEET NUMBER

A-G1001

NOTES:

1. CONSTRUCT ADA RAMPS PER UDOT STD DWGS GW5 SERIES (SEE C101).
2. ALL CURB AND GUTTER TO BE UDOT TYPE B1 CURB AND GUTTER.
3. CONSTRUCT SIDEWALK AND CURB & GUTTER PER UDOT STD DWG GW SERIES (SEE C101).
4. REMOVE CONFLICTING STRIPING.
5. RE-ESTABLISH ALL DISTURBED LANDSCAPING.
6. ALL NEW LANDSCAPING TO MATCH EXISTING DESIGN.
7. SEE ARCHITECTURAL DRAWINGS FOR BUILDING & CURB WALL DETAILS AND ELEVATIONS.
8. ALL ROADWAY ITEMS OF WORK ON THIS SHEET REFERENCE UDOT 2008 STANDARD SPECIFICATIONS AND APPLICABLE SUPPLEMENTAL SPECIFICATIONS .
9. REMOVE ASPHALT PAVEMENT QTY (250 SQ YD).
10. REMOVE CONCRETE CURB AND GUTTER QTY (197 FT).
11. PROPOSED CONCRETE CURB AND GUTTER QTY (194 FT) .
12. PROPOSED HMA PAVING (418 SQ YD).

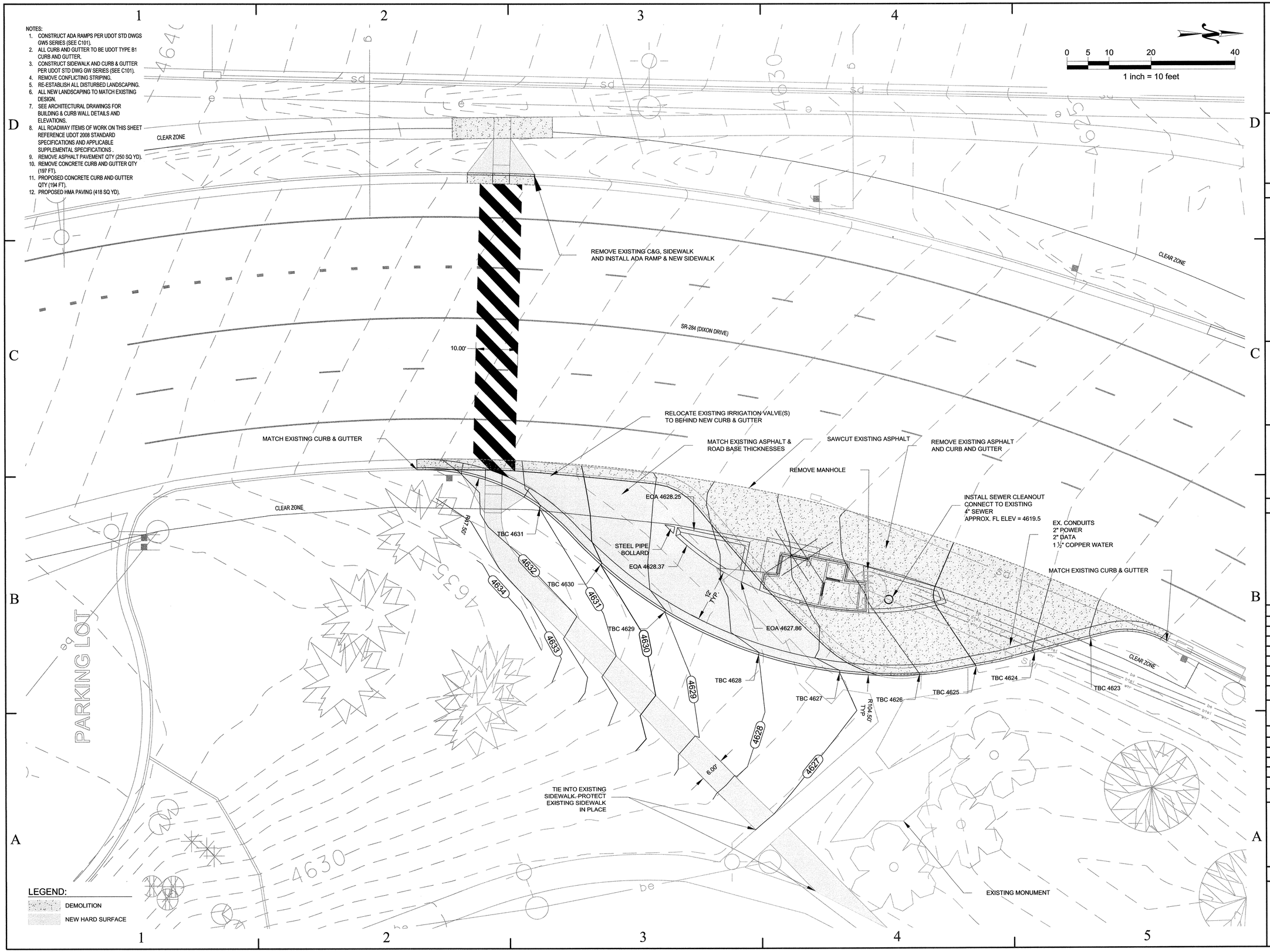

State of Utah
Department of Administrative Services
Division of Facilities Construction & Management
4110 State Office Building
Salt Lake City, Utah 84114
Phone: (801) 538 - 3018
Fax: (801) 538 - 3267
Internet: http://www.dfcm.state.ut.us

Weber State University

CONSULTANT: PEC

PROJECT ENGINEERING CONSULTANTS
8819 South Redwood Rd, Suite C
West Jordan, UT 84088
Tel. 801.495.4240
Fax. 801.495.4244
www.pecutah.com

LICENSED PROFESSIONAL ENGINEER
5-20-09
No. 4770480-2202
LEO JAMES FLORENCE
STATE OF UTAH

PROJECT TITLE:

WEBER STATE UNIVERISTY INFORMATION BOOTH

MARK	DATE	DESCRIPTION

ISSUE TYPE: CONSTRUCTION

ISSUE DATE: 05/20/2009

DFCM PROJECT NO: 08322810
CAD PROJECT NO: UT 9004
CAD DWG FILE: GRADING PLAN
DRAWN BY: JEFF ROBERTS
CHK'D BY: LJF
COPYRIGHT: STATE OF UTAH

SHEET TITLE

GRADING AND UTILITY PLAN

SHEET NUMBER

C100

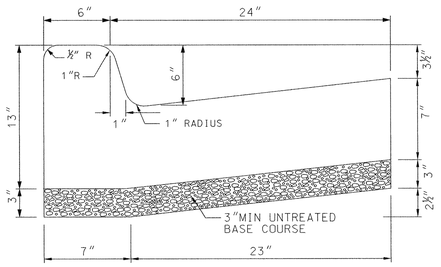

TYPE B1
CURB & GUTTER
AREA = 1.680 SQ.FT.

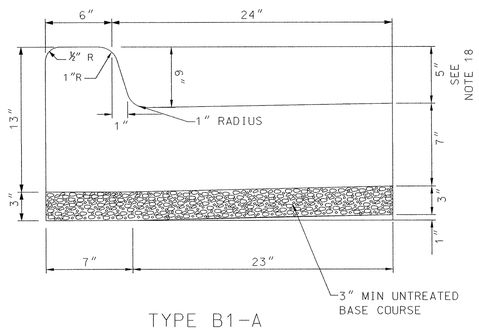

TYPE B1-A
CURB & GUTTER
GUTTER PAN SLOPE REDUCED FOR ADA RAMP
AREA = 1.680 SQ FT

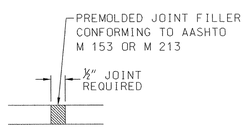

EXPANSION-CONTRACTION
JOINT DETAIL

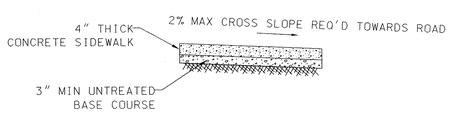

SIDEWALK DETAIL

1. SITE CONDITIONS WILL VARY. CONFIGURATION OF RAMP, LANDING, AND TRANSITION MAY BE CHANGED, BUT THEY MUST MEET DIMENSIONS AND SLOPES SHOWN HERE. THE USE OF FLARES, CURBWALLS, ETC. ARE AT THE DISCRETION OF THE ENGINEER.
2. PROVIDE DETECTABLE WARNING SURFACE FOR FULL WIDTH OF CURB CUT. SEE DETAIL A FOR DETECTABLE WARNING SURFACE DIMENSIONS.
3. LOCATE DETECTABLE WARNING SURFACE SO THE EDGE NEAREST THE STREET IS AT OR WITHIN 2" OF THE BACK OF CURB.
4. RAMP GRADE BREAK MUST BE PERPENDICULAR TO THE RUNNING SLOPE.
5. PERPENDICULAR AND PARALLEL PEDESTRIAN RAMPS SHOWN ON THIS DRAWING ARE ACCEPTABLE FOR USE AT MID-BLOCK OR CORNER INSTALLATIONS. REFER TO STD DWG GW 5B AND GW 5C FOR EXAMPLES OF CORNER INSTALLATIONS.
6. PROVIDE DETECTABLE WARNING SURFACE COLOR THAT CONTRASTS WITH ADJACENT WALKING SURFACE. EITHER LIGHT-ON-DARK OR DARK-ON-LIGHT. ACCEPTABLE COLORS INCLUDE: RED, BLACK, OR YELLOW.
7. USE CLASS AA(AE) CONCRETE.
8. USE UNTREATED BASE COURSE UNDER ALL CONCRETE FLATWORK.
9. WHEN DETECTABLE WARNING SURFACE IS CUT, GRIND OFF REMAINING PORTION OF ANY CUT DOMES. SEAL ALL CUT PANEL EDGES TO PREVENT WATER DAMAGE.
10. LOCATE CURB CUT WITHIN CROSSWALK.
11. DOWELS: ¾" DEFORMED BARS ON 5' MAX.CENTERS.
12. PRECAST CURBS:
    A. MINIMUM OF 10' IN LENGTH.
    B. DOWELS AT A MINIMUM OF 3 PER 10' LENGTH.
    C. INCLUDE ADEQUATE REINFORCING STEEL TO WITH STAND HANDLING STRESSES.
13. CONCRETE CLASS AA "AE"
14. CURB HEIGHT IS MEASURED VERTICALLY FROM THE FLOW LINE OF THE GUTTER TO TOP BACK OF CURB.
15. REFER TO ROADWAY PLANS FOR UNTREATED BASE COURSE SIZE.
16. ADJUST CURB FACE TO 4" MAXIMUM HEIGHT WHEN USED IN CONJUNCTION WITH GUARDRAIL BARRIER.
17. REFER TO STD DWG GW 3 FOR CURB AND GUTTER AT ADA RAMPS.
18. AT ADA RAMP LOCATIONS, FLATTEN GUTTERS AS SHOWN. WHERE MORE THAN ONE RAMP WILL BE CONSTRUCTED AT A CORNER, FLATTEN GUTTER BETWEEN RAMPS AS WELL AS AT CURB RAMPS.
19. ALL CURB AND GUTTER TO BE UDOT TYPE B1 CURB AND GUTTER.
20. CONSTRUCT SIDEWALK AND CURB AND GUTTER PER UDOT STANDARD DRAWINGS (SHOWN).
21. SEE ARCHITECTURAL DRAWINGS FOR BUILDING AND CURBWALL DETAILS AND ELEVATIONS.
22. ALL ROADWAY ITEMS OF WORK ON THIS SHEET REFERENCE UDOT 2008 STANDARD SPECIFICATIONS AND APPLICABLE SUPPLEMENTAL SPECIFICATIONS.
23. MAXIMUM DISTANCE BETWEEN TOOLED OR CONSTRUCTION JOINTS 10' LATERALLY AND LONGITUDINALLY SPACED EQUALLY.
24. PROVIDE EXPANSION JOINTS WHERE CONCRETE SIDEWALK BUTTS AGAINST CONCRETE DRIVEWAYS AND IN CONCRETE SIDEWALK AT 30 FEET INTERVALS.
25. USE CLASS AA(AE) CONCRETE FOR SIDEWALKS.
26. USE UNTREATED BASE COURSE UNDER ALL SIDEWALKS.

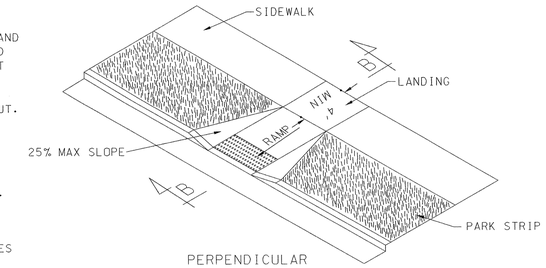

PERPENDICULAR
PEDESTRIAN RAMP

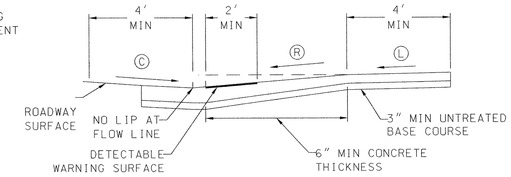

SECTION B-B

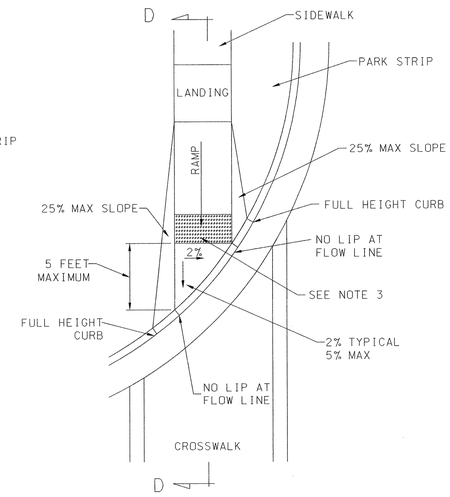

SLOPE TABLE			
	ITEM	MAX. RUNNING SLOPE *	MAX. CROSS SLOPE *
Ⓛ	LANDING	2% (1V:48H)(b)	2% (1V:48H) (b)
Ⓡ	RAMP	8.33% (1V:12H)(c)	2% (1V:48H) (d)
Ⓒ	CLEAR SPACE	5% (1V:20H)(a)	2% (1V:48H) (d)
	SIDEWALK	--	2% (1V:48H)
	FLARE	10% (1V:10H)	--

* RUNNING SLOPE IS IN THE DIRECTION OF PEDESTRIAN TRAVEL. CROSS SLOPE IS PERPENDICULAR TO PEDESTRIAN TRAVEL.
(a) TRANSITION RUNNING SLOPE NEEDS TO BE CONSISTENT ACROSS ENTIRE CURB CUT. WARP GUTTER PAN TO MEET REQUIRED TRANSITION SLOPE AT CURB CUT.
EXCEPTIONS:
(b) SLOPE REQUIREMENTS DO NOT APPLY AT MID-BLOCK CROSSINGS.
(c) PARALLEL RAMPS ARE NOT REQUIRED TO EXCEED 15-FEET IN LENGTH.
(d) CROSS SLOPE REQUIREMENT DOES NOT APPLY AT PERPENDICULAR RAMP MID-BLOCK CROSSING.

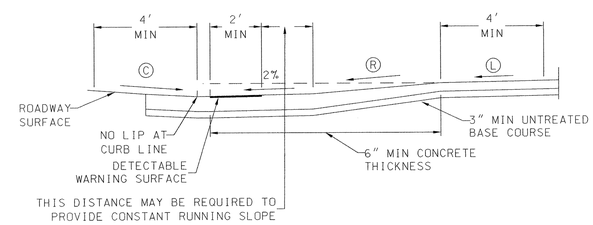

SECTION D-D

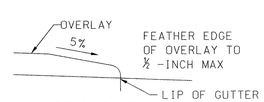

TRANSITION
DETAIL

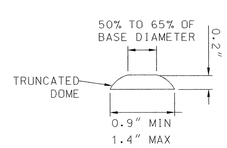

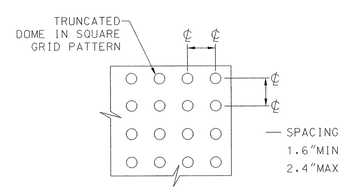

DETECTABLE WARNING SURFACE
DETAIL A

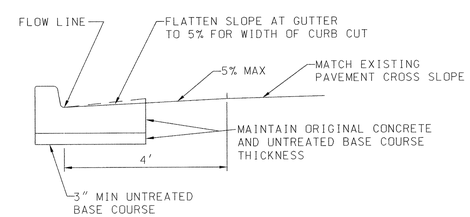

CLEAR SPACE DETAIL

State of Utah
Department of Administrative Services
Division of Facilities
Construction & Management
4110 State Office Building
Salt Lake City, Utah 84114
Phone: (801) 538 - 3018
Fax: (801) 538 - 3267
Internet: http://www.dfcm.state.ut.us

Weber State University

CONSULTANT: PEC

PROJECT ENGINEERING CONSULTANTS
8819 South Redwood Rd, Suite C
West Jordan, UT 84088
Tel. 801.495.4240
Fax. 801.495.4244
www.pecutah.com

LICENSED PROFESSIONAL ENGINEER
5-26-09
No. 4770486-2202
LEO JAMES FLORENCE
STATE OF UTAH

PROJECT TITLE:
WEBER STATE UNIVERISTY INFORMATION BOOTH

MARK	DATE	DESCRIPTION

ISSUE TYPE: CONSTRUCTION

ISSUE DATE: 05/20/2009

DFCM PROJECT NO: 08322810
CAD PROJECT NO: UT 9004
CAD DWG FILE: DETAIL SHEET
DRAWN BY: BETHANY VEIL
CHK'D BY: JDR
COPYRIGHT: STATE OF UTAH

SHEET TITLE
DETAIL SHEET

SHEET NUMBER
C101

GENERAL LANDSCAPING PLANT LIST & NOTES

Quantity	Symbol	Botanical Name	Common Name	Size	Remarks
As shown		New Bio-Grass sod over new 4" top soil see landscape drawing for general information			

1. The general contractor shall provide new sprinkler system for lawn areas as shown. New sprinklers to match existing sprinklers, systems and type, as used by Weber State University
2. The general contractor shall provide new top soil in new planters.

LEGEND

- CONTRACTOR STAGING AREA
- PARKING — CONTRACTOR PARKING AREA
- DUMPSTER — CONTRACTORS DUMPSTER LOCATION
- CONTRACT LIMIT LINE
- CONTRACTOR VEHICLE ACCESS TO CONSTRUCTION SITE

GENERAL NOTES

1. GENERAL CONTRACTOR IS RESPONSIBLE FOR REPLACEMENT OF ANY SIDEWALK, CURB & GUTTER, ASPHALT, LANDSCAPING ETC. DISTURBED OR DESTROYED DURING CONSTRUCTION.
2. CONTRACTOR SHALL MAINTAIN EMERGENCY AND UTILITY VEHICLE ACCESS AT ALL TIMES TO ALL EXISTING BUILDINGS AND BUILDING ENTRANCES
3. GENERAL CONTRACTOR SHALL VERIFY ALL EXISTING SITE CONDITIONS PRIOR TO BIDDING.
4. GENERAL CONTRACTOR SHALL PROTECT EXISTING BUILDING FROM DAMAGE DURING CONSTRUCTION.
5. EXISTING DRIVE APPROACHES TO REMAIN CLEAR AT ALL TIMES
6. ALL EXISTING SIDEWALKS TO REMAIN CLEAR AT ALL TIMES
7. ALL EXISTING CONCRETE AND ASPHALT PATHWAYS TO REMAIN OPEN TO PEDESTRIANS AND VEHICLES AT ALL TIMES DURING CONSTRUCTION
8. GENERAL CONTRACTOR SHALL PROVIDE SELF CONTAINED TOILET FACILITIES AS PER SPECIFICATION. LOCATE AS PER KEY NOTES.
9. IT IS THE GENERAL CONTRACTORS RESPONSIBILITY TO PROVIDE SAFETY NETTING AND BARRIERS BELOW WORKERS TO PROTECT PEDESTRIANS FROM POTENTIAL FALLING OBJECTS.
10. THE GENERAL CONTRACTOR SHALL CLOSE OFF EXISTING SIDEWALKS LOCATED BELOW WORKERS AND PROVIDE ALTERNATIVE ROUTES FOR PEDESTRICANS IN AREAS OF CONSTRUCTION.
11. BUILDING ENTRANCES AND EXITS SHALL NOT BE BLOCKED OR CLOSED AT ANY TIME DURING CONSTRUCTION.

REFERENCE NOTES

1. PROJECT LOCATION
2. GENERAL CONTRACTORS STAGING AREA
3. EXISTING CONCRETE AND ASPHALT PATHWAYS TO REMAIN OPEN TO PEDESTRIANS AND VEHICLES AT ALL TIMES DURING CONSTRUCTION
4. GENERAL CONTRACTORS PARKING AREA
5. CONTRACTOR VEHICLE ACCESS TO CONSTRUCTION SITE
6. EXISTING DRIVE APPROACHES TO REMAIN CLEAR AT ALL TIMES
7. EXISTING AREA OF LANDSCAPING NOT TO BE DISTURBED
8. GENERAL CONTRACTOR SHALL PROVIDE SELF CONTAINED TOILET FACILITIES AS PER SPECIFICATION DURING CONSTRUCTION. LOCATE SELF CONTAINED TOILET FACILITIES INSIDE STAGING AREA
9. NEW SIDEWALK, SEE CIVIL ENGINEERING DRAWINGS
10. NEW 4" BURRIED PVC SPRINKLER SYSTEM PIPE SLEVE. CAP ENDS AND MARK LOCATION.
11. NEW PLANTERS, SEE PLANTER SECTION ON DRAWING AD1501 FOR DRAINAGE INFORMATION
12. PROVIDE BURRIED 1" PVC CONDUIT FROM PLANTER BACK TO UTILITY ROOM 102 FOR FUTURE SPRINKLER CONTROLS
13. SPRINKLER CONTROL BOX
14. ADA VAN PARKING STALL WITH INTERNATIONAL SYMBOL FOR ADA PARKING PAINTED
15. PAINTED WITH TRAFFIC WHITE PAINT, "NO PARKING" AND STRIPING
16. ADA VAN PARKING SIGN, SEE DETAIL ON DRAWING AD1500
17. EDGE OF ROAD STRIPING

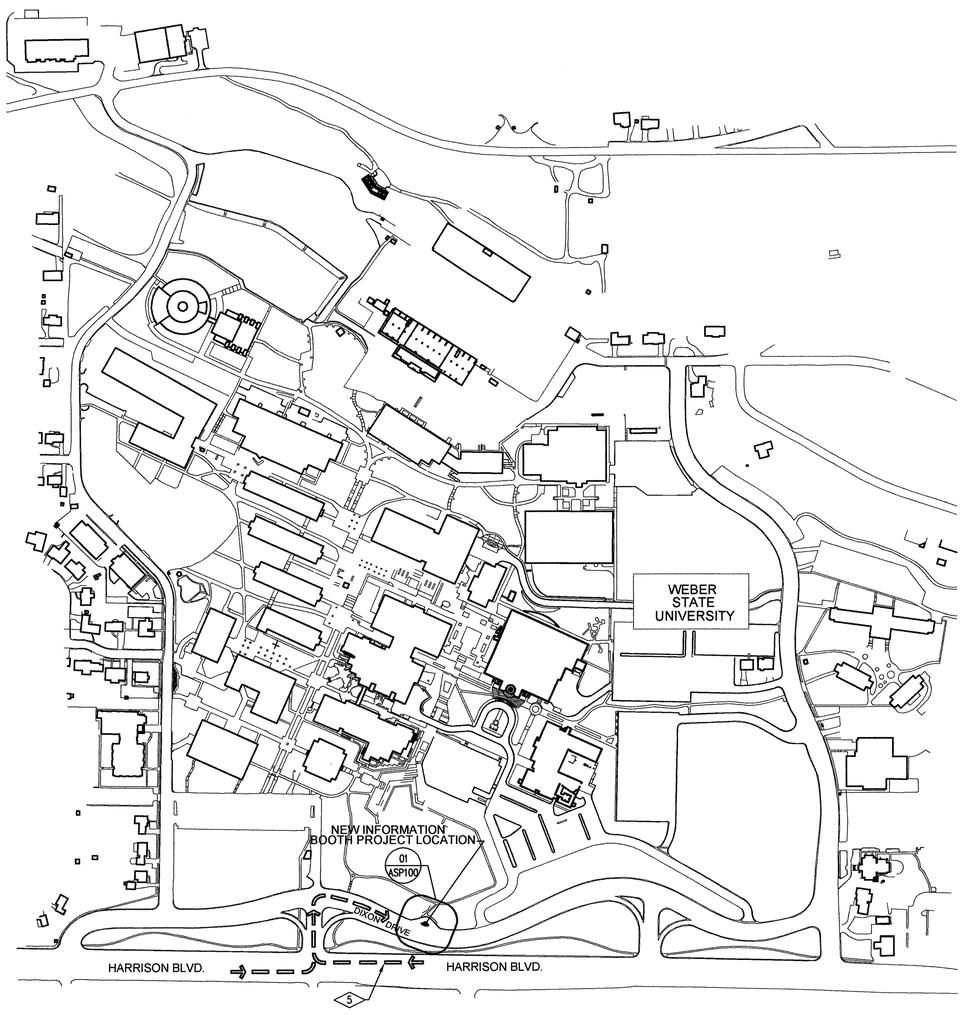

PLAN NORTH — 02 SP100 — CAMPUS SITE PLAN
N.T.S.

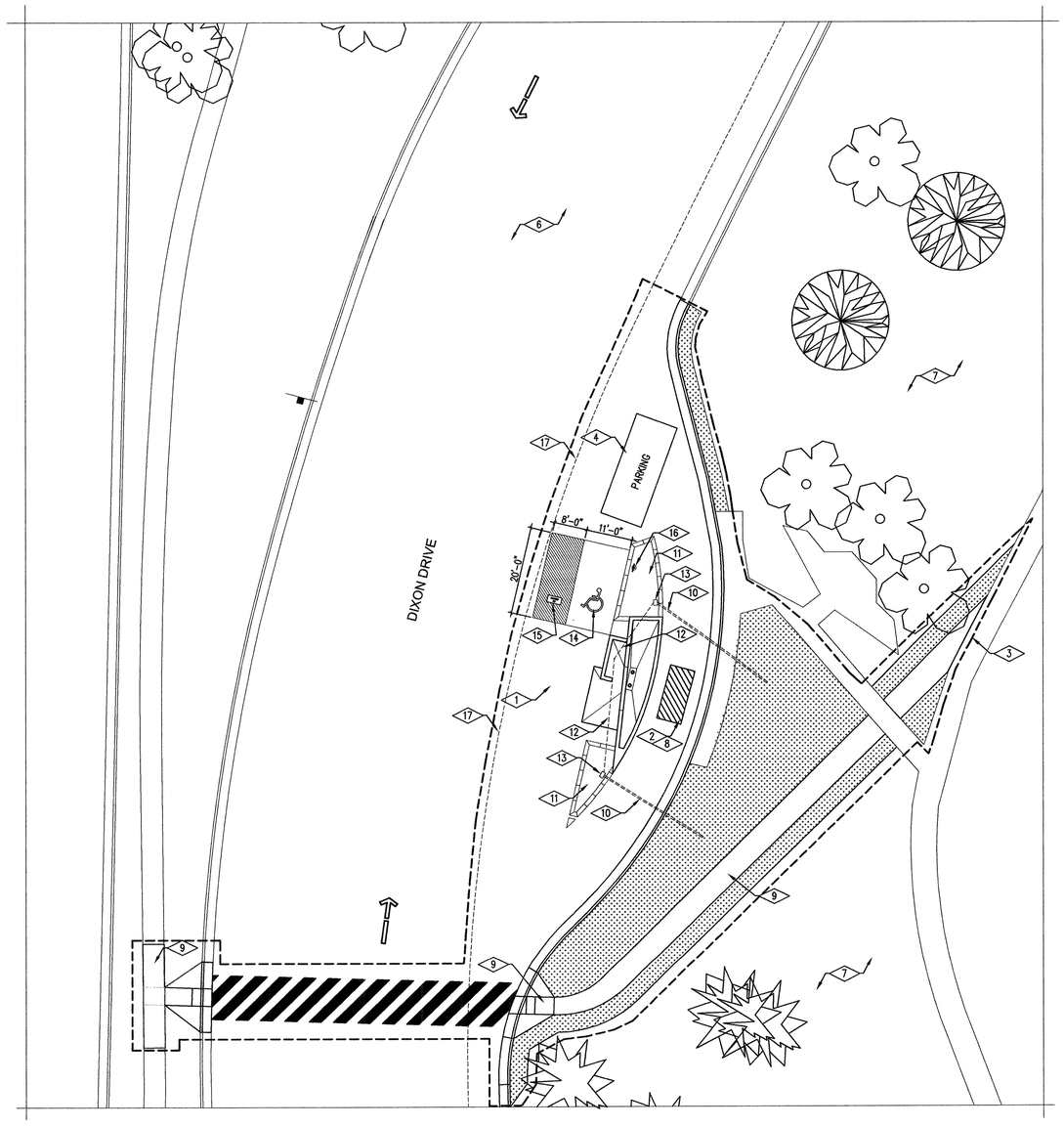

PLAN NORTH — 01 SP100 — SITE PLAN
SCALE: 1/16" = 1'-0"

State of Utah
Department of Administrative Services
Division of Facilities Construction & Management
4110 State Office Building
Salt Lake City, Utah 84114
Phone: (801) 538 - 3018
Fax: (801) 538 - 3267
Internet: http://www.dfcm.state.ut.us

Weber State University

CREATED BY: P+A architects

P+A architects
821 East Kensington Ave.
Salt Lake City, Utah 84105
P: 801.484.1161
F: 801.485.4640
e-mail parchitects@comcast.net

STATE OF UTAH — BRIAN A. PAGE — 261110 — LICENSED ARCHITECT

architecture planning design

CONSULTANT:

PROJECT TITLE:
WEBER STATE UNIVERSITY
OGDEN, UTAH

NEW INFORMATION BUILDING
CONSTRUCTION DOCUMENTS

MARK	DATE	DESCRIPTION

ISSUE TYPE: Construction Documents

ISSUE DATE: MAY 5th, 2009

DFCM PROJECT NO: 08322810
CAD PROJECT NO:
CAD DWG FILE:
DRAWN BY: BRIAN AND SCOTT
CHK'D BY: SCOTT
COPYRIGHT: STATE OF UTAH

SHEET TITLE
SITE PLAN

SHEET NUMBER
SP100

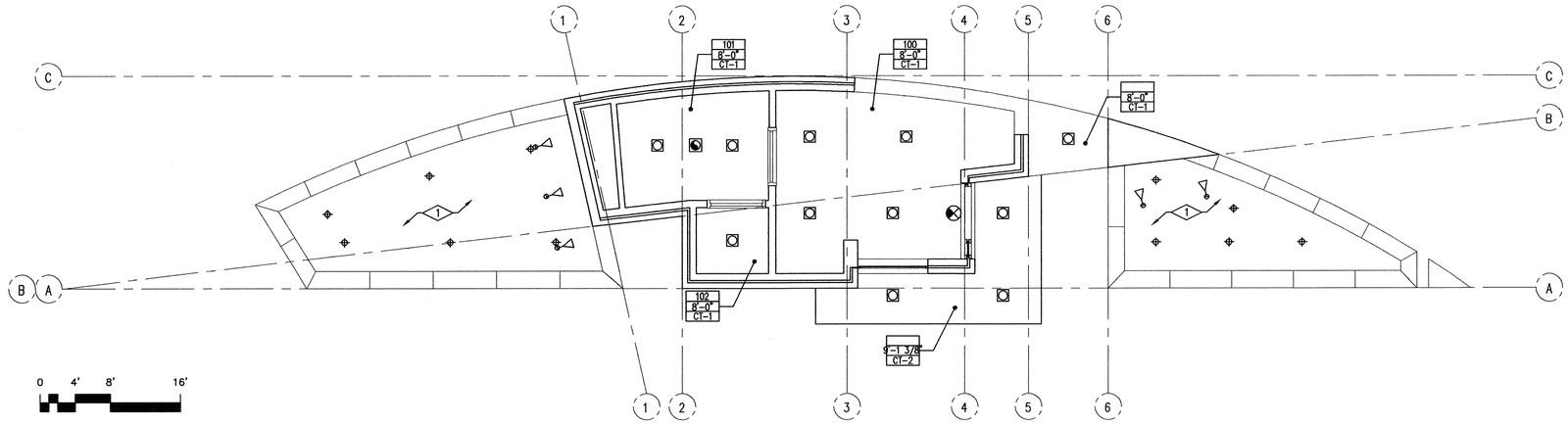

PLAN NORTH

03 AFP100 **CEILING PLAN**

SCALE 1/4" = 1'-0"

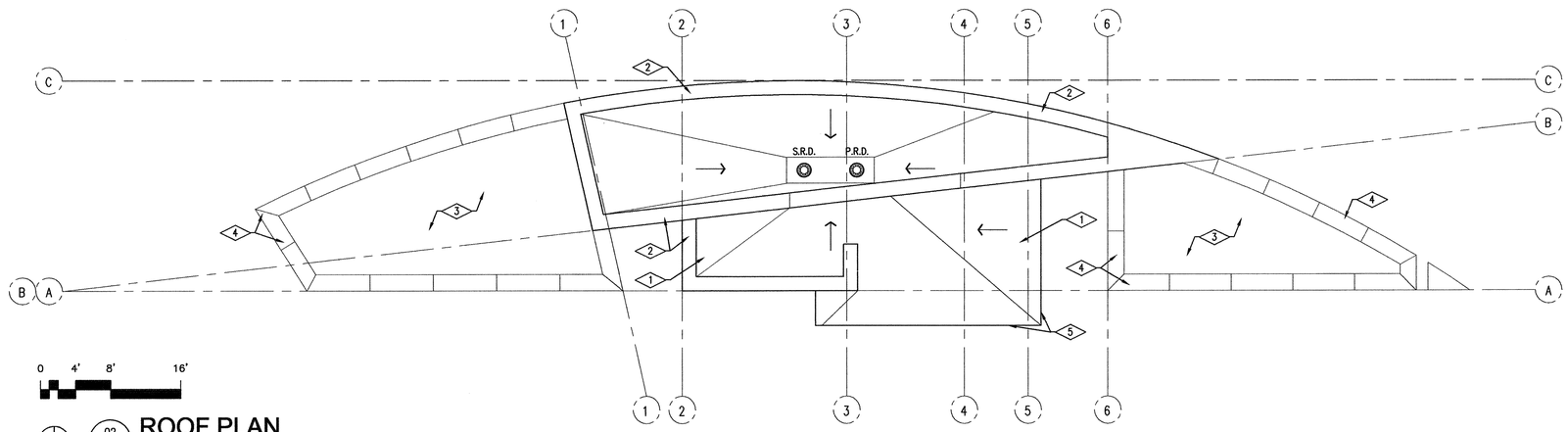

PLAN NORTH

02 AFP100 **ROOF PLAN**

SCALE 1/4" = 1'-0"

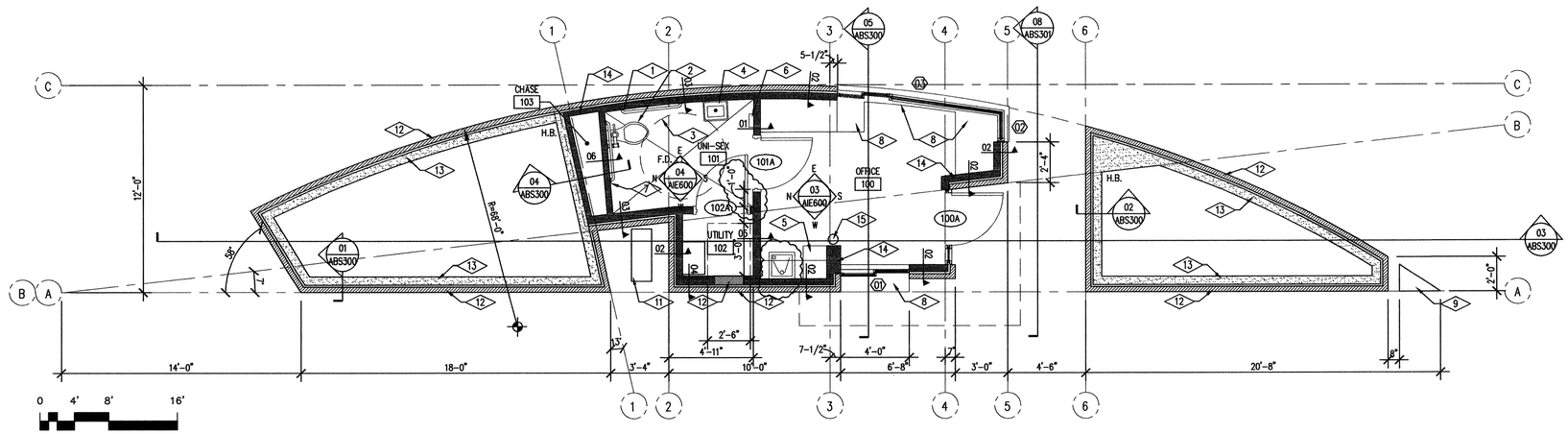

PLAN NORTH

01 AFP100 **FLOOR PLAN**

SCALE 1/4" = 1'-0"

CEILING PLAN REFERENCE NOTES

1. LANDSCAPE PLANTER

GENERAL NOTES

1. REFER TO FINISH SCHEDULE FOR ADDITIONAL FINISH NOTES.

CEILING LEGEND

- 101 / 9'-0" / C1 — ROOM NUMBER / CEILING HEIGHT / CEILING TYPE
- NEW EXIT SIGN, SEE ELECTRICAL DRAWINGS.
- NEW RECESSED CAN LIGHT FIXTURE, SEE ELECTRICAL DRAWINGS
- LANDSCAPE LIGHT FIXTURE, SEE ELECTRICAL DRAWINGS
- SUPPLY AIR DIFFUSER CONTRACTOR TO VERIFY LOCATION WITH MECHANICAL DRAWINGS
- RETURN AIR DIFFUSER GENERAL CONTRACTOR TO VERIFY WITH MECHANICAL DRAWINGS
- CEILING EXHAUST FAN, SEE MECHANICAL DRAWINGS
- LANDSCAPE LIGHT FIXTURE, SEE ELECTRICAL DRAWINGS

ROOF PLAN REFERENCE NOTES

1. NEW FULLY ADHERED PVC ROOF MEMBRANE OVER ½" MECHANICALLY FASTENED DENZ DECK PRIME OVER TAPERED POLYISOCYANURATE RIGID INSULATION.
2. NEW PRE-FINISHED METAL CAP FLASHING. COLOR AND FINISH AS PER ARCHITECT. SEE DETAIL 06/ABS301
3. PLANTER BELOW, SEE PLANTER SECTION SHEET ADT501
4. PRE CAST CUSTOM COLOR CONCRETE WALL CAP BELOW
5. ANODIZED ALUMINUM FACIA, SEE DETAIL

GENERAL NOTES

1. AT THE END OF CONSTRUCTION, CONTRACTOR IS TO CLEAN OUT AND FLUSH ALL ROOF DRAIN LINES TO MAKE SURE THEY ARE NOT PLUGGED AND ARE IN WORKING CONDITION.
2. ALL ROOF AREAS MUST SLOPE TO DRAIN MIN ¼" PER FOOT. POND WATER IS NOT ACCEPTABLE. ALL TAPERED INSULATION, CRICKETS, SADDLES AND ANY OTHER APPURTENANCES NECESSARY TO ACCOMPLISH THIS TASK ARE PART OF THIS CONTRACT.
3. ROOFING SYSTEM TESTING AS PER U.L. 263 BASIC STANDARDS FOR ROOING PRODUCT INVESTIGATION,
   INSTALLATION AS PER JOHNS MANVILLE ROOFING SYSTEMS, TGFU.R10167 CLASS "A" P.V.C. ROOFING SYSTEM, FULLY ADHERED INCLINE 2
4. VENT PIPE ROOF PENETRATION TO RECEIVE VENT PIPE BOOT SEE SPECIFICATION AND DETAILS
5. SEE ADDITIONAL ROOF DETAILS SHEET ADT501

LEGEND

- P.R.D. — P.R.D. = PRIMARY ROOF DRAIN.
- S.R.D. — S.R.D. = SECONDARY ROOF DRAIN
- ARROW INDICATES DIRECTION OF SLOPE

FLOOR PLAN REFERENCE NOTES

1. ADA GRAB BARS, SEE INTERIOR ELEVATIONS
2. ADA WATER CLOSET, SEE PLUMING DRAWINGS
3. 5'-0" DIA ADA TURNING CIRCLE
4. LAVATORY, SEE PLUMBING DRAWINGS
5. PLASTIC LAMINATE COUNTER TOPS AND CASE WORK
6. PAPER TOWEL DISPENSER, SEE INTERIOR ELEVATIONS
7. 18"X18" STEEL CHASE ACCESS DOOR, SEE SPEC
8. CUSTOM STAINLESS STEEL COUNTER TOP, SEE SECTIONS
9. CUSTOM STAINLESS STEEL PIPE BOLLARD, SEE DETAIL 02/ADT500
10. ELECTRICAL PANEL, SEE ELECTRICAL DRAWINGS
11. CONDENSING UNIT, SET ON CONCRETE BASE, SEE MECHANICAL DRAWINGS
12. BRICK VENEER, SEE SECTIONS
13. CONCRETE PLANTER WALLS, SEE SECTIONS AND STRUCTURAL DRAWINGS
14. 2X WOOD FRAMING @ 16" O.C.
15. WALL MOUNTED CLASS A.B.C. 20 LB FIRE EXTINGUISHER, SEE SPECIFICATION

GENERAL NOTES

1. REFER TO FINISH SCHEDULE FOR ADDITIONAL FINISH NOTES.

FLOOR PLAN LEGEND

- RM. NAME / 100 — ROOM TAG
- H.B. — HOSE BIB
- 02 — WINDOW TAG
- 100A — DOOR TAG
- F.D. — FLOOR DRAIN
- 02 — WALL TYPES

State of Utah
Department of Administrative Services

Division of Facilities Construction & Management
4110 State Office Building
Salt Lake City, Utah 84114
Phone: (801) 538 - 3018
Fax: (801) 538 - 3267
Internet: http://www.dfcm.state.ut.us

Weber State University

CREATED BY: P+A architects

P+A architects
821 East Kensington Ave.
Salt Lake City, Utah 84105
P: 801.484.1161
F: 801.485.4640
e-mail parchitects@comcast.net

STATE OF UTAH — 261110 — LICENSED ARCHITECT

☐ architecture ☐ planning ☐ design

CONSULTANT:

PROJECT TITLE:

WEBER STATE UNIVERSITY
OGDEN, UTAH

NEW INFORMATION BUILDING
CONSTRUCTION DOCUMENTS

MARK	DATE	DESCRIPTION

ISSUE TYPE: Construction Documents

ISSUE DATE: MAY 5th, 2009

DFCM PROJECT NO: 08322810
CAD PROJECT NO:
CAD DWG FILE:
DRAWN BY: BRIAN AND SCOTT
CHK'D BY: SCOTT

COPYRIGHT: STATE OF UTAH

SHEET TITLE

FLOOR PLAN
ROOF PLAN
AND CEILING PLAN

SHEET NUMBER

A-FP100

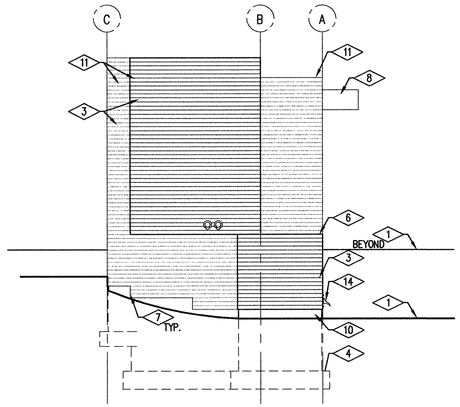

04 AEL200 **NORTH ELEVATION**
SCALE 1/4" = 1'-0"

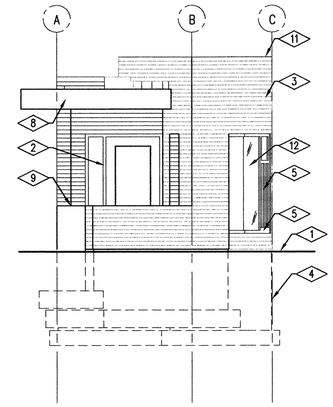

03 AEL200 **SOUTH ELEVATION**
SCALE 1/4" = 1'-0"

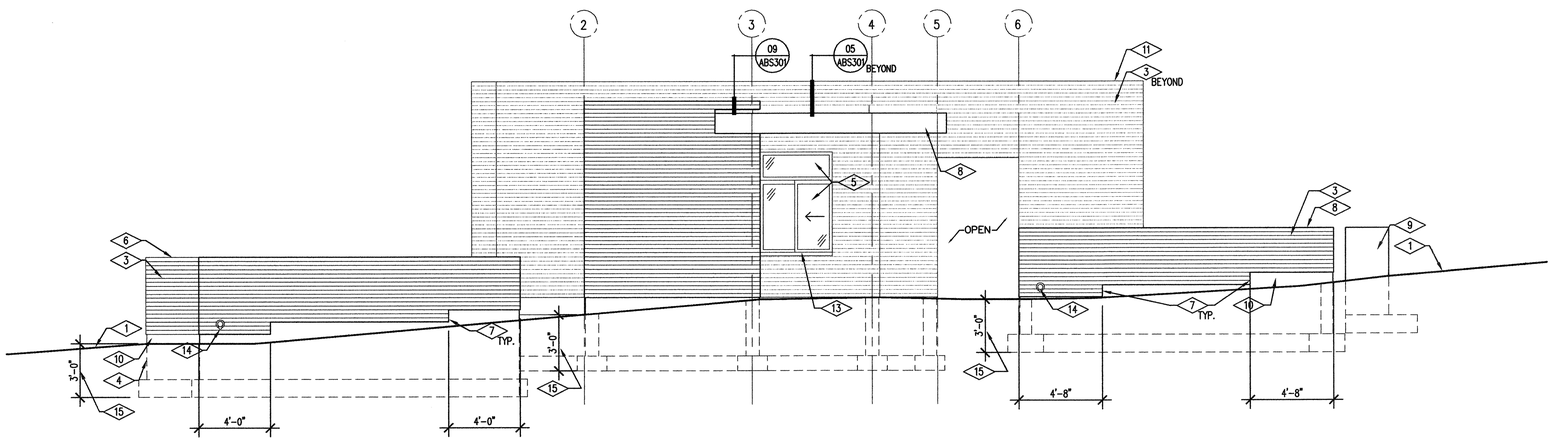

02 AEL200 **WEST ELEVATION**
SCALE 1/4" = 1'-0"

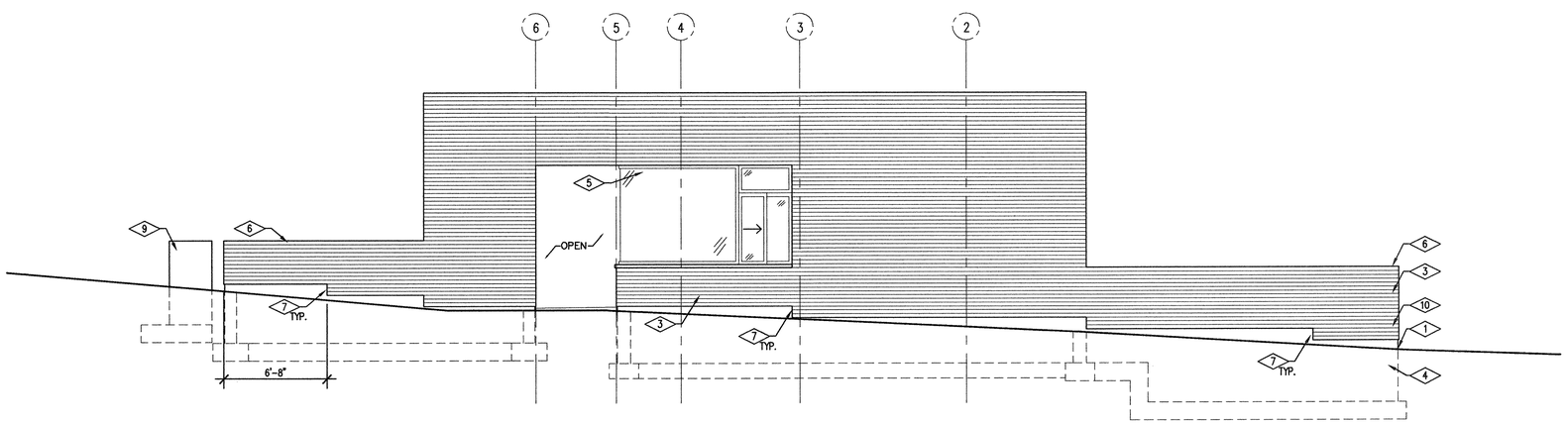

01 AEL200 **EAST ELEVATION**
SCALE 1/4" = 1'-0"

REFERENCE NOTES

1. FINISH GRADE, SEE CIVIL ENGINEERING DRAWINGS
2. ANODIZED ALUMINUM STORE FRONT WINDOW SYSTEM, SEE SPECIFICATION
3. BRICK VENEER, SEE SPECIFICATION
4. CONCRETE FOOTING AND FOUNDATION SYSTEM, SEE STRUCTURAL DRAWINGS
5. ANODIZED ALUMINUM CUSTOMER SERVICE WINDOW, SEE WINDOW TYPES, DETAILS, AND SPECIFICATIONS
6. CUSTOM COLOR PRE CAST CONCRETE PLANTER WALL CAP, SEE DETAIL
7. 8" STEP IN CONCRETE FOUNDATION WALL, SEE STRUCTURAL DRAWINGS
8. ANODIZED ALUMINUM 20 GA FASCIA WRAP, SEE DETAIL 07/ABS301
9. CUSTOM STAINLESS STEEL BOLLARD, SEE DETAIL
10. EXPOSED CONCRETE FOUNDATION WALL SYSTEM, SEE STRUCTURAL DRAWINGS
11. PRE-FINISHED, CUSTOM COLOR METAL CAP FLASHING, SEE DETAIL 06/ABS301
12. BUTT GLAZING, SEE WINDOW TYPES
13. STAINLESS STEEL SHELF AT BOTTOM OF WINDOW
14. DOWN SPOUT FOR PLANTER DRAINAGE, SEE PLANTER SECTION AND DOWN SPOUT NOZZLE DETAIL SHEET ADT501
15. HEIGHT OF BOTTIM OF FOOTING TO BE SET AT 3'-0" BELOW FINISHED GRADE AT LOWEST POINT FOR EACH AREA.

State of Utah
Department of Administrative Services
Division of Facilities Construction & Management
4110 State Office Building
Salt Lake City, Utah 84114
Phone: (801) 538 - 3018
Fax: (801) 538 - 3267
Internet: http://www.dfcm.state.ut.us

Weber State University

CREATED BY: P+A architects

P+A architects
821 East Kensington Ave.
Salt Lake City, Utah 84105
P: 801.484.1161
F: 801.485.4640
e-mail parchitects@comcast.net

STATE OF UTAH 261110 LICENSED ARCHITECT

☐ architecture ☐ planning ☐ design

CONSULTANT:

PROJECT TITLE:
WEBER STATE UNIVERSITY
OGDEN, UTAH

NEW INFORMATION BUILDING
CONSTRUCTION DOCUMENTS

MARK	DATE	DESCRIPTION

ISSUE TYPE: Construction Documents

ISSUE DATE: MAY 5th, 2009

DFCM PROJECT NO: 08322810
CAD PROJECT NO:
CAD DWG FILE:
DRAWN BY: BRIAN AND SCOTT
CHK'D BY: SCOTT
COPYRIGHT: STATE OF UTAH

SHEET TITLE
BUILDING ELEVATIONS

SHEET NUMBER
A-EL200

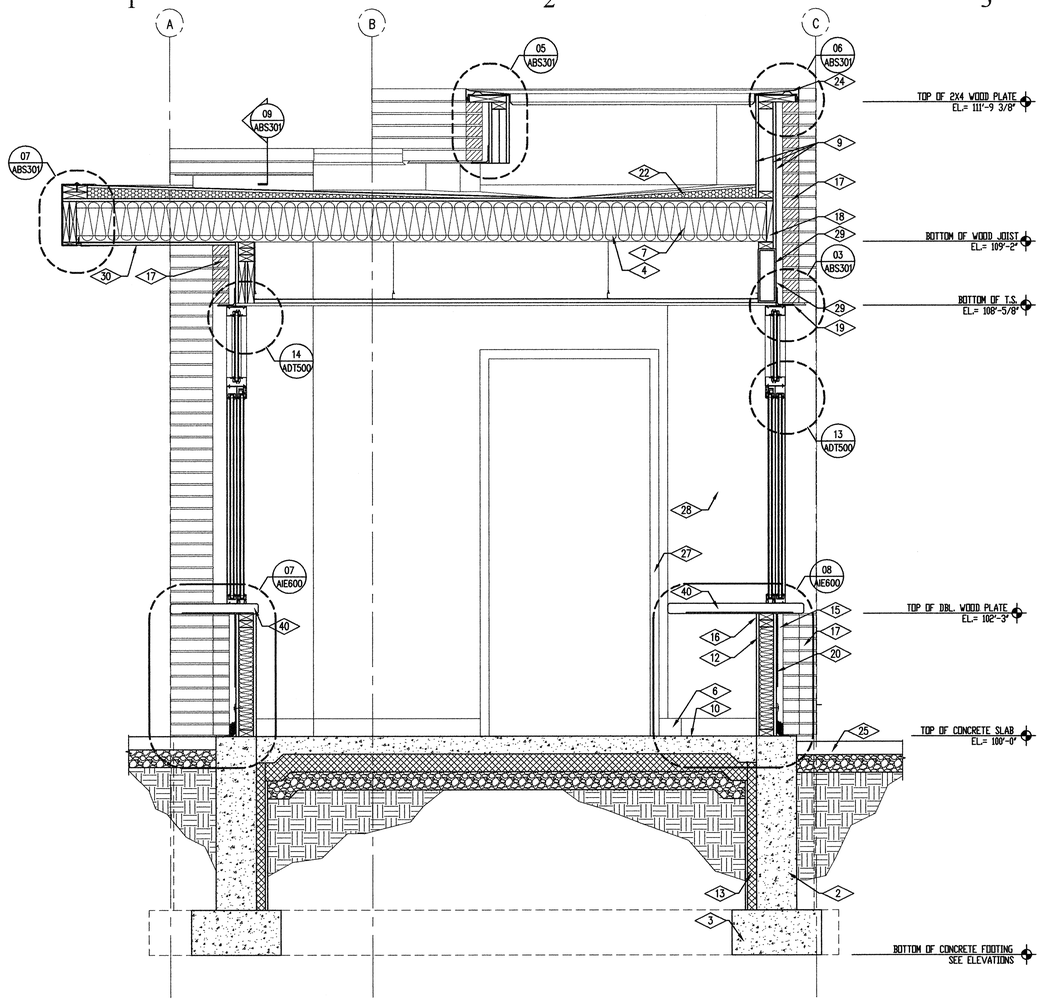

05 ABS300 BUILDING/WALL SECTION
SCALE 3/4" = 1'-0"

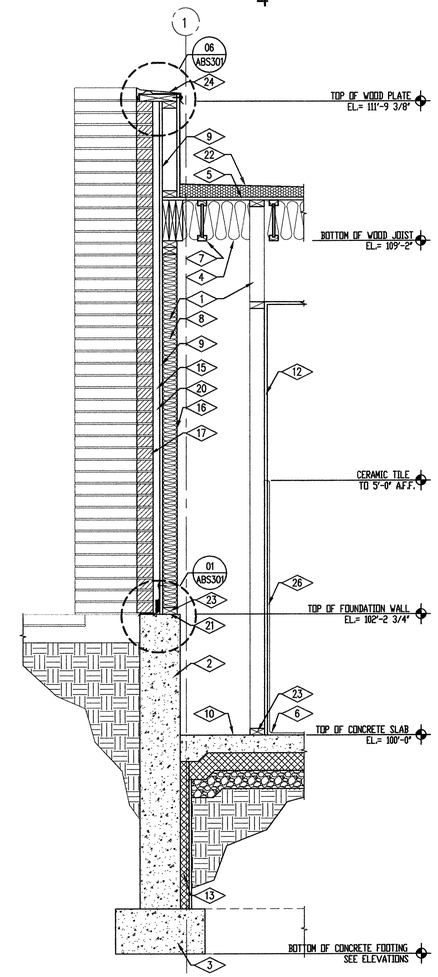

04 ABS300 WALL SECTION
SCALE 3/4" = 1'-0"

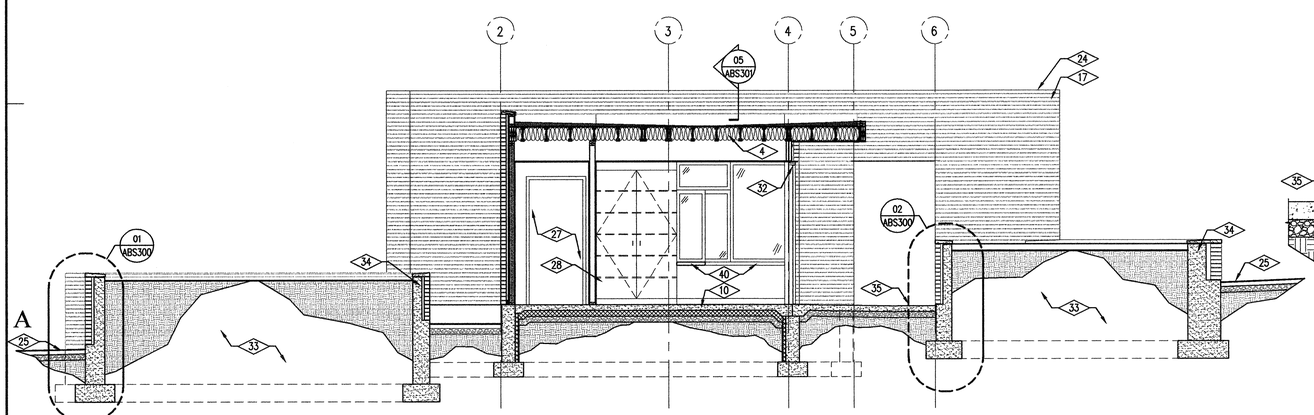

03 ABS300 BUILDING SECTION
SCALE 1/4" = 1'-0"

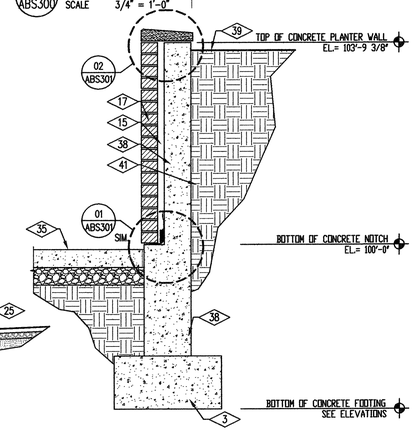

02 ABS300 PLANTER SECTION
SCALE 3/4" = 1'-0"

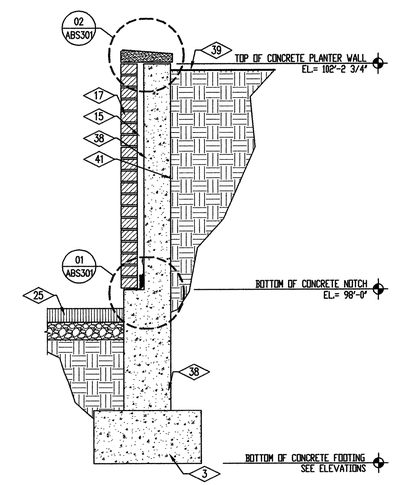

01 ABS300 PLANTER SECTION
SCALE 3/4" = 1'-0"

REFERENCE NOTES

1. R-13 BATT INSULATION
2. CONCRETE FOUNDATION WALL, SEE STRUCTURAL
3. CONCRETE FOOTING SEE STRUCTURAL DRAWINGS
4. R-38 BATT INSULATION
5. ROOF SHEATHING, SEE STRUCTURAL
6. BASE, AS SCHEDULED
7. ROOF FRAMING SYSTEM, SEE STRUCTURAL
8. 2X4 WOOD STUD WALL FRAMING @ 16" O.C.
9. APA RATED WALL SHEATHING, SEE STRUCTURAL
10. 4" CONCRETE FLOOR SLAB OVER 4" OF HIGH DENSITY POLYSTYRENE RIGID INSULATION ON 10 MIL. VAPOR BARRIER OVER 4" COMPACTED GRAVEL BASE, SEE STRUCTURAL
11. ANODIZED ALUMINUM WINDOW SYSTEM, SEE WINDOW TYPES
12. ⅝" TYPE "X" GYPSUM BOARD, PRIMED AND PAINTED
13. 2" PERIMETER INSULATION W/ PROTECTION BOARD
14. FINISH GRADE
15. AIR SPACE
16. 6 MIL VAPOR BARRIER
17. BRICK VENEER
18. 2X WOOD BLOCKING
19. STEEL ANGLE, SEE STRUCTURAL
20. 15 lb. ASPHALT IMPREGNATED BUILDING PAPER
21. ANCHOR BOLT, SEE STRUCTURAL
22. FULLY ADHERED P.V.C.. ROOFING MEMBRANE SYSTEM ON ½"DENZ DECK PRIME ON TAPERED POLYISOCYANURATE RIGID ROOFING INSULATION
23. 2X TREATED SILL PLATE WITH FOAM GASKET
24. PRE FINISHED METAL CAP FLASHING, SEE DETAIL
25. ASPHALT PAVING, SEE CIVIL DRAWINGS
26. CERAMIC TILE ON ⅝" CEMENTICIOUS TILE BACKER BOARD
27. DOOR AND FRAME BEYOND, SEE DOOR TYPES
28. PLASTIC LAMINATE CASEWORK BEYOND, SEE INTERIOR ELEVATIONS
29. TUBE STEEL, SEE STRUCTURAL DRAWINGS
30. PRE-CAST CONCRETE PLANTER WALL CAP, SEE DETAIL
31. ⅝" TYPE "X" GYPSUM BOARD CEILING ON ⅞" METAL THAT CHANNELS @ 16" O.C. ON 1½" COLD ROLLED STEEL CHANNEL FRAMING
32. ANODIZED ALUMINUM ENTRANCE SYSTEM, SEE DOOR TYPES
33. GENERAL CONTRACTOR SHALL PROVIDE 4'-0" NEW TOPSOIL AT PLANTER LOCATIONS
34. CONCRETE AND MASONRY PLANTER SEE SECTIONS AND DETAILS
35. 4" CONCRETE SLAB OVER 4" COMPACTED GRAVEL BASE
36. ANODIZED ALUMINUM FASCIA WRAP, SEE DETAIL
37. ANODIZED ALUMINUM WINDOW SYSTEM, SEE DETAILS
38. CONCRETE PLANTER WALL, SEE STRUCTURAL DRAWINGS
39. NEW TOP SOIL AT PLANTER
40. STAINLESS STEEL COUNTER TOP, SEE SECTIONS AIE600
41. SEE PLANTER SECTION ON DRAWING ADT501 FOR PLANTER WATER PROOFING

State of Utah
Department of Administrative Services
Division of Facilities Construction & Management
4110 State Office Building
Salt Lake City, Utah 84114
Phone: (801) 538 - 3018
Fax: (801) 538 - 3267
Internet: http://www.dfcm.state.ut.us

Weber State University

CREATED BY: P+A architects

P+A architects
821 East Kensington Ave.
Salt Lake City, Utah 84105
P: 801.484.1161
F: 801.485.4640
e-mail parchitects@comcast.net

STATE OF UTAH SCOTT A. PARR 261110 LICENSED ARCHITECT

☐ architecture ☐ planning ☐ design

CONSULTANT:

PROJECT TITLE:

WEBER STATE UNIVERSITY
OGDEN, UTAH

NEW INFORMATION BUILDING
CONSTRUCTION DOCUMENTS

MARK	DATE	DESCRIPTION

ISSUE TYPE: Construction Documents

ISSUE DATE: MAY 5th, 2009

DFCM PROJECT NO: 08322810
CAD PROJECT NO:
CAD DWG FILE:
DRAWN BY: BRIAN AND SCOTT
CHK'D BY: SCOTT
COPYRIGHT: STATE OF UTAH

SHEET TITLE

BUILDING
SECTIONS
WALL SECTIONS

SHEET NUMBER

A-BS300

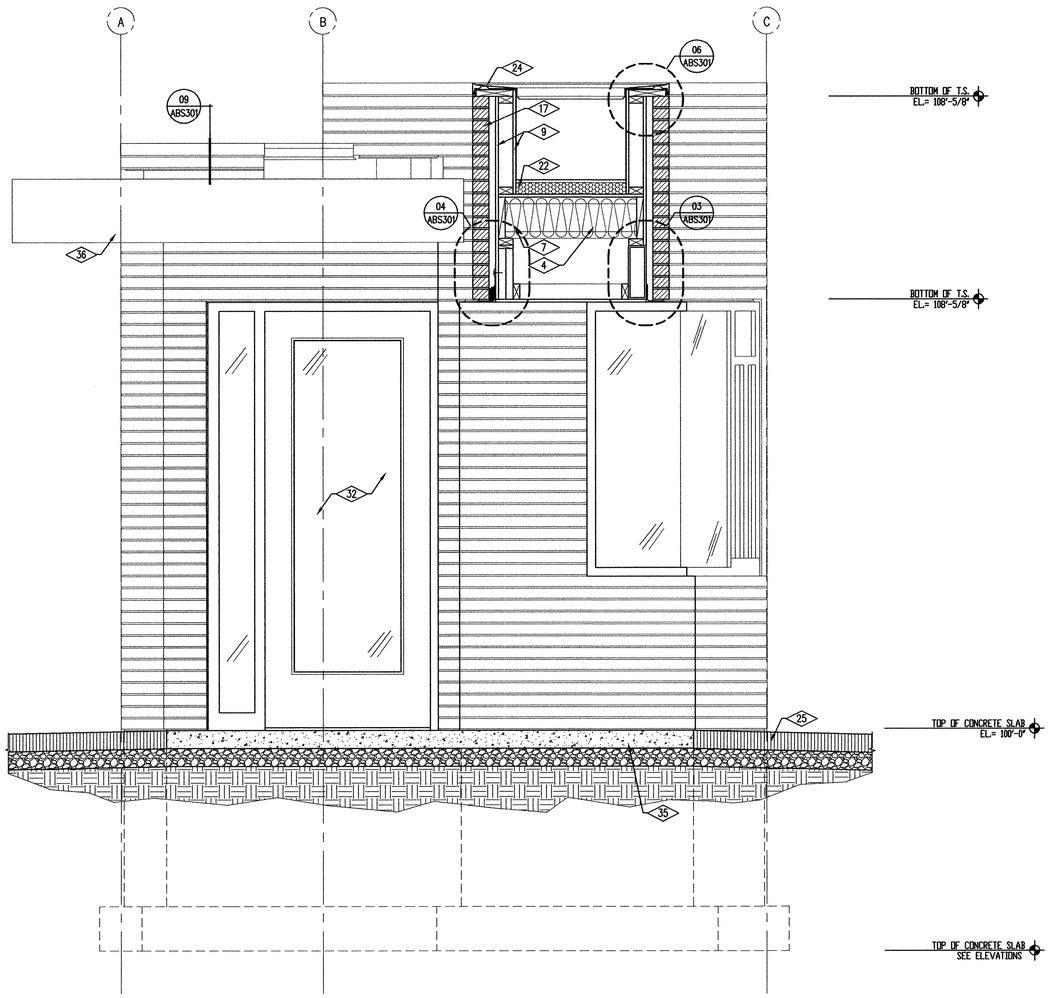

08 ABS301 BUILDING/WALL SECTION
SCALE 3/4" = 1'-0"

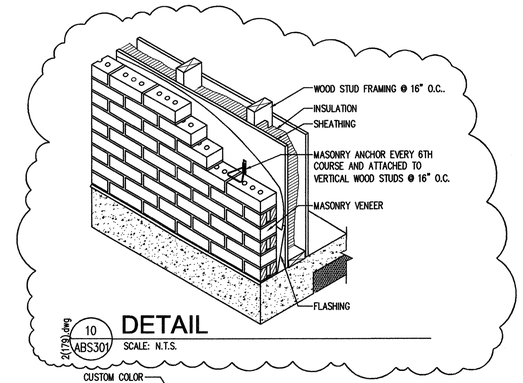

10 ABS301 DETAIL
SCALE: N.T.S.

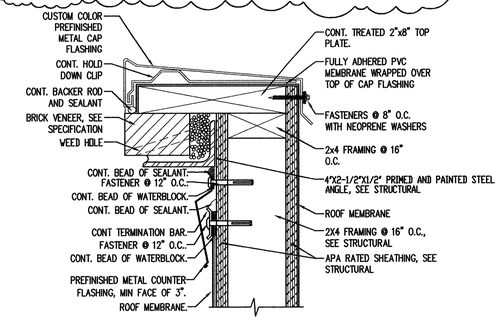

09 ABS301 DETAIL
SCALE: 3" = 1'-0"

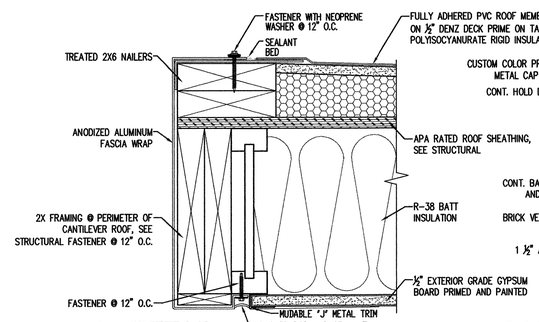

07 ABS301 DETAIL
SCALE: 3" = 1'-0"

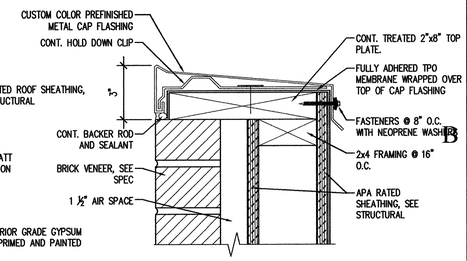

06 ABS301 DETAIL
SCALE: 3" = 1'-0"

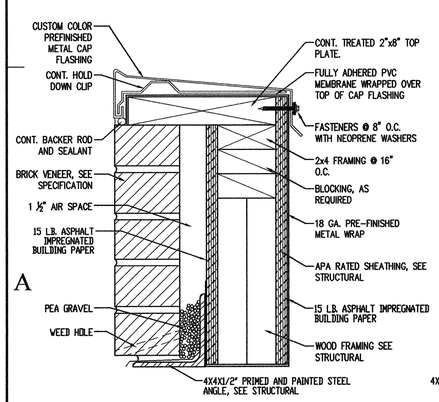

05 ABS301 DETAIL
SCALE: 3" = 1'-0"
1

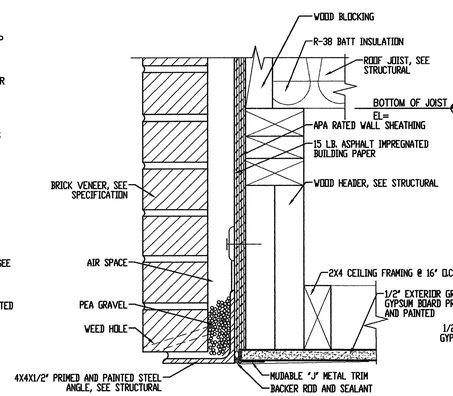

04 ABS301 DETAIL
SCALE: 3" = 1'-0"
2

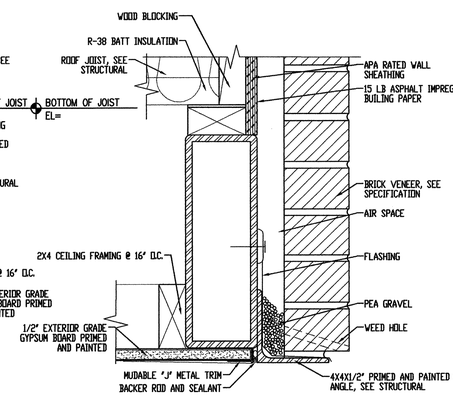

03 ABS301 DETAIL
SCALE: 3" = 1'-0"
3

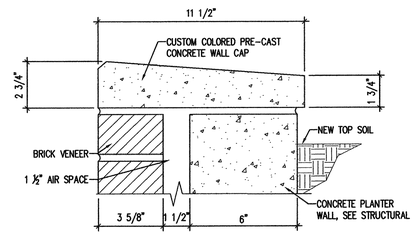

02 ABS301 DETAIL
SCALE: 3" = 1'-0"
4

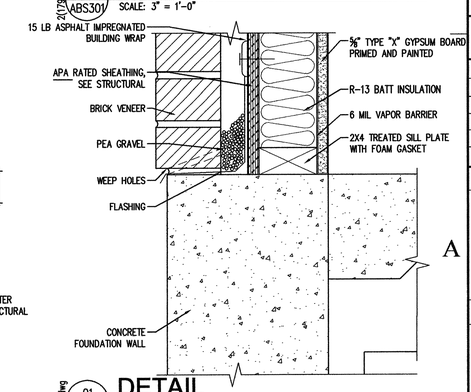

01 ABS301 DETAIL
SCALE: 3" = 1'-0"
5

REFERENCE NOTES

1. R-13 BATT INSULATION
2. CONCRETE FOUNDATION WALL, SEE STRUCTURAL
3. CONCRETE FOOTING SEE STRUCTURAL DRAWINGS
4. R-38 BATT INSULATION
5. ROOF SHEATHING, SEE STRUCTURAL
6. BASE, AS SCHEDULED
7. ROOF FRAMING SYSTEM, SEE STRUCTURAL
8. 2X4 WOOD STUD WALL FRAMING @ 16" O.C.
9. APA RATED WALL SHEATHING, SEE STRUCTURAL
10. 4" CONCRETE FLOOR SLAB OVER 4" OF HIGH DENSITY POLYSTYRENE RIGID INSULATION 10 MIL. VAPOR BARRIER OVER 4" COMPACTED GRAVEL BASE, SEE STRUCTURAL
11. ANODIZED ALUMINUM WINDOW SYSTEM, SEE WINDOW TYPES
12. ⅝" TYPE "X" GYPSUM BOARD, PRIMED AND PAINTED
13. 2" PERIMETER INSULATION W/ PROTECTION BOARD
14. FINISH GRADE
15. AIR SPACE
16. 6 MIL VAPOR BARRIER
17. BRICK VENEER
18. 2X WOOD BLOCKING
19. STEEL ANGLE, SEE STRUCTURAL
20. 15 lb. ASPHALT IMPREGNATED BUILDING PAPER
21. ANCHOR BOLT, SEE STRUCTURAL
22. FULLY ADHERED P.V.C. ROOFING MEMBRANE SYSTEM ON ½" DENZ DECK PRIME ON TAPERED POLYISOCYANURATE RIGID ROOFING INSULATION
23. 2X TREATED SILL PLATE WITH FOAM GASKET
24. PRE FINISHED METAL CAP FLASHING, SEE DETAIL
25. ASPHALT PAVING, SEE CIVIL DRAWINGS
26. CERAMIC TILE ON ⅝" CEMENTICIOUS TILE BACKER BOARD
27. DOOR AND FRAME BEYOND, SEE DOOR TYPES
28. PLASTIC LAMINATE CASEWORK BEYOND, SEE INTERIOR ELEVATIONS
29. TUBE STEEL, SEE STRUCTURAL DRAWINGS
30. ½" EXTERIOR GRADE GYPSUM BOARD SHEATHING
31. ⅝" TYPE "X" GYPSUM BOARD CEILING ON ⅞" METAL THAT CHANNELS @ 16" O.C. ON 1½" COLD ROLLED STEEL CHANNEL FRAMING
32. ANODIZED ALUMINUM ENTRANCE SYSTEM, SEE DOOR TYPES
33. GENERAL CONTRACTOR SHALL PROVIDE 4'-0" NEW TOPSOIL AT PLANTER LOCATIONS
34. CONCRETE AND MASONRY PLANTER SEE SECTIONS AND DETAILS
35. 4" CONCRETE SLAB OVER 4" COMPACTED GRAVEL BASE
36. ANODIZED ALUMINUM FASCIA WRAP, SEE DETAIL
37. ANODIZED ALUMINUM WINDOW SYSTEM, SEE DETAILS

State of Utah
Department of Administrative Services
Division of Facilities Construction & Management
4110 State Office Building
Salt Lake City, Utah 84114
Phone: (801) 538 - 3018
Fax: (801) 538 - 3267
Internet: http://www.dfcm.state.ut.us

Weber State University

CREATED BY: P+A architects

P+A architects
821 East Kensington Ave.
Salt Lake City, Utah 84105
P: 801.484.1161
F: 801.485.4640
e-mail parchitects@comcast.net

STATE OF UTAH — 261110 — LICENSED ARCHITECT

☐ architecture ☐ planning ☐ design

CONSULTANT:

PROJECT TITLE:
WEBER STATE UNIVERSITY
OGDEN, UTAH

NEW INFORMATION BUILDING
CONSTRUCTION DOCUMENTS

MARK	DATE	DESCRIPTION

ISSUE TYPE: Construction Documents

ISSUE DATE: MAY 5th, 2009

DFCM PROJECT NO: 08322810
CAD PROJECT NO:
CAD DWG FILE:
DRAWN BY: BRIAN AND SCOTT
CHK'D BY: SCOTT

COPYRIGHT: STATE OF UTAH

SHEET TITLE
BUILDING SECTIONS
WALL SECTIONS

SHEET NUMBER
A-BS301

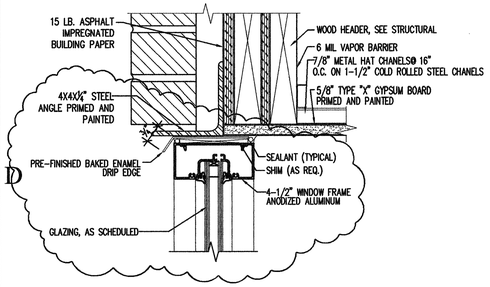

9-01.dwg 14 ADT500 **DOOR HEAD** SCALE 3" = 1'-0"

FLOOR FINISHES	
F-1	12"x12" V.C.T.
F-2	THICK SET CERAMIC FLOOR TILE

BASE TYPES	
B-1	4" COVED RUBBER BASE, SEE SPECIFICATION
B-2	COVED CERAMIC TILE BASE, SEE SPECIFICATION

WALL FINISHES	
W-1	⅝" TYPE "X" GYPSUM BOARD TO BE PRIMED AND PAINTED, SEE SPECIFICATION
W-2	CERAMIC TILE WAINSCOT OVER ⅝" CEMENTICOUS TILE BACKER TO 5'-0" A.F.F.

CEILING TYPES	
CT-1	⅝" TYPE "X" GYPSUM BOARD TO BE PRIMED AND PAINTED. PROVIDE R-38 BATT INSULATION IN SPACE ABOVE CEILING, SEE SPECIFICATION
CT-2	½" TYPE "X" EXTERIOR GRADE GYPSUM BOARD PRIMED AND PAINTED

GLAZING TYPES	
G1	1" INSULATED CLEAR GLASS
G2	1" INSULATED, TEMPERED CLEAR GLASS

DOOR AND FRAME SCHEDULE

DOOR	SINGLE/PAIR	DOOR SIZE WxH	DOOR DEPTH	DOOR TYPE	DOOR MATL	DOOR FINISH	FRAME DEPTH	FRAME TYPE	FRAME MATL	FRAME FINISH	FRAME DETAIL HEAD	FRAME DETAIL JAMB	FRAME DETAIL THRSH	HARD-WARE SET	FIRE RATING DOOR & FRAME	NOTES
100A	S	3'-0" X 7'-10"	1¾"	B	ALUM	ANOD	4⅝"	B	ALUM	ANOD	06/ADT500	04&08/ADT500	01/ADT500		NOTE	
101A	S	3'-0" X 7'-0"	1¾"	A	WOOD	STAIN	6"	A	HM	PAINT	07/ADT500	07/ADT500	02/ADT500		NOTE	
102A	S	3'-0" X 7'-0"	1¾"	A	WOOD	STAIN	6"	A	HM	PAINT	07/ADT500	07/ADT500	02/ADT500		NOTE	

ROOM FINISH SCHEDULE

ROOM NO.	ROOM NAME	FLOOR	BASE	WALLS NORTH	WALLS EAST	WALLS SOUTH	WALLS WEST	CEILING TYPE	CEILING HEIGHT	NOTES
100	OFFICE	F1	B1	W1	W1	W1	W1	CT-1	8'-0"	
101	UNI-SEX	F2	B2	W1 / W2	W1 / W2	W1 / W2	W1 / W2	CT-1	8'-0"	
102	UTILITY	F1	B1	W1	W1	W1	W1	CT-1	8'-0"	

GLAZING TYPE

1. PILKINGTON: OR APPROVED EQUAL
2. COLOR: PILKINGTON BLUE-GREEN ECLIPSE ADVANTAGE, LOW-E GLASS
3. U-VALUE (SUMMER .30) (WINTER .31)
4. SHADING COEFFICIENT .21

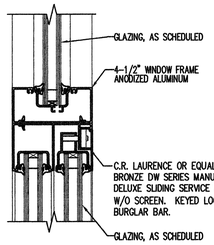

9-01.dwg 13 ADT500 **WINDOW DETAIL** SCALE 3" = 1'-0"

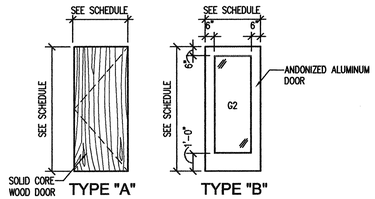

T-02.dwg 12 ADT500 **DOOR TYPES** SCALE 1/4" = 1'-0"

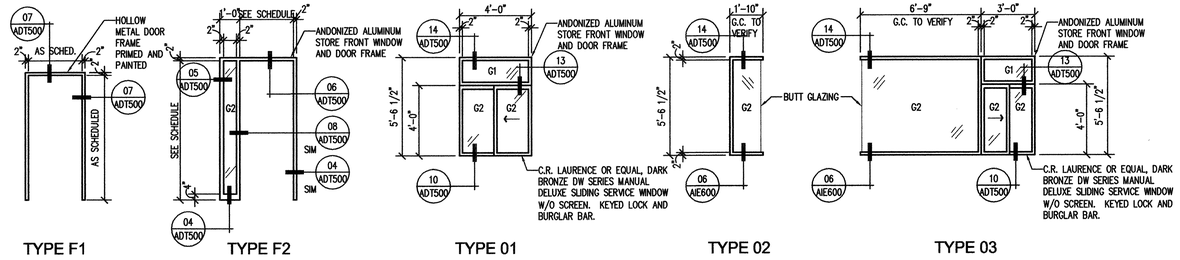

9-01.dwg 11 ADT500 **DOOR & WINDOW FRAME TYPES** SCALE 1/4" = 1'-0"

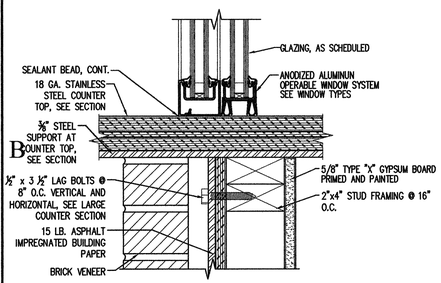

9-04.dwg 10 ADT500 **WINDOW SILL** SCALE 3" = 1'-0"

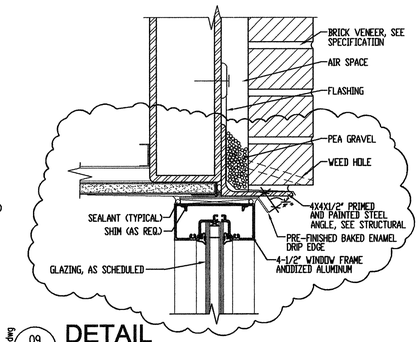

2(T3).dwg 09 ADT500 **DETAIL** SCALE: 3" = 1'-0"

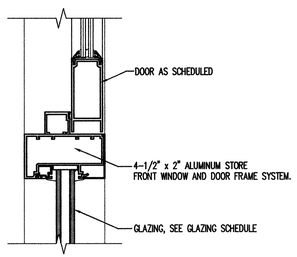

9-06.dwg 08 ADT500 **DOOR JAMB DETAIL** SCALE 3" = 1'-0"

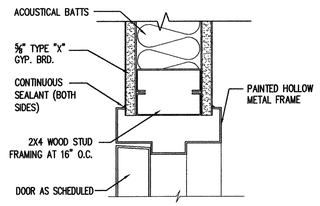

9-05.dwg 07 ADT500 **JAMB / HEAD DETAIL** SCALE 3" = 1'-0"

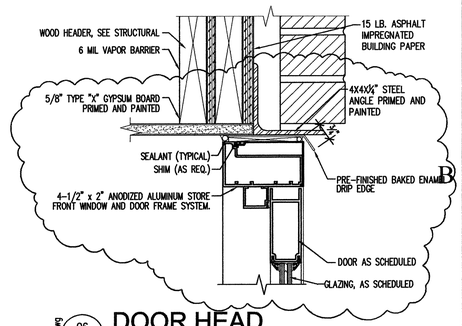

9-01.dwg 06 ADT500 **DOOR HEAD** SCALE 3" = 1'-0"

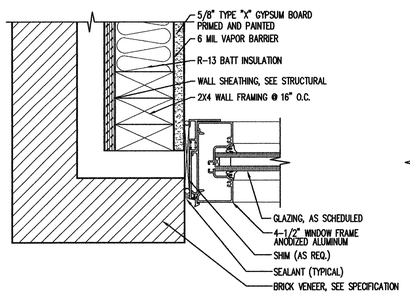

9-03.dwg 05 ADT500 **WINDOW JAMB** SCALE 3" = 1'-0" 1

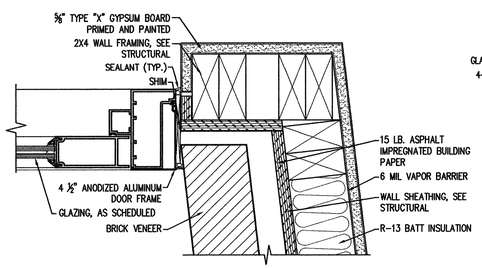

9-03.dwg 04 ADT500 **WINDOW JAMB** SCALE 3" = 1'-0" 2

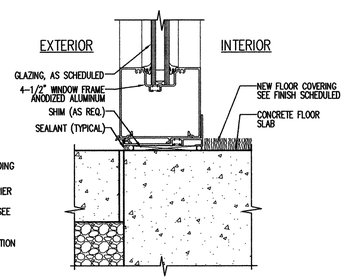

9-03.dwg 03 ADT500 **WINDOW SILL** SCALE 3" = 1'-0" 3

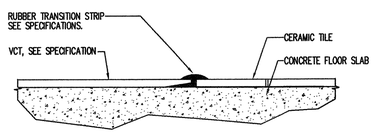

9-12.dwg 02 ADT500 **THRESHOLD** SCALE 3" = 1'-0" 4

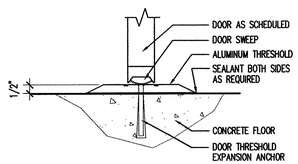

9-12.dwg 01 ADT500 **THRESHOLD** SCALE 3" = 1'-0" 5

State of Utah
Department of Administrative Services
Division of Facilities Construction & Management
4110 State Office Building
Salt Lake City, Utah 84114
Phone: (801) 538 - 3018
Fax: (801) 538 - 3267
Internet: http://www.dfcm.state.ut.us

Weber State University

CREATED BY: P+A architects

P+A architects
821 East Kensington Ave.
Salt Lake City, Utah 84105
P: 801.484.1161
F: 801.485.4640
e-mail parchitects@comcast.net

STATE OF UTAH SCOTT A. BRIAN 261110 LICENSED ARCHITECT

architecture planning design

CONSULTANT:

PROJECT TITLE:
WEBER STATE UNIVERSITY
OGDEN, UTAH

NEW INFORMATION BUILDING
CONSTRUCTION DOCUMENTS

MARK	DATE	DESCRIPTION

ISSUE TYPE: Construction Documents

ISSUE DATE: MAY 5th, 2009

DFCM PROJECT NO: 08322810
CAD PROJECT NO:
CAD DWG FILE:
DRAWN BY: BRIAN AND SCOTT
CHK'D BY: SCOTT
COPYRIGHT: STATE OF UTAH

SHEET TITLE
FINISH SCHEDULE
DOOR SCHEDULE
DOOR AND WINDOW DETAILS

SHEET NUMBER
A-DT500

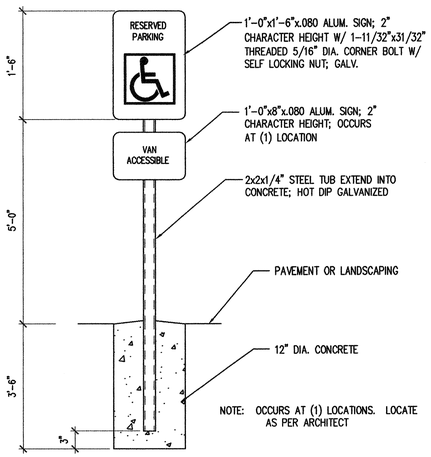

07 ADT501 SCALE 1" = 1'-0"

ADA PARKING STALL SIGN

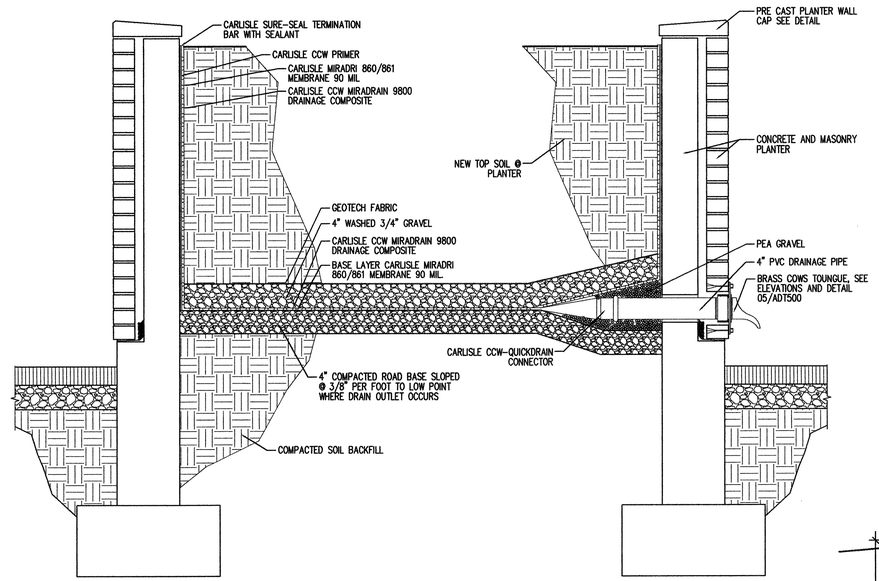

06 ADT501 SCALE 3/4" = 1'-0"

TYPICAL WATER PROOFING AT PLANTER

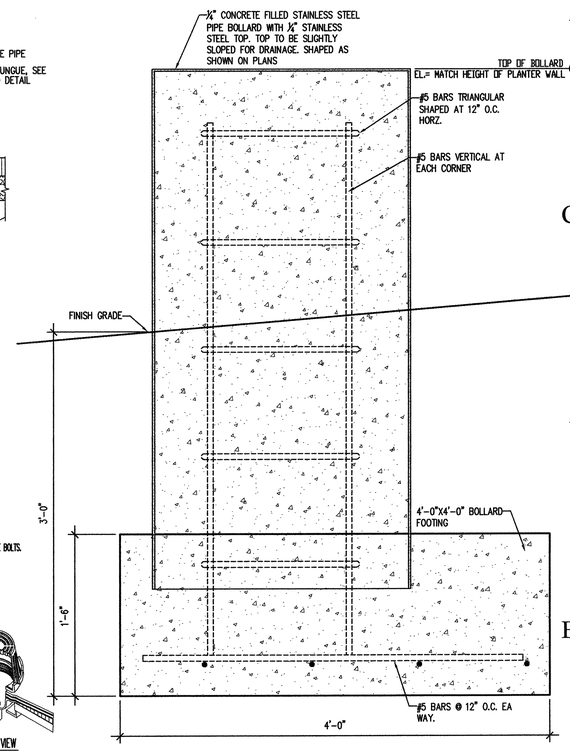

02 ADT501 SCALE 1 1/2" = 1'-0"

BOLLARD DETAIL

DOWNSPOUT TYPE.

DOWNSPOUT NOZZLE: NICKEL BRONZE BODY AND WALL FLANGE WITH DECORATIVE FACE AND OUTLET NOZZLE, THREADED INLET, STAINLESS STEEL SCREEN.	ZURN SMITH MIFAB	Z199-SS 1770-NB-SS R1940-83

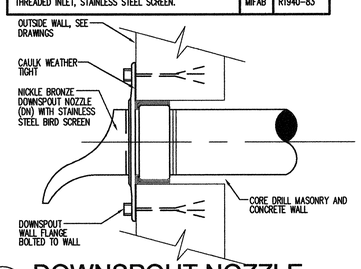

05 ADT501 SCALE N.T.S.

DOWNSPOUT NOZZLE

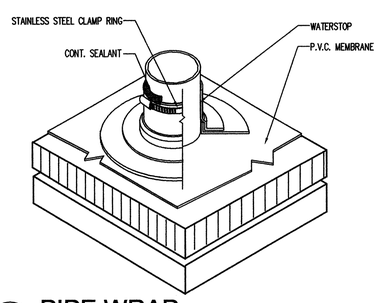

04 ADT501 SCALE N.T.S.

PIPE WRAP

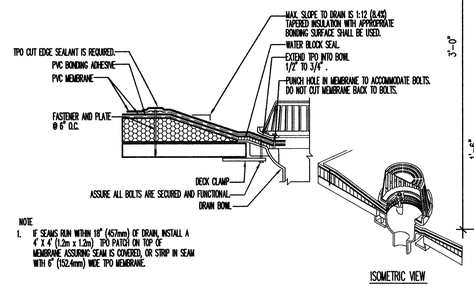

03 ADT501 SCALE N.T.S.

PVC AT ROOF DRAIN

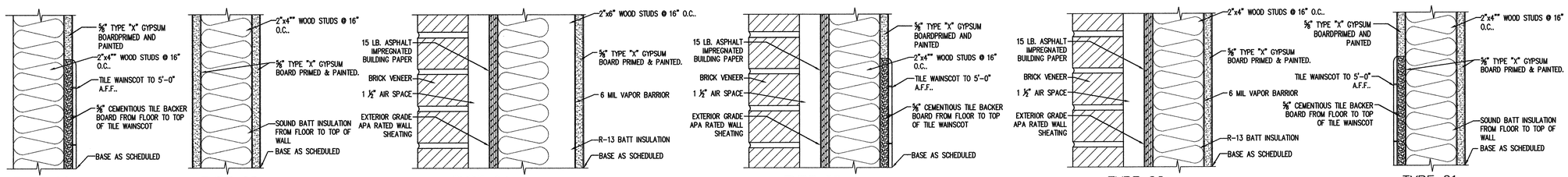

01 ADT501 SCALE 3" = 1'-0"

WALL TYPES

State of Utah
Department of Administrative Services
Division of Facilities Construction & Management
4110 State Office Building
Salt Lake City, Utah 84114
Phone: (801) 538 - 3018
Fax: (801) 538 - 3267
Internet: http://www.dfcm.state.ut.us

Weber State University

CREATED BY: P+A architects

P+A architects
821 East Kensington Ave.
Salt Lake City, Utah 84105
P: 801.484.1161
F: 801.485.4640
e-mail parchitects@comcast.net

STATE OF UTAH SCOTT R. SCOTT 261110 LICENSED ARCHITECT

architecture planning design

CONSULTANT:

PROJECT TITLE:
WEBER STATE UNIVERSITY
OGDEN, UTAH

NEW INFORMATION BUILDING
CONSTRUCTION DOCUMENTS

MARK	DATE	DESCRIPTION

ISSUE TYPE: Construction Documents

ISSUE DATE: MAY 5th, 2009

DFCM PROJECT NO: 08322810
CAD PROJECT NO:
CAD DWG FILE:
DRAWN BY: BRIAN AND SCOTT
CHK'D BY: SCOTT

COPYRIGHT: STATE OF UTAH

SHEET TITLE
WALL TYPES AND MISC. DETAILS

SHEET NUMBER
A-DT501

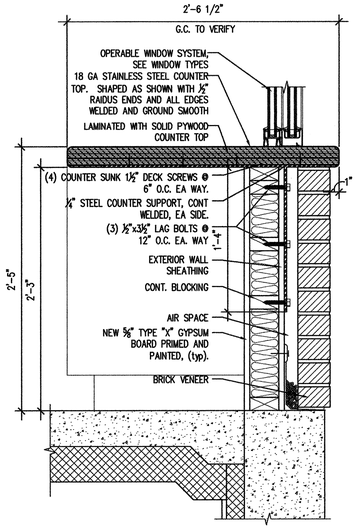

09 AIE600 — **COUNTER SECTION**

SCALE

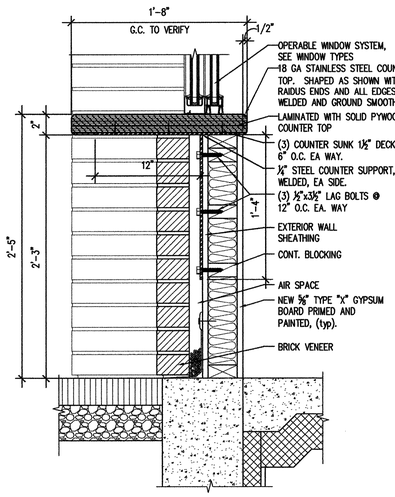

08 AIE600 — **COUNTER SECTION**

SCALE 1 1/2" = 1'-0"

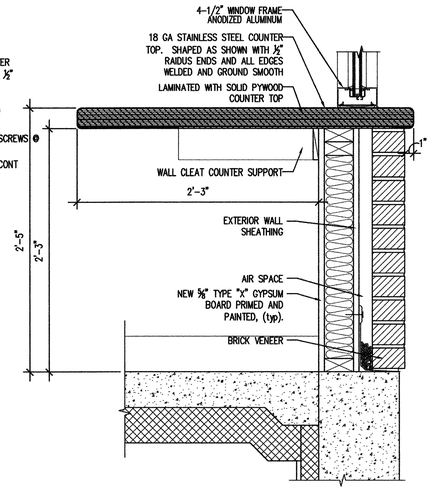

07 AIE600 — **COUNTER SECTION**

SCALE

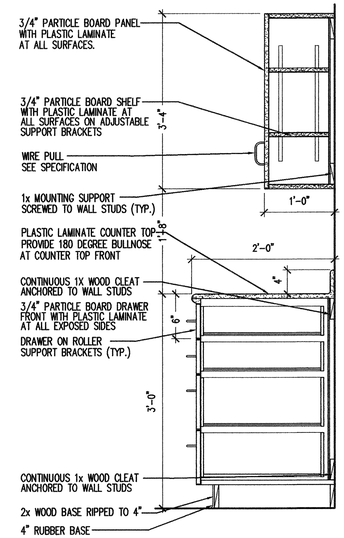

06 AIE600 — **CASEWORK SECTION**

SCALE 1" = 1'-0"

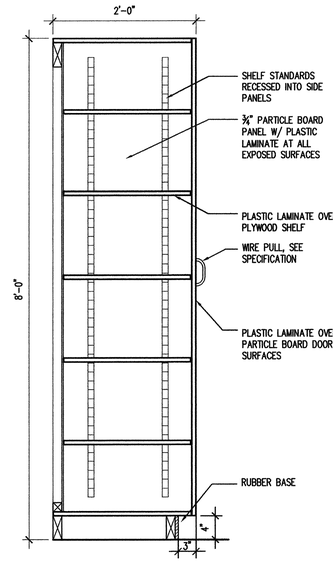

05 AIE600 — **CASEWORK SECTION**

SCALE 1" = 1'-0"

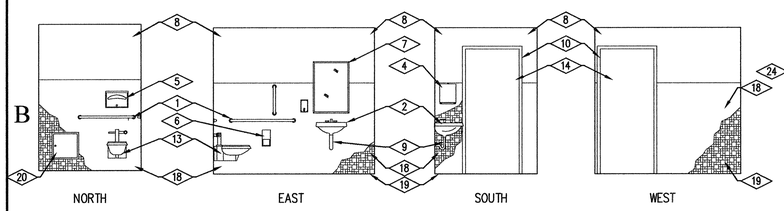

04 AIE600 — **INTERIOR ELEVATIONS BATHROOM**

SCALE 1/4" = 1'-0"

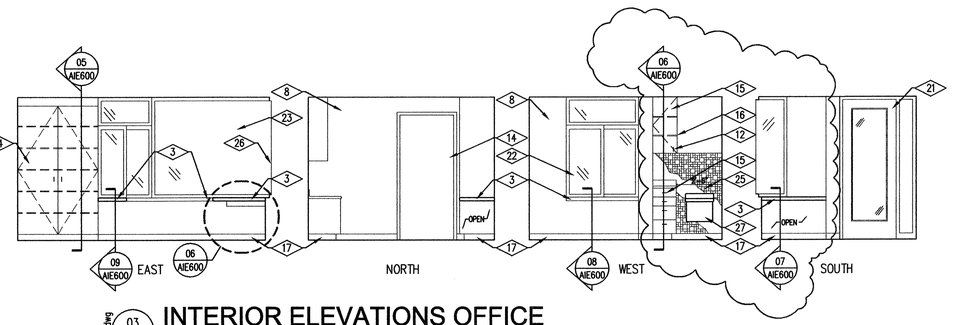

03 AIE600 — **INTERIOR ELEVATIONS OFFICE**

SCALE 1/4" = 1'-0"

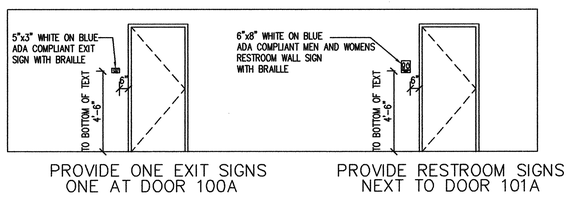

02 AIE600 — **BUILDING SIGNAGE**

SCALE 1/4" = 1'-0"

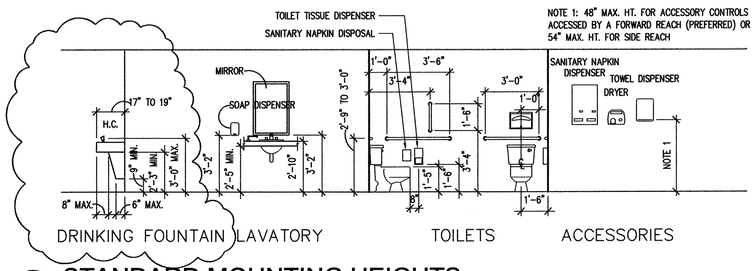

01 AIE600 — **STANDARD MOUNTING HEIGHTS**

SCALE 1/4" = 1'-0"

REFERENCE NOTES

1. WALL MOUNTED GRAB BAR, SEE SPECIFICATION
2. LAVATORY, SEE PLUMBING DRAWINGS
3. 18 GA. STAINLESS STEEL COUNTER TOP, SEE SECTIONS
4. PAPER TOWEL DISPENSER, SEE SPECIFICATION.
5. SANITATION SEAT COVERING DISPENSER, SEE SPECIFICATION
6. TOILET PAPER DISPENSER, SEE SPECIFICATION
7. MIRROR, SEE SPECIFICATION
8. PAINTED GYPSUM BOARD WALL
9. GENERAL CONTRACTOR SHALL PROVIDE ADA PIPE PROTECTION AT ALL EXPOSED PIPING
10. PRIMED AND PAINTED HOLLOW METAL DOOR FRAME, SEE DOOR SCHEDULE AND SPECIFICATION
11. PRE-FORMED PLASTIC LAMINATE COUNTERTOP, SEE SECTION.
12. DOOR AND DRAWER PULL, SEE SPECIFICATION
13. ACCESSIBLE WATER CLOSET, SEE PLUMBING DRAWINGS.
14. SOLID CORE WOOD DOOR, SEE DOOR SCHEDULE
15. PLASTIC LAMINATE CABINET, SEE SECTIONS
16. ADJUSTABLE CABINET SHELVES, SEE CASEWORK SECTIONS.
17. RUBBER BASE, SEE SPECIFICATION
18. CERAMIC TILE 5'-0" WAINSCOT, SEE SPECIFICATION
19. CERAMIC FLOOR TILE, SEE SPECIFICATION
20. 16"x16" LOCKABE CHASE ACCESS DOOR, PRIMED AND PAINTED
21. ANODIZED ALUMINUM STORE FRONT WINDOW AND ENTRANCE SYSTEM, SEE DOOR AND FRAME TYPE.
22. OPERABLE WINDOW SYSTEM, SEE WINDOW TYPES
23. GLAZING, SEE DRAWING ADT500
24. PLASTIC LAMINATE CABINET, SEE SECTION
25. CERAMIC TILE BEHIND WATER COOLER AND COUNTERTOP
26. BUTT GLAZING.
27. ADA WATER COOLER, SEE PLUMBING DRAWINGS

GENERAL NOTES

1. REFER TO FINISH SCHEDULE FOR ADDITIONAL FINISH NOTES
2. CONTRACTOR TO FIELD VERIFY LOCATION AND PLACEMENT OF ALL FIXTURES AND ACCESSORIES AND COORDINATE WITH A.D.A. REQUIREMENTS
3. CONTRACTOR SHALL PROVIDE ADA PIPE PROTECTION AT ALL EXPOSED PIPING
4. GENERAL CONTRACTOR TO FIELD VERIFY LOCATION AND PLACEMENT OF ALL WALL MOUNTED ITEMS AND CASE WORK PRIOR TO FRAMING ALL WALLS. GENERAL CONTRACTOR SHALL PROVIDE ADEQUATE FRAMING, BACKING AND BRACING FOR PROPER INSTALLATION OF ALL REQUIRED A.D.A. ITEMS AND CASEWORK.

State of Utah
Department of Administrative Services
Division of Facilities Construction & Management
4110 State Office Building
Salt Lake City, Utah 84114
Phone: (801) 538 - 3018
Fax: (801) 538 - 3267
Internet: http://www.dfcm.state.ut.us

Weber State University

CREATED BY: P+A architects

P+A architects
821 East Kensington Ave.
Salt Lake City, Utah 84105
P: 801.484.1161
F: 801.485.4640
e-mail parchitects@comcast.net

STATE OF UTAH — SCOTT A. BRIAN — 261110 — LICENSED ARCHITECT

☐ architecture ☐ planning ☐ design

CONSULTANT:

PROJECT TITLE:

WEBER STATE UNIVERSITY
OGDEN, UTAH

NEW INFORMATION BUILDING
CONSTRUCTION DOCUMENTS

MARK	DATE	DESCRIPTION

ISSUE TYPE: Construction Documents

ISSUE DATE: MAY 5th, 2009

DFCM PROJECT NO: 08322810
CAD PROJECT NO:
CAD DWG FILE:
DRAWN BY: BRIAN AND SCOTT
CHK'D BY: SCOTT
COPYRIGHT: STATE OF UTAH

SHEET TITLE

INTERIOR ELEVATIONS, CASEWORK SECTIONS

SHEET NUMBER

A-IE600

STRUCTURAL GENERAL NOTES

A. GENERAL

1. The contractor shall verify all dimensions prior to starting construction. The architect shall be notified of any discrepancies or inconsistencies.
2. Dimensions shall take precedence over scale shown on drawings.
3. Notes and details on drawings shall take precedence over general notes and typical notes.
4. All work shall conform to the minimum standards of the following code. The 2006 edition of the International Building Code, and any other regulating agencies which have authority over any portion of the work, and those codes and standards listed in these notes and specifications.
5. See architectural drawings for the following:
   - Size and location of all door and window openings, except as noted.
   - Size and location of all interior and exterior nonbearing partitions.
   - Size and location of all concrete curbs, floor drains, slopes, depressed areas, changes in level, chamfers, grooves, inserts, etc.
   - Size and location of floor and roof openings except as shown
   - Floor and roof finishes
   - Stair framing and details (except as shown)
6. See mechanical, plumbing, and electrical drawings for the following:
   - Pipe runs, sleeves, hangers, trenches, wall and slab openings, etc. Except as shown or noted.
   - Electrical conduit runs, boxes, outlets in walls and slabs.
   - Concrete inserts for electrical, mechanical or plumbing fixtures.
   - Size and location of machine or equipment bases, anchor bolts for mounts.
7. The contract structural drawings and specifications represent the finished structure. They do not indicate the method of construction. The contractor shall provide all measures necessary to protect the structure during construction. Such measure shall include, but not be limited to, bracing, shoring for loads due to construction equipment, etc. Observation visits to the site by the structural engineer shall not include inspection of the above structural members.
8. Openings, pockets, etc. larger than 6 inches shall not be placed in slabs, decks, beams, joists, columns, walls, etc. unless specifically detailed on the structural drawings. Notify the structural engineer when drawings by others show openings, pockets, etc. not shown on the structural drawings, but which are located on structural members.
9. ASTM specifications noted shall be the latest revision.
10. Contractor shall investigate site during clearing and earthwork operations for filled excavations or buried structures such as cesspools, cisterns, foundations, etc. If any such structures are found, the structural engineer shall be notified immediately.
11. Construction materials shall be spread out if placed on floors or roof. Load shall not exceed the design live load per square foot. Provide adequate shoring and/or bracing where structure has not attained design strength.
12. Design Loads:
    - Roof:
      - 15 psf DEAD
      - 20 psf LIVE
      - 30 psf SNOW (Pg = 43 psf)
    - Wind:
      - Velocity 90 mph (3 sec. Gust)
      - Exposure "B"
      - Importance: 1.0
      - Components and Cladding: See Individual Locations
    - Seismic:
      - S_{DS} = .88 S_{D1} = .56
      - Seismic Design Category "D"
      - Occupancy Category: "II"
      - Site Class: "D"
      - V = 1.02 kips
      - System: Wood structural shear walls
      - Method: Simplified
    - Flood Loads: Not Applicable
    - Special Loads: Not Applicable

B. FOUNDATION

1. Footings are designed based on an allowable soil pressure of 1800 PSF per the project soils report. Footings and foundations have been designed in accordance with the soils report prepared by:

   Company: Y² GEOTECHNICAL P.C.
   Job Number: 07G-030
   Date: JUNE 26, 2007

2. Contractor shall provide for proper de-watering of excavations from surface water, ground water, seepage, etc.
3. Footings shall be placed according to depths shown on the drawings.
4. Footing back fill and utility trench back fill within building area shall be mechanically compacted in layers. Flooding will not be permitted.
5. All abandoned footings, utilities, etc. that interfere with new construction shall be removed.
6. The soil under perimeter beams and slabs shall be above optimum moisture as described in the referenced geotechnical report prior to concrete placement and shall be verified by the soils engineer.
7. Holdown anchor bolts shall meet the requirements of detail 2/S101.
8. All ½" dia. anchor bolts may be replaced with ICC approved ½" dia. wedge or sleeve anchors or Titen HD screws at the same spacing. Provide a min. of 4" embedment.

C. CONCRETE

1. All phases of work pertaining to the concrete construction shall conform to the "Building Code Requirements for Reinforced Concrete" (ACI 318 latest approved edition) with modifications as noted in the drawings and specifications.
2. Reinforced concrete design is by the "ultimate strength design method", ACI 318-(latest edition)
3. Schedule of structural concrete 28-day strengths and types:

Location in structure	Strength PSI	Type
Slabs on Grade	4000	Hard rock
Footings	4000	Hard rock

   Design based on 2500 PSI, 28-day strength, special inspection is required only where indicated on foundation plans.
4. Concrete mix design shall be submitted to the engineer for approval with the following requirements:
   a. Compressive strength at age 28 days as specified above.
   b. Large aggregate-hardrock, ¾" maximum size conforming to ASTM C-33
   c. Cement-ASTM C-150, Type I or II Portland cement
   d. Maximum slump 5-inches, max water cement ratio: 0.50
   e. No admixtures, except for entrained air, and as approved by the engineer.
5. Concrete mixing operations, etc. shall conform to ASTM C-94
6. Placement of concrete shall conform to ACI standard 514 and project specifications.
7. Clear coverage of concrete over outer reinforcing bars shall be as follows: Concrete poured directly against earth - 3 inches clear, structural slabs - 3/4 inches clear (top and bottom), formed concrete with earth back fill - 2 inches clear.
8. All reinforcing bars, anchor bolts and other concrete inserts shall be well secured in position prior to placing concrete.
9. Provide sleeves for plumbing and electrical openings in concrete before placing. Do not cut any reinforcing that may conflict. Coring in concrete is not permitted except as shown. Notify the structural engineer in advance of conditions not shown on the drawings.
10. Conduit or pipe size (O.D.) shall not exceed 30% of slab thickness and shall be placed between the top and bottom reinforcing, unless specifically detailed otherwise. Concentrations of conduits or pipes shall be avoided except where detailed openings are provided.
11. Modulus of elasticity of concrete, when tested in accordance with ASTM C-460, shall be at least the value given by the equations in section 8.5.1 of ACI 318 for the specified 28-day strength.
12. Shrinkage of concrete, when tested in accordance with ASTM C-157, shall not exceed 0.00040 inches/inch.

D. REINFORCING STEEL

1. Reinforcing bars shall conform to the requirements of ASTM A-615 grade 60.
2. All reinforcing bar bends shall be made cold
3. Minimum lap of welded wire fabric shall be 6 inches or one full mesh and one half, which ever is greater.
4. All bars shall be marked so their identification can be made when the final in-place inspection is made.
5. Rebar splices are to be: Class "B"
6. Reinforcing splices shall be made only where indicated on the drawings.
7. Dowels between footings and walls or columns shall be the same grade, size and spacing or number as the vertical reinforcing, respectively.

E. WOOD

1. Framing Lumber
   a. Douglas fir larch No. 2 grade for 2x and 4x framing except for 2x4, 2x6 studs use Douglas fir stud grade, U.N.O.
   b. 6x framing DFL No. 1 grade
2. Bolt holes shall be 1/16" maximum larger than the bolt size. Re-tighten all nuts prior to closing in.
3. Standard cut washers shall be used under all sill plate anchor bolts, U.N.O. at shear walls. See the Shear Wall Schedule on sheet S101 for anchor bolt spacing and washer requirements at shear walls.
4. All sills or plates resting on concrete or masonry shall be pressure treated Douglas Fir. Bolts shall be placed 9 inches from the end of a plate, or from a notch greater than ½ the width of the plate, and spaced at intervals noted.
5. Do not notch joists, rafters or beams except where shown in details. Obtain engineer's approval for any holes or notches not detailed. Holes through sills, plates, studs and double plates in interior, bearing and shear walls shall conform with detail 6/S101.
6. Connection hardware shall be by USP or Simpson strong-tie, or ICC approved equal.

DUAL SPECIFICATION TABLE

SIMPSON CONNECTOR	USP CONNECTOR
STHD8	STAD8
STHD10	STAD10
STHD14	STAD14
MAS	FA3
HTT16	HTT16
HTT22	HTT22
SSTB28	STB28
CS16	RS150
ST6224	KST224
A35	MPA1
LUS28	JUS28
H1	RT15
H10	RT16

7. Fastening schedule per 2006 edition of the International Building Code, table No. 2304.9.1. Unless noted otherwise.
8. All nails, bolts, holdowns, straps or other steel fasteners in contact with pressure treated timber shall be hot-dipped galvanized, stainless steel or otherwise treated or isolated to prevent chemical attack. Contractor shall verify treatment method and confirm appropriate corrosion resistance be provided in accordance with hardware supplier recommendations.

F. LAMINATED VENEER LUMBER (LVL)

1. Laminated veneer lumber to have: Fb=2600 psi, Fv=285 psi, E=1.9x10^6psi
2. Double & triple LVL beams shall be nailed together as follows:
   Provide (2) rows of 16d sinkers at 12" O.C. for beams < 11 7/8" deep
   Provide (3) rows of 16d sinkers at 12" O.C. for beams > 11 7/8" deep
3. Beams w/ (4) or more plies shall be bolted together as indicated in the manufacturer's written specifications.

G. WOOD STRUCTURAL PANELS

1. All wood structural panels shall be plywood or APA rated oriented strand board. Panels shall bear the stamp of an approved agency. Panels shall be of the span/index rating shown on the plans. Fastening shall be indicated on the plans.
2. All plywood shall be C-D interior sheathing with exterior glue. Plywood shall be 4-ply, minimum.

H. SHOP DRAWINGS

1. Shop drawings shall be submitted for all structural items in addition to items required by architectural specifications.
2. The contractor shall review all shop drawings prior to submittal. Items not in accordance with contract drawings shall be flagged for review.
3. Verify all dimensions with architect.
4. Any changes, substitutions, or deviations from original contract drawings shall be redlined or flagged by submitting parties, shall be considered approved after engineers review, unless noted otherwise.
5. The engineer has the right to approve or disapprove any changes to the original drawings at anytime before or after shop drawings review.
6. The shop drawings do not replace the original contract drawings. Items omitted or shown incorrectly and are not flagged by the structural engineer or architect are not to be considered changes to the original contract drawings.
7. The adequacy of engineering designs and layout performed by the others rests with the designing or submitting authority.
8. Reviewing is intended only as an aid to the contractor in obtaining correct shop drawings. Responsibility for corrections shall rest with the contractor.

I. SHEATHING

1. Roof sheathing
   15/32" wood structural panel: plywood or oriented strand board (O.S.B.) panel index = 32/16, unblocked, nail with 8d common nails at 6" O.C. at all boundaries and supported edges, 12" O.C. field. Staples may be used in lieu of common nails, use 16 gage at 4" O.C. at all boundaries and supported edges, 8" O.C. field. Minimum penetration 1" in supporting member (NER 272).
2. Floor sheathing
   3/4" wood structural panel: plywood or oriented strand board (O.S.B.) T & G, panel index = 48/24, unblocked, nail with 10d common nails at 6" O.C. at all boundaries and supported edges, 12" O.C. field.
3. Shear wall sheathing
   Sheathing for shear walls shall be as indicated on the shear wall plans and schedules. Sheathing at shear walls may be installed with panels horizontal or vertical.

J. STRUCTURAL STEEL

1. Hot-rolled structural steel shapes & plates shall be per ASTM A36 with the following exception. All W-Flange shapes shall be per ASTM A992.
2. Structural steel pipe shall be per ASTM A53 grade B, Tube steel per ASTM A500 Grade B.
3. Nuts & bolts in structural steel connections shall be per ASTM 325N, with hardened washers. Design is based upon bearing type connections with thread not excluded, therefore, no special inspection required.
4. Anchor bolts shall be per ASTM A307, U.N.O.
5. Welds shall be by E70XX, low hydrogen electrodes, all welding shall be performed in a shop approved by the building official.
6. Grout material for base plates shall be non-metallic, non-shrink, pre-packaged grout conforming to ASTM C 1107.

K. SPECIAL INSPECTION / QUALITY ASSURANCE PLAN

1. The seismic lateral load resisting system consists of timber roof diaphragm with wood shear walls
2. Special inspections shall be required:
   - All field welding (periodic at field welds ≤ 5/16")
   - All concrete foundation walls (periodic)
   - All high-strength bolting operations
   - All post-installed anchorage to concrete (continuous at epoxy grout applications)

   a. All special inspections shall be performed by an independent certified inspector from an established testing agency, licensed and approved by the building department.
   b. The testing agency shall send copies of all structural testing and inspection reports directly to Vector Structural Engineers and all interested parties.
3. Structural testing is not required.
4. All reports shall be distributed on a monthly basis to the engineer of record, owner, contractor, and to the building official.
5. No structural observation is required. However, the engineer of record reserves the right to make field observations during construction approximately once per week.

SHEET INDEX

SHT #	SHEET NAME	ORIGINAL	△1 MM-DD-YY	△2 MM-DD-YY	△3 MM-DD-YY	△4 MM-DD-YY
S100	STRUCTURAL GENERAL NOTES	●				
S101	STANDARD DETAILS & SCHEDULES	●				
S200	FOUNDATION & SHEAR WALL PLANS	●				
S201	ROOF FRAMING PLAN	●				
S300	FOUNDATION AND FRAMING DETAILS	●				
S301	SPECIAL INSPECTION FORMS	●				

ABBREVIATIONS

A.B.	ANCHOR BOLT	LVL	LAMINATED VENEER LUMBER
ARCH'L	ARCHITECTURAL DRAWINGS	MFR	MANUFACTURED
BLDG	BUILDING	N.T.S.	NOT TO SCALE
BLK	BLOCK	o/	OVER
BLK'G	BLOCKING	O.C.	ON CENTER
BM	BEAM	OPT'L	OPTIONAL
CANT'L	CANTILEVERED	O.S.B.	ORIENTED STRAND BOARD
℄	CENTER LINE	PSL	PARALLEL STRAND LUMBER
CLG	CEILING	PL	PLATE
CMU	CONCRETE MASONRY UNIT	REQ'D	REQUIRED
COL	COLUMN	SHTH'G	SHEATHING
CONT	CONTINUOUS	SHT	SHEET
DBL	DOUBLE	SIM	SIMILAR
DTL	DETAIL	STL	STEEL
EL	ELEVATION	SW	STRONG-WALL
EOR	ENGINEER OF RECORD	T.O.F.	TOP OF FOOTING
FND	FOUNDATION	T.O.W.	TOP OF WALL
FTG	FOOTING	T&B	TOP AND BOTTOM
GL	GLUE LAMINATED (BEAM)	TYP.	TYPICAL
HDR	HEADER	U.N.O.	UNLESS NOTED OTHERWISE
HORIZ.	HORIZONTAL	VERT.	VERTICAL
H.D.	HOLD DOWN	w/	WITH
LSL	LAMINATED STRAND LUMBER		

RELEASE DATE May 5th, 2009

State of Utah
Department of Administrative Services
Division of Facilities Construction & Management
4110 State Office Building
Salt Lake City, Utah 84114
Phone: (801) 538 - 3018
Fax: (801) 538 - 3267
Internet: http://www.dfcm.state.ut.us

Weber State University

CREATED BY: P+A architects
P+A architects
821 East Kensington Ave.
Salt Lake City, Utah 84105
P: 801.484.1161
F: 801.485.4640
e-mail parchitects@comcast.net

☐ architecture ☐ planning ☐ design

CONSULTANT:
VECTOR ENGINEERS
9138 S. STATE STREET, SUITE 101 (801) 990-1775
SANDY, UTAH 84070 (801) 990-1776 FAX
U1044-013-091

PROFESSIONAL STRUCTURAL ENGINEER No. 5339760 JACOB S. PROCTOR STATE OF UTAH
05-05-09

PROJECT TITLE:
WEBER STATE UNIVERSITY
OGDEN, UTAH

NEW INFORMATION BUILDING
CONSTRUCTION DOCUMENTS

MARK	DATE	DESCRIPTION

ISSUE TYPE: Construction Documents

ISSUE DATE: MAY 5th, 2009

DFCM PROJECT NO: 08322810
CAD PROJECT NO:
CAD DWG FILE:
DRAWN BY: MGP
CHK'D BY: RTA

COPYRIGHT: STATE OF UTAH

SHEET TITLE
STRUCTURAL GENERAL NOTES

SHEET NUMBER
S100

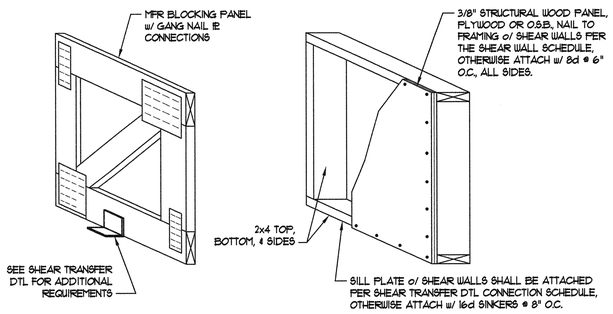

TYPICAL BLOCKING PANEL

N.T.S.

7

STUD HEIGHT TABLE	
STUD WALL TYPE	MAX. HEIGHT
2x4 STUD @ 16" O.C.	10'-0"
2x4 STUD @ 12" O.C.	11'-6"
(2) 2x4 STUD @ 16" O.C.	14'-0"
2x4 DFL #2 @ 16" O.C.	12'-0"
2x4 DFL #2 @ 12" O.C.	13'-0"
(2) 2x4 DFL #2 @ 16" O.C.	14'-0"
2x6 STUD @ 16" O.C.	17'-0"
2x6 STUD @ 12" O.C.	19'-6"
(2) 2x6 STUD @ 16" O.C.	22'-6"
2x6 DFL #2 @ 16" O.C.	18'-6"
2x6 DFL #2 @ 12" O.C.	20'-6"
(2) 2x6 DFL #2 @ 16" O.C.	22'-6"
2x8 DFL #2 @ 16" O.C.	24'-6"
2x8 DFL #2 @ 12" O.C.	26'-6"
(2) 2x8 DFL #2 @ 16" O.C.	30'-0"
1-3/4 x 7-1/4 LVL STUDS @ 16" O.C.	27'-0"

NOTES:
1. THIS TABLE ASSUMES IBC WIND LOADS w/ 90 mph, EXP. "B"
2. THIS TABLE ASSUMES AXIAL DL = 500 lb/ft, LL = 500 lb/ft.

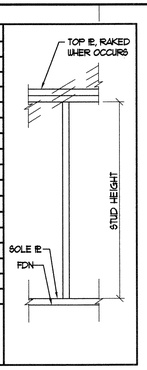

STANDARD STUD TABLE

N.T.S.

4

SHEAR WALL SCHEDULE						
MARK	MIN. BLOCKED MATERIAL	EDGE / BOUNDARY NAILING	FIELD NAILING	SOLE TE NAILING, WHERE OCCURS	SHEAR WALL CAPACITY	DEFAULT SILL ANCHORAGE, U.N.O.
P1	3/8" PLYWOOD OR O.S.B.	8d COMMON NAILS @ 6" O.C.	8d COMMON NAILS @ 12" O.C.	16d SINKERS @ 6" O.C.	260 plf	S1
P2	3/8" PLYWOOD OR O.S.B.	8d COMMON NAILS @ 4" O.C.	8d COMMON NAILS @ 12" O.C.	16d SINKERS @ 4" O.C.	350 plf	S2
P3	3/8" PLYWOOD OR O.S.B.	8d COMMON NAILS @ 3" O.C.	8d COMMON NAILS @ 12" O.C.	16d SINKERS @ 3" O.C.	490 plf	S3
P4	3/8" PLYWOOD OR O.S.B.	8d COMMON NAILS @ 2" O.C.	8d COMMON NAILS @ 12" O.C.	16d SINKERS @ 2" O.C.	640 plf	S4

SILL ANCHORAGE SCHEDULE				
MARK	NOMINAL SILL TE THICKNESS	1/2"ø A.B. SPACING	5/8"ø A.B. SPACING	CAPACITY
S1	2x	48" O.C.	48" O.C.	260 plf
S2	2x	32" O.C.	48" O.C.	350 plf
S3	3x	24" O.C.	32" O.C.	600 plf
	2x	12" O.C.	16" O.C.	
S4	3x	12" O.C.	16" O.C.	1040 plf

SHEAR WALL LENGTH TOLERANCES	
SPECIFIED SHEAR WALL LENGTH	ACCEPTABLE SHEAR WALL TOLERANCE
UP TO 3'-0"	± 2"
OVER 3'-0" AND UP TO 5'-0"	± 3"
OVER 5'-0" AND UP TO 7'-0"	± 4"
OVER 7'-0" AND UP TO 10'-0"	± 6"
OVER 10'-0"	± 8"

1. ALL SHEAR WALLS SHALL BE FRAMED TO THE MINIMUM LENGTHS SHOWN ON THE PLANS WITH THE TOLERANCES INDICATED ON THE TABLE BELOW.
2. ALL SHEAR WALLS SHALL TERMINATE ON AT LEAST (1) FULL HEIGHT STUD. ADDITIONAL STUDS OR SOLID POSTS SHALL BE INSTALLED AS REQUIRED FOR HOLDOWNS WHERE THEY OCCUR.
3. 8d COMMON NAIL SHANK DIAMETER = 131", 16d SINKER SHANK DIAMETER = .148"
4. FOR "P3" AND "P4" SHEAR WALLS, ALL FRAMING RECEIVING EDGE NAILING FROM ADJOINING PANEL EDGES SHALL BE 3-INCH NOMINAL OR WIDER AND NAILS SHALL BE STAGGERED.
5. FOR "P2", "P3" AND "P4" DOUBLE-SIDED SHEAR WALLS, PANEL JOINTS SHALL BE OFFSET TO FALL ON DIFFERENT FRAMING MEMBERS, OR FRAMING SHALL BE 3-INCH NOMINAL OR WIDER AT ADJOINING PANEL EDGES AND NAILS ON EACH SIDE SHALL BE STAGGERED.
6. WHERE 3x SILL PLATES ARE APPLIED, EACH STUD SHALL BE FASTENED w/ (2) 20d BOX END NAILS.
7. ALL ANCHOR BOLTS SHALL HAVE 7" MINIMUM EMBEDMENT.
8. ALL SHEAR WALL ANCHOR BOLTS SHALL INCLUDE A STEEL 3"x3"x0.229" PLATE WASHER BETWEEN THE SILL TE & NUT. THE HOLE IN THE PLATE WASHER IS PERMITTED TO BE DIAGONALLY SLOTTED WITH A WIDTH OF UP TO 3/16" LARGER THAN THE BOLT DIAMETER AND A SLOT LENGTH NOT TO EXCEED 1 3/4" PROVIDED A STANDARD CUT WASHER IS PLACED BETWEEN THE PLATE WASHER AND THE NUT.

STANDARD SHEAR WALL SCHEDULE

N.T.S.

1

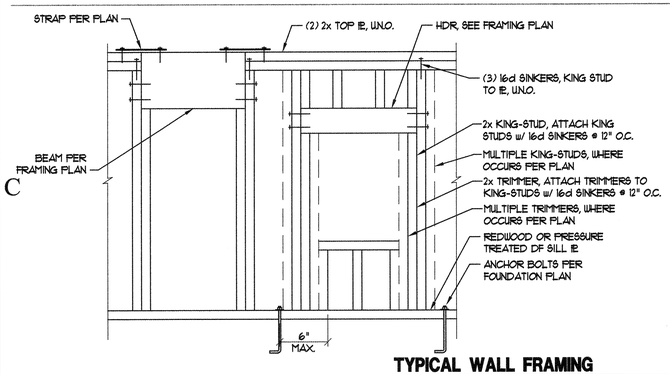

TYPICAL WALL FRAMING

N.T.S.

8

7/16" & 3/8" SHEATHING NAILING ALTERNATES	
8d COMMON NAIL SPACING	ICC APPROVED STAPLE SPACING
	16 GAUGE (1-1/2" LONG)
2" O.C.	N/A
3" O.C.	N/A
4" O.C.	2" O.C.
6" O.C.	3" O.C.
12" O.C.	6" O.C.

STANDARD ALTERNATE NAILING TABLE

N.T.S.

5

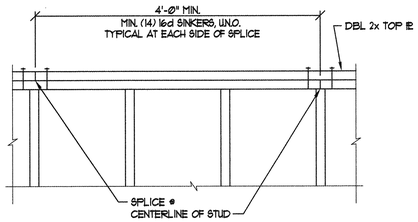

NOTE:
WHERE SPLICE LENGTH IS LESS THAN 4'-0" INSTALL ST6224 STRAP AT TE SPLICES. STRAPS ARE NOT REQUIRED WHERE ONE OF THE PLATES IS CONTINUOUS FOR AT LEAST 4'-0" IN EACH DIRECTION.

TYPICAL TOP PLATE SPLICE

N.T.S.

9

NOTES:
1. HOLES & NOTCHES SHALL NOT OCCUR IN THE SAME STUD.
2. TOP TE'S MAY HAVE HOLES OR NOTCHES AS INDICATED IN THE TABLE. INSTALL STRAPS AS INDICATED ABOVE AT ALL NOTCHES GREATER THAN 25% D.
3. HOLES & NOTCHES GREATER THAN ALLOWED SHALL BE AS STATED BELOW
   - FOR INTERIOR, NON-BEARING, NON- SHEAR WALLS, NO REPAIR IS REQUIRED.
   - FOR EXTERIOR, NON-BEARING WALLS WITH OR WITHOUT SHEAR, INSTALL A RPS22 STRAP ON ONE SIDE OF BOTH TOP PLATES. WHERE MULTIPLE HOLES AR LOCATED ADJACENT TO EACH OTHER, THE STRAP REPAIR MAY BE A CS16 STRAP ON EACH SIDE OF THE UPPER TOP PLATE. THE STRAPS AND NAILING SHALL EXTEND AT LEAST 9" BEYOND EACH END OF THE HOLE GROUP. NAILING BETWEEN HOLES IS NOT REQUIRED. NAILS IN THE CS16 STRAPS MAY BE N8's OR N10's,
   - FOR EXTERIOR AND INTERIOR BEARING WALLS WITH OR WITHOUT SHEAR, INSTALL RPS22 STRAP ON ONE SIDE OF BOTH TOP PLATES. WHERE ROOF TRUSS OR FLOOR TRUSS IS BEARING WITHIN THE STUD BAY OF THE HOLE, INSTALL AN ADDITIONAL STUD DIRECTLY BELOW THE TRUSS OR JOIST. AN ADDITIONAL STUD IS NOT REQUIRED WHERE AN EXISTING STUD FACE IS WITHIN 3" OF THE TRUSS OR JOIST FACE. WHERE MULTIPLE HOLES ARE LOCATED ADJACENT TO EACH OTHER, THE STRAP REPAIR MAY BE WITH A CS16 STRAP ON EACH SIDE OF THE UPPER PLATE. THE STRAPS AND NAILING SHALL EXTEND AT LEAST 9" BEYOND EACH END OF THE WHOLE GROUP. NAILING BETWEEN THE HOLES IS NOT REQUIRED. NAILS IN THE CS16 STRAPS MAY BE N8's OR N10's.

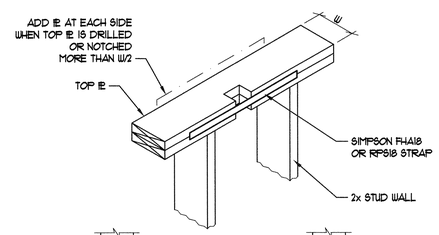

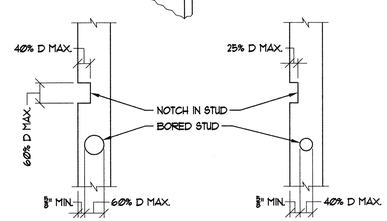

NON-BEARING INTERIOR PARTITION

BEARING & EXTERIOR PARTITION

NOTE: BORING & NOTCHING SHALL NOT OCCUR IN THE SAME STUD.

NOTCH / BORE SCHEDULE		
NOTCH / BORE % OF STUD	2x4 STUD	2x6 STUD
25%	1/8"	1 3/8"
40%	1 3/8"	2 1/8"
60%	2"	3 1/4"

DRILLING AND NOTCHING OF PLATES & STUDS

N.T.S.

6

HOLDOWN ANCHORAGE SCHEDULE	
HOLDOWN	ANCHORAGE
STHD8	PER MANUFACTURER & DTL 10/-
STHD14	PER MANUFACTURER & DTL 10/-
PHD8, HDQ8 & HDU8	SSTB28 OR 7/8" DIA. A307 ALL THREAD ROD EPOXY GROUTED IN 1" DIA. x 15" DEEP HOLE w/ SIMPSON SET EPOXY. NO SUBSTITUTIONS.
HTT16, HTT22 & HDU4	5/8" DIA. A307 ALL THREAD ROD w/ END NUT & WASHER EMBEDDED 10" OR 5/8" DIA. A307 ALL THREAD ROD EPOXY GROUTED IN 3/4" DIA. x 10" DEEP HOLE w/ SIMPSON SET EPOXY. NO SUBSTITUTIONS.
NOTE:	INCREASE FOOTING DEPTH AS REQUIRED FOR 3" MIN. COVER BELOW BOLT & COORDINATE EXACT LOCATIONS WITH THE FRAMING CONTRACTOR. HOLDOWNS MAY BE INSTALLED 4" MAX. FROM SHEAR WALL EDGE. BOUNDARY NAILING MUST BE PROVIDED @ STUDS ALIGNED w/ HOLDOWNS.

STANDARD HOLDOWN ANCHORAGE SCHEDULE

N.T.S.

2

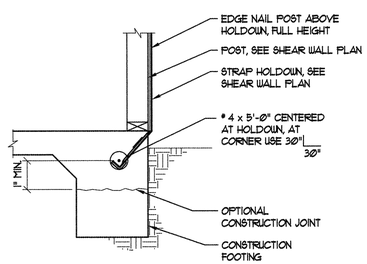

TYPICAL STRAP DETAIL

N.T.S.

10

FOOTING SCHEDULE		
MARK	SIZE	REBAR
F2.0	2'-0" SQ. x 12" THICK	(3) # 4 EACH WAY
F2.5	2'-6" SQ. x 12" THICK	(4) # 4 EACH WAY
F3.0	3'-0" SQ. x 12" THICK	(4) # 4 EACH WAY
F3.5	3'-6" SQ. x 12" THICK	(5) # 4 EACH WAY
F4.0	4'-0" SQ. x 12" THICK	(6) # 4 EACH WAY
F4.5	4'-6" SQ. x 12" THICK	(6) # 4 EACH WAY
F5.0	5'-0" SQ. x 12" THICK	(7) # 4 EACH WAY
F5.5	5'-6" SQ. x 12" THICK	(8) # 4 EACH WAY

STANDARD SPOT FOOTING SCHEDULE

N.T.S.

3

State of Utah
Department of Administrative Services
Division of Facilities Construction & Management
4110 State Office Building
Salt Lake City, Utah 84114
Phone: (801) 538 - 3018
Fax: (801) 538 - 3267
Internet: http://www.dfcm.state.ut.us

Weber State University

CREATED BY: P+A architects

P+A architects
821 East Kensington Ave.
Salt Lake City, Utah 84105
P: 801.484.1161
F: 801.485.4640
e-mail parchitects@comcast.net

architecture planning design

CONSULTANT:

VECTOR engineers
9138 S. State Street, Suite 101 (801) 990-1775
Sandy, Utah 84070 (801) 990-1776 FAX
U1044-013-091

Professional Structural Engineer No. 5339760 Jacob S. Proctor State of Utah
05-05-09

PROJECT TITLE:

WEBER STATE UNIVERSITY
OGDEN, UTAH

NEW INFORMATION BUILDING
CONSTRUCTION DOCUMENTS

MARK	DATE	DESCRIPTION

ISSUE TYPE: Construction Documents

ISSUE DATE: MAY 5th, 2009

DFCM PROJECT NO: 08322810
CAD PROJECT NO:
CAD DWG FILE:
DRAWN BY: MGP
CHK'D BY: RTA
COPYRIGHT: STATE OF UTAH

SHEET TITLE

STANDARD DETAILS AND SCHEDULES

SHEET NUMBER

S101

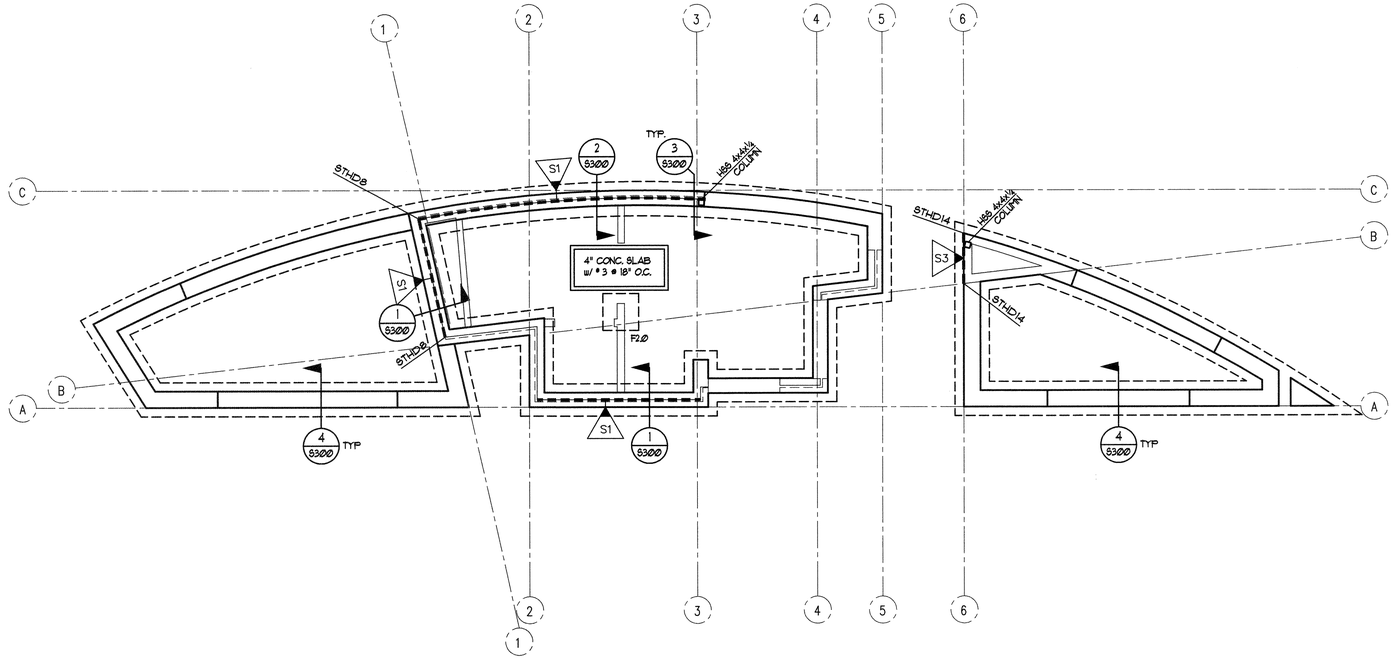

FOUNDATION PLAN

1/4" = 1'-0"

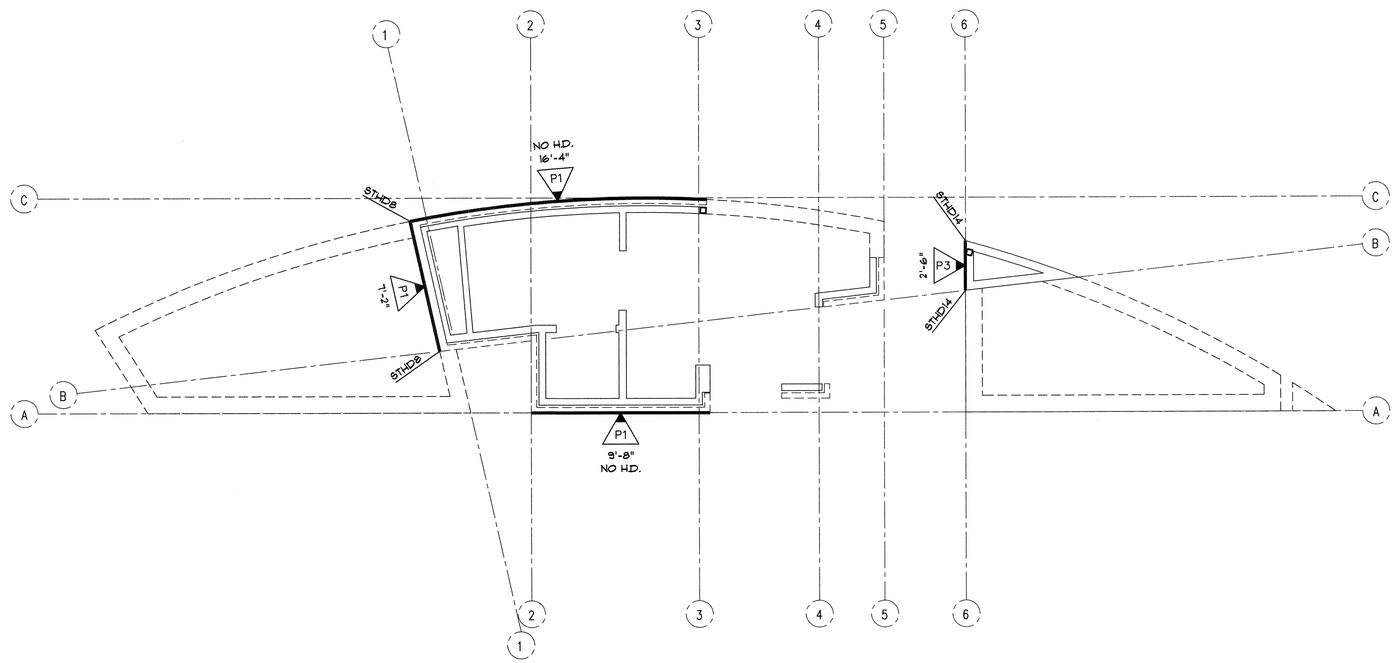

SHEAR WALL PLAN

1/4" = 1'-0"

FOUNDATION NOTES:

1. CONTRACTOR SHALL REFER TO ARCHITECHURAL DRAWINGS FOR ALL DIMENSIONS PRIOR TO CONSTRUCTION.
2. ALL EXTERIOR WALLS, INTERIOR BEARING WALLS & SHEAR WALLS TO BE ATTACHED TO THE FOUNDATION w/ ½"ø x 10" DEEP ANCHOR BOLTS w/ 7" EMBED. (10" @ 2x SILLS & 12" @ 3x SILLS) AT 32" O.C., U.N.O. SEE THIS PLAN & SHEAR WALL SCHEDULE FOR ANCHOR BOLT REQUIREMENTS AT SHEAR WALLS. ANCHOR BOLTS @ SHEAR WALLS TO HAVE WASHERS PER SHEAR WALL SCHED. (SHEET S11) ALL OTHER ANCHOR BOLTS TO HAVE WASHERS PER GENERAL NOTES, NOTE E (S100).
3. ALL STRAPS HOLDOWS SHALL BE INSTALLED AS SHOWN ON DETAIL 10/S101.
4. ISOLATED FOOTINGS & INTERIOR STRIP FOOTINGS TO BE CENTERED BELOW POSTS & BEARING/SHEAR WALLS, RESPECTIVELY.
5. SEE SHEET S101 FOR FOOTING SCHEDULE & HOLDOWN ANCHORAGE SCHEDULE.

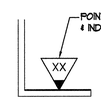

NOTE:
SEE SHEET S101 FOR SILL ANCHORAGE SCHEDULE

SILL ANCHORAGE KEY

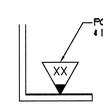

NOTE:
SEE SHEET S101 FOR SHEAR WALL SCHEDULE & HOLDOWN ANCHORAGE SCHEDULE

SHEAR WALL KEY

NOTE:
WHERE STRAP HOLDOWN IS ATTACHED TO A SINGLE KINGSTUD & A SINGLE TRIMMER, ATTACH THE TWO TOGETHER w/ (2) 16d SINKERS @ 6" O.C. FULL HEIGHT OR w/ LTP4 @ 12" O.C. FULL HEIGHT.

State of Utah
Department of Administrative Services
Division of Facilities Construction & Management
4110 State Office Building
Salt Lake City, Utah 84114
Phone: (801) 538 - 3018
Fax: (801) 538 - 3267
Internet: http://www.dfcm.state.ut.us

Weber State University

CREATED BY: P+A architects

P+A architects
821 East Kensington Ave.
Salt Lake City, Utah 84105
P: 801.484.1161
F: 801.485.4640
e-mail parchitects@comcast.net

architecture planning design

CONSULTANT:
VECTOR ENGINEERS
9138 S. STATE STREET, SUITE 101 (801) 990-1775
SANDY, UTAH 84070 (801) 990-1776 FAX
U1044-013-091

PROFESSIONAL STRUCTURAL ENGINEER
No. 5338760
JACOB S. PROCTOR
STATE OF UTAH
05-05-09

PROJECT TITLE:
WEBER STATE UNIVERSITY
OGDEN, UTAH

NEW INFORMATION BUILDING
CONSTRUCTION DOCUMENTS

MARK	DATE	DESCRIPTION

ISSUE TYPE: Construction Documents

ISSUE DATE: MAY 5th, 2009

DFCM PROJECT NO: 08322810
CAD PROJECT NO:
CAD DWG FILE:
DRAWN BY: MGP
CHK'D BY: RTA
COPYRIGHT: STATE OF UTAH

SHEET TITLE
FOUNDATION & SHEAR WALL PLANS

SHEET NUMBER
S200

NOTES:

1. ALL EXTERIOR WALLS & INTERIOR BR'G & SHEAR WALLS TO BE 2x4 @ 16" O.C. DFL-STUD GRADE, U.N.O. STUD WALLS SHALL MEET REQUIREMENTS OF WALL TABLE ON SHEET S10.
2. FOR 2x4 FRAMED WALLS AT HEADERS (HDR):
   A. PROVIDE (1) 2x4 TRIMMER & (1) 2x4 KING STUD AT OPENINGS < 6'-0" U.N.O.
   B. PROVIDE (2) 2x4 TRIMMERS & (2) 2x4 KING STUDS AT OPENINGS ≥ 6'-0" & ≤ 10'-0" U.N.O.
   C. PROVIDE (2) 2x4 TRIMMERS & (3) 2x4 KING STUDS AT OPENINGS ≥ 10'-0" & ≤ 18'-0" U.N.O. (1) KING STUD REQUIRED AT BAY WINDOW OPENINGS & AT GARAGE OPENINGS WHERE ADDITIONAL KING STUDS WOULD NOT FIT.
   NOTE: KINGSTUDS NOT REQUIRED AT BEAMS (BM)
3. FOR 2x6 FRAMED WALLS AT HEADERS (HDR):
   A. PROVIDE (1) 2x6 TRIMMER & (1) 2x6 KING STUD AT OPENINGS < 8'-0" U.N.O.
   B. PROVIDE (2) 2x6 TRIMMERS & (2) 2x6 KING STUDS AT OPENINGS ≥ 8'-0" & ≤ 12'-0" U.N.O.
   C. PROVIDE (2) 2x6 TRIMMERS & (3) 2x6 KING STUDS AT OPENINGS ≥ 12'-0" & ≤ 20'-0" U.N.O.
   NOTE: KINGSTUDS NOT REQUIRED AT BEAMS (BM)
4. FACE NAIL MULTIPLE 2x POSTS WITH 16d SINKERS @ 6" O.C.
5. SHADED AREAS ARE TYPICAL OVERFILL, STICK FRAMED PER DETAIL 6/S11 OR OVERBUILD TRUSSES PER TRUSS MANUFACTURER
6. INTERIOR BEARING WALLS
7. ALL GLULAM BEAMS TO HAVE STANDARD CAMBER (R = 20000') U.N.O.
8. PROVIDE (2) 2x POST, EACH END OF ALL BEAMS & GIRDER TRUSSES, U.N.O.
9. BEAM AND HEADER SIZES INDICATED ON THE PLANS ARE MINIMUM SIZES. LARGER SIZES MAY BE INSTALLED AT THE CONTRACTOR'S OPTION.
10. CONTINUOUS TOP PLATE MAY BE USED IN LIEU OF ST6224 STRAP FROM BEAM TO PLATE.

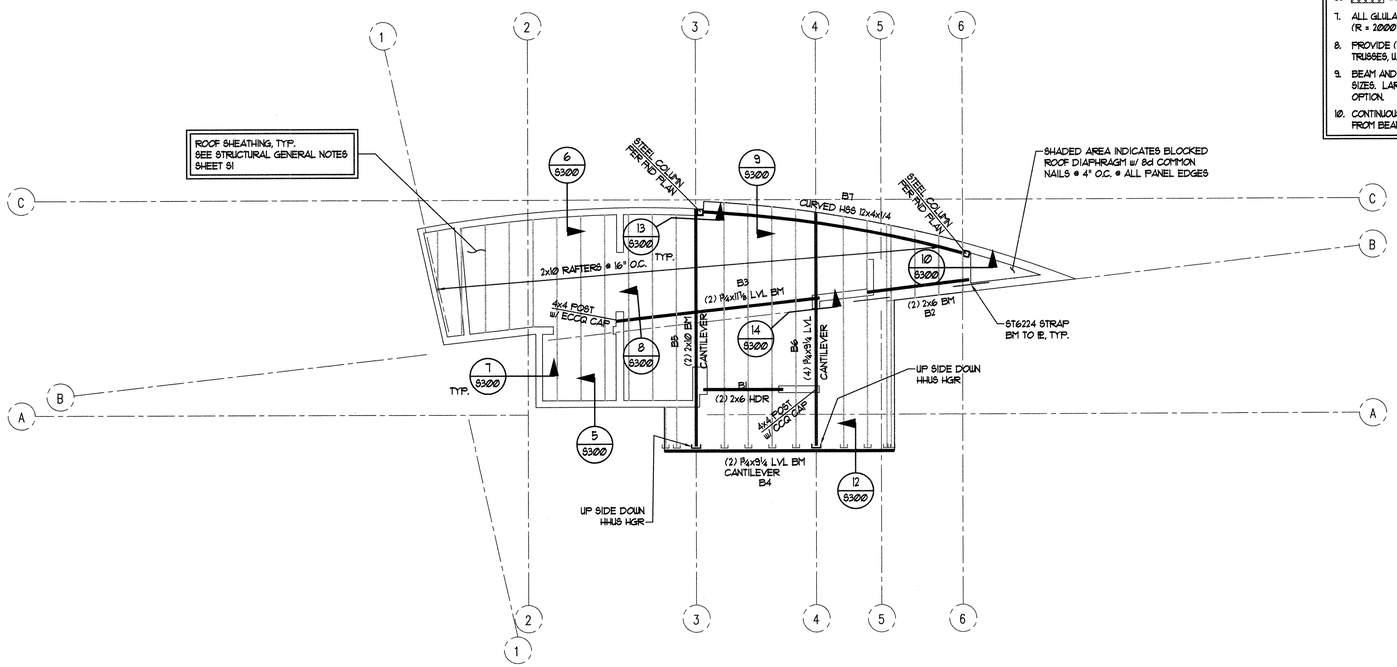

ROOF FRAMING PLAN

1/4" = 1'-0"

State of Utah
Department of Administrative Services
Division of Facilities Construction & Management
4110 State Office Building
Salt Lake City, Utah 84114
Phone: (801) 538 - 3018
Fax: (801) 538 - 3267
Internet: http://www.dfcm.state.ut.us

Weber State University

CREATED BY: P+A architects

P+A architects
821 East Kensington Ave.
Salt Lake City, Utah 84105
P: 801.484.1161
F: 801.485.4640
e-mail parchitects@comcast.net

architecture planning design

CONSULTANT:

VECTOR ENGINEERS
9138 S. STATE STREET, SUITE 101 (801) 990-1775
SANDY, UTAH 84070 (801) 990-1776 FAX
U1044-013-091

PROFESSIONAL STRUCTURAL ENGINEER
No. 5339780
JACOB S. PROCTOR
STATE OF UTAH
05-05-09

PROJECT TITLE:

WEBER STATE UNIVERSITY
OGDEN, UTAH

NEW INFORMATION BUILDING
CONSTRUCTION DOCUMENTS

MARK	DATE	DESCRIPTION

ISSUE TYPE: Construction Documents

ISSUE DATE: MAY 5th, 2009

DFCM PROJECT NO: 08322810
CAD PROJECT NO:
CAD DWG FILE:
DRAWN BY: MGP
CHK'D BY: RTA

COPYRIGHT: STATE OF UTAH

SHEET TITLE

ROOF FRAMING PLAN

SHEET NUMBER

S201

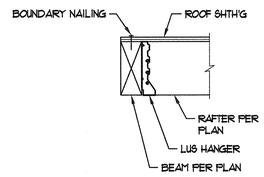

N.T.S. **12**

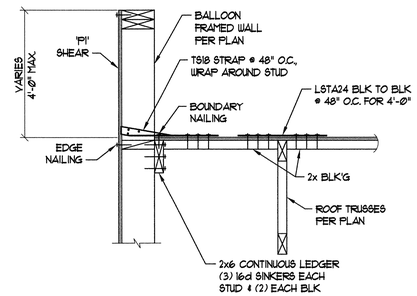

N.T.S. **7**

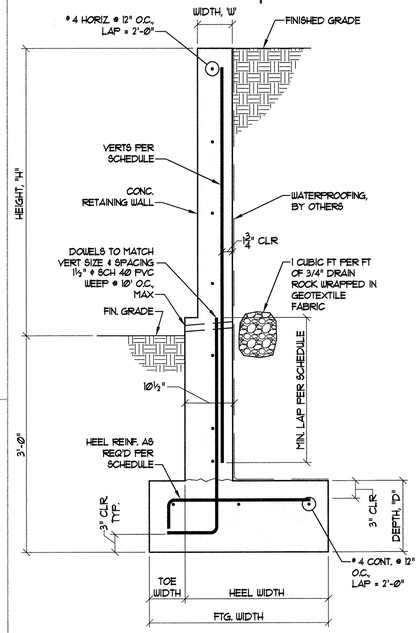

RETAINING WALL SCHEDULE								
W	H	D	TOE WIDTH	HEEL WIDTH	FTG WIDTH	LAP	VERTICAL REINF.	HEEL REINF.
6"	2'-0"	12"	0'-6"	1'-3"	1'-9"	2'-0"	@ 4 BARS @ 18" O.C.	NOT REQ'D
6"	4'-0"	12"	1'-0"	2'-3"	3'-3"	2'-0"	@ 4 BARS @ 18" O.C.	NOT REQ'D
6"	6'-0"	12"	1'-6"	3'-0"	4'-6"	2'-0"	@ 4 BARS @ 10" O.C.	@ 4 BARS @ 10" O.C.

N.T.S. **4**

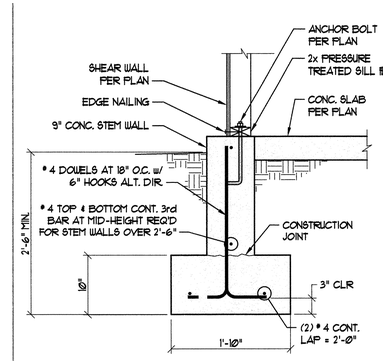

N.T.S. **1**

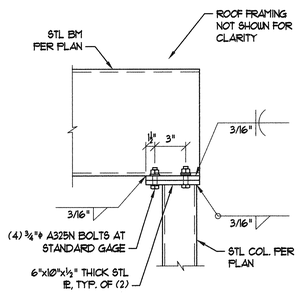

N.T.S. **13**

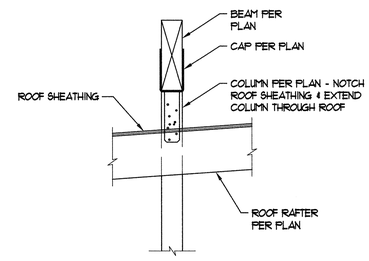

N.T.S. **8**

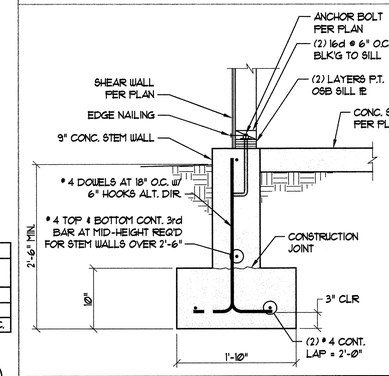

N.T.S. **2**

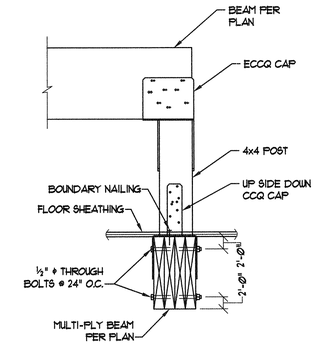

N.T.S. **14**

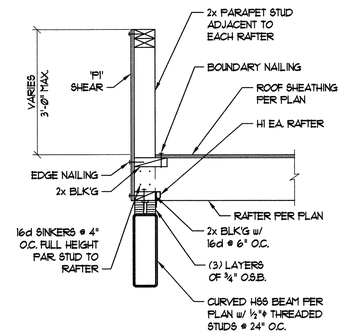

N.T.S. **9**

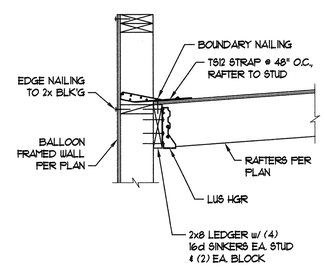

N.T.S. **5**

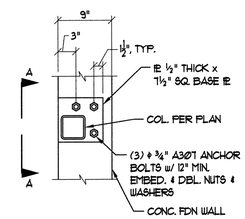

N.T.S. **3**

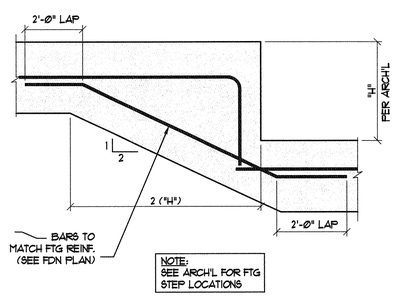

TYPICAL FOOTING STEP

N.T.S. **15**

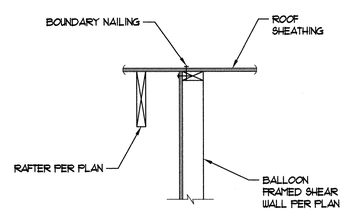

N.T.S. **10**

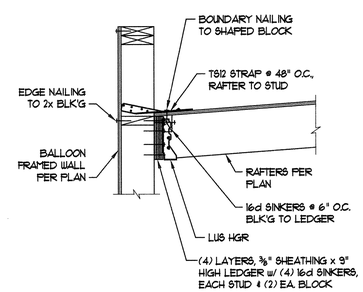

N.T.S. **6**

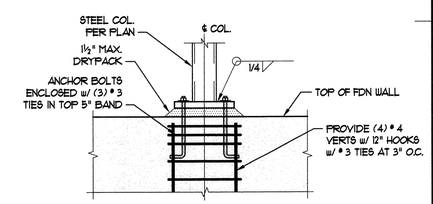

SECTION A-A

N.T.S. **3**

State of Utah
Department of Administrative Services
Division of Facilities Construction & Management
4110 State Office Building
Salt Lake City, Utah 84114
Phone: (801) 538 - 3018
Fax: (801) 538 - 3267
Internet: http://www.dfcm.state.ut.us

Weber State University

CREATED BY: P+A architects

P+A architects
821 East Kensington Ave.
Salt Lake City, Utah 84105
P: 801.484.1161
F: 801.485.4640
e-mail parchitects@comcast.net

architecture planning design

CONSULTANT:

VECTOR ENGINEERS
9138 S. STATE STREET, SUITE 101 (801) 990-1775
SANDY, UTAH 84070 (801) 990-1776 FAX
U1044-013-091

PROFESSIONAL STRUCTURAL ENGINEER No. 5339760 JACOB S. PROCTOR STATE OF UTAH
05-05-09

PROJECT TITLE:

WEBER STATE UNIVERSITY
OGDEN, UTAH

NEW INFORMATION BUILDING
CONSTRUCTION DOCUMENTS

MARK	DATE	DESCRIPTION

ISSUE TYPE: Construction Documents

ISSUE DATE: MAY 5th, 2009

DFCM PROJECT NO: 08322810
CAD PROJECT NO:
CAD DWG FILE:
DRAWN BY: MGP
CHK'D BY: RTA
COPYRIGHT: STATE OF UTAH

SHEET TITLE

FOUNDATION AND FRAMING DETAILS

SHEET NUMBER

S300

SPECIAL INSPECTION AND TESTING (IBC 1704)

Indicate required Special inspections for project by checking the appropriate boxes:

FABRICATORS (IBC1704.2)

☐ Approved Fabricator	Fabricators Name:
☐ Unapproved Fabricator	Fabricators Name:

In-plant inspections
☒ Steel Construction ☒ Welding ☒ Details

STEEL (IBC1704.3)

Item			Reference/Comments
High Strength Bolting(1704.3.3)	☐ Continuous	☒ Periodic	VERIFY BOLT SIZE, NUMBER AND SPACING
WELDING (1704.3.1)			
Details (1704.3.2)			
Complete & partial penetration groove welds	☐ Continuous	☐ Periodic	
Multipass fillet welds	☐ Continuous	☐ Periodic	
Single-pass fillet welds > 5/16"	☐ Continuous	☐ Periodic	
Single-pass fillet welds ≤ 5/16"	☐ Continuous	☒ Periodic	VERIFY WELD SIZE, LENGTH AND STRENGTH
Floor & roof deck welds	☐ Continuous	☐ Periodic	
REINFORCEMENT STEEL	☐ Continuous		
Verification of weldability	☐ Continuous	☐ Periodic	
Shear wall and shear reinforcement	☐ Continuous	☐ Periodic	
Other reinforcement	☐ Continuous	☐ Periodic	
Steel frame joint details	☐ Continuous	☐ Periodic	

CONCRETE CONSTRUCTION (IBC1704.4)

Item			Reference/Comments
Materials (1704.4.1)	☐ Continuous	☐ Periodic	
Steel placement	☐ Continuous	☐ Periodic	
Steel welding	☐ Continuous	☐ Periodic	
Bolts prior & during placement	☐ Continuous	☒ Periodic	VERIFY LOCATION, SIZE, AND STRENGTH
Use of required design mix	☐ Continuous	☐ Periodic	
Concrete sampling for strength test, slump, air content, and temperature of concrete	☐ Continuous	☐ Periodic	
Concrete & shotcrete placement	☐ Continuous	☐ Periodic	
Curing temperature and techniques	☐ Continuous	☐ Periodic	
Pre-stressed concrete	☐ Continuous	☐ Periodic	
Pre-cast concrete	☐ Continuous	☐ Periodic	
Posttentsioned concrete	☐ Continuous	☐ Periodic	
Form work	☐ Continuous	☐ Periodic	

MASONRY CONSTRUCTION (IBC1704.5)

Item	Reference/Comments
As masonry construction begins:	

Site prepared mortar	☐ Continuous	☐ Periodic	
Construction of mortar joints	☐ Continuous	☐ Periodic	
Location of reinforcement, connectors, pre-stressing tendons and anchorages	☐ Continuous	☐ Periodic	
Pre-stressing technique	☐ Continuous	☐ Periodic	
Grade and size of pre-stressing tendons and anchorages	☐ Continuous	☐ Periodic	
Inspection program verify:			
Size and location of structural elements	☐ Continuous	☐ Periodic	
Type, size and location of anchors	☐ Continuous	☐ Periodic	
Size, grade and type of reinforcement	☐ Continuous	☐ Periodic	
Welding of reinforcement	☐ Continuous	☐ Periodic	
Cold and hot weather protection	☐ Continuous	☐ Periodic	
Application and measurement of pre-stressing force	☐ Continuous	☐ Periodic	
Prior to grouting verify			
Clean grout space	☐ Continuous	☐ Periodic	
Placement of reinforcement	☐ Continuous	☐ Periodic	
Grout mix	☐ Continuous	☐ Periodic	
Mortar joints	☐ Continuous	☐ Periodic	
Grout placement	☐ Continuous	☐ Periodic	
Grout and mortar specimens and prisms	☐ Continuous	☐ Periodic	
Construction and submittal compliance verification	☐ Continuous	☐ Periodic	
Empirical masonry – Cat. I-III (1708.1.1)	☐ Continuous	☐ Periodic	
Empirical masonry – Cat. IV (1708.1.1)	☐ Continuous	☐ Periodic	
Engineered masonry – Cat. I-III 1708.1.1	☐ Continuous	☐ Periodic	
Engineered masonry – Cat. IV (1708.1.1)	☐ Continuous	☐ Periodic	
Engineering & pre-stressing steel (1708.3)	☐ Continuous	☐ Periodic	
Structural steel (1708.4)	☐ Continuous	☐ Periodic	
Qualification of mechanical & electrical equipment (1708.5)	☐ Continuous	☐ Periodic	
Seismically isolated structures (1708.6)	☐ Continuous	☐ Periodic	
Testing for seismic resistance is	☐ Continuous	☐ Periodic	

WOOD CONSTRUCTION (IBC1704.6)

Item			Reference/Comments
Prefabricated elements & assembly	☐ Continuous	☐ Periodic	

SOILS CONSTRUCTION (IBC1704.7)

Item			Reference/Comments
Site preparation	☐ Continuous	☐ Periodic	

Structural fill material	☐ Continuous	☐ Periodic	
Structural fill lift thickness	☐ Continuous	☐ Periodic	
Structural fill soil densities	☐ Continuous	☐ Periodic	
Backfill soils materials	☐ Continuous	☐ Periodic	
Backfill soil densities	☐ Continuous	☐ Periodic	
Fill material under side walks and parking	☐ Continuous	☐ Periodic	
Fill soil densities under side walks and parking	☐ Continuous	☐ Periodic	

PILE FOUNDATIONS (IBC1704.8)

Item			Reference/Comments
Observe driving operation and reporting	☐ Continuous	☐ Periodic	
Verify placement & installation data	☐ Continuous	☐ Periodic	

PIER FOUNDATIONS (IBC1704.9)

Item			Reference/Comments
Observe drilling operation and reporting	☐ Continuous	☐ Periodic	
Verify placement & installation data	☐ Continuous	☐ Periodic	

SPRAYED FIRE-RESISTANT MATERIALS (IBC1704.10)

Item			Reference/Comments
Structural member surface conditions	☐ Continuous	☐ Periodic	
Material application	☐ Continuous	☐ Periodic	
Material thickness	☐ Continuous	☐ Periodic	
Material density	☐ Continuous	☐ Periodic	
Bonding strength	☐ Continuous	☐ Periodic	

MASTIC AND INTUMESCENT FIRE-RESISTANT COATINGS (IBC1704.11)

Item			Reference/Comments
Material and instillation	☐ Continuous	☐ Periodic	

EXTERIOR INSTULATION AND FINISH SYSTEMS (EIFS) (IBC1704.12)

Item			Reference/Comments
Material and instillation	☐ Continuous	☐ Periodic	

ALTERNITIVE CONSTRUCTION METHODS OR MATERIALS (IBC1704.13)

Item			Reference/Comments
Material and instillation	☐ Continuous	☐ Periodic	

EPOXY (IBC1704.13)

Item			Reference/Comments
Material and instillation	☐ Continuous	☐ Periodic	

SMOKE CONTROL (IBC1704.14)

Item			Reference/Comments
Material	☐ Continuous	☐ Periodic	

Instillation	☐ Continuous	☐ Periodic	

Special inspection for seismic resistance (IBC1707)

Item			Reference/Comments
Structural Steel (1707.2)	☐ Continuous	☐ Periodic	
Structural Wood (1707.3)	☐ Continuous	☐ Periodic	
Cold-formed steel framing (1707.4)	☐ Continuous	☐ Periodic	
Pier foundations (1707.5)	☐ Continuous	☐ Periodic	
Storage racks & access floors (1707.6)	☐ Continuous	☐ Periodic	
Architectural components (1707.7)	☐ Continuous	☐ Periodic	
Mechanical & electrical items (1707.8)	☐ Continuous	☐ Periodic	
Designated systems verification (1707.9)	☐ Continuous	☐ Periodic	
Seismic isolation systems (1707.10)	☐ Continuous	☐ Periodic	

Inspection of seismic resistance are not required per IBC 1705.3 ☐

OTHER

Item			Reference/Comments
	☐ Continuous	☐ Periodic	
	☐ Continuous	☐ Periodic	

Special Inspectors Shall:

- Be approved by the Building Official prior to performing any duties;
- Provide proof of licensure as a special inspector by the State of Utah for each type of inspection;
- Inspection reports are to meet the requirements of IBC 1704.1.2 and DFCM standards;
- Inspection reports are to be submitted to the code consultant, architect, DFCM project manager, and the State of Utah Building Official within 48 hrs. of inspections;
- A final inspection report shall be submitted following completion of the project documenting the types of special inspections performed and a statement indicating that the structure is in compliance with the drawings, specifications and applicable codes. IBC 1704.1.2

NOTE:

ALL SPECIAL INSPECTION IS TO BE PER CHAPTER 17 OF THE 2006 IBC. COMMENTS LISTED THE REFERENCE/COMMENTS SECTION OF THE FORM ARE BRIEF BASIC EXPLANATIONS OF THE SPECIAL INSPECTIONS ONLY.

State of Utah
Department of Administrative Services
Division of Facilities Construction & Management
4110 State Office Building
Salt Lake City, Utah 84114
Phone: (801) 538 - 3018
Fax: (801) 538 - 3267
Internet: http://www.dfcm.state.ut.us

Weber State University

CREATED BY: P+A architects

P+A architects
821 East Kensington Ave.
Salt Lake City, Utah 84105
P: 801.484.1161
F: 801.485.4640
e-mail parchitects@comcast.net

☐ architecture ☐ planning ☐ design

CONSULTANT:

VECTOR ENGINEERS
9138 S. STATE STREET, SUITE 101 (801) 990-1775
SANDY, UTAH 84070 (801) 990-1776 FAX
U1044-013-091

PROFESSIONAL STRUCTURAL ENGINEER No. 5330760 JACOB S. PROCTOR STATE OF UTAH
05-05-09

PROJECT TITLE:
WEBER STATE UNIVERSITY
OGDEN, UTAH

NEW INFORMATION BUILDING
CONSTRUCTION DOCUMENTS

MARK	DATE	DESCRIPTION

ISSUE TYPE: Construction Documents

ISSUE DATE: MAY 5th, 2009

DFCM PROJECT NO: 08322810
CAD PROJECT NO:
CAD DWG FILE:
DRAWN BY: MGP
CHK'D BY: RTA

COPYRIGHT: STATE OF UTAH

SHEET TITLE
SPECIAL INSPECTION FORMS

SHEET NUMBER
S301

PLUMBING SYMBOL LEGEND \ ABBREVIATIONS

FD	FLOOR DRAIN		RISE IN PIPE		CHECK VALVE
WCO	WALL CLEAN OUT		ELBOW IN PIPE		BALANCE VALVE
	DOMESTIC COLD WATER (DCW)		TEE IN PIPE	VTR	VENT THROUGH ROOF
R.D.	ROOF DRAIN		BALL VALVE	WHA	WATER HAMMER ARRESTOR
O.R.D.	OVERFLOW ROOF DRAIN		PIPE CAP	A.F.F.	ABOVE FINISHED FLOOR
	WASTE (W)		VALVE IN DROP	WH	WALL HYDRANT
	VENT (V)		UNION	HB	HOSE BIBB
	DROP IN PIPE				

PLUMBING FIXTURE SCHEDULE

SYMBOL	DESCRIPTION	COLD	HOT	TRAP	WASTE	VENT	REMARKS
P-1	WATER CLOSET, WALL MOUNTED, FLUSHVALVE TYPE, ADA COMPLIANT	1"	-	INT.	3"	2"	-
P-2	LAVATORY, WALL MOUNTED, ADA COMPLIANT, AUTOMATIC FAUCET	1/2"	1/2"	1-1/2"	2"	1-1/2"	-
P-3	WATER COOLER, SINGLE LEVEL, ADA COMPLIANT	1/2"	-	1-1/2"	2"	1-1/2"	-
FD	FLOOR DRAIN, 6" DIAMETER GRATE	-	-	2"	2"	2"	WITH TRAP PRIMER
WCO	WALL CLEAN OUT	-	-	-	-	-	-

GENERAL FIXTURE NOTES:

1. THE PLUMBING CONTRACTOR SHALL VERIFY THE REQUIREMENTS OF ALL PLUMBING EQUIPMENT AND THE RELATED ROUGH IN LOCATIONS WITH THE MECHANICAL AND ARCHITECTURAL PLANS AND SPECIFICATIONS. PROVIDE ALL ACCESSORIES AND OPTIONS REQUIRED TO PROVIDE THE OWNER A COMPLETELY FUNCTIONAL PLUMBING SYSTEM.
2. ALL WALL HUNG PLUMBING FIXTURES SHALL BE SUPPORTED BY FLOOR MOUNTED CARRIERS BY WADE, SMITH, JOSAM, MIFAB, OR WATTS. CARRIERS SHALL BE CONSTRUCTED UTILIZING ALL METAL COMPONENTS WITH SUPPORT FEET SECURELY ANCHORED TO THE FLOOR STRUCTURE, FIXTURES ARMS SHALL SUPPORT FIXTURE INDEPENDENT FROM WALL STRUCTURE.
3. EACH INDIVIDUAL FIXTURE SUPPLY SHALL BE PROVIDED WITH A CHROME-PLATED QUARTER TURN STOP VALVE BRASSCRAFT MODEL KTCR_ OR ENGINEER APPROVED EQUAL.
4. FIXTURES AND ACCESSORIES SHALL BE AS SCHEDULED. EACH ITEM SHALL BE COMPLETE WITH CHROME-PLATED BRASS TRIM.
5. ADA COMPLIANT FIXTURES SHALL BE INSTALLED WITH PRE-FORMED INSULATION AND PROTECTIVE COVERS ON P-TRAPS AND STOPS. COVERS TO BE MANUFACTURED BY BUCKAROOS OR TRUEBRO.
6. CAULK ALL FIXTURES TO THE WALL OR FLOOR WITH APPLICABLE SILICONE COMPOUND. UTILIZE MULTIPLE BEADS TO FILL GAPS AND FINISH TO SMOOTH, FILLETED EDGE APPROPRIATE TOOLS. PROVIDE PROFESSIONAL APPEARANCE.
7. ALL PLUMBING SHALL BE INSTALLED TO CONFORM TO THE LATEST ADOPTED EDITION OF THE INTERNATIONAL PLUMBING CODE INCLUDING LOCAL AMENDMENTS. CONSULT AUTHORITIES HAVING JURISDICTION

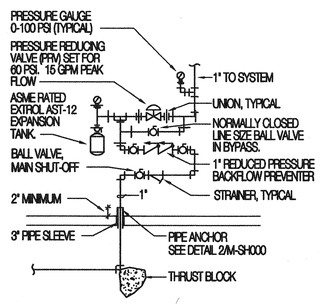

3 M-SH000 PRV STATION DETAIL

SCALE: NONE

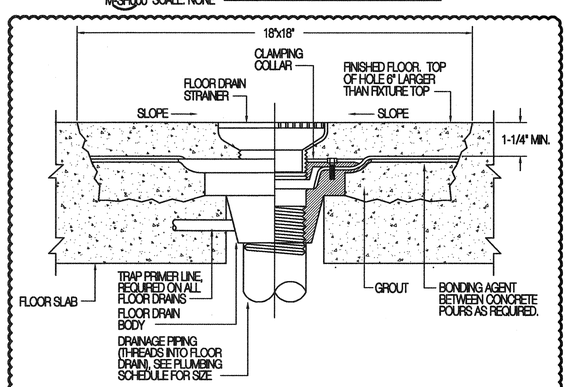

PROVIDE TRAP PRIMER IN MECHANICAL CLOSET WITH VALVED SHUTOFF AND PRIMER LINE EXTENDED TO FLOOR DRAIN BODY.

4 M-SH000 FLOOR DRAIN IN CONCRETE FLOOR

SCALE: NONE

FAN COIL UNIT (FCU)

SYMBOL	MIN. CFM	MIN. E.S.P. IN. WG.	FAN TYPE	FAN SPEED	FAN ELEC. REQ.		COOLING COIL					ELECTRIC HEATING ELEMENT								FILTER SIZE	CARRIER MODEL	REMARKS
					V / PH. / HZ.	HP.	TOT. CAP. (BTUH)	SENS. CAP. (BTUH)	SUCTION TEMP.	REFRIG.	AIR PRESS. DROP (IN. WC.)	TOT. CAP. (KW/BTUH)	RETURN AIR TEMP. (°F)	DISC. AIR TEMP. (F)	DELTA T (°F)	AIR PRESS. DROP (IN. WC.)	V / PH. / HZ.	MCA	MOCP			
FCU-1	485	0.30	FC	LOW	120 / 1 / 60	1/5	16,000	14,500	45°F	R-410	0.05"	5.0 / 17,065	65°F	105°F	40°F	0.03"	208 / 1 / 60	24.5	25	16" x 20"	FF1ENP-018	-

SEE SPECIFICATION SECTION 15830 FOR ADDITIONAL REQUIREMENTS.

AIR COOLED CONDENSING UNITS(CU)

SYMBOL	TOTAL CAPACITY (BTUH)	SENSIBLE CAPACITY (BTUH)	COND. COIL AREA	COND. COIL CFM	AMBIENT AIR TEMP. (F°)	ELECTRICAL REQUIREMENTS					UNIT SERVED	CARRIER MODEL	REMARKS
						VOLTS	PH.	HZ.	MCA	MOCP			
CU-1	16,000	14,500	16.08	2,140	100°	208	1	60	11.7	20	FCU-1	24APA5-018	NOMINAL 1.5 TON CONDENSING UNIT

(1) CAPACITIES AT JOB SITE ELEVATION.

SEE SPECIFICATION SECTION 15650 FOR ADDITIONAL REQUIREMENTS.

GRILLES AND DIFFUSERS

SYMBOL	CFM	NECK SIZE	FACE SIZE	KRUEGER MODEL	REMARKS
S-1	AS NOTED	AS NOTED	AS NOTED	SH	-
R-1	AS NOTED	AS NOTED	AS NOTED	S86H	-

SEE SPECIFICATION SECTION 15940 FOR ADDITIONAL REQUIREMENTS.

CEILING EXHAUST FANS (CEF)

SYMBOL	MINIMUM CFM	TOTAL STATIC PRESSURE IN. WG.	ELECTRICAL REQUIREMENTS				BROAN MODEL	REMARKS
			VOLTS	PH.	HZ.	WATTS		
CEF-1	75	0.375"	120	1	60	130	L100MG	-

(1) CAPACITIES AT JOB SITE ELEVATION OF 4,250 FEET ABOVE SEA LEVEL.

SEE SPECIFICATION SECTION 15870 FOR ADDITIONAL REQUIREMENTS.

INSTANTANEOUS WATER HEATER (IWH)

SYMBOL	NOMINAL INPUT KW	TANK VOLUME GALLONS	ELEC. REQUIREMENTS			WATER CHARACTERISTICS			A.O. SMITH MODEL	REMARKS
			VOLTS	PH.	HZ.	EWT °F	LWT °F	RECOVERY (GPH)		
IWH-1	1,440	2.5	120	1	60	40	122	-	ELJC-2	POINT OF USE MODEL

SEE SPECIFICATION SECTION 15445 FOR ADDITIONAL REQUIREMENTS.

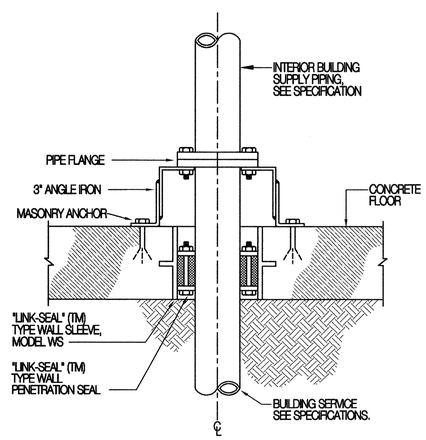

2 M-SH000 PIPE ENTRY ANCHOR DETAIL

SCALE: NONE

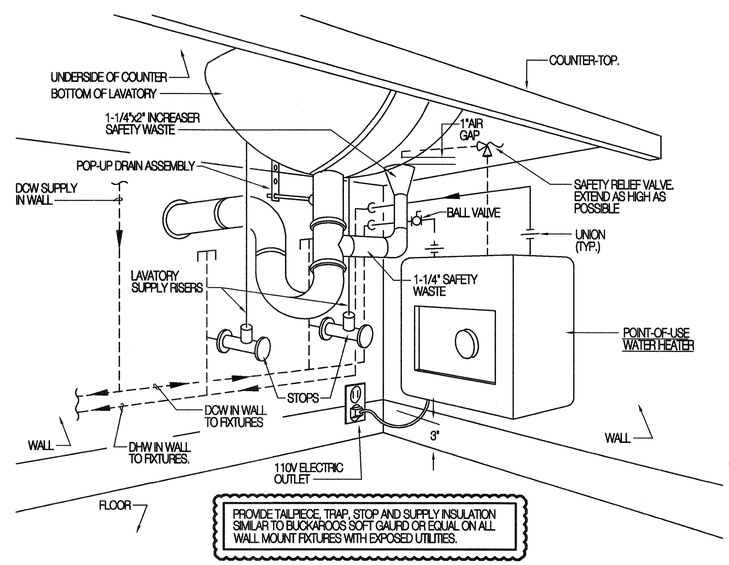

PROVIDE TAILPIECE, TRAP, STOP AND SUPPLY INSULATION SIMILAR TO BUCKAROOS SOFT GAURD OR EQUAL ON ALL WALL MOUNT FIXTURES WITH EXPOSED UTILITIES.

1 M-SH000 POINT OF USE WATER HEATER DETAIL

SCALE: NONE

State of Utah
Department of Administrative Services
Division of Facilities Construction & Management
4110 State Office Building
Salt Lake City, Utah 84114
Phone: (801) 538 - 3018
Fax: (801) 538 - 3267
Internet: http://www.dfcm.state.ut.us

Weber State University

CREATED BY: P+A architects

P+A architects
821 East Kensington Ave.
Salt Lake City, Utah 84105
P: 801.484.1161
F: 801.485.4640
e-mail parchitects@comcast.net

STATE OF UTAH
SCOTT R. PARR
261110
LICENSED ARCHITECT

architecture planning design

CONSULTANT:

Mechanical Consulting Engineers
Cunning & Associates
591 No. Main Clearfield, Ut. 84015 Ph: (801)-776-0055
Email: cassoc@xmission.com Fax: (801)-779-0949

LICENSED PROFESSIONAL ENGINEER
No. 4947211
NORMAN CUNNING
STATE OF UTAH

PROJECT TITLE:

WEBER STATE UNIVERSITY
OGDEN, UTAH

NEW INFORMATION BUILDING
CONSTRUCTION DOCUMENTS

MARK	DATE	DESCRIPTION

ISSUE TYPE: Construction Documents

ISSUE DATE: MAY 5th, 2009

DFCM PROJECT NO: 08322810
CAD PROJECT NO:
CAD DWG FILE:
DRAWN BY: STAFF
CHK'D BY: NDC

COPYRIGHT: STATE OF UTAH

SHEET TITLE

MECH. / PLUMB. SCHEDULES AND DETAILS

SHEET NUMBER

M-SH000

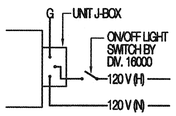

CEILING EXHAUST FAN CONTROL DIAGRAM

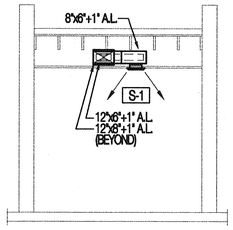

MECHANICAL SECTION A

SCALE: 1/4" = 1'-0"

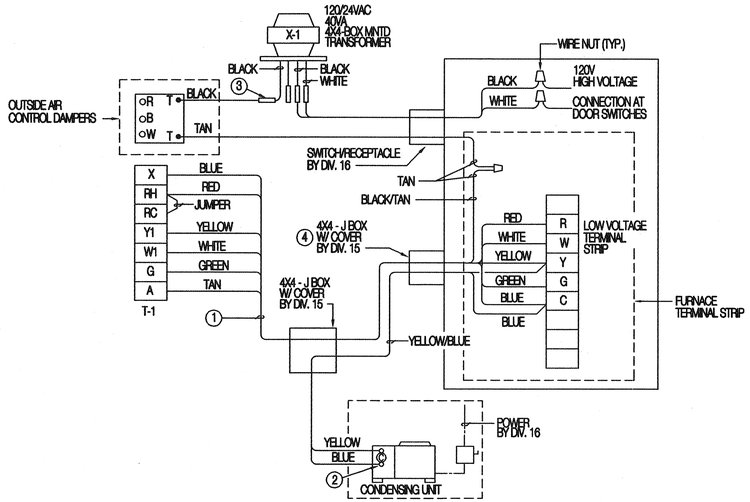

DIAGRAM NOTES

1. THERMOSTAT CABLE- 8 CONDUCTOR- 18 AWG SOLID COPPER WIRE INSULATED WITH HIGH DENSITY POLYETHYLENE. CONDUCTORS PARALLEL. ENCLOSED IN BROWN PVC JACKET. (NO 22 AWG CABLE ALLOWED).
2. IF CONDENSING UNITS HAVE THEIR OWN POWER SUPPLY IT MAY BE NECESSARY TO ADD ADDITIONAL RELAYS IN CONDENSING UNIT TO PROPERLY INTERFACE CONTROLS.
3. USE WIRE NUT CONNECTORS FOR SPLICING CONDUCTORS AND TYTON TYPE CRIMP CONNECTORS FOR TERMINAL CONNECTIONS. NO TERMINAL CONNECTORS REQUIRED AT THERMOSTAT.
4. ALL WIRING TO BE PLENUM RATED.

FAN COIL CONTROL DIAGRAM

CONTROL EQUIPMENT

SYMBOL	DESCRIPTION	HONEYWELL MODEL NO.	REMARKS
T-1	THERMOSTAT	TB8220 SERIES	-
X-1	TRANSFORMER	AT140A1000	-
DM-1	DAMPER MOTOR	MS7505A2008	-

GENERAL NOTES FOR MECHANICAL CONTROLS

1. ALL ELECTRICAL INSTALLATION, INCLUDING POWER DISTRIBUTION AND SPECIAL SYSTEMS, IS INCLUDED IN THE SCOPE OF THE GENERAL CONTRACT. OF SPECIFIC CONCERN ARE THE CONTROL SYSTEMS RELATED TO MECHANICAL EQUIPMENT. RESPONSIBILITY FOR THE CONTROL SYSTEMS RELATED TO MECHANICAL EQUIPMENT. RESPONSIBILITY FOR THE CONTROL WORK IS DIVIDED BETWEEN THE PROJECT ELECTRICIAN (DIV. 16000) AND A SPECIALTY CONTROLS CONTRACTOR (DIV 15000).
2. ALL ELECTRICAL WORK SHALL BE IN ACCORDANCE WITH DIVISION 16000 AND TO THE FULLEST EXTENT POSSIBLE, PRODUCTS AND PRATICES SHALL BE SIMILAR FOR ALL INSTALLATIONS.
3. THE ELECTRICIAN SHALL PROVIDE ALL POWER TO AND THROUGHOUT THE BUILDING, TO INCLUDE MOTOR CONTROL CENTERS, BREAKER PANELS AND ALL OTHER SYSTEMS DESIGNATED TO THE ELECTRICIANS.
4. THE ELECTRICIAN SHALL RUN AND CONNECT ALL WIRING AND DEVICES 120 VOLTS AND ABOVE WHICH POWER MOTORS AND OTHER MECHANICAL DEVICES. WHERE CONTROL DEVICES ARE LOCATED IN POWER CIRCUIT, THE CONTROLS CONTRACTOR SHALL INTERRUPT THE CIRCUIT IN THE MECHANICAL EQUIPMENT JUNCTION BOX, WIRE THROUGH THE CONTROL DEVICE AND BACK TO THE JUNCTION BOX.
5. BREAKERS AND DISCONNECTS, AUXILIARY CONTACTS, STANDARD PILOT LIGHTS AND MAGNETIC STARTERS ARE THE RESPONSIBILITY OF DIVISION 16000.
6. AUXILIARY RELAYS, LOW VOLTAGE TRANSFORMERS, CONTROL PANEL SWITCHES & DEVICES, THERMOSTATS, PRESSURE SWITCHES, ELECTRIC OPERATED VALVES, ETC., ARE THE RESPONSIBILITY OF DIVISION 15000.
7. ANY QUESTION OF RESPONSIBILITY SHALL BE CLARIFIED BY THE GENERAL CONTRACTOR
8. ALL WIRING SHALL TERMINATE AT LABELED TERMINAL STRIPS.

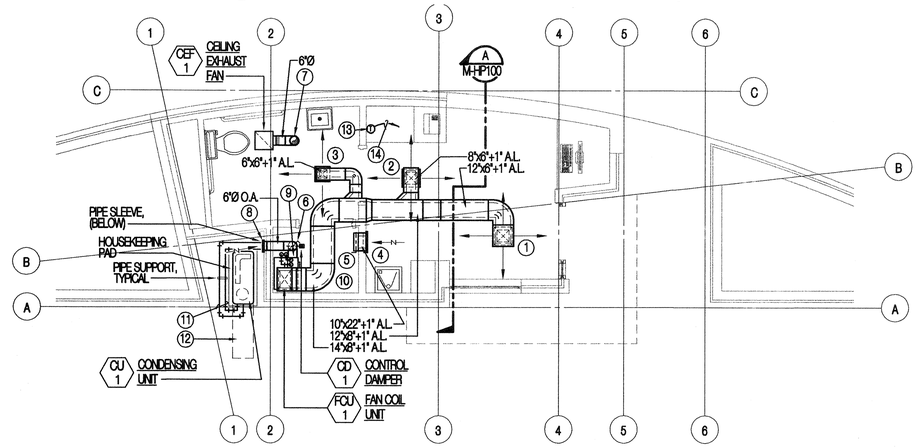

MAIN FLOOR HVAC PLAN

SCALE: 1/4" = 1'-0"

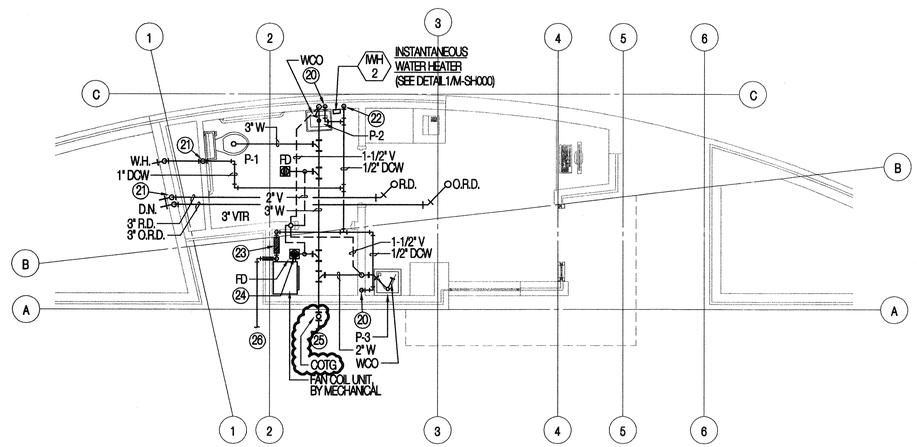

MAIN FLOOR PLUMBING PLAN

SCALE: 1/4" = 1'-0"

DRAWING NOTES

HVAC PLAN NOTES:

1. S-1 255 CFM, 8"x8" NK. S.A. DIFFUSER.
2. S-1 155 CFM, 8"x8" NK. S.A. DIFFUSER.
3. S-1 75 CFM, 6"x6" NK. S.A. DIFFUSER.
4. R-1 12"x24"NK. R.A. GRILLE. MOUNT GRILLE SUCH THAT BOTTOM OF GRILLE IS 8" A.F.F.
5. BALANCE RETURN AIR GRILLE DAMPER TO 485 CFM.
6. BALANCE OUTSIDE AIR DAMPER TO 60 CFM.
7. 6"Ø EXHAUST DUCT RISE TO VENT CAP ON ROOF, SEE DETAIL - FOR ADDITIONAL INFORMATION.
8. BROAN MODEL 641 WALL CAP. REMOVE BACKDRAFT DAMPER FROM WALL CAP PRIOR TO INSTALLATION. TRANSITION OUTSIDE AIR DUCTWORK TO WALL CAP INLET SIZE AND CONNECT. FINISH WALL CAP TO MATCH BUILDING EXTERIOR WITH TWO COATS PRIMER AND TWO COATS PAINT. PAINT BY G.C.
9. DROP 6"Ø OUTSIDE AIR DUCTWORK TO SIDE OF FAN COIL UNIT AND CONNECT WITH HIGH EFFICIENCY TAKEOFF.
10. REFRIGERATION PIPING CONNECTION AT DX COOLING COIL, CONNECT PER DETAIL 2/M-DT500.
11. 3/8" LIQUID AND 5/8" SUCTION PIPING FROM FAN COIL UNIT TO CONDENSING UNIT ON OUTDOOR PAD.
12. CONDENSING UNIT SERVICE CLEARANCE, DO NOT OBSTRUCT.
13. PROVIDE AND INSTALL NEW THERMOSTAT, MOUNT THERMOSTAT AT 48" A.F.F. SEE CONTROL DRAWINGS SHEET M104 FOR ADDITIONAL INFORMATION AND REQUIREMENTS.
14. CONTROL WIRING FROM THERMOSTAT TO TERMINAL STRIP IN FAN COIL UNIT. SEE CONTROL DRAWINGS SHEET M104 FOR ADDITIONAL INFORMATION AND REQUIREMENTS.

PLUMBING PLAN NOTES:

20. 1/2" DCW PIPING DROP ON WARM SIDE OF WALL TO PLUMBING FIXTURE.
21. 1" DCW PIPING DROP ON WARM SIDE OF WALL TO PLUMBING FIXTURE.
22. 1/2" DCW PIPING DROP ON WARM SIDE OF WALL TO INSTANTANEOUS WATER HEATER, SEE DETAIL 1/M-SH000 FOR ADDITIONAL INFORMATION.
23. WATER ENTRY, SEE DETAIL 3/M-SH000.
24. 3/4" COPPER DRAIN PIPING FROM PRIMARY AND SECONDARY DRAIN CONNECTIONS TO FLOOR DRAIN. SUPPORT PIPING WITH UNISTRUT AND PROVIDE A MINIMUM 1" AIR GAP AT FLOOR DRAIN.
25. 4" WASTE PIPING TO CONNECTION AT MAIN, SEE CIVIL DRAWINGS FOR CONTINUATION.
26. 1" DCW PIPING TO CONNECTION AT MAIN, SEE CIVIL DRAWINGS FOR CONTINUATION.

State of Utah
Department of Administrative Services
Division of Facilities Construction & Management
4110 State Office Building
Salt Lake City, Utah 84114
Phone: (801) 538 - 3018
Fax: (801) 538 - 3267
Internet: http://www.dfcm.state.ut.us

Weber State University

CREATED BY: P+A architects

P+A architects
821 East Kensington Ave.
Salt Lake City, Utah 84105
P: 801.484.1161
F: 801.485.4640
e-mail parchitects@comcast.net

STATE OF UTAH
261110
LICENSED ARCHITECT

architecture planning design

CONSULTANT:

Mechanical Consulting Engineers
Cunning & Associates
591 No. Main Clearfield, Ut. 84015 Ph: (801)-776-0055
Email: casoc@xmission.com Fax: (801)-775-0559

LICENSED PROFESSIONAL ENGINEER
No. 4947211
NORMAN CUNNING
STATE OF UTAH

PROJECT TITLE:

WEBER STATE UNIVERSITY
OGDEN, UTAH

NEW INFORMATION BUILDING
CONSTRUCTION DOCUMENTS

MARK	DATE	DESCRIPTION

ISSUE TYPE: Construction Documents

ISSUE DATE: MAY 5th, 2009

DFCM PROJECT NO: 08322810
CAD PROJECT NO:
CAD DWG FILE:
DRAWN BY: STAFF
CHK'D BY: NDC

COPYRIGHT: STATE OF UTAH

SHEET TITLE

MAIN FLOOR HVAC AND PLUMBING PLANS / DETAILS

SHEET NUMBER

M-HP100

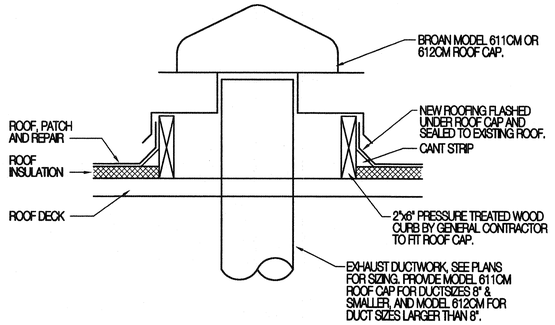

8 EXHAUST ROOF CAP DETAIL
M-DT500 SCALE: NONE

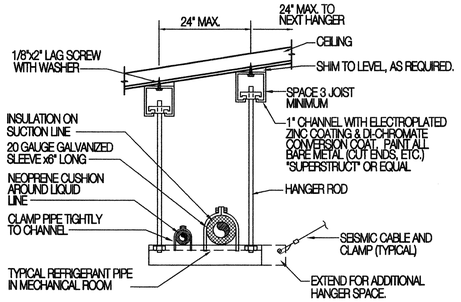

REFRIGERANT PIPING SUPPORT FROM JOIST DETAIL
5 M-DT500 SCALE: NONE

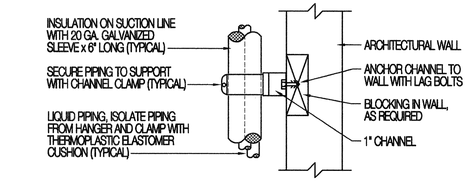

1 REFRIG. PIPING SUPPORT DETAIL
M-DT500 SCALE: NONE

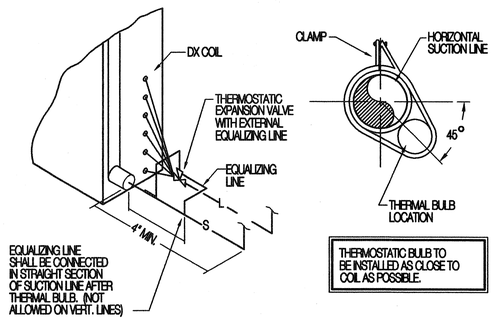

9 DX COIL INSTALLATION DETAIL
M-DT500 SCALE: NONE

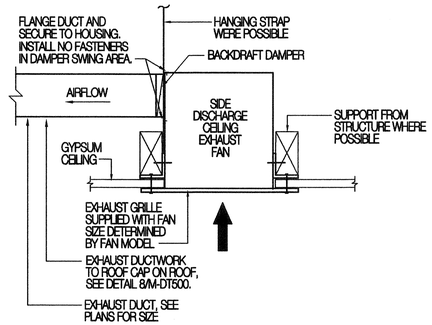

6 CEILING EXHAUST FAN DETAIL
M-DT500 SCALE: NONE

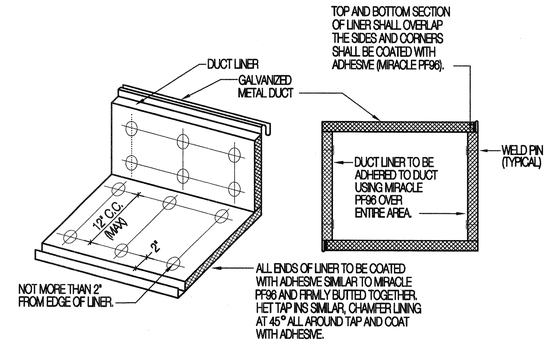

2 ACOUSTICAL LINER DETAIL
M-DT500 SCALE: NONE

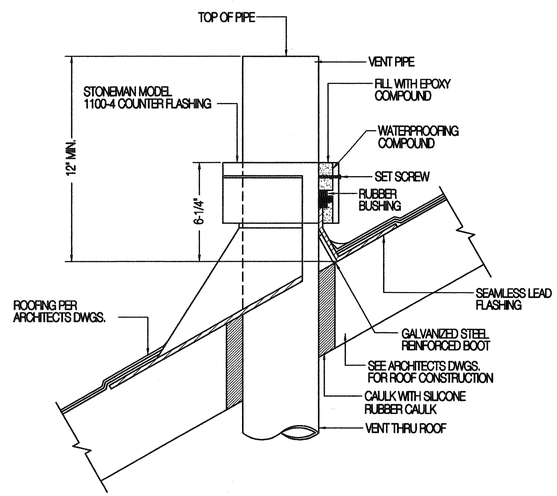

10 VENT THROUGH ROOF DETAIL
M-DT500 SCALE: NONE

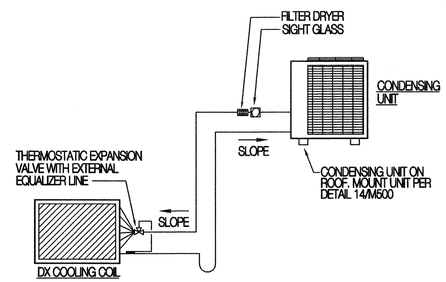

NOTE:
THE CONTRACTOR ALONG WITH HIS EQUIPMENT SUPPLIER SHALL SUBMIT A COMPLETE REFRIGERATION PIPING SHOP DRAWING SHOWING SIZES, TRAPS, PITCHES, VALVES, FILTER/DRYER, SEPARATORS, SITE GLASSES, ETC. THE DRAWING SHALL BE BASED ON ACTUAL BUILDING CONDITIONS. TRAP AS REQUIRED TO ACCOMMODATE SUCTION LINE RISER.

7 REFRIGERANT PIPING SCHEMATIC
M-DT500 SCALE: NONE

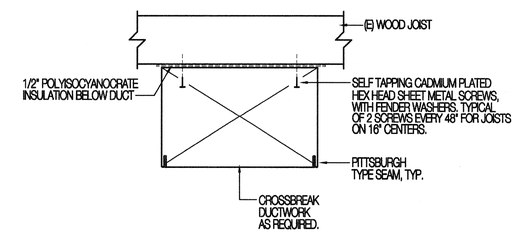

3 RECT. DUCT RUNOUT HANGER DETAIL
M-DT500 SCALE: NONE

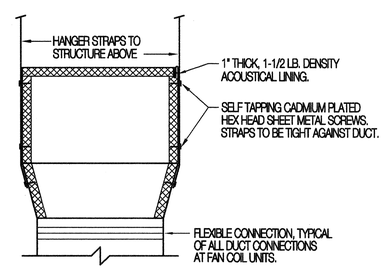

4 RECT. DUCT PLENUM HANGER DETAIL
M-DT500 SCALE: NONE

State of Utah
Department of Administrative Services
Division of Facilities Construction & Management
4110 State Office Building
Salt Lake City, Utah 84114
Phone: (801) 538 - 3018
Fax: (801) 538 - 3267
Internet: http://www.dfcm.state.ut.us

Weber State University

CREATED BY: P+A architects

P+A architects
821 East Kensington Ave.
Salt Lake City, Utah 84105
P: 801.484.1161
F: 801.485.4640
e-mail parchitects@comcast.net

STATE OF UTAH ROBERT A. PARK 261110 LICENSED ARCHITECT

architecture planning design

CONSULTANT:

Mechanical Consulting Engineers
Cunning & Associates
591 No. Main Clearfield, Ut. 84015 Ph: (801)-776-0055
Email: cassoc@xmission.com Fax: (801)-776-0059

LICENSED PROFESSIONAL ENGINEER No. 4947211 NORMAN D. CUNNING STATE OF UTAH

PROJECT TITLE:

WEBER STATE UNIVERSITY
OGDEN, UTAH

NEW INFORMATION BUILDING
CONSTRUCTION DOCUMENTS

MARK	DATE	DESCRIPTION

ISSUE TYPE: Construction Documents

ISSUE DATE: MAY 5th, 2009

DFCM PROJECT NO: 08322810
CAD PROJECT NO:
CAD DWG FILE:
DRAWN BY: STAFF
CHK'D BY: NDC

COPYRIGHT: STATE OF UTAH

SHEET TITLE

MECHANICAL AND PLUMBING DETAILS

SHEET NUMBER

M-DT500

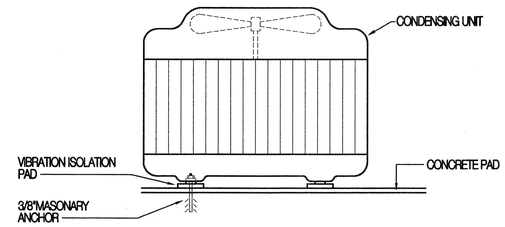

4 M-DT501 CONDENSING UNIT MOUNTING DETAIL

SCALE: NONE

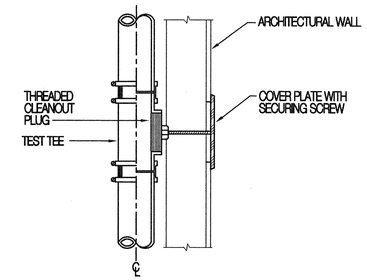

1 M-DT501 WALL CLEANOUT DETAIL

SCALE: NONE

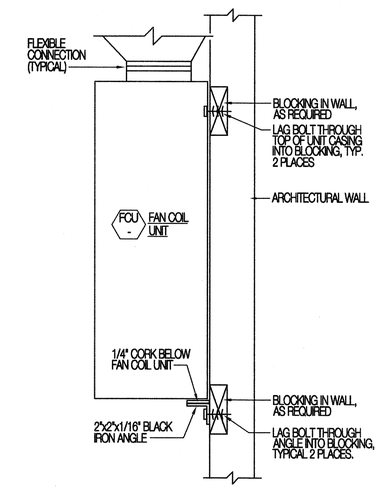

2 M-DT501 FAN COIL UNIT MOUNTING DETAIL

SCALE: NONE

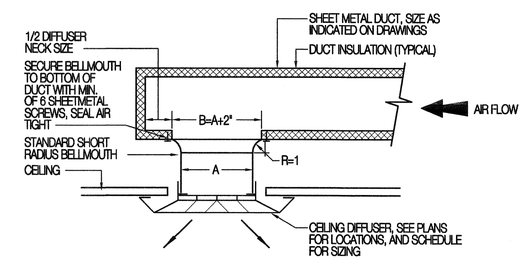

3 M-DT501 RECT. RUNOUT/DIFFUSER DETAIL

SCALE: NONE

State of Utah
Department of Administrative Services
Division of Facilities Construction & Management
4110 State Office Building
Salt Lake City, Utah 84114
Phone: (801) 538 - 3018
Fax: (801) 538 - 3267
Internet: http://www.dfcm.state.ut.us

Weber State University

CREATED BY: P+A architects

P+A architects
821 East Kensington Ave.
Salt Lake City, Utah 84105
P: 801.484.1161
F: 801.485.4640
e-mail parchitects@comcast.net

STATE OF UTAH — SCOTT A. PRUSS — 261110 — LICENSED ARCHITECT

architecture planning design

CONSULTANT:

Mechanical Consulting Engineers
Cunning & Associates
591 No. Main Clearfield, Ut. 84015 Ph: (801)-776-1005
Email: cassoc@xmission.com Fax: (801)-776-0599

LICENSED PROFESSIONAL ENGINEER — No. 4947211 — NORMAN D. CUNNING — STATE OF UTAH

PROJECT TITLE:

WEBER STATE UNIVERSITY
OGDEN, UTAH

NEW INFORMATION BUILDING
CONSTRUCTION DOCUMENTS

MARK	DATE	DESCRIPTION

ISSUE TYPE: Construction Documents

ISSUE DATE: MAY 5th, 2009

DFCM PROJECT NO: 08322810
CAD PROJECT NO:
CAD DWG FILE:
DRAWN BY: STAFF
CHK'D BY: NDC

COPYRIGHT: STATE OF UTAH

SHEET TITLE

MECHANICAL AND PLUMBING DETAILS

SHEET NUMBER

M-DT501

LIGHTING SYMBOLS

1. LIGHT FIXTURE SYMBOLS ARE GENERAL IN NATURE AND MAY BE SHOWN ON THE DRAWINGS IN VARIOUS SIZES AND SHAPES. REFER TO THE LIGHT FIXTURE SCHEDULE FOR SPECIFICATION INFORMATION.
2. ARROWS INDICATE AIMING DIRECTION.

SYMBOL	DESCRIPTION	MOUNTING	REMARKS
	ARM-MOUNTED SINGLE-HEAD LIGHT FIXTURE AND POLE	AS SPECIFIED OR DETAILED	
	ARM-MOUNTED DOUBLE-HEAD LIGHT FIXTURE AND POLE	AS SPECIFIED OR DETAILED	
	POST-TOP SINGLE-HEAD, LIGHT FIXTURE AND POLE	AS SPECIFIED OR DETAILED	
	WALL-MOUNTED FIXTURE	AS SPECIFIED OR DETAILED	REFER TO ARCHITECTURAL EXTERIOR ELEVATIONS FOR MOUNTING HEIGHT
	LIGHT BOLLARD	AS SPECIFIED OR DETAILED	
	FLOOD LIGHT	AS SPECIFIED OR DETAILED	
	RECESSED WALL FIXTURE OR STEP LIGHT	AS SPECIFIED OR DETAILED	REFER TO ARCHITECTURAL EXTERIOR ELEVATIONS FOR MOUNTING HEIGHT
	FLUORESCENT LIGHT FIXTURES	AS SPECIFIED OR DETAILED	
	PARABOLIC - LOUVERED LIGHT FIXTURES	AS SPECIFIED OR DETAILED	
	RECESSED INDIRECT FLUORESCENT LIGHT FIXTURES	AS SPECIFIED OR DETAILED	
	WALL-MOUNTED LINEAR FLUORESCENT LIGHT FIXTURE	AS SPECIFIED OR DETAILED	
	FLUORESCENT LINEAR WALL WASHER	AS SPECIFIED OR DETAILED	
	RECESSED DOWN LIGHT	AS SPECIFIED OR DETAILED	
	RECESSED WALL-WASHER OR DIRECTIONAL DOWNLIGHT	AS SPECIFIED OR DETAILED	IF SHOWN, ARROW INDICATES AIMING DIRECTION
	SURFACE OR PENDANT-MOUNTED LIGHT FIXTURE	AS SPECIFIED OR DETAILED	
	WALL-MOUNTED LIGHT FIXTURE	AS SPECIFIED OR DETAILED	REFER TO ARCHITECTURAL EXTERIOR ELEVATIONS FOR MOUNTING HEIGHT
	TRACK OR MONO-POINT LIGHT FIXTURE	AS SPECIFIED OR DETAILED	IF SHOWN, ARROW INDICATES AIMING DIRECTION
	WALL SCONCE	AS SPECIFIED OR DETAILED	
	FLUORESCENT EGRESS LIGHT FIXTURE	AS SPECIFIED OR DETAILED	THIS IS AN EXAMPLE OF AN EGRESS LIGHT FIXTURE. EGRESS LIGHT FIXTURES ARE HALF-SHADED DIAGONALLY.
	FLUORESCENT EMERGENCY (NON-EGRESS) LIGHT FIXTURE	AS SPECIFIED OR DETAILED	THIS IN AN EXAMPLE OF AN EMERGENCY (NON-EGRESS) LIGHT FIXTURE. EMERGENCY FIXTURES ARE FULLY-SHADED.
	CEILING MOUNTED EXIT SIGN	CEILING	DARKENED PORTION OF SIGN INDICATES FACE(S); ARROW(S) INDICATE CHEVRON DIRECTION(S)
	WALL-MOUNTED EXIT SIGN	WALL ABOVE DOOR	
	WALL-MOUNTED EXIT SIGN W/ EMERGENCY LIGHT FIXTURE	WALL ABOVE DOOR	
TC	TIME CLOCK		
	EMERGENCY LIGHT FIXTURE	AS NOTED	
P	ELECTRIC PHOTOCELL	N/A	MOUNT ON ROOF FACING NORTH SKY
XX	LIGHT FIXTURE CALLOUT (LETTER DENOTES FIXTURE TYPE)		

FIRE ALARM SYMBOLS

SYMBOL	DESCRIPTION	MOUNTING	REMARKS
BDT	BEAM DETECTOR - TRANSMITTER	4" BELOW CEILING TO TOP OF DETECTOR	
BDR	BEAM DETECTOR - RECEIVER	4" BELOW CEILING TO TOP OF DETECTOR	
EOL	END OF LINE DEVICE	PER MANUFACTURER RECOMMENDATIONS	
T	TAMPER SWITCH	AT VALVE	
W	WATER FLOW INDICATOR	ON FIRE RISER	
FSD	FIRE/SMOKE DAMPER	TOP AT 72"	
1	HEAT DETECTOR	CEILING	
2	SMOKE DETECTOR	CEILING	
2	DUCT SMOKE DETECTOR	SIDE OF DUCT	
F	FIRE ALARM MANUAL STATION	+48"	
Z	CONTROL MODULE	AT DEVICE(S) TO BE CONTROLLED	
I	MONITOR MODULE	AT DEVICE(S) TO MONITOR	
R	FAN SHUTDOWN RELAY	AT FAN CONTROL PANEL	
D	MAGNETIC DOOR HOLDER	COORDINATE WITH DOOR INSTALLER	COORDINATE WITH DOOR INSTALLER; SUBSCRIPT 'F' INDICATES TO MOUNT AT FLOOR LEVEL
WF	WATER FLOOD INDICATOR	FLOOR	
H	AUDIO HORN	MOUNT AT LESSOR OF EITHER 80" AFF OR 6" BELOW CEILING.	SUBSCRIPT 'WP' INDICATES THAT A WEATHER PROOF BACK BOX IS REQ. SUBSCRIPT 'C' INDICATES CEILING MOUNTING. NUMERIC SUBSCRIPT INDICATES CANDELLA RATING OF STROBE (I.E. - 15, 75, 110)
H	MINI AUDIO HORN		
S	FIRE ALARM VISUAL STROBE		
S	FIRE ALARM AUDIO/VISUAL HORN/STROBE		
H	MINI AUDIO/VISUAL HORN/STROBE		
S	FIRE ALARM AUDIO SPEAKER		
S	FIRE ALARM AUDIO/VISUAL SPEAKER/STROBE		
	FIRE PROTECTION SPRINKLER RISER BELL	+90"	FURNISHED BY FIRE PROTECTION CONTRACTOR AND INSTALLED AND CONNECTED BY DIV. 16000

ELECTRICAL SYMBOL SCHEDULE GENERAL NOTES

1. MOUNT ALL OUTLETS, DEVICES, AND EQUIPMENT AT HEIGHTS INDICATED BELOW, UNLESS NOTED OTHERWISE ON THE DRAWINGS. UNLESS NOTED OTHERWISE, HEIGHTS ARE GIVEN FROM FINISHED FLOOR TO CENTER OF OUTLET BOX.
2. WHERE OUTLETS, DEVICES, AND EQUIPMENT ARE NOTED BY SUBSCRIPTS, REFER TO ABBREVIATION SCHEDULE FOR DEFINED REQUIREMENTS.
3. WHERE OUTLETS, DEVICES AND EQUIPMENT ARE NOTED BY THE SUBSCRIPT 'A', MOUNT AT 4" ABOVE COUNTER. IF COUNTER HAS A BACK SPLASH, MOUNT AT 4" ABOVE BACK SPLASH. REFER TO ARCHITECTURAL INTERIOR ELEVATIONS AND COORDINATE WITH CASEWORK SUPPLIER.
4. NOT ALL ELECTRICAL SYMBOLS MAY BE USED.

GENERAL SYMBOLS

SYMBOL	DESCRIPTION	REMARKS
XX	KEYED NOTE	
1 E-1	DETAIL REFERENCE	TOP NUMBER INDICATES DETAIL NUMBER; BOTTOM LETTER-NUMBER INDICATES DRAWING SHEET WHERE DETAIL IS SHOWN; WHERE NOT SPECIFICALLY REFERENCED, DETAIL IS GENERAL IN NATURE AND SHALL APPLY WHERE APPLICABLE.
2 E-2	ELEVATION REFERENCE	TOP NUMBER INDICATES ELEVATION NUMBER; BOTTOM LETTER-NUMBER INDICATES WHERE ELEVATION IS SHOWN.
3 E-3	SECTION REFERENCE	TOP NUMBER INDICATES SECTION NUMBER; BOTTOM LETTER NUMBER INDICATES WHERE SECTION IS SHOWN.
100	ARCHITECTURAL ROOM NUMBER	
AHU 1	EQUIPMENT NAME / NUMBER	TOP NUMBER ABBREVIATES EQUIPMENT NAME OR TYPE; BOTTOM NUMBER INDICATES EQUIPMENT NUMBER. REFER TO EQUIPMENT SCHEDULE.
1	REVISION NUMBER	USED TO DENOTE CHANGES EITHER ISSUED BY ADDENDUM OR DURING CONSTRUCTION AND TO DENOTE RECORD DRAWING CHANGES.
	BREAKLINE	USED TO BREAK DRAWINGS.

BRANCH CIRCUITING SYMBOLS

SYMBOL	DESCRIPTION	REMARKS
	1 CIRCUIT, 2 WIRE BRANCH CIRCUIT HOME RUN TO PANEL	ARROWS: NUMBER OF ARROWS INDICATES NUMBER OF CIRCUITS REQUIRED. SHORT CROSS LINES: NUMBER OF SHORT CROSS LINES INDICATES NUMBER OF PHASE, TRAVELER, AND/OR SWITCHED CONDUCTORS REQUIRED IF GREATER THAN 1 (ONE). LONG CROSS LINES: NUMBER OF LONG CROSS LINES INDICATES NUMBER OF NEUTRAL CONDUCTORS REQUIRED FOR MULTI-WIRE HOME RUNS. EQUIPMENT GROUND AND ISOLATED GROUND CONDUCTORS: EQUIPMENT GROUND AND ISOLATED GROUND CONDUCTORS ARE NOT SHOWN, BUT ARE REQUIRED AS NOTED ON THE DRAWINGS OR IN THE SPECIFICATIONS.
	2 CIRCUIT, 3 WIRE BRANCH CIRCUIT HOME RUN TO PANEL	
	3 CIRCUIT, 4 WIRE BRANCH CIRCUIT HOME RUN TO PANEL	
	MULTIPLE WIRE BRANCH CIRCUITING BETWEEN FIXTURES, SWITCHES, DEVICES, ETC.	
	BRANCH CIRCUITING (U.N.O.) TURNED UP OR TOWARDS OBSERVER.	
	BRANCH CIRCUITING (U.N.O.) TURNED DOWN OR AWAY FROM OBSERVER.	
	BRANCH CIRCUITING (U.N.O.) CONTINUATION	
	CONDUIT STUB-IN	CAP AND MARK
	INCOMING SERVICE	
	JUNCTION BOX	MOUNT AS NOTED. SUBSCRIPT 'F' INDICATES TO PROVIDE A FLOOR BOX WITH BLANK COVERPLATE

ELECTRONIC SYSTEM GENERAL SYMBOLS

SYMBOL	DESCRIPTION	MOUNTING	REMARKS
PANEL NAME	ELECTRONIC SYSTEM PANELBOARD (SURFACE MOUNT)	TOP AT 72"	ELECTRONIC SYSTEMS MAY INCLUDE BUT ARE NOT SPECIFICALLY LIMITED TO, TELEPHONE, DATA, TELEVISION, LIGHTING CONTROL, CLOCKS, FIRE ALARM, ACCESS CONTROL, SECURITY, CCTV, SOUND SYSTEM, NURSE CALL, OR INTERCOM.
PANEL NAME	ELECTRONIC SYSTEM PANELBOARD (FLUSH MOUNT)	TOP AT 72"	
	ELECTRONIC SYSTEM TERMINAL BOARD	TOP AT 72"	

TELEPHONE / DATA SYMBOLS

SYMBOL	DESCRIPTION	MOUNTING	REMARKS
	TELEPHONE OUTLET	+18"	
	DATA OUTLET	+18"	
	COMBINATION TELEPHONE/DATA OUTLET	+18"	
	TELEPHONE TERMINAL BOARD	TOP AT 72"	

ELECTRICAL SHEET INDEX

E-GE001	SYMBOL SCHEDULE
E-GE002	SCHEDULES
E-GE003	SCHEDULES & ONE-LINE DIAGRAM
E-GE501	DETAILS
E-EE101	SITE PLAN
E-EE100	POWER, ROOF POWER & LIGHTING PLANS

ABBREVIATION SCHEDULE

NOTE: NOT ALL ABBREVIATIONS MAY BE USED.

A	ABOVE COUNTER	ISO	ISOLATED
A	AMP OR AMPS	KVA	KILO VOLT AMPERES
ADJ	ADJACENT	KW	KILOWATTS
AFF	ABOVE FINISHED FLOOR	LFMC	LIQUID-TIGHT METAL CONDUIT
AHJ	AUTHORITY HAVING JURISDICTION	LFNC	LIQUID-TIGHT NONMETAL CONDUIT
AL	ALUMINUM	MCA	MINIMUM CIRCUIT AMPS
C	CONDUIT	MLO	MAIN LUGS ONLY
CB	CIRCUIT BREAKER	N.C.	NORMALLY CLOSED
CKT	CIRCUIT	N.I.C.	NOT IN CONTRACT
C.O.'S	CONVENIENCE OUTLETS	NL	NIGHT LIGHT
CU	COPPER	N.O.	NORMALLY OPEN
EA	EACH	O.C.	ON CENTER(S)
ELEC	ELECTRICAL	OCP	OVER CURRENT PROTECTION
EM	EMERGENCY	QTY	QUANTITY
EMT	ELECTRIC METALLIC TUBING	R	REMOVE
ENT	ELECTRIC NONMETALLIC TUBING	REQ.	REQUIREMENTS
EQUIP	EQUIPMENT	RMC	RIGID METAL CONDUIT
EWC	ELECTRIC WATER COOLER	RNC	RIGID NONMETALLIC CONDUIT
E, EX	EXISTING	RR	REMOVE AND RELOCATE
EXP	EXPLOSION PROOF	SS	SURGE SUPPRESSION
FA	FIRE ALARM	SCP	SECURITY CONTROL PANEL
FACP	FIRE ALARM CONTROL PANEL	TR	TAMPER RESISTANT
FLA	FULL LOAD AMPS	TYP	TYPICAL
FMC	FLEXIBLE METAL CONDUIT	TVSS	TRANSIENT VOLTAGE SURGE SUPPRESSOR
FOB	FREIGHT ON BOARD	UF	UNDER FLOOR
GND	GROUND CONDUCTOR	UG	UNDERGROUND
HOA	HAND-OFF-AUTO	U.N.O.	UNLESS NOTED OTHERWISE
HP	HORSE POWER	W/	WITH
IG	ISOLATED GROUND	WP	WEATHER PROOF
IMC	INTERMEDIATE METAL CONDUIT	XFMR	TRANSFORMER
INS	INSULATED		

GENERAL PROJECT NOTES:

1. DIVISION 16000 CONTRACTOR IS RESPONSIBLE FOR READING AND APPLYING WHAT IS IN THE SPECIFICATIONS TO THIS PROJECT. ANYTHING THAT IS NOT INCLUDED ON THE PROJECT THAT IS CALLED OUT IN THE SPECIFICATION SHALL BE LISTED ON THE SUBSTANTIAL COMPLETION PUNCHLIST. THE CONTRACTOR WILL BE REQUIRED TO REMEDY THESE DEFICIENCIES WITHOUT ADDITIONAL COSTS TO OWNER. THERE WILL BE NO EXCEPTIONS.
2. THE CONTRACTOR MAY SCHEDULE A PRE-CONSTRUCTION MEETING , AT THEIR DISCRETION, WITH THE ELECTRICAL ENGINEER TO REVIEW THE DRAWINGS AND SPECIFICATIONS. THE MEETING SHALL BE A MAXIMUM OF ONE HOUR AND SHALL TAKE PLACE AT THE ENGINEER'S OFFICE.
3. THE FOLLOWING ITEMS ARE SOME OF THE REQUIREMENTS THAT ARE LISTED IN THE SPECIFICATIONS. THESE ITEMS ARE NOT ALL INCLUSIVE, AND THE CONTRACTOR IS RESPONSIBLE FOR COMPLIANCE TO ALL REQUIREMENTS OF THE SPECIFICATIONS:
   - A. INSULATED THROAT CONNECTORS OR PLASTIC BUSHINGS SHALL BE UTILIZED FOR ALL CONDUIT SIZES USED ON THIS PROJECT.
   - B. A #10 AWG NEUTRAL CONDUCTOR WILL BE PROVIDED FOR ALL FLUORESCENT LIGHTING CIRCUITS.
   - C. THE CONTRACTOR IS RESPONSIBLE FOR UPSIZING CONDUCTORS FOR VOLTAGE DROP PER THE NEC REGARDLESS OF WHETHER IT IS SHOWN ON THE PLANS OR NOT.
   - D. THE CONTRACTOR SHALL LABEL ALL ELECTRICAL EQUIPMENT AS IT IS CALLED OUT IN THE SPECIFICATIONS.
   - E. THE CONTRACTOR SHALL PROVIDE SEISMIC SUPPORT AND BRACING FOR ALL LIGHT FIXTURES AND ELECTRICAL EQUIPMENT AS REQUIRED BY APPLICABLE LOCAL AND NATIONAL CODES.
4. THE CONTRACTOR SHALL FOLLOW THE PANELBOARD SCHEDULES AS INDICATED IN THE DRAWINGS. EACH CIRCUIT BREAKER HAS BEEN ASSIGNED TO A SPECIFIC AREA OF THE BUILDING. NO DEVIATION WILL BE ALLOWED WITHOUT WRITTEN APPROVAL FROM THE ELECTRICAL ENGINEER.
5. AT A MINIMUM THE CONTRACTOR SHALL INSTALL THE WIRE SIZE AS CALLED OUT ON THE PANELBOARD SCHEDULES. HOWEVER, THE CONTRACTOR IS RESPONSIBLE TO ENSURE THE WIRE IS SIZED LARGE ENOUGH TO ALLOW FOR VOLTAGE DROP.
6. THE CONTRACTOR SHALL VERIFY ALL MECHANICAL OVERCURRENT DEVICES FOR THE ACTUAL MECHANICAL EQUIPMENT SUPPLIED ON THE JOB, PRIOR TO RELEASE OF ANY ELECTRICAL DISTRIBUTION EQUIPMENT. CONTACT THE ELECTRICAL ENGINEER WITH ANY DISCREPANCIES.
7. THE CONTRACTOR SHALL VISIT THE SITE BEFORE SUBMITTING THE BID, AND SHALL EXAMINE ALL PHYSICAL CONDITIONS WHICH MAY BE MATERIAL TO THE PERFORMANCE OF HIS WORK. NO ADDITIONAL PAYMENTS WILL BE ALLOWED TO THE CONTRACTOR AS A RESULT OF EXTRA WORK MADE NECESSARY BY HIS FAILURE TO DO SO. ANY CASE OF DISCREPANCY OR LACK OF CLARITY SHALL BE PROMPTLY IDENTIFIED TO THE OWNER'S REPRESENTATIVE AND THE ENGINEER FOR CLARIFICATION.

State of Utah
Department of Administrative Services
Division of Facilities Construction & Management
4110 State Office Building
Salt Lake City, Utah 84114
Phone: (801) 538 - 3018
Fax: (801) 538 - 3267
Internet: http://www.dfcm.state.ut.us

Weber State University

CREATED BY: P+A architects
P+A architects
821 East Kensington Ave.
Salt Lake City, Utah 84105
P: 801.484.1161
F: 801.485.4640
e-mail parchitects@comcast.net

architecture planning design

CONSULTANT:
ENVISION ENGINEERING
Direction. Then Velocity.
244 West 300 North, Suite 100
Salt Lake City, Utah 84103
801.534.1130 ph 801.534.1080 fax

REGISTERED PROFESSIONAL ENGINEER
DAVID P. WHITTON
No. 264397
5/12/09
STATE OF UTAH

PROJECT TITLE:
WEBER STATE UNIVERSITY
OGDEN, UTAH

NEW INFORMATION BUILDING
CONSTRUCTION DOCUMENTS

MARK	DATE	DESCRIPTION

ISSUE TYPE: Construction Documents

ISSUE DATE: MAY 12th, 2009

DFCM PROJECT NO: 08322810
CAD PROJECT NO: 2008-151
CAD DWG FILE:
DRAWN BY: BRT
CHK'D BY: RVV/DPW

COPYRIGHT: STATE OF UTAH

SHEET TITLE
SYMBOL SCHEDULE

SHEET NUMBER
E-GE001

W:\2008-151.00 - Weber State University Information Building\Elec\E-GE001.dwg, 5/12/2009 2:19:13 PM, brad, Envision Engineering, PC

LIGHT FIXTURE SCHEDULE

TYPE	MANUFACTURER	SERIES	DESCRIPTION	VOLTAGE	LOAD (VA)	MOUNTING	LAMPS NUMBER	LAMPS TYPE	LAMPS WATTS	LAMPS COLOR (KELVIN)	LAMPS CRI	REMARKS
LB	WINONA	GLENWOOD	DECORATIVE LANDSCAPE BOLLARD LIGHT FIXTURE DIMENSIONS 24" HIGH BOROSILICATE GLASS LENS, TAMPER RESISTANT HARDWARE FINISH: BRONZE SMOOTH	120	20	GROUND	1	T-3 HALOGEN	20	-	-	PROVIDE PA'S ADJUSTABLE STEM MOUNT AND COORDINATE HEIGHT ABOVE LANDSCAPING WITH ARCHITECT AND OWNER REFER TO MANUFACTURER'S INSTALLATION INSTRUCTIONS FOR MOUNTING INFORMATION
LF	KIM	KLV110	LOW VOLTAGE LANDSCAPE LIGHT DARK BRONZE FINISH	120	20	GROUND	1	MR16	20	-	-	PROVIDE IN-GRADE TRANSFORMER AND ALL PARTS AND ACCESSORIES FOR A COMPLETE SYSTEM PROVIDE EXTENSION MODULE AND SPEAR MOUNT AND COORDINATE HEIGHT ABOVE LANDSCAPING WITH ARCHITECT AND OWNER REFER TO MANUFACTURER'S INSTALLATION INSTRUCTIONS FOR MOUNTING INFORMATION
DF	PRESCOLITE	CFT6	OPEN REFLECTOR COMPACT FLUORSECENT DOWNLIGHT APPERATURE: 6" REFLECTOR TYPE: CLEAR REFLECTOR FINISH: SPECULAR LOW IRID. LENS TYPE: NONE MAXIMUM RECESS DEPTH: 11" ELECTRONIC BALLAST: <10% THD FLANGE: SELF-FLANGED	120	32	RECESSED	1	TRIPLE TUBE COMPACT FLUORESCENT VERTICAL ORIENTATION	32	3500	82	
DFE	PRESCOLITE	CFT6	OPEN REFLECTOR COMPACT FLUORSECENT DOWNLIGHT APPERATURE: 6" REFLECTOR TYPE: CLEAR REFLECTOR FINISH: SPECULAR LOW IRID. LENS TYPE: NONE MAXIMUM RECESS DEPTH: 11" ELECTRONIC BALLAST: <10% THD FLANGE: SELF-FLANGED EMERGENCY BATTERY PACK	120	32	RECESSED	1	TRIPLE TUBE COMPACT FLUORESCENT VERTICAL ORIENTATION	32	3500	82	
DFI	PRESCOLITE	CFT6	OPEN REFLECTOR COMPACT FLUORSECENT DOWNLIGHT APPERATURE: 6" REFLECTOR TYPE: CLEAR REFLECTOR FINISH: SPECULAR LOW IRID. LENS TYPE: PRISMATIC MAXIMUM RECESS DEPTH: 11" ELECTRONIC BALLAST: <10% THD, COLD WEATHER BALLAST FLANGE: SELF-FLANGED WET LOCATION RATED	120	32	RECESSED	1	TRIPLE TUBE COMPACT FLUORESCENT VERTICAL ORIENTATION	32	3500	82	

LIGHT FIXTURE ABBREVIATION SCHEDULE

NOTE: NOT ALL ABBREVIATIONS WILL NECESSARILY BE USED.

A.F.F.	ABOVE FINISHED FLOOR
WALL@CLG.	WALL MOUNT AT CORNER OF WALL AND CEILING
CCBA	CUSTOM PAINTED COLOR AS SELECTED BY THE ARCHITECT
SCBA	STANDARD PAINTED COLOR AS SELECTED BY THE ARCHITECT
CFBA	CUSTOM FINISH AS SELECTED BY THE ARCHITECT
SFBA	STANDARD FINISH AS SELECTED BY THE ARCHITECT
MOD	MODIFY STANDARD LIGHT FIXTURE AS INDICATED

LIGHT FIXTURE GENERAL NOTES

1. REFER TO THE ARCHITECTURAL REFLECTED CEILING PLANS FOR LOCATIONS OF LIGHT FIXTURES. BRING ALL DISCREPANCIES OF LOCATIONS AND QUANTITIES TO THE ATTENTION OF THE ARCHITECT AND ELECTRICAL ENGINEER PRIOR TO BIDDING.
2. REFER TO ARCHITECTURAL ELEVATIONS FOR MOUNTING HEIGHTS AND LOCATIONS OF LIGHT FIXTURES. BRING ALL DISCREPANCIES TO THE ATTENTION OF THE ARCHITECT PRIOR TO BIDDING.
3. REFER TO THE SPECIFICATIONS FOR OTHER LIGHT FIXTURE, BALLAST, AND LAMP REQUIREMENTS AND ACCEPTABLE MANUFACTURERS.
4. REFER TO ARCHITECTURAL DRAWINGS FOR LOUVER REQUIREMENTS (IF ANY).
5. CONFIRM AVAILABLE MOUNTING DEPTHS OF ALL LIGHT FIXTURES AND COMPARE WITH DEPTHS SHOWN ON SHOP DRAWING. BRING ALL POTENTIAL CONFLICT AREAS TO THE ATTENTION OF THE ARCHITECT AND ELECTRICAL ENGINEER PRIOR TO RELEASE.

BIDDING REQUIREMENTS

1. BID ONLY PRODUCTS THAT ARE SPECIFIED OR APPROVED BY ADDENDUM.
2. PACKAGING OF LIGHT FIXTURES WITH OTHER SYSTEMS IS NOT ALLOWED.
3. WHEN ONLY ONE PRODUCT IS APPROVED FOR BIDDING, THE PRICE FOR THAT ITEM SHALL BE BROKEN OUT SEPARATELY WHEN SUBMITTING PRICING TO VARIOUS DISTRIBUTORS AND/OR CONTRACTORS.
4. WHEN A CONTRADICTION EXISTS BETWEEN A SPECIFIC MODEL NUMBER AND THE DESCRIPTION, THE DESCRIPTION SHALL GOVERN.

LIGHT FIXTURE PRIOR APPROVAL REQUIREMENTS

1. PRIOR APPROVAL IS REQUIRED BEFORE BIDDING THIS PROJECT.
2. PRIOR APPROVALS SHALL BE SUBMITTED TO THE ELECTRICAL ENGINEER'S OFFICE AT LEAST (8) EIGHT WORKING DAYS BEFORE THE BID. PRIOR APPROVALS RECEIVED AFTER THIS TIME PERIOD SHALL BE REJECTED.
3. PRIOR APPROVALS SHALL BE SIGNED BY A PRINCIPAL OF THE SUBMITTING ORGANIZATION STATING THAT THEY HAVE PREPARED AND/OR REVIEWED THE SUBMITTAL AND THAT THE PRODUCTS PROPOSED ARE EQUIVALENT TO THOSE SPECIFIED. ANY EXCEPTIONS SHALL BE SO NOTED.
4. ITEMS THAT ARE SUBMITTED AND HAVE BEEN APPROVED WILL BE LISTED IN THE ADDENDUM(S). VERBAL APPROVAL WILL NOT BE GIVEN ON ANY ITEM.
5. IT IS NOT THE RESPONSIBILITY OF THE ELECTRICAL ENGINEER TO NOTIFY THE SUBMITTING PARTY OF ERRORS IN THE SUBMITTAL. NOTIFICATION OF ERRORS BY THE ELECTRICAL ENGINEER PRIOR TO ISSUANCE OF THE ADDENDUM(S) MAY NOT BE GIVEN.
6. PRIOR APPROVALS SHALL CONSIST OF TWO SETS OF CUT SHEETS DESCRIBING THE PRODUCTS BEING SUBMITTED AS EQUIVALENTS. FAXES ARE NOT ACCEPTABLE. ALL SPECIFICATION INFORMATION SHALL BE CLEARLY MARKED, WITH NON-APPLICABLE INFORMATION CROSSED OUT. COMPLETE PHOTOMETRIC DATA SHALL BE PROVIDED. PRODUCTS WITHOUT PHOTOMETRIC DATA WILL BE NOT BE APPROVED.

WIRING DEVICE SYMBOLS

SYMBOL	DESCRIPTION	MOUNTING	REMARKS
$	SINGLE-POLE TOGGLE SWITCH	+48"	
$a	SINGLE-POLE TOGGLE SWITCH	+48"	SUBSCRIPT KEYS SWITCH TO FIXTURES CONTROLLED.
$2	DOUBLE-POLE TOGGLE SWITCH	+48"	
$3	THREE-WAY TOGGLE SWITCH	+48"	
$4	FOUR-WAY TOGGLE SWITCH	+48"	
$K	KEY-OPERATED SINGLE-POLE TOGGLE SWITCH	+48"	
$P	SINGLE-POLE TOGGLE SWITCH WITH PILOT LIGHT	+48"	
$DIM	DIMMER SWITCH	+48"	RATE DIMMER SWITCH FOR MAXIMUM POSSIBLE WATTAGE
$TIM	TIMER SWITCH	+48"	
$$	(2) SINGLE-POLE TOGGLE SWITCH	+48"	DUAL LEVEL SWITCH OUTBOARD LAMPS SEPARATELY FROM INBOARD LAMPS.
$aLV	LOW VOLTAGE MOMENTARY CONTACT SWITCH	+48"	
$3PM	3-POSITION MOMENTARY CONTACT SWITCH	+48"	REFER TO DETAIL UP-ON; CENTER-NEUTRAL; DOWN-OFF
$3PN	3-POSITION MAINTAINED CONTACT SWITCH	+48"	UP-ON; CENTER-OFF; DOWN-ON
C/W	OCCUPANCY SENSOR	AS NOTED	CEILING MOUNTED WITH SUBSCRIPT 'C'; WALL-MOUNTED WITH SUBSCRIPT 'W'
	SPLIT-WIRED DUPLEX RECEPTACLE	+18"	
	SIMPLEX RECEPTACLE	+18"	
	DUPLEX RECEPTACLE	+18"	
	FOURPLEX RECEPTACLE	+18"	
	125/250V RECEPTACLE	+18"	RANGE -- NEMA 14-50R DRYER -- NEMA 14-30R
	GROUND FAULT CIRCUIT INTERRUPTER DUPLEX RECEPTACLE	+18"	
	GROUND FAULT CIRCUIT INTERRUPTER FOURPLEX RECEPTACLE	+18"	
	EMERGENCY DUPLEX RECEPTACLE	+18"	
	EMERGENCY FOURPLEX RECEPTACLE	+18"	
	MULTI-OUTLET ASSEMBLY	4" ABOVE BACKSPLASH	
	POWER / TELEPHONE POLE	FLOOR/CEILING	
	CORD DROP WITH DUPLEX RECEPTACLE	+18"	REFER TO DETAIL
(5-20R)	SPECIAL PURPOSE OUTLET	+18"	SUBSCRIPT IN PARENTHESIS INDICATES NEMA CONFIGURATION IF SHOWN. REFER TO DRAWINGS AND/OR EQUIPMENT SCHEDULES. CONFIRM EXACT CONFIGURATION WITH OWNER PRIOR TO INSTALLATION.

GEAR AND CONTROL SYMBOLS

SYMBOL	DESCRIPTION	MOUNTING	REMARKS
$T	MANUAL STARTER WITH THERMAL OVERLOAD(S)	AT EQUIPMENT	
	ELECTRIC MOTOR		
	NON-FUSED DISCONNECT SWITCH	+60"	
F	FUSED DISCONNECT SWITCH	+60"	
	CIRCUIT BREAKER AND ENCLOSURE	+60"	
	MAGNETIC STARTER	+60"	
	COMBINATION MAGNETIC STARTER / NON-FUSED DISCONNECT	+60"	
	COMBINATION MAGNETIC STARTER / FUSED DISCONNECT	+60"	
	COMB. MAGNETIC STARTER / MOTOR CIRCUIT PROTECTOR (MCP)	+60"	
VFD	COMB. VARIABLE FREQUENCY DRIVE / MOTOR CIRCUIT PROTECTOR (MCP)	FLOOR OR WALL AS SPECIFIED	TOP AT +72" IF WALL MOUNTED
RVS	REDUCED VOLTAGE STARTER	FLOOR OR WALL AS SPECIFIED	TOP AT +72" IF WALL MOUNTED
	LOAD CENTER (SURFACE-MOUNTED)	TOP AT +72"	14"W X 3"D
	LOAD CENTER (FLUSH-MOUNTED)	TOP AT +72"	14"W X 3"D
	LIGHTING AND APPLIANCE PANELBOARD (SURFACE-MOUNTED)	TOP AT +72"	20"W X 6"D
	LIGHTING AND APPLIANCE PANELBOARD (FLUSH-MOUNTED)	TOP AT +72"	20"W X 6"D
	POWER DISTRIBUTION PANELBOARD	WALL	THESE SYMBOLS ARE GENERAL IN NATURE AND MAY VARY IN SIZE AND SHAPE TO SUIT APPLICATION. CROSS HATCHING INDICATES "MAIN PANELBOARD OR SWITCHBOARD" NAME IS INDICATED IN SEMI-QUOTES (I.E. "L2A", "MDP")
	SWITCHBOARD	FLOOR	
	METER BASE	TOP AT +72"	
	OPEN - STOP - CLOSE SWITCH	+60"	FURNISH SWITCH UNLESS FURNISHED BY ANOTHER DIVISION. INSTALL AND CONNECT COMPLETE. REFER TO RELATED SPECIFICATION SECTIONS.
T	HVAC THERMOSTAT	+60"	PROVIDED BY DIVISION 15000 U.N.O.
	HAND - OFF - AUTO SWITCH	+60"	
GF	GROUND FAULT PROTECTION		

State of Utah
Department of Administrative Services
Division of Facilities Construction & Management
4110 State Office Building
Salt Lake City, Utah 84114
Phone: (801) 538 - 3018
Fax: (801) 538 - 3267
Internet: http://www.dfcm.state.ut.us

Weber State University

CREATED BY: P+A architects

P+A architects
821 East Kensington Ave.
Salt Lake City, Utah 84105
P: 801.484.1161
F: 801.485.4640
e-mail parchitects@comcast.net

architecture planning design

CONSULTANT:

ENVISION ENGINEERING
Direction. Then Velocity.
244 West 300 North, Suite 100
Salt Lake City, Utah 84103
801.534.1130ph 801.534.1080fax

REGISTERED PROFESSIONAL ENGINEER
DAVID P. WHITTON
No. 264397
5/12/09
STATE OF UTAH

PROJECT TITLE:

WEBER STATE UNIVERSITY
OGDEN, UTAH

NEW INFORMATION BUILDING
CONSTRUCTION DOCUMENTS

MARK	DATE	DESCRIPTION

ISSUE TYPE: Construction Documents

ISSUE DATE: MAY 12th, 2009

DFCM PROJECT NO: 08322810
CAD PROJECT NO: 2008-151
CAD DWG FILE:
DRAWN BY: BRT
CHK'D BY: RVV/DPW

COPYRIGHT: STATE OF UTAH

SHEET TITLE

SCHEDULES

SHEET NUMBER

E-GE002

W:\2008-151.00 - Weber State University Information Building\Elec\E-GE002.dwg, 5/12/2009 2:19:04 PM, brad, Envision Engineering, PC

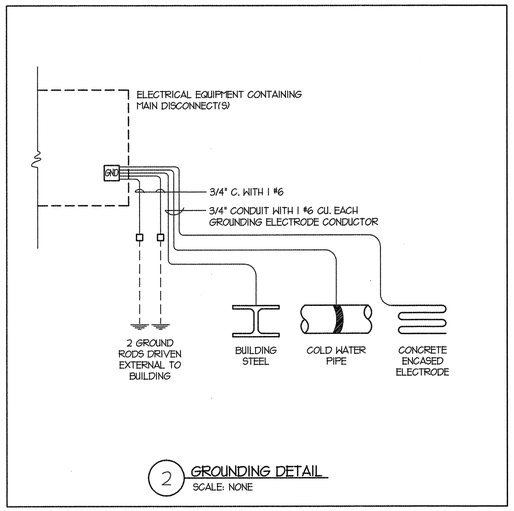

2 GROUNDING DETAIL
SCALE: NONE

MECHANICAL EQUIPMENT SCHEDULE

UNIT NAME	DESCRIPTION	LOAD	TYPE	VOLTAGE	PHASE	AMPERAGE	CONDUIT SIZE	WIRES NO.	WIRES SIZE	STARTER / DISCONNECT/ CONNECTION AT UNIT: NOTE	STARTER SIZE	MCP /FUSE SIZE	MCP /FUSE POLES	DISCONNECT SIZE	DISCONNECT POLES	REMARKS
CU-1	CONDENSING UNIT	11.7	MCA	208	1	11.7	3/4"	2	10	10A	-	20	2	30	3	
CEF-1	CEILING EXHAUST FAN	130	WATTS	120	1	1	3/4"	2	12	12A	-	-	-	1HP	1	
FCU-1	FAN COIL UNIT	1/5	HP	120	1	9.8	3/4"	2	12	1A	-	-	-	1 HP	1	
		24.5	MCA	208	1	24.5	3/4"	2	10	9A	-	25	2	30	3	
IWH-1	INSTANTANEOUS WATER HTR	1.4	KW	120	1	12	3/4"	2	12	13A	-	-	-	-	-	
IWH-2	INSTANTANEOUS WATER HTR	1.4	KW	120	1	12	3/4"	2	12	13A	-	-	-	-	-	

SIZE ALL FUSES IN ACCORDANCE WITH MANUFACTURER'S RECOMMENDATIONS.

STARTER / DISCONNECT NOTES:

1. MANUAL STARTER WITH THERMAL OVERLOAD
2. MANUAL STARTER WITH THERMAL OVERLOAD PROTECTION & LOW VOLTAGE RELAY / CONTACTOR FOR ATC CONTROL
3. COMBINATION MAGNETIC STARTER / FUSED DISCONNECT
4. COMBINATION MAGNETIC STARTER / MOTOR CIRCUIT PROTECTOR (MCP)
5. COMBINATION VARIABLE FREQUENCY DRIVE / MOTOR CIRCUIT PROTECTOR (MCP)
6. REDUCED VOLTAGE STARTER
7. COMBINATION TWO-SPEED STARTER / FUSED DISCONNECT
8. COMBINATION TWO-SPEED STARTER / MOTOR CIRCUIT PROTECTOR (MCP)
9. NON-FUSED DISCONNECT SWITCH
10. FUSED DISCONNECT SWITCH
11. BREAKER AND ENCLOSURE
12. DIRECT CONNECTION
13. DUPLEX RECEPTACLE OUTLET
14. SPECIAL PURPOSE OUTLET
15. SHUNT-TRIP BREAKER AND ENCLOSURE
16. TOGGLE SWITCH
17. FUSED DISCONNECT SWITCH WITH LATE MAKE/EARLY BREAK CONTACT

INSTALLATION NOTES:

A. FURNISHED, INSTALLED, & CONNECTED UNDER DIVISION 16.
B. FURNISHED & INSTALLED UNDER ANOTHER DIVISION REQUIRING CONNECTIONS UNDER DIVISION 16.
C. FURNISHED UNDER ANOTHER DIVISION BUT INSTALLED AND CONNECTED UNDER DIVISION 16.
D. FURNISHED, INSTALLED, & CONNECTED UNDER ANOTHER DIVISION
E. FURNISHED BY OWNER, INSTALLED & CONNECTED BY DIVISION 16

LIGHTING AND APPLIANCE PANELBOARD SCHEDULE

PANEL NAME: 1B TYPE: NQOD CIRCUIT BREAKERS: [X] BOLT ON [ ] PLUG ON 120 / 208 VOLTAGE 3 PH 4 W

[X] ENGRAVED NAME TAGS BUS MATERIAL: [ ] ALUM BUS [X] CU BUS GROUND: [X] GROUND BUS [ ] ISOL GND BUS NEUTRAL: [X] 100% [ ] 200% LUGS: [ ] MAIN [ ] SUB-FEED [ ] FEED-THROUGH MAIN BREAKER: [X] AMPS 100 BUS AMPS: 125

BRANCH BREAKERS

NOTES	ITEM	AMP	POLE	WIRE SIZE	CIR. NO.	LEFT PHASE LOAD A	LEFT PHASE LOAD B	LEFT PHASE LOAD C	RIGHT PHASE LOAD A	RIGHT PHASE LOAD B	RIGHT PHASE LOAD C	CIR. NO.	AMP	POLE	WIRE SIZE	ITEM	NOTES
	OUTLETS	20	1	12	1	900			500			2	20	1	12	EXTERIOR LIGHTING	
	OUTLETS	20	1	12	3		720			700		4	20	1	12	INTERIOR LIGHTS AND EF	
	TTB	20	1	12	5			360				6	20	1		SPARE	
	WATER HEATER	20	1	12	7	1400						8	20	1		SPARE	
	WATER HEATER	20	1	12	9		1400					10	20	1		SPARE	
	FCU FAN	20	1	12	11			500				12	20	1		SPARE	
	FCU HEATER	25	2	10	13	2550						14	20	1		SPARE	
	-	-	-	-	15		2550					16	20	1		SPARE	
	CONDENSER	20	2	10	17			1300				18	20	1		SPARE	
	-	-	-	-	19	1300						20	20	1		SPARE	
	SPARE	20	1		21							22	20	1		SPARE	
	SPARE	20	1		23							24	20	1		SPARE	
	SPARE	20	1		25							26	20	1		SPARE	
	SPARE	20	1		27							28	20	1		SPARE	
	SPARE	20	1		29							30	20	1		SPARE	
						6150	4670	2160	500	700	0						
						6650	5370	2160	TOTAL								
						55	45	18	AMPS / PHASE								

FRONT: [X] STANDARD [ ] HINGED [ ] DOOR-IN-DOOR

MOUNTING: [X] FLUSH [ ] SURFACE [ ] SURFACE W/ SKIRT ABOVE [ ] SURFACE W/ SKIRT BELOW

TVSS: [ ] NONE [ ] CATEGORY "C" [ ] CATEGORY "B" [X] CATEGORY "A"

NEMA RATING: [X] NEMA 1 [ ] NEMA 3R [ ] NEMA 4X [ ] NEMA 12 [ ] STAINLESS STEEL

TOTAL CONNECTED LOAD: 14,180

SHORT CIRCUIT RATING: [ ] SERIES - RATED [X] FULLY - RATED

10,000 AMPS RMS SYM

REFER TO ONE-LINE DIAGRAM FOR FEEDER , CONDUIT AND CONDUCTOR SIZES

PANELBOARD SCHEDULE NOTES:
1. PROVIDE CLASS A GROUND FAULT INTERRUPTER TYPE CIRCUIT BREAKER.
2. PROVIDE ARC FAULT CIRCUIT INTERRUPTER TYPE CIRCUIT BREAKER.
3. PROVIDE 30 MILLIAMPERE EQUIPMENT GROUND FAULT PROTECTOR TYPE CIRCUIT BREAKER.
4. PROVIDE SHUNT-TRIP TYPE CIRCUIT BREAKER WITH 120V COIL.
5. PROVIDE HACR RATED CIRCUIT BREAKER.
6. PROVIDE HANDLE CLAMP FOR HOLDING CIRCUIT BREAKER IN THE "ON" OR "OFF" POSITION.
7. PROVIDE SWITCHING RATED CIRCUIT BREAKER.
8. PROVIDE NEW CIRCUIT BREAKER IN EXISTING PANELBOARD (WHERE PANEL IS INDICATED AS EXISTING) OF SAME MANUFACTURER AND A.I.C. RATING AS EXISTING.
9. EXISTING LOAD.

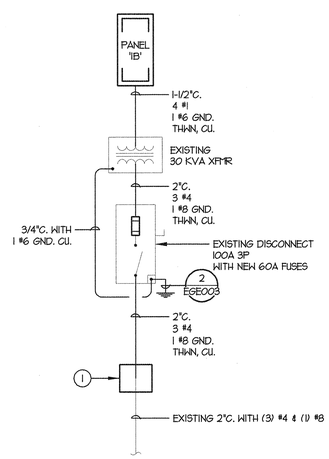

1 ONE-LINE DIAGRAM
SCALE: NONE

KEYED NOTES:

1. CONTRACTOR TO SPLICE NEW CONNECTIONS IN AN NEC SIZED JUNCTION BOX.

State of Utah
Department of Administrative Services
Division of Facilities Construction & Management
4110 State Office Building
Salt Lake City, Utah 84114
Phone: (801) 538 - 3018
Fax: (801) 538 - 3267
Internet: http://www.dfcm.state.ut.us

Weber State University

CREATED BY: P+A architects

P+A architects
821 East Kensington Ave.
Salt Lake City, Utah 84105
P: 801.484.1161
F: 801.485.4640
e-mail parchitects@comcast.net

[ ] architecture [ ] planning [ ] design

CONSULTANT:

ENVISION ENGINEERING
Direction. Then Velocity.
244 West 300 North, Suite 100
Salt Lake City, Utah 84103
801.534.1130 ph 801.534.1080 fax

REGISTERED PROFESSIONAL ENGINEER DAVID J. WHITTON No. 364397 5/12/09 STATE OF UTAH

PROJECT TITLE:
WEBER STATE UNIVERSITY
OGDEN, UTAH

NEW INFORMATION BUILDING
CONSTRUCTION DOCUMENTS

MARK	DATE	DESCRIPTION

ISSUE TYPE: Construction Documents

ISSUE DATE: MAY 12th, 2009

DFCM PROJECT NO: 08322810
CAD PROJECT NO: 2008-151
CAD DWG FILE:
DRAWN BY: BRT
CHK'D BY: RVV/DPW
COPYRIGHT: STATE OF UTAH

SHEET TITLE
SCHEDULES & ONE-LINE DIAGRAM

SHEET NUMBER
E-GE003

W:\2008-151.00 - Weber State University Information Building\Elec\E-GE003.dwg, 5/12/2009 2:18:56 PM, brad, Envision Engineering, PC

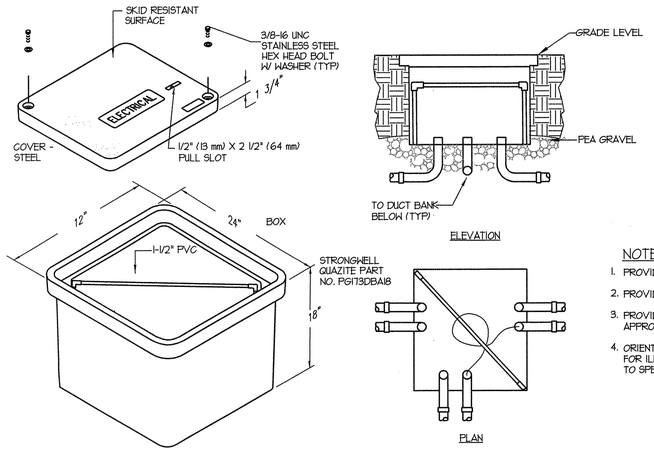

2 IN-GRADE JUNCTION BOX

SCALE: NO SCALE

NOTES:

1. PROVIDE 6" MIN. OF PEA GRAVEL BELOW BOX.
2. PROVIDE 1-1/2" PVC AS SHOWN FOR LOOPING CABLE.
3. PROVIDE RIGID GALVANIZED STEEL (RGS) ELBOWS WITH APPROVED PIPE WRAP.
4. ORIENTATION AND NUMBER OF CONDUITS ARE SHOWN FOR ILLUSTRATIVE PURPOSES AND WILL VARY ACCORDING TO SPECIFIC LOCATION REQUIREMENTS.

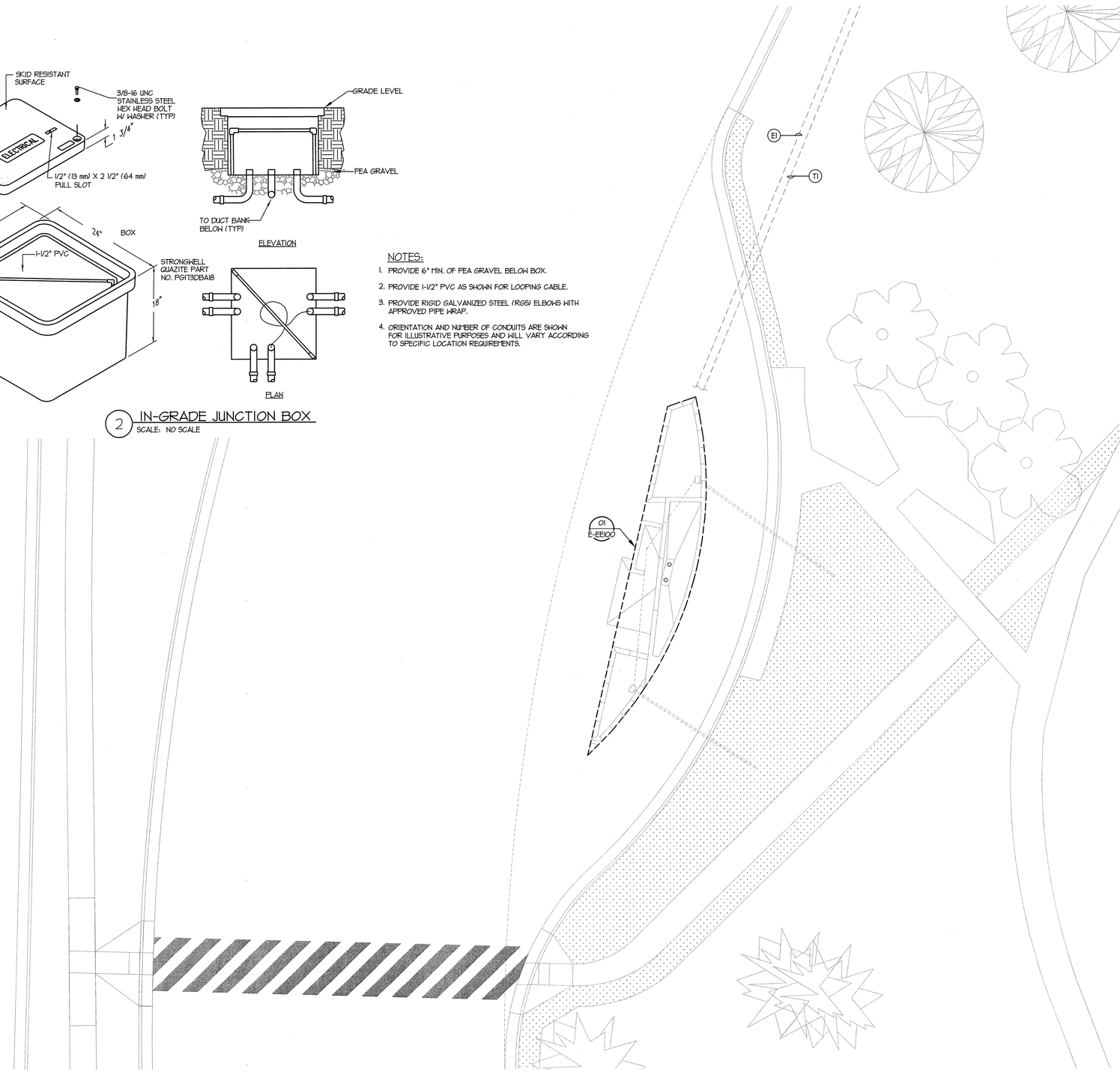

0 5' 10' 20'

PLAN NORTH

01 SITE PLAN

EES100 SCALE 1" = 10'-0"

SITE KEYED NOTES:

TELEPHONE/COMMUNICATION KEYED NOTES:

TI EXISTING 2" CONDUIT FOR DATA. CONTRACTOR SHALL INTERCEPT AND SPLICE AND PROVIDE NEW CONDUCTORS AND 2'C. TO THE NEW TELEPHONE TERMINAL BOARD.

ELECTRICAL SERVICE KEYED NOTES:

EI APPROXIMATE LOCATION OF EXISTING 2" CONDUIT WITH CONDUCTORS FOR POWER.

SITE GENERAL NOTES:

1. PROVIDE ALL REQUIRED TRENCHING, BACKFILLING, ETC. FOR ALL CONDUITS. PROVIDE REQUIRED BACKFILL MATERIALS AS DIRECTED BY EACH UTILITY.

UTILITY COORDINATION REQUIREMENTS:

THE ELECTRICAL CONTRACTOR SHALL COORDINATE AND VERIFY ALL REQUIREMENTS AND LOCATIONS TO EXTEND CONDUITS FOR UTILITY USE WITHIN 2 WEEKS OF THE CONTRACT AWARD. THE CONTRACTOR SHALL NOT ROUGH-IN ANY CONDUITS UNTIL THE UTILITY COORDINATION IS COMPLETE AND ALL LOCATIONS ARE KNOWN. THE CONTRACTOR SHALL PROVIDE TO THE ARCHITECT AND ENGINEER A WRITTEN, SIGNED STATEMENT, INCLUDING A SKETCH OF LOCATIONS, FROM THE UTILITY COMPANY NOTIFYING THEM THAT THEY HAVE COORDINATED AND VERIFIED ALL REQUIREMENTS. IF THE CONTRACTOR DOES NOT COORDINATE AND VERIFY THE REQUIREMENTS WITH THE UTILITIES OR PROVIDE A WRITTEN STATEMENT FROM THE UTILITY COMPANY TO THE ARCHITECT AND ENGINEER ALL CHANGES DUE TO LACK OF COORDINATION WILL BE DONE AT NO ADDITIONAL EXPENSE TO THE OWNER.

State of Utah
Department of Administrative Services
Division of Facilities Construction & Management
4110 State Office Building
Salt Lake City, Utah 84114
Phone: (801) 538 - 3018
Fax: (801) 538 - 3267
Internet: http://www.dfcm.state.ut.us

Weber State University

CREATED BY: P+A architects

P+A architects
821 East Kensington Ave.
Salt Lake City, Utah 84105
P: 801.484.1161
F: 801.485.4640
e-mail parchitects@comcast.net

architecture planning design

CONSULTANT:

ENVISION ENGINEERING
Direction. Then Velocity.
244 West 300 North, Suite 100
Salt Lake City, Utah 84103
801.534.1130 ph 801.534.1080 fax

REGISTERED PROFESSIONAL ENGINEER DAVID P. WHITTON No. 284397 STATE OF UTAH 5/12/09

PROJECT TITLE:

WEBER STATE UNIVERSITY
OGDEN, UTAH

NEW INFORMATION BUILDING
CONSTRUCTION DOCUMENTS

MARK	DATE	DESCRIPTION

ISSUE TYPE: Construction Documents

ISSUE DATE: MAY 12th, 2009

DFCM PROJECT NO: 08322810
CAD PROJECT NO: 2008-151
CAD DWG FILE:
DRAWN BY: BRT
CHK'D BY: RVV/DPW

COPYRIGHT: STATE OF UTAH

SHEET TITLE

SITE PLAN

SHEET NUMBER

E-ES100

W:\2008-151.00 - Weber State University Information Building\Elec\E-ES100.dwg, 5/12/2009 2:18:32 PM, brad, Envision Engineering, PC

OCCUPANCY SENSOR LEGEND					
SYMBOL	LOCATION USED	TECHNOLOGY	COVERAGE SQ/FT	WATT STOPPER CATALOG NUMBER	MOUNTING
◐C	SMALL OFFICE	PIR	UP TO 15'x15'	CI-300-I	CENTER IN SPACE

KEYED NOTES:

1. EXISTING 30 KVA TRANSFORMER IN NEW LOCATION. CONTRACTOR TO PROVIDE A WEATHERPROOF KIT AND WALL MOUNT KIT.
2. SWITCH WITH THE LIGHTS.
3. PROVIDE A TORK PHOTO CELL #2101 OR APPROVED EQUIVALENT. LIGHT FIXTURE TYPES 'LF', 'LB' AND 'DFI' SHALL BE CONTROLLED USING THIS PHOTO CELL. MOUNT ON THE ROOF FACING THE NORTH SKY.
4. EXISTING CONDUITS. REFER TO SITE PLAN FOR MORE INFORMATION.
5. CONTRACTOR SHALL INTERCEPT EXISTING CONDUIT & CONDUCTORS. PROVIDE NEW 2"C. WITH CONDUCTORS IN AN NEC SIZED IN-GRADE JUNCTION BOX AND PROVIDE AN IRREVERSIBLE BUTT SPLICE TO THE EXISTING CONDUCTORS AND EXTEND TO THE NEW BUILDING. LOCATIONS SHOWN ARE APPROXIMATE. CONTRACTOR TO FIELD VERIFY EXACT LOCATIONS OF CONDUIT AND CONDUCTORS AND PROVIDE NEW AS REQUIRED FOR THE NEW BUILDING.
6. PROVIDE IN-GRADE 120V TO 12V TRANSFORMER FOR LANDSCAPE LIGHTING.
7. CONTRACTOR SHALL INTERCEPT EXISTING CONDUIT & CONDUCTORS. PROVIDE NEW 2"C. WITH CONDUCTORS IN AN NEC SIZED IN-GRADE JUNCTION BOX AND SPLICE ALL COMMUNICATIONS TO THE EXISTING CONDUCTORS PER EIA-TIA STANDARDS AND EXTEND TO THE NEW BUILDING. LOCATIONS SHOWN ARE APPROXIMATE. CONTRACTOR TO FIELD VERIFY EXACT LOCATIONS OF CONDUIT AND CONDUCTORS AND PROVIDE NEW AS REQUIRED FOR THE NEW BUILDING.

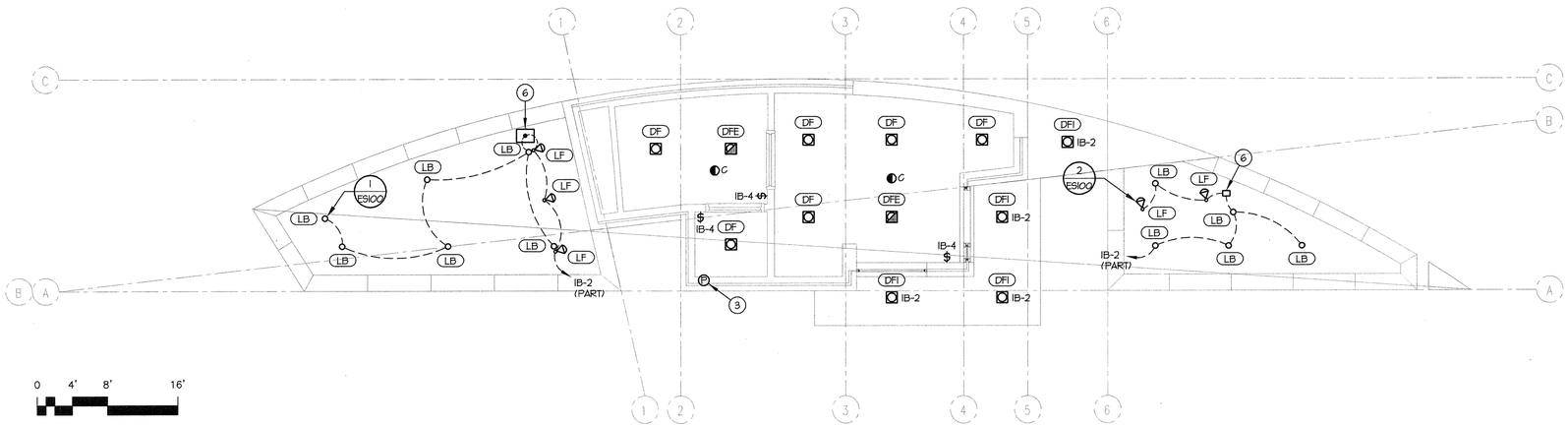

PLAN NORTH

Ø3 EEEØØ LIGHTING PLAN SCALE 1/4" = 1'-Ø"

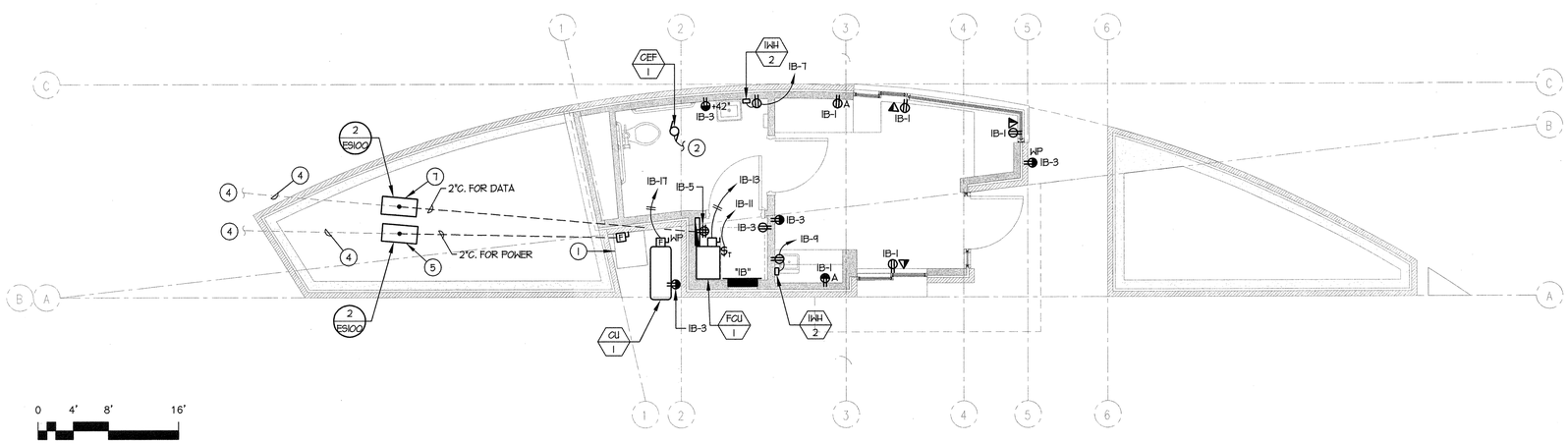

PLAN NORTH

Ø1 EEEØØ POWER PLAN SCALE 1/4" = 1'-Ø"

State of Utah
Department of Administrative Services

Division of Facilities Construction & Management
4110 State Office Building
Salt Lake City, Utah 84114
Phone: (801) 538 - 3018
Fax: (801) 538 - 3267
Internet: http://www.dfcm.state.ut.us

Weber State University

CREATED BY: P+A architects

P+A architects
821 East Kensington Ave.
Salt Lake City, Utah 84105
P: 801.484.1161
F: 801.485.4640
e-mail parchitects@comcast.net

architecture planning design

CONSULTANT:

ENVISION ENGINEERING
Direction. Then Velocity.
244 West 300 North, Suite 100
Salt Lake City, Utah 84103
801.534.1130 ph 801.534.1080 fax

REGISTERED PROFESSIONAL ENGINEER DAVID P. WHITTON No. 264397 5/12/09 STATE OF UTAH

PROJECT TITLE:

WEBER STATE UNIVERSITY
OGDEN, UTAH

NEW INFORMATION BUILDING
CONSTRUCTION DOCUMENTS

MARK	DATE	DESCRIPTION

ISSUE TYPE: Construction Documents

ISSUE DATE: MAY 12th, 2009

DFCM PROJECT NO: 08322810
CAD PROJECT NO: 2008-151
CAD DWG FILE:
DRAWN BY: BRT
CHK'D BY: RVV/DPW
COPYRIGHT: STATE OF UTAH

SHEET TITLE

POWER PLAN
ROOF POWER PLAN
AND LIGHTING PLAN

SHEET NUMBER

E-EE100

W:\2008-151.00 - Weber State University Information Building\Elec\E-EE100.dwg, 5/12/2009 2:18:40 PM, brad, Envision Engineering, PC

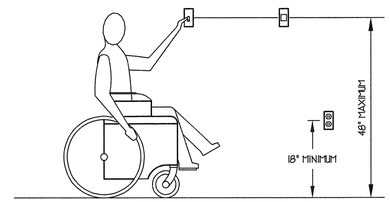

4 ADA ELEVATION DETAIL
SCALE: NONE

PROVIDE 4"x4"x2-1/8" DEEP JUNCTION BOX WITH SINGLE GANG PLASTER RING AND EXTEND 1" CONDUIT WITH NYLON PULL ROPE TO TELEPHONE TERMINAL BOARD. CABLE TO BE PROVIDED BY OWNER.

AI-40 — DESIGNATION OF CIRCUIT. WIRE COMPLETE.

AI-40/IG — ISOLATED GROUND CIRCUIT.

3 TYPICAL OUTLET CONVENTION
SCALE: NONE

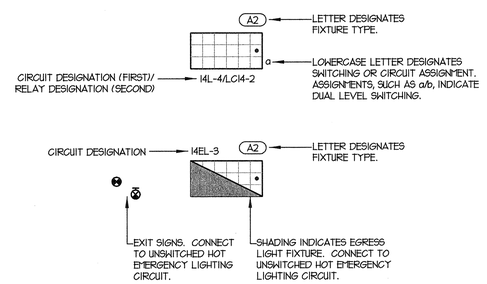

2 TYPICAL LIGHT FIXTURE CONVENTION
SCALE: NONE

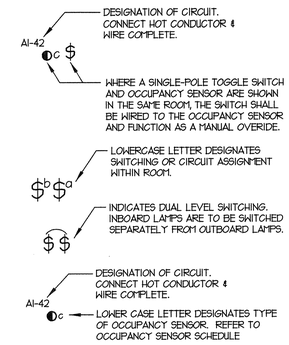

1 TYPICAL SWITCHING CONVENTIONS
SCALE: NONE

State of Utah
Department of Administrative Services
Division of Facilities Construction & Management
4110 State Office Building
Salt Lake City, Utah 84114
Phone: (801) 538 - 3018
Fax: (801) 538 - 3267
Internet: http://www.dfcm.state.ut.us

Weber State University

CREATED BY: P+A architects

P+A architects
821 East Kensington Ave.
Salt Lake City, Utah 84105
P: 801.484.1161
F: 801.485.4640
e-mail parchitects@comcast.net

architecture planning design

CONSULTANT:

ENVISION ENGINEERING
Direction. Then Velocity.
244 West 300 North, Suite 100
Salt Lake City, Utah 84103
801.534.1130 ph 801.534.1080 fax

REGISTERED PROFESSIONAL ENGINEER DAVID P. WHITTON No. 264397 5/12/09 STATE OF UTAH

PROJECT TITLE:
WEBER STATE UNIVERSITY
OGDEN, UTAH

NEW INFORMATION BUILDING
CONSTRUCTION DOCUMENTS

MARK	DATE	DESCRIPTION

ISSUE TYPE: Construction Documents

ISSUE DATE: MAY 12th, 2009

DFCM PROJECT NO: 08322810
CAD PROJECT NO: 2008-151
CAD DWG FILE:
DRAWN BY: BRT
CHK'D BY: RVV/DPW

COPYRIGHT: STATE OF UTAH

SHEET TITLE
DETAILS

SHEET NUMBER
E-GE501

W:\2008-151.00 - Weber State University Information Building\Elec\E-GE501.dwg, 5/12/2009 2:18:49 PM, brad,
Envision Engineering, PC.