OGDEN BAY GREAT SALT LAKE ECOSYSTEM STORAGE BUILDING PHASE I

DIVISION OF WILDLIFE RESOURCES
DFCM PROJECT # 09014520
HOOPER, UTAH

ABBREVIATIONS

AC.	ACOUSTIC
ADD.	ADDENDUM
A/C	AIR CONDITIONING
AL.	ALUMINUM
ALT.	ALTERNATE
A.B.	ANCHOR BOLT
ARCH.	ARCHITECT
ASP.	ASPHALT
@	AT
&	AND
BSMT.	BASEMENT
B.M.	BENCHMARK
BLKG.	BLOCKING
BD.	BOARD
B.O.	BOTTOM OF
BLDG.	BUILDING
CAB'T.	CABINET
C.I.P.	CAST IN PLACE
C.B.	CATCH BASIN
CLG.	CEILING
⌇	CENTER LINE
C.T.	CERAMIC TILE
CH	CHANNEL
CLR.	CLEAR
C.O.	CLEAN OUT
CL.	CLOSET
COL.	COLUMN
CONC.	CONCRETE
COND.	CONDITION
CONN.	CONNECTION
CONST.	CONSTRUCTION
C.J.	CONTROL JOINT
CONT.	CONTINUOUS
C.M.U.	CONCRETE MASONRY UNIT
D.B.	DECK BEARING
D.P.	DAMP PROOFING
DIAG.	DIAGONAL
DIA.	DIAMETER
DIM.	DIMENSION
DISP.	DISPENSER
DWL.	DOWEL
DN.	DOWN
D.S.	DOWN SPOUT
DWG.	DRAWING
D.W.V.	DRAINAGE WASTE & VENT
EA.	EACH
EL.	ELECTRIC
E.W.C.	ELEC. WATER COOLER
ELEV.	ELEVATION
EQ.	EQUAL
EQUIP.	EQUIPMENT
EXH.	EXHAUST
E.J.	EXPANSION JOINT
EXIST.	EXISTING
EXT.	EXTERIOR
F.E.	FIRE EXTINGUISHER
F.E.C.	FIRE EXTINGUISHER CABINET
FT.	FEET
FIN.	FINISH
FIXT.	FIXTURE
FL.	FLASHING
FLR.	FLOOR
F.D.	FLOOR DRAIN
FLUOR.	FLUORESCENT
FTG.	FOOTING
FND.	FOUNDATION
FR.	FRAME
GA.	GAUGE
GALV.	GALVANIZED
GL.	GLASS
GD.	GRADE
GRL.	GRILLE
GRD.	GROUND
GYP.	GYPSUM
G.S.N.	GENERAL STRUCTURAL NOTES
G.C.	GENERAL CONTRACTOR
HR.	HOUR
HDW.	HARDWARE
HDWD.	HARDWOOD
HTR.	HEATER
HT.	HEIGHT
H.P.	HIGH POINT
H.M.	HOLLOW METAL
HORIZ.	HORIZONTAL
H.B.	HOSE BIB
H.W.	HOT WATER
IN.	INCH
I.D.	INSIDE DIAMETER
INSUL.	INSULATION
INT.	INTERIOR
INV.	INVERT
JAN.	JANITOR
JT.	JOINT
JST.	JOIST
LAM.	LAMINATED
LDG.	LANDING
LAV.	LAVATORY
LT.	LIGHT
L.W.C.	LIGHT WEIGHT CONCRETE
LVR.	LOUVER
M.B.	MACHINE BOLT
M.O.	MASONRY OPENING
MAT'L.	MATERIAL
MFR.	MANUFACTURER
MAX.	MAXIMUM
MECH.	MECHANICAL
MTL.	METAL
MIN.	MINIMUM
MLDG.	MOLDING
MULL.	MULLION
N/A	NOT APPLICABLE
N.G.	NATURAL GRADE
NOM.	NOMINAL
N.I.C.	NOT IN CONTRACT
N.T.S.	NOT TO SCALE
O.C.	ON CENTER
OPNG.	OPENING
O.D.	OUTSIDE DIAMETER
O.F.S.	OVERFLOW SCUPPER
O.F.C.I.	OWNER FURNISHED, CONTRACTOR INSTALLED
PTD.	PAINTED
PR.	PAIR
PNL.	PANEL
d	PENNY
PL	PLATE
PLBG.	PLUMBING
PLY'WD.	PLYWOOD
PT.	PAINT
P.S.I.	POUNDS PER SQ. IN.
P.S.F.	POUNDS PER SQ. FT.
P.C.	PLUMBING CONTRACTOR
P.L.	PLASTIC LAMINATE
R.A.	RETURN AIR
RAD.	RADIUS
REG.	REGISTER
REQ'D.	REQUIRED
REV.	REVISION
REC.	RECOMMENDATION
R.D.	ROOF DRAIN
RFG.	ROOFING
RM.	ROOM
RGH.	ROUGH
RND.	ROUND
S.A.	SUPPLY AIR
SCR.	SCREW
SECT.	SECTION
SEL.	SELECT
SHT.	SHEET
SIM.	SIMILAR
SLDG.	SLIDING
SM.	SMOOTH
SPEC.	SPECIFICATION
SPL.	SPLASH
SQ.	SQUARE
STD.	STANDARD
S.S.	STAINLESS STEEL
STRUC.	STRUCTURE
SUSP.	SUSPENDED
SW.BD.	SWITCHBOARD
T&B	TOP & BOTTOM
TELCO	TELEPHONE COMPANY
T.G.	TEMPERED GLASS
T.O.C.	TOP OF CURB
T.O.	TOP OF
T.O.P.	TOP OF PARAPET
T.O.D.	TOP OF DECK
TYP.	TYPICAL
T&G	TONGUE & GROVE
U.N.O.	UNLESS NOTED OTHERWISE
V.	VENT
VERT.	VERTICAL
V.G.	VERTICAL GRAIN
VEST.	VESTIBULE
V.T.R.	VENT THROUGH ROOF
V.C.T.	VINYL COMPOSITION TILE
V.C.P.	VITREOUS CLAY PIPE
W.W.F.	WELDED WIRE FABRIC
W.C.	WATER CLOSET
W.H.	WATER HEATER
W.F.	WIDE FLANGE
W/	WITH
W/O	WITHOUT
WD.	WOOD
WDW.	WINDOW
W.R.	WATER RESISTANT
W.P.	WATER PROOF

MATERIALS / SYMBOLS LEGEND

WOOD MOLDING
STONE IN SECTION
CONCRETE
EARTH
GRAVEL
MASONRY
STEEL FRAMING
RIGID INSULATION
BATT INSULATION
GYPSUM WALL BOARD
PLYWOOD
BLOCKING
CONTINUOUS WOOD
LEVEL ELEVATION, FLOOR ELEVATION, POINT ELEVATION (OR)
℄ CENTERLINE
BUILDING SECTION FLAG (1 / A401)
WALL SECTION FLAG (1 / A451)
INTERIOR ELEVATION
DETAIL (1 / A801)
GRID TAG (A)
DOOR TAG (101 / A)
ROOM TAG (101)
KEYNOTE TAG (1)
REVISION TAG
G4 WINDOW GLAZING SCHEDULE
WALL TYPE SYMBOL (1)

State of Utah–Department of Administrative Services

DIVISION OF FACILITIES CONSTRUCTION AND MANAGEMENT

4110 State Office Building/Salt Lake City, Utah 84114/538–3018

APPROVALS:

Prime Agency _____ Date _____

DFCM _____ Date _____

APPROVAL DOES NOT RELIEVE A/E OF DESIGN LIABILITY

DFCM PLAN CHECK

Division of Facilities Construction and Management

Phase _____ Program _____ Yes ___ No ___

	Approved as noted	Rejected Resubmit	No Comment	Initial	Date
Accessibility					
Architectural					
Civil					
Electrical					
Energy					
HVAC					
Landscape					
Plumbing					
Specification					
Structural					

APPROVAL DOES NOT RELIEVE A/E OF DESIGN LIABILITY

VICINITY MAP

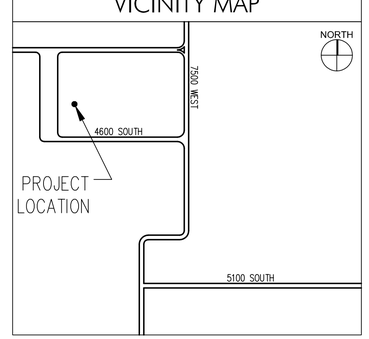

PLAN CHECK DOCUMENTS
FEBRUARY 09, 2009

CODE ANALYSIS

MODULAR UNIT 1

APPLICABLE CODES

	Year		Year
International Building Code	2006	National Electrical Code	2008
International Mechanical Code	2006	Uniform Code for Building Conservation	N/A
International Fuel Gas Code	2006	ADA Accessibility Guidelines	ANSI A117.1 2003
International Plumbing Code	2006		
International Fire Code	2006		
International Energy Conservation Code	2006		

A. Occupancy and Group: B

Change in Use: Yes _____ No __X__ Mixed Occupancy: Yes ____ No __X__
Special Use and Occupancy (e.g. High Rise, Covered Mall): ____NONE____

B. Seismic Design Category: D Design Wind Speed: 90 mph, Exposure C

C. Type of Construction (circle one):

I A | I B | II A | II B | III A | III B | IV HT | V A | V B (circled)

D. Fire Resistance Rating Requirements for the Exterior Walls based on the fire separation distance (in hours):

North: __0__ South: __0__ East: __0__ West: __0__

E. Mixed Occupancies: __N__ Nonseparated Uses: __N__

F: Sprinklers:

Required: __N__ Provided: __N__

Type of Sprinkler System (IBC 903.3.1) __N/A__

G: Number of Stories: __1__ Building Height: __14'__

H: Actual Area per Floor (square feet): __1,440__

I: Tabular Area: __9,000__

J: Area Modifications: N/A

a) $A_a = \left\{ A_t + \left[A_t \times I_f \right] + \left[A_t \times I_s \right] \right\}$ $I_f = \left[F/P - 0.25 \right] W / 30$

b) Sum of the Ratio Calculations for Mixed Occupancies: N/A

$\frac{\text{Actual Area}}{\text{Allowable Area}} \leq 1$

c) Total Allowable Area for:
1) One Story: __9,000__
2) Two Story: $A_a(2)$ __N/A__
3) Three Story: $A_a(3)$ __N/A__

d) Unlimited Area Building: Yes _____ No __X__ Code Section: _____

K. Fire Resistance Rating Requirements for Building Elements (hours).

Element	Hours	Assembly Listing	Element	Hours	Assembly Listing
Exterior Bearing Walls	0		Floors - Ceiling Floors	0	
Interior Bearing Walls	0		Roofs - Ceiling Roofs	0	
Exterior Non-Bearing Walls	0		Exterior Doors and Windows	0	
Structural Frame	0		Shaft Enclosures	0	
Partitions - Permanent	0		Fire Walls	0	
Fire Barriers	0		Fire Partitions	0	
			Smoke Partitions		

L. Design Occupant Load: __15__
Exit Width Required: __36"__ Exit Width Provided: __36"__

M. Minimum Number of Required Plumbing Facilities:
a) Water Closets - Required (m) __1__ (f) __1__ Provided (m) __1__ (f) __1__
b) Urinals - Required (m) __0__ (f) __0__ Provided (m) __0__ (f) __0__
c) Lavatories - Required (m) __1__ (f) __1__ Provided (m) __1__ (f) __1__
d) Bath Tubs or Showers: __0__
e) Drinking Fountains: __2__ Service Sinks: __1__

FOOTNOTES:
1) In case of conflict with the U.S. Department of Justice Federal Registers Parts I through V - ADA Guidelines and specific reference to the International Building Code Accessibility Chapters, the more restrictive requirement shall govern.
2) Additional Code Information shall be provided at the discretion of the Building Official for Complex Buildings. Including, but not limited to:
a) High Rise Requirements.
b) Atriums.
c) Performance Based Criteria.
d) Means or Egress Analysis.
e) Fire Assembly Locator Sheet.
f) Exterior and Interior Accessibility Route.
g) Fire Stopping, Including Tested Design Number.

MODULAR UNIT 2

APPLICABLE CODES

	Year		Year
International Building Code	2006	National Electrical Code	2008
International Mechanical Code	2006	Uniform Code for Building Conservation	N/A
International Fuel Gas Code	2006	ADA Accessibility Guidelines	ANSI A117.1 2003
International Plumbing Code	2006		
International Fire Code	2006		
International Energy Conservation Code	2006		

A. Occupancy and Group: B

Change in Use: Yes _____ No __X__ Mixed Occupancy: Yes ____ No __X__
Special Use and Occupancy (e.g. High Rise, Covered Mall): ____NONE____

B. Seismic Design Category: D Design Wind Speed: 90 mph, Exposure C

C. Type of Construction (circle one):

I A | I B | II A | II B | III A | III B | IV HT | V A | V B (circled)

D. Fire Resistance Rating Requirements for the Exterior Walls based on the fire separation distance (in hours):

North: __0__ South: __0__ East: __0__ West: __0__

E. Mixed Occupancies: __N__ Nonseparated Uses: __N__

F: Sprinklers:

Required: __N__ Provided: __N__

Type of Sprinkler System (IBC 903.3.1) __N/A__

G: Number of Stories: __1__ Building Height: __14'__

H: Actual Area per Floor (square feet): __1,344__

I: Tabular Area: __9,000__

J: Area Modifications: N/A

a) $A_a = \left\{ A_t + \left[A_t \times I_f \right] + \left[A_t \times I_s \right] \right\}$ $I_f = \left[F/P - 0.25 \right] W / 30$

b) Sum of the Ratio Calculations for Mixed Occupancies: N/A

$\frac{\text{Actual Area}}{\text{Allowable Area}} \leq 1$

c) Total Allowable Area for:
1) One Story: __9,000__
2) Two Story: $A_a(2)$ __N/A__
3) Three Story: $A_a(3)$ __N/A__

d) Unlimited Area Building: Yes _____ No __X__ Code Section: _____

K. Fire Resistance Rating Requirements for Building Elements (hours).

Element	Hours	Assembly Listing	Element	Hours	Assembly Listing
Exterior Bearing Walls	0		Floors - Ceiling Floors	0	
Interior Bearing Walls	0		Roofs - Ceiling Roofs	0	
Exterior Non-Bearing Walls	0		Exterior Doors and Windows	0	
Structural Frame	0		Shaft Enclosures	0	
Partitions - Permanent	0		Fire Walls	0	
Fire Barriers	0		Fire Partitions	0	
			Smoke Partitions		

L. Design Occupant Load: __14__
Exit Width Required: __36"__ Exit Width Provided: __36"__

M. Minimum Number of Required Plumbing Facilities:
a) Water Closets - Required (m) 0 (f) 0 (Unisex) 1 Provided (m) 0 (f) 0 (Unisex) 1 Per 2,902.2 Exception 2
b) Urinals - Required (m) __0__ (f) __0__ Provided (m) __0__ (f) __0__
c) Lavatories - Required (m) 0 (f) 0 (Unisex) 1 Provided (m) 0 (f) 0 (Unisex) 1 Per 2,902.2 Exception 2
d) Bath Tubs or Showers: __1__
e) Drinking Fountains: __2__ Service Sinks: __1__

FOOTNOTES:
1) In case of conflict with the U.S. Department of Justice Federal Registers Parts I through V - ADA Guidelines and specific reference to the International Building Code Accessibility Chapters, the more restrictive requirement shall govern.
2) Additional Code Information shall be provided at the discretion of the Building Official for Complex Buildings. Including, but not limited to:
a) High Rise Requirements.
b) Atriums.
c) Performance Based Criteria.
d) Means or Egress Analysis.
e) Fire Assembly Locator Sheet.
f) Exterior and Interior Accessibility Route.
g) Fire Stopping, Including Tested Design Number.

DESIGN TEAM

ARCHITECTURAL
JRCA, Architects,INC
577 South 200 East
Salt Lake City, Utah 84111
(801) 533-2100 Fax (801) 533-2101
Contact: Gordon Clark
Email: gac@jrcadesign.com

CIVIL
Bush & Gudgell, Inc.
525 South 300 East
Salt Lake City, Utah 84111
(801) 364-1212 Fax (801) 364-1225
Contact: George Buys
Email: gbuys@bushandgudgell.com

STRUCTURAL
Shen Engineering
3335 South 900 East, Ste 250
Salt Lake City, Utah 84106
(801) 466-2625 Fax (801) 466-2656
Contact: Henry Shen
Email: sheneng@msn.com

MECHANICAL & PLUMBING
SMD ENGINEERING
986 West Atherton Drive, Ste 200
Taylorsville, Utah 84123
(801) 268-3828 Fax (801) 268-3297
Contact: Scott Deakins
Email: scott@smdengineering.com

ELECTRICAL
BNA Consulting Engineers
635 South State Street
Salt Lake City, Utah 84111
(801) 532-2196 Fax (801) 532-2305
Contact: Elaine Fawson
Email: elaine@bnaconsulting.com

DRAWING INDEX

GENERAL INFORMATION:
GI101 GENERAL INFORMATION
GI102 SPECIAL INSPECTION AND TESTING

CIVIL:
C1 UTILITY & GRADING PLAN

ARCHITECTURAL:
AS101 SITE PLAN
AS102 ENLARGED SITE PLAN & DETAILS
AE101 MODULAR UNIT 1 FLOOR PLAN & CEILING PLAN
AE102 MODULAR UNIT 2 FLOOR PLAN & CEILING PLAN
AE201 MODULAR UNIT 1 ELEVATIONS & DETAILS
AE202 MODULAR UNIT 2 ELEVATIONS & DETAILS

STRUCTURAL:
S101 GENERAL STRUCTURAL NOTES
S201 FOOTING, FOUNDATION PLAN
S202 EXISTING TRAILER WALLS AND FLOOR PLAN
S203 FOOTING, FOUNDATION PLAN
S204 DECK FRAMING PLAN

MECHANICAL:
MH001 MECHANICAL LEGEND AND NOTE
MH101 MECHANICAL MODULAR UNITS FLOOR PLAN
MH501 MECHANICAL DETAILS
MH601 MECHANICAL SCHEDULES

PLUMBING:
PP101 PLUMBING MODULAR FLOOR PLAN
PP601 PLUMBING SCHEDULES

ELECTRICAL:
EG101 SYMBOLS, SCHEDULES & NOTES
ES101 ELECTRICAL SITE PLAN
EE201 TRAILER 1 ELECTRICAL
EE301 TRAILER 2 ELECTRICAL
EX101 ONE–LINE DIAGRAMS AND PANELBOARD SCHEDULES
EX102 ELECTRICAL DIAGRAMS
EX103 ELECTRICAL DIAGRAMS, SCHEDULES

OGDEN BAY GREAT SALT LAKE ECOSYSTEM STORAGE BUILDING PHASE I
DIVISION OF WILDLIFE RESOURCES
DFCM PROJECT # 09014520
HOOPER, UTAH

JRCA
ARCHITECTS
577 South 200 East
Salt Lake City, Utah 84111
(801) 533-2100 fax: 533-2101 jrcadesign.com

DATE/REVISION	PROJECT #.
02 · 09 · 09	08023

GENERAL INFORMATION

GI 101

SPECIAL INSPECTION AND TESTING (IBC 1704)

Indicate required Special inspections for project by checking the appropriate boxes:

FABRICATORS (IBC1704.2)

☐ Approved Fabricator	Fabricators Name:
☐ Unapproved Fabricator	Fabricators Name:

In-plant inspections
☐ Steel Construction ☐ Welding ☐ Details

STEEL (IBC1704.3)

Item			Reference/Comments
High Strength Bolting(1704.3.3)	☐ Continuous	☐ Periodic	
WELDING (1704.3.1)			
Details (1704.3.2)			
Complete & partial penetration groove welds	☐ Continuous	☐ Periodic	
Multipass fillet welds	☐ Continuous	☐ Periodic	
Single-pass fillet welds > 5/16"	☐ Continuous	☐ Periodic	
Single-pass fillet welds ≤ 5/16"	☐ Continuous	☒ Periodic	Per AWS D1.1/D1.1M using ASTM E165, ASTM E 709, ASTM E164 or ASTM E 94. See specifications.
Floor & roof deck welds	☐ Continuous	☐ Periodic	
REINFORCEMENT STEEL	☐ Continuous		
Verification of weldability	☐ Continuous	☐ Periodic	
Shear wall and shear reinforcement	☐ Continuous	☐ Periodic	
Other reinforcement	☐ Continuous	☐ Periodic	
Steel frame joint details	☐ Continuous	☐ Periodic	

CONCRETE CONSTRUCTION (IBC1704.4)

Item			Reference/Comments
Materials (1704.4.1)	☐ Continuous	☐ Periodic	
Steel placement	☐ Continuous	☐ Periodic	
Steel welding	☐ Continuous	☐ Periodic	
Bolts prior & during placement	☐ Continuous	☒ Periodic	Inspection of all epoxy bolts in concrete. See specifications.
Use of required design mix	☐ Continuous	☐ Periodic	
Concrete sampling for strength test, slump, air content, and temperature of concrete	☐ Continuous	☒ Periodic	Obtain at least one composite sample for each 100 cu. yd. or fraction thereof of each concrete mixture placed each day. See specifications.
Concrete & shotcrete placement	☐ Continuous	☐ Periodic	
Curing temperature and techniques	☐ Continuous	☐ Periodic	
Pre-stressed concrete	☐ Continuous	☐ Periodic	
Pre-cast concrete	☐ Continuous	☐ Periodic	
Posttentsioned concrete	☐ Continuous	☐ Periodic	
Form work	☐ Continuous	☐ Periodic	

MASONRY CONSTRUCTION (IBC1704.5)

Item Reference/Comments

Site preparation	☐ Continuous	☐ Periodic	
Structural fill material	☐ Continuous	☐ Periodic	
Structural fill lift thickness	☐ Continuous	☐ Periodic	
Structural fill soil densities	☐ Continuous	☒ Periodic	At slabs, one test per 1000 sq. ft. or part, but not less than three. One per spot footing, See specifications.
Backfill soils materials	☐ Continuous	☐ Periodic	
Backfill soil densities	☐ Continuous	☒ Periodic	One for every 15 feet of backfill. See specifications.
Fill material under side walks and parking	☐ Continuous	☐ Periodic	
Fill soil densities under side walks and parking	☐ Continuous	☒ Periodic	At slabs, one test per 1000 sq. ft. or part, but not less than three. See specifications.

PILE FOUNDATIONS (IBC1704.8)

Item			Reference/Comments
Observe driving operation and reporting	☐ Continuous	☐ Periodic	
Verify placement & installation data	☐ Continuous	☐ Periodic	

PIER FOUNDATIONS (IBC1704.9)

Item			Reference/Comments
Observe drilling operation and reporting	☐ Continuous	☐ Periodic	
Verify placement & installation data	☐ Continuous	☐ Periodic	

SPRAYED FIRE-RESISTANT MATERIALS (IBC1704.10)

Item			Reference/Comments
Structural member surface conditions	☐ Continuous	☐ Periodic	
Material application	☐ Continuous	☐ Periodic	
Material thickness	☐ Continuous	☐ Periodic	
Material density	☐ Continuous	☐ Periodic	
Bonding strength	☐ Continuous	☐ Periodic	

MASTIC AND INTUMESCENT FIRE-RESISTANT COATINGS (IBC1704.11)

Item			Reference/Comments
Material and instillation	☐ Continuous	☐ Periodic	

EXTERIOR INSTULATION AND FINISH SYSTEMS (EIFS) (IBC1704.12)

Item			Reference/Comments
Material and instillation	☐ Continuous	☐ Periodic	

ALTERNITIVE CONSTRUCTION METHODS OR MATERIALS (IBC1704.13)

Item			Reference/Comments
Material and instillation	☐ Continuous	☐ Periodic	

EPOXY (IBC1704.13)

Item			Reference/Comments
Material and instillation	☐ Continuous	☐ Periodic	

SMOKE CONTROL (IBC1704.14)

Item Reference/Comments

As masonry construction begins:			
Site prepared mortar	☐ Continuous	☐ Periodic	
Construction of mortar joints	☐ Continuous	☐ Periodic	
Location of reinforcement, connectors, pre-stressing tendons and anchorages	☐ Continuous	☐ Periodic	
Pre-stressing technique	☐ Continuous	☐ Periodic	
Grade and size of pre-stressing tendons and anchorages	☐ Continuous	☐ Periodic	
Inspection program verify:			
Size and location of structural elements	☐ Continuous	☐ Periodic	
Type, size and location of anchors	☐ Continuous	☐ Periodic	
Size, grade and type of reinforcement	☐ Continuous	☐ Periodic	
Welding of reinforcement	☐ Continuous	☐ Periodic	
Cold and hot weather protection	☐ Continuous	☐ Periodic	
Application and measurement of pre-stressing force	☐ Continuous	☐ Periodic	
Prior to grouting verify			
Clean grout space	☐ Continuous	☐ Periodic	
Placement of reinforcement	☐ Continuous	☐ Periodic	
Grout mix	☐ Continuous	☐ Periodic	
Mortar joints	☐ Continuous	☐ Periodic	
Grout placement	☐ Continuous	☐ Periodic	
Grout and mortar specimens and prisms	☐ Continuous	☐ Periodic	
Construction and submittal compliance verification	☐ Continuous	☐ Periodic	
Empirical masonry – Cat. I-III (1708.1.1)	☐ Continuous	☐ Periodic	
Empirical masonry – Cat. IV (1708.1.1)	☐ Continuous	☐ Periodic	
Engineered masonry – Cat. I-III 1708.1.1	☐ Continuous	☐ Periodic	
Engineered masonry – Cat. IV (1708.1.1)	☐ Continuous	☐ Periodic	
Engineering & pre-stressing steel (1708.3)	☐ Continuous	☐ Periodic	
Structural steel (1708.4)	☐ Continuous	☐ Periodic	
Qualification of mechanical & electrical equipment (1708.5)	☐ Continuous	☐ Periodic	
Seismically isolated structures (1708.6)	☐ Continuous	☐ Periodic	
Testing for seismic resistance is	☐ Continuous	☐ Periodic	

WOOD CONSTRUCTION (IBC1704.6)

Item			Reference/Comments
Prefabricated elements & assembly	☐ Continuous	☐ Periodic	

SOILS CONSTRUCTION (IBC1704.7)

Item Reference/Comments

Material	☐ Continuous	☐ Periodic	
Instillation	☐ Continuous	☐ Periodic	

Special inspection for seismic resistance (IBC1707)

Item			Reference/Comments
Structural Steel (1707.2)	☐ Continuous	☐ Periodic	
Structural Wood (1707.3)	☐ Continuous	☐ Periodic	
Cold–formed steel framing (1707.4)	☐ Continuous	☐ Periodic	
Pier foundations (1707.5)	☐ Continuous	☐ Periodic	
Storage racks & access floors (1707.6)	☐ Continuous	☐ Periodic	
Architectural components (1707.7)	☐ Continuous	☐ Periodic	
Mechanical & electrical items (1707.8)	☐ Continuous	☐ Periodic	
Designated systems verification (1707.9)	☐ Continuous	☐ Periodic	
Seismic isolation systems (1707.10)	☐ Continuous	☐ Periodic	

Inspection of seismic resistance are not required per IBC 1705.3 ☐

OTHER

Item			Reference/Comments
Asphalt Paving	☐ Continuous	☒ Periodic	Field density of in-place pavement every 1000 sq. yd. or less with minimum of 3 samples. See Sepcifications
	☐ Continuous	☐ Periodic	

Special Inspectors Shall:

- Be approved by the Building Official prior to performing any duties;
- Provide proof of licensure as a special inspector by the State of Utah for each type of inspection;
- Inspection reports are to meet the requirements of IBC 1704.1.2 and DFCM standards;
- Inspection reports are to be submitted to the code consultant, architect, DFCM project manager, and the State of Utah Building Official within 48 hrs. of inspections;
- A final inspection report shall be submitted following completion of the project documenting the types of special inspections performed and a statement indicating that the structure is in compliance with the drawings, specifications and applicable codes. IBC 1704.1.2

OGDEN BAY GREAT SALT LAKE ECOSYSTEM STORAGE BUILDING PHASE I
DIVISION OF WILDLIFE RESOURCES
DFCM PROJECT # 09014520
HOOPER, UTAH

JRCA
ARCHITECTS
577 South 200 East
Salt Lake City, Utah 84111
(801) 533-2100 fax: 533-2101 jrcadesign.com

DATE/REVISION	PROJECT #.
02 · 09 · 09	08023

SPECIAL INSPECTION AND TESTING

GI 102

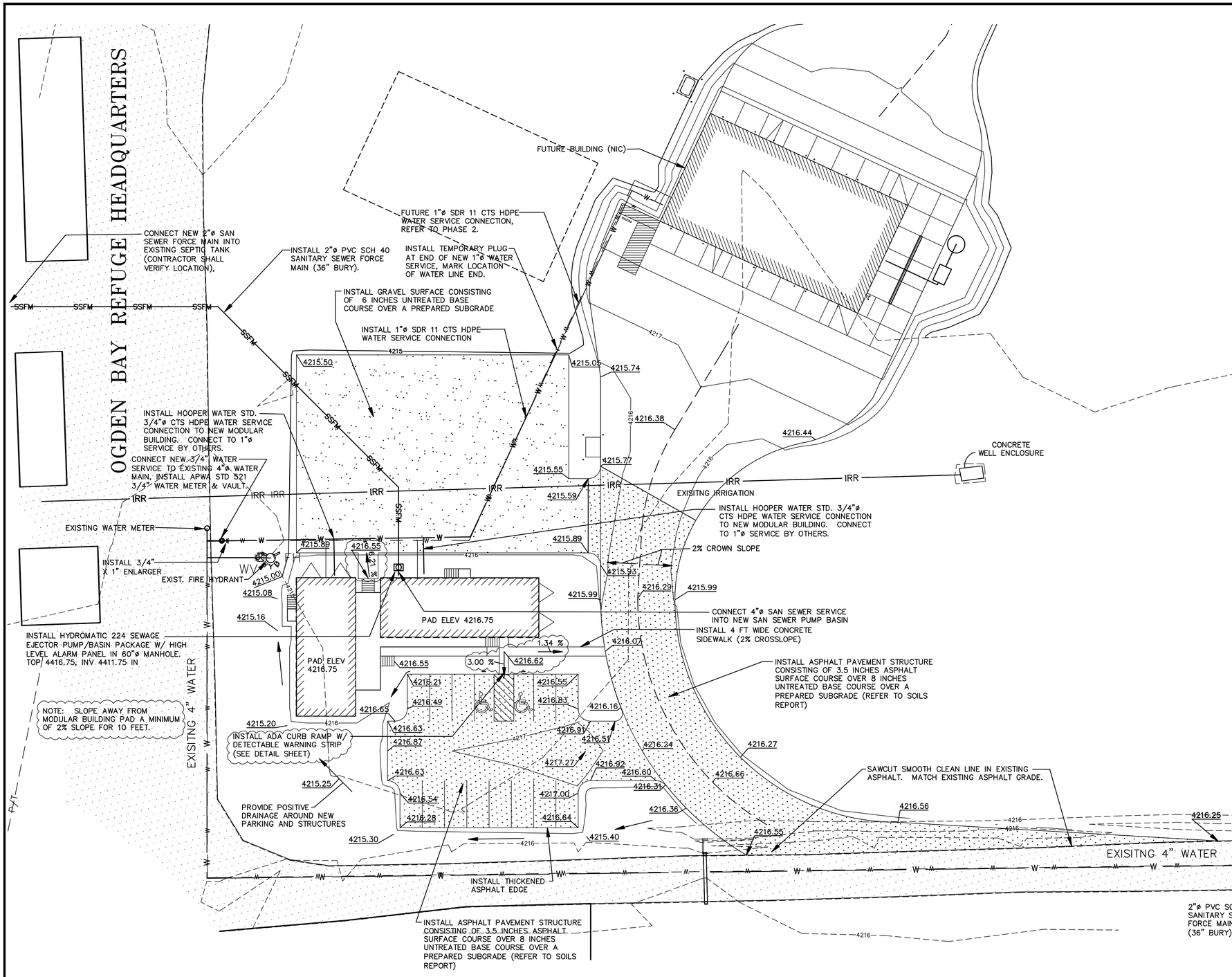

GENERAL NOTES:

1. CONTRACTOR SHALL CALL FOR BLUE STAKES, TELEPHONE 1-800-662-4111, A MINIMUM OF 48 HOURS BEFORE ANY EXCAVATION IS TO COMMENCE.

2. CONTRACTOR SHALL HAVE OBTAINED AND REVIEWED THE GEOTECHNICAL ENGINEERING STUDY AND SHALL BE FAMILIAR WITH THE RECOMMENDATIONS MADE IN THAT REPORT.

3. STRIP AND REMOVE EXISTING VEGETATION, ORGANIC TOPSOILS, DEBRIS, FILL, EXISTING FOUNDATIONS, UTILITY TRENCHES AND ANY OTHER DELETERIOUS MATERIALS FROM THE BUILDING AND PAVEMENT AREAS. ORGANIC TOPSOILS MAY EXTEND FROM SIX TO 10 INCHES BELOW THE SURFACE. ALL EXPOSED SURFACES SHALL BE FREE OF MOUNDS AND DEPRESSIONS WHICH COULD PREVENT UNIFORM COMPACTION.

4. THE SUBGRADE SHOULD BE SCARIFIED, MOISTURE CONDITIONED, AND RECOMPACTED TO A FIRM UNYIELDING CONDITION TO A MINIMUM DEPTH OF 8 INCHES PRIOR TO PLACEMENT OF PAVEMENT MATERIALS. IF LOOSE ZONES ARE ENCOUNTERED THAT DO NOT IMPROVE WITH REPEATED COMPACTION, THEY SHALL BE REMOVED AND REPLACED WITH PROPERLY-COMPACTED, STRUCTURAL FILL.

5. PLACE AND COMPACT FILL MATERIALS IN HORIZONTAL LIFTS NOT EXCEEDING 12 INCHES, USING EQUIPMENT AND PROCEDURES THAT WILL PRODUCE RECOMMENDED WATER CONTENTS AND DENSITIES THROUGHOUT THE LIFT. NO FILL SHALL BE PLACED OVER FROZEN GROUND. MATERIALS SHALL BE COMPACTED TO A MINIMUM OF 95% COMPACTION (ASTM D1557).

6. FILL SOILS SHALL NOT CONTAIN SNOW OR ICE, OR BE PLACED IN A FROZEN CONDITION. FILL SOILS SHALL NOT BE PLACED ON SNOW, ICE, OR FROZEN SOILS.

7. NO GRADE CHANGES WILL BE PERMITTED FROM THAT SHOWN AND APPROVED ON THIS PLAN WITHOUT RESUBMITTING THE PROPOSED CHANGES TO THE OWNER, AND HIS REPRESENTATIVE.

8. THE CONTRACTOR SHALL BE RESPONSIBLE FOR CORRECTING ANY SETTLEMENT OF OR DAMAGE TO EXISTING IMPROVMENTS AT OR NEAR THE PROJECT SITE.

9. THE CONTRACTOR SHALL VERIFY THE LOCATION AND ELEVATION OF ALL UTILITIES LOCATED AT OR NEAR THE PROJECT SITE AND SHALL PROTECT THOSE UTILITIES FROM ANY POTENTIAL DAMAGE.

10. CONTRACTOR SHALL BE RESPONSIBLE FOR DUST CONTROL IN ACCORDANCE WITH THE DRAPER CITY STANDARDS. CONTRACTOR SHALL WET DOWN ALL DRY MATERIALS TO PREVENT BLOWING DUST AND REMOVE ALL RUBBISH TO PREVENT WIND SCATTERING.

11. CONTRACTOR SHALL BE RESPONSIBLE FOR ANY DAMAGE CAUSED TO ADJACENT SURFACE IMPROVEMENTS DURING CONSTRUCTION.

12. ALL EXISTING ASPHALT TO BE CUT SHALL BE SAWCUT IN NEAT STRAIGHT LINES BY THE CONTRACTOR PRIOR TO EXCAVATION.

13. ALL WATER LINE CONSTRUCTION SHALL BE DONE IN ACCORDANCE WITH THE TECHNICAL DRAWINGS AND SPECIFICATIONS OF HOOPER WATER DISTRICT (TELEPHONE: 801-985-1991)

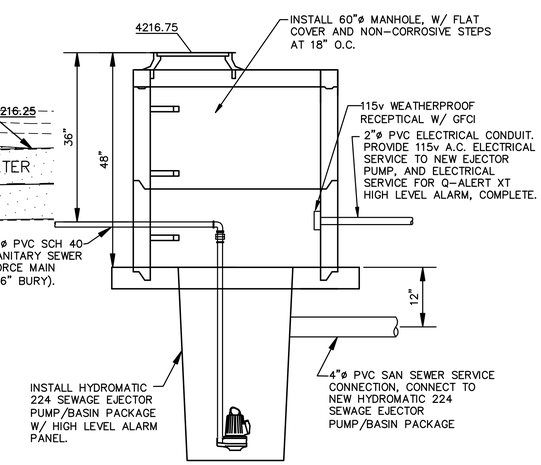

SANITARY SEWER EJECTOR PUMP
NOT TO SCALE

REGISTERED PROFESSIONAL ENGINEER
GEORGE WILLIAM BUYS
No. 152806
STATE OF UTAH

No.	Date	By	Revision

BUSH & GUDGELL, INC.
Engineers - Planners - Surveyors
525 South 300 East
Salt Lake City, Utah 84111
Phone (801) 364-1212 / Fax (801) 364-1225
www.bushandgudgell.com

Drawn : GWB Date : 11-10-08
Designer : GWB
Checked : GWB
Approved : ---
Scale : 1 INCH = 20 FEET
Job No : 47963

GSLEP EQUIPMENT BUILDINGS PHASE 1
UTILITY & GRADING PLAN
DFCM #09014520, 4786 SOUTH 7500 WEST, HOOPER, UTAH
LOCATION: SEC 10, T5N, R3W, S.L.B.&M.
PREPARED FOR: JRCA ARCHITECTS

SHEET
C-1
SHEETS
FILE: 47929

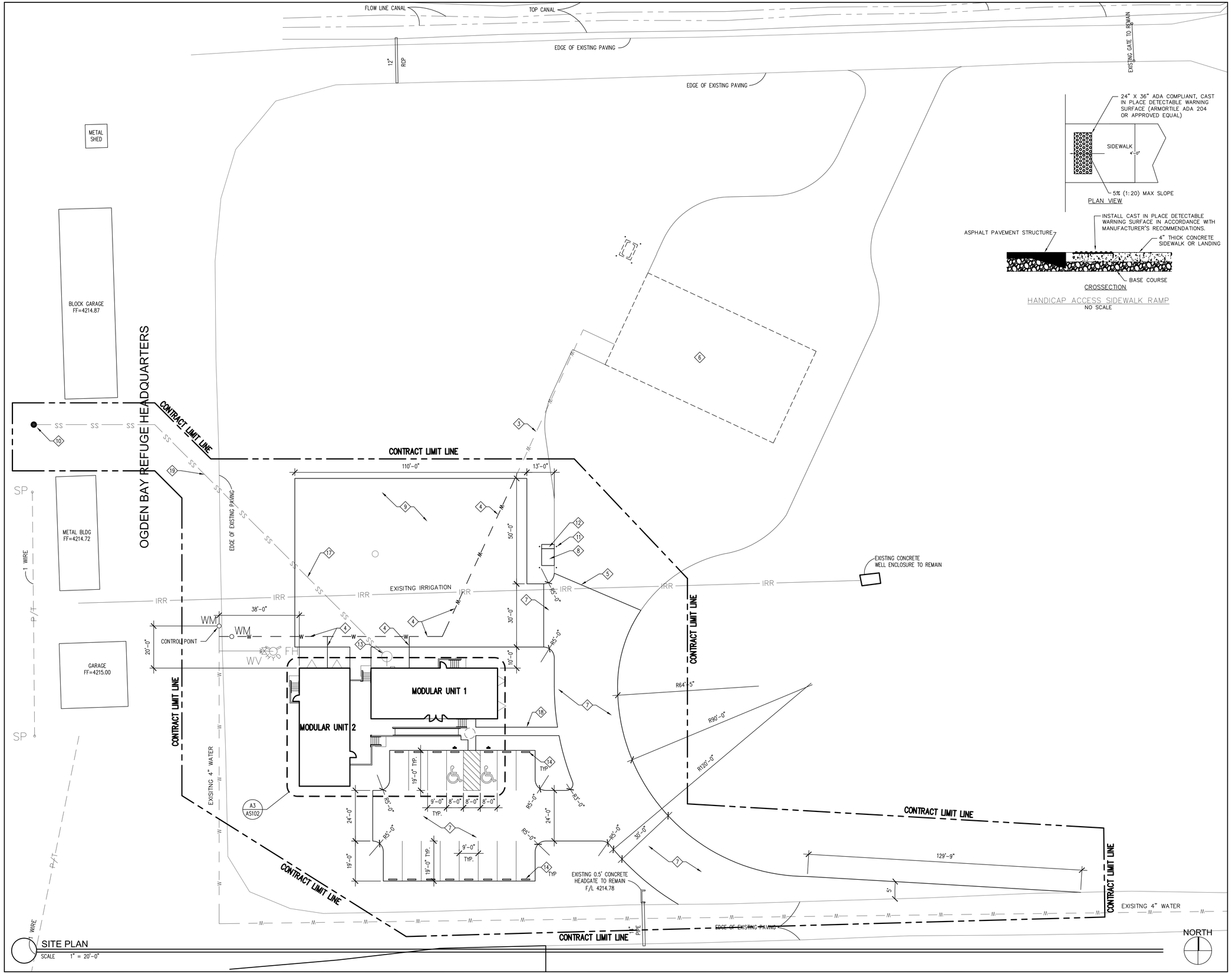

SITE PLAN
SCALE 1" = 20'-0"

HANDICAP ACCESS SIDEWALK RAMP
NO SCALE

GENERAL NOTES:

1. CONTRACTOR SHALL BE RESPONSIBLE FOR MAINTAINING ALL EXISTING LANDSCAPING & SITE IMPROVEMENTS WHICH ARE TO REMAIN FREE FROM DAMAGE DURING CONSTRUCTION BOTH INSIDE & OUTSIDE THE CONTRACT LIMIT LINE. CONTRACTOR SHALL REPAIR OR REPLACE ANY DAMAGED ITEM OR SITE IMPROVEMENTS AS SPECIFIED OR IF NOT SPECIFIED, MATCH EXISTING ADJACENT CONSTRUCTION.
2. CONTRACTOR SHALL VERIFY EXACT LOCATION OF ALL UTILITIES & SITE IMPROVEMENTS WHICH ARE AFFECTED BY, OR WHICH TIE-IN W/ NEW CONSTRUCTION.
3. EXISTING ROAD, PARKING, SERVICE DRIVES & SIDEWALKS SHALL REMAIN ACCESSIBLE & BE KEPT CLEAR OF CONSTRUCTION EQUIPMENT, MATERIALS, MUD, DIRT OTHER DEBRIS.
4. SEE CIVIL DRAWINGS FOR EXTENT OF SITE WORK.

KEY NOTES:

1. NOT USED
2. NOT USED
3. WATER LINE (N.I.C.)
4. WATER LINE
5. EDGE OF ASPHALT PAVING
6. FUTURE GSLEP EQUIPMENT BUILDING
7. ASPHALT PAVING; SEE CIVIL DRAWINGS
8. TRANSFORMER PAD; SEE ELECTRICAL DRAWINGS
9. VEHICLE YARD WITH ROAD BASE, SEE CIVIL
10. SEPTIC TANK INLET
11. BOLLARD; SEE DETAIL D5/AS102
12. 2'X CONCRETE METER PAD; COORDINATE SIZE WITH TRANSFORMER PAD AND ELECTRICAL
13. 5'-0" DIA. CONCRETE MANHOLE FOR ACCESS TO SEWAGE EJECTOR PUMP, SEE CIVIL DWGS
14. CONC. WHEEL STOP, TYPICAL @ ALL STALLS EXCEPT ACCESS AISLE
15. NOT USED
16. NOT USED
17. SEWER LINE, SEE CIVIL DRAWINGS
18. ASPHALT WALK 2" ASPHALT SURFACE COURSE OVER 6" UNTREATED BASE COURSE OVER A PREPARED SUB-GRADE (REFER TO SOILS REPORT)
19. PATCH AND REPAIR EXISTING ASPHALT DUE TO INSTALLATION OF SEWER LINE

OGDEN BAY GREAT SALT LAKE ECOSYSTEM STORAGE BUILDING PHASE I
DIVISION OF WILDLIFE RESOURCES
DFCM PROJECT # 09014520
HOOPER, UTAH

JRCA
ARCHITECTS
577 South 200 East
Salt Lake City, Utah 84111
(801) 533-2100 fax: 533-2101 jrcadesign.com

DATE/REVISION	PROJECT #.
02 · 09 · 09	08023

SITE PLAN

AS 101

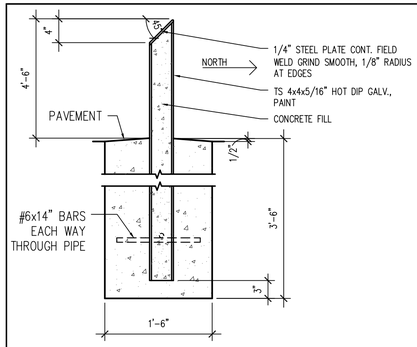

D5 AS102 BOLLARD DETAIL
0-02.DWG
SCALE 1" = 1'-0"

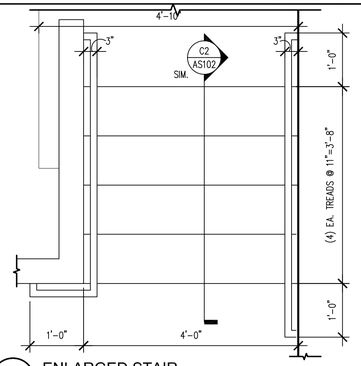

D4 AS102 ENLARGED STAIR
P-03.dwg
SCALE 3/4" = 1'-0"

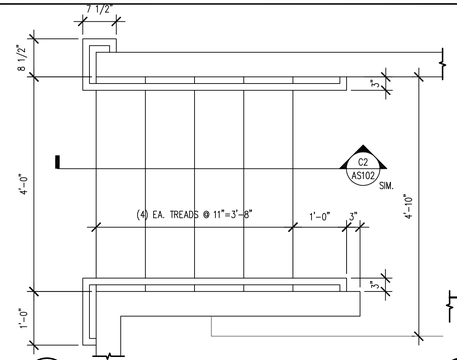

D3 AS102 ENLARGED STAIR
P-02.dwg
SCALE 3/4" = 1'-0"

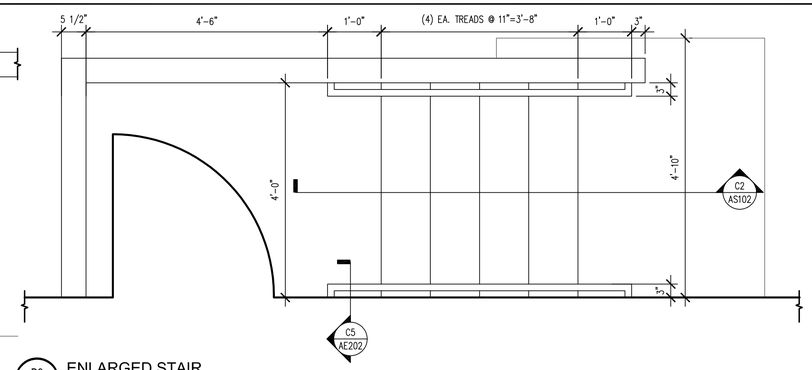

D2 AS102 ENLARGED STAIR
SCALE 3/4" = 1'-0"

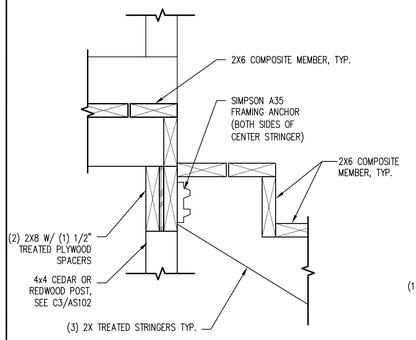

C5 AS102 T.O. STRINGER @ DECK
5-02.DWG
SCALE 1 1/2" = 1'-0"

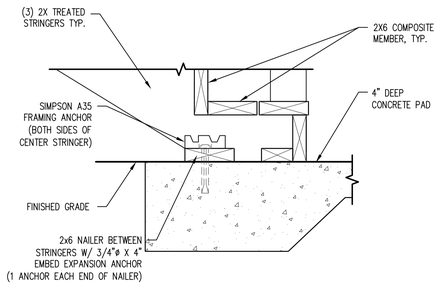

C4 AS102 B.O. STRINGER @ FINISHED GRADE
5-03.dwg
SCALE 1 1/2" = 1'-0"

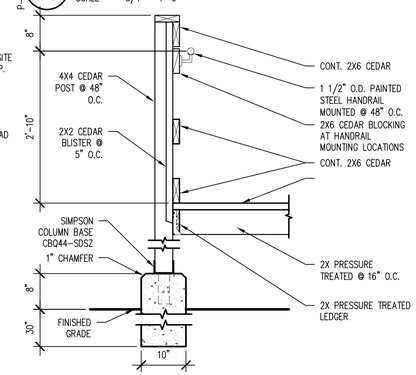

C3 AS102 DETAIL @ RAISED DECK
0-06.dwg
SCALE 3/4" = 1'-0"

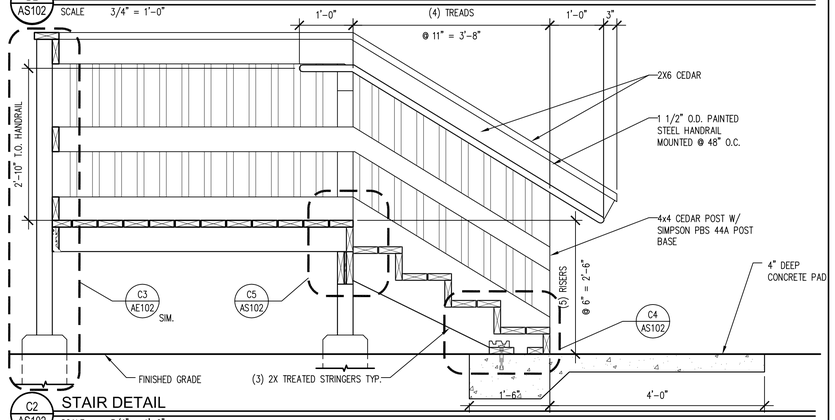

C2 AS102 STAIR DETAIL
S-01.dwg
SCALE 3/4" = 1'-0"

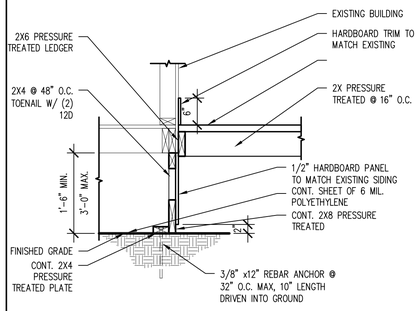

B5 AS102 DECK TO MODULAR UNIT DETAIL
0-05.dwg
SCALE 3/4" = 1'-0"

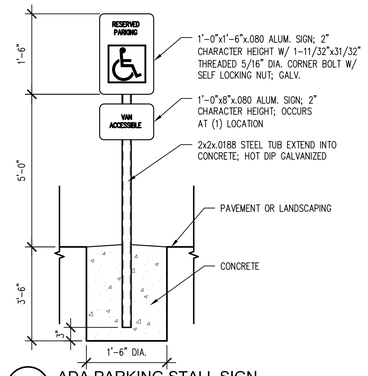

B4 AS102 ADA PARKING STALL SIGN
0-04.DWG
SCALE 3/4" = 1'-0"

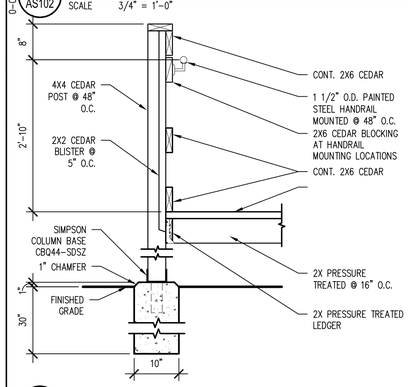

A5 AS102 DETAIL @ RAMP
0-01.dwg
SCALE 3/4" = 1'-0"

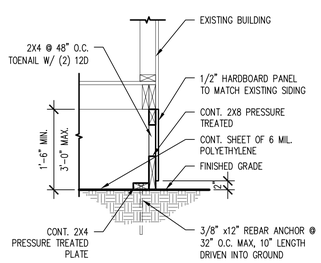

A4 AS102 SKIRTING DETAIL
0-02.dwg
SCALE 3/4" = 1'-0"

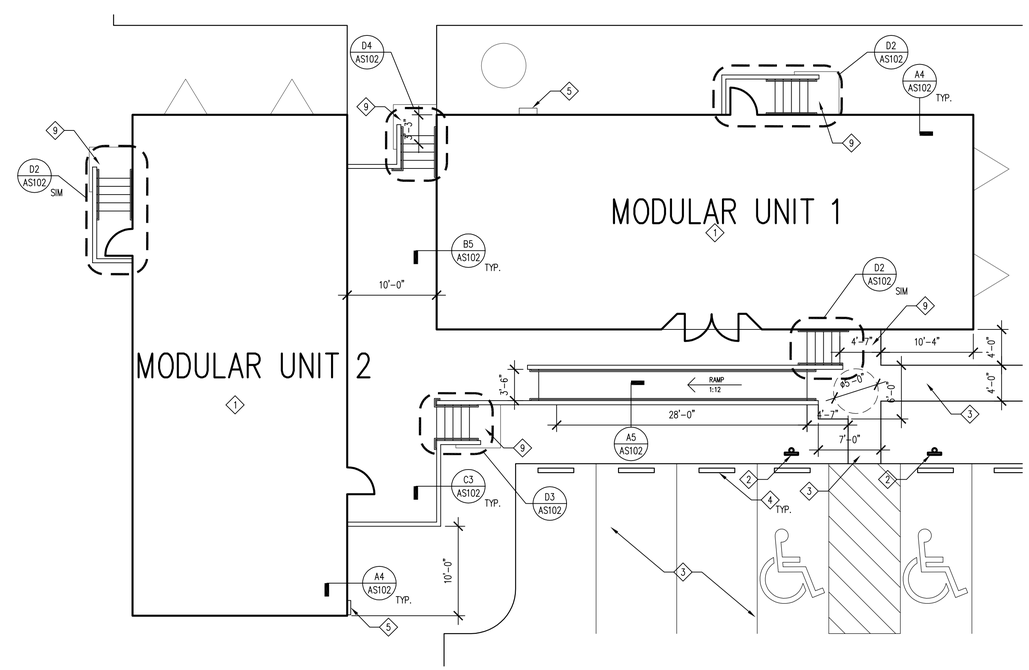

A3 AS102 SITE PLAN
SCALE 1" = 1/8'-0"

NORTH

GENERAL NOTES:

1. CONTRACTOR SHALL BE RESPONSIBLE FOR MAINTAINING ALL EXISTING LANDSCAPING & SITE IMPROVEMENTS WHICH ARE TO REMAIN FREE FROM DAMAGE DURING CONSTRUCTION BOTH INSIDE & OUTSIDE THE CONTRACT LIMIT LINE. CONTRACTOR SHALL REPAIR OR REPLACE ANY DAMAGED ITEM OR SITE IMPROVEMENTS AS SPECIFIED OR IF NOT SPECIFIED, MATCH EXISTING ADJACENT CONSTRUCTION.
2. CONTRACTOR SHALL VERIFY EXACT LOCATION OF ALL UTILITIES & SITE IMPROVEMENTS WHICH ARE AFFECTED BY, OR WHICH TIE-IN W/ NEW CONSTRUCTION.
3. EXISTING ROAD, PARKING, SERVICE DRIVES & SIDEWALKS SHALL REMAIN ACCESSIBLE & BE KEPT CLEAR OF CONSTRUCTION EQUIPMENT, MATERIALS, MUD, DIRT OTHER DEBRIS.
4. SEE CIVIL DRAWINGS FOR EXTENT OF SITE WORK.
5. ALL CONNECTIONS ON DECKING AND EXPOSED FASTENERS SHALL BE WITH GALVANIZED FASTENERS

KEY NOTES:

1. PREFABRICATED MODULAR BUILDINGS
2. H.C. PARKING SIGN SEE B4/AS102
3. ASPHALT PAVING; SEE AS101
4. CONC. WHEEL STOP, TYPICAL @ ALL STALLS EXCEPT ACCESS AISLE
5. ELECTRICAL PANEL MOUNTED TO SIDE OF MODULAR UNIT
6. NOT USED
7. NOT USED
8. NOT USED
9. CONCRETE LANDING

OGDEN BAY GREAT SALT LAKE ECOSYSTEM STORAGE BUILDING PHASE I
DIVISION OF WILDLIFE RESOURCES
DFCM PROJECT # 09014520
HOOPER, UTAH

JRCA
ARCHITECTS
577 South 200 East
Salt Lake City, Utah 84111
(801) 533-2100 fax: 533-2101 jrcadesign.com

DATE/REVISION	PROJECT #.
02 · 09 · 09	08023

ENLARGED SITE PLAN & DETAILS

AS 102

ROOM FINISH SCHEDULE

ROOM NO	ROOM NAME	FLOOR	BASE	WALLS N	WALLS E	WALLS S	WALLS W	NOTES
101	OFFICE	F1	B1	W1	W1	W1	W1	--
102	OFFICE	F1	B1	W1	W1	W1	W1	--
104	MEN	F2	B2	W1/W2	W1/W2	W1/W2	W1/W2	1
105	WOMEN	F2	B2	W1/W2	W1/W2	W1/W2	W1/W2	1
106	STORAGE	F2	B2	W1	W1	W1	W1	--
108	JAN.	F2	B2	W1/W2	W1/W2	W1	W1	1

DOOR AND FRAME SCHEDULE

DOOR	DOOR SIZE WxH	DOOR TYPE	DOOR MATL	DOOR FINISH	DOOR GLAZING	FRAME TYPE	FRAME MATL	FRAME FINISH	FRAME HEAD	FRAME JAMB	FRAME THRSH	FIRE RATING	NOTES
101A	3'-0" x 7'-0"	D1	WD	DF2	--	--	--	DF3	--	--	--	--	1,4
102A	3'-0" x 7'-0"	D1	WD	DF2	--	--	--	DF3	--	--	--	--	1,4
103A	PR 3'-0" x 7'-0"	--	HM	DF1	--	--	--	DF3	--	--	--	--	1,2,3
103B	3'-0" x 7'-0"	D1	HM	DF1	--	F1	HM	DF3	B3/AE201	B4/AE201	--	--	3
104A	3'-0" x 7'-0"	D1	WD	DF2	--	--	--	DF3	--	--	--	--	1,4
105A	3'-0" x 7'-0"	D1	WD	DF2	--	--	--	DF3	--	--	--	--	1,4
106A	3'-0" x 7'-0"	D1	WD	DF2	--	F1	HM	DF3	B5/AE101	B4/AE101	--	--	4
108A	3'-0" x 7'-0"	D1	WD	DF2	--	F1	HM	DF3	B5/AE101	B4/AE101	--	--	4

FINISHES

FLOOR FINISH		WALL FINISH	
F1	CARPET	W1	VINYL COVERED GYPSUM BOARD EXISTING AND NEW TO MATCH EXISTING
F2	SHEET VINYL	W2	4'-0" HIGH WAINSCOT; FRP. BOARD

BASE FINISH		DOOR FINISH	
B1	4" RUBBER BASE	DF1	PAINTED H.M.
B2	6" SHEET VINYL COVE	DF2	PRE-FINISHED

FRAME FINISH	
DF3	PAINTED H.M.

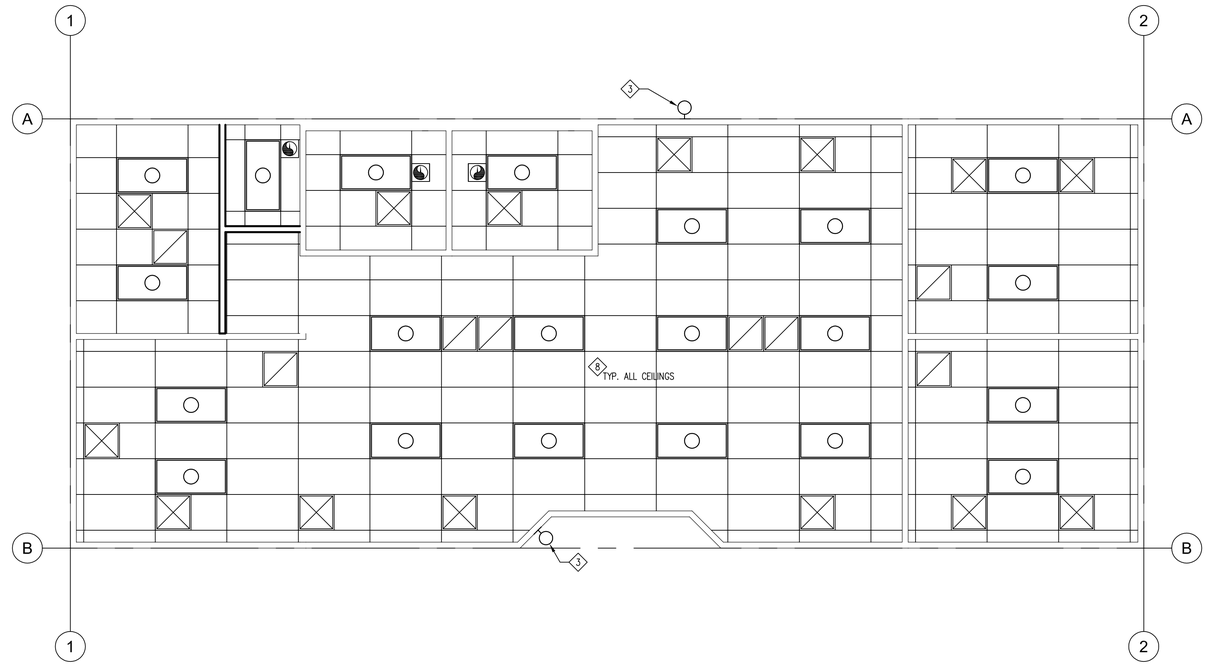

C3 AE101 REFLECTED CEILING PLAN - MODULAR UNIT 1
SCALE 1/4" = 1'-0"

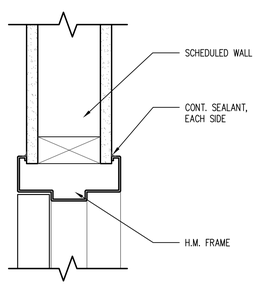

B5 AE101 INTERIOR H.M. DOOR HEAD
SCALE 3" = 1'-0"
9-01.DWG

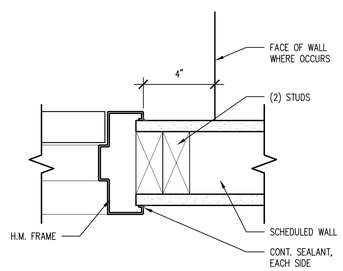

B4 AE101 INTERIOR H.M. DOOR JAMB
SCALE 3" = 1'-0"
9-02.DWG

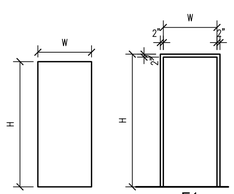

A5 AE101 DOOR & FRAME TYPES
SCALE 1/4" = 1'-0"
1-02.DWG

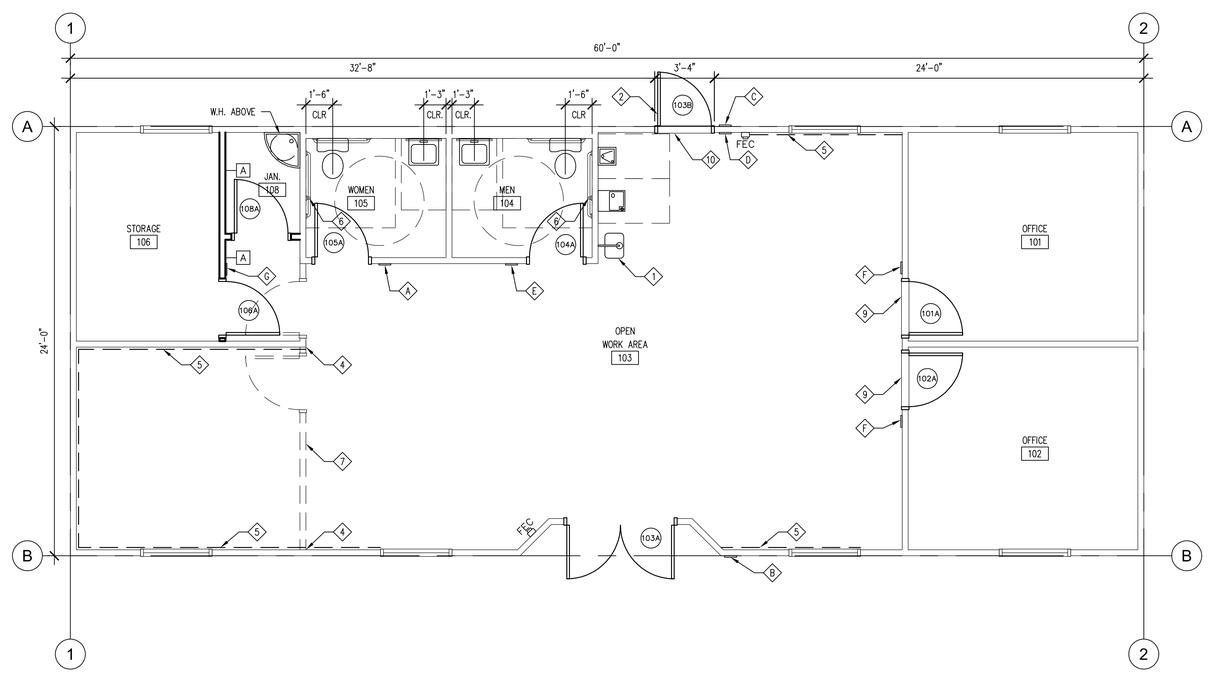

A3 AE101 FLOOR PLAN - MODULAR UNIT 1
SCALE 1/4" = 1'-0"

NORTH

GENERAL NOTES:

1. VERIFY MOUNTING HEIGHTS OF ALL TOILET ROOM ACCESSORIES FOR COMPLIANCE WITH ADA RELOCATE IF REQUIRED; SEE A5/AE202
2. ALL MATERIALS SHALL MATCH EXISTING TO FULLEST EXTENT POSSIBLE
3. WHERE INTERIOR WALL PANELS ARE DAMAGED DUE TO INSTALLATION OF NEW MATERIALS REPLACE PANELS; MATCH EXISTING
4. REMOVE ALL EXISTING FLOOR COVERINGS AND BASE AND PREP FOR NEW FLOOR COVERINGS AND BASE
5. REPAIR OR REPLACE ALL WALL AND CEILING INSULATION WITH LIKE KIND
6. CONTRACTOR SHALL REMOVE ALL PROTECTIVE COVERINGS FROM EXISTING TRAILERS PLACE TRAILERS IN PROPER POSITION AND ALIGNMENT ASSURING LEVEL FLOOR SURFACES. STITCH TRAILERS TOGETHER USING ILLUSTRATED DETAILS, OR IF NOT ILLUSTRATED USING BEST INDUSTRY PRACTICES. REMOVE TOWING TONGUE AND STORE IN CRAWL SPACE. PERFORM BALANCE OF WORK ILLUSTRATED AND DESCRIBED IN THIS SET OF CONTRACT DOCUMENTS

KEY NOTES:

1. EMERGENCY SHOWER & EYE WASH STATION SEE MECHANICAL
2. NEW H.M. DOOR AND FRAME; SEE SCHEDULE
3. EXTERIOR LIGHT FIXTURE
4. PATCH & REPAIR DUE TO DEMOLITION
5. REMOVED WALL BOARD INSTALL 2X4 HORIZONTAL BLOCKING IN WALLS CENTERED ON THESE HEIGHTS: 34", 56 3/4", 81 3/4"; REPLACE WALL BOARD; OMIT UPPER BLOCKING
6. PROVIDE AND INSTALL 18" VERTICAL GRAB BAR- BOBRICK B-5806x18" OR EQUAL
7. REMOVE EXISTING WALLS, DOORS, ELECTRICAL, ETC. REMOVE EXISTING CEILING GRIDS AND LIGHTS
8. ACOUSTICAL PANEL CEILING SEE B3,B4,B5 ON SHEET AE202 FOR DETAILS ON ACOUSTICAL PANEL CEILING INSTALLATION
9. RUBBER TRANSITION STRIP
10. ALUMINUM THRESHOLD

SIGNAGE KEY NOTES:

- A. PROVIDE A SIGN STATING "WOMEN". SIGN TO COMPLY WITH (ANSI 117.1); SEE SHEET AE201/A5-C
- B. PROVIDE A SIGN STATING "ACCESSIBLE ENTRANCE" SIGN TO COMPLY WITH (ANSI 117.1); SEE SHEET AE201/A5-A
- C. PROVIDE A SIGN STATING "NON ACCESSIBLE BUILDING ENTRANCE – ACCESSIBLE ENTRANCE ON SOUTH SIDE OF BUILDING" SIGN TO COMPLY WITH (ANSI 117.1); SEE SHEET AE201/A5-F
- D. PROVIDE A SIGN STATING "NON ACCESSIBLE BUILDING EXIT – ACCESSIBLE EXIT ON NORTH SIDE OF BUILDING" SIGN TO COMPLY WITH (ANSI 117.1); SEE SHEET AE201/A5-B
- E. PROVIDE A SIGN STATING "MEN" SIGN TO COMPLY WITH (ANSI 117.1); SEE SHEET AE201/A5-E
- F. PROVIDE A SIGN STATING "OFFICE" SIGN TO COMPLY WITH (ANSI 117.1); SEE SHEET AE201/A5-K
- G. PROVIDE A SIGN STATING "STORAGE" SIGN TO COMPLY WITH (ANSI 117.1); SEE SHEET AE201/A5-L

LEGEND:

A	WALL TYPE TAG, 2X4 STUDS @ 16" O.C. W/ VINYL COVERED GYPSUM BOARD TO MATCH EXISTING
001	DOOR TAG, SEE DOOR SCHEDULE THIS SHEET
ROOM 000	ROOM TAG, SEE FINISH SCHEDULE THIS SHEET
FEC	FIRE EXTINGUISHER CABINET, SEE SPECIFICATIONS

OGDEN BAY GREAT SALT LAKE ECOSYSTEM STORAGE BUILDING PHASE I
DIVISION OF WILDLIFE RESOURCES
DFCM PROJECT # 09014520
HOOPER, UTAH

JRCA
ARCHITECTS
577 South 200 East
Salt Lake City, Utah 84111
(801) 533-2100 fax: 533-2101 jrcadesign.com

DATE/REVISION	PROJECT #.
02 · 09 · 09	08023

MODULAR UNIT 1 FLOOR PLAN, REFLECTED CEILING PLAN & DETAILS

AE 101

ROOM FINISH SCHEDULE

ROOM NO	ROOM NAME	FLOOR	BASE	WALLS N	WALLS E	WALLS S	WALLS W	NOTES
101	OFFICE	F1	B1	W1	W1	W1	W1	--
102	OFFICE	F1	B1	W1	W1	W1	W1	--
103	OPEN OFFICE	F2	B2	W1	W1	W1	W1	--
104	OFFICE	F1	B1	W1	W1	W1	W1	--
105	OFFICE	F1	B1	W1	W1	W1	W1	--
106	OFFICE	F1	B1	W1	W1	W1	W1	--
107	OFFICE	F1	B1	W1	W1	W1	W1	--
108	RESTROOM	F2	B2	W1/W2	W1/W2	W1/W2	W1/W2	1

1. FRP IS NEW

DOOR AND FRAME SCHEDULE

DOOR	DOOR SIZE WxH	DOOR TYPE	DOOR MATL	DOOR FINISH	DOOR GLAZING	FRAME; SEE AE101 TYPE	FRAME MATL	FRAME FINISH	HEAD	JAMB	THRSH	FIRE RATING	NOTES
101A	3'-0" x 7'-0"	D1	WD	DF2	--	--	--	DF3	--	--	--	--	1,4
102A	3'-0" x 7'-0"	D1	WD	DF2	--	--	--	DF3	--	--	--	--	1,4
103A	3'-0" x 7'-0"	D1	HM	DF1	--	--	--	DF3	B3/AE201	B4/AE201	--	--	1,2,3
104A	3'-0" x 7'-0"	D1	WD	DF2	--	--	--	DF3	--	--	--	--	1,4
105A	3'-0" x 7'-0"	D1	HM	DF1	--	--	--	DF3	B3/AE201	B4/AE201	--	--	1,2,3
105B	3'-0" x 7'-0"	D1	WD	DF2	--	F1	HM	DF3	B5/AE101	B4/AE101	--	--	4
106A	3'-0" x 7'-0"	D1	WD	DF2	--	F1	HM	DF3	B5/AE101	B4/AE101	--	--	4
107A	3'-0" x 7'-0"	D1	WD	DF2	--	F1	HM	DF3	B5/AE101	B4/AE101	--	--	4
108A	3'-0" x 7'-0"	D1	WD	DF2	--	F1	HM	DF3	B5/AE101	B4/AE101	--	--	4
109A	2'-6" x 7'-0"	D1	WD	DF2	--	F1	HM	DF3	B5/AE101	B4/AE101	--	--	4

1. EXISTING FRAME; REPAINT IF DAMAGED.
2. EXISTING DOOR; REPAINT AND REPAIR.
3. DOOR TO BE 1 3/4" THICK
4. DOOR TO BE 1 3/8" THICK

FINISHES

FLOOR FINISH		WALL FINISH	
F1	CARPET	W1	VINYL COVERED GYPSUM BOARD EXISTING AND NEW TO MATCH EXISTING
F2	SHEET VINYL	W2	4'-0" HIGH WAINSCOT; FRP. BOARD

BASE FINISH		DOOR FINISH	
B1	4" RUBBER BASE	DF1	PAINTED H.M.
B2	6" SHEET VINYL COVE	DF2	PRE-FINISHED

FRAME FINISH	
DF3	PAINTED H.M.

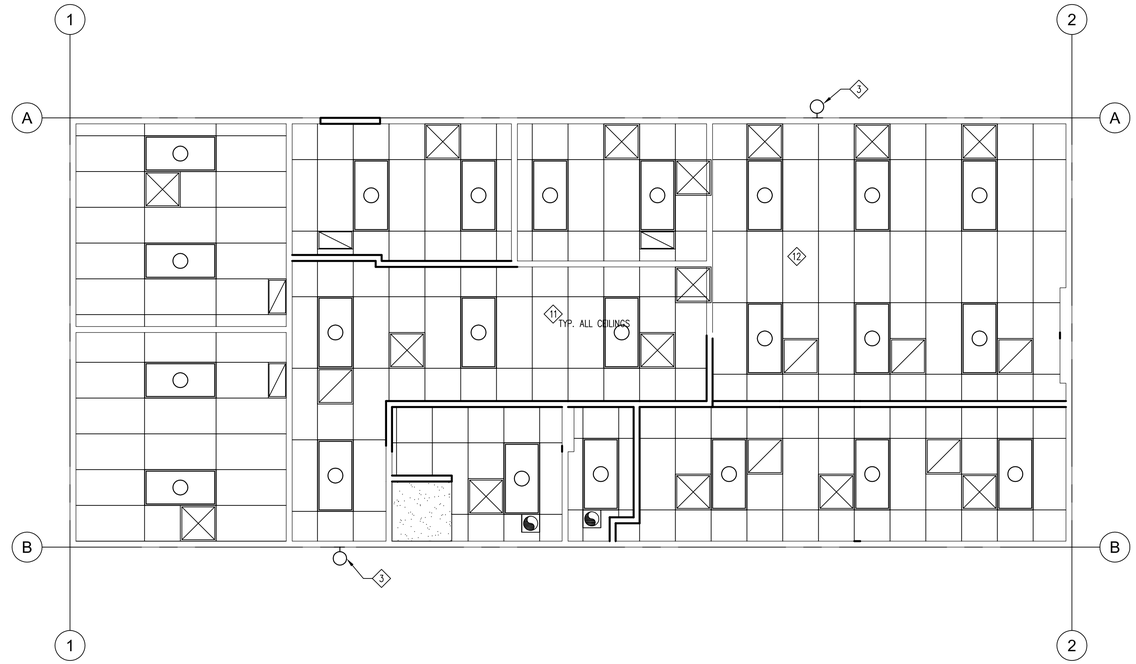

C3 / AE102 REFLECTED CEILING PLAN - MODULAR UNIT 2
SCALE 1/4" = 1'-0"

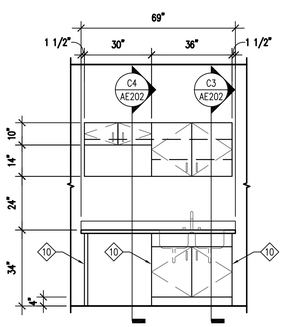

A5 / AE102 CASEWORK ELEVATION
SCALE 3/8" = 1'-0"

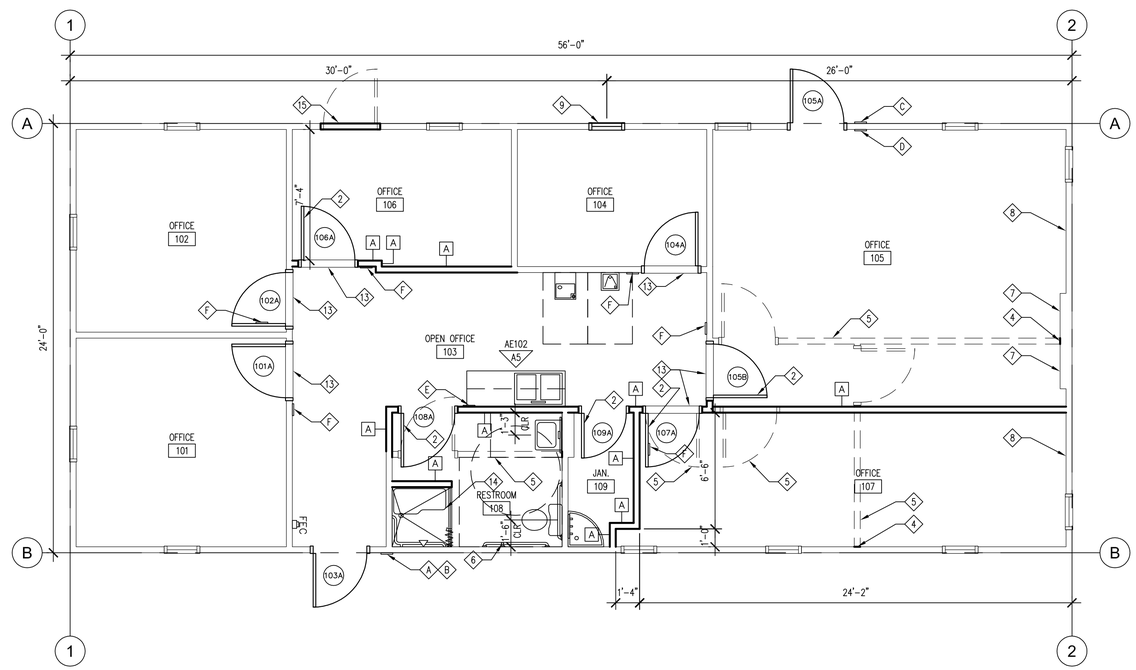

A3 / AE102 FLOOR PLAN - MODULAR UNIT 2
SCALE 1/4" = 1'-0"

NORTH

GENERAL NOTES:

1. VERIFY MOUNTING HEIGHTS OF ALL TOILET ROOM ACCESSORIES FOR COMPLIANCE WITH ADA RELOCATE IF REQUIRED; SEE A5/AE202
2. ALL MATERIALS SHALL MATCH EXISTING TO FULLEST EXTENT POSSIBLE
3. WHERE INTERIOR WALL PANELS ARE DAMAGED DUE TO INSTALLATION OF NEW MATERIALS REPLACE PANELS; MATCH EXISTING
4. REMOVE ALL EXISTING FLOOR COVERINGS AND BASE AND PREP FOR NEW FLOOR COVERINGS AND BASE
5. REPAIR OR REPLACE ALL WALL AND CEILING INSULATION WITH LIKE KIND
6. CONTRACTOR SHALL REMOVE ALL PROTECTIVE COVERINGS FROM EXISTING TRAILERS PLACE TRAILERS IN PROPER POSITION AND ALIGNMENT ASSURING LEVEL FLOOR SURFACES. STITCH TRAILERS TOGETHER USING ILLUSTRATED DETAILS, OR IF NOT ILLUSTRATED USING BEST INDUSTRY PRACTICES. REMOVE TOWING TONGUE AND STORE IN CRAWL SPACE. PERFORM BALANCE OF WORK ILLUSTRATED AND DESCRIBED IN THIS SET OF CONTRACT DOCUMENTS

KEY NOTES:

1. NOT USED
2. NEW 3'-0" x 6'-8" S.C. WOOD DOOR
3. EXTERIOR LIGHT FIXTURE
4. PATCH & REPAIR DUE TO DEMOLITION
5. REMOVE EXISTING WALLS DOORS ELECTRICAL, ETC.
6. PROVIDE AND INSTALL 18" VERTICAL GRAB BAR- BOBRICK B-5806x18" OR EQUAL
7. MAIN ELECTRICAL PANEL
8. EXISTING HVAC GRILLS TO REMAIN
9. NEW WINDOW TO MATCH EXISTING WINDOW TYPE, SIZE, AND HEAD HEIGHT
10. FINISHED END PANEL
11. REMOVE EXISTING CEILING, GRID, AND LIGHTS. REMOVE GYPSUM BOARD LAYER ABOVE CEILING. SECURE INSULATION. ACOUSTICAL PANEL CEILING SEE B3,B4,B5 ON SHEET AE202 FOR DETAILS ON ACOUSTICAL PANEL CEILING INSTALLATION
12. REMOVE ALL GYPSUM BOARD IN CEILING PLENUM
13. RUBBER TRANSITION STRIP
14. ADA SHOWER STALL
    ONE PIECE ACRYLIC 36"x36"
    WRAP AROUND GRAB BAR
    CURTAIN ROD WITH CURTAIN
    FOLD UP PHENOLIC SEAT
    LASCO-FREEDOM LINE 3636-BFS
    KOHLER-FREEWILL K-12458
    AQUAGLASS 6341.39B
15. INFILL OPENING TO MATCH EXISTING

SIGNAGE KEY NOTES:

A. PROVIDE A SIGN STATING "NEAREST ACCESSIBLE RESTROOMS LOCATED IN EAST MODULAR UNIT". SIGN TO COMPLY WITH (ANSI 117.1); SEE SHEET AE201/A5-J
B. PROVIDE A SIGN STATING "ACCESSIBLE ENTRANCE" SIGN TO COMPLY WITH (ANSI 117.1); SEE SHEET AE201/A5-A
C. PROVIDE A SIGN STATING "NON ACCESSIBLE BUILDING ENTRANCE - ACCESSIBLE ENTRANCE ON EAST SIDE OF BUILDING" SIGN TO COMPLY WITH (ANSI 117.1); SEE SHEET AE201/A5-H
D. PROVIDE A SIGN STATING "NON ACCESSIBLE BUILDING EXIT - ACCESSIBLE EXIT ON EAST SIDE OF BUILDING" SIGN TO COMPLY WITH (ANSI 117.1); SEE SHEET AE201/A5-D
E. PROVIDE A SIGN STATING "UNISEX RESTROOM" SIGN TO COMPLY WITH (ANSI 117.1); SEE SHEET AE201/A5-G
F. PROVIDE A SIGN STATING "OFFICE" SIGN TO COMPLY WITH (ANSI 117.1); SEE SHEET AE201/A5-K

LEGEND:

A	WALL TYPE TAG, 2X4 STUDS @ 16" O.C. W/ VINYL COVERED GYPSUM BOARD TO MATCH EXISTING
001	DOOR TAG, SEE DOOR SCHEDULE THIS SHEET
ROOM 000	ROOM TAG, SEE FINISH SCHEDULE THIS SHEET
FEC	FIRE EXTINGUISHER CABINET, SEE SPECIFICATIONS

OGDEN BAY GREAT SALT LAKE ECOSYSTEM STORAGE BUILDING PHASE I
DIVISION OF WILDLIFE RESOURCES
DFCM PROJECT # 09014520
HOOPER, UTAH

JRCA
ARCHITECTS
577 South 200 East
Salt Lake City, Utah 84111
(801) 533-2100 fax: 533-2101 jrcadesign.com

DATE/REVISION	PROJECT #.
02 · 09 · 09	08023

MODULAR UNIT 2 FLOOR PLAN, REFLECTED CEILING PLAN & DETAILS

AE 102

C-01.DWG

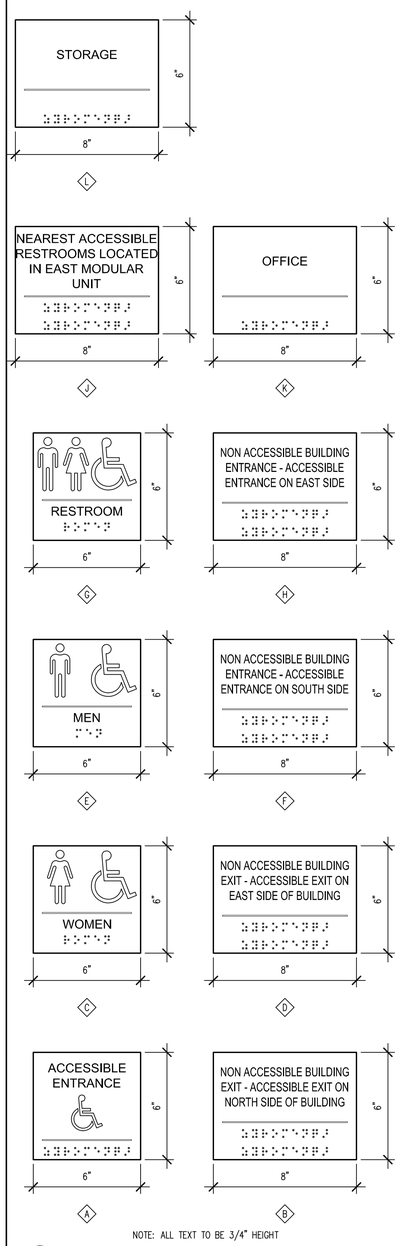

NOTE: ALL TEXT TO BE 3/4" HEIGHT

A5 / AE201 SIGN SCHEDULE
SCALE 3" = 1'-0"
T-03.DWG

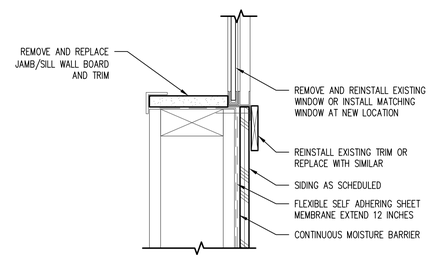

NOTE: PAINT ALL EXPOSED WOOD SURFACES TO MATCH EXISTING

C3 / AE201 WINDOW HEAD/JAMB/SILL (TYP.)
SCALE 3" = 1'-0"
9-04.DWG

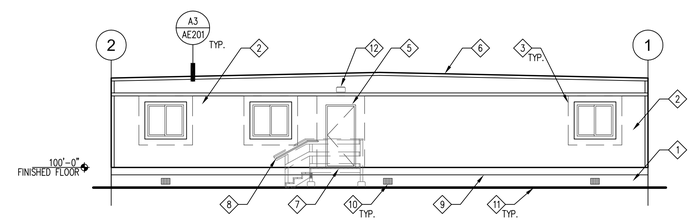

C2 / AE201 ELEVATION - NORTH - MODULAR UNIT 1
SCALE 1/8" = 1'-0"
E-NORTH.DWG

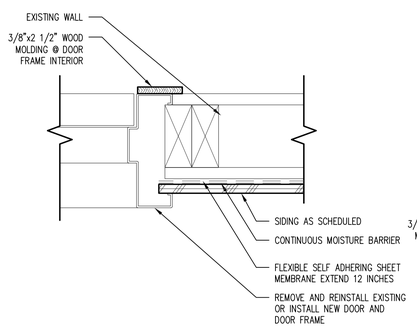

B4 / AE201 EXTERIOR H.M. DOOR JAMB (TYP.)
SCALE 3" = 1'-0"
9-05.DWG

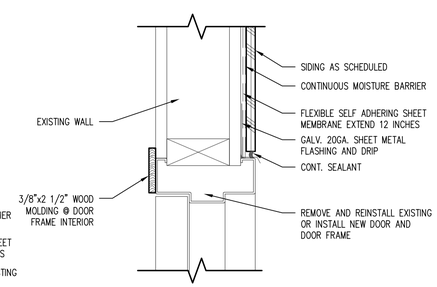

B3 / AE201 EXTERIOR H.M. DOOR HEAD (TYP.)
SCALE 3" = 1'-0"
9-03.DWG

B2 / AE201 ELEVATION - SOUTH - MODULAR UNIT 1
SCALE 1/8" = 1'-0"
E-SOUTH.DWG

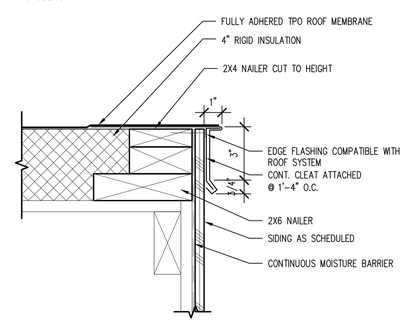

A3 / AE201 ROOF FLASHING DETAIL
SCALE 3" = 1'-0"
4-01.DWG

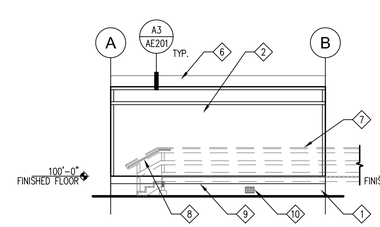

A2 / AE201 ELEVATION - WEST - MODULAR UNIT 1
SCALE 1/8" = 1'-0"
E-WEST.DWG

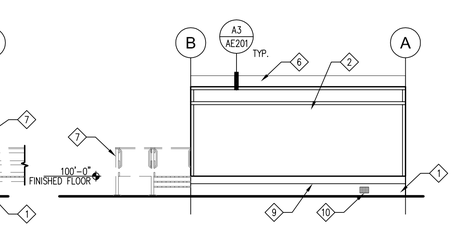

A1 / AE201 ELEVATION - EAST - MODULAR UNIT 1
SCALE 1/8" = 1'-0"
E-EAST.DWG

KEY NOTES:

1. PROVIDE SKIRT PER DETAIL A4/AS102
2. REMOVE EXISTING TRIM. WRAP ENTIRE WALL SYSTEM WITH MOISTURE BARRIER. INSTALL NEW SIDING REINSTALL TRIM, OR IF DAMAGED REPLACE TRIM. PATCH ALL HOLES AND TOUCH UP PAINT TO MATCH EXISTING
3. REMOVE EXISTING WINDOWS, APPLY FLEXIBLE RUBBERIZED SHEET FLASHING 12" WIDE AND WRAPPING UNDERNEATH WINDOW FRAME. REINSTALL WINDOWS, SEE DETAIL A3/AE201
4. REMOVE EXISTING DOOR FRAMES. APPLY FLEXIBLE RUBBERIZED SHEET FLASHING 12" WIDE AND WRAPPING UNDERNEATH DOOR FRAME. REINSTALL FRAME, SEE DETAIL B3 & B4/AE201
5. INSTALL NEW DOOR WITH FLEXIBLE RUBBERIZED SHEET FLASHING 12" WIDE EXTENDING UNDER FRAME. PAINT DOOR AND FRAME, SEE DETAIL B3 & B4/AE201
6. REMOVE EXISTING STANDING SEAM ROOF AND FLASHING. INSTALL INSULATION, FLASHING, AND SINGLE PLY ROOF, SEE DETAIL A3/AE201
7. DECK AND RAILING OMITTED FOR CLARITY
8. HANDRAIL. INSERT BLOCKING IN FRAMING.
9. REPLACE UNDER FLOOR INSULATION WITH R-19 BATT INSULATION. REMOVE OLD RODENT GUARD MEMBRANE AND REPLACE WITH NEW MEMBRANE
10. UNDER FLOOR VENT 8"Hx16"W WITH NET FREE AREA OF 50 SQUARE INCHES, AIR VENT SHALL BE GALVANIZED METAL BY "AIR VENT" OR EQUAL
11. INSTALL 6MIL POLYETHYLENE SHEET VAPOR BARRIER ON GROUND BENEATH MODULAR UNIT
12. WALL MOUNTED LIGHT
13. 18"H x 24"WIDE ACCESS PANEL

UNDER FLOOR VENTILATION/ CALCULATION

60'x24'= 1440S.F.

1203.3.1 EXCEPTION 2

1440S.F. / 1500 = 0.96 S.F. = 138.3 SQ. IN.

VENTS MUST HAVE 50 SQUARE INCHES NET FRAME AREA.

138.3 SQ. IN. / 50 SQ. IN./VENT = 2.8 VENTS

MINIMUM OF EIGHT PROVIDED

OGDEN BAY GREAT SALT LAKE ECOSYSTEM STORAGE BUILDING PHASE I
DIVISION OF WILDLIFE RESOURCES
DFCM PROJECT # 09014520
HOOPER, UTAH

JRCA
ARCHITECTS
577 South 200 East
Salt Lake City, Utah 84111
(801) 533-2100 fax: 533-2101 jrcadesign.com

DATE/REVISION	PROJECT #.
02 · 09 · 09	08023

ELEVATIONS
MODULAR UNIT 1

AE 201

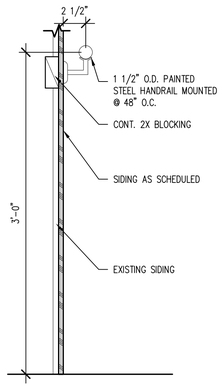

C5 / AE202 HANDRAIL TO BUILDING DETAIL
SCALE 1 1/2" = 1'-0"
0-08.dwg

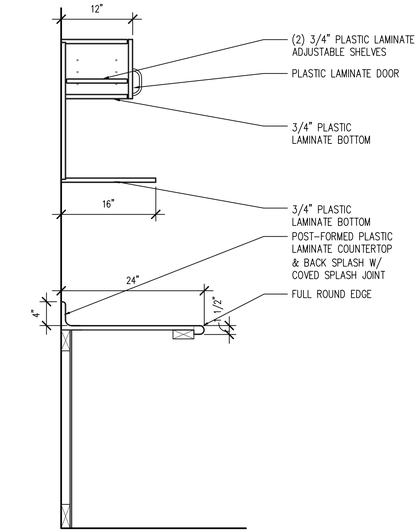

C4 / AE202 CABINET SECTION
SCALE 1" = 1'-0"
7-02.DWG

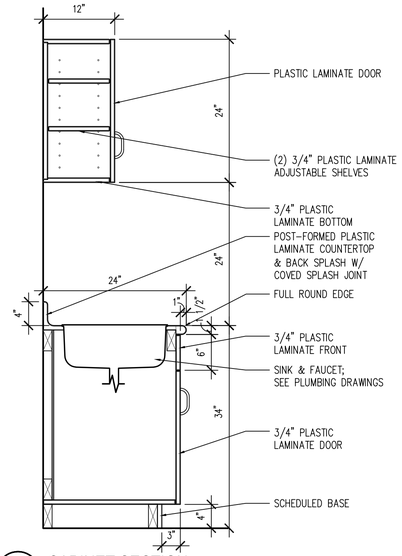

C3 / AE202 CABINET SECTION
SCALE 1" = 1'-0"
7-01.DWG

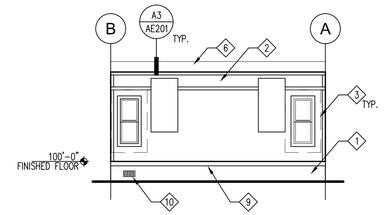

C2 / AE202 ELEVATION - NORTH - MODULAR UNIT 2
SCALE 1/8" = 1'-0"
E-NORTH1.DWG

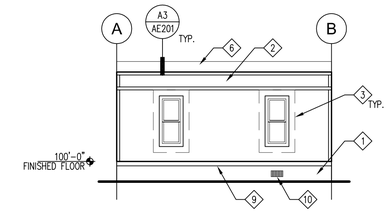

C1 / AE202 ELEVATION - SOUTH - MODULAR UNIT 2
SCALE 1/8" = 1'-0"
E-SOUTH1.DWG

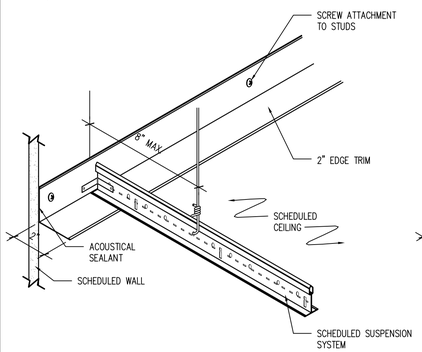

B5 / AE202 RESTRAINED EDGE DETAIL @ ACOUSTICAL LAY-IN CEILING
SCALE N.T.S.
2-04.DWG

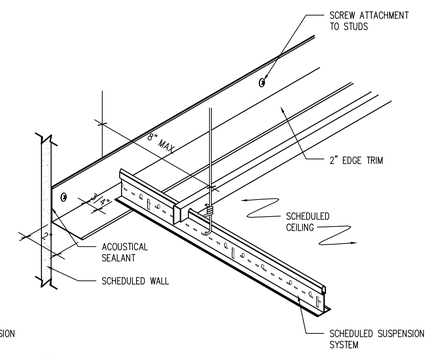

B4 / AE202 UNRESTRAINED EDGE DETAIL @ ACOUSTICAL LAY-IN CEILING
SCALE N.T.S.
2-03.DWG

STRUT SIZE	MAXIMUM LENGTH
3/4" DIAMETER CONDUIT (EMT)	8'-6"
1" DIAMETER CONDUIT (EMT)	10'-0"
SINGLE 2 1/2" X 20 GA. METAL STUD (Imin = 0.18 in4)	11'-6"
BACK TO BACK 2 1/2" X 20 GA. METAL STUDS SCREWED TOGETHER @ 24" O.C.	15'-0"

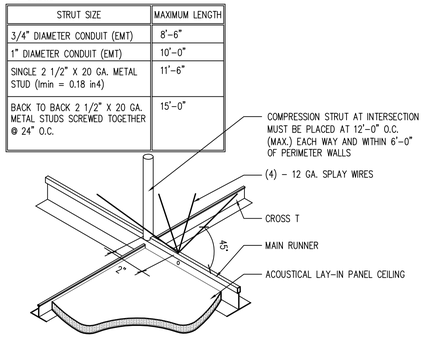

B3 / AE202 TYPICAL COMPRESSION STRUT
SCALE N.T.S.
2-01.DWG

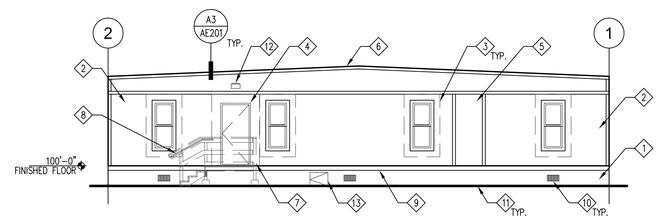

B2 / AE202 ELEVATION - WEST - MODULAR UNIT 2
SCALE 1/8" = 1'-0"
E-WEST1.DWG

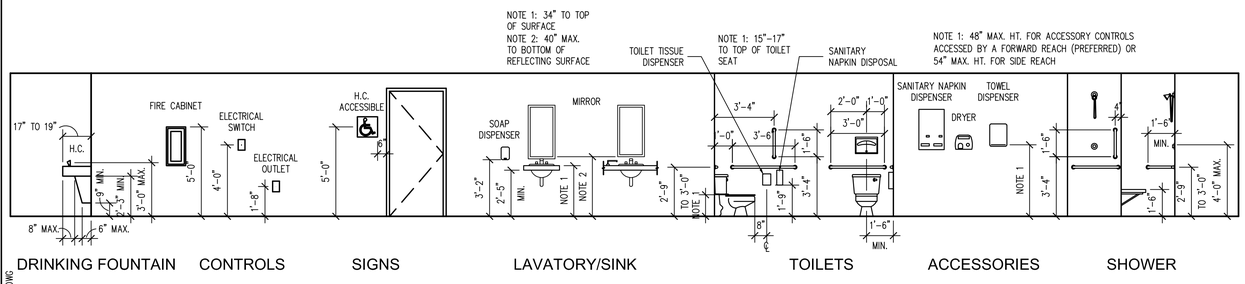

A5 / AE202 STANDARD MOUNTING HEIGHTS
SCALE 1/4" = 1'-0"
E- STANDARDS.DWG

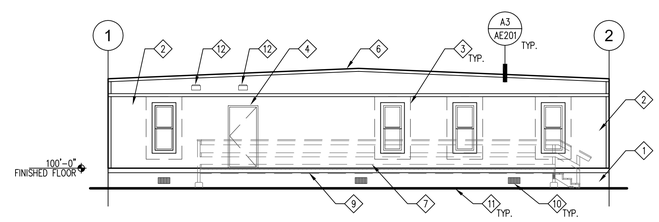

A2 / AE202 ELEVATION - EAST - MODULAR UNIT 2
SCALE 1/8" = 1'-0"
E-EAST1.DWG

KEY NOTES:

1. PROVIDE SKIRT PER DETAIL A4/AS102
2. REMOVE EXISTING TRIM. WRAP ENTIRE WALL SYSTEM WITH MOISTURE BARRIER. INSTALL NEW SIDING REINSTALL TRIM, OR IF DAMAGED REPLACE TRIM. PATCH ALL HOLES AND TOUCH UP PAINT TO MATCH EXISTING
3. REMOVE EXISTING WINDOWS, APPLY FLEXIBLE RUBBERIZED SHEET FLASHING 12" WIDE AND WRAPPING UNDERNEATH WINDOW FRAME. REINSTALL WINDOWS, SEE DETAIL A3/AE201
4. REMOVE EXISTING DOOR FRAMES. APPLY FLEXIBLE RUBBERIZED SHEET FLASHING 12" WIDE AND WRAPPING UNDERNEATH DOOR FRAME. REINSTALL FRAME, SEE DETAIL B3 & B4/AE201
5. REMOVE EXISTING DOOR, PROVIDE INFILL FRAMING, INSULATION, MOISTURE BARRIER AND SIDING TO MATCH EXISTING, PAINT EXTERIOR TO MATCH, PROVIDE WALL BOARD TO MATCH ON INTERIOR SIDE OF WALL
6. REMOVE EXISTING SINGLE PLY ROOF AND FLASHING. INSTALL INSULATION, FLASHING, AND SINGLE PLY ROOF, SEE DETAIL A3/AE201
7. DECK AND RAILING OMITTED FOR CLARITY
8. HANDRAIL. INSERT BLOCKING IN FRAMING.
9. REPLACE UNDER FLOOR INSULATION WITH R-19 BATT INSULATION. REMOVE OLD RODENT QUARD MEMBRANE AND REPLACE WITH NEW MEMBRANE
10. UNDER FLOOR VENT 8"Hx16"W WITH NET FREE AREA OF 50 SQUARE INCHES, AIR VENT SHALL BE GALVANIZED METAL BY "AIR VENT" OR EQUAL
11. INSTALL 6MIL POLYETHYLENE SHEET VAPOR BARRIER ON GROUND BENEATH MODULAR UNIT
12. WALL MOUNTED LIGHT
13. 18"H x 24"WIDE ACCESS PANEL

UNDER FLOOR VENTILATION/ CALCULATION

54'x24'= 1344 S.F.

1203.3.1 EXCEPTION 2

1344 S.F. / 1500 = 0.896 S.F. = 129 SQ. IN.

VENTS MUST HAVE 50 SQUARE INCHES NET FRAME AREA.

129 SQ. IN. / 50 SQ. IN./VENT = 2.6 VENTS

MINIMUM OF EIGHT PROVIDED

OGDEN BAY GREAT SALT LAKE ECOSYSTEM STORAGE BUILDING PHASE I
DIVISION OF WILDLIFE RESOURCES
DFCM PROJECT # 09014520
HOOPER, UTAH

JRCA
ARCHITECTS
577 South 200 East
Salt Lake City, Utah 84111
(801) 533-2100 fax: 533-2101 jrcadesign.com

DATE/REVISION	PROJECT #.
02 · 09 · 09	08023

ELEVATIONS MODULAR UNIT 2

AE 202

GENERAL STRUCTURAL NOTES:

I. GENERAL:

A. THE STRUCTURAL DRAWINGS SHOW THE COMPLETED PROJECT. DETAILS, SECTIONS, AND NOTES SHOWN ON THE DRAWINGS SHALL BE TYPICAL AND APPLY TO SIMILAR SITUATIONS ELSEWHERE UNLESS NOTED OR SHOWN OTHERWISE.

B. CONTRACTOR SHALL COMPARE ALL DIMENSIONS AND CONDITIONS ON CONTRACT DOCUMENTS AND AT THE SITE. ANY OMISSION OR CONFLICT SHALL BE BROUGHT TO THE ATTENTION OF THE ARCHITECT/ENGINEER. IN CASE OF ANY CONFLICT FOLLOW THE MOST STRINGENT REQUIREMENT AS DIRECTED BY ARCHITECT/ENGINEER.

C. SEE THE ARCHITECTURAL DRAWINGS FOR DOORS, WINDOWS, NON-BEARING INTERIOR AND EXTERIOR WALLS, RECESSES, DEPRESSIONS, ETC.

D. CONTRACTOR SHALL PROVIDE ADEQUATE TEMPORARY BRACING FOR ALL PORTIONS OF THE BUILDING UNTIL THE ENTIRE STRUCTURE OF THE BUILDING IS COMPLETE.

E. OBSERVATION VISITS TO THE SITE BY STRUCTURAL ENGINEER'S FIELD REPRESENTATIVES SHALL NOT BE CONSTRUED AS INSPECTION OR APPROVAL OF CONSTRUCTION.

F. ANY ENGINEERING DESIGN PROVIDED BY OTHERS AND SUBMITTED FOR REVIEW SHALL BEAR THE SEAL AND SIGNATURE OF A STRUCTURAL ENGINEER REGISTERED IN UTAH.

II. DESIGN CRITERIA:

A. BUILDING CODE: 2006 INTERNATIONAL BUILDING CODE (IBC) W/ AMENDMENTS

B. LOADINGS:

1. ROOF SNOW LOAD = 30 PSF + SNOW DRIFT PER IBC
2. WIND LOAD - 90 MPH ZONE - EXPOSURE C
3. SEISMIC DESIGN CATEGORY: E

C. FOUNDATION:

1. ALL EXTERIOR FOOTINGS ARE TO BE FOUNDED AT NOT LESS THAN 30" BELOW LOWEST ADJACENT FINISH FLOOR OR FINISH GRADE ONTO UNDISTURBED EXISTING SUBSOILS HAVING A MINIMUM NET BEARING CAPACITY OF 1500 PSF. ALL INTERIOR FOOTINGS ARE TO BE FOUNDED AT NOT LESS THAN 1'-2" BELOW LOWEST ADJACENT FINISH FLOOR ONTO SUBSOILS.

III. CONCRETE:

A. ALL MATERIALS SHALL COMPLY WITH ACI 318 AND ACI 347 PUBLICATIONS AND APPLICABLE ASTM PUBLICATIONS.

B. CONCRETE MATERIAL PROPERTIES: 28-DAY COMPRESSIVE STRENGTHS ARE TO BE 3000 PSI TYPICAL UNLESS NOTED OTHERWISE. DESIGN BASED ON 2500 PSI.

C. CAST IN PLACE CONCRETE:

1. SPACING OF CONSTRUCTION JOINTS OR CONTROL JOINTS IN WALLS EXPOSED TO VIEW SHALL NOT EXCEED 40 FEET UNLESS SPECIFICALLY NOTED OTHERWISE ON THE DRAWINGS.
2. PROVIDE EXTRA REINFORCING AROUND ALL OPENINGS EXCEEDING 24 INCHES SQUARE OR ROUND IN ALL SLABS AND WALLS EQUAL TO TWO #5 BARS ON FOUR SIDES AND EXTEND TWO FEET BEYOND THE OPENING.
3. PROVIDE A 3/4" CHAMFER ON ALL EXPOSED CORNERS OF CONCRETE UNLESS NOTED OTHERWISE.
4. PROVIDE CLASS B LAP SPLICES FOR ALL REINFORCING UNLESS NOTED OTHERWISE.
5. PROVIDE ISOLATION JOINTS AROUND ALL COLUMNS AT ALL EXPOSED SLAB ON GRADE AREAS.

IV. REINFORCING STEEL:

A. ALL BARS #4 AND LARGER TO BE ASTM A 615, GRADE 60. ALL #2 AND #3 BARS TO BE ASTM A 615, GRADE 40. DETAILED, FABRICATED AND ERECTED IN ACCORDANCE WITH ACI-318, LATEST ADOPTION.

B. ALL REINFORCING STEEL SHALL BE BENT, DETAILED AND CHAIRED AS PER "ACI MANUAL OF STANDARD PRACTICE FOR DETAILING REINFORCING CONCRETE STRUCTURES".

C. WELDED WIRE FABRIC TO BE IN ACCORDANCE WITH ASTM A 185.

D. ALL BARS INDICATED ON THE PLANS TO BE WELDED SHALL CONFORM TO ASTM A706 (GRADE 60).

E. CONCRETE COVER REQUIREMENTS FOR DEFORMED BAR REINFORCING STEEL SHALL COMPLY WITH ACI 318, "BUILDING CODE REQUIREMENTS FOR REINFORCING CONCRETE".

1. CAST-IN-PLACE CONCRETE:

a) CONCRETE CAST AGAINST AND PERMANENTLY EXPOSED TO EARTH: 3"

b) FORMED CONCRETE EXPOSED TO EARTH OR WEATHER:

#6 BARS AND LARGER: 2"
#5 BARS AND SMALLER: 1-1/2"

c) CONCRETE NOT EXPOSED TO WEATHER OR IN CONTACT WITH GROUND:
SLABS, WALLS JOISTS: #11 BARS OR SMALLER: 3/4"
BEAMS, COLUMNS: PRIMARY REINFORCING, TIES, STIRRUPS, SPIRALS: 1-1/2"

F. DETAILING: SUBMIT PLACING DRAWINGS PER ACI DETAILING MANUAL, ACI SP-66. FABRICATE ONLY AFTER REVIEW AND APPROVAL. REINFORCING BARS SHALL NOT BE WELDED UNLESS SPECIFICALLY SHOWN ON DRAWINGS.

1. LAP SPLICE LENGTHS SHALL BE AS FOLLOWS:
30 BAR DIAMETER FOR #3 AND #4 BARS
40 BAR DIAMETER FOR #5 THROUGH #8 BARS
DO NOT SPLICE STIRRUPS AND TIES
DO NOT SPLICE VERTICAL BARS IN RETAINING WALLS UNLESS SPECIFICALLY SHOWN.

2. ALL EMBEDMENTS AND DOWELS SHALL BE SECURELY TIED TO FORMWORK OR TO ADJACENT REINFORCING PRIOR TO THE PLACEMENT OF CONCRETE.

V. STRUCTURAL AND MISCELLANEOUS STEEL:

A. MATERIAL PROPERTIES:

1. ALL SHAPES, PLATES, ANGLES, AND CHANNELS TO BE ASTM A-36 UNLESS NOTED OTHERWISE.
2. ALL WF SHAPES WEIGHING 84 POUNDS PER LINEAR FOOT OR LESS TO BE ASTM A 572, GRADE 50. ALL WF SHAPES WEIGHING MORE THAN 84 POUNDS PER LINEAR FOOT TO BE ASTM A 572, GRADE 36.
3. SQUARE OR RECTANGULAR TUBES TO BE ASTM A 500, GRADE B, F_y = 46 KSI.
4. ALL STEEL TO BE DETAILED, FABRICATED AND ERECTED IN ACCORDANCE WITH A.I.S.C. SPECIFICATIONS, LATEST ADOPTION.

B. WELDING:

1. FOR STRUCTURAL STEEL TO BE IN ACCORDANCE WITH A.W.S. REQUIREMENTS FOR E70XX ELECTRODES.

C. BOLTS:

1. ALL BOLTS TO BE 3/4" DIAMETER ASTM A 325-N UNLESS NOTED OTHERWISE.
2. BOLTS, NUTS AND WASHERS SHALL NOT BE REUSED.
3. ANCHOR BOLTS SHALL BE ASTM A 307 OR A 36.

V. SPECIAL INSPECTION: SPECIAL INSPECTION IS REQUIRED IN ACCORDANCE WITH IBC SECTION 1701.

A. FIELD WELDING IF APPLY.
B. EPOXY BOLTING IF APPLY.

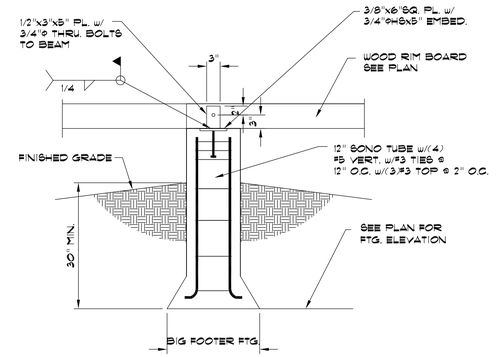

4

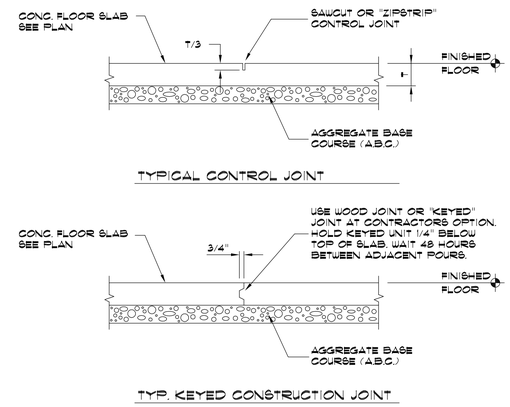

1 TYPICAL CONCRETE FLOOR JOINTS

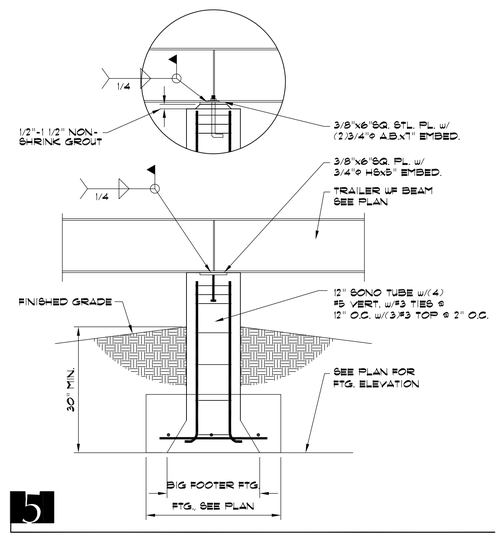

5

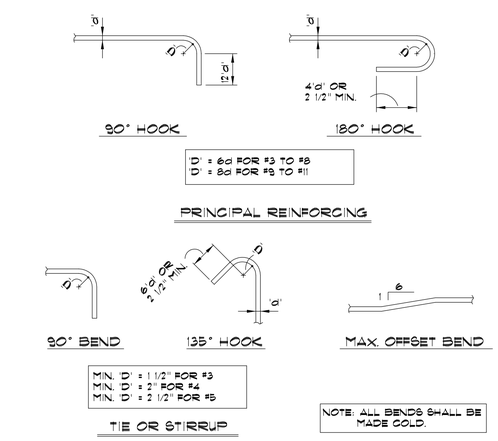

2 TYPICAL REINFORCING BAR BENDS

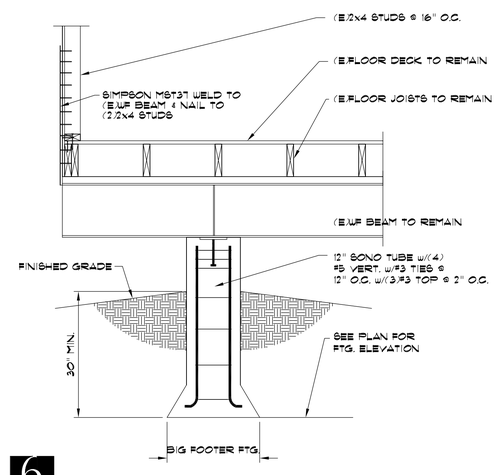

6

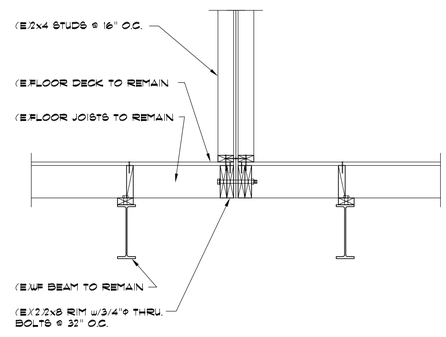

3

Shen Engineers, Inc.
Structural/Seismic Consultants
3335 South 900 East, Ste 250
Salt Lake City, UT 84106
Telephone 801 466-2625
Facsimile 801 466-2656
E-mail: shensing@msn.com

LICENSED STRUCTURAL ENGINEER No. 260129 HUA SHEN STATE OF UTAH

BID SET

OGDEN BAY GREAT SALT LAKE ECOSYSTEM STORAGE BUILDING
PHASE 1
DIVISION OF WILDLIFE RESOURCES
DFCM PROJECT #09014520
HOOPER, UTAH

JRCA
ARCHITECTS
577 South 200 East
Salt Lake City, Utah 84111
(801) 533-2100 fax: 533-2101 jrcadesign.com

DATE/REVISION	PROJECT #.
12 · 12 · 08	SE08249
2/2/09 REV. 1	
2/12/09 REV. 2	

SHEET DESCRIPTION: GENERAL STRUCTURAL NOTES

SHEET NO. S 101

Drawing: C:\SES\CAD\09070S\09070S.DWG (8.45)

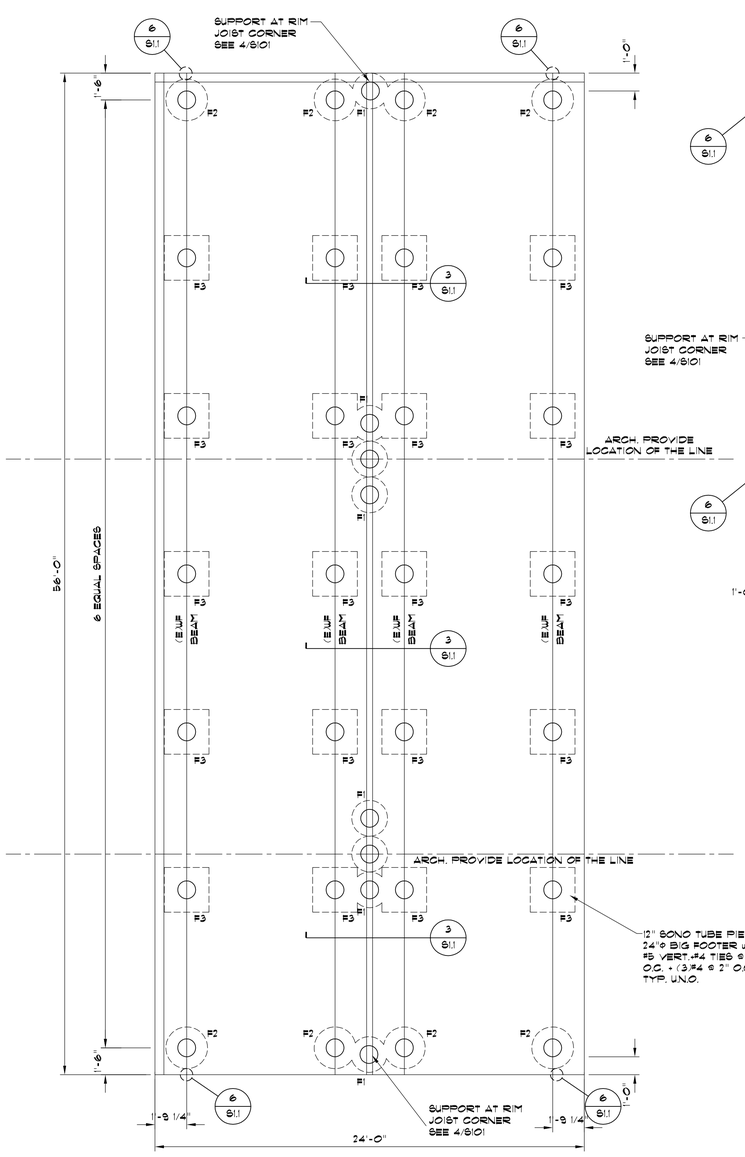

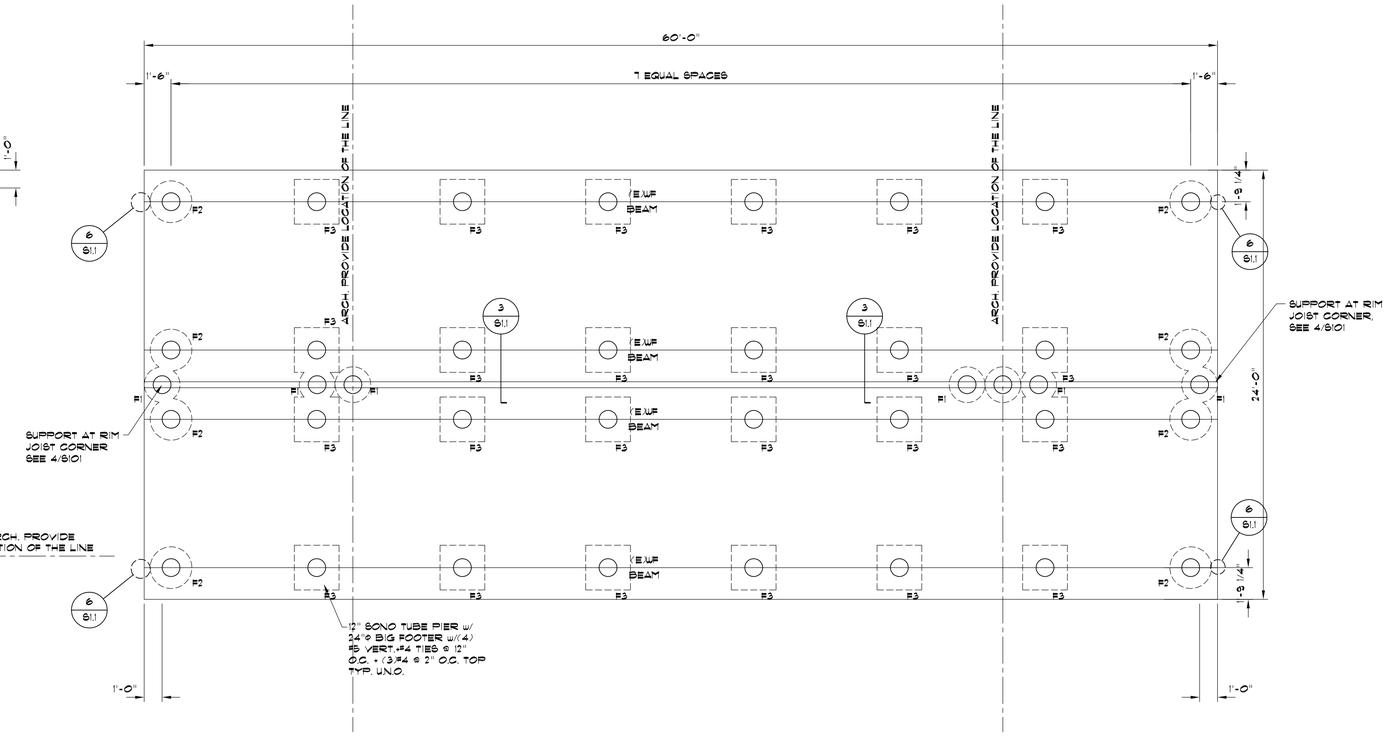

FOR EXISTING TRAILER EDGE TO SONO-TUBE & BIG FOOTER FOOTING CONNECTIONS, SEE DETAIL 4/S101 TYP. U.N.O.

FOR EXISTING TRAILER WF BEAM TO SONO-TUBE & BIG FOOTER FOOTING CONNECTIONS, SEE DETAIL 5/S101 TYP. U.N.O.

F1:
12" SONO TUBE PIER w/ 24"ø BIG FOOTER w/(4) #5 VERT.+#3 TIES @ 12" O.C. + (3)#3 @ 2" O.C. TOP TYP. U.N.O.

F2:
12" SONO TUBE PIER w/ 28"ø BIG FOOTER w/(4) #5 VERT.+#3 TIES @ 12" O.C. + (3)#3 @ 2" O.C. TOP TYP. U.N.O.

F3:
12" SONO TUBE PIER w/ (4)#5 VERT.+#3 TIES @ 12" O.C. + (3)#3 @ 2" O.C. TOP TYP. U.N.O.
2'-6" SQ.X12" SPOT FTG. w/(2) #5 EA. WAY

FOOTING AND FOUNDATION PLAN

1/4"= 1'-0"

F1:
12" SONO TUBE PIER w/ 24"ø BIG FOOTER w/(4) #5 VERT.+#3 TIES @ 12" O.C. + (3)#3 @ 2" O.C. TOP TYP. U.N.O.

F2:
12" SONO TUBE PIER w/ 28"ø BIG FOOTER w/(4) #5 VERT.+#3 TIES @ 12" O.C. + (3)#3 @ 2" O.C. TOP TYP. U.N.O.

F3:
12" SONO TUBE PIER w/ (4)#5 VERT.+#3 TIES @ 12" O.C. + (3)#3 @ 2" O.C. TOP TYP. U.N.O.
2'-6" SQ.X12" SPOT FTG. w/(2) #5 EA. WAY

CONCRETE POUR NOTES:

1. VERIFY FTG STEP LOCATIONS AND HEIGHT WITH ARCHITECT IN FIELD PRIOR TO FORMING FOOTINGS. MAKE FTG REBAR CONTINUOUS THROUGH FTGS WITH BENT BARS AT CORNERS. LAP BARS 40 BAR DIAMETERS AT SPLICES AND TIE.
2. THE DIMENSIONS ARE TO FACE OF CONCRETE UNLESS OTHERWISE NOTED. NOTE THAT DIMENSIONS ON ARCITECTURAL PLANS ARE TO FACE OF STUD AND FACE OF STUD IS 1" OUT FROM FACE OF CONCRETE (TYPICAL).
3. ACCURATELY LOCATE ANCHOR BOLTS AND HOLDDOWNS FROM THE ARCHITECTURAL PLAN AND VERIFY WITH THE ARCHITECT PRIOR TO PLACING CONCRETE.
4. DO NOT POUR ANY CONCRETE UNTIL THE FORMS ARE ADEQUATELY BOLSTERED AND SUPPORTED AND ALL REBAR IS IN PLACE AND SECURED.
5. DO NOT PERMIT FIN. GRADE TO COME CLOSER THAN 6" TO TOP OF CONCRETE.
6. BEARING SURFACES FOR PRECAST CONCRETE, STEEL OR TIMBER MEMBERS SHALL BE PREPARED TO A TRUE AND LEVEL LINE.

NOTE ON EPOXY BOLTS

ALL EPOXY BOLTS ARE TO BE "SIMPSON STRONG-TIES SET HIGH STRENGTH EPOXY" AS PER ICBO/ICC CODE #ER-5275.
THE INSTALLING REQUIREMENT FOR EPOXY BOLTS AND/OR REBAR DOWELS ARE AS FOLLOWED:

DIAMETER	DRILL DIA.	EMBED. DEPTH	EDGE DIST.	SPACING DIST.
1/2"	/ 5/8"	/ 4 1/4"	/ 1 3/4"	/ 6 3/8"
5/8"	/ 3/4"	/ 5"	/ 1 3/4"	/ 7 1/2"
3/4"	/ 7/8"	/ 6 3/4"	/ 1 3/4"	/ 10 1/8"

FOUNDATION PLAN NOTES:

1. SEE GENERAL STRUCTURAL NOTES SHEET AND STANDARD CONCRETE DETAIL SHEET FOR
   A. GENERAL STRUCTURAL NOTES
   B. TYPICAL EXCAVATION ADJACENT TO FOOTING
   C. TYPICAL SLAB JOINT DETAILS
   D. TYPICAL STEPPED FOOTING
2. WS - DENOTES CONCRETE WALL STEP.
3. F-1 - DENOTES FOOTING MARK - SEE FOOTING SCHEDULE
4. K.C.J. - DENOTES KEYED CONSTR. JOINT - SEE STANDARD DETAIL.
5. C.J. - DENOTES CONTROL JOINT - SEE STANDARD DETAIL.
6. F-----S - DENOTES FOOTING STEP, SEE DETAIL TYPICAL
7. CONTRACTOR TO VERIFY ALL DIMENSIONS AND ELEVATIONS WITH ARCHITECTURAL DRAWINGS PRIOR TO CONSTRUCTION. SEE ARCHITECTURAL FOR ALL DIMENSIONS. SLAB SLOPES & DEPRESSIONS NOT NOTED.
8. ALL SLABS ON GRADE ARE TO BE JOINTED AT NO MORE THAN 15'-0" EACH WAY USING JOINTS AS PER STANDARD DETAIL. IN ADDITION NO SECTION OF CONCRETE SHALL HAVE AN ASPECT RATIO OF GREATER THAN 1 1/2:1. PROVIDE (2) #4 x 4'-0" MID-HEIGHT SLAB BARS ADJACENT TO ALL DISCONTINUOUS JOINT LOCATIONS. ALL COLUMN ISOLATION JOINT CORNERS ARE TO BE INTERSECTED BY A SLAB JOINT OR REINFORCED WITH SLAB BARS PER ABOVE. SUBMIT COMPLETE JOINT LAYOUT PLAN TO THE ARCHITECT FOR PRIOR REVIEW.

Shen Engineers, Inc.
Structural/Seismic Consultants
3335 South 300 East, Ste 250
Salt Lake City, UT 84106
Telephone 801 466-2625
Facsimile 801 466-2656
E-mail: shengs@msn.com

LICENSED STRUCTURAL ENGINEER No. 260129 HUA SHEN STATE OF UTAH

BID SET

OGDEN BAY GREAT SALT LAKE ECOSYSTEM STORAGE BUILDING
PHASE 1
DIVISION OF WILDLIFE RESOURCES
DFCM PROJECT #09014520
HOOPER, UTAH

JRCA
ARCHITECTS
577 South 200 East
Salt Lake City, Utah 84111
(801) 533-2100 fax: 533-2101 jrcadesign.com

DATE/REVISION	PROJECT #.
12 • 12 • 08	SE08249
2/2/09 REV. 1	
2/12/09 REV. 2	

SHEET DESCRIPTION: FOOTING & FOUNDATION PLAN

SHEET NO. **S 201**

AutoCAD Version: 13_c4
Plotted: April 08, 1998 3:28:17 p.m.
Drawing: G:\W13\2008\#09014520\S1012.DWG (R.K.S)

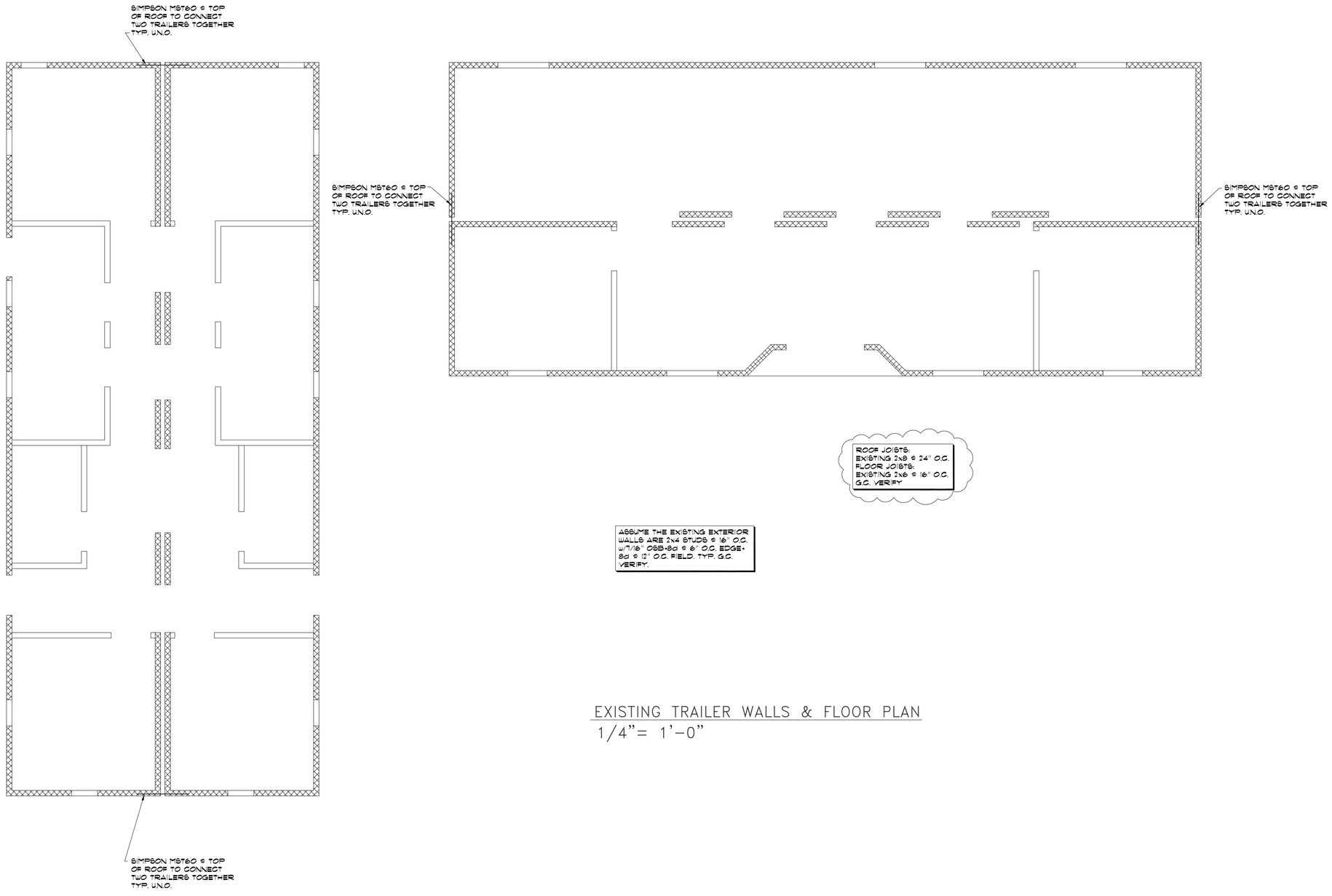

EXISTING TRAILER WALLS & FLOOR PLAN
1/4"= 1'-0"

Shen Engineers, Inc.
Structural/Seismic Consultants
3335 South 900 East, Ste 250
Salt Lake City, UT 84106
Telephone 801 466-2625
Facsimile 801 466-2658
E-mail: shengeng@msn.com

LICENSED STRUCTURAL ENGINEER
No. 260129
HUA SHEN
STATE OF UTAH

BID SET

OGDEN BAY GREAT SALT LAKE ECOSYSTEM STORAGE BUILDING
PHASE 1
DIVISION OF WILDLIFE RESOURCES
DFCM PROJECT #09014520
HOOPER, UTAH

JRCA
ARCHITECTS
577 South 200 East
Salt Lake City, Utah 84111
(801) 533-2100 fax: 533-2101 jrcadesign.com

DATE/REVISION	PROJECT #.
12 • 12 • 08	SE08249
2/2/09 REV. 1	
2/12/09 REV. 2	

SHEET DESCRIPTION:
EXISTING TRAILER WALLS AND FLOOR PLAN

SHEET NO.
S 202

AutoCAD Version: 13_c4
April 08, 1998 2:26:37 p.m.
Drawing: C:\PROJECTS\PROJECTS\2012.DWG (R.G)

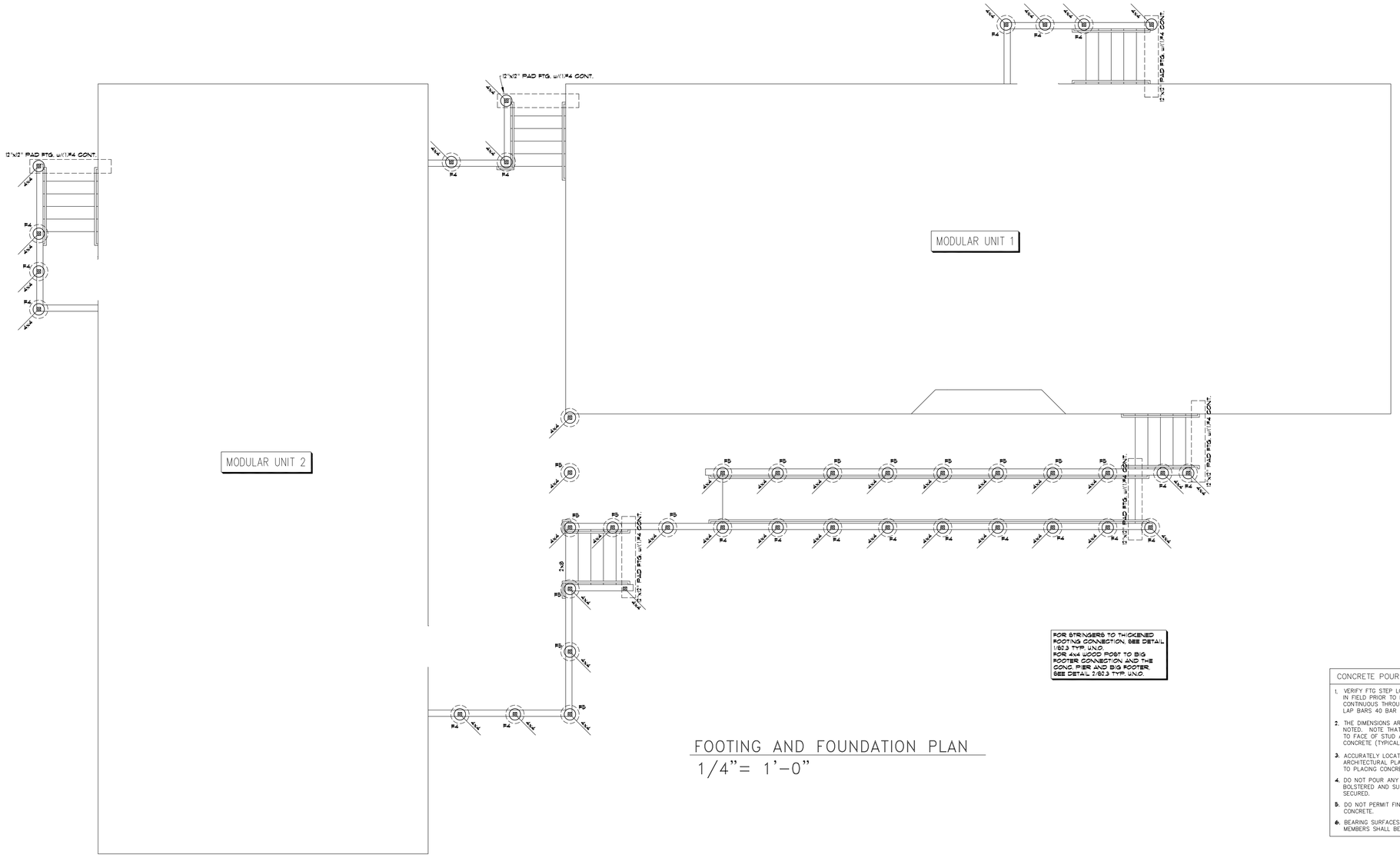

FOOTING AND FOUNDATION PLAN
1/4"= 1'-0"

FOR STRINGERS TO THICKENED FOOTING CONNECTION, SEE DETAIL 1/S2.3 TYP. U.N.O.
FOR 4x4 WOOD POST TO BIG FOOTER CONNECTION AND THE CONC. PIER AND BIG FOOTER, SEE DETAIL 2/S2.3 TYP. U.N.O.

CONCRETE POUR NOTES:

1. VERIFY FTG STEP LOCATIONS AND HEIGHT WITH ARCHITECT IN FIELD PRIOR TO FORMING FOOTINGS. MAKE FTG REBAR CONTINUOUS THROUGH FTGS WITH BENT BARS AT CORNERS. LAP BARS 40 BAR DIAMETERS AT SPLICES AND TIE.
2. THE DIMENSIONS ARE TO FACE OF CONCRETE UNLESS OTHERWISE NOTED. NOTE THAT DIMENSIONS ON ARCHITECTURAL PLANS ARE TO FACE OF STUD AND FACE OF STUD IS 1" OUT FROM FACE OF CONCRETE (TYPICAL).
3. ACCURATELY LOCATE ANCHOR BOLTS AND HOLDDOWNS FROM THE ARCHITECTURAL PLAN AND VERIFY WITH THE ARCHITECT PRIOR TO PLACING CONCRETE.
4. DO NOT POUR ANY CONCRETE UNTIL THE FORMS ARE ADEQUATELY BOLSTERED AND SUPPORTED AND ALL REBAR IS IN PLACE AND SECURED.
5. DO NOT PERMIT FIN. GRADE TO COME CLOSER THAN 6" TO TOP OF CONCRETE.
6. BEARING SURFACES FOR PRECAST CONCRETE, STEEL OR TIMBER MEMBERS SHALL BE PREPARED TO A TRUE AND LEVEL LINE.

NOTE: SEE ARCH'L DRAWINGS FOR ALL STAIR DIMENSIONS THIS IS ONLY A SUGGESTED DETAIL.

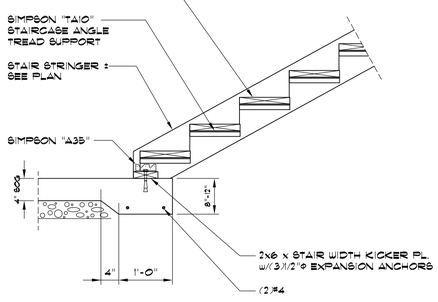

1 TYPICAL WOOD STAIR-CONC. SLAB CONN.

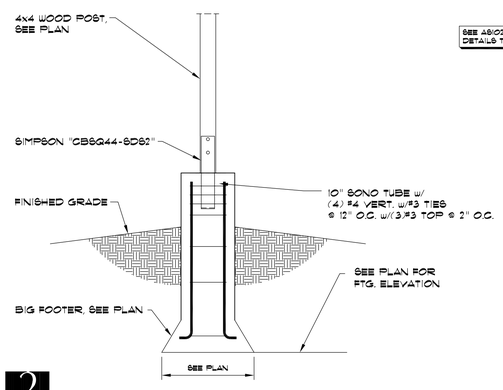

2

SEE 4S/D2 FOR ALL DETAILS TYP. U.N.O.

F4:
10" SONO TUBE PIER w/ 12"ø BIG FOOTER w/(4) #4 VERT.+#3 TIES @ 12" O.C. + (3)#3 @ 2" O.C. TOP TYP. U.N.O.

F5:
10" SONO TUBE PIER w/ 16"ø BIG FOOTER w/(4) #4 VERT.+#3 TIES @ 12" O.C. + (3)#3 @ 2" O.C. TOP TYP. U.N.O.

NOTE ON EPOXY BOLTS

ALL EPOXY BOLTS ARE TO BE "SIMPSON STRONG-TIE® SET HIGH STRENGTH EPOXY" AS PER ICBO/ICC CODE ER-5275.
THE INSTALLING REQUIREMENT FOR EPOXY BOLTS AND/OR REBAR DOWELS ARE AS FOLLOWED:

DIAMETER/DRILL DIAMETER	DEPTH	EDGE DIST.	SPACING DIST.
1/2" / 5/8"	/ 4 1/4"	/ 1 3/4"	/ 6 3/8"
5/8" / 3/4"	/ 5"	/ 1 3/4"	/ 7 1/2"
3/4" / 7/8"	/ 6 3/4"	/ 1 3/4"	/ 10 1/8"

FOUNDATION PLAN NOTES:

1. SEE GENERAL STRUCTURAL NOTES SHEET AND STANDARD CONCRETE DETAIL SHEET FOR
   A. GENERAL STRUCTURAL NOTES
   B. TYPICAL EXCAVATION ADJACENT TO FOOTING
   C. TYPICAL SLAB JOINT DETAILS
   D. TYPICAL STEPPED FOOTING
2. U5 - DENOTES CONCRETE WALL STEP.
3. F-1 - DENOTES FOOTING MARK - SEE FOOTING SCHEDULE.
4. K.C.J. - DENOTES KEYED CONSTR. JOINT - SEE STANDARD DETAIL.
5. C.J. - DENOTES CONTROL JOINT - SEE STANDARD DETAIL.
6. F-----S - DENOTES FOOTING STEP, SEE DETAIL TYPICAL.
7. CONTRACTOR TO VERIFY ALL DIMENSIONS AND ELEVATIONS WITH ARCHITECTURAL DRAWINGS PRIOR TO CONSTRUCTION. SEE ARCHITECTURAL FOR ALL DIMENSIONS. SLAB SLOPES & DEPRESSIONS NOT NOTED.
8. ALL SLABS ON GRADE ARE TO BE JOINTED AT NO MORE THAN 15'-0" EACH WAY USING JOINTS AS PER STANDARD DETAIL. IN ADDITION NO SECTION OF CONCRETE SHALL HAVE AN ASPECT RATIO OF GREATER THAN 1:1.21. PROVIDE (2) #4 x 4'-0" MID-HEIGHT SLAB BARS ADJACENT TO ALL DISCONTINUOUS JOINT LOCATIONS. ALL COLUMN ISOLATION JOINT CORNERS ARE TO BE INTERSECTED BY A SLAB JOINT OR REINFORCED WITH SLAB BARS PER ABOVE. SUBMIT COMPLETE JOINT LAYOUT PLAN TO THE ARCHITECT FOR PRIOR REVIEW.

Shen Engineers, Inc.
Structural/Seismic Consultants
3335 South 300 East, Ste 250
Salt Lake City, UT 84106
Telephone 801 466-2625
Facsimile 801 466-2656
E-mail: shengeng@msn.com

LICENSED STRUCTURAL ENGINEER No. 260129 HUA SHEN STATE OF UTAH

BID SET

OGDEN BAY GREAT SALT LAKE ECOSYSTEM STORAGE BUILDING
PHASE 1
DIVISION OF WILDLIFE RESOURCES
DFCM PROJECT #09014520
HOOPER, UTAH

JRCA
ARCHITECTS
577 South 200 East
Salt Lake City, Utah 84111
(801) 533-2100 fax: 533-2101 jrcadesign.com

DATE/REVISION	PROJECT #.
12 • 12 • 08	SE08244
2/2/09 REV. 1	
2/12/09 REV. 2	

SHEET DESCRIPTION:
FOOTING & FOUNDATION PLAN

SHEET NO.
S 203

AutoCAD Version: 13_c4
April 08, 1998 2:28:37 p.m.
Drawing: G:\REGIONS\PROTOS\013 DWG (R45)

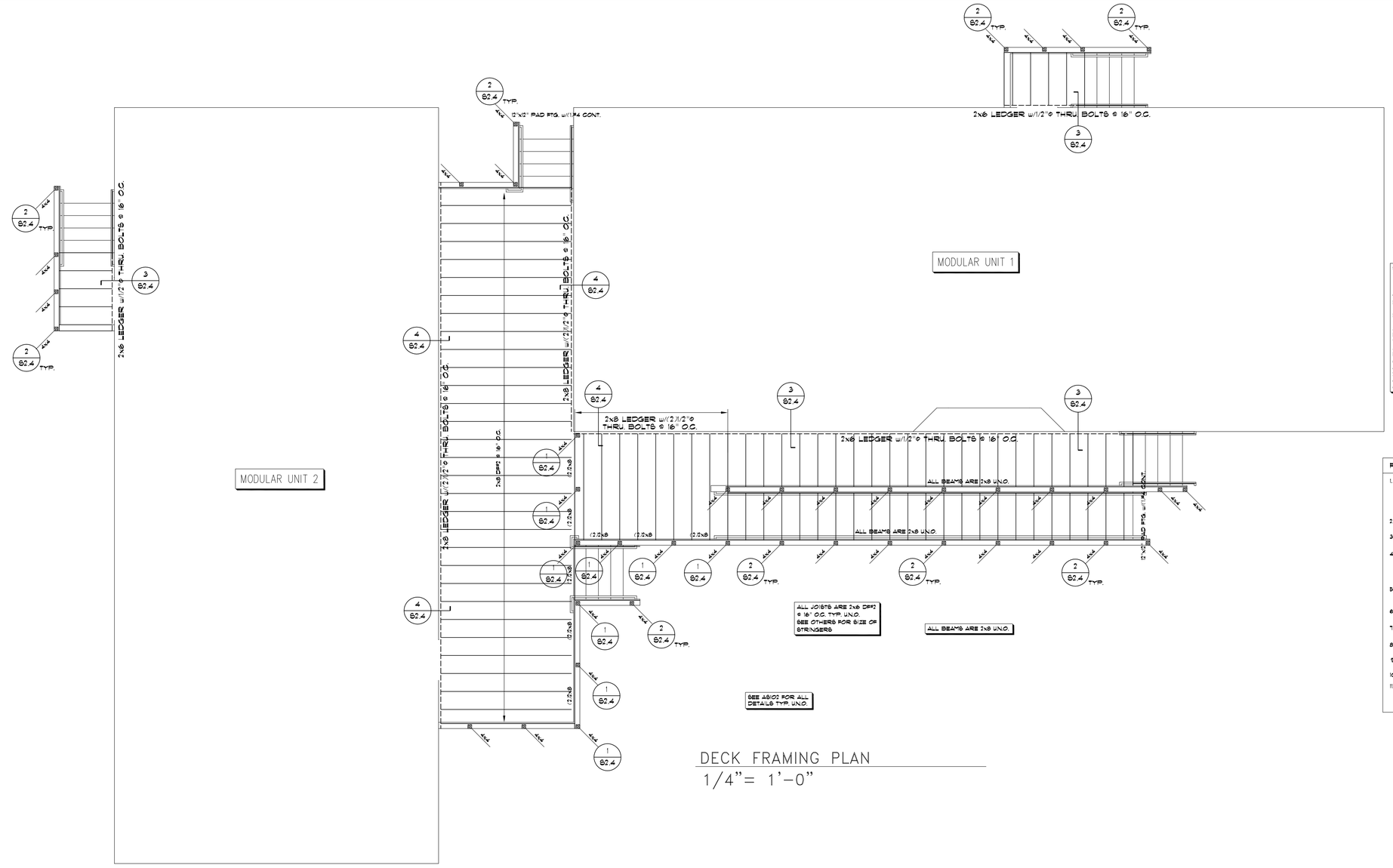

DECK FRAMING PLAN
1/4"= 1'-0"

TYPICAL DECK PLANK:
2x6 REDWOOD (OR P.T. WOOD) w/ (2)16d @ EA. JOIST AND (4) 16d @ END OF PLANK TO EA. JOIST TYPICAL UNLESS NOTED OTHERS

SCHEDULE FOR SIMPSON HANGERS ON 12" MAX BEAMS AND JOISTS TYP.

	TOP MOUNT HANGERS	FACE MOUNT HANGERS
9 1/2" TJI SERIES	ITT	IUS
DBL 9 1/2" TJI	MIT	MIU
11 7/8" TJI/110	ITS	IUS
DBL 11 7/8" TJI	MIT	MIU
1 3/4x LVL or PSL	LFTJ	HU
3 1/2x LVL or PSL	GLTV	HU/HGU
5 1/4x LVL or PSL	GLTV/HGLTV	HU/HGU
7x LVL or PSL	HGLTV	HGUS
3 1/8x GLB	GLST	
5 1/8x GLB	GLST	
6 3/4x GLB	GLST	
8 3/4x GLB	HGLST	
2x JOISTS	HU	LUS
(2)2x	HUS-2TF	LUS
(3)2x	HUS-3TF	LUS

FLOOR FRAMING PLAN NOTES:

1. SEE GENERAL STRUCTURAL NOTES AND STANDARD FRAMING DETAILS FOR
   A. GENERAL STRUCTURAL NOTES
   B. TYPICAL HEADER DETAIL
   C. TYPICAL SHEAR WALL DETAIL
   D. TYPICAL TOP PLATE SPLICE DETAIL
2. HDR-1 = HEADER. SEE HEADER SCHEDULE TYPICAL.
3. ALL FLOOR MEMBERS ARE TO BE 11 7/8" TJI 110 TYPICAL U.N.O.
4. ESTABLISH AND VERIFY ALL OPENINGS & INSERTS FOR MECHANICAL, ELECTRICAL & PLUMBING WITH THE APPROPRIATE TRADES, DRAWINGS AND SUBCONTRACTORS PRIOR TO CONSTRUCTION.
5. HANGING CEILING, DUCTWORK OR OTHER ITEMS FROM THE PLYWOOD DECK IS NOT ALLOWED.
6. PROVIDE JOIST BRIDGING AS PER MANUFACTURER'S SPECIFICATION.
7. PROVIDE SOLID BLOCKING AT JOIST BEARING TYPICAL U.N.O.
8. PROVIDE 1/8" GAP ON WALL SHEATHING FLUID OR FOLLOW MANUFACTURER'S SPECIFICATION.
9. SEE DETAIL FOR MULTI-STUDS TO WOOD BEAM/HEADER CONNECTION TYPICAL U.N.O.
10. "—B—" INDICATES MOMENT CONN. TYP. U.N.O.
11. SHEAR WALLS SHOWN ARE BELOW FRAMING LEVEL. COORDINATE WITH FRAMING PLANS. HOLDOWNS SHOWN ARE LAYING ON FRAMING LEVEL. COORDINATE WITH FRAMING PLANS.

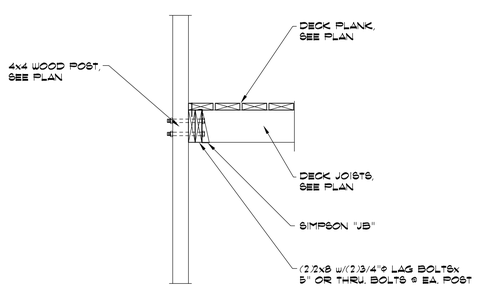

3

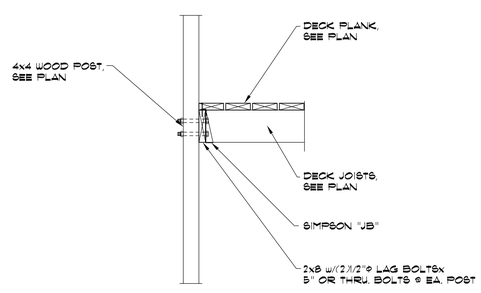

2

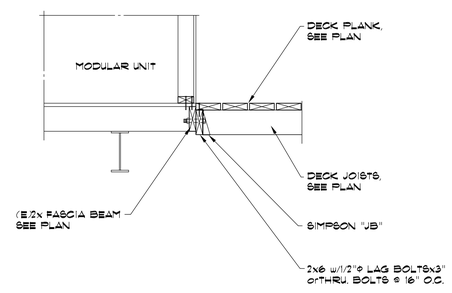

3

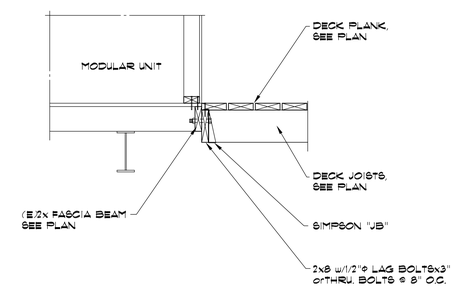

4

Shen Engineers, Inc.
Structural/Seismic Consultants
3335 South 300 East, Ste 250
Salt Lake City, UT 84106
Telephone 801 466-2625
Facsimile 801 466-2656
E-mail: shengs@shen.com

LICENSED STRUCTURAL ENGINEER No. 260129 HUA SHEN STATE OF UTAH

BID SET

OGDEN BAY GREAT SALT LAKE ECOSYSTEM STORAGE BUILDING
PHASE 1
DIVISION OF WILDLIFE RESOURCES
DFCM PROJECT #09014520
HOOPER, UTAH

JRCA
ARCHITECTS
577 South 200 East
Salt Lake City, Utah 84111
(801) 533-2100 fax: 533-2101 jrcadesign.com

DATE/REVISION	PROJECT #.
12 • 12 • 08	SE08244
2/2/09 REV. 1	
2/12/09 REV. 2	

SHEET DESCRIPTION: DECK FRAMING PLAN

SHEET NO. S 204

AutoCAD Version: 13_c4
April 08, 1999 3:28:37 p.m.
Drawing: S:\013\2008\090520\013.DWG (8.65)

THIS DRAWING, AS AN INSTRUMENT OF SERVICE, IS AND SHALL REMAIN THE PROPERTY OF SMD ENGINEERING, PLLC. THE INFORMATION, DESIGN, OR CONCEPTS REPRESENTED ON THIS DRAWING ARE CONFIDENTIAL AND ARE NOT FOR GENERAL DISTRIBUTION. © SMD ENGINEERING, PLLC 2008
OF SMD ENGINEERING, PLLC AND SHALL NOT BE REPRODUCED, PUBLISHED, OR USED IN ANY WAY WITHOUT THE PERMISSION OF SMD ENGINEERING, PLLC.

ABBREVIATIONS

ø	ROUND, DIAMETER, PHASE	EWT	ENTERING WATER TEMPERATURE	OZ	OUNCE
ABS	ACRYLONITRILE-BUTADIENE-STYRENE, ABSOLUTE	EXH	EXHAUST	P	PUMP
ACCU	AIR COOLED CONDENSING UNIT	EXP	EXPANSION	PD	PRESSURE DROP/DIFFERENCE
A/C	AIR CONDITIONING	EXT	EXTERIOR	PE	POLYETHYLENE
AD	ACCESS DOOR, AREA DRAIN	F	FAHRENHEIT	PEX	CROSS-LINKED POLYETHYLENE
ADA	AMERICAN DISABILITIES ACT	FC	FLEXIBLE CONNECTION, FORWARD CURVED	PF	PRE-FILTER
AF	AIR FOIL, AIR FILTER	FCO	FLOOR CLEAN OUT	PH	PHASE
AFF	ABOVE FINISH FLOOR	FCU	FAN COIL UNIT	PIV	POST INDICATOR VALVE
AHU	AIR HANDLING UNIT	FD	FLOOR DRAIN, FIRE DAMPER	PLMB	PLUMBING
ALT	ALTITUDE, ALTERNATE	FDC	FIRE DEPARTMENT CONNECTION	POC	POINT OF CONNECTION
AMB	AMBIENT	FF	FINISH FLOOR, FINAL FILTER	PPM	PARTS PER MILLION
AMP	AMPERE (AMP, AMPS)	FL	FLOW LINE	PRS	PRESSURE REDUCING STATION
AP	ACCESS PANEL	FLEX	FLEXIBLE	PRV	PRESSURE REDUCING VALVE
APD	AIR PRESSURE DROP	FO	FLAT OVAL	PSF	POUNDS PER SQUARE FOOT
ARCH	ARCHITECT	FP	FIRE PROTECTION	PSI	POUNDS PER SQUARE INCH
AS	AIR SEPARATOR	FPM	FEET PER MINUTE	PTAC	PACKAGED TERMINAL AIR CONDITIONER
AV	ACID VENT, AIR VENT	FS	FLOOR SINK	PVC	POLYVINYL CHLORIDE
B	BOILER	FSD	FIRE SMOKE DAMPER	R	THERMAL RESISTANCE, RANKINE, RETURN
BAL	BALANCE	FSTAT	FREEZESTAT	RA	RETURN AIR
BAS	BUILDING AUTOMATION SYSTEM	FT	FEET	RAD	RADIUS
BBR	BASEBOARD RADIATOR	FTR	FIN TUBE RADIATION	RCP	RADIANT CEILING PANEL
BDD	BACKDRAFT DAMPER	FURN	FURNACE, FURNISH, FURNITURE	RD	ROOF DRAIN
BFP	BACKFLOW PREVENTER	FV	FACE VELOCITY	RECIRC	RECIRCULAT(E),(OR),(ING)
BFV	BUTTERFLY VALVE	G	GAUGE, NATURAL GAS	REF	REFRIGERAT(OR),(ION)
BHP	BRAKE HORSEPOWER	GA	GAGE	REQ'D	REQUIRED
BI	BACKWARD INCLINED	GAL	GALLON	RF	RETURN FAN
BOD	BOTTOM OF DUCT	GALV	GALVANIZED	RH	RELATIVE HUMIDITY
BOP	BOTTOM OF PIPE	GC	GENERAL CONTRACTOR	RM	ROOM
BT	BATH TUB	GD	GARAGE DRAIN	RPBP	REDUCED PRESS. BACKFLOW PREVENTER
BTU	BRITISH THERMAL UNIT	GH	GRAVITY HOOD	RPM	REVOLUTIONS PER MINUTE
BTUH	BRITISH THERMAL UNITS/HR	GPM	GALLONS PER MINUTE	RTU	ROOF TOP UNIT
BV	BALL VALVE	GT	GREASE TRAP	REV	REVOLUTION, REVISION, REVERSE
C	CHILLER	HB	HOSE BIBB	S	SECONDS, SUPPLY, SINK
CA	COMPRESSED AIR, COMBUSTION AIR	H/C, HC	HEATING COIL	SA	SUPPLY AIR, SOUND ATTENUATOR
CAP	CAPACITY	HEPA	HIGH EFFICIENCY PARTICULATE AIR	SAN	SANITARY
CAV	CONSTANT AIR VOLUME	HOA	HAND, OFF, AUTO	SAT	SATURATED
C/C, CC	COOLING COIL	HP	HORSEPOWER, HEAT PUMP	SCFM	STANDARD CUBIC FEET PER MINUTE
CD	CONDENSATE DRAIN, CEILING DIFFUSER	HR	HOUR	SD	STORM DRAIN, SMOKE DAMPER
CFM	CUBIC FEET PER MINUTE	HSTAT	HUMIDISTAT	SECT	SECTION
CFOI	CONTRACTOR FURN., OWNER INSTALLED	HT	HEIGHT	SEN	SENSIBLE
CHW	CHILLER WATER	HVAC	HEATING, VENTILATING, AIR-CONDITIONING	SHT	SHEET
CO	CLEAN OUT, CARBON MONOXIDE	HX	HEAT EXCHANGER	SIM	SIMILAR
CO2	CARBON DIOXIDE	HZ	FREQUENCY	SL	SEA LEVEL
CONC	CONCRETE	IAQ	INDOOR AIR QUALITY	SP	STATIC PRESSURE
COND	CONDENS(ER),(ING),(ATE),(ATION)	ID	INSIDE DIAMETER	SPEC	SPECIFICATION
CONT	CONTINUOUS	IE	INVERT ELEVATION	SQ	SQUARE
COP	COEFFICIENT OF PERFORMANCE, COPPER	IN	INCH	SS	SERVICE SINK, STAINLESS STEEL
COTG	CLEANOUT TO GRADE	IN WC	INCHES, WATER COLUMN	STC	SOUND TRANSMISSION CLASS
CPVC	CHLORINATED POLY VINYL CHLORIDE	INV	INVERT	STD	STANDARD
CT	COOLING TOWER	I/O	INPUT/OUTPUT	STRUCT	STRUCTUR(E),(AL)
CU	CONDENSING UNIT, CUBIC	JS	JANITORS SINK	SUCT	SUCTION
CV	CONTROL VALVE, CONSTANT VOLUME	KEC	KITCHEN EQUIPMENT CONTRACTOR	T	TEMPERATURE, TIME
CUH	CABINET UNIT HEATER	KW	KILOWATT	T&P	TEMPERATURE AND PRESSURE
CW	CONDENSER WATER, CLOCKWISE	KWH	KILOWATT HOUR	TAB	TEST, ADJUST AND BALANCE
DA	DISCHARGE AIR	LAT	LEAVING AIR TEMPERATURE	TDH	TOTAL DYNAMIC HEAD
dB	DECIBELS	LAV	LAVATORY	TEMP	TEMPERATURE, TEMPORARY
DB	DRY BULB TEMPERATURE	LBS	POUNDS	TONS	TONS OF REFRIGERATION
DDC	DIRECT DIGITAL CONTROL	LF	LINEAR FEET	TOD	TOP OF DUCT
DF	DRINKING FOUNTAIN	LVR	LOUVER	TOP	TOP OF PIPE
DIA	DIAMETER	LWT	LEAVING WATER TEMPERATURE	TSP	TOTAL STATIC PRESSURE
DMPR	DAMPER	MA	MEDICAL AIR, MIXED AIR	TSTAT	THERMOSTAT
DP	DEWPOINT, DIFFERENTIAL PRESSURE	MAT	MATERIAL, MIXED AIR TEMPERATURE	TYP	TYPICAL
DR	DRAIN	MAU	MAKE UP AIR HANDLING UNIT	U	URINAL
DSN	DOWNSPOUT NOZZLE	MAV	MANUAL AIR VENT	UH	UNIT HEATER
DW	DISHWASHER	MAX	MAXIMUM	UNO	UNLESS NOTED OTHERWISE
DWG	DRAWING	MBH	BTU/HR X 1,000	V	VENT, VALVE
DWV	DRAIN, WASTE, VENT	MC	MECHANICAL CONTRACTOR	VA	VOLT AMPERE
DX	DIRECT EXPANSION	MCC	MOTOR CONTROL CENTER	VAC	VACUUM
(E) EXIST	EXISTING	MECH	MECHANICAL	VAV	VARIABLE AIR VOLUME
EAT	ENTERING AIR TEMPERATURE	MH	MAN HOLE	VD	VOLUME DAMPER
EC	ELECTRICAL CONTRACTOR	MIN	MINIMUM, MINUTE	VFD	VARIABLE FREQUENCY DRIVE
ECON	ECONOMIZER	MVD	MANUAL VOLUME DAMPER	VI	VIBRATION ISOLATOR
EDH	ELECTRIC DUCT HEATER	NA	NOT APPLICABLE	VOL	VOLUME
EER	ENERGY EFFICIENCY RATIO	NC	NOISE CRITERIA, NORMALLY CLOSED	VP	VELOCITY PRESSURE
EF	EXHAUST FAN	NIC	NOT IN CONTRACT	VSC	VARIABLE SPEED CONTROLLER
EFF	EFFICIENCY	NO	NORMALLY OPEN, NITROUS OXIDE	VTR	VENT THROUGH ROOF
EL, ELEV	ELEVATION	NO.	NUMBER	W	WASTE
EMER	EMERGENCY	NOM	NOMINAL	W/	WITH
ENCL	ENCLOSURE	NR	NOISE REDUCTION	W/O	WITHOUT
ESP	EXTERNAL STATIC PRESSURE	NRC	NOISE REDUCTION COEFFICIENT	WB	WET BULB
ET	EXPANSION TANK	NTS	NOT TO SCALE	WC	WATER CLOSET
EUH	ELECTRIC UNIT HEATER	OA	OUTSIDE AIR	WCO	WALL CLEAN OUT
EVAP	EVAPORAT(E),(ING),(ED),(OR)	OBD	OPPOSED BLADE DAMPER	WHA	WATER HAMMER ARRESTOR
EWB	ENTERING WET BULB	OD	OVERFLOW DRAIN, OUTSIDE DIAMETER	WT	WEIGHT
EWC	ELECTRIC WATER COOLER	OF/CI	OWNER FURN./CONTRACTOR INSTALLED	YCO	YARD CLEANOUT
EWH	ELECTRIC WATER HEATER	OF/OI	OWNER FURNISHED/OWNER INSTALLED		
EWS	EYE WASH STATION	OS&Y	OPEN SCREW & YOLK		

MECHANICAL LEGEND

BALL VALVE
BUTTERFLY VALVE
GATE VALVE
ANGLE GATE VALVE, PLAN VIEW
GLOBE VALVE
PLUG VALVE
3-WAY VALVE
NON-RISING STEM/OS&Y VALVE ACTUATOR
LEVER VALVE ACTUATOR
ELECTRONIC/PNEUMATIC VALVE ACTUATOR
SOLENOID/DIAPHRAGM VALVE ACTUATOR
CHECK VALVE
SPRING CHECK VALVE
BALL VALVE W/HOSE END & CAP
NEEDLE VALVE
PRESSURE REDUCING VALVE
REDUCED PRESSURE BACKFLOW PREVENTER — RPBP
INLINE PUMP
PRESSURE & TEMPERATURE RELIEF VALVE
SQUARE HEAD COCK
STRAINER, W/BV HOSE END & CAP
TEMPERATURE & PRESSURE PLUG
CIRCUIT SETTER
AUTOMATIC FLOW CONTROL VALVE
AUTOMATIC/MANUAL AIR VENT — AV, MAV
VENTURI FLOW MEASURING DEVICE
THERMOMETER/PRESSURE GAGE W/COCK
TEMPERATURE SENSOR
CONCENTRIC/ECCENTRIC REDUCER
UNION
BUSHING/CAP
ELBOW UP/DOWN
TOP/BOTTOM CONNECTION, 45° OR 90°
TEE UP/SIDE/DOWN
FLOW/PITCH DOWN DIRECTION — 2%
ANCHOR/GUIDE
EXPANSION JOINT/FLEX CONNECTOR
FLOOR OR GRADE CLEANOUT, W/CONC PAD
WALL CLEANOUT, HOSE BIBB OR WALL HYDRANT — HB, WH
FLOOR DRAIN/FLOOR SINK
VENT
COLD WATER
HOT WATER
HOT WATER RETURN
CONDENSATE DRAIN — D
SANITARY SEWER
SANITARY SEWER BELOW GRADE

DUCT SIZE, (1ST FIGURE, SIDE SHOWN; 2ND FIGURE, OTHER SIDE) — 24/12
DIRECTION OF FLOW
LINED DUCT — 24/12
HIDDEN DUCT — (24/12)
WYE W/45° ENTRY
TEE W/45° ENTRY
ELBOW W/TURNING VANES
HELICAL FLEX DUCT
SUPPLY DUCT SECTION UP/DOWN — 24/12
RETURN DUCT SECTION UP/DOWN — 24/12
EXHAUST DUCT SECTION UP/DOWN — 24/12
SUPPLY DUCT SECTION UP/DOWN — 18ø
ROUND BRANCH — 12ø, 18ø
DUCT TRANSITION — 24/12, 18/12
SPIN-IN W/VOLUME DAMPER — 24/12
MANUAL VOLUME DAMPER — VD
TROL-A-TEMP DAMPER
SIDE/PLAN ACCESS DOOR
SUPPLY AIR DEVICE
RETURN AIR DEVICE
EXHAUST AIR DEVICE
THERMOSTAT/HUMIDISTAT — T, H
POINT OF CONNECTION/REMOVAL
KEYED NOTE/REVISION — 1, 1
WALL SWITCH — $
EQUIPMENT CALLOUT — DESIGNATOR, CHARACTERISTIC
PLUMBING FIXTURE CALLOUT — FIXTURE
DETAIL TAG — DETAIL NO., SHEET NO. — 1, M601

PROJECT NOTES

1. ALL WORK SHALL BE PERFORMED IN ACCORDANCE WITH, 2006 INTERNATIONAL BUILDING CODE, 2006 INTERNATIONAL MECHANICAL CODE, 2006 INTERNATIONAL PLUMBING CODE, 2006 INTERNATIONAL FUEL GAS CODE, AND 2006 INTERNATIONAL ENERGY CODE, INCLUDING STATE AND LOCAL AMENDMENTS, SUBJECT TO AUTHORITY HAVING JURISDICTION INTERPRETATION.
2. CLOSELY COORDINATE NEW MECHANICAL AND PLUMBING CONSTRUCTION WITH ALL MECHANICAL, ELECTRICAL, ARCHITECTURAL AND STRUCTURAL MEMBERS. DUCTWORK AND PIPE ROUTING IS APPROXIMATE, DIAGRAMMATIC AND IS NOT TO BE SCALED. PROVIDE ALTERNATE ROUTING, OFFSETS AND TRANSITIONS AS REQUIRED FOR COORDINATION OF ALL WORK WITHOUT ADDITIONAL COST.
3. DO NOT SHUT-OFF/PUT OUT SERVICE ANY SYSTEMS/SERVICES WITHOUT FIRST COORDINATING ALL DOWNTIME WITH THE OWNER'S PERSONNEL.
4. PROVIDE SEISMIC RESTRAINT FOR ALL MECHANICAL AND PLUMBING EQUIPMENT AND PIPING IN ACCORDANCE WITH 2006 IBC, IMC, AND IPC.
5. RECORD ALL FIELD CHANGES ON RECORD DRAWINGS AND SUBMIT TO ENGINEER DURING PROJECT CLOSE OUT.
6. INSTALL ALL EQUIPMENT IN ACCORDANCE WITH MANUFACTURERS INSTALLATION INSTRUCTIONS.
7. PROJECT ELEVATION IS 4500 FT FOR EQUIPMENT SELECTION.
8. PROVIDE ALL DUCT IN ACCORDANCE WITH SMACNA STANDARDS FOR 2" WC PRESSURE CLASS. SEAL ALL TRANSVERSE AND LONGITUDINAL SEAMS AND JOINTS EXCEPT FOR WELDED OR LOCKING-TYPE LONGITUDINAL JOINTS.
9. PROVIDE 1-1/2" THICK INSULATED FLEXIBLE DUCT AS INDICATED ON DRAWINGS CONFORMING TO NFPA 90A, UL 181-CLASS 0 OR 1 STANDARDS. INSTALL FLEXIBLE DUCT AS SHORT AS POSSIBLE WITHOUT KINKS.
10. LOCATE DIFFUSERS AND RETURN GRILLES ACCORDING TO THE ARCHITECTURAL REFLECTED CEILING PLANS.
11. DUCT DIMENSIONS SHOWN ARE INSIDE FLOW DIMENSIONS.
12. PROVIDE TEST AND BALANCE REPORT TO ENGINEER FOR REVIEW AND APPROVAL.
13. PROVIDE ISOLATION VALVES SERVING EACH PIECE OF EQUIPMENT.
14. ALL WASTE AND VENT IS 2" UNLESS OTHERWISE NOTED.
15. ALL WASTE AND VENT PIPE SHALL BE SERVICE WEIGHT CAST IRON, OR SCHEDULE 40 ABS, OR SCHEDULE 40 PVC.
16. ALL WATER PIPE SHALL BE TYPE "L" COPPER.
17. T-DRILL FITTINGS SHALL NOT BE USED IN THIS PROJECT.
18. INSULATE ALL HOT WATER AND RETURN PIPE WITH 1" INSULATION WITH ASJ. INSULATE ALL COLD WATER PIPE WITH 1/2" INSULATION WITH ASJ.
19. ALL "BRANCH" HOT AND COLD WATER LINES FEEDING ONE OR TWO SINKS OR LAV'S ARE 1/2". DROP IN WALL AND DISTRIBUTE TO SINKS OR LAV'S AS REQ'D. PROVIDE INDIVIDUAL STOPS FOR EACH SINK OR LAV.

SHEET LIST

MH001 – MECHANICAL LEGEND AND NOTES
MH101 – MECHANICAL MODULAR UNITS FLOOR PLAN
MH501 – MECHANICAL DETAILS
MH601 – MECHANICAL SCHEDULES
PP101 – PLUMBING MODULAR UNITS FLOOR PLAN
PP601 – PLUMBING SCHEDULES

OGDEN BAY GREAT SALT LAKE ECOSYSTEM STORAGE BUILDING PHASE I
DIVISION OF WILDLIFE RESOURCES
DFCM PROJECT # 09014520
SOUTH OGDEN, UTAH

SMD ENGINEERING, PLLC
"Engineered Mechanical Solutions"
986 WEST ATHERTON DRIVE, SUITE 200
TAYLORSVILLE, UTAH 84123
(801) 268-3828,
FAX (801) 268-3297

JRCA
ARCHITECTS
577 South 200 East
Salt Lake City, Utah 84111
(801) 533-2100 fax: 533-2101 jrcadesign.com

DATE/REVISION	PROJECT #.
01 · 06 · 09	20081204

MECHANICAL LEGEND AND NOTES

MH 001

THIS DRAWING, AS AN INSTRUMENT OF SERVICE, IS AND SHALL REMAIN THE PROPERTY OF SMD ENGINEERING, PLLC AND SHALL NOT BE REPRODUCED, PUBLISHED, OR USED IN ANY WAY WITHOUT THE PERMISSION OF SMD ENGINEERING, PLLC. THE INFORMATION, DESIGN, OR CONCEPTS REPRESENTED ON THIS DRAWING ARE CONFIDENTIAL AND ARE NOT FOR GENERAL DISTRIBUTION. © SMD ENGINEERING, PLLC 2008

TYPICAL SHEET METAL DETAILS

1 / MH501 FLEX DUCT CONNECTION

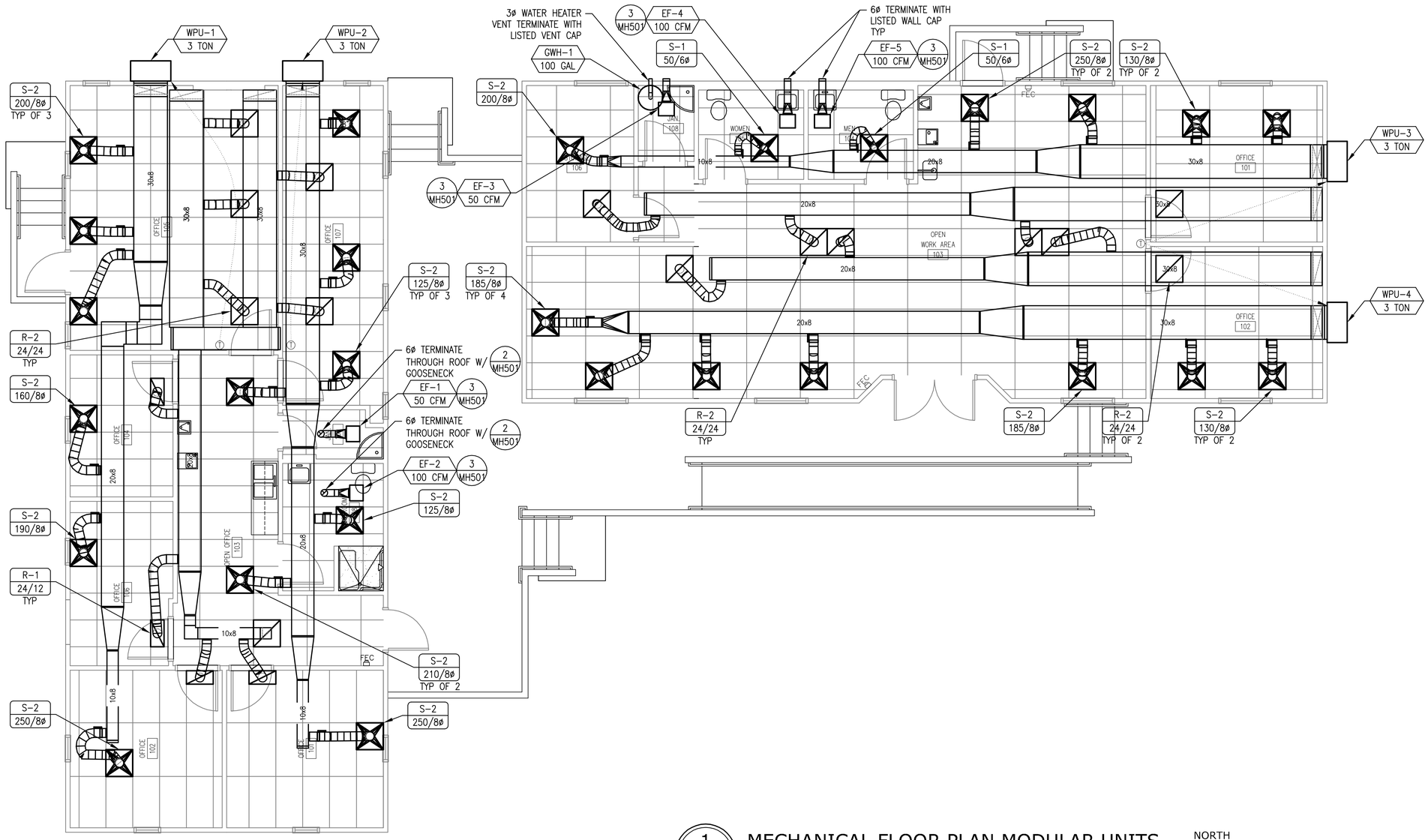

1 / MH101 MECHANICAL FLOOR PLAN MODULAR UNITS

NORTH

4' 2' 1' 0 4' 8'

SCALE: 1/4" = 1'-0"

OGDEN BAY GREAT SALT LAKE
ECOSYSTEM STORAGE BUILDING
PHASE I
DIVISION OF WILDLIFE RESOURCES
DFCM PROJECT # 09014520
SOUTH OGDEN, UTAH

SMD ENGINEERING, PLLC
"Engineered Mechanical Solutions"
986 WEST ATHERTON
DRIVE, SUITE 200
TAYLORSVILLE, UTAH
84123
(801) 268-3828,
FAX (801) 268-3297

JRCA
ARCHITECTS
577 South 200 East
Salt Lake City, Utah 84111
(801) 533-2100 fax: 533-2101 jrcadesign.com

DATE/REVISION	PROJECT #.
01 · 06 · 09	20081204

MECHANICAL
FLOOR PLAN
MODULAR UNITS

MH
101

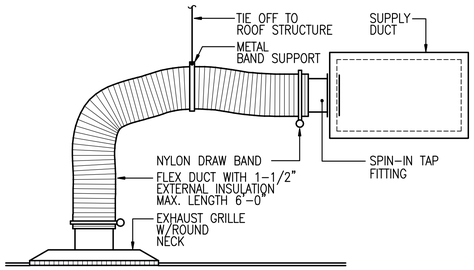

1 MH501 FLEX DUCT CONNECTION

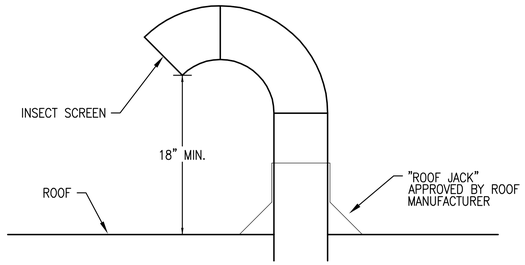

2 MH501 GOOSENECK DETAIL

3 MH501 CEILING EXHAUST FAN

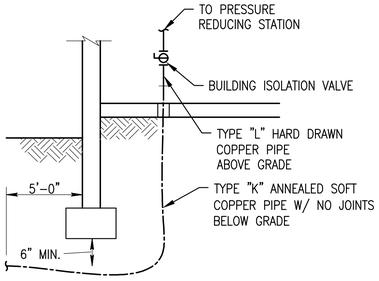

4 MH501 WATER SERVICE ENTRY

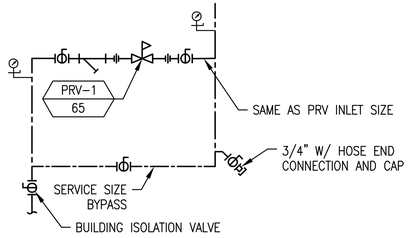

5 MH501 PRESSURE REDUCING STATION

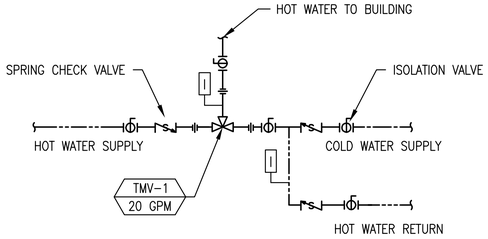

6 MH501 THERMOSTATIC MIXING VALVE PIPING

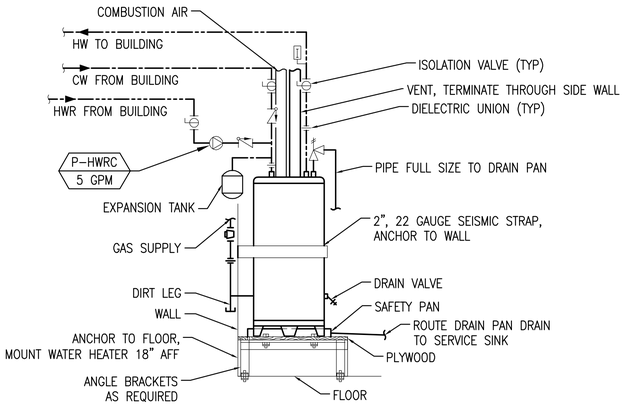

7 MH501 GAS FIRED WATER HEATER

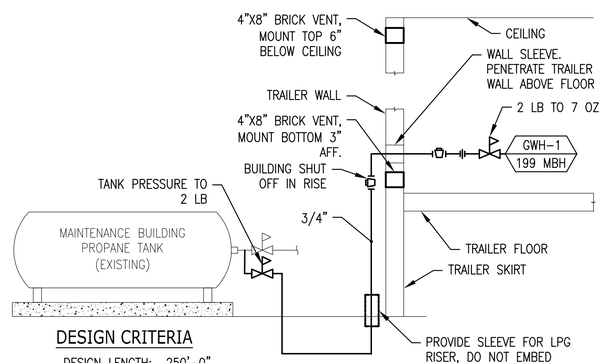

DESIGN CRITERIA

DESIGN LENGTH: 250'-0"
GAS HEAT: 2500 BTU/CF
SYSTEM PRESSURE: 2 LB

8 MH501 GAS PIPING DIAGRAM

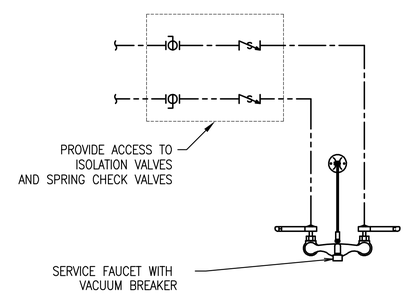

NOTE: TYPICAL ALL FAUCETS WITH HOSE END CONNECTION

9 MH501 SERVICE FAUCET PIPING

OGDEN BAY GREAT SALT LAKE ECOSYSTEM STORAGE BUILDING PHASE I
DIVISION OF WILDLIFE RESOURCES
DFCM PROJECT # 09014520
SOUTH OGDEN, UTAH

SMD ENGINEERING, PLLC
"Engineered Mechanical Solutions"
986 WEST ATHERTON DRIVE, SUITE 200
TAYLORSVILLE, UTAH 84123
(801) 268-3828,
FAX (801) 268-3297

JRCA
ARCHITECTS
577 South 200 East
Salt Lake City, Utah 84111
(801) 533-2100 fax: 533-2101 jrcadesign.com

DATE/REVISION	PROJECT #.
01 · 06 · 09	20081204

MECHANICAL DETAILS

MH 501

THIS DRAWING, AS AN INSTRUMENT OF SERVICE, IS AND SHALL REMAIN THE PROPERTY OF SMD ENGINEERING, PLLC AND SHALL NOT BE REPRODUCED, PUBLISHED, OR USED IN ANY WAY WITHOUT THE PERMISSION OF SMD ENGINEERING, PLLC. THE INFORMATION, DESIGN, OR CONCEPTS REPRESENTED ON THIS DRAWING ARE CONFIDENTIAL AND ARE NOT FOR GENERAL DISTRIBUTION. © SMD ENGINEERING, PLLC 2008

THIS DRAWING, AS AN INSTRUMENT OF SERVICE, IS AND SHALL REMAIN THE PROPERTY OF SMD ENGINEERING, PLLC AND SHALL NOT BE REPRODUCED, PUBLISHED, OR USED IN ANY WAY WITHOUT THE PERMISSION OF SMD ENGINEERING, PLLC. THE INFORMATION, DESIGN, OR CONCEPTS REPRESENTED ON THIS DRAWING ARE CONFIDENTIAL AND ARE NOT FOR GENERAL DISTRIBUTION. © SMD ENGINEERING, PLLC 2008

WALL PACK UNIT SCHEDULE (WPU)

WPU / NOM. TON

MARK	AREA SERVED	NOM. TONS	SEER	CFM @ ELEV.	ESP IN WC	COOLING CAPACITY						HEATING CAPACITY (PROJECT)		COMPRESSORS		CONDENSER FAN MOTORS			EVAPORATOR FAN MOTOR		ELECTRICAL			DIMENSIONS				MANUFACTURER MODEL	REMARKS
						TOTAL MBH	SENS. MBH	EAT °F DB/WB	LAT °F DB	AMB °F	REFRIG	KW	VOLTS/ PHASE	NO.	RLA	NO.	HP	FLA	NO.	HP	VOLT/ PHASE	MCA	MCOP	L IN	W IN	H IN	WT LBS		
WPU-1	TRAILER 2	3	9.0	1,200	0.23	37.0	25.9	80/67	57	95	R-22	5	120/ 1ø	1	15.7	1	1/5	1.5	1	1/3	230/ 1ø	50	60	72	38	19	350	SUN 36B-100A	NOTE 1
WPU-2	TRAILER 2	3	9.0	1,200	0.23	37.0	25.9	80/67	57	95	R-22	5	120/ 1ø	1	15.7	1	1/5	1.5	1	1/3	230/ 1ø	50	60	72	38	19	350	SUN 36B-100A	NOTE 1
WPU-3	TRAILER 1	3	9.0	1,200	0.23	37.0	25.9	80/67	57	95	R-22	5	120/ 1ø	1	15.7	1	1/5	1.5	1	1/3	230/ 1ø	50	60	72	38	19	350	SUN 36B-100A	NOTE 1
WPU-4	TRAILER 1	3	9.0	1,200	0.23	37.0	25.9	80/67	57	95	R-22	5	120/ 1ø	1	15.7	1	1/5	1.5	1	1/3	230/ 1ø	50	60	72	38	19	350	SUN 36B-100A	NOTE 1

NOTE 1: WITH "FACTORY" INSTALLED ELECTRIC HEAT, AND SINGLE POINT ELECTRICAL CONNECTION.

AIR DEVICE SCHEDULE

DEVICE / CFM/NCK

MARK	TYPE & DUTY	FACE SIZE H X W	NECK SIZE H X W	CEILING TYPE	MAX. CFM	MAX. T.P. (IN WC)	MAX. NC LEVEL	MIN T50 THROW (FT)	PATTERN	MANUFACTURER MODEL	REMARKS
S-1	ARCHITECTURAL PLAQUE DIFFUSER	24/24	6ø	LAY-IN	120	0.03	11	5	4-WAY	KRUEGER PLQ	W/ LAY-IN FRAME
S-2	ARCHITECTURAL PLAQUE DIFFUSER	24/24	8ø	LAY-IN	250	0.07	15	10	4-WAY	KRUEGER PLQ	W/ LAY-IN FRAME
S-3	ARCHITECTURAL PLAQUE DIFFUSER	24/24	10ø	LAY-IN	400	0.09	17	13	4-WAY	KRUEGER PLQ	W/ LAY-IN FRAME
S-4	ARCHITECTURAL PLAQUE DIFFUSER	24/24	12ø	LAY-IN	500	0.10	14	15	4-WAY	KRUEGER PLQ	W/ LAY-IN FRAME
R-1	PERFORATED RETURN	24/12	22/10	LAY-IN	600	0.05	28	N/A	N/A	KRUEGER 6490	W/ LAY-IN FRAME
R-2	PERFORATED RETURN	24/24	22/22	LAY-IN	1200	0.05	28	N/A	N/A	KRUEGER 6490	W/ LAY-IN FRAME
E-1	PERFORATED EXHAUST	12/12	6ø	GYP.	100	0.09	7	N/A	N/A	KRUEGER 6690	W/ SURFACE MOUNT FRAME
E-2	PERFORATED EXHAUST	24/24	12/12	LAY-IN	400	0.06	12	N/A	N/A	KRUEGER 6490	W/ LAY-IN FRAME

EXHAUST FAN SCHEDULE (EF)

FAN / CFM

MARK	AREA SERVED	TYPE	CFM	ESP IN WC	FAN RPM	MOTOR			OPENING IN./IN.	SONES	CONTROL	DAMPER	MANUFACTURER MODEL	REMARKS
						BHP	HP	VOLT/ PHASE						
EF-1	JANITORS CLOSET 109	CABINET EXHAUST FAN	50	.375	760	39 WATTS	N/A	120/ 1ø	12/14	2.3	LIGHTS	GRAVITY	COOK GEMC GC-124	W/ ELECTRONIC SPEED CONTROL
EF-2	RESTROOM 108	CABINET EXHAUST FAN	100	0.25	882	84 WATTS	N/A	120/ 1ø	12/14	2	LIGHTS	GRAVITY	COOK GEMC GC-184	W/ ELECTRONIC SPEED CONTROL
EF-3	JANITORS CLOSET 108	CABINET EXHAUST FAN	50	.375	760	39 WATTS	N/A	120/ 1ø	12/14	2.3	LIGHTS	GRAVITY	COOK GEMC GC-124	W/ ELECTRONIC SPEED CONTROL
EF-4	WOMENS 105	CABINET EXHAUST FAN	100	0.25	882	84 WATTS	N/A	120/ 1ø	12/14	2	LIGHTS	GRAVITY	COOK GEMC GC-184	W/ ELECTRONIC SPEED CONTROL
EF-5	MENS 104	CABINET EXHAUST FAN	100	0.25	882	84 WATTS	N/A	120/ 1ø	12/14	2	LIGHTS	GRAVITY	COOK GEMC GC-184	W/ ELECTRONIC SPEED CONTROL

OGDEN BAY GREAT SALT LAKE ECOSYSTEM STORAGE BUILDING PHASE I
DIVISION OF WILDLIFE RESOURCES
DFCM PROJECT # 09014520
SOUTH OGDEN, UTAH

SMD ENGINEERING, PLLC
"Engineered Mechanical Solutions"
986 WEST ATHERTON DRIVE, SUITE 200
TAYLORSVILLE, UTAH 84123
(801) 268-3828,
FAX (801) 268-3297

JRCA
ARCHITECTS
577 South 200 East
Salt Lake City, Utah 84111
(801) 533-2100 fax: 533-2101 jrcadesign.com

DATE/REVISION	PROJECT #.
01 · 06 · 09	20081204

MECHANICAL SCHEDULES

MH 601

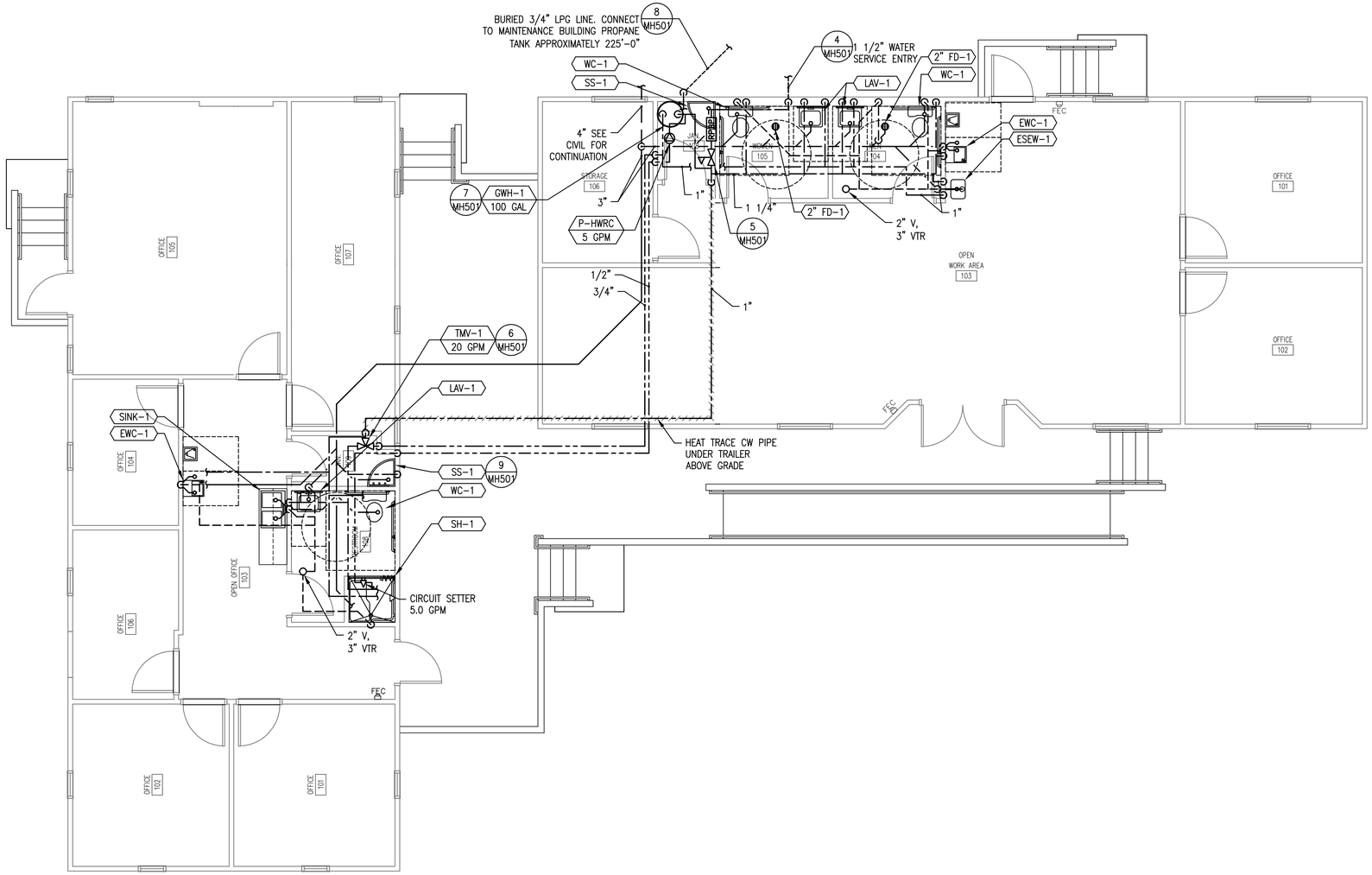

1
PP101

PLUMBING FLOOR PLAN MODULAR UNITS

4' 2' 1' 0 4' 8'
SCALE: 1/4" = 1'-0"

NORTH

OGDEN BAY GREAT SALT LAKE ECOSYSTEM STORAGE BUILDING PHASE I
DIVISION OF WILDLIFE RESOURCES
DFCM PROJECT # 09014520
SOUTH OGDEN, UTAH

SMD ENGINEERING, PLLC
"Engineered Mechanical Solutions"
986 WEST ATHERTON DRIVE, SUITE 200
TAYLORSVILLE, UTAH 84123
(801) 268-3828,
FAX (801) 268-3297

JRCA
ARCHITECTS
577 South 200 East
Salt Lake City, Utah 84111
(801) 533-2100 fax: 533-2101 jrcadesign.com

DATE/REVISION	PROJECT #.
01 · 06 · 09	20081204

PLUMBING FLOOR PLAN MODULAR UNITS

PP 101

THIS DRAWING, AS AN INSTRUMENT OF SERVICE, IS AND SHALL REMAIN THE PROPERTY OF SMD ENGINEERING, PLLC AND SHALL NOT BE REPRODUCED, PUBLISHED, OR USED IN ANY WAY WITHOUT THE PERMISSION OF SMD ENGINEERING, PLLC. THE INFORMATION, DESIGN, OR CONCEPTS REPRESENTED ON THIS DRAWING ARE CONFIDENTIAL AND ARE NOT FOR GENERAL DISTRIBUTION. © SMD ENGINEERING, PLLC 2008

THIS DRAWING, AS AN INSTRUMENT OF SERVICE, IS AND SHALL REMAIN THE PROPERTY OF SMD ENGINEERING, PLLC AND SHALL NOT BE REPRODUCED, PUBLISHED, OR USED IN ANY WAY WITHOUT THE PERMISSION OF SMD ENGINEERING, PLLC. THE INFORMATION, DESIGN, OR CONCEPTS REPRESENTED ON THIS DRAWING ARE CONFIDENTIAL AND ARE NOT FOR GENERAL DISTRIBUTION. © SMD ENGINEERING, PLLC 2008

PUMP SCHEDULE (P)

P / GPM

MARK	SYSTEM SERVED	TYPE	GPM	HEAD FT WC	GLYCOL %	MOTOR				MANUFACTURER MODEL	REMARKS
						RPM	BHP	HP	VOLT/ PHASE		
P-HWRC	HOT WATER RECIRC.	INLINE	5	10	POTABLE	3250	N/A	1/6	120/ 1ø	BELL & GOSSETT PL-36	W/ BRONZE CASING

MIXING VALVE SCHEDULE (TMV)

TMV / GPM

MARK	MIN GPM	DESIGN GPM	MAX GPM	MAX PD PSI	MANUFACTURER MODEL	REMARKS
TMV-1	0.5	20	27	10	SYMMONS TEMPCONTROL 5-400	THERMOSTATIC MIXING VALVE

PLUMBING FIXTURE SCHEDULE

FIXTURE

MARK	FIXTURE	ROUGH IN SIZE					MANUFACTURER MODEL	REMARKS
		WASTE IN	TRAP IN	VENT IN	HW IN	CW IN		
WC-1	WATER CLOSET, ADA COMPLIANT, PRESSURE ASSISTED FLUSH TANK, FLOOR MOUNT	3	2	2	N/A	1/2	AMERICAN STANDARD "CADET" RIGHT HEIGHT PRESSURE ASSISTED ELONGATED BOWL	1.6 GPF, 16 1/2" FLOOR TO RIM, FULLY GLAZED 2" BALLPASS TRAP, W/ SIDE-MOUNTED CHROME TRIP LEVER, CHROMED ANGLE STOP AND CHROMED SUPPLY
LAV-1	LAVATORY, WALL-HUNG ADA COMPLIANT W/SINGLE CONTROL LAV FAUCET	2	1 1/4	2	1/2	1/2	AMERICAN STANDARD "LUCERNE" LAVATORY W/"SEVA" FAUCET	VITREOUS CHINA, 18"X21", WALL MOUNTED LAVATORY W/ FLOOR MOUNTED CONCEALED ARM CARRIER, FAUCET HOLES ON 4" CENTERS, GRID STRAINER, CHROMED ANGLE STOPS, CHROMED BRASS SUPPLIES, AND CHROMED BRASS "P" TRAP.
SINK-1	SINK, SINGLE COMPARTMENT, STAINLESS STEEL, COUNTER MOUNTED, W/ DISPOSAL, AND GOOSENECK FAUCET	2	1 1/2	2	1/2	1/2	ELKAY DLR252110 SINK W/ LK2442 FAUCET, LK99 STRAINER, AND INSINKERATOR MODEL 777 DISPOSAL	STAINLESS STEEL COUNTERTOP SINK, INSIDE BOWL 21"X16"X10" W/ 10" GOOSENECK FAUCET, STRAINER, CHROMED ANGLE STOPS, CHROMED BRASS SUPPLIES, CHROMED BRASS "P" TRAP, AND 1 HP, 120 VOLT, SINGLE PHASE DISPOSAL MOTOR.
SH-1	ADA COMPLIANT SHOWER VALVE W/ HAND SPRAY, SLIDE BAR, AND SHOWER DRAIN	2	2	2	1/2	1/2	LASCO BATHWARE 3636-BFS W/ ZURN SHOWER DRAIN FD-2254-NH2-R5	PRESSURE BALANCED SHOWER VALVE W/ INTEGRAL SERVICE STOPS, HAND SPRAY, 24" SLIDE BAR, L-SHAPED FOLD UP SEAT, VACUUM BREAKER, 60" HOSE. SHOWER DRAIN W/ CAST IRON BODY, CLAMPING COLLER, ADJUSTABLE NICKEL BRONZE STRAINER ASSEMBLY.
SS-1	SERVICE SINK, ENAMELED CAST IRON	3	3	2	1/2	1/2	AMERICAN STANDARD FLORWELL W/FAUCET 8344.112	28"X28"X13" DEEP ENAMELED CAST IRON SERVICE SINK W/ FLAT GRID DRAIN, REMOVABLE VINYL-COATED RIM GUARD, HOSE AND HOSE BRACKET. POLISHED CHROME FAUCET W/TOP BRACE, STOPS AND VACUUM BREAKER.
EWC-1	ELECTRIC WATER COOLER, TWO STATION, ADA COMPLIANT	2	1 1/2	2	N/A	1/2	ELKAY EZSTL8C	W/ FRONT AND SIDE CONTROLS, 9.6 GPH 50°F DRINKING WATER, 120V/1ø/3.7A, CHROMED ANGLE STOP, CHROMED BRASS "P" TRAP, AND CHROMED BRASS SUPPLY.
WH-1	FREEZELESS WALL HYDRANT	N/A	N/A	N/A	N/A	3/4	WOODFORD MFG 65	W/ LOOSE KEY, AND INTEGRAL VACUUM BREAKER.
ESEW-1	COMBINATION EMERGENCY DRENCH SHOWER AND EYE WASH UNIT	2	1 1/2	2	1 1/2	N/A	BRADLEY MODEL S19-310 W/WATTS FD-100-A	PRESSURE BALANCED SHOWER VALVE W/ INTEGRAL SERVICE STOPS, PULL ROD W/ TRIANGULAR HANDLE. EYE WASH BOWL WITH PUSH HANDLE.
FD-1	FLOOR DRAIN W/ TRAP GUARD	X	X	X/2 2" MIN	N/A	N/A	ZURN FD-2321-NH"X" "X" INDICATED ON DRAWINGS W/ PROSET TRAPGUARD T25530	CAST IRON BODY, ADJUSTABLE NICKEL BRONZE STRAINER ASSEMBLY, MEMBRANE CLAMP, WEEP HOLES, AND TRAP PRIMER CONNECTION.
FS-1	FLOOR SINK 6" DEEP	2	2	2	N/A	N/A	ZURN FD-2375-Y	CAST IRON, 12"X12"X6" DEEP, 1/2 GRATE, WHITE ACID RESISTING INTERIOR, PVC DOME STRAINER, AND SEDIMENT BUCKET.
STAND	STANDPIPE	2	2	2	N/A	N/A	N/A	PROVIDE TRAP PRIMER.

GAS FIRED WATER HEATER SCHEDULE (GWH)

GWH / GAL

MARK	INPUT MBH	OUT. MBH	EFF. %	FUEL	TANK GAL	REC. GPH	TEMP. RISE °F	OPER. TEMP °F	FLUE		DIMENSIONS			ELECTRICAL		MANUFACTURER MODEL	REMARKS
									D IN	TYPE	D IN	H IN	OPER. WT LBS	VOLT/ PHASE	AMP		
GWH-1	199	139	94	LPG	100	202	90	140	3	PVC	28	56	1275	120/ 1ø	10	A. O. SMITH BTH-199	LPG FIRED, W/ WATER HEATER SAFETY PAN, AND AMTROL ST-12-C EXPANSION TANK

EXPANSION TANK SCHEDULE (ET)

ET / GAL

MARK	SYSTEM SERVED	TEMP °F	GLYC. %	TANK VOL. GAL	ACCEPT. VOL. GAL	PRE-CHARGE PSI	DIMENSIONS			MANUFACTURER MODEL	REMARKS
							DIA. IN	H IN	WT LBS		
ET-1	URINAL	60	POTABLE	6.4	3.2	65	12	16	55	AMTROL THERM-X-TROL ST-12-C	W/ POTABLE WATER BLADDER

PRV SCHEDULE (PRV)

PRV / SETTING

MARK	SIZE	GPM	PD PSI	SETTING	MANUFACTURER MODEL
PRV-1	3/4	20	10	65	WATTS 223S

OGDEN BAY GREAT SALT LAKE ECOSYSTEM STORAGE BUILDING PHASE I
DIVISION OF WILDLIFE RESOURCES
DFCM PROJECT # 09014520
SOUTH OGDEN, UTAH

SMD ENGINEERING, PLLC
"Engineered Mechanical Solutions"
986 WEST ATHERTON DRIVE, SUITE 200
TAYLORSVILLE, UTAH 84123
(801) 268-3828,
FAX (801) 268-3297

JRCA
ARCHITECTS
577 South 200 East
Salt Lake City, Utah 84111
(801) 533-2100 fax: 533-2101 jrcadesign.com

DATE/REVISION	PROJECT #.
01 · 06 · 09	20081204

PLUMBING SCHEDULES

PP 601

FIXTURE SCHEDULE

TYPE	DESCRIPTION	CATALOG NUMBER	VOLTS	LAMPS
A	2 X 4 LAY-IN; A12.125 ACRYLIC LENS; 2-LAMP .71 BALLAST FACTOR BALLAST SYLVANIA PSX CAM LATCHES	LITHONIA 2SP8G 232 A12.125 SYLVANIA PSX .71 BF	120	(2) F32 T8 835 SYLVANIA XPS
AE	SAME AS TYPE A WITH 1400 LUMEN EMERGENCY BATTERY PACK	LITHONIA 2SP8G 232 A12.125 SYLVANIA PSX .71 BF EL14	120	(2) F32 T8 835 SYLVANIA XPS
B	2 X 4 LAY-IN; A12.125 ACRYLIC LENS; 3-LAMP .71 BALLAST FACTOR BALLAST SYLVANIA PSX	LITHONIA 2SP8G 332 A12.125 SYLVANIA PSX .71 BF	120	(3) F32 T8 835 SYLVANIA XPS
BE	SAME AS TYPE B WITH 1400 LUMEN EMERGENCY BATTERY PACK	LITHONIA 2SP8G 332 A12.125 SYLVANIA PSX .71 BF EL14	120	(3) F32 T8 835
C	RECESSED FLUORESCENT SHOWER LIGHT WET LOCATION	LITHONIA LF6 1/32 FBLS73 120 GEB10	120	(1) 32W TT 35K
D	EXTERIOR HID WALL LIGHT	LITHONIA TWS 50M 120 DWH LP1	120	(1) 50M (INCLUDED)
E	EXTERIOR EMERGENCY WALL LIGHT WET LOCATION; -18 DEGREE NI CAD BATTERY	LITHONIA AFN W EXT	120	(INCLUDED)

LIGHT FIXTURE ABBREVIATION SCHEDULE

NOTE: NOT ALL ABBREVIATIONS WILL NECESSARILY BE USED.

A.F.F.	ABOVE FINISH FLOOR
WALL@CLG	WALL MOUNT AT CORNER OF WALL AND CEILING
CCBA	CUSTOM PAINTED COLOR AS SELECTED BY THE ARCHITECT
SCBA	STANDARD PAINTED COLOR AS SELECTED BY THE ARCHITECT
CFBA	CUSTOM FINISH AS SELECTED BY THE ARCHITECT
SFBA	STANDARD FINISH AS SELECTED BY THE ARCHITECT
MOD	MODIFY STANDARD LIGHT FIXTURE AS INDICATED

LIGHT FIXTURE GENERAL NOTES

1. REFER TO THE ARCHITECTURAL REFLECTED CEILING PLANS FOR LOCATIONS OF LIGHT FIXTURES. BRING ALL DISCREPANCIES OF LOCATIONS AND QUANTITIES TO THE ATTENTION OF THE ARCHITECT AND ELECTRICAL ENGINEER PRIOR TO BIDDING.
2. REFER TO ARCHITECTURAL ELEVATIONS FOR MOUNTING HEIGHTS AND LOCATIONS OF LIGHT FIXTURES. BRING ALL DISCREPANCIES TO THE ATTENTION OF THE ARCHITECT PRIOR TO BIDDING.
3. REFER TO THE SPECIFICATIONS FOR OTHER LIGHT FIXTURE, FUSING, BALLAST, AND LAMP REQUIREMENTS AND ACCEPTABLE MANUFACTURERS.
4. REFER TO ARCHITECTURAL DRAWINGS AND SPECIFICATIONS FOR LOUVER REQUIREMENTS AS REQUIRED.
5. CONFIRM AVAILABLE MOUNTING DEPTHS OF ALL LIGHT FIXTURES AND COMPARE WITH DEPTHS SHOWN ON SHOP DRAWINGS. BRING ALL POTENTIAL CONFLICT AREAS TO THE ATTENTION OF THE ARCHITECT AND ELECTRICAL ENGINEER PRIOR TO RELEASE.

BIDDING REQUIREMENTS

1. BID ONLY PRODUCTS THAT ARE SPECIFIED OR APPROVED BY ADDENDUM.
2. PACKAGING OF LIGHT FIXTURES WITH OTHER SYSTEMS IS NOT ALLOWED.
3. WHEN ONLY ONE PRODUCT IS APPROVED FOR BIDDING, THE PRICE FOR THAT ITEM SHALL BE BROKEN OUT SEPARATELY WHEN SUBMITTING PRICING TO VARIOUS DISTRIBUTORS AND/OR CONTRACTORS.
4. WHEN A CONTRADICTION EXISTS BETWEEN A SPECIFIC MODEL NUMBER AND THE DESCRIPTION, THE DESCRIPTION SHALL GOVERN.

PRIOR APPROVAL REQUIREMENTS

1. PRIOR APPROVAL IS REQUIRED BEFORE BIDDING THIS PROJECT.
2. PRIOR APPROVALS SHALL BE SUBMITTED TO THE ELECTRICAL ENGINEER'S OFFICE AT LEAST (8) EIGHT WORKING DAYS BEFORE THE BID. PRIOR APPROVALS RECEIVED AFTER THIS TIME PERIOD SHALL BE REJECTED.
3. PRIOR APPROVALS SHALL BE SIGNED BY A PRINCIPAL OF THE SUBMITTING ORGANIZATION STATING THAT THEY HAVE PREPARED AND/OR REVIEWED THE SUBMITTAL AND THAT THE PRODUCTS PROPOSED ARE EQUIVALENT TO THOSE SPECIFIED. ANY EXCEPTIONS SHALL BE SO NOTED.
4. ITEMS THAT ARE SUBMITTED AND HAVE BEEN APPROVED WILL BE LISTED IN THE ADDENDUM(S). VERBAL APPROVAL WILL NOT BE GIVEN ON ANY ITEM.
5. IT IS NOT THE RESPONSIBILITY OF THE ELECTRICAL ENGINEER TO NOTIFY THE SUBMITTING PARTY OF ERRORS IN THE SUBMITTAL. NOTIFICATION OF ERRORS BY THE ELECTRICAL ENGINEER PRIOR TO ISSUANCE OF THE ADDENDUM(S) MAY NOT BE GIVEN.
6. PRIOR APPROVALS SHALL CONSIST OF TWO SETS OF CUT SHEETS DESCRIBING THE PRODUCTS BEING SUBMITTED AS EQUIVALENTS. FAXES ARE NOT ACCEPTABLE. ALL SPECIFICATION INFORMATION SHALL BE CLEARLY MARKED, WITH NON-APPLICABLE INFORMATION CROSSED OUT. COMPLETE PHOTOMETRIC DATA SHALL BE PROVIDED. PRODUCTS WITHOUT PHOTOMETRIC DATA WILL NOT BE APPROVED.
7. SUPPLY POINT-BY-POINTS AS REQUIRED BY THE ELECTRICAL ENGINEER AND/OR LIGHTING DESIGNER.
8. SAMPLE FIXTURES MUST BE SUPPLIED WITH A CORD, PLUG AND 120V BALLAST.

LIGHTING SHOP DRAWING REQUIREMENTS

1. REFER TO SPECIFICATIONS 16001, 16510 & 16551.
2. MUST INCLUDE BALLAST AND LAMP CUT SHEETS.
3. LINEAR LIGHTING MUST INCLUDE DETAILED DRAWINGS WITH SUPPORT DETAILS, STEM LOCATIONS AND HAVE ALL LENGTHS IDENTIFIED WITH STEM LOCATIONS.
4. COLOR SAMPLES MUST BE INCLUDED IN FIRST SUBMITTAL.
5. CUT SHEETS MUST BE STAMPED WITH THE FACTORY REPRESENTATIVE'S COMPANY NAME.
6. VALUE ENGINEERING CONDUCTED WITHOUT THE DESIGN TEAM IE; ARCHITECT, OWNER, ENGINEER & LIGHTING CONSULTANT/DESIGNER WILL NOT BE ALLOWED, REVIEWED OR APPROVED.
7. PROVIDE A LIST OF SPARE PARTS, EQUIPMENT & LAMPS.

DEMOLITION NOTES

1. COORDINATE ALL NEW ELECTRICAL EQUIPMENT REQUIREMENTS AND MAKE CONNECTION TO EXISTING SYSTEMS. THIS INCLUDES LIGHTING, POWER, SIGNAL, RACEWAY AND OTHER SYSTEMS INCLUDED UNDER DIVISION 16.
2. RELOCATE, REWIRE AND/OR RECONNECT EXISTING ELECTRICAL DEVICES AND/OR EQUIPMENT THAT FOR ANY REASON OBSTRUCTS CONSTRUCTION.
3. CONCEAL ALL RACEWAY AND WIRING IN EXISTING WALLS, CEILINGS, FLOORS, ETC. EXCEPT WHERE THE USE OF SURFACE METAL RACEWAYS (E.G. WIRE MOLD) IS INDICATED ON DRAWINGS OR IN SPEC.
4. LEAVE ALL EXISTING EQUIPMENT, IN PORTIONS OF THE BUILDING NOT BEING REMODELED, IN WORKING CONDITION. RESTORE ALL INTERRUPTED BRANCH CIRCUITS, FEEDERS, ETC. TO WORKING CONDITION.
5. EXISTING RACEWAYS MAY BE REUSED (IN PLACE) WHERE POSSIBLE, AND WHERE IN COMPLIANCE WITH THE SPECIFICATIONS AND THE INTENT OF THE CONTRACT DOCUMENTS. INSURE INTEGRITY OF EXISTING RACEWAY BEFORE REUSE.
6. REMOVE ALL RACEWAYS, CONDUCTORS, BOXES, DEVICES, EQUIPMENT, ETC. THAT ARE NOT TO BE REUSED.
7. REMOVE EXISTING LIGHT FIXTURES WHICH ARE NOT TO BE REUSED, PLACE IN CARTON, LABEL APPROPRIATELY, AND RETURN TO OWNER, OR PROPERLY DISPOSE OF FIXTURES THAT THE OWNER CHOOSES NOT TO KEEP.
8. DO NOT PENETRATE STRUCTURAL ELEMENTS OF FLOORS, WALLS, CEILINGS, ROOFS, ETC.
9. DISCONNECT AND RECONNECT ANY/ALL FIXTURES, DEVICES, EQUIPMENT, ETC. REQUIRED FOR PROPER COMPLETION OF THE WORK.

GENERAL NOTES

1. CONSULT ARCHITECTURAL REFLECTED CEILING PLANS FOR EXACT LOCATION OF ALL LIGHTING FIXTURES.
2. VERIFY ALL EQUIPMENT DIMENSIONS AND LOCATIONS BEFORE BEGINNING ROUGH IN. CONSULT ALL APPLICABLE CONTRACT DRAWINGS AND SHOP DRAWINGS TO INSURE NEC CODE CLEARANCES REQUIRED AROUND ALL ELECTRICAL EQUIPMENT.
3. CONTRACTOR SHALL VERIFY ALL ELECTRICAL LOADS (VOLTAGE, PHASE, CONNECTION REQUIREMENTS, ETC.) OF EQUIPMENT FURNISHED UNDER DIVISION 15 WITH APPROVED MECHANICAL SHOP DRAWINGS BEFORE BEGINNING ROUGH IN.
4. SEE SECTION 16510 OF THE SPECIFICATION REQUIRED COORDINATION MEETINGS WITH MECHANICAL AND CEILING CONTRACTORS.
5. SEE APPLICABLE SHOP DRAWINGS FOR ROUGH IN LOCATION OF ALL EQUIPMENT, WIRING DEVICES, ETC. WHERE APPLICABLE MOUNT ALL WIRING DEVICES ABOVE BACK SPLASH EXCEPT THOSE SERVING UNDER COUNTER EQUIPMENT.
6. SEE SPECIFICATION FOR ENERGY SAVING LAMP AND BALLAST REQUIREMENTS.
7. FINISHES OF ALL LIGHT FIXTURES SHALL BE AS SELECTED BY ARCHITECT.
8. THE ELECTRICAL CONTRACTOR SHALL NOTIFY AND COOPERATE WITH THE MECHANICAL CONTRACTOR SUCH THAT NO PIPING, DUCTS, OR EQUIPMENT FOREIGN TO THE OPERATION OF THE ELECTRICAL EQUIPMENT SHALL BE PERMITTED TO BE INSTALLED IN, ENTER OR PASS THRU ELECTRICAL ROOMS OR SPACES, OR ABOVE OR BELOW ELECTRICAL EQUIPMENT IN OTHER AREAS.
9. ELECTRICAL BOXES SHALL NOT BE LOCATED IN MASONRY COLUMNS IN BRICK WALLS OR IN GROUTED CELLS ADJACENT TO OPENINGS. COORDINATE LOCATION OF BOXES WITH MASONRY CONTRACTOR.
10. ALL PENETRATIONS OF FIRE RATED FLOORS, WALLS, AND CEILINGS SHALL BE SEALED WITH APPROVED MATERIAL TO MAINTAIN FIRE RATING OF SURFACE PENETRATED.
11. CIRCUITS EXTENDING OVER 70' FOR 120 VOLT AND 165' FOR 277 VOLT 20 AMP CIRCUITS SHALL BE RUN WITH MINIMUM #10 CONDUCTORS.

ELECTRICAL SYMBOL SCHEDULE

1. SEE FIXTURE SCHEDULE FOR TYPE, MOUNTING AND WATTAGE.
2. HEIGHT MEASURED TO CENTER LINE OF THE BOX FROM THE FINISH FLOOR.
3. REFER TO DRAWINGS FOR DIRECTIONAL ARROWS.
4. SUBSCRIPT KEYS SWITCH TO FIXTURES CONTROLLED.
5. NEMA TYPE 'ND' NON-FUSED UNLESS NOTED 'F' (FUSED). USE 'HD' 480 V.
6. HEIGHT TO BE THE LOWER OF EITHER 80" A.F.F. OR 6" BELOW CEILING.
7. PROVIDE H.O.A. AND S.S. PUSHBUTTONS AS REQUIRED.
8. DOUBLE ARROWS DENOTE A DOUBLE FACE UNIT.
9. COORDINATE WITH MILLWORK SHOP DRAWINGS AND ELEVATIONS FOR HEIGHT.
10. SUBSCRIPT DENOTES NEMA CONFIGURATION.
11. HEIGHT MEASURED TO BOTTOM OF THE BOX FROM FINISH FLOOR.

* TYPICAL SYMBOL SCHEDULE. SOME SYMBOLS MAY NOT BE USED IN THIS SET OF DRAWINGS.

STANDARD MOUNTING HEIGHT UNLESS OTHERWISE NOTED ON PLANS

SYMBOL	DESCRIPTION	MOUNTING HEIGHT	NOTES
	ONE CIRCUIT, TWO WIRE HOME RUN TO PANEL		
	2 CIRCUIT, 3 WIRE, COMMON NEUTRAL HOME RUN		
	3 CIRCUIT, 4 WIRE, COMMON NEUTRAL HOME RUN		
	CONDUIT RUN CONCEALED IN WALL OR CEILING		
	CONDUIT RUN CONCEALED IN FLOOR OR GROUND		
	CONDUIT UP		
	CONDUIT DOWN		
	CONDUIT STUB LOCATION	CAP CONDUIT	
	CABLE TRAY	AS NOTED	
	CEILING LIGHT FIXTURE	CEILING	1.
	WALL LIGHT FIXTURE	AS NOTED	1.
	RECESSED DOWNLIGHT FIXTURE	CEILING	1.
	FLUORESCENT LIGHT FIXTURE	AS NOTED	1
	FLUORESCENT EGRESS LIGHT FIXTURE	AS NOTED	UNSWITCHED
	AREA LIGHT POLE AND FIXTURE	CONCRETE BASE	SEE DIAGRAM
	FLOOD OR TRACK FIXTURE	AS NOTED	
	CEILING MOUNTED EXIT LIGHT	CEILING	1.3.8.
	WALL MOUNTED EXIT LIGHT	AS NOTED	1.3.8.
$	SINGLE POLE SWITCH	+4'-0"	2.
$a	SINGLE POLE SWITCH	+4'-0"	4. 2.
$3	THREE-WAY SWITCH	+4'-0"	2.
$4	FOUR-WAY SWITCH	+4'-0"	2.
$K	KEY OPERATED SWITCH	+4'-0"	2.
$P	SWITCH WITH PILOT LIGHT	+4'-0"	2.
$D	VARIABLE INTENSITY SWITCH	+4'-0"	2.
$TM	TIMER SWITCH	+4'-0"	2.
$	MOMENTARY CONTACT SWITCH, CENTER POSITION OFF	+4'-0"	2.
	OCCUPANCY SENSOR	CEILING	
	OCCUPANCY SENSOR	+4'-0"	2.
PP	POWER PACK	CEILING	SEE DIAGRAM, SPEC.
A	AUTOMATIC RELAY PACK	CEILING	SEE DIAGRAM. SPEC.
T	LOW VOLTAGE TRANSFORMER		
	DUPLEX RECEPTACLE UPPER OUTLET SWITCH CONTROLLED	+16" OR AS NOTED	9. 11.
	SIMPLEX RECEPTACLE	+16" OR AS NOTED	9. 11.
	DUPLEX RECEPTACLE	+16" OR AS NOTED	9. 11.
A	DUPLEX RECEPTACLE		9.
W	ELECTRIC WATER COOLER RECEPTACLE		SEE DIAGRAM
WP	WEATHERPROOF RECEPTACLE	+24" OR AS NOTED	2. 9.
IG	ISOLATED GROUND RECEPTACLE	+16" OR AS NOTED	9. 11.
	GROUND FAULT INTERRUPTER DUPLEX RECEPTACLE	+16" OR AS NOTED	9. 11.
	DUPLEX RECEPTACLE EMERGENCY POWER (RED)	+16" OR AS NOTED	9. 11.
	FOURPLEX RECEPTACLE	+16" OR AS NOTED	9. 11.
	FOURPLEX RECEPTACLE EMERGENCY POWER (RED)	+16" OR AS NOTED	9. 11.
	FLOOR OUTLET WITH 20A DEVICE	FLOOR	
	MULTIPLE SERVICE FLOOR BOX	FLOOR	
	SPECIAL PURPOSE OUTLET	+16" OR AS NOTED	10. WITH CAP. 11.
	CORD DROP		SEE DIAGRAM
	PLUGMOLD	+46" OR AS NOTED	
	TELEVISION OUTLET	+16" OR AS NOTED	11.
	DATA OUTLET	+16" OR AS NOTED	9. 11.
	TELEPHONE OUTLET	+16" OR AS NOTED	9. 11.
	TELEPHONE/DATA OUTLET	+16" OR AS NOTED	9. 11.
	TELEPHONE OUTLET	FLOOR	
	CALL SWITCH	+4'-0"	2.
C	CLOCK OUTLET	+7'-6"	8.
C	CLOCK/SPEAKER COMBINATION	+7'-6"	

STANDARD MOUNTING HEIGHT UNLESS OTHERWISE NOTED ON PLANS

SYMBOL	DESCRIPTION	MOUNTING HEIGHT	NOTES
J	JUNCTION BOX ('F' IN FLOOR)	AS NOTED	
	MOTOR OUTLET	TO SUIT EQUIP.	
P	PHOTO-ELECTRIC CONTROL	AS NOTED	TORK 2000A
TC	TIME CLOCK	+5'-0"	2.
	PUSHBUTTON	+4'-0"	2.
	NON-FUSED DISCONNECT SWITCH	+5'-0"	5.
F	FUSED DISCONNECT SWITCH	+5'-0"	5.
$T	MANUAL STARTER THERMAL OVERLOAD SWITCH WITH PILOT LIGHT	+4'-0"	2.
	MAGNETIC STARTER	+5'-0"	7.
	MAGNETIC STARTER / DISCONNECT COMBINATION	+5'-0"	
VFD	VARIABLE FREQUENCY DRIVE	+6'-6"	
	PANEL BOARD	TOP AT +6'-0"	
	MAIN DISTRIBUTION PANEL		
	TELEPHONE TERMINAL BOARD		
	BELL	+7'-6"	
	CHIME	+7'-6"	
F	FIRE ALARM MANUAL STATION	+4'-0"	2.
H	FIRE ALARM SIGNAL HORN/STROBE PROJECTORS	+6'-8"	6.
H	FIRE ALARM SIGNAL HORN/STROBE	+6'-8"	6.
E	FIRE ALARM SIGNAL SPEAKER/STROBE	+6'-8"	6.
S	SMOKE DETECTOR	CEILING	
D	DUCT SMOKE DETECTOR		MTD. IN DUCT
H	HEAT DETECTOR	CEILING	
D	FIRE/SMOKE DAMPER		
	DOOR HOLDER	AS NOTED	
FS	FLOW SWITCH		
TS	TAMPER SWITCH		
WF	WATER FLOOD INDICATOR		
	O.S. & Y. VALVE		SEE DIAGRAM
R	FIRE ALARM RELAY		
CM	FIRE ALARM CONTROL MODULE		
MM	FIRE ALARM MONITOR MODULE		
S	FIRE ALARM STROBE	+6'-8"	6.
D	DURESS PUSHBUTTON	+4'-0"	
D 1	SECURITY SYSTEM DOOR SWITCH	DOOR JAMB	
D 2	SECURITY SYSTEM OVERHEAD DOOR SWITCH	CEILING	MOUNT AS PER. MAN
M	MAGNETIC SHEAR LOCK		
A	SECURITY SYSTEM KEYED ACCESS SWITCH	+4'-0"	2.
I	INFRARED SENSOR	AS NOTED	
M	SECURITY MOTION DETECTOR		MOUNT AS PER. MAN
G	GLASS BREAK DETECTOR	CEILING	
ES	ELECTRIC DOOR STRIKE		
CR	ACCESS CONTROL CARD READER	+4'-0"	2.
	CLOSED CIRCUIT TELEVISION CAMERA	AS NOTED	
	DOOR POSITION INDICATING SWITCH		
#	SOUND SYSTEM SPEAKER	+8'-0" OR AS NOTED	
IC	INTERCOM SPEAKER	AS NOTED	
V	VOLUME CONTROL	+4'-0"	2.
M	MICROPHONE OUTLET	+16"	11.
M	MICROPHONE FLOOR OUTLET	FLOOR	
M	MICROPHONE CEILING OUTLET	CEILING	
	SOUND EQUIPMENT CABINET		CIRCUIT TO 120V
842	ARCHITECTURAL ROOM NUMBER		
A	LIGHT FIXTURE (LETTER DESIGNATES TYPE)		
EQ 34	EQUIPMENT NUMBER		

INDEX OF ELECTRICAL DRAWINGS

EG101 SYMBOLS, SCHEDULES AND NOTES

ES101 ELECTRICAL SITE PLAN

EE201 TRAILER 1 ELECTRICAL PLAN
EE301 TRAILER 2 ELECTRICAL PLAN

EX101 ONE-LINE DIAGRAM AND PANELBOARD SCHEDULES
EX102 ELECTRICAL DIAGRAMS
EX103 ELECTRICAL DIAGRAMS, SCHEDULES

OGDEN BAY GREAT SALT LAKE ECOSYSTEM TRAILERS
PHASE I
DIVISION OF WILDLIFE RESOURCES
DFCM PROJECT # 09014520
SOUTH OGDEN, UTAH

BNA CONSULTING
SALT LAKE ST.GEORGE
635 South State Street
Salt Lake City, Utah 84111
P:801.532.2196
F:801.532.2305
www.bnaconsulting.com

© 2008 BNACONSULTING

JRCA
ARCHITECTS
577 South 200 East
Salt Lake City, Utah 84111
(801) 533-2100 fax: 533-2101 jrcadesign.com

DATE/REVISION	PROJECT #.
01 · 06 · 09	08245A
02 · 09 · 09	08245A

LICENSED PROFESSIONAL ENGINEER
B. ELAINE FAWSON
No. 295587
STATE OF UTAH

SYMBOLS, SCHEDULES AND NOTES

EG 101

By: paul; Mar 02, 2009 - 9:13am
F:\2008\245A\DRAW\245A-dEG101.dwg

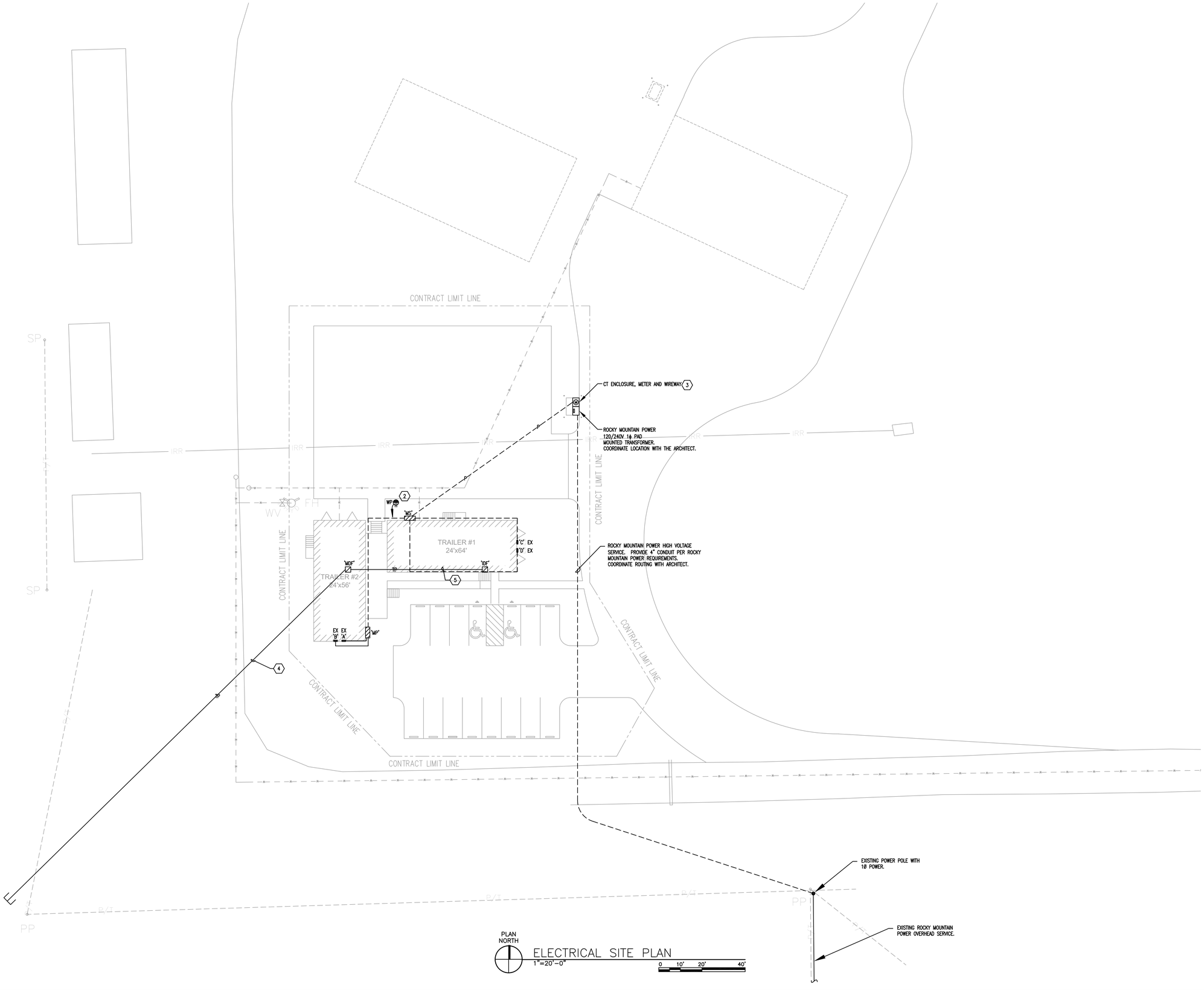

ELECTRICAL SITE PLAN
1"=20'-0"

SHEET KEYNOTES

1. FIELD VERIFY LOCATION OF EXISTING TRAILER PANELS PRIOR TO BID.
2. CIRCUIT OUTLET FOR SEWAGE EJECTOR PUMP TO NEW PANEL 'MDP' PER ONE-LINE DIAGRAM. PROVIDE CONTROL WIRING PER MANUFACTURER'S WRITTEN INSTRUCTIONS IN 3/4" CONDUIT TO HIGH LEVEL ALARM PANEL MOUNTED ON TRAILER SKIRT. VERIFY EXACT LOCATIONS WITH THE ARCHITECT.
3. PROVIDE UNISTRUT RACK.
4. PROVIDE A 4" CONDUIT FROM 'MDF' TO EXISTING TELEPHONE SERVICE AT EXISTING HOUSE. USE WIDE SWEEP ELBOWS AND PROVIDE PULL ROPE. FIELD VERIFY EXACT LOCATION.
5. PROVIDE A 4" CONDUIT FROM 'MDF' TO 'IDF'.

OGDEN BAY GREAT SALT LAKE
ECOSYSTEM TRAILERS
PHASE I
DIVISION OF WILDLIFE RESOURCES
DFCM PROJECT # 09014520
SOUTH OGDEN, UTAH

BNA CONSULTING
SALT LAKE ST.GEORGE
635 South State Street
Salt Lake City, Utah 84111
P:801.532.2196
F:801.532.2305
www.bnaconsulting.com
© 2008 BNACONSULTING

JRCA
ARCHITECTS
577 South 200 East
Salt Lake City, Utah 84111
(801) 533-2100 fax: 533-2101 jrcadesign.com

DATE/REVISION	PROJECT #.
01 · 06 · 09	08245A
02 · 09 · 09	08245A

LICENSED PROFESSIONAL ENGINEER
B. ELAINE FAWSON
No. 295587
STATE OF UTAH

ELECTRICAL SITE PLAN

ES 101

By: paul; Mar 02, 2009 – 9:10am
F:\2008\245A\DRAW\245A-bES101.dwg

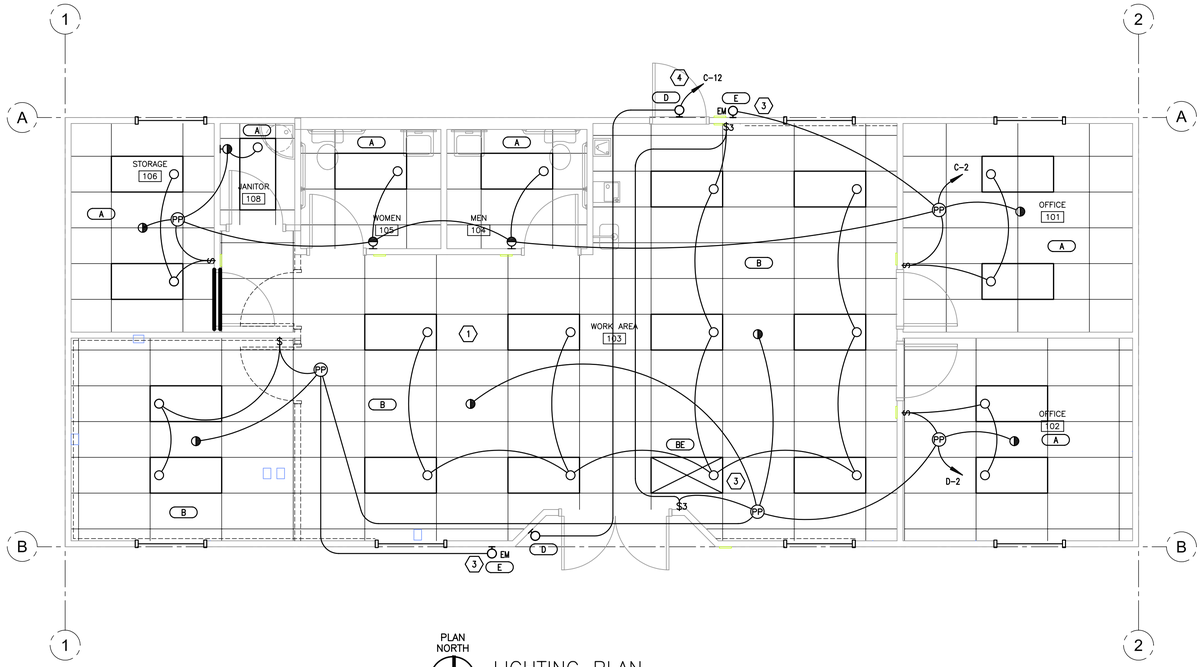

PLAN NORTH

LIGHTING PLAN
1/4"=1'-0"

0 2' 4' 8'

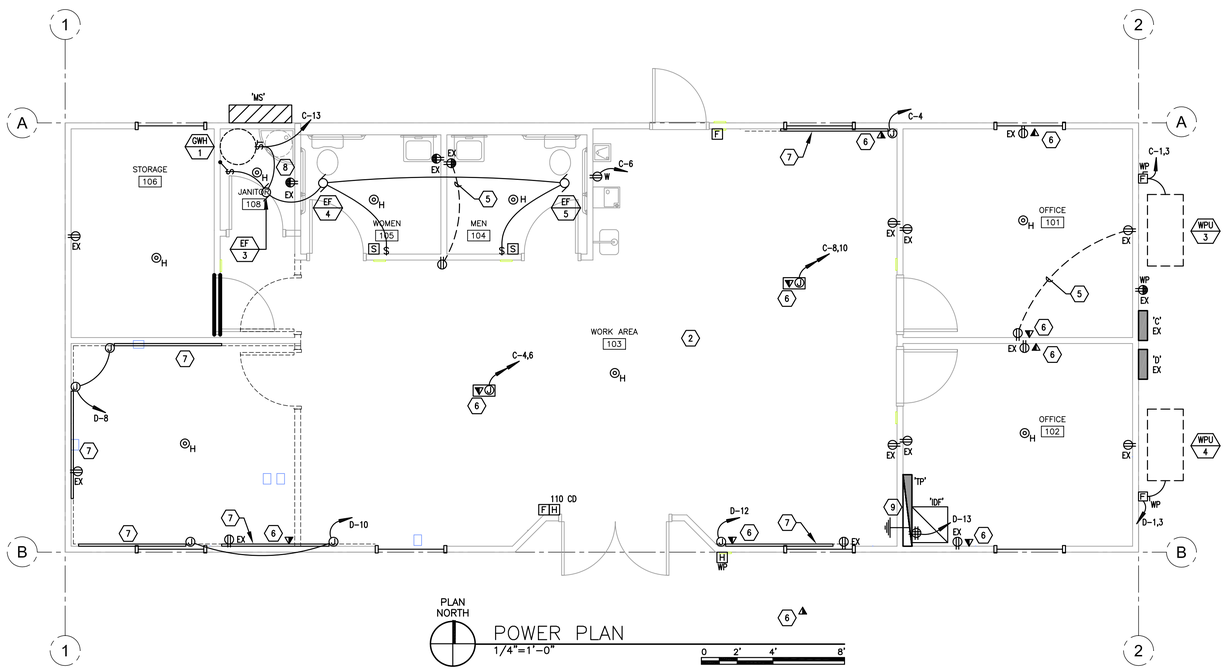

PLAN NORTH

POWER PLAN
1/4"=1'-0"

0 2' 4' 8'

SHEET KEYNOTES

1. REMOVE EXISTING LIGHT FIXTURES, SWITCHES AND WIRING BACK TO PANEL. PROVIDE NEW LIGHTING AS SHOWN. (TYPICAL OF ALL SPACES).
2. REMOVE EXISTING OUTLETS ON WALLS WHICH ARE BEING REMOVED. PROVIDE ALL WORK REQUIRED TO MAINTAIN EXISTING OUTLETS WHICH REMAIN IN SERVICE. (TYPICAL OF ALL SPACES).
3. EXTEND A HOT CONDUCTOR AHEAD OF THE OCCUPANCY SENSOR TO THE EMERGENCY BATTERY PACK. USE SAME CIRCUIT PROVIDED FOR NORMAL OPERATION OF THE FIXTURES.
4. CIRCUIT THROUGH LIGHTING CONTACTOR. SEE LIGHTING CONTROL DIAGRAM.
5. CONNECT NEW CONVENIENCE OUTLET TO EXISTING OFFICE OUTLET CIRCUIT.
6. PROVIDE 4" SQUARE JUNCTION BOX WITH SINGLE GANG MUD RING. PROVIDE A 1" EMT CONDUIT FROM JUNCTION BOX TO MDF. PROVIDE PULL ROPE IN ALL RACEWAY.
7. PROVIDE WIREMOLD 2457224GBX991V WIREMOLD WITH ACCESSORIES AS REQUIRED FOR A COMPLETE SYSTEM. MOUNT AT +44" AFF.
8. REPLACE EXISTING OUTLET WITH NEW GFI OUTLET.
9. PROVIDE #6 COPPER GROUND TO PANEL MS GROUND BUS.

OGDEN BAY GREAT SALT LAKE
ECOSYSTEM TRAILERS
PHASE I
DIVISION OF WILDLIFE RESOURCES
DFCM PROJECT # 09014520
SOUTH OGDEN, UTAH

BNA CONSULTING
SALT LAKE ST.GEORGE
635 South State Street
Salt Lake City, Utah 84111
P:801.532.2196
F:801.532.2305
www.bnaconsulting.com
© 2008 BNACONSULTING

JRCA
ARCHITECTS
577 South 200 East
Salt Lake City, Utah 84111
(801) 533-2100 fax: 533-2101 jrcadesign.com

DATE/REVISION	PROJECT #.
01 · 06 · 09	08245A
02 · 09 · 09	08245A

LICENSED PROFESSIONAL ENGINEER
B. ELAINE FAWSON
No. 295587
STATE OF UTAH

TRAILER 1
ELECTRICAL
PLAN

EE
201

By: paul; Mar 02, 2009 – 9:08am
F:\2008\245A\DRAW\245A--EE201.dwg

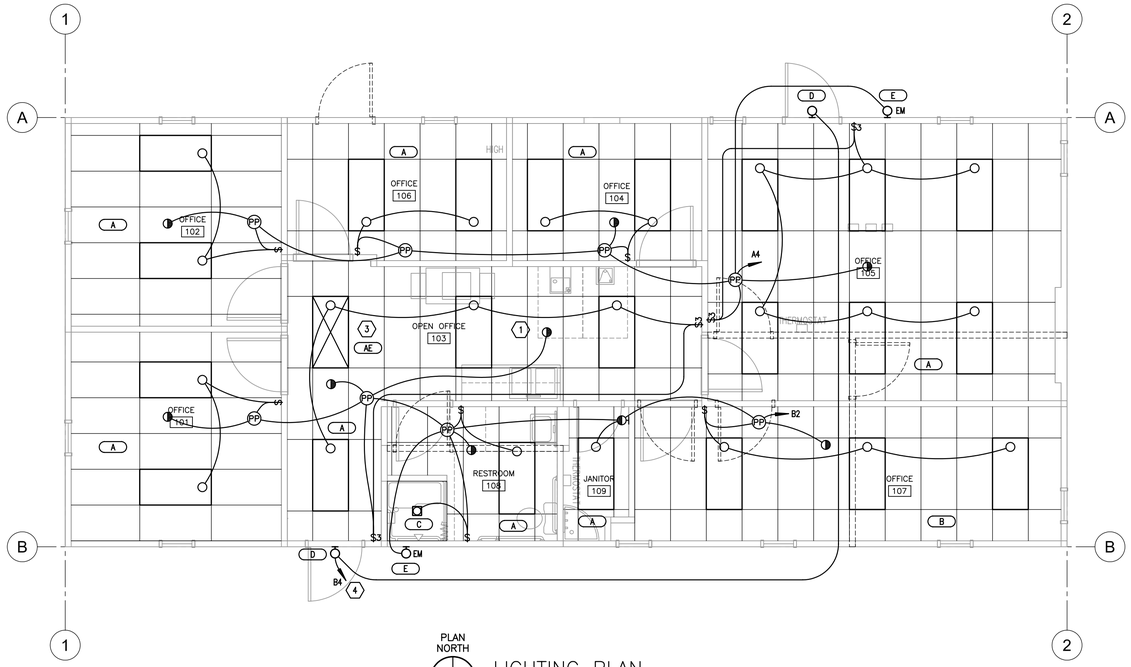

PLAN NORTH

LIGHTING PLAN
1/4"=1'-0"

0 2' 4' 8'

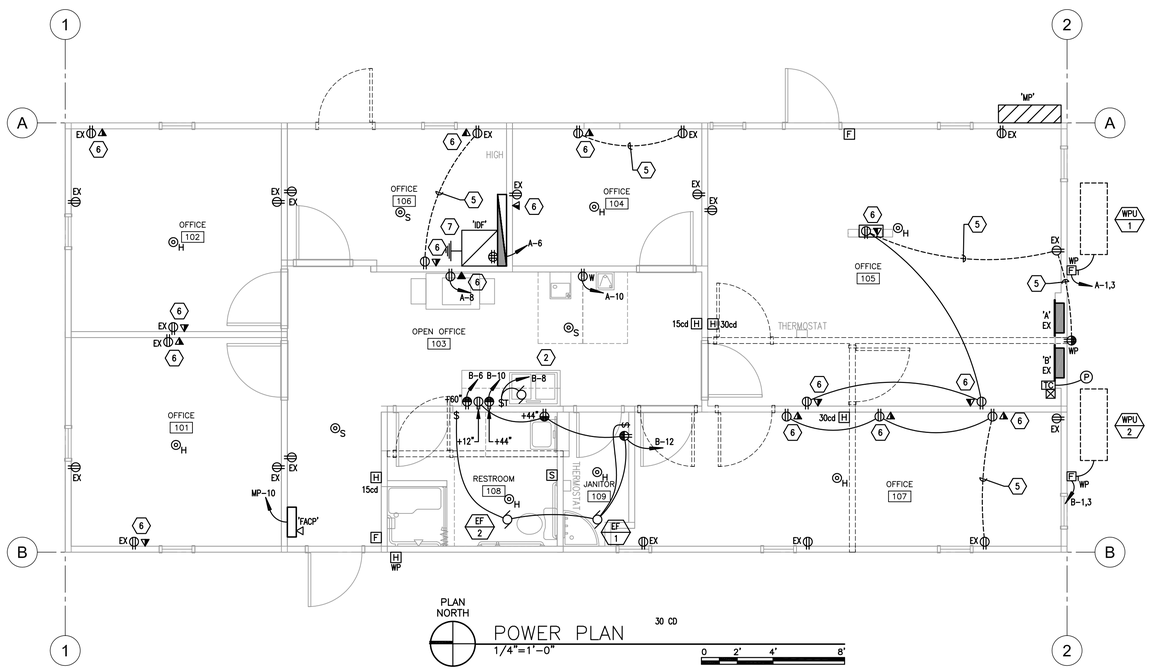

PLAN NORTH

POWER PLAN
1/4"=1'-0"

30 CD

0 2' 4' 8'

SHEET KEYNOTES

1. REMOVE EXISTING LIGHT FIXTURES, SWITCHES AND WIRING BACK TO PANEL. PROVIDE NEW LIGHTING AS SHOWN. (TYPICAL OF ALL SPACES).
2. REMOVE EXISTING OUTLETS ON WALLS WHICH ARE BEING REMOVED. PROVIDE ALL WORK REQUIRED TO MAINTAIN EXISTING OUTLETS WHICH REMAIN IN SERVICE. (TYPICAL OF ALL SPACES).
3. EXTEND A HOT CONDUCTOR AHEAD OF THE OCCUPANCY SENSOR TO THE EMERGENCY BATTERY PACK. USE SAME CIRCUIT PROVIDED FOR NORMAL OPERATION OF THE FIXTURES.
4. CIRCUIT THROUGH LIGHTING CONTACTOR. SEE LIGHTING CONTROL DIAGRAM.
5. CONNECT NEW CONVENIENCE OUTLET TO EXISTING OFFICE OUTLET CIRCUIT.
6. PROVIDE 4" SQUARE JUNCTION BOX WITH SINGLE GANG MUD RING. PROVIDE A 1" EMT CONDUIT FROM JUNCTION BOX TO MDF. PROVIDE PULL ROPE IN ALL RACEWAY.
7. PROVIDE A #6 COPPER GROUND FROM MDF TO PANEL 'MP'.

OGDEN BAY GREAT SALT LAKE
ECOSYSTEM TRAILERS
PHASE I
DIVISION OF WILDLIFE RESOURCES
DFCM PROJECT # 09014520
SOUTH OGDEN, UTAH

BNA CONSULTING
SALT LAKE ST.GEORGE
635 South State Street
Salt Lake City, Utah 84111
P:801.532.2196
F:801.532.2305
www.bnaconsulting.com
© 2008 BNACONSULTING

JRCA
ARCHITECTS
577 South 200 East
Salt Lake City, Utah 84111
(801) 533-2100 fax: 533-2101 jrcadesign.com

DATE/REVISION	PROJECT #.
01 · 06 · 09	08245A
02 · 09 · 09	08245A

LICENSED PROFESSIONAL ENGINEER
B. ELAINE FAWSON
No. 295587
STATE OF UTAH

TRAILER 2
ELECTRICAL
PLAN

EE
301

By: paul; Mar 02, 2009 – 9:05am
F:\2008\245A\DRAW\245A-eEE301.dwg

PANELBOARD SCHEDULE

PANEL A (EXISTING) TYPE HOMELITE 120/240 VOLTS 1 PH 3 W

MOUNTING: X FLUSH; SURFACE — DIMENSIONS: W; D (in.); H — LOCATION: — AMP 125 — MAINS: X LUGS; BREAKER; SUBFEED LUGS; ISO GROUND; 200% NEUTRAL

BRANCH BREAKERS

ITEM	AMPS	POLE	WIRE SIZE	CIR. NO.	L. PHASE LOAD A	L. PHASE LOAD B	R. PHASE LOAD A	R. PHASE LOAD B	CIR. NO.	AMPS	POLE	WIRE SIZE	ITEM
WPU-1	60	2	6	1	4800				2	20	1		EXISTING OUTLETS
				3		4800		564	4	20	1	12	NEW LIGHTING
EXISTING OUTLETS	20	1		5			360		6	20	1	12	DATA RACK OUTLETS
EXISTING OUTLETS	20	1		7				1200	8	20	1	12	COPY MACHINE OUTLET
EXISTING OUTLETS	20	1		9			540		10	20*	1	12	DRINKING FOUNTAIN OUTLETS
EXISTING OUTLETS	20	1		11				540	12	20*	1	12	OFFICE OUTLETS
					4800	4800	900	2304					
					5700	7104	TOTAL						
					48	59	AMPS/PHASE						

*Provide twin 20amp 1 pole circuit breakers if required.

CONNECTED LOAD TOTAL 12804 W

EQUIP RATING ____ AMPS RMS SYM.

PANELBOARD SCHEDULE

PANEL B (EXISTING) TYPE HOMELITE 120/240 VOLTS 1 PH 3 W

MOUNTING: X FLUSH; SURFACE — DIMENSIONS: W; D (in.); H — LOCATION: — AMP 125 — MAINS: X LUGS; BREAKER; SUBFEED LUGS; ISO GROUND; 200% NEUTRAL

BRANCH BREAKERS

ITEM	AMPS	POLE	WIRE SIZE	CIR. NO.	L. PHASE LOAD A	L. PHASE LOAD B	R. PHASE LOAD A	R. PHASE LOAD B	CIR. NO.	AMPS	POLE	WIRE SIZE	ITEM
WPU-2	60	2	6	1	4800		630		2	20	1	12	NEW LIGHTING
				3		4800		120	4	20	1	12	NEW EXTERIOR LIGHTING
SPARE	30	2		5			1200		6	20	1	12	MICROWAVE OUTLET
				7				1200	8	20	1	12	DISPOSAL
EXISTING OUTLETS	20	1		9			180		10	20	1	12	COUNTER OUTLET
EXISTING OUTLETS	20	1		11				983	12	20	1	12	U.C. REF, JAN CO'S, EF
EXISTING OUTLETS	20	1		13									
					4800	4800	2010	2303					
					6810	7103	TOTAL						
					57	59	AMPS/PHASE						

CONNECTED LOAD TOTAL 13913 W

EQUIP RATING ____ AMPS RMS SYM.

PANELBOARD SCHEDULE

PANEL D (EXISTING) TYPE CUTLER 120/240 VOLTS 1 PH 3 W

MOUNTING: FLUSH; X SURFACE — DIMENSIONS: W; D (in.); H — LOCATION: EXTERIOR — AMP 125 — MAINS: LUGS; X BREAKER; SUBFEED LUGS; ISO GROUND; 200% NEUTRAL

BRANCH BREAKERS

ITEM	AMPS	POLE	WIRE SIZE	CIR. NO.	L. PHASE LOAD A	L. PHASE LOAD B	R. PHASE LOAD A	R. PHASE LOAD B	CIR. NO.	AMPS	POLE	WIRE SIZE	ITEM
WPU-4	60	2	6	1	4800		970		2	20	1	12	NEW LIGHTING
				3		4800		360	4	20	1	12	SYSTEM FURN PWR
EXISTING OUTLETS	20	1		5			360		6	20	1	12	SYSTEM FURN PWR
EXISTING OUTLETS	20	1		7				1620	8	20	1	12	WIREMOLD
EXISTING OUTLETS	20	1		9			1260		10	20	1	12	WIREMOLD
EXISTING OUTLETS	20	1*		11				540	12	20*	1	12	WIREMOLD
IDF OUTLETS	20	1*		13					14	20*	1		SPARE
					4800	4800	2590	2520					
					7390	7320	TOTAL						
					62	61	AMPS/PHASE						

*Provide twin circuit breakers if required

CONNECTED LOAD TOTAL 14710 W

EQUIP RATING ____ AMPS RMS SYM.

PANELBOARD SCHEDULE

PANEL C (EXISTING) TYPE CUTLER 120/240 VOLTS 1 PH 3 W

MOUNTING: FLUSH; X SURFACE — DIMENSIONS: W; D (in.); H — LOCATION: — AMP 125 — MAINS: LUGS; X BREAKER; SUBFEED LUGS; ISO GROUND; 200% NEUTRAL

BRANCH BREAKERS

ITEM	AMPS	POLE	WIRE SIZE	CIR. NO.	L. PHASE LOAD A	L. PHASE LOAD B	R. PHASE LOAD A	R. PHASE LOAD B	CIR. NO.	AMPS	POLE	WIRE SIZE	ITEM
WPU-3	60	2	6	1	4800		329		2	20	1	12	NEW LIGHTING
				3		4800		900	4	20	1	12	WIREMOLD
SPARE	30	2		5			540		6	20	1	12	DRINK FOUNTAIN
				7				360	8	20	1	12	SYST FURN POWER
EXISTING OUTLETS	20	1		9			360		10	20	1	12	SYST FURN POWER
EXISTING OUTLETS	20*	1		11				120	12	20*	1	12	EXTERIOR LIGHTING
GWH-1, EF	20*	1	12	13	307				14	20*	1		SPARE
					5107	4800	1229	1380					
					6336	6180	TOTAL						
					53	52	AMPS/PHASE						

*Provide twin circuit breakers as required

CONNECTED LOAD TOTAL 12516 W

EQUIP RATING ____ AMPS RMS SYM.

PANELBOARD SCHEDULE

PANEL MP TYPE I-LINE 120/240 VOLTS 1 PH 3 W

MOUNTING: FLUSH; X SURFACE — DIMENSIONS: W; D (in.); H — LOCATION: — AMP 225 — MAINS: LUGS; X BREAKER; SUBFEED LUGS; ISO GROUND; X NEMA 3R

BRANCH BREAKERS

ITEM	AMPS	POLE	WIRE SIZE	CIR. NO.	L. PHASE LOAD A	L. PHASE LOAD B	R. PHASE LOAD A	R. PHASE LOAD B	CIR. NO.	AMPS	POLE	WIRE SIZE	ITEM
PANEL A	125	2	1	1	5700				2	20	1		SPARE
				3		7104			4	20	1		SPARE
PANEL B	125	2	1	5	6810		500		6	20	1	12	FIRE ALARM PANEL
				7		7103			8				SPACE ONLY
					12510	14207	500	0					
					13010	14207	TOTAL						
					108	118	AMPS/PHASE						

CONNECTED LOAD TOTAL 27217 W

EQUIP RATING 22,000 AMPS RMS SYM.

PANELBOARD SCHEDULE

PANEL MS TYPE I-LINE 120/240 VOLTS 1 PH 3 W

MOUNTING: FLUSH; X SURFACE — DIMENSIONS: 20 W; 6 D (in.); H — LOCATION: — AMP 400 — MAINS: LUGS; X BREAKER; SUBFEED LUGS; ISO GROUND; X NEMA 3R

BRANCH BREAKERS

ITEM	AMPS	POLE	WIRE SIZE	CIR. NO.	L. PHASE LOAD A	L. PHASE LOAD B	R. PHASE LOAD A	R. PHASE LOAD B	CIR. NO.	AMPS	POLE	WIRE SIZE	ITEM
TRAILER PANEL C	125	2	1	1	6336		13010		2	225	2	4X	PANEL MP
				3		6180		14207	4				
TRAILER PANEL D	125	2	1	5	7390				6	60	2		SPARE
				7		7320			8				
SEWAGE EJECT PUMP	20	1	12	9	1200				10	20	1		SPARE
SPARE	20	1		11					12				SPACE ONLY
SPARE	20	1		13					14				SPACE ONLY
					####	####	####	####					
					####	####	TOTAL						
					233	231	AMPS/PHASE						

CONNECTED LOAD TOTAL 55843 W

EQUIP RATING 22,000 AMPS RMS SYM.

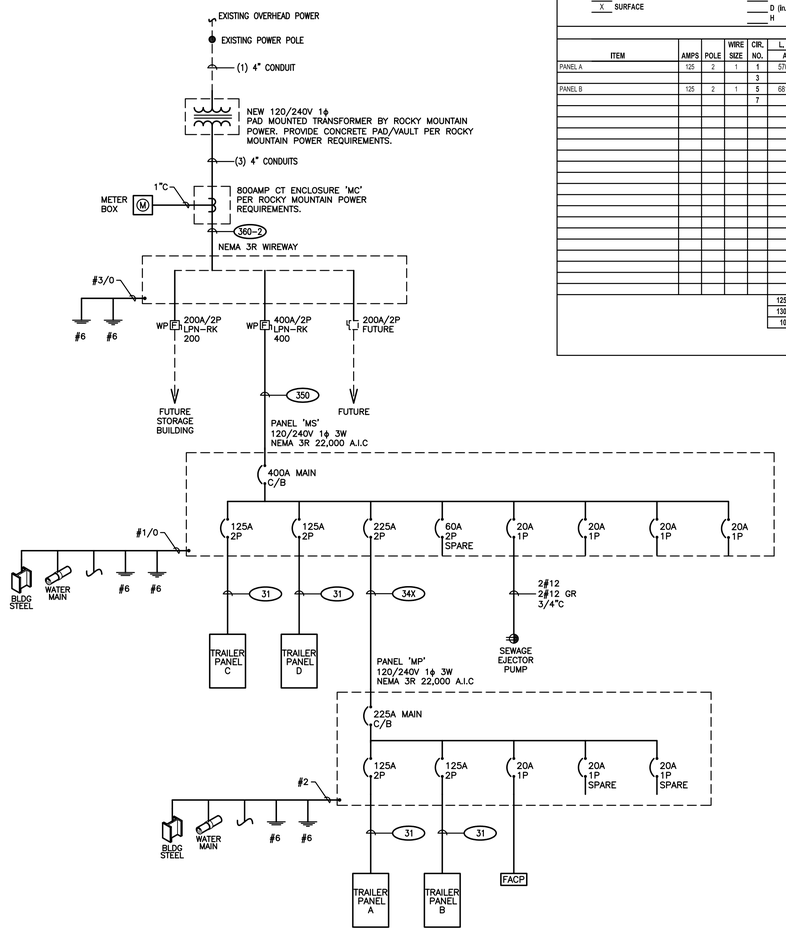

1 ONE-LINE DIAGRAM
NO SCALE

COPPER CONDUCTOR & CONDUIT SCHEDULE

TYPE	AMP.	COND. SIZE	CONDUCTOR QUAN.	CONDUCTOR SIZE	INSUL-ATION	EQ. GND. COND.
20	30	3/4"	2	10	THHN THWN	10
30	30	3/4"	3	10	THHN THWN	10
40	30	3/4"	4	10	THHN THWN	10
28	40	3/4"	2	8	THHN THWN	10
38	40	3/4"	3	8	THHN THWN	10
48	40	3/4"	4	8	THHN THWN	10
26	55	3/4"	2	6	THHN THWN	8
36	55	3/4"	3	6	THHN THWN	8
46	55	1"	4	6	THHN THWN	8
24	70	3/4"	2	4	THHN THWN	8
34	70	1"	3	4	THHN THWN	8
44	70	1-1/4"	4	4	THHN THWN	8
23	85	1"	2	3	THHN THWN	8
33	85	1"	3	3	THHN THWN	8
43	85	1-1/4"	4	3	THHN THWN	8
32	95	1-1/4"	3	2	THHN THWN	6
42	95	1-1/4"	4	2	THHN THWN	6
31	110	1-1/4"	3	1	THHN THWN	6
41	110	1-1/2"	4	1	THHN THWN	6
51	110	2"	5	1	THHN THWN	6
31X	150	1-1/2"	3	1/0	THHN THWN	6
41X	150	1-1/2"	4	1/0	THHN THWN	6
51X	150	2"	5	1/0	THHN THWN	6
32X	175	1-1/2"	3	2/0	THHN THWN	6
42X	175	2"	4	2/0	THHN THWN	6
52X	175	2"	5 *	2/0	THHN THWN	6
33X	200	2"	3	3/0	THHN THWN	6
43X	200	2"	4	3/0	THHN THWN	6
53X	200	2-1/2"	5	3/0	THHN THWN	6
34X	230	2"	3	4/0	THHN THWN	4
44X	230	2-1/2"	4	4/0	THHN THWN	4
54X	230	2-1/2"	5	4/0	THHN THWN	4
325	255	2"	3	250	THHN THWN	4
425	255	2-1/2"	4	250	THHN THWN	4
525	255	2-1/2"	5	250	THHN THWN	4
335	310	2-1/2"	3	350	THHN THWN	3
435	310	3"	4	350	THHN THWN	3
535	310	3"	5	350	THHN THWN	3
340	335	3"	3	400	THHN THWN	3
440	335	3"	4	400	THHN THWN	3
540	335	3"	5	400	THHN THWN	3
350	380	3-1/2"	3	500	XHHW	3
450	380	3-1/2"	4	500	XHHW	3
550	380	3-1/2"	5	500	XHHW	3

COPPER CONDUCTOR & CONDUIT SCHEDULE FOR PARALLEL RUNS

TYPE	MAX. O.C. PROT.	COND. AMPS	SETS	CONDUCTOR QUAN.	CONDUCTOR SIZE	CONDUIT SIZE	EQ. GND. COND.
325-2	600	510	2	3	250	2-1/2"	1
425-2	600	510	2	4	250	2-1/2"	1
525-2	600	510	2	5	250	2-1/2"	1
435-2	700	620	2	4	350	3"	1/0
440-2	700	670	2	4	400	3"	1/0
550-2	800	760	2	3	500	3"	1/0
450-2	800	760	2	4	500	4"	1/0
550-2	800	760	2	5	500	4"	1/0
460-2	800	840	2	4	600	4"	1/0
435-3	900	930	3	3	350	3"	2/0
435-3	900	930	3	4	350	3"	2/0
535-3	900	930	3	5 *	350	3"	2/0
540-3	1000	1005	3	3	400	3"	2/0
440-3	1000	1005	3	4	400	3"	2/0
540-3	1000	1005	3	5	400	3"	2/0
435-4	1200	1240	4	4	350	3"	3/0
535-4	1200	1240	4	5	350	3"	3/0
460-3	1200	1260	3	4	600	4"	3/0
535-5	1500	1550	5	3	350	3"	4/0
440-5	1600	1675	5	4	400	3"	4/0
540-5	1600	1675	5	5	400	3"	4/0
460-4	1600	1680	4	4	600	4"	4/0
440-6	2000	2010	6	4	400	3"	250
460-6	2500	2520	6	4	600	4"	350
450-8	3000	3040	8	4	500	4"	400
450-11	4000	4180	11	4	500	4"	500

NOTES
IN PARALLEL RUNS SIZE GND. COND. IN ACCORDANCE WITH NEC PARA. 250-122.

GND. CONDUCTOR MAY BE DELETED ON SERVICE ENTRANCE CONDUCTORS

* 200% NEUTRAL

OGDEN BAY GREAT SALT LAKE ECOSYSTEM TRAILERS PHASE I
DIVISION OF WILDLIFE RESOURCES
DFCM PROJECT # 09014520
SOUTH OGDEN, UTAH

BNA CONSULTING
SALT LAKE ST.GEORGE
635 South State Street
Salt Lake City, Utah 84111
P:801.532.2196
F:801.532.2305
www.bnaconsulting.com

© 2008 BNACONSULTING

JRCA ARCHITECTS
577 South 200 East
Salt Lake City, Utah 84111
(801) 533-2100 fax: 533-2101 jrcadesign.com

DATE/REVISION	PROJECT #.
01 · 06 · 09	08245A
02 · 09 · 09	08245A

LICENSED PROFESSIONAL ENGINEER
B. ELAINE FAWSON
No. 295587
STATE OF UTAH

ONE-LINE DIAGRAM AND PANELBOARD SCHEDULES

EX 101

By: paul; Mar 02, 2009 - 9:05am
F:\2008\245A\DRAW\245A-eEX101.dwg

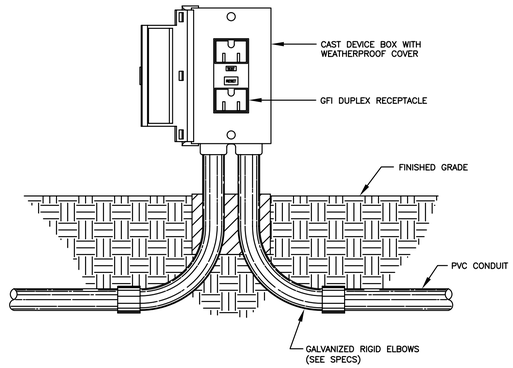

DIAGRAM L002 RECEPTACLE MOUNTING
NTS

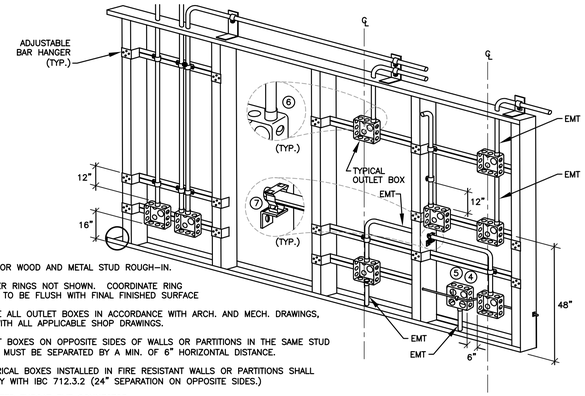

NOTES:

1. TYP. FOR WOOD AND METAL STUD ROUGH-IN.
2. PLASTER RINGS NOT SHOWN. COORDINATE RING DEPTH TO BE FLUSH WITH FINAL FINISHED SURFACE
3. LOCATE ALL OUTLET BOXES IN ACCORDANCE WITH ARCH. AND MECH. DRAWINGS, AND WITH ALL APPLICABLE SHOP DRAWINGS.
4. OUTLET BOXES ON OPPOSITE SIDES OF WALLS OR PARTITIONS IN THE SAME STUD SPACE MUST BE SEPARATED BY A MIN. OF 6" HORIZONTAL DISTANCE.
5. ELECTRICAL BOXES INSTALLED IN FIRE RESISTANT WALLS OR PARTITIONS SHALL COMPLY WITH IBC 712.3.2 (24" SEPARATION ON OPPOSITE SIDES.)
6. INSULATED THROAT EMT CONNECTOR.
7. CADDY FASTENER, THROUGH STUD CABLE/CONDUIT SUPPORT 'FB12P'.

DIAGRAM H004 TYPICAL ROUGH IN REQUIREMENTS
NTS

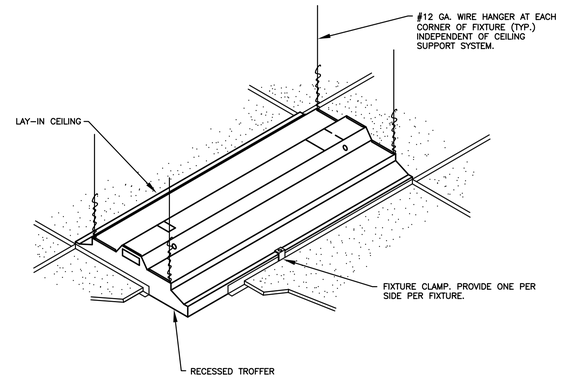

DIAGRAM A001 TYP. RECESSED FIXTURE MOUNTING
NTS

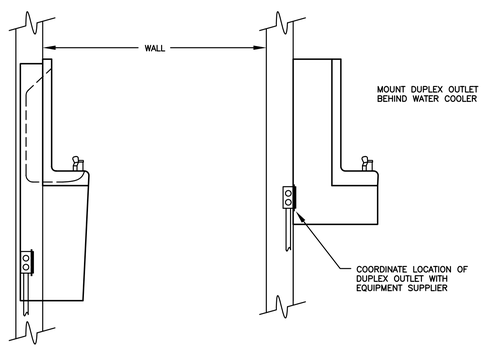

DIAGRAM R002 ELECTRIC WATER COOLER (EWC)
NTS

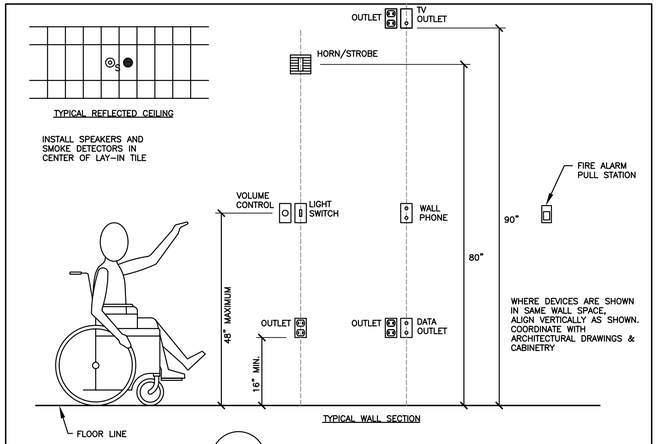

DIAGRAM R001 DEVICE MOUNTING HEIGHTS
NTS

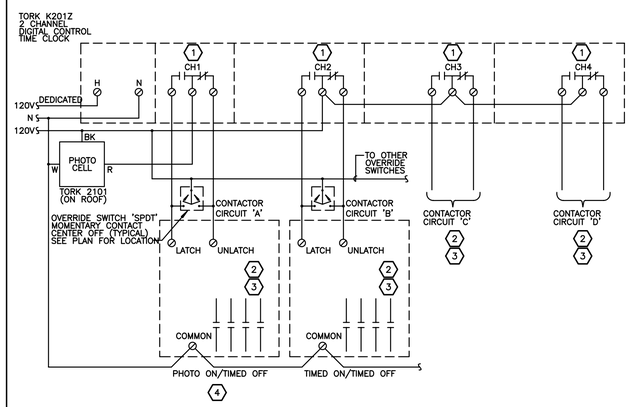

REFERENCE NOTES

1. TIMED ON/TIMED OFF EACH CHANNEL CAN BE SET FOR MULTIPLE ON/OFF SCHEDULING.
2. SEE CONTACTOR SCHEDULE FOR NUMBER OF POLES REQUIRED AND CIRCUIT.
3. MECHANICALLY HELD CONTACTORS WITH COIL CLEARING CONTACTS SQUARE-D CLASS 8903.
4. CONTACTOR CAN BE PROGRAMMED FOR PHOTO ON / PHOTO OFF.

CONTACTOR SCHEDULE

CONTACTOR #	CIRCUITS CONTROLLED	CONTACTOR SIZE	CONTACTOR PANEL	CONTACTOR CIRCUIT CONTROLLED
1	C-12	20A/1P		"A" (PHOTO ON/TIMED OFF)
2	B-4	20A/1P		"B" (PHOTO ON/TIMED OFF)

DIAGRAM P005 LIGHTING CONTROL
NTS

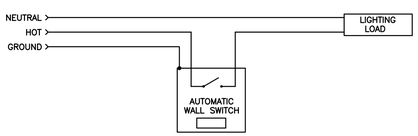

DIAGRAM S006 WALL SWITCH SENSOR
NTS

NOTE:
COORDINATE TRANSFORMER PAD SIZE WITH POWER COMPANY REQUIREMENTS FOR 600V, 800 AMPS MAX.

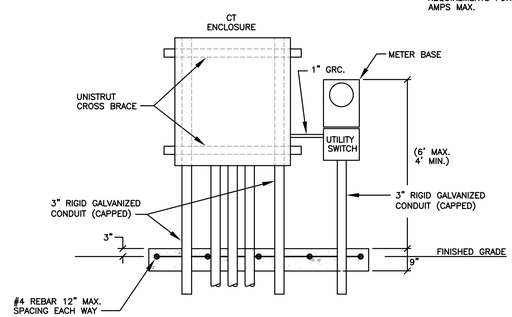

DIAGRAM Q001 CURRENT TRANSFORMER METERING
NTS

OGDEN BAY GREAT SALT LAKE ECOSYSTEM TRAILERS PHASE I
DIVISION OF WILDLIFE RESOURCES
DFCM PROJECT # 09014520
SOUTH OGDEN, UTAH

BNA CONSULTING
SALT LAKE ST.GEORGE
635 South State Street
Salt Lake City, Utah 84111
P:801.532.2196
F:801.532.2305
www.bnaconsulting.com
© 2008 BNACONSULTING

JRCA
ARCHITECTS
577 South 200 East
Salt Lake City, Utah 84111
(801) 533-2100 fax: 533-2101 jrcadesign.com

DATE/REVISION	PROJECT #.
01 · 06 · 09	08245A
02 · 09 · 09	08245A

LICENSED PROFESSIONAL ENGINEER
B. ELAINE FAWSON
No. 295587
STATE OF UTAH

ELECTRICAL DIAGRAM

EX 102

By: paul: Mar 02, 2009 – 9:04am
F:\2008\245A\DRAW\245A-EX102.dwg

EQUIPMENT SCHEDULE

UNIT #	FUNCTION	LOAD	VOLT	PHASE	FULL LOAD AMPS	CONDUIT SIZE	WIRES NO. SETS	WIRES NO.	WIRES SIZE	WIRES EQUIP. GND (1)	OCPD TYPE	OCPD AMPS	REF. NOTES STARTER	REF. NOTES DISCONNECT	REF. NOTES OTHER	REMARKS
CEF-1	EXHAUST FAN	39 VA	120	1	0.33	3/4"	1	2	12	12	CB	15		11A		PROVIDE WALL SWITCH
CEF-2	EXHAUST FAN	84 VA	120	1	0.70	3/4"	1	2	12	12	CB	15		11A		PROVIDE WALL SWITCH
CEF-3	EXHAUST FAN	39 VA	120	1	0.33	3/4"	1	2	12	12	CB	15		11A		PROVIDE WALL SWITCH
CEF-4	EXHAUST FAN	84 VA	120	1	0.70	3/4"	1	2	12	12	CB	15		11A		PROVIDE WALL SWITCH
CEF-5	EXHAUST FAN	84 VA	120	1	0.70	3/4"	1	2	12	12	CB	15		11A		PROVIDE WALL SWITCH
GWH-1	WATER HEATER	100 VA	120	1	0.83	3/4"	1	2	12	12	CB	15		4A		
WPU-1	WALL PACK UNIT	50 MCA	240	1	40.00	3/4"	1	2	6	10	CB	60		2A		
WPU-2	WALL PACK UNIT	50 MCA	240	1	40.00	3/4"	1	2	6	10	CB	60		2A		
WPU-3	WALL PACK UNIT	50 MCA	240	1	40.00	3/4"	1	2	6	10	CB	60		2A		
WPU-4	WALL PACK UNIT	50 MCA	240	1	40.00	3/4"	1	2	6	10	CB	60		2A		

NOTES:
1. NON-FUSED DISCONNECT SWITCH
2. FUSED DISCONNECT SWITCH
3. BREAKER IN ENCLOSURE
4. MANUAL STARTER WITHERMAL OVERLOAD
5. MAGNETIC STARTER
6. MAGNETIC STARTER/NON-FUSED DISCONNECT COMBINATION
7. MAGNETIC STARTER/FUSED DISCONNECT COMBINATION
8. MAGNETIC STARTER/BREAKER COMBINATION
9. VARIABLE FREQUENCY DRIVE
10. REDUCED VOLTAGE STARTER
11. DIRECT CONNECTION
12. RECEPTACLE/SPECIAL PURPOSE OUTLET/ETC.
13. TWO-SPEED STARTER, COORDINATE W/MOTOR TYPE

A. FURNISHED, INSTALLED, AND CONNECTED UNDER DIVISION 16
B. FURNISHED AND INSTALLED UNDER ANOTHER DIVISION REQUIRING CONNECTION UNDER DIVISION 16.
C. FURNISHED UNDER ANOTHER DIVISION BUT INSTALLED AND CONNECTED UNDER DIVISION 16.
D. FURNISHED, INSTALLED AND CONNECTED UNDER ANOTHER DIVISION.

CB = CIRCUIT BREAKER - THERMAL MAGNETIC
CKW = CHILLER KILOWATTS

NOTE 1: PER 250.123(A), EQUIPMENT GROUND IS NOT REQUIRED TO BE LARGER THAN PHASE CONDUCTOR.

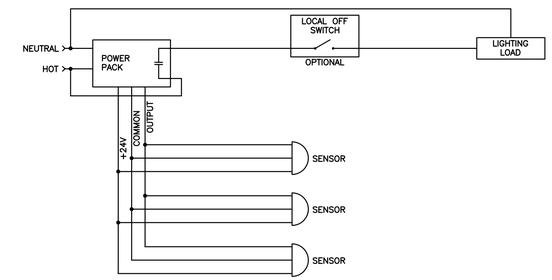

DIAGRAM S009 MULTIPLE SENSOR CONTROLLING ONE POWER PACK
NTS

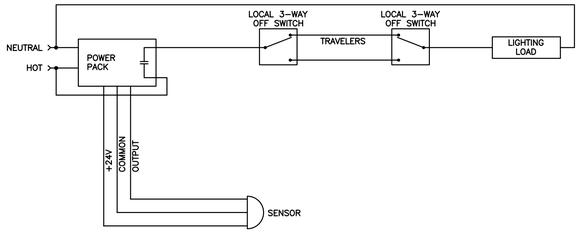

DIAGRAM S011 SENSOR WITH 3-WAY SWITCHING
NTS

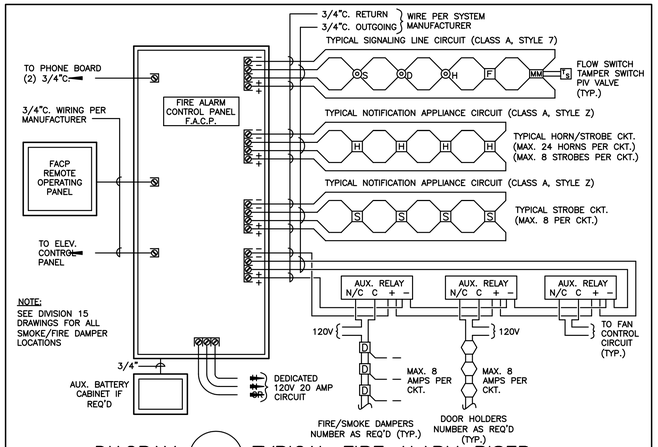

DIAGRAM D002 TYPICAL FIRE ALARM RISER
NTS

OGDEN BAY GREAT SALT LAKE ECOSYSTEM TRAILERS
PHASE I
DIVISION OF WILDLIFE RESOURCES
DFCM PROJECT # 09014520
SOUTH OGDEN, UTAH

BNA CONSULTING
SALT LAKE ST.GEORGE
635 South State Street
Salt Lake City, Utah 84111
P:801.532.2196
F:801.532.2305
www.bnaconsulting.com

© 2008 BNACONSULTING

JRCA
ARCHITECTS
577 South 200 East
Salt Lake City, Utah 84111
(801) 533-2100 fax: 533-2101 jrcadesign.com

DATE/REVISION	PROJECT #.
01 · 06 · 09	08245A
02 · 09 · 09	08245A

LICENSED PROFESSIONAL ENGINEER
B. ELAINE FAWSON
No. 295587
STATE OF UTAH

ELECTRICAL DIAGRAMS, SCHEDULES

EX 103

By: paul; Mar 02, 2009 – 9:04am
F:\2008\245A\DRAW\245A-gEX103.dwg