ESCALANTE HERITAGE CENTER

1281 EAST HIGHWAY 12
ESCALANTE, UTAH

OWNER — GARFIELD COUNTY
55 South Main
Panguitch, UTAH 84759
435-676-1157 p
CONTACT: Justin Fischer

LANDSCAPE — LANDMARK DESIGN
2834 Highland Drive
Salt Lake City, Utah 84106
801-474-3300 p
801-474-3303 f
CONTACT: Mark Vlasic

INTERPRETATION — HANKS CONSULTING
333 South Parkside Circle
St. George, Utah 84770
435-313-0606 p
CONTACT: Kurt Hanks

SITE CIVIL/STRUCTURAL/ ELECTRICAL — JONES & DEMILLE ENGINEERING, INC.
1535 South 100 West
Richfield, Utah 84701
435-896-8266 p
435-896-8268 f
CONTACT: Tom Christensen

ARCHITECTURAL — AJC ARCHITECTS
703 East 1700 South
Salt Lake City, Utah 84105
801-466-8818 p
801-466-4411 f
CONTACT: Josh Greene

STRUCTURAL FOR ARCHITECTURE — REAVELEY ENGINEERS
675 East 500 South, Suite 400
Salt Lake City, Utah 84102
801-486-3883 p
801-485-0911 f
CONTACT: Aaron Buchanan

MECHANICAL/PLUMBING FOR ARCHITECTURE — WHW ENGINEERING INC.
8619 Sandy Parkway, Suite 101
Sandy, Utah 84070
801-466-4021 p
801-466-8536 f
CONTACT: Win Packer

ELECTRICAL FOR ARCHITECTURE — KEN GARNER ENGINEERING, INC.
102 West 500 South, Suite 225
Salt Lake City, Utah 84111
801-328-8800 p
801-328-8802 f
CONTACT: Chris Kobayashi

LANDMARK DESIGN INCORPORATED
LANDSCAPE ARCHITECTURE AND LAND PLANNING
2834 HIGHLAND DRIVE
SALT LAKE CITY
UTAH 84106
PHONE (801) 474-3300
FAX (801) 474-3303

REVIEWED FOR CODE COMPLIANCE
SIGNATURE: FC
DATE: 11-3-09
DIVISION OF FACILITIES CONSTRUCTION AND MANAGEMENT

DRAWING INDEX

COVER SHEET	GI001
SITE ACCESSIBILITY PLAN	GI002
LANDSCAPE	
SITE PLAN	LS100
LAYOUT & DIMENSION PLAN	LS101
LAYOUT & DIMENSION PLAN	LS102
LANDSCAPE MATERIALS PLAN	LS103
LANDSCAPE PLANTING PLAN	LS200
LANDSCAPE IRRIGATION PLAN	LS300
LANDSCAPE DETAILS	LD200
LANDSCAPE DETAILS	LD201
LANDSCAPE DETAILS	LD202
IRRIGATION DETAILS	LD300
IRRIGATION DETAILS	LD301
IRRIGATION DETAILS	LD302
INTERPRETATION	
INTERPRETIVE PLANS	IP100
INTERPRETIVE PLANS	IP101
INTERPRETIVE PLANS	IP102
INTERPRETIVE PLANS	IP103
INTERPRETIVE PLANS	IP104
INTERPRETIVE PLANS	IP105
INTERPRETIVE PLANS	IP106
INTERPRETIVE PLAN LAYOUTS	ID100
INTERPRETIVE PLAN LAYOUTS	ID101
INTERPRETIVE PLAN LAYOUTS	ID102
INTERPRETIVE PLAN LAYOUTS	ID103
CIVIL	
SITE PLAN	CS100
UTILITY PLAN	CS200
GRADING PLAN	CS300
DETAILS	CD100
DETAILS	CD101
SITE LIGHTING DETAILS	CD102
ARCHITECTURAL	
CODE SUMMARY & CHECKLIST	AE000
~~CODE SUMMARY & REFERENCE SITE PLAN~~	~~AE001~~
GENERAL NOTES	AE002
ADA REQUIREMENTS	AE003
ADA REQUIREMENTS	AE004
PAVILION FLOOR PLAN	AE101
RESTROOM FLOOR PLAN	AE102
PAVILION REFLECTED CEILING PLAN	AE103
RESTROOM REFLECTED CEILING PLAN	AE104
PAVILION ELEVATIONS	AE201
RESTROOM ELEVATIONS	AE202
RESTROOM SECTIONS	AE301
SECTIONS	AE302
INTERIOR ELEVATIONS	AE401
DETAILS	AE501
DETAILS	AE502
STRUCTURAL	
GENERAL STRUCTURAL NOTES	SE001
GENERAL STRUCTURAL NOTES	SE002
GENERAL STRUCTURAL NOTES	SE003
STRUCTURAL PLANS	SB101
FOOTING & FOUNDATION DETAILS	SB501
FOOTING & FOUNDATION DETAILS	SB502
STRUCTURAL SCHEDULES	SB601
ROOF FRAMING DETAILS	SF501
ROOF FRAMING DETAILS	SF502
STRUCTURAL SCHEDULES	SF601
MECHANICAL/PLUMBING	
MECHANICAL LEGEND & GENERAL NOTES	MG001
MECHANICAL FLOOR PLAN, DETAILS, & SCHEDULES	ME101
PLUMBING LEGEND	PG001
PLUMBING PLAN	PE101
PLUMBING DETAILS & SCHEDULES	PE501
ELECTRICAL	
SYMBOLS, ABBREVIATIONS, & DRAWING INDEX	EG001
RESTROOM LIGHTING PLAN	EL100
PAVILION LIGHTING PLAN	EL101
RESTROOM POWER PLAN	EP100
PAVILION POWER PLAN	EP101
ELECTRICAL SITE PLAN	ES100
ONE LINE DIAGRAM & SCHEDULES	EX100

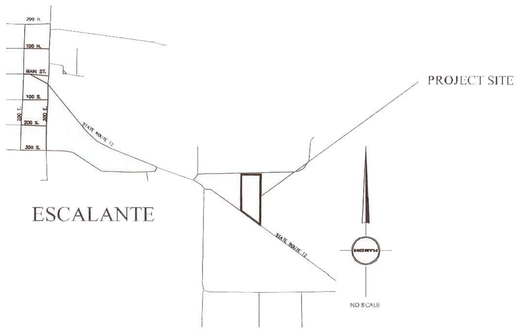

1

DEFERRED SUBMITTALS

Submittal documents for deferred submittal items shall be submitted to the registered design professional in responsible charge who shall review them and forward them to the building offical with a notation indicating that the deferred submittal documents have been reviewed and that they have been found to be in general conformance with the design of the building. The deferred submittal items shall not be installed until their design and submittal documents have been approved by the building official.

LIST OF DEFERRED SUBMITTALS:

ITEM	DISCIPLINE	DATE OF SUBMISSION
1. Trusses	Structural	after contractor is selected

OCTOBER 22, 2009
100% SUBMITTAL

State of Utah
Department of Administrative Services
Division of Facilities Construction & Management
4110 State Office Building
Salt Lake City, Utah 84114
Phone: (801) 538 - 3018
Fax: (801) 538 - 3267
http://dfcm.utah.gov

CONSULTANTS:

PROJECT NAME AND ADDRESS:
ESCALANTE HERITAGE CENTER
1281 EAST HIGHWAY 12
ESCALANTE, UTAH

COPYRIGHT:
ALL RIGHTS RESERVED ©
LANDMARK DESIGN, INC.
These documents are protected under the United States 1978 copyright act. It is an exclusive work of original authorship. None of the pictorial, graphic, or technical charts or drawings depicted may be reproduced by any method, mechanical, electronic, or otherwise; nor may they be used or re-used for any purpose without the express prior written permission of Landmark Design, Inc.

MARK	DATE	DESCRIPTION
1	08-07-09	Deferred Submittal - See DFCM Review Comment #11
2	10-22-09	Sheet Index, See DFCM Review Comment #1 from 10/05/09 Review Comments

ISSUE TYPE: 100% SUBMITTAL
ISSUE DATE: 06.12.09
DFCM PROJECT NO: 09018900
CAD PROJECT NO: 0840
CAD DWG FILE: --
DRAWN BY: L. BENSON
CHK'D BY: H.HOLT/M.VLASIC
COPYRIGHT: --

SHEET TITLE
COVER SHEET

SHEET NUMBER
GI001

SHEET OF

NOTES:

SEE CIVIL, ARCHITECTURAL, AND LANDSCAPE DRAWINGS FOR DRAWINGS AND DETAILED INFORMATION.

ALL CROSS SLOPES LESS THAN 2%.

REST-ROOM

ACCESSIBLE ENTRANCE

PAVILION

PAVILION ACCESSIBLE FROM 3 SIDES

<1%
SLOPE

-2%
SLOPE

4.44%
SLOPE

2.50%
SLOPE

2.55%
SLOPE

3%
SLOPE

2.50%
SLOPE

-2%
SLOPE

10'-0"

20'-0"

10'-0"

10'-0"

5835

5830

R.O.W. FENCE

STATE ROUTE 12

R.O.W. FENCE

FUTURE ROADWAY

ACCESSIBLE PARKING STALL (TYP. OF 2)

COLORED CONCRETE

ASPHALT

GRAVEL

CRUSHED STONE

ACCESSIBLE ROUTE

0 20 40
FEET

N

State of Utah
Department of Administrative Services

Division of Facilities Construction & Management
4110 State Office Building
Salt Lake City, Utah 84114
Phone: (801) 538 - 3018
Fax: (801) 538 - 3267

http://dfcm.utah.gov

CONSULTANTS:

LANDMARK DESIGN

STATE OF UTAH
8/13/09
LISA M. BENSON
NO. 5198020
LICENSED LANDSCAPE ARCHITECT

PROJECT NAME AND ADDRESS:

ESCALANTE HERITAGE CENTER

1281 EAST HIGHWAY 12
ESCALANTE, UTAH

COPYRIGHT:

ALL RIGHTS RESERVED ©
LANDMARK DESIGN, INC.
These documents are protected under the United States 1978 copyright act. It is an exclusive work of original authorship. None of the pictorial, graphic, or technical charts or drawings depicted may be reproduced by any method, mechanical, electronic, or otherwise; nor may they be used or re-used for any purpose without the express prior written permission of Landmark Design, Inc.

MARK	DATE	DESCRIPTION

ISSUE TYPE: 100% SUBMITTAL

ISSUE DATE: 06.12.09

DFCM PROJECT NO:	09018900
CAD PROJECT NO:	0840
CAD DWG FILE:	--
DRAWN BY:	L. BENSON
CHK'D BY:	H.HOLT/M.VLASIC
COPYRIGHT:	--

SHEET TITLE

SITE ACCESSIBILITY PLAN

SHEET NUMBER

GI002

SHEET OF

Lisa; Aug 10, 2009 - 3:34pm
\\Design_s\r\ver\landmark\PROJECTS\LA_CURRENT\ESCALANTE_HERITAGE_CENTER\1-Phase1 construction october 2008\CAD files\GI 002 ACCESSIBILITY PLAN.dwg

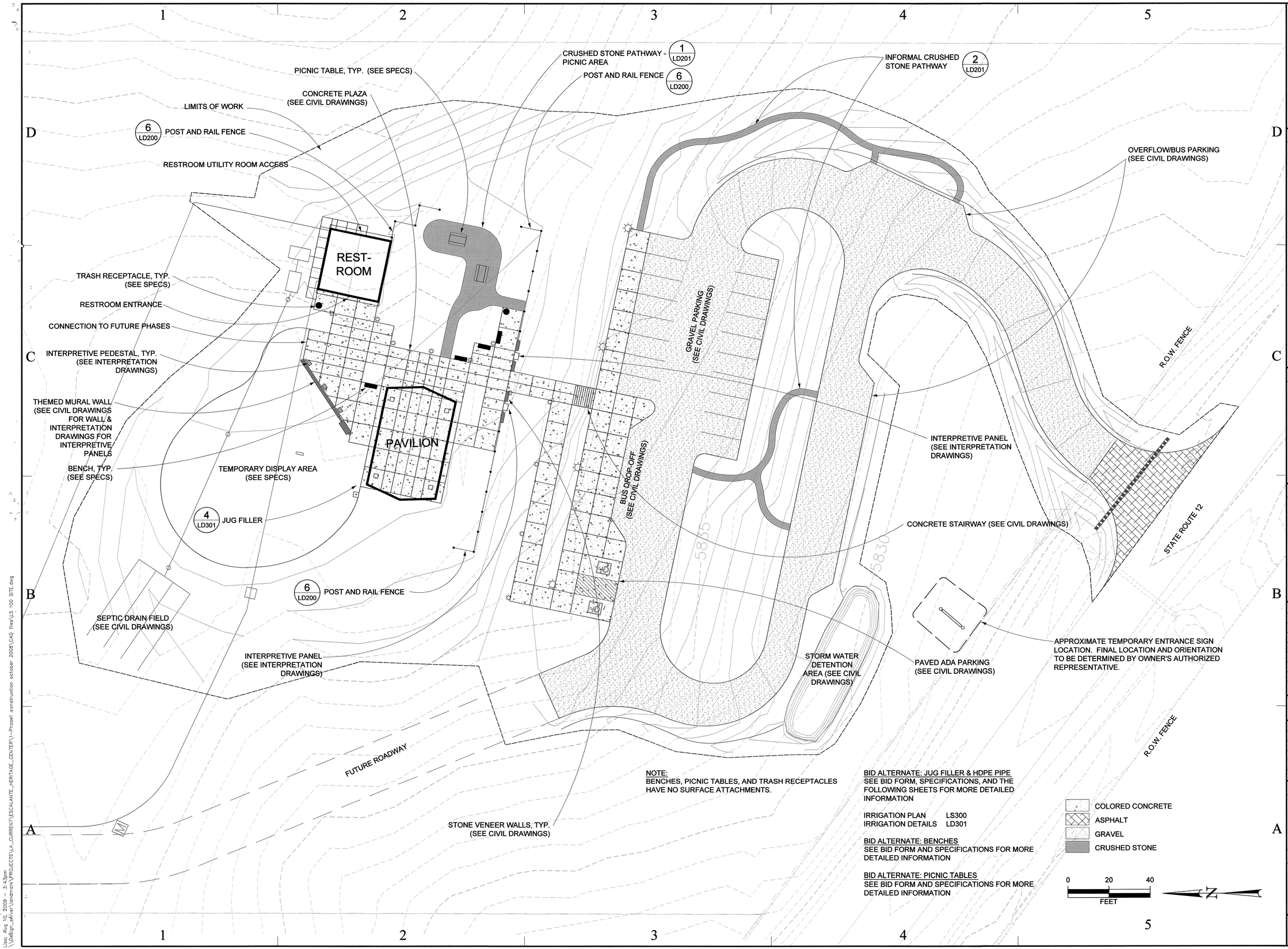

NOTE:
BENCHES, PICNIC TABLES, AND TRASH RECEPTACLES HAVE NO SURFACE ATTACHMENTS.

BID ALTERNATE: JUG FILLER & HDPE PIPE
SEE BID FORM, SPECIFICATIONS, AND THE FOLLOWING SHEETS FOR MORE DETAILED INFORMATION

IRRIGATION PLAN LS300
IRRIGATION DETAILS LD301

BID ALTERNATE: BENCHES
SEE BID FORM AND SPECIFICATIONS FOR MORE DETAILED INFORMATION

BID ALTERNATE: PICNIC TABLES
SEE BID FORM AND SPECIFICATIONS FOR MORE DETAILED INFORMATION

State of Utah
Department of Administrative Services

Division of Facilities Construction & Management
4110 State Office Building
Salt Lake City, Utah 84114
Phone: (801) 538 - 3018
Fax: (801) 538 - 3267

http://dfcm.utah.gov

CONSULTANTS:

LANDMARK DESIGN

STATE OF UTAH
8/13/07
LISA M. BENSON
NO. 5198020
LICENSED LANDSCAPE ARCHITECT

PROJECT NAME AND ADDRESS:

ESCALANTE HERITAGE CENTER

1281 EAST HIGHWAY 12
ESCALANTE, UTAH

COPYRIGHT:

ALL RIGHTS RESERVED ©
LANDMARK DESIGN, INC.
These documents are protected under the United States 1978 copyright act. It is an exclusive work of original authorship. None of the pictorial, graphic, or technical charts or drawings depicted may be reproduced by any method, mechanical, electronic, or otherwise; nor may they be used or re-used for any purpose without the express prior written permission of Landmark Design, Inc.

MARK	DATE	DESCRIPTION

ISSUE TYPE: 100% SUBMITTAL

ISSUE DATE: 06.12.09

DFCM PROJECT NO:	09018900
CAD PROJECT NO:	0840
CAD DWG FILE:	--
DRAWN BY:	L. BENSON
CHK'D BY:	H.HOLT/M.VLASIC
COPYRIGHT:	--

SHEET TITLE

SITE PLAN

SHEET NUMBER

LS100

SHEET OF

Lisa: Aug 10, 2009 - 3:43pm
\\design_server\landmark\PROJECTS\LA_CURRENT\ESCALANTE_HERITAGE_CENTER\1-Phase1 construction october 2008\CAD files\LS 100 SITE.dwg

NOTES:

1. SEE CIVIL DRAWINGS FOR ROADWAY AND PARKING LAYOUT AND DIMENSIONS.
2. CONCRETE SIDEWALKS 10' WIDE, TYPICAL.
3. INFORMAL CRUSHED STONE PATHWAYS 3' WIDE, TYPICAL.
4. SEE ARCHITECTURAL DRAWINGS FOR RESTROOM AND PAVILION LAYOUT AND DIMENSIONS.
5. DIMENSIONS ARE BASED ON CONCRETE WALKWAY ADJACENT TO GRAVEL PARKING. (SEE CS100).

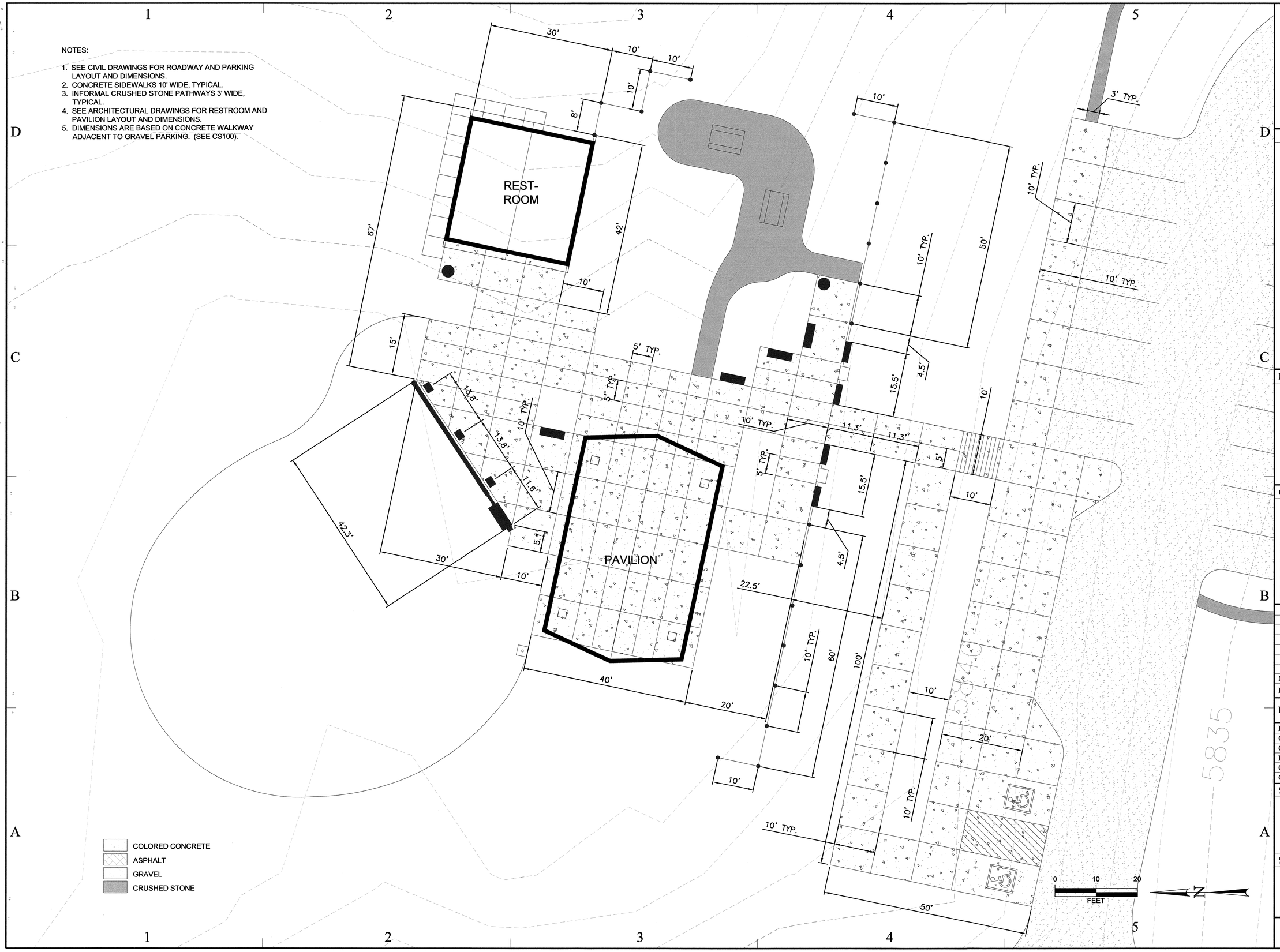

State of Utah
Department of Administrative Services

Division of Facilities Construction & Management
4110 State Office Building
Salt Lake City, Utah 84114
Phone: (801) 538 - 3018
Fax: (801) 538 - 3267

http://dfcm.utah.gov

CONSULTANTS:

LANDMARK DESIGN

STATE OF UTAH 8/13/09 LISA M. BENSON NO. 5198020 LICENSED LANDSCAPE ARCHITECT

PROJECT NAME AND ADDRESS:

ESCALANTE HERITAGE CENTER

1281 EAST HIGHWAY 12
ESCALANTE, UTAH

COPYRIGHT:

ALL RIGHTS RESERVED ©
LANDMARK DESIGN, INC.
These documents are protected under the United States 1978 copyright act. It is an exclusive work of original authorship. None of the pictorial, graphic, or technical charts or drawings depicted may be reproduced by any method, mechanical, electronic, or otherwise; nor may they be used or re-used for any purpose without the express prior written permission of Landmark Design, Inc.

MARK	DATE	DESCRIPTION

ISSUE TYPE: 100% SUBMITTAL

ISSUE DATE: 06.12.09

DFCM PROJECT NO:	09018900
CAD PROJECT NO:	0840
CAD DWG FILE:	--
DRAWN BY:	L. BENSON
CHK'D BY:	H.HOLT/M.VLASIC
COPYRIGHT:	--

SHEET TITLE

LAYOUT & DIMENSION PLAN

SHEET NUMBER

LS101

SHEET OF

Lisa: Aug 10, 2009 - 3:42pm
\\Design_server\landmark\PROJECTS\LA_CURRENT\ESCALANTE_HERITAGE_CENTER\1-Phase1 construction october 2008\CAD files\LS 101 LAYOUT.dwg

NOTES:

1. SEE CIVIL DRAWINGS FOR ROADWAY AND PARKING LAYOUT AND DIMENSIONS.
2. CONCRETE SIDEWALKS 10' WIDE, TYPICAL.
3. INFORMAL CRUSHED STONE PATHWAYS 3' WIDE, TYPICAL.
4. SEE ARCHITECTURAL DRAWINGS FOR RESTROOM AND PAVILION LAYOUT AND DIMENSIONS.
5. CONTRACTOR TO STAKE THE LAYOUT OF THE INFORMAL DISPLAY AREA, THE CRUSHED STONE PATHWAY FOR THE PICNIC TABLES, AND ALL SITE FEATURES SHOWN FOR APPROVAL BY THE OWNER'S AUTHORIZED REPRESENTATIVE. PROVIDE 48 HOURS NOTICE TO THE OWNER'S AUTHORIZED REPRESENTATIVE. LAYOUT CURVILINEAR FEATURES USING BROAD CURVES AND SMOOTH TRANSITIONS. DIMENSIONS ARE DRAWN PERPENDICULAR AND PARALLEL TO FORMS OF BUILDINGS AND PLAZA (EXCEPTIONS TO THIS ARE DIMENSIONS CLEARLY ALIGNED WITH OTHER SITE ELEMENTS).

COLORED CONCRETE
ASPHALT
GRAVEL
CRUSHED STONE

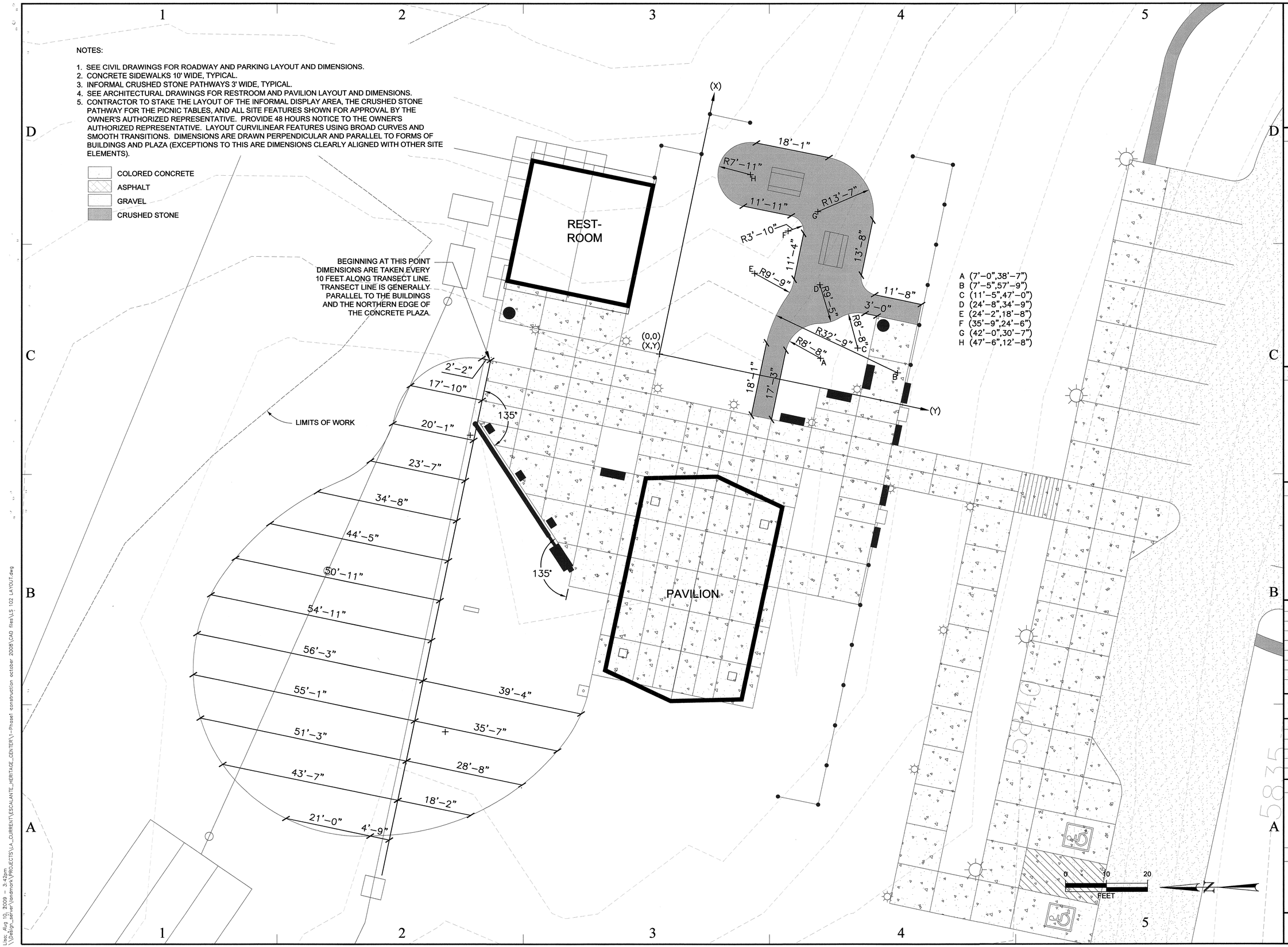

State of Utah
Department of Administrative Services

Division of Facilities Construction & Management
4110 State Office Building
Salt Lake City, Utah 84114
Phone: (801) 538 - 3018
Fax: (801) 538 - 3267

http://dfcm.utah.gov

CONSULTANTS:

LANDMARK DESIGN

STATE OF UTAH
8/13/07
LISA M. BENSON
NO. 5198020
LICENSED LANDSCAPE ARCHITECT

PROJECT NAME AND ADDRESS:

ESCALANTE HERITAGE CENTER

1281 EAST HIGHWAY 12
ESCALANTE, UTAH

COPYRIGHT:

ALL RIGHTS RESERVED ©
LANDMARK DESIGN, INC.
These documents are protected under the United States 1978 copyright act. It is an exclusive work of original authorship. None of the pictorial, graphic, or technical charts or drawings depicted may be reproduced by any method, mechanical, electronic, or otherwise; nor may they be used or re-used for any purpose without the express prior written permission of Landmark Design, Inc.

MARK	DATE	DESCRIPTION

ISSUE TYPE: 100% SUBMITTAL

ISSUE DATE: 06.12.09

DFCM PROJECT NO:	09018900
CAD PROJECT NO:	0840
CAD DWG FILE:	--
DRAWN BY:	L. BENSON
CHK'D BY:	H.HOLT/M.VLASIC
COPYRIGHT:	--

SHEET TITLE

LAYOUT & DIMENSION PLAN

SHEET NUMBER

LS102

SHEET OF

Lisa, Aug 10, 2009 - 3:42pm
\\Design_server\landmark\PROJECTS\LA_CURRENT\ESCALANTE_HERITAGE_CENTER\1-Phase1 construction october 2008\CAD files\LS 102 LAYOUT.dwg

State of Utah
Department of Administrative Services

Division of Facilities
Construction & Management
4110 State Office Building
Salt Lake City, Utah 84114
Phone: (801) 538 - 3018
Fax: (801) 538 - 3267

http://dfcm.utah.gov

CONSULTANTS:

LANDMARK DESIGN

STATE OF UTAH
8/13/09
LISA M. BENSON
NO. 5198020
LICENSED LANDSCAPE ARCHITECT

PROJECT NAME AND ADDRESS:

ESCALANTE HERITAGE CENTER

1281 EAST HIGHWAY 12
ESCALANTE, UTAH

COPYRIGHT:

ALL RIGHTS RESERVED © LANDMARK DESIGN, INC.
These documents are protected under the United States 1978 copyright act. It is an exclusive work of original authorship. None of the pictorial, graphic, or technical charts or drawings depicted may be reproduced by any method, mechanical, electronic, or otherwise; nor may they be used or re-used for any purpose without the express prior written permission of Landmark Design, Inc.

MARK	DATE	DESCRIPTION

ISSUE TYPE: 100% SUBMITTAL

ISSUE DATE: 06.12.09

DFCM PROJECT NO:	09018900
CAD PROJECT NO:	0840
CAD DWG FILE:	--
DRAWN BY:	L. BENSON
CHK'D BY:	H.HOLT/M.VLASIC
COPYRIGHT:	--

SHEET TITLE

LANDSCAPE MATERIALS PLAN

SHEET NUMBER

LS103

SHEET OF

Lisa; Aug 10, 2009 - 3:41pm
\\Design_server\landmark\PROJECTS\LA_CURRENT\ESCALANTE_HERITAGE_CENTER\1-Phase1 construction october 2008\CAD files\LS 103 MATERIALS.dwg

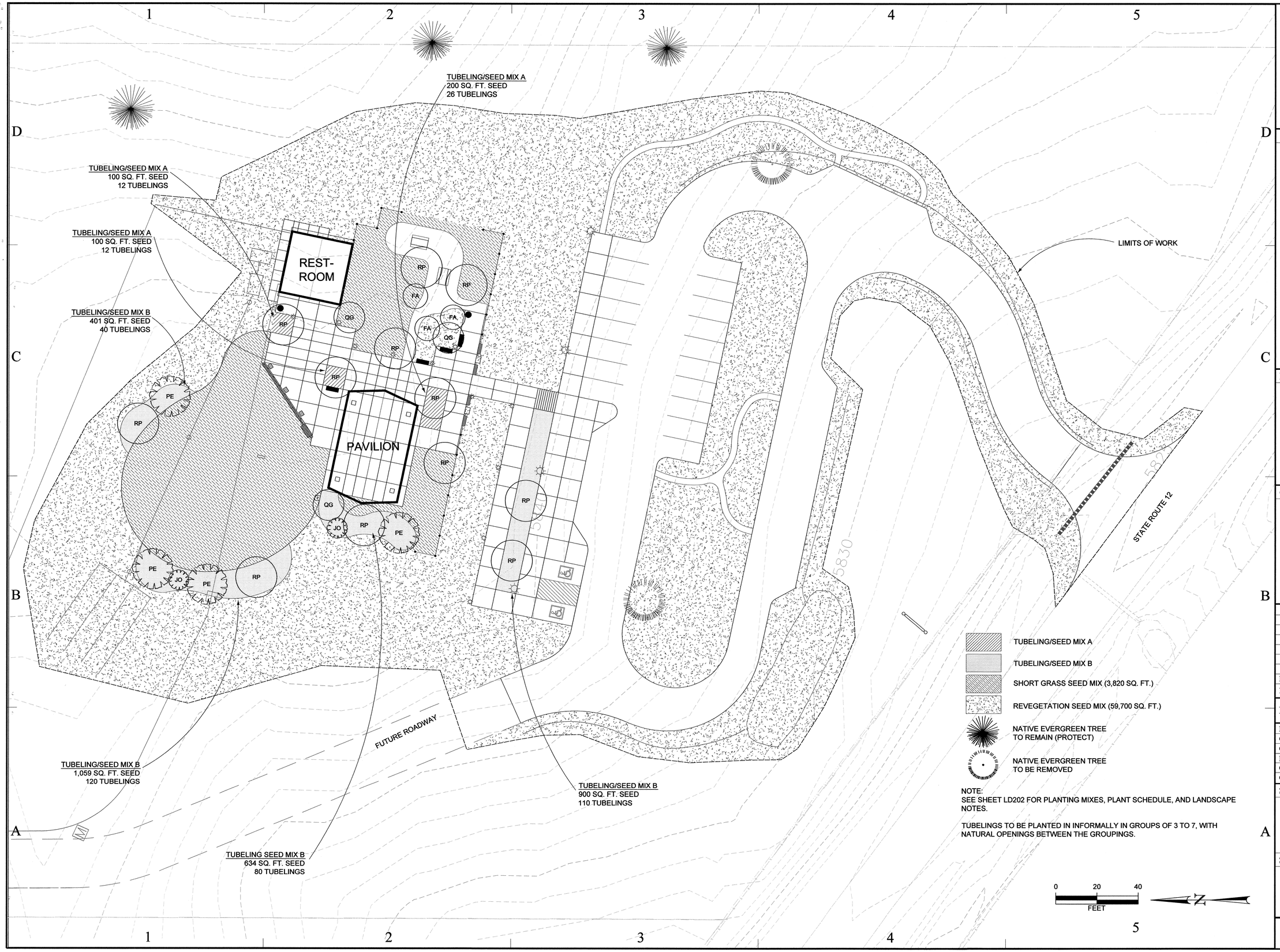

NOTE:
SEE SHEET LD202 FOR PLANTING MIXES, PLANT SCHEDULE, AND LANDSCAPE NOTES.

TUBELINGS TO BE PLANTED IN INFORMALLY IN GROUPS OF 3 TO 7, WITH NATURAL OPENINGS BETWEEN THE GROUPINGS.

State of Utah
Department of Administrative Services

Division of Facilities
Construction & Management
4110 State Office Building
Salt Lake City, Utah 84114
Phone: (801) 538 - 3018
Fax: (801) 538 - 3267

http://dfcm.utah.gov

CONSULTANTS:

LANDMARK DESIGN

STATE OF UTAH
8/15/09
LISA M. BENSON
NO. 5198020
LICENSED LANDSCAPE ARCHITECT

PROJECT NAME AND ADDRESS:

ESCALANTE HERITAGE CENTER

1281 EAST HIGHWAY 12
ESCALANTE, UTAH

COPYRIGHT:

ALL RIGHTS RESERVED ©
LANDMARK DESIGN, INC.
These documents are protected under the United States 1978 copyright act. It is an exclusive work of original authorship. None of the pictorial, graphic, or technical charts or drawings depicted may be reproduced by any method, mechanical, electronic, or otherwise; nor may they be used or re-used for any purpose without the express prior written permission of Landmark Design, Inc.

MARK	DATE	DESCRIPTION

ISSUE TYPE: 100% SUBMITTAL

ISSUE DATE: 06.12.09

DFCM PROJECT NO:	09018900
CAD PROJECT NO:	0840
CAD DWG FILE:	--
DRAWN BY:	L. BENSON
CHK'D BY:	H.HOLT/M.VLASIC
COPYRIGHT:	--

SHEET TITLE

LANDSCAPE PLANTING PLAN

SHEET NUMBER

LS200

SHEET OF

Lisa, Aug 10, 2009 - 3:41pm
\\Design_server\landmark\PROJECTS\LA_CURRENT\ESCALANTE_HERITAGE_CENTER\1-Phase1 construction october 2008\CAD files\LS 200 PLANTING.dwg

IRRIGATION SCHEDULE

- RAINBIRD 4 ZONE CONTROLLER - SEE SHEET LD302 FOR DETAIL. SEE SPECS.
- IRRIGATION WATER SOURCE (SEE CIVIL DRAWINGS)
  1 " STOP AND WASTE VALVE
- POINT OF CONNECTION, SEE SHEET LD300 FOR DETAILS
  1" REDUCED PRESSURE BACKFLOW PREVENTER
  1" HUNTER HQ-44C QUICK COUPLER
  1" MANUAL DRAIN
- AUTOMATIC DRIP CONTROL VALVE, SEE SHEET LD300 FOR DETAIL
  1" HUNTER ICZ-101-40 DRIP VALVE
  ASSEMBLY INCLUDES:
  1 - ICV REMOTE CONTROL VALVE
  1 - 1" WYE FILTER
  1 - PRESSURE REGULATOR (40 PSI)
- VALVE DESCRIPTION
  STATION NUMBER
  DESIGN GALLONS PER MINUTE
  VALVE SIZE
- PVC. SCH. 40 SLEEVE (SIZE AS REQUIRED - 2" MINIMUM)
- PVC. SCH. 40 IRRIGATION MAINLINE - SIZE AS SHOWN
- PVC. SCH. 40 LATERAL LINE (SIZE AS SHOWN)
- 1" HIGH DENSITY POLYETHYLENE (HDPE) PIPE BY CONTRACTOR (SEE SPECS), DISINFECTION OF PIPE REQUIRED (SEE CIVIL SPECS)
- PVC SCH. 40 LATERAL LINE - 1"
  TREE LOOP - 19.5' NETAFIM TECHLINE CV IN-LINE EMITTER TUBING TLCV4-18, 0.40 GPH (5.2 GPH), SEE SHEET LD301 FOR DETAILS

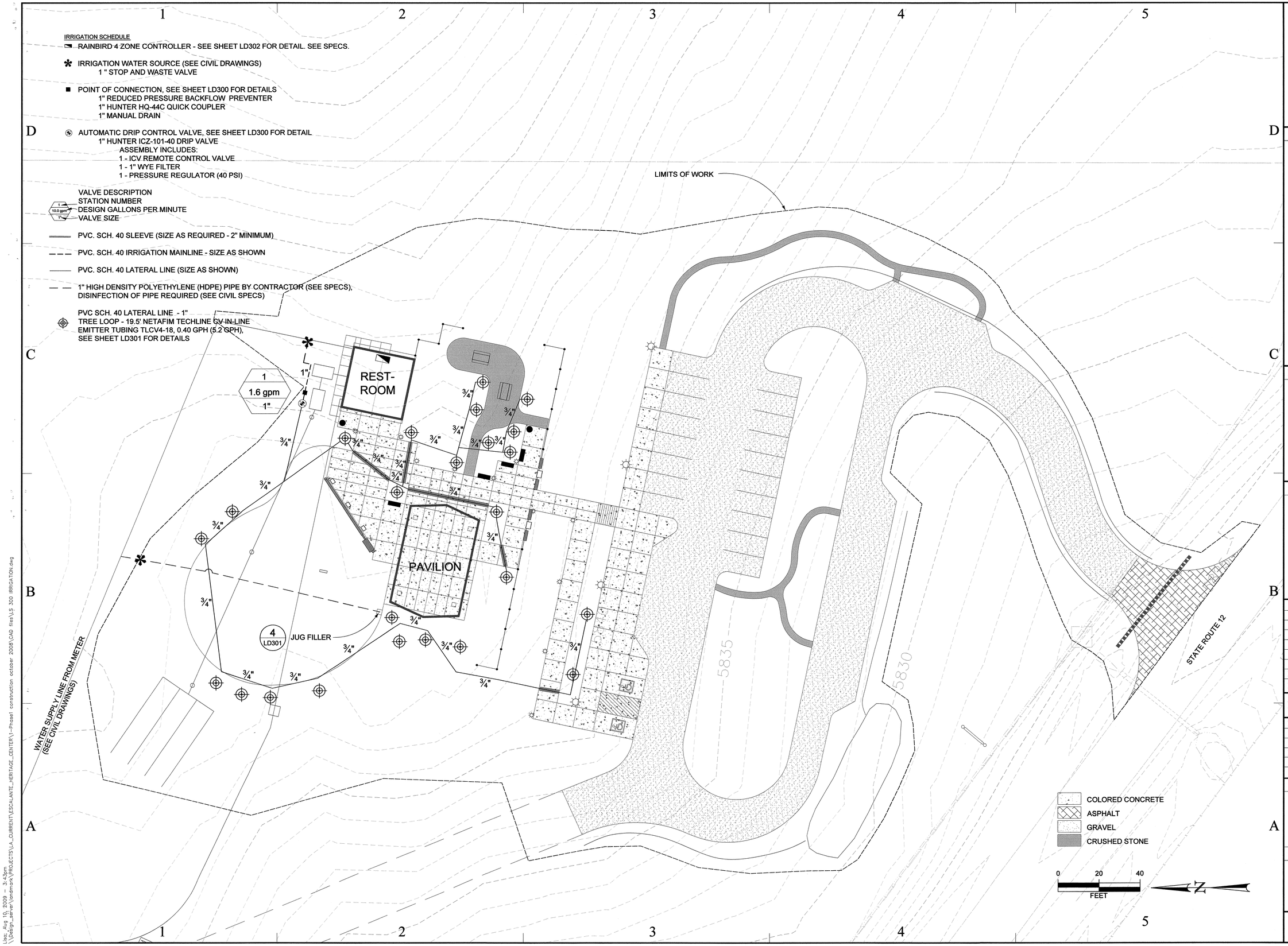

State of Utah
Department of Administrative Services

Division of Facilities Construction & Management
4110 State Office Building
Salt Lake City, Utah 84114
Phone: (801) 538 - 3018
Fax: (801) 538 - 3267

http://dfcm.utah.gov

CONSULTANTS:

LANDMARK DESIGN

STATE OF UTAH
6/12/09
LISA M. BENSON
NO. 5198020
LICENSED LANDSCAPE ARCHITECT

PROJECT NAME AND ADDRESS:

ESCALANTE HERITAGE CENTER

1281 EAST HIGHWAY 12
ESCALANTE, UTAH

COPYRIGHT:

ALL RIGHTS RESERVED © LANDMARK DESIGN, INC.
These documents are protected under the United States 1978 copyright act. It is an exclusive work of original authorship. None of the pictorial, graphic, or technical charts or drawings depicted may be reproduced by any method, mechanical, electronic, or otherwise; nor may they be used or re-used for any purpose without the express prior written permission of Landmark Design, Inc.

MARK	DATE	DESCRIPTION

ISSUE TYPE: 100% SUBMITTAL

ISSUE DATE: 06.12.09

DFCM PROJECT NO:	09018900
CAD PROJECT NO:	0840
CAD DWG FILE:	--
DRAWN BY:	L. BENSON
CHK'D BY:	H.HOLT/M.VLASIC
COPYRIGHT:	--

SHEET TITLE

LANDSCAPE IRRIGATION PLAN

SHEET NUMBER

LS300

SHEET OF

Lisa; Aug 10, 2009 - 3:43pm
\\Design_server\landmark\PROJECTS\LA_CURRENT\ESCALANTE_HERITAGE_CENTER\1-Phase1 construction october 2008\CAD files\LS 300 IRRIGATION.dwg

MIX EXCAVATED SOIL WITH 1.5 CUBIC FEET ORGANIC MATTER FOR AMENDED BACKFILL FOR EACH TREE.

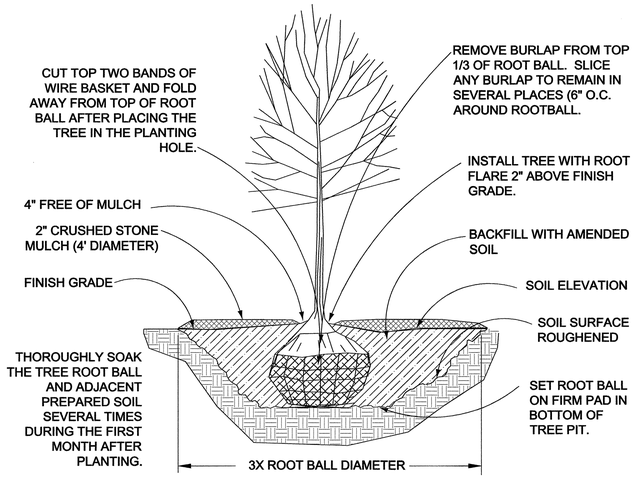

STAKING TREES
1. STAKING IS NOT GENERALLY REQUIRED FOR ALL TREE PLANTING. IF CONDITIONS ARE PRESENT WHERE THE CONTRACTOR DEEMS IT NECESSARY TO STAKE TREES TO ENSURE VIABILITY THROUGH THE GUARANTEE PERIOD, THE CONTRACTOR MAY STAKE THE TREES AT NO ADDITIONAL COST TO THE OWNER.

1 / LD200 DECIDUOUS TREE PLANTING

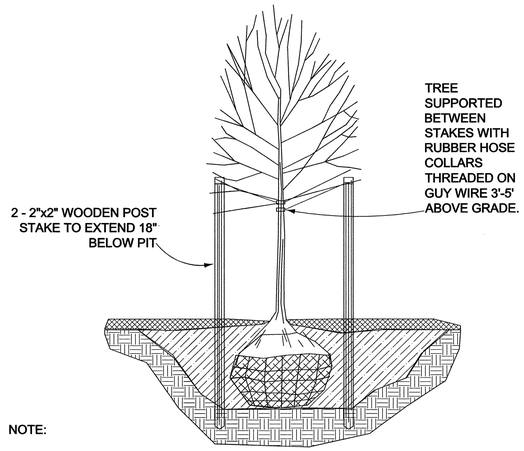

NOTE:
1. ANY STAKING WILL BE IN ACCORDANCE WITH CURRANT HORTICULTURE PRACTICE. STAKING OF TREES WILL BE WITH WOODEN STAKES PLACED OUTSIDE OF THE ROOT BALL
2. SEE DETAILS FOR TREE PLANTING.

2 / LD200 TREE STAKING (DECIDUOUS)

MIX EXCAVATED SOIL WITH 1.5 CUBIC FEET ORGANIC MATTER FOR AMENDED BACKFILL FOR EACH TREE.

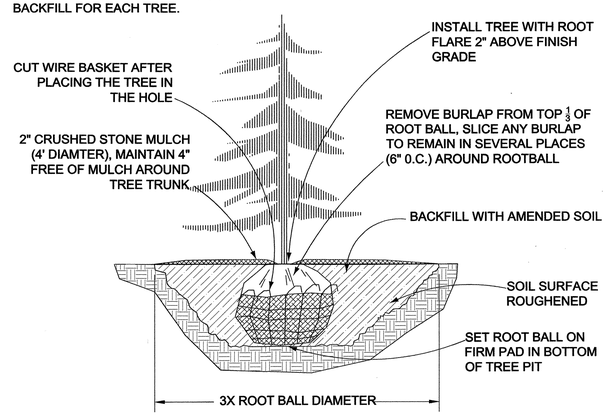

NOTE:
1. STAKING IS NOT GENERALLY REQUIRED. FOR ALL TREE PLANTING, IF CONDITIONS ARE PRESENT WHERE THE CONTRACTOR DEEMS IT NECESSARY TO STAKE TREES IN ORDER TO ENSURE VIABILITY THORUGH THE GUARANTEE PERIOD, THE CONTRACTOR MAY STAKE THE TREES AT NO ADDITIONAL COST TO THE OWNER.

3 / LD200 EVERGREEN TREE PLANTING

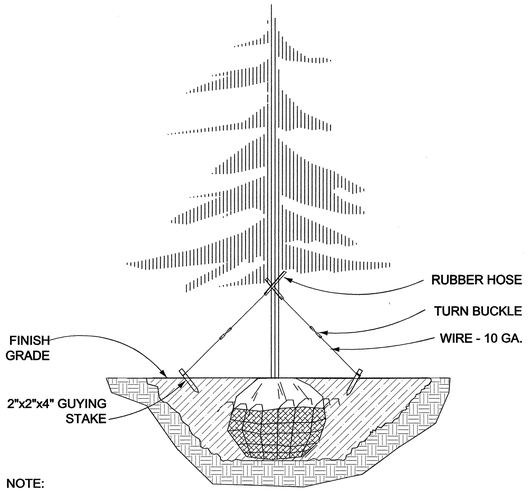

NOTE:
1. STAKING WILL BE IN ACCORDANCE WITH CURRANT HORTICULTURE PRACTICE. STAKING OF TREES WILL BE WITH WOODEN STAKES PLACED OUTSIDE OF THE ROOT BALL.
2. THREE EQUALLY SPACED WIRES ARE TO BE USED IN GUYING.
3. ALL TREE STAKING SHALL BE INCLUDED.
4. SEE DETAILS FOR TREE PLANTING.

4 / LD200 TREE GUYING (EVERGREEN)

MIX EXISTING SOIL WITH A HANDFUL OF ORGANIC MATTER FOR BACKFILL FOR EACH TUBLING.

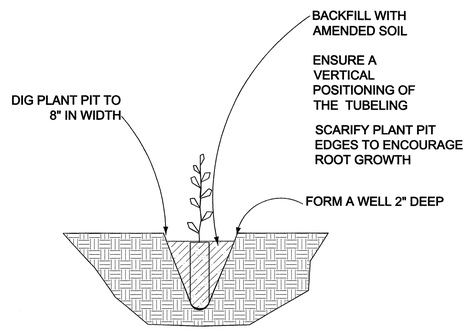

5 / LD200 TUBELING PLANTING

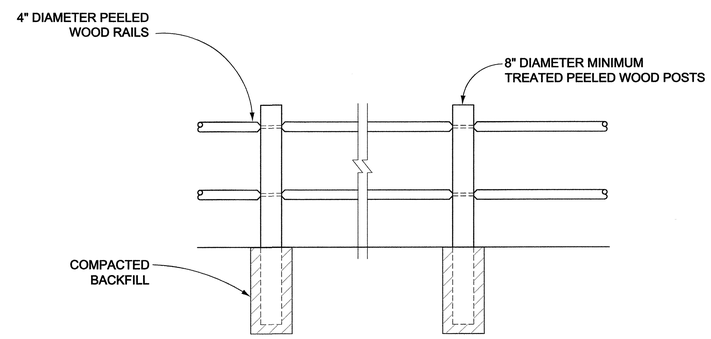

NOTES:
1. ALL RAILS & POSTS TREATED WITH SHINGLE OIL.
2. SEE CIVIL SHEETS FOR DETAILS ON ATTACHMENT TO STONE VENEER WALLS.
3. CONTRACTOR TO PROVIDE SHOP DRAWINGS.

6 / LD200 POST & RAIL FENCE

State of Utah
Department of Administrative Services
Division of Facilities Construction & Management
4110 State Office Building
Salt Lake City, Utah 84114
Phone: (801) 538 - 3018
Fax: (801) 538 - 3267
http://dfcm.utah.gov

CONSULTANTS:

LANDMARK DESIGN

STATE OF UTAH 8/19/07 LISA M. BENSON NO. 5198020 LICENSED LANDSCAPE ARCHITECT

PROJECT NAME AND ADDRESS:

ESCALANTE HERITAGE CENTER

1281 EAST HIGHWAY 12
ESCALANTE, UTAH

COPYRIGHT:

ALL RIGHTS RESERVED © LANDMARK DESIGN, INC.
These documents are protected under the United States 1978 copyright act. It is an exclusive work of original authorship. None of the pictorial, graphic, or technical charts or drawings depicted may be reproduced by any method, mechanical, electronic, or otherwise; nor may they be used or re-used for any purpose without the express prior written permission of Landmark Design, Inc.

MARK	DATE	DESCRIPTION

ISSUE TYPE: 100% SUBMITTAL

ISSUE DATE: 06.12.09

DFCM PROJECT NO:	09018900
CAD PROJECT NO:	0840
CAD DWG FILE:	--
DRAWN BY:	L. BENSON
CHK'D BY:	H.HOLT/M.VLASIC
COPYRIGHT:	--

SHEET TITLE

LANDSCAPE DETAILS

SHEET NUMBER

LD200

SHEET OF

Lisa; Aug 10, 2009 - 3:45pm
\\Design_server\landmark\PROJECTS\LA_CURRENT\ESCALANTE_HERITAGE_CENTER\-Phase1 construction october 2008\CAD files\LD 200 LANDSCAPE DETAILS.dwg

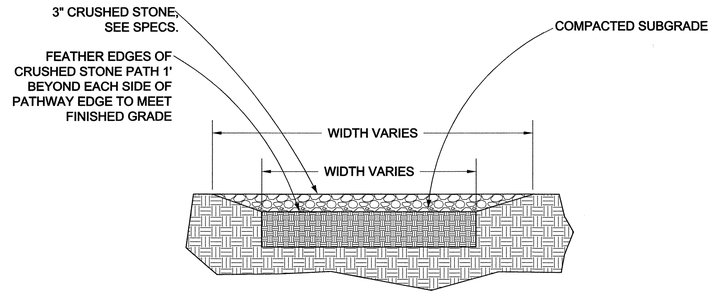

NOTE: SEE DIMENSION AND LAYOUT PLAN (SHEET LS102) FOR PATHWAY DIMENSIONS.

1 / LD201 CRUSHED STONE PATHWAY - PICNIC AREA

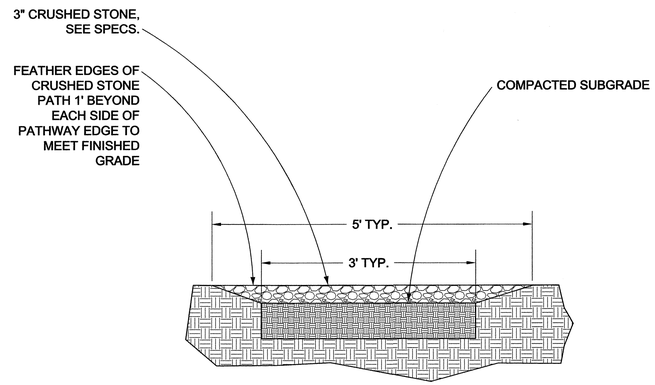

2 / LD201 INFORMAL CRUSHED STONE PATHWAY

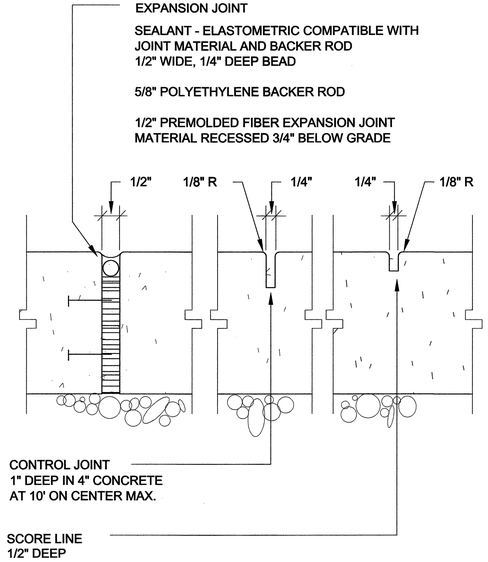

3 / LD201 CONCRETE JOINTS

State of Utah
Department of Administrative Services
Division of Facilities Construction & Management
4110 State Office Building
Salt Lake City, Utah 84114
Phone: (801) 538 - 3018
Fax: (801) 538 - 3267
http://dfcm.utah.gov

CONSULTANTS:

LANDMARK DESIGN

STATE OF UTAH 8/12/09 LISA M. BENSON NO. 5198020 LICENSED LANDSCAPE ARCHITECT

PROJECT NAME AND ADDRESS:

ESCALANTE HERITAGE CENTER

1281 EAST HIGHWAY 12
ESCALANTE, UTAH

COPYRIGHT:

ALL RIGHTS RESERVED © LANDMARK DESIGN, INC.
These documents are protected under the United States 1978 copyright act. It is an exclusive work of original authorship. None of the pictorial, graphic, or technical charts or drawings depicted may be reproduced by any method, mechanical, electronic, or otherwise; nor may they be used or re-used for any purpose without the express prior written permission of Landmark Design, Inc.

MARK	DATE	DESCRIPTION

ISSUE TYPE: 100% SUBMITTAL

ISSUE DATE: 06.12.09

DFCM PROJECT NO:	09018900
CAD PROJECT NO:	0840
CAD DWG FILE:	--
DRAWN BY:	L. BENSON
CHK'D BY:	H.HOLT/M.VLASIC
COPYRIGHT:	--

SHEET TITLE

LANDSCAPE DETAILS

SHEET NUMBER

LD201

SHEET OF

Lisa; Aug 10, 2009 - 3:45pm
\\Design_server\landmark\PROJECTS\LA_CURRENT\ESCALANTE_HERITAGE_CENTER\1-Phase1 construction october 2008\CAD files\LD 201 LANDSCAPE DETAILS.dwg

PLANT SCHEDULES

TUBELING/SEED MIX A

QTY.	SIZE	SCIENTIFIC NAME	COMMON NAME
		SHRUBS	
9	TUBELING	ARTEMISIA FRIGIDA	FRINGED SAGE
6	TUBELING	CERATOIDES LANATA	WINTERFAT
8	TUBELING	CHRYSOTHAMNUS NAUSEOSUS	RUBBER RABBITBRUSH
7	TUBELING	EPHEDRA VIRIDIS	MORMON TEA
		FORBS	
4	TUBELING	CALYLOPHUS LAVANDULIFOLIUS	PUCKERED SUNDROPS
4	TUBELING	DELPHINIUM ANDERSONII	ANDERSON'S LARKSPUR
4	TUBELING	GILIA AGGREGATA	SCARLET GILIA
4	TUBELING	HYMENOXYS ACAULIS	SUNDANCER DAISY
4	TUBELING	PHLOX HOODII	CARPET PHLOX
		NATIVE FORB/GRASS SEED MIX (SEE SCHEDULE THIS SHEET)	
	SEED	ACHNATHERUM HYMENOIDES	INDIAN RICE GRASS
	SEED	BOUTELOUA GRACILIS	BLUE GRAMA
	SEED	ERIOGONUM UMBELLATUM	SULPHUR BUCKWHEAT
	SEED	GAILLARDIA ARISTATA	BLANKETFLOWER
	SEED	HILARIA JAMESII	GALLETA
	SEED	PASCOPYRUM SMITHII	WESTERN WHEATGRASS
	SEED	PENSTEMON EATONII	FIRECRACKER PENSTEMON
	SEED	POA SECUNDA	SANDBERG BLUEGRASS

TUBELING/SEED MIX B

QTY.	SIZE	SCIENTIFIC NAME	COMMON NAME
		SHRUBS	
25	TUBELING	AMELANCHIER UTAHENSIS	UTAH SERVICEBERRY
20	TUBELING	CERATOIDES LANATA	WINTERFAT
24	TUBELING	CERCORCARPUS MONTANUS	ALDERLEAF MOUNTAIN MAHOGANY
20	TUBELING	CHAMAEBATIARIA MILLEFOLIUM	FERNBUSH
25	TUBELING	EPHEDRA VIRIDIS	MORMON TEA
25	TUBELING	FALLUGIA PARADOXA	APACHE PLUME
24	TUBELING	PHILADELPUS MICROPHYLLUS	LITTLELEAF MOCKORANGE
25	TUBELING	RHUS TRILOBATA	OAKBRUSH SUMAC
24	TUBELING	RIBES AUREUM	GOLDEN CURRANT
24	TUBELING	SHEPHERDIA ARGENTEA	SILVER BUFFALOBERRY
15	TUBELING	YUCCA ANGUSTISSIMA	NARROWLEAF YUCCA
15	TUBELING	YUCCA HARRIMANIAE	HARRIMAN YUCCA
		FORBS	
7	TUBELING	CALYLOPHUS LAVANDULIFOLIUS	PUCKERED SUNDROPS
7	TUBELING	DELPHINIUM ANDERSONII	ANDERSON'S LARKSPUR
7	TUBELING	ERIOGONUM OVALIFOLIUM	CUSHION BUCKWHEAT
7	TUBELING	GAILLARDIA PINNATIFIDA	HOPI BLANKETFLOWER
7	TUBELING	GILIA AGGREGATA	SCARLET GILIA
7	TUBELING	HYMENOXYS ACAULIS	SUNDANCER DAISY
7	TUBELING	MIRABILIS MULTIFLORA	SHOWY FOUR O'CLOCK
7	TUBELING	OENOTHERA ALBICAULUS	WHITE STEMMED EVENING PRIMROSE
7	TUBELING	OENOTHERA CAESPITOSA	WHITE TUFTED EVENING PRIMROSE
7	TUBELING	PENSTEMON UTAHENSIS	UTAH PENSTEMON
7	TUBELING	PHLOX HOODII	CARPET PHLOX
7	TUBELING	PHLOX LONGIFOLIA	LONGLEAF PHLOX
		NATIVE SHRUB/FORB/GRASS MIX (SEE SCHEDULE THIS SHEET)	
	SEED	ACHNATHERUM HYMENOIDES	INDIAN RICE GRASS
	SEED	ARTEMISIA CANA	SILVER SAGE
	SEED	ARTEMISIA FRIGIDA	FRINGED SAGE
	SEED	ARTEMISIA TRIDENTATA VASEYANA	MOUNTAIN BIG SAGEBRUSH
	SEED	BOUTELOUA CURTIPENDULA	SIDEOATS GRAMA
	SEED	BOUTELOUA GRACILIS	BLUE GRAMA
	SEED	CHRYSOTHAMNUS NAUSEOSUS	RUBBER RABBITBRUSH
	SEED	ERIOGONUM UMBELLATUM	SULFUR BUCKWHEAT
	SEED	GAILLARDIA ARISTATA	BLANKETFLOWER
	SEED	HILARIA JAMESII	GALLETA
	SEED	LEYMUS CINEREUS	GREAT BASIN WILDRYE
	SEED	LINUM LEWISII	BLUE FLAX
	SEED	OENOTHERA PALLIDA	PALE EVENING PRIMROSE
	SEED	PASCOPYRUM SMITHII	WESTERN WHEATGRASS
	SEED	PENSTEMON EATONII	FIRECRACKER PENSTEMON
	SEED	PENSTEMON PALMERI	PALMER PENSTEMON
	SEED	POA SECUNDA	SANDBERG BLUEGRASS
	SEED	PSEUDOROEGNERIA SPICATA	BLUEBUNCH WHEATGRASS
	SEED	SCHIZACHYRIUM SCOPARIUM	LITTLE BLUESTEM
	SEED	SHPAERALCEA GROSSULARIIFOLIA	GOOSEBERRYLEAF GLOBEMALLOW
	SEED	SPOROBOLUS AIROIDES	ALKALI SACATON
	SEED	VIGUIERA MULTIFLORA	SHOWY GOLDENEYE

SHORT GRASS SEED MIX (SEE SCHEDULE THIS SHEET)

ACHNATHERUM HYMENOIDES	INDIAN RICE GRASS
BOUTELOUA GRACILIS	BLUE GRAMA
HILARIA JAMESII	GALLETA
PASCOPYRUM SMITHII	WESTERN WHEATGRASS
POA SECUNDA	SANDBERG BLUEGRASS

REVEGETATION SEED MIX (SEE SCHEDULE THIS SHEET)

ACHNATHERUM HYMENOIDES	INDIAN RICE GRASS
ARTEMISIA CANA	SILVER SAGE
ARTEMISIA FRIGIDA	FRINGED SAGE
ARTEMISIA TRIDENTATA VASEYANA	MOUNTAIN BIG SAGEBRUSH
BOUTELOUA CURTIPENDULA	SIDEOATS GRAMA
BOUTELOUA GRACILIS	BLUE GRAMA
CHRYSOTHAMNUS NAUSEOSUS	RUBBER RABBITBRUSH
ERIOGONUM UMBELLATUM	SULFUR BUCKWHEAT
GAILLARDIA ARISTATA	BLANKETFLOWER
HILARIA JAMESII	GALLETA
LEYMUS CINEREUS	GREAT BASIN WILDRYE
LINUM LEWISII	BLUE FLAX
OENOTHERA PALLIDA	PALE EVENING PRIMROSE
PASCOPYRUM SMITHII	WESTERN WHEATGRASS
PENSTEMON EATONII	FIRECRACKER PENSTEMON
PENSTEMON PALMERI	PALMER PENSTEMON
POA SECUNDA	SANDBERG BLUEGRASS
PSEUDOROEGNERIA SPICATA	BLUEBUNCH WHEATGRASS
SCHIZACHYRIUM SCOPARIUM	LITTLE BLUESTEM
SHPAERALCEA GROSSULARIIFOLIA	GOOSEBERRYLEAF GLOBEMALLOW
SPOROBOLUS AIROIDES	ALKALI SACATON
VIGUIERA MULTIFLORA	SHOWY GOLDENEYE

TREES

QTY.	SIZE	SYMBOL	SCIENTIFIC NAME	COMMON NAME
3	2" CAL.	FA	FRAXINUS ANOMALA	SINGLE LEAF ASH
2	10 GAL.	JP	JUNIPERUS OSTEOSPERMA	UTAH JUNIPER
4	4'	PE	PINUS EDULIS	PINYON PINE
2	10 GAL. CLUMP	QG	QUERCUS GAMBELII	GAMBEL'S OAK
12	2" CAL.	RP	ROBINIA PSEUDOACACIA 'PURPLE ROBE'	PURPLE ROBE LOCUST

SEED MIX A

BOTANICAL NAME	COMMON NAME	LBS PLS PER ACRE	SEEDS PER SQ FT	SEEDS PER ACRE	% OF SEEDS IN MIX	NUMBER OF SEEDS PER LB
ACHNATHERUM HYMENOIDES	INDIAN RICE GRASS	4.00	12.9	564,000	17.89	141,000
BOUTELOUA GRACILIS	BLUE GRAMA	0.75	14.2	618,750	19.63	825,000
ERIOGONUM UMBELLATUM	SULFUR BUCKWHEAT	1.00	4.8	209,000	6.63	209,000
GAILLARDIA ARISTATA	BLANKETFLOWER	1.00	3.0	132,000	4.19	132,000
HILARIA JAMESII	GALLETA	1.00	10.8	470,000	14.91	470,000
PASCOPYRUM SMITHII	WESTERN WHEATGRASS	1.50	3.8	165,000	5.23	110,000
PENSTEMON EATONII	FIRECRACKER PENSTEMON	0.50	6.9	300,000	9.52	600,000
POA SECUNDA	SANDBERG BLUEGRASS	0.75	15.9	693,750	22.01	925,000
TOTAL		**10.50**	**72.4**	**3,152,500**	**100.00**	
				% FORB	**20.33**	
				% GRASS	**79.67**	
					100.00	

SHORT GRASS SEED MIX

BOTANICAL NAME	COMMON NAME	LBS PLS PER ACRE	SEEDS PER SQ FT	SEEDS PER ACRE	% OF SEEDS IN MIX	NUMBER OF SEEDS PER LB
ACHNATHERUM HYMENOIDES	INDIAN RICE GRASS	3.00	9.7	423,000	12.84	141,000
BOUTELOUA GRACILIS	BLUE GRAMA	1.00	18.9	825,000	25.03	825,000
HILARIA JAMESII	GALLETA	1.25	13.5	587,500	17.83	470,000
LEYMUS CINEREUS	GREAT BASIN WILDRYE	2.00	6.0	260,000	7.89	130,000
PASCOPYRUM SMITHII	WESTERN WHEATGRASS	2.50	6.3	275,000	8.34	110,000
POA SECUNDA	SANDBERG BLUEGRASS	1.00	21.2	925,000	28.07	925,000
TOTAL		**10.75**	**75.7**	**3,295,500**	**100.00**	

SEED MIX B/REVEGETATION SEED MIX

BOTANICAL NAME	COMMON NAME	LBS PLS PER ACRE	SEEDS PER SQ FT	SEEDS PER ACRE	% OF SEEDS IN MIX	NUMBER OF SEEDS PER LB
ACHNATHERUM HYMENOIDES	INDIAN RICE GRASS	1.00	3.2	141,000	3.59	141,000
ARTEMISIA CANA	SILVER SAGE	0.10	2.0	85,000	2.16	850,000
ARTEMISIA FRIGIDA	FRINGED SAGE	0.10	10.0	435,600	11.08	4,356,000
ARTEMISIA TRIDENTATA VASEYANA	MOUNTAIN BIG SAGEBRUSH	0.10	5.7	250,000	6.36	2,500,000
BOUTELOUA CURTIPENDULA	SIDEOATS GRAMA	1.00	4.4	191,000	4.86	191,000
BOUTELOUA GRACILIS	BLUE GRAMA	0.40	7.6	330,000	8.39	825,000
CHRYSOTHAMNUS NAUSEOSUS	RUBBER RABBITBRUSH	0.20	1.8	80,000	2.03	400,000
ERIOGONUM UMBELLATUM	SULFUR BUCKWHEAT	0.50	2.4	104,500	2.66	209,000
GAILLARDIA ARISTATA	BLANKETFLOWER	0.50	1.5	66,000	1.68	132,000
HILARIA JAMESII	GALLETA	0.50	5.4	235,000	5.98	470,000
LEYMUS CINEREUS	GREAT BASIN WILDRYE	0.70	2.1	91,000	2.31	130,000
LINUM LEWISII	BLUE FLAX	0.50	3.4	146,500	3.73	293,000
OENOTHERA PALLIDA	PALE EVENING PRIMROSE	0.20	2.4	102,400	2.60	512,000
PASCOPYRUM SMITHII	WESTERN WHEATGRASS	0.70	1.8	77,000	1.96	110,000
PENSTEMON EATONII	FIRECRACKER PENSTEMON	0.20	2.8	120,000	3.05	600,000
PENSTEMON PALMERI	PALMER'S PENSTEMON	0.20	2.8	122,000	3.10	610,000
POA SECUNDA	SANDBERG BLUEGRASS	0.40	8.5	370,000	9.41	925,000
PSEUDOROEGNERIA SPICATA	BLUEBUNCH WHEATGRASS	0.50	1.6	70,000	1.78	140,000
SCHIZACHYRIUM SCOPARIUM	LITTLE BLUESTEM	0.70	4.2	182,000	4.63	260,000
SHPAERALCEA GROSSULARIIFOLIA	GOOSEBERRYLEAF GLOBEMALLOW	0.20	2.3	100,000	2.54	500,000
SPOROBOLUS AIROIDES	ALKALI SACATON	0.30	12.1	527,400	13.41	1,758,000
VIGUIERA MULTIFLORA	SHOWY GOLDENEYE	0.10	2.4	105,500	2.68	1,055,000
TOTAL		**9.10**	**90.3**	**3,931,900**	**100.00**	
				% SHRUB	**21.63**	
				% FORB	**19.36**	
				% GRASS	**59.00**	
					100.00	

LANDSCAPE NOTES:

1) THE CONTRACTOR MUST EXAMINE THE SITE CONDITIONS UNDER WHICH THE WORK IS TO BE PERFORMED AND NOTIFY THE OWNER'S AUTHORIZED REPRESENTATIVE IN WRITING OF ANY UNSATISFACTORY CONDITIONS. DO NOT PROCEED UNTIL CONDITIONS HAVE BEEN CORRECTED.

2) BEFORE ANY EXCAVATION NOTIFY APPROPRIATE UTILITY COMPANIES, AND COORDINATE WITH THE CONTRACTING OFFICER FOR THE LOCATION OF UTILITIES, SLEEVES, CONDUITS, ETC.

3) THE CONTRACTOR MUST COORDINATE WITH ALL OTHER ASSOCIATED TRADES TO BEST FACILITATE PROGRESS ON THE JOB.

4) THE CONTRACTOR IS RESPONSIBLE FOR FINISH GRADE ELEVATIONS IN LANDSCAPED AREAS.

5) ALL PLANT MATERIALS MUST MEET SIZES INDICATED IN SCHEDULES. THE OWNER'S AUTHORIZED REPRESENTATIVE RESERVES THE RIGHT TO REFUSE PLANT MATERIALS WHICH DO NOT MEET THE QUALITY REQUIRED OF THE PROJECT.

6) ANY PLANT QUANTITIES SHOWN ARE FOR THE CONVENIENCE OF THE CONTRACTOR ONLY. CONTRACTOR TO VERIFY ALL PLANT QUANTITIES REQUIRED AND PROVIDE THE PLANTS NECESSARY TO COMPLETE THE PLANTINGS.

7) CONTRACTOR IS RESPONSIBLE FOR REVEGETATING ANY ADDITIONAL DISTURBED AREAS AS DIRECTED BY OWNER'S AUTHORIZED REPRESENTATIVE. SEE SPECS.

8) CONTRACTOR TO ALLOW FOR 2" CRUSHED STONE MULCH (4' DIAMETER) AROUND EACH TREE. SEE DETAILS.

State of Utah
Department of Administrative Services
Division of Facilities Construction & Management
4110 State Office Building
Salt Lake City, Utah 84114
Phone: (801) 538 - 3018
Fax: (801) 538 - 3267
http://dfcm.utah.gov

CONSULTANTS:

LANDMARK DESIGN

STATE OF UTAH 8/13/09 LISA M. BENSON NO. 5198020 LICENSED LANDSCAPE ARCHITECT

PROJECT NAME AND ADDRESS:

ESCALANTE HERITAGE CENTER

1281 EAST HIGHWAY 12
ESCALANTE, UTAH

COPYRIGHT:

ALL RIGHTS RESERVED © LANDMARK DESIGN, INC.
These documents are protected under the United States 1978 copyright act. It is an exclusive work of original authorship. None of the pictorial, graphic, or technical charts or drawings depicted may be reproduced by any method, mechanical, electronic, or otherwise; nor may they be used or re-used for any purpose without the express prior written permission of Landmark Design, Inc.

MARK	DATE	DESCRIPTION

ISSUE TYPE: 100% SUBMITTAL

ISSUE DATE: 06.12.09

DFCM PROJECT NO:	09018900
CAD PROJECT NO:	0840
CAD DWG FILE:	--
DRAWN BY:	L. BENSON
CHK'D BY:	H.HOLT/M.VLASIC
COPYRIGHT:	--

SHEET TITLE

LANDSCAPE DETAILS

SHEET NUMBER

LD202

SHEET OF

Last: Aug 10, 2009 - 3:45pm
\\Design_server\landmark\PROJECTS\LA_CURRENT\ESCALANTE_HERITAGE_CENTER\1-Phase1 construction october 2008\CAD files\LD 202 LANDSCAPE DETAILS.dwg

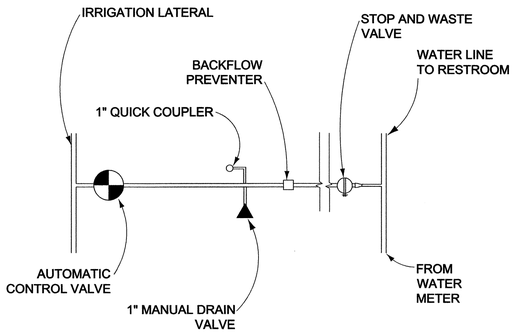

1 LD300 POINT OF CONNECTION SCHEMATIC

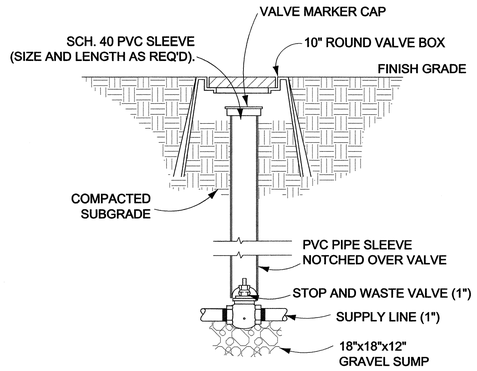

2 LD300 STOP AND WASTE VALVE

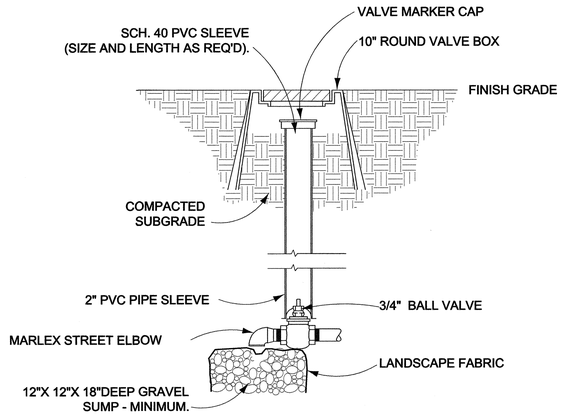

3 LD300 MANUAL DRAIN VALVE

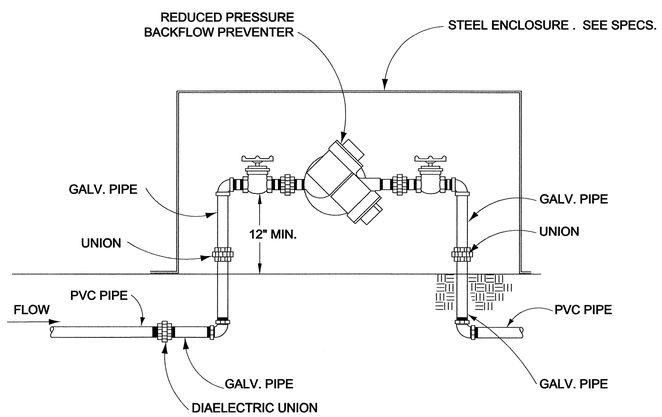

4 LD300 BACKFLOW PREVENTER

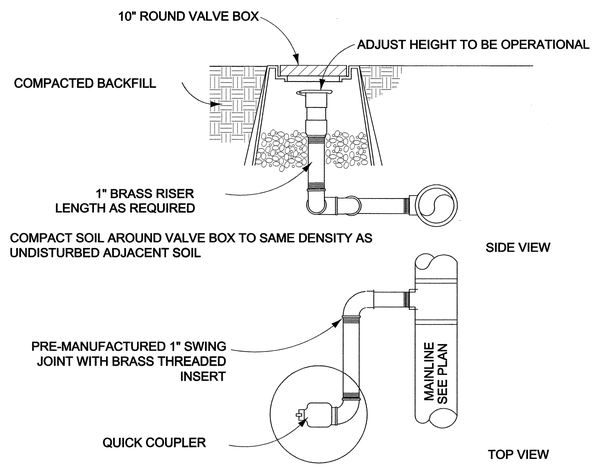

5 LD300 QUICK COUPLER VALVE

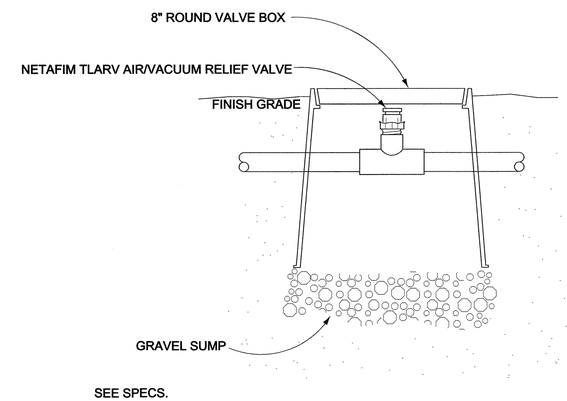

6 LD300 AIR/VACUUM RELIEF VALVE

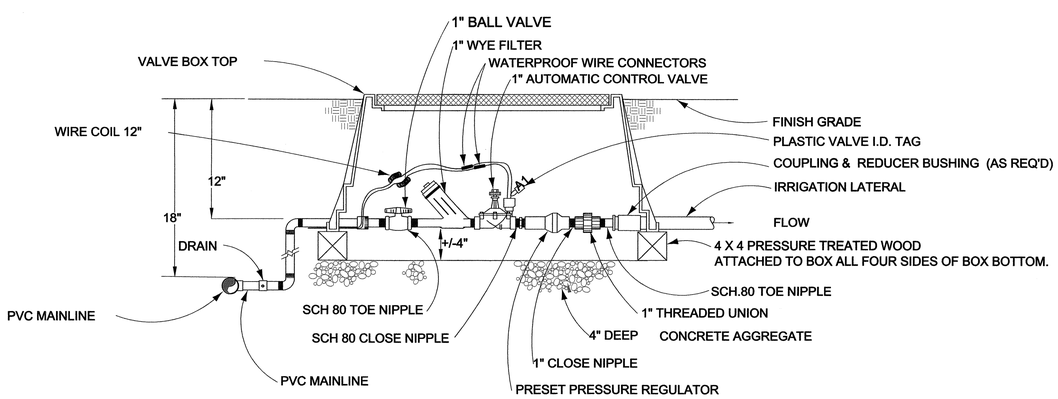

7 LD300 AUTOMATIC DRIP CONTROL VALVE

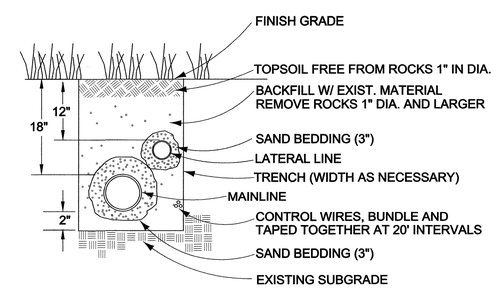

TIE A LOOSE 20" LOOP IN ALL WIRING AT CHANGES OF DIRECTION GREATER THAN 30 DEGREES. UNTIE ALL LOOPS AFTER CONNECTIONS HAVE BEEN MADE.

8 LD300 TYPICAL TRENCHING

State of Utah
Department of Administrative Services
Division of Facilities Construction & Management
4110 State Office Building
Salt Lake City, Utah 84114
Phone: (801) 538 - 3018
Fax: (801) 538 - 3267
http://dfcm.utah.gov

CONSULTANTS:

LANDMARK DESIGN

STATE OF UTAH 8/13/09 LISA M. BENSON NO. 5198020 LICENSED LANDSCAPE ARCHITECT

PROJECT NAME AND ADDRESS:

ESCALANTE HERITAGE CENTER

1281 EAST HIGHWAY 12
ESCALANTE, UTAH

COPYRIGHT:

ALL RIGHTS RESERVED © LANDMARK DESIGN, INC.
These documents are protected under the United States 1978 copyright act. It is an exclusive work of original authorship. None of the pictorial, graphic, or technical charts or drawings depicted may be reproduced by any method, mechanical, electronic, or otherwise; nor may they be used or re-used for any purpose without the express prior written permission of Landmark Design, Inc.

MARK	DATE	DESCRIPTION

ISSUE TYPE: 100% SUBMITTAL

ISSUE DATE: 06.12.09

DFCM PROJECT NO:	09018900
CAD PROJECT NO:	0840
CAD DWG FILE:	--
DRAWN BY:	L. BENSON
CHK'D BY:	H.HOLT/M.VLASIC
COPYRIGHT:	--

SHEET TITLE

IRRIGATION DETAILS

SHEET NUMBER

LD300

SHEET OF

Lisa; Aug 10, 2009 – 3:44pm
\\Design_server\landmark\PROJECTS\LA_CURRENT\ESCALANTE_HERITAGE_CENTER\1-Phase1 construction october 2008\CAD files\LD 300 IRRIGATION DETAILS.dwg

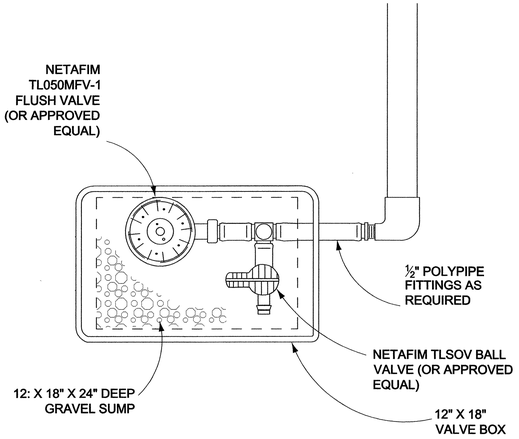

SEE SPECS.

1 / LD301 EMITTER LINE FLUSH VALVE

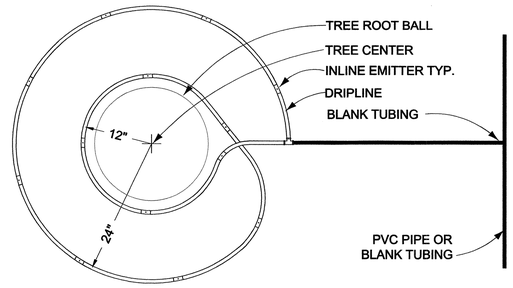

NOTES:
1. LENGTH OF DRIPLINE IS 19.5' PER TREE.
VERIFY THAT THERE ARE 13 INLINE EMITTERS ON DRIPLINE BEFORE PLACING AROUND TREE.
STAKE TUBING AS DETAILED (SEE DETAIL 3 THIS SHEET)

2 / LD301 DRIP TUBING (TREE)

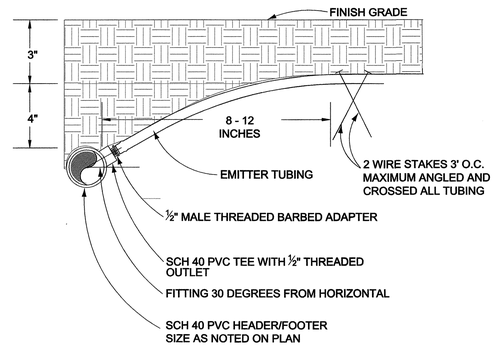

3 / LD301 PVE-EMITTER TUBING TRANSITION AND STAKING

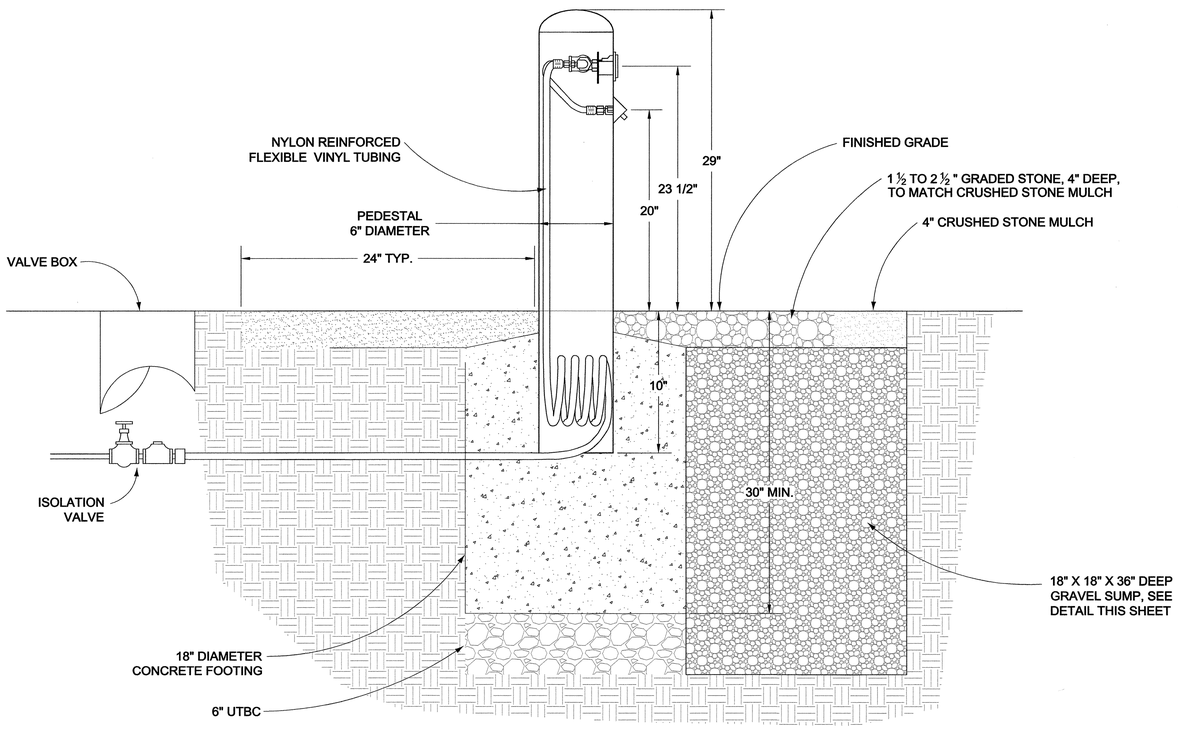

NOTES:
1. INSTALLATION TO BE COMPLETED IN ACCORDANCE WITH MANUFACTURER'S SPECIFICATIONS.
2. SEE SPECIFICATIONS.

4 / LD301 JUG FILLER - DIRECT BURY

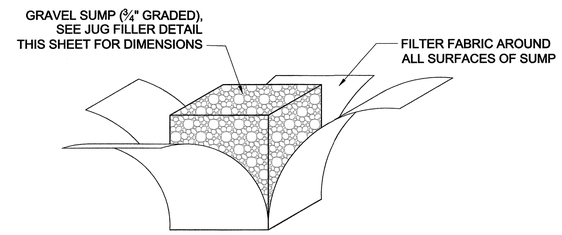

5 / LD301 GRAVEL SUMP

State of Utah
Department of Administrative Services
Division of Facilities
Construction & Management
4110 State Office Building
Salt Lake City, Utah 84114
Phone: (801) 538 - 3018
Fax: (801) 538 - 3267
http://dfcm.utah.gov

CONSULTANTS:

LANDMARK DESIGN

STATE OF UTAH 8/13/07 LISA M. BENSON NO. 5198020 LICENSED LANDSCAPE ARCHITECT

PROJECT NAME AND ADDRESS:

ESCALANTE HERITAGE CENTER

1281 EAST HIGHWAY 12
ESCALANTE, UTAH

COPYRIGHT:

ALL RIGHTS RESERVED ©
LANDMARK DESIGN, INC.
These documents are protected under the United States 1978 copyright act. It is an exclusive work of original authorship. None of the pictorial, graphic, or technical charts or drawings depicted may be reproduced by any method, mechanical, electronic, or otherwise; nor may they be used or re-used for any purpose without the express prior written permission of Landmark Design, Inc.

MARK	DATE	DESCRIPTION

ISSUE TYPE: 100% SUBMITTAL

ISSUE DATE: 06.12.09

DFCM PROJECT NO:	09018900
CAD PROJECT NO:	0840
CAD DWG FILE:	--
DRAWN BY:	L. BENSON
CHK'D BY:	H.HOLT/M.VLASIC
COPYRIGHT:	--

SHEET TITLE

IRRIGATION DETAILS

SHEET NUMBER

LD301

SHEET OF

Lisa; Aug 10, 2009 - 3:46pm
\\Design_server\landmark\PROJECTS\LA_CURRENT\ESCALANTE_HERITAGE_CENTER\1-Phase1 construction october 2008\CAD files\LD 301 IRRIGATION DETAILS.dwg

SLEEVE SIZE CHART

PIPE SIZE	MIN. SLEEVE SIZE
3/4"	1 1/2"
1"	2"
1 1/4"	2 1/2"
1 1/2"	3"
2"	4"
2 1/2"	6"
3"	6"
4"	8"
6"	12"

*WHEN MULTIPLE PIPES OCCUR IN ONE TRENCH, ADD REQUIRED SLEEVE SIZES TOGETHER FOR 1 SLEEVE SIZE.

*WIRES SHALL BE IN SEPARATE CONDUIT AS PER CHART BELOW.

WIRE CONDUIT SIZES

NUMBER OF WIRES	MIN. CONDUIT SIZE
1-7	1"
8-11	1 1/2"
12-22	2"
23-31	2 1/2"
32-36	3"

1 LD302 SLEEVING REQUIREMENTS

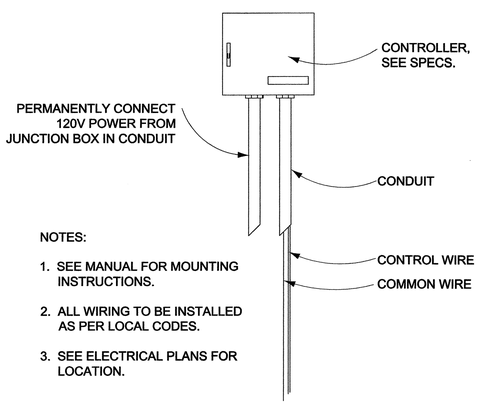

NOTES:

1. SEE MANUAL FOR MOUNTING INSTRUCTIONS.
2. ALL WIRING TO BE INSTALLED AS PER LOCAL CODES.
3. SEE ELECTRICAL PLANS FOR LOCATION.

2 LD302 WALL MOUNTED CONTROLLER

IRRIGATION NOTES:

1) THE CONTRACTOR MUST EXAMINE THE SITE CONDITIONS UNDER WHICH THE WORK IS TO BE PERFORMED AND NOTIFY THE OWNER'S AUTHORIZED REPRESENTATIVE IN WRITING OF UNSATISFACTORY CONDITIONS. DO NOT PROCEED UNTIL CONDITIONS HAVE BEEN CORRECTED.

2) IT IS THE RESPONSIBILITY OF THE CONTRACTOR TO BE FAMILIAR WITH ALL GRADE DIFFERENCES. LOCATION OF WALKS, WALLS, STRUCTURES, AND UTILITIES. THE CONTRACTOR SHALL REPAIR OR REPLACE ALL ITEMS DAMAGED BY THE WORK PERFORMED. THE CONTRACTOR SHALL COORDINATE ALL WORK WITH OTHER CONTRACTORS FOR THE LOCATION, INSTALLATION, AND MARKING OF PIPE SLEEVES UNDER WALKS.

3) BEFORE ANY TRENCHING, EXCAVATION OR DIGGING FOR ANY REASON THE CONTRACTOR SHALL HAVE THE UTILITIES LOCATED AND CONTACT THE APPROPRIATE UTILITY COMPANIES. THE CONTRACTOR WILL CONDUCT THE WORK IN SUCH A MANNER TO PROTECT ALL UTILITIES FROM DAMAGES. IT IS THE RESPONSIBILITY OF THE TRADES TO REPAIR OR REPLACE ANY DAMAGE AT NO EXPENSE TO THE OWNER.

4) THE IRRIGATION SYSTEM DESIGN IS BASED ON A MINIMUM OPERATING PRESSURE AT THE MAIN CONNECTION OF APPROXIMATELY 30 PSI AND A MAXIMUM FLOW DEMAND OF 2 GPM PER CIRCUIT. THE CONTRACTOR WILL VERIFY WATER PRESSURE PRIOR TO CONSTRUCTION. REPORT ANY DIFFERENCES BETWEEN THE PRESSURE INDICATED ON THE DRAWINGS AND THE ACTUAL PRESSURE READING AT THE IRRIGATION POINT OF CONNECTION (P.O.C.) TO THE OWNER'S AUTHORIZED REPRESENTATIVE.

5) DO NOT WILLFULLY INSTALL THE IRRIGATION SYSTEM AS SHOWN ON THE DRAWINGS WHEN IT IS OBVIOUS IN THE FIELD THAT UNKNOWN OBSTRUCTIONS, GRADE DIFFERENCES, OR DIFFERENCES IN THE AREA DIMENSIONS EXIST THAT MIGHT NOT HAVE BEEN CONSIDERED IN THE ENGINEERING. SUCH OBSTRUCTIONS OR DIFFERENCES SHOULD BE BROUGHT TO THE ATTENTION OF THE OWNER'S AUTHORIZED REPRESENTATIVE. IN THE EVENT THIS NOTIFICATION IS NOT PERFORMED, THE CONTRACTOR SHALL ASSUME FULL RESPONSIBILITY FOR ANY REVISIONS NECESSARY.

6) ALL IRRIGATION EQUIPMENT NOT OTHERWISE DETAILED SHALL BE INSTALLED AS PER MANUFACTURER'S RECOMMENDATIONS AND SPECIFICATIONS.

7) ALL MAIN LINES SHALL BE SCHEDULE 40 PVC BURIED TO A DEPTH OF 18".

8) MAIN AND LATERAL LINES SHOWN ON PLANS ARE DIAGRAMMATIC ONLY. ALL PIPES SHALL BE LAIN IN COMMON TRENCHES AND LANDSCAPED AREAS WHEN FEASIBLE.

9) ALL MAIN LINE PIPING AND CONTROL WIRES UNDER PAVING SHALL BE INSTALLED IN SLEEVES. CONTROL WIRE SLEEVES SHALL BE OF SUFFICIENT SIZE FOR THE REQUIRED NUMBER OF WIRES UNDER PAVING. CONTROL WIRES NOT LAIN IN A COMMON TRENCH WITH MAINLINE SHALL BE INSTALLED IN CONDUIT OF SUFFICIENT SIZE.

10) THE ELECTRICAL CONNECTION SHALL BE MADE FROM THE NEW VALVES TO THE CONTROLLER. IRRIGATION RUN TIMES SHALL BE SET BY THE CONTRACTOR.

11) CONTRACTOR TO SUBMIT ANY IRRIGATION LAYOUT CHANGES FROM PLAN FOR REVIEW AND APPROVAL PRIOR TO INITIATING WORK.

State of Utah
Department of Administrative Services
Division of Facilities Construction & Management
4110 State Office Building
Salt Lake City, Utah 84114
Phone: (801) 538 - 3018
Fax: (801) 538 - 3267
http://dfcm.utah.gov

CONSULTANTS:

LANDMARK DESIGN
LANDSCAPE ARCHITECTURE AND LAND PLANNING
1004 EMIGRANT SUITE
SALT LAKE CITY
UTAH 84108
PHONE (801) 474-0990
FAX (801) 474-0995

STATE OF UTAH
8/12/09
LISA M. BENSON
NO. 5198020
LICENSED LANDSCAPE ARCHITECT

PROJECT NAME AND ADDRESS:

ESCALANTE HERITAGE CENTER

1281 EAST HIGHWAY 12
ESCALANTE, UTAH

COPYRIGHT:

ALL RIGHTS RESERVED ©
LANDMARK DESIGN, INC.
These documents are protected under the United States 1978 copyright act. It is an exclusive work of original authorship. None of the pictorial, graphic, or technical charts or drawings depicted may be reproduced by any method, mechanical, electronic, or otherwise; nor may they be used or re-used for any purpose without the express prior written permission of Landmark Design, Inc.

MARK	DATE	DESCRIPTION

ISSUE TYPE: 100% SUBMITTAL

ISSUE DATE: 06.12.09

DFCM PROJECT NO:	09018900
CAD PROJECT NO:	0840
CAD DWG FILE:	--
DRAWN BY:	L. BENSON
CHK'D BY:	H.HOLT/M.VLASIC
COPYRIGHT:	--

SHEET TITLE

IRRIGATION DETAILS

SHEET NUMBER

LD302

SHEET OF

Lisa; Aug 10, 2009 - 3:46pm
\\Design_server\landmark\PROJECTS\LA_CURRENT\ESCALANTE_HERITAGE_CENTER\-Phase1 construction october 2008\CAD files\LD 302 IRRIGATION DETAILS.dwg

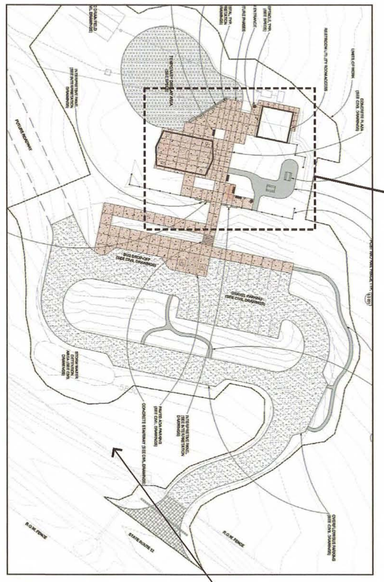

A Site Map

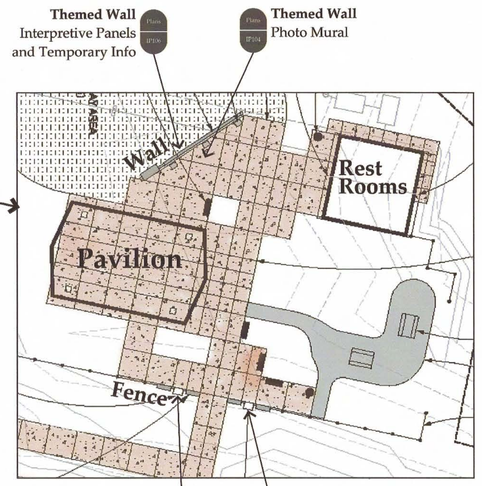

B Escalante Heritage Center

Entrance Sign
Temporary Location

Hole-In-The-Rock Trail
Orientation Sign

Escalante Region
Orientation Sign

SITE MAP Interpretive and Orientation Signage Location

State of Utah
Department of Administrative Services

Division of Facilities
Construction & Management
4110 State Office Building
Salt Lake City, Utah 84114
Phone: (801) 538 - 3018
Fax: (801) 538 - 3267

http://dfcm.utah.gov

CONSULTANTS:

LANDMARK DESIGN

Hanks Consulting
333 South Parkside Circle
St. George, UT 84770
435-313-0606

PROJECT NAME AND ADDRESS:

ESCALANTE
HERITAGE CENTER

1281 EAST HIGHWAY 12
ESCALANTE, UTAH

COPYRIGHT:

ALL RIGHTS RESERVED ©
LANDMARK DESIGN, INC.
These documents are protected under the United States 1978 copyright act. It is an exclusive work of original authorship. None of the pictorial, graphic, or technical charts or drawings depicted may be reproduced by any method, mechanical, electronic, or otherwise; nor may they be used or re-used for any purpose without the express prior written permission of Landmark Design, Inc.

MARK	DATE	DESCRIPTION

ISSUE TYPE: 100% SUBMITTAL

ISSUE DATE: 06.12.09

DFCM PROJECT NO:	09018900
CAD PROJECT NO:	--
CAD DWG FILE:	--
DRAWN BY:	K.HANKS
CHK'D BY:	K.HANKS
COPYRIGHT:	--

SHEET TITLE

INTERPRETIVE
SITE MAP

SHEET NUMBER

IP100

SHEET OF

Lisa; Aug 10, 2009 – 3:54pm
\\Design_server\landmark\PROJECTS\LA_CURRENT\ESCALANTE_HERITAGE_CENTER\1-Phase1 construction october 2008\CAD files\INTERP\100 percIP100.dwg

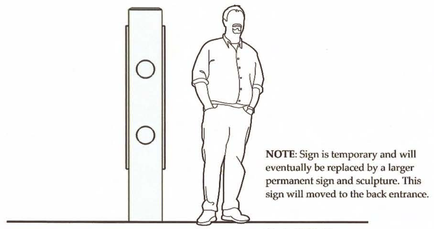

NOTE: Sign is temporary and will eventually be replaced by a larger permanent sign and sculpture. This sign will moved to the back entrance.

Scale 1/2"=1'

B East Elevation

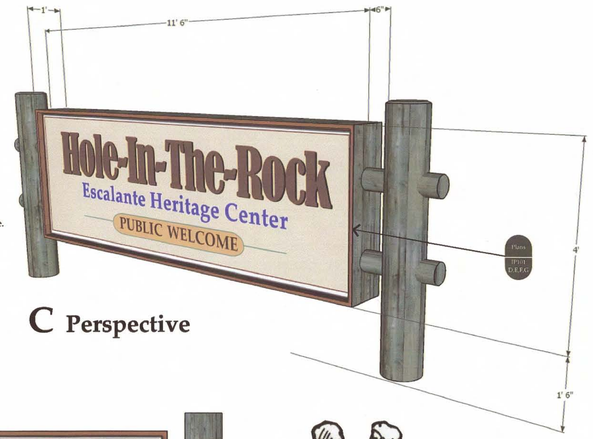

C Perspective

Scale 1/2"=1'

A South Elevation

ENTRANCE SIGN *Temporary*

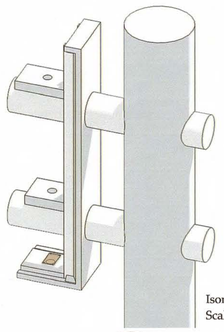

SPECIAL NOTES:
Vent holes on horizontal interior bracing and bottom. Cover interior bottom holes with screen.

Keep details, sizes, and materials standard as possible.

Match sign to project pole fencing.

Isometric
Scale 1"=1'

D Detail

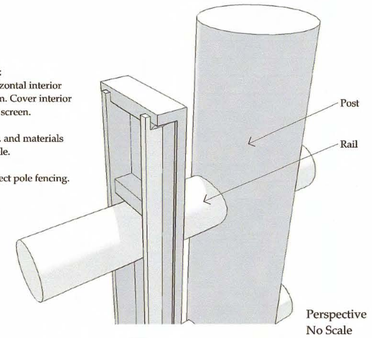

Perspective
No Scale

E Detail

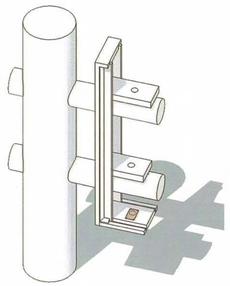

Isometric
Scale 1"=1'

F Detail

Typeface
BernhardM5
Condensed
kerned
PMS-484
w/ shadow
black

Typeface
Palatino BD
md. letter spacing
PMS-293

Typeface
Palatino Bd
+ letter spacing
all caps
PMS-484

NOTE: Proportionally match layout and type sizes to final sign size.

Sign Face Color
PMS-162

Facing Edge
PMS-484

Sign Sides
stained and sealed
natural gray
match light posts
& bollards

Sign Facing Edge
White

Line
PMS-484

Element Color
line PMS-877
fill color PMS-472

Scale 3/4"=1'

G Sign Face

ENTRANCE SIGN Layout/Details

State of Utah
Department of Administrative Services

Division of Facilities
Construction & Management
4110 State Office Building
Salt Lake City, Utah 84114
Phone: (801) 538 - 3018
Fax: (801) 538 - 3267

http://dfcm.utah.gov

CONSULTANTS:

LANDMARK DESIGN
LANDSCAPE ARCHITECTURE AND LAND PLANNING
2004 HIGHLAND DRIVE
SALT LAKE CITY
UTAH 84106
PHONE (801) 474-1000
FAX (801) 474-1010

Hanks Consulting
333 South Parkside Circle
St. George, UT 84770
435-313-0606

PROJECT NAME AND ADDRESS:

ESCALANTE
HERITAGE CENTER

1281 EAST HIGHWAY 12
ESCALANTE, UTAH

COPYRIGHT:

ALL RIGHTS RESERVED ©
LANDMARK DESIGN, INC.
These documents are protected under the United States 1978 copyright act. It is an exclusive work of original authorship. None of the pictorial, graphic, or technical charts or drawings depicted may be reproduced by any method, mechanical, electronic, or otherwise; nor may they be used or re-used for any purpose without the express prior written permission of Landmark Design, Inc.

MARK	DATE	DESCRIPTION

ISSUE TYPE: 100% SUBMITTAL

ISSUE DATE: 06.12.09

DFCM PROJECT NO:	09018900
CAD PROJECT NO:	--
CAD DWG FILE:	--
DRAWN BY:	K.HANKS
CHK'D BY:	K.HANKS
COPYRIGHT:	--

SHEET TITLE

INTERPRETIVE
PLANS

SHEET NUMBER

IP101

SHEET OF

Lisc: Aug 10, 2009 – 3:54pm
\\Design_server\landmark\PROJECTS\LA_CURRENT\ESCALANTE_HERITAGE_CENTER\1-Phase1 construction october 2008\CAD files\INTERP\100 percIP101.dwg

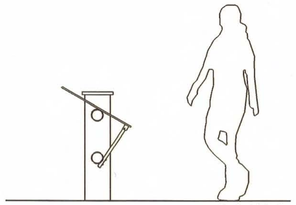

Scale 1/2"=1'

B Section View

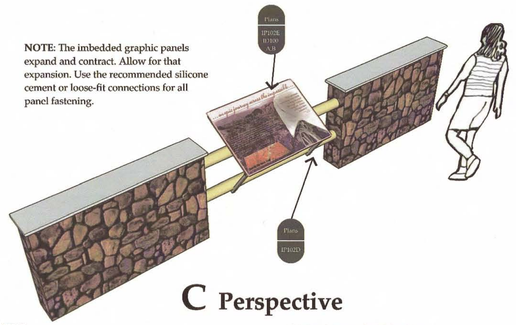

C Perspective

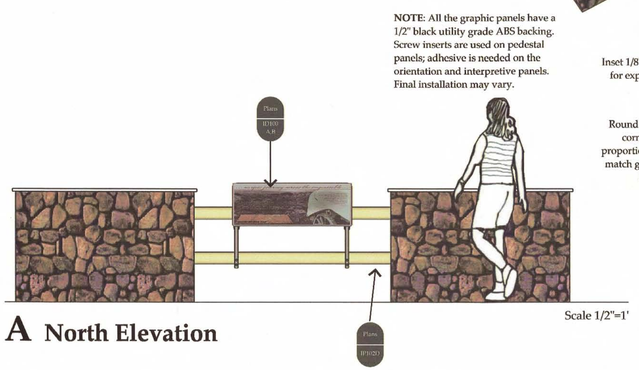

Scale 1/2"=1'

A North Elevation

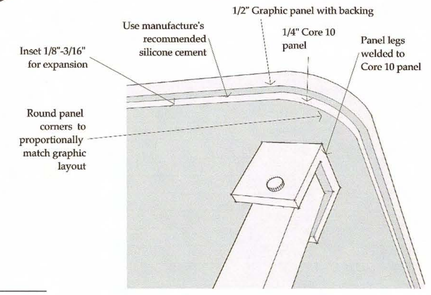

D Graphic Panel Detail

Hole-In-The-Rock Trail Orientation Panel

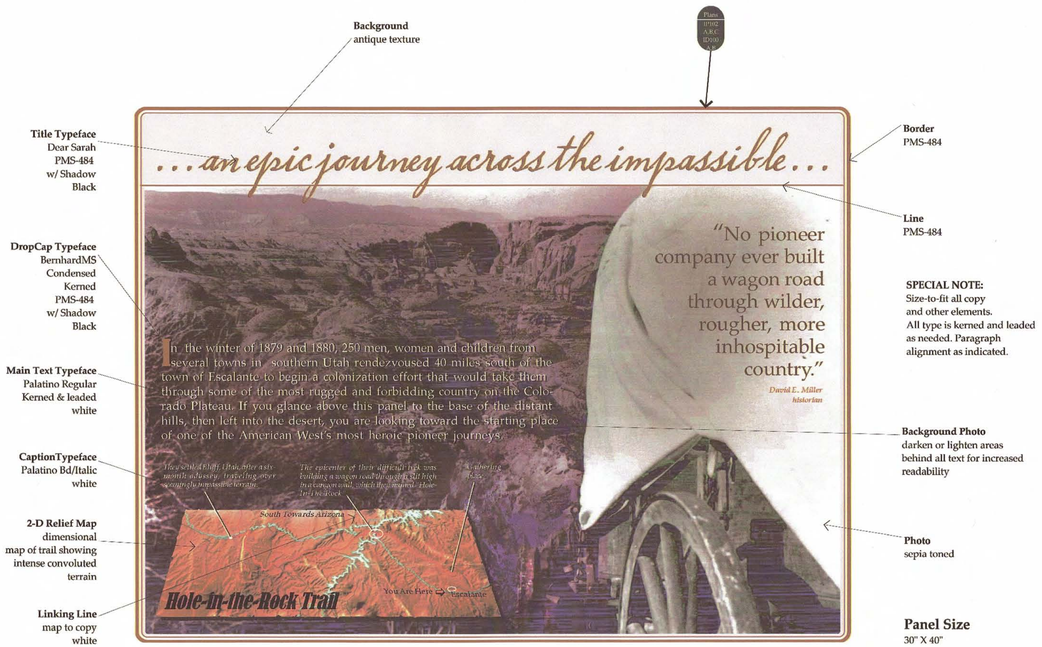

Interpretive Panel

Scale 1/4"=1"

E Hole-In-The-Rock Trail Orientation Panel Layout

State of Utah
Department of Administrative Services

Division of Facilities
Construction & Management
4110 State Office Building
Salt Lake City, Utah 84114
Phone: (801) 538 - 3018
Fax: (801) 538 - 3267

http://dfcm.utah.gov

CONSULTANTS:

LANDMARK DESIGN

Hanks Consulting
333 South Parkside Circle
St. George, UT 84770
435-313-0606

PROJECT NAME AND ADDRESS:

ESCALANTE
HERITAGE CENTER

1281 EAST HIGHWAY 12
ESCALANTE, UTAH

COPYRIGHT:

ALL RIGHTS RESERVED ©
LANDMARK DESIGN, INC.
These documents are protected under the United States 1978 copyright act. It is an exclusive work of original authorship. None of the pictorial, graphic, or technical charts or drawings depicted may be reproduced by any method, mechanical, electronic, or otherwise; nor may they be used or re-used for any purpose without the express prior written permission of Landmark Design, Inc.

MARK	DATE	DESCRIPTION

ISSUE TYPE: 100% SUBMITTAL

ISSUE DATE: 06.12.09

DFCM PROJECT NO:	09018900
CAD PROJECT NO:	--
CAD DWG FILE:	--
DRAWN BY:	K.HANKS
CHK'D BY:	K.HANKS
COPYRIGHT:	--

SHEET TITLE

INTERPRETIVE
PLANS

SHEET NUMBER

IP102

SHEET OF

Lisa; Aug 10, 2009 - 3:54pm
\\Design_server\landmark\PROJECTS\LA_CURRENT\ESCALANTE_HERITAGE_CENTER\1-Phase1 construction october 2008\CAD files\INTERP\100 pencil02.dwg

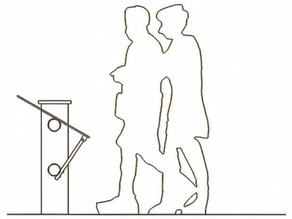

Scale 1/2"=1'

B Section View

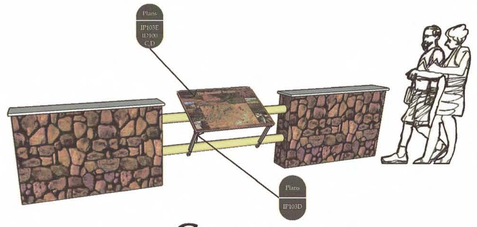

C Perspective

NOTES: Panel is 1/4" Core 10 plate with 1/2" embedded polycarbonate graphic panel mounted on panel facing. Mounted together with GE's Silicone II Polyurethane Contractor's Cement

Underside of panel is viewable from the downhill walkway. Have all hardward anodized or painted to match the weathered Core 10 plate.

Fasteners are vandal resistant.

Field check all measurements.

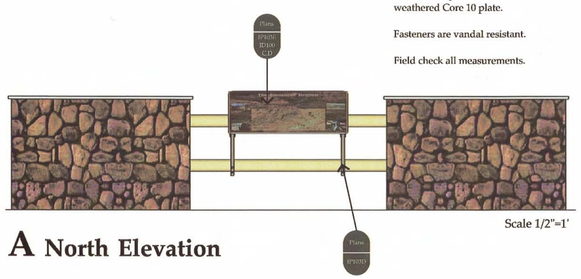

Scale 1/2"=1'

A North Elevation

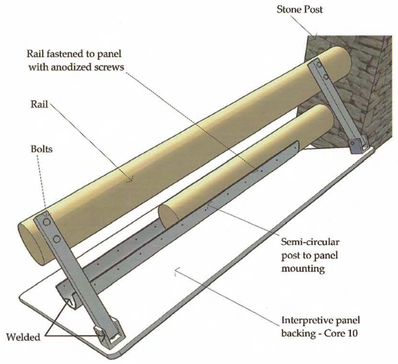

D Mounting Detail

Panel to Rail Underside Viewpoint

Escalante Region Orientation Panel

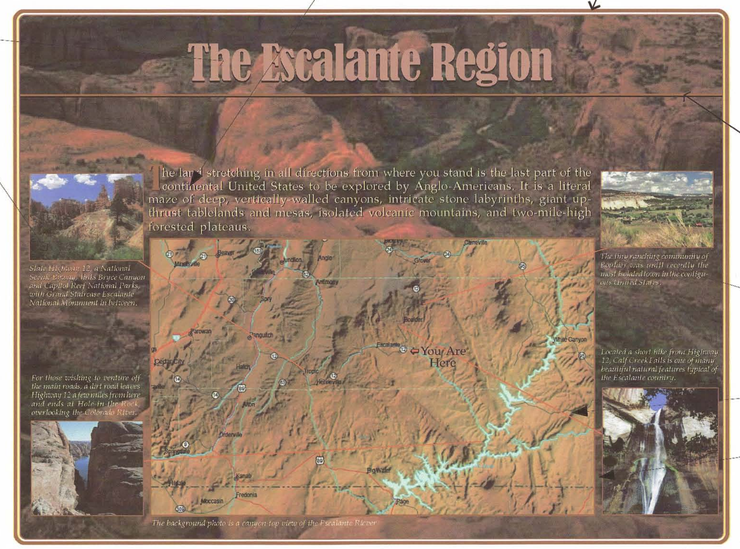

Text
Palatino Reg.
white

Title & Drop Cap
BernhardMS
Color depends on final contrast with photo

Same size panel and basic details as page IP 301

SPECIAL NOTE:
Size-to-fit all copy and other elements. All type is kerned and leaded as needed. Paragraph alignment as indicated.

Running Line
PMS-484
w/shadow black

Background Photo
darken areas behind all text for increased readability

Call-out lines
PMS-1795

Borders
PMS-484

Panel Size
30" X 40"

Scale 1/4"=1"

E The Escalante Region Orientation Panel Layout

State of Utah
Department of Administrative Services

Division of Facilities Construction & Management
4110 State Office Building
Salt Lake City, Utah 84114
Phone: (801) 538 - 3018
Fax: (801) 538 - 3267

http://dfcm.utah.gov

CONSULTANTS:

LANDMARK DESIGN INCORPORATED

Hanks Consulting
333 South Parkside Circle
St. George, UT 84770
435-313-0606

PROJECT NAME AND ADDRESS:

ESCALANTE HERITAGE CENTER

1281 EAST HIGHWAY 12
ESCALANTE, UTAH

COPYRIGHT:

ALL RIGHTS RESERVED © LANDMARK DESIGN, INC.
These documents are protected under the United States 1978 copyright act. It is an exclusive work of original authorship. None of the pictorial, graphic, or technical charts or drawings depicted may be reproduced by any method, mechanical, electronic, or otherwise; nor may they be used or re-used for any purpose without the express prior written permission of Landmark Design, Inc.

MARK	DATE	DESCRIPTION

ISSUE TYPE: 100% SUBMITTAL

ISSUE DATE: 06.12.09

DFCM PROJECT NO:	09018900
CAD PROJECT NO:	--
CAD DWG FILE:	--
DRAWN BY:	K.HANKS
CHK'D BY:	K.HANKS
COPYRIGHT:	--

SHEET TITLE

INTERPRETIVE PLANS

SHEET NUMBER

IP103

SHEET OF

Lisa: Aug 10, 2009 - 3:53pm
\\Design_server\landmark\PROJECTS\LA_CURRENT\ESCALANTE_HERITAGE_CENTER\1-Phase1 construction october 2008\CAD files\INTERP\100 perciP103.dwg

NOTES: The large vinyl mural is recommended by the manufacturer to be stretched and staple-mounted into furring strips along the mural's outside edges. This mural is temporary and expected to last 2-3 years. A color matching moulding along the outside is recommended, covering the furring strips for aesthetics. Moulding will also have to be removable in order to change the mural.

Field check all measurements.

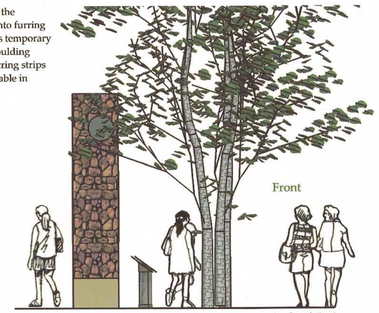

Scale 1/4"=1'

B West Elevation

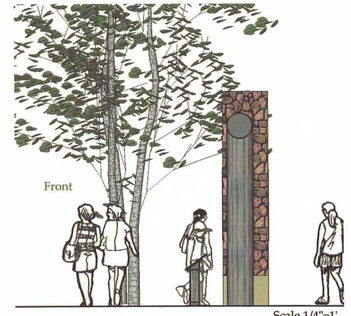

Scale 1/4"=1'

C East Elevation

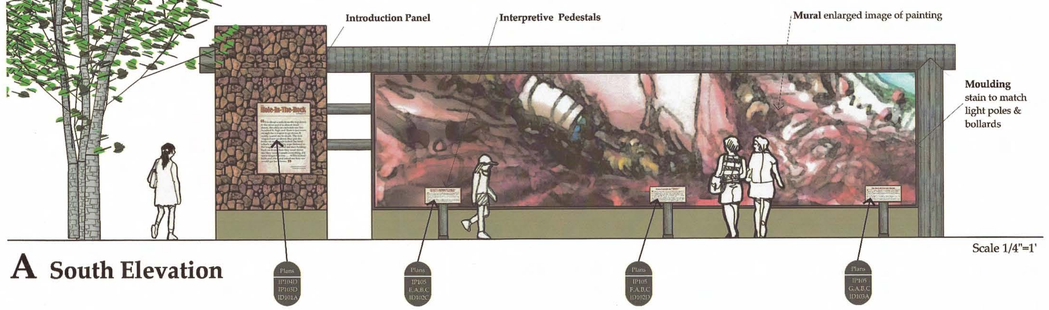

Scale 1/4"=1'

A South Elevation

THEMED WALL The-Hole-In-The-Rock Trail *South Elevation*

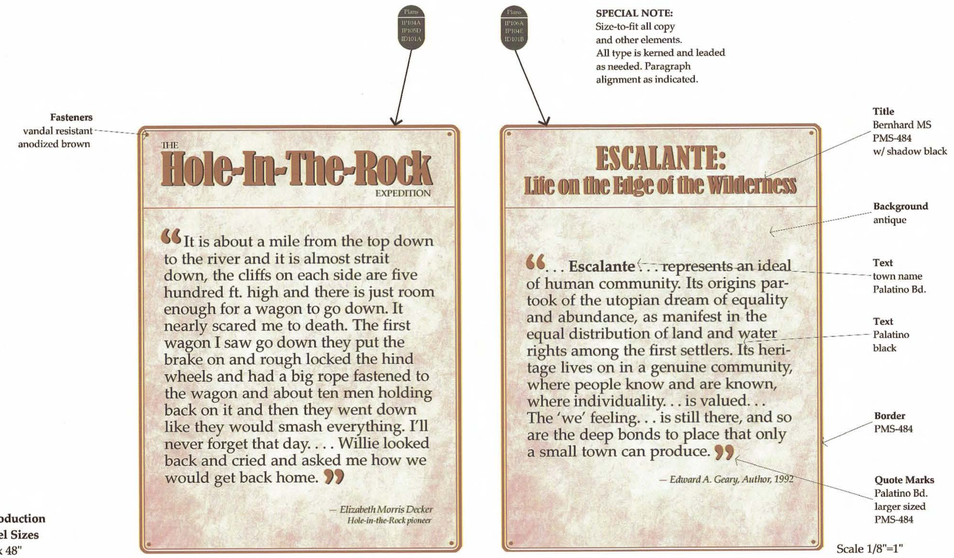

Scale 1/8"=1"

D Introduction Panel
Hole-In-The-Rock Trail

E Introduction Panel
The Escalante Region

THEMED WALL Introduction Panels Layout *Hole-In-The-Rock Trail & The Escalante Region*

State of Utah
Department of Administrative Services

Division of Facilities
Construction & Management
4110 State Office Building
Salt Lake City, Utah 84114
Phone: (801) 538 - 3018
Fax: (801) 538 - 3267

http://dfcm.utah.gov

CONSULTANTS:

LANDMARK DESIGN INCORPORATED
LANDSCAPE ARCHITECTURE AND LAND PLANNING
1004 HERMAN AVENUE
SALT LAKE CITY
UTAH 84105
PHONE (801) 474-1000
FAX (801) 474-1001

Hanks Consulting
333 South Parkside Circle
St. George, UT 84770
435-313-0606

PROJECT NAME AND ADDRESS:

ESCALANTE
HERITAGE CENTER

1281 EAST HIGHWAY 12
ESCALANTE, UTAH

COPYRIGHT:

ALL RIGHTS RESERVED ©
LANDMARK DESIGN, INC.
These documents are protected under the United States 1978 copyright act. It is an exclusive work of original authorship. None of the pictorial, graphic, or technical charts or drawings depicted may be reproduced by any method, mechanical, electronic, or otherwise; nor may they be used or re-used for any purpose without the express prior written permission of Landmark Design, Inc.

MARK	DATE	DESCRIPTION

ISSUE TYPE: 100% SUBMITTAL

ISSUE DATE: 06.12.09

DFCM PROJECT NO:	09018900
CAD PROJECT NO:	--
CAD DWG FILE:	--
DRAWN BY:	K.HANKS
CHK'D BY:	K.HANKS
COPYRIGHT:	--

SHEET TITLE

INTERPRETIVE
PLANS

SHEET NUMBER

IP104

SHEET OF

Lisp: Aug 10, 2009 - 3:52pm
\\Design_server\landmark\PROJECTS\LA_CURRENT\ESCALANTE_HERITAGE_CENTER\1-Phase1 construction october 2008\CAD files\INTERP\100 persIP104.dwg

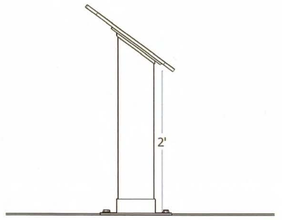

Scale 1"=1'

B West Elevation

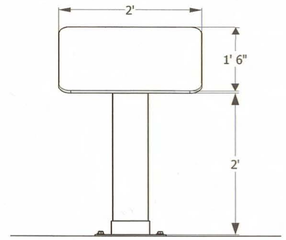

Scale 1"=1'

A South Elevation

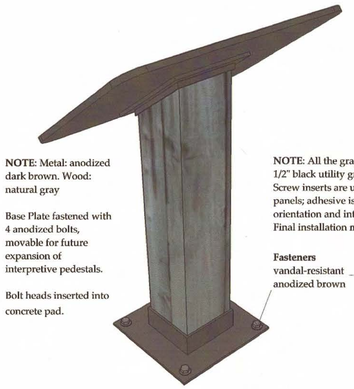

NOTE: Metal: anodized dark brown. Wood: natural gray

Base Plate fastened with 4 anodized bolts, movable for future expansion of interpretive pedestals.

Bolt heads inserted into concrete pad.

NOTE: The imbedded graphic panels expand and contract. Allow for that expansion. Use the recommended silicone cement or loose fit connections for all panel fastening.

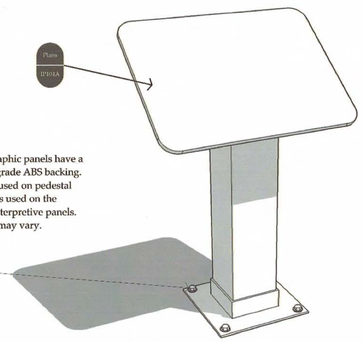

NOTE: All the graphic panels have a 1/2" black utility grade ABS backing. Screw inserts are used on pedestal panels; adhesive is used on the orientation and interpretive panels. Final installation may vary.

Fasteners
vandal-resistant anodized brown

C Perspectives

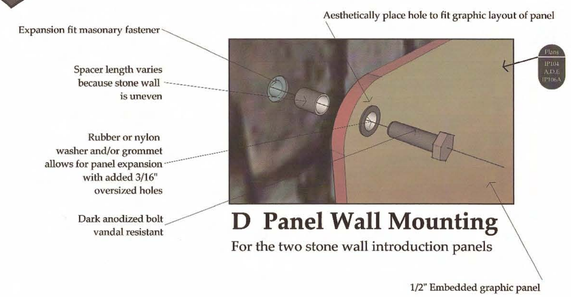

D Panel Wall Mounting
For the two stone wall introduction panels

PEDESTAL DETAIL The-Hole-In-The-Rock Trail

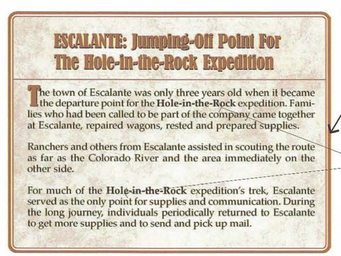

ESCALANTE: Jumping-Off Point For The Hole-in-the-Rock Expedition

The town of Escalante was only three years old when it became the departure point for the **Hole-in-the-Rock** expedition. Families who had been called to be part of the company came together at Escalante, repaired wagons, rested and prepared supplies.

Ranchers and others from Escalante assisted in scouting the route as far as the Colorado River and the area immediately on the other side.

For much of the **Hole-in-the-Rock** expedition's trek, Escalante served as the only point for supplies and communication. During the long journey, individuals periodically returned to Escalante to get more supplies and to send and pick up mail.

Panel E

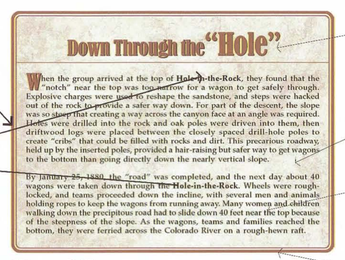

Down Through the "Hole"

When the group arrived at the top of **Hole-in-the-Rock**, they found that the "notch" near the top was too narrow for a wagon to get safely through. Explosive charges were used to reshape the sandstone, and steps were hacked out of the rock to provide a safer way down. For part of the descent, the slope was so steep that creating a way across the canyon face at an angle was required. Holes were drilled into the rock and oak poles were driven into them, then driftwood logs were placed between the closely spaced drill-hole poles to create "cribs" that could be filled with rocks and dirt. This precarious roadway, held up by the inserted poles, provided a hair-raising but safer way to get wagons to the bottom than going directly down the nearly vertical slope.

By January 26, 1880, the "road" was completed, and the next day about 40 wagons were taken down through the **Hole-in-the-Rock**. Wheels were rough-locked, and teams proceeded down the incline, with several men and animals holding ropes to keep the wagons from running away. Many women and children walking down the precipitous road had to slide down 40 feet near the top because of the steepness of the slope. As the wagons, teams and families reached the bottom, they were ferried across the Colorado River on a rough-hewn raft.

Panel F

Plate IP104A IP105C

Plate IP104A IP105D

Plate IP104A IP105A

Treck Title
Palatino Bd.

Title & Drop Cap
Bernhard MS
PMS-484
w/ shadow black

Background
antique

Text
Palatino
black

Border
PMS-484

NOTE: Metal: anodized dark brown. Wood: natural gray

Base Plate fastened with 4 anodized bolts, movable for future expansion of interpretive pedestals

Base mounting is bolt heads in cast concrete pads.

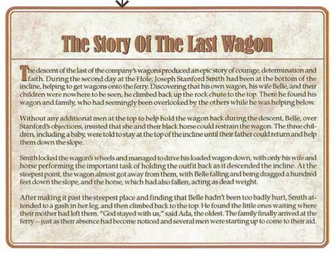

The Story Of The Last Wagon

The descent of the last of the company's wagons produced an epic story of courage, determination and faith. During the second day at the Hole, Joseph Stanford Smith had been at the bottom of the incline, helping to get wagons onto the ferry. Discovering that his own wagon, his wife Belle, and their children were nowhere to be seen, he climbed back up the rock chute to the top. There he found his wagon and family, who had seemingly been overlooked by the others while he was helping below.

Without any additional men at the top to help hold the wagon back during the descent, Belle, over Stanford's objections, insisted that she and their black horse could restrain the wagon. The three children, including a baby, were told to stay at the top of the incline until their father could return and help them down the slope.

Smith locked the wagon's wheels and managed to drive his loaded wagon down, with only his wife and horse performing the important task of holding the outfit back as it descended the incline. At the steepest point, the wagon almost got away from them, with Belle falling and being dragged a hundred feet down the slope, and the horse, which had also fallen, acting as dead weight.

After making it past the steepest place and finding that Belle hadn't been too badly hurt, Smith attended to a gash in her leg, and then climbed back to the top. He found the little ones waiting where their mother had left them. "God stayed with us," said Ada, the oldest. The family finally arrived at the ferry—just as their absence had become noticed and several men were starting up to come to their aid.

Panel G

Scale 1/8"=1'

SPECIAL NOTE:
Size-to-fit all copy and other elements.
All type is kerned and leaded as needed. Paragraph alignment as indicated.

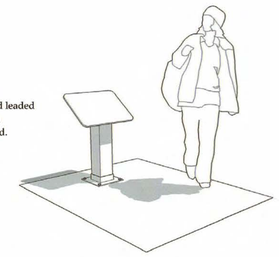

Pedestal Interpretive Panel Sizes 18" x 24"

THEMED WALL The-Hole-In-The-Rock Trail *Pedestal Panel Layouts*

State of Utah
Department of Administrative Services

Division of Facilities Construction & Management
4110 State Office Building
Salt Lake City, Utah 84114
Phone: (801) 538 - 3018
Fax: (801) 538 - 3267

http://dfcm.utah.gov

CONSULTANTS:

LANDMARK DESIGN
LANDSCAPE ARCHITECTURE AND LAND PLANNING
1804 HIGHLAND DRIVE
SALT LAKE CITY
UTAH 84106
PHONE (801) 474-0200
FAX (801) 474-0202

Hanks Consulting
333 South Parkside Circle
St. George, UT 84770
435-313-0606

PROJECT NAME AND ADDRESS:

ESCALANTE HERITAGE CENTER

1281 EAST HIGHWAY 12
ESCALANTE, UTAH

COPYRIGHT:

ALL RIGHTS RESERVED © LANDMARK DESIGN, INC.
These documents are protected under the United States 1978 copyright act. It is an exclusive work of original authorship. None of the pictorial, graphic, or technical charts or drawings depicted may be reproduced by any method, mechanical, electronic, or otherwise; nor may they be used or re-used for any purpose without the express prior written permission of Landmark Design, Inc.

MARK	DATE	DESCRIPTION

ISSUE TYPE: 100% SUBMITTAL

ISSUE DATE: 06.12.09

DFCM PROJECT NO:	09018900
CAD PROJECT NO:	--
CAD DWG FILE:	--
DRAWN BY:	K.HANKS
CHK'D BY:	K.HANKS
COPYRIGHT:	--

SHEET TITLE

INTERPRETIVE PLANS

SHEET NUMBER

IP105

SHEET OF

Usc: Aug 10, 2009 — 3:52pm
\\Design_server\landmark\PROJECTS\LA_CURRENT\ESCALANTE_HERITAGE_CENTER\1-Phase1 construction october 2008\CAD files\INTERP\100 perdIP105.dwg

B East Elevation

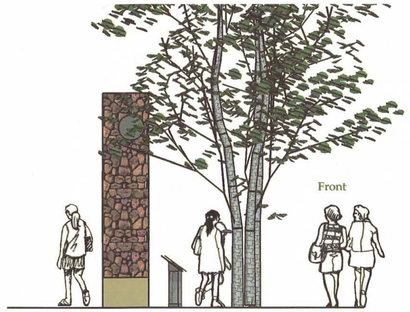

C West Elevation

SPECIAL NOTES:
Field check all measurements

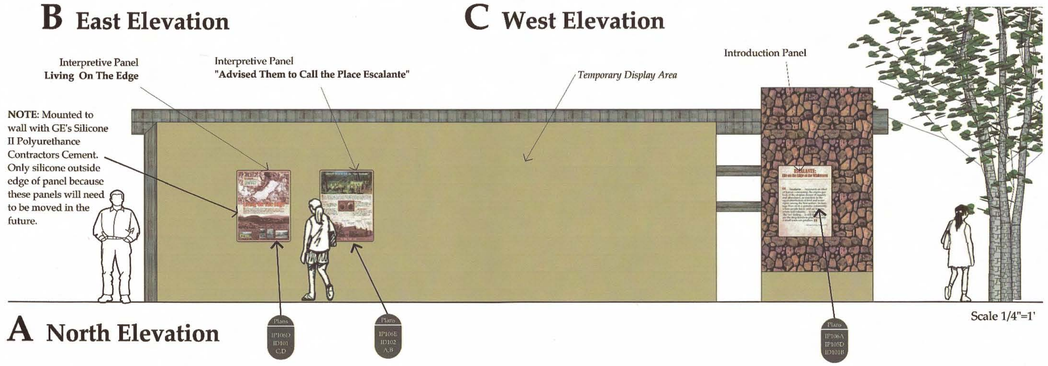

A North Elevation

Scale 1/4"=1'

THEMED WALL Interpretive Panels *South Elevation*

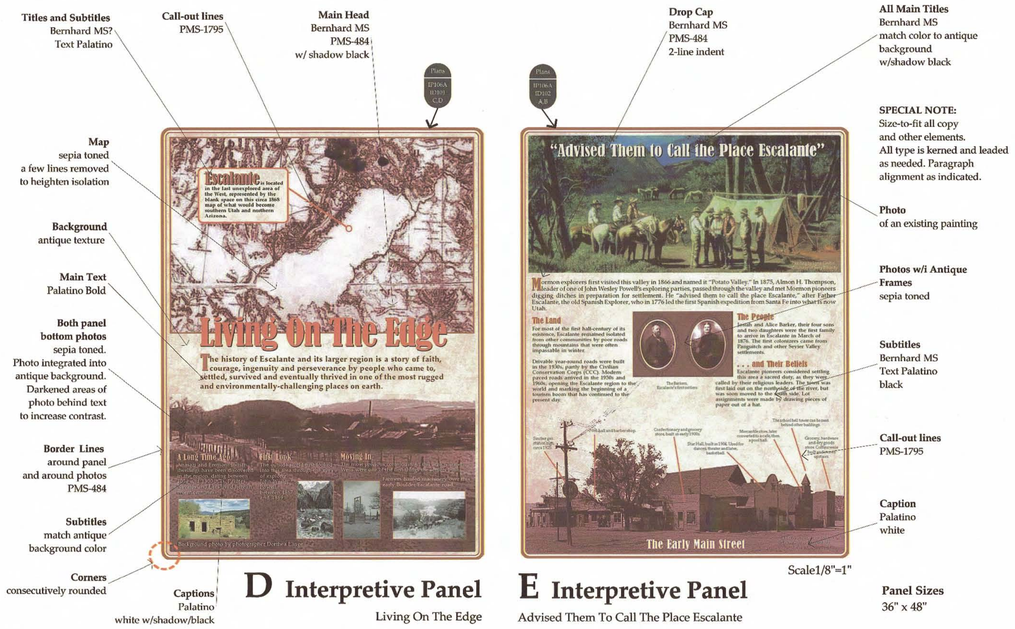

D Interpretive Panel
Living On The Edge

E Interpretive Panel
Advised Them To Call The Place Escalante

Scale1/8"=1"

Panel Sizes
36" x 48"

THEMED WALL Interpretive Panels Layout *Living On The Edge & Advised Them To Call The Place Escalante*

State of Utah
Department of Administrative Services

Division of Facilities
Construction & Management
4110 State Office Building
Salt Lake City, Utah 84114
Phone: (801) 538 - 3018
Fax: (801) 538 - 3267

http://dfcm.utah.gov

CONSULTANTS:

LANDMARK DESIGN
LANDSCAPE ARCHITECTURE AND LAND PLANNING
2004 HIGHLAND DRIVE
SALT LAKE CITY
UTAH 84106
PHONE (801) 476-0200
FAX (801) 476-0202

Hanks Consulting
333 South Parkside Circle
St. George, UT 84770
435-313-0606

PROJECT NAME AND ADDRESS:

ESCALANTE
HERITAGE CENTER

1281 EAST HIGHWAY 12
ESCALANTE, UTAH

COPYRIGHT:

ALL RIGHTS RESERVED ©
LANDMARK DESIGN, INC.
These documents are protected under the United States 1978 copyright act. It is an exclusive work of original authorship. None of the pictorial, graphic, or technical charts or drawings depicted may be reproduced by any method, mechanical, electronic, or otherwise; nor may they be used or re-used for any purpose without the express prior written permission of Landmark Design, Inc.

MARK	DATE	DESCRIPTION

ISSUE TYPE: 100% SUBMITTAL

ISSUE DATE: 06.12.09

DFCM PROJECT NO:	09018900
CAD PROJECT NO:	--
CAD DWG FILE:	--
DRAWN BY:	K.HANKS
CHK'D BY:	K.HANKS
COPYRIGHT:	--

SHEET TITLE

INTERPRETIVE
PLANS

SHEET NUMBER

IP106

SHEET OF

Lisa; Aug 10, 2009 - 3:38pm
\\Design_server\landmark\PROJECTS\LA_CURRENT\ESCALANTE_HERITAGE_CENTER\1-Phase1 construction october 2008\CAD files\INTERP\100 percIP106.dwg

Escalante Heritage Center INTERPRETIVE PANELS & SIGNS PANEL LAYOUT A

Orientation Panel
Main Title: **An Epic Journey Across The Impassible**

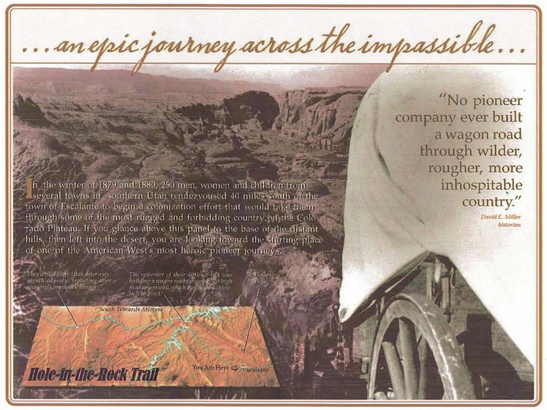

Plans ID100 IP102

Scale 3/16"= 1"
30" x 40" Panel

Kurt Hanks Interpretive Designer

Escalante Heritage Center INTERPRETIVE PANELS & SIGNS TEXT B

Orientation Panel
Main Title: **An Epic Journey Across The Impassible**

Main Text — In the winter of 1879 and 1880, 250 men, women and children from several towns in southern Utah rendezvoused 40 miles south of the town of Escalante to begin a colonization effort that would take them through some of the most rugged and forbidding country on the Colorado Plateau. If you glance above this panel to the base of the distant hills, then left into the desert, you are looking toward the starting place of one of the American West's most heroic pioneer journeys.

Captions — The epicenter of their difficult trek was building a wagon road through a slit high in a canyon wall, which they named "Hole-in-the-Rock."

They settled Bluff, Utah, after a six-month odyssey, traveling over seemingly impassible terrain.

Gathering place

Quote — "No pioneer company ever built a wagon road through wilder, rougher, more inhospitable country."
David E. Miller, historian

Map
Description: Aerial 3-D
Source: Program or visualized by artist

Photo
Description: The Hole-In-The-Rock
Source: Escalante Heritage Center

Kurt Hanks Interpretive Designer

Escalante Heritage Center INTERPRETIVE PANELS & SIGNS PANEL LAYOUT C

Orientation Panel
Title: **The Escalante Region**

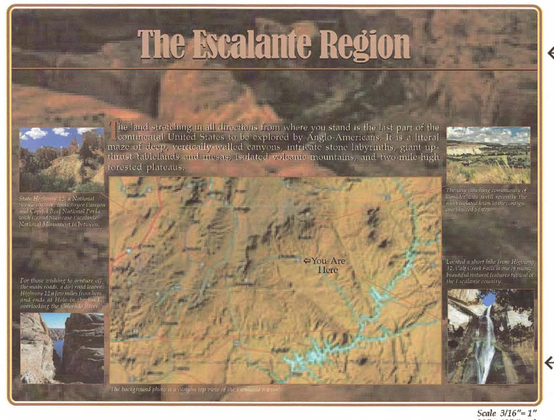

Plans IP103

Plans ID100 IP103

Scale 3/16"= 1"
30" x 40" Panel

Kurt Hanks Interpretive Designer

Escalante Heritage Center INTERPRETIVE PANELS & SIGNS TEXT D

Orientation Panel
Title: **The Escalante Region**

Main Text — The land stretching in all directions from where you stand is the last part of the continental United States to be explored by Anglo-Americans. It is a literal maze of deep, vertically-walled canyons, intricate stone labyrinths, giant upthrust tablelands and mesas, isolated volcanic mountains, and two-mile-high forested plateaus.

Captions & photo descriptions

(Scenic view along Highway 12)
State Highway 12, a National Scenic Byway, links Bryce Canyon and Capitol Reef National Parks, with Grand Staircase Escalante National Monument in between.

(Calf Creek Falls)
Located a short hike from Highway 12, Calf Creek Falls is one of many beautiful natural features typical of the Escalante country.

(View of Boulder, with barns, fields, and surrounding cliffs)
The tiny ranching community of Boulder was until recently the most isolated town in the contiguous United States.

(Hole-In-The-Rock)
For those wishing to venture off the main roads, a dirt road leaves Highway 12 a few miles from here and ends at Hole-in-the-Rock, overlooking the Colorado River.

(Above the Escalante River-background photo)
The background photo is a canyon-top view of the Escalante Ricver

Map
Description: Mapping Program
Source: mapping resources.com Premium U.S. & Terrain Map Series

Photo
Description: Lower Calf Creek Falls
Source: NPS

Photo
Description: Escalante River
Source: Gael Hill

Photo
Description: Bryce on Highway 12
Source: Scenic Highway

Photo
Description: Boulder, Utah
Source: pwheaton, Utah Scenic Byway, outdoor webshots.com

Photo
Description: Hole-In-The-Rock
Source: Jerry Roundy, Escalante

Kurt Hanks Interpretive Designer

State of Utah
Department of Administrative Services

Division of Facilities Construction & Management
4110 State Office Building
Salt Lake City, Utah 84114
Phone: (801) 538 - 3018
Fax: (801) 538 - 3267

http://dfcm.utah.gov

CONSULTANTS:

LANDMARK DESIGN INCORPORATED
LANDSCAPE ARCHITECTURE AND SITE PLANNING
2004 HIGHLAND DRIVE
SALT LAKE CITY
UTAH 84106
PHONE (801) 474-0200
FAX (801) 474-0201

Hanks Consulting
333 South Parkside Circle
St. George, UT 84770
435-313-0606

PROJECT NAME AND ADDRESS:

ESCALANTE HERITAGE CENTER

1281 EAST HIGHWAY 12
ESCALANTE, UTAH

COPYRIGHT:

ALL RIGHTS RESERVED ©
LANDMARK DESIGN, INC.
These documents are protected under the United States 1978 copyright act. It is an exclusive work of original authorship. None of the pictorial, graphic, or technical charts or drawings depicted may be reproduced by any method, mechanical, electronic, or otherwise; nor may they be used or re-used for any purpose without the express prior written permission of Landmark Design, Inc.

MARK	DATE	DESCRIPTION

ISSUE TYPE: 100% SUBMITTAL

ISSUE DATE: 06.12.09

DFCM PROJECT NO:	09018900
CAD PROJECT NO:	--
CAD DWG FILE:	--
DRAWN BY:	K.HANKS
CHK'D BY:	K.HANKS
COPYRIGHT:	--

SHEET TITLE

ORIENTATION PANEL LAYOUTS

SHEET NUMBER

ID100

SHEET OF

Lisa; Aug 10, 2009 - 3:50pm
\\Design_server\landmark\PROJECTS\LA_CURRENT\ESCALANTE_HERITAGE_CENTER\1-Phase1 construction october 2008\CAD files\INTERP\100 perc10.dwg

Escalante Heritage Center INTERPRETIVE PANELS & SIGNS PANEL LAYOUT A

Themed Wall Introduction Panel
Title: **The Hole-In-The-Rock Expedition**

THE
Hole-In-The-Rock
EXPEDITION

"It is about a mile from the top down to the river and it is almost strait down, the cliffs on each side are five hundred ft. high and there is just room enough for a wagon to go down. It nearly scared me to death. The first wagon I saw go down they put the brake on and rough locked the hind wheels and had a big rope fastened to the wagon and about ten men holding back on it and then they went down like they would smash everything. I'll never forget that day. . . . Willie looked back and cried and asked me how we would get back home."

— Elizabeth Morris Decker,
Hole-in-the-Rock pioneer

Plans IP104 A-D IP105

36" x 48" Scale 1/8"= 1"

Kurt Hanks Interpretive Designer

Main Text

"It is about a mile from the top down to the river and it is almost strait down, the cliffs on each side are five hundred ft. high and there is just room enough for a wagon to go down. It nearly scared me to death. The first wagon I saw go down they put the brake on and rough locked the hind wheels and had a big rope fastened to the wagon and about ten men holding back on it and then they went down like they would smash everything. I'll never forget that day. . . . Willie looked back and cried and asked me how we would get back home."

— Elizabeth Morris Decker,
Hole-in-the-Rock pioneer

Escalante Heritage Center INTERPRETIVE PANELS & SIGNS PANEL LAYOUT B

Themed Wall Introduction Panel
Escalante Side

ESCALANTE:
Life on the Edge of the Wilderness

". . . **Escalante** . . . represents an ideal of human community. Its origins partook of the utopian dream of equality and abundance, as manifest in the equal distribution of land and water rights among the first settlers. Its heritage lives on in a genuine community, where people know and are known, where individuality. . . is valued. . . The 'we' feeling. . . is still there, and so are the deep bonds to place that only a small town can produce."

— Edward A. Geary, Author, 1992

Plans IP103A IP104E

36" x 48" Scale 1/8"= 1"

Kurt Hanks Interpretive Designer

Main Text

. . . Escalante . . . represents an ideal of human community. Its origins partook of the utopian dream of equality and abundance, as manifest in the equal distribution of land and water rights among the first settlers. Its heritage lives on in a genuine community, where people know and are known, where individuality . . . is valued . . . The 'we' feeling. . . is still there, and so are the deep bonds to place that only a small town can produce.

— Edward A. Geary, Author, 1992

Escalante Heritage Center INTERPRETIVE PANELS & SIGNS PANEL LAYOUT C

Interpretive Panel A
Main Title: **Living On The Edge**

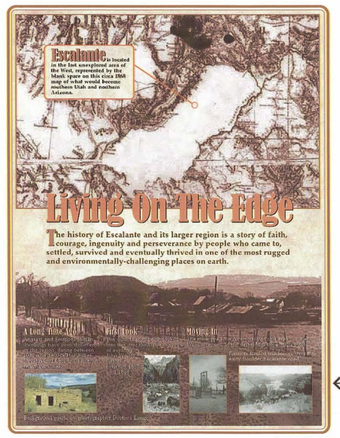

Plans IP102 A-D IP103D

Scale 1/8"= 1"
36" x 48"

Kurt Hanks Interpretive Designer

Escalante Heritage Center INTERPRETIVE PANELS & SIGNS TEXT D

Interpretive Panel A
Main Title: **Living On The Edge**

Main Text

The history of Escalante and its larger region is a story of faith, courage, ingenuity and perseverance by people who came to, settled, survived and eventually thrived in one of the most rugged and environmentally-challenging places on earth.

Captions
& photo descriptions

Escalante is located in the last unexplored expanse of the West, represented by the blank space on this circa 1868 map of what would become southern Utah and northern Arizona.

A Long Time Ago

Anasazi and Fremont Indian dwellings have been discovered in the region, dating between 1050 and 1300 A.D. Paiutes, Navajos and Utes lived here in recent centuries. Background photo by photographer Dorthea Lange

First Look

The outside world first looked into this wilderness through the eyes of explorer John Wesley Powell between1867 and 1869.

Moving In

The most precious commodity in this area is water. Wells were one of the first things the settlers built.

Farmers hauled machinery over this early Boulder/Escalante road.

Photo
Description:
Dorthea Lange photo
Source:
Library of Congress
Gael Hill-Escalante

Photo
Description:
Dorthea Lange photo
Source:
Library of Congress
Gael Hill-Escalante

Photo
Description:
Engraving of Powell expedition
Source:
Library of Congress

Photo
Description:
Early map
Source:
Univ. of Wyoming
Jerry Roundy-Escalante

Photo
Description:
Building of the road between Escalante and Boulder
Source:
Jerry Roundy-Escalante

Photo
Description:
Anazazi State Park Restoration
Source:
Utah State Parks ?

Kurt Hanks Interpretive Designer

State of Utah
Department of Administrative Services

Division of Facilities
Construction & Management
4110 State Office Building
Salt Lake City, Utah 84114
Phone: (801) 538 - 3018
Fax: (801) 538 - 3267

http://dfcm.utah.gov

CONSULTANTS:

LANDMARK DESIGN

LANDSCAPE ARCHITECTURE AND LAND PLANNING
2004 HIGHLAND DRIVE
SALT LAKE CITY
UTAH 84106
PHONE (801) 486-3000
FAX (801) 486-1960

Hanks Consulting
333 South Parkside Circle
St. George, UT 84770
435-313-0606

PROJECT NAME AND ADDRESS:

ESCALANTE
HERITAGE CENTER

1281 EAST HIGHWAY 12
ESCALANTE, UTAH

COPYRIGHT:

ALL RIGHTS RESERVED ©
LANDMARK DESIGN, INC.
These documents are protected under the United States 1978 copyright act. It is an exclusive work of original authorship. None of the pictorial, graphic, or technical charts or drawings depicted may be reproduced by any method, mechanical, electronic, or otherwise; nor may they be used or re-used for any purpose without the express prior written permission of Landmark Design, Inc.

MARK	DATE	DESCRIPTION

ISSUE TYPE: 100% SUBMITTAL

ISSUE DATE: 06.12.09

DFCM PROJECT NO:	09018900
CAD PROJECT NO:	--
CAD DWG FILE:	--
DRAWN BY:	K.HANKS
CHK'D BY:	K.HANKS
COPYRIGHT:	--

SHEET TITLE

INTERPRETIVE
PANEL
LAYOUTS

SHEET NUMBER

ID101

SHEET OF

Lisa; Aug 10, 2009 - 3:57pm
\\Design_server\landmark\PROJECTS\LA_CURRENT\ESCALANTE_HERITAGE_CENTER\1-Phase1 construction october 2008\CAD files\INTERP\100 perc\ID101.dwg

Escalante Heritage Center — INTERPRETIVE PANELS & SIGNS — PANEL LAYOUT A

Interpretive Panel B
Main Title: **"Advised Them to Call the Place Escalante"**

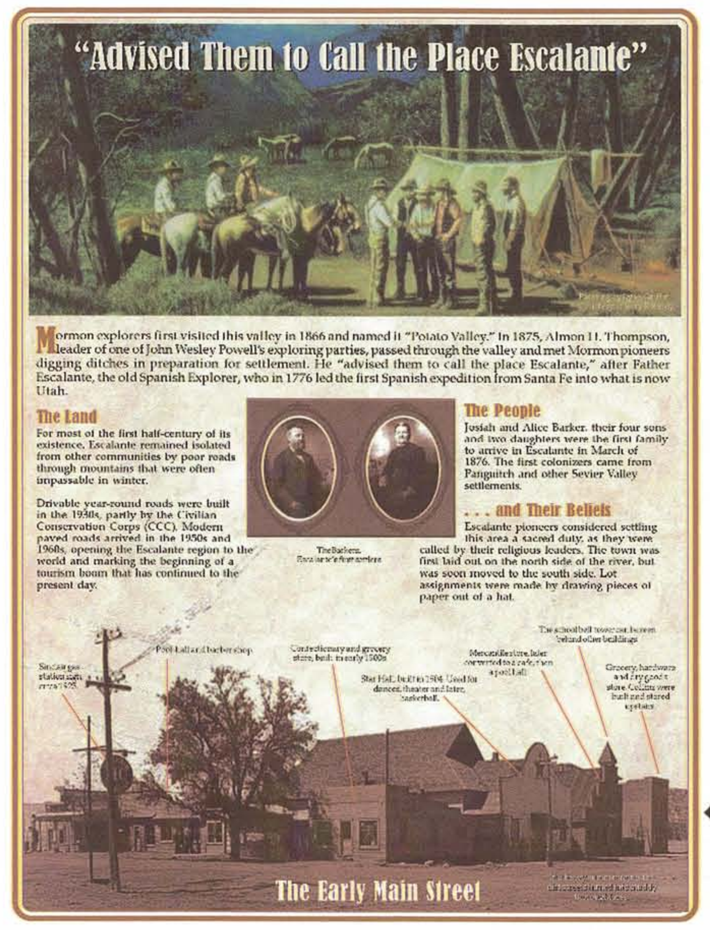

← Plans IP106 A, E IP102B

Scale 1/8"= 1"
36" x 48"

Kurt Hanks Interpretive Designer

Escalante Heritage Center — INTERPRETIVE PANELS & SIGNS — TEXT B

Interpretive Panel B
Main Title: **"Advised Them to Call the Place Escalante"**

Main Text
Mormon explorers first visited this region in 1866 and named it "Potato Valley." In 1875, Almon H. Thompson, leader of one of John Wesley Powell's exploring parties, passed through the valley and met Mormon pioneers digging ditches in preparation for settlement. He "advised them to call the place Escalante," after Father Escalante, the old Spanish Explorer, who in 1776 led the first Spanish expedition from Santa Fe into what is now Utah.

Secondary Text
The Land
For most of the first half-century of its existence, Escalante remained isolated from other communities by poor roads through mountains that were often impassable in winter.

Drivable year-round roads were built in the 1930s, partly by the Civilian Conservation Corps. Modern paved roads arrived in the 1950s and 1960s, opening the Escalante region to the world and marking the beginning of a tourism boom that has continued to the present day.

The People
Josiah and Alice Barker, with their four sons and two daughters, were the first family to arrive in Escalante in March of 1876. The first colonizers came from Panguitch and other Sevier Valley settlements.

. . . and Their Beliefs
Escalante pioneers considered settling this area a sacred duty, as they were called by their religious leaders. The town was first laid out on the north side of the river, but was soon moved to the south side. Lot assignments were made by drawing pieces of paper out of a hat.

Captions & photo description
The Barkers, Escalante's first settlers.

Sinclair gas station sign, circa 1925. Pool hall and barbershop. Confectionary and grocery story, built in early 1900s. Star Hall, built in 1904. Used for dances, theater, and later, basketball. Mercantile store, later converted to a cafe, then a pool hall. The school bell tower can be seen behind other buildings. Grocery, hardware and dry goods store. Coffins were built and stored upstairs.

Photo
Description: Escalante dirt street
Source: Library of Congress, Gael Hill, Escalante

Photo
Description: Painting of Mormons meeting explorers
Source: Jerry Roundy, Escalante

Photo
Description: The first family to settle the area.
Source: Jerry Roundy, Escalante; Antique Digital Photo Frames–*www.louoates.com*

Kurt Hanks Interpretive Designer

Escalante Heritage Center — INTERPRETIVE PANELS & SIGNS — PANEL LAYOUT C

Pedestal Panel A
Main Title: **Escalante: Jumping-Off Point For The Hole-in-the-Rock Expedition**

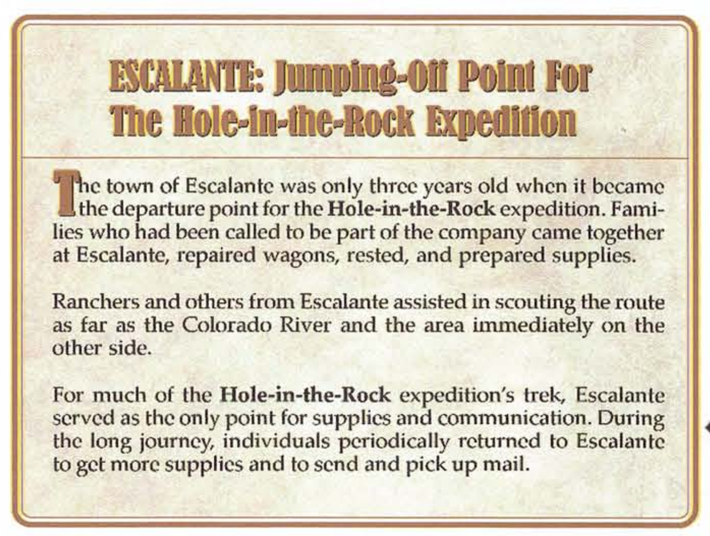

← Plans IP104A IP105 E,A,B,C

Scale 3/16"= 1"
18" X 24"

Main Text
The town of Escalante was only three years old when it became the departure point for the Hole-in-the-Rock expedition. Families who had been called to be part of the company came together at Escalante, repaired wagons, rested, and prepared supplies.

Ranchers and others from Escalante assisted in scouting the route as far as the Colorado River and the area immediately on the other side.

For much of the Hole-in-the-Rock expedition's trek, Escalante served as the only point for supplies and communication. During the long journey, individuals periodically returned to Escalante to get more supplies and to send and pick up mail.

Kurt Hanks Interpretive Designer

Escalante Heritage Center — INTERPRETIVE PANELS & SIGNS — PANEL LAYOUT D

Pedestal Panel B
Main Title: **Down Through The Hole**

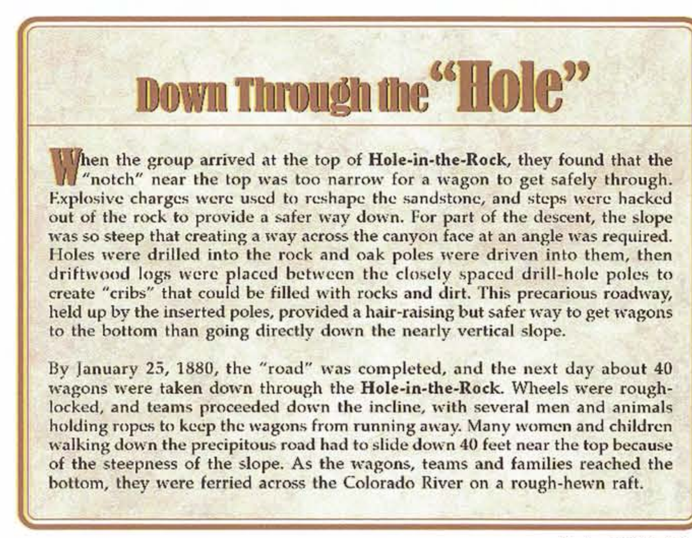

← Plans IP104A IP105 E,A,B,C

Scale 3/16"= 1"
18" X 24"

Main Text
When the group arrived at the top of Hole-in-the-Rock, they found that the "notch" near the top was too narrow for a wagon to get safely through. Explosive charges were used to reshape the sandstone, and steps were hacked out of the rock to provide a safer way down. For part of the descent, the slope was so steep that creating a way across the canyon face at an angle was required. Holes were drilled into the rock and oak poles were driven into them, then driftwood logs were placed between the closely spaced drill-hole poles to create "cribs" that could be filled with rocks and dirt. This precarious roadway, held up by the inserted poles, provided a hair-raising but safer way to get wagons to the bottom than going directly down the nearly vertical slope.

By January 25, 1880, the "road" was completed, and the next day about 40 wagons were taken down through the Hole in the Rock. Wheels were rough-locked, and teams proceeded down the incline, with several men and animals holding ropes to keep the wagons from running away. Many women and children walking down the precipitous road had to slide down 40 feet near the top because of the steepness of the slope. As the wagons, teams and families reached the bottom, they were ferried across the Colorado River on a rough-hewn raft.

Kurt Hanks Interpretive Designer

State of Utah
Department of Administrative Services
Division of Facilities Construction & Management
4110 State Office Building
Salt Lake City, Utah 84114
Phone: (801) 538 - 3018
Fax: (801) 538 - 3267
http://dfcm.utah.gov

CONSULTANTS:
LANDMARK DESIGN INCORPORATED — Landscape Architecture and Land Planning, 3834 Highland Drive, Salt Lake City, Utah 84106, Phone (801) 474-3300, Fax (801) 474-3303

Hanks Consulting
333 South Parkside Circle
St. George, UT 84770
435-313-0606

PROJECT NAME AND ADDRESS:
ESCALANTE HERITAGE CENTER
1281 EAST HIGHWAY 12
ESCALANTE, UTAH

COPYRIGHT:
ALL RIGHTS RESERVED ©
LANDMARK DESIGN, INC.
These documents are protected under the United States 1978 copyright act. It is an exclusive work of original authorship. None of the pictorial, graphic, or technical charts or drawings depicted may be reproduced by any method, mechanical, electronic, or otherwise; nor may they be used or re-used for any purpose without the express prior written permission of Landmark Design, Inc.

MARK	DATE	DESCRIPTION

ISSUE TYPE: 100% SUBMITTAL

ISSUE DATE: 06.12.09

DFCM PROJECT NO:	09018900
CAD PROJECT NO:	--
CAD DWG FILE:	--
DRAWN BY:	K.HANKS
CHK'D BY:	K.HANKS
COPYRIGHT:	--

SHEET TITLE
INTERPRETIVE PANEL LAYOUTS

SHEET NUMBER
ID102

SHEET OF

Lisa; Aug 10, 2009 – 3:57pm
\\Design_server\landmark\PROJECTS\LA_CURRENT\ESCALANTE_HERITAGE_CENTER\1-Phase1 construction october 2008\CAD files\INTERP\100 percID102.dwg

Escalante Heritage Center INTERPRETIVE PANELS & SIGNS PANEL LAYOUT A

Pedestal Panel C

Main Title: **The Story Of The Last Wagon**

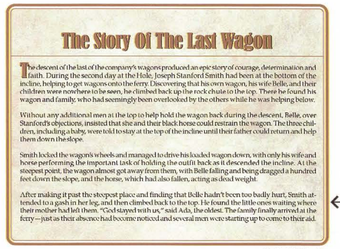

Main Text

The descent of the last of the company's wagons produced an epic story of courage, determination and faith. During the second day at the Hole, Joseph Stanford Smith had been at the bottom of the incline, helping to get wagons onto the ferry. Discovering that his own wagon, his wife Belle, and their children were nowhere to be seen, he climbed back up the rock chute to the top. There he found his wagon and family, who had seemingly been overlooked by the others while he was helping below.

Without any additional men at the top to help hold the wagon back during the descent, Belle, over Stanford's objections, insisted that she and their black horse could restrain the wagon. The three children, including a baby, were told to stay at the top of the incline until their father could return and help them down the slope.

Smith locked the wagon's wheels and managed to drive his loaded wagon down, with only his wife and horse performing the important task of holding the outfit back as it descended the incline. At the steepest point, the wagon almost got away from them, with Belle falling and being dragged a hundred feet down the slope, and the horse, which had also fallen, acting as dead weight.

After making it past the steepest place and finding that Belle hadn't been too badly hurt, Smith attended to a gash in her leg, and then climbed back to the top. He found the little ones waiting where their mother had left them. "God stayed with us," said Ada, the oldest. The family finally arrived at the ferry—just as their absence had become noticed and several men were starting up to come to their aid.

Kurt Hanks Interpretive Designer

State of Utah
Department of Administrative Services
Division of Facilities
Construction & Management
4110 State Office Building
Salt Lake City, Utah 84114
Phone: (801) 538 - 3018
Fax: (801) 538 - 3267
http://dfcm.utah.gov

CONSULTANTS:

LANDMARK DESIGN
LANDSCAPE ARCHITECTURE
AND LAND PLANNING
2800 MOUNTAIN DRIVE
SALT LAKE CITY
UTAH 84109
PHONE (801) 474-0000
FAX (801) 474-0000

Hanks Consulting
333 South Parkside Circle
St. George, UT 84770
435-313-0606

PROJECT NAME AND ADDRESS:

ESCALANTE HERITAGE CENTER

1281 EAST HIGHWAY 12
ESCALANTE, UTAH

COPYRIGHT:

ALL RIGHTS RESERVED © LANDMARK DESIGN, INC.
These documents are protected under the United States 1978 copyright act. It is an exclusive work of original authorship. None of the pictorial, graphic, or technical charts or drawings depicted may be reproduced by any method, mechanical, electronic, or otherwise; nor may they be used or re-used for any purpose without the express prior written permission of Landmark Design, Inc.

MARK	DATE	DESCRIPTION

ISSUE TYPE: 100% SUBMITTAL

ISSUE DATE: 06.12.09

DFCM PROJECT NO:	09018900
CAD PROJECT NO:	--
CAD DWG FILE:	--
DRAWN BY:	K.HANKS
CHK'D BY:	K.HANKS
COPYRIGHT:	--

SHEET TITLE

INTERPRETIVE PANEL LAYOUTS

SHEET NUMBER

ID103

SHEET OF

Lisa: Aug 10, 2009 - 3:55pm
\\Design_server\landmark\PROJECTS\LA_CURRENT\ESCALANTE_HERITAGE_CENTER\1-Phase1 construction october 2008\CAD files\INTERP\100 peralD103.dwg

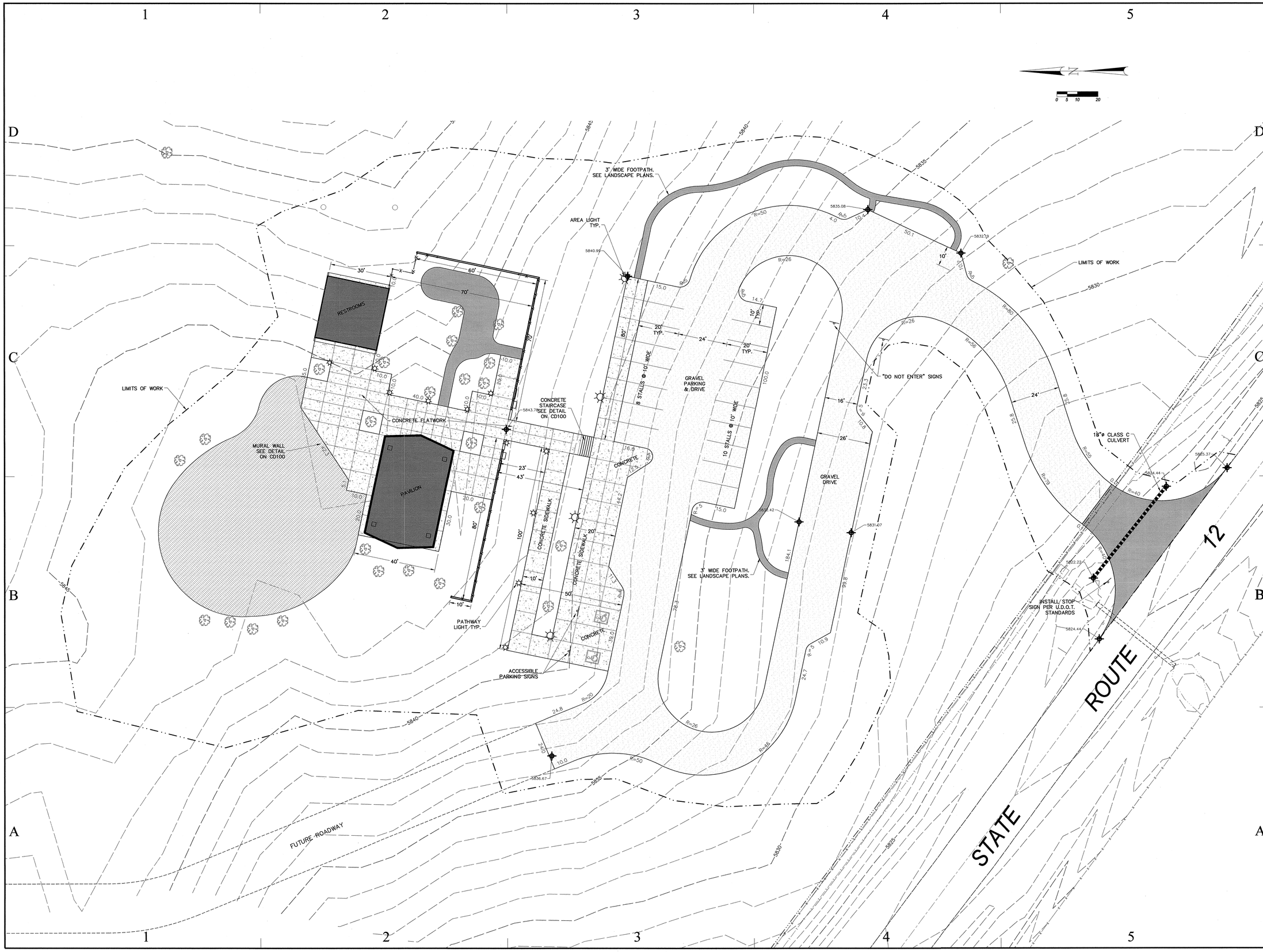

State of Utah
Department of Administrative Services

Division of Facilities Construction & Management
4110 State Office Building
Salt Lake City, Utah 84114
Phone: (801) 538 - 3018
Fax: (801) 538 - 3267

http://dfcm.utah.gov

CONSULTANTS:

LANDMARK DESIGN
LANDSCAPE ARCHITECTURE AND LAND PLANNING

Jones & DeMille Engineering, Inc.
Richfield Office
1535 South 100 West
Richfield, Utah 84701
Phone (435) 896-8266
Fax (435) 896-8268

Price Office
248 East Main
Price, Utah 84501
Phone (435) 637-8266
Fax (435) 637-8268

www.jonesanddemille.com

REGISTERED PROFESSIONAL ENGINEER
Thomas Roy Christensen
#335767
STATE OF UTAH
8/10/09

PROJECT NAME AND ADDRESS:

ESCALANTE HERITAGE CENTER

1281 EAST HIGHWAY 12

ESCALANTE, UTAH

COPYRIGHT:

ALL RIGHTS RESERVED © LANDMARK DESIGN, INC.
These documents are protected under the United States 1978 copyright act. It is an exclusive work of original authorship. None of the pictorial, graphic, or technical charts or drawings depicted may be reproduced by any method, mechanical, electronic, or otherwise; nor may they be used or re-used for any purpose without the express prior written permission of Landmark Design, Inc.

MARK	DATE	DESCRIPTION

ISSUE TYPE: 100% SUBMITTAL

ISSUE DATE: 06.12.09

DFCM PROJECT NO:
CAD PROJECT NO:
CAD DWG FILE:
DRAWN BY:
CHK'D BY:
COPYRIGHT:

SHEET TITLE

SITE PLAN

SHEET NUMBER

CS100

SHEET OF

Owner: Aug 06, 2009 - 7:32am
H:\JD\Proj\0810-003\dwg\Site_0810-003.dwg

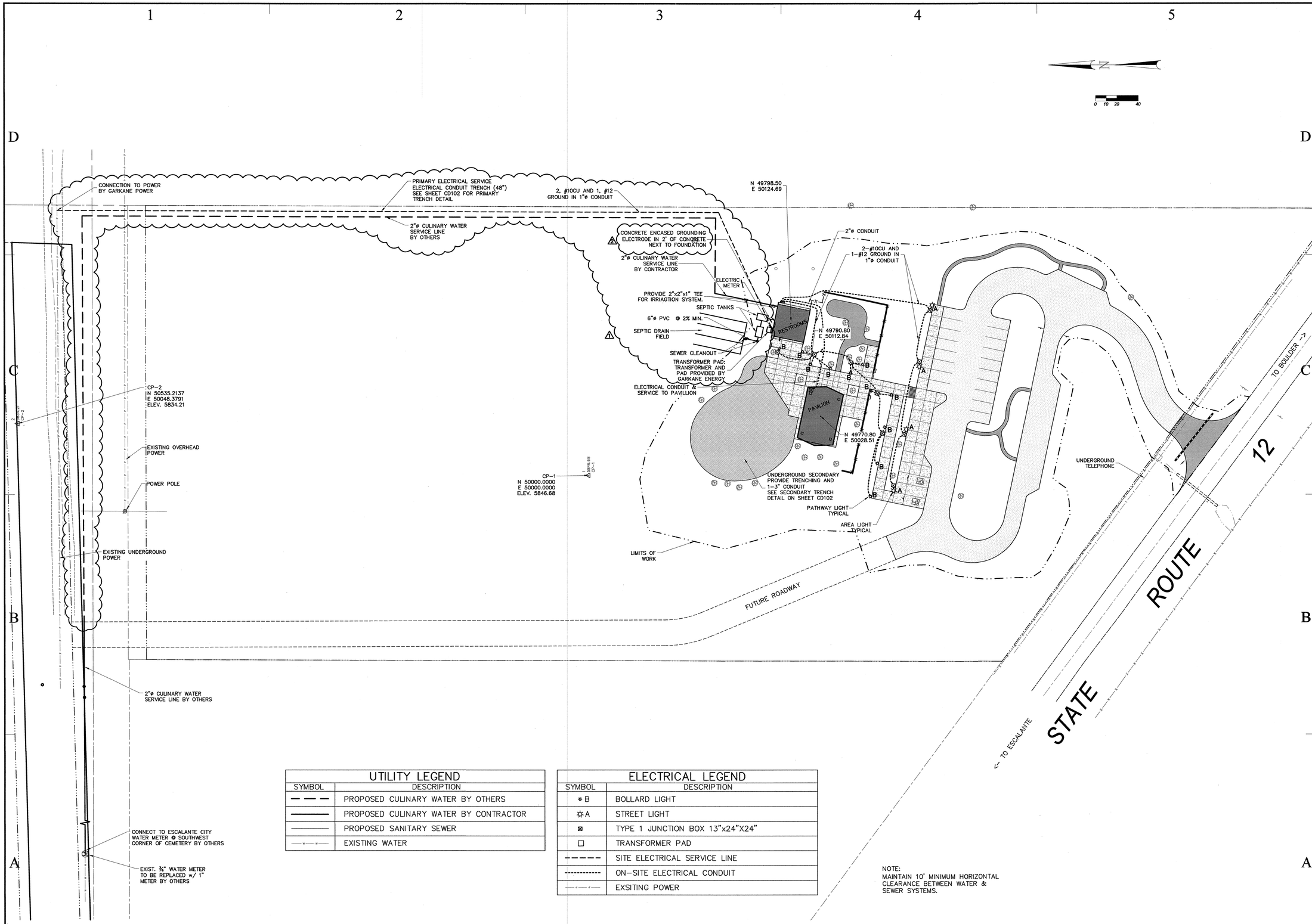

UTILITY LEGEND	
SYMBOL	DESCRIPTION
— — —	PROPOSED CULINARY WATER BY OTHERS
———	PROPOSED CULINARY WATER BY CONTRACTOR
———	PROPOSED SANITARY SEWER
—x—x—	EXISTING WATER

ELECTRICAL LEGEND	
SYMBOL	DESCRIPTION
✻B	BOLLARD LIGHT
☼A	STREET LIGHT
⊠	TYPE 1 JUNCTION BOX 13"x24"X24"
□	TRANSFORMER PAD
- - - - -	SITE ELECTRICAL SERVICE LINE
----------	ON-SITE ELECTRICAL CONDUIT
—x—x—	EXSITING POWER

NOTE:
MAINTAIN 10' MINIMUM HORIZONTAL CLEARANCE BETWEEN WATER & SEWER SYSTEMS.

State of Utah
Department of Administrative Services

Division of Facilities Construction & Management
4110 State Office Building
Salt Lake City, Utah 84114
Phone: (801) 538 - 3018
Fax: (801) 538 - 3267

http://dfcm.utah.gov

CONSULTANTS:

LANDMARK DESIGN

Jones & DeMille Engineering, Inc.
Richfield Office
1535 South 100 West
Richfield, Utah 84701
Phone (435) 896-8266
Fax (435) 896-8268
Price Office
248 East Main
Price, Utah 84501
Phone (435) 637-8266
Fax (435) 637-8268
www.jonesanddemille.com

REGISTERED PROFESSIONAL ENGINEER Thomas Roy Christensen #323767 STATE OF UTAH 10/28/09

PROJECT NAME AND ADDRESS:

ESCALANTE HERITAGE CENTER

1281 EAST HIGHWAY 12
ESCALANTE, UTAH

COPYRIGHT:

ALL RIGHTS RESERVED © LANDMARK DESIGN, INC.
These documents are protected under the United States 1978 copyright act. It is an exclusive work of original authorship. None of the pictorial, graphic, or technical charts or drawings depicted may be reproduced by any method, mechanical, electronic, or otherwise; nor may they be used or re-used for any purpose without the express prior written permission of Landmark Design, Inc.

MARK	DATE	DESCRIPTION
1	10/16/2009	ADJUSTMENT IN LOCATION OF SEPTIC DRAIN FIELD, CULINARY SERVICE LINE AND ELECTRICAL CONDUIT
2	10/16/2009	ADDED CONCRETE ENCASED ELECTRODE

ISSUE TYPE: 100% SUBMITTAL

ISSUE DATE: 06.12.09

DFCM PROJECT NO:
CAD PROJECT NO:
CAD DWG FILE:
DRAWN BY:
CHK'D BY:
COPYRIGHT:

SHEET TITLE

UTILITY PLAN

SHEET NUMBER

CS200

SHEET OF

Owner: Oct 27, 2009 - 4:37pm
H:\JD\Proj\0810-003\dwg\Util_0810-003.dwg

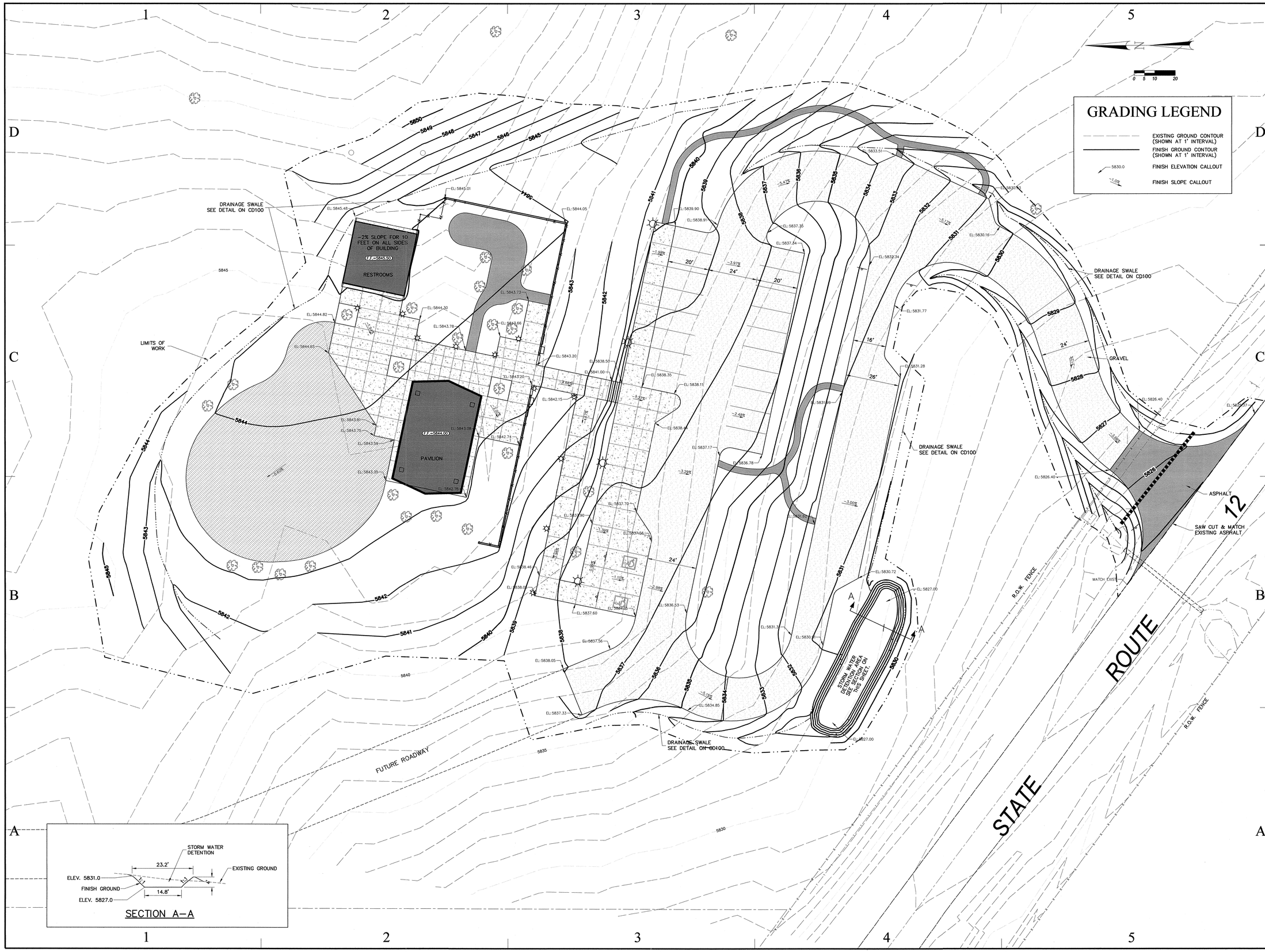

State of Utah
Department of Administrative Services

Division of Facilities
Construction & Management
4110 State Office Building
Salt Lake City, Utah 84114
Phone: (801) 538 - 3018
Fax: (801) 538 - 3267

http://dfcm.utah.gov

CONSULTANTS:

LANDMARK DESIGN

Jones & DeMille Engineering, Inc.
Richfield Office
1535 South 100 West
Richfield, Utah 84701
Phone (435) 896-8266
Fax (435) 896-8268
Price Office
248 East Main
Price, Utah 84501
Phone (435) 637-8266
Fax (435) 637-8268
www.jonesanddemille.com

REGISTERED PROFESSIONAL ENGINEER
Thomas Roy Christensen
#323767
STATE OF UTAH
8/11/09

PROJECT NAME AND ADDRESS:

ESCALANTE HERITAGE CENTER

1281 EAST HIGHWAY 12
ESCALANTE, UTAH

COPYRIGHT:

ALL RIGHTS RESERVED © LANDMARK DESIGN, INC.
These documents are protected under the United States 1978 copyright act. It is an exclusive work of original authorship. None of the pictorial, graphic, or technical charts or drawings depicted may be reproduced by any method, mechanical, electronic, or otherwise; nor may they be used or re-used for any purpose without the express prior written permission of Landmark Design, Inc.

MARK	DATE	DESCRIPTION

ISSUE TYPE: 100% SUBMITTAL

ISSUE DATE: 06.12.09

DFCM PROJECT NO:
CAD PROJECT NO:
CAD DWG FILE:
DRAWN BY:
CHK'D BY:
COPYRIGHT:

SHEET TITLE

GRADING PLAN

SHEET NUMBER

CS300

SHEET OF

Owner: Aug 06, 2009 - 7:30am
H:\JD\Proj\0810-003\dwg\Grade_0810-003.dwg

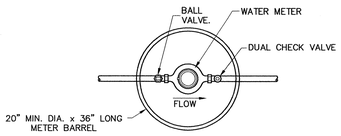

METER PLAN

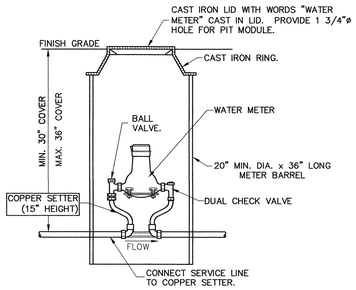

METER SECTION

METER BOX DETAIL (BY OTHERS)

(3/4" – 1" METERS)

NOTES: 1. INSTALL TRACER WIRE WITH ALL SERVICE LINES.
2. WRAP TRACER WIRE AROUND COPPER SETTER.
3. USE CONCRETE BARREL WHEN METER IS LOCATED IN TRAFFIC AREA.

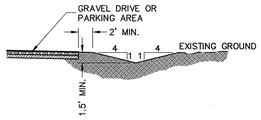

DRAINAGE SWALE

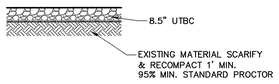

GRAVEL DRIVE & PARKING AREA

NOTE: COMPACT TO 95% STD PROCTOR ON ALL MATERIALS.

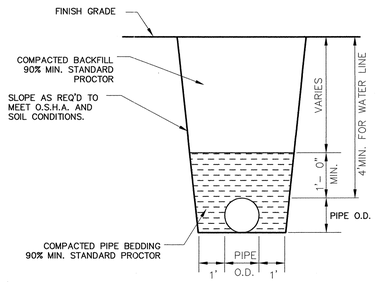

WATER & SEWER TRENCH DETAIL

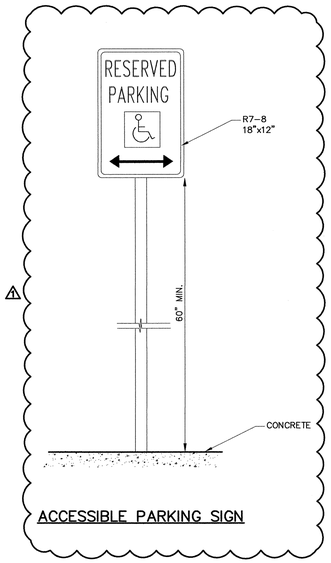

ACCESSIBLE PARKING SIGN

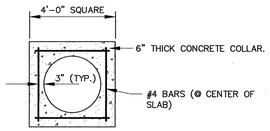

PLAN

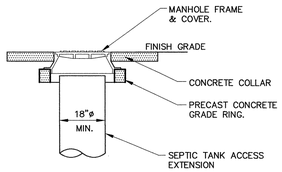

SECTION

SEPTIC TANK ACCESS DETAIL

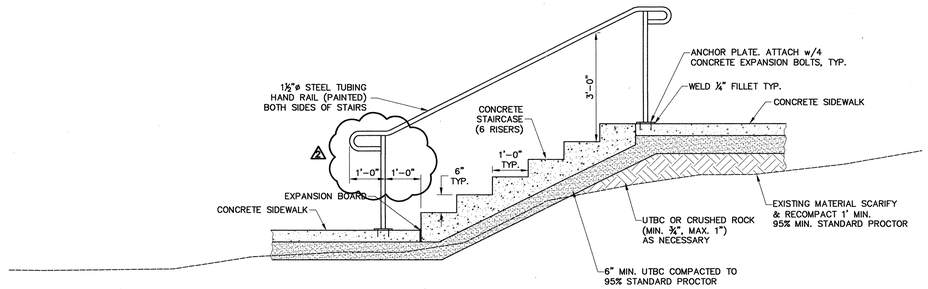

CONCRETE STAIRS DETAIL

NOTE: EXTEND HANDRAIL 1' BEYOND LOWEST RISER.

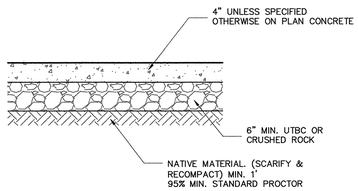

CONCRETE SIDEWALK & FLATWORK

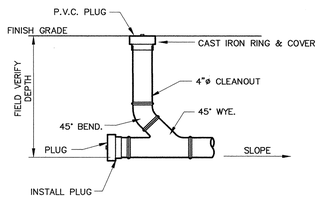

SEWER CLEANOUT

State of Utah
Department of Administrative Services

Division of Facilities Construction & Management
4110 State Office Building
Salt Lake City, Utah 84114
Phone: (801) 538 - 3018
Fax: (801) 538 - 3267

http://dfcm.utah.gov

CONSULTANTS:

LANDMARK DESIGN

Jones & DeMille Engineering, Inc.
Richfield Office
1535 South 100 West
Richfield, Utah 84701
Phone (435) 896-8266
Fax (435) 896-8268

Price Office
248 East Main
Price, Utah 84501
Phone (435) 637-9266
Fax (435) 637-8268

www.jonesanddemille.com

REGISTERED PROFESSIONAL ENGINEER Thomas R. Jones #323767 STATE OF UTAH 11/20/09

PROJECT NAME AND ADDRESS:

ESCALANTE HERITAGE CENTER

1281 EAST HIGHWAY 12

ESCALANTE, UTAH

COPYRIGHT:

ALL RIGHTS RESERVED © LANDMARK DESIGN, INC.
These documents are protected under the United States 1978 copyright act. It is an exclusive work of original authorship. None of the pictorial, graphic, or technical charts or drawings depicted may be reproduced by any method, mechanical, electronic, or otherwise; nor may they be used or re-used for any purpose without the express prior written permission of Landmark Design, Inc.

MARK	DATE	DESCRIPTION
1	10/16/2009	ACCESSIBLE PARKING SIGN
2	10/16/2009	HANDRAIL EXTENSION

ISSUE TYPE: 100% SUBMITTAL

ISSUE DATE: 06.12.09

DFCM PROJECT NO:
CAD PROJECT NO:
CAD DWG FILE:
DRAWN BY:
CHK'D BY:
COPYRIGHT:

SHEET TITLE

DETAILS

SHEET NUMBER

CD100

SHEET _ OF _

Owner: Oct 27, 2009 – 3:56pm
H:\JD-Proj\0810-003\eng\Details.dwg

GENERAL NOTES:

1. NATIVE MATERIAL COMPACTED TO 90% MIN. STANDARD PROCTOR.
2. UTBC COMPACTED TO 95% MIN. STANDARD PROCTOR.
3. REINFORCEMENT LAP SPLICES SHALL BE 37" MIN.
4. PROVICE STNADARD HOOK INTO FOOTING FOR REINFORCING DOWELS.

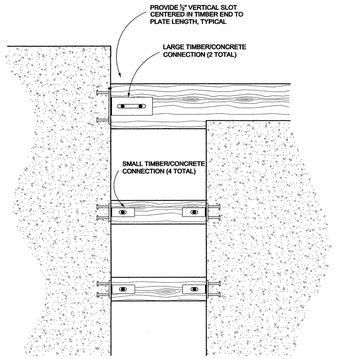

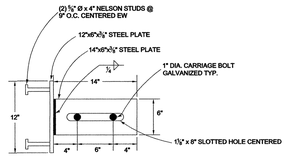

LARGE TIMBER/CONCRETE CONNECTION

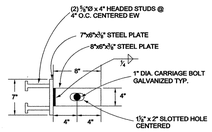

SMALL TIMBER/CONCRETE CONNECTION

F CD101 TIMBER/CONCRETE CONNECTION DETAIL

NOTE: HOT DIP GALVANIZE ALL STEEL PLATES, BOLTS & NUTS.

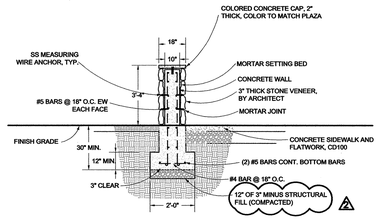

NOTES:
1. 2" MINIMUM REBAR COVER UNLESS NOTED OTHERWISE.
2. CONTRACTOR TO PROVIDE SHOP DRAWINGS FOR APPROVAL BY OWNER'S AUTHORIZED REPRESENTATIVE.
3. STONE VENEER BY ARCHITECT.
4. SECURELY ATTACH VENEER AS REQUIRED.

D CD101 STONE VENEER WALL (SECTION)

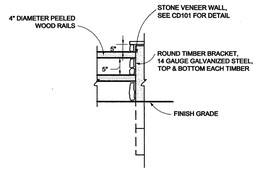

E CD101 TIMBER ATTACHMENT TO STONE VENEER WALL

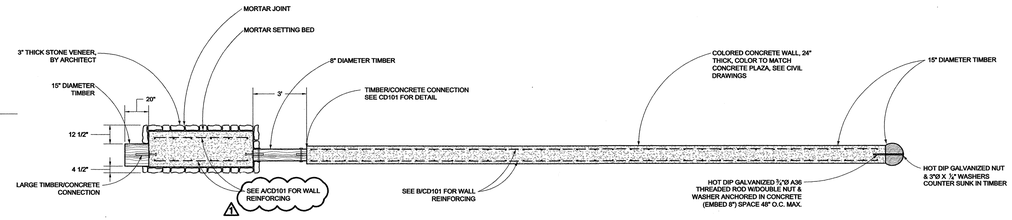

C CD101 MURAL WALL (PLAN VIEW SECTION)

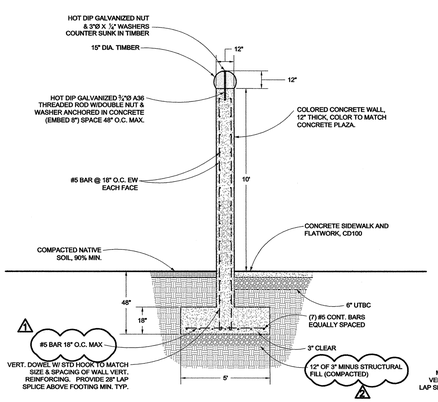

NOTES:
1. 2" MINIMUM REBAR COVER, UNLESS NOTED OTHERWISE.
2. CONTRACTOR TO PROVIDE SHOP DRAWINGS FOR APPROVAL BY OWNER'S AUTHORIZED REPRESENTATIVE.

B CD101 MURAL WALL: DISPLAY WALL (SECTION)

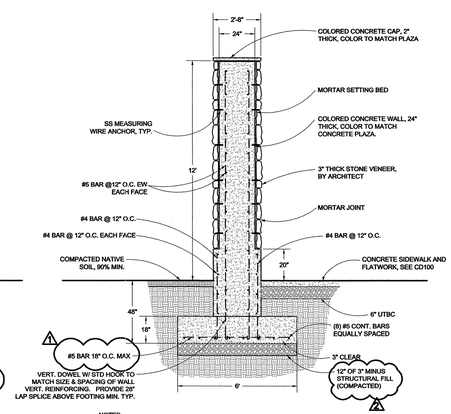

NOTES:
1. 2" MINIMUM REBAR COVER, UNLESS NOTED OTHERWISE.
2. CONTRACTOR TO PROVIDE SHOP DRAWINGS FOR APPROVAL BY OWNER'S AUTHORIZED REPRESENTATIVE.
3. STONE VENEER BY ARCHITECT.
4. SECURELY ATTACH VENEER AS REQUIRED.

A CD101 MURAL WALL: STONE VENEER WALL (SECTION)

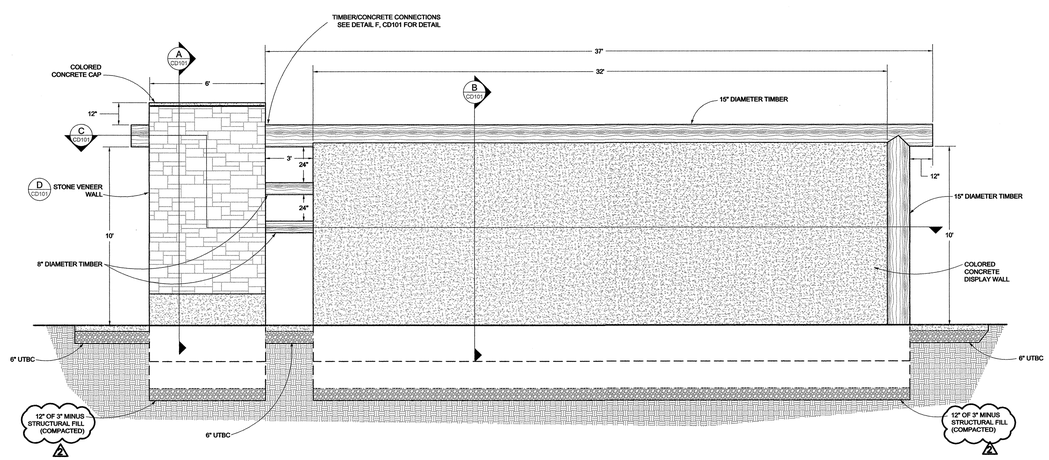

MURAL WALL (FRONT ELEVATION)

State of Utah
Department of Administrative Services

Division of Facilities Construction & Management
4110 State Office Building
Salt Lake City, Utah 84114
Phone: (801) 538 - 3018
Fax: (801) 538 - 3267

http://dfcm.utah.gov

CONSULTANTS:

LANDMARK DESIGN
LANDSCAPE ARCHITECTURE AND LAND PLANNING
859 COLLEGE DRIVE
SALT LAKE CITY
UTAH 84103
PHONE (801) 474-0997
FAX (801) 474-0997

Jones & DeMille Engineering, Inc.
Richfield Office
1535 South 100 West
Richfield, Utah 84701
Phone (435) 896-8266
Fax (435) 896-8268

Price Office
248 East Main
Price, Utah 84501
Phone (435) 637-8266
Fax (435) 637-8268

www.jonesanddemille.com

REGISTERED PROFESSIONAL ENGINEER
Thomas Ray Christensen
STATE OF UTAH
10/16/09

PROJECT NAME AND ADDRESS:

ESCALANTE HERITAGE CENTER

1281 EAST HIGHWAY 12

ESCALANTE, UTAH

COPYRIGHT:

ALL RIGHTS RESERVED © LANDMARK DESIGN, INC.
These documents are protected under the United States 1978 copyright act. It is an exclusive work of original authorship. None of the pictorial, graphic, or technical charts or drawings depicted may be reproduced by any method, mechanical, electronic, or otherwise; nor may they be used or re-used for any purpose without the express prior written permission of Landmark Design, Inc.

MARK	DATE	DESCRIPTION
1	10/16/2009	CONTINUOUS FOUNDATION WALL REINFORCEMENT CLARIFICATIONS
2	10/16/2009	CHANGE TO 3 IN. MINUS FILL

ISSUE TYPE: 100% SUBMITTAL

ISSUE DATE: 06.12.09

DFCM PROJECT NO:
CAD PROJECT NO:
CAD DWG FILE:
DRAWN BY:
CHK'D BY:
COPYRIGHT:

SHEET TITLE

DETAILS

SHEET NUMBER

CD101

SHEET _ OF _

Owner: Oct 27, 2009 – 4:30pm
H:\JD\Proj\0810-003\dwg\Details.dwg

		LIGHTING AND OUTSIDE CIRCUITS IN PANEL				120/240 VOLTS SINGLE PHASE	
Wire Size	**Ground Size**	**Circuit Description**	**Brk. Size**	**USE**	**LOAD (VA)**	**A**	**B**
#10 CU	#12 CU	Parking Lot lights	20 A	L	600	3	
#10 CU		Parking Lot lights	20A				3
#10 CU	#12 CU	Bollards	20 A	L	770	4	
#10 CU		Bollards	20A				4
#12 CU	#12 CU	Time Clock	20 A	R		2	
		Future Pavilion	20 A				
		Future Pavilion	20A				
		TOTAL AMPS			1370	9	7

LIGHT FIXTURE SCHEDULE

Fixt. Type	# To Be Installed	Manufacturer	Catalog #	Volts	Lamps/ Fixture	Lamp Size	Watts	Mounting	Remarks
A	4	ANTIQUE STREET LIGHTS	ES22ST 150S MED GCF SR3 TB3 DF ANDB	240	1	150 HPS	150 W	CONCRETE BASE, SEE DETAIL SHEET	AREA LIGHT: ARM: EAL4WB ANDB. ARM TO BE DRILL MOUNTED TO POLE. USE 20 FT SQUARE STEEL POLE WRAPPED WITH GRADE "A" CLEAR CEDAR, APPROXIMATELY 1/4" THICK, LAMINATED TO STEEL POLE. POLE PROVIDED WITH TOP CAP. POWDERCOAT FINISH COLOR OF LIGHT FIXTURE AND ARM TO BE DETERMINED BY LANDSCAPE ARCHITECT.
B	11	KIM LIGHTING	VSB1/70HPS/240/DB	240	1	70 HPS	70 W	CONCRETE FOOTING, SEE DETAIL SHEET	BOLLARD LIGHT: VANDAL RESISTANT SQUARE BOLLARD LIGHT. WRAP BOTTOM OF BOLLARD FROM GROUND TO LIGHT OPENING (APPROX. 33") WITH GRADE "A" CLEAR CEDAR, APPROXIMATELY 1/4" THICK, LAMINATED TO ALUMINUM SHAFT. POWDERCOAT FINISH COLOR OF BOLLARD TO BE DETERMINED BY LANDSCAPE ARCHITECT.

Note: Provide light fixtures and pole as shown or equivalent as approved through the submittal process.

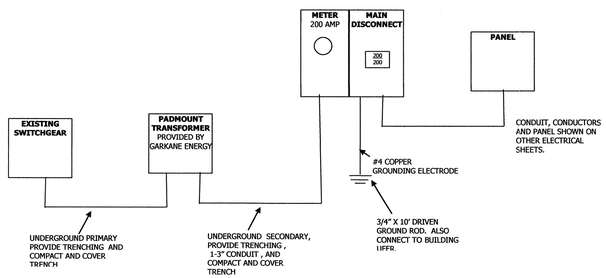

ESCALANTE HERITAGE CENTER ELECTRICAL ONE-LINE DIAGRAM

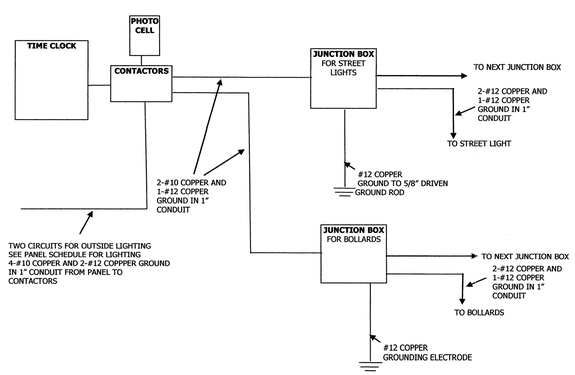

LIGHTING ONE-LINE DIAGRAM

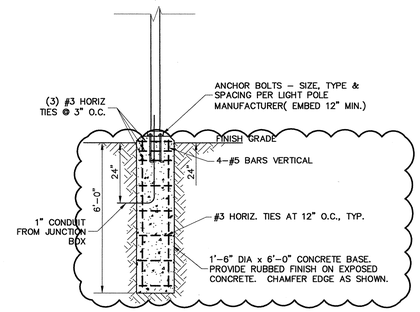

AREA LIGHT, POLE & BASE DETAIL

NOTES:
1. VERIFY BOLT PATTERN WITH MANUFACTURER TEMPLATE.

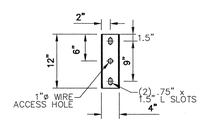

MOUNTING BRACKET

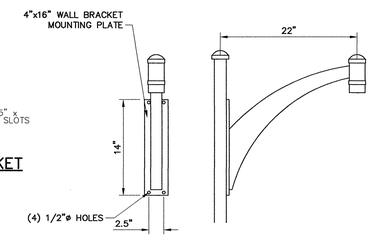

MOUNTING BRACKET

AREA LIGHT DETAIL

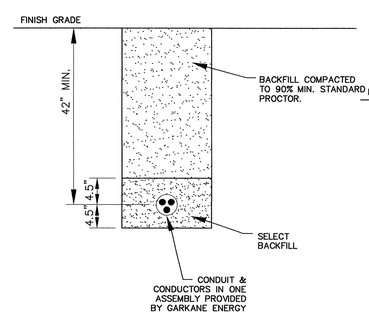

PRIMARY UNDERGROUND TRENCH DETAIL

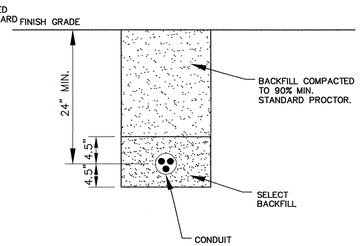

ELECTRICAL TRENCH DETAIL
FOR SECONDARY SERVICES

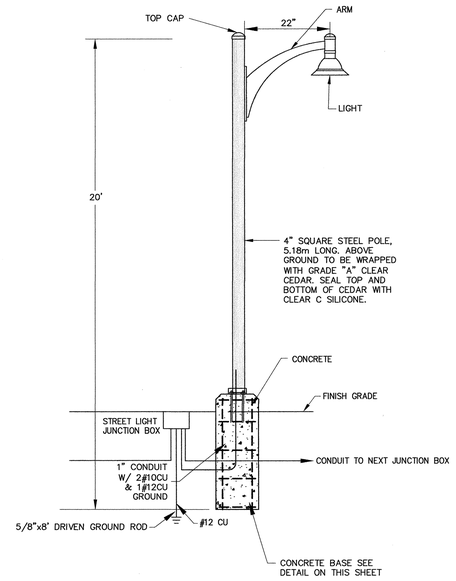

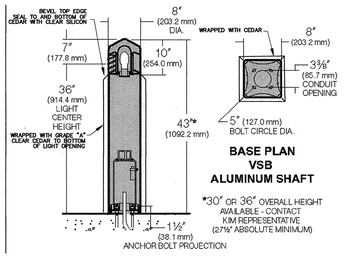

BASE PLAN VSB ALUMINUM SHAFT

*30" OR 36" OVERALL HEIGHT AVAILABLE - CONTACT KIM REPRESENTATIVE (27½" ABSOLUTE MINIMUM)

Installation in Soil

Electrical components are factory mounted and prewired to a rigid bracket, bolted to the anchor base.

Aluminum shaft locks to the base casting and secures with four hex socket stainless steel screws.

Installation in Paving or Hardscape

Aluminum shaft bollards are installed with anchor bolts in a poured-in-place footing (by others). Internal anchor base is leveled prior to installing the shaft.

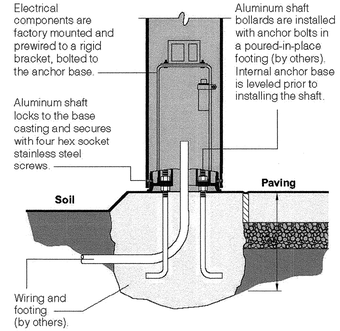

BOLLARD LIGHT DETAIL

State of Utah
Department of Administrative Services

Division of Facilities Construction & Management
4110 State Office Building
Salt Lake City, Utah 84114
Phone: (801) 538 - 3018
Fax: (801) 538 - 3267

http://dfcm.utah.gov

CONSULTANTS:

LANDMARK DESIGN
LANDSCAPE ARCHITECTURE AND LAND PLANNING
2004 SOUTHLAND DRIVE
SALT LAKE CITY
UTAH 84106
PHONE (801) 474-0990
FAX (801) 474-0993

Jones & DeMille Engineering, Inc.
Richfield Office
1535 South 100 West
Richfield, Utah 84701
Phone (435) 896-8266
Fax (435) 896-8268
Price Office
248 East Main
Price, Utah 84501
Phone (435) 637-8266
Fax (435) 637-8268
www.jonesanddemille.com

REGISTERED PROFESSIONAL ENGINEER
Thomas Roy Christensen
#326767
STATE OF UTAH
10/28/09

PROJECT NAME AND ADDRESS:

ESCALANTE HERITAGE CENTER

1281 EAST HIGHWAY 12
ESCALANTE, UTAH

COPYRIGHT:

ALL RIGHTS RESERVED © LANDMARK DESIGN, INC.
These documents are protected under the United States 1978 copyright act. It is an exclusive work of original authorship. None of the pictorial, graphic, or technical charts or drawings depicted may be reproduced by any method, mechanical, electronic, or otherwise; nor may they be used or re-used for any purpose without the express prior written permission of Landmark Design, Inc.

MARK	DATE	DESCRIPTION
1	10/16/2009	LIGHT POLE BASE DETAILS

ISSUE TYPE: 100% SUBMITTAL

ISSUE DATE: 06.12.09

DFCM PROJECT NO:
CAD PROJECT NO:
CAD DWG FILE:
DRAWN BY:
CHK'D BY:
COPYRIGHT:

SHEET TITLE

SITE LIGHTING DETAILS

SHEET NUMBER

CD102

SHEET _ OF _

Owner: Oct 27, 2009 – 3:56pm
H:\JD\Proj\0810-003\dwg\Details.dwg

SPECIAL INSPECTION AND TESTING CHECKLIST: 1 2 3

SPECIAL INSPECTION AND TESTING (IBC 1704)

Indicate required Special inspections for project by checking the appropriate boxes:

FABRICATORS (IBC1704.2)

☐ Approved Fabricator	Fabricators Name:
☐ Unapproved Fabricator	Fabricators Name:

In-plant inspections
☐ Steel Construction ☐ Welding ☐ Details

STEEL (IBC1704.3)

Item			Reference/Comments
High Strength Bolting(1704.3.3)	☐ Continuous	☒ Periodic	
WELDING (1704.3.1)			
Details (1704.3.2)			
Complete & partial penetration groove welds	☐ Continuous	☐ Periodic	
Multipass fillet welds	☐ Continuous	☐ Periodic	
Single-pass fillet welds > 5/16"	☐ Continuous	☐ Periodic	
Single-pass fillet welds ≤ 5/16"	☐ Continuous	☒ Periodic	
Floor & roof deck welds	☐ Continuous	☐ Periodic	
REINFORCEMENT STEEL	☐ Continuous		
Verification of weldability	☐ Continuous	☐ Periodic	
Shear wall and shear reinforcement	☐ Continuous	☐ Periodic	
Other reinforcement	☐ Continuous	☐ Periodic	
Steel frame joint details	☐ Continuous	☒ Periodic	

CONCRETE CONSTRUCTION (IBC1704.4)

Item			Reference/Comments
Materials (1704.4.1)	☐ Continuous	☒ Periodic	
Steel placement	☐ Continuous	☒ Periodic	
Steel welding	☐ Continuous	☐ Periodic	
Bolts prior & during placement	☒ Continuous	☐ Periodic	
Use of required design mix	☐ Continuous	☒ Periodic	
Concrete sampling for strength test, slump, air content, and temperature of concrete	☒ Continuous	☐ Periodic	
Concrete & shotcrete placement	☒ Continuous	☐ Periodic	
Curing temperature and techniques	☐ Continuous	☒ Periodic	
Pre-stressed concrete	☐ Continuous	☐ Periodic	
Pre-cast concrete	☐ Continuous	☐ Periodic	
Posttentsioned concrete	☐ Continuous	☐ Periodic	
Form work	☐ Continuous	☒ Periodic	

MASONRY CONSTRUCTION (IBC1704.5)

Item	Reference/Comments
As masonry construction begins:	

Page 1 of 4

Site prepared mortar	☐ Continuous	☒ Periodic	
Construction of mortar joints	☐ Continuous	☒ Periodic	
Location of reinforcement, connectors, pre-stressing tendons and anchorages	☐ Continuous	☒ Periodic	
Pre-stressing technique	☐ Continuous	☐ Periodic	
Grade and size of pre-stressing tendons and anchorages	☐ Continuous	☐ Periodic	
Inspection program verify:			
Size and location of structural elements	☐ Continuous	☒ Periodic	
Type, size and location of anchors	☐ Continuous	☒ Periodic	
Size, grade and type of reinforcement	☐ Continuous	☒ Periodic	
Welding of reinforcement	☐ Continuous	☐ Periodic	
Cold and hot weather protection	☐ Continuous	☒ Periodic	
Application and measurement of pre-stressing force	☐ Continuous	☐ Periodic	
Prior to grouting verify			
Clean grout space	☐ Continuous	☒ Periodic	
Placement of reinforcement	☐ Continuous	☒ Periodic	
Grout mix	☐ Continuous	☒ Periodic	
Mortar joints	☐ Continuous	☒ Periodic	
Grout placement	☒ Continuous	☐ Periodic	
Grout and mortar specimens and prisms	☒ Continuous	☐ Periodic	
Construction and submittal compliance verification	☐ Continuous	☒ Periodic	
Empirical masonry – Cat. I-III (1708.1.1)	☐ Continuous	☐ Periodic	
Empirical masonry – Cat. IV (1708.1.1)	☐ Continuous	☐ Periodic	
Engineered masonry – Cat. I-III 1708.1.1	☐ Continuous	☐ Periodic	
Engineered masonry – Cat. IV (1708.1.1)	☐ Continuous	☐ Periodic	
Engineering & pre-stressing steel (1708.3)	☐ Continuous	☐ Periodic	
Structural steel (1708.4)	☐ Continuous	☐ Periodic	
Qualification of mechanical & electrical equipment (1708.5)	☐ Continuous	☐ Periodic	
Seismically isolated structures (1708.6)	☐ Continuous	☐ Periodic	
Testing for seismic resistance is	☐ Continuous	☐ Periodic	

WOOD CONSTRUCTION (IBC1704.6)

Item			Reference/Comments
Prefabricated elements & assembly	☐ Continuous	☒ Periodic	

SOILS CONSTRUCTION (IBC1704.7)

Item			Reference/Comments
Site preparation	☐ Continuous	☒ Periodic	

Page 2 of 4

Structural fill material	☒ Continuous	☐ Periodic	
Structural fill lift thickness	☒ Continuous	☐ Periodic	
Structural fill soil densities	☒ Continuous	☐ Periodic	
Backfill soils materials	☐ Continuous	☒ Periodic	
Backfill soil densities	☐ Continuous	☒ Periodic	
Fill material under side walks and parking	☐ Continuous	☒ Periodic	
Fill soil densities under side walks and parking	☐ Continuous	☒ Periodic	

PILE FOUNDATIONS (IBC1704.8)

Item			Reference/Comments
Observe driving operation and reporting	☐ Continuous	☐ Periodic	
Verify placement & installation data	☐ Continuous	☐ Periodic	

PIER FOUNDATIONS (IBC1704.9)

Item			Reference/Comments
Observe drilling operation and reporting	☐ Continuous	☐ Periodic	
Verify placement & installation data	☐ Continuous	☐ Periodic	

SPRAYED FIRE-RESISTANT MATERIALS (IBC1704.10)

Item			Reference/Comments
Structural member surface conditions	☐ Continuous	☐ Periodic	
Material application	☐ Continuous	☐ Periodic	
Material thickness	☐ Continuous	☐ Periodic	
Material density	☐ Continuous	☐ Periodic	
Bonding strength	☐ Continuous	☐ Periodic	

MASTIC AND INTUMESCENT FIRE-RESISTANT COATINGS (IBC1704.11)

Item			Reference/Comments
Material and instillation	☐ Continuous	☐ Periodic	

EXTERIOR INSTULATION AND FINISH SYSTEMS (EIFS) (IBC1704.12)

Item			Reference/Comments
Material and instillation	☐ Continuous	☐ Periodic	

ALTERNITIVE CONSTRUCTION METHODS OR MATERIALS (IBC1704.13)

Item			Reference/Comments
Material and instillation	☐ Continuous	☐ Periodic	

EPOXY (IBC1704.13)

Item			Reference/Comments
Material and instillation	☐ Continuous	☐ Periodic	

SMOKE CONTROL (IBC1704.14)

Item			Reference/Comments
Material	☐ Continuous	☐ Periodic	

Page 3 of 4

Instillation	☐ Continuous	☐ Periodic

Special inspection for seismic resistance (IBC1707)

Item			Reference/Comments
Structural Steel (1707.2)	☒ Continuous	☐ Periodic	
Structural Wood (1707.3)	☒ Continuous	☐ Periodic	
Cold–formed steel framing (1707.4)	☐ Continuous	☐ Periodic	
Pier foundations (1707.5)	☐ Continuous	☐ Periodic	
Storage racks & access floors (1707.6)	☐ Continuous	☐ Periodic	
Architectural components (1707.7)	☐ Continuous	☒ Periodic	
Mechanical & electrical items (1707.8)	☐ Continuous	☒ Periodic	
Designated systems verification (1707.9)	☐ Continuous	☐ Periodic	
Seismic isolation systems (1707.10)	☐ Continuous	☐ Periodic	

Inspection of seismic resistance are not required per IBC 1705.3 ☐

OTHER

Item			Reference/Comments
	☐ Continuous	☐ Periodic	
	☐ Continuous	☐ Periodic	

Special Inspectors Shall:

- Be approved by the Building Official prior to performing any duties;
- Provide proof of licensure as a special inspector by the State of Utah for each type of inspection;
- Inspection reports are to meet the requirements of IBC 1704.1.2 and DFCM standards;
- Inspection reports are to be submitted to the code consultant, architect, DFCM project manager, and the State of Utah Building Official within 48 hrs. of inspections;
- A final inspection report shall be submitted following completion of the project documenting the types of special inspections performed and a statement indicating that the structure is in compliance with the drawings, specifications and applicable codes. IBC 1704.1.2

Page 4 of 4

CODE SUMMARY:

APPLICABLE CODES:

International Building Code	2006	National Electrical Code	2008
International Mechanical Code	2006	Uniform Code for Building Conservation	2003
International Fuel Gas Code	2006	ADA Accessibility Guidelines	1998
International Plumbing Code	2006	ANSI A117.1	2003
International Fire Code	2006		
International Energy Conservation Code	2006		

1

A. Occupancy & Group: A-5 (PAV) B (RR)
Change in Use: Yes ___ No x Mixed Occupancy: Yes ___ No x
Special Use & Occupancy (e.g. high rise, covered mall): NA

B. Seismic Design Category: C Design Wind Speed: 90 exp C mph

C. Type of Construction (circle one):

I	I	II	II	III	III	IV	V	V
A	B	A	B	A	B	HT	A	B

D. Fire Resistance Rating: Requirements for the Exterior Walls based on the fire separation distance (in hours):
North: 0 South: 0 East: 0 West: 0

E. Mixed Occupancies: NA Non-separated Uses: NA

F. Sprinklers:
Required: NO Provided: NO Type of Sprinkler System: NA

G. Number of Stories: 1 Building Height: 25'

H. Actual Area per Floor (square feet): 1,200 GSF PAVILION (PAV), 900 GSF RESTROOM (RR)

I. Tabular Area: UNLIMITED (PAV), 9,000 (RR)

I. Area Modifications:

a) $I_f = 100\left[\frac{F}{P} - 0.25\right]\frac{W}{30}$ = .75, WHERE F=140', P=140', W=30' (PAV.)
= .75, WHERE F=120', P=120', W=30' (RR)

b) Sum of the Ration Calculations for Mixed Occupancies:

$PAV = \frac{1200\ SF}{UL} \leq 1$ $RR = \frac{900\ SF}{15{,}750} \leq 1$

c) Total Allowable Area for:

1) One Story: UL
2) Two Story: A (2) UL
3) Three Story: A (3) UL

1) One Story: 15,750
2) Two Story: A (2) 15,750
3) Three Story: A (3) NA

d) Unlimited Area Building: yes x no ___ Code Section: TABLE 503

K. Fire Resistance Rating Requirements for Building Elements (hours).

Element	Hours	Assembly Listing	Element	Hours	Assembly Listing
Exterior Bearing Walls	0		Floors - Ceiling Floors	0	
Interior Bearing Walls	0		Roofs - Ceiling Roofs	0	
Exterior Non-Bearing Walls	0		Exterior Doors & Windows	0	
Structural Frame	0		Shaft Enclosures	0	
Partitions - Permanent	0		Fire Walls	0	
Fire Barriers	0		Fire Partitions	0	
			Smoke Partitions	0	

L. Design Occupant Load: 172 (1,200 GSF / 15 NSF/OCC.
Exit Width Required: 35" Exit Width Provided:: 1,464"

M. Minimum Number of Required Plumbing Facilities: 172 / 2 = 86 MALE, 86 FEMALE

a) Water Closets - Required (m) 2 (f) 3 Provided (m) 4 (f) 4
b) Lavatories - Required (m) 1 (f) 1 Provided (m) 3 (f) 3
a) Bath Tubs or Showers: 0
a) Drinking Fountains: 1 Service Sinks: 1

FOOTNOTES:

1) In case of conflict with the US Department of Justice Federal Registers Parts I Through V - ADA Guidelines and specific reference to the International Building Code Accessibility Chapters, the more restrictive requirement shall govern.

2) Additional Code Information shall be provided at the discretion of the Building Official for Complex Buildings. Including, but limited to:

a) Performance based Criteria.
b) Means or Egress Analysis.
c) Exterior and Interior Accessibility Route.

ROOF VENT CALCULATIONS

SQUARE INCHES OF BLDG	=	94,848 IN²
SECTION 1203.2	/	300
TOTAL NET FREE AREA REQUIRED	=	316.2 IN²
½ TO BE @ EAVE ½ TO BE @ RIDGE	/	4
NET FREE AREA REQ. @ EAVE & RIDGE	=	79.05 IN²
NET FREE AREA FOR EACH VENT @ EAVE	/	4.064 IN²
VENTS REQUIRED	=	20

PROVIDE (1) VENT BETWEEN EACH JOIST @ EAVE. (10) VENTS ON EACH SIDE OF THE RESTROOM. VENTS TO BE INSTALLED FROM THE CENTER JOIST SPACING WITH EQUAL NUMBERS OF VENTS ON EACH SIDE OF THE FIRST VENT.

GENERAL NOTES AND LEGEND:

FOR SHEET AE002 ONLY.

- SEE SHEET AE002 FOR GENERAL NOTES.
- SEE COVER SHEET G1001 FOR DRAWING INDEX.
- DO NOT SCALE DRAWINGS.
- CONTRACTOR SHALL VERIFY ALL DIMENSIONS AND CONDITIONS BEFORE BEGINNING WORK AND SHALL REPORT TO THE ARCHITECT ANY ERRORS, INCONSISTENCIES OR OMISSIONS BEFORE BEGINNING WORK. SEE GENERAL NOTES AND SPECIFICATIONS.
- THE SITE INFORMATION IS FOR REFERENCE ONLY. SEE LANDSCAPE/CIVIL DRAWINGS.

State of Utah
Department of Administrative Services

Division of Facilities Construction & Management
4110 State Office Building
Salt Lake City, Utah 84114
Phone: (801) 538 - 3018
Fax: (801) 538 - 3267

http://dfcm.utah.gov

CONSULTANTS:

LANDMARK DESIGN
LANDSCAPE ARCHITECTURE AND LAND PLANNING
859 WOODLAND DRIVE
SALT LAKE CITY
UTAH 84108
PHONE (801) 474-0200
FAX (801) 474-0201

ajc architects
703 east 1700 south
salt lake city, utah 84105
ph: 801.466.8818
fx: 801.466.4411
ajc@ajcarchitects.com

STATE OF UTAH KENT R. RIGBY 135096 10/22/09 LICENSED ARCHITECT

PROJECT NAME AND ADDRESS:

ESCALANTE HERITAGE CENTER

1281 EAST HIGHWAY 12
ESCALANTE, UTAH

COPYRIGHT:

ALL RIGHTS RESERVED © LANDMARK DESIGN, INC.
These documents are protected under the United States 1978 copyright act. It is an exclusive work of original authorship. None of the pictorial, graphic, or technical charts or drawings depicted may be reproduced by any method, mechanical, electronic, or otherwise; nor may they be used or re-used for any purpose without the express prior written permission of Landmark Design, Inc.

MARK	DATE	DESCRIPTION
1	08.13.09	DFCM REVIEW
2	09.08.09	DFCM REVIEW
3	10.22.09	DFCM REVIEW

ISSUE TYPE: 100% SUBMITTAL

ISSUE DATE: 06.12.2009

DFCM PROJECT NO:	09018900
CAD PROJECT NO:	0860
CAD DWG FILE:	--
DRAWN BY:	S BODILY
CHK'D BY:	K RIGBY
COPYRIGHT:	--

SHEET TITLE:

CODE SUMMARY & CHECKLIST

SHEET NUMBER:

AE000

KEYED NOTE LEGEND:

*FOR SHEET AE001 ONLY.

07	ACCESSIBLE PARKING, STRIPING & SIGNAGE (SHOWN FOR REFERENCE ONLY). SEE LANDSCAPE/ CIVIL DRAWINGS.
08	CRUSHED STONE PATHWAY (SHOWN FOR REFERENCE ONLY). SEE LANDSCAPE/ CIVIL DRAWINGS.
09	FENCING (SHOWN FOR REFERENCE ONLY). SEE LANDSCAPE/ CIVIL DRAWINGS.
10	ROAD (SHOWN FOR REFERENCE ONLY). SEE LANDSCAPE/ CIVIL DRAWINGS.
11	CORRUGATED ROOF PANELS. SEE SPECIFICATIONS.
12	METAL ROOF EDGE PANELS. SEE SPECIFICATIONS.
13	LANDSCAPE FURNITURE (SHOWN FOR REFERENCE ONLY). SEE LANDSCAPE DRAWINGS.

KEYED NOTE LEGEND:

*FOR SHEET AE001 ONLY.

01	BID ALTERNATE: 1200 GSF PAVILION STRUCTURE AND RELATED STRUCTURAL & ELECTRICAL ITEMS. SEE SHEET AE101 FOR ARCHITECTURAL PLAN. LOCATE PER LANDSCAPE/CIVIL DRAWINGS.
02	900 GSF RESTROOM BUILDING. SEE SHEET AE102 FOR ARCHITECTURAL PLAN. LOCATE PER LANDSCAPE/CIVIL DRAWINGS.
03	EXHIBIT WALL (SHOWN FOR REFERENCE ONLY). SEE LANDSCAPE DRAWINGS.
04	LANDSCAPE AREAS (SHOWN FOR REFERENCE ONLY). SEE LANDSCAPE DRAWINGS.
05	CONCRETE WALKWAY AND PLAZA, WITH CONTROL/EXPANSION JOINTS (SHOWN FOR REFERENCE ONLY). SEE LANDSCAPE/ CIVIL DRAWINGS.
06	CONCRETE STAIRS (SHOWN FOR REFERENCE ONLY). SEE LANDSCAPE/ CIVIL DRAWINGS.

GENERAL NOTES AND LEGEND:

*FOR SHEET AE001 ONLY.

- SEE SHEET AE002 FOR GENERAL NOTES.
- SEE COVER SHEET G1001 FOR DRAWING INDEX.
- DO NOT SCALE DRAWINGS.
- CONTRACTOR SHALL VERIFY ALL DIMENSIONS AND CONDITIONS BEFORE BEGINNING WORK AND SHALL REPORT TO THE ARCHITECT ANY ERRORS, INCONSISTENCIES OR OMISSIONS BEFORE BEGINNING WORK. SEE GENERAL NOTES AND SPECIFICATIONS.
- THE SITE INFORMATION IS FOR REFERENCE ONLY. SEE LANDSCAPE/CIVIL DRAWINGS.

BID ALTERNATE: PAVILION STRUCTURE
SEE BID FORM AND THE FOLLOWING SHEETS FOR DETAILED DRAWINGS:

ARCHITECTURAL:	AE001, AE101, AE103, AE201
STRUCTURAL:	SB101, RELATED DETAILS/SCHEDULES ON SB501/SB601, SF201, SF501
ELECTRICAL:	EL101, EP101, & RELATED SCHEDULES/DETAILS

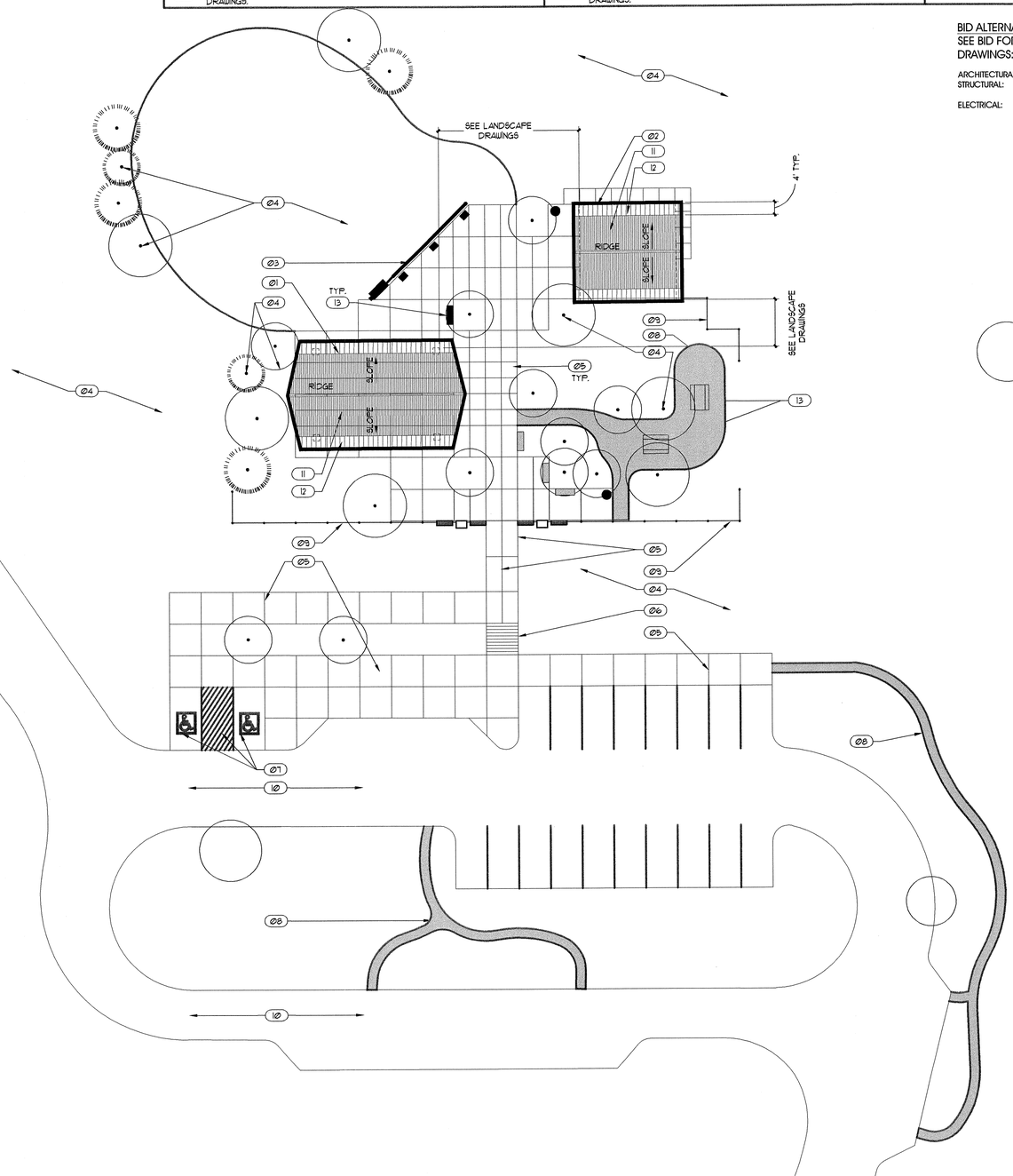

REFERENCE SITE PLAN
SCALE: 1" = 20'-0"
A4 / AE001

State of Utah
Department of Administrative Services

Division of Facilities Construction & Management
4110 State Office Building
Salt Lake City, Utah 84114
Phone: (801) 538 - 3018
Fax: (801) 538 - 3267

http://dfcm.utah.gov

CONSULTANTS:

LANDMARK DESIGN
LANDSCAPE ARCHITECTURE AND LAND PLANNING
350 EAST MOREHEAD AVENUE
SALT LAKE CITY
UTAH 84111
PHONE (801) 274-3200
FAX (801) 274-3200

ajc architects
703 east 1700 south
salt lake city, utah 84105
ph: 801.466.8818
fx: 801.466.4411
ajc@ajcarchitects.com

STATE OF UTAH
KURT R. RIGBY
135096
8/11/09
LICENSED ARCHITECT

PROJECT NAME AND ADDRESS:

ESCALANTE HERITAGE CENTER

1281 EAST HIGHWAY 12
ESCALANTE, UTAH

COPYRIGHT:

ALL RIGHTS RESERVED ©
LANDMARK DESIGN, INC.
These documents are protected under the United States 1978 copyright act. It is an exclusive work of original authorship. None of the pictorial, graphic, or technical charts or drawings depicted may be reproduced by any method, mechanical, electronic, or otherwise; nor may they be used or re-used for any purpose without the express prior written permission of Landmark Design, Inc.

MARK	DATE	DESCRIPTION

ISSUE TYPE: 100% SUBMITTAL

ISSUE DATE: 06.12.2009

DFCM PROJECT NO:	09018900
CAD PROJECT NO:	0860
CAD DWG FILE:	--
DRAWN BY:	S BODILY
CHK'D BY:	K RIGBY
COPYRIGHT:	--

SHEET TITLE:

REFERENCE SITE PLAN

SHEET NUMBER:

AE001

ABBREVIATIONS

AB	ANCHOR BOLTS
ABBREV	ABBREVIATION (S)
APPR	APPROVED
ACOUS	ACOUSTICAL
AC	ASPHALT CONCRETE
A/C	AIR CONDITIONING
AD	ACCESS DOOR
A.F.F.	ABOVE FINISHED FLOOR
ALUM	ALUMINUM
BD	BOARD
BLDG	BUILDING
BLK	BLOCK
BM	BEAM
B.O.B.	BOTTOM OF BEAM
BOT	BOTTOM
C/C	CENTER TO CENTER
CER	CERAMIC
CH	CEILING HEIGHT
CEM	CEMENT
CLG	CEILING
CLOS.	CLOSET
CLR	CLEAR
CMU	CONCRETE MASONRY UNIT
COL	COLUMN
COMPO	COMPOSITION
CONC	CONCRETE
CONN	CONNECTION
CONT	CONTINUOUS
CORR	CORRIDOR
CSK	COUNTERSINK
DEL	DELETE
DET	DETAIL
DF	DOUGLAS FIR
DF	DRINKING FOUNTAIN
DIA	DIAMETER
DIAG	DIAGONAL
DIM	DIMENSION
DIR	DIRECTION
DBL	DOUBLE
DN	DOWN
DO	DOOR OPENING
DR	DOOR
DS	DOWNSPOUT
DWG	DRAWING
EA	EACH
ELEC	ELECTRICAL
ELEV or EL	ELEVATION
ELEV	ELEVATOR
EQ	EQUAL
EQUIP	EQUIPMENT
EXIST	EXISTING
EJ	EXPANSION JOINT
EXT	EXTERIOR
EWC	ELEC WATER COOLER
FF	FINISH FLOOR
FHC	FIRE HOSE CABINET
FIN	FINISH
FLR	FLOOR
FO	FINISHED OPENING
FOC	FACE OF CONCRETE
FOS	FACE OF STUD
FOW	FACE OF WALL
FDN	FOUNDATION
FRP	FIBER REINFORCED PLASTIC
FD	FLOOR DRAIN
FS	FLOOR SINK
FS	FULL SIZE
FSD	FULL SIZE DETAIL
FT	FEET
FH	FULL HEIGHT
GA	GAUGE
GC	GENERAL CONTRACTOR
GL	GLASS
GALV or GV	GALVANIZED
GR	GRADE
GYP BD	GYPSUM BOARD
GSD	GRANITE SCHOOL DISTRICT
H	HIGH
HDWD	HARDWOOD
HORIZ	HORIZONTAL
HM	HOLLOW METAL
HP	HIGH POINT
ID	INSIDE DIAMETER
INSUL	INSULATION
INT	INTERIOR
JAN	JANITOR
LAV	LAVATORY
LEV	LEVEL
LTG	LIGHTING
LTWT	LIGHT WEIGHT
MAINT	MAINTENANCE
MAT'L	MATERIAL
MAX	MAXIMUM
MB	MACHINE BOLT
MECH	MECHANICAL
MET	METAL
MEZZ	MEZZANINE
MFR	MANUFACTURER
MISC	MISCELLANEOUS
MO	MASONRY OPENING
MIN	MINIMUM
MULL	MULLION
(N)	NEW
N.I.C.	NOT IN CONTRACT
NO.	NUMBER
N.T.S.	NOT TO SCALE
NR	NON-RATED
OC	ON CENTER
OCC	OPERATOR CONTROL CENTER
OD	OUTSIDE DIAMETER
OF	OVERFLOW
OFF	OFFICE
OFI	OWNER FURNISH ITEM
OFOI	OWNER FURNISHED OWNER INSTALLED
OH	OPPOSITE HAND
OPN'G	OPENING
OPP	OPPOSITE
PC	PORTLAND CEMENT
PL	PLATE
PLAS	PLASTER
PLYWD	PLYWOOD
PR	PAIR
PREP	PREPARATION
PROJ	PROJECTION
PT	PRESSURE TREATED
PTDF	PRESSURE TREATED DOUGLAS FIR
QT	QUARRY TILE
R	RISER
R or RAD	RADIUS
RD	ROOF DRAIN
REF	REFERENCE
REFL	REFLECTED
REINF	REINFORCE
REQ'D	REQUIRED
RES	RESILIENT
RM	ROOM
R.O.	ROUGH OPENING
REDW'D	REDWOOD
SECT	SECTION
SHT	SHEET
SIM	SIMILAR
SIMUL	SIMULATED
SPECS	SPECIFICATIONS
SS	STAINLESS STEEL
STA	STATION
STD	STANDARD
STL	STEEL
SQ	SQUARE
STRUCT	STRUCTURAL
SUSP	SUSPENDED
SYM	SYMMETRICAL
T	TREAD
TBC	TOP BACK OF CURB
TDC	TRAFFIC DECK COVERING
T & G	TONGUE & GROOVE
TEMP	TEMPERED
TEL	TELEPHONE
THK	THICK
T.O.C.	TOP OF CONCRETE or CURB
T.O.F.	TOP OF FOOTING
T.O.P.	TOP OF PARAPET
T.O.S.	TOP OF STEEL
TYP	TYPICAL
T.O.W.	TOP OF WALL
UNO	UNLESS NOTED OTHERWISE
VER	VERTICAL
W	WIDE
W/	WITH
WC	WATER CLOSET
WD	WOOD
WI	WROUGHT IRON
WL	WATER LEVEL
WP⊕	WORKING POINT
WP	WATERPROOFING

MATERIALS LEGEND (TYPICAL PLAN VIEWS)

NEW CONSTRUCTION

ALL NEW CONSTRUCTION IS SHOWN HATCHED AS ILLUSTRATED BELOW
ALL NEW CONSTRUCTION IS FULLY NOTED AS SHOWN BELOW
ALL WORK IS NEW UNLESS LABELED "EXISTING"

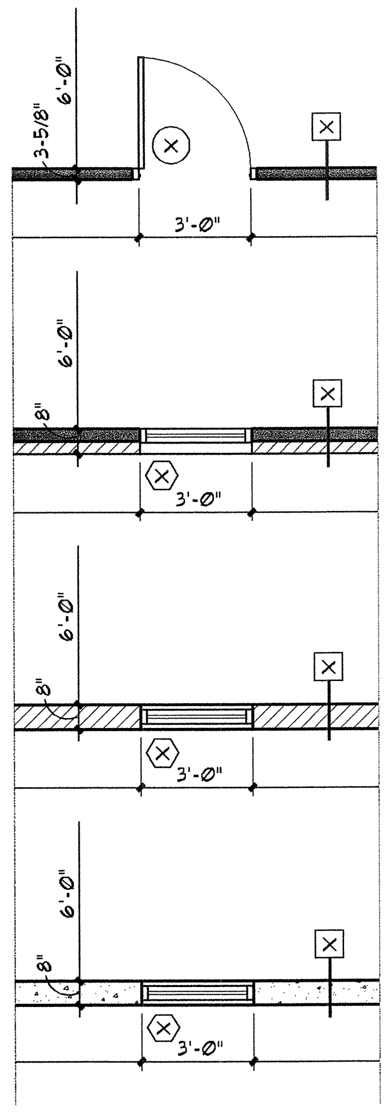

METAL OR WOOD STUD FRAMED WALL.
- ACTUAL WIDTH OF WALL DIMENSIONED
- WIDTH OF WALL DIMENSIONED TO FACE OF STUD
- DOORS DIMENSIONED TO NOMINAL DOOR SIZE EXCLUDING FRAME
- WINDOWS DIMENSIONED TO NOMINAL FRAME SIZE - NOT ROUGH OPENING

METAL OR WOOD STUD FRAMED WALL W/ MASONRY OR STONE VENEER
- WIDTH OF WALL DIMENSIONED FROM FACE OF STUD TO OVERALL NOMINAL WIDTH.
- WIDTH OF WALL DIMENSIONED TO FACE OF STUD AT INTERIOR
- DOORS DIMENSIONED TO NOMINAL DOOR SIZE EXCLUDING FRAME
- WINDOWS DIMENSIONED TO NOMINAL FRAME SIZE - NOT ROUGH OPENING

MASONRY WALL
- WIDTH OF WALL DIMENSIONED TO NOMINAL SIZE.
- DOORS DIMENSIONED TO NOMINAL DOOR SIZE EXCLUDING FRAME
- WINDOWS DIMENSIONED TO NOMINAL FRAME SIZE - NOT ROUGH OPENING

CONCRETE WALL
- ACTUAL WIDTH OF WALL DIMENSIONED
- DOORS DIMENSIONED TO NOMINAL DOOR SIZE EXCLUDING FRAME
- WINDOWS DIMENSIONED TO NOMINAL FRAME SIZE - NOT ROUGH OPENING

EXISTING CONDITIONS

ALL EXISTING CONSTRUCTION IS SHOWN WITHOUT HATCH AS ILLUSTRATED BELOW
ALL EXISTING CONSTRUCTION IS LABELED "EXISTING" BY KEYNOTE OR OTHERWISE
ALL DIMENSIONS TO EXISTING ARE APPROXIMATE ONLY AND ARE TO BE FIELD VERIFIED BY THE CONTRACTOR

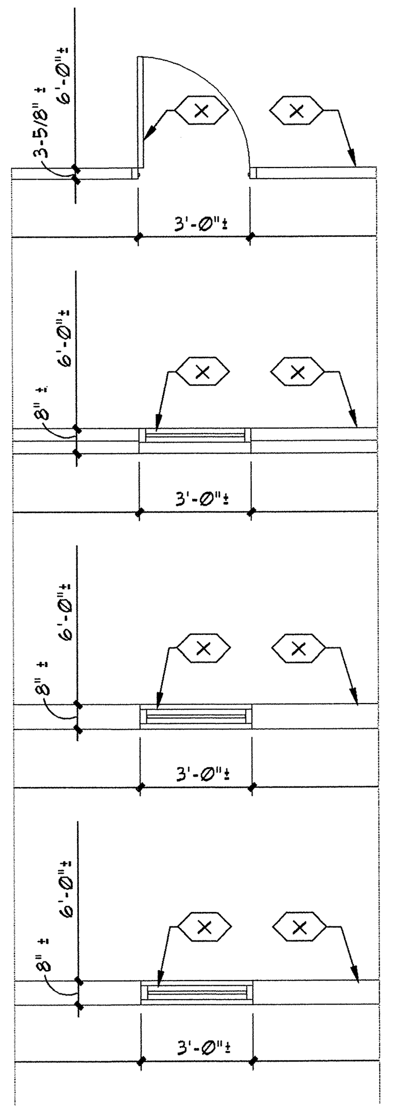

EXISTING
METAL OR WOOD STUD FRAMED WALL.
- WIDTH OF WALL DIMENSIONED TO FINISHED FACE.
- DOORS DIMENSIONED TO NOMINAL DOOR SIZE EXCLUDING FRAME
- WINDOWS DIMENSIONED TO NOMINAL FRAME SIZE

EXISTING
METAL OR WOOD STUD FRAMED WALL W/ MASONRY OR STONE VENEER
- WIDTH OF WALL DIMENSIONED FROM FINISH FACE TO OVERALL NOMINAL WIDTH.
- DOORS DIMENSIONED TO NOMINAL DOOR SIZE EXCLUDING FRAME
- WINDOWS DIMENSIONED TO NOMINAL FRAME SIZE

EXISTING
MASONRY WALL (TO REMAIN)
- WIDTH OF WALL DIMENSIONED TO NOMINAL SIZE.
- DOORS DIMENSIONED TO NOMINAL DOOR SIZE EXCLUDING FRAME
- WINDOWS DIMENSIONED TO NOMINAL FRAME SIZE

EXISTING
CONCRETE WALL (TO REMAIN)
- NOMINAL WIDTH OF WALL DIMENSIONED
- DOORS DIMENSIONED TO NOMINAL DOOR SIZE EXCLUDING FRAME
- WINDOWS DIMENSIONED TO NOMINAL FRAME SIZE

NEW CONSTRUCTION AT EXISTING

NEW CONSTRUCTION SHOWN HATCHED W/ THICKER LINE
ALL EXISTING COMPONENTS SHOWN THIN LINE SOLID, NO HATCH.

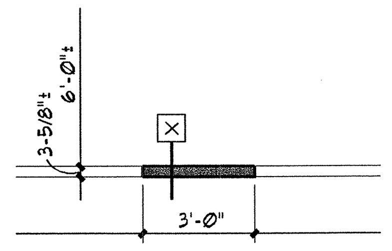

DEMOLITION AT EXISTING CONDITIONS

ALL EXISTING COMPONENTS SHOWN THIN LINE SOLID, NO HATCH.
ALL COMPONENTS TO BE DEMOLISHED ARE SHOWN DASHED. THIN LINE

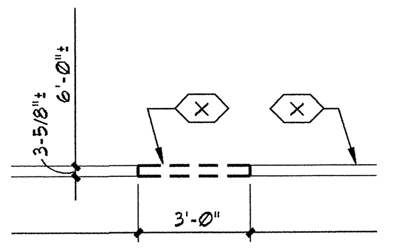

SYMBOLS

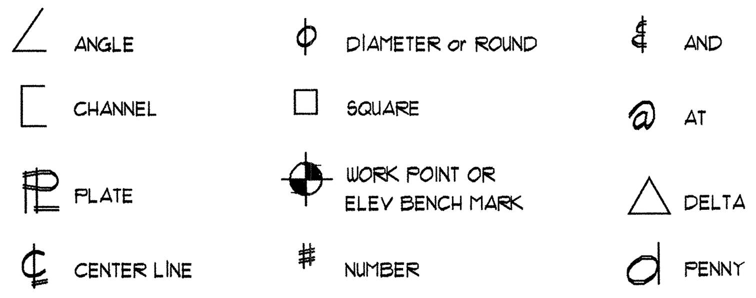

DETAIL TAGS

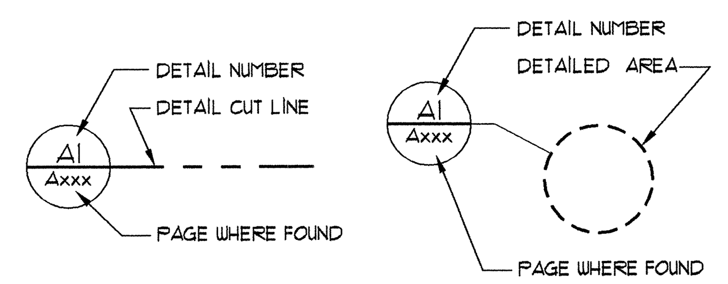

DETAIL TAGS

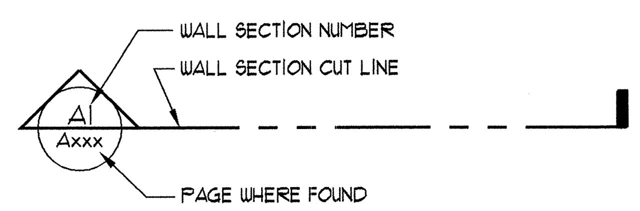

WALL SECTION TAG

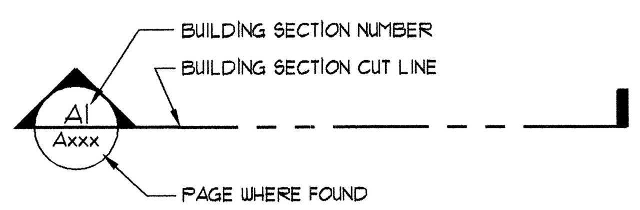

BUILDING SECTION TAG

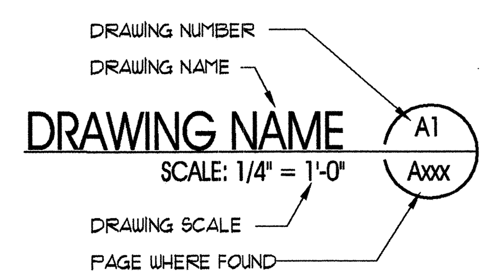

DRAWING TITLE

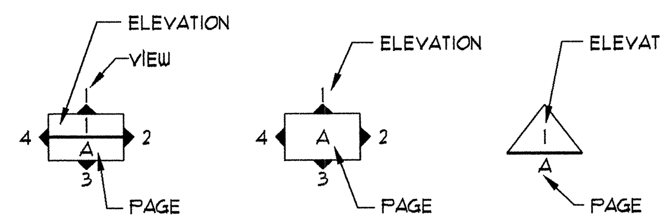

INTERIOR ELEVATION TAGS

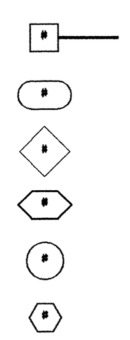

WALL TYPE DESIGNATION.
KEYNOTE.
WALL, FLOOR, BASE, CEILING FINISH KEYNOTE.
EXISTING/DEMO KEYNOTE.
DOOR DESIGNATION. SEE DOOR SCHEDULE.
WINDOW DESIGNATION. SEE WINDOW SCHEDULE.

MISCELLANEOUS KEYED NOTE SYMBOLS

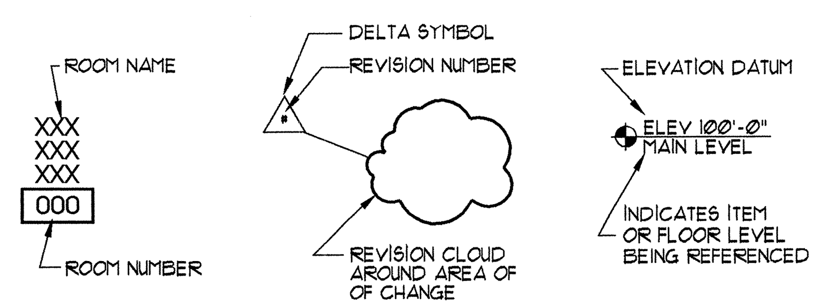

ROOM NAME TAG | REVISION CLOUD | DATUM TAG

GENERAL NOTES:

1 THE GENERAL CONTRACTOR SHALL HEREAFTER BE REFERRED TO AS "GENERAL CONTRACTOR" OR "GC". THE OWNER MAY HEREAFTER BE REFERRED TO AS "OWNER"

2 PLEASE NOTE:
THE GENERAL CONTRACTOR IS RESPONSIBLE FOR ALL WORK REGARDLESS OF THE LOCATION OF THE INFORMATION IN THE DOCUMENTS. THE GENERAL CONTRACTOR SHALL UTILIZE THE CONSTRUCTION DRAWINGS AND WRITTEN SPECIFICATIONS FOR ALL REQUIRED INFORMATION TO PROVIDE COMPLETE CONSTRUCTION OF THIS PROJECT. ITEMS LISTED IN DRAWINGS MAY NOT BE INCLUDED IN SPECIFICATIONS. ITEMS LISTED IN SPECIFICATIONS MAY NOT BE INCLUDED IN DRAWINGS.

3 UNLESS OTHERWISE INDICATED IN THE CONSTRUCTION DOCUMENTS AS BEING NOT IN CONTRACT (N.I.C.) OR EXISTING, ALL ITEMS, MATERIALS AND INSTALLATION OF SAME ARE PART OF THE CONTRACT AS DEFINED BY THE CONSTRUCTION DOCUMENTS. THE GC SHALL PROVIDE AND INSTALL ALL ACCESSORIES, COMPONENTS AND ASSEMBLIES REQUIRED FOR THE WORK DEPICTED OR SPECIFIED.

4 THE GENERAL CONTRACTOR SHALL FIELD VERIFY ALL CONDITIONS AND DIMENSIONS PRIOR TO BEGINNING ANY WORK AND SHALL BE RESPONSIBLE FOR ALL WORK AND MATERIALS INCLUDING THOSE FURNISHED BY SUBCONTRACTORS. THE GC SHALL ACCEPT PREMISES AS FOUND. OWNER WILL MAINTAIN THE EXISTING CONDITION OF THE SITE AND EXISTING STRUCTURES AT THE TIME OF BIDDING.

5 DISCREPANCIES BETWEEN PORTIONS OF THE CONTRACT DOCUMENTS ARE NOT INTENDED. THE GENERAL CONTRACTOR IS TO CLARIFY WITH THE ARCHITECT ANY SUCH DISCREPANCIES PRIOR TO COMMENCING WORK.

6 DIMENSIONS TAKE PRECEDENCE OVER DRAWINGS: DO NOT SCALE DRAWINGS TO DETERMINE ANY LOCATIONS. THE ARCHITECT SHALL BE NOTIFIED OF ANY DISCREPANCY PRIOR TO CONTINUING WITH WORK.

7 ALL PLAN DIMENSIONS ARE FROM GRIDLINE OR FACE OF STUD OR FACE OF BLOCK UNLESS OTHERWISE INDICATED. SEE SECTION ON "DIMENSIONING" THIS SHEET.

8 THE CONTRACTOR SHALL REPORT TO THE ARCHITECT ALL CONDITIONS REQUIRING COORDINATION/ CHANGES WITH THE CONTRACT DOCUMENTS. COORDINATION / APPROVAL SHALL TAKE PLACE BEFORE THE WORK BEGINS. ALL CHANGES TO THE CONTRACT COST SHALL BE APPROVED THROUGH A CHANGE ORDER

9 DETAILED DRAWINGS AND LARGER SCALE DRAWINGS TAKE PRECEDENCE OVER SMALL SCALE DRAWINGS.

10 THE ARCHITECT WILL REVIEW SHOP DRAWINGS AND SAMPLES FOR CONFORMANCE WITH DESIGN CONCEPT OF THE PROJECT. THE ARCHITECT'S REVIEW OF A SEPARATE ITEM SHALL NOT INDICATE APPROVAL OF AN ASSEMBLY IN WHICH THE ITEM FUNCTIONS. THE ARCHITECT WILL NOT REVIEW SHOP DRAWINGS UNTIL THE GC HAS REVIEWED AND STAMPED THE SHOP DRAWING/SUBMITTAL. THE GC IS RESPONSIBLE FOR FIELD VERIFYING ALL DIMENSIONS SHOWN ON THE SHOP DRAWINGS. THE ARCHITECT'S REVIEW OF THE SHOP DRAWINGS SHALL NOT OVERRIDE THE CONDITIONS DESCRIBED IN THE CONTRACT DOCUMENTS UNLESS SPECIFICALLY NOTED OTHERWISE BY THE ARCHITECT

11 FOR CONSTRUCTION DETAILS NOT SHOWN, USE THE MANUFACTURER'S STANDARD DETAILS OR APPROVED SHOP DRAWINGS / DATA SHEETS IN ACCORDANCE WITH THE PROJECT SPECIFICATIONS.

12 THE GENERAL CONTRACTOR SHALL REFER AND CONFORM TO ALL RECOMMENDATIONS AND FINDINGS AS SET FORTH IN THE GEOTECHNICAL REPORT. THE ARCHITECT ACCEPTS NO RESPONSIBILITY FOR THE ACCURACY OF THE FINDINGS OR FOR THE FINAL RECOMMENDATIONS.

13 FOR GRADING, TRENCHING ETC., CONTACT THE ARCHITECT FOR INSTRUCTIONS PRIOR TO THE CONTINUATION OF WORK SHOULD ANY UNUSUAL CONDITIONS BECOME APPARENT DURING GRADING OR FOUNDATION CONSTRUCTION. EXISTING ELEVATIONS AND LOCATIONS TO BE JOINED SHALL BE VERIFIED BY THE GENERAL CONTRACTOR BEFORE CONSTRUCTION.

14 ALL WORK, MATERIALS AND METHODS SHALL BE IN CONFORMANCE WITH THE CODES, ORDINANCES AND REGULATIONS OF ALL GOVERNMENTAL AGENCIES HAVING JURISDICTION AT THE PROJECT LOCATION. THE GENERAL CONTRACTOR MUST COMPLY WITH THE CONTRACTOR REGISTRATION REQUIREMENTS OF ALL GOVERNING AUTHORITIES.

15 ALL PROJECT CONSTRUCTION SHALL CONFORM WITH ANSI A-117.1-1998, AND THE AMERICANS WITH DISABILITIES ACT (ADA).

THE GENERAL CONTRACTOR SHALL NOTIFY ALL APPLICABLE LOCAL GOVERNING AUTHORITIES AND UTILITY COMPANIES PRIOR TO COVERING UP ANY WORK REQUIRING INSPECTION.

16 THE GENERAL CONTRACTOR SHALL MAINTAIN ALL REQUIRED EXITS AND FIRE LANES IN WORKING ORDER.

17 A GENERAL BUILDING PERMIT IS NOT REQUIRED. ALL OTHER PERMITS OR CONNECTION FEES SHALL BE SECURED AND PAID FOR BY THE GENERAL CONTRACTOR.

18 THE GENERAL CONTRACTOR SHALL PROVIDE AND INSTALL FIRE EXTINGUISHERS. GOVERNING CODES AND THE FIRE MARSHALL HAVING JURISDICTION SHALL DICTATE SIZE, TYPE, QUANTITY AND LOCATIONS OF BOTH TEMPORARY AND PERMANENT FIRE EXTINGUISHERS.

19 MINIMUM FLAME SPREAD CLASSIFICATION OF INTERIOR FINISH SHALL CONFORM TO THE BUILDING CODE AND LOCAL GOVERNING BUILDING CODES/ORDINANCES.

20 THE GENERAL CONTRACTOR SHALL PROVIDE AND IS SOLELY RESPONSIBLE AND LIABLE FOR PUBLIC AND EMPLOYEE PROTECTION AS NECESSARY AND AS REQUIRED BY THE CODES, INCLUDING EXTERIOR AND INTERIOR PEDESTRIAN TRAFFIC BARRIERS. ALL WORK SHALL CONFORM TO THE ORDINANCES AND REGULATIONS OF GOVERNMENTAL AGENCIES HAVING JURISDICTION AT THE PROJECT.

21 THE GENERAL CONTRACTOR SHALL PROVIDE TEMPORARY BARRICADES FOR DUST AND NOISE CONTROL WHERE WORK JOINS EXISTING CONDITIONS.

22 ALL DEBRIS SHALL BE REMOVED FROM PREMISES AND ALL AREAS SHALL BE LEFT IN A CLEAN (BROOM) CONDITION DAILY.

23 IT SHALL BE THE RESPONSIBILITY OF THE GENERAL CONTRACTOR TO LOCATE ALL EXISTING UTILITIES, WHETHER SHOWN HEREIN OR NOT, AND TO PROTECT THEM FROM DAMAGE. THE GENERAL CONTRACTOR SHALL BEAR ALL EXPENSE OF REPAIR OR REPLACEMENT OF UTILITIES OR OTHER PROPERTY DAMAGED BY OPERATIONS IN CONJUNCTION WITH THE PROSECUTION OF THE WORK.

24 APPROVED PLANS SHALL BE KEPT IN A PLAN BOX AND SHALL NOT BE USED BY WORKMEN. ALL CONSTRUCTION SETS SHALL REFLECT THE SAME INFORMATION. THE GENERAL CONTRACTOR SHALL ALSO MAINTAIN, IN GOOD CONDITION, ONE COMPLETE SET OF PLANS WITH ALL REVISIONS, ADDENDA AND CHANGE ORDERS, ON THE PREMISES AT ALL TIMES. THESE ARE TO BE KEPT UNDER THE CARE OF THE JOB SUPERINTENDENT.

25 THE GENERAL CONTRACTOR SHALL BE RESPONSIBLE FOR AND SHALL REPLACE OR REMEDY ANY FAULTY, IMPROPER OR INFERIOR MATERIALS OR WORKMANSHIP WHICH SHALL APPEAR WITHIN ONE (1) YEAR (OR AS OTHERWISE SPECIFIED) FOR A SPECIFIC COMPONENT AFTER THE DATE OF SUBSTANTIAL COMPLETION. EXCEPTION: THE ROOFING SUBCONTRACTOR SHALL FURNISH AND MAINTAIN AN AGREEMENT CO-SIGNED BY THE GENERAL CONTRACTOR TO MAINTAIN THE ROOFING IN A WATERTIGHT CONDITION FOR A PERIOD AS LISTED IN THE SPECIFICATIONS, STARTING AFTER DATE OF SUBSTANTIAL COMPLETION.

26 THE GENERAL CONTRACTOR SHALL PROVIDE A 6' HIGH (MIN) CHAIN LINK (MIN) JOB FENCE FOR SECURITY AT THE CONSTRUCTION SITE DURING ALL PHASES OF CONSTRUCTION. THE CONSTRUCTION FENCE SHALL BE GATED AND LOCKABLE. THE FENCE SHALL BE DURABLE ENOUGH TO WITHSTAND THE SPECIFIC JOB SITE CONDITIONS.

27 CONTRACTOR SHALL PROVIDE TEMPORARY WATER, POWER, TOILET FACILITIES AND ON SITE PHONE OR CELLULAR.

28 THE CONTRACTOR IS TO PROVIDE BLOCKING AS REQUIRED FOR MOUNTING OF WALL MOUNTED SHELVES, CABINETS, HC GRAB BARS AND PARTITION BRACES. BLOCKING SHALL BE FIRE TREATED WHERE REQUIRED BY THE BUILDING CODE.

29 THE GENERAL CONTRACTOR IS RESPONSIBLE FOR RECEIVING, UNLOADING, UNCRATING, INSTALLATION AND HOOK-UP OF ALL OWNER FURNISHED ITEMS UNLESS NOTED OTHERWISE ON THE DRAWINGS.

30 WHERE GAS SERVICE IS BEING PROVIDED, THE GC SHALL PROVIDE AN OUTSIDE GAS SHUT-OFF VALVE CONSPICUOUSLY MARKED.

31 ALL EXPOSED ELECTRICAL EQUIPMENT SHALL BE PAINTED TO MATCH ADJACENT SURFACES.

32 THE GENERAL CONTRACTOR IS TO ASSURE THAT NO REBAR OR REINFORCEMENT IS PRESENT PRIOR TO CORE DRILLING OR PLACING BOLTS OR ANY OTHER ITEM WHICH COULD DISTURB THE STRUCTURAL SLAB OR FOUNDATION WALLS.

33 PROVIDE GALVANIC PROTECTION BETWEEN DISSIMILAR MATERIALS WHERE REQUIRED.

34 PROVIDE METAL TRIM OF CASING AT ALL EDGES OF PLASTER AND DRYWALL SURFACES WHERE IT TERMINATES OR MEETS ANT OTHER MATERIAL, UNLESS NOTED OTHERWISE.

35 PROVIDE METAL CORNER TRIM AT ALL CORNERS (INSIDE AND OUT) OF PLASTER AND DRYWALL SURFACES.

36 ALL PENETRATIONS THROUGH ANY SURFACE SHALL BE THOROUGHLY SEALED WITH APPROPRIATE SEALANT MATERIAL.

37 UNLESS OTHERWISE NOTED, ALL EXTERIOR AND INTERIOR METAL, TRIM, TREILLAGE, RAILINGS, MOLDINGS, FRAMES, CASTING ETC., SHALL BE PAINTED.

38 THE GC SHALL VERIFY LOCATIONS OF ALL CEILING ACCESS PANELS WITH MECHANICAL AND PLUMBING PLANS. ACCESS PANELS SHALL BE FURNISHED AND INSTALLED WITH A FIRE RATING EQUAL TO THE WALL OR CEILING ASSEMBLY INTO WHICH THEY ARE TO BE INSTALLED. FINISH AND LOCATION SHALL BE APPROVED BY THE ARCHITECT.

39 THE GC SHALL VERIFY DIMENSIONS OF ALL EQUIPMENT PADS & BASES WITH EQUIPMENT MANUFACTURERS & SHALL VERIFY ALL SIZES AND LOCATIONS OF DUCT OPENINGS ON ROOF AND INTERIOR SHAFTS.

MATERIALS LEGEND (TYPICAL SECTION VIEWS)

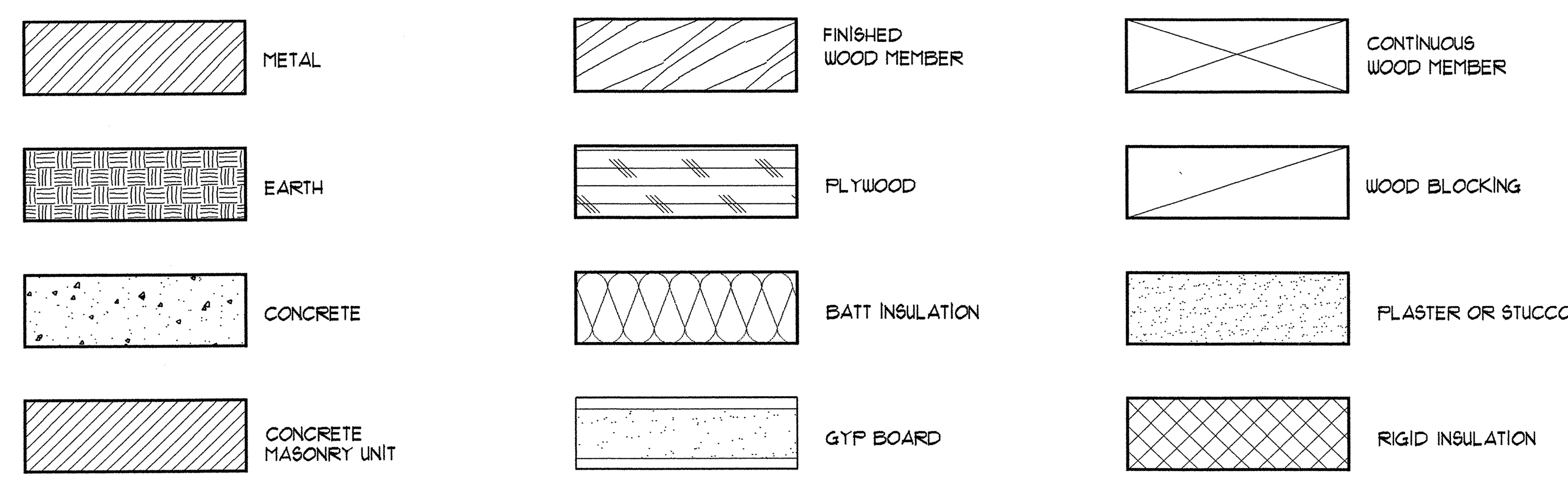

State of Utah
Department of Administrative Services

Division of Facilities Construction & Management
4110 State Office Building
Salt Lake City, Utah 84114
Phone: (801) 538 - 3018
Fax: (801) 538 - 3267

http://dfcm.utah.gov

CONSULTANTS:

LANDMARK DESIGN INCORPORATED
LANDSCAPE ARCHITECTURE AND LAND PLANNING
2634 HIGHLAND DRIVE
SALT LAKE CITY
UTAH 84106
PHONE (801) 474-3300
FAX (801) 474-3303

ajc architects
703 east 1700 south
salt lake city, utah 84105
ph: 801.466.8818
fx: 801.466.4411
ajc@ajcarchitects.com

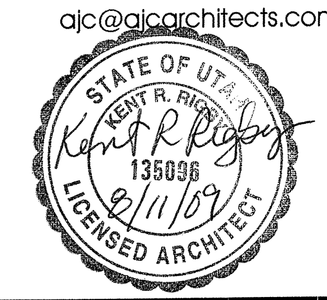

PROJECT NAME AND ADDRESS:

ESCALANTE HERITAGE CENTER

1281 EAST HIGHWAY 12
ESCALANTE, UTAH

COPYRIGHT:

ALL RIGHTS RESERVED ©
LANDMARK DESIGN, INC.
These documents are protected under the United States 1978 copyright act. It is an exclusive work of original authorship. None of the pictorial, graphic, or technical charts or drawings depicted may be reproduced by any method, mechanical, electronic, or otherwise; nor may they be used or re-used for any purpose without the express prior written permission of Landmark Design, Inc.

MARK	DATE	DESCRIPTION

ISSUE TYPE: 100% SUBMITTAL

ISSUE DATE:	06.12.2009
DFCM PROJECT NO:	09018900
CAD PROJECT NO:	0860
CAD DWG FILE:	--
DRAWN BY:	S BODILY
CHK'D BY:	K RIGBY
COPYRIGHT:	--

SHEET TITLE:

GENERAL NOTES

SHEET NUMBER:

AE002

DOOR AND DOORWAY CLEARANCE REQUIREMENTS:

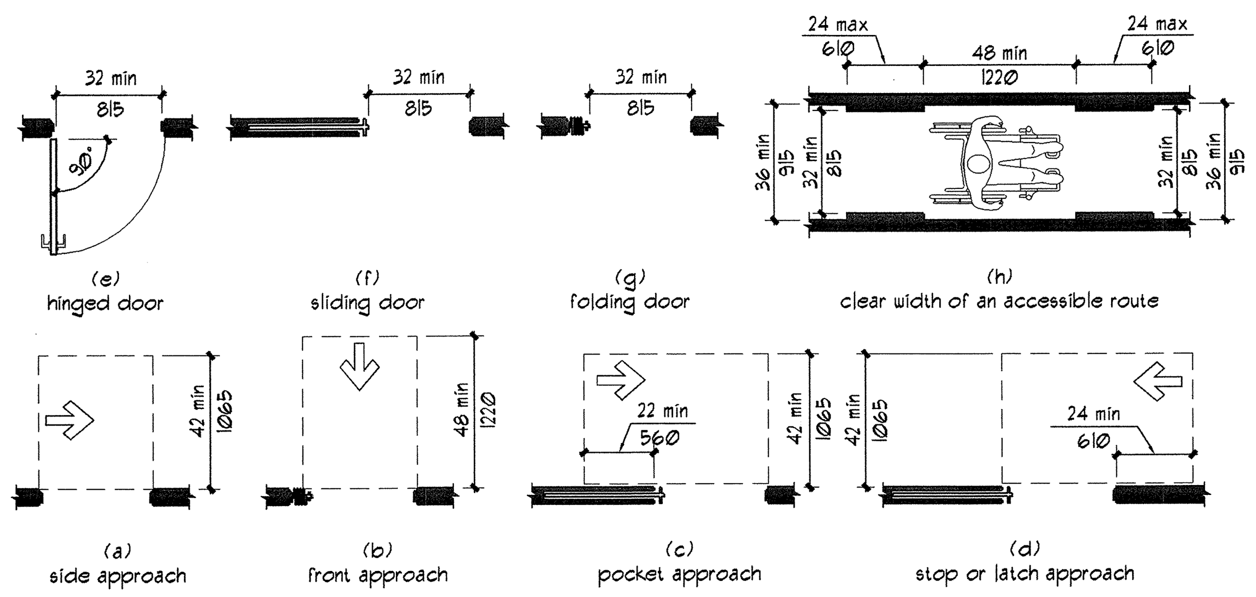

maneuvering clearances at sliding,folding doors, doorways and clear width at doorways

STATE OF UTAH ENHANCED ACCESSIBILITY REQUIREMENTS:
1. POWERED DOOR OPENERS FOR THE PRIMARY ENTRANCE DESIGNATED FOR USE BY PEOPLE WITH DISABILITIES.
2. POWERED DOOR OPENERS FOR ONE UNI-SEX RESTROOM OR FOR ONE MALE AND ONE FEMALE RESTROOM IN THE BUILDING UNLESS RESTROOMS WITH A DOOR- LESS ENTRY ARE PROVIDED.

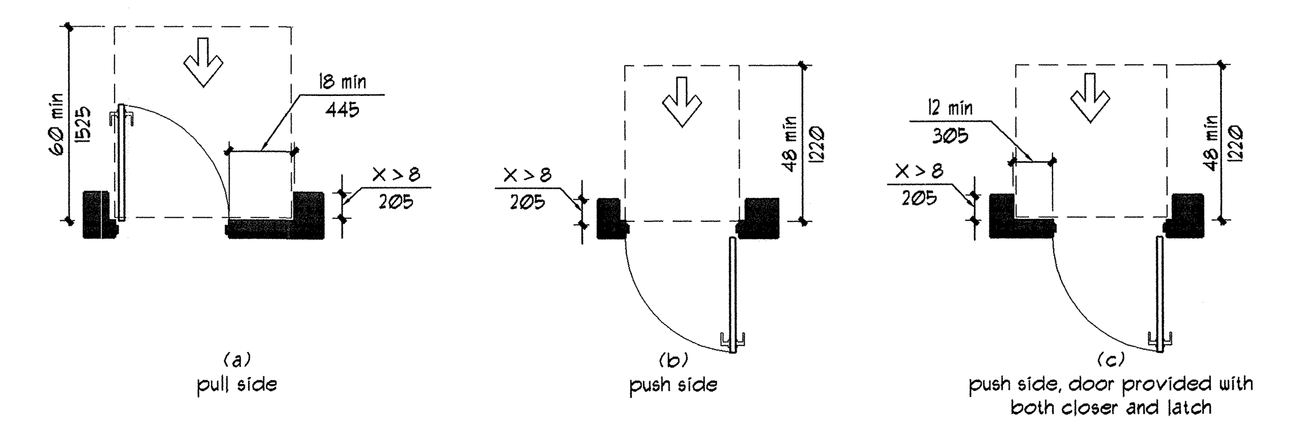

maneuvering clearances

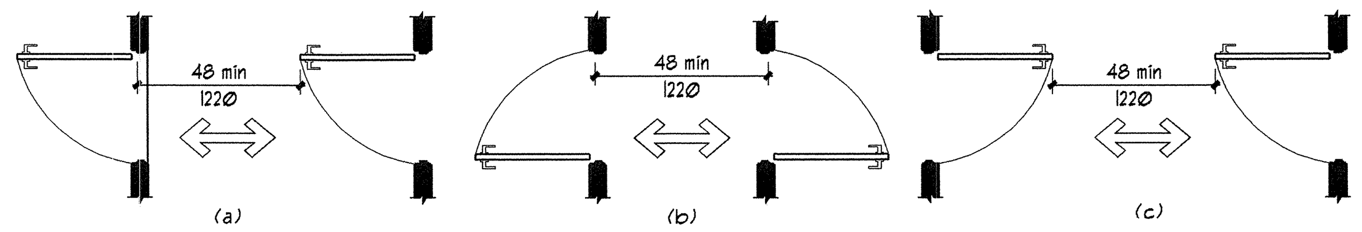

doors in series

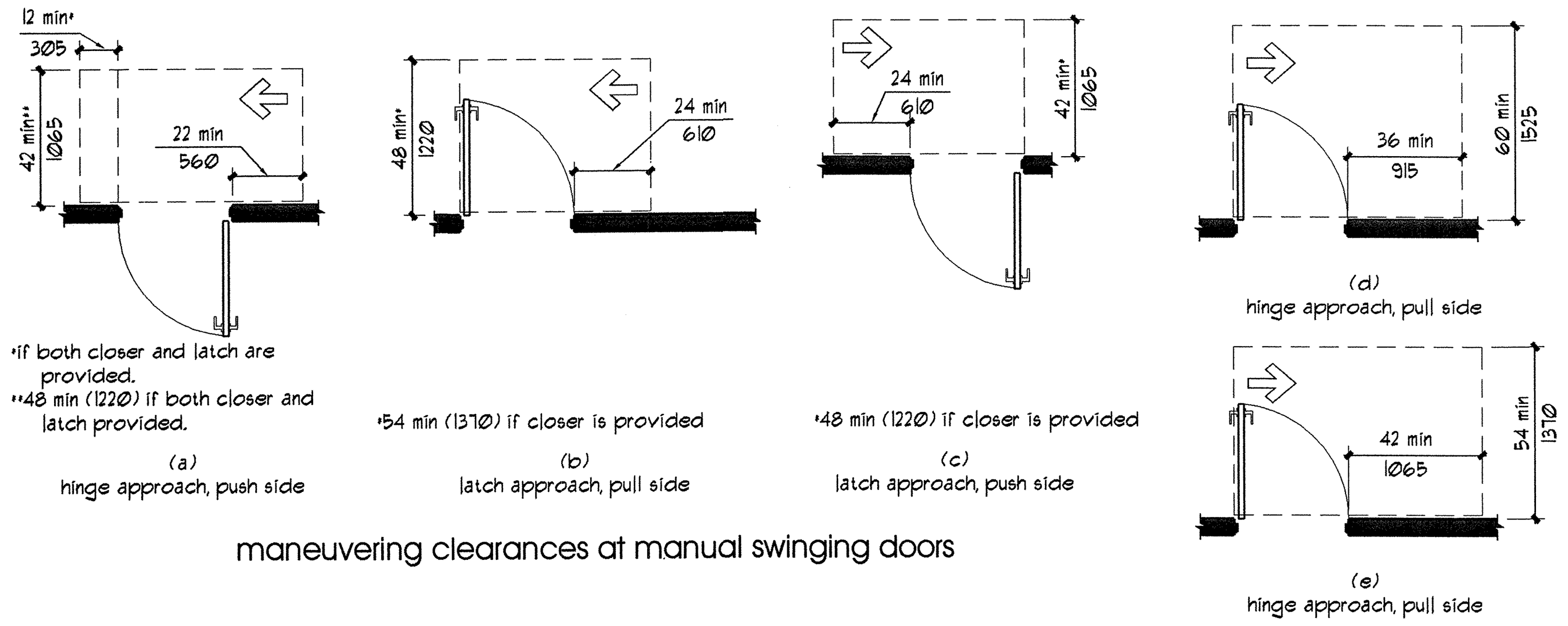

maneuvering clearances at manual swinging doors

TOILET COMPARTMENT CLEARANCE REQUIREMENTS:

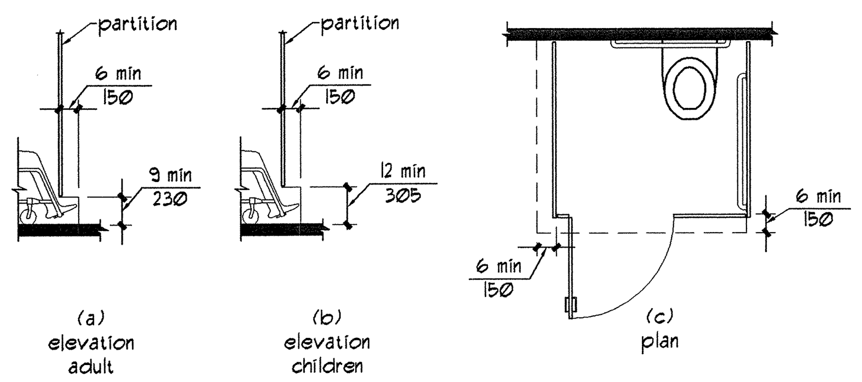

wheelchair accessible toilet compartment toe clearance

ADVISORY SPECIFICATIONS FOR WATER CLOSETS SERVING CHILDREN AGES 3 THROUGH 12

	AGES 3 AND 4	AGES 5 THRU 8	AGES 9 THRU 12
WATER CLOSET CENTERLINE	12 INCHES (305 MM)	12 TO 15 INCHES (305 TO 380 MM)	15 TO 18 INCHES (380 TO 455 MM)
TOILET SEAT HEIGHT	11 TO 12 INCHES (280 TO 305 MM)	12 TO 15 INCHES (305 TO 380 MM)	15 TO 17 INCHES (380 TO 430 MM)
GRAB BAR HEIGHT	18 TO 20 INCHES (455 TO 510 MM)	20 TO 25 INCHES (510 TO 635 MM)	25 TO 27 INCHES (635 TO 685 MM)
DISPENSER HEIGHT	14 INCHES (355 MM)	14 TO 17 INCHES (355 TO 430 MM)	17 TO 19 INCHES (430 TO 485 MM)

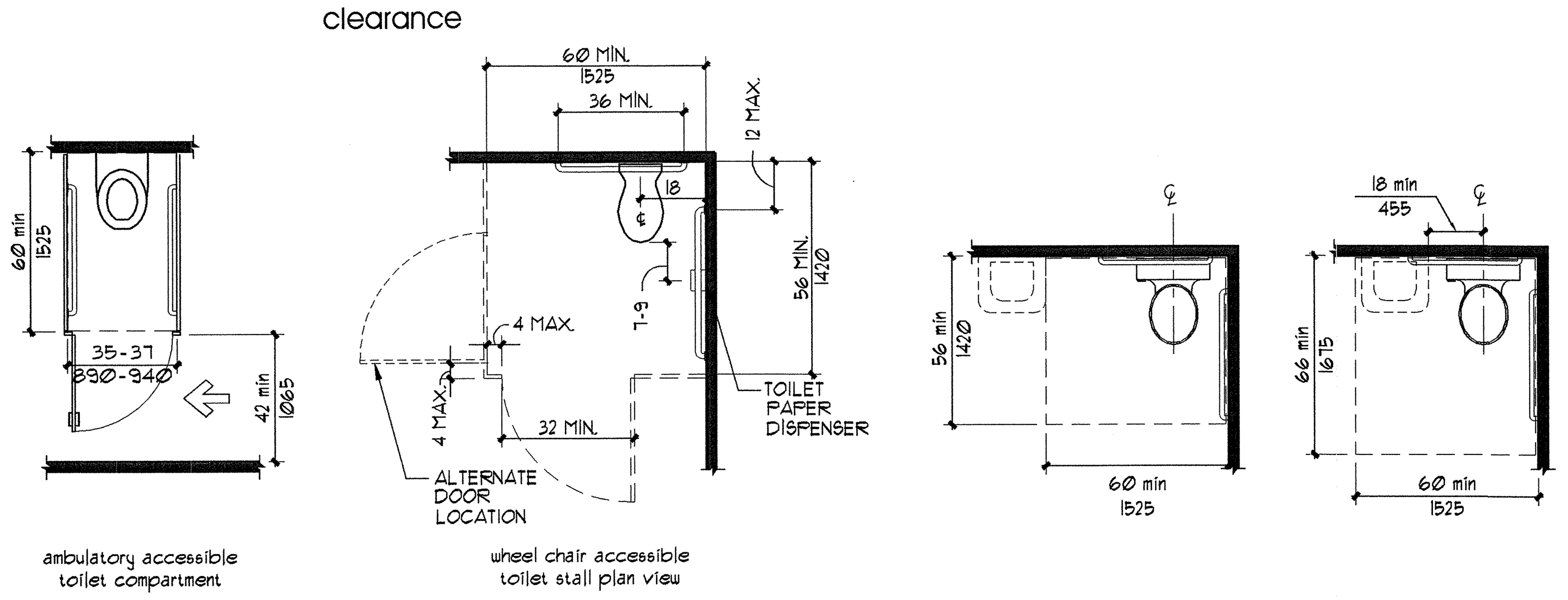

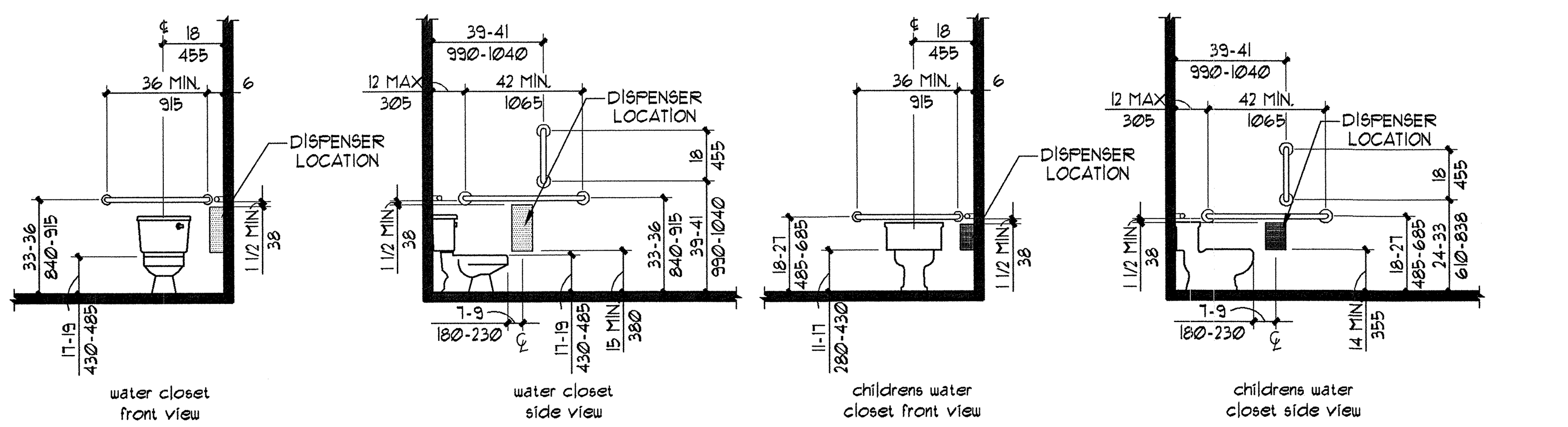

accessible toilet compartment clearances and mounting heights

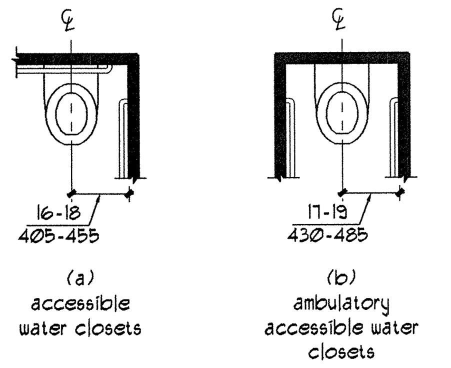

water closet location

URINAL CLEARANCE REQUIREMENTS:

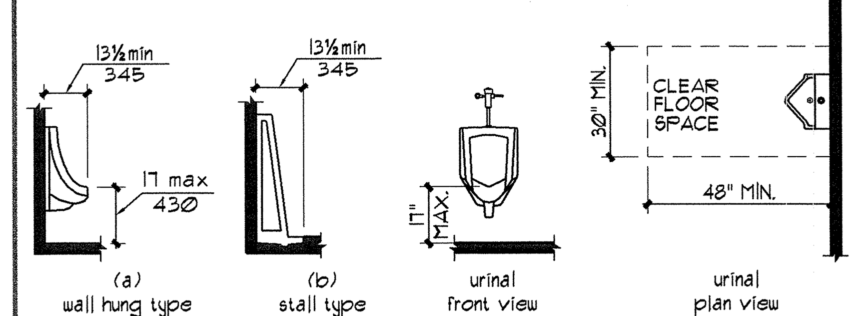

height and depth of urinals

GENERAL NOTES:

1. REFER TO DOOR HARDWARE SPECIFICATIONS FOR DOOR HARDWARE ADA REQUIREMENTS AND STANDARDS.
2. REFER TO ELECTRICAL DRAWINGS FOR ELECTRICAL DEVICES ADA MOUNTING HEIGHT REQUIREMENTS.
3. REFER TO SITE PLAN FOR ACCESSIBLE ROUTE REQUIREMENTS AND DETAIL REFERENCES. (NOT APPLICABLE TO ALL PROJECTS)

LEVEL CHANGE:

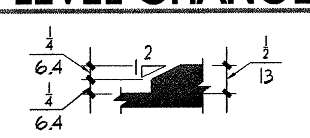

beveled change in level

LAVATORY & ACCESSORY CLEARANCES AND HEIGHT REQUIREMENTS:

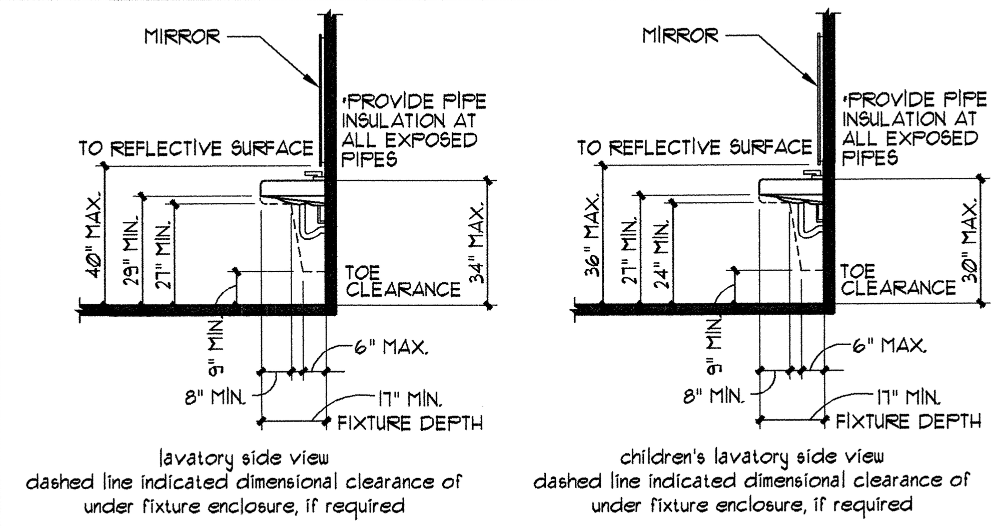

lavatory side view
dashed line indicated dimensional clearance of under fixture enclosure, if required

children's lavatory side view
dashed line indicated dimensional clearance of under fixture enclosure, if required

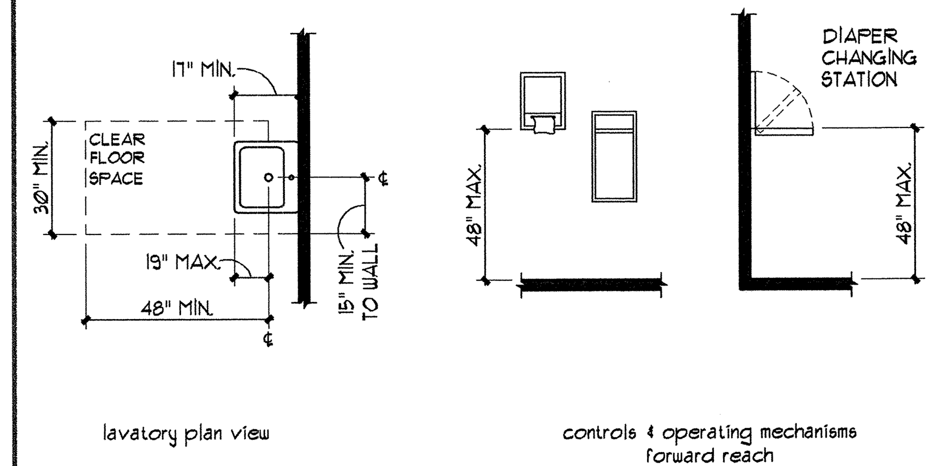

lavatory plan view

controls & operating mechanisms forward reach

ELECTRIC WATER COOLER REQUIREMENTS:

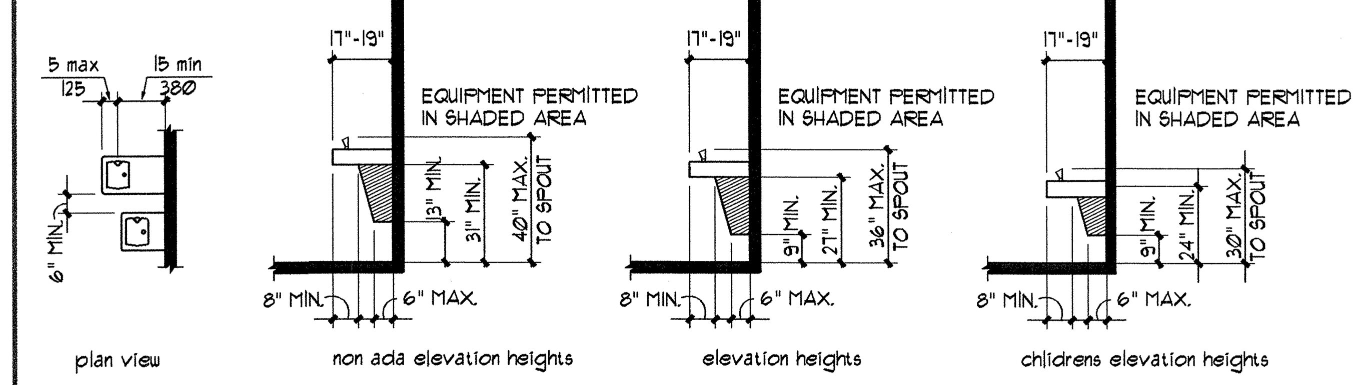

drinking fountain clearances

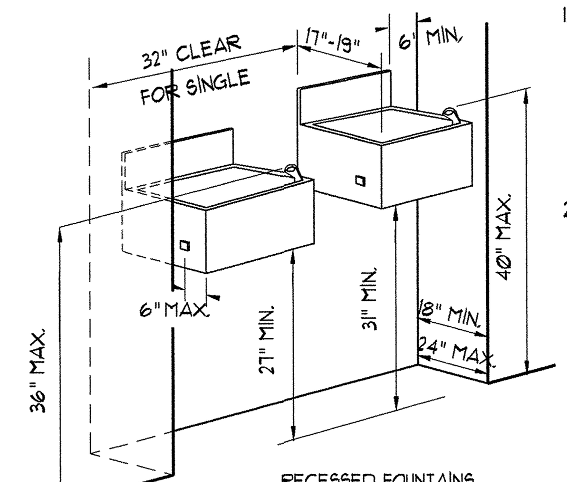

RECESSED FOUNTAINS

1. RECESSED FOUNTAINS:
WITHIN ALCOVES MINIMUM 63" WIDE, MINIMUM 18" DEEP WHEN DOUBLE DRINKING FOUNTAINS ARE REQUIRED AND 32" MIN. CLR. WHEN A SINGLE FOUNTAIN IS PERMITTED.
   A. CONTRACTOR SHALL COORDINATE WITH SIZE OF WATER FOUNTAIN TO BE USED AND SIZE ALCOVE ACCORDINGLY COMPLYING WITH REQUIREMENTS AND RECOMMENDATIONS AND COORDINATING WITH THE ARCHITECT.
2. PROJECTED FOUNTAINS:
WARNING FOR THE VISION IMPAIRED AT A PROJECTED DRINKING FOUNTAIN CAN BE PROVIDED BY EITHER OF THE FOLLOWING MEANS:
   A. THE SURFACE OF THE FLOOR OR GROUND AT THE DRINKING FOUNTAIN CAN BE OF CONTRASTING COLOR WITH A TEXTURE THAT CONTRASTS IN RESILIENCY WITH THE ADJACENT FINISHED FLOOR MATERIAL, SO THAT IT CAN BE SENSED BY A CANE, WITH THE TEXTURE EXTENDING FROM THE WALL TO ONE FOOT BEYOND THE FRONT EDGE OF THE DRINKING FOUNTAIN AND ONE FOOT BEYOND EACH SIDE OF THE FOUNTAIN, OR INSTALL WING WALLS ON EACH SIDE OF THE DRINKING FOUNTAIN TO B. PROJECT OUT FROM THE MAIN WALL AT LEAST AS FAR AS THE DRINKING FOUNTAIN AND TO WITHIN 6" OF THE PATH OF TRAVEL FLOOR FINISH. THERE MUST BE 32" CLEAR BETWEEN THE WING WALLS.

NOTE:
ILLUSTRATIONS SHOWN HERE ARE FOR DIMENSIONAL ACCESSIBILITY PURPOSES ONLY. A SECOND DRINKING FOUNTAIN SHOULD BE PROVIDED AT A MOUNTING HEIGHT SUITABLE TO PERSONS WITH LIMITED PHYSICAL BENDING ABILITY, ADJACENT TO THE ACCESSIBLE FOUNTAIN, MAINTAINING MINIMUM CLEARANCES NOTED AND AS REQUIRED. PROVIDE TEXTURED AREA OF CONTRASTING COLOR TO IDENTIFY WATER FOUNTAIN LOCATION AS NOTED. WHEN FOUNTAIN IS AT AN INTERIOR LOCATION, THE TEXTURED AREA SHALL ALSO BE OF DIFFERENT RESILIENCY THAN THAT OF THE ADJACENT FLOOR SURFACE FINISH. SEE TYPICAL ACCESSIBILITY NOTES SHEET FOR ADDITIONAL REQUIREMENTS.

TUB AND SHOWER CLEARANCES AND ACCESSORY HEIGHT REQUIREMENTS:

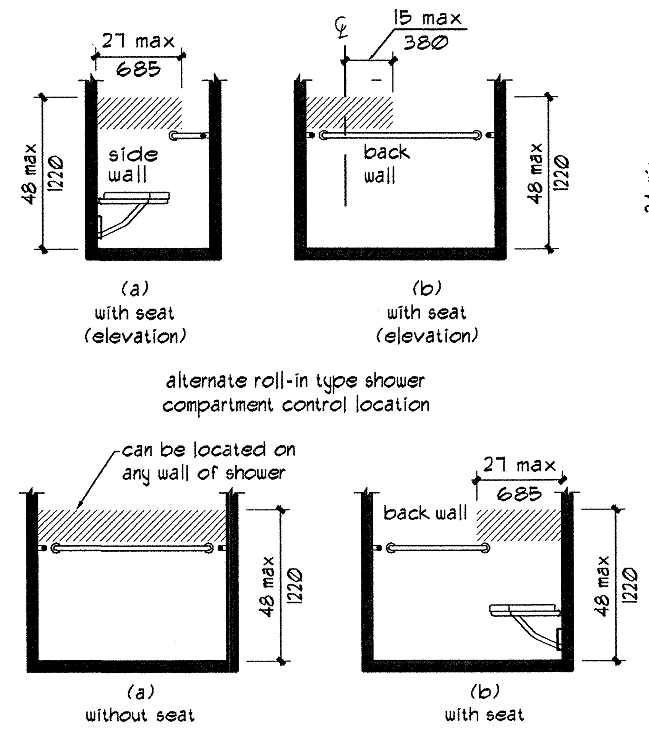

alternate roll-in type shower compartment control location

standard roll-in type shower compartment control location

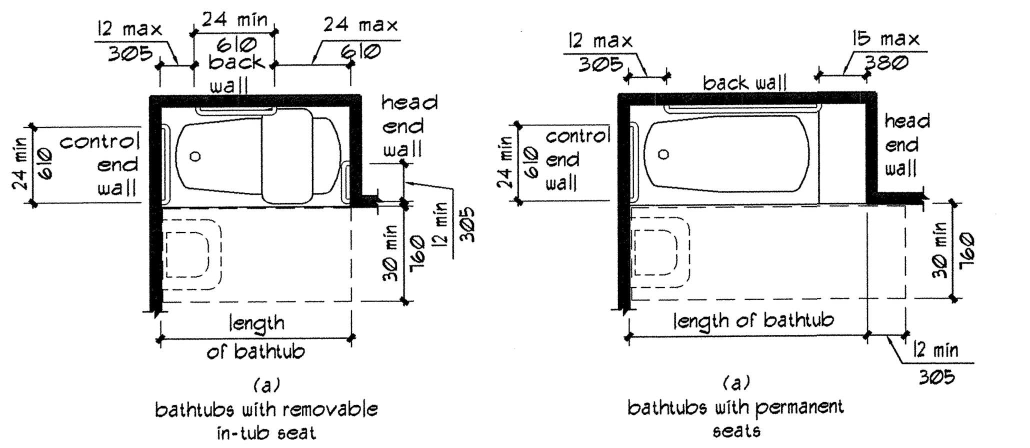

clearances for bathtubs

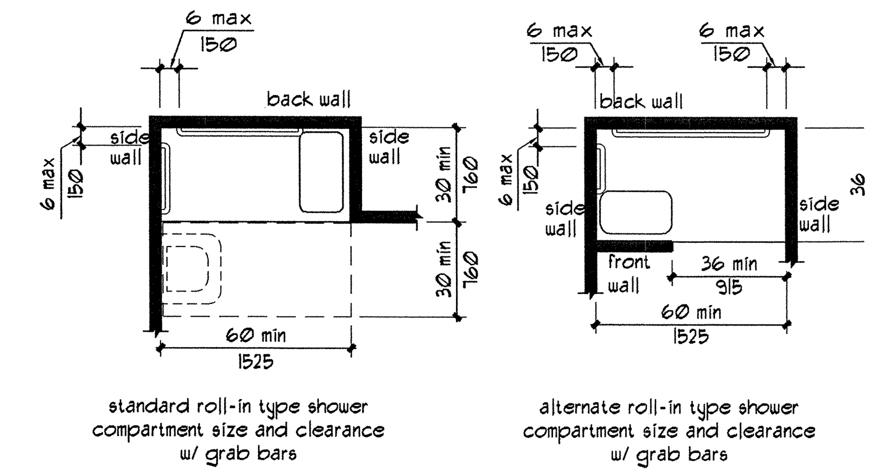

roll-in type shower clearances

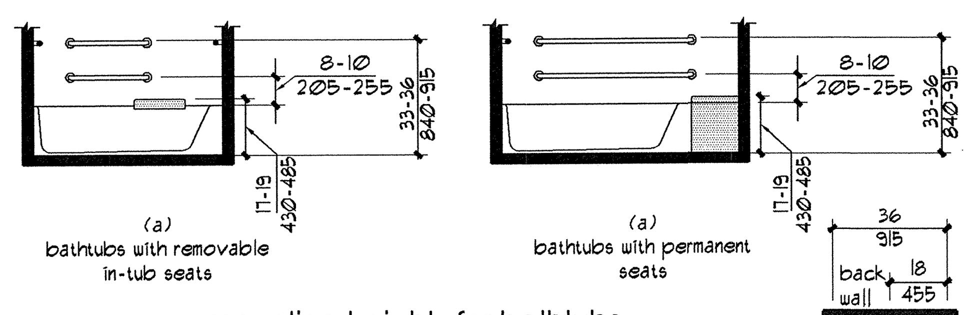

mounting heights for bathtubs

UNLESS NOTED AS "MIN." OR "MAX." DIMENSIONS SHOWN ARE ABSOLUTE. DIMENSIONS SHOWN HERE SHALL GOVERN THE INSTALLATION OF ALL ACCESSIBLE FIXTURES AND ACCESSORIES, UNLESS MORE SPECIFIC DIMENSIONS ARE SHOWN ELSEWHERE IN THE CONTRACT DOCUMENTS THAT ARE WITHIN THE PERMISSIBLE LIMITS SHOWN HERE.

MOUNTING HEIGHTS OF RESTROOM FIXTURES AND ACCESSORIES. PROVIDE BACKING AT ALL WALL MOUNTED FIXTURES AND EQUIPMENT.

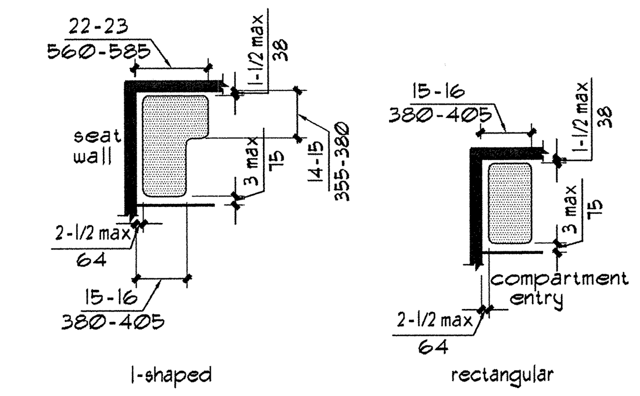

l-shaped and rectangular shower seats

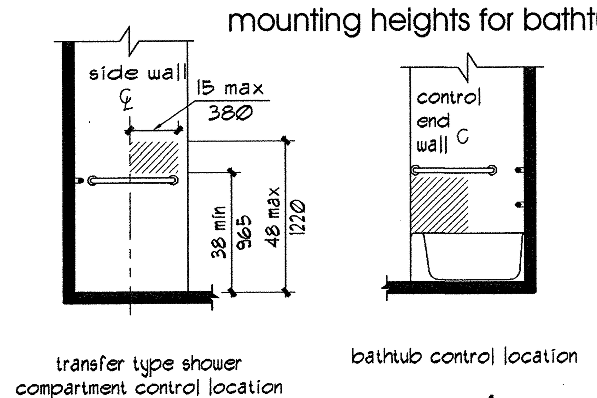

tub and shower control location

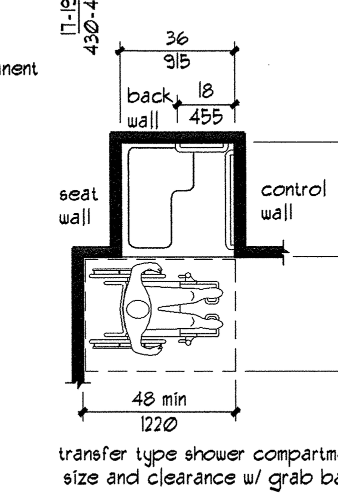

transfer type shower clearances

State of Utah
Department of Administrative Services
Division of Facilities Construction & Management
4110 State Office Building
Salt Lake City, Utah 84114
Phone: (801) 538 - 3018
Fax: (801) 538 - 3267
http://dfcm.utah.gov

CONSULTANTS:
LANDMARK DESIGN INCORPORATED
ajc architects
703 east 1700 south
salt lake city, utah 84105
ph: 801.466.8818
fx: 801.466.4411
ajc@ajcarchitects.com

PROJECT NAME AND ADDRESS:
ESCALANTE HERITAGE CENTER
1281 EAST HIGHWAY 12
ESCALANTE, UTAH

COPYRIGHT:
ALL RIGHTS RESERVED ©
LANDMARK DESIGN, INC.
These documents are protected under the United States 1978 copyright act. It is an exclusive work of original authorship. None of the pictorial, graphic, or technical charts or drawings depicted may be reproduced by any method, mechanical, electronic, or otherwise; nor may they be used or re-used for any purpose without the express prior written permission of Landmark Design, Inc.

MARK	DATE	DESCRIPTION

ISSUE TYPE: 100% SUBMITTAL

ISSUE DATE: 06.12.2009

DFCM PROJECT NO:	09018900
CAD PROJECT NO:	0860
CAD DWG FILE:	--
DRAWN BY:	S BODILY
CHK'D BY:	K RIGBY
COPYRIGHT:	--

SHEET TITLE:
ADA REQUIREMENTS

SHEET NUMBER:
AE003

CLEAR FLOOR SPACE & HEIGHT REQUIREMENTS:

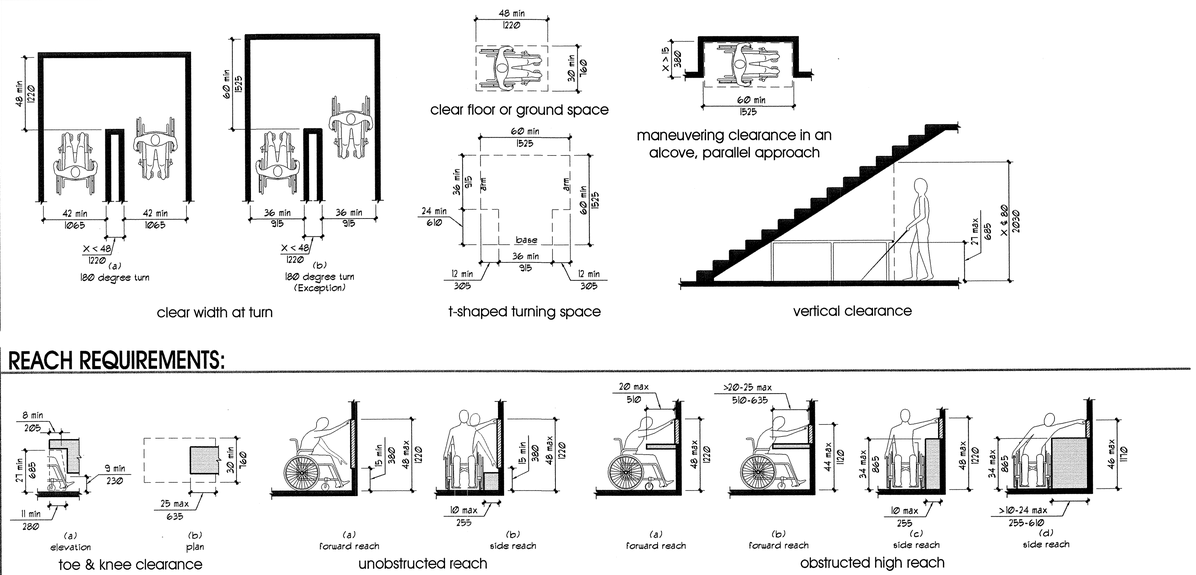

REACH REQUIREMENTS:

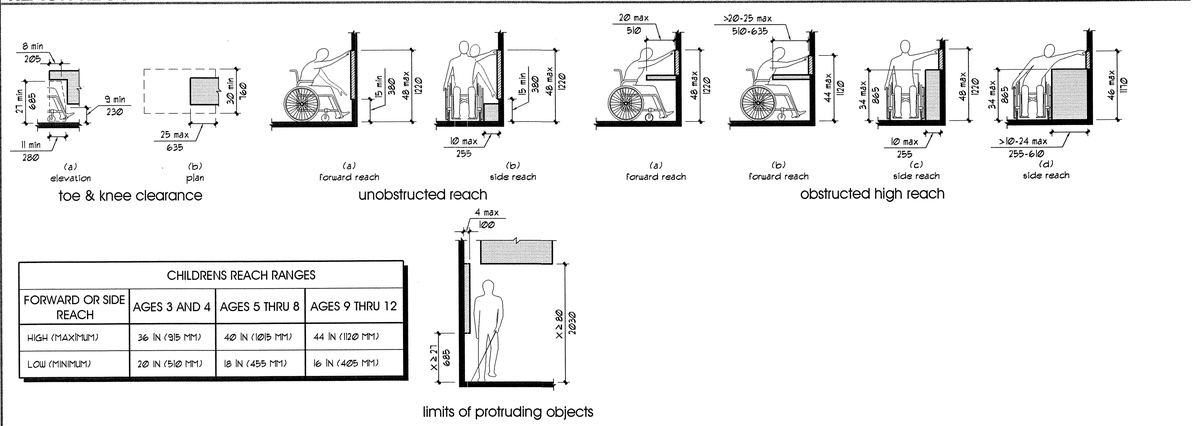

CHILDRENS REACH RANGES			
FORWARD OR SIDE REACH	AGES 3 AND 4	AGES 5 THRU 8	AGES 9 THRU 12
HIGH (MAXIMUM)	36 IN (915 MM)	40 IN (1015 MM)	44 IN (1120 MM)
LOW (MINIMUM)	20 IN (510 MM)	18 IN (455 MM)	16 IN (405 MM)

limits of protruding objects

SIGNS / PICTOGRAMS:

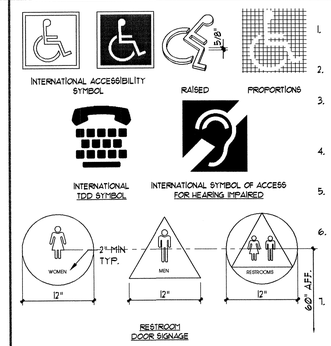

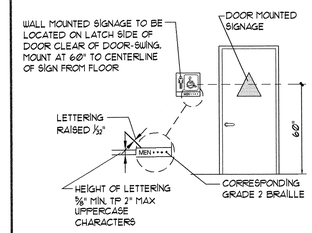

LETTERS AND NUMBERS:

1. LETTERS AND NUMBERS ON SIGNS SHALL BE RAISED 1/32" MINIMUM AND SHALL BE SANS-SERIF UPPERCASE CHARACTERS ACCOMPANIED BY GRADE 2 BRAILLE. (SEC. 11B.703.1)
2. RAISED CHARACTERS OR SYMBOLS SHALL BE A MINIMUM OF 5/8" HIGH. (SEC. 11B.703.2)
3. PICTORIAL SYMBOL SIGNS (PICTOGRAMS) SHALL BE ACCOMPANIED BY THE EQUIVALENT VERBAL DESCRIPTION PLACED DIRECTLY BELOW THE PICTOGRAM. THE BORDER DIMENSION OF THE PICTOGRAM SHALL BE A MINIMUM OF 6" IN HEIGHT. (SEC. 11B.703.3)
4. LETTERS AND NUMBERS ON SIGNS SHALL HAVE A WIDTH-TO-HEIGHT RATIO OF BETWEEN 3:5 AND 1:1 AND A STROKE WIDTH-TO-HEIGHT RATIO BETWEEN 1:5 AND 1:10. (SEC. 11B.703.3)
5. CHARACTERS AND SYMBOLS SHALL CONTRAST WITH THEIR BACKGROUND, EITHER LIGHT CHARACTERS ON A DARK BACKGROUND OR DARK CHARACTERS ON A LIGHT BACKGROUND. (SEC. 11B.703.5)
6. CHARACTERS AND NUMBERS ON SIGNS SHALL BE SIZED ACCORDING TO THE VIEWING DISTANCE FROM WHICH THEY ARE TO BE READ. THE MINIMUM HEIGHT IS MEASURED USING AN UPPER CASE X. LOWER CASE CHARACTERS ARE PERMITTED. FOR SIGNS SUSPENDED OR PROJECTED ABOVE THE FINISH FLOOR IN COMPLIANCE WITH SECTION 1012B, THE MINIMUM CHARACTER HEIGHT SHALL BE 3". (SEC. 11B.703.4)
7. CONTRACTED GRADE 2 BRAILLE SHALL BE USED WHEREVER BRAILLE SYMBOLS ARE SPECIFICALLY REQUIRED IN OTHER PORTIONS OF THESE REGULATIONS. DOTS SHALL BE 1/10" ON CENTERS IN EACH CELL WITH 2/10" SPACE BETWEEN CELLS. DOTS SHALL BE RAISED A MINIMUM OF 1/40" ABOVE THE BACKGROUND. (SEC. 11B.703.7)

SIGN LOCATIONS:

8. ALL BUILDING ENTRANCES THAT ARE ACCESSIBLE TO AND USABLE BY PERSONS WITH DISABILITIES AND AT EVERY MAJOR JUNCTION ALONG OR LEADING TO AN ACCESSIBLE ROUTE OF TRAVEL SHALL BE IDENTIFIED WITH A SIGN DISPLAYING THE INTERNATIONAL SYMBOL OF ACCESSIBILITY AND WITH ADDITIONAL DIRECTIONAL SIGNS, AS REQUIRED, TO BE VISIBLE TO PERSONS ALONG APPROACHING PEDESTRIAN WAYS. (SEC. 11B.703.7.1 1021B.3)
9. WHEN PERMANENT IDENTIFICATION IS PROVIDED FOR ROOMS AND SPACES, RAISED LETTERS SHALL BE PROVIDED AND SHALL BE ACCOMPANIED BY BRAILLE IN CONFORMANCE WITH SECTION 11B.703.6. SIGNS SHALL BE INSTALLED ON THE WALL ADJACENT TO THE LATCH OUTSIDE OF THE DOOR WHERE THERE IS NO WALL SPACE ON THE LATCH SIDE, INCLUDING AT LEAF DOORS. SIGNS SHALL BE PLACE ON THE NEAREST ADJACENT WALL, PREFERABLY ON THE RIGHT. MOUNTING HEIGHT SHALL BE 60" ABOVE THE FINISH FLOOR TO THE CENTERLINE OF THE SIGN. MOUNTING LOCATION SHALL BE DETERMINED SO THAT THE PERSON MAY APPROACH WITHIN 3" OF THE SIGNAGE WITHOUT ENCOUNTERING PROTRUDING OBJECTS OR STANDING WITHIN THE SWING OF A DOOR. (SEC. 11B.703.9)
10. ADDITIONAL DIRECTIONAL SIGNS ALONG ACCESSIBLE PATH OF TRAVEL ARE REQUIRED.
11. BUILDINGS REMODELED TO PROVIDE ACCESSIBLE SANITARY FACILITIES FOR PUBLIC USE SHALL HAVE INFORMATION POSTED IN THE LOBBY AS PART OF THE BUILDING DIRECTORY.

INTERNATIONAL SYMBOL OF ACCESSIBILITY:

12. STANDARD USED TO IDENTIFY ACCESSIBLE FACILITIES.
13. WHITE FIGURE ON BLUE BACKGROUND, COLOR # 15090 ON FEDERAL STANDARD # 595A.
14. WHEN ENFORCING AGENCY DETERMINES, IF APPROPRIATE, SPECIAL DESIGNS AND COLORS MAY BE APPROVED.

BRAILLE:

15. USE CONTRASTED GRADE 2 BRAILLE. DOTS TO BE 01 INCH ON CENTER IN EACH CELL.
16. 02 INCH SPACE BETWEEN CELLS.
17. DOTS RAISED MINIMUM 0.025 INCH ABOVE BACKGROUND.
18. SEE A/T-4 FOR MORE INFO.

State of Utah
Department of Administrative Services

Division of Facilities Construction & Management
4110 State Office Building
Salt Lake City, Utah 84114
Phone: (801) 538 - 3018
Fax: (801) 538 - 3267

http://dfcm.utah.gov

CONSULTANTS:

LANDMARK DESIGN
LANDSCAPE ARCHITECTURE AND LAND PLANNING
1004 DESERET BLDG
SALT LAKE CITY
UTAH 84111
PHONE (801) 474-0200
FAX (801) 474-0202

ajc architects
703 east 1700 south
salt lake city, utah 84105
ph: 801.466.8818
fx: 801.466.4411
ajc@ajcarchitects.com

STATE OF UTAH
KERT R. RIGBY
135096
6/11/09
LICENSED ARCHITECT

PROJECT NAME AND ADDRESS:

ESCALANTE HERITAGE CENTER

1281 EAST HIGHWAY 12
ESCALANTE, UTAH

COPYRIGHT:

ALL RIGHTS RESERVED ©
LANDMARK DESIGN, INC.
These documents are protected under the United States 1978 copyright act. It is an exclusive work of original authorship. None of the pictorial, graphic, or technical charts or drawings depicted may be reproduced by any method, mechanical, electronic, or otherwise; nor may they be used or re-used for any purpose without the express prior written permission of Landmark Design, Inc.

MARK	DATE	DESCRIPTION

ISSUE TYPE: 100% SUBMITTAL

ISSUE DATE: 06.12.2009

DFCM PROJECT NO:	09018900
CAD PROJECT NO:	0860
CAD DWG FILE:	--
DRAWN BY:	S BODILY
CHK'D BY:	K RIGBY
COPYRIGHT:	--

SHEET TITLE:

ADA REQUIREMENTS

SHEET NUMBER:

AE004

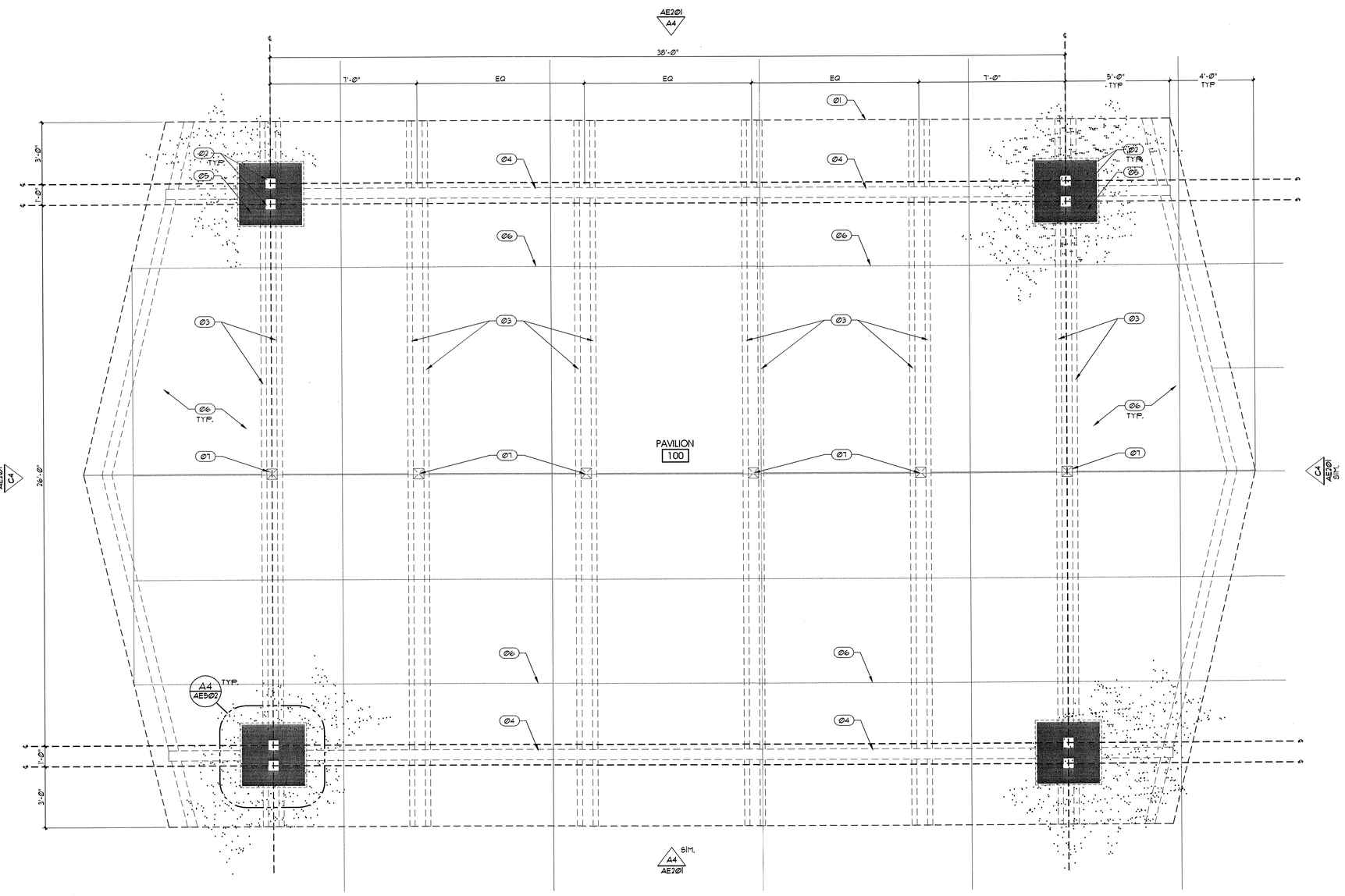

PAVILION FLOOR PLAN
SCALE: 3/8" = 1'-0"
A4
AE101

GENERAL NOTES AND LEGEND:

*FOR SHEET AE101 ONLY.

- SEE SHEET AE002 FOR GENERAL NOTES.
- SEE COVER SHEET FOR DRAWING INDEX.
- DO NOT SCALE DRAWINGS.
- CONTRACTOR SHALL VERIFY ALL DIMENSIONS AND CONDITIONS BEFORE BEGINNING WORK AND SHALL REPORT TO THE ARCHITECT ANY ERRORS, INCONSISTENCIES OR OMISSIONS BEFORE BEGINNING WORK. SEE GENERAL NOTES AND SPECIFICATIONS.
- SEE ELECTRICAL DRAWINGS FOR PLUG LOCATIONS.
- SEE FINISH LEGEND ON SHEET AE102 FOR COLORS AND FINISHES.

KEYED NOTE LEGEND:

*FOR SHEET AE101 ONLY.

01 ROOF EDGE ABOVE (SHOWN DASHED).
02 STEEL COLUMNS - PAINT. SEE STRUCTURAL DRAWINGS AND FINISH LEGEND.
03 WOOD TRUSS ABOVE - STAIN. SEE STRUCTURAL DRAWINGS AND FINISH LEGEND
04 STEEL BEAM ABOVE - PAINT. SEE STRUCTURAL DRAWINGS AND FINISH LEGEND
05 NATURAL STONE THIN VENEER ON TAPERED FRAMING. SEE FINISH LEGEND.
06 CONCRETE SLAB, CONTROL & EXPANSION JOINTS (SHOWN FOR REFERENCE ONLY). SEE LANDSCAPE/CIVIL DRAWINGS.
07 6"X6" KING POST ABOVE. SEE STRUCTURAL DRAWINGS.

State of Utah
Department of Administrative Services

Division of Facilities
Construction & Management
4110 State Office Building
Salt Lake City, Utah 84114
Phone: (801) 538 - 3018
Fax: (801) 538 - 3267

http://dfcm.utah.gov

CONSULTANTS:

LANDMARK DESIGN

ajc architects

703 east 1700 south
salt lake city, utah 84105
ph: 801.466.8818
fx: 801.466.4411
ajc@ajcarchitects.com

STATE OF UTAH
KENT R. RIGBY
135096
8/11/09
LICENSED ARCHITECT

PROJECT NAME AND ADDRESS:

ESCALANTE HERITAGE CENTER

1281 EAST HIGHWAY 12
ESCALANTE, UTAH

COPYRIGHT:

ALL RIGHTS RESERVED © LANDMARK DESIGN, INC.
These documents are protected under the United States 1978 copyright act. It is an exclusive work of original authorship. None of the pictorial, graphic, or technical charts or drawings depicted may be reproduced by any method, mechanical, electronic, or otherwise; nor may they be used or re-used for any purpose without the express prior written permission of Landmark Design, Inc.

MARK	DATE	DESCRIPTION

ISSUE TYPE: 100% SUBMITTAL

ISSUE DATE: 06.12.2009

DFCM PROJECT NO:	09018900
CAD PROJECT NO:	0860
CAD DWG FILE:	--
DRAWN BY:	S BODILY
CHK'D BY:	K RIGBY
COPYRIGHT:	--

SHEET TITLE:

PAVILION FLOOR PLAN

SHEET NUMBER:

AE101

WINDOW TYPES

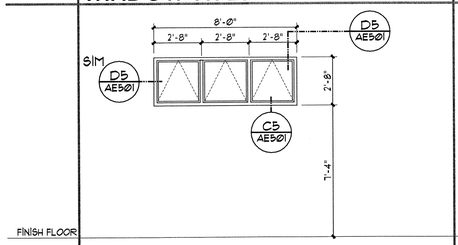

A
ALUMINUM CLAD WOOD WINDOWS
WITH 1" INSUL. GLAZING (SEE NOTE #4 BELOW)
OPERABLE (AWNING)

DOOR TYPES

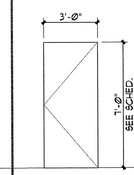

1
HOLLOW METAL DOOR. (SEE
NOTE #3 BELOW). PAINT.

DOOR FRAME TYPES

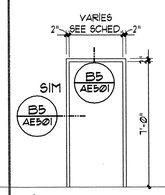

A
2" GALVANIZED HOLLOW
METAL FRAME WITH 2" HEAD.
PROVIDE WALL ANCHORS AS
REQ'D. SOLID GROUT ALL
FRAMES. PAINT - SEE NOTES #
1 & #2 BELOW.

DOOR SCHEDULE

DOOR NO.	DOOR SIZE	FIRE RATING (MIN)	DOOR TYPE	DOOR MATERIAL	DOOR FINISH	FRAME TYPE	FRAME MATERIAL	FRAME FINISH	FRAME DETAILS HEAD	FRAME DETAILS JAMB	HARDWARE	DOOR NOTES
01	3'-0" x 7'-0" x 1 3/4"	-	1	HM	PT	A	HM	PT	-	-	#	
02	3'-0" x 7'-0" x 1 3/4"	-	1	HM	PT	A	HM	PT	-	-	#	
03	3'-0" x 7'-0" x 1 3/4"	-	1	HM	PT	A	HM	PT	-	-	#	

1 #SEE SPECIFICATIONS FOR DOOR HARDWARE. ALL DOOR HARDWARE TO BE IN COMPLIANCE WITH ANSI 40426.

DOOR SCHEDULE ABBREV.

HM	HOLLOW METAL	PT	PAINT - SEE FINISH SCHEDULE

GENERAL DOOR/WINDOW NOTES

1	ALL HOLLOW METAL FRAMES SHALL BE PAINTED - SEE FINISH SCHEDULE
2	ALL HOLLOW METAL FRAMES SHALL BE FACTORY PRIMED
3	ALL DOORS TO BE INSULATED (R-5, U .2 MIN)
4	ALL GLAZING TO BE LOW E COATED INSIDE FACE OF EXTERIOR PANE & OBSCURE GLASS ON INSIDE FACE OF INTERIOR PANE

FINISH LEGEND

	COLORS
CMU	INTERSTATE BLOCK: RENAISSANCE HONED - OLIVE (INTEGRALLY COLORED W/ CLEAR URETHANE SEALER - SEE SPEC)
NATURAL STONE THIN VENEER	DELTA STONE: NATURAL STONE THIN VENEER - LEUDERS LIMESTONE
NATURAL STONE PEDESTAL CAP AND WINDOW SILLS	DELTA STONE: NATURAL STONE THIN VENEER - LEUDERS LIMESTONE
NATURAL STONE PEDESTAL CAP AND WINDOW SILLS	DELTA STONE: LEUDERS LIMESTONE
PAINT - EXPOSED STRUCTURAL STEEL PAINT - DOORS PAINT - DOOR FRAMES PAINT - MISCELLANEOUS	MATCH BERRIDGE: AGED BRONZE
PAINT - GYPSUM BOARD CEILING	BENJAMIN MOORE: #967 CLOUD WHITE
STAIN - TRUSSES/FRAMING STAIN - TONGUE AND GROOVE DECKING STAIN - SOFFIT STAIN - MISCELLANEOUS TIMBER STAIN - WOOD WINDOW FRAMES (INTERIOR)	OLYMPIC STAIN: #316
ALUMINUM WINDOW FRAMES (EXTERIOR)	MATCH BERRIDGE: AGED BRONZE
CEMENTITIOUS FIBER BOARD SIDING	HARDIE BOARD: JH30-30 WOODSTOCK BROWN - SMOOTH
METAL FASCIA/ROOF TRIM	MATCH BERRIDGE: AGED BRONZE
CORRUGATED METAL ROOF PANELS	GALVANIZED METAL
METAL ROOF PANELS	MBCI 5V CRIMP PANELS: GALVANIZED METAL
SOLID SURFACE INTEGRAL SINK AND COUNTERTOP	AVONITE: STUDIO COLLECTION - K3-8465 SKY GLASS - SATIN
TOILET PARTITIONS PLUMBING FIXTURES ALL RESTROOM ACCESSORIES	STAINLESS STEEL

ACCESSORIES SCHEDULE

PROVIDE BLOCKING IN WALLS FOR ALL EQUIPMENT LISTED BELOW AND SHOWN ELSEWHERE IN DRAWINGS AS REQ'D BY MANUF. RECOMMENDATIONS.

ALL ITEMS CONTRACTOR PROVIDED AND CONTRACTOR INSTALLED UNLESS NOTED OTHERWISE.

ACCESSORY ITEM (ONE EACH ROOM UNLESS NOTED OTHERWISE)

	36" STAINLESS STEEL GRAB BARS MODEL: BOBRICK B-6806x36	42" STAINLESS STEEL GRAB BARS MODEL: BOBRICK B-6806x42	18" STAINLESS STEEL GRAB BARS MODEL: BOBRICK B-6806x18	SOAP DISPENSER 2 PER ROOM MODEL: BOBRICK B-2111	ELECTRIC HAND DRYER 1 PER ROOM MODEL: GAMCO GXT-MR	BABY CHANGING STATION MODEL: KOALA KARE KB110-88SM
ROOM NUMBER	101 103	101 103	101 103	101 103	101 103	101 103

	24"x36" MIRROR - 3 PER ROOM MODEL: BOBRICK B-165 2436	MOP/BROOM HOLDER MODEL: BOBRICK B-223 x 36	TOILET PAPER HOLDER - 1 PER TOILET MODEL: BOBRICK B-2892	S.S UTILITY SHELF MODEL: BOBRICK B-295		
ROOM NUMBER	101 103	102	101 103	102		

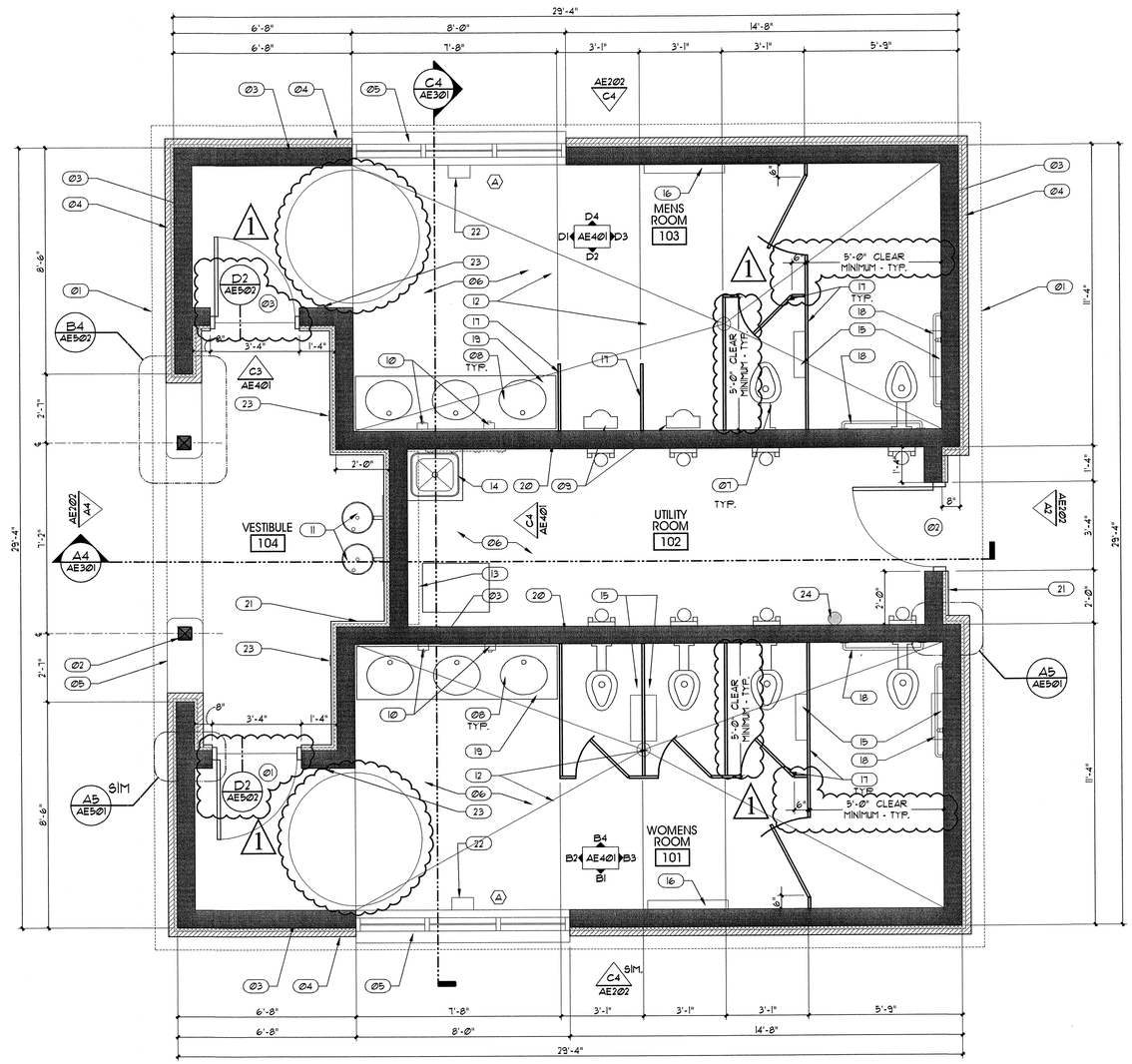

RESTROOM FLOOR PLAN

SCALE: 3/8" = 1'-0"

A4 / AE102

GENERAL NOTES AND LEGEND:

*FOR SHEET AE202 ONLY.

- SEE SHEET AE002 FOR GENERAL NOTES.
- SEE COVER SHEET FOR DRAWING INDEX.
- DO NOT SCALE DRAWINGS.
- CONTRACTOR SHALL VERIFY ALL DIMENSIONS AND CONDITIONS BEFORE BEGINNING WORK AND SHALL REPORT TO THE ARCHITECT ANY ERRORS, INCONSISTENCIES OR OMISSIONS BEFORE BEGINNING WORK. SEE GENERAL NOTES AND SPECIFICATIONS.
- SEE ELECTRICAL DRAWINGS FOR PLUG LOCATIONS.

KEYED NOTE LEGEND:

*FOR SHEET AE202 ONLY.

01 ROOF OUTLINE ABOVE (SHOWN DASHED).
02 DECORATIVE 6" X 6" TIMBER COLUMN - SEE FINISH LEGEND
03 8" CMU WALL W/ INTEGRAL LOOSE FILL INSUL. (AT ALL EXTERIOR WALLS) COLOR AND FINISH TBD. SEE STRUCTURAL & SPECIFICATIONS. SEE FINISH LEGEND
04 NATURAL STONE THIN VENEER (SEE FINISH LEGEND) OVER SCRATCH COAT OVER METAL LATH OVER 30 LBS FELT OVER RIGID INSUL. BD. SEE SPECIFICATIONS.
05 NATURAL STONE SILL. SEE FINISH LEGEND
06 SEALED CONCRETE FLOORING.
07 TOILET. SEE PLUMBING DRAWINGS.
08 SINK. SEE PLUMBING DRAWINGS.
09 URINAL. SEE PLUMBING DRAWINGS.
10 SOAP DISPENSER. SEE ACCESSORY SCHEDULE.
11 ELECTRIC WATER COOLER. SEE PLUMBING.
12 FLOOR DRAIN. SLOPE FLOOR TO DRAIN AS SHOWN. SEE PLUMBING.
13 UTILITY SHELVING ABOVE. SEE SPECIFICATIONS.
14 MOP SINK. SEE PLUMBING DRAWINGS.
15 TOILET PAPER DISPENSER. SEE ACCESSORY SCHEDULE.
16 BABY CHANGING STATION. SEE ACCESSORY SCHEDULE.
17 S.S. TOILET PARTITIONS. SEE SPECIFICATIONS AND FINISH LEGEND.
18 STAINLESS STEEL GRAB BARS. SEE ACCESSORY SCHEDULE.
19 SOLID SURFACE COUNTER TOP. SEE SPECIFICATIONS AND FINISH LEGEND.
20 8" CMU WALL (AT INTERIOR WALLS). SEE FINISH LEGEND. SEE STRUCTURAL.
21 CEMENTITIOUS FIBER BOARD SIDING OVER RIGID INSUL. BD. SEE SPECIFICATIONS AND FINISH LEGEND.
22 ELECTRIC HAND DRYER. SEE ELECTRICAL DRAWINGS.
23 HANDICAPPED ASSIST POWERED DOOR OPENER. SEE ELECTRICAL DRAWINGS.
24 FIRE EXTINGUISHER.

State of Utah
Department of Administrative Services

Division of Facilities
Construction & Management
4110 State Office Building
Salt Lake City, Utah 84114
Phone: (801) 538 - 3018
Fax: (801) 538 - 3267

http://dfcm.utah.gov

CONSULTANTS:

LANDMARK DESIGN
LANDSCAPE ARCHITECTURE AND LAND PLANNING
1004 DESIGN DRIVE
LAST LAKE, UT
PHONE (801) 474-0200
FAX (801) 474-0202

ajc architects
703 east 1700 south
salt lake city, utah 84105
ph: 801.466.8818
fx: 801.466.4411
ajc@ajcarchitects.com

STATE OF UTAH
KENT R. RIGBY
135098
8/11/09
LICENSED ARCHITECT

PROJECT NAME AND ADDRESS:

ESCALANTE HERITAGE CENTER

1281 EAST HIGHWAY 12
ESCALANTE, UTAH

COPYRIGHT:

ALL RIGHTS RESERVED ©
LANDMARK DESIGN, INC.
These documents are protected under the United States 1978 copyright act. It is an exclusive work of original authorship. None of the pictorial, graphic, or technical charts or drawings depicted may be reproduced by any method, mechanical, electronic, or otherwise; nor may they be used or re-used for any purpose without the express prior written permission of Landmark Design, Inc.

MARK	DATE	DESCRIPTION
1	08.13.09	DFCM REVIEW

ISSUE TYPE: 100% SUBMITTAL

ISSUE DATE: 06.12.2009

DFCM PROJECT NO:	09018900
CAD PROJECT NO:	0860
CAD DWG FILE:	--
DRAWN BY:	S BODILY
CHK'D BY:	K RIGBY
COPYRIGHT:	--

SHEET TITLE:

RESTROOM FLOOR PLAN

SHEET NUMBER:

AE102

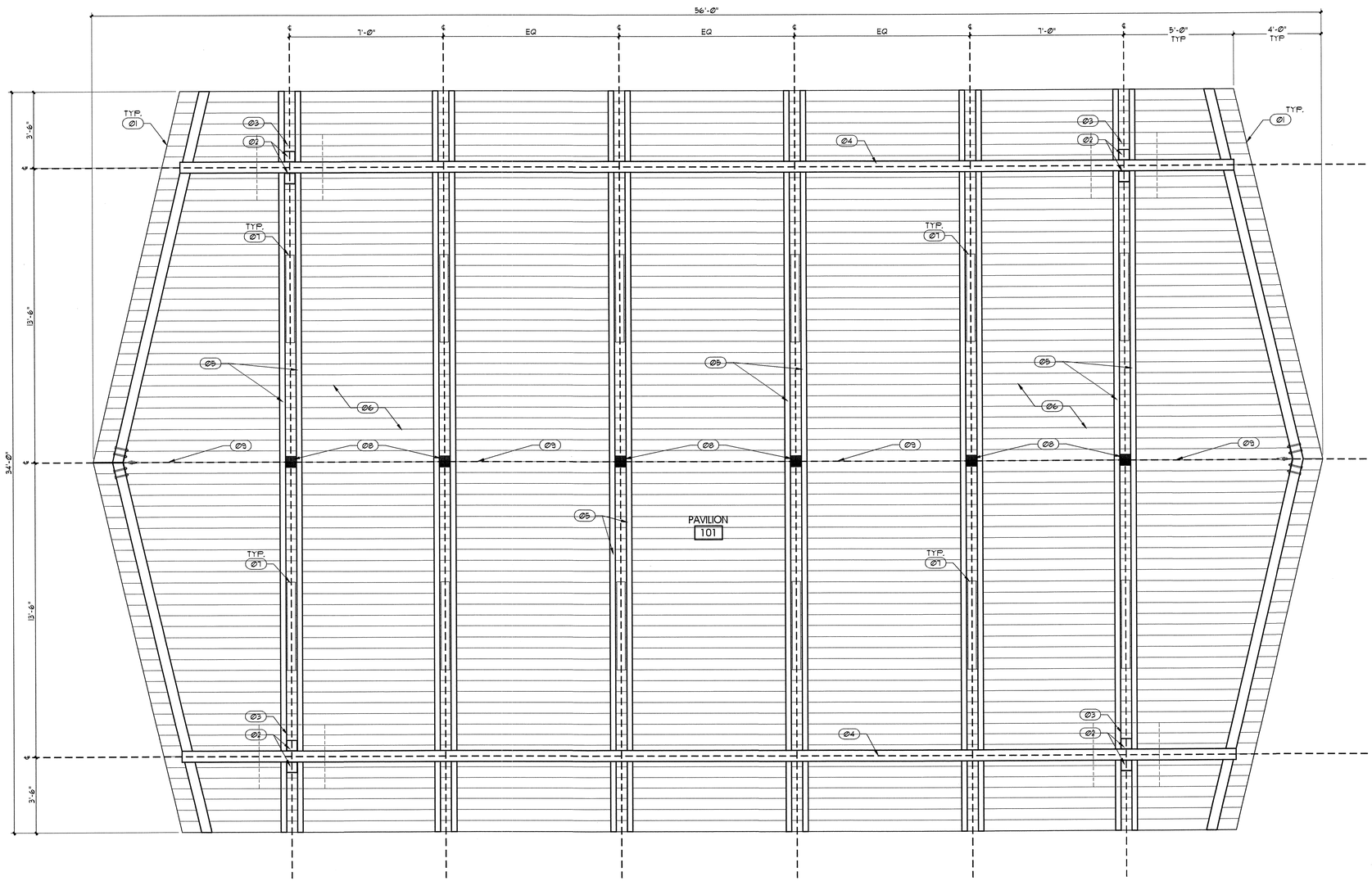

PAVILION REFLECTED CEILING PLAN A4 AE103

SCALE: 3/8" = 1'-0"

GENERAL NOTES AND LEGEND:

*FOR SHEET AE103 ONLY.

- SEE SHEET AE002 FOR GENERAL NOTES.
- SEE COVER SHEET FOR DRAWING INDEX.
- DO NOT SCALE DRAWINGS.
- CONTRACTOR SHALL VERIFY ALL DIMENSIONS AND CONDITIONS BEFORE BEGINNING WORK AND SHALL REPORT TO THE ARCHITECT ANY ERRORS, INCONSISTENCIES OR OMISSIONS BEFORE BEGINNING WORK. SEE GENERAL NOTES AND SPECIFICATIONS.
- SEE ELECTRICAL DRAWINGS FOR PLUG LOCATIONS.
- SEE FINISH LEGEND ON SHEET AE102 FOR COLORS AND FINISHES.

KEYED NOTE LEGEND:

*FOR SHEET AE103 ONLY.

Ø1 ROOF EDGE.
Ø2 STEEL COLUMNS - PAINT. SEE FINISH LEGEND AND STRUCTURAL DRAWINGS.
Ø3 TAPERED COLUMN BASE BELOW. SEE AE 102.
Ø4 STEEL BEAM - PAINT (COLOR TBD). SEE STRUCTURAL.
Ø5 WOOD TRUSS - STAIN (COLOR & FINISH TBD). SEE STRUCTURAL.
Ø6 6" TONGUE AND GROOVE DECKING. - STAIN (COLOR & FINISH TBD). SEE STRUCTURAL.
Ø7 LIGHT FIXTURE. SEE ELECTRICAL DRAWINGS.
Ø8 6"x6" KING POST - STAIN (COLOR & FINISH TBD). SEE STRUCTURAL DRAWINGS.
Ø9 ½" TENSION ROD. SEE STRUCTURAL DRAWINGS.

State of Utah
Department of Administrative Services

Division of Facilities
Construction & Management
4110 State Office Building
Salt Lake City, Utah 84114
Phone: (801) 538 - 3018
Fax: (801) 538 - 3267

http://dfcm.utah.gov

CONSULTANTS:

LANDMARK DESIGN

ajc architects

703 east 1700 south
salt lake city, utah 84105
ph: 801.466.8818
fx: 801.466.4411
ajc@ajcarchitects.com

STATE OF UTAH KENT R. RIGBY 135096 8/11/09 LICENSED ARCHITECT

PROJECT NAME AND ADDRESS:

ESCALANTE HERITAGE CENTER

1281 EAST HIGHWAY 12
ESCALANTE, UTAH

COPYRIGHT:

ALL RIGHTS RESERVED © LANDMARK DESIGN, INC.
These documents are protected under the United States 1978 copyright act. It is an exclusive work of original authorship. None of the pictorial, graphic, or technical charts or drawings depicted may be reproduced by any method, mechanical, electronic, or otherwise; nor may they be used or re-used for any purpose without the express prior written permission of Landmark Design, Inc.

MARK	DATE	DESCRIPTION

ISSUE TYPE: 100% SUBMITTAL

ISSUE DATE: 06.12.2009

DFCM PROJECT NO:	09018900
CAD PROJECT NO:	0860
CAD DWG FILE:	--
DRAWN BY:	S BODILY
CHK'D BY:	K RIGBY
COPYRIGHT:	--

SHEET TITLE:

PAVILION REF. CLNG. PLAN

SHEET NUMBER:

AE103

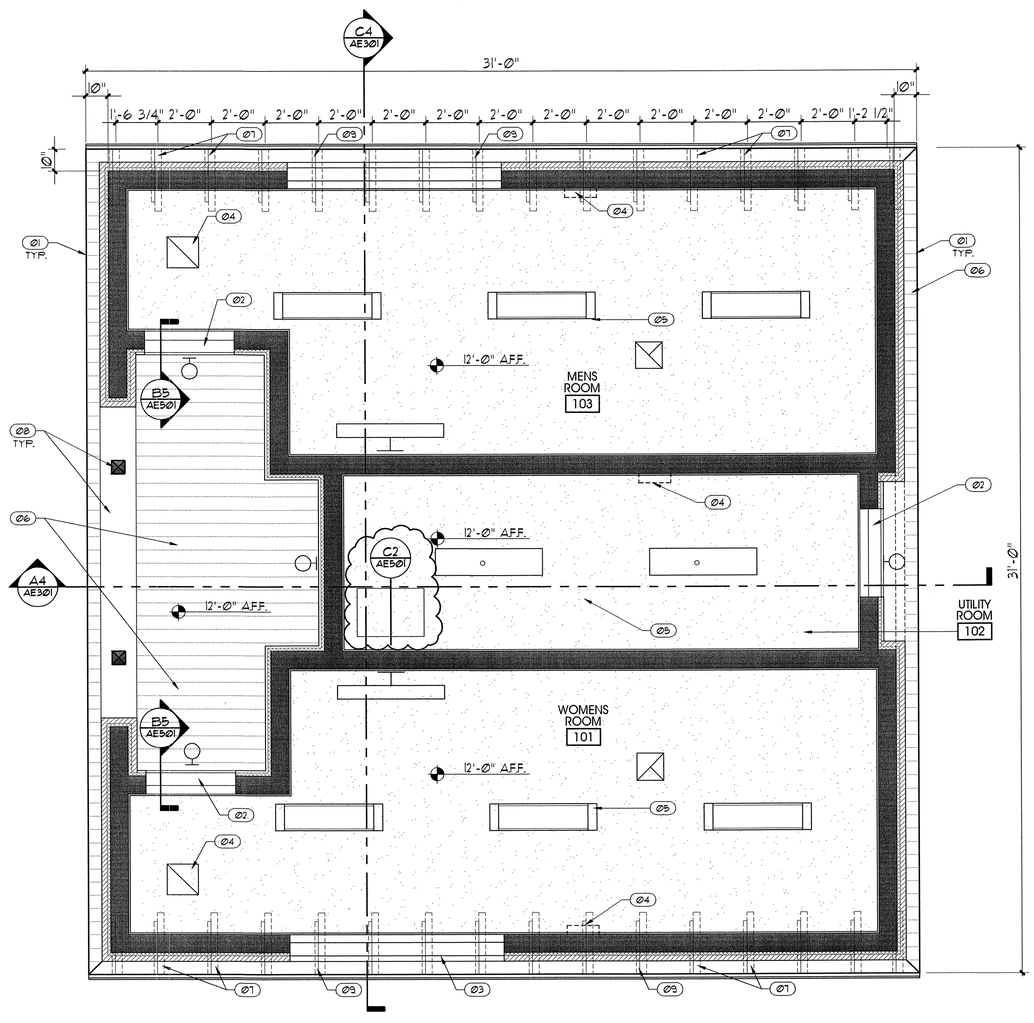

RESTROOM REFLECTED CEILING PLAN (A4 / AE104)

SCALE: 3/8" = 1'-0"

GENERAL NOTES AND LEGEND:

*FOR SHEET AE104 ONLY.

- SEE SHEET AE002 FOR GENERAL NOTES.
- SEE COVER SHEET FOR DRAWING INDEX.
- DO NOT SCALE DRAWINGS.
- CONTRACTOR SHALL VERIFY ALL DIMENSIONS AND CONDITIONS BEFORE BEGINNING WORK AND SHALL REPORT TO THE ARCHITECT ANY ERRORS, INCONSISTENCIES OR OMISSIONS BEFORE BEGINNING WORK. SEE GENERAL NOTES AND SPECIFICATIONS.
- SEE FINISH LEGEND ON SHEET AE002 FOR COLORS AND FINISHES.

5/8" GYP. BD. CEILING. PAINT.

CEMENTITIOUS FIBER BOARD SOFFIT.

KEYED NOTE LEGEND:

*FOR SHEET AE104 ONLY.

01 ROOF EDGE.
02 DOOR HEADER. SEE STRUCTURAL DRAWINGS.
03 WINDOW HEADER. SEE STRUCTURAL DRAWINGS.
04 MECHANICAL EQUIPMENT. SEE MECHANICAL DRAWINGS.
05 EXHAUST FAN (& RELATED DUCT WORK). SEE MECHANICAL DRAWINGS.
06 3/4"x6" TONGUE AND GROOVE WOOD SOFFIT - STAIN. SEE FINISH LEGEND.
07 3"x6" OUTRIGGER - STAIN. SEE FINISH LEGEND.
08 DECORATIVE 6x6 ROUGH SAWN POSTS AND LINTEL - STAIN. SEE FINISH LEGEN
09 TRUSSES (SHOWN DASHED) - STAIN. SEE FINISH LEGEND.

SYMBOL LEGEND:

*FOR SHEET AE104 ONLY.

LIGHT FIXTURE - SURFACE MOUNTED. SEE ELECTRICAL DRAWINGS

LIGHT FIXTURE - SUSPENDED. SEE ELECTRICAL DRAWINGS

LIGHT FIXTURE - WALL MOUNTED, LINEAR. SEE ELECTRICAL DRAWINGS

LIGHT FIXTURE - WALL MOUNTED. SEE ELECTRICAL DRAWINGS

MECHANICAL GRILL. SEE MECHANICAL DRAWINGS

MECHANICAL EXHAUST. SEE MECHANICAL DRAWINGS

State of Utah
Department of Administrative Services

Division of Facilities Construction & Management
4110 State Office Building
Salt Lake City, Utah 84114
Phone: (801) 538 - 3018
Fax: (801) 538 - 3267

http://dfcm.utah.gov

CONSULTANTS:

LANDMARK DESIGN
LANDSCAPE ARCHITECTURE AND LAND PLANNING
ajc architects
703 east 1700 south
salt lake city, utah 84105
ph: 801.466.8818
fx: 801.466.4411
ajc@ajcarchitects.com

STATE OF UTAH KEITH R. RIGBY 135096 6/11/09 LICENSED ARCHITECT

PROJECT NAME AND ADDRESS:

ESCALANTE HERITAGE CENTER

1281 EAST HIGHWAY 12
ESCALANTE, UTAH

COPYRIGHT:

ALL RIGHTS RESERVED ©
LANDMARK DESIGN, INC.
These documents are protected under the United States 1978 copyright act. It is an exclusive work of original authorship. None of the pictorial, graphic, or technical charts or drawings depicted may be reproduced by any method, mechanical, electronic, or otherwise; nor may they be used or re-used for any purpose without the express prior written permission of Landmark Design, Inc.

MARK	DATE	DESCRIPTION

ISSUE TYPE: 100% SUBMITTAL

ISSUE DATE: 06.12.2009

DFCM PROJECT NO:	09018900
CAD PROJECT NO:	0860
CAD DWG FILE:	--
DRAWN BY:	S BODILY
CHK'D BY:	K RIGBY
COPYRIGHT:	--

SHEET TITLE:

RESTROOM REF. CLNG. PLAN

SHEET NUMBER:

AE104

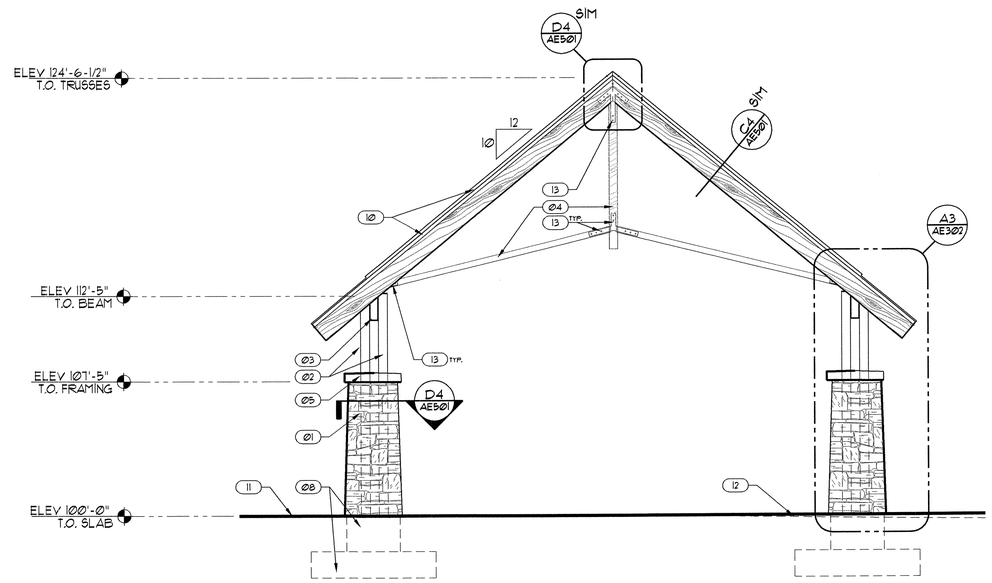

WEST / EAST PAVILION ELEVATION (C4 / AE201)
SCALE: 1/4" = 1'-0"

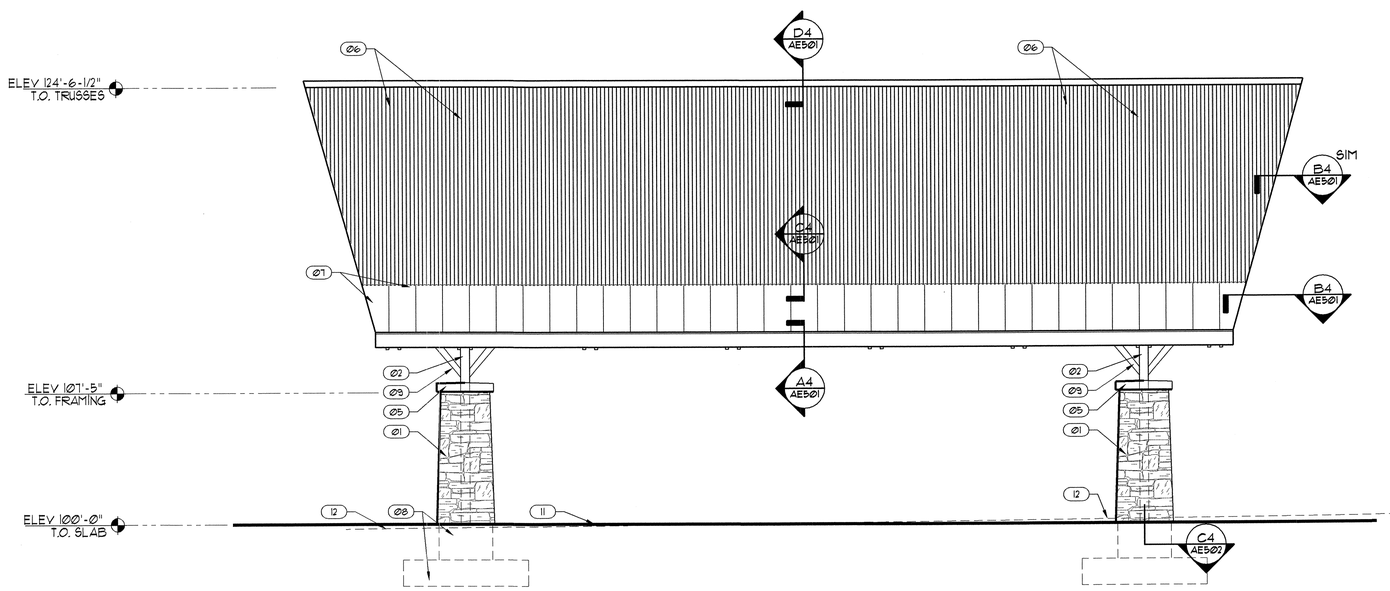

SOUTH / NORTH PAVILION ELEVATION (A4 / AE201)
SCALE: 1/4" = 1'-0"

GENERAL NOTES AND LEGEND:

*FOR SHEET AE201 ONLY.

- SEE SHEET AE001 FOR GENERAL NOTES.
- SEE COVER SHEET FOR DRAWING INDEX.
- DO NOT SCALE DRAWINGS.
- CONTRACTOR SHALL VERIFY ALL DIMENSIONS AND CONDITIONS BEFORE BEGINNING WORK AND SHALL REPORT TO THE ARCHITECT ANY ERRORS, INCONSISTENCIES OR OMISSIONS BEFORE BEGINNING WORK. SEE GENERAL NOTES AND SPECIFICATIONS.

KEYED NOTE LEGEND:

*FOR SHEET AE201 ONLY.

01 NATURAL STONE THIN VENEER - SEE FINISH LEGEND.
02 STEEL COLUMNS - PAINT. SEE STRUCTURAL DRAWINGS AND FINISH LEGEND.
03 STEEL BEAM- PAINT. SEE STRUCTURAL DRAWINGS AND FINISH LEGEND.
04 WOOD TRUSS - STAIN. SEE STRUCTURAL DRAWINGS AND FINISH LEGEND.
05 NATURAL STONE CAPSTONE - SEE FINISH LEGEND.
06 CORRUGATED METAL ROOFING - SEE FINISH LEGEND.
07 METAL ROOFING PANEL. SEE FINISH LEGEND.
08 FOOTING AND FOUNDATION. SEE STRUCTURAL DRAWINGS.
09 STEEL BRACE - PAINT. SEE STRUCTURAL DRAWINGS AND FINISH LEGEND.
10 COLOR CLAD FLASHING - SEE FINISH LEGEND.
11 F.F. CONCRETE SLAB. SEE LANDSCAPE DRAWINGS.
12 FINISH GRADE. SHOWN DASHED.
13 STEEL GUSSET PLATE - PAINT. SEE STRUCTURAL DRAWINGS AND FINISH LEGEND.
14 STEEL BRACE - PAINT. SEE STRUCTURAL DRAWINGS AND FINISH LEGEND.

State of Utah
Department of Administrative Services

Division of Facilities Construction & Management
4110 State Office Building
Salt Lake City, Utah 84114
Phone: (801) 538 - 3018
Fax: (801) 538 - 3267

http://dfcm.utah.gov

CONSULTANTS:

LANDMARK DESIGN
LANDSCAPE ARCHITECTURE AND LAND PLANNING
1894 SKYLINE DRIVE
SALT LAKE CITY
UTAH 84108
PHONE (801) 474-1000
FAX (801) 474-1001

ajc architects
703 east 1700 south
salt lake city, utah 84105
ph: 801.466.8818
fx: 801.466.4411
ajc@ajcarchitects.com

STATE OF UTAH
KURT R. RIGBY
135006
9/11/09
LICENSED ARCHITECT

PROJECT NAME AND ADDRESS:

ESCALANTE HERITAGE CENTER

1281 EAST HIGHWAY 12
ESCALANTE, UTAH

COPYRIGHT:

ALL RIGHTS RESERVED ©
LANDMARK DESIGN, INC.
These documents are protected under the United States 1978 copyright act. It is an exclusive work of original authorship. None of the pictorial, graphic, or technical charts or drawings depicted may be reproduced by any method, mechanical, electronic, or otherwise; nor may they be used or re-used for any purpose without the express prior written permission of Landmark Design, Inc.

MARK	DATE	DESCRIPTION

ISSUE TYPE: 100% SUBMITTAL

ISSUE DATE: 06.12.2009

DFCM PROJECT NO:	09018900
CAD PROJECT NO:	0860
CAD DWG FILE:	--
DRAWN BY:	S BODILY
CHK'D BY:	K RIGBY
COPYRIGHT:	--

SHEET TITLE:

PAVILION ELEVATIONS

SHEET NUMBER:

AE201

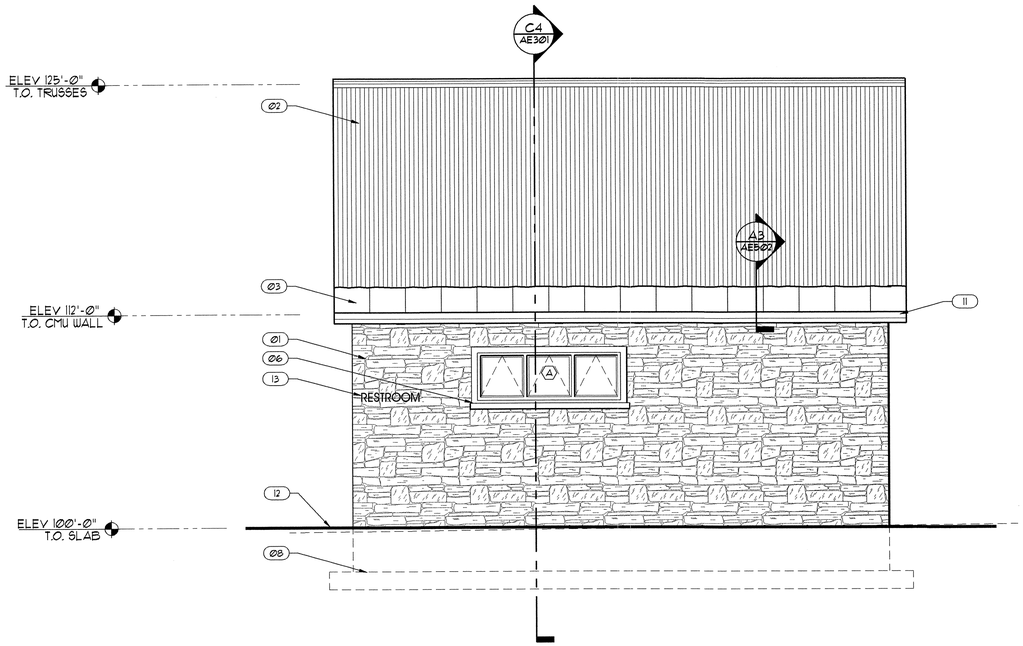

SOUTH / NORTH RESTROOM ELEVATION (C4 / AE202)
SCALE: 1/4" = 1'-0"

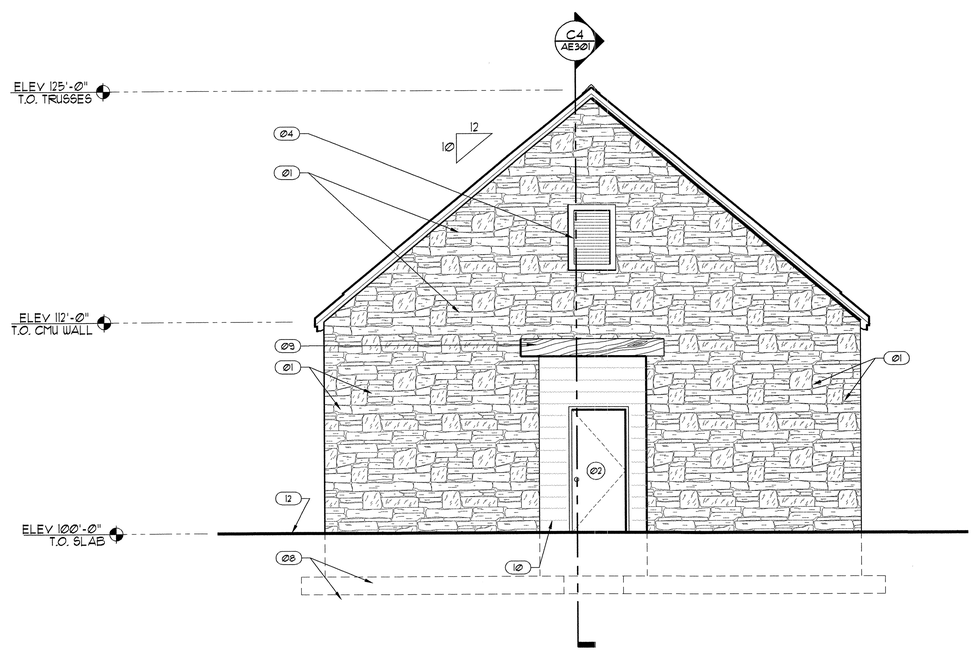

EAST RESTROOM ELEVATION (A2 / AE202)
SCALE: 1/4" = 1'-0"

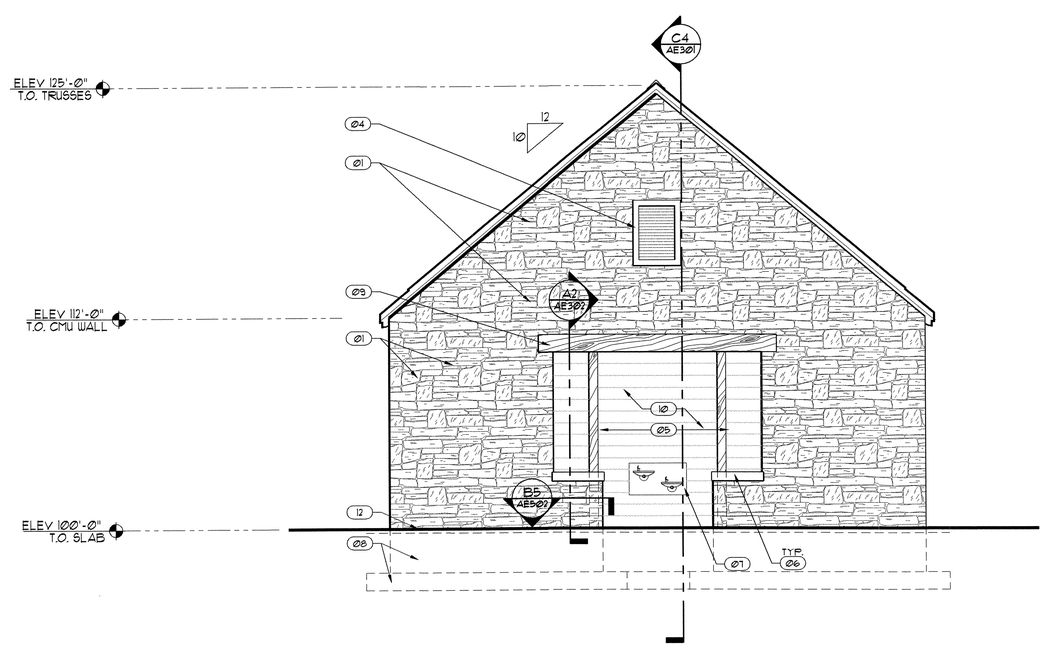

WEST RESTROOM ELEVATION (A4 / AE202)
SCALE: 1/4" = 1'-0"

GENERAL NOTES AND LEGEND:
FOR SHEET AE202 ONLY.

- SEE SHEET AE002 FOR GENERAL NOTES.
- SEE COVER SHEET FOR DRAWING INDEX.
- DO NOT SCALE DRAWINGS.
- CONTRACTOR SHALL VERIFY ALL DIMENSIONS AND CONDITIONS BEFORE BEGINNING WORK AND SHALL REPORT TO THE ARCHITECT ANY ERRORS, INCONSISTENCIES OR OMISSIONS BEFORE BEGINNING WORK. SEE GENERAL NOTES AND SPECIFICATIONS.

KEYED NOTE LEGEND:
FOR SHEET AE202 ONLY.

01 NATURAL STONE THIN VENEER. SEE FINISH LEGEND.
02 CORRUGATED METAL ROOF PANELS. SEE FINISH LEGEND.
03 METAL ROOFING PANELS. SEE FINISH LEGEND.
04 MECHANICAL LOUVER. SEE MECHANICAL DRAWINGS.
05 DECORATIVE TIMBER COLUMNS - STAIN. SEE STRUCTURAL DRAWINGS AND FINISH LEGEND.
06 NATURAL STONE SILL. SEE FINISH LEGEND.
07 ELECTRIC WATER COOLER. SEE MECHANICAL DRAWINGS.
08 FOOTING AND FOUNDATION WITH DAMPROOFING. SEE STRUCTURAL DRAWINGS.
09 DECORATIVE TIMBER LINTEL - STAIN AND FINISH PER SPECIFICATION. SEE FINISH LEGEND.
10 CEMENTITIOUS FIBER BOARD SIDING. SEE FINISH LEGEND.
11 COLOR CLAD METAL FLASHING - SEE FINISH LEGEND.
12 GRADE OR SLAB. SEE LANDSCAPE/CIVIL DRAWINGS.
13 3" HIGH OIL RUBBED CAST BRONZE LETTERING (SIGNAGE). POST EPOXY MOUNTING IN STONE VENEER. SOUTH SIDE ONLY. FONT: AVANTGARDE BK BT.

State of Utah
Department of Administrative Services
Division of Facilities
Construction & Management
4110 State Office Building
Salt Lake City, Utah 84114
Phone: (801) 538 - 3018
Fax: (801) 538 - 3267
http://dfcm.utah.gov

CONSULTANTS:
LANDMARK DESIGN
LANDSCAPE ARCHITECTURE AND LAND PLANNING
2804 WOODLAND DRIVE
SALT LAKE CITY
UTAH 84108
PHONE (801) 474-3200
FAX (801) 474-3202

ajc architects
703 east 1700 south
salt lake city, utah 84105
ph: 801.466.8818
fx: 801.466.4411
ajc@ajcarchitects.com

STATE OF UTAH
KENT R. RIGBY
135096
8/11/09
LICENSED ARCHITECT

PROJECT NAME AND ADDRESS:

ESCALANTE HERITAGE CENTER

1281 EAST HIGHWAY 12
ESCALANTE, UTAH

COPYRIGHT:

ALL RIGHTS RESERVED © LANDMARK DESIGN, INC.
These documents are protected under the United States 1978 copyright act. It is an exclusive work of original authorship. None of the pictorial, graphic, or technical charts or drawings depicted may be reproduced by any method, mechanical, electronic, or otherwise; nor may they be used or re-used for any purpose without the express prior written permission of Landmark Design, Inc.

MARK	DATE	DESCRIPTION

ISSUE TYPE: 100% SUBMITTAL

ISSUE DATE: 06.12.2009

DFCM PROJECT NO:	09018900
CAD PROJECT NO:	0860
CAD DWG FILE:	--
DRAWN BY:	S BODILY
CHK'D BY:	K RIGBY
COPYRIGHT:	--

SHEET TITLE:

RESTROOM ELEVATIONS

SHEET NUMBER:

AE202

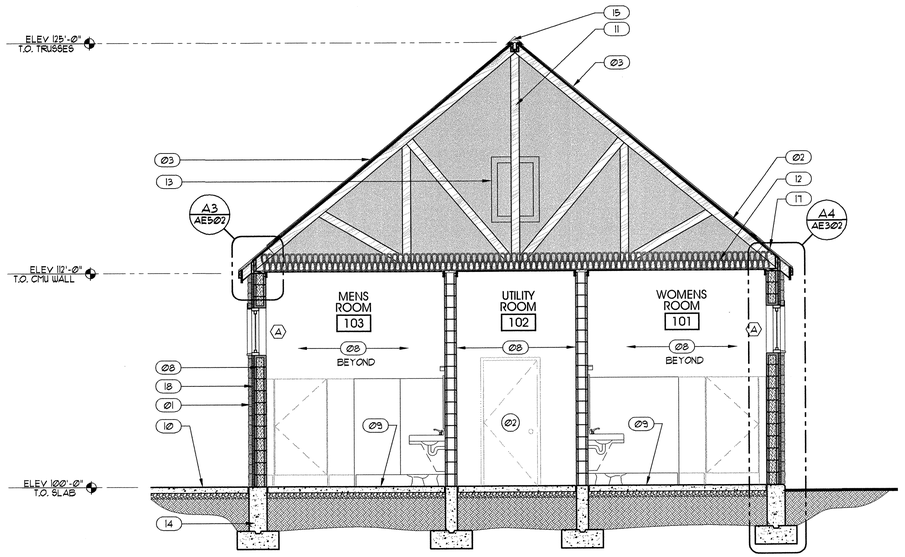

RESTROOM SECTION (C4 / AE301)
SCALE: 1/4" = 1'-0"

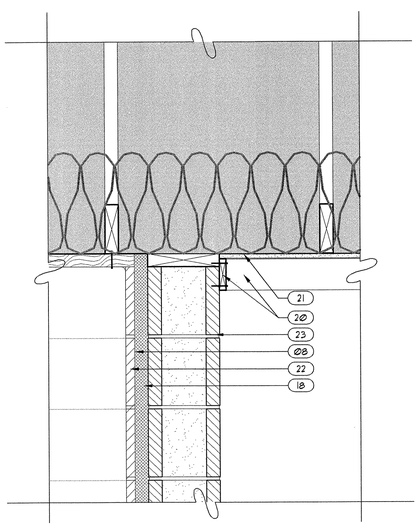

RESTROOM TRIM DETAIL (A2 / AE301)
SCALE: 1-1/2" = 1'-0"

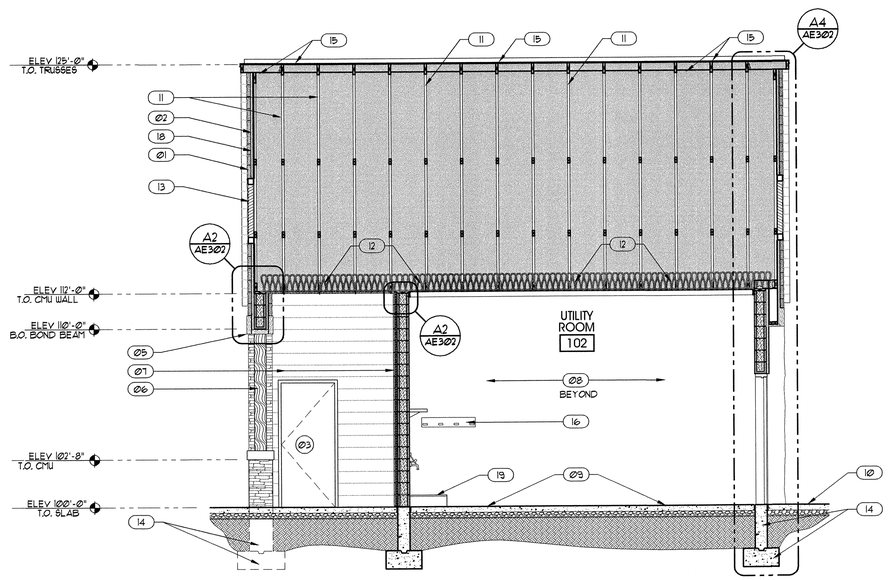

RESTROOM SECTION (A4 / AE301)
SCALE: 1/4" = 1'-0"

GENERAL NOTES AND LEGEND:

*FOR SHEET AE301 ONLY.

- SEE SHEET AE002 FOR GENERAL NOTES.
- SEE COVER SHEET FOR DRAWING INDEX.
- DO NOT SCALE DRAWINGS.
- CONTRACTOR SHALL VERIFY ALL DIMENSIONS AND CONDITIONS BEFORE BEGINNING WORK AND SHALL REPORT TO THE ARCHITECT ANY ERRORS, INCONSISTENCIES OR OMISSIONS BEFORE BEGINNING WORK. SEE GENERAL NOTES AND SPECIFICATIONS.
- SEE ELECTRICAL DRAWINGS FOR PLUG LOCATIONS.

KEYED NOTE LEGEND:

*FOR SHEET AE301 ONLY.

01	NATURAL STONE THIN VENEER OVER SCRATCH COAT OVER METAL LATH OVER 30 LBS FELT OVER 1 1/2" RIGID INSULATION BOARD IN Z-CLIPS ON CMU WALL W/ LOOSE FILL INSUL. IN CAVITY. SEE SPECS. & STRUCTURAL DRAWINGS. SEE FINISH LEGEND.
02	EXTERIOR SHEATHING. SEE STRUCTURAL DRAWINGS.
03	CORRUGATED METAL ROOF PANEL OVER ICE & WATER SHIELD OVER PLYWD. SHEATHING - SEE STRUCTURAL DRAWINGS AND FINISH LEGEND.
04	CEMENTITIOUS FIBER PANEL SOFFIT AT EAVES. SEE FINISH LEGEND.
05	DECORATIVE ROUGH-SAWN TIMBER LINTEL - STAIN. SEE FINISH LEGEND.
06	DECORATIVE 6"x6" ROUGH-SAWN TIMBER COLUMN - STAIN. SEE FINISH LEGEND.
07	CEMENTITIOUS FIBER BOARD SIDING OVER 1 1/2" RIGID INSULATION BD. OVER CMU WALL. SEE SPEC. & STRUCTURAL DRAWINGS. SEE FINISH LEGEND.
08	EXPOSED INTEGRALLY COLORED CMU WALL W/ CLEAR URETHANE COAT. SEE FINISH LEGEND.
09	CONC. SLAB (SEAL @ INTERIOR CONDITIONS) OVER FILL OVER UNDISTURBED EARTH. SEE STRUCTURAL DRAWINGS.
10	EXTERIOR CONC. SLAB. SEE LANDSCAPE & CIVIL DRAWINGS.
11	PRE-MANUF. PRE-ENGINEERED TRUSSES - STAIN. SEE STRUCTURAL DRAWINGS AND FINISH LEGEND.
12	R-30 BATT INSULATION WITH VAPOR BARRIER.
13	MECHANICAL LOUVER. SEE MECHANICAL DRAWINGS.
14	REINFORCED CONCRETE FOOTING AND FOUNDATION W/ DAMPROOFING. TYP. SEE STRUCTURAL DRAWINGS.
15	RIDGE VENT.
16	S.S. MOP AND BROOM HOLDER.
17	MBCI 5V CRIMP PANEL METAL ROOFING. SEE FINISH LEGEND.
18	1-1/2" RIGID INSULATION.
19	MOP SINK. SEE PLUMBING DRAWINGS.
20	1x4 WOOD TRIM. STAIN. SEE FINISH LEGEND.
21	5/8" GYPSUM BOARD. PAINT. SEE FINISH LEGEND.
22	CEMENTITIOUS FIBER BOARD LAP SIDING. SEE FINISH LEGEND.
23	AIR INFILTRATION BARRIER.

State of Utah
Department of Administrative Services

Division of Facilities Construction & Management
4110 State Office Building
Salt Lake City, Utah 84114
Phone: (801) 538 - 3018
Fax: (801) 538 - 3267

http://dfcm.utah.gov

CONSULTANTS:

LANDMARK DESIGN
LANDSCAPE ARCHITECTURE AND LAND PLANNING
2004 SOUTHLAND DRIVE
SALT LAKE CITY
UTAH 84106
PHONE (801) 474-0200
FAX (801) 474-0207

ajc architects
703 east 1700 south
salt lake city, utah 84105
ph: 801.466.8818
fx: 801.466.4411
ajc@ajcarchitects.com

STATE OF UTAH — KENT R. RIGBY — 135096 — 6/11/09 — LICENSED ARCHITECT

PROJECT NAME AND ADDRESS:

ESCALANTE HERITAGE CENTER

1281 EAST HIGHWAY 12
ESCALANTE, UTAH

COPYRIGHT:

ALL RIGHTS RESERVED ©
LANDMARK DESIGN, INC.
These documents are protected under the United States 1978 copyright act. It is an exclusive work of original authorship. None of the pictorial, graphic, or technical charts or drawings depicted may be reproduced by any method, mechanical, electronic, or otherwise; nor may they be used or re-used for any purpose without the express prior written permission of Landmark Design, Inc.

MARK	DATE	DESCRIPTION

ISSUE TYPE: 100% SUBMITTAL

ISSUE DATE: 06.12.2009

DFCM PROJECT NO:	09018900
CAD PROJECT NO:	0860
CAD DWG FILE:	--
DRAWN BY:	S BODILY
CHK'D BY:	K RIGBY
COPYRIGHT:	--

SHEET TITLE:

RESTROOM SECTIONS

SHEET NUMBER:

AE301

GENERAL NOTES AND LEGEND:

(FOR SHEET AE302 ONLY.

- SEE SHEET AE002 FOR GENERAL NOTES.
- SEE COVER SHEET FOR DRAWING INDEX.
- DO NOT SCALE DRAWINGS.
- CONTRACTOR SHALL VERIFY ALL DIMENSIONS AND CONDITIONS BEFORE BEGINNING WORK AND SHALL REPORT TO THE ARCHITECT ANY ERRORS, INCONSISTENCIES OR OMISSIONS BEFORE BEGINNING WORK. SEE GENERAL NOTES AND SPECIFICATIONS.
- SEE ELECTRICAL DRAWINGS FOR PLUG LOCATIONS.

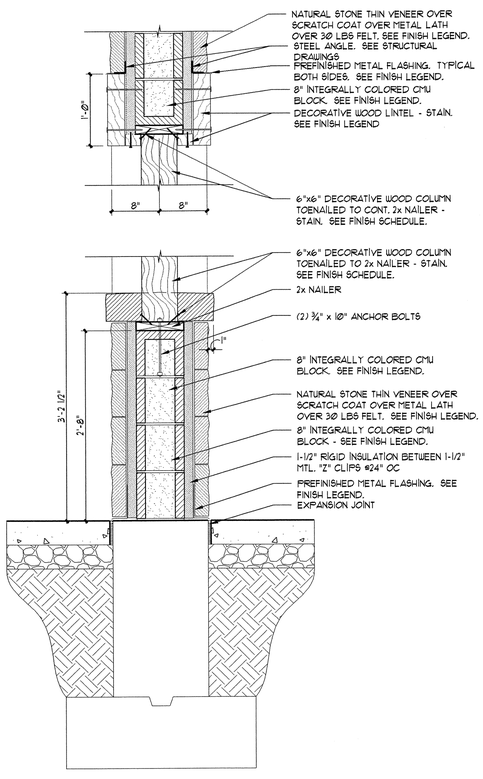

SECTION (A2 / AE302)
SCALE: 1" = 1'-0"

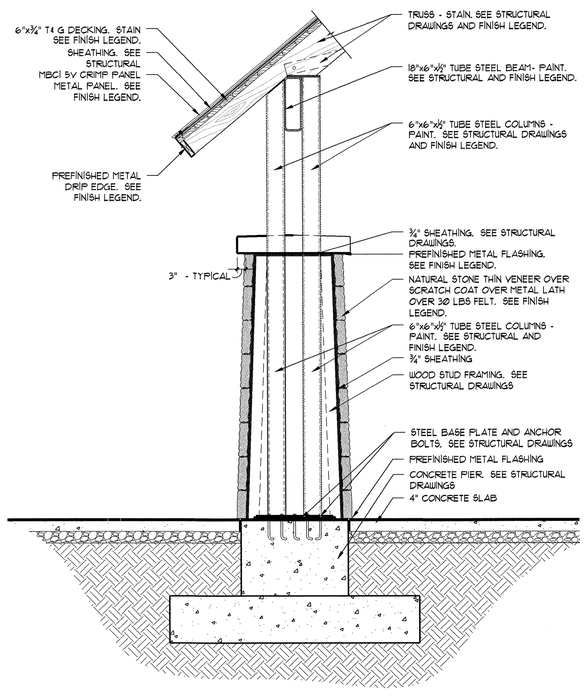

SECTION (A3 / AE302)
SCALE: 1/2" = 1'-0"

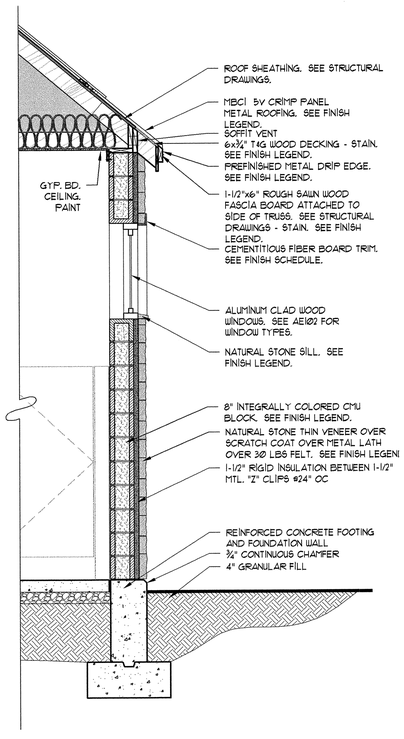

WALL SECTION (A4 / AE302)
SCALE: 1/2" = 1'-0"

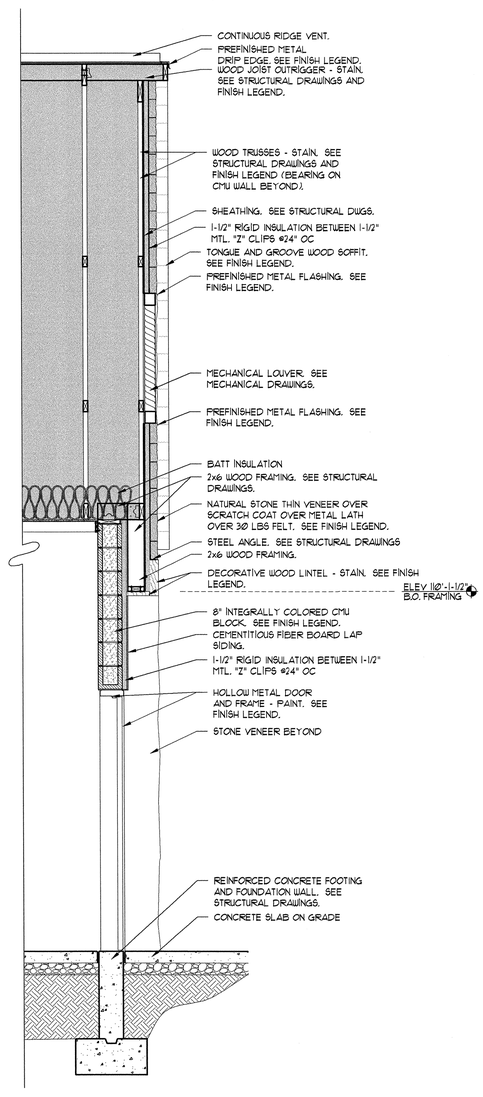

WALL SECTION (A4 / AE302)
SCALE: 1/2" = 1'-0"

State of Utah
Department of Administrative Services

Division of Facilities Construction & Management
4110 State Office Building
Salt Lake City, Utah 84114
Phone: (801) 538 - 3018
Fax: (801) 538 - 3267

http://dfcm.utah.gov

CONSULTANTS:

LANDMARK DESIGN INCORPORATED
LANDSCAPE ARCHITECTURE AND LAND PLANNING
2604 SOUTHEAST STATE
SALT LAKE CITY
UTAH 84106
PHONE (801) 474-1264
FAX (801) 474-1269

ajc architects
703 east 1700 south
salt lake city, utah 84105
ph: 801.466.8818
fx: 801.466.4411
ajc@ajcarchitects.com

STATE OF UTAH — KERT R. RIGBY — 135096 — 6/11/09 — LICENSED ARCHITECT

PROJECT NAME AND ADDRESS:

ESCALANTE HERITAGE CENTER

1281 EAST HIGHWAY 12
ESCALANTE, UTAH

COPYRIGHT:

ALL RIGHTS RESERVED © LANDMARK DESIGN, INC.
These documents are protected under the United States 1978 copyright act. It is an exclusive work of original authorship. None of the pictorial, graphic, or technical charts or drawings depicted may be reproduced by any method, mechanical, electronic, or otherwise; nor may they be used or re-used for any purpose without the express prior written permission of Landmark Design, Inc.

MARK	DATE	DESCRIPTION

ISSUE TYPE: 100% SUBMITTAL

ISSUE DATE: 06.12.2009

DFCM PROJECT NO:	09018900
CAD PROJECT NO:	0860
CAD DWG FILE:	--
DRAWN BY:	S BODILY
CHK'D BY:	K RIGBY
COPYRIGHT:	--

SHEET TITLE:

SECTIONS

SHEET NUMBER:

AE302

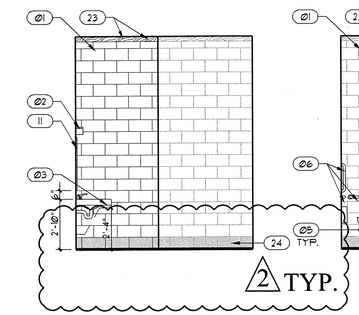

MENS RESTROOM D1 / AE401
1/4" = 1'-0"

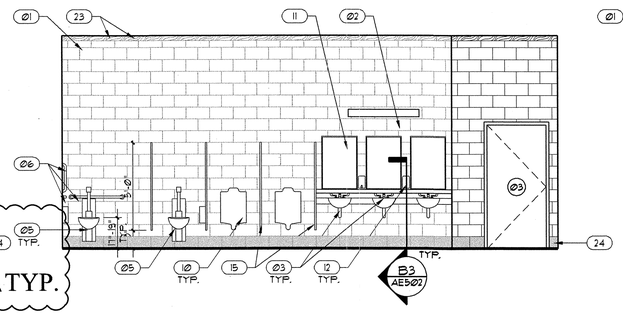

MENS RESTROOM D2 / AE401
1/4" = 1'-0"

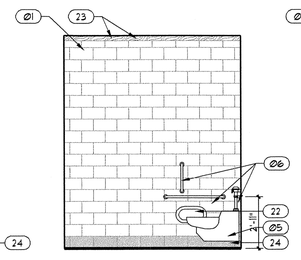

MENS RESTROOM D3 / AE401
1/4" = 1'-0"

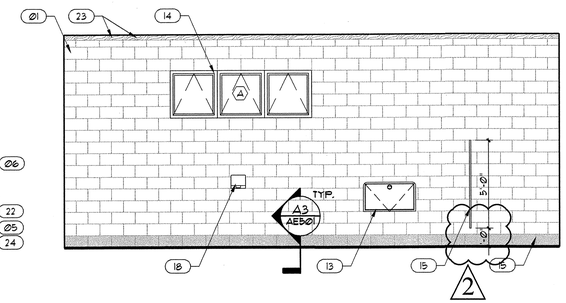

MENS RESTROOM D4 / AE401
1/4" = 1'-0"

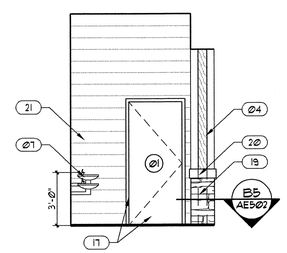

VESTIBULE C3 / AE401
1/4" = 1'-0"

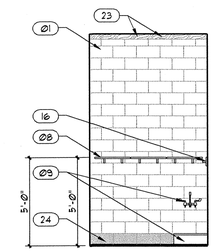

UTILITY ROOM C4 / AE401
1/4" = 1'-0"

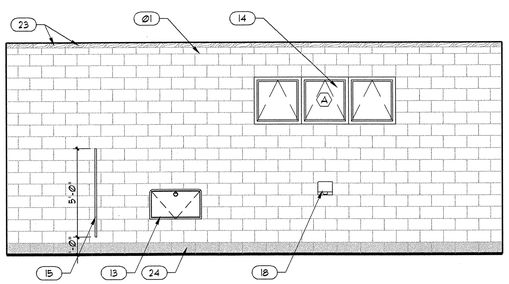

WOMENS RESTROOM B1 / AE401
1/4" = 1'-0"

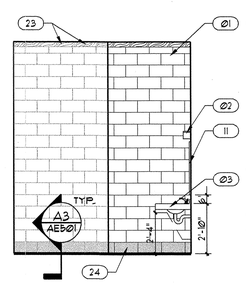

WMNS RESTROOM B2 / AE401
1/4" = 1'-0"

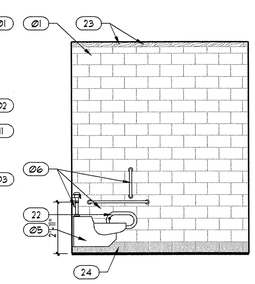

WMNS RESTROOM B3 / AE401
1/4" = 1'-0"

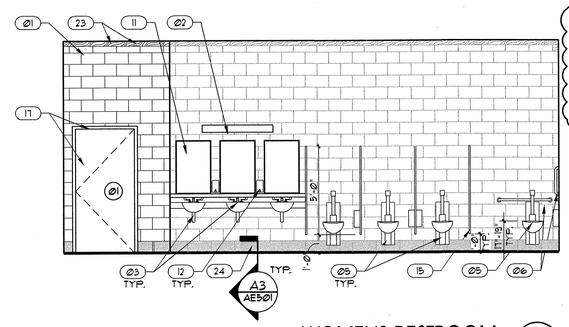

WOMENS RESTROOM B4 / AE401
1/4" = 1'-0"

GENERAL NOTES AND LEGEND:

*FOR SHEET AE401 ONLY.

- SEE SHEET AE002 FOR GENERAL NOTES.
- SEE COVER SHEET FOR DRAWING INDEX.
- DO NOT SCALE DRAWINGS.
- CONTRACTOR SHALL VERIFY ALL DIMENSIONS AND CONDITIONS BEFORE BEGINNING WORK AND SHALL REPORT TO THE ARCHITECT ANY ERRORS, INCONSISTENCIES OR OMISSIONS BEFORE BEGINNING WORK. SEE GENERAL NOTES AND SPECIFICATIONS.
- ALL ACCESSORIES & PLUMBING FIXTURES TO BE MOUNTED PER ADA REQUIREMENTS. SEE SHEET AE003 & AE004 FOR ADA MOUNTING HEIGHTS AND RELATED INFORMATION.
- SEE SHEET AE002 FOR ACCESSORY SCHEDULE.
- ALL COLORS & FINISHES ARE TO BE DETERMINED.

KEYED NOTE LEGEND:

*FOR SHEET AE401 ONLY.

01 INTEGRALLY COLORED CMU WALL WITH CLEAR URETHANE SEAL COAT.
02 LIGHT FIXTURE. SEE ELECTRICAL DRAWINGS.
03 INTEGRAL SOLID SURFACE SINK AND COUNTERTOP. SEE PLUMBING DRAWINGS.
04 DECORATIVE 6"x6" TIMBER COLUMN.
05 TOILET. SEE PLUMBING DRAWINGS.
06 S.S. GRAB BARS.
07 S.S. ELECTRIC WATER COOLERS.
08 S.S. UTILITY SHELF. (3) 5"x24" - SEE SPEC.
09 MOP SINK AND FAUCET. SEE PLUMBING DRAWINGS.
10 URINAL. SEE PLUMBING DRAWINGS.
11 VANDAL RESISTANT MIRRORED SURFACE. POLISHED STAINLESS STEEL.
12 SOAP DISPENSER.
13 BABY CHANGING STATION.
14 WINDOW. SEE SCHEDULE ON AE002.
15 S.S. TOILET PARTITIONS.
16 S.S. MOP AND BROOM HOLDER.
17 DOOR AND FRAME.
18 ELECTRIC HAND DRYER. SEE ELECTRICAL DRAWINGS.
19 NATURAL STONE THIN VENEER.
20 NATURAL STONE SILL.
21 CEMENTITIOUS FIBER BOARD SIDING.
22 S.S. TOILET PAPER DISPENSER.
23 1x4 WOOD TRIM. STAIN. SEE FINISH LEGEND.
24 8" HIGHLY POLISHED, REFLECTIVE FACE, LOAD BEARING CONCRETE MASONRY UNITS. BASE COURSE ONLY-SHOWN SHADED. CONCRETE MASONRY UNITS MUST CONTAIN A MAXIMUM SILICA CONTENT OF 2% IN ACCORDANCE WITH ASTM C25. IN ADDITION TO BEING INTEGRALLY WATER REPELLENT BY MEANS OF LIQUID INTEGRAL POLYMETRIC ADMIXTURE, MUST COMPLY WITH ASTM C90 GRADE N, TYPE I MOISTURE CONTROLLED, AND MUST CONFORM TO ASTM C744 AND ANSI C137 TO RESIST CRAZING, HAVE CHEMICAL RESISTANCE, RESIST ABRASION, SPALLING, AND CRACKING OR DISINTEGRATION OF FACING. MUST BE RESISTANT TO COLOR CHANGE, GLOSS, AND TEXTURE OF HIGHLY REFLECTIVE FACE. COLOR TO MATCH FIELD CMU BLOCK.

State of Utah
Department of Administrative Services

Division of Facilities Construction & Management
4110 State Office Building
Salt Lake City, Utah 84114
Phone: (801) 538 - 3018
Fax: (801) 538 - 3267

http://dfcm.utah.gov

CONSULTANTS:

LANDMARK DESIGN

ajc architects
703 east 1700 south
salt lake city, utah 84105
ph: 801.466.8818
fx: 801.466.4411
ajc@ajcarchitects.com

STATE OF UTAH KENT R. RIGBY 135098 9/8/09 LICENSED ARCHITECT

PROJECT NAME AND ADDRESS:

ESCALANTE HERITAGE CENTER

1281 EAST HIGHWAY 12
ESCALANTE, UTAH

COPYRIGHT:

ALL RIGHTS RESERVED © LANDMARK DESIGN, INC.
These documents are protected under the United States 1978 copyright act. It is an exclusive work of original authorship. None of the pictorial, graphic, or technical charts or drawings depicted may be reproduced by any method, mechanical, electronic, or otherwise; nor may they be used or re-used for any purpose without the express prior written permission of Landmark Design, Inc.

MARK	DATE	DESCRIPTION
2	09.08.09	DFCM REVIEW

ISSUE TYPE: 100% SUBMITTAL

ISSUE DATE: 06.12.2009

DFCM PROJECT NO:	09018900
CAD PROJECT NO:	0860
CAD DWG FILE:	--
DRAWN BY:	S BODILY
CHK'D BY:	K RIGBY
COPYRIGHT:	--

SHEET TITLE:

INTERIOR ELEVATIONS

SHEET NUMBER:

AE401

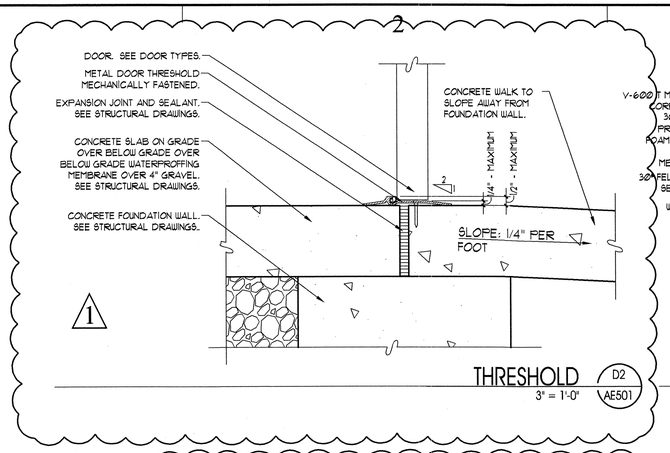

THRESHOLD D2 / AE501
3" = 1'-0"

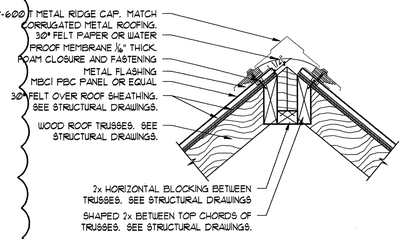

RIDGE VENT DETAIL D4 / AE501
1-1/2" = 1'-0"

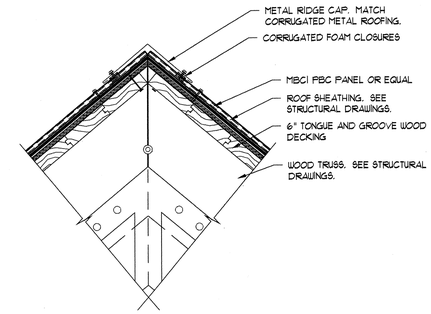

RIDGE CAP DETAIL D4 / AE501
1-1/2" = 1'-0"

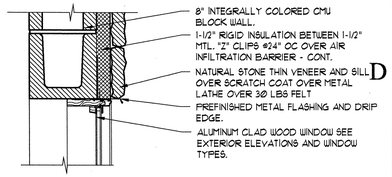

WINDOW HEAD DETAIL D5 / AE501
1-1/2" = 1'-0"

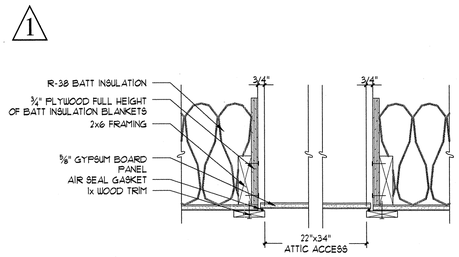

ATTIC ACCESS DETAIL C2 / AE501
1-1/2" = 1'-0"

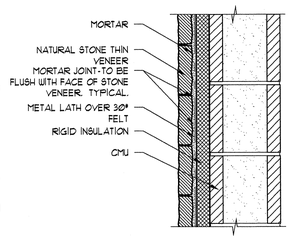

MORTAR JOINT DETAIL C3 / AE501
1-1/2" = 1'-0"

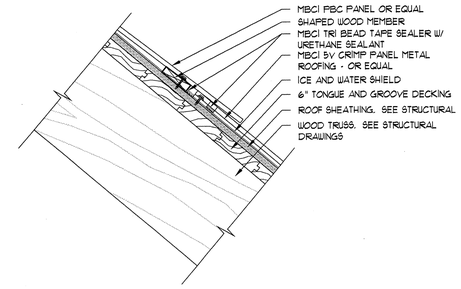

ROOF DETAIL C4 / AE501
1-1/2" = 1'-0"

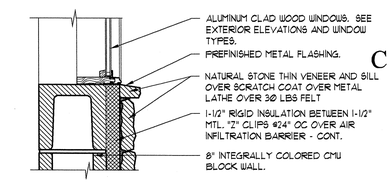

WINDOW SILL DETAIL C5 / AE501
1-1/2" = 1'-0"

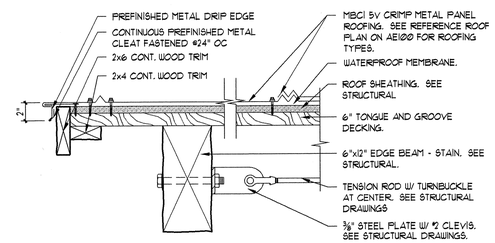

DETAIL B4 / AE501
1-1/2" = 1'-0"

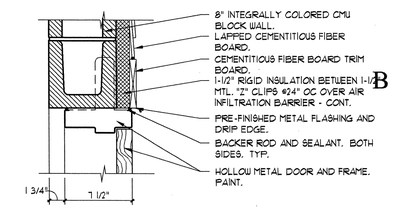

DOOR HEAD DETAIL B5 / AE501
1-1/2" = 1'-0"

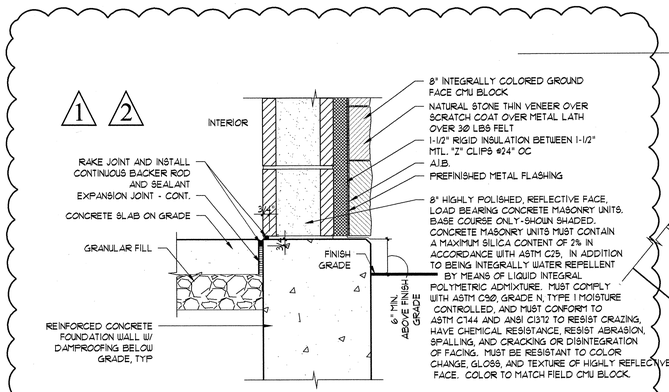

DETAIL A3 / AE501
1-1/2" = 1'-0"

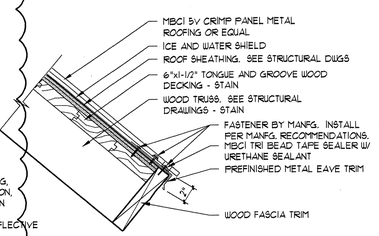

DETAIL A4 / AE501
1-1/2" = 1'-0"

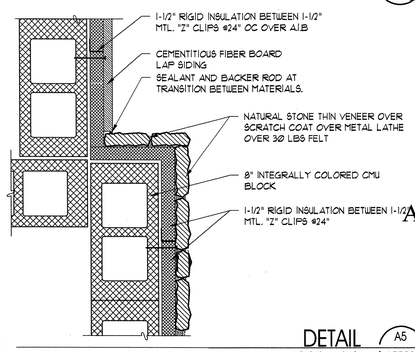

DETAIL A5 / AE501
1-1/2" = 1'-0"

State of Utah
Department of Administrative Services

Division of Facilities Construction & Management
4110 State Office Building
Salt Lake City, Utah 84114
Phone: (801) 538 - 3018
Fax: (801) 538 - 3267

http://dfcm.utah.gov

CONSULTANTS:

LANDMARK DESIGN

ajc architects
703 east 1700 south
salt lake city, utah 84105
ph: 801.466.8818
fx: 801.466.4411
ajc@ajcarchitects.com

STATE OF UTAH KIRT R. RIGBY 135098 9/8/09 LICENSED ARCHITECT

PROJECT NAME AND ADDRESS:

ESCALANTE HERITAGE CENTER

1281 EAST HIGHWAY 12
ESCALANTE, UTAH

COPYRIGHT:

ALL RIGHTS RESERVED ©
LANDMARK DESIGN, INC.
These documents are protected under the United States 1978 copyright act. It is an exclusive work of original authorship. None of the pictorial, graphic, or technical charts or drawings depicted may be reproduced by any method, mechanical, electronic, or otherwise; nor may they be used or re-used for any purpose without the express prior written permission of Landmark Design, Inc.

MARK	DATE	DESCRIPTION
1	08.13.09	DFCM REVIEW
2	09.08.09	DFCM REVIEW

ISSUE TYPE: 100% SUBMITTAL

ISSUE DATE: 06.12.2009

DFCM PROJECT NO:	09018900
CAD PROJECT NO:	0860
CAD DWG FILE:	--
DRAWN BY:	S BODILY
CHK'D BY:	K RIGBY
COPYRIGHT:	--

SHEET TITLE:

DETAILS

SHEET NUMBER:

AE501

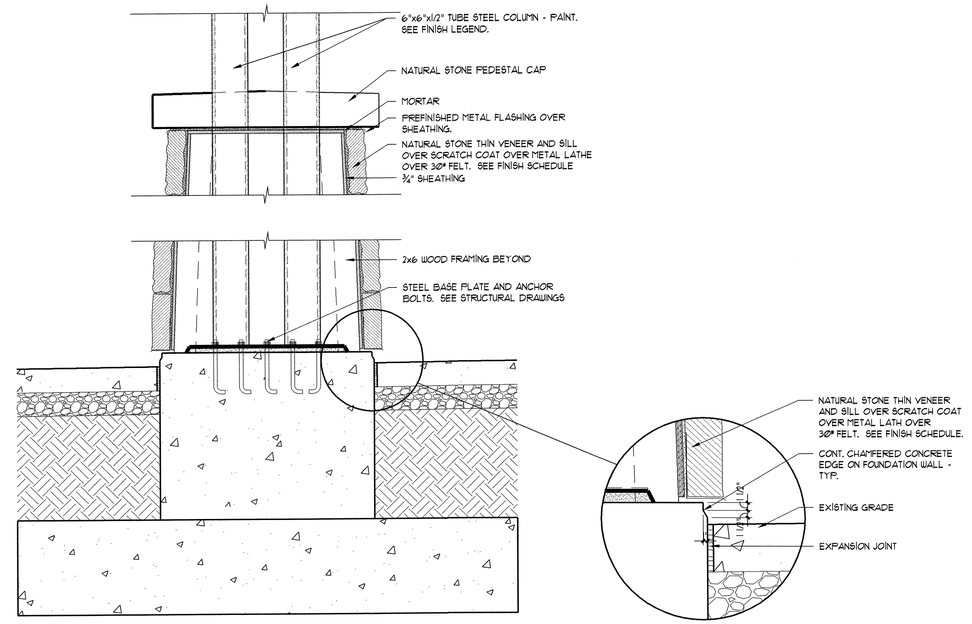

DETAIL C4 / AE502
1" = 1'-0"

DETAIL C5 / AE502
1" = 1'-0"

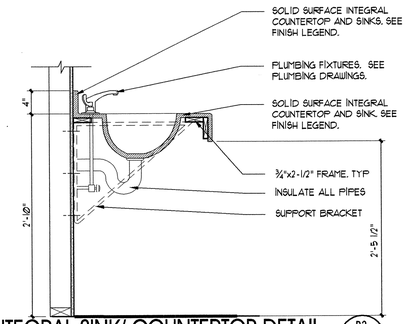

INTEGRAL SINK/ COUNTERTOP DETAIL B3 / AE502
1" = 1'-0"

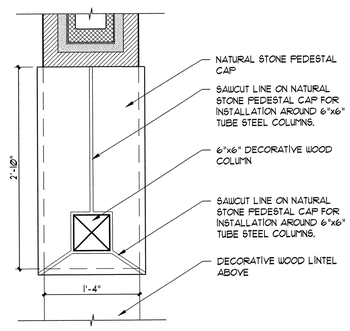

PLAN SECTION DETAIL B4 / AE502
1" = 1'-0"

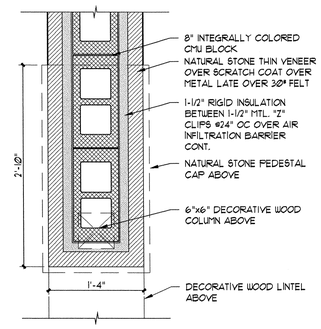

ENTRY SECTION DETAIL B5 / AE502
1" = 1'-0"

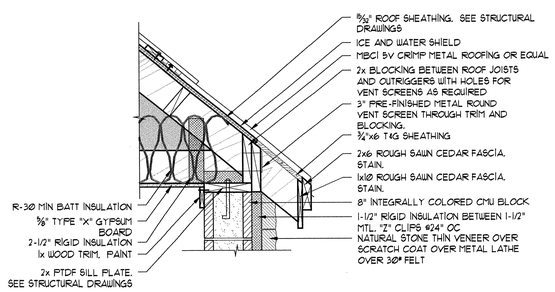

DETAIL A3 / AE502
1" = 1'-0"

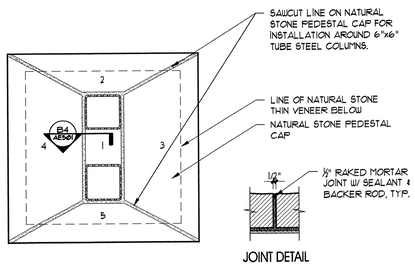

PEDESTAL PLAN DETAIL A4 / AE502
1" = 1'-0"

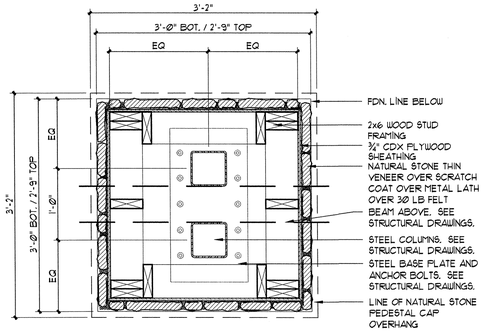

PEDESTAL SECTION DETAIL A5 / AE502
1" = 1'-0"

State of Utah
Department of Administrative Services

Division of Facilities Construction & Management
4110 State Office Building
Salt Lake City, Utah 84114
Phone: (801) 538 - 3018
Fax: (801) 538 - 3267

http://dfcm.utah.gov

CONSULTANTS:

LANDMARK DESIGN
LANDSCAPE ARCHITECTURE AND LAND PLANNING
1004 DECKLAND DRIVE
SALT LAKE CITY
UTAH 84108
PHONE (801) 274-1200
FAX (801) 274-1202

ajc architects
703 east 1700 south
salt lake city, utah 84105
ph: 801.466.8818
fx: 801.466.4411
ajc@ajcarchitects.com

STATE OF UTAH
KENT R. RIGBY
135096
8/11/09
LICENSED ARCHITECT

PROJECT NAME AND ADDRESS:

ESCALANTE HERITAGE CENTER

1281 EAST HIGHWAY 12
ESCALANTE, UTAH

COPYRIGHT:

ALL RIGHTS RESERVED ©
LANDMARK DESIGN, INC.
These documents are protected under the United States 1978 copyright act. It is an exclusive work of original authorship. None of the pictorial, graphic, or technical charts or drawings depicted may be reproduced by any method, mechanical, electronic, or otherwise; nor may they be used or re-used for any purpose without the express prior written permission of Landmark Design, Inc.

MARK	DATE	DESCRIPTION

ISSUE TYPE: 100% SUBMITTAL

ISSUE DATE: 06.12.2009

DFCM PROJECT NO:	09018900
CAD PROJECT NO:	0860
CAD DWG FILE:	--
DRAWN BY:	S BODILY
CHK'D BY:	K RIGBY
COPYRIGHT:	--

SHEET TITLE:

DETAILS

SHEET NUMBER:

AE502

GENERAL STRUCTURAL NOTES

I. Design Criteria

A. Governing Building Code: 2006 International Building Code (IBC)

B. Floor Live Loading:
1. Restroom/Pavillion: .... 100 psf Live Load

C. Roof Live Loading:
1. Roof Live Load: .... 20 psf
2. Roof Snow Load: .... 33 psf + Drift per IBC
   a. Ground Snow Load, P_g: .... 43 psf
   b. Snow Exposure Factor, C_e: 0.9
   c. Importance Factor, I_S: 1.0
   d. Thermal Factor, C_t: 1.2

D. Earthquake:
1. Occupancy Category: II
2. Seismic Design Category.. C
3. Spectral Response Accelerations:
   S_S = 0.454 g S_{DS} = 0.435 g
   S_1 = 0.13 g S_{D1} = 0.198 g
4. Soil Site Class: .... D
   F_a = 1.44 F_v = 2.28
5. Restrooms Basic Seismic-Force-Resisting System: . Ordinary reinforced masonry shear walls
   R = 2 C_d = 1.75 Ω_0 = 2.5
   a. Importance Factor, I_E: 1.0
   b. Design Base Shear: .... 38 kips
   c. Design Story Drift, Δ:.. 1.44 in
   d. Analysis Procedure: .... Equivalent Lateral Force (Static)
6. Canopy Basic Seismic-Force-Resisting System: ..... Ordinary Steel Moment Frames
   R = 1.25 C_d = 1.25 Ω_0 = 1.25
   a. Importance Factor, I_E: 1.0
   b. Design Base Shear: .... 17 kips
   c. Design Story Drift, Δ:.. 3.75 in
   d. Analysis Procedure: .... Equivalent Lateral Force (Static)

E. Wind:
1. Basic Wind Speed (3-second gust): .... 90 mph
2. Importance Factor, I_W: 1.0
3. Exposure: C
4. Internal Pressure Coefficient, GC_{pi}: 0.18
5. Topographic Factor, K_{ht}: 1.0

F. Foundation:
1. Subsurface Conditions:
   Soils report and log of borings was obtained by the Owner for the Engineer's use in the design of the foundation, and is not a part of the Contract Documents. This report and log of borings is available for the Contractor's information, but is not a warranty of the subsurface conditions. The Contractor may use the report at his own risk.
2. Soils Report by PEPG Engineering, L.L.C., dated March 23, 2009.
3. Soil Bearing Pressure: .... 1950 psf, on Compacted Fill
4. Lateral Soil Pressure Fluid Equivalent Density.
   a. Active: .... 60 pcf (retaining walls)
   b. At Rest: .... 100 pcf (rigid foundation walls)

II. Earthwork

A. Clearing: The entire building area shall be scraped to remove the top 4 inches of soil, including all vegetation and debris.

B. Near surface native soils: The depth of this material is approximately 10 feet. Do not place any footing on this material. Remove all native material from below footings and replace it with compacted structural fill. Remove an area that is one foot wider than the width of the footing and a minimum depth of 1 foot.

C. Proof rolling: The natural undisturbed soil below all footings shall be proof rolled prior to placing concrete. Remove all soft spots and replace with compacted structural fill.

D. Compacted structural fill: All fill material shall be a well-graded granular material with a maximum size less than 4 inches and with not more than 10 percent passing a No. 200 sieve. It shall be compacted to 95 percent of the maximum laboratory density as determined by ASTM D1557. All fill shall be tested (See Specifications and the Quality Assurance section of the GSN).

E. Place concrete footings such that the bottom of footing elevations are below the specified frost depth of 42 inches beneath the final ground surface per the geotechnical study by PEPG Engineering, L.L.C. (1)

III. Concrete

A. Materials shall comply with the Standards specified in American Concrete Institute (ACI) 318-05, "Building Code Requirements for Structural Concrete."
1. Compressive strengths of concrete at 28 days shall be as follows:
   a. Footings: .... 3000 psi
   b. Slabs on Grade: .... 3000 psi
   c. Walls: .... 4000 psi
   d. All other Site Cast Concrete: .... 4000 psi
2. Concrete Density (Maximum Air Dry Weight):
   a. Normal weight concrete shall be approximately 145 to 155 pounds per cubic foot.
3. Reinforcement steel:
   a. ASTM A615 Grade 60, fy = 60,000 psi min. unless noted otherwise.
   b. Reinforcement at concrete moment frames and shear wall jambs shall be ASTM A706 or ASTM A615 Grade 60, with the following properties:
      (1) Actual yield strength based on mill tests shall not exceed 78,000 psi.
      (2) Retest shall not exceed 81,000 psi.
      (3) Ratio of actual ultimate tensile stress to the actual yield strength shall not be less than 1.25.
      (4) Mill tests shall be submitted to the Engineer.
4. Admixtures:
   a. Air-entraining admixtures, comply with ASTM C 260 (when used).
      (1) When air content of a trowel finished floor slab exceeds 3%, there is an increased risk for delaminations and blistering to occur. When this situation is present, the contractor shall pay special attention to the finishing procedures to help minimize such risks. Refer to ACI 302.1R-96 "Guide for Concrete Floor and Slab Construction" for proper finishing guidelines.
   b. Calcium chloride shall not be added to the concrete mix.
5. Only one grade or type of concrete shall be poured on the site at any given time.
6. Plastic coated tie wires and chairs shall be used to support reinforcing bars.

B. Formwork shall comply with ACI Standards Publication 347 and the project specifications. The contractor shall be responsible for the design, detailing, care, placement and removal of the formwork and shores.
1. Precamber forms and screeds with a camber of 1/4" per every 10'-0" of span to compensate for dead load deflection, unless noted otherwise.

C. Concrete cover requirements for deformed bar reinforcing steel shall comply with ACI 318, "Building Code Requirements for Structural Concrete".
1. Cast-in-place Concrete: Clear Cover
   a. Cast against and permanently exposed to earth: .... 3"
   b. Formed concrete exposed to earth or weather:
      #6 thru #18 bars.. 2"
      #5 and smaller bars.. 1.1/2"
   c. Concrete not exposed to weather or in contact with ground:
      Slabs, Walls; #11 bars and smaller... 3/4"

D. Construction Joints and Control Joints:
1. Provide a continuous 2 X 4 keyway or a surface intentionally roughened to a full amplitude of approximately ¼" in all wall footings. Adjust the keyway as necessary to provide for proper bar placement.
2. All horizontal and vertical construction joints shall have a continuous 2 X 4 keyway along the joint or joints shall be intentionally roughened to a full amplitude of approximately ¼", unless noted otherwise.
3. Provide reinforcement dowels to match the member reinforcement across the joint, unless noted otherwise. For dowels across construction joints, refer to specific project plans, schedules, and details.
4. Slabs on grade shall have construction or control joints spaced not to exceed 30 times the slab thickness in any direction. All discontinuous control or construction joints shall be reinforced with 2 - #4 x 48". See structural details. Construction joints shall not exceed a distance of 125'-0" o.c. in any direction.
5. Control joints shall be installed in slabs on grade so the length to width ratio of the slab is no more than 1.25:1. Control joints shall be completed within 12 hours of concrete placement. Control joints may be installed by:
   a. Saw cut a depth of 1/4 the thickness of the slab
   b. Tooled joints a depth of 1/4 the thickness of the slab
6. Control joints in visually exposed walls, unless noted otherwise: (Joints shall line up with masonry and architectural joints, see drawings.)
   a. Vertical control joints at 10'-0" on center.
   b. Reinforcing shall be continuous through control and construction joints, unless noted otherwise.
   c. Control joints in concrete foundation walls shall line up with masonry control joints.

E. Detailing: All reinforcing, including WWF, shall be detailed, bolstered & supported to comply with ACI 315, "Details and Detailing of Concrete Reinforcement" and the Concrete Reinforcing Steel Institute (CRSI) recommendations. Reinforcing bars shall not be welded unless specifically shown on drawings.
1. Lap splice lengths shall be detailed to comply with the "Reinforcing Bar Lap Splice Schedule" contained within the contract drawings. Splices may be made with mechanical splices capable of 125% tension capacity of the bar being spliced. Mechanical splices shall be the positive connecting type coupler. They shall be covered by a current ICC Code Evaluation Report. Use "Cadweld" splice sleeves with ferrous filler, "Lenton" taper threaded rebar splices, "Bar-Lock" lockshear bolt coupling sleeves, or approved equivalent. If mechanical splices are used, splices or couplers on adjacent bars shall be staggered a minimum of 24" apart along the longitudinal axis of the reinforcing bars.
2. All embedments and dowels shall be securely tied to formwork or to adjacent reinforcing prior to the placement of concrete.
3. Use chairs or other support devices recommended by the CRSI to support and tie reinforcement bars prior to placing concrete.
4. Provide corner bars at intersecting wall corners using the same bar size and spacing as the horizontal wall reinforcing. Unless noted otherwise, corner bar lap lengths shall conform with reinforcing bar lap splice lengths as noted above.
5. All vertical reinforcing shall be doweled to footings, or to the structure below. Dowels shall be the same size and at the same spacing as the vertical reinforcing scheduled (or detailed) for the element above. Lap splice lengths shall comply as noted above or as shown in the drawings. Dowels extending into footings shall terminate with a 90 degree standard ACI hook and shall extend to within 4" of the bottom of the footing. Footing dowels (#8 bars and smaller) with hooks need not extend more than 20" into footings.
6. Horizontal wall reinforcing shall terminate at ends of walls and openings into the far end of the jamb column with a 90-degree standard ACI hook, unless shown otherwise. Lap horizontal bar splices as noted above or as shown in the drawings. Horizontal wall reinforcing shall be continuous through construction and control joints. Splices in horizontal reinforcement shall be staggered, so the splice laps will not overlap. Splices in two curtains where used shall not occur in the same location, splice laps shall not overlap.
7. Provide 2-#5 X 4'-0" diagonal bars (or 1 - #7 x 4'-0" bar in 10" walls and thinner) at the corners of all openings. Diagonal bars shall be centered on the corner of the opening. All recesses in concrete walls that interrupt reinforcing steel shall be reinforced the same as an opening.
8. Contractor shall coordinate placement of all openings, curbs, dowels, sleeves, conduits, bolts, inserts and other embedded items prior to concrete placement.
9. All reinforcement shall be bent cold, and shall be bent only once at the same location. All reinforcement shall be shop bent, unless otherwise permitted by the engineer.

F. Minimum Reinforcing: Wall reinforcing shall be as follows, unless noted otherwise:

Wall Thickness	Horizontal Reinf.	Vertical Reinf.
6"	#4 @ 13" o.c.	#4 @ 18" o.c.
8"	#5 @ 15" o.c.	#4 @ 16" o.c.
10"	#5 @ 12" o.c.	#4 @ 13" o.c.
12"	#4 @ 13" o.c. Each Face	#4 @ 18" o.c. Each Face
Others	0.25% of Wall Area	0.15% of Wall Area

Place steel in the center of the wall (except in walls thicker than 10" and where shown otherwise). Walls thicker than 10" shall have two curtains of reinforcing (placed near each face of the wall), unless otherwise shown on the structural drawings. Spacing shall not exceed three times the wall thickness nor 18". In addition to the above reinforcing, 2 - #5 (or 1 - #7 in 10" walls and thinner) x continuous horizontal bars shall be placed at the bottom of the wall (near the footing) and at each floor level, at the roof level and at the top of wall.

G. No aluminum conduit or product containing aluminum or any other material injurious to concrete shall be embedded in concrete.

H. Unless otherwise noted, all slabs on grade shall be 4" thick.

IV. Masonry

A. Materials, unless noted otherwise:
1. Concrete Masonry Units: ASTM C 90, Lightweight, minimum unit strength of 1900 psi average or better. (f'm = 1500 psi)
2. Mortar: Use Type "S" according to IBC Section 2103.8, and tested according to ASTM C270. Admixtures shall not be added to the mortar mix. (1800 psi minimum compressive strength).
3. Grout: Conform to IBC Table 2103.12 or ASTM C476. Proportioned according to IBC Section 2103.12 and tested according to ASTM C1019. Grout shall attain a minimum compressive strength equal to or greater than f'm but shall not be less than 2000 psi at 28 days.
4. Reinforcing: Grade 60 reinforcing steel shall comply with ASTM A615. Wire joint reinforcing shall comply with ASTM A951.
5. Deformed Bar Anchors (DBA): All DBAs shall comply with ASTM A496.
6. Anchor Bolts (AB): ASTM A307 with ASTM A563 heavy hex nuts and hardened washers, Grade A, unless noted otherwise.
7. Headed Stud Anchors (HSA): Manufacture all HSAs in conformance with ASTM A108 with dimensions complying with AISC specifications.

B. Construction Requirements:
1. Mortar Joints: Joints shall be "concave", "V-joint" or "weathered raked" for structural members unless noted otherwise on architectural drawings.
2. Masonry walls, beams and columns shall be constructed with running bond, unless noted otherwise.
3. Grouting Requirements: Comply with IBC Section 2104 and ACI 530.1/ASCE 6/TMS 602. Grout shall be mechanically consolidated and mechanically reconsolidated according to ACI 530.1/ASCE 6/TMS 602 Section 3.5 E.
4. Reinforcing Bars shall not be welded unless specifically shown on drawings. In such cases, use only AWS standards. Do not substitute reinforcing bars for DBAs or HSAs.
5. Control Joints: Spacing shall not exceed 40'-0". See architectural drawings for locations.
6. Grout all beam and joist pockets solid after installation of beams and joists.
7. Masonry Veneer Attachment and Reinforcing:
   a. To reinforced masonry walls: Veneer shall be attached with tri-rod laddur type reinforcement spaced at a maximum of 16" o.c. vertically consisting of 3 - #9 gauge, galvanized, corrugated, wires. Veneer may also be attached with Dur-O-Wal D/A 360 S Seismic Ladur-Eye spaced at 16" o.c. maximum in both vertical and horizontal directions. . Anchor ties shall engage to a galvanized No. 9 gauge horizontal joint reinforcement wire in the veneer which shall be continuous and shall be placed at 16" o.c. maximum at the center of the veneer. Anchors shall extend to the galvanized ladur type (2 - #9 wires) joint reinforcing in the masonry wall spaced at 16" o.c. maximum.
   b. Other methods of attachment may be used after written acceptance by the architect and structural engineer.
   c. Steel Lintels: Provide steel angle lintels at all openings through the masonry veneer. Provide one inch of bearing for each foot of width of opening, with a minimum bearing of six inches. See the Steel Angle Lintel Schedule for size.

C. Detailing Requirements:
1. Standards: Reinforcing detailing shall comply with American Concrete Institute (ACI) Standard 315, "Details and Detailing of Concrete Reinforcement."
2. Reinforcement Protection (cover):
   a. Joint reinforcement shall have not less than 5/8" mortar coverage from the exposed face.
   b. Other reinforcement shall have a minimum coverage of one bar diameter over all the bars, but not less than 3/4". When masonry is exposed to soil, minimum coverage shall be 1.5".
3. Vertical steel reinforcement shall be placed and secured against displacement prior to grouting by wire positioners or other suitable devices: at intervals not exceeding 112 bar diameters, at the grout lift heights, or at bar splice locations, whichever is less. Vertical reinforcing shall be located at the center of the wall, unless noted otherwise.
4. Lap Splice Lengths: Lap all masonry reinforcing bars per the "Masonry Reinforcing Bar Lap Splice Schedule." Joint reinforcement shall lap a minimum of 6".
5. Corner Bars: Horizontal reinforcement shall be continuous at all corners and at intersecting walls. Provide corner bars with the required lap splice length.
6. Dowels: All vertical reinforcing shall be doweled to the foundation wall, footing (structure below) and to the structure above with the same size dowel, spacing (and in the same core) as the vertical wall reinforcing unless noted otherwise.
7. Wall Openings 24" wide and wider: Provide reinforced masonry lintels per Masonry Lintel Schedule over the top of, and 2 - #5 bars, in grouted spaces, on all sides and adjacent to every unscheduled opening, unless noted otherwise. Bars for all openings shall extend a minimum of 48 bar diameters beyond the corners of the opening. Vertical bars shall extend from floor level below to the floor , or roof, level above. Where a 48 bar diameter extension is not possible, extend bars as far beyond the opening as possible and terminate them with a 90 degree standard ACI hook.
8. Horizontal wall reinforcing shall be continuous through joining concrete walls, masonry walls, columns, and pilasters. Provide a key between the wall and the column or pilaster. Horizontal wall reinforcing shall be placed inside the column vertical reinforcing.
9. Anchor bolts and headed stud anchors shall be set in a grouted cell. Anchor bolts and headed stud anchors shall have 1" grout surrounding the shank at its penetration. Grout shall be flush with the face or top of the masonry.
10. All masonry column ties shall terminate with 135 degree hooks plus a 6 bar diameter extension (4" minimum).
11. The exposed face of all embed plates shall be set flush with the face of masonry wall or column.

D. Minimum Reinforcing:
All masonry walls shall be reinforced as follows, unless shown otherwise on the drawings. Reinforcing shall be placed in grouted cells.

Wall Thickness	Horizontal Reinf.	Vertical Reinf.
6"	#4 @ 48" o.c.	#5 @ 32" o.c.
8"	#5 @ 48" o.c.	#5 @ 32" o.c.
10"	#6 @ 48" o.c.	#6 @ 32" o.c.
12"	2 - #5 @ 48" o.c.	#6 @ 32" o.c.

STRUCTURAL DRAWING INDEX

Sheet No.	Sheet Title
SE001	GENERAL STRUCTURAL NOTES
SE002	GENERAL STRUCTURAL NOTES
SE003	GENERAL STRUCTURAL NOTES
SB100	STRUCTURAL PLANS
SB501	FOOTING & FOUNDATION DETAILS
SB502	FOOTING & FOUNDATION DETAILS
SB601	STRUCTURAL SCHEDULES
SF501	ROOF FRAMING DETAILS
SF502	ROOF FRAMING DETAILS
SF601	STRUCTURAL SCHEDULES

5

#170416 JEFFERY THOMAS MILLER UTAH
10/22/09

State of Utah
Department of Administrative Services
Division of Facilities Construction & Management
4110 State Office Building
Salt Lake City, Utah 84114
Phone: (801) 538 - 3018
Fax: (801) 538 - 3267
http://dfcm.utah.gov

CONSULTANTS:

LANDMARK DESIGN INCORPORATED

ajc architects
703 east 1700 south
salt lake city, utah 84105
ph: 801.466.8818
fx: 801.466.4411
ajc@ajcarchitects.com

REAVELEY ENGINEERS + ASSOCIATES
Consulting Structural Engineers
675 E. 500 S. Suite 400
Salt Lake City, UT 84102
P:801.486.3883
F:801.485.0911
www.reaveley.com

PROJECT NAME AND ADDRESS:

ESCALANTE HERITAGE CENTER

1281 EAST HIGHWAY 12
ESCALANTE, UTAH

COPYRIGHT:

ALL RIGHTS RESERVED ©
LANDMARK DESIGN, INC.
These documents are protected under the United States 1978 copyright act. It is an exclusive work of original authorship. None of the pictorial, graphic, or technical charts or drawings depicted may be reproduced by any method, mechanical, electronic, or otherwise; nor may they be used or re-used for any purpose without the express prior written permission of Landmark Design, Inc.

MARK	DATE	DESCRIPTION
1	10.20.09	DFCM REVIEW

ISSUE TYPE: 100% SUBMITTAL

ISSUE DATE: 8.13.09

DFCM PROJECT NO:	09018900
CAD PROJECT NO:	0860
CAD DWG FILE:	--
DRAWN BY:	D MANNING
CHK'D BY:	A BUCHANAN
COPYRIGHT:	--

SHEET TITLE:

GENERAL STRUCTURAL NOTES

SHEET NUMBER:

SE001

SHEET OF

GENERAL STRUCTURAL NOTES

VI. Wood

A. Materials:
1. Framing Lumber: Number 2 Douglas Fir-Larch or better or as noted otherwise
2. Laminated Veneer Lumber (LVL): All LVL members shall have the following minimum properties: Fb = 2600 psi, Fv = 285 psi, E = 1900 ksi.
3. Wood Structural Panel Sheathing: All panels shall be rated by the American Plywood Association (APA), Exposure 1. Panels shall be interior grade with exterior glue with the following panel span rating, unless noted otherwise,
   24/16 Roof
4. Nails: Standard Common with the following properties:

Nail Size	Shank Diameter	Min. Penetration into Support Member
6d	0.113"	1.25"
8d	0.131"	1.50"
10d	0.148"	1.63"
12d	0.148"	1.63"
16d	0.162"	1.75"

5. Bolts for connections: ASTM A307 with ASTM A563 heavy hex nuts and hardened washers, Grade A, unless noted otherwise.

B. Special Treatments (American Wood Preservers Institute Standards):
1. All wood in contact with concrete, masonry or soil: Pressure treat with Wolman CCA preservative or equal as approved by the Architect.
2. Fire Retardant: Pressure treat with Dricon or equal as approved by the Architect.
3. Poles and Piles: AWPI-CP-77, pentachlorophenal in heavy oil.

C. Minimum Nailing Requirements (See drawings for areas with greater requirements):
1. Roof: Nail all sheathing panels with 10d common nails at 6" o.c. at all supported edges and boundaries and at 12" o.c. at all intermediate supports. Use two plyclips between each support for spans of 48" o.c. and one plyclip between each support for lesser spans at all unsupported panel edges.
2. General Framing and Carpentry: Connect all items as per IBC Table 2304.9.1, "Fastening Schedule", unless noted otherwise.

G. Pre-Fabricated Steel Plate Wood Trusses:
1. Design Loading: The truss manufacturer is responsible for design and fabrication of the trusses. They shall be designed to support the concentrated and other distributed loads as shown on the framing plans in addition to the following uniform loads:
   Dead Load (Top Chord) = 10 psf
   Dead Load (Bottom Chord) = 10 psf
   Live Load (Top Chord) = 18 psf (Balanced Snow) or 43 psf (Unbalanced Snow)*
   38 psf Total Load (w/balanced snow)
   ** Unbalanced Snow loads are only on one side of the ridge*
   Correlate the design with all mechanical equipment, fire sprinkling systems and hanging walls supported by the trusses. Provide extra trusses where required.
2. Submittals: Complete calculations and shop drawings indicating all member forces, stresses, lumber grades, dimensions, steel truss plate sizes and locations shall be submitted and reviewed by the engineer before fabrication. Each connector shall be dimensioned on the shop drawings as to its exact location at the joint. Shop drawings and calculations shall bear the seal of a professional engineer licensed in the State of Utah. After truss installation, the fabricator shall certify in writing that the trusses have been installed according to his specifications.
3. Steel Connector Plates: Use only galvanized steel connector plates that comply with the Truss Plate Institute publication, TPI 1-2002. All steel connector plates must be approved by the ICC Evaluation Services. Submit a copy of the ICC Code Evaluation Report for the connector plate used. Values established by this committee must be indicated on the shop drawings.
   a. The minimum size for any connector shall be 15 square inches.
   b. All steel gusset plates shall be located on the joint as the stresses require and shall provide a minimum bite of 2.5" length on all tension members.
   c. Plates shall be pressed or rolled into member to obtain full penetration without crushing the outer surfaces of wood.
   d. Steel plates at compression web members shall be designed to resist 100% of the compression force without considering wood to wood bearing.
   e. All steel plate dimensions shall be increased by 10% above that required by analysis. Stress increases for steel connector plate values for duration of load are not allowed.
4. Wood Members: All wood members of the truss shall be constructed of kiln dried lumber. The trusses shall be handled and stored in a manner to prevent moisture from being absorbed by the wood. Grade stamps shall be visible on framing members. Splices in chords shall occur at 1/4 of the panel span from a joint.
5. The trusses shall be designed by the truss supplier according to the following criteria:
   a. Bending moments in the top and bottom chords shall be based on the following moment coefficients:
      .... 1/8 for one and two continuous span conditions.
      .... 1/10 for three or more continuous span conditions.
   b. Web members shall be designed using an effective length factor:
      .... K = 1.0
6. Lateral Bracing: Lateral bracing and bridging may be required by the design of the pre-fabricated

VI. Wood

A. Materials:
1. Framing Lumber: Number 2 Douglas Fir-Larch or better or as noted otherwise
2. Laminated Veneer Lumber (LVL): All LVL members shall have the following minimum properties: Fb = 2600 psi, Fv = 285 psi, E = 1900 ksi.
3. Wood Structural Panel Sheathing: All panels shall be rated by the American Plywood Association (APA), Exposure 1. Panels shall be interior grade with exterior glue with the following panel span rating, unless noted otherwise,
   24/16 Roof
4. Nails: Standard Common with the following properties:

Nail Size	Shank Diameter	Min. Penetration into Support Member
6d	0.113"	1.25"
8d	0.131"	1.50"
10d	0.148"	1.63"
12d	0.148"	1.63"
16d	0.162"	1.75"

5. Bolts for connections: ASTM A307 with ASTM A563 heavy hex nuts and hardened washers, Grade A, unless noted otherwise.

B. Special Treatments (American Wood Preservers Institute Standards):
1. All wood in contact with concrete, masonry or soil: Pressure treat with Wolman CCA preservative or equal as approved by the Architect.
2. Fire Retardant: Pressure treat with Dricon or equal as approved by the Architect.
3. Poles and Piles: AWPI-CP-77, pentachlorophenal in heavy oil.

C. Minimum Nailing Requirements (See drawings for areas with greater requirements):
1. Roof: Nail all sheathing panels with 10d common nails at 6" o.c. at all supported edges and boundaries and at 12" o.c. at all intermediate supports. Use two plyclips between each support for spans of 48" o.c. and one plyclip between each support for lesser spans at all unsupported panel edges.
2. General Framing and Carpentry: Connect all items as per IBC Table 2304.9.1, "Fastening Schedule", unless noted otherwise.

D. Framing Connections
All Framing connections not shown or otherwise indicated on the drawings shall be connected in a manner similar to the connections shown in the drawings or with approved Simpson Strong-Tie Connectors or equal with approval of engineer.
(The following notations refer to Simpson Strong-Tie Connectors):
1. Framing Angles: "A" as required.
2. Hurricane Ties: "H"

E. Blocking, Bridging, and Bracing:
Provide solid shaped blocking at least 2 in.(nominal) thick and full depth of joist at ends and at each support of joist. Provide approved bridging at 8'-0" o.c. maximum between joist end supports. Solid blocking between joists shall be nailed to the wood plate at the top of the wall with one Simpson "A35" framing anchor per each piece of blocking. Fill all holes in the framing anchors with 8-d short nails.

F. Laminated built-up beams of 2X member 12 in. or less in depth shall be spiked together with not less than 16d spikes at twelve-inch (12 in.) centers, staggered. Unless so spiked, or if the depth of beam is more than twelve inches (12 in.), the laminations shall be connected together with 1/2" diameter bolts at 24 in. o.c. staggered. Bolts shall be placed 1/4 the depth of the member from the top and bottom of the member.

G. Pre-Fabricated Steel Plate Wood Trusses:
1. Design Loading: The truss manufacturer is responsible for design and fabrication of the trusses. They shall be designed to support the concentrated and other distributed loads as shown on the framing plans in addition to the following uniform loads:
   Dead Load (Top Chord) = 10 psf
   Dead Load (Bottom Chord) = 10 psf
   Live Load (Top Chord) = 18 psf (Balanced Snow) or 43 psf (Unbalanced Snow)*
   38 psf Total Load (w/balanced snow)
   ** Unbalanced Snow loads are only on one side of the ridge*
   Correlate the design with all mechanical equipment, fire sprinkling systems and hanging walls supported by the trusses. Provide extra trusses where required.
2. Submittals: Complete calculations and shop drawings indicating all member forces, stresses, lumber grades, dimensions, steel truss plate sizes and locations shall be submitted and reviewed by the engineer before fabrication. Each connector shall be dimensioned on the shop drawings as to its exact location at the joint. Shop drawings and calculations shall bear the seal of a professional engineer licensed in the State of Utah. After truss installation, the fabricator shall certify in writing that the trusses have been installed according to his specifications.
3. Steel Connector Plates: Use ~~only~~ galvanized steel connector plates that comply with the Truss Plate Institute publication, TPI 1-2002. All steel connector plates must be approved by the ICC Evaluation Services. Submit ~~a copy~~ of the ICC Code Evaluation Report for the connector plate used. Values established by this committee must be indicated on the shop drawings.
   a. The minimum size for any connector shall be 15 square inches.
   b. All steel gusset plates shall be located on the joint as the stresses require and shall provide a minimum bite of 2.5" length on all tension members.
   c. Plates shall be pressed or rolled into member to obtain full penetration without crushing the outer surfaces of wood.
   d. Steel plates at compression web members shall be designed to resist 100% of the compression force without considering wood to wood bearing.
   e. All steel plate dimensions shall be increased by 10% above that required by analysis. Stress increases for steel connector plate values for duration of load are not allowed.
4. Wood Members: All wood members of the truss shall be constructed of kiln dried lumber. The trusses shall be handled and stored in a manner to prevent moisture from being absorbed by the wood. Grade stamps shall be visible on framing members. Splices in chords shall occur at 1/4 of the panel span from a joint.
5. The trusses shall be designed by the truss supplier according to the following criteria:
   a. Bending moments in the top and bottom chords shall be based on the following moment coefficients:
      .... 1/8 for one and two continuous span conditions.
      .... 1/10 for three or more continuous span conditions.
   b. Web members shall be designed using an effective length factor:
      .... K = 1.0

6. Lateral Bracing: Lateral bracing and bridging may be required by the design of the pre-fabricated wood roof truss to reduce the buckling length of individual truss members and provide stability during erection. This bracing or bridging may be in the form of 2 x 4 horizontal bracing or bridging with 2 x 4 cross-bracing spaced at 24'-0" o.c. maximum and at each end of the bracing or bridging. The 2 x 4 cross bridging shall be connected to the truss top chord and the horizontal bridging with Simpson A35 each end. Locations of the lateral bracing and truss bridging is to be supplied and installed at the location specified on the pre-fabricated wood roof truss design ~~drawings by the General Contractor.~~
7. Other requirements for truss stability and erection shall comply with the Truss Plate Institute and the Wood Truss Components Association publication entitled "Building Component Safety Information (BCSI)" The contractor shall have a copy of this publication on site and shall be familiar with its contents. (1)
8. Prior to the fabrication of the pre-fabricated wood trusses, the contractor shall submit, in writing, ~~proof of compliance of in-plant inspection by an ICC approved independent~~ inspection agency. The in-plant inspections shall comply with section 1704.2 of the International Building Code.
9. The truss manufacturer's identification stamp shall be clearly visible.

H. Wood Decking:
1. Wood decking on the canopy shall be 2" nominal (1 1/2" net) x 6" nominal tongue and groove. Deck may be installed in either two span continuous or controlled random layup, unless specifically noted in the drawings.
2. Species and appearance grade of decking shall be according to the Architect's specifications. Minimum properties shall be as follows:
   Fb = 850 psi
   E = 2040000 psi
3. The maximum moisture content shall be 15%.
4. Decking is to be installed with tongues parallel on pitched roofs. It shall be installed with pattern faces down, unless noted otherwise. The minimum nailing shall be as follows: Every decking piece shall be nailed to each support with one 16d common nail toenailed through the tongue and one 16d common nail through the face.
5. Controlled random layup may only be used when all decking pieces are continuous for three or more spans.
   a. The distance between end joints in adjacent courses must be at least two feet. Joints in the same general line (within 6 inches) shall be separated by at least two intervening courses.
   b. Contiguous pieces must bear (and butt) on at least one support. The pieces the first and second courses, and repeating at least after each group of seven intervening courses, shall bear on two or more supports with end joints in these two courses occurring in alternate spans or on alternate supports.
   c. Decking pieces may be of specified length or may be of random lengths. If random lengths, odd or even lengths are permitted, and the minimum length percentages shall be as follows:
      Not less than 40% to be 14 ft. and longer.
      Not over 10% to be less than 10 ft.
      Not over 1% to be 4 or 5 ft.
      Minimum length is limited to 75% of the span length.
6. Two-Span Continuous. Alternate pieces in end spans are simple spans; adjacent pieces are two-span continuous. End joints shall be staggered in adjacent courses and occur over supports.

VII. Special Instructions

A. The project specifications are not superseded by the General Structural Notes but are intended to be complementary to them. Consult the specifications for additional requirements in each section. Notes and specific details on the drawings shall take precedence over General Structural Notes and typical details.

B. The architectural drawings are the prime contract drawings. Consultant drawings by other disciplines are supplementary to the architectural drawings. All omissions or conflicts, including dimensions, between the various elements of the consultants' drawings and/or specifications shall be brought to the attention of the Architect before proceeding with any work involved. In case of conflict, follow the most stringent requirement as directed by the Architect without additional cost to the owner. Any work done by the contractor after discovery of such discrepancy shall be done at the contractor's risk.

C. The structural drawings shall be used in conjunction with the architectural drawings. Primary structural elements and overall structural layout are indicated within the structural plans and details. Some secondary elements, architectural layouts, alcoves, elevations, slopes, depressions, curbs, mechanical equipment and electrical equipment, are not indicated within the structural drawings. Detailing and shop drawing production for structural elements will require information (including dimensions) contained in the architectural, structural and/or other consultants' drawings.

D. Shoring and Bracing Requirements:
1. Floor and Roof Structures -- The General Contractor is responsible for the method and sequence of all structural erection. He shall provide temporary shoring and bracing as his method of erection requires to provide adequate vertical and lateral support. Shoring and bracing shall remain in place as the chosen method requires until all permanent members are in place and all final connections are completed, including all roof and floor attachments. The building shall not be considered stable until all connections are complete.
2. Foundation walls must be braced until the complete floor or roof systems is completed. Do not backfill until floor or roof systems are in place.
3. Walls above grade shall be braced until the structural system is complete. Walls shall not be considered to be self supporting.

E. All expansion joints (E.J.) shown in the structural drawings shall be considered seismic separation joints, unless noted otherwise.

F. Submittals: A copy of all shop drawings that have been submitted for review must be kept at the construction site for reference. These drawings must bear the appropriate review stamps. The shop drawing review shall not relieve the contractor of the responsibility of completing the project according to the contract documents. The general contractor shall review and mark all shop drawings prior to submitting them to the Architect for his review. Shop Drawings made from reproductions of (these) contract drawings will be rejected.

G. Project Coordination: It shall be the responsibility of the general contractor to coordinate with all trades any and all items that are to be integrated into the structural system. Openings or penetrations through, or attachments to the structural system that are not indicated on these drawings shall be the responsibility of the general contractor and shall be coordinated with the Architect/Engineers. The order of construction is the responsibility of the general contractor. It is the contractor's obligation to provide all items necessary for his chosen procedure.

H. Contractor shall field verify all dimensions, and conditions. If the contract drawings do not represent actual conditions, contractor shall notify architect/engineer prior to fabrication or construction within that area.

I. Notice of Copyright: The structural drawings, plans, schedules, notes and details are hereby copyrighted by Reaveley Engineers and Associates, Inc., All Rights reserved. Submission or distribution of documents to meet official regulatory requirements or for similar purposes in connection with the project is not to be construed as publication in derogation of Reaveley Engineers & Associates, Inc.'s reserved rights. The documents defining the structure are instruments of service prepared by Reaveley Engineers and Associates, Inc. for one use only. Furthermore, these documents shall not be reproduced, or copied, in whole or in part by the contractor or his subcontractors for preparation of shop drawings or other submittals.

J. The steel fabricator shall be selected from the DFCM approved fabricator list. (1)

#170416 JEFFERY THOMAS MILLER UTAH
10/22/09

State of Utah
Department of Administrative Services
Division of Facilities Construction & Management
4110 State Office Building
Salt Lake City, Utah 84114
Phone: (801) 538 - 3018
Fax: (801) 538 - 3267
http://dfcm.utah.gov

CONSULTANTS:
LANDMARK DESIGN INCORPORATED

ajc architects
703 east 1700 south
salt lake city, utah 84105
ph: 801.466.8818
fx: 801.466.4411
ajc@ajcarchitects.com

REAVELEY ENGINEERS + ASSOCIATES
Consulting Structural Engineers
675 E. 500 S. Suite 400
Salt Lake City, UT 84102
P:801.486.3883
F:801.485.0911
www.reaveley.com

PROJECT NAME AND ADDRESS:
ESCALANTE HERITAGE CENTER
1281 EAST HIGHWAY 12
ESCALANTE, UTAH

COPYRIGHT:
ALL RIGHTS RESERVED ©
LANDMARK DESIGN, INC.
These documents are protected under the United States 1978 copyright act. It is an exclusive work of original authorship. None of the pictorial, graphic, or technical charts or drawings depicted may be reproduced by any method, mechanical, electronic, or otherwise; nor may they be used or re-used for any purpose without the express prior written permission of Landmark Design, Inc.

MARK	DATE	DESCRIPTION
1	10.20.09	DFCM REVIEW

ISSUE TYPE: 100% SUBMITTAL

ISSUE DATE: 8.13.09

DFCM PROJECT NO:	09018900
CAD PROJECT NO:	0860
CAD DWG FILE:	--
DRAWN BY:	D MANNING
CHK'D BY:	A BUCHANAN
COPYRIGHT:	--

SHEET TITLE:
GENERAL STRUCTURAL NOTES

SHEET NUMBER:
SE002

SHEET OF

GENERAL STRUCTURAL NOTES

VIII. Quality Assurance

A. Quality Assurance Agency Requirements:
1. The owner shall engage a qualified Quality Assurance Agency (QAA) to provide all special inspection and quality assurance testing for the project. All quality assurance personnel assigned to the project shall demonstrate competence, to the satisfaction of the building official, for inspection of the particular type of construction or operation requiring special inspection.
2. Prior to construction, the QAA shall prepare a written Quality Assurance Implementation Plan (QAIP) for the project. The QAIP shall include a list of personnel assigned to the project including management personnel, inspection procedures and frequency, proposed testing methods and frequency of testing, and reporting procedures. The QAIP shall also outline methods of documenting deficiencies and reporting corrections. A copy of the QAIP shall be given to the contractor for review and coordination with subcontractors.
3. Prior to construction, the QAA shall submit the following information to the Architect and Engineer of Record for approval:
   a. A copy of the Quality Assurance Implementation Plan for the project.
   b. A copy of the appropriate certification and training records for each individual performing inspections or testing.
   c. A list of the testing equipment designated for the project and recent calibration records for the equipment.
   d. Sample inspection and testing reports and the distribution list for the reports.
4. The special inspector shall inspect the work per Chapter 17 of the IBC for conformance with the contract documents. The special inspector shall send reports to the owner, building official, architect, engineer, and contractor. All discrepancies shall be brought to the immediate attention of the contractor for correction. The QAA shall submit a final signed report stating that the special inspection work was, to the best of their knowledge, in conformance with the plans, specifications and applicable workmanship provisions of the IBC.

B. Seismic Force Resisting Systems
1. Elements that are a part of the Main Seismic Force Resisting System for the structure may require increased quality assurance inspection and testing. The Main Seismic Force Resisting system for the structure includes the following elements:
   a. Masonry walls.
   b. Steel columns that are part of a steel moment frame.
   c. Footings and foundation systems that directly support walls, columns and braces referenced above.
   d. Roof decking.
   e. All elements labeled as "drag struts" or "chords."
   f. Connections between the elements referenced above.

C. Special Inspection: Special Inspection shall be provided for the following elements per IBC sections 1704 and 1707:
1. Concrete and elements embedded in concrete shall be special inspected prior to and during placement of concrete. Special inspection of concrete shall include the following:
   a. Reinforcing steel size and placement.
   b. Surface preparation at cold joints including placement of keyways.
   c. Bolt and embed size, configuration and placement.
   d. Concrete shall receive continuous special inspection during placement, and periodic inspection after placement to ensure proper curing and weather protection procedures.
2. Structural steel fabrication and erection shall be special inspected, including the following:
   a. High strength bolts per IBC 1704.3.3 and IBC section 2209.
   b. Fillet welds smaller than 5/16" per AWS D1.1.
   c. Fillet welds larger than 5/16", multiple pass welds, and all groove welds shall receive continuous special inspection during weld placement per AWS D1.1.
   d. Welding of reinforcing steel shall receive continuous special inspection during weld placement per AWS D1.1.
   e. Welding of Headed Stud Anchors (HSA) and Deformed Bar Anchors (DBA) shall be inspected to comply with AWS D1.1 Section 7.6 through 7.8 and Annex IX.
   f. Welding primary members of moment frames shall receive continuous special inspection to comply with AWS D1.1 and AISC 358, and the special provisions for moment frames in the structural steel sections of the GSN and specifications.
3. Structural Masonry: Special inspection shall be provided, as follows:
   a. As masonry construction begins, and periodically during construction, verify the following are in compliance:
      (1) Proportions of site-mixed mortar and grout.
      (2) Placement of masonry units and construction of mortar joints.
      (3) Locations of reinforcement, connectors and embeds.
      (4) Protection of masonry during cold or hot weather.
   b. Prior to grouting, verify the following are in compliance:
      (1) Grout space.
      (2) Size and location of structural elements.
      (3) Grade, size and placement of reinforcement, connectors and embeds.
      (4) Construction of all mortar joints.
   c. Continuous inspection is required during placement of grout and during preparation of grout specimens, mortar specimens, and/or prisms for testing.
4. Post-installed anchors, including but not limited to expansion anchors, adhesive anchors and rebar dowels, and low velocity fasteners, shall receive special inspection per the code evaluation reports for the anchors.
   a. Continuous special inspection is required during the installation of all adhesive anchors and rebar dowels. Special inspector shall verify the following:
      (1) Anchor size and steel grade.
      (2) Hole diameter, location, and type of drill bit.
      (3) Cleanliness of hole and anchor.
      (4) Adhesive application.
      (5) Anchor embedment.
5. Wood: Nailing of wood roof diaphragms and installation of anchor bolts, hold down anchors, seismic straps and other elements of the main seismic force resisting system shall receive special inspection per IBC 1707.3.

D. Structural Testing: The following materials shall be tested per IBC sections 1704 and 1708. The owner reserves the right to test any and all materials using any appropriate non-destructive procedure. Any items found to be deficient shall be corrected and retested at no additional cost to the owner.
1. Earthwork: All compacted structural fill shall be tested to verify soil gradation, lift thickness, and compaction requirements. See the specifications and earthwork section of the GSN for testing frequency and acceptability criteria.
2. Concrete Strength Verification and Testing. All concrete shall be tested to verify strength, slump, unit weight, air content, and temperature. See the specifications for testing criteria, testing frequency and acceptability criteria.
3. Masonry Strength Verification:
   a. Masonry strength, f'm shall be verified using the "Unit Strength Method" per IBC Section 2105.2.2.1 and as follows: Prior to construction, the masonry units and grout shall be tested for compressive strength. Certificates of compliance with strength requirements of the masonry units and grout shall be submitted by the masonry and grout suppliers. During construction, the masonry units and grout shall be tested for every 5,000 square feet of masonry constructed per GSN IV.A, above. Proportions of materials in mortar and grout delivered to the site shall be verified.
   b. The contractor has the option of using the "Masonry Prism Test Method" per IBC Section 2105.2.2.2, in lieu of the "Unit Strength Method."
4. Welded connections shall be tested for compliance according to IBC Table 1704.3, AWS D1.1 and the contract specifications and plans. As a minimum, the testing shall include the following:
   a. All complete penetration groove welds shall be tested 100 percent either by ultrasonic testing or by radiography.
   b. Partial penetration groove welds shall be tested either by ultrasonic testing or radiography. A minimum of 50% of these welds shall be tested.
   c. Any material discontinuities shall be accepted or rejected on the basis of the defect rating in accordance with the testing in AWS D1.1 Chapter 6, excluding Sections 6.1 through and including 6.6. All deficient welds shall be corrected and retested at no additional cost to the owner.
5. Post-installed anchors, including but not limited to expansion anchors, adhesive anchors, and low velocity fasteners, shall be tested per the code evaluation reports for the anchors.

E. Structural Observations by the Engineer of Record.
1. The Engineer of Record may perform structural observations at critical phases of the project. Copies of the engineer's report will be distributed to the architect, contractor, owner, and QAA.
2. Observation visits to the site by the Engineer's field representatives shall not be construed as inspection or approval of construction.
3. Notification of Engineer: The contractor shall notify the engineer twenty-four hours prior to:
   a. Placing concrete in any footing.
   b. Closing any wall forms.
   c. Placing concrete in any column, beam or suspended slab.
   d. Grouting any masonry.
   e. Completing the welding of major sections of steel decking.
   f. Completing the nailing of any plywood wall or deck.

F. Contractor Responsibility: The contractor shall prepare and submit a written statement of responsibility to the building official and the owner prior to commencement of work on the project. As a minimum the statement shall contain the following information:
1. Acknowledgement of the quality assurance requirements for the structure.
2. Acknowledgement of receipt of the Quality Assurance Implementation Plan (QAIP) from the testing agency.
3. Acknowledgement that control will be exercised to obtain conformance to the Contract Documents and the QAIP.
4. Quality control procedures within the contractors organization, methods and frequency of reporting, and distribution of the reports.
5. Identification and qualifications of the person(s) responsible for quality control and their position(s) in the organization.

ABBREVIATIONS

AB	ANCHOR BOLT (S)	JT	JOINT
ABV	ABOVE	JST	JOIST
@	AT	KLF	KIPS PER LINEAL FOOT
ALT	ALTERNATE	KSF	KIPS PER SQUARE FOOT
APPROX	APPROXIMATE	KSI	KIPS PER SQUARE INCH
ARCH	ARCHITECT(URAL)	K	KIPS – 1,000 POUNDS
BM	BEAM	LF	LINEAL FOOT
BLW	BELOW	LBS	POUNDS
BRG	BEARING	LLH	LONG LEG HORIZONTAL
BTWN	BETWEEN	LLV	LONG LEG VERTICAL
BLDG	BUILDING	MAS	MASONRY
BOT	BOTTOM	MAX	MAXIMUM
		MCJ	MASONRY C.J.
C.J.	CONSTRUCTION JOINT OR CONTROL JOINT	MECH	MECHANICAL
CJP	COMPLETE JOINT PENETRATION	MFR	MANUFACTURER
CMU	CONC MASONRY UNIT	MIN	MINIMUM
COL	COLUMN	MISC	MISCELLANEOUS
CONC	CONCRETE	NIC	NOT IN CONTRACT
CONST	CONSTRUCTION	NTS	NOT TO SCALE
CONT	CONTINUOUS		
CONTR	CONTRACTOR	OPNG	OPENING
CTR	CENTER	OPP	OPPOSITE
		O.C.	ON CENTER
DB	DECK BEARING	O.F.	OUTSIDE FACE
DBA	DEFORMED BAR ANCHORS	OWSJ	OPEN WEB STEEL JOIST
DBL	DOUBLE		
DET	DETAIL	PCF	POUNDS/CUBIC FOOT
DIA (OR ø)	DIAMETER	PL	PLATE
DIM	DIMENSION	PLF	POUNDS/LINEAL FOOT
DN	DOWN	PNL	PANEL
DWG	DRAWING	PSF	POUNDS/SQ FOOT
DWL	DOWEL	PSI	POUNDS/SQ INCH
		PT	POINT
EA	EACH		
E.J.	EXPANSION JOINT	REINF	REINFORCING
	(SEISMIC SEPARATION JOINT)	R.D.	ROOF DRAIN
ELEV	ELEVATION	REQ'D	REQUIRED
ELEC	ELECTRICAL		
EQUIP	EQUIPMENT	SHT	SHEET
EQ	EQUAL	SI	SPECIAL INSPECTION
EXIST	EXISTING	SOG	SLAB ON GRADE
EXP	EXPANSION / EXPOSED	STD	STANDARD
EXT	EXTERIOR	STIFF	STIFFENER
E.F.	EACH FACE	STL	STEEL
E.W.	EACH WAY	SQ	SQUARE
F.D	FLOOR DRAIN	SIM	SIMILAR
FDTN	FOUNDATION	STR	STRUCTURAL
F.F.	FINISH FLOOR	STAG	STAGGERED
FIN	FINISH		
FL	FLOOR	T&B	TOP AND BOTTOM
FT	FOOT	TEMP	TEMPERATURE
FTG	FOOTING	THDS	THREADS
FV	FIELD VERIFY	T.O.	TOP OF
		TOC	TOP OF CONCRETE
GA	GAUGE	TOF	TOP OF FOOTING
GALV	GALVANIZED	TOS	TOP OF SLAB
GLB	GLU-LAMINATED BEAM	TOW	TOP OF WALL
GR	GRADE	TYP	TYPICAL
GSN	GENERAL STRUCTURAL NOTES		
HB	HORIZONTAL BRIDGING	UNO	UNLESS NOTED OTHERWISE
HT	HEIGHT		
HORIZ	HORIZONTAL	VERT	VERTICAL
HSA	HEADED STUD ANCHORS	W/	WITH
		WWF	WELDED WIRE FABRIC
IBC	INTERNATIONAL BUILDING CODE		
ICBO	INTERNATIONAL CONFERENCE OF BUILDING OFFICIALS		
ICC	INTERNATIONAL CODE COUNCIL		
IN.	INCH		
INSUL	INSULATION		
INT	INTERIOR		
I.F.	INSIDE FACE		

State of Utah
Department of Administrative Services

Division of Facilities Construction & Management
4110 State Office Building
Salt Lake City, Utah 84114
Phone: (801) 538 - 3018
Fax: (801) 538 - 3267

http://dfcm.utah.gov

CONSULTANTS:

LANDMARK DESIGN INCORPORATED
LANDSCAPE ARCHITECTURE AND LAND PLANNING
8834 HIGHLAND DRIVE SALT LAKE CITY UTAH 84106 PHONE (801) 474-3300 FAX (801) 474-3308

ajc architects
703 east 1700 south
salt lake city, utah 84105
ph: 801.466.8818
fx: 801.466.4411
ajc@ajcarchitects.com

REAVELEY ENGINEERS + ASSOCIATES
Consulting Structural Engineers
675 E. 500 S. Suite 400
Salt Lake City, UT 84102
P:801.486.3883
F:801.485.0911
www.reaveley.com

PROJECT NAME AND ADDRESS:

ESCALANTE HERITAGE CENTER

1281 EAST HIGHWAY 12
ESCALANTE, UTAH

COPYRIGHT:

ALL RIGHTS RESERVED © LANDMARK DESIGN, INC.
These documents are protected under the United States 1978 copyright act. It is an exclusive work of original authorship. None of the pictorial, graphic, or technical charts or drawings depicted may be reproduced by any method, mechanical, electronic, or otherwise; nor may they be used or re-used for any purpose without the express prior written permission of Landmark Design, Inc.

MARK	DATE	DESCRIPTION
1	08.10.09	DFCM REVIEW

ISSUE TYPE: 100% SUBMITTAL

ISSUE DATE: 8.13.09

DFCM PROJECT NO:	09018900
CAD PROJECT NO:	0860
CAD DWG FILE:	--
DRAWN BY:	D MANNING
CHK'D BY:	A BUCHANAN
COPYRIGHT:	--

SHEET TITLE:

GENERAL STRUCTURAL NOTES

SHEET NUMBER:

SE003

SHEET OF

LICENSED CERTIFIED STRUCTURAL ENGINEER #170416 JEFFERY THOMAS MILLER UTAH
8/10/09

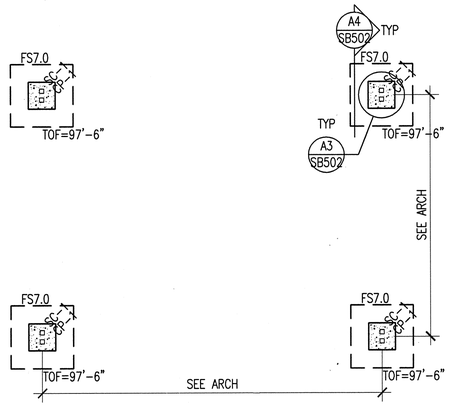

FOOTING & FOUNDATION PLAN
PAVILION BUILDING
SCALE: 1/8"=1'-0"

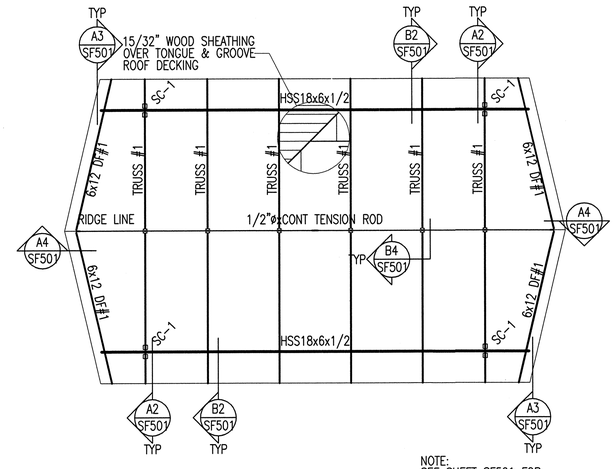

NOTE:
SEE SHEET SF501 FOR TRUSS ELEVATION.

ROOF FRAMING PLAN
PAVILION BUILDING
SCALE: 1/8"=1'-0"

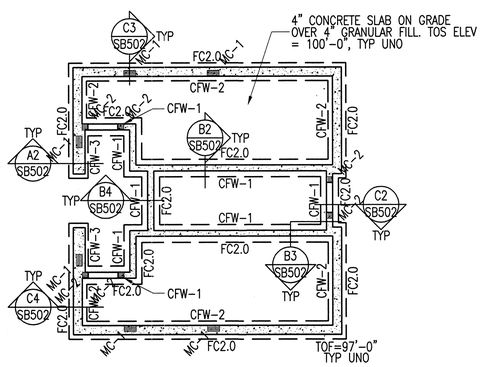

FOOTING & FOUNDATION PLAN
RESTROOM BUILDING
SCALE: 1/8"=1'-0"

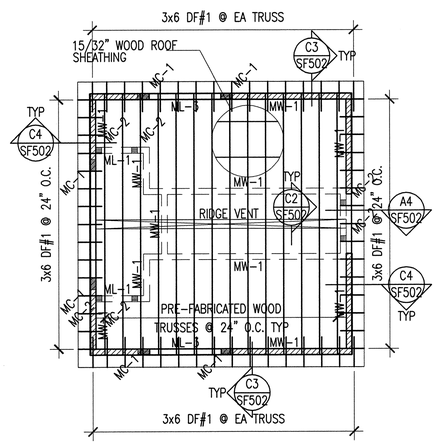

ROOF FRAMING PLAN
RESTROOM BUILDING
SCALE: 1/8"=1'-0"

PLAN LEGEND

- FOOTING – CONTINUOUS
- FOOTING – SQUARE FOOTING – RECTANGULAR FOOTING – MAT FOOTING
- CONCRETE WALL, CONCRETE FOUNDATION WALL, OR CONCRETE RETAINING WALL
- CONCRETE FOUNDATION WALL – RECESSED
- CONCRETE PIER
- MASONRY WALL
- MASONRY WALL – RECESSED
- MASONRY COLUMN IN MASONRY WALL
- STEEL COLUMN – TUBE
- GLU-LAM, MICRO-LAM OR WOOD BEAM
- JOIST OR TRUSS
- STEEL BEAM OR GIRDER
- 0" CHANGE IN ELEVATION
- CJ SLAB CONTROL/CONSTRUCTION JOINT
- RECESSED/DEPRESSED SLAB
- OPENING

FOOTING & FOUNDATION PLAN NOTES

NOTE-FOOTING

1. SEE ARCHITECTURAL, CIVIL AND LANDSCAPE DRAWINGS FOR EXTERIOR CONCRETE WORK AT DOORS, SIDEWALKS ETC.
2. SEE ARCHITECTURAL DRAWINGS AND FINISH SCHEDULE FOR SLAB AREAS TO RECEIVE FLOOR TILE.
3. SEE ARCHITECTURAL DRAWINGS FOR SLAB DEPRESSIONS AND SLOPES TO DRAINS, ETC.
4. SEE ARCHITECTURAL, CIVIL AND LANDSCAPE DRAWINGS FOR ADDITIONAL EXTERIOR CONCRETE RETAINING AND / OR SITE WALLS NOT SHOWN ON THE STRUCTURAL DRAWINGS.
5. SEE C1/SB501 FOR TYPICAL REINFORCEMENT AT WALL CORNERS AND INTERSECTIONS.
6. SEE C2/SB501 FOR TYPICAL DETAIL AT SLAB JOINTS IN CONCRETE SLABS ON GRADE.
7. SEE C3/SB501 FOR REINFORCEMENT AT DISCONTINUOUS CONSTRUCTION / CONTROL JOINTS IN CONCRETE SLAB ON GRADE.
8. SEE C4/SB501 FOR TYPICAL RECESSES IN 8" MASONRY WALL.
9. SEE B4/SB501 FOR COMPACTED STRUCTURAL FILL REQUIREMENTS.

WOOD FRAMING PLAN NOTES

1. ALL FRAMING ANCHORS SHALL BE SIMPSON STRONG-TIE OR ICBO EQUIVALENT.
2. SEE B2/SF601 FOR TYPICAL LAYOUT OF WOOD DECK PANELS ON STRUCTURE.
3. PROVIDE 1" MINIMUM GAP BETWEEN THE BOTTOM OF THE PRE-FABRICATED WOOD TRUSSES & THE TOP OF INTERIOR NON-BEARING MASONRY WALLS.
4. PRE-FABRICATED WOOD TRUSSES SHALL BE DESIGNED FOR THE FOLLOWING MOMENTS ON THE ENDS OF EACH TRUSS: 120 lb/ft & -40 lb/ft (UPLIFT)

LICENSED CERTIFIED STRUCTURAL ENGINEER #170416 JEFFERY THOMAS MILLER UTAH
8/10/09

State of Utah
Department of Administrative Services
Division of Facilities Construction & Management
4110 State Office Building
Salt Lake City, Utah 84114
Phone: (801) 538 - 3018
Fax: (801) 538 - 3267
http://dfcm.utah.gov

CONSULTANTS:

LANDMARK DESIGN
LANDSCAPE ARCHITECTURE AND SITE PLANNING
1054 WASHINGTON AVENUE
SALT LAKE CITY
UTAH 84105
PHONE (801) 474-1000
FAX (801) 474-1001

ajc architects
703 east 1700 south
salt lake city, utah 84105
ph: 801.466.8818
fx: 801.466.4411
ajc@ajcarchitects.com

REAVELEY ENGINEERS + ASSOCIATES
Consulting Structural Engineers
675 E. 500 S. Suite 400
Salt Lake City, UT 84102
P:801.486.3883
F:801.485.0911
www.reaveley.com

PROJECT NAME AND ADDRESS:

ESCALANTE HERITAGE CENTER

1281 EAST HIGHWAY 12
ESCALANTE, UTAH

COPYRIGHT:

ALL RIGHTS RESERVED ©
LANDMARK DESIGN, INC.
These documents are protected under the United States 1978 copyright act. It is an exclusive work of original authorship. None of the pictorial, graphic, or technical charts or drawings depicted may be reproduced by any method, mechanical, electronic, or otherwise; nor may they be used or re-used for any purpose without the express prior written permission of Landmark Design, Inc.

MARK	DATE	DESCRIPTION

ISSUE TYPE: 100% SUBMITTAL

ISSUE DATE: 8.13.09

DFCM PROJECT NO:	09018900
CAD PROJECT NO:	0860
CAD DWG FILE:	--
DRAWN BY:	D MANNING
CHK'D BY:	A BUCHANAN
COPYRIGHT:	--

SHEET TITLE:

STRUCTURAL PLANS

SHEET NUMBER:

SB101

SHEET OF

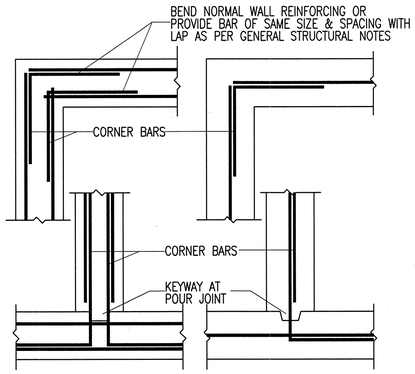

C1 SB501 CF-TYP02 TYPICAL REINFORCEMENT AT TYPICAL WALL CORNERS & INTERSECTIONS - PLAN VIEW
NO SCALE

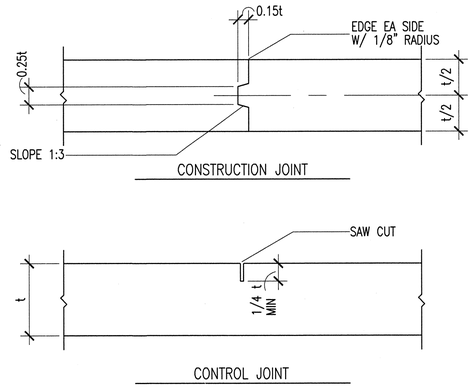

C2 SB501 CF-TYP03 TYPICAL SLAB JOINTS
NO SCALE

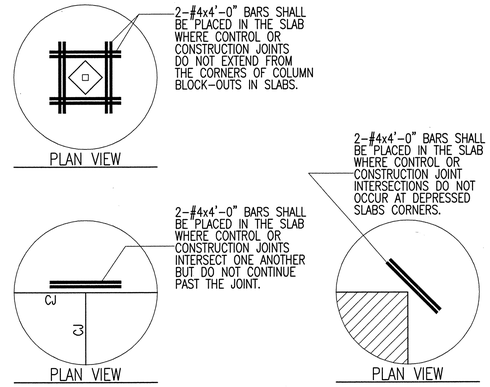

C3 SB501 CF-TYP10 TYPICAL SLAB REINFORCING AT DISCONTINUOUS SLAB JOINTS
NO SCALE

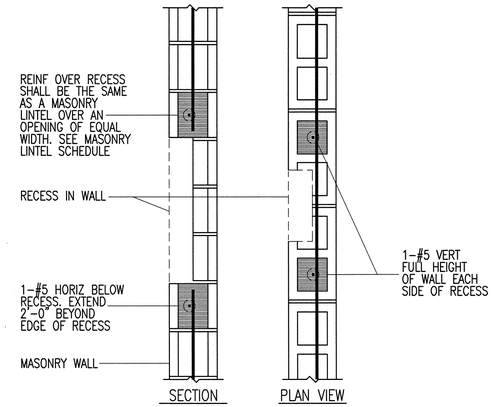

C4 SB501 CF-TYP07 TYPICAL RECESS IN 8" MASONRY WALL
NO SCALE

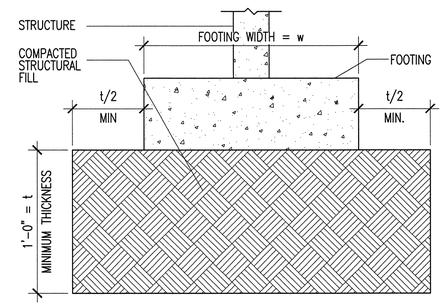

COMPACTED STRUCTURAL FILL:
ALL FILL MATERIAL SHALL BE A WELL-GRADED GRANULAR MATERIAL WITH A MAXIMUM SIZE LESS THAN 3 INCHES AND WITH NOT MORE THAN 10 PERCENT PASSING A NO. 200 SIEVE. IT SHALL BE COMPACTED TO 95 PERCENT OF THE MAXIMUM LABORATORY DENSITY AS DETERMINED BY ASTM D-1557. ALL FILL SHALL BE TESTED (SEE SPECIFICATIONS).

B4 SB501 CF-TYP09 TYP COMPACTED STRUCTURAL FILL DETAIL
NO SCALE

LICENSED PROFESSIONAL ENGINEER #170416 JEFFREY THOMAS MILLER STATE OF UTAH 10/22/09

State of Utah
Department of Administrative Services
Division of Facilities Construction & Management
4110 State Office Building
Salt Lake City, Utah 84114
Phone: (801) 538 - 3018
Fax: (801) 538 - 3267
http://dfcm.utah.gov

CONSULTANTS:
LANDMARK DESIGN
ajc architects
703 east 1700 south
salt lake city, utah 84105
ph: 801.466.8818
fx: 801.466.4411
ajc@ajcarchitects.com
REAVELEY ENGINEERS + ASSOCIATES
Consulting Structural Engineers
675 E. 500 S. Suite 400
Salt Lake City, UT 84102
P:801.486.3883
F:801.485.0911
www.reaveley.com

PROJECT NAME AND ADDRESS:

ESCALANTE HERITAGE CENTER

1281 EAST HIGHWAY 12
ESCALANTE, UTAH

COPYRIGHT:
ALL RIGHTS RESERVED © LANDMARK DESIGN, INC.
These documents are protected under the United States 1978 copyright act. It is an exclusive work of original authorship. None of the pictorial, graphic, or technical charts or drawings depicted may be reproduced by any method, mechanical, electronic, or otherwise; nor may they be used or re-used for any purpose without the express prior written permission of Landmark Design, Inc.

MARK	DATE	DESCRIPTION

ISSUE TYPE: 100% SUBMITTAL

ISSUE DATE: 8.13.09

DFCM PROJECT NO:	09018900
CAD PROJECT NO:	0860
CAD DWG FILE:	--
DRAWN BY:	D MANNING
CHK'D BY:	A BUCHANAN
COPYRIGHT:	--

SHEET TITLE:

FOOTING & FOUNDATION DETAILS

SHEET NUMBER:

SB501

SHEET OF

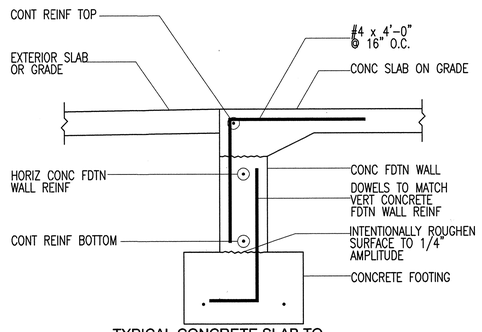

C2 / SB502 TYPICAL CONCRETE SLAB TO FOUNDATION WALL AT DOOR OPENING
NO SCALE
CW1-CF16

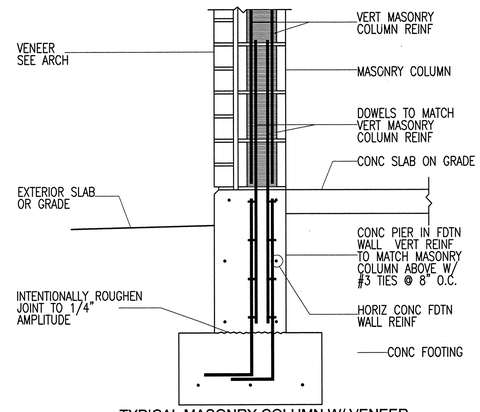

C3 / SB502 TYPICAL MASONRY COLUMN W/ VENEER ON CONCRETE PIER IN FOUNDATION WALL
NO SCALE
2009-009-SB502/C3

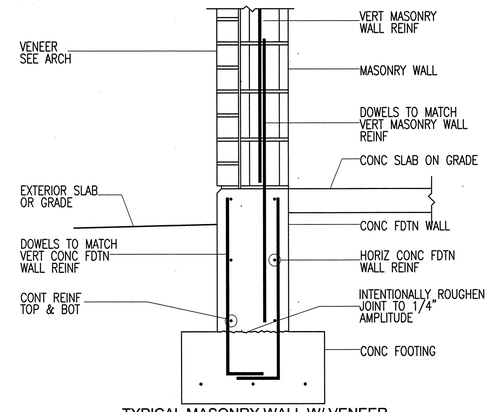

C4 / SB502 TYPICAL MASONRY WALL W/ VENEER ON CONCRETE FOUNDATION WALL
NO SCALE
2009-009-SB502/C4

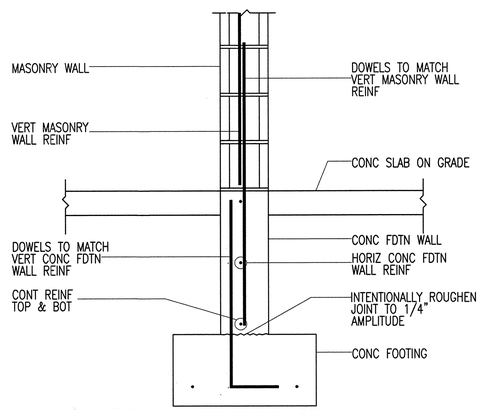

B2 / SB502 TYPICAL MASONRY WALL ON FOUNDATION WALL
NO SCALE
2009-009-SB501/B2

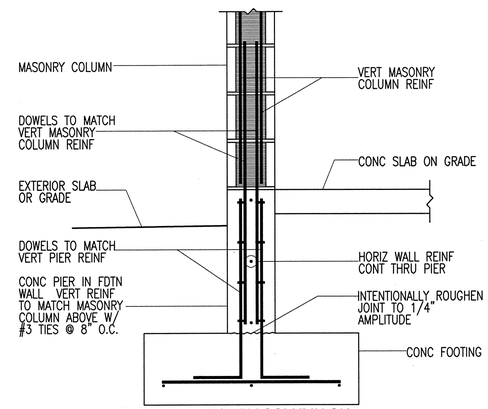

B3 / SB502 TYPICAL MASONRY COLUMN ON CONCRETE PIER IN FOUNDATION WALL
NO SCALE
MW1CFW02

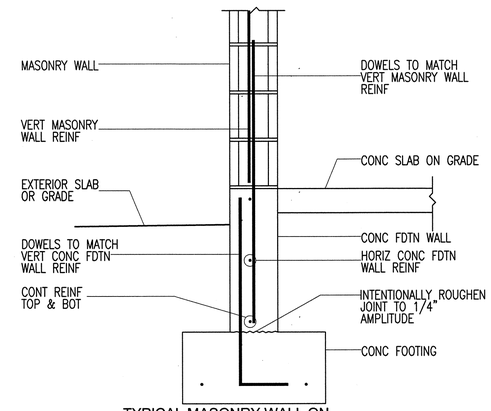

B4 / SB502 TYPICAL MASONRY WALL ON FOUNDATION WALL
NO SCALE
MW1CFW01

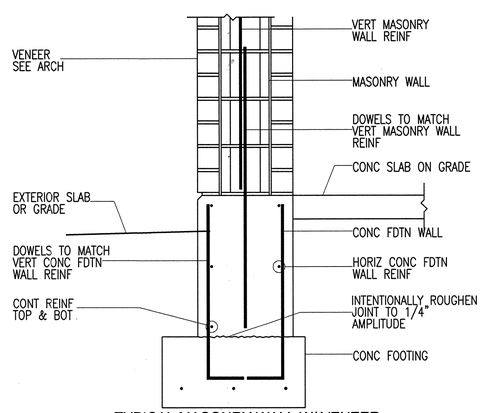

A2 / SB502 TYPICAL MASONRY WALL W/ VENEER ON CONCRETE FOUNDATION WALL
NO SCALE
2009-009-SB502/A2

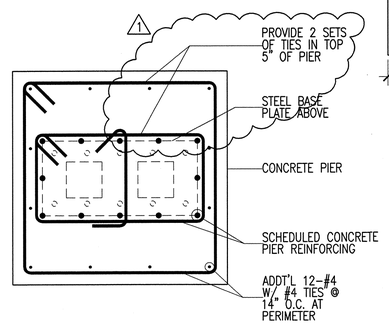

A3 / SB502 CONCRETE PIER - PLAN VIEW
NO SCALE
2009-009-SB502/A3

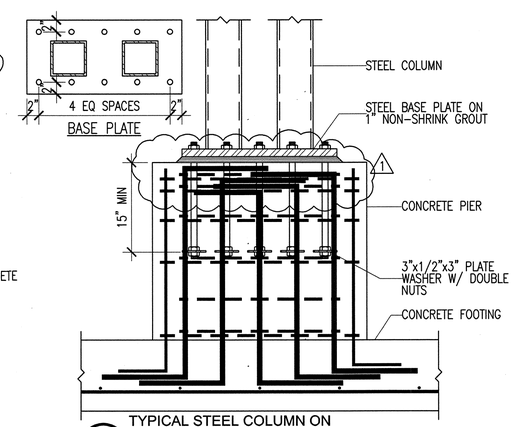

A4 / SB502 TYPICAL STEEL COLUMN ON CONCRETE PIER
NO SCALE
2009-009-SB501/A4

LICENSED REGISTERED STRUCTURAL ENGINEER #170416 JEFFERY THOMAS MILLER UTAH
8/14/09

State of Utah
Department of Administrative Services
Division of Facilities Construction & Management
4110 State Office Building
Salt Lake City, Utah 84114
Phone: (801) 538 - 3018
Fax: (801) 538 - 3267
http://dfcm.utah.gov

CONSULTANTS:
LANDMARK DESIGN
LANDSCAPE ARCHITECTURE AND LAND PLANNING
ajc architects
703 east 1700 south
salt lake city, utah 84105
ph: 801.466.8818
fx: 801.466.4411
ajc@ajcarchitects.com
REAVELEY ENGINEERS + ASSOCIATES
Consulting Structural Engineers
675 E. 500 S. Suite 400
Salt Lake City, UT 84102
P:801.486.3883
F:801.485.0911
www.reaveley.com

PROJECT NAME AND ADDRESS:

ESCALANTE HERITAGE CENTER

1281 EAST HIGHWAY 12
ESCALANTE, UTAH

COPYRIGHT:

ALL RIGHTS RESERVED © LANDMARK DESIGN, INC.
These documents are protected under the United States 1978 copyright act. It is an exclusive work of original authorship. None of the pictorial, graphic, or technical charts or drawings depicted may be reproduced by any method, mechanical, electronic, or otherwise; nor may they be used or re-used for any purpose without the express prior written permission of Landmark Design, Inc.

MARK	DATE	DESCRIPTION
1	08.10.09	DFCM REVIEW

ISSUE TYPE: 100% SUBMITTAL

ISSUE DATE: 8.13.09

DFCM PROJECT NO:	09018900
CAD PROJECT NO:	0860
CAD DWG FILE:	--
DRAWN BY:	D MANNING
CHK'D BY:	A BUCHANAN
COPYRIGHT:	--

SHEET TITLE:

FOOTING & FOUNDATION DETAILS

SHEET NUMBER:

SB502

SHEET OF

CONCRETE REINFORCING BAR LAP SPLICE SCHEDULE

RBLS-1

BAR SIZE Fy = 60 KSI	TENSION BARS																COMP. BARS
	f'c = 3000 PSI				f'c = 4000 PSI				f'c = 5000 PSI				f'c = 6000 PSI				f'c = ALL
	REGULAR CLASS		TOP CLASS		REGULAR CLASS		TOP CLASS		REGULAR CLASS		TOP CLASS		REGULAR CLASS		TOP CLASS		
	A	B	A	B	A	B	A	B	A	B	A	B	A	B	A	B	
#3	17"	22"	22"	28"	15"	19"	19"	25"	13"	17"	17"	22"	12"	16"	16"	20"	12"
#4	22"	29"	29"	38"	19"	25"	25"	33"	17"	23"	23"	29"	16"	21"	21"	27"	15"
#5	28"	36"	36"	47"	24"	31"	31"	41"	22"	28"	28"	36"	20"	26"	26"	33"	19"
#6	33"	43"	43"	56"	29"	37"	37"	49"	26"	34"	34"	44"	24"	31"	31"	40"	23"
#7	48"	63"	63"	81"	42"	54"	54"	71"	38"	49"	49"	63"	34"	45"	45"	58"	27"
#8	55"	72"	72"	93"	48"	62"	62"	81"	43"	56"	56"	72"	39"	51"	51"	66"	30"
#9	62"	81"	81"	105"	54"	70"	70"	91"	48"	63"	63"	81"	44"	57"	57"	74"	34"
#10	70"	91"	91"	118"	61"	79"	79"	102"	54"	71"	71"	92"	50"	64"	64"	84"	39"
#11	78"	101"	101"	131"	67"	87"	87"	114"	60"	78"	78"	102"	55"	71"	71"	93"	43"

NOTES: THESE NOTES SHALL BE USED FOR ALL SPLICES, UNLESS NOTED OTHERWISE ON DRAWINGS.

1. TOP BARS ARE HORIZONTAL BARS, SPLICED SO THAT 12" OR MORE OF FRESH CONCRETE IS CAST IN THE MEMBER BELOW THE REINFORCING BAR.
2. CLASS A SPLICES MAY BE USED ONLY WHEN 50% OR LESS OF THE BARS ARE SPLICED WITHIN THE LAP SPLICE LENGTH.
3. CLASS B SPLICES SHALL BE USED FOR ALL SPLICES IN SLABS, BEAMS, JOISTS, WALLS, MOMENT RESISTING COLUMNS, AND JAMB COLUMNS, UNLESS THEY MEET THE REQUIREMENTS OF NOTE #2 ABOVE.
4. TIES AND STIRRUPS SHALL NOT BE SPLICED.
5. A. FOR BUNDLED BARS OF THREE OR LESS, LAP SPLICE LENGTHS SHALL BE MULTIPLIED BY 1.2.
   B. FOR BUNDLED BARS OF FOUR OR MORE, LAP LENGTHS SHALL BE MULTIPLIED BY 1.33.
   C. INDIVIDUAL BAR SPLICES WITHIN A BUNDLE SHALL NOT OVERLAP. ENTIRE BUNDLES SHALL NOT BE LAP SPLICED.
6. FOR ALL LIGHTWEIGHT CONCRETE, LAP LENGTHS SHALL BE MULTIPLIED BY 1.3.
7. FOR ALL EPOXY COATED BARS WITH COVER LESS THAN 3 BAR DIAMETERS OF CLEAR SPACING LESS THAN 6 BAR DIAMETERS THE LAP SPLICE LENGTHS SHALL BE MULTIPLIED BY 1.5. FOR ALL OTHER EPOXY BARS THE SPLICE LENGTHS SHALL BE MULTIPLIED BY 1.2
8. THE BAR LAP SPLICE LENGTHS SHALL BE MULTIPLIED BY 1.5 WHEN EITHER OF THE FOLLOWING IS TRUE:
   A. CLEAR SPACING OF BARS BEING DEVELOPED IS LESS THAN ONE BAR DIAMETER, CLEAR COVER IS LESS THAN ONE BAR DIAMETER AND STIRRUPS OR TIES ALONG THE LENGTH OF THE SPLICE ARE LESS THAN THE CODE MINIMUM.
   B. CLEAR SPACING OF BARS BEING DEVELOPED IS LESS THAN 2 BAR DIAMETERS AND CLEAR COVER IS LESS THAN ONE BAR DIAMETER.

AS PER ACI 318-05

MASONRY REINFORCING BAR LAP SPLICE SCHEDULE

MRBLS-2000

BAR SIZE	f'm = 2000 psi							f'm = 2500 psi		
	6" CMU CLASS	8" CMU CLASS		10" CMU CLASS		12" CMU CLASS		6" ATLAS CLASS	8" ATLAS CLASS	
	A	A	B	A	B	A	B	A	A	B
#3	17"	17"	17"	17"	17"	17"	17"	15"	15"	15"
#4	22"	22"	26"	22"	24"	22"	24"	20"	20"	24"
#5	34"	27"	42"	27"	39"	27"	39"	31"	24"	40"
#6	70"	50"	91"	46"	80"	46"	80"	64"	45"	87"
#7	–	69"	**	53"	**	53"	**	–	63"	**
#8	–	98"	**	75"	**	65"	**	–	89"	**
#9	–	–	–	96"	**	78"	**	–	–	–

NOTES:

1. CLASS A SPLICES MAY BE USED WHEN ONLY ONE BAR IS CONTINUOUS IN THE MASONRY CELL OR COURSE.
2. CLASS B SPLICES SHALL BE USED WHEN TWO BARS ARE CONTINUOUS IN THE MASONRY CELL OR COURSE.
3. ** INDICATES THAT A LAP SPLICE IS NOT ALLOWED AND MECHANICAL BAR COUPLERS ARE REQUIRED FOR THE BAR SPLICES.
4. WHERE VERTICAL BARS HAVE A REQUIRED LAP SPLICE GREATER THAN THE HEIGHT OF THE GROUT POUR, THE BAR SPLICE SHALL BE MADE WITH A MECHANICAL BAR COUPLER. WHERE THE HEIGHT OF THE GROUT POUR EXCEEDS 60 INCHES, HIGH LIFT GROUTING PROCEDURES SHALL BE FOLLOWED.
5. WHERE MECHANICAL BAR COUPLERS ARE USED, THE CONNECTOR SHALL DEVELOP 125% OF THE SPECIFIED YIELD STRENGTH OF THE BAR IN TENSION AND COMPRESSION.

MASONRY WALL SCHEDULE

MW-1

MARK	THICK	MATERIALS	REINFORCING VERTICAL	REINFORCING HORIZONTAL	REINFORCING JOINTS	NOTES
MW-1	8"	CMU	#5 @ 32" O.C.	#5 @ 32" O.C.	SEE GSN	

NOTES:

1. PROVIDE SCHEDULED VERTICAL REINFORCING BARS AT ALL CORNERS, ENDS OF WALLS, AND SPACED AS SCHEDULED, UNLESS NOTED OTHERWISE.
2. HORIZONTAL REINFORCING BARS SHALL BE CONTINUOUS AT ALL CORNERS AND AT INTERSECTING WALLS. PROVIDE CORNER BARS WITH THE REQUIRED LAP SPLICE LENGTH.
3. TERMINATE ALL HORIZONTAL REINFORCING BARS AT ENDS OF WALLS AND EDGES OF OPENINGS WITH A STANDARD HOOK AROUND VERTICAL REINFORCING BARS.
4. SEE PLANS, DETAILS AND GENERAL STRUCTURAL NOTES FOR ADDITIONAL REINFORCING REQUIREMENTS.
5. GROUT SOLID ALL CELLS BELOW GRADE, CELLS CONTAINING EMBEDS (HSA'S, DBA'S, ANCHOR BOLTS, ETC.), AND CELLS CONTAINING REINFORCING. CONSOLIDATE GROUT AS PER THE GENERAL STRUCTURAL NOTES.
6. HORIZONTAL WALL REINFORCING SHALL BE PLACED INSIDE THE VERTICALS OF MASONRY COLUMNS.
7. HORIZONTAL WALL REINFORCING SHALL CONTINUE THROUGH MASONRY LINTELS. WHERE BOTH HORIZONTAL WALL REINFORCING AND LINTEL REINFORCING OCCUR IN THE SAME COURSE, THE LARGER BARS ARE TO REPLACE THE SMALLER BARS.

MASONRY COLUMN SCHEDULE

MC-1

MARK	SIZE	REINFORCING VERTICAL	REINFORCING TIES	REMARKS
MC-1	8"x16"	4-#5	-----	
MC-2	8"x8"	2-#5	-----	

NOTES:

1. THE CENTERLINE OF VERTICAL BARS SHALL BE LOCATED 2.1/2" FROM THE FACE OF THE MASONRY. HORIZONTAL BARS SHALL BE LOCATED TO THE INSIDE OF THE VERTICAL BARS.
2. UNLESS NOTED OTHERWISE, VERTICAL REINFORCING AND TIES SHALL EXTEND FULL HEIGHT OF THE WALL.
3. MASONRY COLUMN VERTICAL BARS OR DOWELS IN CONCRETE FOUNDATION WALLS SHALL BE TIED WITH #3 TIES @ 8" O.C.

MASONRY LINTEL SCHEDULE

ML-1

MARK	LINTEL DEPTH	LINTEL WIDTH	MASONRY TYPE	LINTEL HORIZONTAL	LINTEL STIRRUPS	MAXIMUM SPAN	REMARKS
ML-1	8"	6",8",10" OR 12"	BRICK OR CMU	1- #7 CONT.	-----	3'-4"	
ML-2	16"	6",8",10" OR 12"	BRICK OR CMU	1- #7 CONT. TOP & BOT.	#3 @ 8" O.C.	5'-4"	
ML-3	24"	6",8",10" OR 12"	BRICK OR CMU	1- #7 CONT. TOP & BOT.	#3 @ 8" O.C.	8'-0"	
ML-4	32"	6",8",10" OR 12"	BRICK OR CMU	1- #7 CONT. TOP & BOT.	#3 @ 8" O.C.	10'-0"	

NOTES:

1. MASONRY LINTELS ML-1 THROUGH ML-4 SHALL BE USED OVER OPENINGS IN MASONRY WALLS WHEN A SPECIFIC MASONRY LINTEL IS NOT OTHERWISE SPECIFIED. THE MASONRY LINTEL TO BE USED SHALL BE DETERMINED BY THE MAXIMUM SPAN AS SPECIFIED IN THIS SCHEDULE. WHEN A SPECIFIC MASONRY LINTEL IS CALLED OUT ON THE PLAN, THE MAXIMUM SPAN AS NOTED IN THIS SCHEDULE SHALL NOT APPLY
2. MASONRY LINTELS ML-1 THROUGH ML-4 SHALL NOT BE LOCATED BELOW ANY FLOOR, OR ROOF BEAM, OR GIRDER, OR ANY OTHER CONCENTRATED LOAD UNLESS SHOWN SPECIFICALLY ON THE PLAN SHEET. JOISTS SHALL NOT BEAR ON ANY LINTEL LESS THAN 16" DEEP.
3. FOR MASONRY LINTELS NOT SHOWN ON THE DRAWINGS THAT CARRY ANY FLOOR, OR ROOF BEAM, OR GIRDER, OR ANY OTHER CONCENTRATED LOAD, OR THAT SPAN GREATER THAN 10'-0" CONSULT THE STRUCTURAL ENGINEER.
4. EXTEND ALL HORIZONTAL REINFORCING 48 BAR DIAMETERS BEYOND THE EDGE OF THE OPENING. IF HORIZONTAL REINFORCING CANNOT BE EXTENDED 48 BAR DIAMETERS BEYOND THE EDGE OF THE OPENING, PROVIDE 90 DEGREE STANDARD HOOK.
5. GROUT MASONRY LINTELS MONOLITHICALLY WITH THE SUPPORT WALL OR COLUMN AT EACH END.
6. SPLICE TOP BARS AT MIDSPAN OF LINTEL ONLY.
7. SPLICE BOTTOM BARS OVER SUPPORTS ONLY.
8. FOR WALL ABOVE LINTEL, DOWEL VERTICAL REINFORCING INTO FULL DEPTH OF THE LINTEL OR 48 BAR DIAMETERS, WHICHEVER IS LESS.
9. HORIZONTAL WALL REINFORCING SHALL CONTINUE THROUGH MASONRY LINTELS. WHERE BOTH HORIZONTAL WALL REINFORCING AND LINTEL REINFORCING WOULD OCCUR IN THE SAME COURSE, THE LARGER BARS ARE TO REPLACE THE SMALLER BARS.

CONCRETE FOOTING SCHEDULE

CF-3000

MARK	WIDTH	LENGTH	THICK	CROSSWISE REINFORCING NO.	SIZE	LENGTH	SPACE	LENGTHWISE REINFORCING NO.	SIZE	LENGTH	SPACE	REMARKS
FC2.0	2'-0"	CONT.	12"	--	NONE	REQ'D	--	3	#4	CONT.	9"	
FS7.0	7'-0"	7'-0"	15"	6	#6	6'-6"	15.6"	6	#6	6'-6"	15.6"	

NOTES:

1. PLACE ALL FOOTING REINFORCING IN BOTTOM OF FOOTING WITH 3" CLEAR CONCRETE COVER UNLESS NOTED OTHERWISE.
2. TOP REINFORCING, WHERE SPECIFIED, SHALL BE PLACED IN THE TOP OF THE FOOTING WITH 2" CLEAR CONCRETE COVER.
3. SPOT FOOTINGS SHALL BE CENTERED UNDER COLUMNS AND CONTINUOUS FOOTINGS SHALL BE CENTERED UNDER WALLS, UNLESS NOTED OTHERWISE.
4. ALL FOOTINGS SHALL BE FORMED. FOOTINGS SHALL NOT BE EARTH FORMED OR OVERSIZED WITHOUT WRITTEN PERMISSION FROM THE STRUCTURAL ENGINEER.

CONCRETE FOUNDATION WALL SCHEDULE

CFW-1

MARK	THICK	HORIZONTAL REINFORCING	VERTICAL REINFORCING	TOP & BOTTOM HORIZONTAL BARS	PLACEMENT
CFW-1	8"	#5 @ 15" O.C.	#4 @ 16" O.C.	1-#5	TYPE A
CFW-2	12"	#4 @ 13" O.C. E.F.	#4 @ 18" O.C. E.F.	2-#5	TYPE C
CFW-3	16"	#5 @ 15" O.C. E.F.	#4 @ 16" O.C. E.F.	2-#5	TYPE C

PLACEMENT TYPE

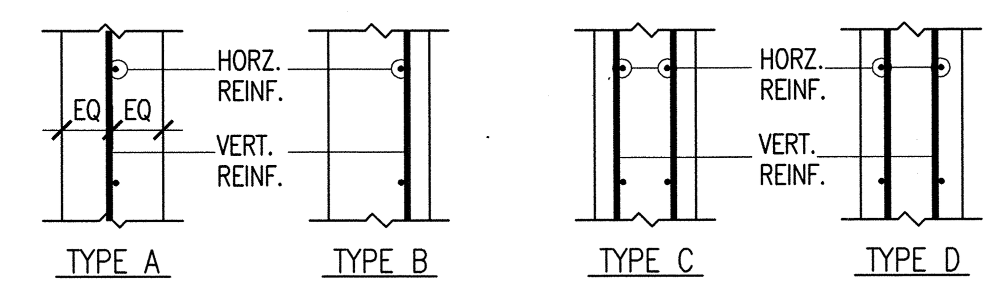

E.F. = EACH FACE
O.F. = OUTSIDE FACE (AGAINST SOIL)
I.F. = INSIDE FACE
3L = THREE LAYERS

CONCRETE PIER SCHEDULE

CP-1

MARK	SIZE	REINFORCING VERTICAL	REINFORCING TIES	REMARKS
CP-1	36"x36"	12-#7	2-#4 @ 7" O.C. (1)	SEE A3/SB502

NOTES:
1. ALL VERTICAL PIER REINFORICNG SHALL BE TERIMINATED WITH STANDARD 90° HOOKS TOP & BOTTOM.

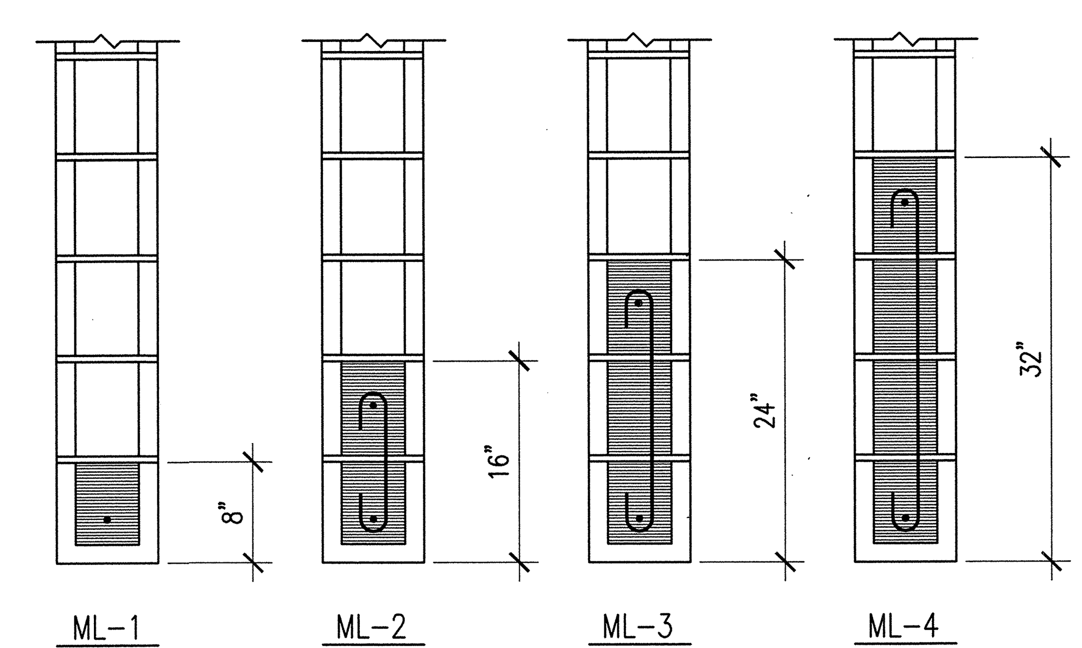

A4 / SB601 TYPICAL MASONRY LINTEL DETAILS
NO SCALE
ML-DET

LICENSED CERTIFIED STRUCTURAL ENGINEER #170416 JEFFERY THOMAS MILLER UTAH 8/10/09

State of Utah
Department of Administrative Services
Division of Facilities Construction & Management
4110 State Office Building
Salt Lake City, Utah 84114
Phone: (801) 538 - 3018
Fax: (801) 538 - 3267
http://dfcm.utah.gov

CONSULTANTS:

LANDMARK DESIGN INCORPORATED
LANDSCAPE ARCHITECTURE AND LAND PLANNING

ajc architects
703 east 1700 south
salt lake city, utah 84105
ph: 801.466.8818
fx: 801.466.4411
ajc@ajcarchitects.com

REAVELEY ENGINEERS + ASSOCIATES
Consulting Structural Engineers
675 E. 500 S. Suite 400
Salt Lake City, UT 84102
P:801.486.3883
F:801.485.0911
www.reaveley.com

PROJECT NAME AND ADDRESS:

ESCALANTE HERITAGE CENTER

1281 EAST HIGHWAY 12
ESCALANTE, UTAH

COPYRIGHT:

ALL RIGHTS RESERVED ©
LANDMARK DESIGN, INC.
These documents are protected under the United States 1978 copyright act. It is an exclusive work of original authorship. None of the pictorial, graphic, or technical charts or drawings depicted may be reproduced by any method, mechanical, electronic, or otherwise; nor may they be used or re-used for any purpose without the express prior written permission of Landmark Design, Inc.

MARK	DATE	DESCRIPTION
1	08.10.09	DFCM REVIEW

ISSUE TYPE: 100% SUBMITTAL

ISSUE DATE: 8.13.09

DFCM PROJECT NO:	09018900
CAD PROJECT NO:	0860
CAD DWG FILE:	--
DRAWN BY:	D MANNING
CHK'D BY:	A BUCHANAN
COPYRIGHT:	--

SHEET TITLE:

STRUCTURAL SCHEDULES

SHEET NUMBER:

SB601

SHEET OF

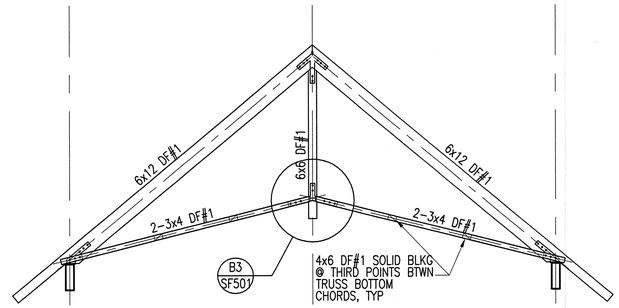

C3 SF501 **TRUSS #1 ELEVATION**
SCALE: 1/4"=1'-0"

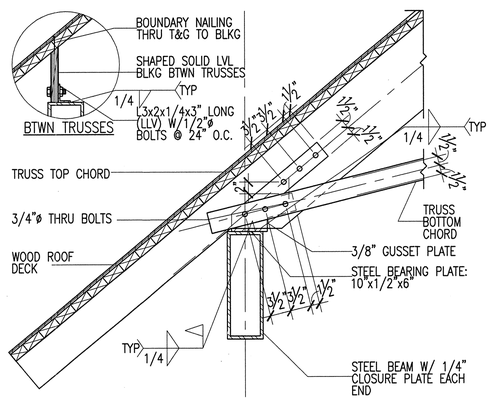

B2 SF501 **TYPICAL WOOD TRUSS BEARING AT STEEL TUBE BEAM**
NO SCALE
2009-009-SF501/B2

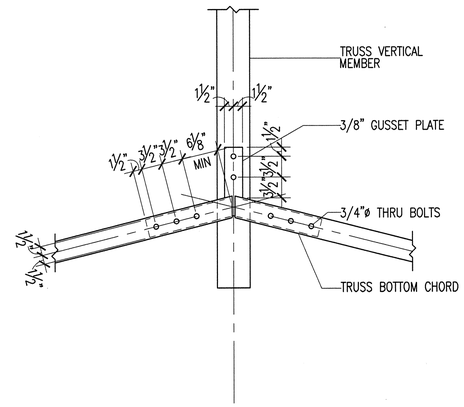

B3 SF501 **TYPICAL WOOD TRUSS CONNECTION**
NO SCALE
2009-009-SF501/B3

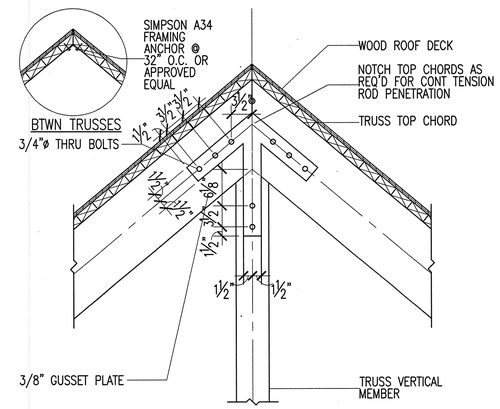

B4 SF501 **TYPICAL WOOD TRUSS CONNECTION**
NO SCALE
2009-009-SF501/B4

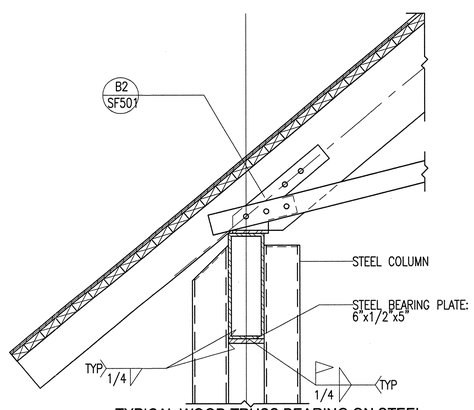

A2 SF501 **TYPICAL WOOD TRUSS BEARING ON STEEL TUBE BEAM AT STEEL COLUMN**
NO SCALE
2009-009-SF501/A2

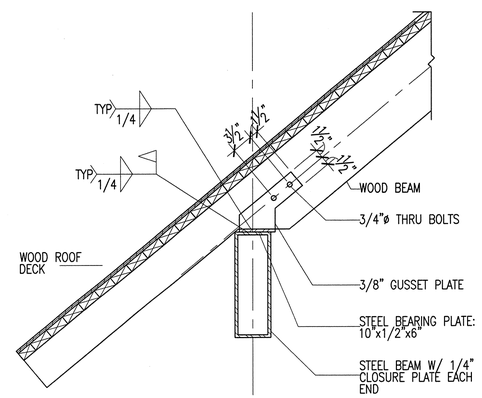

A3 SF501 **TYPICAL WOOD BEAM BEARING AT STEEL TUBE BEAM**
NO SCALE
2009-009-SF501/A3

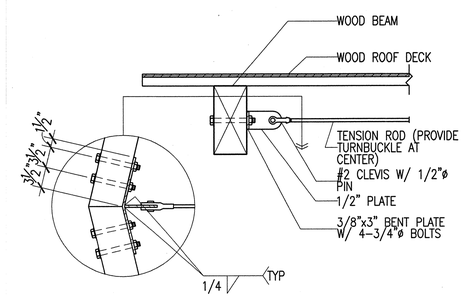

A4 SF501 **TYPICAL WOOD EDGE BEAM AT RIDGE**
NO SCALE
2009-009-SF501/A4

LICENSED CERTIFIED STRUCTURAL ENGINEER #170416 JEFFERY THOMAS MILLER UTAH
8/10/09

State of Utah
Department of Administrative Services

Division of Facilities Construction & Management
4110 State Office Building
Salt Lake City, Utah 84114
Phone: (801) 538 - 3018
Fax: (801) 538 - 3267

http://dfcm.utah.gov

CONSULTANTS:

LANDMARK DESIGN
LANDMARK ARCHITECTURE AND LAND PLANNING
2800 SOUTHLAND DRIVE
SALT LAKE CITY
UTAH 84115
PHONE (801) 474-2800
FAX (801) 474-2820

ajc architects
703 east 1700 south
salt lake city, utah 84105
ph: 801.466.8818
fx: 801.466.4411
ajc@ajcarchitects.com

REAVELEY ENGINEERS + ASSOCIATES
Consulting Structural Engineers
675 E. 500 S. Suite 400
Salt Lake City, UT 84102
P:801.486.3863
F:801.485.0911
www.reaveley.com

PROJECT NAME AND ADDRESS:

ESCALANTE HERITAGE CENTER

1281 EAST HIGHWAY 12
ESCALANTE, UTAH

COPYRIGHT:

ALL RIGHTS RESERVED © LANDMARK DESIGN, INC.
These documents are protected under the United States 1978 copyright act. It is an exclusive work of original authorship. None of the pictorial, graphic, or technical charts or drawings depicted may be reproduced by any method, mechanical, electronic, or otherwise; nor may they be used or re-used for any purpose without the express prior written permission of Landmark Design, Inc.

MARK	DATE	DESCRIPTION

ISSUE TYPE: 100% SUBMITTAL

ISSUE DATE: 8.13.09

DFCM PROJECT NO:	09018900
CAD PROJECT NO:	0860
CAD DWG FILE:	--
DRAWN BY:	D MANNING
CHK'D BY:	A BUCHANAN
COPYRIGHT:	--

SHEET TITLE:

ROOF FRAMING DETAILS

SHEET NUMBER:

SF501

SHEET OF

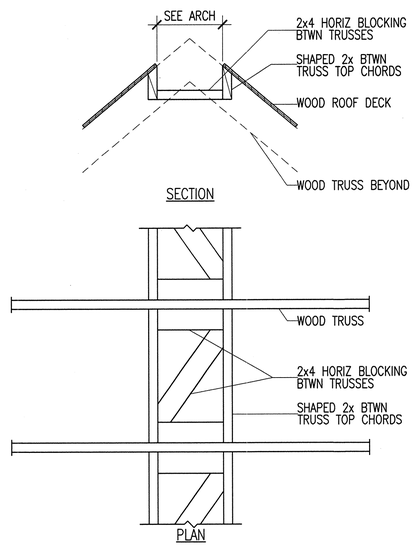

C2 SF502 TYPICAL CONT RIDGE VENT
NO SCALE
2009-009-SF502/C2

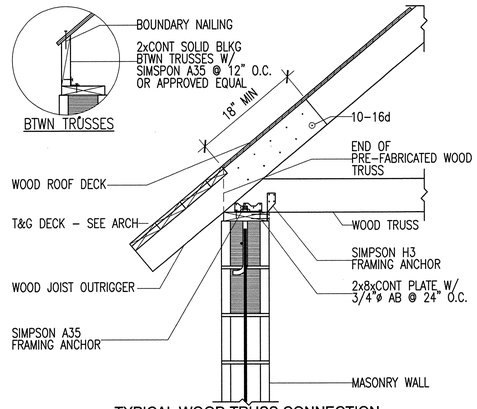

C3 SF502 TYPICAL WOOD TRUSS CONNECTION AT MASONRY WALL
NO SCALE
2009-009-SF502/C3

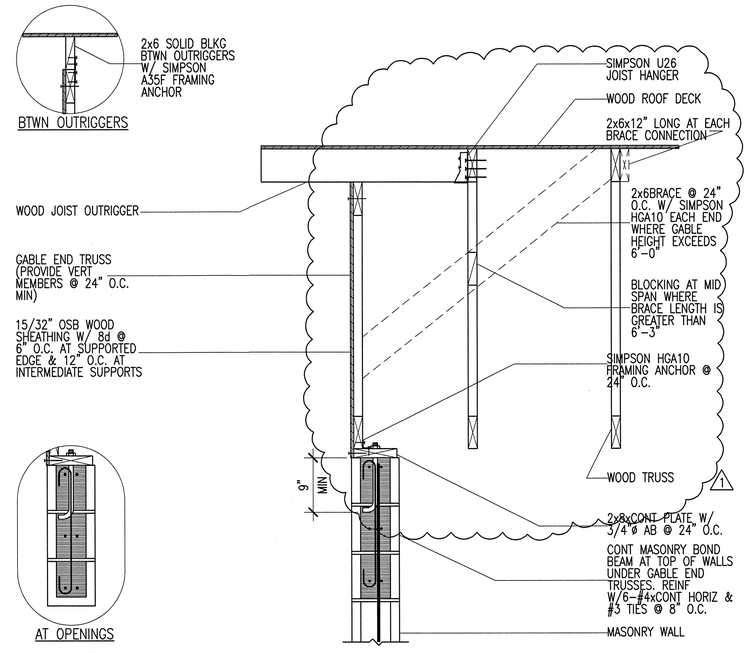

C4 SF502 TYPICAL WOOD OUTRIGGER AT GABLE END TRUSS BEARING ON MASONRY WALL
NO SCALE
2009-009-SF502/C4

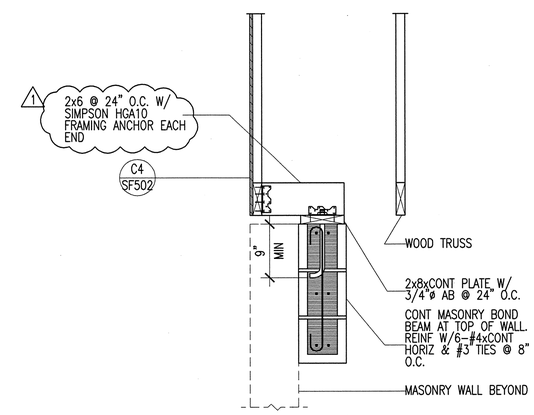

A4 SF502 MASONRY LINTEL AT DOOR RECESS
NO SCALE
2009-009-SF502/A4

State of Utah
Department of Administrative Services

Division of Facilities Construction & Management
4110 State Office Building
Salt Lake City, Utah 84114
Phone: (801) 538 - 3018
Fax: (801) 538 - 3267

http://dfcm.utah.gov

CONSULTANTS:

LANDMARK DESIGN
LANDSCAPE ARCHITECTURE AND LAND PLANNING
ajc architects
703 east 1700 south
salt lake city, utah 84105
ph: 801.466.8818
fx: 801.466.4411
ajc@ajcarchitects.com

REAVELEY ENGINEERS + ASSOCIATES
Consulting Structural Engineers
675 E. 500 S. Suite 400
Salt Lake City, UT 84102
P:801.486.3883
F:801.485.0911
www.reaveley.com

PROJECT NAME AND ADDRESS:

ESCALANTE HERITAGE CENTER

1281 EAST HIGHWAY 12
ESCALANTE, UTAH

COPYRIGHT:

ALL RIGHTS RESERVED © LANDMARK DESIGN, INC.
These documents are protected under the United States 1978 copyright act. It is an exclusive work of original authorship. None of the pictorial, graphic, or technical charts or drawings depicted may be reproduced by any method, mechanical, electronic, or otherwise; nor may they be used or re-used for any purpose without the express prior written permission of Landmark Design, Inc.

MARK	DATE	DESCRIPTION
1	10.20.09	DFCM REVIEW

ISSUE TYPE: 100% SUBMITTAL

ISSUE DATE: 8.13.09

DFCM PROJECT NO:	09018900
CAD PROJECT NO:	0860
CAD DWG FILE:	--
DRAWN BY:	D MANNING
CHK'D BY:	A BUCHANAN
COPYRIGHT:	--

SHEET TITLE:

ROOF FRAMING DETAILS

SHEET NUMBER:

SF502

SHEET OF

REGISTERED PROFESSIONAL ENGINEER #170416 JEFFERY THOMAS MILLER UTAH 10/22/09

MINIMUM NAILING SCHEDULE

NAILING

CONNECTION	NAILING
1. JOIST TO SILL OR GIRDER, TOENAIL	3– 8d
2. BRIDGING TO JOIST, TOENAIL EACH END	2– 8d
3. 1" x 6" SUBFLOOR TO EACH JOIST, FACE NAIL	2– 8d
4. WIDER THAN 1" x 6" SUBFLOOR TO EACH JOIST, FACE NAIL	3– 8d
5. 2" SUBFLOOR TO JOIST OR GIRDER, BLIND AND FACE NAIL	2– 16d
6. SOLE PLATE TO JOIST OR BLOCKING	16d @ 16" O.C.
7. TOP PLATE TO STUD, END NAIL	2– 16d
8. STUD TO SOLE PLATE	4–8d, TOENAIL OR 2–16d, END NAIL
9. DOUBLE STUDS, FACE NAIL	16d @ 24" O.C.
10. DOUBLED TOP PLATES, FACE NAIL	16d @ 16" O.C.
11. TOP PLATES, LAPS AND INTERSECTIONS, FACE NAIL	2– 16d
12. CONTINUOUS HEADER, TWO PIECES	16d @ 16" O.C. ALONG EACH END
13. CEILING JOISTS TO PLATE, TOENAIL	3– 8d
14. CONTINUOUS HEADER TO STUD, TOENAIL	4– 8d
15. CEILING JOISTS, LAPS OVER PARTITIONS, FACE NAIL	3– 16d
16. CEILING JOISTS TO PARALLEL RAFTERS, FACE NAIL	3– 16d
17. RAFTER TO PLATE, TOENAIL	3– 8d
18. 1" BRACE TO EACH STUD AND PLATE, FACE NAIL	2– 8d
19. 1" x 8" SHEATHING OR LESS TO EACH BEARING, FACE NAIL	2– 8d
20. WIDER THAN 1" x 8" SHEATHING TO EACH BEARING, FACE NAIL	3– 8d
21. BUILT–UP CORNER STUDS	16d @ 24" O.C.
22. BUILT–UP GIRDER AND BEAMS:	20d @ 32" O.C. AT TOP AND BOTTOM AND STAGGERED 2– 20d AT ENDS AND AT EACH SPLICE
23. 2" PLANKS	2– 16d AT EACH BEARING

NOTES:

1. COMMOM OR BOX NAILS SHALL BE USED EXCEPT WHERE OTHERWISE STATED. SEE GENERAL STRUCTURAL NOTES.

STEEL COLUMN SCHEDULE

SC–1

MARK	SIZE	STEEL BASE PLATE	STEEL CAP PLATE	REMARKS
SC–1	2–HSS6x6x1/2	14"x1.1/4"x26" W/ 10–7/8"ø ANCHOR BOLTS	1/4" CLOSURE PLATE	

NOTES:

1. UNLESS NOTED OTHERWISE, ALL COLUMNS SHALL BE INSTALLED W/4–3/4" DIAMETER A.B. W/ 3" (MIN) HOOKS. PROJECT ANCHOR BOLTS 3" (MIN) ABOVE THE TOP OF THE BASE PLATE. EMBEDMENT SHALL BE 9" (MIN). ALL BOLTS SHALL BE INSTALLED W/ HARDENED WASHERS BENEATH THE NUT. ANY BOLT HOLES LARGER THAN THE BOLT DIAMETER PLUS 5/16" SHALL HAVE 5/16" PLATE WASHERS INSTALLED BENEATH THE HARDENED WASHERS.

2. ALL BOLTS IN CAP PLATES SHALL BE 3/4" DIA, A325N BOLTS TYPICAL U.N.O.

3. COLUMN SPLICES SHALL BE LOCATED PER SPLICE DETAILS, TYPICAL, U.N.O.

4. WELDS SHALL NOT BE MADE TO ANCHOR BOLTS.

STEEL ANGLE LINTEL SCHEDULE

STL–LINT

BEARING EQUALS 1" PER FOOT OF OPENING OR 6" MINIMUM TYPICAL

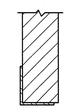

OPENING SIZE	ANGLE SIZE
0'–0" – 7'–0"	L3.1/2x3.1/2x1/4
7'–0" – 9'–0"	L4x3.1/2x1/4
9'–0" – 10'–0"	L5x3.1/2x1/4

NOTES:

LINTELS ARE DESIGNED TO SUPPORT UNIFORM LOADS CONSISTING ONLY OF WEIGHT OF WALL WITHIN A 60 DEGREE ISOSCELES TRIANGLE AREA ABOVE OPENING.

ALL STEEL LINTELS ARE TO HAVE LONG LEG VERTICAL.

LINTEL SCHEDULE FOR 4" VENEER

ALL ANGLE LINTELS SHALL BE GALVANIZED.

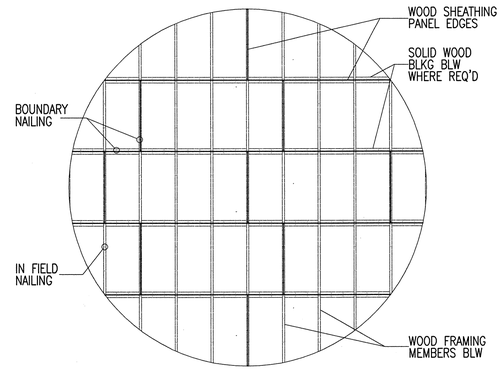

A4 SF601 TYPICAL WOOD DIAPHRAGM SHEATHING PANEL LAYOUT - PLAN VIEW
NO SCALE
WDTYP06

State of Utah
Department of Administrative Services

Division of Facilities Construction & Management
4110 State Office Building
Salt Lake City, Utah 84114
Phone: (801) 538 - 3018
Fax: (801) 538 - 3267

http://dfcm.utah.gov

CONSULTANTS:

LANDMARK DESIGN
LANDSCAPE ARCHITECTURE AND LAND PLANNING
859 EAST 3300 SOUTH
SALT LAKE CITY
UTAH 84106
PHONE (801) 486-3800
FAX (801) 486-0888

ajc architects
703 east 1700 south
salt lake city, utah 84105
ph: 801.466.8818
fx: 801.466.4411
ajc@ajcarchitects.com

REAVELEY ENGINEERS + ASSOCIATES
Consulting Structural Engineers
675 E. 500 S. Suite 400
Salt Lake City, UT 84102
P:801.486.3883
F:801.485.0911
www.reaveley.com

PROJECT NAME AND ADDRESS:

ESCALANTE HERITAGE CENTER

1281 EAST HIGHWAY 12
ESCALANTE, UTAH

COPYRIGHT:

ALL RIGHTS RESERVED © LANDMARK DESIGN, INC.
These documents are protected under the United States 1978 copyright act. It is an exclusive work of original authorship. None of the pictorial, graphic, or technical charts or drawings depicted may be reproduced by any method, mechanical, electronic, or otherwise; nor may they be used or re-used for any purpose without the express prior written permission of Landmark Design, Inc.

MARK	DATE	DESCRIPTION

ISSUE TYPE: 100% SUBMITTAL

ISSUE DATE: 8.13.09

DFCM PROJECT NO:	09018900
CAD PROJECT NO:	0860
CAD DWG FILE:	--
DRAWN BY:	D MANNING
CHK'D BY:	A BUCHANAN
COPYRIGHT:	--

SHEET TITLE:

STRUCTURAL SCHEDULES

SHEET NUMBER:

SF601

SHEET OF

LICENSED CERTIFIED STRUCTURAL ENGINEER #170416 JEFFERY THOMAS MILLER UTAH
8/10/09

MECHANICAL LEGEND

SYMBOL	ABR.	DESCRIPTION
GENERAL TERMINOLOGY		
A2		DETAIL NUMBER DESIGNATION CORRESPONDING WITH GRID LOCATION
MA 1		MECHANICAL EQUIPMENT DESIGNATION
		EQUIPMENT ITEM DESIGNATION
D-1 CFM		REGISTER, GRILL OR DIFFUSER DESIGNATION WITH BALANCING CFM LISTED BELOW
R-1		GRILLE, OR LOUVER DESIGNATION WHERE BALANCING NOT REQUIRE
1		REVISION DESIGNATOR AND NUMBER
1		KEY NOTE DESIGNATOR AND NUMBER
	POC	POINT OF CONNECTION
	POR	POINT OF REMOVAL
GC		GENERAL CONTRACTOR
MC		MECHANICAL CONTRACTOR
ATC		CONTROL CONTRACTOR
EC		ELECTRICAL CONTRACTOR
FPC		FIRE PROTECTION CONTROL
NIC		NOT IN CONTRACT
NTS		NOT TO SCALE
C		COMMON
NC		NORMALLY CLOSED
NO		NORMALLY OPEN

SYMBOL	ABR.	DESCRIPTION
AIR SIDE		
		EXISTING AIR DUCT TO BE REMOVED
		EXISTING AIR DUCT TO REMAIN
		NEW AIR DUCT
		NEW SPIRAL DUCT
		NEW MEDIUM PRESSURE DUCT
		BURIED OR UNDER FLOOR DUCT
		FLEXIBLE AIR DUCT
		LINED DUCT
		VANED ELBOW
		RADIUS ELBOW
		FLEXIBLE AIR DUCT CONNECTION
VD		VOLUME DAMPER
		SUPPLY AIR DIFFUSER
		RETURN AIR, FRESH AIR, AND TRANSFER AIR
		CEILING MOUNTED EXHAUST FAN OR EXHAUST GRILLE
		RETURN OR OUTSIDE AIR DUCT UP
		SUPPLY DUCT UP
		EXHAUST AIR INTAKE UP
		RETURN OR OUTSIDE AIR DUCT DOWN
		SUPPLY DUCT DOWN
		EXHAUST DUCT DOWN
		ROUND DUCT UP
		ROUND DUCT DOWN
	AP	ACCESS PANEL
		EXISTING EQUIPMENT TO BE REMOVED
		EXISTING EQUIPMENT TO REMAIN
		NEW EQUIPMENT
T RTU-1	T-STAT	WALL MOUNTED THERMOSTAT MECHANICAL EQUIPMENT CONTROLLED
SA		SUPPLY AIR
RA		RETURN AIR
EA		EXHAUST AIR
OA		OUTSIDE AIR
MA		MIXED AIR
FA		FRESH AIR
RF		RELIEF AIR

SYMBOL	ABR.	DESCRIPTION
WET SIDE		
		PUMP
		REGULATOR
		UNION
		BUTTERFLY VALVE
		GATE VALVE
	CBV	CIRCUIT BALANCING VALVE
	BV	BALL VALVE
		PRESSURE GAUGE AND GAUGE COCK - WATER
		PRESSURE GAUGE AND GAUGE COCK - STEAM
		THERMOMETER AND THERMOWELL
		DIRECTION OF FLOW
		ELBOW UP
		ELBOW DOWN
		TEE UP
		TEE DOWN
		EXISTING PIPING TO BE REMOVED
		EXISTING PIPING TO REMAIN
		NEW PIPING
		PIPE CAP OR PLUG
		FLEXIBLE CONNECTION
	CW	CULINARY COLD WATER
	HW	CULINARY HOT WATER
		RECIRCULATED CULINARY HOT WATER
HWS		HEATING WATER SUPPLY
HWR		HEATING WATER RETURN
CHWS		CHILLED WATER SUPPLY
CHWR		CHILLED WATER RETURN

GENERAL NOTES:

G-1 MECHANICAL INFORMATION IS NOT LIMITED TO THE MECHANICAL DRAWINGS. CONTRACTOR SHALL BE RESPONSIBLE FOR INFORMATION ON ALL OTHER CONSTRUCTION DOCUMENTS INCLUDING DRAWINGS BY OTHER DISCIPLINES AND SPECIFICATIONS.

A - EACH DRAWING SHEET AND THE SPECIFICATIONS HAVE BEEN PREPARED TO SUPPLEMENT EACH OTHER AND THEY SHALL BE INTERPRETED AS AN INTEGRAL UNIT WITH ITEMS SHOWN AND NOTED ON ONE AND NOT THE OTHER BEING FURNISHED AND INSTALLED AS THOUGH SHOWN AND CALLED OUT IN ALL PLACES. ITEMS IN SPECIFICATIONS OR DRAWINGS LISTED WHICH ARE DIFFERING IN EFFICIENCY OR QUALITY SHALL BE HELD TO THE GREATEST OF: EFFICIENCY, QUALITY OR GOVERNING CODE.

B - THE CONTRACTOR WILL BE HELD RESPONSIBLE FOR THE INSTALLATION OF THE SYSTEMS ACCORDING TO THE TRUE INTENT AND MEANING OF THE CONTRACT DOCUMENTS.

C - THE CONTRACTOR SHALL INSTALL ALL EQUIPMENT WITH PROPER SERVICE ACCESS AND CLEARANCES ACCORDING TO MANUFACTURERS RECOMMENDATIONS. THE CONTRACTOR SHALL REVIEW SUPPLIERS BID PACKAGES FOR COMPLETENESS AND COMPLIANCE TO THE SPECIFICATIONS, SCHEDULES, AND DESIGN INTENT (ALL EQUIPMENT AND METHODS). THE CONTRACTOR SHALL REMOVE AND REINSTALL CORRECTLY AT HIS OWN EXPENSE ANY EQUIPMENT NOT IN COMPLIANCE.

D - THE CONTRACTOR SHALL CONSULT MANUFACTURERS INSTALLATION INSTRUCTIONS FOR SIZES, METHODS, ACCESSORIES, AND CLEARANCES IN SPACE AVAILABLE PRIOR TO BIDDING PROJECT.

E - ANYTHING NOT CLEAR OR IN CONFLICT WILL BE EXPLAINED BY MAKING APPLICATION TO THE ENGINEER IN WRITING.

G-2 ANY AND ALL ALTERATIONS TO THE SYSTEM SHOWN SHALL BE SUBMITTED TO THE ENGINEER PRIOR TO CHANGES FOR APPROVAL. CONTRACTOR SHALL NOT START ANY CHANGES UNTIL NOTIFIED IN WRITING. IF CHANGES ARE MADE PRIOR TO APPROVAL CONTRACTOR SHALL TAKE ALL RESPONSIBILITY FOR THE CHANGES MADE AND ALL COSTS RELATING TO FAILURE OR REPLACEMENT OF ALTERATIONS.

G-3 CONTRACTOR SHALL FIELD VERIFY ALL DIMENSIONS AND LOCATIONS.

G-4 THE WORKING DRAWINGS ARE DIAGRAMMATIC. THEY DO NOT SHOW EVERY OFFSET, BEND, OR ELBOW NECESSARY FOR THE COMPLETE INSTALLATION IN THE SPACE PROVIDED. ALL LOCATIONS FOR MECHANICAL EQUIPMENT SHALL BE FIELD VERIFIED AND COORDINATED WITH ALL DRAWINGS. THE CONTRACTOR SHALL PROVIDE OR COORDINATE WITH THE GENERAL CONTRACTOR PROVISIONS FOR BLOCKOUTS OR CORE DRILLS THROUGH STRUCTURE.

G-5 THE INSTRUCTION TO "PROVIDE" ALSO INCLUDES INSTALLATION.

G-6 MECHANICAL CONTRACTOR SHALL PROVIDE AND INSTALL SMOKE AND FIRE DAMPERS AS REQUIRED BY LOCAL CODES AND AUTHORITIES.

G-7 SHEET METAL DUCT SIZES SHOWN ON DRAWINGS ARE FREE AREA DIMENSIONS.

G-8 PROVIDE AND INSTALL BALANCING DAMPERS IN ALL SUPPLY AND EXHAUST AIR BRANCH DUCTS. BALANCE TO CFM SHOWN ON PLAN.

G-9 SEE ARCHITECTURAL REFLECTED CEILING PLAN FOR EXACT LOCATION OF DIFFUSERS AND GRILLES.

G-10 PROVIDE TURNING VANES IN ALL ELBOWS OF RECTANGULAR DUCT.

G-11 THE CONTRACTOR SHALL ASSUME ALL RESPONSIBILITY IN HANDLING AND DISPOSING OF REFRIGERANTS, OILS, ETC. ALL SUCH MATERIALS SHALL BE HANDLED, DISPOSED, AND USED IN ACCORDANCE WITH ALL LOCAL, STATE, AND FEDERAL LAWS.

G-12 THE MECHANICAL CONTRACTOR SHALL VERIFY MOTOR VOLTAGES WITH THE ELECTRICAL DRAWING BEFORE ORDERING MOTORIZED EQUIPMENT AND CONTROLS.

G-13 C.F.M. LISTED IS ACTUAL AIR.

G-14 SUPPLIERS SHALL REVIEW ALL DRAWINGS AND THE SPECIFICATIONS PRIOR TO SUBMITTING PRICES TO THE CONTRACTOR. ALL QUESTIONS AND DISCREPANCIES SHALL BE BROUGHT TO THE ENGINEERS ATTENTION PRIOR TO BIDDING.

G-15 CONTRACTOR SHALL THOROUGHLY REVIEW AND SIGN SUBMITTALS FOR COMPLETENESS AND COMPLIANCE TO THE SPECIFICATIONS PRIOR TO ENGINEERS REVIEW. SUPPLIERS SHALL HIGHLIGHT OR MARK ALL INFORMATION REQUIRED TO SHOW COMPLIANCE TO THE SPECIFICATIONS. ALL REQUESTED EXCEPTIONS TO THE SPECIFICATIONS, OR SCHEDULES SHALL BE CLEARLY NOTED AND EXPLAINED. SUBMITTAL REVIEW AND ACCEPTANCE IS FOR DESIGN CONCEPT ONLY, AND DOES NOT AT ANY TIME RELIEVE THE CONTRACTOR OF RESPONSIBILITY TO MEET SPECIFICATIONS, CAPACITIES, OR DESIGN INTENT.

G-16 ALL MECHANICAL SHALL BE INSTALLED AND CONFORM TO THE 2006 EDITION OF THE IMC WITH UTAH ANNOTATIONS AND LOCAL AUTHORITY REQUIREMENTS.

G-17 THIS CONTRACTOR SHALL BE RESPONSIBLE FOR THE DRAINING DOWN AND RE-FILLING OF ALL SYSTEMS NECESSARY TO COMPLETE THE WORK OUTLINED BY THIS PROJECT. THIS INCLUDES PROVIDING THE REQUIRED CHEMICAL TREATMENT WHEN RE-FILLING THE SYSTEM.

G-18 THIS CONTRACTOR SHALL CONTRACT WITH A DESIGN BUILD ELECTRICAL CONTRACTOR FOR THE DESIGN AND CONSTRUCTION OF THE ELECTRICAL PORTION OF THIS PROJECT. ELECTRICAL INSTALLATION AND DESIGN SHALL BE PER 2005 NEC.

G-19 ALL PIPING, MATERIALS, ETC. SHALL BE NEW AND DOMESTIC MADE UNLESS SPECIFICALLY AUTHORIZED IN WRITING PRIOR TO BID.

PROFESSIONAL ENGINEER 8/10/09 WINWARD M. PACKER No. 375080 STATE OF UTAH

State of Utah
Department of Administrative Services
Division of Facilities Construction & Management
4110 State Office Building
Salt Lake City, Utah 84114
Phone: (801) 538 - 3018
Fax: (801) 538 - 3267
http://dfcm.utah.gov

CONSULTANTS:
LANDMARK DESIGN
ajc architects
703 east 1700 south
salt lake city, utah 84105
ph: 801.466.8818
fx: 801.466.4411
ajc@ajcarchitects.com

WHW ENGINEERING INC.
PROFESSIONAL MECHANICAL ENGINEERING
8619 Sandy Parkway Suite 101
SANDY, UTAH 84070
(801)466-4021, FAX 466-8536
EMAIL: excellence@whw-engineering.com

PROJECT NAME AND ADDRESS:

ESCALANTE HERITAGE CENTER

1281 EAST HIGHWAY 12
ESCALANTE, UTAH

COPYRIGHT:

ALL RIGHTS RESERVED © LANDMARK DESIGN, INC.
These documents are protected under the United States 1978 copyright act. It is an exclusive work of original authorship. None of the pictorial, graphic, or technical charts or drawings depicted may be reproduced by any method, mechanical, electronic, or otherwise; nor may they be used or re-used for any purpose without the express prior written permission of Landmark Design, Inc.

MARK	DATE	DESCRIPTION
1	08.13.09	DFCM REVIEW

ISSUE TYPE: 100% SUBMITTAL

ISSUE DATE: 06.12.09

DFCM PROJECT NO: 09018900
CAD PROJECT NO:
CAD DWG FILE:
DRAWN BY: WP
CHK'D BY: STAFF
COPYRIGHT:

SHEET TITLE

MECHANICAL LEGEND AND GENERAL NOTES

SHEET NUMBER

MG001

ryanb: Aug 10, 2009 - 9:23am
C:\Documents and Settings\ryanb\Local settings\temp\AcPublish_2460\M-09001.dwg

EXHAUST FAN SCHEDULE

SYMBOL	MANUFACTURER & MODEL No.	SERVES	C.F.M.	STATIC PRESSURE IN. WG.	MAX NOISE SONES	MOTOR		OPER. WT. (LBS)	SCHEDULE NOTES
						V - Ø - Hz	AMPS		
EF 1	COOK GN-640	MEN'S	500	0.30	1.3	115-1-60	4.9	40	1,2
EF 2	COOK GN-640	WOMEN'S	500	0.30	1.3	115-1-60	4.9	40	1,2

1. INTERLOCK WITH ROOM SENSOR WITH TIME DELAY TO RUN FOR 10 MINUTES AFTER OCCUPANCY.
2. PROVIDE WITH MANUFACTURERS CEILING GRILLE.

ELECTRIC WALL HEATER SCHEDULE

SYMBOL	ELECTRICAL DATA 240 V			MANUFACTURER AND MODEL NUMBER	REMARKS
	KW	PH	HZ		
H 1	3	1	60	QMARK CWH3407	1,2
H 2	3	1	60	QMARK CWH3407	1,2
H 3	2	1	60	QMARK CWH3407	1,2

1. PROVIDE WITH SURFACE MOUNTING ADAPTER.
2. UNIT SHALL HAVE BUILT IN THERMOSTAT.

REGISTER, LOUVER & GRILLE SCHEDULE

SYMBOL	TYPE	SERVICE	MAX CFM	NOMINAL SIZE	THROAT SIZE	CEILING TYPE	SCHEDULE NOTES
L-1	SIDEWALL	EXHAUST	1000	18/42	18/42	N/A	1,3,4,5
L-2	SIDEWALL	TRANSFER	1000	18/42	18/42	N/A	1,3,4,5,6
TG-1	CEILING	TRANSFER	500	14/14	14/14	HARD	1,2,3,4

REGISTER. LOUVER AND DIFFUSER SCHEDULE NOTES:

1. MAXIMUM NC = 25 @ MAXIMUM CFM NOTED.
2. SHALL BE PRICE 535 OR EQUAL BY OTHER APPROVED MANUFACTURERS.
3. SEE SPECIFICATIONS FOR APPROVED MANUFACTURERS.
4. FINISH TO BE SPECIFIED BY ARCH
5. SHALL BE RUSKIN ELF 811 OR EQUAL BY OTHER APPROVED MANUFACTURERS.
6. PROVIDE WITH BACK DRAFT DAMPER.

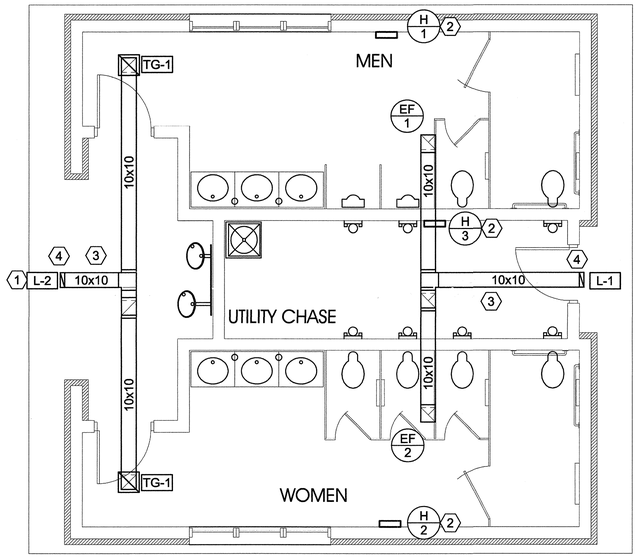

MECHANICAL FLOOR PLAN

SCALE: 1/4" = 1'-0"

SHEET NOTES:

1. PROVIDE LOUVER WITH BACK DRAFT DAMPER.
2. PROVIDE ELECTRIC WALL MOUNTED HEATER.
3. TWO 10x10 DUCTS, STACKED VERTICALLY.
4. PROVIDE LOUVER WITH PLENUM BOX WITH DIVIDER. CONNECT TOP DUCT INTO TOP HALF OF LOUVER. CONNECT BOTTOM DUCT INTO THE BOTTOM HALF OF LOUVER.

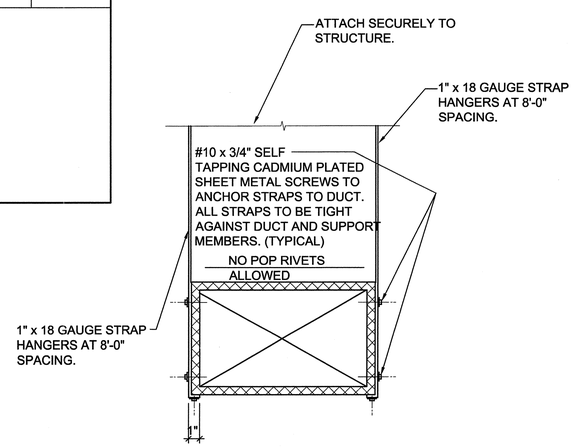

1 DUCT STRAP HANGER DETAIL

SCALE: NONE

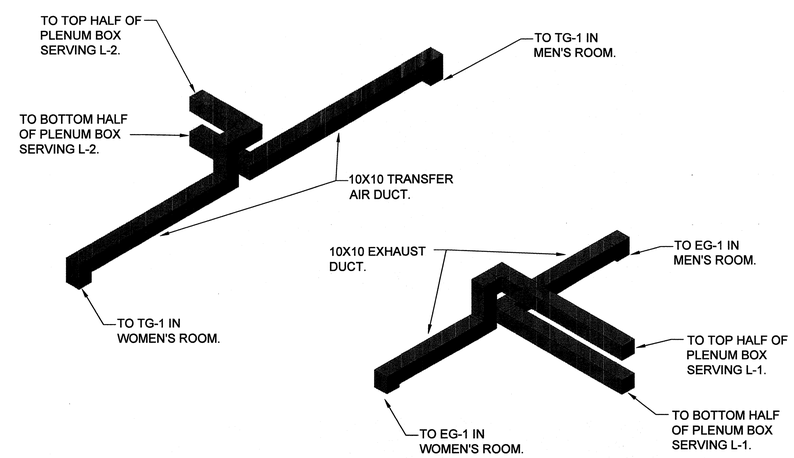

SOUTH EAST ISOMETRIC OF DUCT WORK

SCALE: NONE

PROFESSIONAL ENGINEER 8/10/09 WINWARD M. PACKER No. 375080 STATE OF UTAH

State of Utah
Department of Administrative Services
Division of Facilities Construction & Management
4110 State Office Building
Salt Lake City, Utah 84114
Phone: (801) 538 - 3018
Fax: (801) 538 - 3267
http://dfcm.utah.gov

CONSULTANTS:

LANDMARK DESIGN

ajc architects
703 east 1700 south
salt lake city, utah 84105
ph: 801.466.8818
fx: 801.466.4411
ajc@ajcarchitects.com

WHW ENGINEERING INC.
PROFESSIONAL MECHANICAL ENGINEERING
8619 Sandy Parkway Suite 101
SANDY, UTAH 84070
(801)466-4021, FAX 466-8536
EMAIL: excellence@whw-engineering.com

PROJECT NAME AND ADDRESS:

ESCALANTE HERITAGE CENTER

1281 EAST HIGHWAY 12
ESCALANTE, UTAH

COPYRIGHT:

ALL RIGHTS RESERVED © LANDMARK DESIGN, INC.
These documents are protected under the United States 1978 copyright act. It is an exclusive work of original authorship. None of the pictorial, graphic, or technical charts or drawings depicted may be reproduced by any method, mechanical, electronic, or otherwise; nor may they be used or re-used for any purpose without the express prior written permission of Landmark Design, Inc.

MARK	DATE	DESCRIPTION
1	08.13.09	DFCM REVIEW

ISSUE TYPE: 100% SUBMITTAL

ISSUE DATE: 06.12.09

DFCM PROJECT NO: 09018900
CAD PROJECT NO:
CAD DWG FILE:
DRAWN BY: WP
CHK'D BY: STAFF
COPYRIGHT:

SHEET TITLE

MECHANICAL FLOOR PLAN, DETAILS, AND SCHEDULES

SHEET NUMBER

ME101

rypnb: Aug 10, 2009 - 9:23am
C:\Documents and Settings\rypnb\Local settings\temp\AcPublish_2460\M-09001.dwg

PLUMBING LEGEND

MEANING	SYMBOL OR ABBREVIATION	MEANING	SYMBOL OR ABBREVIATION
HOT WATER LINE		WALL CLEANOUT	WCO
COLD WATER LINE		CLEANOUT	CO
HOT WATER RECIRCULATING LINE		CLEANOUT TO GRADE	COTG
VENT LINE		FLOOR CLEANOUT	FCO
WASTE LINE		BALL VALVE	
GAS LINE		UNION	
VENT THRU ROOF	VTR	CONNECTION TO EXISTING PIPING	
UNDER FLOOR	UF	REGULATOR	R
SANITARY SEWER	SS		

PLUMBING GENERAL NOTES:

G-1 ALL PLUMBING SHALL BE INSTALLED AND CONFORM TO THE 2006 EDITION OF THE INTERNATIONAL PLUMBING CODE (IPC) WITH UTAH ANNOTATIONS AND LOCAL AUTHORITY REQUIREMENTS.

G-2 ALL PIPING MATERIALS SHALL MEET ALL REQUIREMENTS OF IPC AND LOCAL AUTHORITY. PLASTIC PIPING SHALL BE ALLOWED ONLY WHERE ALLOWED BY CODE. PLASTIC PIPING SHALL NOT BE ROUTED THROUGH RETURN AIR PLENUMS OR OTHER AREAS PROHIBITED BY THE IMC, IPC OR NFPA CODES OR BY LOCAL AUTHORITY

G-3 GAS PIPING INSTALLATION SHALL BE IN STRICT ACCORDANCE WITH GAS COMPANY REGULATIONS, NFPA CODE REQUIREMENTS, AND LOCAL AUTHORITY.

G-4 ALL MATERIALS SHALL BE NEW AND SHALL BE DOMESTIC MADE UNLESS SPECIFICALLY APPROVED OTHERWISE IN WRITING BY ARCHITECT OR OWNER.

G-5 PROVIDE VACUUM BREAKERS AND BACK FLOW PREVENTERS WHERE REQUIRED BY CODE OR WHERE THERE MAY BE ANY POSSIBLE CHANCE FOR CROSS CONTAMINATION. PREVENTERS SHALL BE INSTALLED IN ACCORDANCE WITH UTAH CODE.

G-6 ALL PLUMBING INFORMATION IS NOT LIMITED TO THE PLUMBING DRAWINGS. CONTRACTOR SHALL BE RESPONSIBLE FOR INFORMATION ON ALL OTHER CONSTRUCTION DOCUMENTS INCLUDING ARCHITECTURAL DRAWING, STRUCTURAL DRAWINGS, MECHANICAL DRAWINGS, AND ELECTRICAL DRAWINGS.

G-7 THE WORKING DRAWINGS ARE DIAGRAMMATIC. BECAUSE OF THE SMALL SCALE OF THE DRAWING, THEY DO NOT SHOW EVERY OFFSET, BEND OR ELBOW NECESSARY FOR THE COMPLETE INSTALLATION IN THE SPACE PROVIDED. ALL PIPING SHALL BE CHECKED AND COORDINATED WITH THE ARCHITECTURAL, STRUCTURAL, MECHANICAL, AND ELECTRICAL DRAWINGS.

G-8 COORDINATE ALL PIPING AND PLUMBING EQUIPMENT WITH ALL OTHER TRADES AND/OR CONTRACTORS PRIOR TO INSTALLATION.

G-9 ANY AND ALL ALTERATIONS TO THE SYSTEM SHOWN SHALL BE THE RESPONSIBILITY OF THIS CONTRACTOR AND ARCHITECT/ENGINEER SHALL BE NOTIFIED IN WRITING PRIOR TO CHANGES.

G-10 GAS LINE FITTINGS SHALL BE STANDARD WELD FITTINGS WITH TAPERED REDUCERS. DO NOT USE VALVES, UNIONS, OR AUTO CONTROLS IN GAS LINES ROUTED IN INACCESSIBLE CONCEALED SPACES.

G-11 ALL WATER SYSTEMS SHALL MEET THE REQUIREMENTS OF ANSI/NSF STANDARD 61 SECTION 9 (1998), CONCERNING METAL CONTAMINANTS IN THE WATER SYSTEM.

G-12 WATER PIPING SHALL NOT BE ROUTED IN OUTSIDE WALLS OR ON EXTERIOR SIDE OF BUILDING INSULATION ENVELOPE.

G-13 WATER HAMMER ARRESTORS SHALL BE INSTALLED IN ALL WATER LINES WITH QUICK OPEN OR QUICK CLOSE VALVES.

WATER HAMMER ARRESTOR SCHEDULE:

TYPE A 1-11 FIXTURE UNITS
TYPE B 12-32 FIXTURE UNITS
TYPE C 33-60 FIXTURE UNITS
TYPE D 61-113 FIXTURE UNITS

PROFESSIONAL ENGINEER 8/10/09 WINWARD M. PACKER No. 375080 STATE OF UTAH

State of Utah
Department of Administrative Services

Division of Facilities Construction & Management
4110 State Office Building
Salt Lake City, Utah 84114
Phone: (801) 538 - 3018
Fax: (801) 538 - 3267

http://dfcm.utah.gov

CONSULTANTS:

LANDMARK DESIGN

ajc architects
703 east 1700 south
salt lake city, utah 84105
ph: 801.466.8818
fx: 801.466.4411
ajc@ajcarchitects.com

WHW ENGINEERING INC.
PROFESSIONAL MECHANICAL ENGINEERING
8619 Sandy Parkway Suite 101
SANDY, UTAH 84070
(801)466-4021, FAX 466-8536
EMAIL: excellence@whw-engineering.com

PROJECT NAME AND ADDRESS:

ESCALANTE HERITAGE CENTER

1281 EAST HIGHWAY 12
ESCALANTE, UTAH

COPYRIGHT:

ALL RIGHTS RESERVED © LANDMARK DESIGN, INC.
These documents are protected under the United States 1978 copyright act. It is an exclusive work of original authorship. None of the pictorial, graphic, or technical charts or drawings depicted may be reproduced by any method, mechanical, electronic, or otherwise; nor may they be used or re-used for any purpose without the express prior written permission of Landmark Design, Inc.

MARK	DATE	DESCRIPTION
1	08.13.09	DFCM REVIEW

ISSUE TYPE: 100% SUBMITTAL

ISSUE DATE: 06.12.09

DFCM PROJECT NO: 09018900
CAD PROJECT NO:
CAD DWG FILE:
DRAWN BY: WP
CHK'D BY: STAFF
COPYRIGHT:

SHEET TITLE

PLUMBING LEGEND

SHEET NUMBER

PG001

rymb; Aug 10, 2009 - 9:23am
C:\Documents and Settings\rymb\Local settings\temp\AcPublish_2460\P-09001.dwg

SHEET NOTES:

1. SEE CIVIL SITE PLAN FOR CONTINUATION OF COLD WATER PIPE.
2. PROVIDE PRV STATION PER DETAIL ON SHEET PE501.
3. INSTALL WATER HEATER ON SHELF OVER MOP SINK. SEE DETAIL PE501.
4. SEE CIVIL SITE PLAN FOR CONTINUATION OF SANITARY SEWER PIPE.

GENERAL NOTES:

1. COORDINATE WITH DIVISION 16 TO PROVIDE HEAT TRACING ON ALL WATER PIPING IN WALLS OR CEILING.

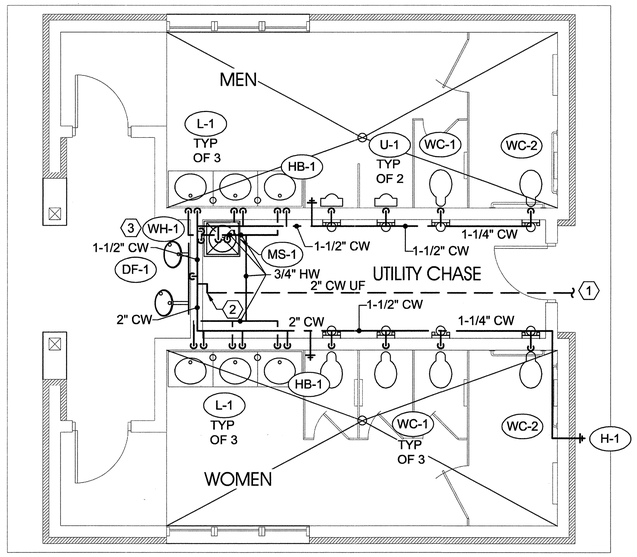

PLUMBING WATER PLAN

SCALE: 1/4" = 1'-0"

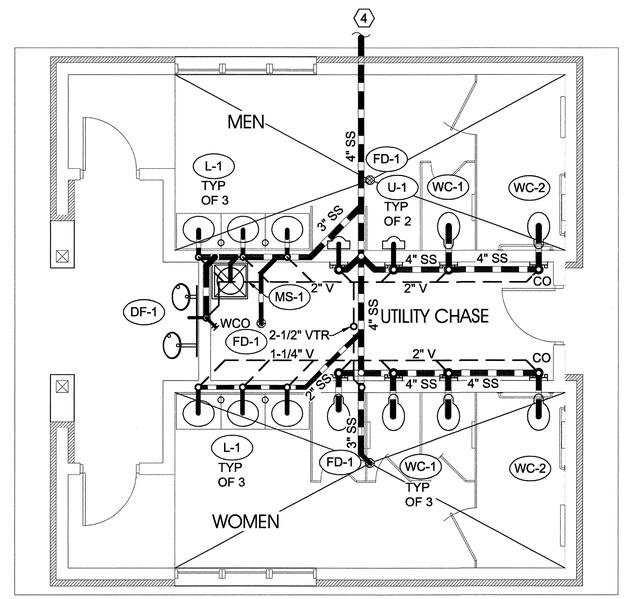

PLUMBING WATER PLAN

SCALE: 1/4" = 1'-0"

State of Utah
Department of Administrative Services

Division of Facilities
Construction & Management
4110 State Office Building
Salt Lake City, Utah 84114
Phone: (801) 538 - 3018
Fax: (801) 538 - 3267

http://dfcm.utah.gov

CONSULTANTS:

LANDMARK DESIGN

ajc architects
703 east 1700 south
salt lake city, utah 84105
ph: 801.466.8818
fx: 801.466.4411
ajc@ajcarchitects.com

WHW ENGINEERING INC.
PROFESSIONAL MECHANICAL ENGINEERING
8619 Sandy Parkway Suite 101
SANDY, UTAH 84070
(801)466-4021, FAX 466-8536
EMAIL: excellence@whw-engineering.com

PROJECT NAME AND ADDRESS:

ESCALANTE HERITAGE CENTER

1281 EAST HIGHWAY 12
ESCALANTE, UTAH

COPYRIGHT:

ALL RIGHTS RESERVED ©
LANDMARK DESIGN, INC.
These documents are protected under the United States 1978 copyright act. It is an exclusive work of original authorship. None of the pictorial, graphic, or technical charts or drawings depicted may be reproduced by any method, mechanical, electronic, or otherwise; nor may they be used or re-used for any purpose without the express prior written permission of Landmark Design, Inc.

MARK	DATE	DESCRIPTION
1	08.13.09	DFCM REVIEW

ISSUE TYPE: 100% SUBMITTAL

ISSUE DATE: 06.12.09

DFCM PROJECT NO: 09018900
CAD PROJECT NO:
CAD DWG FILE:
DRAWN BY: WP
CHK'D BY: STAFF
COPYRIGHT:

SHEET TITLE

PLUMBING PLAN

SHEET NUMBER

PE101

PROFESSIONAL ENGINEER
8/10/09
WINWARD M. PACKER
No. 375080
STATE OF UTAH

ryanb; Aug 10, 2009 – 9:23am
C:\Documents and Settings\ryans\Local settings\temp\AcPublish_2460\P-09001.dwg

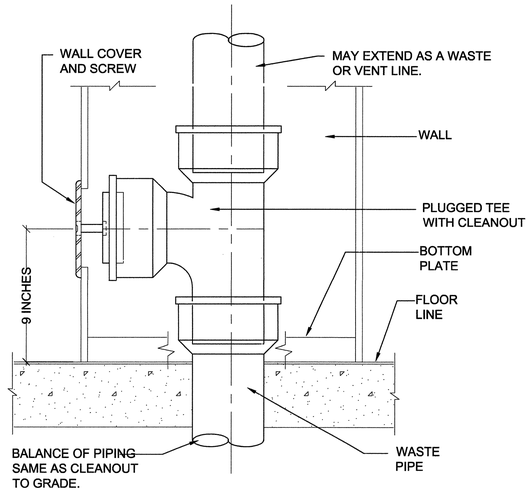

C1 WALL CLEAN-OUT DETAIL
SCALE: NONE

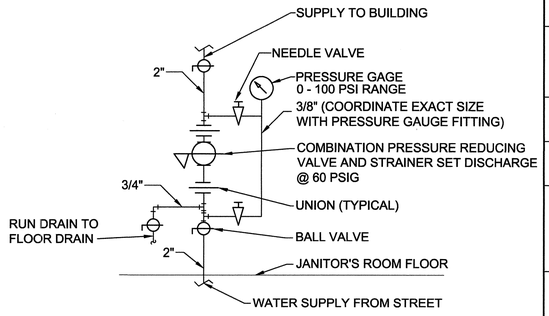

C2 VERTICAL WATER PRESSURE REDUCING STATION DETAIL
SCALE: NONE

PLUMBING FIXTURE SCHEDULE

SYMBOL	FIXTURE	INDIVIDUAL LINE SIZES					REMARKS
		TRAP	WASTE	VENT	COLD WATER	HOT WATER	
DF-1	DRINKING FOUNTAIN	1-1/2"	1-1/2"	1-1/2"	1/2"	-	OUTDOOR SEMI-RECESSED BI-LEVEL WITH FREEZE PROOF VALVE ASSEMBLY. ELKAY MODEL EDFPBM117C
FD-1	FLOOR DRAIN	3"	3"	2"	-	-	PROVIDE WITH TRAP PRIMER
HB-1	HOSE BIBB	-	-	-	1/2"	-	PROVIDE WITH LOOSE KEY HANDLE.
H-1	WALL HYDRANT	-	-	-	1/2"	-	FREEZE PROOF. PROVIDE WITH LOOSE KEY HANDLE.
L-1	LAVATORY	1-1/2"	1-1/2"	1-1/2"	1/2"	1/2"	LAVATORY BOWL TO BE INTEGRAL WITH COUNTER. PROVIDE ALL OTHER COMPONENTS INCLUDING FAUCET, VALVES, ETC.. PROVIDE WITH THERMOSTATIC AND PRESSURE MIXING VALVE.
MS-1	MOP SINK	3"	3"	1-1/2"	3/4"	3/4"	ELKAY'S MOP BASIN MODEL NO. EFS2523C. A FLOOR MOUNTED SINK W/LK43 DRAIN FITTING. LK401B SERVICE SINK FAUCET WITH VACUUM BREAKER., LK402 HOSE, LK403 3 STATION MOP HOLDER, LK404 HOSE HANGER. PROVIDE STAINLESS STEEL SPLASH GUARD (SEE ARCH. DETAIL)
WC-1	WATER CLOSET	INT	4"	2"	1"	-	STAINLESS STEEL VANDAL RESISTANT. WALL MOUNTED, FLUSH VALVE BRADLEY WC7245 OR ETWS-1490-CM. PROVIDE HARD WIRED, CONCEALED, SENSOR OPERATED FLUSH VALVE WITH PUSH BUTTON OVERRIDE.
WC-2	WATER CLOSET	INT	4"	2"	1"	-	STAINLESS STEEL VANDAL RESISTANT. WALL MOUNTED, FLUSH VALVE, ADA COMPLIANT BRADLEY WC7245 OR ETWS-1490-CM. PROVIDE HARD WIRED, CONCEALED, SENSOR OPERATED FLUSH VALVE WITH PUSH BUTTON OVERRIDE.
U-1	URINAL	3"	3"	2"	3/4"	-	STAINLESS STEEL VANDAL RESISTANT. WALL MOUNTED, WITH CONCEALED FLUSH VALVE. BRADLEY URI8100 OR EQUAL.

WATER HEATER SCHEDULE

SYMBOL	INPUT (kW)	GPH RECOVERY 90°F	STORAGE CAPACITY	RELIEF VALVE		V - Ø - Hz	COMMENTS
				BTU RATING	PRESSURE		
WH-1	2	9	20 GALLONS	PER MANUFACTURERS RECOMMENDATIONS		208/1/60	AO SMITH DEL 20 OR EQUAL

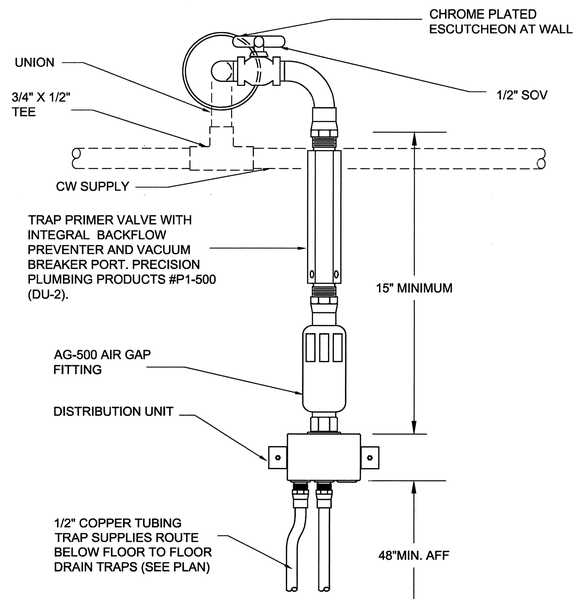

A1 TRAP PRIMER DETAIL
SCALE: NONE

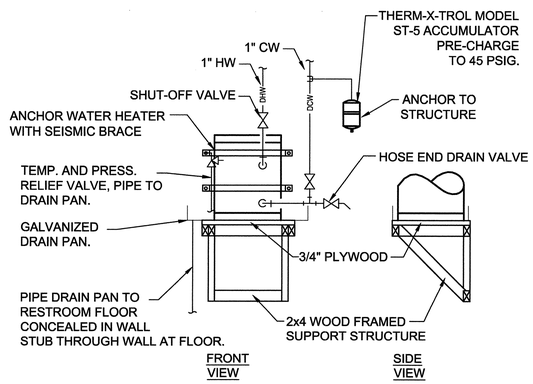

A2 WATER HEATER DETAIL
SCALE: NONE

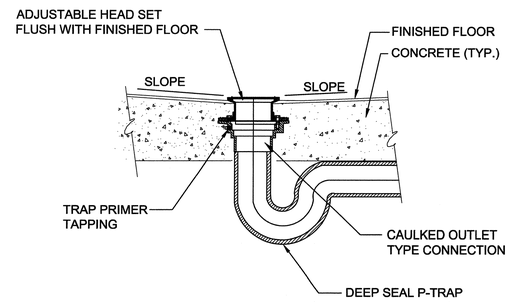

C4 FLOOR DRAIN DETAIL
SCALE: NONE

PROFESSIONAL ENGINEER 8/10/09 WINWARD M. PACKER No. 375080 STATE OF UTAH

State of Utah
Department of Administrative Services
Division of Facilities Construction & Management
4110 State Office Building
Salt Lake City, Utah 84114
Phone: (801) 538 - 3018
Fax: (801) 538 - 3267
http://dfcm.utah.gov

CONSULTANTS:
LANDMARK DESIGN
ajc architects
703 east 1700 south
salt lake city, utah 84105
ph: 801.466.8818
fx: 801.466.4411
ajc@ajcarchitects.com
WHW ENGINEERING INC.
PROFESSIONAL MECHANICAL ENGINEERING
8619 Sandy Parkway Suite 101
SANDY, UTAH 84070
(801)466-4021, FAX 466-8536
EMAIL: excellence@whw-engineering.com

PROJECT NAME AND ADDRESS:

ESCALANTE HERITAGE CENTER

1281 EAST HIGHWAY 12
ESCALANTE, UTAH

COPYRIGHT:
ALL RIGHTS RESERVED © LANDMARK DESIGN, INC.
These documents are protected under the United States 1978 copyright act. It is an exclusive work of original authorship. None of the pictorial, graphic, or technical charts or drawings depicted may be reproduced by any method, mechanical, electronic, or otherwise; nor may they be used or re-used for any purpose without the express prior written permission of Landmark Design, Inc.

MARK	DATE	DESCRIPTION
1	08.13.09	DFCM REVIEW

ISSUE TYPE: 100% SUBMITTAL

ISSUE DATE: 06.12.09

DFCM PROJECT NO: 09018900
CAD PROJECT NO:
CAD DWG FILE:
DRAWN BY: WP
CHK'D BY: STAFF
COPYRIGHT:

SHEET TITLE

PLUMBING DETAILS AND SCHEDULES

SHEET NUMBER

PE501

ryanb; Aug 10, 2009 – 9:23am
C:\Documents and Settings\ryanb\local settings\temp\AcPublish_2460\P-09001.dwg

SYMBOL LIST

- WALL MOUNTED LIGHT FIXTURE
- SURFACE FLUORESCENT LIGHT FIXTURE
- WALL MOUNTED FLUORESCENT LIGHT FIXTURE
- $ — SINGLE POLE SWITCH
- $3 — THREE-WAY LIGHT SWITCH
- $T — THERMAL SWITCH
- $TS — TIME SWITCH, WATTSTOPPER TS-400 OR EQUAL APPROVED
- DUPLEX RECEPTACLE
- DUPLEX RECEPTACLE ABOVE COUNTER
- J — JUNCTION BOX, FLUSH FLOOR MOUNTED
- SURFACE ELECTRICAL PANELBOARD
- RECESSED ELECTRICAL PANELBOARD
- PP — POWER PACK
- OS — OCCUPANCY SENSOR, CEILING MOUNT
- PC — PHOTO CONTROL
- PUSHBUTTON
- F — FUSED DISCONNECT SWITCH
- MOTOR CONNECTION
- # — DRAWING NOTE DESIGNATION
- # — LIGHT FIXTURE DESIGNATION
- HEAT TRACE
- CONDUIT CONCEALED IN WALLS, CEILING OR FLOOR
- CONDUIT CONCEALED IN SLAB, UNDERGROUND OR UNDERFLOOR
- EXISTING CONDUIT
- GROUND WIRE
- STUB UP
- STUB DOWN
- STUB OUT
- ISOLATED GROUND CONDUCTOR / EQUIPMENT GROUND CONDUCTOR
- PHASE CONDUCTOR / NEUTRAL CONDUCTOR
- PHASE CONDUCTOR / NEUTRAL CONDUCTOR / PROVIDE GREEN GROUND WIRE SIZED PER NEC IN ALL RACEWAYS
- EF-1 — MECHANICAL EQUIPMENT DESIGNATION

ABBREVIATIONS

AFF	ABOVE FINISHED FLOOR
AIC	AMP INTERRUPTING CURRENT (SYMMETRICAL)
C	CONDUIT
CLG	CEILING
CKT	CIRCUIT
CU	COPPER
EWC	ELECTRIC WATER COOLER
FLA	FULL LOAD AMPS
GFI	GROUND FAULT INTERRUPTER
GRD	GROUND
LTG	LIGHTING
N.C.	NORMALY CLOSED
PNL	PANEL
SPD	SURGE PROTECTIVE DEVICE
S.T.	SHUNT TRIP
TYP	TYPICAL
WP	WEATHER PROOF

DRAWING INDEX

EG001	SYMBOLS, ABBREVIATIONS AND DRAWING INDEX
ES100	ELECTRICAL SITE PLAN
EL100	RESTROOM LIGHTING PLAN
EL101	PAVILION LIGHTING PLAN
EP100	RESTROOM POWER PLAN
EP101	PAVILION POWER PLAN
EX100	ONE LINE DIAGRAM AND SCHEDULES

LICENSED PROFESSIONAL ENGINEER No. 271808 KENNETH D. GARNER STATE OF UTAH

08/13/09

State of Utah
Department of Administrative Services

Division of Facilities Construction & Management
4110 State Office Building
Salt Lake City, Utah 84114
Phone: (801) 538 - 3018
Fax: (801) 538 - 3267

http://dfcm.utah.gov

CONSULTANTS:

LANDMARK DESIGN

ajc architects
703 east 1700 south
salt lake city, utah 84105
ph: 801.466.8818
fx: 801.466.4411
ajc@ajcarchitects.com

Ken Garner Engineering, Inc.
ELECTRICAL CONSULTING ENGINEERS
102 West 500 South, Suite 225
Salt Lake City, Utah 84101
Telephone: 801.328.8800
Fax: 801.328.8802
Contact: Aleksandar Rankovic
Project #: 58069.00

PROJECT NAME AND ADDRESS:

ESCALANTE HERITAGE CENTER

1281 EAST HIGHWAY 12
ESCALANTE, UTAH

COPYRIGHT:

ALL RIGHTS RESERVED © LANDMARK DESIGN, INC.
These documents are protected under the United States 1978 copyright act. It is an exclusive work of original authorship. None of the pictorial, graphic, or technical charts or drawings depicted may be reproduced by any method, mechanical, electronic, or otherwise; nor may they be used or re-used for any purpose without the express prior written permission of Landmark Design, Inc.

MARK	DATE	DESCRIPTION

ISSUE TYPE: 100% SUBMITTAL

ISSUE DATE: 06.12.2009

DFCM PROJECT NO:	09018900
CAD PROJECT NO:	0860
CAD DWG FILE:	--
DRAWN BY:	KGE
CHK'D BY:	CK
COPYRIGHT:	--

SHEET TITLE:

SYMBOLS, ABBREVIATIONS AND DRAWING INDEX

SHEET NUMBER:

EG001

By: rbrown; Aug 06, 2009 - 2:18pm
H:\2008\UDOT Escalante Pavilion & Restroom 58069\Cad\EG001.dwg

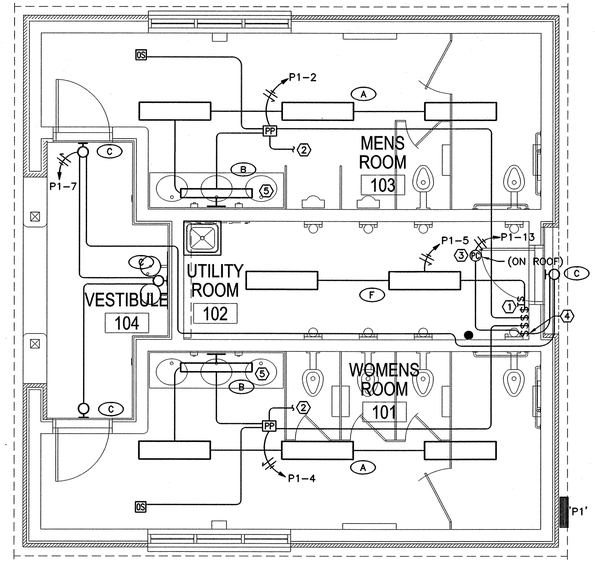

1 EL100 RESTROOM LIGHTING PLAN
SCALE: 1/4" = 1'-0"

KEYED NOTES - SHEET EL100

1. PROVIDE LIGHT SWITCHES FOR UTILITY CHASE LIGHTS CONTROL AND FOR RESTROOMS MANUAL OVERRIDE CONTROL. LABEL SWITCHES AS SPECIFIED IN SECTION 262726. TIME-OUT SETTING OF TIME SWITCH TO BE DETERMINED BY OWNER AND FIELD ADJUSTED BY DIV 26.
2. TO EXHAUST FAN IN THIS ROOM (SEE EP100).
3. ADJUST PHOTOCELL TO FACE NORTH.
4. PROVIDE SWITCH FOR VESTIBULE AND UTILITY ROOM EXTERIOR LIGHTS MANUAL OVERRIDE CONTROL. LABEL SWITCH AS SPECIFIED IN SECTION 262726.
5. FIXTURE TYPE B TO BE INSTALLED 7'-8" AFF, CENTERED ON A CMU COURSE. CORDINATE INSTALLATION WITH ARCHITECT.

GENERAL NOTES - SHEET EL100

A. ALL CONDUITS MUST BE CONCEALED WITHIN WALLS AND ABOVE CEILING. EXPOSED CONDUITS ARE NOT ALLOWED.

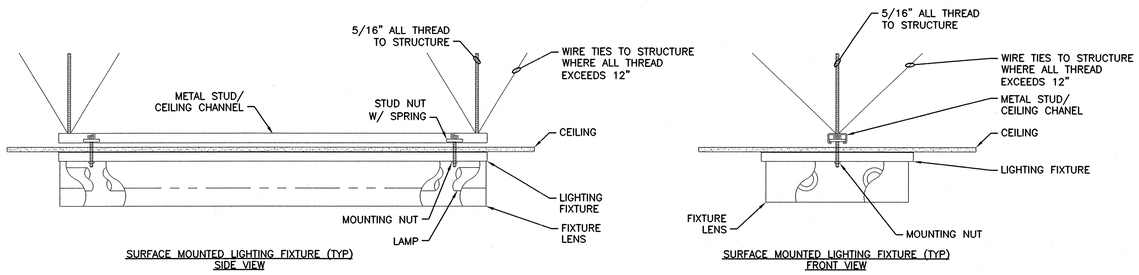

SURFACE MOUNTED LIGHTING FIXTURE (TYP)
SIDE VIEW

SURFACE MOUNTED LIGHTING FIXTURE (TYP)
FRONT VIEW

2 EL100 TYPICAL SURFACE FIXTURE MOUNTING DETAIL
SCALE: NTS

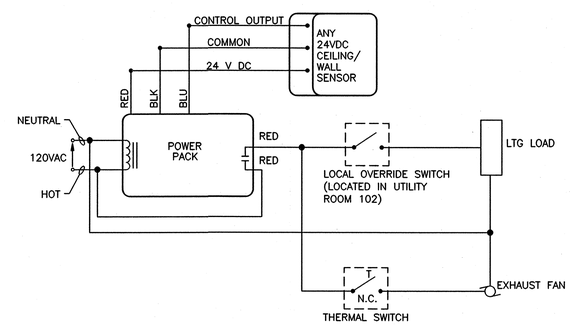

3 EL100 LIGHTING/EXHAUST FAN CONTROL DETAIL
SCALE: NTS

LICENSED PROFESSIONAL ENGINEER
No. 271880
KENNETH D. GARNER
STATE OF UTAH
08/13/09

State of Utah
Department of Administrative Services
Division of Facilities Construction & Management
4110 State Office Building
Salt Lake City, Utah 84114
Phone: (801) 538 - 3018
Fax: (801) 538 - 3267
http://dfcm.utah.gov

CONSULTANTS:

LANDMARK DESIGN
ajc architects
703 east 1700 south
salt lake city, utah 84105
ph: 801.466.8818
fx: 801.466.4411
ajc@ajcarchitects.com
Ken Garner Engineering, Inc.
ELECTRICAL CONSULTING ENGINEERS
102 West 500 South, Suite 225
Salt Lake City, Utah 84101
Telephone: 801.328.8800
Fax: 801.328.8802
Contact: Aleksandar Rankovic
Project #: 58069.00

PROJECT NAME AND ADDRESS:

ESCALANTE HERITAGE CENTER

1281 EAST HIGHWAY 12
ESCALANTE, UTAH

COPYRIGHT:

ALL RIGHTS RESERVED © LANDMARK DESIGN, INC.
These documents are protected under the United States 1978 copyright act. It is an exclusive work of original authorship. None of the pictorial, graphic, or technical charts or drawings depicted may be reproduced by any method, mechanical, electronic, or otherwise; nor may they be used or re-used for any purpose without the express prior written permission of Landmark Design, Inc.

MARK	DATE	DESCRIPTION

ISSUE TYPE: 100% SUBMITTAL

ISSUE DATE: 06.12.2009

DFCM PROJECT NO:	09018900
CAD PROJECT NO:	0860
CAD DWG FILE:	--
DRAWN BY:	KGE
CHK'D BY:	CK
COPYRIGHT:	--

SHEET TITLE:

RESTROOM LIGHTING PLAN

SHEET NUMBER:

EL100

By: rbrown; Aug 06, 2009 - 2:18pm
H:\2008\UDOT Escalante Pavilion & Restroom 58069\Cad\EL100.dwg

KEYED NOTES - SHEET EL101

1. MOUNT FIXTURE BETWEEN TRUSS MEMBERS.
2. TIME-OUT SETTING OF TIME SWITCH TO BE DETERMINED BY OWNER AND FIELD ADJUSTED BY DIVISION 26. PROVIDE WEATHER PROOF BOX WITH SPRING-HINGE DOOR. INSTALL BOX FLUSH WITH COLUMN. DOOR MUST BE SEALED AND GASKETED. INSTALL TIME SWITCH INSIDE OF BOX AND LABEL BOX AS "PAVILION LIGHT SWITCH" OR AS DIRECTED BY OWNER. SUBMIT BOX FOR ENGINEERS REVIEW.

GENERAL NOTES - SHEET EL101

A. ALL CONDUITS MUST BE CONCEALED WITHIN PAVILION COLUMNS. EXPOSED CONDUITS MUST BE HIDDEN AND PAINTED AS DIRECTED BY ARCHITECT.

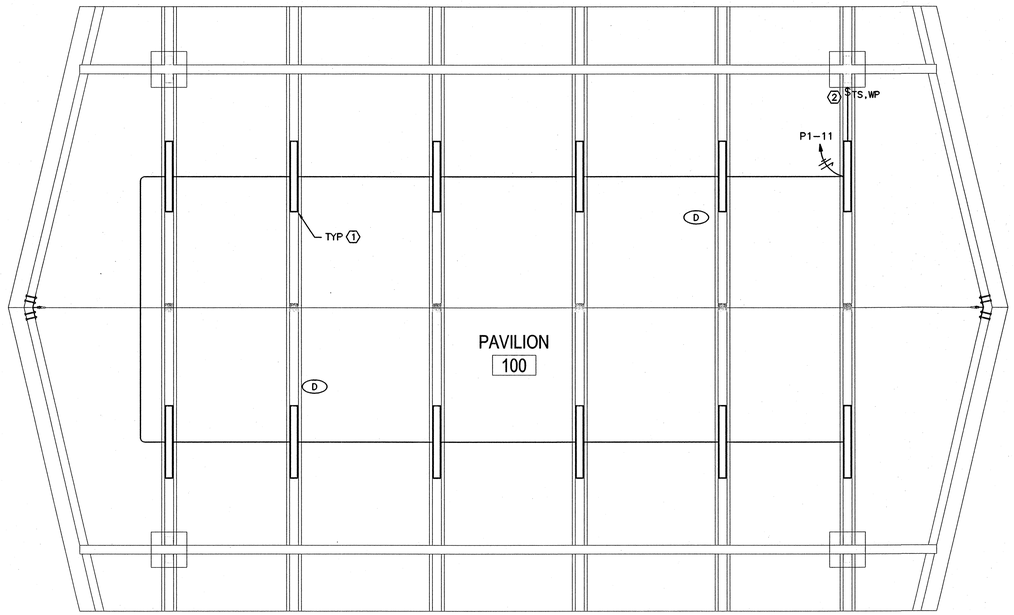

1 EL101 PAVILION LIGHTING PLAN
SCALE: 1/4" = 1'-0"

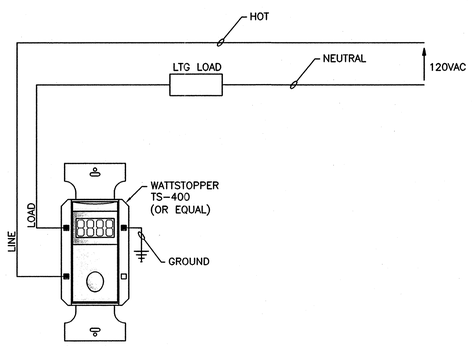

2 EL101 LIGHTING CONTROL DETAIL
SCALE: NTS

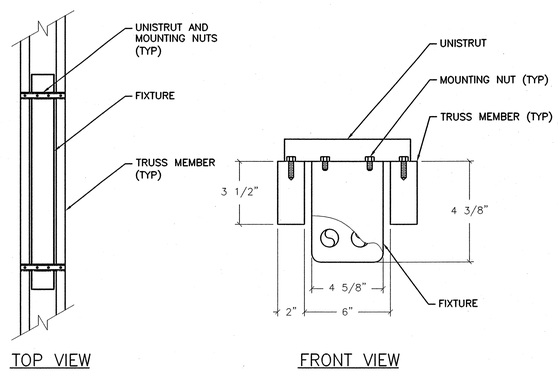

TOP VIEW

FRONT VIEW

3 EL101 FIXTURE TYPE D - MOUNTING DETAIL
SCALE: NTS

LICENSED PROFESSIONAL ENGINEER
No. 271888
KENNETH D. GARNER
STATE OF UTAH
08/13/09

State of Utah
Department of Administrative Services
Division of Facilities Construction & Management
4110 State Office Building
Salt Lake City, Utah 84114
Phone: (801) 538 - 3018
Fax: (801) 538 - 3267
http://dfcm.utah.gov

CONSULTANTS:

LANDMARK DESIGN
LANDSCAPE ARCHITECTURE AND LAND PLANNING
8604 SOUTHLAND DRIVE
SALT LAKE CITY
UTAH 84108
PHONE (801) 474-0200
FAX (801) 474-0200

ajc architects
703 east 1700 south
salt lake city, utah 84105
ph: 801.466.8818
fx: 801.466.4411
ajc@ajcarchitects.com

Ken Garner Engineering, Inc.
ELECTRICAL CONSULTING ENGINEERS
102 West 500 South, Suite 225
Salt Lake City, Utah 84101
Telephone: 801.328.8800
Fax: 801.328.8802
Contact: Aleksandar Rankovic
Project #: 58069.00

PROJECT NAME AND ADDRESS:

ESCALANTE HERITAGE CENTER

1281 EAST HIGHWAY 12
ESCALANTE, UTAH

COPYRIGHT:

ALL RIGHTS RESERVED © LANDMARK DESIGN, INC.
These documents are protected under the United States 1978 copyright act. It is an exclusive work of original authorship. None of the pictorial, graphic, or technical charts or drawings depicted may be reproduced by any method, mechanical, electronic, or otherwise; nor may they be used or re-used for any purpose without the express prior written permission of Landmark Design, Inc.

MARK	DATE	DESCRIPTION

ISSUE TYPE: 100% SUBMITTAL

ISSUE DATE: 06.12.2009

DFCM PROJECT NO:	09018900
CAD PROJECT NO:	0860
CAD DWG FILE:	--
DRAWN BY:	KGE
CHK'D BY:	CK
COPYRIGHT:	--

SHEET TITLE:

PAVILION LIGHTING PLAN

SHEET NUMBER:

EL101

By: rbrown; Aug 06, 2009 - 2:18pm
H:\2008\UDOT Escalante Pavilion & Restroom 58069\Cad\EL101.dwg

KEYED NOTES - SHEET EP100

1. COORDINATE EXACT LOCATION OF DUPLEX RECEPTACLE FOR DRINKING FOUNTAIN WITH ARCHITECT AND MECHANICAL PRIOR TO ROUGH IN.
2. COORDINATE EXACT LOCATION OF LOCKABLE THERMAL SWITCHES WITH ARCHITECT AND MECHANICAL PRIOR TO ROUGH IN.
3. TIE TO LIGHTING OCCUPANCY SENSOR IN THIS ROOM FOR CONTROL (SEE EL100).
4. HEAT TRACE CONTACTOR. COORDINATE EXACT LOCATION WITH ARCHITECT PRIOR TO ROUGH IN.
5. HEAT TRACE MOISTURE/TEMPERATURE CONTROLLER. COORDINATE EXACT LOCATION WITH ARCHITECT PRIOR TO ROUGH IN.
6. PROVIDE HEAT TRACE CABLE FOR ALL WATER PIPING IN WALLS AND CEILING. COORDINATE WITH MECHANICAL.
7. PROVIDE 2-POLE THERMAL SWITCH FOR HEAT TRACE.
8. PROVIDE J-BOX AND LOCKABLE THERMAL SWITCH FOR HAND DRYER. COORDINATE EXACT LOCATION WITH ARCHITECT PRIOR TO ROUGH IN.
9. PROVIDE POWER FOR ADA DOOR OPERATOR. COORDINATE EXACT LOCATION WITH ARCHITECT PRIOR TO ROUGH IN.
10. RUN 3/4" CONDUIT AND REQUIRED WIRING FROM ADA DOOR OPERATOR TO PUSHBUTTON PROVIDED BY ARCHITECT. PROVIDE PUSHBUTTON BACKBOX. COORDINATE EXACT LOCATION WITH ARCHITECT PRIOR TO ROUGH IN.
11. PROVIDE POWER FOR IRRIGATION CONTROLLER. FIELD COORDINATE EXACT CONTROLLER LOCATION.

GENERAL NOTES - SHEET EP100

A. ALL CONDUITS MUST BE CONCEALED WITHIN WALLS AND ABOVE CEILING. EXPOSED CONDUITS ARE NOT ALLOWED.

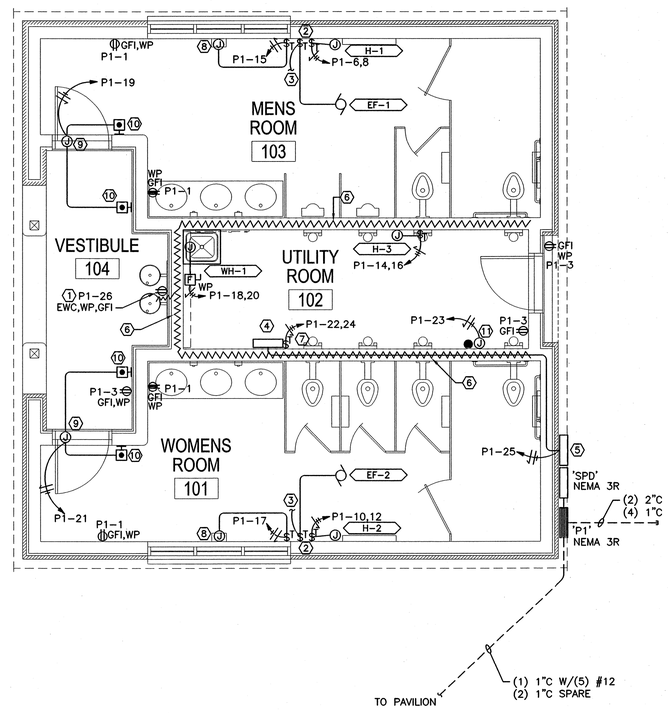

1 EP100 RESTROOM POWER PLAN
SCALE: 1/4" = 1'-0"

LICENSED PROFESSIONAL ENGINEER
No. 271808
KENNETH D. GARNER
STATE OF UTAH
08/13/09

State of Utah
Department of Administrative Services
Division of Facilities Construction & Management
4110 State Office Building
Salt Lake City, Utah 84114
Phone: (801) 538 - 3018
Fax: (801) 538 - 3267
http://dfcm.utah.gov

CONSULTANTS:

LANDMARK DESIGN
LANDSCAPE ARCHITECTURE
AND LAND PLANNING
8904 WOODLAND DRIVE
SALT LAKE CITY
UTAH 84117
PHONE (801) 474-3000
FAX (801) 474-3000

ajc architects
703 east 1700 south
salt lake city, utah 84105
ph: 801.466.8818
fx: 801.466.4411
ajc@ajcarchitects.com

Ken Garner Engineering, Inc.
ELECTRICAL CONSULTING ENGINEERS
102 West 500 South, Suite 225
Salt Lake City, Utah 84101
Telephone: 801.328.8800
Fax: 801.328.8802
Contact: Aleksandar Rankovic
Project #: 58069.00

PROJECT NAME AND ADDRESS:

ESCALANTE HERITAGE CENTER

1281 EAST HIGHWAY 12
ESCALANTE, UTAH

COPYRIGHT:

ALL RIGHTS RESERVED © LANDMARK DESIGN, INC.
These documents are protected under the United States 1978 copyright act. It is an exclusive work of original authorship. None of the pictorial, graphic, or technical charts or drawings depicted may be reproduced by any method, mechanical, electronic, or otherwise; nor may they be used or re-used for any purpose without the express prior written permission of Landmark Design, Inc.

MARK	DATE	DESCRIPTION

ISSUE TYPE: 100% SUBMITTAL

ISSUE DATE: 06.12.2009

DFCM PROJECT NO:	09018900
CAD PROJECT NO:	0860
CAD DWG FILE:	--
DRAWN BY:	KGE
CHK'D BY:	CK
COPYRIGHT:	--

SHEET TITLE:

RESTROOM POWER PLAN

SHEET NUMBER:

EP100

By: rbrown; Aug 06, 2009 - 2:19pm
H:\2008\UDOT Escalante Pavilion & Restroom 58069\Cad\EP100.dwg

GENERAL NOTES - SHEET EP101

A. ALL CONDUITS MUST BE CONCEALED WITHIN PAVILION COLUMNS. EXPOSED CONDUITS ARE NOT ALLOWED.

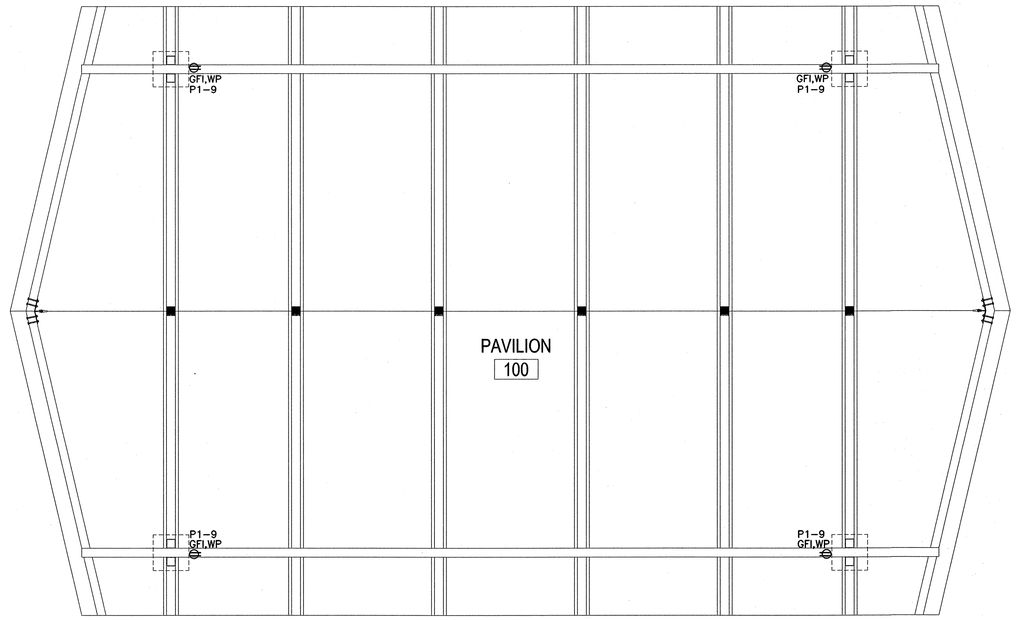

1 EP101 PAVILION POWER PLAN
SCALE: 1/8" = 1'- 0"

N

LICENSED PROFESSIONAL ENGINEER
No. 221888
KENNETH D. GARNER
STATE OF UTAH
08/13/09

State of Utah
Department of Administrative Services

Division of Facilities Construction & Management
4110 State Office Building
Salt Lake City, Utah 84114
Phone: (801) 538 - 3018
Fax: (801) 538 - 3267

http://dfcm.utah.gov

CONSULTANTS:

LANDMARK DESIGN
LANDSCAPE ARCHITECTURE AND LAND PLANNING
8894 SUGARLAND DRIVE
SALT LAKE CITY
STATE: 84094
PHONE (801) 474-0200
FAX (801) 474-0202

ajc architects
703 east 1700 south
salt lake city, utah 84105
ph: 801.466.8818
fx: 801.466.4411
ajc@ajcarchitects.com

Ken Garner Engineering, Inc.
ELECTRICAL CONSULTING ENGINEERS
102 West 500 South, Suite 225
Salt Lake City, Utah 84101
Telephone: 801.328.8800
Fax: 801.328.8802
Contact: Aleksandar Rankovic
Project #: 58069.00

PROJECT NAME AND ADDRESS:

ESCALANTE HERITAGE CENTER

1281 EAST HIGHWAY 12
ESCALANTE, UTAH

COPYRIGHT:

ALL RIGHTS RESERVED ©
LANDMARK DESIGN, INC.
These documents are protected under the United States 1978 copyright act. It is an exclusive work of original authorship. None of the pictorial, graphic, or technical charts or drawings depicted may be reproduced by any method, mechanical, electronic, or otherwise; nor may they be used or re-used for any purpose without the express prior written permission of Landmark Design, Inc.

MARK	DATE	DESCRIPTION

ISSUE TYPE: 100% SUBMITTAL

ISSUE DATE: 06.12.2009

DFCM PROJECT NO:	09018900
CAD PROJECT NO:	0860
CAD DWG FILE:	--
DRAWN BY:	KGE
CHK'D BY:	CK
COPYRIGHT:	--

SHEET TITLE:

PAVILION POWER PLAN

SHEET NUMBER:

EP101

By: dbrown: Aug 06, 2009 – 2:19pm
H:\2008\UDOT Escalante Pavilion & Restroom 58069\Cad\EP101.dwg

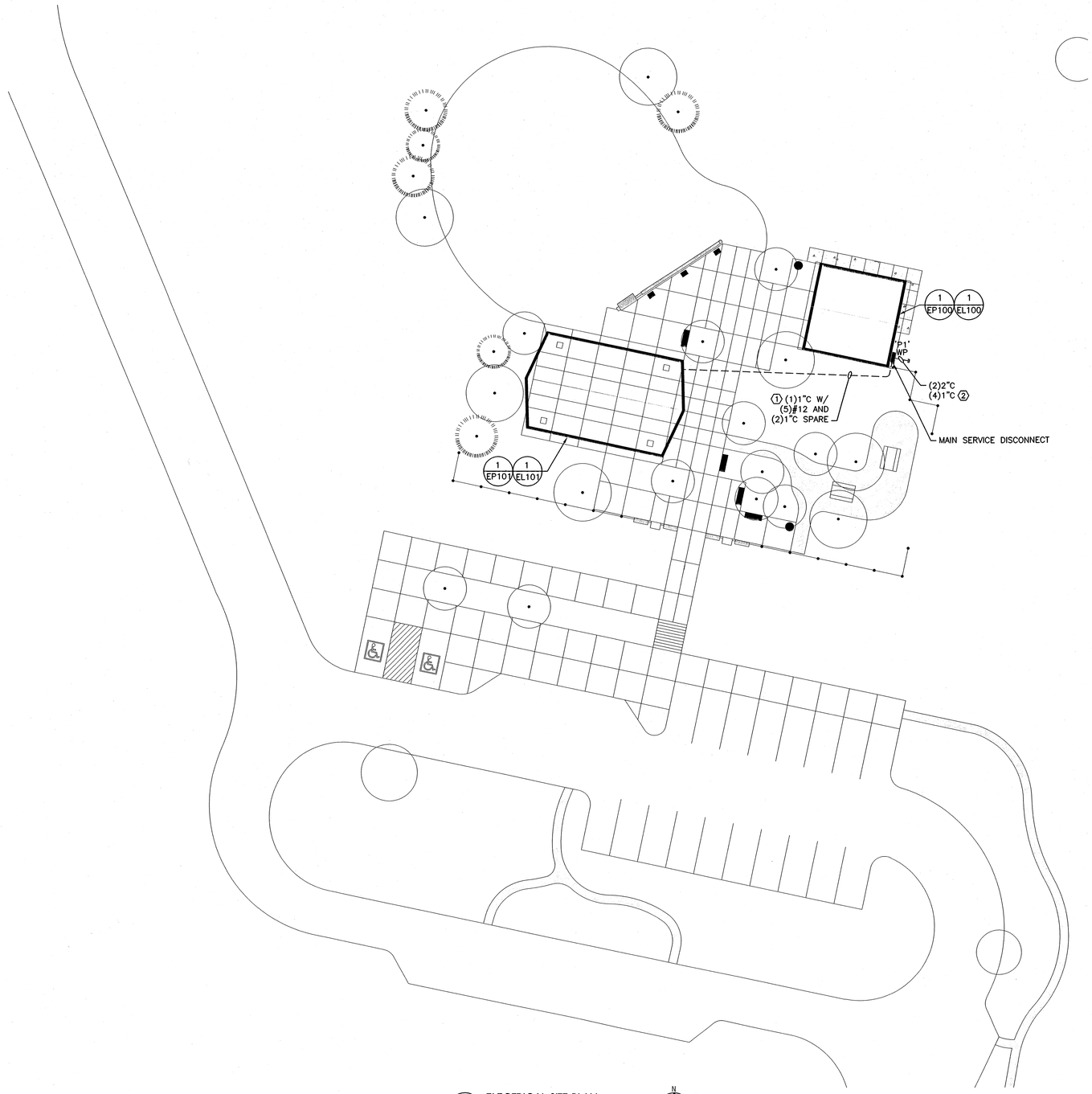

1 EL101 ELECTRICAL SITE PLAN
SCALE: 1" = 20'-0"

KEYED NOTES - SHEET ES100

1. ELECTRICAL CONTRACTOR TO TRENCH AND INSTALL (1) 1" CONDUITS (FOR PAVILION LIGHTS AND RECEPTACLES) WITH (5) #12 AND (2) 1" CONDUIT SPARE. TRENCH CONDUIT 36" DEEP FROM TOP OF CONDUIT. PROVIDE MAGNETIC RIBBON AT 12" BELOW GRADE. PROVIDE PULL STRING FOR ALL SPARE CONDUITS STUB SPARE CONDUITS 5 FEET BELOW GRADE FROM PAVILION, CAP AND MARK AS "SPARE CONDUITS". BACKFILL, COMPACT AND REPAIR TRENCH AS REQUIRED.
2. ELECTRICAL CONTRACTOR TO PROVIDE AND INSTALL (2) 2" AND (4) 1" SPARE CONDUITS. STUB CONDUITS OUT 5 FEET BELOW GRADE FROM PANELBOARD 'P1'. TRENCH CONDUITS 36"DEEP. PROVIDE YELLOW MAGNETIC RIBBON AT 12" BELOW GRADE. CAP AND PROTECT CONDUITS FOR FUTURE USE. SHOW EXACT LOCATIONS AND DIMENSIONS ON AS BUILTS DRAWINGS. EXPOSED PARTS AND ELBOWS MUST BE RIGID. UNDERGROUND PARTS ARE TO BE PVC.

ALTERNATE #1:
PAVILION AND ASSOCIATED ELECTRICAL WORK

LICENSED PROFESSIONAL ENGINEER
No. 271888
KENNETH D. GARNER
STATE OF UTAH
08/13/09

State of Utah
Department of Administrative Services
Division of Facilities
Construction & Management
4110 State Office Building
Salt Lake City, Utah 84114
Phone: (801) 538 - 3018
Fax: (801) 538 - 3267
http://dfcm.utah.gov

CONSULTANTS:

LANDMARK DESIGN
LANDSCAPE ARCHITECTURE AND LAND PLANNING
2604 SOUTHLAND DRIVE
SALT LAKE CITY
UTAH 84106
PHONE (801) 474-9500
FAX (801) 474-9505

ajc architects
703 east 1700 south
salt lake city, utah 84105
ph: 801.466.8818
fx: 801.466.4411
ajc@ajcarchitects.com

Ken Garner Engineering, Inc.
ELECTRICAL CONSULTING ENGINEERS
102 West 500 South, Suite 225
Salt Lake City, Utah 84101
Telephone: 801.328.8800
Fax: 801.328.8802
Contact: Aleksandar Rankovic
Project #: 58069.00

PROJECT NAME AND ADDRESS:

ESCALANTE HERITAGE CENTER

1281 EAST HIGHWAY 12
ESCALANTE, UTAH

COPYRIGHT:

ALL RIGHTS RESERVED ©
LANDMARK DESIGN, INC.
These documents are protected under the United States 1978 copyright act. It is an exclusive work of original authorship. None of the pictorial, graphic, or technical charts or drawings depicted may be reproduced by any method, mechanical, electronic, or otherwise; nor may they be used or re-used for any purpose without the express prior written permission of Landmark Design, Inc.

MARK	DATE	DESCRIPTION

ISSUE TYPE: 100% SUBMITTAL

ISSUE DATE: 06.12.2009

DFCM PROJECT NO:	09018900
CAD PROJECT NO:	0860
CAD DWG FILE:	--
DRAWN BY:	KGE
CHK'D BY:	CK
COPYRIGHT:	--

SHEET TITLE:

ELECTRICAL SITE PLAN

SHEET NUMBER:

ES100

By: rbrown; Aug 06, 2009 - 2:18pm
H:\2008\UDOT Escalante Pavilion & Restroom 58069\Cad\ES100.dwg

MECHANICAL EQUIPMENT LIST

	DESCRIPTION	V	PH	HP	KVA	AMPS	DISCONNECT SIZE	DISCONNECT FUSED	STARTER	FEEDER	REMARKS
EF-1	EXHAUST FAN	120	1	–	–	4.90	THERMAL SWITCH		–	3/4"C W/ (3)#12	1, 2
EF-2	EXHAUST FAN	120	1	–	–	4.90	THERMAL SWITCH		–	3/4"C W/ (3)#12	1, 2
EWC-1	DRINKING FOUNTAIN	120	1	–	–	–	–	–	–	3/4"C W/ (3)#12	
H-1	EL. WALL HEATER	240	1	–	3	12.50	THERMAL SWITCH		–	3/4"C W/ (3)#12	3
H-2	EL. WALL HEATER	240	1	–	3	12.50	THERMAL SWITCH		–	3/4"C W/ (3)#12	3
H-3	EL. WALL HEATER	240	1	–	3	12.50	THERMAL SWITCH		–	3/4"C W/ (3)#12	4
WH-1	WATER HEATER	240	1	–	2	8.33	30.00	12.00	–	3/4"C W/ (3)#12	5

REMARKS:
1. INTERLOCK WITH RESTROOM OCCUPANCY SENSOR.
2. PROVIDE LOCKABLE THERMAL SWITCH.
3. PROVIDE 2-POLE LOCKABLE THERMAL SWITCH.
4. PROVIDE 2-POLE THERMAL SWITCH.
5. COORDINATE FUSE SIZE WITH MANUFACTURER RECOMMENDATIONS.

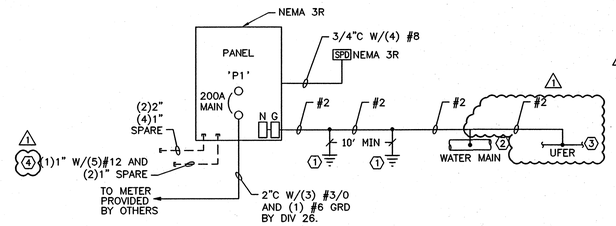

1 EX101 ONE LINE DIAGRAM
SCALE: NTS

KEYED NOTES - SHEET EX100

1. 10' LONG, 5/8" DIAMETER COPPER RODS SHALL BE BURRIED 24" BELOW GRADE TO TOP OF ROD. CADWELD CONNECTION TO CONDUCTOR LEAVING 6' SLACK IN CONDUCTOR BETWEEN RODS. RODS SHALL BE SPACED MINIMUM 10' APART.
2. CLAMP TO BUILDING WATER MAIN AS REQUIRED BY NEC 205.52(A)(1) WHERE AVAILABLE FOR INSPECTION IF POSSIBLE.
3. CONCRETE ENCASED ELECTRODE SHALL BE 20 FEET MINIMUM LENGTH OF #2 COPPER PLACED WITHIN 2-1/2 TO 3-1/2 INCHES OF BOTTOM OF EXTERIOR WALL FOOTING THAT IS 1/2 INCH DIAMETER OR GREATER. REFER TO NEC 250.52.
4. IF ALTERNATE #1 (PAVILION AND ASSOCIATED ELECTRICAL WORK) HAS NOT BEEN ACCEPTED, STUB (3)1" CONDUITS WITH PULL STRINGS OUT 5 FEET BELOW GRADE FROM PANELBOARD 'P1' SHOW EXACT CONDUIT LOCATION ON RECORD DRAWINGS.

PANEL:P1 120 240 1 PH 3 W 200 A MAIN BKR 22 KAIC

		LOAD	BKR	P					BKR	P		LOAD		DESCRIPTION
REC. RESTROOMS	R	720	20	1	1	A	2		20	1	M	780		EF-1 & LTS MENS RM 103
REC. EXT, UTILITY CHASE	R	540	20	1	3	B	4		20	1	M	780		EF-2 & LTS WOMENS RM 101
LTS, UTIL. CHASE	L	96	20	1	5	A	6		20	2	M	1500		H-1
LTS EXTERIOR	L	282	20	1	7	B	8	–		–	M	1500		–
REC. PAVILION	R	720	20	1	9	A	10		20	2	M	1500		H-2
LTS PAVILION	L	480	20	1	11	B	12	–		–	M	1500		–
PHOTOCELL	E	100	20	1	13	A	14		20	2	M	1500		H-3
HAND DRYER – MENS RM 103	E	1500	20	1	15	B	16	–		–	M	1500		–
HAND DRYER – WOMENS RM 101	E	1500	20	1	17	A	18		20	2	M	1000		WH-1
ADA DOOR – MENS RM 103	E	1000	20	1	19	B	20	–		–	M	1000		–
ADA DOOR – WOMENS RM 101	E	1000	20	1	21	A	22	20*		2	E	1000		HEAT TRACE
IRRIGATION CONTROLLER	E	400	20	1	23	B	24	–		–	E	1000		–
HEAT TRACE CONTROLLER	E	500	20	1	25	A	26		20	1	M	1000		EWC-1
SPARE			20	1	27	B	28		20	1				SPARE
SPARE			20	1	29	A	30		20	1				SPARE
SPARE			20	2	31	B	32		40	2				SPED
–			–	–	33	A	34	–		–				–
SPARE			20	2	35	B	36		20	2				SPARE
–			–	–	37	A	38	–		–				–
SPACE ONLY					39	B	40							SPACE ONLY
SPACE ONLY					41	A	42							SPACE ONLY
CONNECTED LOAD		24.4 KVA			102		AMPS							* – PROVIDE 30mA GFI BREAKER
NEC DEMAND LOAD		24.4 KVA			102		AMPS							

LUMINAIRE SCHEDULE - SHEET EX100

TYPE	DESCRIPTION		LAMP(S) AND BALLAST(S)	INPUT (VA)	MANUFACTURER(S)
A	DESCRIPTION:	HIGH ABUSE SURFACE POLYCARBONATE LINEAR FL	(2) F32T8/ADV835/ALTO	48	LUMINAIRE
	SIZE:	7" WIDE X 4" DEEP X 4' LONG	(1) 2-LAMP ADVANCE		LVP-1049-232-E120V-ADVANCE-GLR
	HOUSING:	16 GAUGE STEEL	ROP-2P32-LW-SC		
	FINISH:	POLYESTER POWDER COAT	PREMIUM ELECTRONIC		OR EQUAL APPROVED KENNAL
	LENS:	UV STABILIZED IMPACT RES PRISMATIC POLYCARBONATE	120 VOLT		OR EQUAL APPROVED LIGHTOLIER
	GASKET:	POLYURETHANE GASKETING, WET LABEL			
	MOUNTING:	SURFACE MOUNT TO TRUSS MEMBERS			
	OTHER:	FUSED, TORXHEAD VANDAL RESISTANT SCREWS			
B	DESCRIPTION:	HIGH ABUSE WALL MOUNT POLYCARBONATE LINEAR FL	(2) F32T8/ADV835/ALTO	48	LUMINAIRE
	SIZE:	5" WIDE X 5" DEEP X 4' LONG	(1) 2-LAMP ADVANCE		LVP-524-232-E120V-ADVANCE-GLR
	HOUSING:	16 GAUGE STEEL	ROP-2P32-LW-SC		
	FINISH:	POLYESTER POWDER COAT	PREMIUM ELECTRONIC		OR EQUAL APPROVED KENNAL
	LENS:	UV STABILIZED IMPACT RES PRISMATIC POLYCARBONATE	120 VOLT		OR EQUAL APPROVED LIGHTOLIER
	GASKET:	POLYURETHANE GASKETING, DAMP LABEL			
	MOUNTING:	WALL MOUNT AT 7'-8" AFF			
	OTHER:	FUSED, TROXHEAD VANDAL RESISTANT SCREWS			
C	DESCRIPTION:	HIGH ABUSE REGRESSED WALL MOUNT CF WET LABEL	50W PSMH	63	KIM
	SIZE:	12" NOMINAL DIAMETER X 8" DEEP (REGRESSED 4")	PULSE START		WF33C/50PMH120/SCBA/SF
	HOUSING:	DIE-CAST ALUMINUM	120 VOLT		
	FINISH:	POLYESTER POWDER COAT, CUSTOM COLOR BY ARCHITECT			OR EQUAL APPROVED KENNAL
	LENS:	.225" TEMPERED GLASS, IMPACT RESISTANT			OR EQUAL APPROVED HADCO
	GASKET:	POLYURETHANE GASKETING, WET LABEL			
	MOUNTING:	PARTIALLY REGRESSED WALL MOUNTED AT 9'-0"AFF TO CENTER			
	OTHER:	FUSED, TORXHEAD VANDAL RESISTANT SCREWS			
D	DESCRIPTION:	SPECIAL VANDAL RESISTANT FLUORESCENT	(2) F32T8/ADV835/ALTO	48	LUMINAIRE
	SIZE:	4.63"W X 4.19"H X 48.31"L	(1) 2-LAMP ADVANCE		LVP 524-232-E120V-ADVANCE-AL-WET-DAMP-GLR
	FINISH:	POLIESTER POWDER COAT	ROP-2P32-LW-SC		
	MOUNTING:	SURFACE MOUNT BETWEEN TRUSS MEMBERS	PREMIUM ELECTRONIC		OR EQUAL APPROVED KENNAL
	OTHER:	FUSED	120 VOLT		OR EQUAL APPROVED WIDELITE
F	DESCRIPTION:	SUSPENDED WRAPAROUND	(2) F32T8/ADV835/ALTO	48	COLUMBIA LIGHTING
	SIZE:	10"X48"	(1) 2-LAMP ADVANCE		WC4-232-E120V-ADVANCE-GLR-DL-S18*
	HOUSING:	STATIC	ROP-2P32-LW-SC		*- PROVIDE STEAM (LENGTH AS REQUIRED)
	FINISH:	WHITE	PREMIUM ELECTRONIC		TO MOUNT FIXTURE 8'0" ABOVE FINISHED FLOOR
	LENS:	.187, A12	120 VOLT		
	MOUNTING:	SUSPENDED WITH STEAM, 8'-0" ABOVE FINISHED FLOOR			OR EQUAL APPROVED LITHONIA
	OTHER:	FUSED			OR EQUAL APPROVED LIGHTOLIER

LUMINAIRE SCHEDULE GENERAL NOTES:
A. ALL BALLASTED FIXTURES SHALL BE 120 VOLT.
B. ALL BALLASTED FIXTURES SHALL HAVE FUSING. FACTORY INSTALLED FUSE MANDATORY.
C. ALL FLUORESCENT LAMPS SHALL BE 3500K.

LICENSED PROFESSIONAL ENGINEER
No. 271800
KENNETH D. GARNER
STATE OF UTAH
08/13/09

State of Utah
Department of Administrative Services
Division of Facilities Construction & Management
4110 State Office Building
Salt Lake City, Utah 84114
Phone: (801) 538 - 3018
Fax: (801) 538 - 3267
http://dfcm.utah.gov

CONSULTANTS:

LANDMARK DESIGN
LANDSCAPE ARCHITECTURE AND LAND PLANNING
8894 HIGHLAND DRIVE
SALT LAKE CITY
UTAH 84121
PHONE (801) 474-0050
FAX (801) 474-0052

ajc architects
703 east 1700 south
salt lake city, utah 84105
ph: 801.466.8818
fx: 801.466.4411
ajc@ajcarchitects.com

Ken Garner Engineering, Inc.
ELECTRICAL CONSULTING ENGINEERS
102 West 500 South, Suite 225
Salt Lake City, Utah 84101
Telephone: 801.328.8800
Fax: 801.328.8802
Contact: Aleksandar Rankovic
Project #: 58069.00

PROJECT NAME AND ADDRESS:

ESCALANTE HERITAGE CENTER

1281 EAST HIGHWAY 12
ESCALANTE, UTAH

COPYRIGHT:

ALL RIGHTS RESERVED ©
LANDMARK DESIGN, INC.
These documents are protected under the United States 1978 copyright act. It is an exclusive work of original authorship. None of the pictorial, graphic, or technical charts or drawings depicted may be reproduced by any method, mechanical, electronic, or otherwise; nor may they be used or re-used for any purpose without the express prior written permission of Landmark Design, Inc.

MARK	DATE	DESCRIPTION
1	08.13.09	DFCM REVIEW

ISSUE TYPE: 100% SUBMITTAL

ISSUE DATE: 06.12.2009

DFCM PROJECT NO:	09018900
CAD PROJECT NO:	0860
CAD DWG FILE:	--
DRAWN BY:	KGE
CHK'D BY:	CK
COPYRIGHT:	--

SHEET TITLE:

ONE LINE DIAGRAM AND SCHEDULES

SHEET NUMBER:

EX100

By: rbrown, Aug 06, 2009 – 2:19pm
H:\2008\UOF Escalante Pavilion & Restroom 58069\Cad\EX100.dwg