Utah Valley University New Science Building

CONSTRUCTION DOCUMENTS - VOLUME 1

DFCM PROJECT NO.: **09020790**

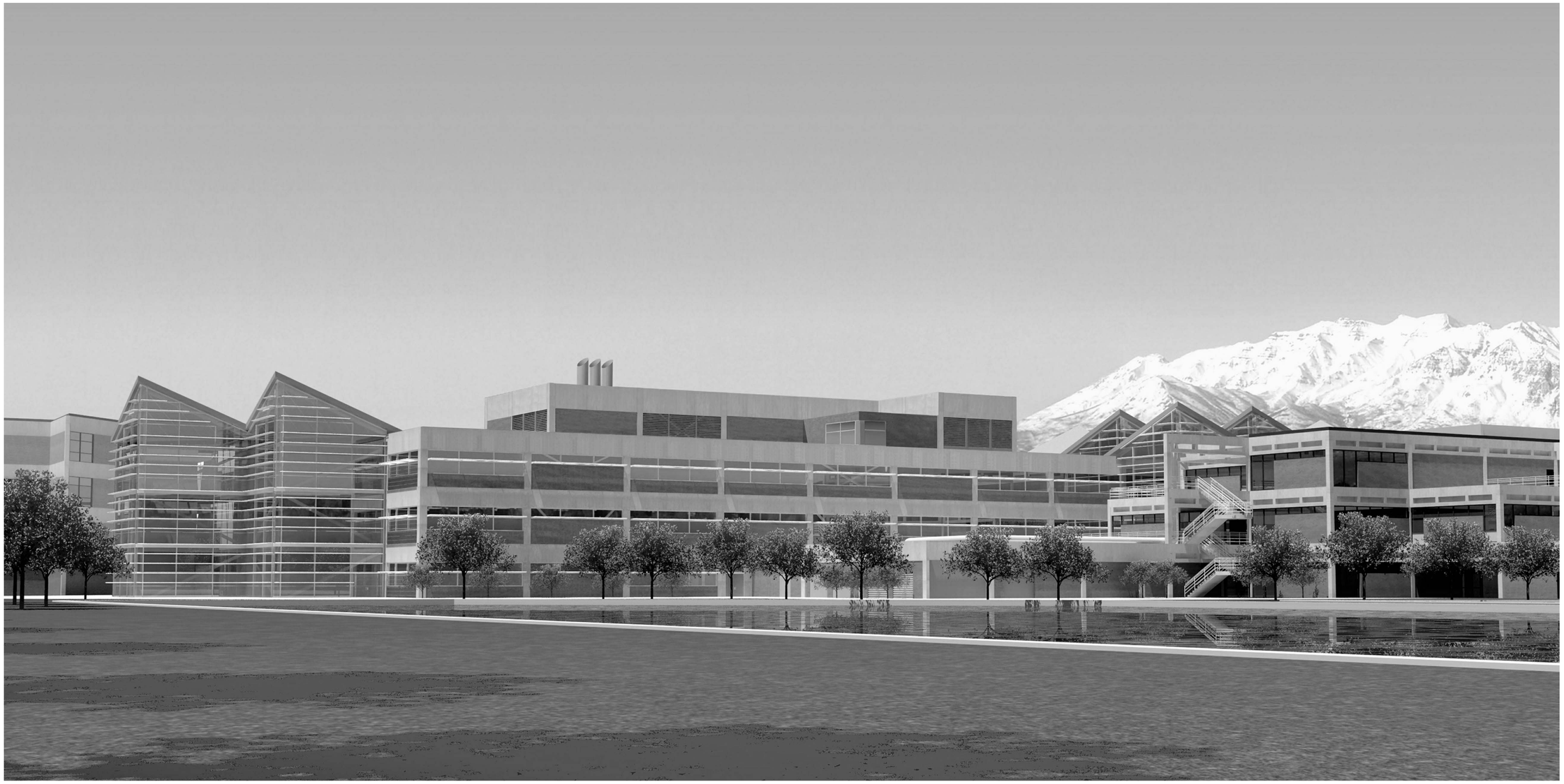

GSBS ARCHITECTS

375 WEST 200 SOUTH
SALT LAKE CITY, UT 84101

P 801.521.8600
F 801.521.7913

www.gsbsarchitects.com

CIVIL ENGINEERING:
GREAT BASIN NORTH
5746 South 1475 East #200
Ogden, Utah 84403

STRUCTURAL ENGINEERING:
REAVELEY ENGINEERS
675 East 500 South # 400
Salt Lake City, Utah 84102

MECHANICAL ENGINEERING:
COLVIN ENGINEERING ASSOC.
244 West 300 North #200
Salt Lake City, Utah 84103

ELECTRICAL ENGINEERING:
SPECTRUM DESIGN
175 South Main #300
Salt Lake City, Utah 84111

LABORATORY CONSULTANT
RESEARCH FACILITIES DESIGN
3965 Fifth Avenue, Suite 400
San Diego, California 92103

Division of
Facilities
Construction and
Management

Utah Valley
University New
Science Building

800 West University Parkway
Orem, Utah 84058

CONSTRUCTION DOCUMENTS

GSBS PROJECT NO.:	2009.115.00
ISSUED DATE:	05.07.2010

DRAWING INDEX

GENERAL

GI-000	COVER SHEET	Vol. 1
GI-010	INDEX SHEET	Vol. 1
GI-020	CONSTRUCTION ACTIVITIES PLAN	Vol. 1
GI-100	LEVEL 0 CODE PLAN	Vol. 1
GI-101	LEVEL 1 CODE PLAN	Vol. 1
GI-102	LEVEL 2 CODE PLAN	Vol. 1
GI-103	ROOF CODE PLAN	Vol. 1
GI-200	SPECIAL INSPECTIONS	Vol. 1
GI-201	COMCHECK/ DEFERRED SUBMITTALS	

CIVIL

CD-000	OVERALL DEMOLITION PLAN	Vol. 1
CD-001	DEMOLITION PLAN	Vol. 1
CD-002	DEMOLITION PLAN	Vol. 1
CD-003	DEMOLITION PLAN	Vol. 1
CS-100	OVERALL SITE PLAN	Vol. 1
CS-101	SITE PLAN	Vol. 1
CS-102	SITE PLAN	Vol. 1
CS-103	SITE PLAN	Vol. 1
CS-104	ADA SITE ACCESSIBILITY PLAN	Vol. 1
CG-200	OVERALL GRADING & DRAINAGE PLAN	Vol. 1
CG-200A	EXCAVATION PLAN	Vol. 1
CG-201	GRADING & DRAINAGE PLAN	Vol. 1
CG-202	GRADING & DRAINAGE PLAN	Vol. 1
CG-203	GRADING & DRAINAGE PLAN	Vol. 1
CG-204	GRADING & DRAINAGE DETAIL AREAS	Vol. 1
CG-205	RETAINING WALL DETAILS	Vol. 1
CU-300	OVERALL UTILITY PLAN	Vol. 1
CU-301	UTILITY PLAN	Vol. 1
CU-302	UTILITY PLAN	Vol. 1
CU-303	UTILITY PLAN	Vol. 1
CU-304	UTILITY PLAN DETAIL AREA & WATER LINE CROSSINGS	Vol. 1
CU-305	UTILITY TUNNEL PLAN AND PROFILE	Vol. 1
CU-306	UTILITY TUNNEL PLAN AND PROFILE	Vol. 1
DS-101	UTILITY TUNNEL DETAIL SHEET	Vol. 1
DS-102	DETAIL SHEET	Vol. 1
CW-101	SWPPP DEMOLITION PHASE	Vol. 1
CW-102	SWPPP BUILDING EXCAVATION PHASE	Vol. 1
CW-103	SWPPP UTILITY CONSTRUCTION PHASE	Vol. 1
CW-104	SWPPP FINISH GRADING PHASE	Vol. 1

LANDSCAPE

AS-100	SITE PLAN	Vol 1.
AS-101	SITE DETAILS	Vol 1.
LI-100	IRRIGATION PLAN	Vol 1.
LI-101	IRRIGATION DETAILS	Vol 1.
LP-100	PLANTING PLAN	Vol 1.
LP-101	PLANTING DETAILS	Vol 1.

ARCHITECTURAL

AD-101	LEVEL 0 DEMOLITION PLAN	Vol. 1
AD-111	LEVEL 1 DEMOLITION PLAN	Vol. 1
AD-121	LEVEL 2 DEMOLITION PLAN	Vol. 1
AD-131	DEMO VIEWS	Vol. 1
AD-132	DEMO VIEWS	Vol. 1
AE-101	LEVEL 0 FLOOR PLAN	Vol. 1
AE-101A	LEVEL 0 FLOOR PLAN - AREA A	Vol. 1
AE-101B	LEVEL 0 FLOOR PLAN - AREA B	Vol. 1
AE-101C	LEVEL 0 FLOOR PLAN - AREA C	Vol. 1
AE-102A	LEVEL 0 WTFI PLAN- AREA A	Vol. 1
AE-102B	LEVEL 0 WTFI PLAN- AREA B	Vol. 1
AE-102C	LEVEL 0 WTFI PLAN- AREA C	Vol. 1
AE-102D	LEVEL 0 FLOOR PATTERN PLAN	Vol. 1
AE-103A	LEVEL 0 REFLECTED CEILING PLAN - AREA A	Vol. 1
AE-103B	LEVEL 0 REFLECTED CEILING PLAN - AREA B	Vol. 1
AE-103C	LEVEL 0 REFLECTED CEILING PLAN - AREA C	Vol. 1
AE-111	LEVEL 1 FLOOR PLAN	Vol. 1
AE-111A	LEVEL 1 FLOOR PLAN - AREA A	Vol. 1
AE-111B	LEVEL 1 FLOOR PLAN - AREA B	Vol. 1

ARCHITECTURAL

AE-112A	LEVEL 1 WTFI PLAN - AREA A	Vol. 1
AE-112B	LEVEL 1 WTFI PLAN - AREA B	Vol. 1
AE-112C	LEVEL 1 FLOOR PATTERN PLAN	Vol. 1
AE-113A	LEVEL 1 REFLECTED CEILING PLAN - AREA A	Vol. 1
AE-113B	LEVEL 1 REFLECTED CEILING PLAN - AREA B	Vol. 1
AE-113C	ENLARGED REFLECTED CEILING PLAN	Vol. 1
AE-121	LEVEL 2 FLOOR PLAN	Vol. 1
AE-121A	LEVEL 2 FLOOR PLAN - AREA A	Vol. 1
AE-121B	LEVEL 2 FLOOR PLAN - AREA B	Vol. 1
AE-122A	LEVEL 2 WTFI PLAN- AREA A	Vol. 1
AE-122B	LEVEL 2 WTFI PLAN- AREA B	Vol. 1
AE-122C	LEVEL 2 FLOOR PATTERN PLAN	Vol. 1
AE-123A	LEVEL 2 REFLECTED CEILING PLAN - AREA A	Vol. 1
AE-123B	LEVEL 2 REFLECTED CEILING PLAN - AREA B	Vol. 1
AE-124	PENTHOUSE FLOOR PLAN	Vol. 1
AE-131	ROOF PLAN	Vol. 1
AE-132	ENLARGED ROOF PLANS	Vol. 1
AE-140	WALL TYPES	Vol. 1
AE-201	BUILDING ELEVATIONS	Vol. 1
AE-202	BUILDING ELEVATIONS	Vol. 1
AE-301	BUILDING SECTIONS	Vol. 1
AE-302	BUILDING SECTIONS	Vol. 1
AE-311	WALL SECTIONS	Vol. 1
AE-312	WALL SECTIONS	Vol. 1
AE-313	WALL SECTIONS	Vol. 1
AE-314	WALL SECTIONS	Vol. 1
AE-315	WALL SECTIONS	Vol. 1
AE-316	WALL SECTIONS	Vol. 1
AE-317	SHAFT SECTIONS	Vol. 1
AE-318	INTERIOR WALL SECTIONS	Vol. 1
AE-319	INTERIOR WALL SECTIONS	Vol. 1
AE-401	ENLARGED PLANS	Vol. 1
AE-402	ENLARGED PLANS	Vol. 1
AE-403	ENLARGED PLANS	Vol. 1
AE-404	ENLARGED PLANS	Vol. 1
AE-405	ENLARGED PLANS	Vol. 1
AE-411	VERTICAL CIRCULATION	Vol. 1
AE-412	VERTICAL CIRCULATION	Vol. 1
AE-413	VERTICAL CIRCULATION	Vol. 1
AE-414	VERTICAL CIRCULATION	Vol. 1
AE-415	VERTICAL CIRCULATION	Vol. 1
AE-416	VERTICAL CIRCULATION	Vol. 1
AE-501	INTERIOR ELEVATIONS	Vol. 1
AE-502	INTERIOR ELEVATIONS	Vol. 1
AE-503	INTERIOR ELEVATIONS	Vol. 1
AE-504	INTERIOR ELEVATIONS	Vol. 1
AE-505	INTERIOR ELEVATIONS	Vol. 1
AE-506	INTERIOR ELEVATIONS	Vol. 1
AE-507	INTERIOR ELEVATIONS	Vol. 1
AE-508	INTERIOR ELEVATIONS	Vol. 1
AE-509	INTERIOR ELEVATIONS	Vol. 1
AE-531	REFERENCED ASSEMBLIES	Vol. 1
AE-532	REFERENCED ASSEMBLIES	Vol. 1
AE-533	REFERENCED ASSEMBLIES	Vol. 1
AE-534	REFERENCED ASSEMBLIES	Vol. 1
AE-535	REFERENCED ASSEMBLIES	Vol. 1
AE-536	REFERENCED ASSEMBLIES	Vol. 1
AE-537	REFERENCED ASSEMBLIES	Vol. 1
AE-601	EXTERIOR DETAILS	Vol. 1
AE-602	EXTERIOR DETAILS	Vol. 1
AE-603	EXTERIOR DETAILS	Vol. 1
AE-604	EXTERIOR DETAILS	Vol. 1
AE-605	EXTERIOR DETAILS	Vol. 1
AE-606	EXTERIOR DETAILS	Vol. 1
AE-611	INTERIOR DETAILS	Vol. 1
AE-612	INTERIOR DETAILS	Vol. 1
AE-613	INTERIOR DETAILS	Vol. 1
AE-614	INTERIOR DETAILS	Vol. 1
AE-615	INTERIOR DETAILS	Vol. 1
AE-621	CEILING DETAILS	Vol. 1
AE-622	CEILING DETAILS	Vol. 1
AE-631	CABINETRY DETAILS	Vol. 1
AE-632	CABINETRY DETAILS	Vol. 1
AE-641	FINISH DETAILS	Vol. 1
AE-642	FINISH DETAILS	Vol. 1
AE-701	INTERIOR WINDOW TYPES	Vol. 1
AE-702	EXTERIOR WINDOW TYPES	Vol. 1
AE-703	EXTERIOR WINDOW TYPES	Vol. 1
AE-704	EXTERIOR WINDOW TYPES	Vol. 1
AE-705	GLAZING DETAILS	Vol. 1
AE-801	FINISH SCHEDULE	Vol. 1

LAB FURNISHINGS

LF-001	LAB FURNISHINGS KEYSHEET AND LEGENDS	Vol. 1
LF-002	LAB FURNISHINGS SCHEDULES	Vol. 1
LF-003	LAB FURNISHINGS SCHEDULES & GENERAL NOTES	Vol. 1
LF-004	LAB FURNISHINGS CASEWORK MENU	Vol. 1
LF-101	LAB FURNISHINGS LEVEL 0 FLOOR PLAN	Vol. 1
LF-101A	LAB FURNISHINGS LEVEL 0 PARTIAL FLOOR PLAN	Vol. 1
LF-101B	LAB FURNISHINGS LEVEL 0 PARTIAL FLOOR PLAN	Vol. 1
LF-101C	LAB FURNISHINGS LEVEL 0 PARTIAL FLOOR PLAN	Vol. 1
LF-101D	LAB FURNISHINGS LEVEL 0 PARTIAL FLOOR PLAN	Vol. 1
LF-111	LAB FURNISHINGS LEVEL 1 FLOOR PLAN	Vol. 1
LF-111A	LAB FURNISHINGS LEVEL 1 PARTIAL FLOOR PLAN	Vol. 1
LF-111B	LAB FURNISHINGS LEVEL 1 PARTIAL FLOOR PLAN	Vol. 1
LF-111C	LAB FURNISHINGS LEVEL 1 PARTIAL FLOOR PLAN	Vol. 1
LF-111D	LAB FURNISHINGS LEVEL 1 PARTIAL FLOOR PLAN	Vol. 1
LF-121	LAB FURNISHINGS LEVEL 2 FLOOR PLAN	Vol. 1
LF-121A	LAB FURNISHINGS LEVEL 2 PARTIAL FLOOR PLAN	Vol. 1
LF-121B	LAB FURNISHINGS LEVEL 2 PARTIAL FLOOR PLAN	Vol. 1
LF-121C	LAB FURNISHINGS LEVEL 2 PARTIAL FLOOR PLAN	Vol. 1
LF-121D	LAB FURNISHINGS LEVEL 2 PARTIAL FLOOR PLAN	Vol. 1
LF-300	LAB FURNISHINGS ELEVATIONS	Vol. 1
LF-301	LAB FURNISHINGS ELEVATIONS	Vol. 1
LF-400	LAB FURNISHINGS DETAILS	Vol. 1
LF-401	LAB FURNISHINGS DETAILS	Vol. 1
LF-402	LAB FURNISHINGS DETAILS	Vol. 1
LF-403	LAB FURNISHINGS DETAILS	Vol. 1
LF-404	LAB FURNISHINGS DETAILS	Vol. 1
LF-500	LAB FURNISHINGS DETAILS	Vol. 1
LF-501	LAB FURNISHINGS DETAILS	Vol. 1
LF-502	LAB FURNISHINGS DETAILS	Vol. 1

STRUCTURAL

SE001	GENERAL STRUCTURAL NOTES	Vol. 1
SE002	GENERAL STRUCTURAL NOTES	Vol. 1
SB101	OVERALL FOOTING & FOUNDATION PLAN	Vol. 1
SB101A	PARTIAL FOOTING & FOUNDATION PLAN -AREA A	Vol. 1
SB101B	PARTIAL FOOTING & FOUNDATION PLAN -AREA B	Vol. 1
SB101C	PARTIAL FOOTING & FOUNDATION PLAN -AREA C	Vol. 1
SB501	TYPICAL FOOTING & FOUNDATION DETAILS	Vol. 1
SB502	TYPICAL FOOTING & FOUNDATION DETAILS	Vol. 1
SB503	TYPICAL FOOTING & FOUNDATION DETAILS	Vol. 1
SB504	TYPICAL FOOTING & FOUNDATION DETAILS	Vol. 1
SB505	TUNNEL SECTIONS	Vol. 1
SB506	FOUNDATION DETAILS	Vol. 1
SB510	FOUNDATION & SHORING WALL DETAILS	Vol. 1
SB601	CONCRETE SCHEDULES	Vol. 1
SB602	MASONRY SCHEDULES	Vol. 1
SF111	OVERALL LEVEL 1 FLOOR FRAMING PLAN	Vol. 1
SF111A	PARTIAL LEVEL 1 FLOOR FRAMING PLAN - AREA A	Vol. 1
SF111B	PARTIAL LEVEL 1 FLOOR FRAMING PLAN - AREA B	Vol. 1
SF111C	PARTIAL LEVEL 1 FLOOR FRAMING PLAN - AREA C	Vol. 1
SF121	OVERALL LEVEL 2 FLOOR FRAMING PLAN	Vol. 1
SF121A	PARTIAL LEVEL 2 FLOOR FRAMING PLAN - AREA A	Vol. 1
SF121B	PARTIAL LEVEL 2 FLOOR FRAMING PLAN - AREA B	Vol. 1
SF131	OVERALL ROOF FRAMING PLAN	Vol. 1
SF131A	PARTIAL ROOF/ P.H. FLOOR FRAMING PLAN - AREA A	Vol. 1
SF131B	PARTIAL ROOF FRAMING PLAN - AREA B	Vol. 1
SF141	OVERALL HIGH ROOF FRAMING PLAN	Vol. 1
SF141A	PENTHOUSE ROOF FRAMING PLAN - AREA A	Vol. 1
SF141B	PARTIAL ROOF FRAMING PLAN - AREA B	Vol. 1
SF201	BRACED FRAME ELEVATIONS	Vol. 1
SF202	BRACED FRAME ELEVATIONS	Vol. 1
SF203	BRACED FRAME ELEVATIONS	Vol. 1
SF211	BRACED FRAME SCHEDULE & DETAILS	Vol. 1
SF212	BRACED FRAME DETAILS	Vol. 1
SF213	BRACED FRAME DETAILS	Vol. 1
SF501	TYPICAL FLOOR FRAMING DETAILS	Vol. 1
SF502	TYPICAL FLOOR FRAMING DETAILS	Vol. 1
SF503	TYPICAL FLOOR FRAMING DETAILS	Vol. 1
SF504	TYPICAL FLOOR FRAMING DETAILS	Vol. 1
SF505	FLOOR FRAMING DETAILS	Vol. 1
SF521	TYPICAL ROOF FRAMING DETAILS	Vol. 1
SF522	TYPICAL ROOF FRAMING DETAILS	Vol. 1
SF523	TYPICAL ROOF FRAMING DETAILS	Vol. 1
SF524	TYPICAL ROOF FRAMING DETAILS	Vol. 1
SF525	TYPICAL ROOF FRAMING DETAILS	Vol. 1
SF526	ROOF FRAMING DETAILS	Vol. 1
SF601	STRUCTURAL STEEL SCHEDULES	Vol. 1
SF602	STEEL COLUMN SCHEDULE	Vol. 1
SF603	STEEL COLUMN SCHEDULE	Vol. 1

MECHANICAL

MH001	MECHANICAL LEGEND, SYMBOLS & ABBREV.	Vol. 2
MH002	MECHANICAL COMCHECK	Vol. 2
MD102B	LEVEL 1 MECH. DEMOLITION FLOOR PLAN-AREA B	Vol. 2
MH101A	LEVEL 0 MECHANICAL FLOOR PLAN - AREA A	Vol. 2
MH101B	LEVEL 0 MECHANICAL FLOOR PLAN - AREA B	Vol. 2
MH101C	LEVEL 0 MECHANICAL FLOOR PLAN - AREA C	Vol. 2
MH102A	LEVEL 1 MECHANICAL FLOOR PLAN - AREA A	Vol. 2
MH102B	LEVEL 1 MECHANICAL FLOOR PLAN - AREA B	Vol. 2
MH103A	LEVEL 2 MECHANICAL FLOOR PLAN - AREA A	Vol. 2
MH103B	LEVEL 2 MECHANICAL FLOOR PLAN - AREA B	Vol. 2
MH104	PENTHOUSE MECHANICAL PLAN	Vol. 2
MH105	MECHANICAL ROOF PLAN	Vol. 2
MH302	MECHANICAL SECTIONS	Vol. 2
MH501	MECHANICAL DETAILS	Vol. 2
MH502	MECHANICAL DETAILS	Vol. 2
MH503	MECHANICAL DETAILS	Vol. 2
MH504	MECHANICAL DETAILS	Vol. 2
MH505	MECHANICAL DETAILS	Vol. 2
MH601	MECHANICAL SCHEDULES	Vol. 2
MH602	MECHANICAL SCHEDULES	Vol. 2
MH603	MECHANICAL SCHEDULES	Vol. 2
MH604	MECHANICAL SCHEDULES	Vol. 2
MH801	LABORATORY AIRFLOW DATA	Vol. 2
MI201	LAB CONTROLS	Vol. 2
MI202	LAB CONTROLS	Vol. 2
MI203	MECHANICAL CONTROL SCHEMATICS	Vol. 2
MI204	MECHANICAL CONTROL SCHEMATICS	Vol. 2
MI205	MECHANICAL CONTROL SCHEMATICS	Vol. 2
MP101A	LEVEL 0 MECH. PIPING FLOOR PLAN - AREA A	Vol. 2
MP101B	LEVEL 0 MECH. PIPING FLOOR PLAN - AREA B	Vol. 2
MP101C	LEVEL 0 MECH. PIPING FLOOR PLAN - AREA C	Vol. 2
MP102A	LEVEL 1 MECH. PIPING FLOOR PLAN - AREA A	Vol. 2
MP102B	LEVEL 1 MECH. PIPING FLOOR PLAN - AREA B	Vol. 2
MP102D	LEVEL 1 MECH. PIPING FLOOR PLAN - AREA D	Vol. 2
MP103A	LEVEL 2 MECH. PIPING FLOOR PLAN - AREA A	Vol. 2
MP103B	LEVEL 2 MECH. PIPING FLOOR PLAN - AREA B	Vol. 2
MP104	PENTHOUSE MECHANICAL PIPING PLAN	Vol. 2
MP201	CHILLED/ CONDENSER WATER SCHEMATIC	Vol. 2
MP202	HEATING WATER PIPING SCHEMATIC	Vol. 2
MP251	UPPER PLANT PIPING SCHEMATIC	Vol. 2
MP451	ENLARGED UPPER PLANT PIPING PLAN	Vol. 2
MP461	LOWER POWER PLANT	Vol. 2
MP651	MECHANICAL PLANT SCHEDULES	Vol. 2
PD102B	LEVEL 1 PLUMBING DEMOLITION PLAN	Vol. 2
PL101A	LEVEL 0 PLUMBING FLOOR PLAN - AREA A	Vol. 2
PL101B	LEVEL 0 PLUMBING FLOOR PLAN - AREA B	Vol. 2
PL101C	LEVEL 0 PLUMBING FLOOR PLAN - AREA C	Vol. 2
PL102A	LEVEL 1 PLUMBING FLOOR PLAN - AREA A	Vol. 2
PL102B	LEVEL 1 PLUMBING FLOOR PLAN - AREA B	Vol. 2
PL103A	LEVEL 2 PLUMBING FLOOR PLAN - AREA A	Vol. 2
PL103B	LEVEL 2 PLUMBING FLOOR PLAN - AREA B	Vol. 2
PL104	PENTHOUSE PLUMBING PLAN	Vol. 2
PL105	PLUMBING ROOF PLAN	Vol. 2
PL201	PLUMBING SCHEMATICS	Vol. 2
PL401	ENLARGED PLUMBING PLANS	Vol. 2
PL402	ENLARGED PLUMBING PLANS	Vol. 2
PL601	PLUMBING SCHEDULES	Vol. 2
FP101	LEVEL 0 FIRE PROTECTION FLOOR PLAN	Vol. 2
FP102	LEVEL 1 FIRE PROTECTION FLOOR PLAN	Vol. 2
FP103	LEVEL 2 FIRE PROTECTION FLOOR PLAN	Vol. 2
FP104	ROOF FIRE PROTECTION FLOOR PLAN	Vol. 2

LAB PLUMBING

LP-001	LAB PLUMBING GEN. NOTES, SYMBOLS, LEGENDS & SCHEDULES	Vol. 2
LP-002	LAB PLUMBING POINT OF CONNECTION SCHEDULE	Vol. 2
LP-101	LAB PLUMBING LEVEL 0 FLOOR PLAN	Vol. 2
LP-101A	LAB PLUMBING LEVEL 0 PARTIAL FLOOR PLAN	Vol. 2
LP-101B	LAB PLUMBING LEVEL 0 PARTIAL FLOOR PLAN	Vol. 2
LP-101C	LAB PLUMBING LEVEL 0 PARTIAL FLOOR PLAN	Vol. 2
LP-101D	LAB PLUMBING LEVEL 0 PARTIAL FLOOR PLAN	Vol. 2
LP-111	LAB PLUMBING LEVEL 1 FLOOR PLAN	Vol. 2
LP-111A	LAB PLUMBING LEVEL 1 PARTIAL FLOOR PLAN	Vol. 2
LP-111B	LAB PLUMBING LEVEL 1 PARTIAL FLOOR PLAN	Vol. 2
LP-111C	LAB PLUMBING LEVEL 1 PARTIAL FLOOR PLAN	Vol. 2
LP-111D	LAB PLUMBING LEVEL 1 PARTIAL FLOOR PLAN	Vol. 2
LP-121	LAB PLUMBING LEVEL 2 FLOOR PLAN	Vol. 2
LP-121A	LAB PLUMBING LEVEL 2 PARTIAL FLOOR PLAN	Vol. 2
LP-121B	LAB PLUMBING LEVEL 2 PARTIAL FLOOR PLAN	Vol. 2
LP-121C	LAB PLUMBING LEVEL 2 PARTIAL FLOOR PLAN	Vol. 2
LP-121D	LAB PLUMBING LEVEL 2 PARTIAL FLOOR PLAN	Vol. 2
LP-301	LAB PLUMBING DETAILS	Vol. 2
LP-302	LAB PLUMBING DETAILS	Vol. 2
LP-303	LAB PLUMBING DETAILS	Vol. 2

ELECTRICAL

EE-001	SHEET INDEX, ABBREV. AND GENERAL NOTES	Vol. 2
EE-002	SYMBOLS LEGEND	Vol. 2
EE-501	DETAILS	Vol. 2
EE-502	DETAILS	Vol. 2
EE-601	GROUNDING RISER DIAGRAM	Vol. 2
EE-701	TYPICAL MOUNTING HEIGHT DETAILS	Vol. 2
ES-101	CAMPUS ELECTRICAL PLAN	Vol. 2
ES-101A	ENLARGED PARTIAL ELECTRICAL SITE PLAN - AREA A	Vol. 2
ES-101B	ENLARGED PARTIAL ELECTRICAL SITE PLAN - AREA B	Vol. 2
ES-102	SITE ELECTRICAL DEMOLITION PLAN	Vol. 2
ES-103	SITE ELECTRICAL PLAN	Vol. 2
ES-401	TUNNEL ELECTRICAL PLAN	Vol. 2
ES-501	SITE ELECTRICAL DETAILS	Vol. 2
ED-101	LEVEL 0 ELECTRICAL DEMOLITION PLAN	Vol. 2
ED-102	LEVEL 1 ELECTRICAL DEMOLITION PLAN	Vol. 2
ED-103	LEVEL 2 ELECTRICAL DEMOLITION PLAN	Vol. 2
EP-101A	LEVEL 0 POWER PLAN - AREA A	Vol. 2
EP-101B	LEVEL 0 POWER PLAN - AREA B	Vol. 2
EP-101C	LEVEL 0 POWER PLAN - AREA C	Vol. 2
EP-102A	LEVEL 1 POWER PLAN - AREA A	Vol. 2
EP-102B	LEVEL 1 POWER PLAN - AREA B	Vol. 2
EP-103A	LEVEL 2 POWER PLAN - AREA A	Vol. 2
EP-103B	LEVEL 2 POWER PLAN - AREA B	Vol. 2
EP-104	OVERALL ROOF POWER PLAN	Vol. 2
EP-104A	PENTHOUSE POWER PLAN	Vol. 2
EP-151	ENLARGED UPPER CENTRAL PLANT ELECTRICAL PLAN	Vol. 2
EP-161	LOWER CENTRAL PLANT ELECTRICAL PLANS	Vol. 2
EP-401	ENLARGED PARTIAL POWER PLANS	Vol. 2
EP-601	POWER ONE-LINE DIAGRAM - MEDIUM VOLTAGE	Vol. 2
EP-602	POWER ONE-LINE DIAGRAM - 277/480V NORMAL POWER	Vol. 2
EP-603	POWER ONE-LINE DIAGRAM - 120/280V NORMAL POWER	Vol. 2
EP-604	POWER ONE-LINE DIAGRAM - EMERGENCY/STANDBY POWER	Vol. 2
EP-605	EQUIPMENT SCHEDULE	Vol. 2
EP-606	PANEL SCHEDULES	Vol. 2
EP-607	PANEL SCHEDULES	Vol. 2
EP-608	PANEL SCHEDULES	Vol. 2
EP-609	PANEL SCHEDULES	Vol. 2
EP-610	PANEL SCHEDULES	Vol. 2
EP-651	UPPER PLANT POWER ONE-LINE DIAGRAM	Vol. 2
EP-661	LOWER PLANT POWER ONE-LINE DIAGRAM	Vol. 2
EP-671	SCHEDULES - CENTRAL PLANT	Vol. 2
EL-101A	LEVEL 0 LIGHTING PLAN - AREA A	Vol. 2
EL-101B	LEVEL 0 LIGHTING PLAN - AREA B	Vol. 2
EL-101C	LEVEL 0 LIGHTING PLAN - AREA C	Vol. 2
EL-102A	LEVEL 1 LIGHTING PLAN - AREA A	Vol. 2
EL-102B	LEVEL 1 LIGHTING PLAN - AREA B	Vol. 2
EL-103A	LEVEL 2 LIGHTING PLAN - AREA A	Vol. 2
EL-103B	LEVEL 2 LIGHTING PLAN - AREA B	Vol. 2
EL-104	PENTHOUSE LIGHTING PLAN	Vol. 2
EL-501	NETWORKED LIGHTING CONTROL DETAILS	Vol. 2
EL-502	LIGHTING CONTROL DETAILS	Vol. 2
EL-601	LIGHTING FIXTURE SCHEDULE	Vol. 2
ET-101A	LEVEL 0 TELECOMMUNICATIONS PLAN - AREA A	Vol. 2
ET-101B	LEVEL 0 TELECOMMUNICATIONS PLAN - AREA B	Vol. 2
ET-101C	LEVEL 0 TELECOMMUNICATIONS PLAN - AREA C	Vol. 2
ET-102A	LEVEL 1 TELECOMMUNICATIONS PLAN - AREA A	Vol. 2
ET-102B	LEVEL 1 TELECOMMUNICATIONS PLAN - AREA B	Vol. 2
ET-103A	LEVEL 2 TELECOMMUNICATIONS PLAN - AREA A	Vol. 2
ET-103B	LEVEL 2 TELECOMMUNICATIONS PLAN - AREA B	Vol. 2
ET-401	ENLARGED TELECOMMUNICATIONS PLANS	Vol. 2
ET-402	ENLARGED TELECOMMUNICATIONS PLANS	Vol. 2
ET-601	TELECOMMUNICATIONS ROUGH-IN SCHEDULE, DETAILS & DIAGRAMS	Vol. 2
EY-101A	LEVEL 0 SECURITY PLAN - AREA A	Vol. 2
EY-101B	LEVEL 0 SECURITY PLAN - AREA B	Vol. 2
EY-101C	LEVEL 0 SECURITY PLAN - AREA C	Vol. 2
EY-102A	LEVEL 1 SECURITY PLAN - AREA A	Vol. 2
EY-102B	LEVEL 1 SECURITY PLAN - AREA B	Vol. 2
EY-103A	LEVEL 2 SECURITY PLAN - AREA A	Vol. 2
EY-103B	LEVEL 2 SECURITY PLAN - AREA B	Vol. 2
EY-104	PENTHOUSE SECURITY PLAN	Vol. 2
EY-601	SECURITY SYSTEMS DETAILS AND DIAGRAMS	Vol. 2
EY-602	SECURITY SYSTEMS SCHEDULES	Vol. 2
EJ-101A	LEVEL 0 AUDIO-VIDEO PLAN - AREA A	Vol. 2
EJ-101B	LEVEL 0 AUDIO-VIDEO PLAN - AREA B	Vol. 2
EJ-101C	LEVEL 0 AUDIO-VIDEO PLAN - AREA C	Vol. 2
EJ-102A	LEVEL 1 AUDIO-VIDEO PLAN - AREA A	Vol. 2

ELECTRICAL

EJ-102B	LEVEL 1 AUDIO-VIDEO PLAN - AREA B	Vol. 2
EJ-103A	LEVEL 2 AUDIO-VIDEO PLAN - AREA A	Vol. 2
EJ-103B	LEVEL 2 AUDIO-VIDEO PLAN - AREA B	Vol. 2
EJ-201	LECTURE SECTIONS	Vol. 2
EJ-601	AV SYSTEMS ROUGH-IN EQUIPMENT LIST, NOTES, & DETAILS	Vol. 2
EJ-602	AV SYSTEMS ROUGH-IN RISER DIAGRAMS	Vol. 2
FA-101A	LEVEL 0 FIRE ALARM PLAN - AREA A	Vol. 2
FA-101B	LEVEL 0 FIRE ALARM PLAN - AREA B	Vol. 2
FA-101C	LEVEL 0 FIRE ALARM PLAN - AREA C	Vol. 2
FA-102A	LEVEL 1 FIRE ALARM PLAN - AREA A	Vol. 2
FA-102B	LEVEL 1 FIRE ALARM PLAN - AREA B	Vol. 2
FA-103A	LEVEL 2 FIRE ALARM PLAN - AREA A	Vol. 2
FA-103B	LEVEL 2 FIRE ALARM PLAN - AREA B	Vol. 2
FA-104	PENTHOUSE FIRE ALARM PLAN	Vol. 2
FA-601	FIRE ALARM RISER DIAGRAM AND MATRIX	Vol. 2
TT-001	TELECOMMUNICATIONS EQUIPMENT LIST AND NOTES	Vol. 2
TT-501	TELECOMMUNICATIONS DETAILS	Vol. 2
TT-601	TELECOMMUNICATIONS RISER DIAGRAMS	Vol. 2

LAB ELECTRICAL

LE-001	NOTE SHEET	Vol. 2
LE-101	LAB ELECTRICAL LEVEL 0 FLOOR PLAN	Vol. 2
LE-101A	LAB ELECTRICAL LEVEL 0 PARTIAL FLOOR PLAN	Vol. 2
LE-101B	LAB ELECTRICAL LEVEL 0 PARTIAL FLOOR PLAN	Vol. 2
LE-101C	LAB ELECTRICAL LEVEL 0 PARTIAL FLOOR PLAN	Vol. 2
LE-101D	LAB ELECTRICAL LEVEL 0 PARTIAL FLOOR PLAN	Vol. 2
LE-111	LAB ELECTRICAL LEVEL 1 FLOOR PLAN	Vol. 2
LE-111A	LAB ELECTRICAL LEVEL 1 PARTIAL FLOOR PLAN	Vol. 2
LE-111B	LAB ELECTRICAL LEVEL 1 PARTIAL FLOOR PLAN	Vol. 2
LE-111C	LAB ELECTRICAL LEVEL 1 PARTIAL FLOOR PLAN	Vol. 2
LE-111D	LAB ELECTRICAL LEVEL 1 PARTIAL FLOOR PLAN	Vol. 2
LE-121	LAB ELECTRICAL LEVEL 2 FLOOR PLAN	Vol. 2
LE-121A	LAB ELECTRICAL LEVEL 2 PARTIAL FLOOR PLAN	Vol. 2
LE-121B	LAB ELECTRICAL LEVEL 2 PARTIAL FLOOR PLAN	Vol. 2
LE-121C	LAB ELECTRICAL LEVEL 2 PARTIAL FLOOR PLAN	Vol. 2
LE-121D	LAB ELECTRICAL LEVEL 2 PARTIAL FLOOR PLAN	Vol. 2
LE-201	LAB ELECTRICAL PANEL SCHEDULES	Vol. 2
LE-202	LAB ELECTRICAL PANEL SCHEDULES	Vol. 2
LE-203	LAB ELECTRICAL PANEL SCHEDULES	Vol. 2
LE-301	LAB ELECTRICAL DETAIL SHEET	Vol. 2
LE-302	LAB ELECTRICAL DETAIL SHEET	Vol. 2

VICINITY MAP

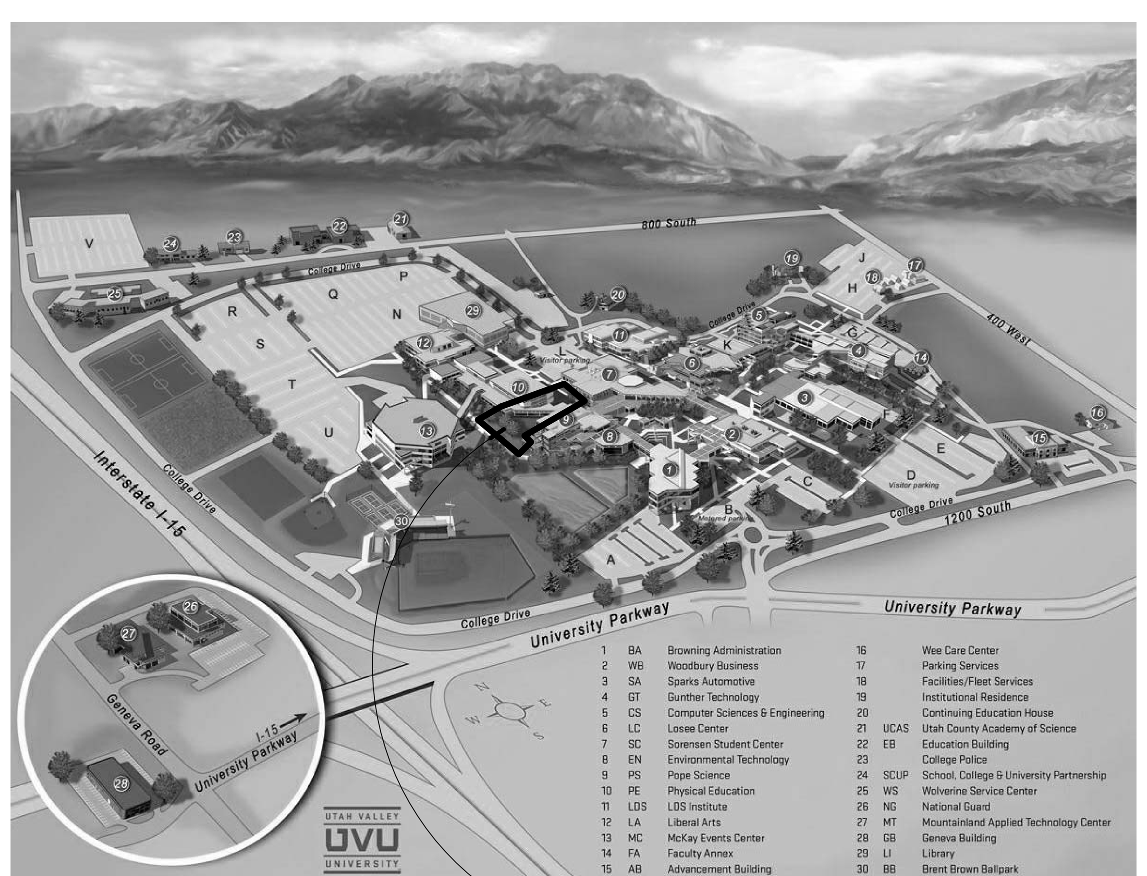

BUILDING SITE

ABBREVIATIONS

#	NUMBER
@	AT
℄	CENTER LINE
□	DIAMETER
L	ANGLE
3L	THREE LAYERS
A.B.	ANCHOR BOLT
ABV.	ABOVE
ADJ.	ADJUSTABLE
A.F.F.	ABOVE FINISH FLOOR
A.I.A.	AMERICAN INSTITUTE OF ARCHITECTS
ALUM.	ALUMINUM
APPROX.	APPROXIMATE
ARCH.	ARCHITECTURAL
A.S.T.M.	AMERICAN SOCIETY FOR TESTING MATERIALS
D.B.A.	DEFORMED BAR ANCHOR
BD.	BOARD
BITUM.	BITUMINOUS
BLDG.	BUILDING
B.M.	BENCHMARK
B.O.	BOTTOM OF
BOT.	BOTTOM
B.P.	BASE PLATE
BRG.	BEARING
BTWN.	BETWEEN
CER.	CERAMIC
C.J.	CONSTRUCTION JOINT
CLG.	CEILING
CLR.	CLEAR
CMU	CONCRETE MASONRY UNIT
COL.	COLUMN
CONC.	CONCRETE
CONT.	CONTINUOUS
CONST.	CONSTRUCTION
COORD.	COORDINATE
C.P.	CAP PLATE
C.T.J.	CONTRACTION JOINT
DBL.	DOUBLE
DEPT	DEPARTMENT
DET.	DETAIL
DIA.	DIAMETER
DTL.	DETAIL
DWGS.	DRAWINGS
EA.	EACH
E.F.	EACH FACE
E.J.	EXPANSION JOINT
EL.	ELEVATION
ELEV.	ELEVATION
EQ.	EQUAL
E.S.	EACH SIDE
E.W.	EACH WAY
EXIST.	EXISTING
EXPAN.	EXPANSION
EXT.	EXTERIOR
E.W.C.	ELECTRIC WATER COOLER
F.D.	FLOOR DRAIN
FDN.	FOUNDATION
FDTN.	FOUNDATION
F.E.	FIRE EXTINGUISHER
F.E.C.	FIRE EXTINGUISHER CABINET
F.F.	FINISH FLOOR
FIN.	FINISH
FLR.	FLOOR
FT.	FEET
FTG.	FOOTING
GA.	GAGE/GAUGE
GAL.	GALLON
GALV.	GALVANIZED
GFCI	GOVERNMENT FURNISHED CONTRACTOR INSTALLED
GFGI	GOVERNMENT FURNISHED GOVERNMENT INSTALLED
GPM	GALLONS PER MINUTE
GND.	GROUND
GOVT.	GOVERNMENT
GWB.	GYPSUM WALL BOARD
GYP. BD.	GYPSUM WALL BOARD
HC.	HANDICAPPED
HDW.	HARDWARE
H.M.	HOLLOW METAL
HORIZ.	HORIZONTAL
HR.	HOUR
H.S.A.	HEADED STUD ANCHOR
HT.	HEIGHT
HVAC	HEATING/VENTILATION/ AIR CONDITIONING
HYD	HYDRANT
I.D.	INSIDE DIAMETER
I.F.	INSIDE FACE
IN.	INCHES
INFO.	INFORMATION
INSUL.	INSULATION
LAV.	LAVATORY
LT.	LIGHT
LT. WT.	LIGHT WEIGHT
MAINT.	MAINTENANCE
MANUF.	MANUFACTURER
MAX.	MAXIMUM
MAT.	MATERIAL
M.C.J.	MASONRY CONTROL JOINT
MECH.	MECHANICAL
MFR.	MANUFACTURER
MIN.	MINIMUM
MISC.	MISCELLANEOUS
M.O.	MASONRY OPENING
MTL.	METAL
N.I.C.	NOT IN CONTRACT
NO.	NUMBER
N.T.S.	NOT TO SCALE
O.C.	ON CENTER
O.D.	OUTSIDE DIAMETER
O.F.	OUTSIDE FACE
O.H.	OVERHEAD
OHD	OVERHEAD DOOR
OPP.	OPPOSITE
O.W.S.J.	OPEN WEB STEEL JOIST
PART.	PARTITION
P.C.F.	POUNDS PER CUBIC FOOT
PERP.	PERPENDICULAR
PL.	PLATE
P.L.F.	POUNDS PER LINEAL FOOT
PNTD.	PAINTED
PROT.	PROTECTION
P.S.F.	POUNDS PER SQUARE FOOT
P.S.I.	POUNDS PER SQUARE INCH
QTY.	QUANTITY
R.D.	ROOF DRAIN
RAD.	RADIUS
REINF.	REINFORCED
REQ'D	REQUIRED
RM.	ROOM
R.O.	ROUGH OPENING
SCHED.	SCHEDULE
S.D.I.	STEEL DECK INSTITUTE
SHR.	SHOWER
SHT.	SHEET
SIM.	SIMILAR
S.J.I.	STEEL JOIST INSTITUTE
SPEC.	SPECIFICATION
STC	SOUND TRANSMISSION COEFFICIENT
STD.	STANDARD
STIFF.	STIFFENER
STR.	STRUCTURAL
SUPER.	SUPERVISOR
SUSP.	SUSPENDED
THRU	THROUGH
T.O.	TOP OF
T.O.A.	TOP OF ASPHALT
T.O.C.	TOP OF CURB
T.O.F.	TOP OF FOOTING
T.O.S.	TOP OF SLAB OR SIDEWALK
T.O.W.	TOP OF WALL
TYP.	TYPICAL
U.N.O.	UNLESS NOTED OTHERWISE
VCT	VINYL COMPOSITION TILE
VERT.	VERTICAL
VEST.	VESTIBULE
VNR.	VENEER
W/	WITH
WD.	WOOD
W.W.F.	WELDED WIRE FABRIC

GRAPHIC SYMBOLS

GRID
GRID — GRID LINES

DETAIL SYMBOL
DETAIL NUMBER
SHEET WHERE DETAIL IS DRAWN

BUILDING SECTION SYMBOL
SECTION REFERENCE
SHEET WHERE SECTION IS DRAWN

WALL SECTION SYMBOL
SECTION REFERENCE
SHEET WHERE SECTION IS DRAWN

ViewNumber
SheetNumber — INTERIOR ELEVATION SYMBOL
ELEVATION IDENTIFICATION
SHEET WHERE ELEVATION IS DRAWN

ELEVATION CONTROL POINT OR DATUM POINT

A — DOOR NUMBER

W1 — WINDOW OR STOREFRONT NUMBER

NAME
101
S.F. — ROOM NUMBER

1
0-0-0 — REVISION

MATERIALS/LEGEND

- CONCRETE MASONRY UNIT
- FACE BRICK
- CONCRETE (POURED IN PLACE)
- GYPSUM BOARD OR SETTING BEDS
- INSULATION (BATT & BLANKET)
- INSULATION (RIGID/SEMI-RIGID)
- PLYWOOD
- CONTINUOUS ROUGH WOOD
- BLOCKING, ROUGH WOOD
- METAL (LARGE SCALE)
- GRAVEL
- EARTH
- QUARRY/CERAMIC TILE

GSBS
ARCHITECTS

375 WEST 200 SOUTH
SALT LAKE CITY, UT 84101

P 801.521.8600
F 801.521.7913

www.gsbsarchitects.com

REVISIONS:

Utah Valley University New Science Building

800 West University Parkway
Orem, Utah 84058

Division of Facilities Construction and Management

DRAWN BY:	Author
CHECKED BY:	Checker
DFCM PROJECT NO.:	09020790
GSBS PROJECT NO.:	2009.115.00
ISSUED DATE:	05.07.2010

INDEX SHEET

CONSTRUCTION DOCUMENTS

GI-010

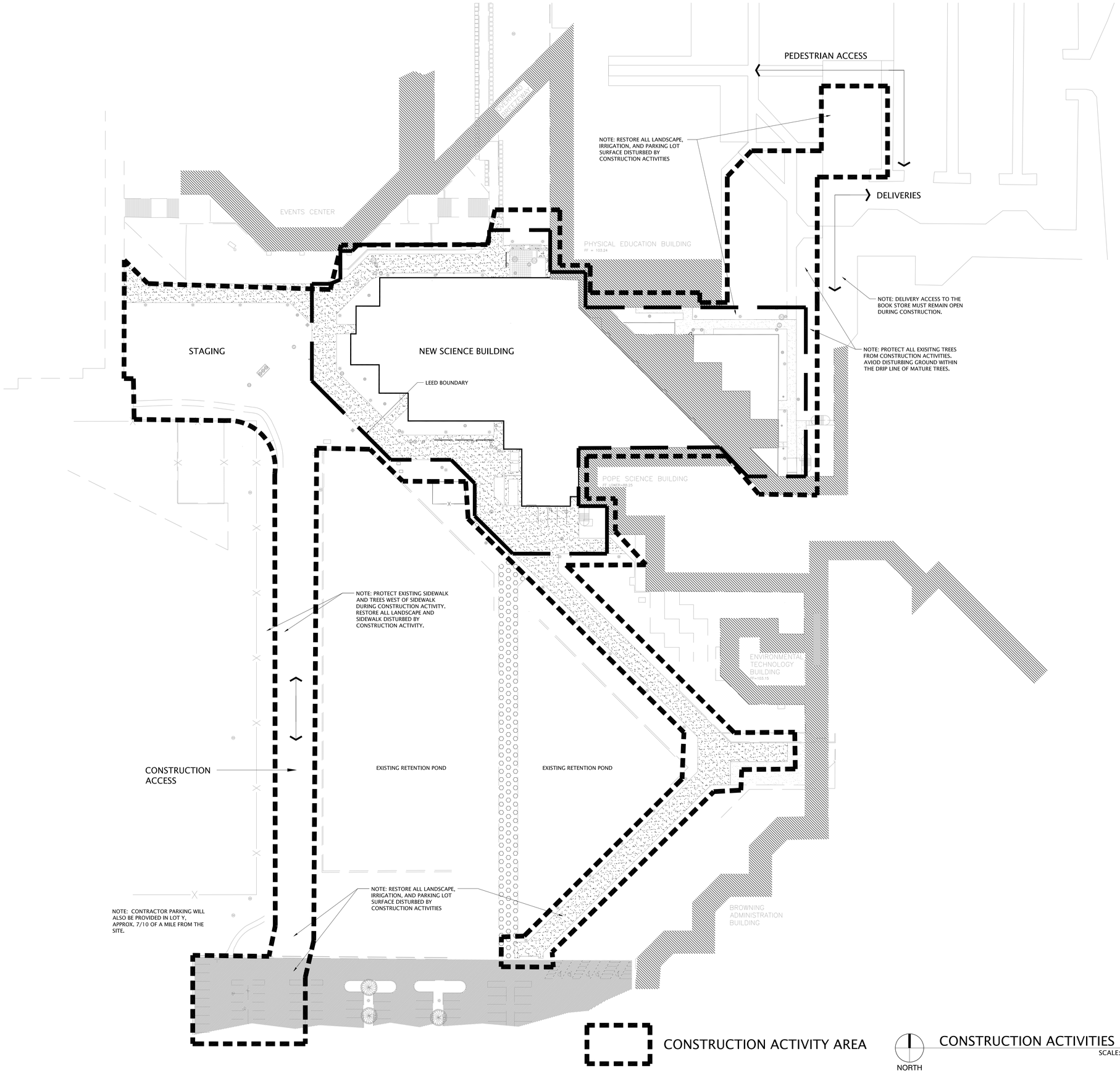

CONSTRUCTION ACTIVITIES PLAN

SCALE: 1"=40'-0"

1 / G1020

GSBS ARCHITECTS

375 WEST 200 SOUTH
SALT LAKE CITY, UT 84101

P 801.521.8600
F 801.521.7913

www.gsbsarchitects.com

LICENSED LANDSCAPE ARCHITECT
DAVID G. GARDNER
NO. 5453489-5301
Signature
5/7/10
Renewal Date
Date
STATE OF UTAH

REVISIONS:

Utah Valley University New Science Building

800 West University Parkway
Orem, Utah 84058

Division of Facilities Construction and Management

DRAWN BY:	EJS
CHECKED BY:	
DFCM PROJECT NO.:	09020790
GSBS PROJECT NO.:	
ISSUED DATE:	5/7/2010

CONSTRUCTION ACTIVITIES PLAN

CONCSTRUCTION DOCUMENTS

GI-020

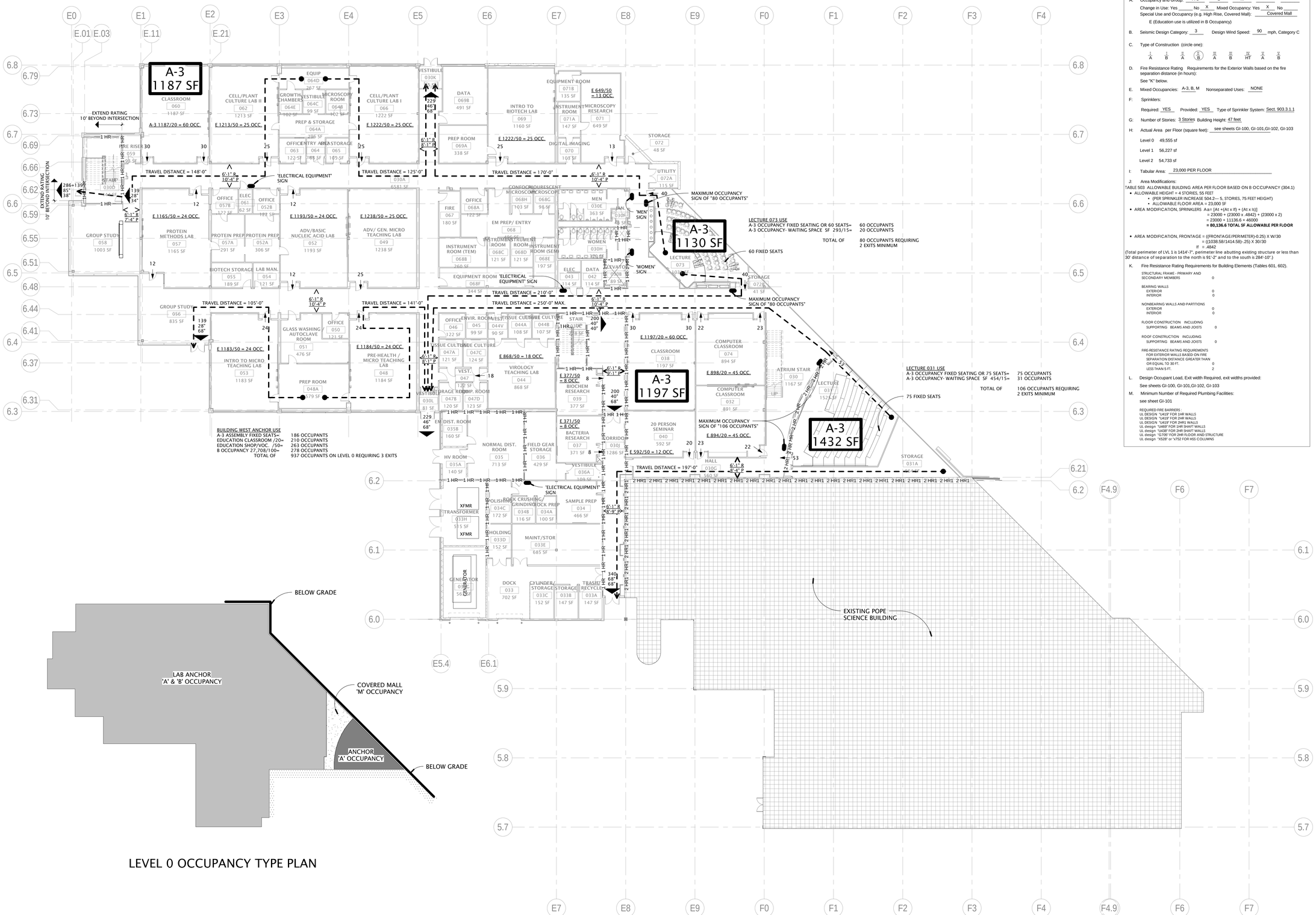

LEVEL 0 OCCUPANCY TYPE PLAN

1 GI-100 LEVEL 0 CODE PLAN 1/16" = 1'-0"

16' 8' 0' 16' 32'

CODE ANALYSIS

APPLICABLE CODES

	Year		Year
International Building Code	2009	National Electrical Code	2008
International Mechanical Code	2009		
International Plumbing Code	2009		
International Fire Code	2009	ADA Accessibility Guidelines	LATEST
International Energy Conservation Code	2009		

A. Occupancy and Group: A-3 B M

Change in Use: Yes ___ No X Mixed Occupancy: Yes X No ___

Special Use and Occupancy (e.g. High Rise, Covered Mall): Covered Mall

E (Education use is utilized in B Occupancy)

B. Seismic Design Category: 3 Design Wind Speed: 90 mph, Category C

C. Type of Construction (circle one):

I A I B II A II B III A III B IV HT IV A IV B

D. Fire Resistance Rating Requirements for the Exterior Walls based on the fire separation distance (in hours):

See "K" below.

E. Mixed Occupancies: A-3, B, M Nonseparated Uses: NONE

F: Sprinklers:

Required YES Provided: YES Type of Sprinkler System: Sect. 903.3.1.1

G: Number of Stories: 3 Stories Building Height: 47 feet

H: Actual Area per Floor (square feet): see sheets GI-100, GI-101,GI-102, GI-103

Level 0 49,555 sf

Level 1 56,227 sf

Level 2 54,733 sf

I: Tabular Area: 23,000 PER FLOOR

J: Area Modifications:

TABLE 503 ALLOWABLE BUILDING AREA PER FLOOR BASED ON B OCCUPANCY (304.1)

- ALLOWABLE HEIGHT = 4 STORIES, 55 FEET
  - (PER SPRINKLER INCREASE 504.2---, 5, STORIES, 75 FEET HEIGHT)
  - ALLOWABLE FLOOR AREA = 23,000 SF
- AREA MODIFICATION, SPRINKLERS $A_a = [At + (At \times If) + (At \times Is)]$
  = 23000 + (23000 x .4842) + (23000 x 2)
  = 23000 + 11136.6 + 46000
  = 80,136.6 TOTAL SF ALLOWABLE PER FLOOR
- AREA MODIFICATION, FRONTAGE = ((FRONTAGE/PERIMETER)-0.25) X W/30
  = ((1038.58/1414.58)-.25) X 30/30
  If = .4842

(Total perimeter of LVL 1 is 1414'-7", pr perimeter line abutting existing structure or less than 30' distance of separation to the north is 91'-2" and to the south is 284'-10".)

K. Fire Resistance Rating Requirements for Building Elements (Tables 601, 602).

STRUCTURAL FRAME - PRIMARY AND SECONDARY MEMBERS	0
BEARING WALLS	
EXTERIOR	0
INTERIOR	0
NONBEARING WALLS AND PARTITIONS	
EXTERIOR	0
INTERIOR	0
FLOOR CONSTRUCTION INCLUDING SUPPORTING BEAMS AND JOISTS	0
ROOF CONSTRUCTION INCLUDING SUPPORTING BEAMS AND JOISTS	0
FIRE-RESISTANCE RATING REQUIREMENTS FOR EXTERIOR WALLS BASED ON FIRE SEPARATION DISTANCE GREATER THAN OR EQUAL TO 30 FT.	0
LESS THAN 5 FT.	2

L. Design Occupant Load, Exit width Required, exit widths provided:

See sheets GI-100, GI-101,GI-102, GI-103

M. Minimum Number of Required Plumbing Facilities:

see sheet GI-101

REQUIRED FIRE BARRIERS:
UL DESIGN U419 FOR 1HR WALLS
UL DESIGN U419 FOR 2HR WALLS
UL DESIGN U419 FOR 2HR1 WALLS
UL design U469 FOR 1HR SHAFT WALLS
UL design U438 FOR 2HR SHAFT WALLS
UL design G705 FOR 2HR FLOOR AND STRUCTURE
UL design X528 or V752 FOR HSS COLUMNS

CODE LEGEND

- 1HR—1HR— 1 HOUR RATED WALL ASSEMBLY
- 2HR—2HR— 2 HOUR RATED WALL ASSEMBLY (NON-PROTECTED OPENINGS)
- 2HR1—2HR1— 2 HOUR RATED WALL ASSEMBLY (PROTECTED OPENINGS)
- X (X.X" REQ'D) (X.X" PROV'D) — OCCUPANTS REQUIRED EXIT INCHES PROVIDED EXIT INCHES
- FLOOR CEILING ASSEMBLY
- REQUIRED SIGNAGE DESIGNATION
- XX — OCCUPANTS EXITING ROOM/ SPACE
- (X.X" R) (X.X" P) — EXIT WIDTH REQUIRED WIDTH INCHES PROVIDED WIDTH INCHES
- TRAVEL DISTANCE

GENERAL NOTES

1. THE INFORMATION CONTAINED ON SHEETS GI-100, GI-101, GI-102 AND GI-103 IS INTENDED TO ASSIST THE CODE OFFICIALS WITH THEIR REVIEW OF THE PROJECT FOR COMPLIANCE WITH APPLICABLE CODE REQUIREMENTS. ANY DISCREPANCIES BETWEEN THESE SHEETS AND THE BALANCE OF THE CONSTRUCTION DOCUMENTS MUST BROUGHT TO THE ATTENTION OF THE ARCHITECT IN WRITING.
2. ALL EXITS THIS LEVEL ARE ACCESSIBLE.
3. AREA OF REFUGE NOT REQUIRED IN STAIRWAYS PER 1007.3, EXCEPTION 3.
4. SMOKE PROTECTION IS NOT UTILIZED IN ASSEMBLY AREAS.

GSBS ARCHITECTS
375 WEST 200 SOUTH
SALT LAKE CITY, UT 84101
P 801.521.8600
F 801.521.7915
www.gsbsarchitects.com

STATE OF UTAH 116302 LICENSED ARCHITECT

REVISIONS:

PROJECT NORTH

Utah Valley University New Science Building

800 West University Parkway
Orem, Utah 84058

Division of Facilities Construction and Management

DRAWN BY:	Author
CHECKED BY:	Checker
DFCM PROJECT NO.:	09020790
GSBS PROJECT NO.:	2009.115.00
ISSUED DATE:	05.07.2010

LEVEL 0 CODE PLAN

CONSTRUCTION DOCUMENTS

GI-100

GSBS ARCHITECTS
375 WEST 200 SOUTH
SALT LAKE CITY, UT 84101
P 801.521.8600
F 801.521.7913
www.gsbsarchitects.com

STATE OF UTAH
116302
LICENSED ARCHITECT

REVISIONS:

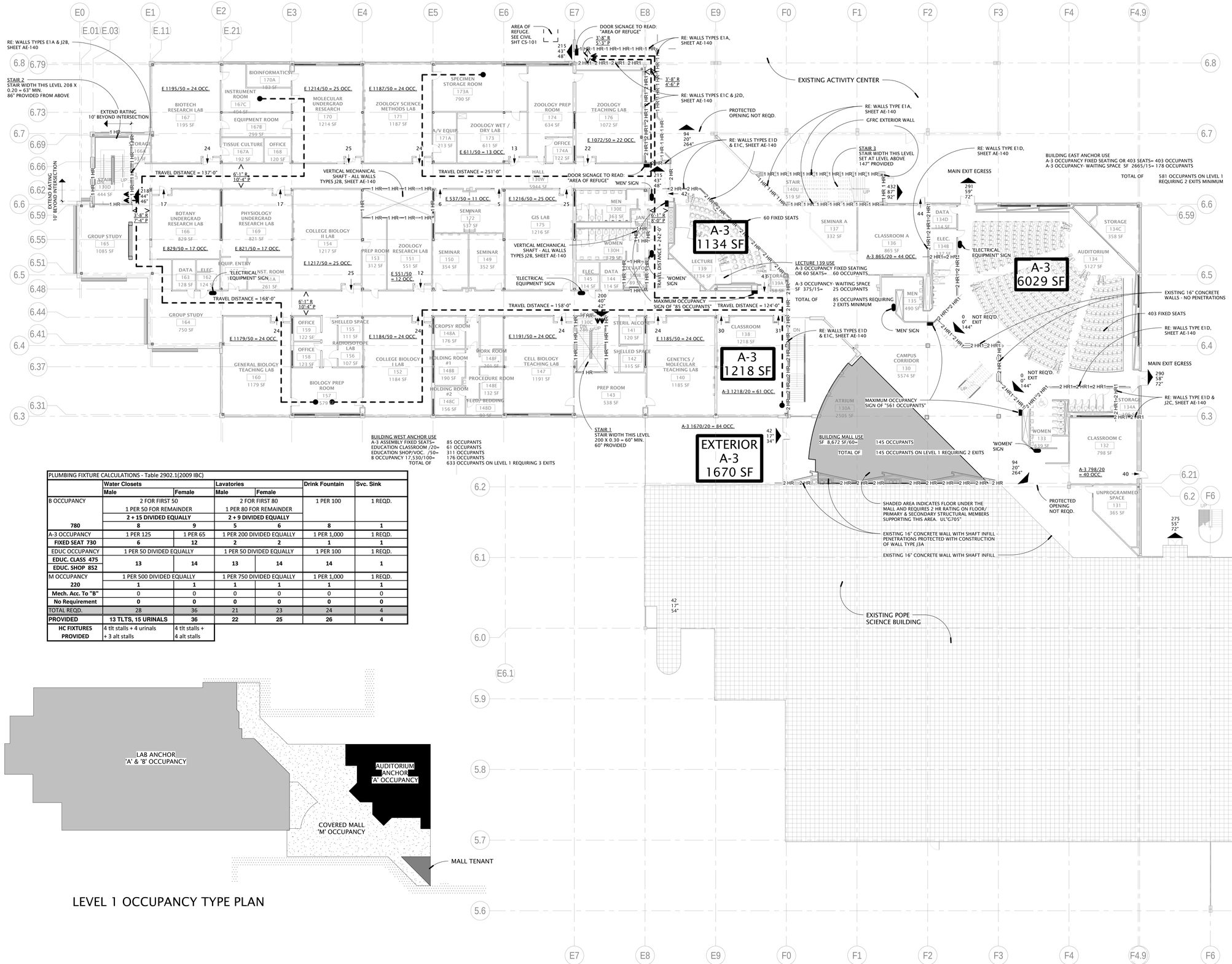

PLUMBING FIXTURE CALCULATIONS - Table 2902.1(2009 IBC)						
	Water Closets		Lavatories		Drink Fountain	Svc. Sink
	Male	Female	Male	Female		
B OCCUPANCY	2 FOR FIRST 50 1 PER 50 FOR REMAINDER		2 FOR FIRST 80 1 PER 80 FOR REMAINDER		1 PER 100	1 REQD.
	2 + 15 DIVIDED EQUALLY		2 + 9 DIVIDED EQUALLY			
780	8	9	5	6	8	1
A-3 OCCUPANCY	1 PER 125	1 PER 65	1 PER 200 DIVIDED EQUALLY		1 PER 1,000	1 REQD.
FIXED SEAT 730	6	12	2	2	1	1
EDUC OCCUPANCY	1 PER 50 DIVIDED EQUALLY		1 PER 50 DIVIDED EQUALLY		1 PER 100	1 REQD.
EDUC. CLASS 475 EDUC. SHOP 852	13	14	13	14	14	1
M OCCUPANCY	1 PER 500 DIVIDED EQUALLY		1 PER 750 DIVIDED EQUALLY		1 PER 1,000	1 REQD.
220	1	1	1	1	1	1
Mech. Acc. To "B"	0	0	0	0	0	0
No Requirement	0	0	0	0	0	0
TOTAL REQD.	28	36	21	23	24	4
PROVIDED	13 TLTS, 15 URINALS	36	22	25	26	4
HC FIXTURES PROVIDED	4 tlt stalls + 4 urinals + 3 alt stalls	4 tlt stalls + 4 alt stalls				

LEVEL 1 OCCUPANCY TYPE PLAN

CODE LEGEND

- 1HR—1HR — 1 HOUR RATED WALL ASSEMBLY
- 2HR—2HR — 2 HOUR RATED WALL ASSEMBLY (NON-PROTECTED OPENINGS)
- 2HR1+2HR1 — 2 HOUR RATED WALL ASSEMBLY (PROTECTED OPENINGS)
- X (X.X" REQ'D) (X.X" PROV'D) — OCCUPANTS REQUIRED EXIT INCHES PROVIDED EXIT INCHES
- FLOOR CEILING ASSEMBLY
- REQUIRED SIGNAGE DESIGNATION
- XX — OCCUPANTS EXITING ROOM/ SPACE
- (X.X" R) (X.X" P) — EXIT WIDTH REQUIRED WIDTH INCHES PROVIDED WIDTH INCHES
- TRAVEL DISTANCE

GENERAL NOTES

1. THE INFORMATION CONTAINED ON SHEETS GI-100, GI-101, GI-102 AND GI-103 IS INTENDED TO ASSIST THE CODE OFFICIALS WITH THEIR REVIEW OF THE PROJECT FOR COMPLIANCE WITH APPLICABLE CODE REQUIREMENTS. ANY DISCREPANCIES BETWEEN THESE SHEETS AND THE BALANCE OF THE CONSTRUCTION DOCUMENTS MUST BROUGHT TO THE ATTENTION OF THE ARCHITECT IN WRITING.
2. ALL EXITS THIS LEVEL ARE ACCESSIBLE.
3. AREA OF REFUGE NOT REQUIRED IN STAIRWAYS PER 1007.3, EXCEPTION 3.
4. SMOKE PROTECTION IS NOT UTILIZED IN ASSEMBLY AREAS.

PROJECT NORTH

Utah Valley University New Science Building

800 West University Parkway
Orem, Utah 84058

Division of Facilities Construction and Management

DRAWN BY:	Author
CHECKED BY:	Checker
DFCM PROJECT NO.:	09020790
GSBS PROJECT NO.:	2009.115.00
ISSUED DATE:	05.07.2010

LEVEL 1 CODE PLAN

CONSTRUCTION DOCUMENTS

GI-101

1 GI-101 LEVEL 1 CODE PLAN
1/16" = 1'-0"
16' 8' 0' 16' 32'

GSBS ARCHITECTS
375 WEST 200 SOUTH
SALT LAKE CITY, UT 84101
P 801.521.8600
F 801.521.7913
www.gsbsarchitects.com

STATE OF UTAH
116302
LICENSED ARCHITECT

REVISIONS:

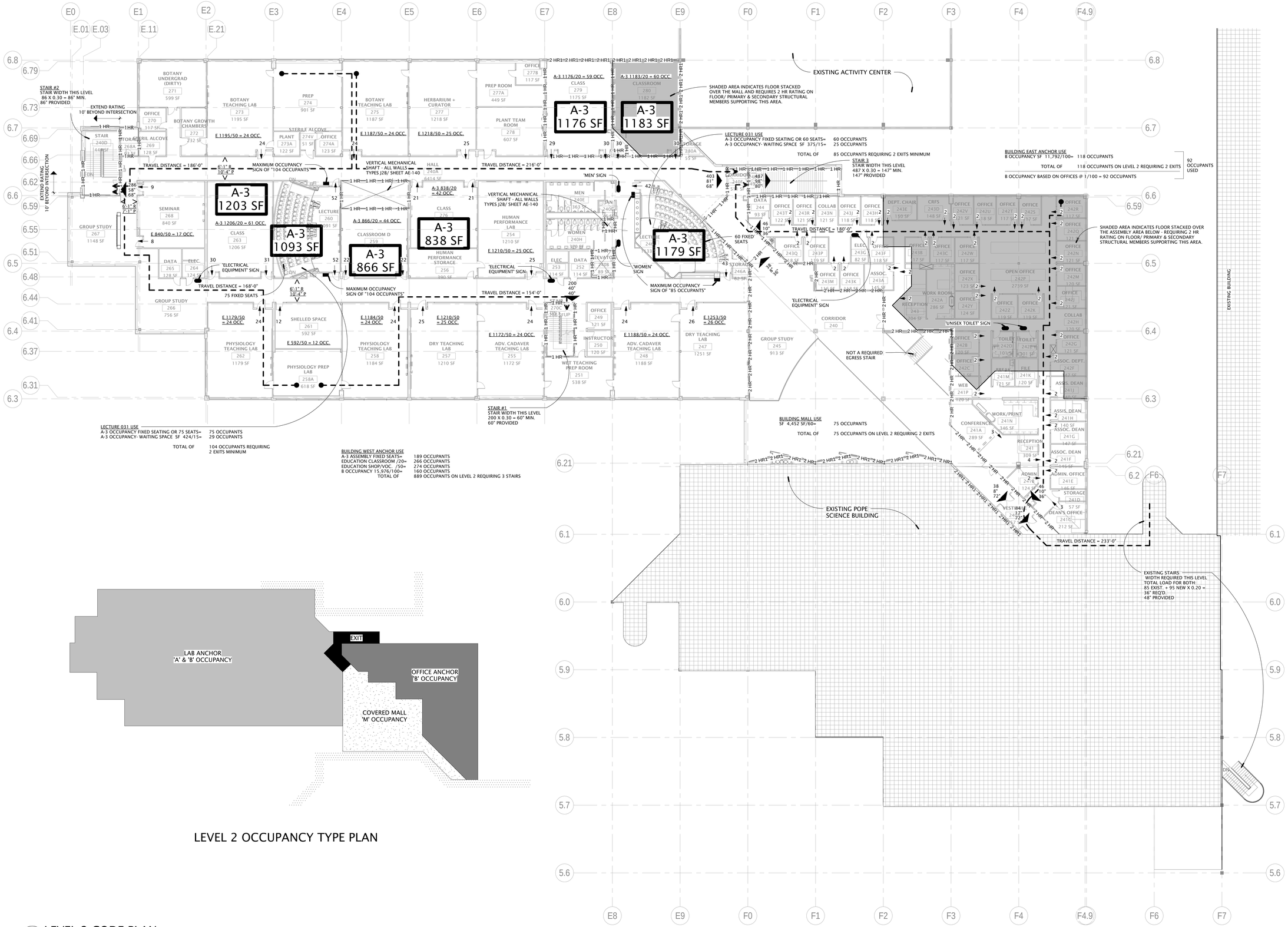

LEVEL 2 OCCUPANCY TYPE PLAN

CODE LEGEND

- 1HR—1HR — 1 HOUR RATED WALL ASSEMBLY
- 2HR—2HR — 2 HOUR RATED WALL ASSEMBLY (NON-PROTECTED OPENINGS)
- 2HR1-2HR1 — 2 HOUR RATED WALL ASSEMBLY (PROTECTED OPENINGS)
- X (X.X" REQ'D) (X.X" PROV'D) — OCCUPANTS REQUIRED EXIT INCHES PROVIDED EXIT INCHES
- FLOOR CEILING ASSEMBLY
- REQUIRED SIGNAGE DESIGNATION
- XX — OCCUPANTS EXITING ROOM/ SPACE
- (X.X" R) (X.X" P) — EXIT WIDTH REQUIRED WIDTH INCHES PROVIDED WIDTH INCHES
- TRAVEL DISTANCE

GENERAL NOTES

1. THE INFORMATION CONTAINED ON SHEETS GI-100, GI-101, GI-102 AND GI-103 IS INTENDED TO ASSIST THE CODE OFFICIALS WITH THEIR REVIEW OF THE PROJECT FOR COMPLIANCE WITH APPLICABLE CODE REQUIREMENTS. ANY DISCREPANCIES BETWEEN THESE SHEETS AND THE BALANCE OF THE CONSTRUCTION DOCUMENTS MUST BROUGHT TO THE ATTENTION OF THE ARCHITECT IN WRITING.
2. ALL EXITS THIS LEVEL ARE ACCESSIBLE.
3. AREA OF REFUGE NOT REQUIRED IN STAIRWAYS PER 1007.3, EXCEPTION 3.
4. SMOKE PROTECTION IS NOT UTILIZED IN ASSEMBLY AREAS.

PROJECT NORTH

Utah Valley University New Science Building

800 West University Parkway
Orem, Utah 84058

Division of Facilities Construction and Management

DRAWN BY:	Author
CHECKED BY:	Checker
DFCM PROJECT NO.:	09020790
GSBS PROJECT NO.:	2009.115.00
ISSUED DATE:	05.07.2010

LEVEL 2 CODE PLAN

CONSTRUCTION DOCUMENTS

GI-102

1 GI-102 LEVEL 2 CODE PLAN 1/16" = 1'-0"

GSBS ARCHITECTS

375 WEST 200 SOUTH
SALT LAKE CITY, UT 84101

P 801.521.8600
F 801.521.7913

www.gsbsarchitects.com

STATE OF UTAH
116302
LICENSED ARCHITECT

REVISIONS:

CODE LEGEND

—1HR—1HR—	1 HOUR RATED WALL ASSEMBLY
—2HR—2HR—	2 HOUR RATED WALL ASSEMBLY (NON-PROTECTED OPENINGS)
—2HR1-2HR1—	2 HOUR RATED WALL ASSEMBLY (PROTECTED OPENINGS)
X (X.X" REQ'D) (X.X" PROV'D)	OCCUPANTS REQUIRED EXIT INCHES PROVIDED EXIT INCHES
	FLOOR CEILING ASSEMBLY
	REQUIRED SIGNAGE DESIGNATION
XX	OCCUPANTS EXITING ROOM/ SPACE
(X.X" R) (X.X" P)	EXIT WIDTH REQUIRED WIDTH INCHES PROVIDED WIDTH INCHES
	TRAVEL DISTANCE

GENERAL NOTES

1. THE INFORMATION CONTAINED ON SHEETS GI-100, GI-101, GI-102 AND GI-103 IS INTENDED TO ASSIST THE CODE OFFICIALS WITH THEIR REVIEW OF THE PROJECT FOR COMPLIANCE WITH APPLICABLE CODE REQUIREMENTS. ANY DISCREPANCIES BETWEEN THESE SHEETS AND THE BALANCE OF THE CONSTRUCTION DOCUMENTS MUST BROUGHT TO THE ATTENTION OF THE ARCHITECT IN WRITING.
2. ALL EXITS THIS LEVEL ARE ACCESSIBLE.
3. AREA OF REFUGE NOT REQUIRED IN STAIRWAYS PER 1007.3, EXCEPTION 3.
4. SMOKE PROTECTION IS NOT UTILIZED IN ASSEMBLY AREAS.

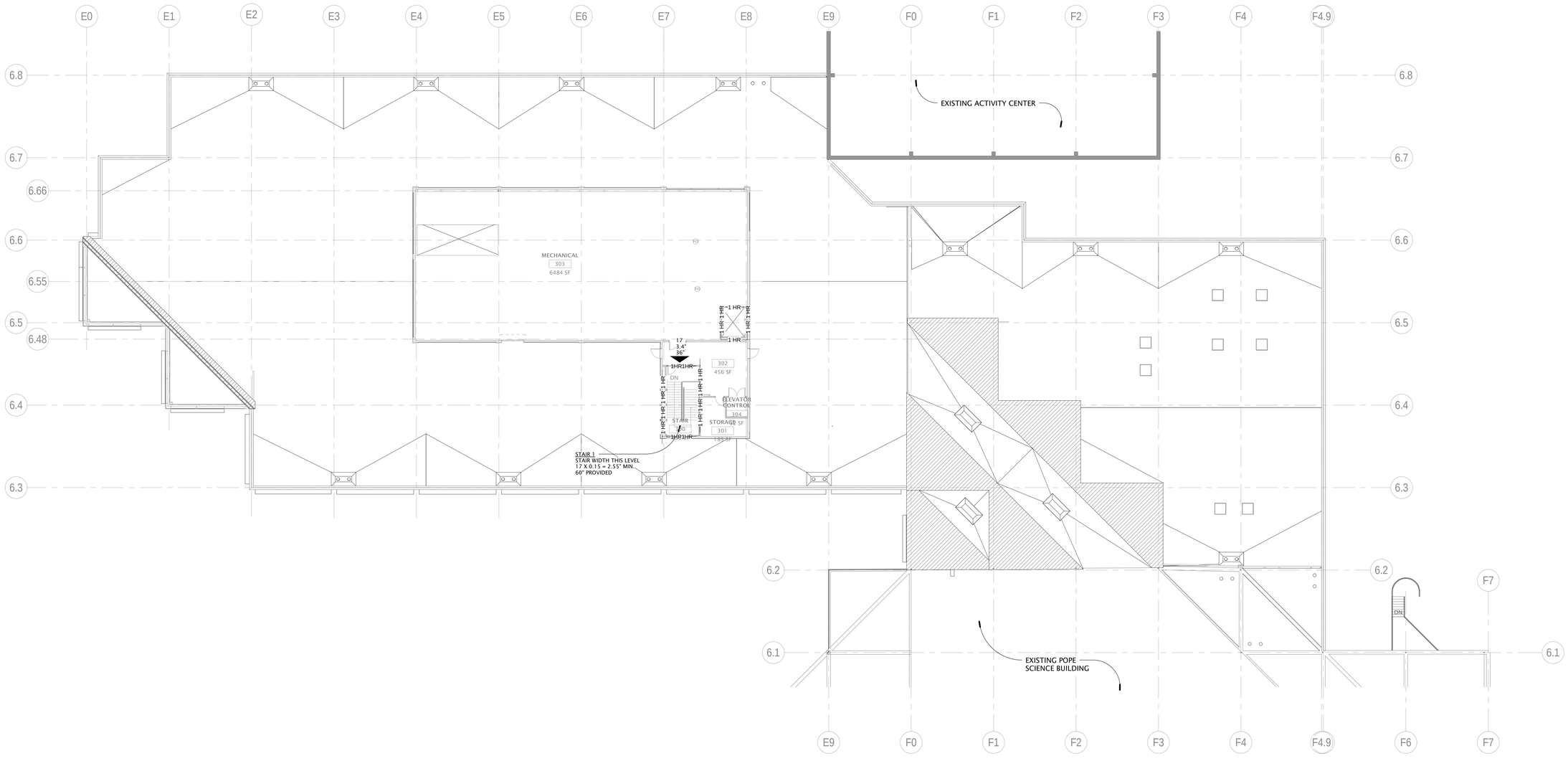

1 GI-103 ROOF CODE PLAN
1/16" = 1'-0"

Utah Valley University New Science Building

800 West University Parkway
Orem, Utah 84058

Division of Facilities Construction and Management

DRAWN BY:	Author
CHECKED BY:	Checker
DFCM PROJECT NO.:	09020790
GSBS PROJECT NO.:	2009.115.00
ISSUED DATE:	05.07.2010

ROOF CODE PLAN

CONSTRUCTION DOCUMENTS

GI-103

SPECIAL INSPECTION AND TESTING UNDER THE PROVISIONS OF IBC 1704 AND FOR MISCELLANEOUS AREAS

Indicate required Special inspections for project by checking the appropriate boxes and provide specific instructions as to the inspection requirements and the expectations of the architect, engineer and owner:

FABRICATORS (IBC 1704.2)

☒ Approved Fabricator	Fabricators Name: To be determined after bid is awarded
☐ Unapproved Fabricator	Fabricators Name:

In-plant inspections

☒ Steel Construction ☒ Welding ☒ Details

STEEL (IBC 1704.3)

Item			Detailed Instructions and Frequencies
High Strength Bolting(1704.3.3)	☐ Continuous	☒ Periodic	AISC 360 Section A3.3 and M2.5, AISC 341 Appendix Q, RCSC Specification for Structural Joints Using ASTM A325 or A490 Bolts Section 9.
WELDING (1704.3.1)			
Details (1704.3.2)			
Complete & partial penetration groove welds	☒ Continuous	☐ Periodic	AWS D1.1, AISC 341 Appendix Q and Appendix W.
Multipass fillet welds	☒ Continuous	☐ Periodic	AWS D1.1, AISC 341 Appendix Q and Appendix W.
Single-pass fillet welds > 5/16"	☒ Continuous	☐ Periodic	AWS D1.1, AISC 341 Appendix Q and Appendix W.
Single-pass fillet welds ≤ 5/16"	☐ Continuous	☒ Periodic	AWS D1.1, AISC 341 Appendix Q and Appendix W.
Floor & roof deck welds	☐ Continuous	☒ Periodic	AWS D1.3
REINFORCEMENT STEEL	☐ Continuous		Welding Reinforcing Steel Not Allowed.
Verification of weldability	☐ Continuous	☐ Periodic	Welding Reinforcing Steel Not Allowed.
Shear wall and shear reinforcement	☐ Continuous	☐ Periodic	NA
Other reinforcement	☐ Continuous	☐ Periodic	Welding Reinforcing Steel Not Allowed.
Steel frame joint details	☐ Continuous	☒ Periodic	IBC 1704.3.2

CONCRETE CONSTRUCTION (IBC 1704.4)

Item			Detailed Instructions and Frequencies
Materials (1704.4.1)	☐ Continuous	☒ Periodic	IBC 1704.4.1
Steel placement	☐ Continuous	☒ Periodic	ACI 318: 3.5, 7.1-7.7 and IBC 1913.4
Steel welding	☐ Continuous	☐ Periodic	Welding Reinforcing Steel Not Allowed.
Bolts prior & during placement	☒ Continuous	☐ Periodic	IBC 1911.5
Use of required design mix	☐ Continuous	☒ Periodic	ACI 318: 4, 5.2-5.4 and IBC 1904.2.2, 1913.2, 1913.3
Concrete sampling for strength test, slump, air content, and temperature of concrete	☒ Continuous	☐ Periodic	ASTM C 172, ASTM C31, ACI 318: 5.6, 5.8 and IBC 1913.10
Concrete & shotcrete placement	☒ Continuous	☐ Periodic	ACI 318: 5.9-5.10 and IBC 1913.6,1913.7, 1913.8
Curing temperature and techniques	☐ Continuous	☒ Periodic	ACI 318: 5.11-5.13 and IBC 1913.9
Pre-stressed concrete	☐ Continuous	☐ Periodic	NA
Pre-cast concrete	☐ Continuous	☐ Periodic	NA
Post-tensioned concrete	☐ Continuous	☐ Periodic	NA
Form work	☐ Continuous	☒ Periodic	ACI 318: 6.1.1

MASONRY CONSTRUCTION (IBC 1704.5)

Item			Detailed Instructions and Frequencies
As masonry construction begins:			
Site prepared mortar	☐ Continuous	☒ Periodic	
Construction of mortar joints	☐ Continuous	☒ Periodic	
Location of reinforcement, connectors, pre-stressing tendons and anchorages	☐ Continuous	☒ Periodic	
Pre-stressing technique	☐ Continuous	☐ Periodic	NA
Grade and size of pre-stressing tendons and anchorages	☐ Continuous	☐ Periodic	NA
Inspection program verify:			
Size and location of structural elements	☐ Continuous	☒ Periodic	
Type, size and location of anchors	☐ Continuous	☒ Periodic	ACI 530: 1.2.2(e), 2.1.4, 3.1.6
Size, grade and type of reinforcement	☐ Continuous	☒ Periodic	ACI 530: 1.13
Welding of reinforcement	☐ Continuous	☐ Periodic	Welding Reinforcing Steel Not Allowed.
Cold and hot weather protection	☐ Continuous	☒ Periodic	IBC 2104.3, 2104.4
Application and measurement of pre-stressing force	☐ Continuous	☐ Periodic	NA
Prior to grouting verify			
Clean grout space	☐ Continuous	☒ Periodic	
Placement of reinforcement	☐ Continuous	☒ Periodic	ACI 530:1.13
Grout mix	☐ Continuous	☒ Periodic	
Mortar joints	☐ Continuous	☒ Periodic	
Grout placement	☒ Continuous	☐ Periodic	
Grout and mortar specimens and prisms	☒ Continuous	☐ Periodic	IBC 2105.2.2, 2105.3
Construction and submittal compliance verification	☐ Continuous	☒ Periodic	
Empirical masonry – Cat. I-III (1708.1.1)	☐ Continuous	☐ Periodic	NA
Empirical masonry – Cat. IV (1708.1.1)	☐ Continuous	☐ Periodic	NA
Engineered masonry – Cat. I-III 1708.1.1	☒ Continuous	☐ Periodic	Inspection frequency as indicated above.
Engineered masonry – Cat. IV (1708.1.1)	☐ Continuous	☐ Periodic	NA
Reinforcing & pre-stressing steel (1708.3)	☐ Continuous	☒ Periodic	IBC 1708.3
Structural steel (1708.4)	☐ Continuous	☒ Periodic	IBC 1708.4, AISC 341, AWS D1.1
Qualification of mechanical & electrical equipment (1708.5)	☐ Continuous	☐ Periodic	
Seismically isolated structures (1708.6)	☐ Continuous	☐ Periodic	NA
Testing for seismic resistance is	☒ Continuous	☐ Periodic	As indicated

WOOD CONSTRUCTION (IBC 1704.6)

Item			Detailed Instructions and Frequencies
Prefabricated elements & assembly	☐ Continuous	☐ Periodic	NA

SOILS CONSTRUCTION (IBC 1704.7)

Item			Detailed Instructions and Frequencies
Site preparation	☐ Continuous	☒ Periodic	
Structural fill material	☒ Continuous	☐ Periodic	
Structural fill lift thickness	☒ Continuous	☐ Periodic	
Structural fill soil densities	☒ Continuous	☐ Periodic	
Backfill soils materials	☒ Continuous	☐ Periodic	
Backfill soil densities	☒ Continuous	☐ Periodic	

PILE FOUNDATIONS (IBC 1704.8)

Item			Detailed Instructions and Frequencies
Observe driving operation and reporting	☒ Continuous	☐ Periodic	IBC table 1704.8
Verify placement & installation data	☒ Continuous	☐ Periodic	IBC table 1704.8

MICRO PILE FOUNDATIONS (IBC 1704.9)

Item			Detailed Instructions and Frequencies
Observe drilling operation and reporting	☒ Continuous	☐ Periodic	IBC table 1704.9
Verify placement & installation data	☒ Continuous	☐ Periodic	IBC table 1704.9

SPRAYED FIRE-RESISTANT MATERIALS (IBC 1704.10)

Item			Detailed Instructions and Frequencies
Structural member surface conditions	☐ Continuous	☒ Periodic	IBC 1704.10.1
Material application	☐ Continuous	☒ Periodic	IBC 1704.10.2
Material thickness	☐ Continuous	☒ Periodic	IBC 1704.10.3
Material density	☐ Continuous	☒ Periodic	IBC 1704.10.4
Bonding strength	☐ Continuous	☒ Periodic	IBC 1704.10.5

MASTIC AND INTUMESCENT FIRE-RESISTANT COATINGS (IBC 1704.11)

Item			Detailed Instructions and Frequencies
Material and installation	☐ Continuous	☐ Periodic	NA

EXTERIOR INSULATION AND FINISH SYSTEMS (EIFS) (IBC 1704.12)

Item			Detailed Instructions and Frequencies
Material and installation	☐ Continuous	☐ Periodic	NA

ALTERNITIVE CONSTRUCTION METHODS OR MATERIALS (IBC 1704.13)

Item			Detailed Instructions and Frequencies
Material and installation	☐ Continuous	☐ Periodic	NA

EPOXY (IBC 1704.13)

Item			Detailed Instructions and Frequencies
Material and installation (specify locations)	☒ Continuous	☐ Periodic	

SMOKE CONTROL (IBC 1704.14)

Item			Detailed Instructions and Frequencies
Material	☐ Continuous	☐ Periodic	NA
Installation	☐ Continuous	☐ Periodic	NA

Special inspection for seismic resistance (IBC 1707)

Item			Detailed Instructions and Frequencies
Structural Steel (1707.2)	☒ Continuous	☐ Periodic	AISC 341
Structural Wood (1707.3)	☐ Continuous	☐ Periodic	NA
Cold–formed steel framing (1707.4)	☐ Continuous	☒ Periodic	
Pier foundations (1707.5)	☒ Continuous	☐ Periodic	
Storage racks & access floors (1707.6)	☐ Continuous	☒ Periodic	Anchorage for racks over 8' tall
Architectural components (1707.7)	☐ Continuous	☒ Periodic	Exterior Cladding
Mechanical & electrical items (1707.8)	☐ Continuous	☒ Periodic	Natural gas piping, Boiler flues, Refrigerant relief vent piping, Laboratory exhaust ducts
Designated systems verification (1707.9)	☐ Continuous	☐ Periodic	NA
Seismic isolation systems (1707.10)	☐ Continuous	☐ Periodic	Per IBC 1707.10

MISCELLANEOUS AREAS

These inspections are recommended by the Architect/Engineer and approved by DFCM.

			Detailed Instructions and Frequencies
Suspended Ceiling Grid Clips	☐ Continuous	☒ Periodic	During installation before items are concealed.
Suspended Ceiling wire spacing (Seismic)	☐ Continuous	☒ Periodic	During installation before items are concealed.
Soils backfill (specify locations and frequency)	☐ Continuous	☒ Periodic	Foundation wall backfill at least 1 test for each 100 feet of wall length but no fewer than 2 tests per ASTM D 1556 (Sand Cone Method), D 2922 (Nuclear Method), or D 2937 (Drive-Cylinder Method)
Soils for curb and gutter (specify locations and frequency)	☐ Continuous	☒ Periodic	At sub-grade layer 1 test for every 250 L.F. of C&G but no fewer than 4 tests per ASTM D 1556 (Sand Cone Method), D 2922 (Nuclear Method), or D 2937 (Drive-Cylinder Method)
Soils for parking lots (specify locations and frequency)	☐ Continuous	☐ Periodic	NA
Soils for utility trench backfill	☐ Continuous	☒ Periodic	At each compacted initial and final backfill layer, at least 1 test for each 150 feet or less, but no fewer than 2 tests per ASTM D 1556 (Sand Cone Method), D 2922 (Nuclear Method), or D 2937 (Drive-Cylinder Method)
Reinforcement for slab on grade sidewalks and drive approaches (specify locations and frequency)	☐ Continuous	☒ Periodic	During installation before items are concealed.
Reinforcement for interior slab on grade (specify locations and frequency)	☐ Continuous	☒ Periodic	During installation before items are concealed.
Concrete testing for slab on grade sidewalks and drive approaches (specify locations and frequency)	☐ Continuous	☒ Periodic	Prior to placement of cement, slump test per ASTM C 143; air content per ASTM C 231; temperature per ASTM C 1064 when above 80 or below 40 degree F. Compressive Strength Test per ASTM C 39/C 39M (1 specimen @ 7 days and 2 specimens @ 28 days)
Concrete testing for interior slab on grade (specify locations and frequency)	☐ Continuous	☒ Periodic	Refer to Specification Section 033000 3.15
Masonry Veneer (specify locations and frequency)	☐ Continuous	☐ Periodic	Not required per section IBC 1707.7 Exception 1. The masonry on the building does not exceed 30'.

Asphalt inspection (specify locations and frequency)	☐ Continuous	☐ Periodic	NA
Asphalt testing (specify locations and frequency)	☐ Continuous	☐ Periodic	NA
Inspection of seismic resistance (specify locations and frequency)	☐ Continuous	☒ Periodic	Refer to welding and reinforced concrete section of this document.
Steam and water line welding (specify locations and frequency)	☐ Continuous	☐ Periodic	NA
Seismic supports for duct work and sealing of joints for duct work	☐ Continuous	☒ Periodic	During installation before items are concealed.
Seismic supports for electrical raceways, cable trays and lights	☐ Continuous	☒ Periodic	During installation before items are concealed.
Seismic supports for plumbing lines including gas, water and steam and condensation	☐ Continuous	☒ Periodic	During installation before items are concealed.
Seismic bracing for mechanical units both on slab and suspended	☐ Continuous	☒ Periodic	During installation before items are concealed.
	☐ Continuous	☐ Periodic	
	☐ Continuous	☐ Periodic	
	☐ Continuous	☐ Periodic	
	☐ Continuous	☐ Periodic	
	☐ Continuous	☐ Periodic	
	☐ Continuous	☐ Periodic	
	☐ Continuous	☐ Periodic	
	☐ Continuous	☐ Periodic	
	☐ Continuous	☐ Periodic	
	☐ Continuous	☐ Periodic	
	☐ Continuous	☐ Periodic	

Special Inspectors Shall:

- Be approved by the Building Official prior to performing any duties;
- Provide proof of licensure as a special inspector by the State of Utah for each type of inspection;
- Inspection reports are to meet the requirements of IBC 1704.1.2 and DFCM standards;
- Inspection reports are to be submitted to the code consultant, architect, DFCM project manager, and the State of Utah Building Official within 48 hrs. of inspections;
- A final inspection report shall be submitted following completion of the project documenting the types of special inspections performed and a statement indicating that the structure is in compliance with the drawings, specifications and applicable codes. IBC 1704.1.2

Updated October 8, 2009

NONSTRUCTURAL COMPONENT CHECKLIST

ITEM DESCRIPTION	*NOT REQUIRED*	*ON CONST. DOCUMENTS*	*DEFERRED SUBMITTAL*	*COMMENTS*
Architectural Components:				
Interior Nonstructural Walls & Partitions		X		
Cantilever Elements *(i.e. parapets, etc.)*		X		
Exterior Nonstructural Wall Elements		X	X	Lights, Sunshades (deferred)
Veneer		X	X	GFRC Panels
Penthouses		X		
Ceilings *(i.e. suspended grid or hard-lid)*		X		
Cabinets *(i.e. storage cabinets, equip, etc.)*			X	
Access Floors	X			
Storage Racks			X	
Appendages & Ornamentations	X			
Signs & Billboards	X			
Other: Auditorium Ceiling Clouds		X		
MEP Components:				
Fire Sprinklers			X	
Mechanical Equipment *(i.e. HVAC, fans, air handlers, boilers, furnaces, tanks, chillers, water heaters, heat exchangers, evaporators, engines, turbines, pumps, compressors, MFR equipment, etc.)*			X	
Electrical Equipment *(i.e. generators, batteries, inverters, transformers, MCC, panel boards, switch gear, cabinets, etc.)*			X	
Elevator & Escalator Components		X	X	Rails, Car &Hoist-way equipment(deferred)
Communication Equipment, Computers, Instrumentation, and Controls	X			
Roof-mounted Chimneys, Stacks, Cooling & Electrical Towers	X			
Lighting Fixtures			X	
Vibration Isolated Components	X			
Piping & Conduit Systems			X	
Ductwork *(including in-line components)*			X	
Conveyors			X	
Cable Trays			X	

NOTES:

1. Deferred submittals for seismic restraint of nonstructural components must be submitted to the DFCM Building Official a minimum of two weeks prior to the planned installation in order to allow for plan review and forwarding to inspectors. In the event that the submittal is deficient additional time may become necessary. ***Submittals shall be consolidated into groups for efficient review***.
2. If seismic restraints of non-structural components are installed prior to receiving DFCM approval they shall not be covered or concealed until receiving both plan review and inspection approval. Further, installers are proceeding at their own risk until plan review and inspection approval occurs.
3. The requirements for seismic restraint of nonstructural components cannot be satisfied by a general reference to Design Manuals. The design professional may utilize these manuals as a basis of their design, but must provide all supporting documentation to ensure that the design conforms to the requirements of ASCE 7-05, Chapter 13.
4. Submittals must include details of the proposed seismic restraint of nonstructural components. These details must show specific information relating to the materials, type, size, and locations of anchorages; materials used for bracing; attachment requirements of bracing to structure and component; and locations of transverse and longitudinal sway bracing and rod stiffeners. Submittals may also require structural calculations, engineering reports, test data, and/or specifications to ensure code compliance.
5. ASCE 7-05 Section 13.1.4 specifies important exemptions to the Chapter 13 requirements.

Revised: 02/15/2010
Page 1 of 1

GSBS ARCHITECTS
375 WEST 200 SOUTH
SALT LAKE CITY, UT 84101
P 801.521.8600
F 801.521.7913
www.gsbsarchitects.com

STATE OF UTAH
116302
LICENSED ARCHITECT

REVISIONS:

Utah Valley University New Science Building

800 West University Parkway
Orem, Utah 84058

Division of Facilities Construction and Management

DRAWN BY:	Author
CHECKED BY:	Checker
DFCM PROJECT NO.:	09020790
GSBS PROJECT NO.:	2009.115.00
ISSUED DATE:	05.07.2010

SPECIAL INSPECTIONS

CONSTRUCTION DOCUMENTS

GI-200

COM*check* Software Version 3.7.1

Envelope Compliance Certificate

90.1 (2007) Standard

Section 1: Project Information

Project Type: **New Construction**
Project Title :
Construction Site: Owner/Agent: Designer/Contractor:

Section 2: General Information

Building Location (for weather data):	**Orem, Utah**
Climate Zone:	**5b**
Building Type for Envelope Requirements:	**Non-Residential**
Vertical Glazing / Wall Area Pct.:	**35%**

Building Type	Floor Area
School/University	165000

Section 3: Requirements Checklist

Envelope PASSES: Design 15% better than code.

Climate-Specific Requirements:

Component Name/Description	Gross Area or Perimeter	Cavity R-Value	Cont. R-Value	Proposed U-Factor	Budget U-Factor(a)
Orientation: NORTH					
A1: Steel-Framed, 16" o.c.	323	19.0	8.4	0.057	0.064
A2: Steel-Framed, 16" o.c.	220	19.0	8.4	0.057	0.064
A2.D1: Insulated Metal, Swinging	46	---	---	0.700	0.700
N1: Steel-Framed, 16" o.c.	3084	19.0	8.4	0.057	0.064
N1.W6: Metal Frame with Thermal Break:Double Pane with Low-E, Clear, SHGC 0.26	321	---	---	0.440	0.550
N1.W7: Metal Frame with Thermal Break:Double Pane with Low-E, Clear, SHGC 0.26	444	---	---	0.440	0.550
N1.D4: Insulated Metal, Swinging	63	---	---	0.700	0.700
N2: Steel-Framed, 16" o.c.	1561	19.0	8.4	0.057	0.064
N3: Steel-Framed, 16" o.c.	756	19.0	8.4	0.057	0.064
N3.W8: Metal Frame with Thermal Break:Double Pane with Low-E, Clear, SHGC 0.26	152	---	---	0.440	0.550
N3.W9: Metal Frame with Thermal Break:Double Pane with Low-E, Clear, SHGC 0.26	210	---	---	0.440	0.550
N4: Steel-Framed, 16" o.c.	7793	19.0	8.4	0.057	0.064
N4.W10: Metal Frame with Thermal Break:Double Pane with Low-E, Clear, SHGC 0.26	1072	---	---	0.440	0.550
N4.W11: Metal Frame with Thermal Break:Double Pane with Low-E, Clear, SHGC 0.26	1480	---	---	0.440	0.550
N4.D5: Insulated Metal, Swinging	42	---	---	0.700	0.700
N5: Steel-Framed, 16" o.c.	1098	19.0	8.4	0.057	0.064
N6: Steel-Framed, 16" o.c.	248	19.0	8.4	0.057	0.064
N6.W12: Metal Frame with Thermal Break:Double Pane with Low-E, Clear, SHGC 0.26	248	---	---	0.440	0.550
N7: Steel-Framed, 16" o.c.	238	19.0	8.4	0.057	0.064
N7.W13: Metal Frame with Thermal Break:Double Pane with Low-E, Clear, SHGC 0.16	211	---	---	0.440	0.550

N8: Steel-Framed, 16" o.c.	238	19.0	8.4	0.057	0.064
N8.W14: Metal Frame with Thermal Break:Double Pane with Low-E, Clear, SHGC 0.16	211	---	---	0.440	0.550
N9: Steel-Framed, 16" o.c.	239	19.0	8.4	0.057	0.064
N9.W15: Metal Frame with Thermal Break:Double Pane with Low-E, Clear, SHGC 0.16	211	---	---	0.440	0.550
PN: Steel-Framed, 16" o.c.	2497	19.0	0.0	0.110	0.064
Orientation: EAST					
E1: Steel-Framed, 16" o.c.	4297	19.0	8.4	0.057	0.064
E1.W1: Metal Frame with Thermal Break:Double Pane with Low-E, Clear, SHGC 0.26	380	---	---	0.440	0.550
E1.W2: Metal Frame with Thermal Break:Double Pane with Low-E, Clear, SHGC 0.16	524	---	---	0.440	0.550
A2.D2: Insulated Metal, Swinging	63	---	---	0.700	0.700
E2: Steel-Framed, 16" o.c.	323	19.0	8.4	0.057	0.064
E2.D3: Insulated Metal, Swinging	61	---	---	0.700	0.700
E3: Steel-Framed, 16" o.c.	244	19.0	8.4	0.057	0.064
E3.W3: Metal Frame with Thermal Break:Double Pane with Low-E, Clear, SHGC 0.26	211	---	---	0.440	0.550
E4: Steel-Framed, 16" o.c.	245	19.0	8.4	0.057	0.064
E4.W4: Metal Frame with Thermal Break:Double Pane with Low-E, Clear, SHGC 0.26	211	---	---	0.440	0.550
E5: Steel-Framed, 16" o.c.	239	19.0	8.4	0.057	0.064
E5.W5: Metal Frame with Thermal Break:Double Pane with Low-E, Clear, SHGC 0.26	211	---	---	0.440	0.550
PE: Steel-Framed, 16" o.c.	1568	19.0	0.0	0.110	0.064
ME1: Steel-Framed, 16" o.c.	132	19.0	0.0	0.110	0.064
Orientation: SOUTH					
S1: Steel-Framed, 16" o.c.	1606	19.0	8.4	0.057	0.064
S1.W16: Metal Frame with Thermal Break:Double Pane with Low-E, Clear, SHGC 0.16, PF 0.50	1606	---	---	0.440	0.550
S2: Steel-Framed, 16" o.c.	1674	19.0	8.4	0.057	0.064
S2.W17: Metal Frame with Thermal Break:Double Pane with Low-E, Clear, SHGC 0.16, PF 0.50	1632	---	---	0.440	0.550
S2.D6: Insulated Metal, Swinging	42	---	---	0.700	0.700
S3: Steel-Framed, 16" o.c.	8258	19.0	8.4	0.057	0.064
S3.W18: Metal Frame with Thermal Break:Double Pane with Low-E, Clear, SHGC 0.26	1270	---	---	0.440	0.550
S3.W19: Metal Frame with Thermal Break:Double Pane with Low-E, Clear, SHGC 0.16, PF 0.50	1755	---	---	0.440	0.550
S3.D7: Insulated Metal, Swinging	42	---	---	0.700	0.700
S4: Steel-Framed, 16" o.c.	279	19.0	8.4	0.057	0.064
S4.W20: Metal Frame with Thermal Break:Double Pane with Low-E, Clear, SHGC 0.26	215	---	---	0.440	0.550
S5: Steel-Framed, 16" o.c.	249	19.0	8.4	0.057	0.064
S5.W21: Metal Frame with Thermal Break:Double Pane with Low-E, Clear, SHGC 0.26	193	---	---	0.440	0.550
S6: Steel-Framed, 16" o.c.	331	19.0	8.4	0.057	0.064
S5.W22: Metal Frame with Thermal Break:Double Pane with Low-E, Clear, SHGC 0.26	220	---	---	0.440	0.550
S7: Steel-Framed, 16" o.c.	157	19.0	8.4	0.057	0.064
PS: Steel-Framed, 16" o.c.	2404	19.0	0.0	0.110	0.064
PS.D9: Insulated Metal, Non-Swinging	80	---	---	0.700	0.500
MS1: Steel-Framed, 16" o.c.	291	19.0	0.0	0.110	0.064
MS2: Steel-Framed, 16" o.c.	729	19.0	0.0	0.110	0.064
MS2.D10: Insulated Metal, Non-Swinging	95	---	---	0.700	0.500
MS3: Steel-Framed, 16" o.c.	116	19.0	0.0	0.110	0.064
MS3.D11: Insulated Metal, Non-Swinging	21	---	---	0.700	0.500
Orientation: WEST					
D1D: Steel-Framed, 16" o.c.	701	19.0	8.4	0.057	0.064
W1: Steel-Framed, 16" o.c.	1340	19.0	8.4	0.057	0.064
W1.W23: Metal Frame with Thermal Break:Double Pane with Low-E, Clear, SHGC 0.26	227	---	---	0.440	0.550

W1.W24: Metal Frame with Thermal Break:Double Pane with Low-E, Clear, SHGC 0.16	313	---	---	0.440	0.550
W2: Steel-Framed, 16" o.c.	1334	19.0	8.4	0.057	0.064
W2.W25: Metal Frame with Thermal Break:Double Pane with Low-E, Clear, SHGC 0.26	260	---	---	0.440	0.550
W2.D8: Insulated Metal, Swinging	42	---	---	0.700	0.700
W3: Steel-Framed, 16" o.c.	1723	19.0	8.4	0.057	0.064
W3.W26: Metal Frame with Thermal Break:Double Pane with Low-E, Clear, SHGC 0.16	1723	---	---	0.440	0.550
W4: Steel-Framed, 16" o.c.	1606	19.0	8.4	0.057	0.064
W4.W27: Metal Frame with Thermal Break:Double Pane with Low-E, Clear, SHGC 0.16	1606	---	---	0.440	0.550
W5: Steel-Framed, 16" o.c.	1307	19.0	8.4	0.057	0.064
W5.W28: Metal Frame with Thermal Break:Double Pane with Low-E, Clear, SHGC 0.26	203	---	---	0.440	0.550
W5.W29: Metal Frame with Thermal Break:Double Pane with Low-E, Clear, SHGC 0.16	280	---	---	0.410	0.550
W6: Steel-Framed, 16" o.c.	1061	19.0	8.4	0.057	0.064
W6.W30: Metal Frame with Thermal Break:Double Pane with Low-E, Clear, SHGC 0.16	1061	---	---	0.440	0.550
W7: Steel-Framed, 16" o.c.	309	19.0	8.4	0.057	0.064
W7.W31: Metal Frame with Thermal Break:Double Pane with Low-E, Clear, SHGC 0.16	220	---	---	0.440	0.550
W8: Steel-Framed, 16" o.c.	251	19.0	8.4	0.057	0.064
W8.W32: Metal Frame with Thermal Break:Double Pane with Low-E, Clear, SHGC 0.26	171	---	---	0.410	0.550
PW: Steel-Framed, 16" o.c.	1547	19.0	0.0	0.110	0.064
MW1: Steel-Framed, 16" o.c.	393	19.0	0.0	0.110	0.064
MW1.D12: Insulated Metal, Non-Swinging	21	---	---	0.700	0.500
MW2: Steel-Framed, 16" o.c.	871	19.0	0.0	0.110	0.064
Orientation: UNSPECIFIED ORIENTATION					
R1: Insulation Entirely Above Deck	52997	---	30.0	0.032	0.048
R2: Metal Building, Screw Down	7733	0.0	30.0	0.032	0.065
Floor 1: Slab-On-Grade:Unheated	690	---	---	---	---

(a) Budget U-factors are used for software baseline calculations ONLY, and are not code requirements.

Insulation:

- ☐ 1. Open-blown or poured loose-fill insulation has not been used in attic roof spaces with ceiling slope greater than 3 in 12.
- ☐ 2. Wherever vents occur, they are baffled to deflect incoming air above the insulation.
- ☐ 3. Recessed lights, equipment and ducts are not affecting insulation thickness.
- ☐ 4. No roof insulation is installed on a suspended ceiling with removable ceiling panels.
- ☐ 5. All exterior insulation is covered with protective material.
- ☐ 6. Cargo and loading dock doors are equipped with weather seals.

Fenestration and Doors:

- ☐ 7. Windows and skylights are labeled and certified by the manufacturer for U-factor and SHGC.
- ☐ 8. Fixed windows and skylights unlabeled by the manufacturer have been site labeled using the default U-factor and SHGC.
- ☐ 9. Other unlabeled vertical fenestration, operable and fixed, that are unlabeled by the manufacturer have been site labeled using the default U-factor and SHGC. No credit has been given for metal frames with thermal breaks, low-emissivity coatings, gas fillings, or insulating spacers.

Air Leakage and Component Certification:

- ☐ 10. All joints and penetrations are caulked, gasketed, weather-stripped, or otherwise sealed.
- ☐ 11. Windows, doors, and skylights certified as meeting leakage requirements.
- ☐ 12. Component R-values & U-factors labeled as certified.
- ☐ 13. 'Other' components have supporting documentation for proposed U-Factors.
- ☐ 14. Building entrances that separate conditioned space from the exterior have an enclosed vestibule with all doors equipped with self-closing devices. Interior and exterior doors in the closed position are no less than 7 ft apart. Conditioned vestibules comply with the requirements for a conditioned space. Unconditioned vestibules comply with the requirements of a semiheated space.
  Exceptions:
  Building entrances with revolving doors.
  Doors not intended to be used as a building entrance.

Doors opening directly from a dwelling unit.
Doors that open directly from a space less than 3000 sq. ft. in area and is separate from the building entrance.

- ☐ 15. Insulation installed according to manufacturer's instructions, in substantial contact with the surface being insulated, and in a manner that achieves the rated R-value without compressing the insulation.

Section 4: Compliance Statement

Compliance Statement: The proposed envelope design represented in this document is consistent with the building plans, specifications and other calculations submitted with this permit application. The proposed envelope system has been designed to meet the 90.1 (2007) Standard requirements in COMcheck Version 3.7.1 and to comply with the mandatory requirements in the Requirements Checklist.

Curtis J. Clark - Director — Signature — 3/30/10
Name - Title Signature Date

DEFERRED SUBMITTALS

Deferred Submittal	Approximate Date
Structural	
a. Foundation elements:	
Stone Columns, Helical Piers, Micropiles, and Shoring Walls	Jul 2010
Civil	
a. Dewatering	Jul 2010
Architectural	
a. GFRC Panels	Sep 2010
b. Sunshades	Oct 2010
c. Glass Guardrail System	Jan 2011
d. Plaza Paver System	Jan 2011
e. Seismic Restraint of Storage Racks	Jan 2011
Mechanical	
a. Fire Sprinklers	Jan 2011
b. Seismic Restraint of Mechanical / Plumbing Equipment	Mar 2011
Electrical	
a. Seismic Restraint of Electrical Equipment	Mar 2011
b. Lighting	May 2011

NOTE: Contactor shall consolidate nonstructural component seismic bracing submittals to the greatest extent possible.

GSBS ARCHITECTS
375 WEST 200 SOUTH
SALT LAKE CITY, UT 84101
P 801.521.8600
F 801.521.7913
www.gsbsarchitects.com

STATE OF UTAH 116302 LICENSED ARCHITECT

REVISIONS:

Utah Valley University New Science Building

800 West University Parkway
Orem, Utah 84058

Division of Facilities Construction and Management

DRAWN BY:	Author
CHECKED BY:	Checker
DFCM PROJECT NO.:	09020790
GSBS PROJECT NO.:	2009.115.00
ISSUED DATE:	05.07.2010

COMCHECK/ DEFERRED SUBMITTALS

CONSTRUCTION DOCUMENTS

GI-201

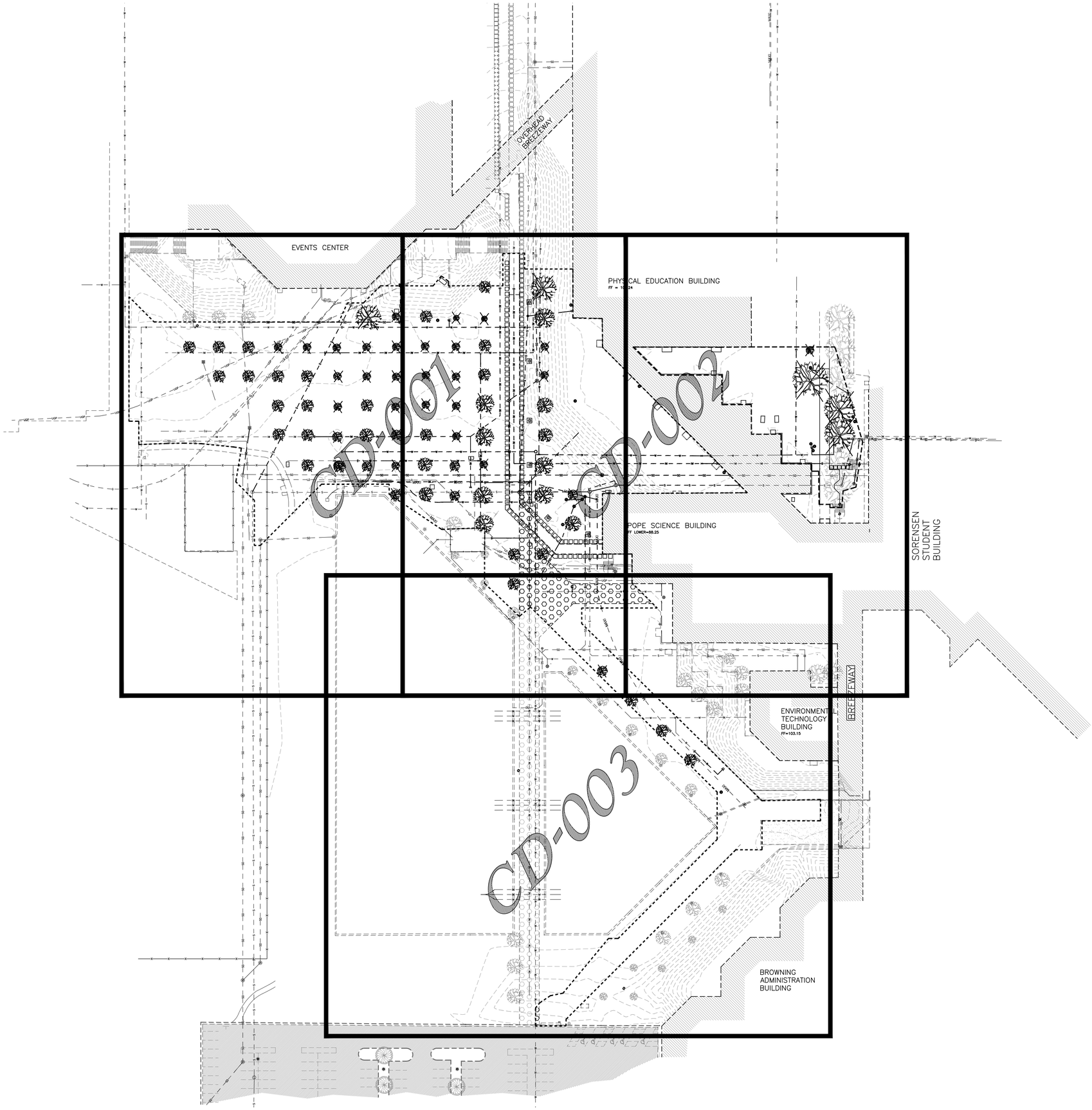

Scale: 1" = 40'

40 0 10 20 40 50 60 70 80

Graphic Scale

Legend

(Note: All items may not appear on drawing)

San. Sewer Manhole	S
Water Manhole	W
Storm Drain Manhole	D
Electrical Manhole	E
Catch Basins	
Exist. Fire Hydrant	
Fire Hydrant	
Exist. Water Valve	
Water Valve	
Sanitary Sewer	—S—
Culinary Water	—W—
Gas Line	—G—
Irrigation Line	—IW—
Storm Drain	—SD—
Telephone Line	—T—
Secondary Waterline	—SW—
Power Line	—P—
Fire Line	—F—
Land Drain	—LD—
Power pole	
Power pole w/guy	
Light Pole	
Fence	x x x
Flowline of ditch	
Overhead Power line	—OHP—
Corrugated Metal Pipe	CMP
Concrete Pipe	CP
Reinforced Concrete Pipe	RCP
Ductile Iron	DI
Polyvinyl Chloride	PVC
Top of Asphalt	TA
Edge of Asphalt	EA
Centerline	CL
Flowline	FL
Finish Floor	FF
Top of Curb	TC
Top of Wall	TWL
Top of Walk	TW
Top of Concrete	TCN
Natural Ground	NG
Finish Grade	FG
Fire Department Connection	FDC
Finish Contour	—90—
Exist. Contour	—90—
Finish Grade	95.33TA
Exist. Grade	95.72TA
Ridge Line	—R—
Direction of Flow	
Existing Asphalt	
New Asphalt	
Existing Footings	
Concrete	
Open Face Curb & Gutter	
Turf Block Roadway	
Demo Tree	

General Demolition Notes:

1. Demolition and site clearing for this contract are to include all areas shown within demolition limits or by note.
2. Refer to site improvement plans for more details on limits of removal.
3. Retain and protect existing buildings, including all footings and foundations.
4. All utilities, sewer, water, gas, telephone and electrical services to be disconnected and capped according to city, county and utility company requirements, unless otherwise shown.
5. Clear and grub trees, shrubs, and vegetation within construction limits, disposal to be off-site except where noted otherwise.
6. DO NOT interrupt any services or disrupt the operation of any businesses shown outside the demolition limits.
7. If ASBESTOS is found, the Asbestos must be removed in a legal manner by a contractor licensed to handle asbestos materials. (Not a part of contract.)
8. Remove debris, rubbish, and other materials resulting from the demolition and site clearing operations from the site and dispose of in a legal manner.
9. The location and/or elevation of existing utilities as shown on these plans is based on records of the various utility companies, Utah Valley University Record Drawings, and, where possible, measurements taken in the field. The information is not to be relied upon as being exact or complete. Contractor shall contact authorities having jurisdiction for field locations. Contractor shall be responsible for protection of in place and relocated utilities during construction.
10. Stockpiles shall be graded to maintain slopes not greater than 3 horizontal to 1 vertical. Provide erosion control as needed to prevent sediment transport to adjacent drainage ways.
11. Contractor shall be responsible for disposal of all waste material. Disposal shall be at an approved site for such material. Burning onsite is not permitted.
12. Install traffic warning devices as needed in accordance with local standards.
13. Contractor shall obtain all permits necessary for demolition from City, County, State or Federal Agencies as required.

Project Benchmark:
Working Point 856.39' N1°6'56"E from Southwest Corner of Existing Pope Science Building.
Northing 9890.500
Easting 10234.950
Elevation 107.947 (Local Datum)

CAUTION NOTICE TO CONTRACTOR

The contractor is specifically cautioned that the location and/or elevation of existing utilities as shown on these plans are based on records of the various utility companies and, where possible, measurements taken in the field. The information is not to be relied on as being exact or complete. The contractor must call the appropriate utility company at least 48 hours before any excavation to request exact field location of utilities. It shall be the responsibility of the contractor to relocate all existing utilities which conflict with the propose improvements shown on the plans.

SUPPLEMENT TO CAUTION NOTICE TO CONTRACTOR

Any information on these plans that contains "Rec. Dwg." indicates that the information has been provided by means of record drawings. Record drawings may have been delivered by either written and or verbal means. Record drawings may have various sources including but not limited to: Architects, owners, utility companies, and government offices. The providers of record drawings are listed below. The supplemental information shown on these plans shall not be solely be relied upon as exact or complete. The contractor retains all responsibility to locate and verify all utilities including those that may interfere with this project prior to start of construction activities.

SOURCE:	DATA PROVIDED:	DATE:
Frank Young, Utah Valley University	Existing utility locations and sizes.	09/28/2009
Frank Young, Utah Valley University	Turf block paver locations	06/17/2009

PRIVATE ENGINEER'S NOTICE TO CONTRACTORS

The Contractor agrees that he shall assume sole and complete responsibility for job site conditions during the course of construction of this project, including safety of all persons and property; that this requirement shall apply continuously and not be limited to normal working hours; and that the contractor shall defend, indemnify, and hold the owner and the engineer harmless from any and all liability, real or alleged, in connection with the performance of work on this project, excepting for liability arising from the sole negligence of the owner or the engineer.

ALL CONSTRUCTION TO CONFORM TO CITY STANDARDS AND SPECIFICATIONS

GREAT BASIN ENGINEERING INC
5746 South 1475 East · Suite 200
Ogden, Utah 84403 Main (801)394-4515
S.L.C. (801)521-0222 Fax 801-392-7544
www.greatbasinengineering.com

GSBS ARCHITECTS
375 WEST 200 SOUTH
SALT LAKE CITY, UT 84101
P 801.521.8600
F 801.521.7913
www.gsbsarchitects.com

REVISIONS:

LICENSED PROFESSIONAL ENGINEER No. 166184 MARK EUGENE BABBITT 5-7-10 STATE OF UTAH

Utah Valley University New Science Building

800 West University Parkway
Orem, Utah 84058

DFCM

DRAWN BY:	HA
CHECKED BY:	DRW
OWNER PROJECT NO.:	09020790
GSBS PROJECT NO.:	2009.115.00
ISSUED DATE:	05.07.10

OVERALL DEMOLITION PLAN

CONSTRUCTION DOCUMENTS

CD-000

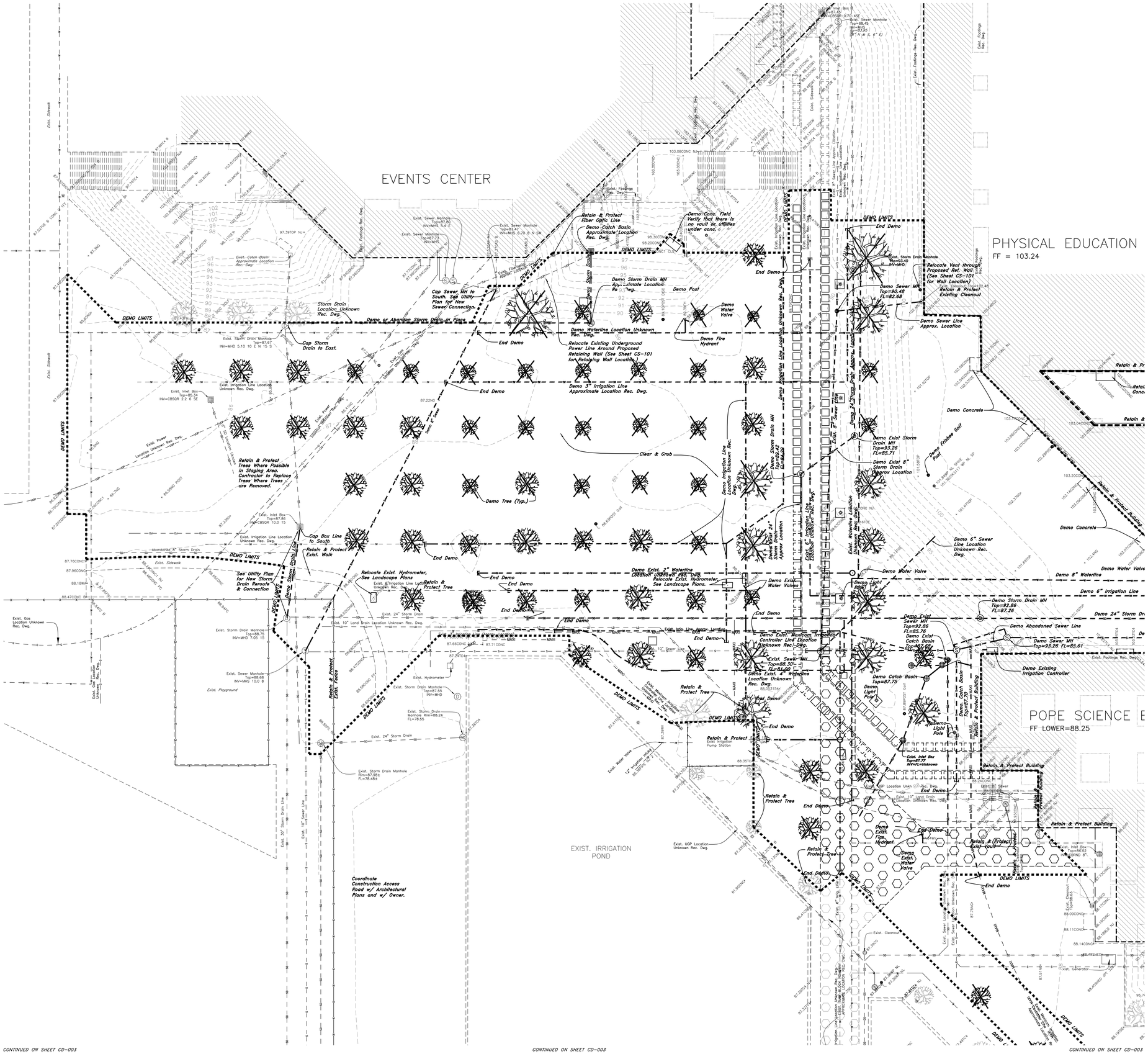
EVENTS CENTER
PHYSICAL EDUCATION
FF = 103.24
POPE SCIENCE B
FF LOWER=88.25
EXIST. IRRIGATION POND
DEMO LIMITS
Retain & Protect Fiber Optic Line
Demo Catch Basin Approximate Location Rec. Dwg.
Demo Conc. Field Verify that there is no vault or utilities under conc.
Cap Sewer MH to South. See Utility Plan for New Sewer Connection.
Storm Drain Location Unknown Rec. Dwg.
Demo or Abandon Storm Drain as Req.
Cap Storm Drain to East.
Demo Storm Drain MH Approximate Location Rec. Dwg.
Demo Post
Demo Water Valve
Demo Fire Hydrant
Demo Waterline Location Unknown Rec. Dwg.
Relocate Existing Underground Power Line Around Proposed Retaining Wall (See Sheet CS-101 for Retaining Wall Location)
Demo 3" Irrigation Line Approximate Location Rec. Dwg.
Relocate Vent through Proposed Ret. Wall (See Sheet CS-101 for Wall Location)
Retain & Protect Existing Cleanout
Demo Sewer MH Top=90.48 FL=82.68
Demo Sewer Line Approx. Location
Demo Concrete
Demo Exist Storm Drain MH Top=93.26 FL=85.71
Demo Exist 8" Storm Drain Approx Location
Demo Tribbe Golf Post
Retain & Protect Building
Retain & Protect Trees Where Possible In Staging Area. Contractor to Replace Trees Where Trees are Removed.
Clear & Grub
Demo Tree (Typ.)
Cap Box Line to South
Retain & Protect Exist. Walk
See Utility Plan for New Storm Drain Reroute & Connection
Relocate Exist. Hydrometer, See Landscape Plans
Demo Exist. 2" Waterline Location Unknown Rec. Dwg. Relocate Exist. Hydrometer, See Landscape Plans.
Demo Exist Water Valves
Demo Light Pole
Demo Water Valve
Demo 6" Sewer Line Location Unknown Rec. Dwg.
Demo 8" Waterline
Demo 6" Irrigation Line
Demo 24" Storm Dr
Demo Storm Drain MH Top=92.86 FL=87.26
Demo Abandoned Sewer Line
Demo Sewer MH Top=93.26 FL=85.61
Demo Exist Sewer MH Top=92.86 FL=85.76
Demo Exist Catch Basin Top=92.66
Demo Existing Irrigation Controller
Demo Catch Basin Top=87.75
Demo Exist. Maxicom Irrigation Controller Line Location Unknown Rec. Dwg.
Demo Exist. 4" Waterline Location Unknown Rec. Dwg.
Demo Exist. Sewer MH Top=88.30 FL=84.00
Retain & Protect Tree
Retain & Protect Exist. Fence
Coordinate Construction Access Road w/ Architectural Plans and w/ Owner.
Demo Exist. Fire Hydrant
Demo Exist. Water Valve
Demo Exist. Cleanout
Demo Exist. Generator
Exist. Sidewalk
Exist. Playground
Exist. Footings Rec. Dwg.
Exist. Storm Drain Line
Exist. 24" Storm Drain
Exist. 10" Land Drain Location Unknown Rec. Dwg.
Exist. Irrigation Line Location Unknown Rec. Dwg.
Exist. Gas Location Unknown Rec. Dwg.
Exist. Power Location Unknown Rec. Dwg.
Exist. Sewer Line
Exist. 12" Sewer Line
Exist. 30" Storm Drain Line
Exist. UGP Location Unknown Rec. Dwg.
Exist. Storm Drain Manhole Rim=87.984 FL=78.48±
Exist. Hydrometer
Exist. Storm Drain Manhole Top=87.55 INV=MHD
Exist. Storm Drain Manhole Rim=88.24 FL=78.55
Exist. Sewer Manhole Top=88.68 INV=MHS 10.0 8
Exist. Storm Drain Manhole Top=85.75 INV=MHD 7.05 15
Exist. Inlet Box Top=85.34 INV=CBSQR 2.2 6 SE
Exist. Inlet Box Top=87.86 INV=CBSQR 10.0 15
Exist. Storm Drain Manhole Top=87.67 INV=MHD 5.10 10 E N 15 S
Exist. Sewer Manhole Top=87.90 INV=MHS 5.4 2
Exist. Sewer Manhole Top=87.73 INV=MHS
Exist. Sewer Manhole Top=87.43 INV=MHS 6.70 8 N SW
Exist. Inlet Box Top=87.67 INV=CBSQR (8.70) NE
Exist. Sewer Manhole Top=88.45 INV=MHS Top=87.35 (8 N & 5 E)
Exist. Footings Rec. Dwg.
Exist. Footings Rec. Dwg.
Exist. Footings Rec. Dwg.

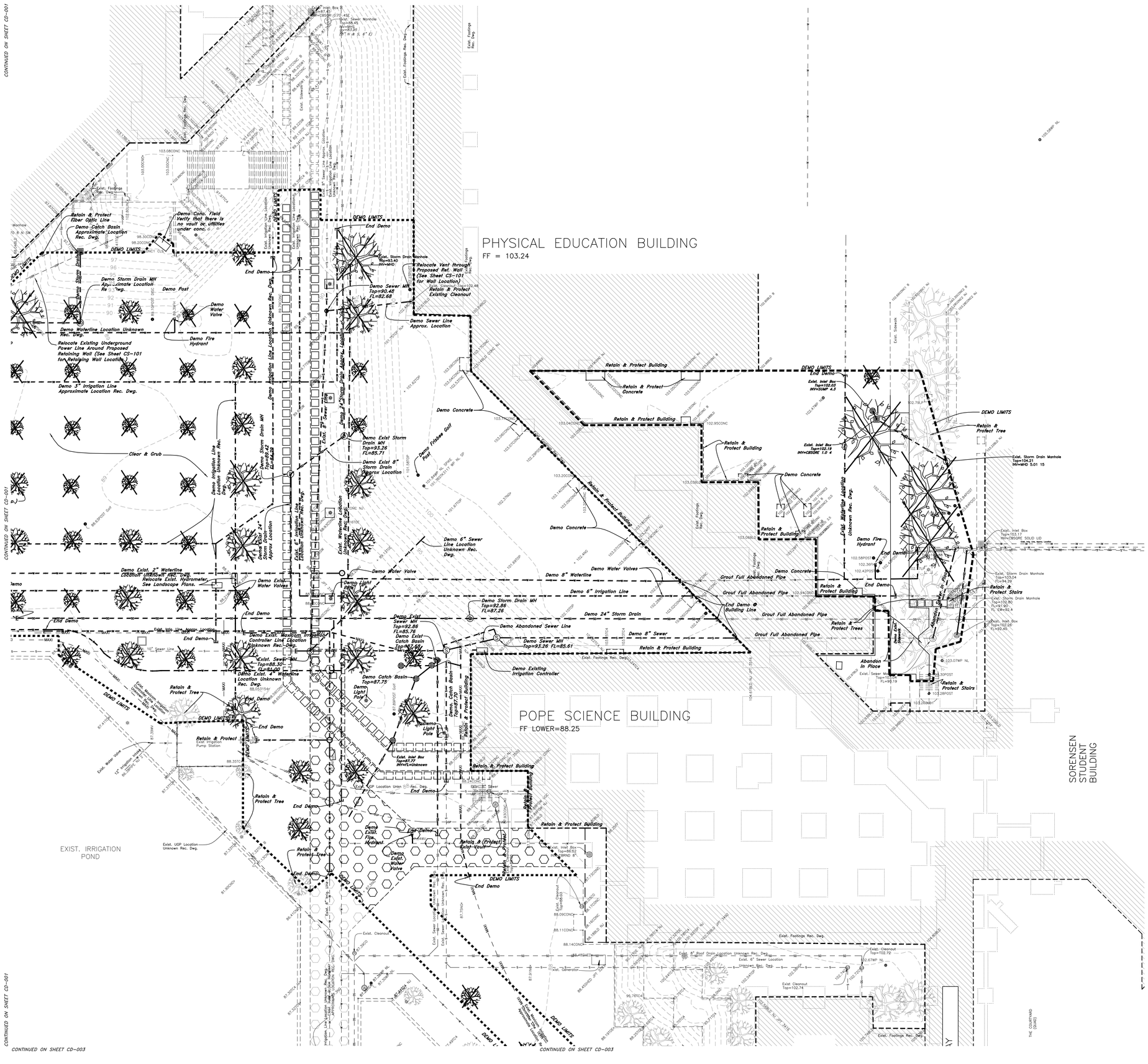
PHYSICAL EDUCATION BUILDING
FF = 103.24
POPE SCIENCE BUILDING
FF LOWER=88.25
SORENSEN STUDENT BUILDING
EXIST. IRRIGATION POND
DEMO LIMITS
Retain & Protect Building
Demo Concrete
Demo Water Valves
Demo 8" Waterline
Demo 6" Irrigation Line
Demo 24" Storm Drain
Demo 8" Sewer
Grout Full Abandoned Pipe
Demo Abandoned Sewer Line
Demo Existing Irrigation Controller
Demo Fire Hydrant
Demo Water Valve
Demo Light Pole
Demo Catch Basin
Clear & Grub
Relocate Vent through Proposed Ref. Wall (See Sheet C5-101 for Wall Location)
Demo Sewer Line Approx. Location
Demo Storm Drain MH Top=92.86 FL=87.26
Demo Exist Sewer MH Top=92.86 FL=85.76
Demo Exist Catch Basin Top=87.60
Demo Sewer MH Top=93.26 FL=85.61
Demo Sewer MH Top=90.48 FL=82.68
Demo Exist Storm Drain MH Top=93.26 FL=85.71
Demo Exist 8" Storm Drain Approx Location
Demo 6" Sewer Line Location Unknown Rec. Dwg.
Demo Exist. 2" Waterline Location Unknown Rec. Dwg. Relocate Exist. Hydrometer See Landscape Plans.
Demo Exist. Water Valves
Demo Exist. 4" Waterline Location Unknown Rec. Dwg.
Demo Exist. Maxicom Irrigation Controller Line Location Unknown Rec. Dwg.
Demo Exist. Irrigation Line Location Unknown Rec. Dwg.
Demo Exist. Storm Drain Manhole Top=104.21 INV=MHD 5.01 15
Demo Exist. Inlet Box Top=103.17 INV=CBSDRE SOLID LID
Demo Exist. Storm Drain Manhole Top=103.04 FL=94.39
Demo Exist. Storm Drain Manhole Top=102.80 FL=91.90 FL EW=92.4
Demo Exist. Inlet Box Top=102.20 FL=92.40
Demo Exist. Inlet Box Top=103.55 INV=SUMP 4.3
Demo Exist. Inlet Box Top=102.19 INV=CBSDRE 1.0 4
Demo Exist. Cleanout Top=102.72
Demo Exist. Cleanout Top=102.74
Demo Exist. Inlet Box Top=87.77 INV=FL=Unknown
Demo Exist. Fire Hydrant
Demo Exist. Water Valve
Demo Exist. Footings Rec. Dwg.
Demo Exist. Sidewalk
Demo Exist. Irrigation Line Location Unknown Rec. Dwg.
Demo Exist. Waterline Location Unknown Rec. Dwg.
Demo Exist. Storm Drain MH
Demo Exist. 8" Sewer
Demo Exist. 8" Roof Drain Location Unknown Rec. Dwg.
Demo Exist. 6" Sewer Location Unknown Rec. Dwg.
Demo Exist. Generator
Demo Exist. Cleanout Top=88.03
Demo Exist. Sewer Location Unknown Rec. Dwg.
Demo Exist. Sewer Line Location Unknown Rec. Dwg.
Demo Exist. Sewer Line Location Unknown Rec. Dwg.
Demo Exist. Sewer Line

GSBS ARCHITECTS

375 WEST 200 SOUTH
SALT LAKE CITY, UT 84101

P 801.521.8600
F 801.521.7913

www.gsbsarchitects.com

REVISIONS:

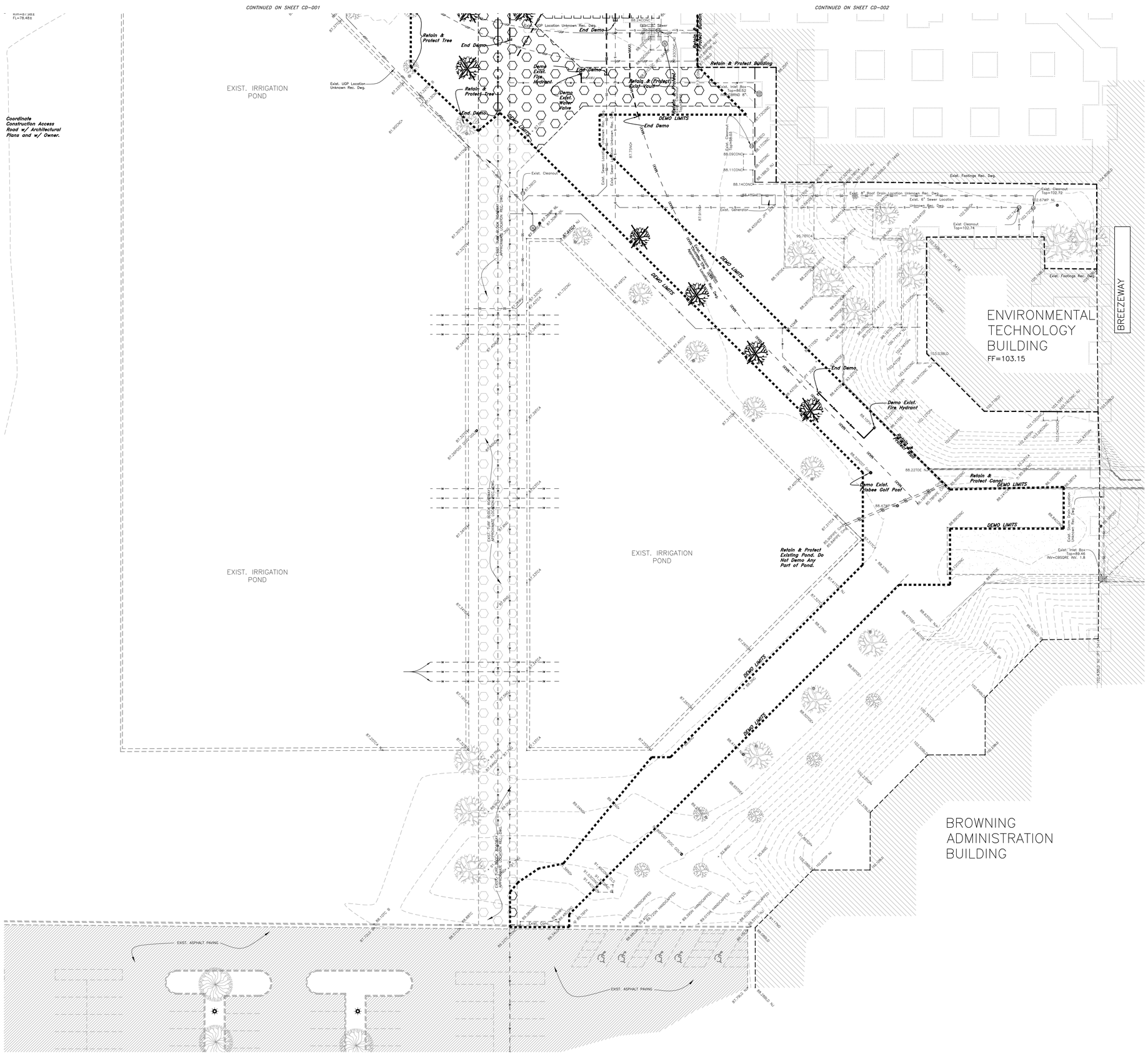

Scale: 1" = 20'

20 0 10 20 25 30 35 40

Graphic Scale

Legend

(Note: All items may not appear on drawing)

San. Sewer Manhole	S
Water Manhole	W
Storm Drain Manhole	D
Electrical Manhole	E
Catch Basins	
Exist. Fire Hydrant	
Fire Hydrant	
Exist. Water Valve	
Water Valve	
Sanitary Sewer	—S—
Culinary Water	—W—
Gas Line	—G—
Irrigation Line	—IW—
Storm Drain	—SD—
Telephone Line	—T—
Secondary Waterline	—SW—
Power Line	—P—
Fire Line	—F—
Land Drain	—LD—
Power pole	
Power pole w/guy	
Light Pole	
Fence	x x x
Flowline of ditch	
Overhead Power line	—OHP—
Corrugated Metal Pipe	CMP
Concrete Pipe	CP
Reinforced Concrete Pipe	RCP
Ductile Iron	DI
Polyvinyl Chloride	PVC
Top of Asphalt	TA
Edge of Asphalt	EA
Centerline	CL
Flowline	FL
Finish Floor	FF
Top of Curb	TC
Top of Wall	TWL
Top of Walk	TW
Top of Concrete	TCN
Natural Ground	NG
Finish Grade	FG
Fire Department Connection	FDC
Finish Contour	—97—
Exist. Contour	—96—
Finish Grade	**95.337A**
Exist. Grade	95.721A
Ridge Line	—R—
Direction of Flow	
Existing Asphalt	
New Asphalt	
Existing Footings	
Concrete	
Open Face Curb & Gutter	
Turf Block Roadway	
Demo Tree	

General Demolition Notes:

1. Demolition and site clearing for this contract are to include all areas shown within demolition limits or by note.
2. Refer to site improvement plans for more details on limits of removal.
3. Retain and protect existing buildings, including all footings and foundations.
4. All utilities, sewer, water, gas, telephone and electrical services to be disconnected and capped according to city, county and utility company requirements, unless otherwise shown.
5. Clear and grub trees, shrubs, and vegetation within construction limits, disposal to be off-site except where noted otherwise.
6. DO NOT interrupt any services or disrupt the operation of any businesses shown outside the demolition limits.
7. If ASBESTOS is found, the Asbestos must be removed in a legal manner by a contractor licensed to handle asbestos materials. (Not a part of contract.)
8. Remove debris, rubbish, and other materials resulting from the demolition and site clearing operations from the site and dispose of in a legal manner.
9. The location and/or elevation of existing utilities as shown on these plans is based on records of the various utility companies, Utah Valley University Record Drawings, and, where possible, measurements taken in the field. The information is not to be relied upon as being exact or complete. Contractor shall contact authorities having jurisdiction for field locations. Contractor shall be responsible for protection of in place and relocated utilities during construction.
10. Stockpiles shall be graded to maintain slopes not greater than 3 horizontal to 1 vertical. Provide erosion control as needed to prevent sediment transport to adjacent drainage ways.
11. Contractor shall be responsible for disposal of all waste material. Disposal shall be at an approved site for such material. Burning onsite is not permitted.
12. Install traffic warning devices as needed in accordance with local standards.
13. Contractor shall obtain all permits necessary for demolition from City, County, State or Federal Agencies as required.

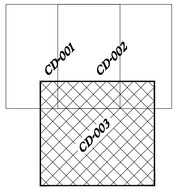

Project Benchmark:
Working Point 836.39' N21°6'56"E from Southwest Corner of Existing Pope Science Building.
Northing 9690.500
Easting 10234.950
Elevation 107.947 (Local Datum)

CAUTION NOTICE TO CONTRACTOR

The contractor is specifically cautioned that the location and/or elevation of existing utilities as shown on these plans are based on records of the various utility companies and, where possible, measurements taken in the field. The information is not to be relied on as being exact or complete. The contractor must call the appropriate utility company at least 48 hours before any excavation to request exact field location of utilities. It shall be the responsibility of the contractor to relocate all existing utilities which conflict with the propose improvements shown on the plans.

SUPPLEMENT TO CAUTION NOTICE TO CONTRACTOR

Any information on these plans that contains "Rec. Dwg." indicates that the information has been provided by means of record drawings. Record drawings may have been delivered by either written and or verbal means. Record drawings may have various sources including but not limited to: Architects, owners, utility companies, and government offices. The providers of record drawings are listed below. The supplemental information shown on these plans shall not be solely be relied upon as exact or complete. The contractor retains all responsibility to locate and verify all utilities including those that may interfere with this project prior to start of construction activities.

SOURCE:	DATA PROVIDED:	DATE:
Frank Young, Utah Valley University	Existing utility locations and sizes.	09/28/2009
Frank Young, Utah Valley University	Turf block paver locations	06/17/2009

PRIVATE ENGINEER'S NOTICE TO CONTRACTORS

The Contractor agrees that he shall assume sole and complete responsibility for job site conditions during the course of construction of this project, including safety of all persons and property; that this requirement shall apply continuously and not be limited to normal working hours; and that the contractor shall defend, indemnify, and hold the owner and the engineer harmless from any and all liability, real or alleged, in connection with the performance of work on this project, excepting for liability arising from the sole negligence of the owner or the engineer.

ALL CONSTRUCTION TO CONFORM TO CITY STANDARDS AND SPECIFICATIONS

GREAT BASIN ENGINEERING INC
5746 South 1475 East - Suite 200
Ogden, Utah 84403 Main (801)394-4515
S.L.C (801)521-0222 FAX 801-392-7544
www.greatbasinengineering.com

Utah Valley University New Science Building

800 West University Parkway
Orem, Utah 84058

DFCM

DRAWN BY:	HA
CHECKED BY:	DRW
OWNER PROJECT NO.:	09020790
GSBS PROJECT NO.:	2009.115.00
ISSUED DATE:	05.07.10

DEMOLITION PLAN

CONSTRUCTION DOCUMENTS

CD-003

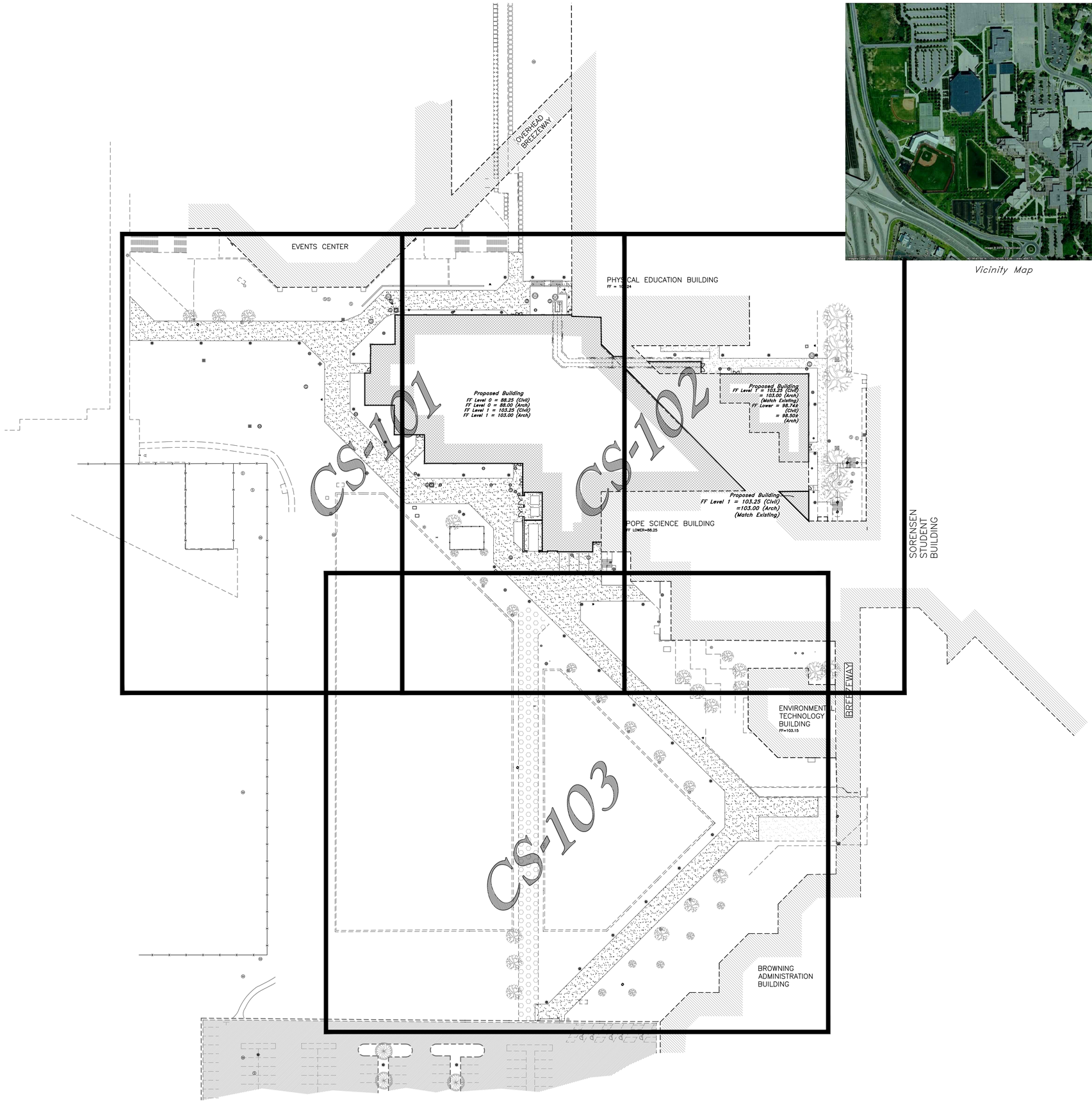

Vicinity Map

Scale: 1" = 40'

40 0 10 20 40 50 60 70 80

Graphic Scale

Legend

(Note: All Items may not appear on drawing)

San. Sewer Manhole	S
Water Manhole	W
Storm Drain Manhole	D
Electrical Manhole	E
Catch Basins	
Exist. Fire Hydrant	
Fire Hydrant	
Exist. Water Valve	
Water Valve	
Sanitary Sewer	S
Culinary Water	W
Gas Line	G
Irrigation Line	IW
Storm Drain	SD
Telephone Line	T
Secondary Waterline	SD
Power Line	P
Fire Line	F
Land Drain	LD
Power pole	
Power pole w/guy	
Light Pole	
Fence	X X X
Flowline of ditch	
Overhead Power line	OHP
Corrugated Metal Pipe	CMP
Concrete Pipe	CP
Reinforced Concrete Pipe	RCP
Ductile Iron	DI
Polyvinyl Chloride	PVC
Top of Asphalt	TA
Edge of Asphalt	EA
Centerline	CL
Flowline	FL
Finish Floor	FF
Top of Curb	TC
Top of Wall	TWL
Top of Walk	TW
Top of Concrete	TCN
Natural Ground	NG
Finish Grade	FG
Fire Department Connection	FDC
Finish Contour	90
Exist. Contour	90
Finish Grade	95.37TA
Exist. Grade	95.72TA
Ridge Line	R
Direction of Flow	
Existing Asphalt	
New Asphalt	
Existing Footings	
Concrete	
Open Face Curb & Gutter	
Turf Block Roadway	
Demo Tree	

General Site Notes:

1. Building sidewalks, ramps, and bollards are building contractor responsible items. See architectural plans.
2. All dimensions are to back of curb unless otherwise noted.

CAUTION NOTICE TO CONTRACTOR

The contractor is specifically cautioned that the location and/or elevation of existing utilities as shown on these plans are based on records of the various utility companies and, where possible, measurements taken in the field. The information is not to be relied on as being exact or complete. The contractor must call the appropriate utility company at least 48 hours before any excavation to request exact field location of utilities. It shall be the responsibility of the contractor to relocate all existing utilities which conflict with the propose improvements shown on the plans.

SUPPLEMENT TO CAUTION NOTICE TO CONTRACTOR

Any information on these plans that contains "Rec. Dwg." indicates that the information has been provided by means of record drawings. Record drawings may have been delivered by either written and or verbal means. Record drawings may have various sources including but not limited to: Architects, owners, utility companies, and government offices. The providers of record drawings are listed below. The supplemental information shown on these plans shall not be solely be relied upon as exact or complete. The contractor retains all responsibility to locate and verify all utilities including those that may interfere with this project prior to start of construction activities.

SOURCE:	DATA PROVIDED:	DATE:
Frank Young, Utah Valley University	Existing utility locations and sizes.	09/28/2009
Frank Young, Utah Valley University	Turf block paver locations	06/17/2009

PRIVATE ENGINEER'S NOTICE TO CONTRACTORS

The Contractor agrees that he shall assume sole and complete responsibility for job site conditions during the course of construction of this project, including safety of all persons and property; that this requirement shall apply continuously and not be limited to normal working hours; and that the contractor shall defend, indemnify, and hold the owner and the engineer harmless from any and all liability, real or alleged, in connection with the performance of work on this project, excepting for liability arising from the sole negligence of the owner or the engineer.

ALL CONSTRUCTION TO CONFORM TO CITY STANDARDS AND SPECIFICATIONS.

GREAT BASIN ENGINEERING INC
5746 South 1475 East · Suite 200
Ogden, Utah 84403 Main (801)394-4515
S.L.C (801)521-0222 FAX 801-392-7544
WWW.GREATBASINENGINEERING.COM

GSBS ARCHITECTS
375 WEST 200 SOUTH
SALT LAKE CITY, UT 84101
P 801.521.8600
F 801.521.7913
www.gsbsarchitects.com

REVISIONS:

LICENSED PROFESSIONAL ENGINEER No. 166184 MARK EUGENE BABBITT 5-7-10 STATE OF UTAH

Utah Valley University New Science Building

800 West University Parkway
Orem, Utah 84058

DFCM

DRAWN BY:	HA
CHECKED BY:	DRW
OWNER PROJECT NO.:	09020790
GSBS PROJECT NO.:	2009.115.00
ISSUED DATE:	05.07.10

OVERALL SITE PLAN

CONSTRUCTION DOCUMENTS

CS-100

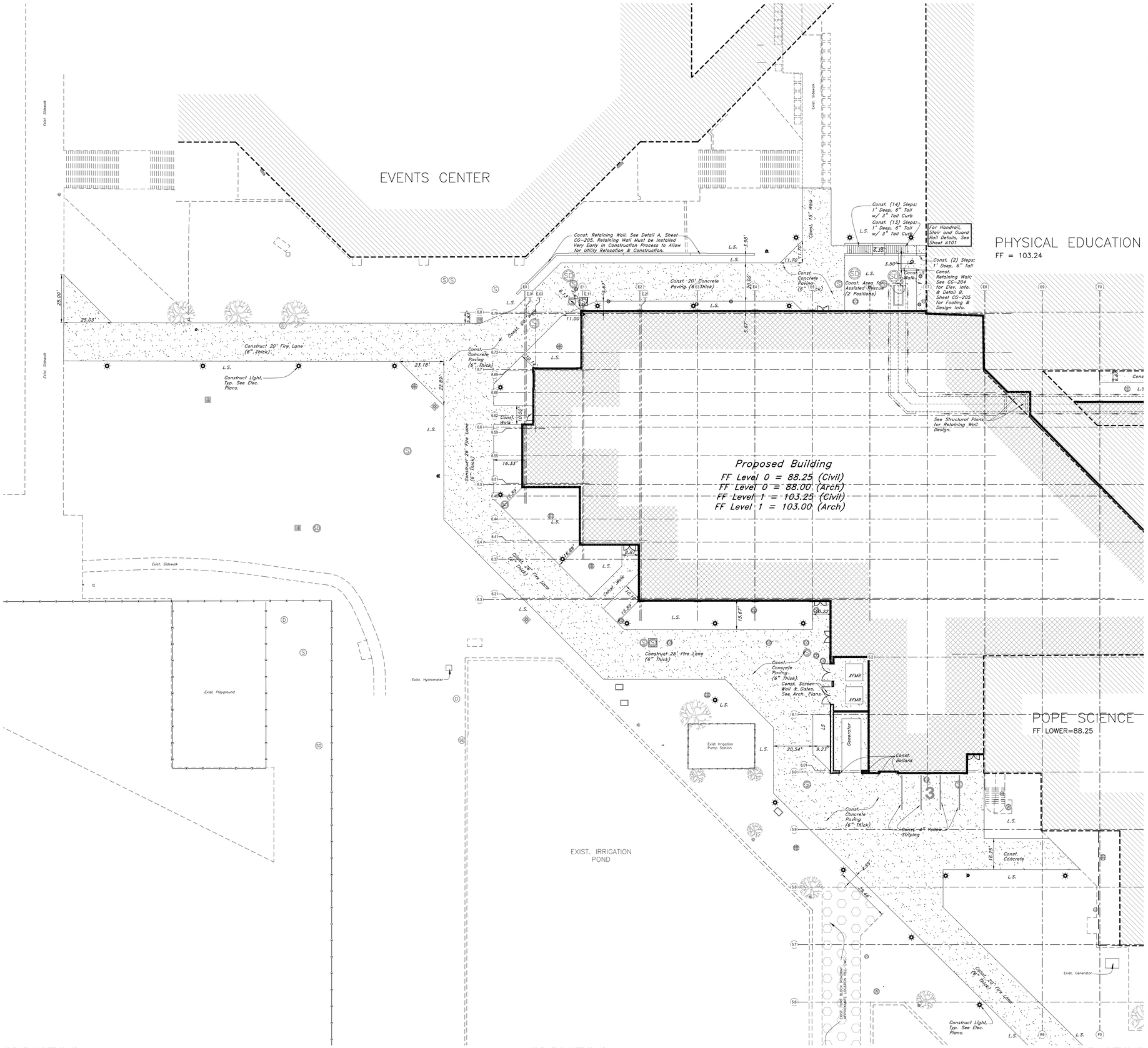

Legend

(Note: All items may not appear on drawing)

San. Sewer Manhole	S
Water Manhole	W
Storm Drain Manhole	SD
Electrical Manhole	E
Catch Basins	
Exist. Fire Hydrant	
Fire Hydrant	
Exist. Water Valve	
Water Valve	
Sanitary Sewer	S
Culinary Water	W
Gas Line	G
Irrigation Line	IW
Storm Drain	SD
Telephone Line	T
Secondary Waterline	SW
Power Line	P
Fire Line	F
Land Drain	LD
Power pole	
Power pole w/guy	
Light Pole	
Fence	X X X
Flowline of ditch	
Overhead Power line	OHP
Corrugated Metal Pipe	CMP
Concrete Pipe	CP
Reinforced Concrete Pipe	RCP
Ductile Iron	DI
Polyvinyl Chloride	PVC
Top of Asphalt	TA
Edge of Asphalt	EA
Centerline	CL
Flowline	FL
Finish Floor	FF
Top of Curb	TC
Top of Wall	TWL
Top of Walk	TW
Top Of Concrete	TCN
Natural Ground	NG
Finish Grade	FG
Fire Department Connection	FDC
Finish Contour	90
Exist. Contour	90
Finish Grade	95.33TA
Exist. Grade	95.72TA
Ridge Line	R
Direction of Flow	
Existing Asphalt	
New Asphalt	
Existing Footings	
Concrete	
Open Face Curb & Gutter	
Turf Block Roadway	
Demo Tree	

Scale: 1" = 20'

20 0 10 20 25 30 35 40

Graphic Scale

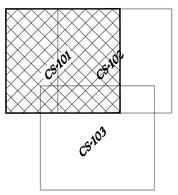

General Site Notes:

1. Building sidewalks, ramps, and bollards are building contractor responsible items. See architectural plans.
2. All dimensions are to back of curb unless otherwise noted.

CAUTION NOTICE TO CONTRACTOR

The contractor is specifically cautioned that the location and/or elevation of existing utilities as shown on these plans are based on records of the various utility companies and, where possible, measurements taken in the field. The information is not to be relied on as being exact or complete. The contractor must call the appropriate utility company at least 48 hours before any excavation to request exact field location of utilities. It shall be the responsibility of the contractor to relocate all existing utilities which conflict with the propose improvements shown on the plans.

SUPPLEMENT TO CAUTION NOTICE TO CONTRACTOR

Any information on these plans that contains "Rec. Dwg." indicates that the information has been provided by means of record drawings. Record drawings may have been delivered by either written and or verbal means. Record drawings may have various sources including but not limited to: Architects, owners, utility companies, and government offices. The providers of record drawings are listed below. The supplemental information shown on these plans shall not be solely be relied upon as exact or complete. The contractor retains all responsibility to locate and verify all utilities including those that may interfere with this project prior to start of construction activities.

SOURCE:	DATA PROVIDED:	DATE:
Frank Young, Utah Valley University	Existing utility locations and sizes.	09/28/2009
Frank Young, Utah Valley University	Turf block paver locations	06/17/2009

PRIVATE ENGINEER'S NOTICE TO CONTRACTORS

The Contractor agrees that he shall assume sole and complete responsibility for job site conditions during the course of construction of this project, including safety of all persons and property; that this requirement shall apply continuously and not be limited to normal working hours; and that the contractor shall defend, indemnify, and hold the owner and the engineer harmless from any and all liability, real or alleged, in connection with the performance of work on this project, excepting for liability arising from the sole negligence of the owner or the engineer.

ALL CONSTRUCTION TO CONFORM TO CITY STANDARDS AND SPECIFICATIONS

GREAT BASIN ENGINEERING INC
5746 South 1475 East · Suite 200
Ogden, Utah 84403 Main (801)394-4515
S.L.C. (801)521-0222 FAX 801-392-7544
WWW.GREATBASINENGINEERING.COM

GSBS ARCHITECTS
375 WEST 200 SOUTH
SALT LAKE CITY, UT 84101
P 801.521.8600
F 801.521.7913
www.gsbsarchitects.com

REVISIONS:

LICENSED PROFESSIONAL ENGINEER No. 166184 MARK EUGENE BABBITT 5-7-10 STATE OF UTAH

Utah Valley University New Science Building

800 West University Parkway
Orem, Utah 84058

DFCM

DRAWN BY:	HA
CHECKED BY:	DRW
OWNER PROJECT NO.:	09020790
GSBS PROJECT NO.:	2009.115.00
ISSUED DATE:	05.07.10

SITE PLAN

CONSTRUCTION DOCUMENTS

CS-101

W:\09n220-UVU Pope\DWG\09N220S6.DWG, 5/5/2010 3:07:22 PM, heathera, 1:1

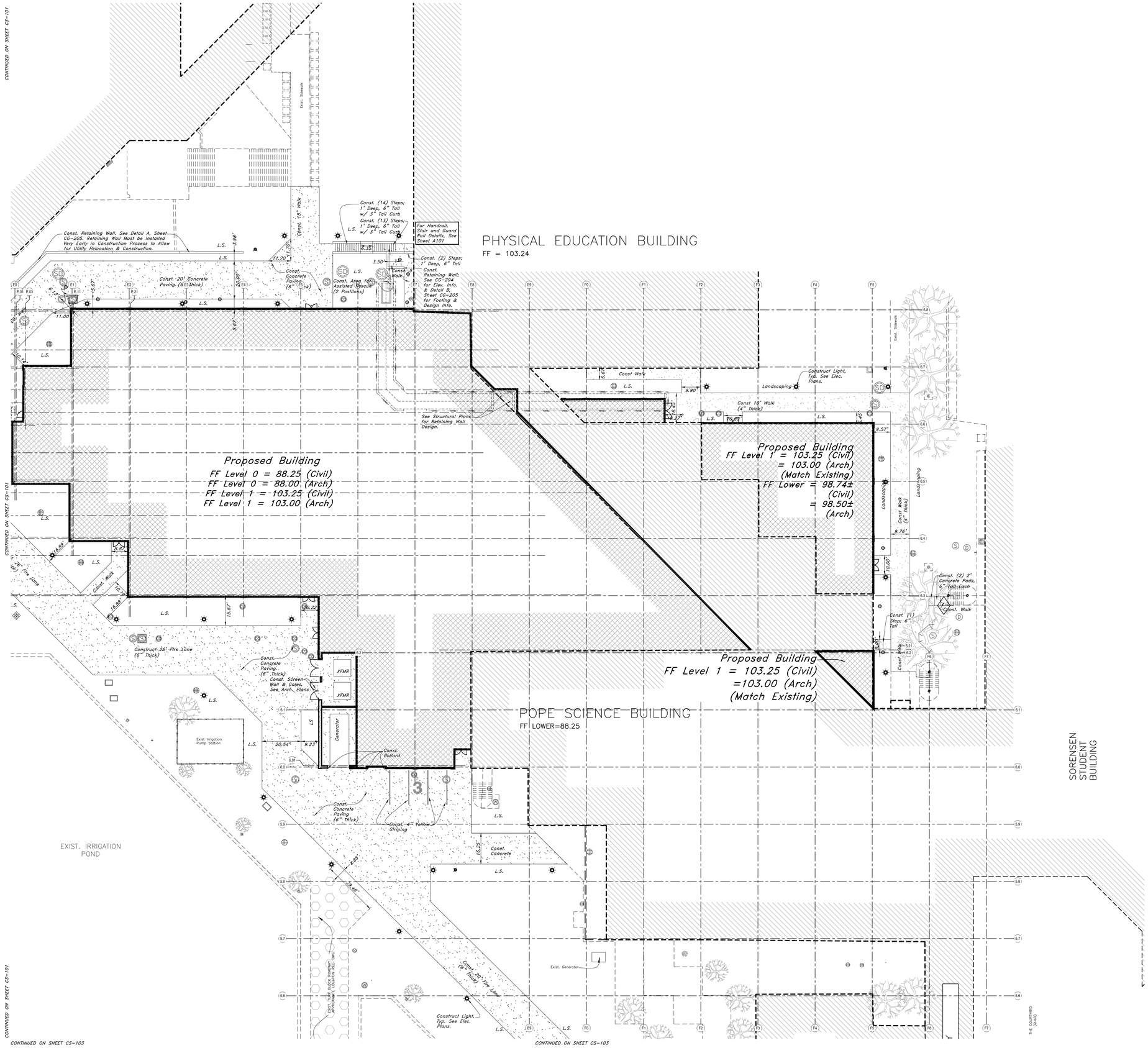

GSBS ARCHITECTS

375 WEST 200 SOUTH
SALT LAKE CITY, UT 84101

P 801.521.8600
F 801.521.7913

www.gsbsarchitects.com

REVISIONS:

Scale: 1" = 20'

20 0 10 20 25 30 35 40

Graphic Scale

Legend

(Note: All Items may not appear on drawing)

San. Sewer Manhole
Water Manhole
Storm Drain Manhole
Electrical Manhole
Catch Basins
Exist. Fire Hydrant
Fire Hydrant
Exist. Water Valve
Water Valve
Sanitary Sewer — S —
Culinary Water — W —
Gas Line — G —
Irrigation Line — IW —
Storm Drain — SD —
Telephone Line — T —
Secondary Waterline — SW —
Power Line — P —
Fire Line — F —
Land Drain — LD —
Power pole
Power pole w/guy
Light Pole
Fence — x — x — x —
Flowline of ditch
Overhead Power line — OHP —
Corrugated Metal Pipe CMP
Concrete Pipe CP
Reinforced Concrete Pipe RCP
Ductile Iron DI
Polyvinyl Chloride PVC
Top of Asphalt TA
Edge of Asphalt EA
Centerline CL
Flowline FL
Finish Floor FF
Top of Curb TC
Top of Wall TWL
Top of Walk TW
Top of Concrete TCN
Natural Ground NG
Finish Grade FG
Fire Department Connection FDC
Finish Contour — 90 —
Exist. Contour — 90 —
Finish Grade 95.33TA
Exist. Grade 95.72TA
Ridge Line — R —
Direction of Flow
Existing Asphalt
New Asphalt
Existing Footings
Concrete
Open Face Curb & Gutter
Turf Block Roadway
Demo Tree

General Site Notes:

1. Building sidewalks, ramps, and bollards are building contractor responsible items. See architectural plans.
2. All dimensions are to back of curb unless otherwise noted.

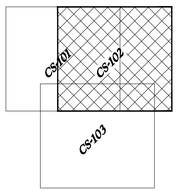

CAUTION NOTICE TO CONTRACTOR

The contractor is specifically cautioned that the location and/or elevation of existing utilities as shown on these plans are based on records of the various utility companies and, where possible, measurements taken in the field. The information is not to be relied on as being exact or complete. The contractor must call the appropriate utility company at least 48 hours before any excavation to request exact field location of utilities. It shall be the responsibility of the contractor to relocate all existing utilities which conflict with the propose improvements shown on the plans.

SUPPLEMENT TO CAUTION NOTICE TO CONTRACTOR

Any information on these plans that contains "Rec. Dwg." indicates that the information has been provided by means of record drawings. Record drawings may have been delivered by either written and or verbal means. Record drawings may have various sources including but not limited to: Architects, owners, utility companies, and government offices. The providers of record drawings are listed below. The supplemental information shown on these plans shall not be solely be relied upon as exact or complete. The contractor retains all responsibility to locate and verify all utilities including those that may interfere with this project prior to start of construction activities.

SOURCE:	DATA PROVIDED:	DATE:
Frank Young, Utah Valley University	Existing utility locations and sizes.	09/28/2009
Frank Young, Utah Valley University	Turf block paver locations	06/17/2009

PRIVATE ENGINEER'S NOTICE TO CONTRACTORS

The Contractor agrees that he shall assume sole and complete responsibility for job site conditions during the course of construction of this project, including safety of all persons and property; that this requirement shall apply continuously and not be limited to normal working hours; and that the contractor shall defend, indemnify, and hold the owner and the engineer harmless from any and all liability, real or alleged, in connection with the performance of work on this project, excepting for liability arising from the sole negligence of the owner or the engineer.

ALL CONSTRUCTION TO CONFORM TO CITY STANDARDS AND SPECIFICATIONS

GREAT BASIN ENGINEERING

5746 South 1475 East · Suite 200
Ogden, Utah 84403 Main (801)394-4515
S.L.C.(801)521-0222 FAX 801-392-7544
WWW.GREATBASINENGINEERING.COM

Utah Valley University New Science Building

800 West University Parkway
Orem, Utah 84058

DFCM

DRAWN BY:	HA
CHECKED BY:	DRW
OWNER PROJECT NO.:	09020790
GSBS PROJECT NO.:	2009.115.00
ISSUED DATE:	05.07.10

SITE PLAN

CONSTRUCTION DOCUMENTS

CS-102

W:\09n220-UVU Pope\DWG\09N220S6.DWG, 5/5/2010 3:07:32 PM, heathera, 1:1

CONTINUED ON SHEET CS-101

CONTINUED ON SHEET CS-102

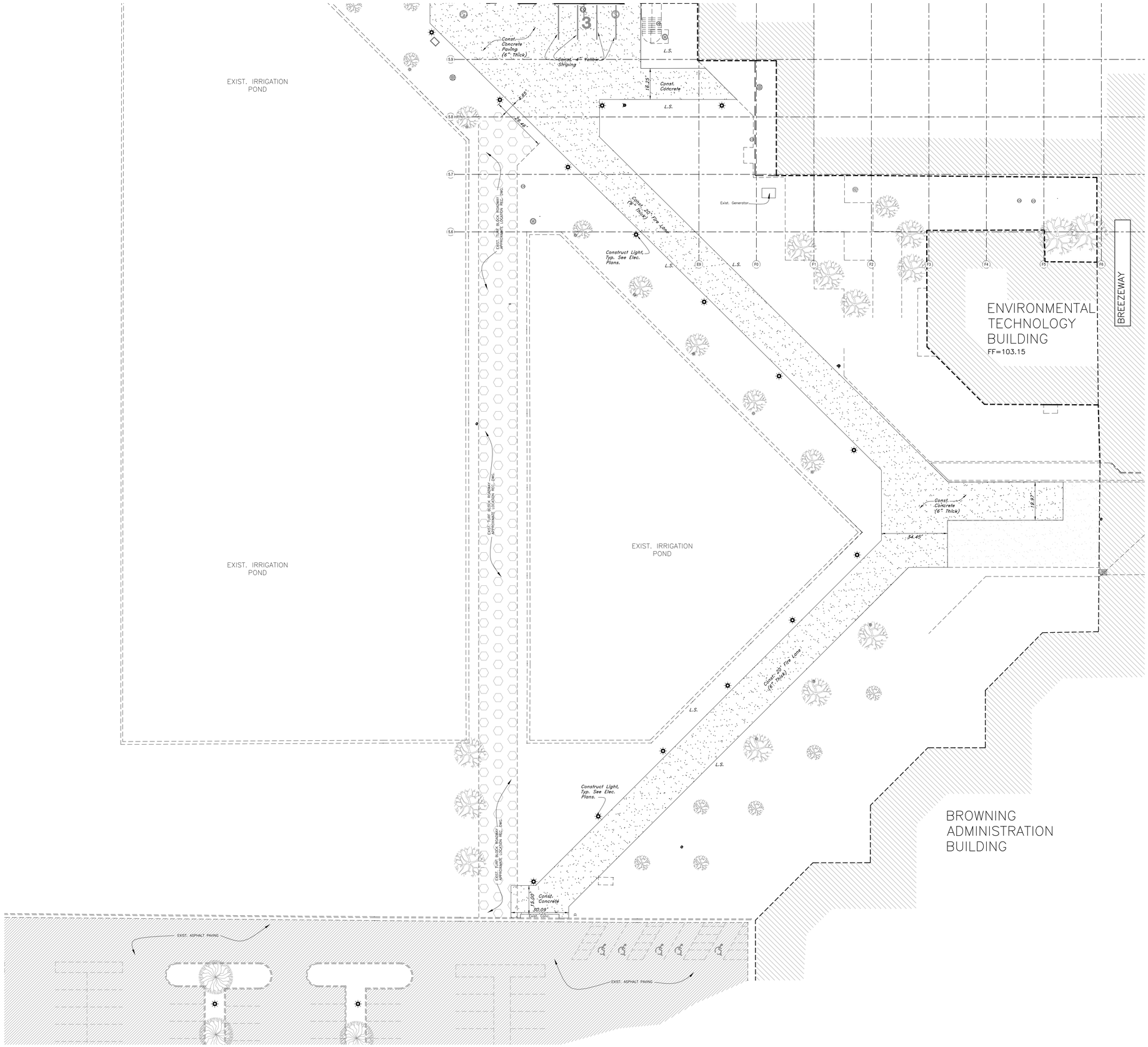

GSBS ARCHITECTS

375 WEST 200 SOUTH
SALT LAKE CITY, UT 84101

P 801.521.8600
F 801.521.7913

www.gsbsarchitects.com

REVISIONS:

Scale: 1" = 20'

20 0 10 20 25 30 35 40

Graphic Scale

Legend

(Note: All Items may not appear on drawing)

San. Sewer Manhole
Water Manhole
Storm Drain Manhole
Electrical Manhole
Catch Basins
Exist. Fire Hydrant
Fire Hydrant
Exist. Water Valve
Water Valve
Sanitary Sewer — S —
Culinary Water — W —
Gas Line — G —
Irrigation Line — IW —
Storm Drain — SD —
Telephone Line — T —
Secondary Waterline — SD —
Power Line — P —
Fire Line — F —
Land Drain — LD —
Power pole
Power pole w/guy
Light Pole
Fence — x x x —
Flowline of ditch
Overhead Power line — OHP —
Corrugated Metal Pipe CMP
Concrete Pipe CP
Reinforced Concrete Pipe RCP
Ductile Iron DI
Polyvinyl Chloride PVC
Top of Asphalt TA
Edge of Asphalt EA
Centerline CL
Flowline FL
Finish Floor FF
Top of Curb TC
Top of Wall TWL
Top of Walk TW
Top of Concrete TCN
Natural Ground NG
Finish Grade FG
Fire Department Connection FDC
Finish Contour — 90 —
Exist. Contour — 90 —
Finish Grade 95.33TA
Exist. Grade 95.72TA
Ridge Line — R —
Direction of Flow
Existing Asphalt
New Asphalt
Existing Footings
Concrete
Open Face Curb & Gutter
Turf Block Roadway
Demo Tree

General Site Notes:

1. Building sidewalks, ramps, and bollards are building contractor responsible items. See architectural plans.
2. All dimensions are to back of curb unless otherwise noted.

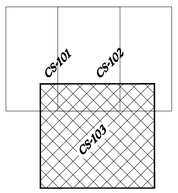

CAUTION NOTICE TO CONTRACTOR

The contractor is specifically cautioned that the location and/or elevation of existing utilities as shown on these plans are based on records of the various utility companies and, where possible, measurements taken in the field. The information is not to be relied on as being exact or complete. The contractor must call the appropriate utility company at least 48 hours before any excavation to request exact field location of utilities. It shall be the responsibility of the contractor to relocate all existing utilities which conflict with the propose improvements shown on the plans.

SUPPLEMENT TO CAUTION NOTICE TO CONTRACTOR

Any information on these plans that contains "Rec. Dwg." indicates that the information has been provided by means of record drawings. Record drawings may have been delivered by either written and or verbal means. Record drawings may have various sources including but not limited to: Architects, owners, utility companies, and government offices. The providers of record drawings are listed below. The supplemental information shown on these plans shall not be solely be relied upon as exact or complete. The contractor retains all responsibility to locate and verify all utilities including those that may interfere with this project prior to start of construction activities.

SOURCE:	DATA PROVIDED:	DATE:
Frank Young, Utah Valley University	Existing utility locations and sizes.	09/28/2009
Frank Young, Utah Valley University	Turf block paver locations	06/17/2009

PRIVATE ENGINEER'S NOTICE TO CONTRACTORS

The Contractor agrees that he shall assume sole and complete responsibility for job site conditions during the course of construction of this project, including safety of all persons and property; that this requirement shall apply continuously and not be limited to normal working hours; and that the contractor shall defend, indemnify, and hold the owner and the engineer harmless from any and all liability, real or alleged, in connection with the performance of work on this project, excepting for liability arising from the sole negligence of the owner or the engineer.

ALL CONSTRUCTION TO CONFORM TO CITY STANDARDS AND SPECIFICATIONS.

GREAT BASIN ENGINEERING
5746 South 1475 East - Suite 200
Ogden, Utah 84403 Main (801)394-4515
S.L.C (801)521-0222 FAX 801-392-7544
WWW.GREATBASINENGINEERING.COM

Utah Valley University New Science Building

800 West University Parkway
Orem, Utah 84058

DFCM

DRAWN BY:	HA
CHECKED BY:	DRW
OWNER PROJECT NO.:	09020790
GSBS PROJECT NO.:	2009.115.00
ISSUED DATE:	05.07.10

SITE PLAN

CONSTRUCTION DOCUMENTS

CS-103

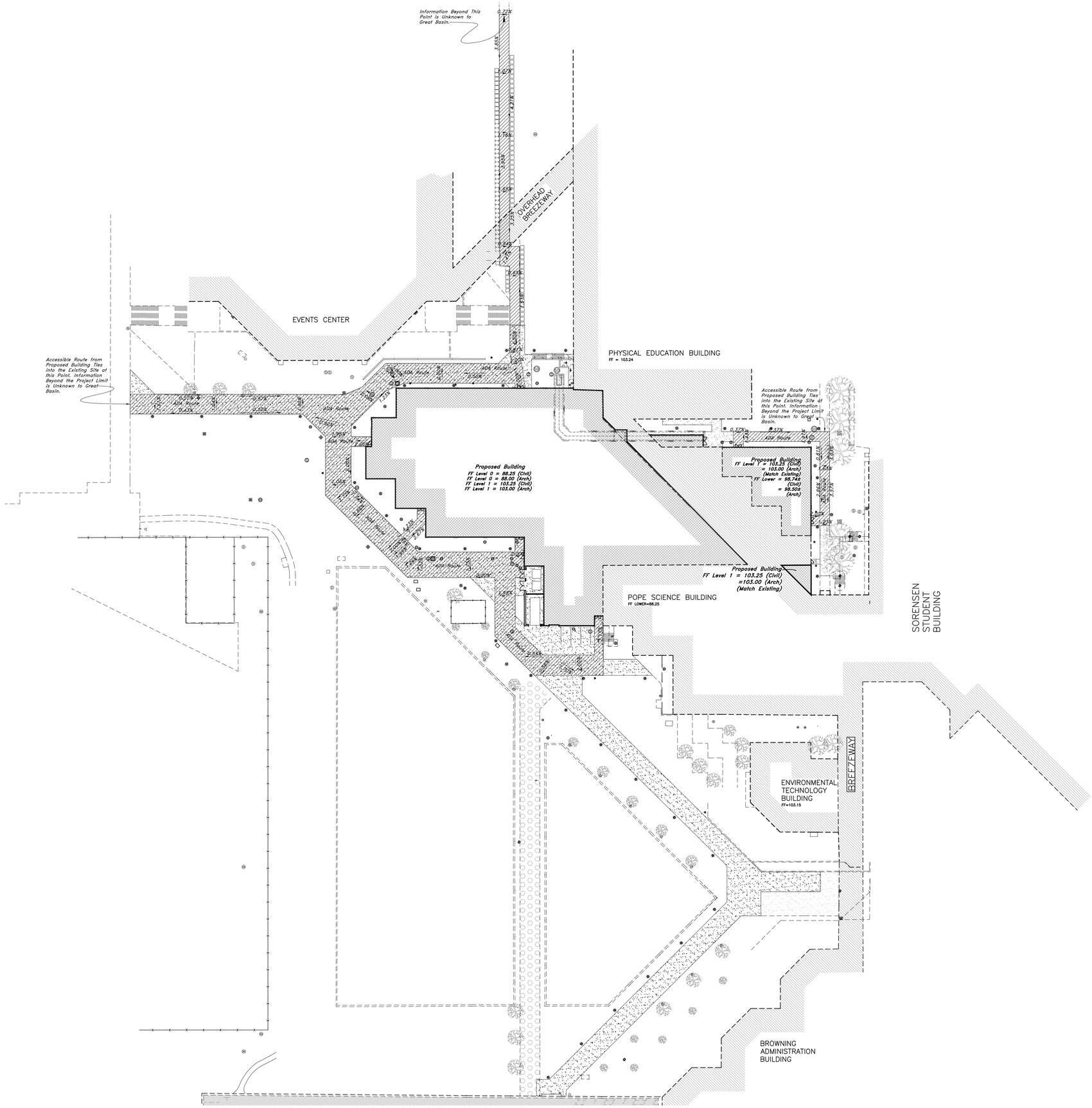

Scale: 1" = 40'

40 0 10 20 40 50 60 70 80

Graphic Scale

Legend

(Note: All Items may not appear on drawing)

San. Sewer Manhole	S
Water Manhole	W
Storm Drain Manhole	D
Electrical Manhole	E
Catch Basins	
Exist. Fire Hydrant	
Fire Hydrant	
Exist. Water Valve	
Water Valve	
Sanitary Sewer	—S—
Culinary Water	—W—
Gas Line	—G—
Irrigation Line	—IW—
Storm Drain	—SD—
Telephone Line	—T—
Secondary Waterline	—SD—
Power Line	—P—
Fire Line	—F—
Land Drain	—LD—
Power pole	
Power pole w/guy	
Light Pole	
Fence	x x x
Flowline of ditch	
Overhead Power line	—OHP—
Corrugated Metal Pipe	CMP
Concrete Pipe	CP
Reinforced Concrete Pipe	RCP
Ductile Iron	DI
Polyvinyl Chloride	PVC
Top of Asphalt	TA
Edge of Asphalt	EA
Centerline	CL
Flowline	FL
Finish Floor	FF
Top of Curb	TC
Top of Wall	TWL
Top of Walk	TW
Top of Concrete	TCN
Natural Ground	NG
Finish Grade	FG
Fire Department Connection	FDC
Finish Contour	—91—
Exist. Contour	—90—
Finish Grade	**95.37TA**
Exist. Grade	95.72TA
Ridge Line	—R—
Direction of Flow	
Existing Asphalt	
New Asphalt	
Existing Footings	
Concrete	
Open Face Curb & Gutter	
Turf Block Roadway	
Demo Tree	

CAUTION NOTICE TO CONTRACTOR

The contractor is specifically cautioned that the location and/or elevation of existing utilities as shown on these plans are based on records of the various utility companies and, where possible, measurements taken in the field. The information is not to be relied on as being exact or complete. The contractor must call the appropriate utility company at least 48 hours before any excavation to request exact field location of utilities. It shall be the responsibility of the contractor to relocate all existing utilities which conflict with the propose improvements shown on the plans.

SUPPLEMENT TO CAUTION NOTICE TO CONTRACTOR

Any information on these plans that contains "Rec. Dwg." indicates that the information has been provided by means of record drawings. Record drawings may have been delivered by either written and or verbal means. Record drawings may have various sources including but not limited to: Architects, owners, utility companies, and government offices. The providers of record drawings are listed below. The supplemental information shown on these plans shall not be solely be relied upon as exact or complete. The contractor retains all responsibility to locate and verify all utilities including those that may interfere with this project prior to start of construction activities.

SOURCE:	DATA PROVIDED:	DATE:
Frank Young, Utah Valley University	Existing utility locations and sizes.	09/28/2009
Frank Young, Utah Valley University	Turf block paver locations	06/17/2009

PRIVATE ENGINEER'S NOTICE TO CONTRACTORS

The Contractor agrees that he shall assume sole and complete responsibility for job site conditions during the course of construction of this project, including safety of all persons and property; that this requirement shall apply continuously and not be limited to normal working hours; and that the contractor shall defend, indemnify, and hold the owner and the engineer harmless from any and all liability, real or alleged, in connection with the performance of work on this project, excepting for liability arising from the sole negligence of the owner or the engineer.

ALL CONSTRUCTION TO CONFORM TO CITY STANDARDS AND SPECIFICATIONS

GREAT BASIN ENGINEERING INC
5746 South 1475 East · Suite 200
Ogden, Utah 84403 Main (801)394-4515
S.L.C (801)521-0222 FAX 801-392-7544
www.greatbasinengineering.com

GSBS ARCHITECTS
375 WEST 200 SOUTH
SALT LAKE CITY, UT 84101
P 801.521.8600
F 801.521.7913
www.gsbsarchitects.com

REVISIONS:

REGISTERED PROFESSIONAL ENGINEER No. 166184 MARK EUGENE BABBITT 5-7-10 STATE OF UTAH

Utah Valley University New Science Building

800 West University Parkway
Orem, Utah 84058

DFCM

DRAWN BY:	HA
CHECKED BY:	DRW
OWNER PROJECT NO.:	09020790
GSBS PROJECT NO.:	2009.115.00
ISSUED DATE:	05.07.10

ADA SITE ACCESSIBILITY PLAN

CONSTRUCTION DOCUMENTS

CS-104

W:\09n220-UVU Pope\DWG\09N220S6.DWG, 5/5/2010 3:07:57 PM, heathera, 1:1

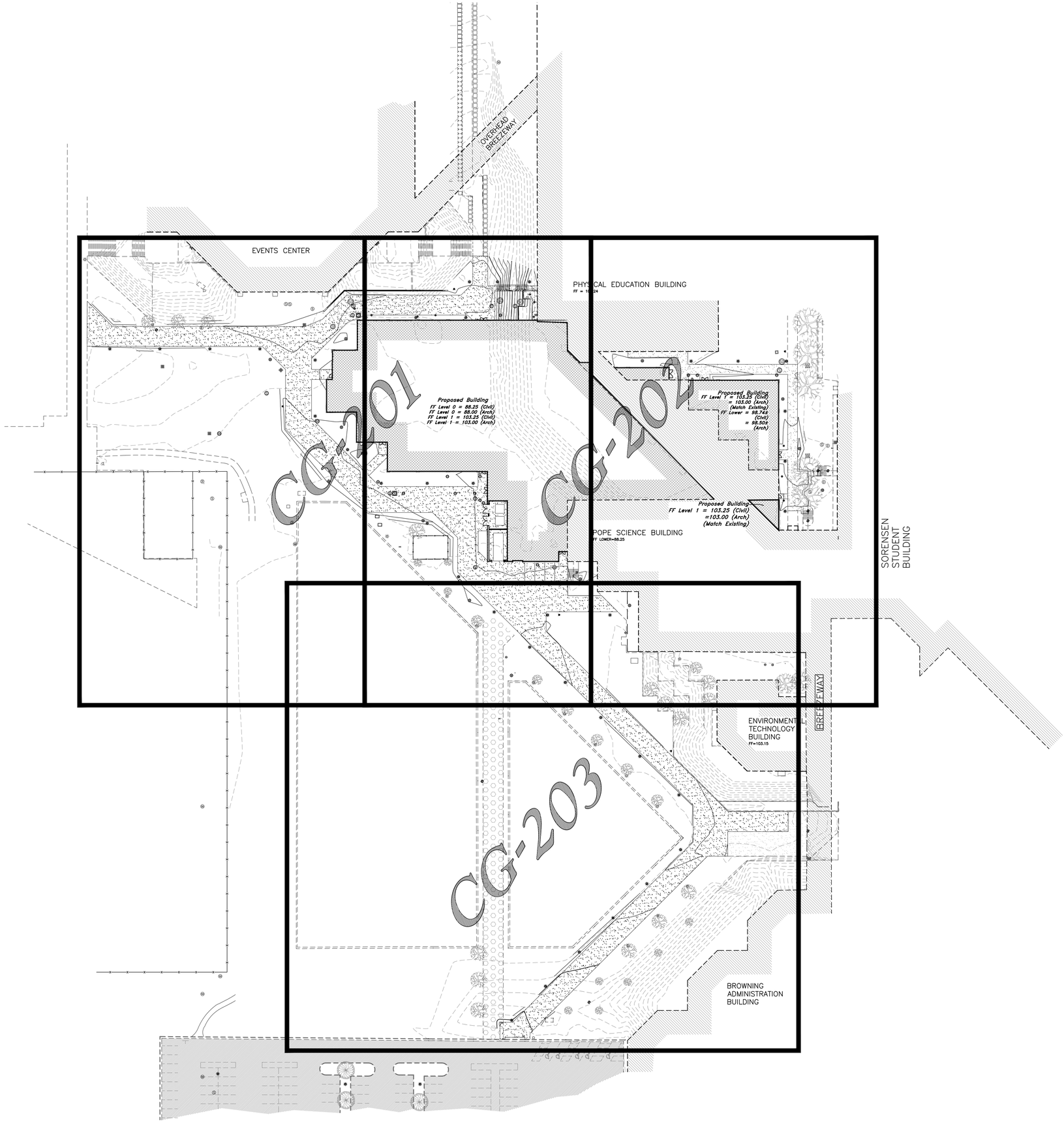

Scale: 1" = 40'

40 0 10 20 40 50 60 70 80

Graphic Scale

Legend

(Note: All Items may not appear on drawing)

San. Sewer Manhole	S
Water Manhole	W
Storm Drain Manhole	D
Electrical Manhole	E
Catch Basins	
Exist. Fire Hydrant	
Fire Hydrant	
Exist. Water Valve	
Water Valve	W
Sanitary Sewer	—S—
Culinary Water	—W—
Gas Line	—G—
Irrigation Line	—IW—
Storm Drain	—SD—
Telephone Line	—T—
Secondary Waterline	—SW—
Power Line	—P—
Fire Line	—F—
Land Drain	—LD—
Power pole	
Power pole w/guy	
Light Pole	
Fence	x x x
Flowline of ditch	
Overhead Power line	—OHP—
Corrugated Metal Pipe	CMP
Concrete Pipe	CP
Reinforced Concrete Pipe	RCP
Ductile Iron	DI
Polyvinyl Chloride	PVC
Top of Asphalt	TA
Edge of Asphalt	EA
Centerline	CL
Flowline	FL
Finish Floor	FF
Top of Curb	TC
Top of Wall	TWL
Top of Walk	TW
Top of Concrete	TCN
Natural Ground	NG
Finish Grade	FG
Fire Department Connection	FDC
Finish Contour	—91—
Exist. Contour	—90—
Finish Grade	**95.37TA**
Exist. Grade	95.72TA
Ridge Line	—R—
Direction of Flow	
Existing Asphalt	
New Asphalt	
Existing Footings	
Concrete	
Open Face Curb & Gutter	
Turf Block Roadway	
Demo Tree	

General Grading Notes:

1. All work shall be in accordance with the City Public Works Standard.
2. Cut slopes shall be no steeper than 1 horizontal to 1 vertical.
3. Fill slopes shall be no steeper than 1 horizontal to 1 vertical.
4. Fills shall be compacted per the recommendations of the geotechnical report prepared for the project and shall be certified by the geotechnical engineer.
5. Areas to receive fill shall be properly prepared and approved by the inspector and geotechnical Engineer prior to placing fill.
6. Fills shall be benched into competent material as per specifications and geotechnical report.
7. All trench backfill shall be tested and certified by the site geotechnical engineer per the grading code.
8. A geotechnical engineer shall perform periodic inspections and submit a complete report and map upon completion of the rough grading.
9. The final compaction report and certification from the geotechnical engineer shall contain the type of field testing performed. Each test shall be identified with the method of obtaining the in-place density, whether sand cone or drive ring and shall be so noted for each test. Sufficient maximum density determinations shall be performed to verify the accuracy of the maximum density curves used by the field technician.
10. Dust shall be controlled by watering.
11. The location and protection of all utilities is the responsibility of the permitee.
12. Approved protective measures and temporary drainage provisions must be used to protect adjoining areas during the grading project.
13. All public & University roadways must be cleared daily of all dirt, mud and debris deposited on them as a result of the grading operation. Cleaning is to be done to the satisfaction of the city engineer.
14. The site shall be cleared and grubbed of all vegetation and deleterious matter prior to grading.
15. The contractor shall provide shoring in accordance with OSHA requirements for trench walls.
16. Aggregate base shall be compacted per the geotechnical report prepared for the project.
17. Elevations shown on this plan are finish grades. Rough grades are the subgrades of the improvements shown hereon.
18. The recommendations in the following Geotechnical Engineering Report by RB&G Engineering, Inc. are included in the requirements of grading and site preparation. The report is titled "UVU Pope Science Building Addition Geotechnical Investigation" Job No.: 200901-051 Utah Valley University Campus, Orem, Utah Dated: November 2009
19. As part of the construction documents, owner has provided contractor with a topographic survey performed by manual or aerial means. Such survey was prepared for project design purposes and is provided to the contractor as a courtesy. It is expressly understood that such survey may not accurately reflect existing topographic conditions.
20. Erosion Control: Protect all inlet boxes, catch basins, etc. with straw bales or other approved method to strain the strom water during construction. Protect surrounding properties and streets from site runoff with sandbags and earth berms.

CAUTION NOTICE TO CONTRACTOR

The contractor is specifically cautioned that the location and/or elevation of existing utilities as shown on these plans are based on records of the various utility companies and, where possible, measurements taken in the field. The information is not to be relied on as being exact or complete. The contractor must call the appropriate utility company at least 48 hours before any excavation to request exact field location of utilities. It shall be the responsibility of the contractor to relocate all existing utilities which conflict with the propose improvements shown on the plans.

SUPPLEMENT TO CAUTION NOTICE TO CONTRACTOR

Any information on these plans that contains "Rec. Dwg." indicates that the information has been provided by means of record drawings. Record drawings may have been delivered by either written and or verbal means. Record drawings may have various sources including but not limited to: Architects, owners, utility companies, and government offices. The providers of record drawings are listed below. The supplemental information shown on these plans shall not be solely be relied upon as exact or complete. The contractor retains all responsibility to locate and verify all utilities including those that may interfere with this project prior to start of construction activities.

SOURCE:	DATA PROVIDED:	DATE:
Frank Young, Utah Valley University	Existing utility locations and sizes.	09/28/2009
Frank Young, Utah Valley University	Turf block paver locations	06/17/2009

PRIVATE ENGINEER'S NOTICE TO CONTRACTORS

The Contractor agrees that he shall assume sole and complete responsibility for job site conditions during the course of construction of this project, including safety of all persons and property; that this requirement shall apply continuously and not be limited to normal working hours; and that the contractor shall defend, indemnify, and hold the owner and the engineer harmless from any and all liability, real or alleged, in connection with the performance of work on this project, excepting for liability arising from the sole negligence of the owner or the engineer.

ALL CONSTRUCTION TO CONFORM TO CITY STANDARDS AND SPECIFICATIONS

GREAT BASIN ENGINEERING INC
5746 SOUTH 1475 EAST SUITE 200
OGDEN, UTAH 84403 MAIN (801)394-4515
S.L.C (801)521-0222 FAX 801-392-7544
WWW.GREATBASINENGINEERING.COM

GSBS ARCHITECTS
375 WEST 200 SOUTH
SALT LAKE CITY, UT 84101
P 801.521.8600
F 801.521.7913
www.gsbsarchitects.com

REVISIONS:

No. 166184 MARK EUGENE BABBITT 5-7-10 STATE OF UTAH

Utah Valley University New Science Building

800 West University Parkway
Orem, Utah 84058

DFCM

DRAWN BY:	HA
CHECKED BY:	DRW
OWNER PROJECT NO.:	09020790
GSBS PROJECT NO.:	2009.15.00
ISSUED DATE:	05.07.10

OVERALL GRADING AND DRAINAGE PLAN

CONSTRUCTION DOCUMENTS

CG-200

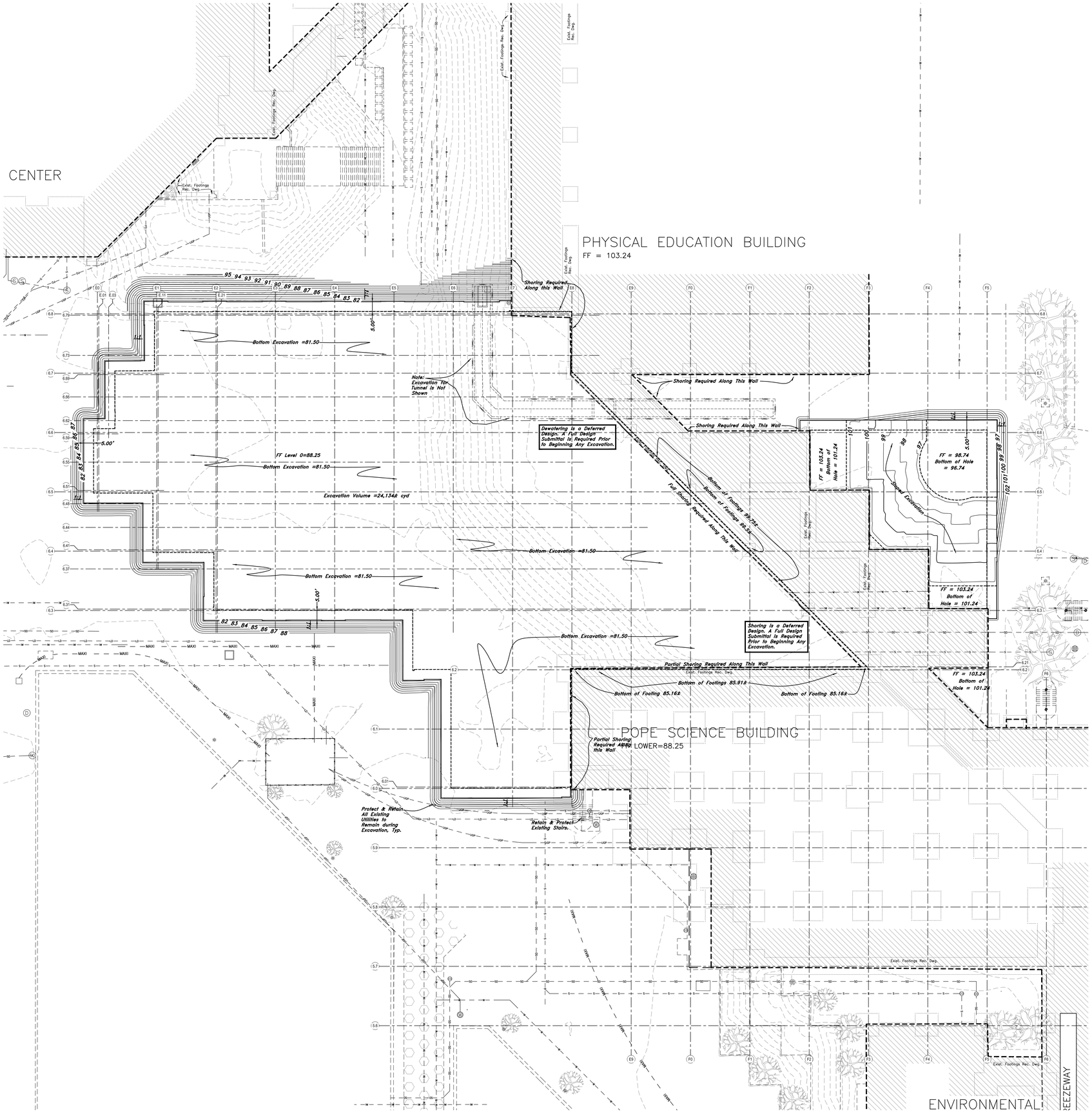

GSBS ARCHITECTS

375 WEST 200 SOUTH
SALT LAKE CITY, UT 84101

P 801.521.8600
F 801.521.7913

www.gsbsarchitects.com

REVISIONS:

Scale: 1" = 20'

20 0 10 20 25 50 35 40

Graphic Scale

Legend

(Note: All Items may not appear on drawing)

San. Sewer Manhole	S
Water Manhole	W
Storm Drain Manhole	D
Electrical Manhole	E
Catch Basins	
Exist. Fire Hydrant	
Fire Hydrant	
Exist. Water Valve	
Water Valve	
Sanitary Sewer	—S—
Culinary Water	—W—
Gas Line	—G—
Irrigation Line	—IW—
Storm Drain	—SD—
Telephone Line	—T—
Secondary Waterline	—SW—
Power Line	—P—
Fire Line	—F—
Land Drain	—LD—
Power pole	
Power pole w/guy	
Light Pole	
Fence	x x x
Flowline of ditch	
Overhead Power line	—OHP—
Corrugated Metal Pipe	CMP
Concrete Pipe	CP
Reinforced Concrete Pipe	RCP
Ductile Iron	DI
Polyvinyl Chloride	PVC
Top of Asphalt	TA
Edge of Asphalt	EA
Centerline	CL
Flowline	FL
Finish Floor	FF
Top of Curb	TC
Top of Wall	TWL
Top of Walk	TW
Top of Concrete	TCN
Natural Ground	NG
Finish Grade	FG
Fire Department Connection	FDC
Finish Contour	—90—
Exist. Contour	—90—
Finish Grade	**95.33TA**
Exist. Grade	95.72TA
Ridge Line	—R—
Direction of Flow	
Existing Asphalt	
New Asphalt	
Existing Footings	
Concrete	
Open Face Curb & Gutter	
Turf Block Roadway	
Demo Tree	

General Grading Notes:

1. All work shall be in accordance with the City Public Works Standard.
2. Cut slopes shall be no steeper than 1 horizontal to 1 vertical.
3. Fill slopes shall be no steeper than 1 horizontal to 1 vertical.
4. Fills shall be compacted per the recommendations of the geotechnical report prepared for the project and shall be certified by the geotechnical engineer.
5. Areas to receive fill shall be properly prepared and approved by the inspector and geotechnical Engineer prior to placing fill.
6. Fills shall be benched into competent material as per specifications and geotechnical report.
7. All trench backfill shall be tested and certified by the site geotechnical engineer per the grading code.
8. A geotechnical engineer shall perform periodic inspections and submit a complete report and map upon completion of the rough grading.
9. The final compaction report and certification from the geotechnical engineer shall contain the type of field testing performed. Each test shall be identified with the method of obtaining the in-place density, whether sand cone or drive ring and shall be so noted for each test. Sufficient maximum density determinations shall be performed to verify the accuracy of the maximum density curves used by the field technician.
10. Dust shall be controlled by watering.
11. The location and protection of all utilities is the responsibility of the permitee.
12. Approved protective measures and temporary drainage provisions must be used to protect adjoining areas during the grading project.
13. All public & University roadways must be cleared daily of all dirt, mud and debris deposited on them as a result of the grading operation. Cleaning is to be done to the satisfaction of the city engineer.
14. The site shall be cleared and grubbed of all vegetation and deleterious matter prior to grading.
15. The contractor shall provide shoring in accordance with OSHA requirements for trench walls.
16. Aggregate base shall be compacted per the geotechnical report prepared for the project.
17. Elevations shown on this plan are finish grades. Rough grades are the subgrades of the improvements shown hereon.
18. The recommendations in the following Geotechnical Engineering Report by RB&G Engineering, Inc. are included in the requirements of grading and site preparation. The report is titled "UVU Pope Science Building Addition Geotechnical Investigation" Job No.: 200901-051 Utah Valley University Campus, Orem, Utah Dated: November 2009
19. As part of the construction documents, owner has provided contractor with a topographic survey performed by manual or aerial means. Such survey was prepared for project design purposes and is provided to the contractor as a courtesy. It is expressly understood that such survey may not accurately reflect existing topographic conditions.
20. Erosion Control: Protect all inlet boxes, catch basins, etc. with straw bales or other approved method to strain the stram water during construction. Protect surrounding properties and streets from site runoff with sandbags and earth berms.

CAUTION NOTICE TO CONTRACTOR

The contractor is specifically cautioned that the location and/or elevation of existing utilities as shown on these plans are based on records of the various utility companies and, where possible, measurements taken in the field. The information is not to be relied on as being exact or complete. The contractor must call the appropriate utility company at least 48 hours before any excavation to request exact field location of utilities. It shall be the responsibility of the contractor to relocate all existing utilities which conflict with the propose improvements shown on the plans.

SUPPLEMENT TO CAUTION NOTICE TO CONTRACTOR

Any information on these plans that contains "Rec. Dwg." indicates that the information has been provided by means of record drawings. Record drawings may have been delivered by either written and or verbal means. Record drawings may have various sources including but not limited to: Architects, owners, utility companies, and government offices. The providers of record drawings are listed below. The supplemental information shown on these plans shall not be solely be relied upon as exact or complete. The contractor retains all responsibility to locate and verify all utilities including those that may interfere with this project prior to start of construction activities.

SOURCE:	DATA PROVIDED:	DATE:
Frank Young, Utah Valley University	Existing utility locations and sizes.	09/28/2009
Frank Young, Utah Valley University	Turf block paver locations	06/17/2009

PRIVATE ENGINEER'S NOTICE TO CONTRACTORS

The Contractor agrees that he shall assume sole and complete responsibility for job site conditions during the course of construction of this project, including safety of all persons and property: that this requirement shall apply continuously and not be limited to normal working hours; and that the contractor shall defend, indemnify, and hold the owner and the engineer harmless from any and all liability, real or alleged, in connection with the performance of work on this project, excepting for liability arising from the sole negligence of the owner or the engineer.

ALL CONSTRUCTION TO CONFORM TO CITY STANDARDS AND SPECIFICATIONS.

GREAT BASIN ENGINEERING INC
5746 South 1475 East - Suite 200
Ogden, Utah 84403 Main (801)394-4515
S.L.C (801)521-0222 FAX 801-392-7544
www.greatbasinengineering.com

Utah Valley University New Science Building

800 West University Parkway
Orem, Utah 84058

DFCM

DRAWN BY:	HA
CHECKED BY:	DRW
OWNER PROJECT NO.:	09020790
GSBS PROJECT NO.:	2009.115.00
ISSUED DATE:	05.07.10

EXCAVATION PLAN

CONSTRUCTION DOCUMENTS

CG-200A

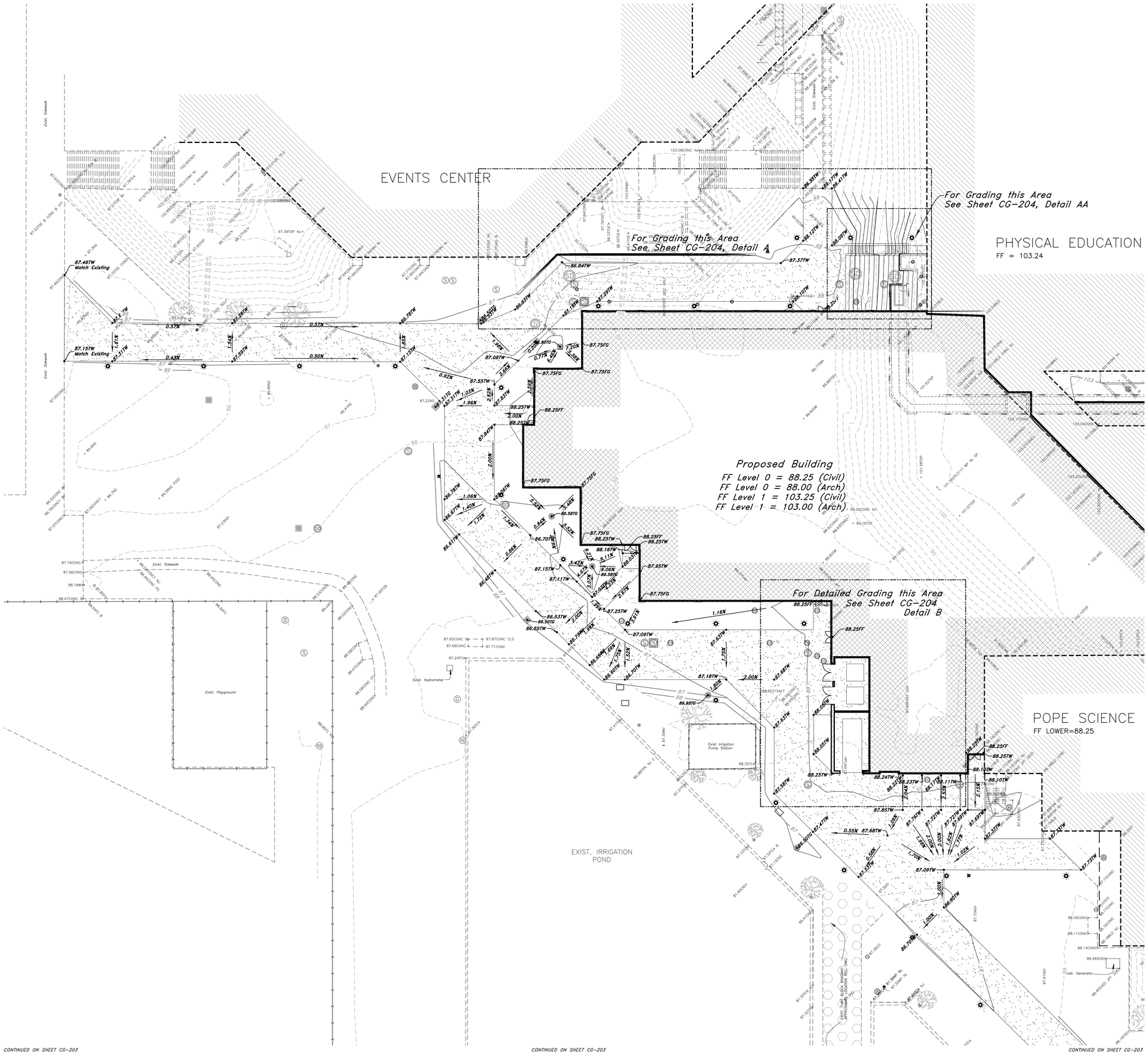

Legend

(Note: All items may not appear on drawing)

- San. Sewer Manhole
- Water Manhole
- Storm Drain Manhole
- Electrical Manhole
- Catch Basins
- Exist. Fire Hydrant
- Fire Hydrant
- Exist. Water Valve
- Water Valve
- Sanitary Sewer — S —
- Culinary Water — W —
- Gas Line — G —
- Irrigation Line — IW —
- Storm Drain — SD —
- Telephone Line — T —
- Secondary Waterline — SD —
- Power Line — P —
- Fire Line — F —
- Land Drain — LD —
- Power pole
- Power pole w/guy
- Light Pole
- Fence
- Flowline of ditch
- Overhead Power line — OHP —
- Corrugated Metal Pipe — CMP
- Concrete Pipe — CP
- Reinforced Concrete Pipe — RCP
- Ductile Iron — DI
- Polyvinyl Chloride — PVC
- Top of Asphalt — TA
- Edge of Asphalt — EA
- Centerline — CL
- Flowline — FL
- Finish Floor — FF
- Top of Curb — TC
- Top of Wall — TWL
- Top of Walk — TW
- Top of Concrete — TCN
- Natural Ground — NG
- Finish Grade — FG
- Fire Department Connection — FDC
- Finish Contour — 90 —
- Exist. Contour — 90 —
- Finish Grade — 95.33TA
- Exist. Grade — 95.72TA
- Ridge Line — R —
- Direction of Flow
- Existing Asphalt
- New Asphalt
- Existing Footings
- Concrete
- Open Face Curb & Gutter
- Turf Block Roadway
- Demo Tree

Scale: 1" = 20'

20 0 10 20 25 30 35 40

Graphic Scale

General Grading Notes:

1. All work shall be in accordance with the City Public Works Standard.
2. Cut slopes shall be no steeper than 1 horizontal to 1 vertical.
3. Fill slopes shall be no steeper than 1 horizontal to 1 vertical.
4. Fills shall be compacted per the recommendations of the geotechnical report prepared for the project and shall be certified by the geotechnical engineer.
5. Areas to receive fill shall be properly prepared and approved by the inspector and geotechnical Engineer prior to placing fill.
6. Fills shall be benched into competent material as per specifications and geotechnical report.
7. All trench backfill shall be tested and certified by the site geotechnical engineer per the grading code.
8. A geotechnical engineer shall perform periodic inspections and submit a complete report and map upon completion of the rough grading.
9. The final compaction report and certification from the geotechnical engineer shall contain the type of field testing performed. Each test shall be identified with the method of obtaining the in-place density, whether sand cone or drive ring and shall be so noted for each test. Sufficient maximum density determinations shall be performed to verify the accuracy of the maximum density curves used by the field technician.
10. Dust shall be controlled by watering.
11. The location and protection of all utilities is the responsibility of the permitee.
12. Approved protective measures and temporary drainage provisions must be used to protect adjoining areas during the grading project.
13. All public & University roadways must be cleared daily of all dirt, mud and debris deposited on them as a result of the grading operation. Cleaning is to be done to the satisfaction of the city engineer.
14. The site shall be cleared and grubbed of all vegetation and deleterious matter prior to grading.
15. The contractor shall provide shoring in accordance with OSHA requirements for trench walls.
16. Aggregate base shall be compacted per the geotechnical report prepared for the project.
17. Elevations shown on this plan are finish grades. Rough grades are the subgrades of the improvements shown hereon.
18. The recommendations in the following Geotechnical Engineering Report by RB&G Engineering, Inc. are included in the requirements of grading and site preparation. The report is titled "UVU Pope Science Building Addition Geotechnical Investigation" Job No.: 200901-051 Utah Valley University Campus, Orem, Utah Dated: November 2009
19. As part of the construction documents, owner has provided contractor with a topographic survey performed by manual or aerial means. Such survey was prepared for project design purposes and is provided to the contractor as a courtesy. It is expressly understood that such survey may not accurately reflect existing topographic conditions.
20. Erosion Control: Protect all inlet boxes, catch basins, etc. with straw bales or other approved method to strain the strom water during construction. Protect surrounding properties and streets from site runoff with sandbags and earth berms.

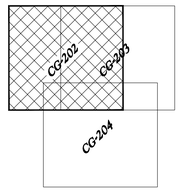

CAUTION NOTICE TO CONTRACTOR

The contractor is specifically cautioned that the location and/or elevation of existing utilities as shown on these plans are based on records of the various utility companies and, where possible, measurements taken in the field. The information is not to be relied on as being exact or complete. The contractor must call the appropriate utility company at least 48 hours before any excavation to request exact field location of utilities. It shall be the responsibility of the contractor to relocate all existing utilities which conflict with the propose improvements shown on the plans.

SUPPLEMENT TO CAUTION NOTICE TO CONTRACTOR

Any information on these plans that contains "Rec. Dwg." indicates that the information has been provided by means of record drawings. Record drawings may have been delivered by either written and or verbal means. Record drawings may have various sources including but not limited to: Architects, owners, utility companies, and government offices. The providers of record drawings are listed below. The supplemental information shown on these plans shall not be solely be relied upon as exact or complete. The contractor retains all responsibility to locate and verify all utilities including those that may interfere with this project prior to start of construction activities.

SOURCE:	DATA PROVIDED:	DATE:
Frank Young, Utah Valley University	Existing utility locations and sizes.	09/28/2009
Frank Young, Utah Valley University	Turf block paver locations	06/17/2009

PRIVATE ENGINEER'S NOTICE TO CONTRACTORS

The Contractor agrees that he shall assume sole and complete responsibility for job site conditions during the course of construction of this project, including safety of all persons and property; that this requirement shall apply continuously and not be limited to normal working hours; and that the contractor shall defend, indemnify, and hold the owner and the engineer harmless from any and all liability, real or alleged, in connection with the performance of work on this project, excepting for liability arising from the sole negligence of the owner or the engineer.

ALL CONSTRUCTION TO CONFORM TO CITY STANDARDS AND SPECIFICATIONS

GREAT BASIN ENGINEERING INC
5746 South 1475 East Suite 200
Ogden, Utah 84403 Main (801)394-4515
S.L.C (801)521-0222 Fax 801-392-7544
www.greatbasinengineering.com

GSBS ARCHITECTS
375 WEST 200 SOUTH
SALT LAKE CITY, UT 84101
P 801.521.8600
F 801.521.7913
www.gsbsarchitects.com

REVISIONS:

No. 166184 MARK EUGENE BABBITT 5-7-10 STATE OF UTAH

Utah Valley University New Science Building

800 West University Parkway
Orem, Utah 84058

DFCM

DRAWN BY:	HA
CHECKED BY:	DRW
OWNER PROJECT NO.:	09020790
GSBS PROJECT NO.:	2009.115.00
ISSUED DATE:	05.07.10

GRADING AND DRAINAGE PLAN

CONSTRUCTION DOCUMENTS

CG-201

W:\09n220-UVU Pope\DWG\09N220S6.DWG, 5/5/2010 3:08:27 PM, heathera, 1:1

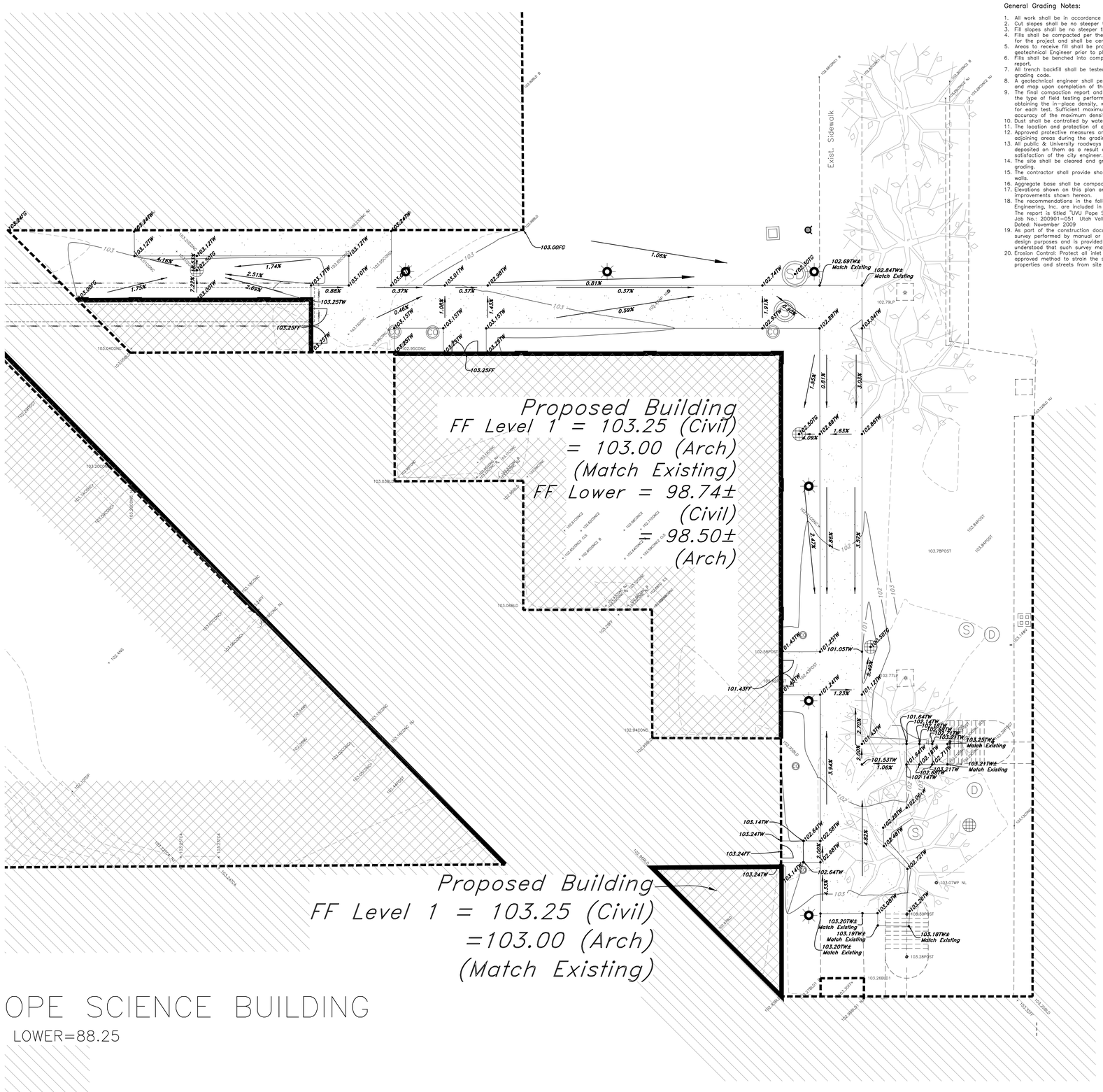

OPE SCIENCE BUILDING

LOWER=88.25

CONTINUED ON SHEET CG-203

CONTINUED ON SHEET CG-203

General Grading Notes:

1. All work shall be in accordance with the City Public Works Standard.
2. Cut slopes shall be no steeper than 1 horizontal to 1 vertical.
3. Fill slopes shall be no steeper than 1 horizontal to 1 vertical.
4. Fills shall be compacted per the recommendations of the geotechnical report prepared for the project and shall be certified by the geotechnical engineer.
5. Areas to receive fill shall be properly prepared and approved by the inspector and geotechnical Engineer prior to placing fill.
6. Fills shall be benched into competent material as per specifications and geotechnical report.
7. All trench backfill shall be tested and certified by the site geotechnical engineer per the grading code.
8. A geotechnical engineer shall perform periodic inspections and submit a complete report and map upon completion of the rough grading.
9. The final compaction report and certification from the geotechnical engineer shall contain the type of field testing performed. Each test shall be identified with the method of obtaining the in-place density, whether sand cone or drive ring and shall be so noted for each test. Sufficient maximum density determinations shall be performed to verify the accuracy of the maximum density curves used by the field technician.
10. Dust shall be controlled by watering.
11. The location and protection of all utilities is the responsibility of the permitee.
12. Approved protective measures and temporary drainage provisions must be used to protect adjoining areas during the grading project.
13. All public & University roadways must be cleared daily of all dirt, mud and debris deposited on them as a result of the grading operation. Cleaning is to be done to the satisfaction of the city engineer.
14. The site shall be cleared and grubbed of all vegetation and deleterious matter prior to grading.
15. The contractor shall provide shoring in accordance with OSHA requirements for trench walls.
16. Aggregate base shall be compacted per the geotechnical report prepared for the project.
17. Elevations shown on this plan are finish grades. Rough grades are the subgrades of the improvements shown hereon.
18. The recommendations in the following Geotechnical Engineering Report by RB&G Engineering, Inc. are included in the requirements of grading and site preparation. The report is titled "UVU Pope Science Building Addition Geotechnical Investigation" Job No.: 200901-051 Utah Valley University Campus, Orem, Utah Dated: November 2009
19. As part of the construction documents, owner has provided contractor with a topographic survey performed by manual or aerial means. Such survey was prepared for project design purposes and is provided to the contractor as a courtesy. It is expressly understood that such survey may not accurately reflect existing topographic conditions.
20. Erosion Control: Protect all inlet boxes, catch basins, etc. with straw bales or other approved method to strain the strom water during construction. Protect surrounding properties and streets from site runoff with sandbags and earth berms.

Scale: 1" = 10'

10 0 5 10 15 20

Graphic Scale

Legend

(Note: All items may not appear on drawing)

San. Sewer Manhole	S
Water Manhole	W
Storm Drain Manhole	D
Electrical Manhole	E
Catch Basins	
Exist. Fire Hydrant	
Fire Hydrant	
Exist. Water Valve	
Water Valve	
Sanitary Sewer	—W—
Culinary Water	—C—
Gas Line	—IW—
Irrigation Line	—SD—
Storm Drain	—T—
Telephone Line	—SD—
Secondary Waterline	—P—
Power Line	—T—
Fire Line	—LD—
Land Drain	
Power pole	
Power pole w/guy	
Light Pole	
Fence	x x x
Flowline of ditch	
Overhead Power line	—OHP—
Corrugated Metal Pipe	CMP
Concrete Pipe	CP
Reinforced Concrete Pipe	RCP
Ductile Iron	DI
Polyvinyl Chloride	PVC
Top of Asphalt	TA
Edge of Asphalt	EA
Centerline	CL
Flowline	FL
Finish Floor	FF
Top of Curb	TC
Top of Wall	TWL
Top of Walk	TW
Top of Concrete	TCN
Natural Ground	NG
Finish Grade	FG
Fire Department Connection	FDC
Finish Contour	—90—
Exist. Contour	—90—
Finish Grade	95.37TA
Exist. Grade	95.72TA
Ridge Line	— R —
Direction of Flow	
Existing Asphalt	
New Asphalt	
Existing Footings	
Concrete	
Open Face Curb & Gutter	
Turf Block Roadway	
Demo Tree	

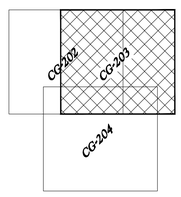

CAUTION NOTICE TO CONTRACTOR

The contractor is specifically cautioned that the location and/or elevation of existing utilities as shown on these plans are based on records of the various utility companies and, where possible, measurements taken in the field. The information is not to be relied on as being exact or complete. The contractor must call the appropriate utility company at least 48 hours before any excavation to request exact field location of utilities. It shall be the responsibility of the contractor to relocate all existing utilities which conflict with the propose improvements shown on the plans.

SUPPLEMENT TO CAUTION NOTICE TO CONTRACTOR

Any information on these plans that contains "Rec. Dwg." indicates that the information has been provided by means of record drawings. Record drawings may have been delivered by either written and or verbal means. Record drawings may have various sources including but not limited to: Architects, owners, utility companies, and government offices. The providers of record drawings are listed below. The supplemental information shown on these plans shall not be solely be relied upon as exact or complete. The contractor retains all responsibility to locate and verify all utilities including those that may interfere with this project prior to start of construction activities.

SOURCE:	DATA PROVIDED:	DATE:
Frank Young, Utah Valley University	Existing utility locations and sizes.	09/28/2009
Frank Young, Utah Valley University	Turf block paver locations	06/17/2009

PRIVATE ENGINEER'S NOTICE TO CONTRACTORS

The Contractor agrees that he shall assume sole and complete responsibility for job site conditions during the course of construction of this project, including safety of all persons and property; that this requirement shall apply continuously and not be limited to normal working hours; and that the contractor shall defend, indemnify, and hold the owner and the engineer harmless from any and all liability, real or alleged, in connection with the performance of work on this project, excepting for liability arising from the sole negligence of the owner or the engineer.

ALL CONSTRUCTION TO CONFORM TO CITY STANDARDS AND SPECIFICATIONS.

ORENSEN
TUDENT

GREAT BASIN ENGINEERING
5746 South 1475 East - Suite 200
Ogden, Utah 84403 Main (801)394-4515
S.L.C (801)521-0222 FAX 801-392-7544
www.greatbasinengineering.com

GSBS ARCHITECTS
375 WEST 200 SOUTH
SALT LAKE CITY, UT 84101
P 801.521.8600
F 801.521.7913
www.gsbsarchitects.com

REVISIONS:

LICENSED PROFESSIONAL ENGINEER
No. 166184
MARK EUGENE BABBITT
5-7-10
STATE OF UTAH

Utah Valley University New Science Building

800 West University Parkway
Orem, Utah 84058

DFCM

DRAWN BY:	HA
CHECKED BY:	DRW
OWNER PROJECT NO.:	09020790
GSBS PROJECT NO.:	2009.115.00
ISSUED DATE:	05.07.10

GRADING AND DRAINAGE PLAN

CONSTRUCTION DOCUMENTS

CG-202

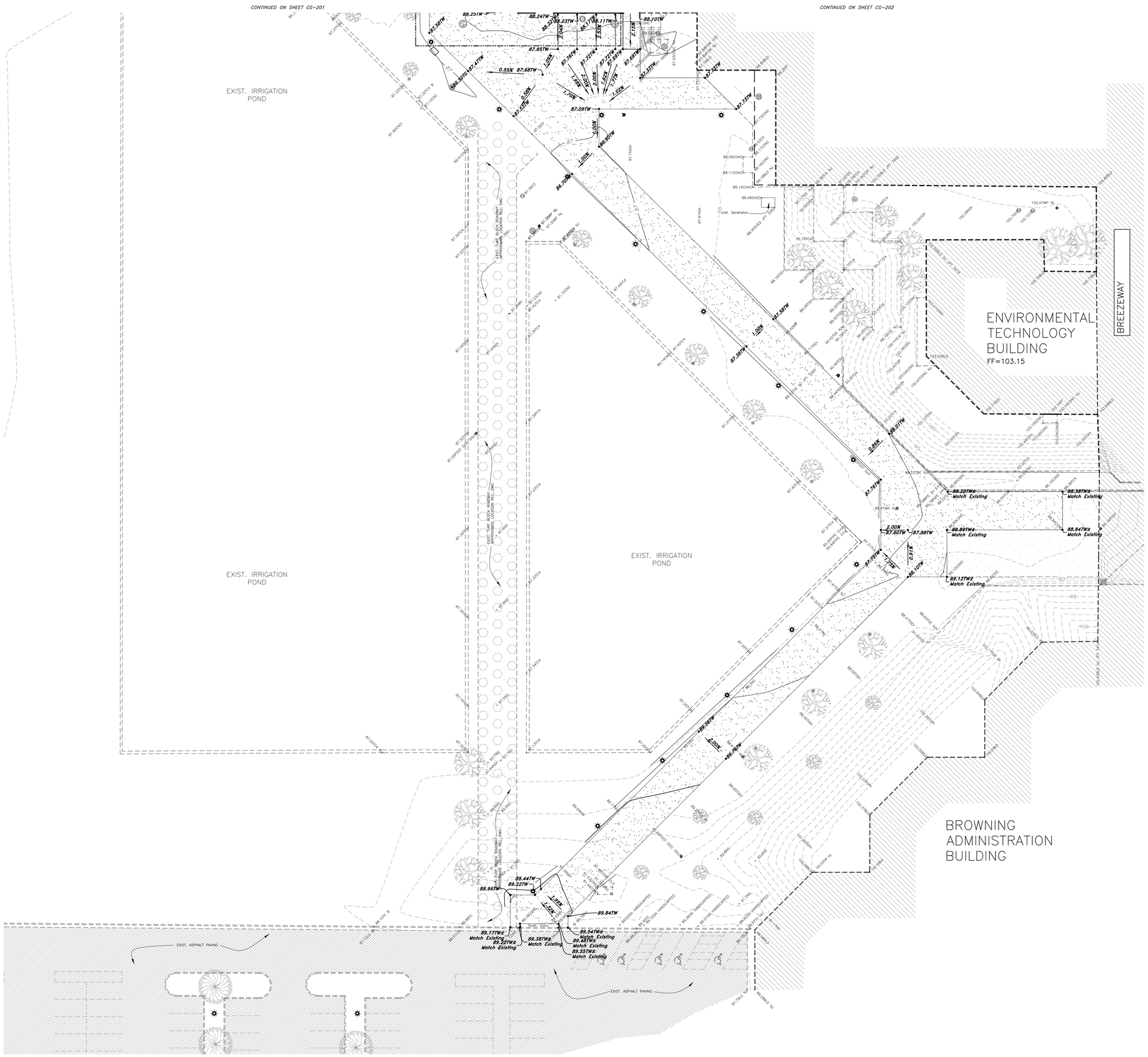

Scale: 1" = 20'

Graphic Scale

Legend

(Note: All items may not appear on drawing)

- San. Sewer Manhole
- Water Manhole
- Storm Drain Manhole
- Electrical Manhole
- Catch Basins
- Exist. Fire Hydrant
- Fire Hydrant
- Exist. Water Valve
- Water Valve
- Sanitary Sewer — S —
- Culinary Water — W —
- Gas Line — G —
- Irrigation Line — IW —
- Storm Drain — SD —
- Telephone Line — T —
- Secondary Waterline — P —
- Power Line — P —
- Fire Line — FD —
- Land Drain
- Power pole
- Power pole w/guy
- Light Pole
- Fence
- Flowline of ditch
- Overhead Power line — OHP —
- Corrugated Metal Pipe — CMP
- Concrete Pipe — CP
- Reinforced Concrete Pipe — RCP
- Ductile Iron — DI
- Polyvinyl Chloride — PVC
- Top of Asphalt — TA
- Edge of Asphalt — EA
- Centerline — CL
- Flowline — FL
- Finish Floor — FF
- Top of Curb — TC
- Top of Wall — TWL
- Top of Walk — TW
- Top of Concrete — TCN
- Natural Ground — NG
- Finish Grade — FG
- Fire Department Connection — FDC
- Finish Contour — 90 —
- Exist. Contour — 90 —
- Finish Grade — 95.33TA
- Exist. Grade — 95.73TA
- Ridge Line — R —
- Direction of Flow
- Existing Asphalt
- New Asphalt
- Existing Footings
- Concrete
- Open Face Curb & Gutter
- Turf Block Roadway
- Demo Tree

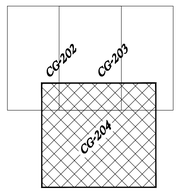

General Grading Notes:

1. All work shall be in accordance with the City Public Works Standard.
2. Cut slopes shall be no steeper than 1 horizontal to 1 vertical.
3. Fill slopes shall be no steeper than 1 horizontal to 1 vertical.
4. Fills shall be compacted per the recommendations of the geotechnical report prepared for the project and shall be certified by the geotechnical engineer.
5. Areas to receive fill shall be properly prepared and approved by the inspector and geotechnical Engineer prior to placing fill.
6. Fills shall be benched into competent material as per specifications and geotechnical report.
7. All trench backfill shall be tested and certified by the site geotechnical engineer per the grading code.
8. A geotechnical engineer shall perform periodic inspections and submit a complete report and map upon completion of the rough grading.
9. The final compaction report and certification from the geotechnical engineer shall contain the type of field testing performed. Each test shall be identified with the method of obtaining the in-place density, whether sand cone or drive ring and shall be so noted for each test. Sufficient maximum density determinations shall be performed to verify the accuracy of the maximum density curves used by the field technician.
10. Dust shall be controlled by watering.
11. The location and protection of all utilities is the responsibility of the permitee.
12. Approved protective measures and temporary drainage provisions must be used to protect adjoining areas during the grading project.
13. All public & University roadways must be cleared daily of all dirt, mud and debris deposited on them as a result of the grading operation. Cleaning is to be done to the satisfaction of the city engineer.
14. The site shall be cleared and grubbed of all vegetation and deleterious matter prior to grading.
15. The contractor shall provide shoring in accordance with OSHA requirements for trench walls.
16. Aggregate base shall be compacted per the geotechnical report prepared for the project.
17. Elevations shown on this plan are finish grades. Rough grades are the subgrades of the improvements shown hereon.
18. The recommendations in the following Geotechnical Engineering Report by RB&G Engineering, Inc. are included in the requirements of grading and site preparation. The report is titled "UVU Pope Science Building Addition Geotechnical Investigation" Job No.: 200901-051 Utah Valley University Campus, Orem, Utah Dated: November 2009
19. As part of the construction documents, owner has provided contractor with a topographic survey performed by manual or aerial means. Such survey was prepared for project design purposes and is provided to the contractor as a courtesy. It is expressly understood that such survey may not accurately reflect existing topographic conditions.
20. Erosion Control: Protect all inlet boxes, catch basins, etc. with straw bales or other approved method to strain the strom water during construction. Protect surrounding properties and streets from site runoff with sandbags and earth berms.

CAUTION NOTICE TO CONTRACTOR

The contractor is specifically cautioned that the location and/or elevation of existing utilities as shown on these plans are based on records of the various utility companies and, where possible, measurements taken in the field. The information is not to be relied on as being exact or complete. The contractor must call the appropriate utility company at least 48 hours before any excavation to request exact field location of utilities. It shall be the responsibility of the contractor to relocate all existing utilities which conflict with the propose improvements shown on the plans.

SUPPLEMENT TO CAUTION NOTICE TO CONTRACTOR

Any information on these plans that contains "Rec. Dwg." indicates that the information has been provided by means of record drawings. Record drawings may have been delivered by either written and or verbal means. Record drawings may have various sources including but not limited to: Architects, owners, utility companies, and government offices. The providers of record drawings are listed below. The supplemental information shown on these plans shall not be solely be relied upon as exact or complete. The contractor retains all responsibility to locate and verify all utilities including those that may interfere with this project prior to start of construction activities.

SOURCE:	DATA PROVIDED:	DATE:
Frank Young, Utah Valley University	Existing utility locations and sizes.	09/28/2009
Frank Young, Utah Valley University	Turf block paver locations	06/17/2009

PRIVATE ENGINEER'S NOTICE TO CONTRACTORS

The Contractor agrees that he shall assume sole and complete responsibility for job site conditions during the course of construction of this project, including safety of all persons and property; that this requirement shall apply continuously and not be limited to normal working hours; and that the contractor shall defend, indemnify, and hold the owner and the engineer harmless from any and all liability, real or alleged, in connection with the performance of work on this project, excepting for liability arising from the sole negligence of the owner or the engineer.

ALL CONSTRUCTION TO CONFORM TO CITY STANDARDS AND SPECIFICATIONS

GREAT BASIN ENGINEERING INC
5746 South 1475 East - Suite 200
Ogden, Utah 84403 Main (801)394-4515
S.L.C (801)521-0222 FAX 801-392-7544
www.greatbasinengineering.com

GSBS ARCHITECTS
375 WEST 200 SOUTH
SALT LAKE CITY, UT 84101
P 801.521.8600
F 801.521.7913
www.gsbsarchitects.com

REVISIONS:

No. 166184 MARK EUGENE BABBITT 5-7-10 STATE OF UTAH

Utah Valley University New Science Building

800 West University Parkway
Orem, Utah 84058

DFCM

DRAWN BY:	HA
CHECKED BY:	DRW
OWNER PROJECT NO.:	09020790
GSBS PROJECT NO.:	2009.115.00
ISSUED DATE:	05.07.10

GRADING AND DRAINAGE PLAN

CONSTRUCTION DOCUMENTS

CG-203

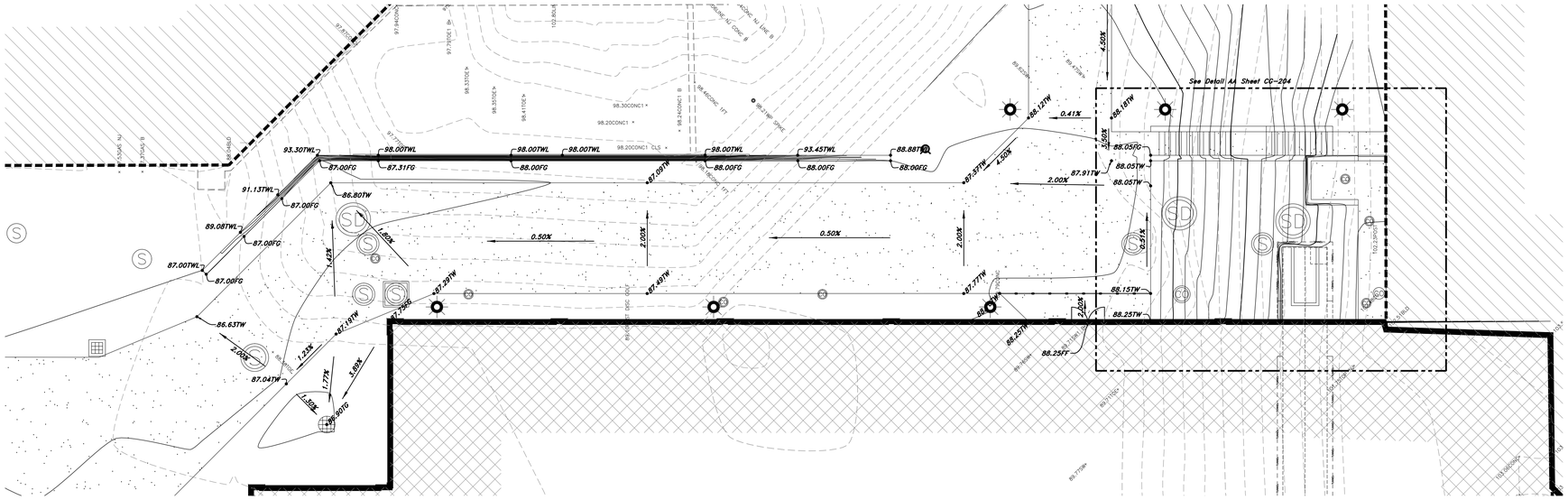
See Detail AA Sheet CG-204
93.30TWL
98.00TWL
93.45TWL
88.88TW
87.00FG
87.31FG
88.00FG
91.13TWL
89.08TWL
87.00TWL
86.80TW
86.63TW
87.04TW
86.90TG
0.50%
2.00%
4.50%
0.41%
87.91TW
88.05TW
88.05FG
88.15TW
88.25TW
88.25FF
87.77TW
87.49TW
87.39TW
87.19TW
87.07TW
87.57TW
88.21TW
88.18TW
98.30CONC1
98.20CONC1
98.20CONC1 CLS
98.40CONC 1FT
98.40CONC 1B
98.40CONC 1A
98.37TOE
98.41TOE
102.80LIP
97.74CONC
97.78TOE1
97.37TOE
97.40CONC
98.19TW SPIKE
89.42CONC
89.42TOW
89.41TOW
89.77TOW
89.67TOW
89.67TOE
89.67CONC
89.67CONC 1FT
89.67CONC 1A
89.67CONC 1B
89.67CONC 1C
89.67CONC 1D
89.67CONC 1E
89.67CONC 1F
89.67CONC 1G
89.67CONC 1H
102.23POST
102.22POST
102.21POST
102.20POST
102.19POST
102.18POST
102.17POST
102.16POST
102.15POST
102.14POST
102.13POST
102.12POST
102.11POST
102.10POST
102.09POST
102.08POST
102.07POST
102.06POST
102.05POST
102.04POST
102.03POST
102.02POST
102.01POST
101.99POST
101.98POST
101.97POST
101.96POST
101.95POST
101.94POST
101.93POST
101.92POST
101.91POST
101.90POST
101.89POST
101.88POST
101.87POST
101.86POST
101.85POST
101.84POST
101.83POST

GSBS ARCHITECTS

375 WEST 200 SOUTH
SALT LAKE CITY, UT 84101

P 801.521.8600
F 801.521.7913

www.gsbsarchitects.com

REVISIONS:

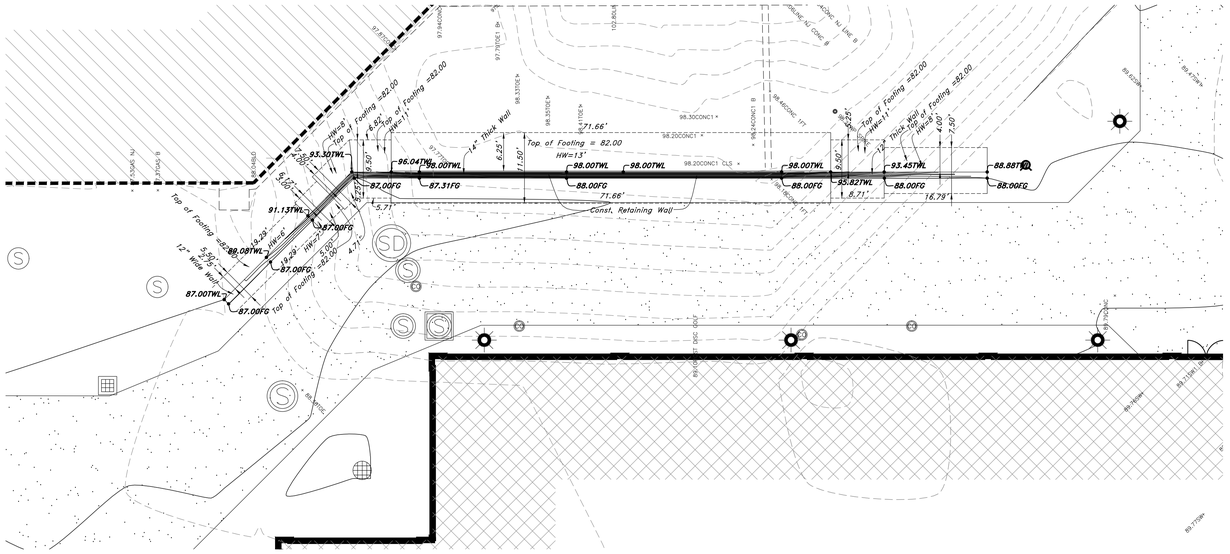

Detail A

Scale: 1" = 10'

10 0 5 10 15 20

Graphic Scale

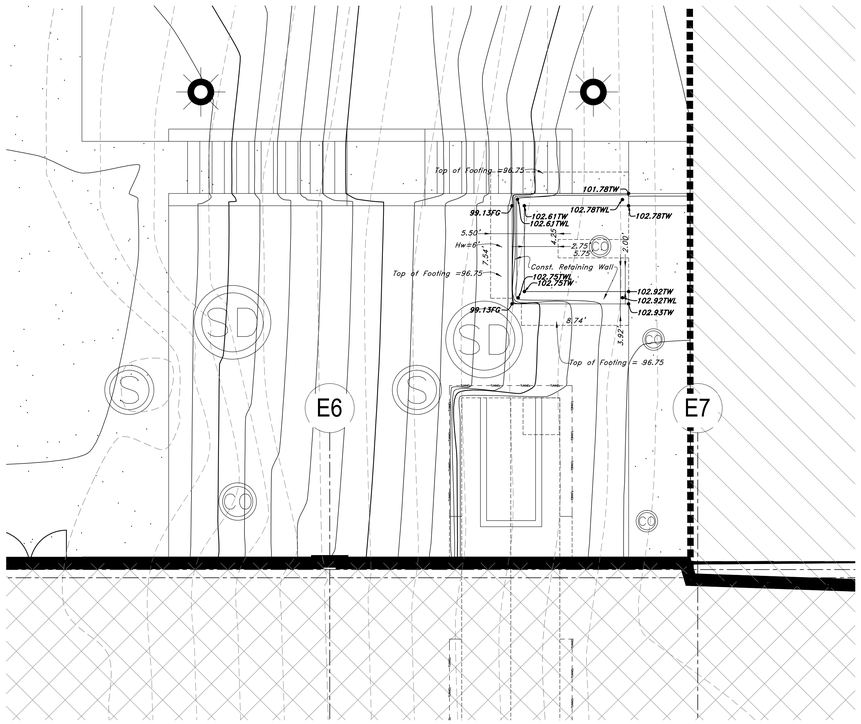

Detail B

Scale: 1" = 5'

5 0 2.5 5 7.5 10

Graphic Scale

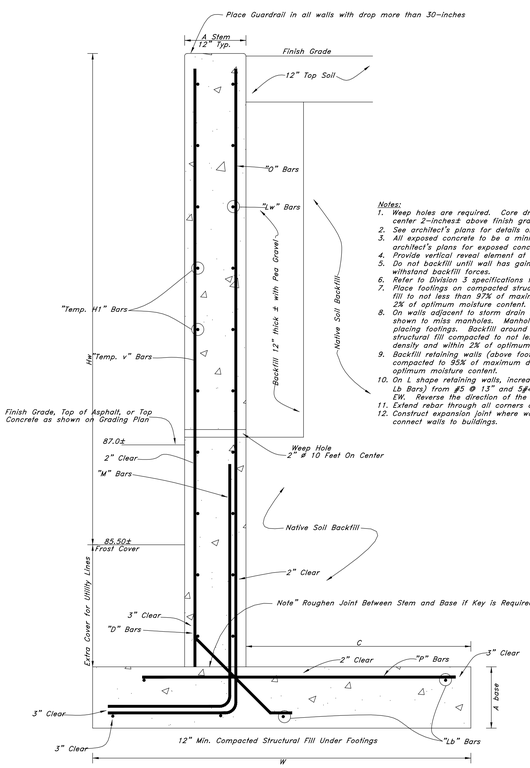

Notes:

1. Weep holes are required. Core drill 2-inch holes 10-feet on center 2-inches± above finish grade.
2. See architect's plans for details on hand rails and guard rails.
3. All exposed concrete to be a minimum of a rubbed finish. See architect's plans for exposed concrete finish requirements.
4. Provide vertical reveal element of 10 foot spacing on center.
5. Do not backfill until wall has gained sufficient strength to withstand backfill forces.
6. Refer to Division 3 specifications for concrete requirements.
7. Place footings on compacted structural fill. Compact structural fill to not less than 97% of maximum dry density and within 2% of optimum moisture content.
8. On walls adjacent to storm drain manholes, jog footings as shown to miss manholes. Manholes must be installed prior to placing footings. Backfill around manholes and tunnel with structural fill compacted to not less than 97% of maximum dry density and within 2% of optimum moisture content.
9. Backfill retaining walls (above footings) with granular soil compacted to 95% of maximum dry density and within 2% of optimum moisture content.
10. On L shape retaining walls, increase rebar in mat (P Bars and Lb Bars) from #5 @ 13" and 5#4 to two mats of #5 at 6" OC EW. Reverse the direction of the D bars.
11. Extend rebar through all corners and bends.
12. Construct expansion joint where walls meet buildings. Do not connect walls to buildings.

Cantilevered Retaining Wall Table of Values (Level Backfill)

CANTILEVERED RETAINING WALL
SOIL PROPERTIES 115 LBS/CF, LEVEL BACKFILL

Height above Base Hw (ft)	A Stem (in)	Heel C (ft-in)	Width of Base W (ft-in)	Thickness A Base (in)	0" Bars Size @ in.	Dowels into Stem (ft-in)	"M" Bars Size @ in.	"Q" Bars Size @ in.	"Lw" Bars Size @ in.	"P" Bars Size @ in.	"Lb" Bars No. & Size	"Temp v" Bars Size @ in.	"Temp H1" Bars Size @ in.
6	12	2'-9"	5'-6"	12	#4@9	None	None	#4@9	#5@11	#5@13	5 #5	#4@12	#5@12
7	12	3'-0"	6'-2"	12	#4@9	None	None	#4@9	#5@11	#5@13	5 #6	#4@12	#5@12
8	12	4'-0"	7'-6"	12	#5@9	None	None	#5@9	#5@11	#5@13	5 #6	#4@12	#5@12
11	12	5'-3"	9'-6"	12	#6@9	1'-10"	#4@9	#6@9	#5@11	#5@9	6 #6	#4@12	#5@12
13	14	6'-3"	11'-5"	12	#7@9	2'-5"	#4@9	#7@9	#5@10	#6@9	7 #6	#4@10	#5@10

Legend

(Note: All items may not appear on drawing)

San. Sewer Manhole	S
Water Manhole	W
Storm Drain Manhole	D
Electrical Manhole	E
Catch Basins	
Exist. Fire Hydrant	
Fire Hydrant	
Exist. Water Valve	
Water Valve	W
Sanitary Sewer	—S—
Culinary Water	—W—
Gas Line	—G—
Irrigation Line	—IW—
Storm Drain	—SD—
Telephone Line	—T—
Secondary Waterline	—SW—
Power Line	—P—
Fire Line	—F—
Land Drain	—LD—
Power pole	
Power pole w/guy	
Light Pole	
Fence	x x x
Flowline of ditch	
Overhead Power line	—OHP—
Corrugated Metal Pipe	CMP
Concrete Pipe	CP
Reinforced Concrete Pipe	RCP
Ductile Iron	DI
Polyvinyl Chloride	PVC
Top of Asphalt	TA
Edge of Asphalt	EA
Centerline	CL
Flowline	FL
Finish Floor	FF
Top of Curb	TC
Top of Wall	TWL
Top of Walk	TW
Top of Concrete	TCN
Natural Ground	NG
Finish Grade	FG
Fire Department Connection	FDC
Finish Contour	—90—
Exist. Contour	—90—
Finish Grade	95.33TA
Exist. Grade	95.72TA
Ridge Line	—R—
Direction of Flow	
Existing Asphalt	
New Asphalt	
Existing Footings	
Concrete	
Open Face Curb & Gutter	
Turf Block Roadway	
Demo Tree	

General Grading Notes:

1. All work shall be in accordance with the City Public Works Standard.
2. Cut slopes shall be no steeper than 1 horizontal to 1 vertical.
3. Fill slopes shall be no steeper than 1 horizontal to 1 vertical.
4. Fills shall be compacted per the recommendations of the geotechnical report prepared for the project and shall be certified by the geotechnical engineer.
5. Areas to receive fill shall be properly prepared and approved by the inspector and geotechnical Engineer prior to placing fill.
6. Fills shall be benched into competent material as per specifications and geotechnical report.
7. All trench backfill shall be tested and certified by the site geotechnical engineer per the grading code.
8. A geotechnical engineer shall perform periodic inspections and submit a complete report and map upon completion of the rough grading.
9. The final compaction report and certification from the geotechnical engineer shall contain the type of field testing performed. Each test shall be identified with the method of obtaining the in-place density, whether sand cone or drive ring and shall be so noted for each test. Sufficient maximum density determinations shall be performed to verify the accuracy of the maximum density curves used by the field technician.
10. Dust shall be controlled by watering.
11. The location and protection of all utilities is the responsibility of the permitee.
12. Approved protective measures and temporary drainage provisions must be used to protect adjoining areas during the grading project.
13. All public & University roadways must be cleared daily of all dirt, mud and debris deposited on them as a result of the grading operation. Cleaning is to be done to the satisfaction of the city engineer.
14. The site shall be cleared and grubbed of all vegetation and deleterious matter prior to grading.
15. The contractor shall provide shoring in accordance with OSHA requirements for trench walls.
16. Aggregate base shall be compacted per the geotechnical report prepared for the project.
17. Elevations shown on this plan are finish grades. Rough grades are the subgrades of the improvements shown hereon.
18. The recommendations in the following Geotechnical Engineering Report by RB&G Engineering, Inc. are included in the requirements of grading and site preparation. The report is titled "UVU Pope Science Building Addition Geotechnical Investigation" Job No.: 200901-051 Utah Valley University Campus, Orem, Utah Dated: November 2009
19. As part of the construction documents, owner has provided contractor with a topographic survey performed by manual or aerial means. Such survey was prepared for project design purposes and is provided to the contractor as a courtesy. It is expressly understood that such survey may not accurately reflect existing topographic conditions.
20. Erosion Control: Protect all inlet boxes, catch basins, etc. with straw bales or other approved method to strain the strom water during construction. Protect surrounding properties and streets from site runoff with sandbags and earth berms.

CAUTION NOTICE TO CONTRACTOR

The contractor is specifically cautioned that the location and/or elevation of existing utilities as shown on these plans are based on records of the various utility companies and, where possible, measurements taken in the field. The information is not to be relied on as being exact or complete. The contractor must call the appropriate utility company at least 48 hours before any excavation to request exact field location of utilities. It shall be the responsibility of the contractor to relocate all existing utilities which conflict with the propose improvements shown on the plans.

SUPPLEMENT TO CAUTION NOTICE TO CONTRACTOR

Any information on these plans that contains "Rec. Dwg." indicates that the information has been provided by means of record drawings. Record drawings may have been delivered by either written and or verbal means. Record drawings may have various sources including but not limited to: Architects, owners, utility companies, and government offices. The providers of record drawings are listed below. The supplemental information shown on these plans shall not be solely be relied upon as exact or complete. The contractor retains all responsibility to locate and verify all utilities including those that may interfere with this project prior to start of construction activities.

SOURCE:	DATA PROVIDED:	DATE:
Frank Young, Utah Valley University	Existing utility locations and sizes.	09/28/2009
Frank Young, Utah Valley University	Turf block paver locations	06/17/2009

PRIVATE ENGINEER'S NOTICE TO CONTRACTORS

The Contractor agrees that he shall assume sole and complete responsibility for job site conditions during the course of construction of this project, including safety of all persons and property; that this requirement shall apply continuously and not be limited to normal working hours; and that the contractor shall defend, indemnify, and hold the owner and the engineer harmless from any and all liability, real or alleged, in connection with the performance of work on this project, excepting for liability arising from the sole negligence of the owner or the engineer.

ALL CONSTRUCTION TO CONFORM TO CITY STANDARDS AND SPECIFICATIONS

GREAT BASIN ENGINEERING INC
5746 SOUTH 1475 EAST SUITE 200
OGDEN, UTAH 84403 MAIN (801)394-4515
S.L.C (801)521-0222 FAX 801-392-7544
WWW.GREATBASINENGINEERING.COM

Utah Valley University New Science Building

800 West University Parkway
Orem, Utah 84058

DFCM

DRAWN BY:	HA
CHECKED BY:	DRW
OWNER PROJECT NO.:	09020790
GSBS PROJECT NO.:	2009.15.00
ISSUED DATE:	05.07.10

RETAINING WALL DETAILS

CONSTRUCTION DOCUMENTS

CG-205

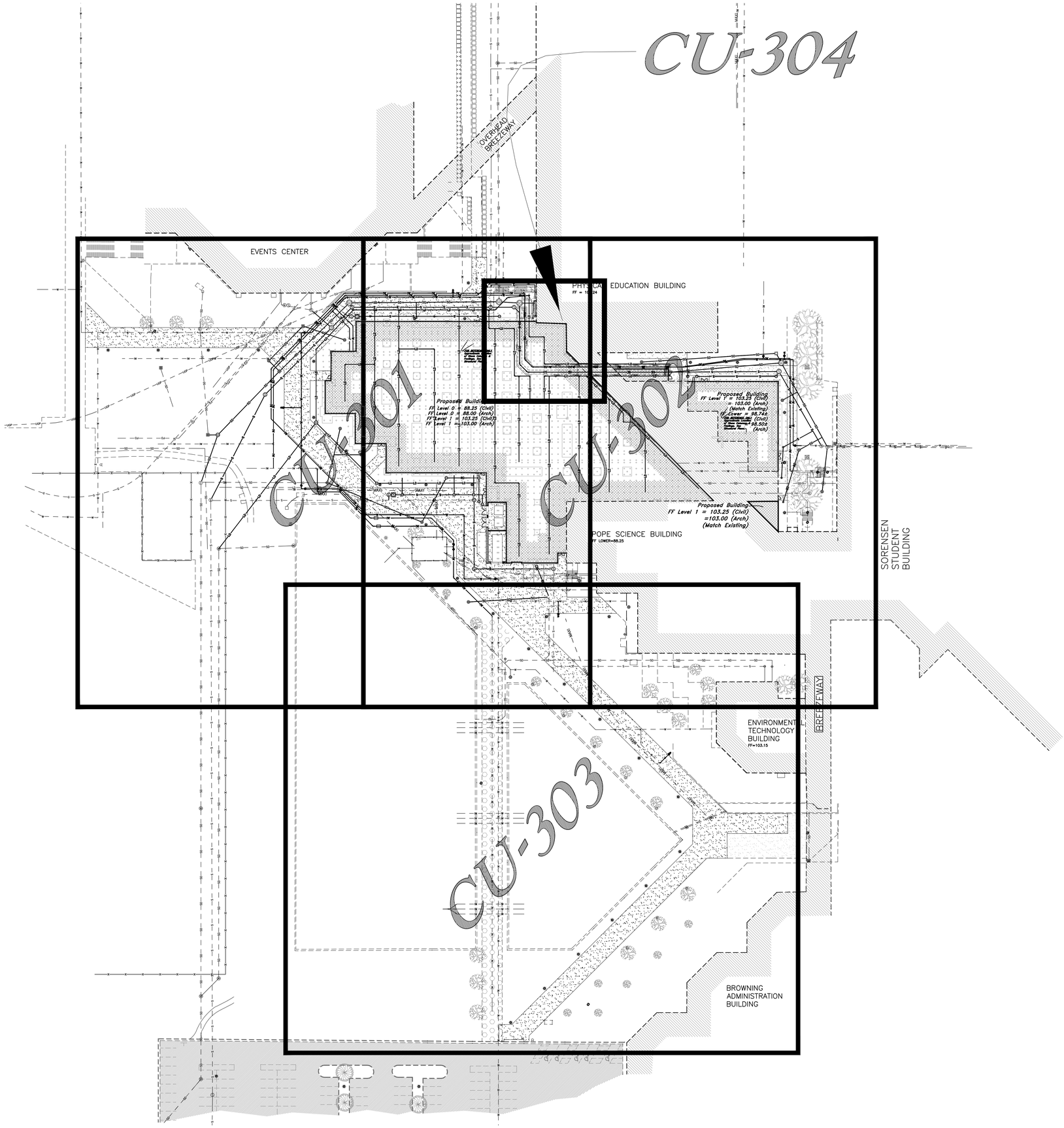

Legend

(Note: All items may not appear on drawing)

San. Sewer Manhole	S
Water Manhole	W
Storm Drain Manhole	D
Electrical Manhole	E
Catch Basins	
Exist. Fire Hydrant	
Fire Hydrant	
Exist. Water Valve	WV
Water Valve	WV
Sanitary Sewer	—S—
Culinary Water	—W—
Gas Line	—G—
Irrigation Line	—IW—
Storm Drain	—SD—
Telephone Line	—T—
Secondary Waterline	—SD—
Power Line	—P—
Fire Line	—F—
Land Drain	—LD—
Power pole	PO
Power pole w/guy	PO GY
Light Pole	
Fence	x x x
Flowline of ditch	
Overhead Power line	—OHP—
Corrugated Metal Pipe	CMP
Concrete Pipe	CP
Reinforced Concrete Pipe	RCP
Ductile Iron	DI
Polyvinyl Chloride	PVC
Top of Asphalt	TA
Edge of Asphalt	EA
Centerline	CL
Flowline	FL
Finish Floor	FF
Top of Curb	TC
Top of Wall	TWL
Top of Walk	TW
Top of Concrete	TCN
Natural Ground	NG
Finish Grade	FG
Fire Department Connection	FDC
Finish Contour	—90—
Exist. Contour	—90—
Finish Grade	95.33TA
Exist. Grade	95.72TA
Ridge Line	— R —
Direction of Flow	
Existing Asphalt	
New Asphalt	
Existing Footings	
Concrete	
Open Face Curb & Gutter	
Turf Block Roadway	
Demo Tree	

Scale: 1" = 40'

40 0 10 20 40 50 60 70 80

Graphic Scale

General Utility Notes:

1. Coordinate all utility connections to building with plumbing plans and building contractor.
2. Verify depth and location of all existing utilities prior to constructing any new utility lines. Notify Civil Engineer of any discrepancies or conflicts prior to any connections being made.
3. All catch basin and inlet box grates are to be bicycle proof.
4. Refer to the site electrical plan for details and locations of electrical lines, transformers and light poles.
5. Gas lines, telephone lines, and cable TV lines are not a part of these plans unless otherwise noted.
6. Water meters are to be installed per city standards and specifications. It will be the contractor's responsibility to install all items required.
7. Water lines, valves, fire hydrants, fittings etc. are to be constructed as shown. Contractor is responsible to construct any vertical adjustments necessary to clear sewer, storm drain or other utilities as necessary including valve boxes and hydrant spools to proper grade.
8. Field verify all existing and/or proposed Roof Drain/Roof Drain down spout connections to Storm Water System with Civil, Plumbing & Architectural plans. Notify Engineer of any discrepancies.
9. Coordinate with Landscape plan for New Maxilines, Controllers, and their locations

Utility Piping Materials:

All piping to be installed per manufacturers recommendations. Refer to project specifications for more detailed information regarding materials, installation, etc.

Culinary Service Laterals

1. 3/4"ø to 2"ø Pipe – Copper Tube ASTM B, Type K, Soft Temper
2. 2-1/2"ø to 3"ø Pipe – HDPE PW3408 Poly Pipe, DR9
3. Over 4"ø Pipe – AWWA C-900 Class 150 pipe

Water Main Lines and Fire Lines & Irrigation Water Lines

1. AWWA C-900 Class 150 pipe.

Sanitary Sewer Lines

1. All exterior sewer piping to be Polyvinyl Chloride (PVC) sewer pipe, ASTM D 3034, Type PSM, SDR 35.
2. All sewer piping inside tunnel to be AWWA c-900 Class 150 pipe.

Storm Drain Lines

1. 10" Pipes or Smaller – Polyvinyl Chloride (PVC) sewer pipe, ASTM D3034, Type PSM, SDR 35
2. 12" to 21" pipes – Concrete Pipe, ASTM C14, Class III up to 13' of cover. For greater than 13' feet of cover, use reinforced concrete pipe and classes listed below.
3. 24" pipes or larger – Reinforced Concrete Pipe, ASTM C76, Class III up to 13' of cover, Class IV for 13' to 21' of cover, Class V for 21' to 32' of cover, and Special Design for cover greater than 32 feet.
4. All storm drain piping in tunnel to be AWWA C-905 DR 41 pipe.

CAUTION NOTICE TO CONTRACTOR

The contractor is specifically cautioned that the location and/or elevation of existing utilities as shown on these plans are based on records of the various utility companies and, where possible, measurements taken in the field. The information is not to be relied on as being exact or complete. The contractor must call the appropriate utility company at least 48 hours before any excavation to request exact field location of utilities. It shall be the responsibility of the contractor to relocate all existing utilities which conflict with the propose improvements shown on the plans.

SUPPLEMENT TO CAUTION NOTICE TO CONTRACTOR

Any information on these plans that contains "Rec. Dwg." indicates that the information has been provided by means of record drawings. Record drawings may have been delivered by either written and or verbal means. Record drawings may have various sources including but not limited to: Architects, owners, utility companies, and government offices. The providers of record drawings are listed below. The supplemental information shown on these plans shall not be solely be relied upon as exact or complete. The contractor retains all responsibility to locate and verify all utilities including those that may interfere with this project prior to start of construction activities.

SOURCE:	DATA PROVIDED:	DATE:
Frank Young, Utah Valley University	Existing utility locations and sizes.	09/28/2009
Frank Young, Utah Valley University	Turf block paver locations	06/17/2009

PRIVATE ENGINEER'S NOTICE TO CONTRACTORS

The Contractor agrees that he shall assume sole and complete responsibility for job site conditions during the course of construction of this project, including safety of all persons and property; that this requirement shall apply continuously and not be limited to normal working hours; and that the contractor shall defend, indemnify, and hold the owner and the engineer harmless from any and all liability, real or alleged, in connection with the performance of work on this project, excepting for liability arising from the sole negligence of the owner or the engineer.

ALL CONSTRUCTION TO CONFORM TO CITY STANDARDS AND SPECIFICATIONS.

GREAT BASIN ENGINEERING INC
5746 South 1475 East - Suite 200
Ogden, Utah 84403 Main (801)394-4515
S.L.C (801)521-0222 FAX 801-392-7544
www.greatbasinengineering.com

GSBS ARCHITECTS
375 WEST 200 SOUTH
SALT LAKE CITY, UT 84101
P 801.521.8600
F 801.521.7913
www.gsbsarchitects.com

REVISIONS:

LICENSED PROFESSIONAL ENGINEER No. 166184 MARK EUGENE BABBITT 5-7-10 STATE OF UTAH

Utah Valley University New Science Building

800 West University Parkway
Orem, Utah 84058

DFCM

DRAWN BY:	HA
CHECKED BY:	DRW
OWNER PROJECT NO.:	09020790
GSBS PROJECT NO.:	2009.115.00
ISSUED DATE:	05.07.10

OVERALL UTILITY PLAN

CONSTRUCTION DOCUMENTS

CU-300

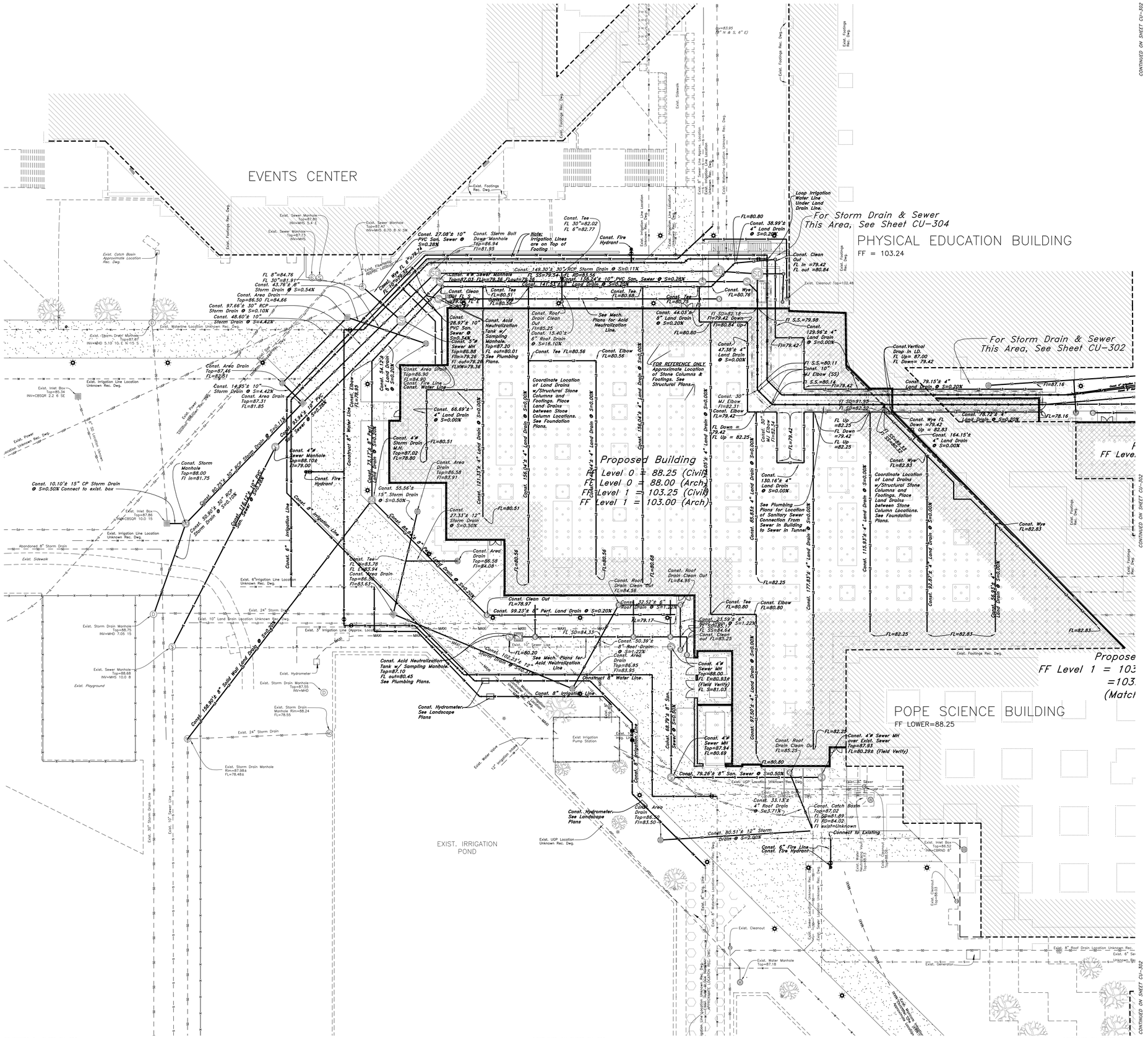

Legend

(Note: All items may not appear on drawing)

San. Sewer Manhole
Water Manhole
Storm Drain Manhole
Electrical Manhole
Catch Basins
Exist. Fire Hydrant
Fire Hydrant
Exist. Water Valve
Water Valve
Sanitary Sewer
Culinary Water
Gas Line
Irrigation Line
Storm Drain
Telephone Line
Secondary Waterline
Power Line
Fire Line
Land Drain
Power pole
Power pole w/guy
Light Pole
Fence
Flowline of ditch
Overhead Power line
Corrugated Metal Pipe
Concrete Pipe
Reinforced Concrete Pipe
Ductile Iron
Polyvinyl Chloride
Top of Asphalt
Edge of Asphalt
Centerline
Flowline
Finish Floor
Top of Curb
Top of Wall
Top of Walk
TOP OF Concrete
Natural Ground
Finish Grade
Fire Department Connection
Finish Contour
Exist. Contour
Finish Grade
Exist. Grade
Ridge Line
Direction of Flow
Existing Asphalt
New Asphalt
Existing Footings
Concrete
Open Face Curb & Gutter
Turf Block Roadway
Demo Tree

Scale: 1" = 20'

Graphic Scale

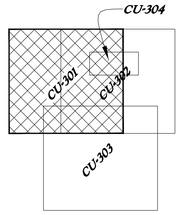

General Utility Notes:

1. Coordinate all utility connections to building with plumbing plans and building contractor.
2. Verify depth and location of all existing utilities prior to constructing any new utility lines. Notify Civil Engineer of any discrepancies or conflicts prior to any connections being made.
3. All catch basin and inlet box grates are to be bicycle proof.
4. Refer to the site electrical plan for details and locations of electrical lines, transformers and light poles.
5. Gas lines, telephone lines, and cable TV lines are not a part of these plans unless otherwise noted.
6. Water meters are to be installed per city standards and specifications. It will be the contractor's responsibility to install all items required.
7. Water lines, valves, fire hydrants, fittings etc. are to be constructed as shown. Contractor is responsible to construct any vertical adjustments necessary to clear sewer, storm drain or other utilities as necessary including valve boxes and hydrant spools to proper grade.
8. Field verify all existing and/or proposed Roof Drain/Roof Drain down spout connections to Storm Water System with Civil, Plumbing & Architectural plans. Notify Engineer of any discrepancies.
9. Coordinate with Landscape plan for New Maxlines, Controllers, and their locations

Utility Piping Materials:

All piping to be installed per manufacturers recommendations. Refer to project specifications for more detailed information regarding materials, installation, etc.

Culinary Service Laterals

1. 3/4"ø to 2"ø Pipe – Copper Tube ASTM B, Type K, Soft Temper
2. 2-1/2"ø to 3"ø Pipe – HDPE PW3408 Poly Pipe, DR9
3. Over 4"ø Pipe – AWWA C-900 Class 150 pipe

Water Main Lines and Fire Lines & Irrigation Water Lines

1. AWWA C-900 Class 150 pipe.

Sanitary Sewer Lines

1. All exterior sewer piping to be Polyvinyl Chloride (PVC) sewer pipe, ASTM D 3034, Type PSM, SDR 35.
2. All sewer piping inside tunnel to be AWWA c-900 Class 150 pipe.

Storm Drain Lines

1. 10" Pipes or Smaller – Polyvinyl Chloride (PVC) sewer pipe, ASTM D3034, Type PSM, SDR 35
2. 12" to 21" pipes – Concrete Pipe, ASTM C14, Class III up to 13' of cover. For greater than 13' feet of cover, use reinforced concrete pipe and classes listed below.
3. 24" pipes or larger – Reinforced Concrete Pipe, ASTM C76, Class III up to 13' of cover, Class IV for 13' to 21' of cover, Class V for 21' to 32' of cover, and Special Design for cover greater than 32 feet.
4. All storm drain piping in tunnel to be AWWA C-905 DR 41 pipe.

CAUTION NOTICE TO CONTRACTOR

The contractor is specifically cautioned that the location and/or elevation of existing utilities as shown on these plans are based on records of the various utility companies and, where possible, measurements taken in the field. The information is not to be relied on as being exact or complete. The contractor must call the appropriate utility company at least 48 hours before any excavation to request exact field location of utilities. It shall be the responsibility of the contractor to relocate all existing utilities which conflict with the propose improvements shown on the plans.

SUPPLEMENT TO CAUTION NOTICE TO CONTRACTOR

Any information on these plans that contains "Rec. Dwg." indicates that the information has been provided by means of record drawings. Record drawings may have been delivered by either written and or verbal means. Record drawings may have various sources including but not limited to: Architects, owners, utility companies, and government offices. The providers of record drawings are listed below. The supplemental information shown on these plans shall not be solely be relied upon as exact or complete. The contractor retains all responsibility to locate and verify all utilities including those that may interfere with this project prior to start of construction activities.

SOURCE:	DATA PROVIDED:	DATE:
Frank Young, Utah Valley University	Existing utility locations and sizes.	09/28/2009
Frank Young, Utah Valley University	Turf block paver locations	06/17/2009

PRIVATE ENGINEER'S NOTICE TO CONTRACTORS

The Contractor agrees that he shall assume sole and complete responsibility for job site conditions during the course of construction of this project, including safety of all persons and property; that this requirement shall apply continuously and not be limited to normal working hours; and that the contractor shall defend, indemnify, and hold the owner and the engineer harmless from any and all liability, real or alleged, in connection with the performance of work on this project, excepting for liability arising from the sole negligence of the owner or the engineer.

ALL CONSTRUCTION TO CONFORM TO CITY STANDARDS AND SPECIFICATIONS

GREAT BASIN ENGINEERING INC
5746 SOUTH 1475 EAST - SUITE 200
OGDEN, UTAH 84403 MAIN (801)394-4515
S.L.C (801)521-0222 FAX 801-392-7544
WWW.GREATBASINENGINEERING.COM

GSBS ARCHITECTS
375 WEST 200 SOUTH
SALT LAKE CITY, UT 84101
P 801.521.8600
F 801.521.7913
www.gsbsarchitects.com

REVISIONS:

No. 166184 MARK EUGENE BABBITT 5-7-10 STATE OF UTAH

Utah Valley University New Science Building

800 West University Parkway
Orem, Utah 84058

DFCM

DRAWN BY:	HA
CHECKED BY:	DRW
OWNER PROJECT NO.:	09020790
GSBS PROJECT NO.:	2009.115.00
ISSUED DATE:	05.07.10

UTILITY PLAN

CONSTRUCTION DOCUMENTS

CU-301

W:\09n220-UVU Pope\DWG\09N220S6.DWG, 5/5/2010 3:09:26 PM, heathera, 1:1

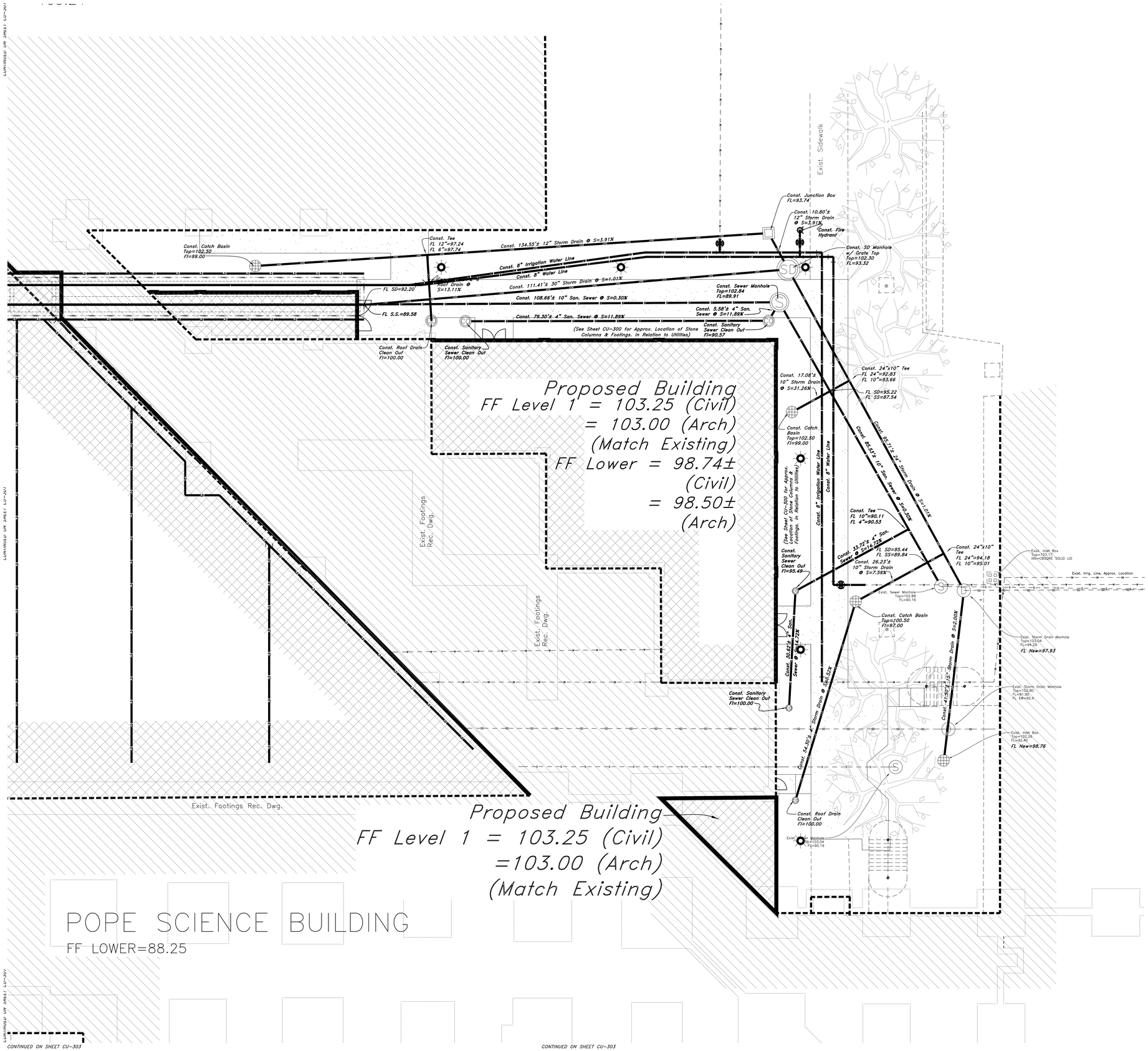

Legend

(Note: All items may not appear on drawing)

San. Sewer Manhole
Water Manhole
Storm Drain Manhole
Electrical Manhole
Catch Basins
Exist. Fire Hydrant
Fire Hydrant
Exist. Water Valve
Water Valve
Sanitary Sewer — S —
Culinary Water — W —
Gas Line — G —
Irrigation Line — IW —
Storm Drain — SD —
Telephone Line — T —
Secondary Waterline — SW —
Power Line — P —
Fire Line — FL —
Land Drain — LD —
Power pole
Power pole w/guy
Light Pole
Fence
Flowline of ditch
Overhead Power line — OHP —
Corrugated Metal Pipe CMP
Concrete Pipe CP
Reinforced Concrete Pipe RCP
Ductile Iron DI
Polyvinyl Chloride PVC
Top of Asphalt TA
Edge of Asphalt EA
Centerline CL
Flowline FL
Finish Floor FF
Top of Curb TC
Top of Wall TWL
Top of Walk TW
Top of Concrete TON
Natural Ground NG
Finish Grade FG
Fire Department Connection FDC
Finish Contour — 90 —
Exist. Contour — 90 —
Finish Grade 95.33TA
Exist. Grade 95.72TA
Ridge Line — R —
Direction of Flow
Existing Asphalt
New Asphalt
Existing Footings
Concrete
Open Face Curb & Gutter
Turf Block Roadway
Demo Tree

Scale: 1" = 10'

10 0 5 10 15 20

Graphic Scale

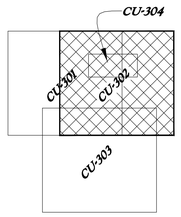

General Utility Notes:

1. Coordinate all utility connections to building with plumbing plans and building contractor.
2. Verify depth and location of all existing utilities prior to constructing any new utility lines. Notify Civil Engineer of any discrepancies or conflicts prior to any connections being made.
3. All catch basin and inlet box grates are to be bicycle proof.
4. Refer to the site electrical plan for details and locations of electrical lines, transformers and light poles.
5. Gas lines, telephone lines, and cable TV lines are not a part of these plans unless otherwise noted.
6. Water meters are to be installed per city standards and specifications. It will be the contractor's responsibility to install all items required.
7. Water lines, valves, fire hydrants, fittings etc. are to be constructed as shown. Contractor is responsible to construct any vertical adjustments necessary to clear sewer, storm drain or other utilities as necessary including valve boxes and hydrant spools to proper grade.
8. Field verify all existing and/or proposed Roof Drain/Roof Drain down spout connections to Storm Water System with Civil, Plumbing & Architectural plans. Notify Engineer of any discrepancies.
9. Coordinate with Landscape plan for New Maxilines, Controllers, and their locations

Utility Piping Materials:

All piping to be installed per manufacturers recommendations. Refer to project specifications for more detailed information regarding materials, installation, etc.

Culinary Service Laterals

1. 3/4"ø to 2"ø Pipe – Copper Tube ASTM B, Type K, Soft Temper
2. 2–1/2"ø to 3"ø Pipe – HDPE PW3408 Poly Pipe, DR9
3. Over 4"ø Pipe – AWWA C–900 Class 150 pipe

Water Main Lines and Fire Lines & Irrigation Water Lines

1. AWWA C–900 Class 150 pipe.

Sanitary Sewer Lines

1. All exterior sewer piping to be Polyvinyl Chloride (PVC) sewer pipe, ASTM D 3034, Type PSM, SDR 35.
2. All sewer piping inside tunnel to be AWWA c–900 Class 150 pipe.

Storm Drain Lines

1. 10" Pipes or Smaller – Polyvinyl Chloride (PVC) sewer pipe, ASTM D3034, Type PSM, SDR 35
2. 12" to 21" pipes – Concrete Pipe, ASTM C14, Class III up to 13' of cover. For greater than 13' feet of cover, use reinforced concrete pipe and classes listed below.
3. 24" pipes or larger – Reinforced Concrete Pipe, ASTM C76, Class III up to 13' of cover, Class IV for 13' to 21' of cover, Class V for 21' to 32' of cover, and Special Design for cover greater than 32 feet.
4. All storm drain piping in tunnel to be AWWA C–905 DR 41 pipe.

CAUTION NOTICE TO CONTRACTOR

The contractor is specifically cautioned that the location and/or elevation of existing utilities as shown on these plans are based on records of the various utility companies and, where possible, measurements taken in the field. The information is not to be relied on as being exact or complete. The contractor must call the appropriate utility company at least 48 hours before any excavation to request exact field location of utilities. It shall be the responsibility of the contractor to relocate all existing utilities which conflict with the propose improvements shown on the plans.

SUPPLEMENT TO CAUTION NOTICE TO CONTRACTOR

Any information on these plans that contains "Rec. Dwg." indicates that the information has been provided by means of record drawings. Record drawings may have been delivered by either written and or verbal means. Record drawings may have various sources including but not limited to: Architects, owners, utility companies, and government offices. The providers of record drawings are listed below. The supplemental information shown on these plans shall not be solely be relied upon as exact or complete. The contractor retains all responsibility to locate and verify all utilities including those that may interfere with this project prior to start of construction activities.

SOURCE:	DATA PROVIDED:	DATE:
Frank Young, Utah Valley University	Existing utility locations and sizes.	09/28/2009
Frank Young, Utah Valley University	Turf block paver locations	06/17/2009

PRIVATE ENGINEER'S NOTICE TO CONTRACTORS

The Contractor agrees that he shall assume sole and complete responsibility for job site conditions during the course of construction of this project, including safety of all persons and property; that this requirement shall apply continuously and not be limited to normal working hours; and that the contractor shall defend, indemnify, and hold the owner and the engineer harmless from any and all liability, real or alleged, in connection with the performance of work on this project, excepting for liability arising from the sole negligence of the owner or the engineer.

ALL CONSTRUCTION TO CONFORM TO CITY STANDARDS AND SPECIFICATIONS.

GREAT BASIN ENGINEERING INC
5746 South 1475 East - Suite 200
Ogden, Utah 84403 Main (801)394-4515
S.L.C (801)521-0222 FAX 801-392-7544
WWW.GREATBASINENGINEERING.COM

GSBS ARCHITECTS
375 WEST 200 SOUTH
SALT LAKE CITY, UT 84101
P 801.521.8600
F 801.521.7913
www.gsbsarchitects.com

REVISIONS:

No. 166184 MARK EUGENE BABBITT 5-7-10 STATE OF UTAH

Utah Valley University New Science Building

800 West University Parkway
Orem, Utah 84058

DFCM

DRAWN BY:	HA
CHECKED BY:	DRW
OWNER PROJECT NO.:	09020790
GSBS PROJECT NO.:	2009.115.00
ISSUED DATE:	05.07.10

UTILITY PLAN

CONSTRUCTION DOCUMENTS

CU-302

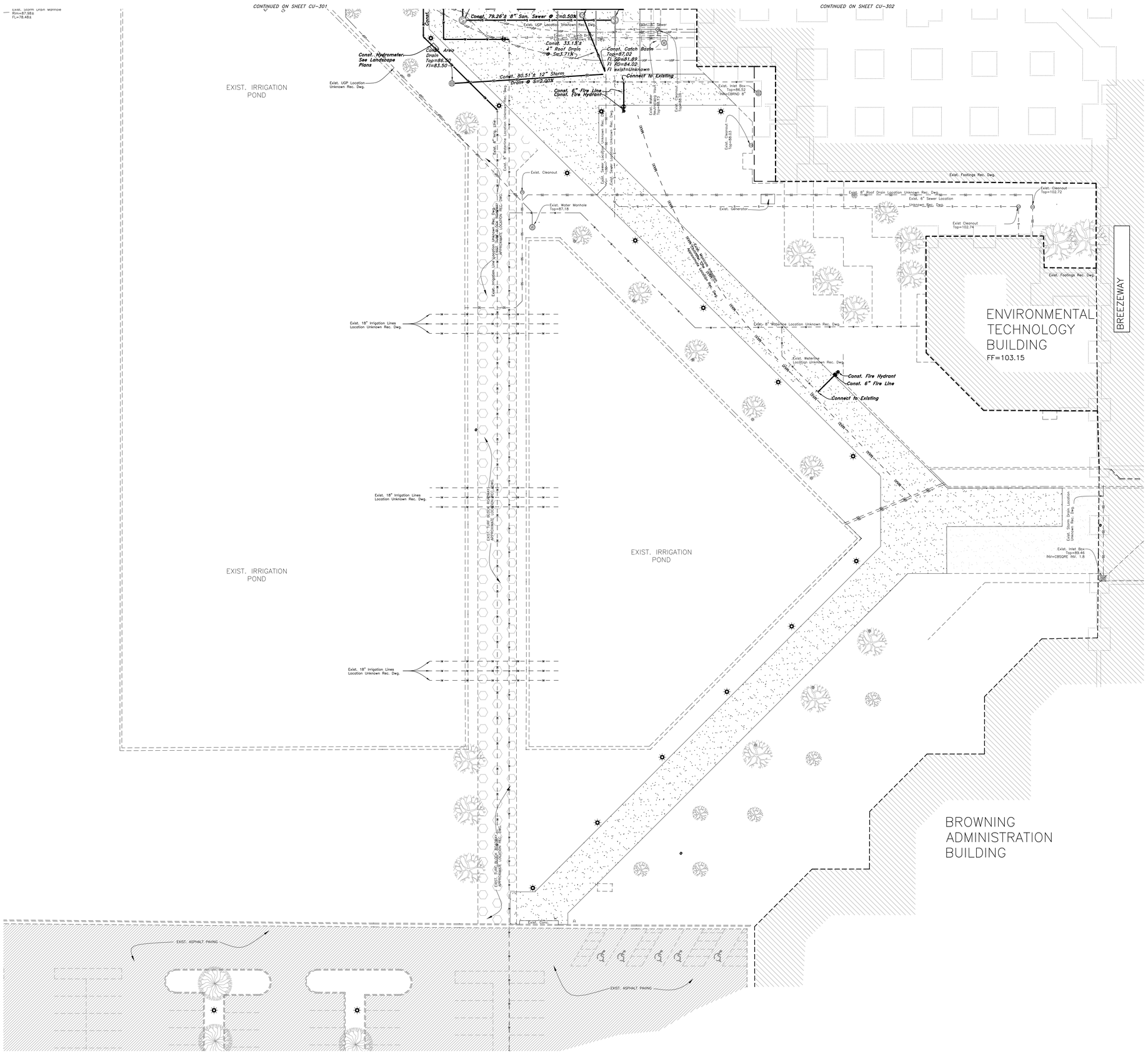

Legend

(Note: All items may not appear on drawing)

San. Sewer Manhole	
Water Manhole	
Storm Drain Manhole	
Electrical Manhole	
Catch Basins	
Exist. Fire Hydrant	
Fire Hydrant	
Exist. Water Valve	
Water Valve	
Sanitary Sewer	—S—
Culinary Water	—W—
Gas Line	—G—
Irrigation Line	—IW—
Storm Drain	—SD—
Telephone Line	—T—
Secondary Waterline	—SD—
Power Line	—P—
Fire Line	—F—
Land Drain	—LD—
Power pole	
Power pole w/guy	
Light Pole	
Fence	
Flowline of ditch	
Overhead Power line	—OHP—
Corrugated Metal Pipe	CMP
Concrete Pipe	CP
Reinforced Concrete Pipe	RCP
Ductile Iron	DI
Polyvinyl Chloride	PVC
Top of Asphalt	TA
Edge of Asphalt	EA
Centerline	CL
Flowline	FL
Finish Floor	FF
Top of Curb	TC
Top of Wall	TWL
Top of Walk	TW
Top of Concrete	TCN
Natural Ground	NG
Finish Grade	FG
Fire Department Connection	FDC
Finish Contour	—90—
Exist. Contour	—90—
Finish Grade	95.33TA
Exist. Grade	95.72TA
Ridge Line	—R—
Direction of Flow	
Existing Asphalt	
New Asphalt	
Existing Footings	
Concrete	
Open Face Curb & Gutter	
Turf Block Roadway	
Demo Tree	

Scale: 1" = 20'

20 0 10 20 25 30 35 40

Graphic Scale

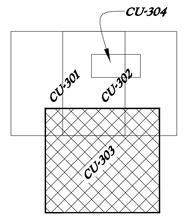

General Utility Notes:

1. Coordinate all utility connections to building with plumbing plans and building contractor.
2. Verify depth and location of all existing utilities prior to constructing any new utility lines. Notify Civil Engineer of any discrepancies or conflicts prior to any connections being made.
3. All catch basin and inlet box grates are to be bicycle proof.
4. Refer to the site electrical plan for details and locations of electrical lines, transformers and light poles.
5. Gas lines, telephone lines, and cable TV lines are not a part of these plans unless otherwise noted.
6. Water meters are to be installed per city standards and specifications. It will be the contractor's responsibility to install all items required.
7. Water lines, valves, fire hydrants, fittings etc. are to be constructed as shown. Contractor is responsible to construct any vertical adjustments necessary to clear sewer, storm drain or other utilities as necessary including valve boxes and hydrant spools to proper grade.
8. Field verify all existing and/or proposed Roof Drain/Roof Drain down spout connections to Storm Water System with Civil, Plumbing & Architectural plans. Notify Engineer of any discrepancies.
9. Coordinate with Landscape plan for New Maxilines, Controllers, and their locations

Utility Piping Materials:

All piping to be installed per manufacturers recommendations. Refer to project specifications for more detailed information regarding materials, installation, etc.

Culinary Service Laterals

1. 3/4"ø to 2"ø Pipe – Copper Tube ASTM B, Type K, Soft Temper
2. 2-1/2"ø to 3"ø Pipe – HDPE PW3408 Poly Pipe, DR9
3. Over 4"ø Pipe – AWWA C-900 Class 150 pipe

Water Main Lines and Fire Lines & Irrigation Water Lines

1. AWWA C-900 Class 150 pipe.

Sanitary Sewer Lines

1. All exterior sewer piping to be Polyvinyl Chloride (PVC) sewer pipe, ASTM D 3034, Type PSM, SDR 35.
2. All sewer piping inside tunnel to be AWWA c-900 Class 150 pipe.

Storm Drain Lines

1. 10" Pipes or Smaller – Polyvinyl Chloride (PVC) sewer pipe, ASTM D3034, Type PSM, SDR 35
2. 12" to 21" pipes – Concrete Pipe, ASTM C14, Class III up to 13' of cover. For greater than 13' feet of cover, use reinforced concrete pipe and classes listed below.
3. 24" pipes or larger – Reinforced Concrete Pipe, ASTM C76, Class III up to 13' of cover, Class IV for 13' to 21' of cover, Class V for 21' to 32' of cover, and Special Design for cover greater than 32 feet.
4. All storm drain piping in tunnel to be AWWA C-905 DR 41 pipe.

CAUTION NOTICE TO CONTRACTOR

The contractor is specifically cautioned that the location and/or elevation of existing utilities as shown on these plans are based on records of the various utility companies and, where possible, measurements taken in the field. The information is not to be relied on as being exact or complete. The contractor must call the appropriate utility company at least 48 hours before any excavation to request exact field location of utilities. It shall be the responsibility of the contractor to relocate all existing utilities which conflict with the propose improvements shown on the plans.

SUPPLEMENT TO CAUTION NOTICE TO CONTRACTOR

Any information on these plans that contains "Rec. Dwg." indicates that the information has been provided by means of record drawings. Record drawings may have been delivered by either written and or verbal means. Record drawings may have various sources including but not limited to: Architects, owners, utility companies, and government offices. The providers of record drawings are listed below. The supplemental information shown on these plans shall not be solely be relied upon as exact or complete. The contractor retains all responsibility to locate and verify all utilities including those that may interfere with this project prior to start of construction activities.

SOURCE:	DATA PROVIDED:	DATE:
Frank Young, Utah Valley University	Existing utility locations and sizes.	09/28/2009
Frank Young, Utah Valley University	Turf block paver locations	06/17/2009

PRIVATE ENGINEER'S NOTICE TO CONTRACTORS

The Contractor agrees that he shall assume sole and complete responsibility for job site conditions during the course of construction of this project, including safety of all persons and property; that this requirement shall apply continuously and not be limited to normal working hours; and that the contractor shall defend, indemnify, and hold the owner and the engineer harmless from any and all liability, real or alleged, in connection with the performance of work on this project, excepting for liability arising from the sole negligence of the owner or the engineer.

ALL CONSTRUCTION TO CONFORM TO CITY STANDARDS AND SPECIFICATIONS

GREAT BASIN ENGINEERING
5746 South 1475 East · Suite 200
Ogden, Utah 84403 Main (801)394-4515
S.L.C (801)521-0222 FAX 801-392-7544
www.greatbasinengineering.com

GSBS ARCHITECTS
375 WEST 200 SOUTH
SALT LAKE CITY, UT 84101
P 801.521.8600
F 801.521.7913
www.gsbsarchitects.com

REVISIONS:

LICENSED PROFESSIONAL ENGINEER No. 166184 MARK EUGENE BABBITT 5-7-10 STATE OF UTAH

Utah Valley University New Science Building

800 West University Parkway
Orem, Utah 84058

DFCM

DRAWN BY:	HA
CHECKED BY:	DRW
OWNER PROJECT NO.:	09020790
GSBS PROJECT NO.:	2009.115.00
ISSUED DATE:	05.07.10

UTILITY PLAN

CONSTRUCTION DOCUMENTS

CU-303

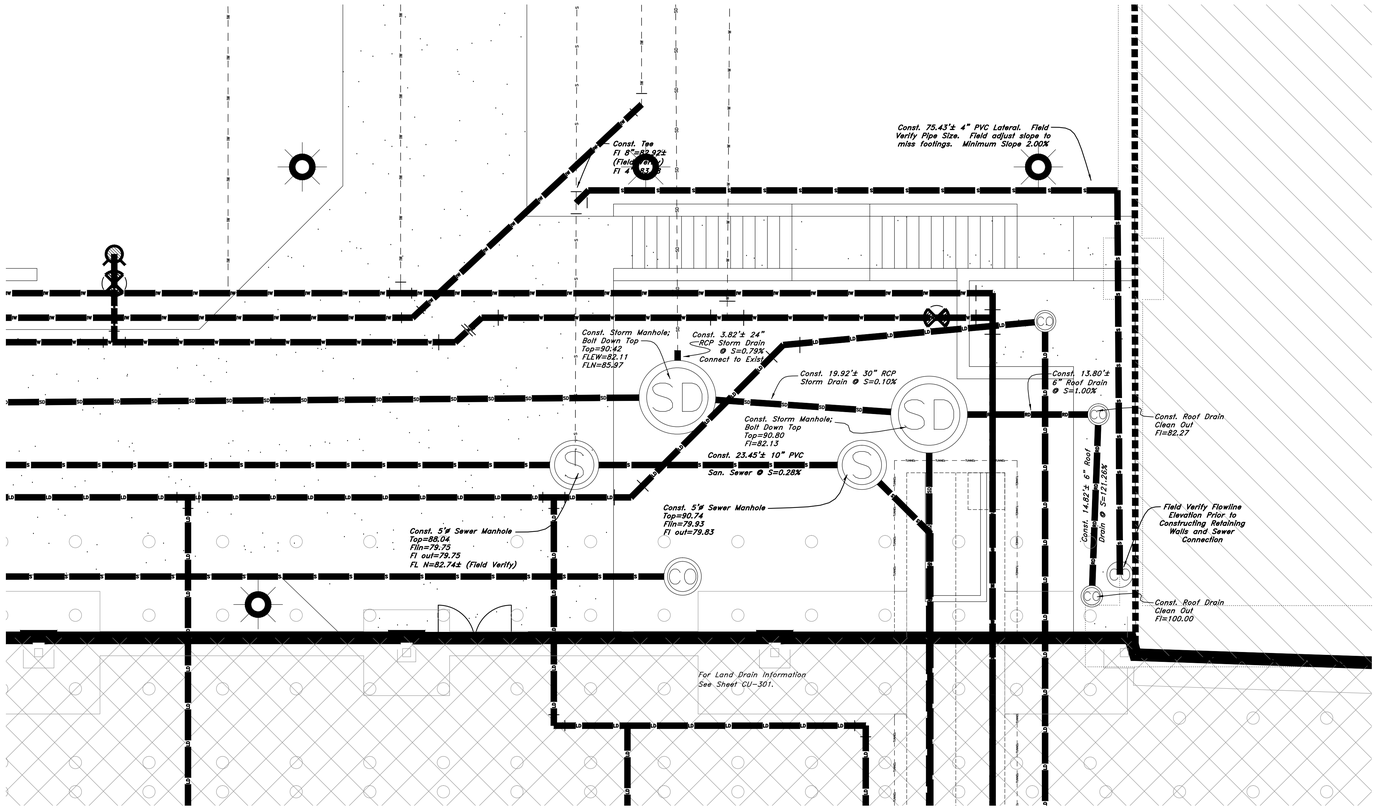

Scale: 1" = 5'

Graphic Scale

General Utility Notes:

1. Coordinate all utility connections to building with plumbing plans and building contractor.
2. Verify depth and location of all existing utilities prior to constructing any new utility lines. Notify Civil Engineer of any discrepancies or conflicts prior to any connections being made.
3. All catch basin and inlet box grates are to be bicycle proof.
4. Refer to the site electrical plan for details and locations of electrical lines, transformers and light poles.
5. Gas lines, telephone lines, and cable TV lines are not a part of these plans unless otherwise noted.
6. Water meters are to be installed per city standards and specifications. It will be the contractor's responsibility to install all items required.
7. Water lines, valves, fire hydrants, fittings etc. are to be constructed as shown. Contractor is responsible to construct any vertical adjustments necessary to clear sewer, storm drain or other utilities as necessary including valve boxes and hydrant spools to proper grade.
8. Field verify all existing and/or proposed Roof Drain/Roof Drain down spout connections to Storm Water System with Civil, Plumbing & Architectural plans. Notify Engineer of any discrepancies.
9. Coordinate with Landscape plan for New Maxilines, Controllers, and their locations

Utility Piping Materials:

All piping to be installed per manufacturers recommendations. Refer to project specifications for more detailed information regarding materials, installation, etc.

Culinary Service Laterals

1. 3/4"ø to 2"ø Pipe – Copper Tube ASTM B, Type K, Soft Temper
2. 2-1/2"ø to 3"ø Pipe – HDPE PW3408 Poly Pipe, DR9
3. Over 4"ø Pipe – AWWA C-900 Class 150 pipe

Water Main Lines and Fire Lines & Irrigation Water Lines

1. AWWA C-900 Class 150 pipe.

Sanitary Sewer Lines

1. All exterior sewer piping to be Polyvinyl Chloride (PVC) sewer pipe, ASTM D 3034, Type PSM, SDR 35.
2. All sewer piping inside tunnel to be AWWA c-900 Class 150 pipe.

Storm Drain Lines

1. 10" Pipes or Smaller – Polyvinyl Chloride (PVC) sewer pipe, ASTM D3034, Type PSM, SDR 35
2. 12" to 21" pipes – Concrete Pipe, ASTM C14, Class III up to 13' of cover. For greater than 13' feet of cover, use reinforced concrete pipe and classes listed below.
3. 24" pipes or larger – Reinforced Concrete Pipe, ASTM C76, Class III up to 13' of cover, Class IV for 13' to 21' of cover, Class V for 21' to 32' of cover, and Special Design for cover greater than 32 feet.
4. All storm drain piping in tunnel to be AWWA C-905 DR 41 pipe.

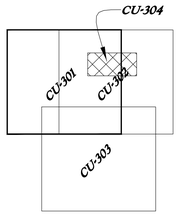

Legend

(Note: All items may not appear on drawing)

San. Sewer Manhole	S
Water Manhole	W
Storm Drain Manhole	D
Electrical Manhole	E
Catch Basins	
Exist. Fire Hydrant	
Fire Hydrant	FH
Exist. Water Valve	
Water Valve	WV
Sanitary Sewer	S
Culinary Water	W
Gas Line	G
Irrigation Line	IW
Storm Drain	SD
Telephone Line	T
Secondary Waterline	SW
Power Line	P
Fire Line	FL
Land Drain	LD
Power pole	
Power pole w/guy	
Light Pole	
Fence	
Flowline of ditch	
Overhead Power line	OHP
Corrugated Metal Pipe	CMP
Concrete Pipe	CP
Reinforced Concrete Pipe	RCP
Ductile Iron	DI
Polyvinyl Chloride	PVC
Top of Asphalt	TA
Edge of Asphalt	EA
Centerline	CL
Flowline	FL
Finish Floor	FF
Top of Curb	TC
Top of Wall	TW
Top of Walk	TW
Top of Concrete	TW
Natural Ground	NG
Finish Grade	FG
Fire Department Connection	FDC
Finish Contour	90
Exist. Contour	90
Finish Grade	95.37A
Exist. Grade	95.72TA
Ridge Line	R
Direction of Flow	
Existing Asphalt	
New Asphalt	
Existing Footings	
Concrete	
Open Face Curb & Gutter	
Turf Block Roadway	
Demo Tree	

GSBS ARCHITECTS

375 WEST 200 SOUTH
SALT LAKE CITY, UT 84101

P 801.521.8600
F 801.521.7913

www.gsbsarchitects.com

REVISIONS:

No. 166184
MARK EUGENE BABBITT
5-7-10
STATE OF UTAH

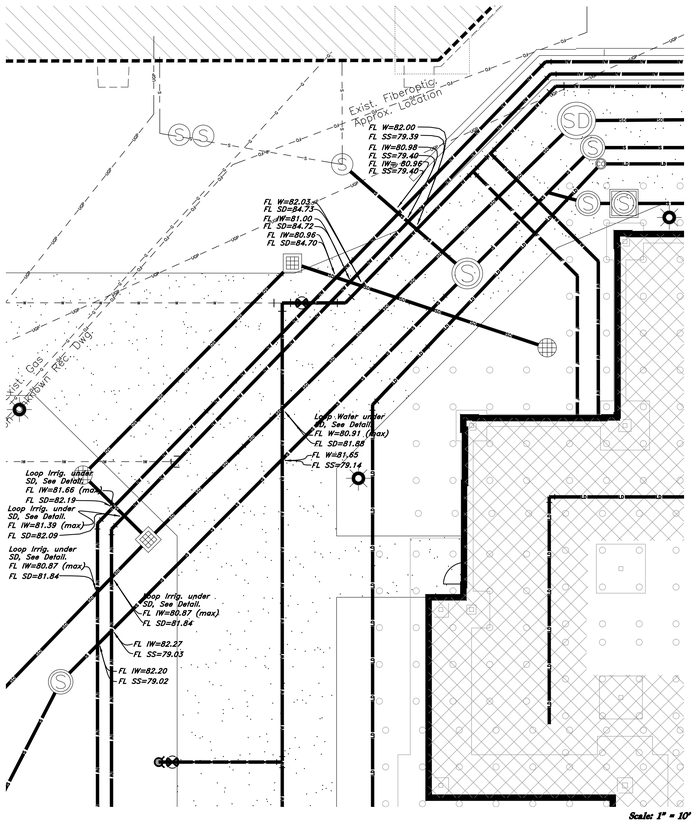

Scale: 1" = 10'

Graphic Scale

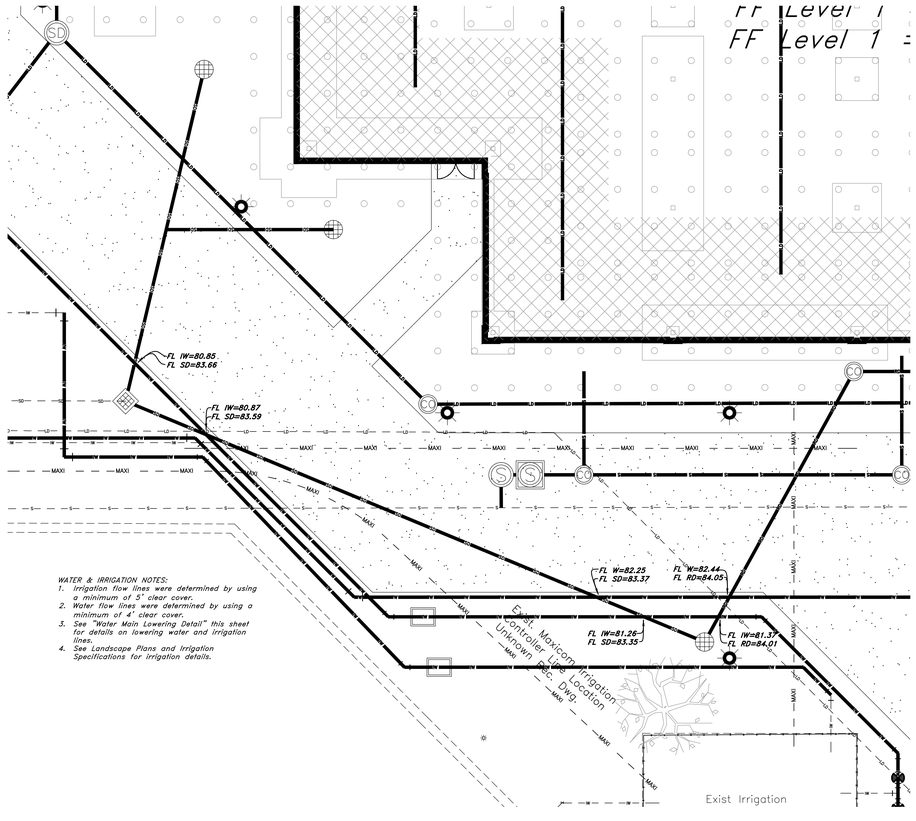

WATER & IRRIGATION NOTES:

1. Irrigation flow lines were determined by using a minimum of 5' clear cover.
2. Water flow lines were determined by using a minimum of 4' clear cover.
3. See "Water Main Lowering Detail" this sheet for details on lowering water and irrigation lines.
4. See Landscape Plans and Irrigation Specifications for irrigation details.

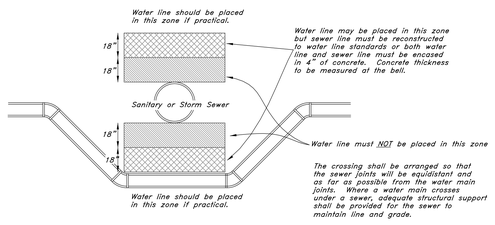

Water & Irrigation Main Lowering Detail

NOT TO SCALE

CAUTION NOTICE TO CONTRACTOR

The contractor is specifically cautioned that the location and/or elevation of existing utilities as shown on these plans are based on records of the various utility companies and, where possible, measurements taken in the field. The information is not to be relied on as being exact or complete. The contractor must call the appropriate utility company at least 48 hours before any excavation to request exact field location of utilities. It shall be the responsibility of the contractor to relocate all existing utilities which conflict with the propose improvements shown on the plans.

SUPPLEMENT TO CAUTION NOTICE TO CONTRACTOR

Any information on these plans that contains "Rec. Dwg." indicates that the information has been provided by means of record drawings. Record drawings may have been delivered by either written and or verbal means. Record drawings may have various sources including but not limited to: Architects, owners, utility companies, and government offices. The providers of record drawings are listed below. The supplemental information shown on these plans shall not be solely be relied upon as exact or complete. The contractor retains all responsibility to locate and verify all utilities including those that may interfere with this project prior to start of construction activities.

SOURCE:	DATA PROVIDED:	DATE:
Frank Young, Utah Valley University	Existing utility locations and sizes.	09/28/2009
Frank Young, Utah Valley University	Turf block paver locations	06/17/2009

PRIVATE ENGINEER'S NOTICE TO CONTRACTORS

The Contractor agrees that he shall assume sole and complete responsibility for job site conditions during the course of construction of this project, including safety of all persons and property; that this requirement shall apply continuously and not be limited to normal working hours; and that the contractor shall defend, indemnify, and hold the owner and the engineer harmless from any and all liability, real or alleged, in connection with the performance of work on this project, excepting for liability arising from the sole negligence of the owner or the engineer.

ALL CONSTRUCTION TO CONFORM TO CITY STANDARDS AND SPECIFICATIONS.

GREAT BASIN ENGINEERING INC
5746 South 1475 East - Suite 200
Ogden, Utah 84403 Main (801)394-4515
S.L.C.(801)521-0222 FAX 801-392-7544
WWW.GREATBASINENGINEERING.COM

Utah Valley University New Science Building

800 West University Parkway
Orem, Utah 84058

DFCM

DRAWN BY:	HA
CHECKED BY:	DRW
OWNER PROJECT NO.:	09020790
GSBS PROJECT NO.:	2009.115.00
ISSUED DATE:	05.07.10

UTILITY PLAN DETAIL AREA & WATER LINE CROSSINGS

CONSTRUCTION DOCUMENTS

CU-304

GSBS ARCHITECTS
375 WEST 200 SOUTH
SALT LAKE CITY, UT 84101
P 801.521.8600
F 801.521.7913
www.gsbsarchitects.com

REVISIONS:

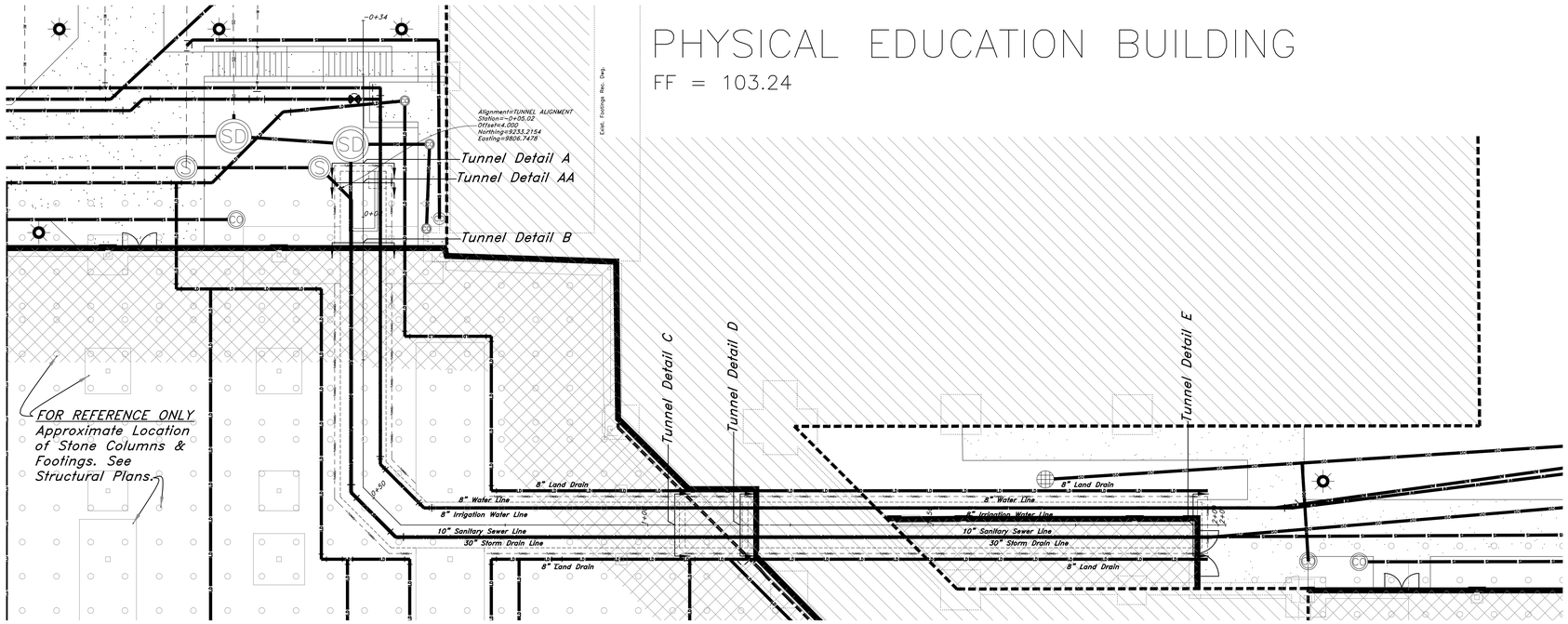

Sanitary Sewer & Storm Drain Tunnel Wall

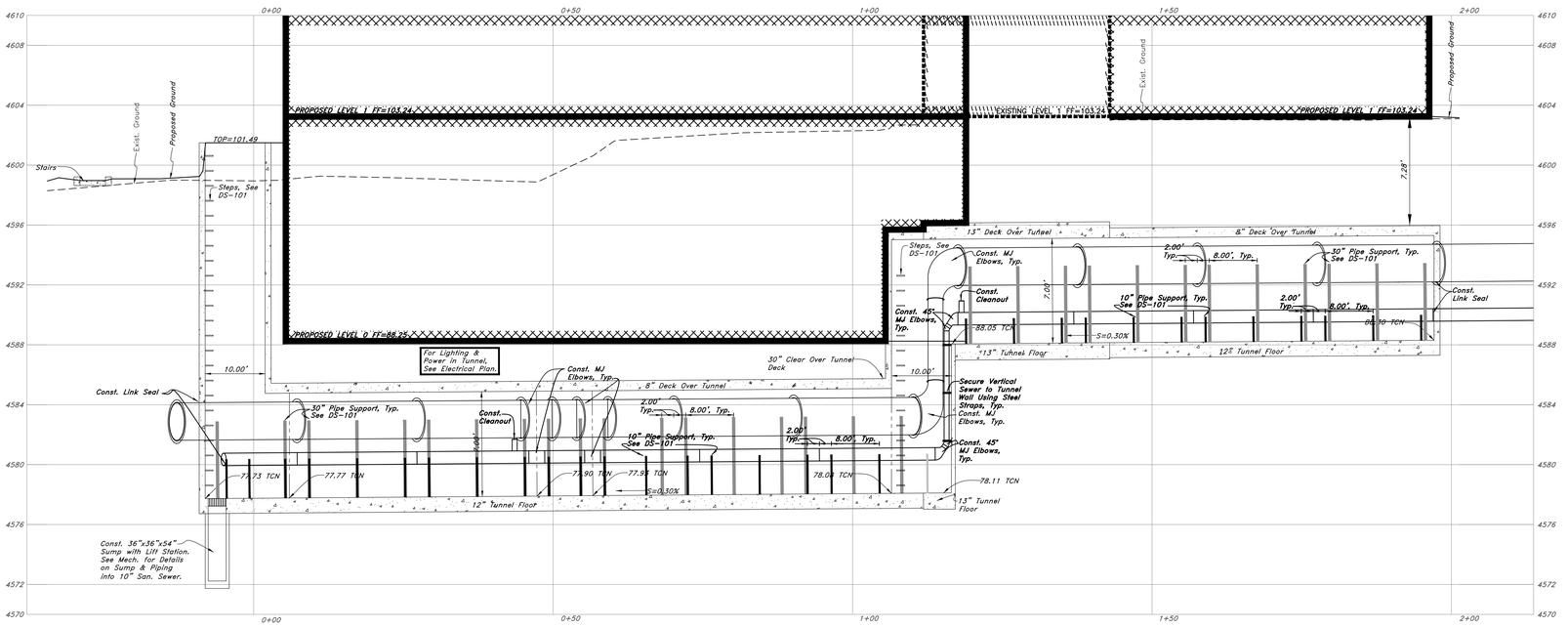

Scale: 1" = 10'

Graphic Scale

Legend

(Note: All items may not appear on drawing)

San. Sewer Manhole
Water Manhole
Storm Drain Manhole
Electrical Manhole
Catch Basins
Exist. Fire Hydrant
Fire Hydrant
Exist. Water Valve
Water Valve
Sanitary Sewer
Culinary Water
Gas Line
Irrigation Line
Storm Drain
Telephone Line
Secondary Waterline
Power Line
Fire Line
Land Drain
Power pole
Power pole w/guy
Light Pole
Fence
Flowline of ditch
Overhead Power line
Corrugated Metal Pipe
Concrete Pipe
Reinforced Concrete Pipe
Ductile Iron
Polyvinyl Chloride
Top of Asphalt
Edge of Asphalt
Centerline
Flowline
Finish Floor
Top of Curb
Top of Wall
Top of Walk
Top of Concrete
Natural Ground
Finish Grade
Fire Department Connection
Finish Contour
Exist. Contour
Finish Grade
Exist. Grade
Ridge Line
Direction of Flow
Existing Asphalt
New Asphalt
Existing Footings
Concrete
Open Face Curb & Gutter
Turf Block Roadway
Demo Tree

General Utility Notes:

1. Coordinate all utility connections to building with plumbing plans and building contractor.
2. Verify depth and location of all existing utilities prior to constructing any new utility lines. Notify Civil Engineer of any discrepancies or conflicts prior to any connections being made.
3. All catch basin and inlet box grates are to be bicycle proof.
4. Refer to the site electrical plan for details and locations of electrical lines, transformers and light poles.
5. Gas lines, telephone lines, and cable TV lines are not a part of these plans unless otherwise noted.
6. Water meters are to be installed per city standards and specifications. It will be the contractor's responsibility to install all items required.
7. Water lines, valves, fire hydrants, fittings etc. are to be constructed as shown. Contractor is responsible to construct any vertical adjustments necessary to clear sewer, storm drain or other utilities as necessary including valve boxes and hydrant spools to proper grade.
8. Field verify all existing and/or proposed Roof Drain/Roof Drain down spout connections to Storm Water System with Civil, Plumbing & Architectural plans. Notify Engineer of any discrepancies.
9. Coordinate with Landscape plan for New Maxilines, Controllers, and their locations

Utility Piping Materials:

All piping to be installed per manufacturers recommendations. Refer to project specifications for more detailed information regarding materials, installation, etc.

Culinary Service Laterals

1. 3/4"ø to 2"ø Pipe – Copper Tube ASTM B, Type K, Soft Temper
2. 2–1/2"ø to 3"ø Pipe – HDPE PW3408 Poly Pipe, DR9
3. Over 4"ø Pipe – AWWA C–900 Class 150 pipe

Water Main Lines and Fire Lines & Irrigation Water Lines

1. AWWA C–900 Class 150 pipe.

Sanitary Sewer Lines

1. All exterior sewer piping to be Polyvinyl Chloride (PVC) sewer pipe, ASTM D 3034, Type PSM, SDR 35.
2. All sewer piping inside tunnel to be AWWA c–900 Class 150 pipe.

Storm Drain Lines

1. 10" Pipes or Smaller – Polyvinyl Chloride (PVC) sewer pipe, ASTM D3034, Type PSM, SDR 35
2. 12" to 21" pipes – Concrete Pipe, ASTM C14, Class III up to 13' of cover. For greater than 13' feet of cover, use reinforced concrete pipe and classes listed below.
3. 24" pipes or larger – Reinforced Concrete Pipe, ASTM C76, Class III up to 13' of cover, Class IV for 13' to 21' of cover, Class V for 21' to 32' of cover, and Special Design for cover greater than 32 feet.
4. All storm drain piping in tunnel to be AWWA C–905 DR 41 pipe.

CAUTION NOTICE TO CONTRACTOR

The contractor is specifically cautioned that the location and/or elevation of existing utilities as shown on these plans are based on records of the various utility companies and, where possible, measurements taken in the field. The information is not to be relied on as being exact or complete. The contractor must call the appropriate utility company at least 48 hours before any excavation to request exact field location of utilities. It shall be the responsibility of the contractor to relocate all existing utilities which conflict with the propose improvements shown on the plans.

SUPPLEMENT TO CAUTION NOTICE TO CONTRACTOR

Any information on these plans that contains "Rec. Dwg." indicates that the information has been provided by means of record drawings. Record drawings may have been delivered by either written and or verbal means. Record drawings may have various sources including but not limited to: Architects, owners, utility companies, and government offices. The providers of record drawings are listed below. The supplemental information shown on these plans shall not be solely be relied upon as exact or complete. The contractor retains all responsibility to locate and verify all utilities including those that may interfere with this project prior to start of construction activities.

SOURCE:	DATA PROVIDED:	DATE:
Frank Young, Utah Valley University	Existing utility locations and sizes.	09/28/2009
Frank Young, Utah Valley University	Turf block paver locations	06/17/2009

PRIVATE ENGINEER'S NOTICE TO CONTRACTORS

The Contractor agrees that he shall assume sole and complete responsibility for job site conditions during the course of construction of this project, including safety of all persons and property; that this requirement shall apply continuously and not be limited to normal working hours; and that the contractor shall defend, indemnify, and hold the owner and the engineer harmless from any and all liability, real or alleged, in connection with the performance of work on this project, excepting for liability arising from the sole negligence of the owner or the engineer.

ALL CONSTRUCTION TO CONFORM TO CITY STANDARDS AND SPECIFICATIONS

GREAT BASIN ENGINEERING
5746 South 1475 East · Suite 200
Ogden, Utah 84403 Main (801)394-4515
S.L.C.(801)521-0222 FAX 801-392-7544
WWW.GREATBASINENGINEERING.COM

Utah Valley University New Science Building

800 West University Parkway
Orem, Utah 84058

DFCM

DRAWN BY:	HA
CHECKED BY:	DRW
OWNER PROJECT NO.:	09020790
GSBS PROJECT NO.:	2009.115.00
ISSUED DATE:	05.07.10

UTILITY TUNNEL PLAN AND PROFILE

CONSTRUCTION DOCUMENTS

CU-305

GSBS ARCHITECTS
375 WEST 200 SOUTH
SALT LAKE CITY, UT 84101
P 801.521.8600
F 801.521.7913
www.gsbsarchitects.com

REVISIONS:

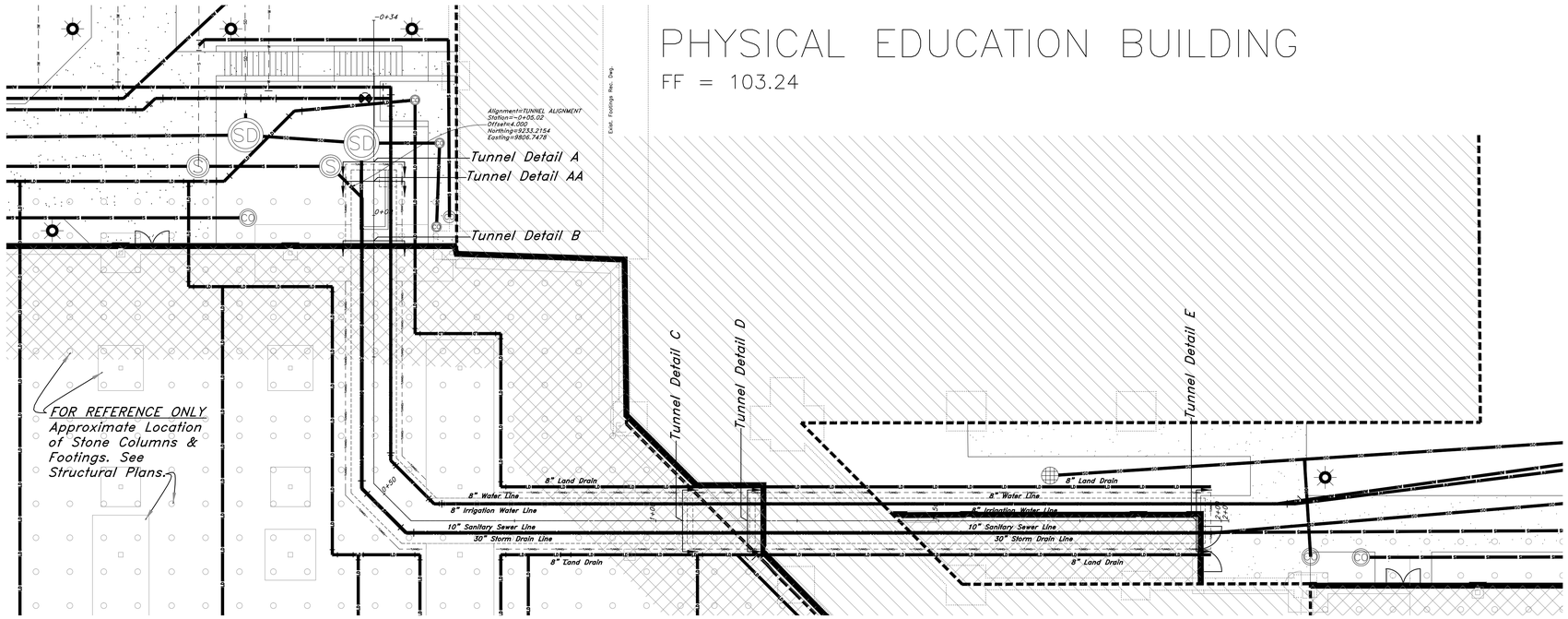

Irrigation Water Line and Culinary Water Line Tunnel Wall

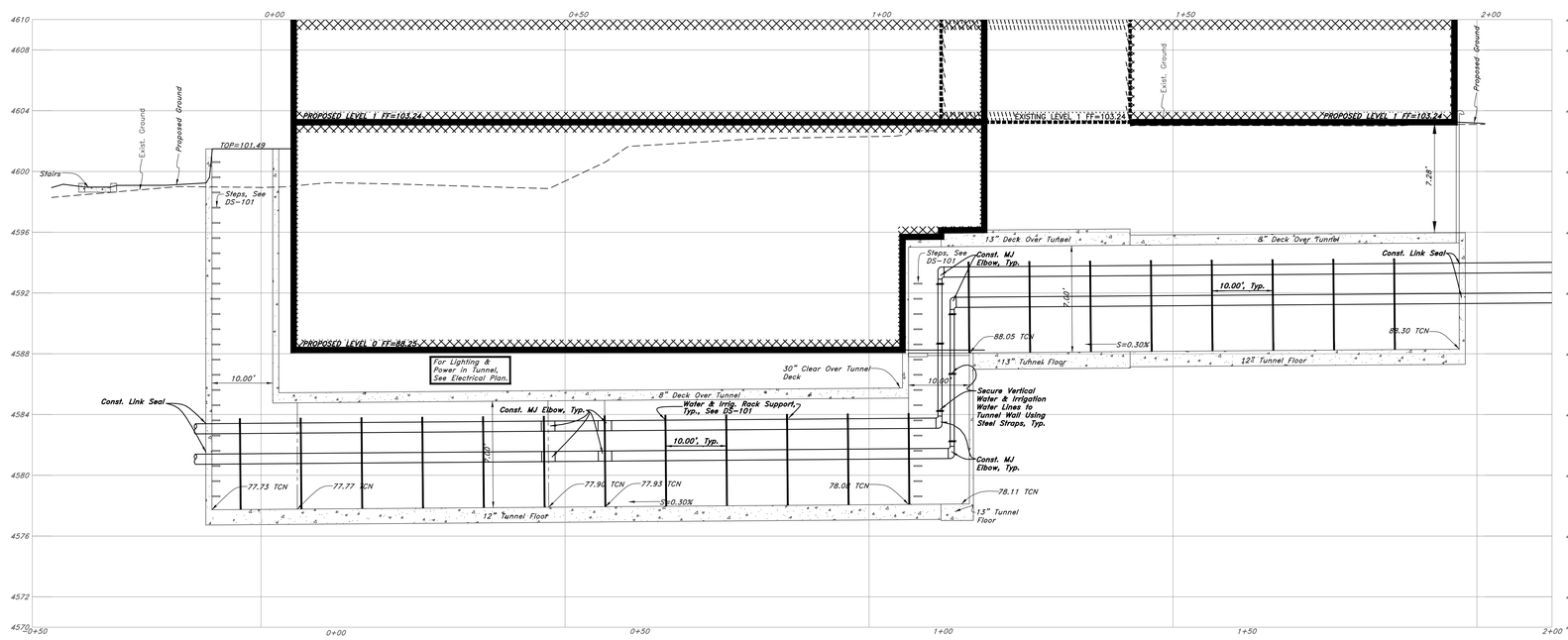

Scale: 1" = 10'

10 0 5 10 15 20

Graphic Scale

Legend

(Note: All items may not appear on drawing)

San. Sewer Manhole	S
Water Manhole	W
Storm Drain Manhole	D
Electrical Manhole	E
Catch Basins	
Exist. Fire Hydrant	
Fire Hydrant	
Exist. Water Valve	
Water Valve	
Sanitary Sewer	S
Culinary Water	W
Gas Line	G
Irrigation Line	IW
Storm Drain	SD
Telephone Line	T
Secondary Waterline	SW
Power Line	P
Fire Line	F
Land Drain	LD
Power pole	
Power pole w/guy	
Light Pole	
Fence	
Flowline of ditch	
Overhead Power line	OHP
Corrugated Metal Pipe	CMP
Concrete Pipe	CP
Reinforced Concrete Pipe	RCP
Ductile Iron	DI
Polyvinyl Chloride	PVC
Top of Asphalt	TA
Edge of Asphalt	EA
Centerline	CL
Flowline	FL
Finish Floor	FF
Top of Curb	TC
Top of Wall	TW
Top of Walk	TW
Top of Concrete	TCN
Natural Ground	NG
Finish Grade	FG
Fire Department Connection	FDC
Finish Contour	90
Exist. Contour	90
Finish Grade	95.33TA
Exist. Grade	95.72TA
Ridge Line	R
Direction of Flow	
Existing Asphalt	
New Asphalt	
Existing Footings	
Concrete	
Open Face Curb & Gutter	
Turf Block Roadway	
Demo Tree	

General Utility Notes:

1. Coordinate all utility connections to building with plumbing plans and building contractor.
2. Verify depth and location of all existing utilities prior to constructing any new utility lines. Notify Civil Engineer of any discrepancies or conflicts prior to any connections being made.
3. All catch basin and inlet box grates are to be bicycle proof.
4. Refer to the site electrical plan for details and locations of electrical lines, transformers and light poles.
5. Gas lines, telephone lines, and cable TV lines are not a part of these plans unless otherwise noted.
6. Water meters are to be installed per city standards and specifications. It will be the contractor's responsibility to install all items required.
7. Water lines, valves, fire hydrants, fittings etc. are to be constructed as shown. Contractor is responsible to construct any vertical adjustments necessary to clear sewer, storm drain or other utilities as necessary including valve boxes and hydrant spools to proper grade.
8. Field verify all existing and/or proposed Roof Drain/Roof Drain down spout connections to Storm Water System with Civil, Plumbing & Architectural plans. Notify Engineer of any discrepancies.
9. Coordinate with Landscape plan for New Maxilines, Controllers, and their locations

Utility Piping Materials:

All piping to be installed per manufacturers recommendations. Refer to project specifications for more detailed information regarding materials, installation, etc.

Culinary Service Laterals

1. 3/4"ø to 2"ø Pipe – Copper Tube ASTM B, Type K, Soft Temper
2. 2-1/2"ø to 3"ø Pipe – HDPE PW3408 Poly Pipe, DR9
3. Over 4"ø Pipe – AWWA C-900 Class 150 pipe

Water Main Lines and Fire Lines & Irrigation Water Lines

1. AWWA C-900 Class 150 pipe.

Sanitary Sewer Lines

1. All exterior sewer piping to be Polyvinyl Chloride (PVC) sewer pipe, ASTM D 3034, Type PSM, SDR 35.
2. All sewer piping inside tunnel to be AWWA c-900 Class 150 pipe.

Storm Drain Lines

1. 10" Pipes or Smaller – Polyvinyl Chloride (PVC) sewer pipe, ASTM D3034, Type PSM, SDR 35
2. 12" to 21" pipes – Concrete Pipe, ASTM C14, Class III up to 13' of cover. For greater than 13' feet of cover, use reinforced concrete pipe and classes listed below.
3. 24" pipes or larger – Reinforced Concrete Pipe, ASTM C76, Class III up to 13' of cover, Class IV for 13' to 21' of cover, Class V for 21' to 32' of cover, and Special Design for cover greater than 32 feet.
4. All storm drain piping in tunnel to be AWWA C-905 DR 41 pipe.

CAUTION NOTICE TO CONTRACTOR

The contractor is specifically cautioned that the location and/or elevation of existing utilities as shown on these plans are based on records of the various utility companies and, where possible, measurements taken in the field. The information is not to be relied on as being exact or complete. The contractor must call the appropriate utility company at least 48 hours before any excavation to request exact field location of utilities. It shall be the responsibility of the contractor to relocate all existing utilities which conflict with the propose improvements shown on the plans.

SUPPLEMENT TO CAUTION NOTICE TO CONTRACTOR

Any information on these plans that contains "Rec. Dwg." indicates that the information has been provided by means of record drawings. Record drawings may have been delivered by either written and or verbal means. Record drawings may have various sources including but not limited to: Architects, owners, utility companies, and government offices. The providers of record drawings are listed below. The supplemental information shown on these plans shall not be solely be relied upon as exact or complete. The contractor retains all responsibility to locate and verify all utilities including those that may interfere with this project prior to start of construction activities.

SOURCE:	DATA PROVIDED:	DATE:
Frank Young, Utah Valley University	Existing utility locations and sizes.	09/28/2009
Frank Young, Utah Valley University	Turf block paver locations	06/17/2009

PRIVATE ENGINEER'S NOTICE TO CONTRACTORS

The Contractor agrees that he shall assume sole and complete responsibility for job site conditions during the course of construction of this project, including safety of all persons and property; that this requirement shall apply continuously and not be limited to normal working hours; and that the contractor shall defend, indemnify, and hold the owner and the engineer harmless from any and all liability, real or alleged, in connection with the performance of work on this project, excepting for liability arising from the sole negligence of the owner or the engineer.

ALL CONSTRUCTION TO CONFORM TO CITY STANDARDS AND SPECIFICATIONS.

GREAT BASIN ENGINEERING
5746 South 1475 East · Suite 200
Ogden, Utah 84403 Main (801)394-4515
S.L.C (801)521-0222 FAX 801-392-7544
WWW.GREATBASINENGINEERING.COM

Utah Valley University New Science Building

800 West University Parkway
Orem, Utah 84058

DFCM

DRAWN BY:	HA
CHECKED BY:	DRW
OWNER PROJECT NO.:	09020790
GSBS PROJECT NO.:	2009.115.00
ISSUED DATE:	05.07.10

UTILITY TUNNEL PLAN AND PROFILE

CONSTRUCTION DOCUMENTS

CU-306

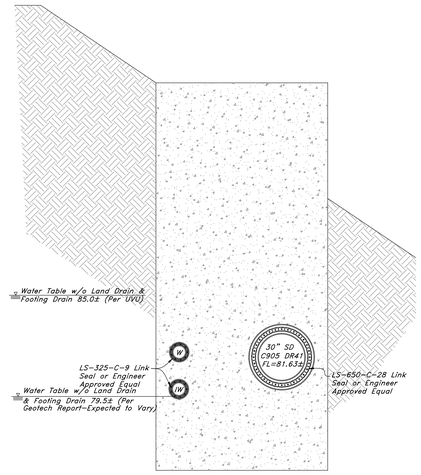

Tunnel Section A
(End Wall)

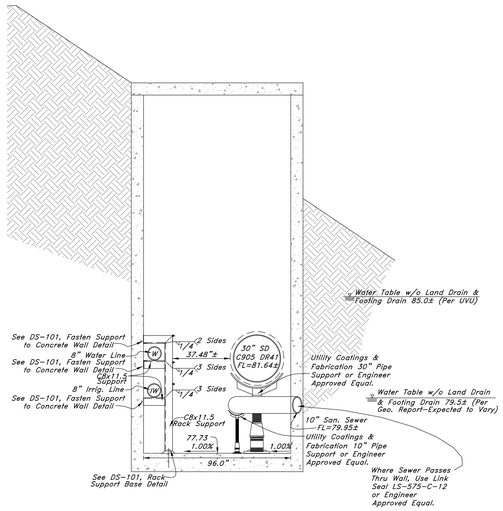

Tunnel Section AA

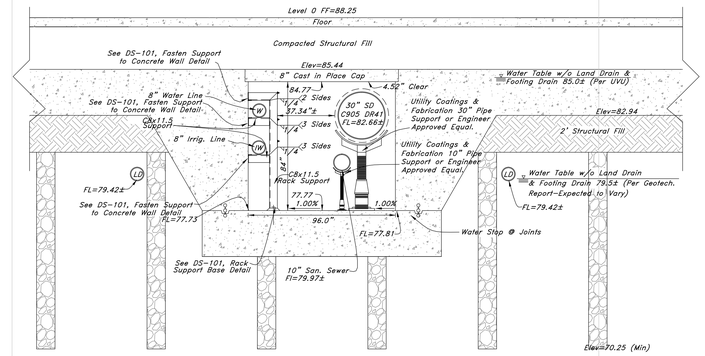

Tunnel Section B

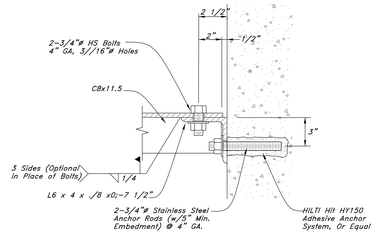

Fasten Support to Concrete Wall Detail

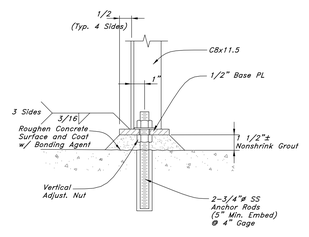

Rack Support Base Detail

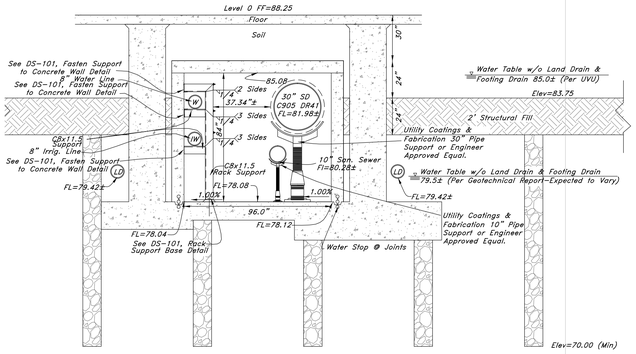

Tunnel Section C

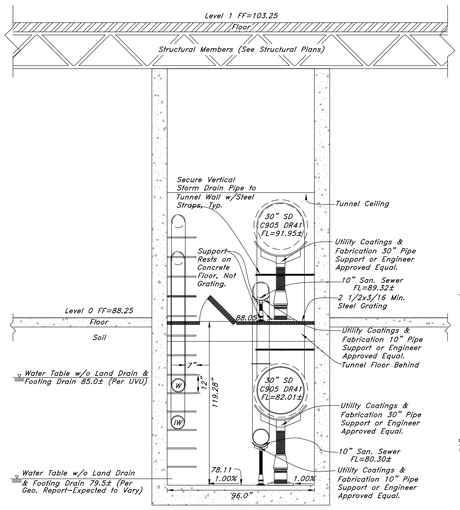

Tunnel Section D

See Structural Plans for Tunnel Design

BILCO or Engineer Approved Equal
Type J-AL 24x30 Sidewalk
Door w/ Grated Plate Cover

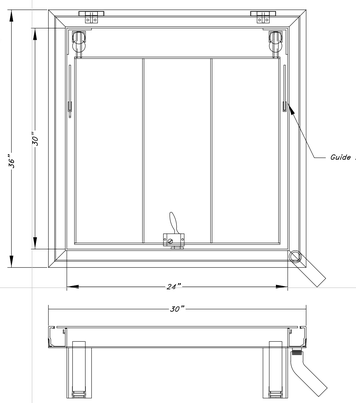

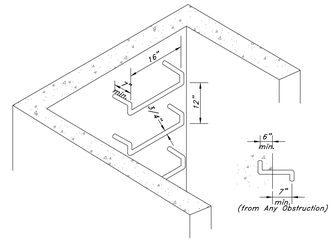

Tunnel Access Ladder

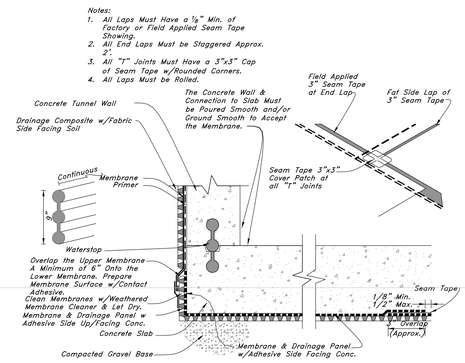

Waterproofing Details

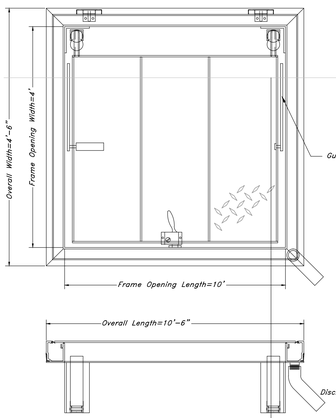

BILCO or Engineer Approved Equal
Type J-AL 48x120
Sidewalk Door

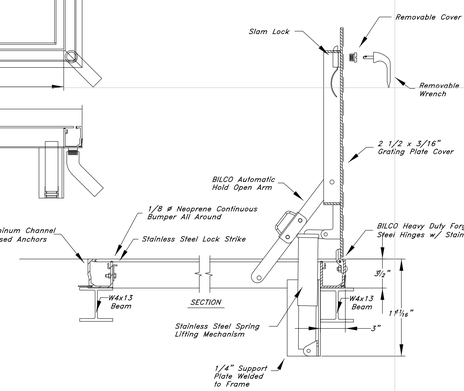

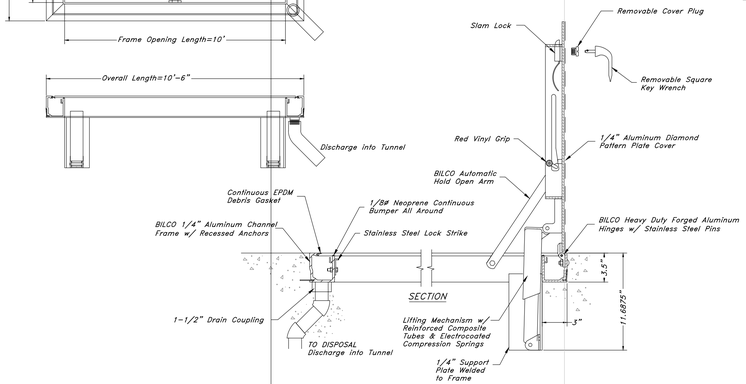

Exterior Tunnel Access Hatch

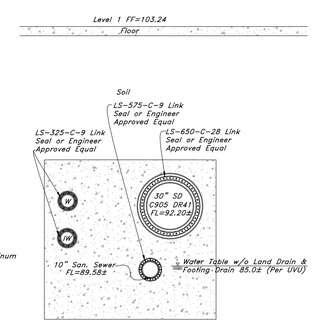

Tunnel Section E

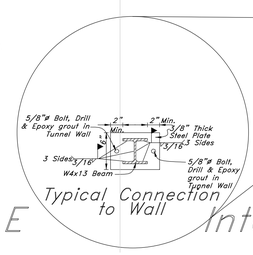

Typical Connection to Wall

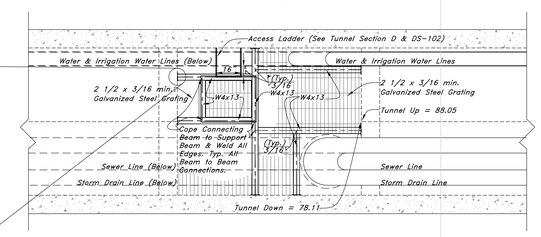

Interior Tunnel Grate/Access Hatch

CAUTION NOTICE TO CONTRACTOR

The contractor is specifically cautioned that the location and/or elevation of existing utilities as shown on these plans are based on records of the various utility companies and, where possible, measurements taken in the field. The information is not to be relied on as being exact or complete. The contractor must call the appropriate utility company at least 48 hours before any excavation to request exact field location of utilities. It shall be the responsibility of the contractor to relocate all existing utilities which conflict with the propose improvements shown on the plans.

SUPPLEMENT TO CAUTION NOTICE TO CONTRACTOR

Any information on these plans that contains "Rec. Dwg." indicates that the information has been provided by means of record drawings. Record drawings may have been delivered by either written and or verbal means. Record drawings may have various sources including but not limited to: Architects, owners, utility companies, and government offices. The providers of record drawings are listed below. The supplemental information shown on these plans shall not be solely relied upon as exact or complete. The contractor retains all responsibility to locate and verify all utilities including those that may interfere with this project prior to start of construction activities.

SOURCE:	DATA PROVIDED:	DATE:
Frank Young, Utah Valley University	Existing utility locations and sizes.	09/28/2009
Frank Young, Utah Valley University	Turf block paver locations	06/17/2009

PRIVATE ENGINEER'S NOTICE TO CONTRACTORS

The Contractor agrees that he shall assume sole and complete responsibility for job site conditions during the course of construction of this project, including safety of all persons and property; that this requirement shall apply continuously and not be limited to normal working hours; and that the contractor shall defend, indemnify, and hold the owner and the engineer harmless from any and all liability, real or alleged, in connection with the performance of work on this project, excepting for liability arising from the sole negligence of the owner or the engineer.

ALL CONSTRUCTION TO CONFORM TO CITY STANDARDS AND SPECIFICATIONS

GREAT BASIN ENGINEERING UNLIMITED
5746 South 1475 East - Suite 200
Ogden, Utah 84403 Main (801)394-4515
S.L.C (801)521-0222 FAX 801-392-7544
www.greatbasinengineering.com

GSBS ARCHITECTS
375 WEST 200 SOUTH
SALT LAKE CITY, UT 84101
P 801.521.8600
F 801.521.7915
www.gsbsarchitects.com

REVISIONS:

No. 166184 MARK EUGENE BABBITT 5-7-10 STATE OF UTAH

Utah Valley University New Science Building

800 West University Parkway
Orem, Utah 84058

DFCM

DRAWN BY:	HA
CHECKED BY:	DRW
OWNER PROJECT NO.:	09020790
GSBS PROJECT NO.:	2009.115.00
ISSUED DATE:	05.07.10

UTILITY TUNNEL DETAIL SHEET

CONSTRUCTION DOCUMENTS

DS-101

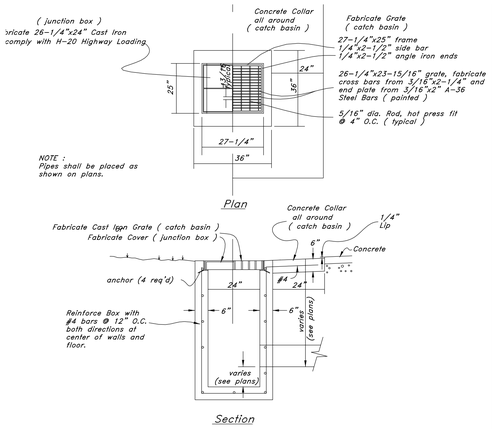

Typical Catch Basin

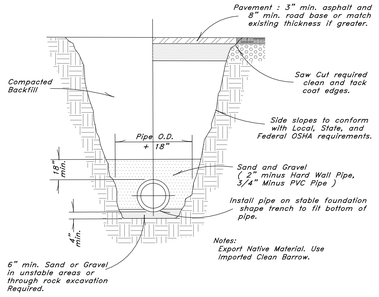

Typical Trench Detail

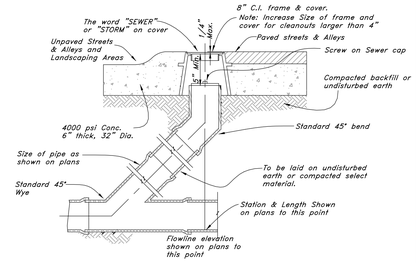

Sewer, Storm, and Roof Drain Cleanout Detail

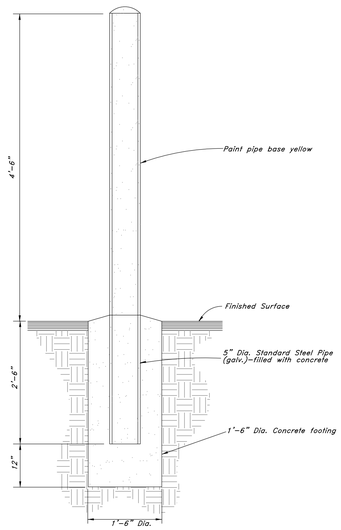

Bollard Detail

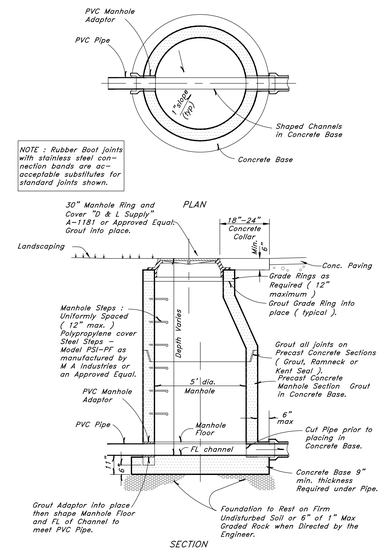

Typical Manhole Detail

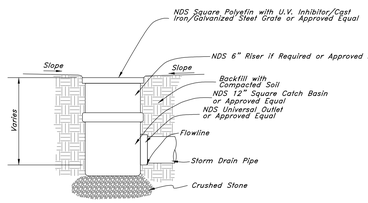

12" Area Drain

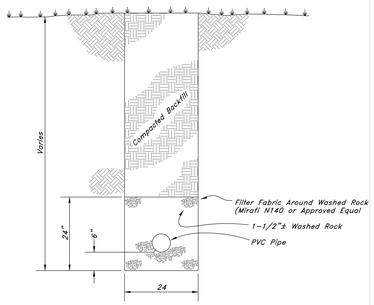

Typical Land Drain Detail

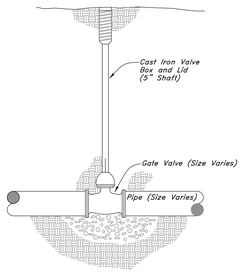

Gate Valve Box & Lid Detail

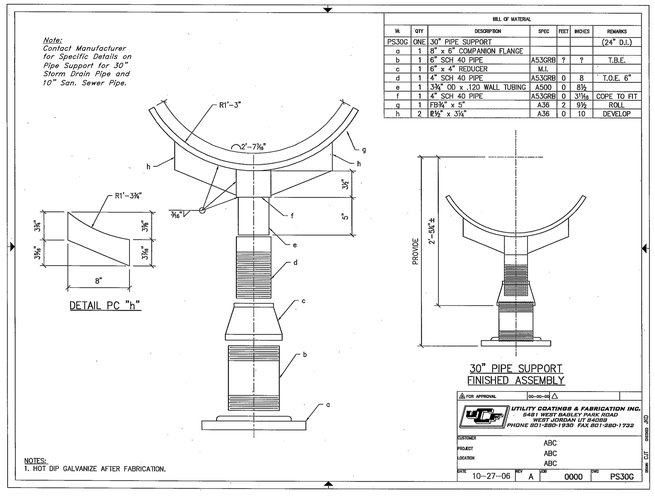

Pipe Support Detail

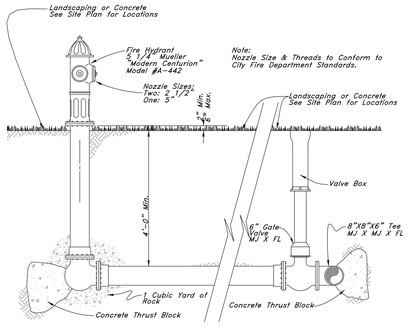

Typical Fire Hydrant & Valve Connection

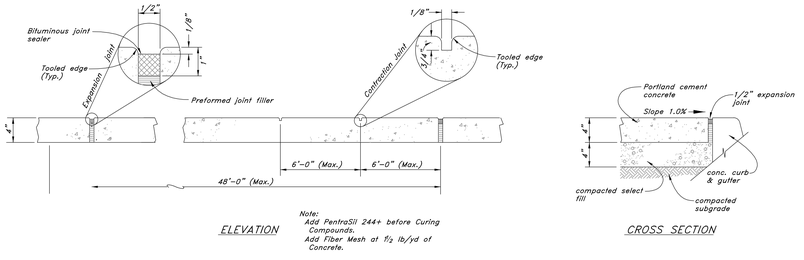

Concrete Sidewalk

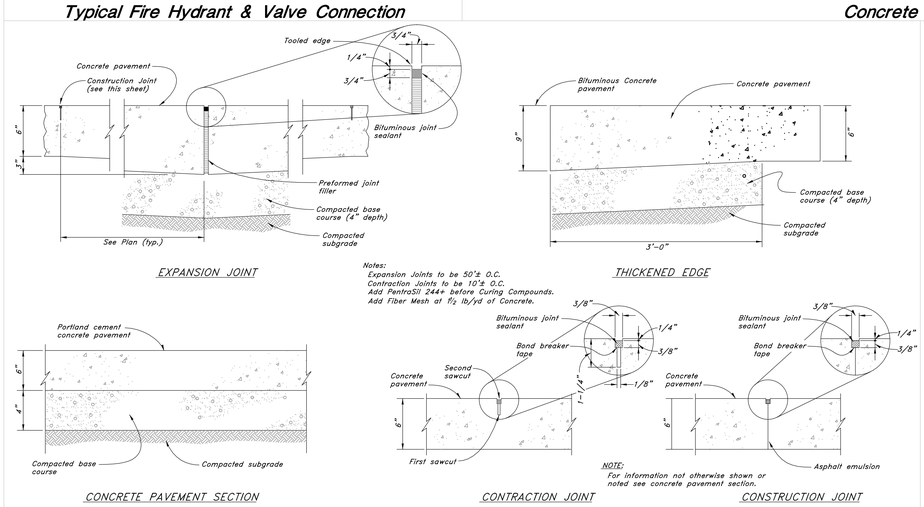

Heavy Duty Portland

CAUTION NOTICE TO CONTRACTOR

The contractor is specifically cautioned that the location and/or elevation of existing utilities as shown on these plans are based on records of the various utility companies and, where possible, measurements taken in the field. The information is not to be relied on as being exact or complete. The contractor must call the appropriate utility company at least 48 hours before any excavation to request exact field location of utilities. It shall be the responsibility of the contractor to relocate all existing utilities which conflict with the propose improvements shown on the plans.

SUPPLEMENT TO CAUTION NOTICE TO CONTRACTOR

Any information on these plans that contains "Rec. Dwg." indicates that the information has been provided by means of record drawings. Record drawings may have been delivered by either written and or verbal means. Record drawings may have various sources including but not limited to: Architects, owners, utility companies, and government offices. The providers of record drawings are listed below. The supplemental information shown on these plans shall not be solely be relied upon as exact or complete. The contractor retains all responsibility to locate and verify all utilities including those that may interfere with this project prior to start of construction activities.

SOURCE:	DATA PROVIDED:	DATE:
Frank Young, Utah Valley University	Existing utility locations and sizes.	09/28/2009
Frank Young, Utah Valley University	Turf block paver locations	06/17/2009

PRIVATE ENGINEER'S NOTICE TO CONTRACTORS

The Contractor agrees that he shall assume sole and complete responsibility for job site conditions during the course of construction of this project, including safety of all persons and property; that this requirement shall apply continuously and not be limited to normal working hours; and that the contractor shall defend, indemnify, and hold the owner and the engineer harmless from any and all liability, real or alleged, in connection with the performance of work on this project, excepting for liability arising from the sole negligence of the owner or the engineer.

ALL CONSTRUCTION TO CONFORM TO CITY STANDARDS AND SPECIFICATIONS

GREAT BASIN ENGINEERING
5746 South 1475 East - Suite 200
Ogden, Utah 84403 Main (801)394-4515
S.L.C (801)521-0222 FAX 801-392-7544
www.greatbasinengineering.com

GSBS ARCHITECTS
375 WEST 200 SOUTH
SALT LAKE CITY, UT 84101
P 801.521.8600
F 801.521.7913
www.gsbsarchitects.com

REVISIONS:

Utah Valley University New Science Building

800 West University Parkway
Orem, Utah 84058

DFCM

DRAWN BY:	HA
CHECKED BY:	DRW
OWNER PROJECT NO.:	09020790
GSBS PROJECT NO.:	2009.115.00
ISSUED DATE:	05.07.10

DETAIL SHEET

CONSTRUCTION DOCUMENTS

DS-102

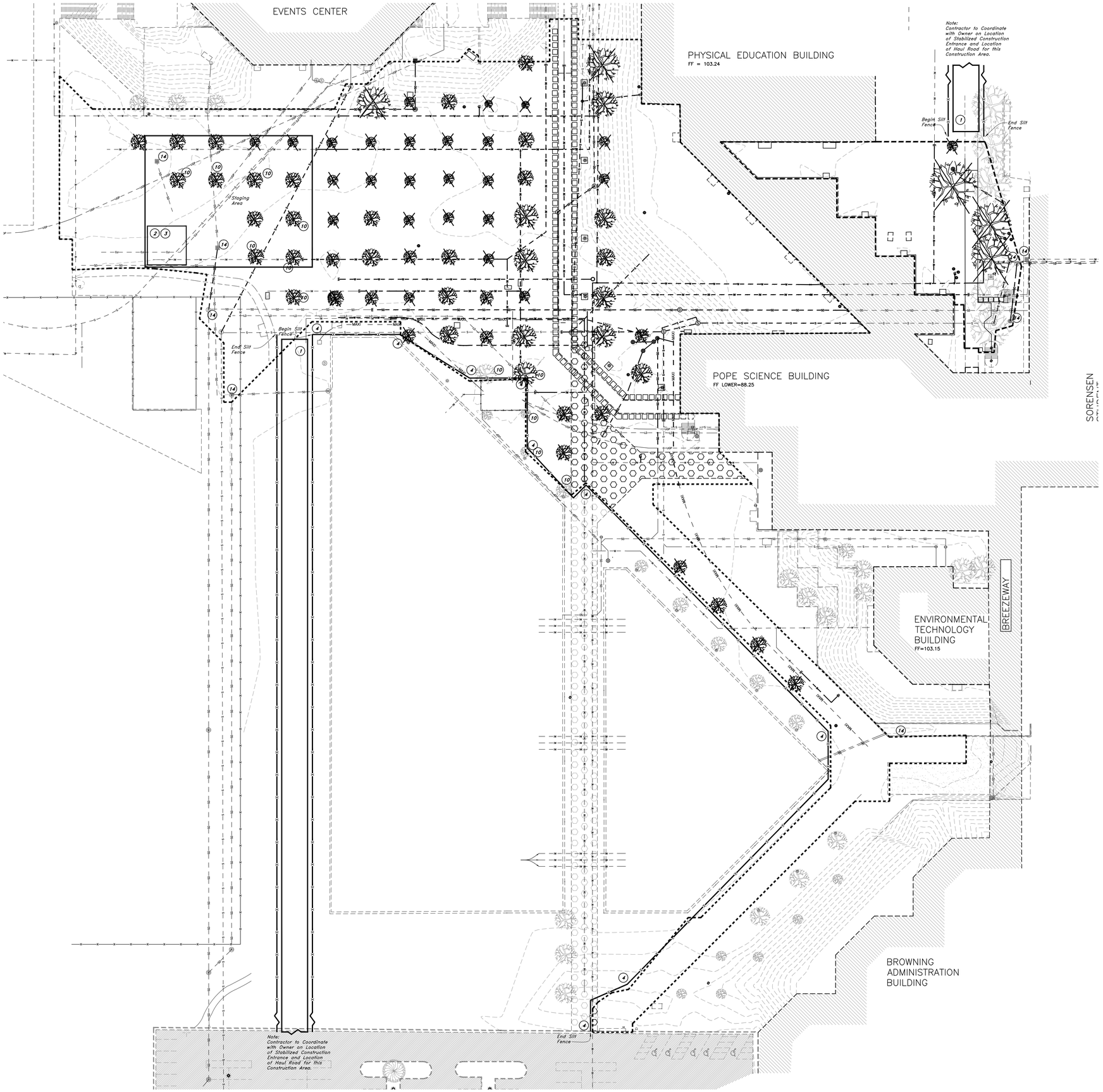

Scale: 1" = 30'

30 0 15 30 40 50 60

Graphic Scale

Legend

(Note: All items may not appear on drawing)

San. Sewer Manhole	S
Water Manhole	W
Storm Drain Manhole	D
Electrical Manhole	E
Catch Basins	
Exist. Fire Hydrant	
Fire Hydrant	
Exist. Water Valve	
Water Valve	
Sanitary Sewer	—S—
Culinary Water	—W—
Gas Line	—G—
Irrigation Line	—IW—
Storm Drain	—SD—
Telephone Line	—T—
Secondary Waterline	—SW—
Power Line	—P—
Fire Line	—F—
Land Drain	—LD—
Power pole	
Power pole w/guy	
Light Pole	
Fence	x x x x
Flowline of ditch	
Overhead Power line	—OHP—
Corrugated Metal Pipe	CMP
Concrete Pipe	CP
Reinforced Concrete Pipe	RCP
Ductile Iron	DI
Polyvinyl Chloride	PVC
Top of Asphalt	TA
Edge of Asphalt	EA
Centerline	CL
Flowline	FL
Finish Floor	FF
Top of Curb	TC
Top of Wall	TWL
Top of Walk	TW
Top of Concrete	TCN
Natural Ground	NG
Finish Grade	FG
Fire Department Connection	FDC
Finish Contour	—90—
Exist. Contour	—90—
Finish Grade	95.33TA
Exist. Grade	95.72TA
Ridge Line	—R—
Direction of Flow	
Existing Asphalt	
New Asphalt	
Existing Footings	
Concrete	
Open Face Curb & Gutter	
Turf Block Roadway	
Demo Tree	

PHASE 1 Demolition

1. *Construct BMP Stabilized Construction Entrance*
2. *Construct BMP Vehicle and Equipment Cleaning & Truck Wash*
3. *Construct BMP Vehicle and Equipment Fueling*
4. *Construct BMP Silt Fence or Approved Equal*
5. *Utilize BMP Portable Toilets*
6. *Utilize BMP Temporary and Permanent Seeding*
7. *Utilize BMP Construction Sequencing*
8. *Utilize BMP Grading Practices*
9. *Utilize BMP Materials Storage*
10. *Utilize BMP Preservation of Existing Vegetation*
11. *Utilize BMP Parking Lot Sweeping/Vacuuming*
12. *Utilize BMP Spill Clean-up*
13. *Construct BMP Construction Road Stabilization*
14. *Construct BMP Inlet Protection, Concrete Block, Gravel, Excavated, Sand Bag Barrier, Straw Bale Barrier or Silt Fence*

Notes:

1. *Contractor to show location of Portable Toilets*
2. *Not all BMP's are shown on each SWPP sheet.*
3. *Contractor should be familiar with SWPP manual provided by Great Basin Engineering. The SWPP manual is part of the SWPP documents.*
4. *SWPP details are shown in SWPP manual.*
5. *Contractor to modify SWPP items as necessary*

Project Benchmark:
Working Point 856.39' N21°6'56"E from Southwest Corner of Existing Pope Science Building.
Northing 9690.500
Easting 10234.950
Elevation 107.947 (Local Datum)

CAUTION NOTICE TO CONTRACTOR

The contractor is specifically cautioned that the location and/or elevation of existing utilities as shown on these plans are based on records of the various utility companies and, where possible, measurements taken in the field. The information is not to be relied on as being exact or complete. The contractor must call the appropriate utility company at least 48 hours before any excavation to request exact field location of utilities. It shall be the responsibility of the contractor to relocate all existing utilities which conflict with the propose improvements shown on the plans.

SUPPLEMENT TO CAUTION NOTICE TO CONTRACTOR

Any information on these plans that contains "Rec. Dwg." indicates that the information has been provided by means of record drawings. Record drawings may have been delivered by either written and or verbal means. Record drawings may have various sources including but not limited to: Architects, owners, utility companies, and government offices. The providers of record drawings are listed below. The supplemental information shown on these plans shall not be solely be relied upon as exact or complete. The contractor retains all responsibility to locate and verify all utilities including those that may interfere with this project prior to start of construction activities.

SOURCE:	DATA PROVIDED:	DATE:
Frank Young, Utah Valley University	Existing utility locations and sizes.	09/28/2009
Frank Young, Utah Valley University	Turf block paver locations	06/17/2009

PRIVATE ENGINEER'S NOTICE TO CONTRACTORS

The Contractor agrees that he shall assume sole and complete responsibility for job site conditions during the course of construction of this project, including safety of all persons and property; that this requirement shall apply continuously and not be limited to normal working hours; and that the contractor shall defend, indemnify, and hold the owner and the engineer harmless from any and all liability, real or alleged, in connection with the performance of work on this project, excepting for liability arising from the sole negligence of the owner or the engineer.

ALL CONSTRUCTION TO CONFORM TO CITY STANDARDS AND SPECIFICATIONS

GREAT BASIN ENGINEERING
5746 South 1475 East · Suite 200
Ogden, Utah 84403 Main (801)394-4515
S.L.C.(801)521-0222 FAX 801-392-7544
WWW.GREATBASINENGINEERING.COM

GSBS ARCHITECTS
375 WEST 200 SOUTH
SALT LAKE CITY, UT 84101
P 801.521.8600
F 801.521.7913
www.gsbsarchitects.com

REVISIONS:

LICENSED PROFESSIONAL ENGINEER No. 166184 MARK EUGENE BABBITT 5-7-10 STATE OF UTAH

Utah Valley University New Science Building

800 West University Parkway
Orem, Utah 84058

DFCM

DRAWN BY:	HA
CHECKED BY:	DRW
OWNER PROJECT NO.:	09020790
GSBS PROJECT NO.:	2009.115.00
ISSUED DATE:	05.07.10

STORM WATER POLLUTION PREVENTION PLAN DEMOLITION PHASE

CONSTRUCTION DOCUMENTS

CW-101

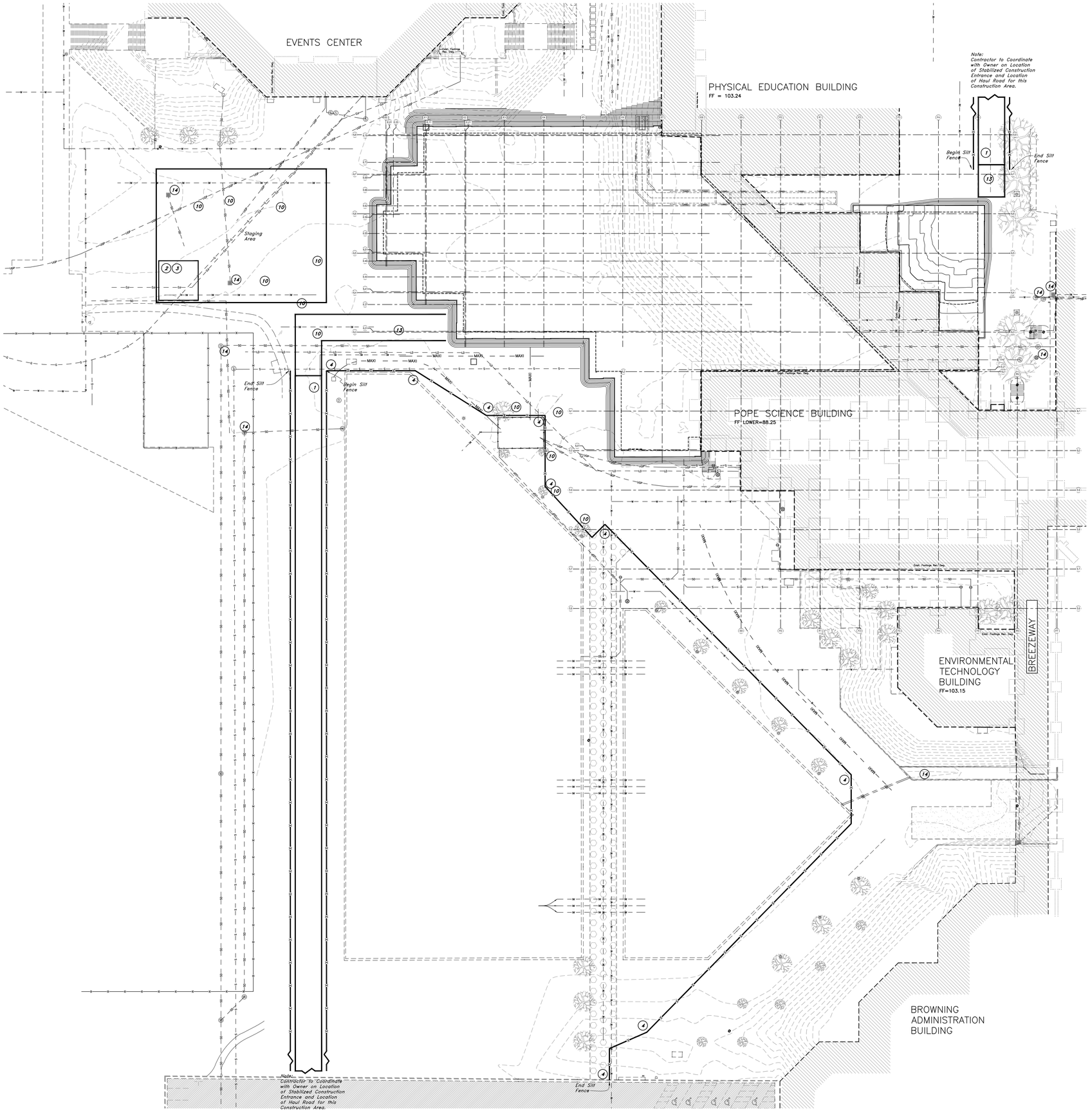

Scale: 1" = 20'

Graphic Scale

Legend

(Note: All items may not appear on drawing)

San. Sewer Manhole	S
Water Manhole	W
Storm Drain Manhole	D
Electrical Manhole	E
Catch Basins	
Exist. Fire Hydrant	
Fire Hydrant	
Exist. Water Valve	WV
Water Valve	WV
Sanitary Sewer	—S—
Culinary Water	—W—
Gas Line	—G—
Irrigation Line	—IW—
Storm Drain	—SD—
Telephone Line	—T—
Secondary Waterline	—SW—
Power Line	—P—
Fire Line	—F—
Land Drain	—LD—
Power pole	
Power pole w/guy	
Light Pole	
Fence	x x x
Flowline of ditch	
Overhead Power line	—OHP—
Corrugated Metal Pipe	CMP
Concrete Pipe	CP
Reinforced Concrete Pipe	RCP
Ductile Iron	DI
Polyvinyl Chloride	PVC
Top of Asphalt	TA
Edge of Asphalt	EA
Centerline	CL
Flowline	FL
Finish Floor	FF
Top of Curb	TC
Top of Wall	TWL
Top of Walk	TW
Top of Concrete	TCN
Natural Ground	NG
Finish Grade	FG
Fire Department Connection	FDC
Finish Contour	—90—
Exist. Contour	—90—
Finish Grade	**95.33TA**
Exist. Grade	95.72TA
Ridge Line	—R—
Direction of Flow	→
Existing Asphalt	
New Asphalt	
Existing Footings	
Concrete	
Open Face Curb & Gutter	
Turf Block Roadway	
Demo Tree	

PHASE 2 Excavation
REFER TO ARCHITECTURAL & STRUCTURAL PLANS FOR FOOTING & FOUNDATION & EXCAVATION REQUIREMENTS.

1. *Construct BMP Stabilized Construction Entrance*
2. *Construct BMP Vehicle and Equipment Cleaning & Truck Wash*
3. *Construct BMP Vehicle and Equipment Fueling*
4. *Construct BMP Silt Fence or Approved Equal*
5. *Utilize BMP Portable Toilets*
6. *Utilize BMP Temporary and Permanent Seeding*
7. *Utilize BMP Construction Sequencing*
8. *Utilize BMP Grading Practices*
9. *Utilize BMP Materials Storage*
10. *Utilize BMP Preservation of Existing Vegetation*
11. *Utilize BMP Parking Lot Sweeping/Vacuuming*
12. *Utilize BMP Spill Clean-up*
13. *Construct BMP Construction Road Stabilization*
14. *Construct BMP Inlet Protection, Concrete Block, Gravel, Excavated, Sand Bag Barrier, Straw Bale Barrier or Silt Fence*

Notes:

1. *Contractor to show location of Portable Toilets*
2. *Not all BMP's are shown on each SWPP sheet.*
3. *Contractor should be familiar with SWPP manual provided by Great Basin Engineering. The SWPP manual is part of the SWPP documents.*
4. *SWPP details are shown in SWPP manual.*
5. *Contractor to modify SWPP items as necessary*

CAUTION NOTICE TO CONTRACTOR

The contractor is specifically cautioned that the location and/or elevation of existing utilities as shown on these plans are based on records of the various utility companies and, where possible, measurements taken in the field. The information is not to be relied on as being exact or complete. The contractor must call the appropriate utility company at least 48 hours before any excavation to request exact field location of utilities. It shall be the responsibility of the contractor to relocate all existing utilities which conflict with the propose improvements shown on the plans.

SUPPLEMENT TO CAUTION NOTICE TO CONTRACTOR

Any information on these plans that contains "Rec. Dwg." indicates that the information has been provided by means of record drawings. Record drawings may have been delivered by either written and or verbal means. Record drawings may have various sources including but not limited to: Architects, owners, utility companies, and government offices. The providers of record drawings are listed below. The supplemental information shown on these plans shall not be solely be relied upon as exact or complete. The contractor retains all responsibility to locate and verify all utilities including those that may interfere with this project prior to start of construction activities.

SOURCE:	DATA PROVIDED:	DATE:
Frank Young, Utah Valley University	Existing utility locations and sizes.	09/28/2009
Frank Young, Utah Valley University	Turf block paver locations	06/17/2009

PRIVATE ENGINEER'S NOTICE TO CONTRACTORS

The Contractor agrees that he shall assume sole and complete responsibility for job site conditions during the course of construction of this project, including safety of all persons and property; that this requirement shall apply continuously and not be limited to normal working hours; and that the contractor shall defend, indemnify, and hold the owner and the engineer harmless from any and all liability, real or alleged, in connection with the performance of work on this project, excepting for liability arising from the sole negligence of the owner or the engineer.

ALL CONSTRUCTION TO CONFORM TO CITY STANDARDS AND SPECIFICATIONS

GREAT BASIN ENGINEERING
5746 South 1475 East · · Suite 200
Ogden, Utah 84403 Main (801)394-4515
S.L.C (801)521-0222 FAX 801-392-7544
www.greatbasinengineering.com

GSBS ARCHITECTS
375 WEST 200 SOUTH
SALT LAKE CITY, UT 84101
P 801.521.8600
F 801.521.7913
www.gsbsarchitects.com

REVISIONS:

LICENSED PROFESSIONAL ENGINEER No. 166184 MARK EUGENE BABBITT 5-7-10 STATE OF UTAH

Utah Valley University New Science Building

800 West University Parkway
Orem, Utah 84058

DFCM

DRAWN BY:	HA
CHECKED BY:	DRW
OWNER PROJECT NO.:	09020790
GSBS PROJECT NO.:	2009.115.00
ISSUED DATE:	05.07.10

STORM WATER POLLUTION PREVENTION PLAN
BUILDING EXCAVATION PHASE

CONSTRUCTION DOCUMENTS

CW-102

W:\09n220-UVU Pope\DWG\09N220S6.DWG, 5/5/2010 3:11:17 PM, heathera, 1:1

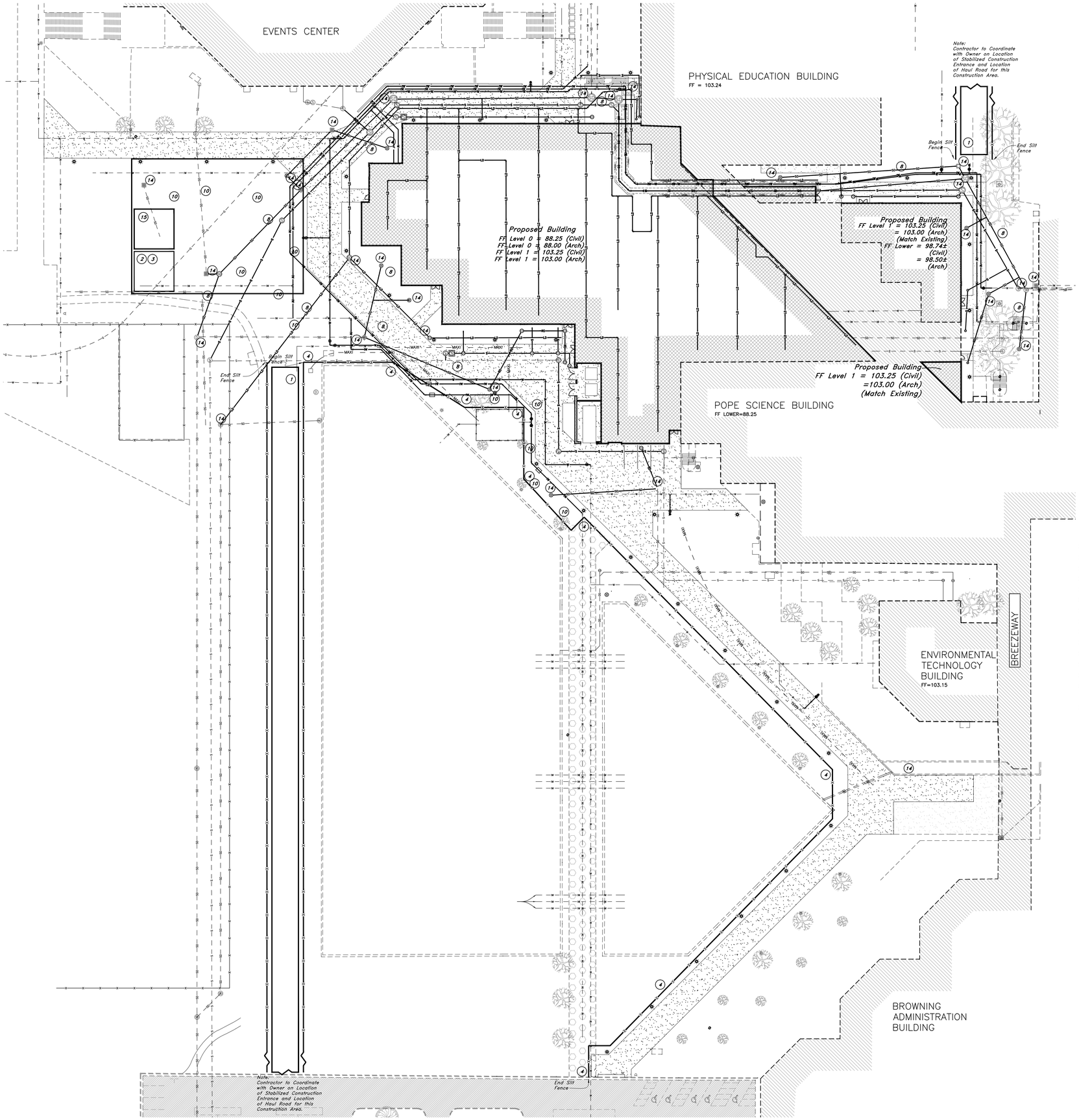

Legend

(Note: All items may not appear on drawing)

San. Sewer Manhole	S
Water Manhole	W
Storm Drain Manhole	D
Electrical Manhole	E
Catch Basins	
Exist. Fire Hydrant	
Fire Hydrant	
Exist. Water Valve	
Water Valve	
Sanitary Sewer	—S—
Culinary Water	—W—
Gas Line	—G—
Irrigation Line	—IW—
Storm Drain	—SD—
Telephone Line	—SD—
Secondary Waterline	—I—
Power Line	—P—
Fire Line	—F—
Land Drain	—LD—
Power pole	
Power pole w/guy	
Light Pole	
Fence	x x x
Flowline of ditch	
Overhead Power line	—OHP—
Corrugated Metal Pipe	CMP
Concrete Pipe	CP
Reinforced Concrete Pipe	RCP
Ductile Iron	DI
Polyvinyl Chloride	PVC
Top of Asphalt	TA
Edge of Asphalt	EA
Centerline	CL
Flowline	FL
Finish Floor	FF
Top of Curb	TC
Top of Wall	TWL
Top of Walk	TW
Top of Concrete	TCN
Natural Ground	NG
Finish Grade	FG
Fire Department Connection	FDC
Finish Contour	—90—
Exist. Contour	—90—
Finish Grade	95.33TA
Exist. Grade	95.72TA
Ridge Line	—R—
Direction of Flow	
Existing Asphalt	
New Asphalt	
Existing Footings	
Concrete	
Open Face Curb & Gutter	
Turf Block Roadway	
Demo Tree	

Scale: 1" = 30'

30 0 15 30 40 50 60

Graphic Scale

PHASE 3 Utility Construction
MODIFY HAUL ROAD AS NEEDED

1. Construct BMP Stabilized Construction Entrance
2. Construct BMP Vehicle and Equipment Cleaning & Truck Wash
3. Construct BMP Vehicle and Equipment Fueling
4. Construct BMP Silt Fence or Approved Equal
5. Utilize BMP Portable Toilets
6. Utilize BMP Temporary and Permanent Seeding
7. Utilize BMP Construction Sequencing
8. Utilize BMP Grading Practices
9. Utilize BMP Materials Storage
10. Utilize BMP Preservation of Existing Vegetation
11. Utilize BMP Parking Lot Sweeping/Vacuuming
12. Utilize BMP Spill Clean-up
13. Construct BMP Construction Road Stabilization
14. Construct BMP Inlet Protection, Concrete Block, Gravel, Excavated, Sand Bag Barrier, Straw Bale Barrier or Silt Fence
15. Construct BMP Concrete Waste Management

Notes:

1. Contractor to show location of Portable Toilets
2. Not all BMP's are shown on each SWPP sheet.
3. Contractor should be familiar with SWPP manual provided by Great Basin Engineering. The SWPP manual is part of the SWPP documents.
4. SWPP details are shown in SWPP manual.
5. Contractor to modify SWPP items as necessary

CAUTION NOTICE TO CONTRACTOR

The contractor is specifically cautioned that the location and/or elevation of existing utilities as shown on these plans are based on records of the various utility companies and, where possible, measurements taken in the field. The information is not to be relied on as being exact or complete. The contractor must call the appropriate utility company at least 48 hours before any excavation to request exact field location of utilities. It shall be the responsibility of the contractor to relocate all existing utilities which conflict with the propose improvements shown on the plans.

SUPPLEMENT TO CAUTION NOTICE TO CONTRACTOR

Any information on these plans that contains "Rec. Dwg." indicates that the information has been provided by means of record drawings. Record drawings may have been delivered by either written and or verbal means. Record drawings may have various sources including but not limited to: Architects, owners, utility companies, and government offices. The providers of record drawings are listed below. The supplemental information shown on these plans shall not be solely be relied upon as exact or complete. The contractor retains all responsibility to locate and verify all utilities including those that may interfere with this project prior to start of construction activities.

SOURCE:	DATA PROVIDED:	DATE:
Frank Young, Utah Valley University	Existing utility locations and sizes.	09/28/2009
Frank Young, Utah Valley University	Turf block paver locations	06/17/2009

PRIVATE ENGINEER'S NOTICE TO CONTRACTORS

The Contractor agrees that he shall assume sole and complete responsibility for job site conditions during the course of construction of this project, including safety of all persons and property; that this requirement shall apply continuously and not be limited to normal working hours; and that the contractor shall defend, indemnify, and hold the owner and the engineer harmless from any and all liability, real or alleged, in connection with the performance of work on this project, excepting for liability arising from the sole negligence of the owner or the engineer.

ALL CONSTRUCTION TO CONFORM TO CITY STANDARDS AND SPECIFICATIONS

GREAT BASIN ENGINEERING
5746 South 1475 East · Suite 200
Ogden, Utah 84403 Main (801)394-4515
S.L.C. (801)521-0222 Fax 801-392-7544
www.greatbasinengineering.com

GSBS ARCHITECTS
375 WEST 200 SOUTH
SALT LAKE CITY, UT 84101
P 801.521.8600
F 801.521.7913
www.gsbsarchitects.com

REVISIONS:

LICENSED PROFESSIONAL ENGINEER No. 166184 MARK EUGENE BABBITT 5-7-10 STATE OF UTAH

Utah Valley University New Science Building

800 West University Parkway
Orem, Utah 84058

DFCM

DRAWN BY:	HA
CHECKED BY:	DRW
OWNER PROJECT NO.:	09020790
GSBS PROJECT NO.:	2009.115.00
ISSUED DATE:	05.07.10

STORM WATER POLLUTION PREVENTION PLAN UTILITY CONSTRUCTION PHASE

CONSTRUCTION DOCUMENTS

CW-103

W:\09n220-UVU Pope\DWG\09N220S6.DWG, 5/5/2010 3:11:26 PM, heathera, 1:1

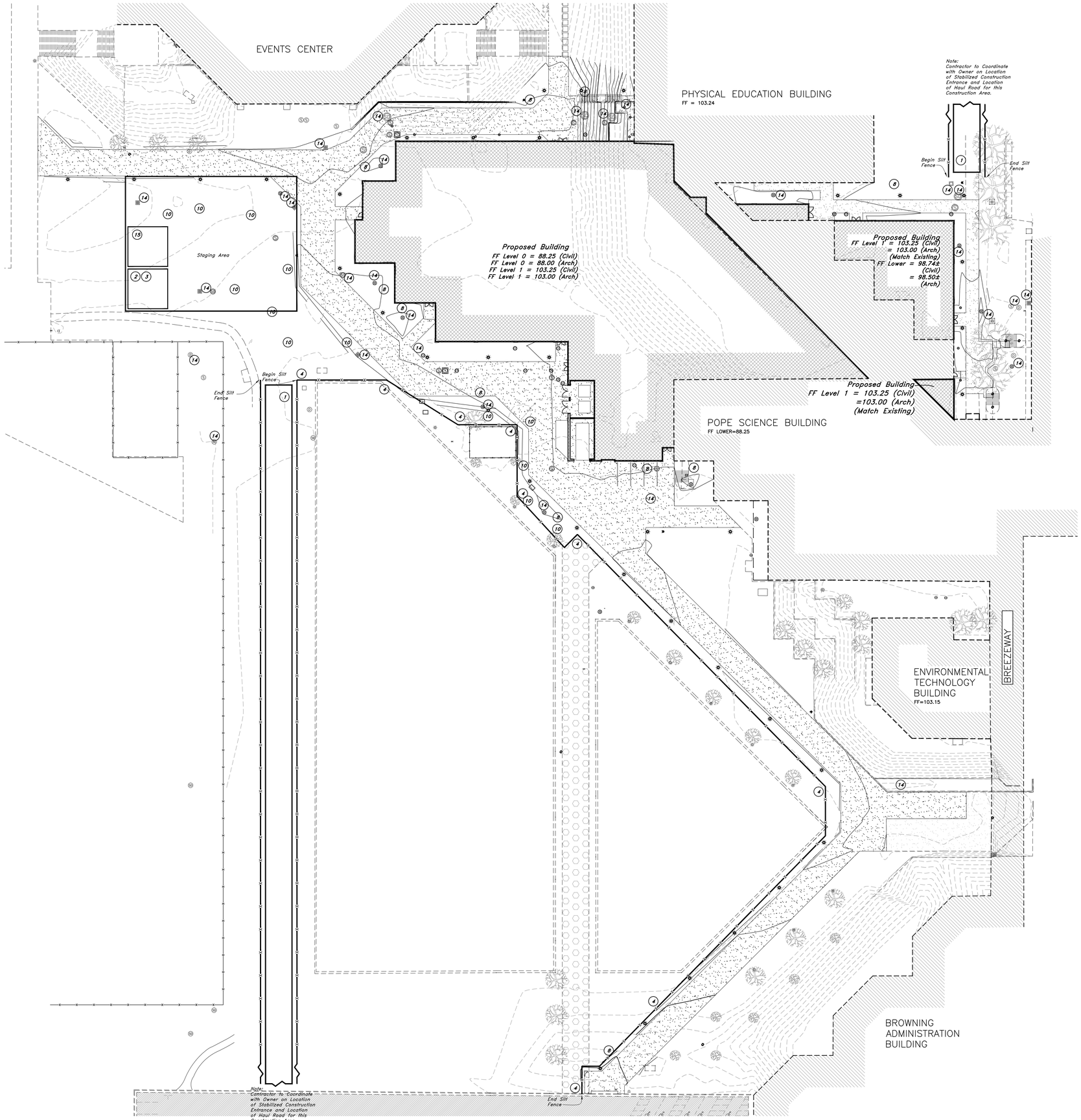

Scale: 1" = 30'

30 0 15 30 40 50 60

Graphic Scale

Legend

(Note: All items may not appear on drawing)

San. Sewer Manhole	S
Water Manhole	W
Storm Drain Manhole	D
Electrical Manhole	E
Catch Basins	
Exist. Fire Hydrant	
Fire Hydrant	
Exist. Water Valve	
Water Valve	
Sanitary Sewer	—S—
Culinary Water	—W—
Gas Line	—G—
Irrigation Line	—IW—
Storm Drain	—SD—
Telephone Line	—T—
Secondary Waterline	—SD—
Power Line	—P—
Fire Line	—F—
Land Drain	—LD—
Power pole	
Power pole w/guy	
Light Pole	
Fence	x x x
Flowline of ditch	
Overhead Power line	—OHP—
Corrugated Metal Pipe	CMP
Concrete Pipe	CP
Reinforced Concrete Pipe	RCP
Ductile Iron	DI
Polyvinyl Chloride	PVC
Top of Asphalt	TA
Edge of Asphalt	EA
Centerline	CL
Flowline	FL
Finish Floor	FF
Top of Curb	TC
Top of Wall	TWL
Top of Walk	TW
Top of Concrete	TCN
Natural Ground	NG
Finish Grade	FG
Fire Department Connection	FDC
Finish Contour	—90—
Exist. Contour	—90—
Finish Grade	**95.33TA**
Exist. Grade	95.72TA
Ridge Line	—R—
Direction of Flow	
Existing Asphalt	
New Asphalt	
Existing Footings	
Concrete	
Open Face Curb & Gutter	
Turf Block Roadway	
Demo Tree	

PHASE 4 Finish Grading
MODIFY BMP'S AS NEEDED UNTIL AREAS ARE NOT LESS THAN 70% STABALIZED

1. *Construct BMP Stabilized Construction Entrance*
2. *Construct BMP Vehicle and Equipment Cleaning & Truck Wash*
3. *Construct BMP Vehicle and Equipment Fueling*
4. *Construct BMP Silt Fence or Approved Equal*
5. *Utilize BMP Portable Toilets*
6. *Utilize BMP Temporary and Permanent Seeding*
7. *Utilize BMP Construction Sequencing*
8. *Utilize BMP Grading Practices*
9. *Utilize BMP Materials Storage*
10. *Utilize BMP Preservation of Existing Vegetation*
11. *Utilize BMP Parking Lot Sweeping/Vacuuming*
12. *Utilize BMP Spill Clean-up*
13. *Construct BMP Construction Road Stabilization*
14. *Construct BMP Inlet Protection, Concrete Block, Gravel, Excavated, Sand Bag Barrier, Straw Bale Barrier or Silt Fence*
15. *Construct BMP Concrete Waste Management*

Notes:

1. *Contractor to show location of Portable Toilets*
2. *Not all BMP's are shown on each SWPP sheet.*
3. *Contractor should be familiar with SWPP manual provided by Great Basin Engineering. The SWPP manual is part of the SWPP documents.*
4. *SWPP details are shown in SWPP manual.*
5. *Contractor to modify SWPP items as necessary*

CAUTION NOTICE TO CONTRACTOR

The contractor is specifically cautioned that the location and/or elevation of existing utilities as shown on these plans are based on records of the various utility companies and, where possible, measurements taken in the field. The information is not to be relied on as being exact or complete. The contractor must call the appropriate utility company at least 48 hours before any excavation to request exact field location of utilities. It shall be the responsibility of the contractor to relocate all existing utilities which conflict with the propose improvements shown on the plans.

SUPPLEMENT TO CAUTION NOTICE TO CONTRACTOR

Any information on these plans that contains "Rec. Dwg." indicates that the information has been provided by means of record drawings. Record drawings may have been delivered by either written and or verbal means. Record drawings may have various sources including but not limited to: Architects, owners, utility companies, and government offices. The providers of record drawings are listed below. The supplemental information shown on these plans shall not be solely be relied upon as exact or complete. The contractor retains all responsibility to locate and verify all utilities including those that may interfere with this project prior to start of construction activities.

SOURCE:	DATA PROVIDED:	DATE:
Frank Young, Utah Valley University	Existing utility locations and sizes.	09/28/2009
Frank Young, Utah Valley University	Turf block paver locations	06/17/2009

PRIVATE ENGINEER'S NOTICE TO CONTRACTORS

The Contractor agrees that he shall assume sole and complete responsibility for job site conditions during the course of construction of this project, including safety of all persons and property; that this requirement shall apply continuously and not be limited to normal working hours; and that the contractor shall defend, indemnify, and hold the owner and the engineer harmless from any and all liability, real or alleged, in connection with the performance of work on this project, excepting for liability arising from the sole negligence of the owner or the engineer.

ALL CONSTRUCTION TO CONFORM TO CITY STANDARDS AND SPECIFICATIONS

GREAT BASIN ENGINEERING
5746 South 1475 East · Suite 200
Ogden, Utah 84403 Main (801)394-4515
S.L.C (801)521-0222 Fax 801-392-7544
www.greatbasinengineering.com

GSBS ARCHITECTS
375 WEST 200 SOUTH
SALT LAKE CITY, UT 84101
P 801.521.8600
F 801.521.7913
www.gsbsarchitects.com

REVISIONS:

LICENSED PROFESSIONAL ENGINEER No. 166184 MARK EUGENE BABBITT 5-7-10 STATE OF UTAH

Utah Valley University New Science Building

800 West University Parkway
Orem, Utah 84058

DFCM

DRAWN BY:	HA
CHECKED BY:	DRW
OWNER PROJECT NO.:	09020790
GSBS PROJECT NO.:	2009.115.00
ISSUED DATE:	05.07.10

STORM WATER POLLUTION PREVENTION PLAN FINISH GRADING PHASE

CONSTRUCTION DOCUMENTS

CW-104

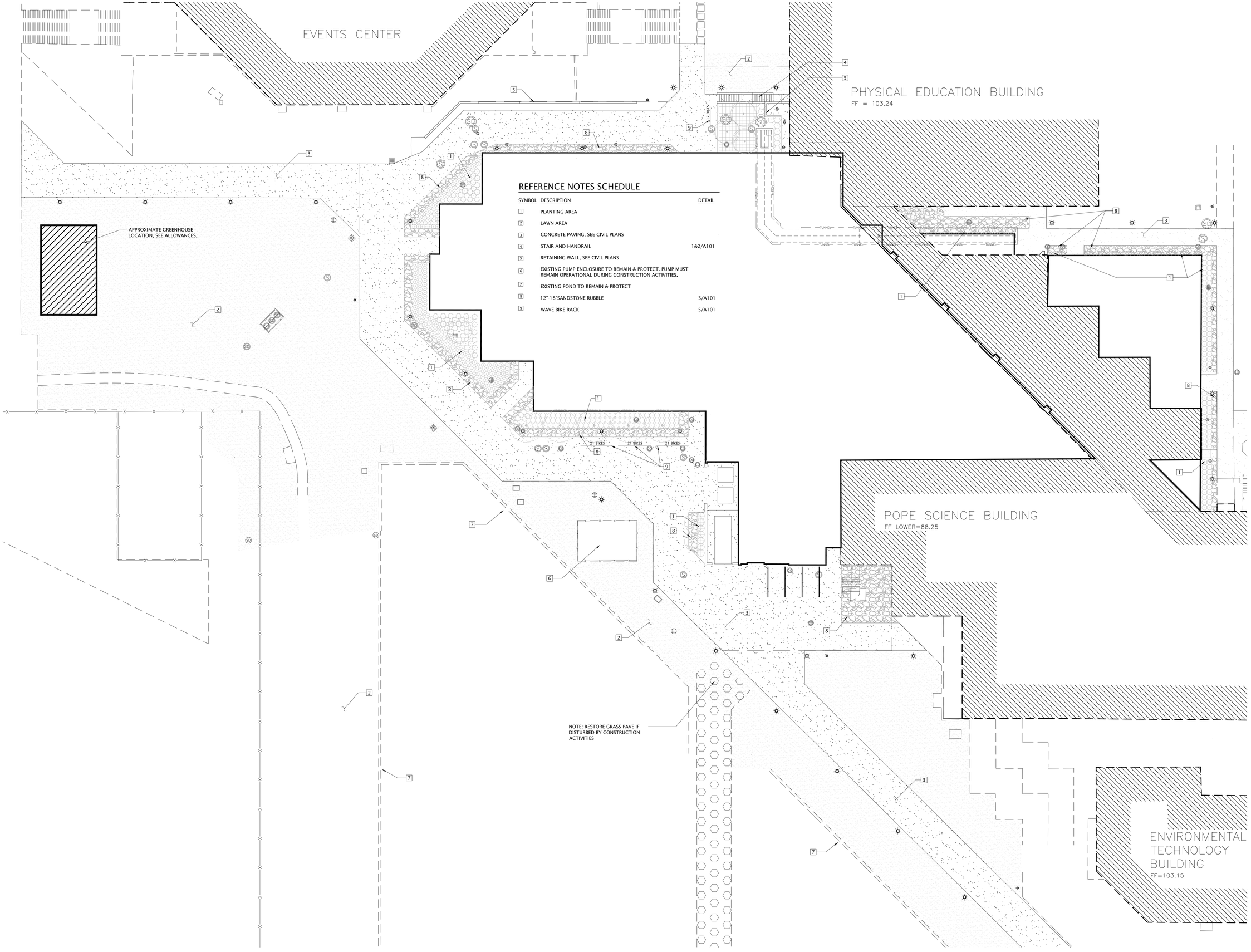

REFERENCE NOTES SCHEDULE

SYMBOL	DESCRIPTION	DETAIL
1	PLANTING AREA	
2	LAWN AREA	
3	CONCRETE PAVING, SEE CIVIL PLANS	
4	STAIR AND HANDRAIL	1&2/A101
5	RETAINING WALL, SEE CIVIL PLANS	
6	EXISTING PUMP ENCLOSURE TO REMAIN & PROTECT. PUMP MUST REMAIN OPERATIONAL DURING CONSTRUCTION ACTIVITIES.	
7	EXISTING POND TO REMAIN & PROTECT	
8	12"-18"SANDSTONE RUBBLE	3/A101
9	WAVE BIKE RACK	5/A101

SITE PLAN
SCALE: 1" = 20' - 0"
1 / A100

GSBS ARCHITECTS
375 WEST 200 SOUTH
SALT LAKE CITY, UT 84101
P 801.521.8600
F 801.521.7913
www.gsbsarchitects.com

LICENSED LANDSCAPE ARCHITECT
DAVID G. GARDNER
No. 5462489-5301
Signature
5/7/2010
Renewal Date
Date
STATE OF UTAH

REVISIONS:

Utah Valley University New Science Building

800 West University Parkway
Orem, Utah 84058

Division of Facilities Construction and Management

DRAWN BY:	EJS
CHECKED BY:	
DFCM PROJECT NO.:	09020790
GSBS PROJECT NO.:	2009.115.00
ISSUED DATE:	5/7/2010

SITE PLAN

CONCSTRUCTION DOCUMENTS

AS100

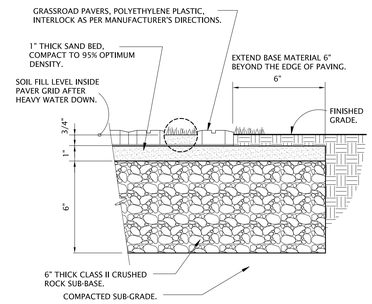

4 PLASTIC TURF REINFORCED PAVING

3" = 12" 02795-10001

NOTE: SEE PLANS FOR BIKE CAPACITY.

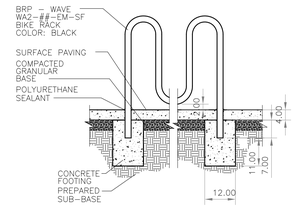

5 WAVE BIKE RACK

1/2" = 12" DETAIL–FILE

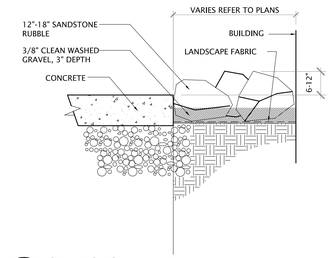

3 SANDSTONE RUBBLE

1" = 1'-0" 329413.19-14

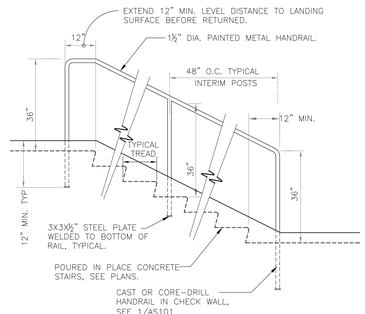

2 STAIR / PIPE HANDRAIL

NTS 055213–05

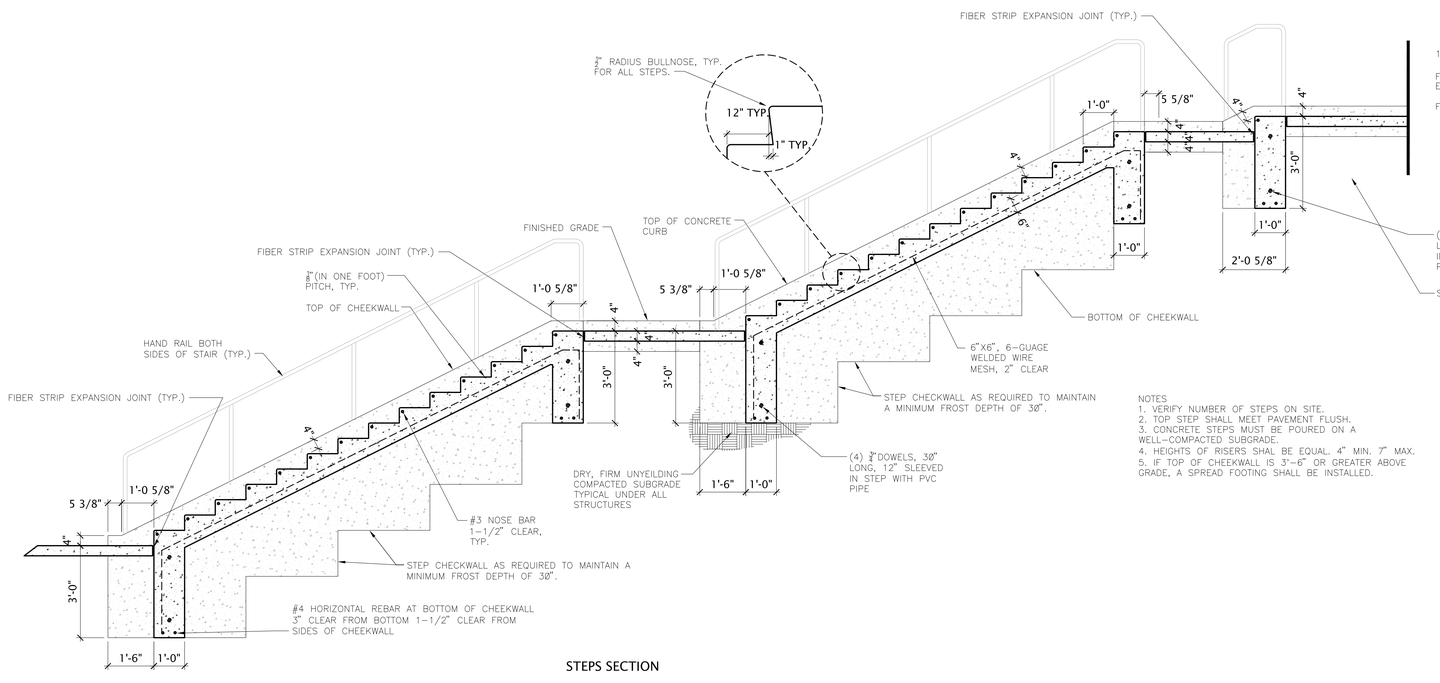

NOTES
1. VERIFY NUMBER OF STEPS ON SITE.
2. TOP STEP SHALL MEET PAVEMENT FLUSH.
3. CONCRETE STEPS MUST BE POURED ON A WELL–COMPACTED SUBGRADE.
4. HEIGHTS OF RISERS SHAL BE EQUAL. 4" MIN. 7" MAX.
5. IF TOP OF CHEEKWALL IS 3'–6" OR GREATER ABOVE GRADE, A SPREAD FOOTING SHALL BE INSTALLED.

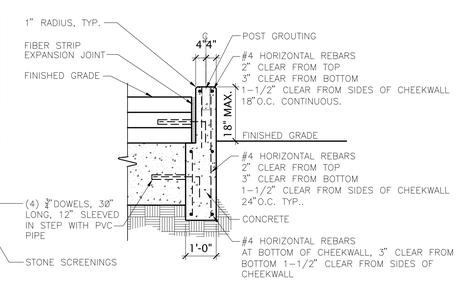

CHEEKWALL SECTION

1 STAIR SECTION

1/2" = 1'–8"

GSBS ARCHITECTS

375 WEST 200 SOUTH
SALT LAKE CITY, UT 84101

P 801.521.8600
F 801.521.7913

www.gsbsarchitects.com

LICENSED LANDSCAPE ARCHITECT
CARY LEE G. GRAHAM
NO. 5462449-5301
Signature
5/7/10
Renewal Date
Date
STATE OF UTAH

REVISIONS:

Utah Valley University New Science Building

800 West University Parkway
Orem, Utah 84058

Division of Facilities Construction and Management

DRAWN BY:	EJS
CHECKED BY:	
DFCM PROJECT NO.:	09020790
GSBS PROJECT NO.:	2009.115.00
ISSUED DATE:	5/7/2010

SITE DETAILS

CONCSTRUCTION DOCUMENTS

AS101

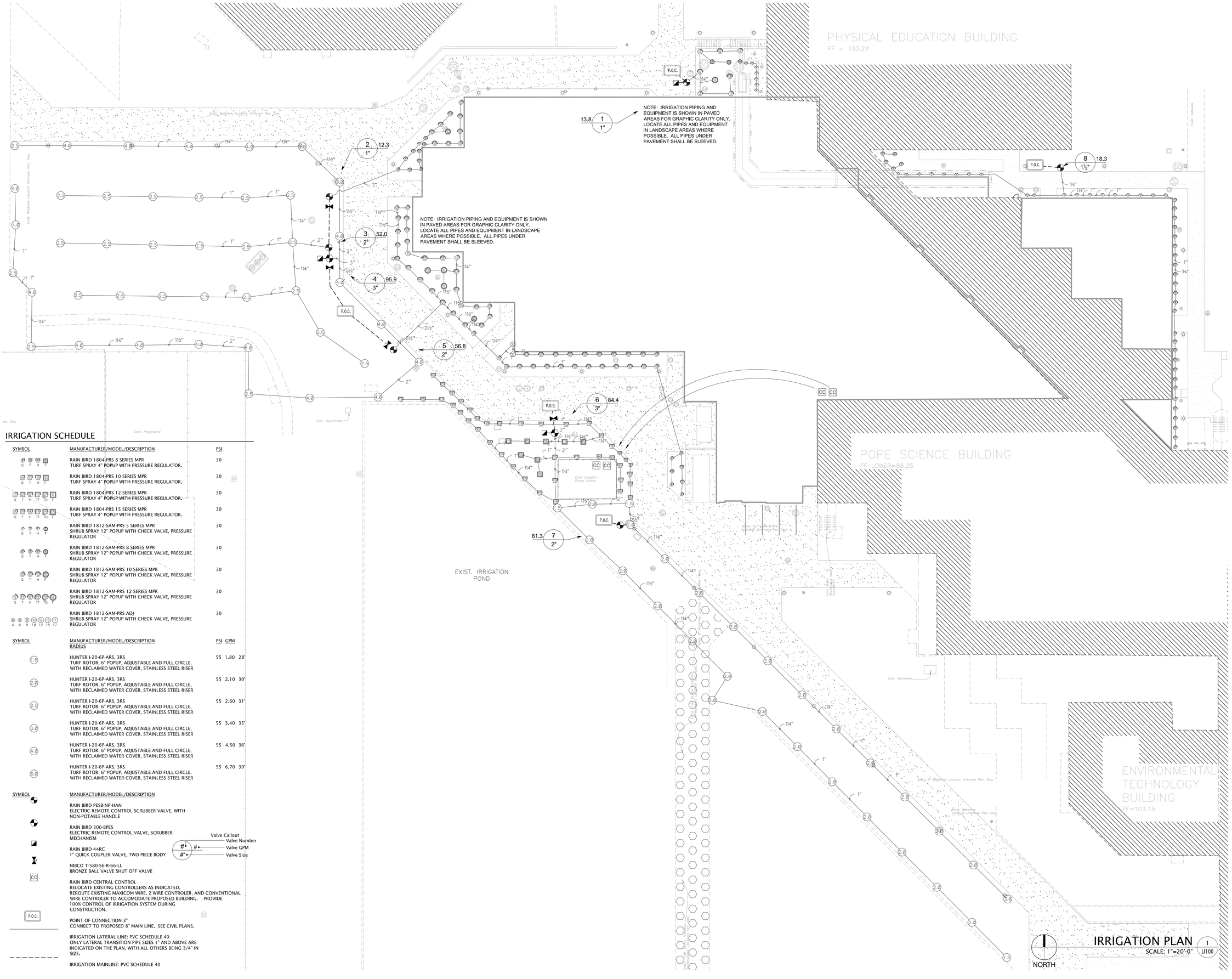

IRRIGATION SCHEDULE

SYMBOL	MANUFACTURER/MODEL/DESCRIPTION	PSI
Q T H F	RAIN BIRD 1804-PRS 8 SERIES MPR TURF SPRAY 4" POPUP WITH PRESSURE REGULATOR.	30
Q T H F	RAIN BIRD 1804-PRS 10 SERIES MPR TURF SPRAY 4" POPUP WITH PRESSURE REGULATOR.	30
Q T H TT F	RAIN BIRD 1804-PRS 12 SERIES MPR TURF SPRAY 4" POPUP WITH PRESSURE REGULATOR.	30
Q T H TT TQ F	RAIN BIRD 1804-PRS 15 SERIES MPR TURF SPRAY 4" POPUP WITH PRESSURE REGULATOR.	30
Q T H F	RAIN BIRD 1812-SAM-PRS 5 SERIES MPR SHRUB SPRAY 12" POPUP WITH CHECK VALVE, PRESSURE REGULATOR	30
Q T H F	RAIN BIRD 1812-SAM-PRS 8 SERIES MPR SHRUB SPRAY 12" POPUP WITH CHECK VALVE, PRESSURE REGULATOR	30
Q T H F	RAIN BIRD 1812-SAM-PRS 10 SERIES MPR SHRUB SPRAY 12" POPUP WITH CHECK VALVE, PRESSURE REGULATOR	30
Q T H TT TQ F	RAIN BIRD 1812-SAM-PRS 12 SERIES MPR SHRUB SPRAY 12" POPUP WITH CHECK VALVE, PRESSURE REGULATOR	30
4 6 8 10 12 15 17	RAIN BIRD 1812-SAM-PRS ADJ SHRUB SPRAY 12" POPUP WITH CHECK VALVE, PRESSURE REGULATOR	30

SYMBOL	MANUFACTURER/MODEL/DESCRIPTION RADIUS	PSI	GPM	
1.5	HUNTER I-20-6P-ARS, 3RS TURF ROTOR, 6" POPUP, ADJUSTABLE AND FULL CIRCLE, WITH RECLAIMED WATER COVER, STAINLESS STEEL RISER	55	1.80	28'
2.0	HUNTER I-20-6P-ARS, 3RS TURF ROTOR, 6" POPUP, ADJUSTABLE AND FULL CIRCLE, WITH RECLAIMED WATER COVER, STAINLESS STEEL RISER	55	2.10	30'
2.5	HUNTER I-20-6P-ARS, 3RS TURF ROTOR, 6" POPUP, ADJUSTABLE AND FULL CIRCLE, WITH RECLAIMED WATER COVER, STAINLESS STEEL RISER	55	2.60	31'
3.0	HUNTER I-20-6P-ARS, 3RS TURF ROTOR, 6" POPUP, ADJUSTABLE AND FULL CIRCLE, WITH RECLAIMED WATER COVER, STAINLESS STEEL RISER	55	3.40	35'
4.0	HUNTER I-20-6P-ARS, 3RS TURF ROTOR, 6" POPUP, ADJUSTABLE AND FULL CIRCLE, WITH RECLAIMED WATER COVER, STAINLESS STEEL RISER	55	4.50	36'
5.0	HUNTER I-20-6P-ARS, 3RS TURF ROTOR, 6" POPUP, ADJUSTABLE AND FULL CIRCLE, WITH RECLAIMED WATER COVER, STAINLESS STEEL RISER	55	6.70	39'

SYMBOL	MANUFACTURER/MODEL/DESCRIPTION
	RAIN BIRD PESB-NP-HAN ELECTRIC REMOTE CONTROL SCRUBBER VALVE, WITH NON-POTABLE HANDLE
	RAIN BIRD 300-BPES ELECTRIC REMOTE CONTROL VALVE, SCRUBBER MECHANISM
	RAIN BIRD 44RC 1" QUICK COUPLER VALVE, TWO PIECE BODY
	NIBCO T-580-S6-R-66-LL BRONZE BALL VALVE SHUT OFF VALVE
CC	RAIN BIRD CENTRAL CONTROL RELOCATE EXISTING CONTROLLERS AS INDICATED. REROUTE EXISTING MAXICOM WIRE, 2 WIRE CONTROLER, AND CONVENTIONAL WIRE CONTROLER TO ACCOMODATE PROPOSED BUILDING. PROVIDE 100% CONTROL OF IRRIGATION SYSTEM DURING CONSTRUCTION.
P.O.C.	POINT OF CONNECTION 3" CONNECT TO PROPOSED 8" MAIN LINE. SEE CIVIL PLANS.
	IRRIGATION LATERAL LINE: PVC SCHEDULE 40 ONLY LATERAL TRANSITION PIPE SIZES 1" AND ABOVE ARE INDICATED ON THE PLAN, WITH ALL OTHERS BEING 3/4" IN SIZE.
	IRRIGATION MAINLINE: PVC SCHEDULE 40

Valve Callout
Valve Number
Valve GPM
Valve Size

GSBS ARCHITECTS
375 WEST 200 SOUTH
SALT LAKE CITY, UT 84101
P 801.521.8600
F 801.521.7913
www.gsbsarchitects.com

LICENSED LANDSCAPE ARCHITECT
CARY D. G. GARDNER
NO. 5463489-5301
Signature
5/7/10
Renewal Date
Date
STATE OF UTAH

REVISIONS:

Utah Valley University New Science Building

800 West University Parkway
Orem, Utah 84058

Division of Facilities Construction and Management

DRAWN BY:	EJS
CHECKED BY:	
DFCM PROJECT NO.:	09020790
GSBS PROJECT NO.:	2009.115.00
ISSUED DATE:	5/7/2010

IRRIGATION PLAN

CONCSTRUCTION DOCUMENTS

LI100

WATERING SCHEDULE - INITIAL ESTABLISHMENT PERIOD

NUMBER	MODEL	TYPE	PRECIP	SUN	MON	TUE	WED	THU	FRI	SAT	IN./WEEK	MIN./WEEK	GAL./WEEK	GAL./DAY
1	RAIN BIRD PESB-NP-HAN	SHRUB SPRAY	1.69 in/h	8 min		8 min		8 min		8 min	1	36	488.9	122.2
2	RAIN BIRD PESB-NP-HAN	SHRUB SPRAY	1.70 in/h	8 min		8 min		8 min		8 min	1	35	432.4	108.1
3	RAIN BIRD PESB-NP-HAN	TURF ROTOR	0.26 in/h	65 min	65 min	65 min	65 min	65 min	65 min	65 min	2	462	24,000	3,429
4	RAIN BIRD 300-BPES	TURF ROTOR	0.76 in/h	22 min	22 min	22 min	22 min	22 min	22 min	22 min	2	158	15,142	2,163
5	RAIN BIRD PESB-NP-HAN	SHRUB SPRAY	1.94 in/h	7 min		7 min		7 min		7 min	1	31	1,756	439.1
6	RAIN BIRD 300-BPES	TURF SPRAY	2.01 in/h	8 min	8 min	8 min	8 min	8 min	8 min	8 min	2	60	5,041	720.1
7	RAIN BIRD PESB-NP-HAN	TURF ROTOR	0.59 in/h	29 min	29 min	29 min	29 min	29 min	29 min	29 min	2	203	12,468	1,781
8	RAIN BIRD PESB-NP-HAN	SHRUB SPRAY	1.02 in/h	14 min		14 min		14 min		14 min	1	59	1,074	268.5
		TOTALS:		161	124	161	124	161	124	161		1,043	60,402	9,031

WATERING SCHEDULE - FOLLOWING JULY AFTER ESTABLISHMENT PERIOD

NUMBER	MODEL	TYPE	PRECIP	SUN	MON	TUE	WED	THU	FRI	SAT	IN./WEEK	MIN./WEEK	GAL./WEEK	GAL./DAY
1	RAIN BIRD PESB-NP-HAN	SHRUB SPRAY	1.69 in/h	5 min			5 min			5 min	0.50	18	244.4	81.5
2	RAIN BIRD PESB-NP-HAN	SHRUB SPRAY	1.70 in/h	5 min			5 min			5 min	0.50	18	216.2	72.1
3	RAIN BIRD PESB-NP-HAN	TURF ROTOR	0.26 in/h	76 min			76 min			76 min	1	231	12,000	4,000
4	RAIN BIRD 300-BPES	TURF ROTOR	0.76 in/h	26 min			26 min			26 min	1	79	7,571	2,524
5	RAIN BIRD PESB-NP-HAN	SHRUB SPRAY	1.94 in/h	5 min			5 min			5 min	0.50	15	878.2	292.7
6	RAIN BIRD 300-BPES	TURF SPRAY	2.01 in/h	9 min			9 min			9 min	1	30	2,520	840.1
7	RAIN BIRD PESB-NP-HAN	TURF ROTOR	0.59 in/h	33 min			33 min			33 min	1	102	6,234	2,078
8	RAIN BIRD PESB-NP-HAN	SHRUB SPRAY	1.02 in/h	9 min			9 min			9 min	0.50	29	537.1	179.0
		TOTALS:		168			168			168		521.5	30,201	10,067

SEASONAL ADJUSTMENT PER MONTH FOR YEAR FOLLOWING ESTABLISHMENT PERIOD:

MONTH	PERCENT	GALLONS
JANUARY	0%	
FEBRUARY	0%	
MARCH	12%	16,308
APRIL	29%	39,412
MAY	52%	70,670
JUNE	73%	99,210
JULY	100%	135,904 (4.5 WEEKS)
AUGUST	86%	116,877
SEPTEMBER	53%	72,029
OCTOBER	27%	36,694
NOVEMBER	8%	10,872
DECEMBER	0%	
	TOTAL	462,072

NOTE: ALL WATER USED FOR IRRIGATION IS SECONDARY

WATER ALLOWANCE CALCULATION:
ET X PF X AREA / IE X .62

TURF AREAS
30.65 X 1.0 X 45,508 /.625 X .62= 1,383,661

PLANT AREAS
30.65 X .5 X 7390 /.625 X .62= 112,345

TOTAL WATER ALLOWANCE=1,496,006 GALLONS

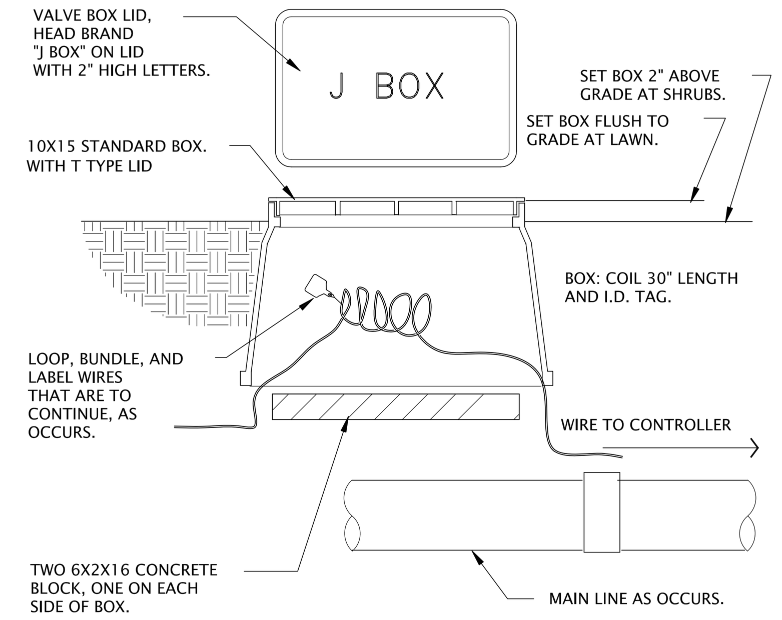

10 WIRE BUNDLE JUNCTION BOX
1 1/2" = 12" 02810-86001

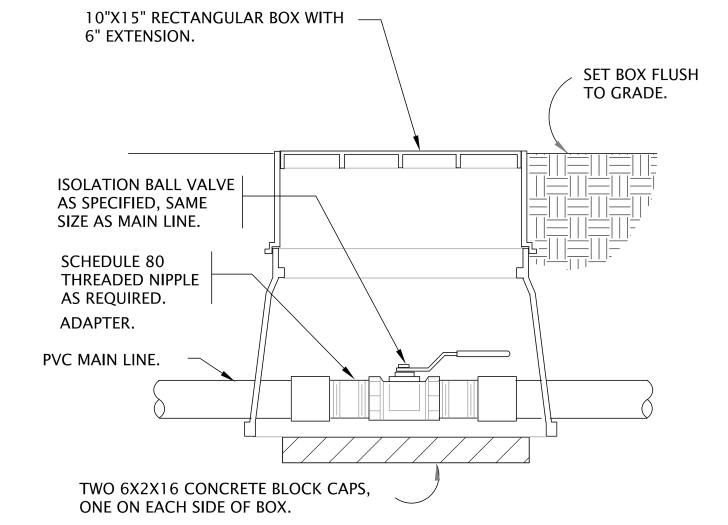

5 BALL SHUT-OFF VALVE
1 1/2" = 12" 02810-38120

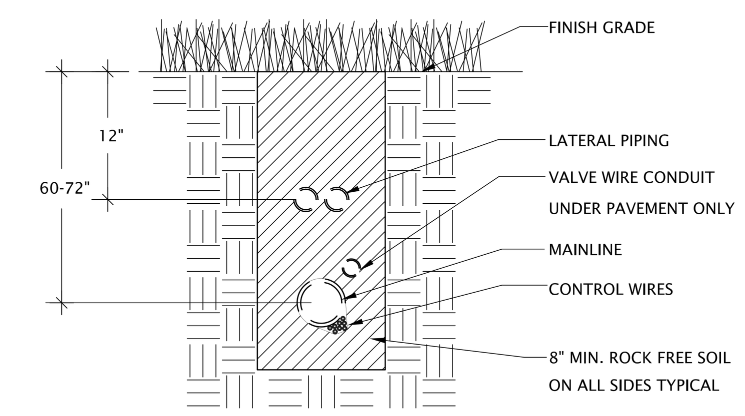

NOTE: ALL PIPE RUNNING UNDER PAVEMENT SHALL BE IN SLEEVING, SIZE AS REQUIRED.

9 TRENCH SECTION
NTS 328409.76–13

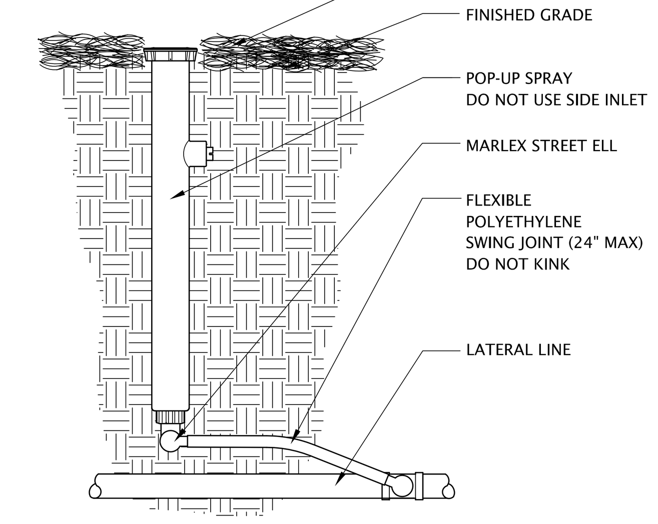

4 PLANTING AREA POP-UP SPRAY HEAD
3" = 12" 328403.29-02

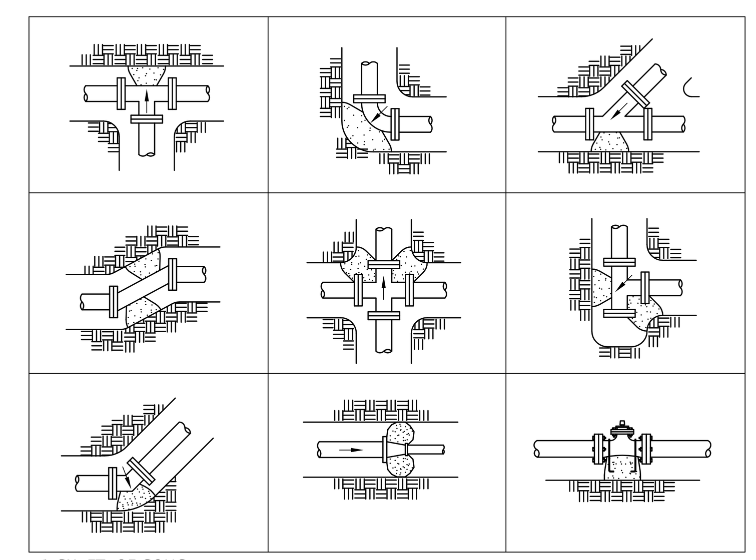

1 CU. FT. OF CONC. PER INCH OF MAINLINE SIZE

8 THRUST BLOCKS
3/4" = 12" 328409.76-11

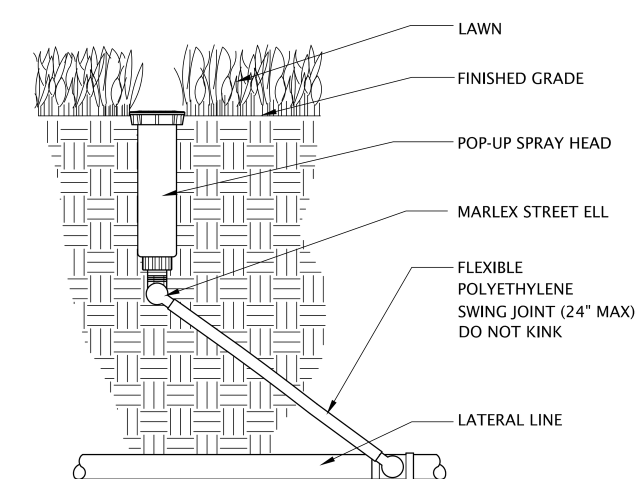

3 SHRUB AREA POP-UP SPRAY HEAD
3" = 12" 328403.13-03

11 IRRIGATION NOTES

1. CONTRACTOR SHALL VERIFY STATIC PRESSURE AT POINT OF CONNECTION AND OPERATING PRESSURE AT EACH HEAD AS INDICATED. INSUFFICIENT PRESSURE CONCERNS SHALL BE BROUGHT TO THE ATTENTION OF THE LANDSCAPE ARCHITECT IMMEDIATELY.

2. ALL HEADS SHALL BE SET PERPENDICULAR TO FINISH GRADE.

3. MAKE THE MAINLINE CONNECTION TO THE EXISTING METER OR WATER SERVICE LINE AND INSTALL BACKFLOW PREVENTION AS REQUIRED BY LOCAL MUNICIPALITY CODES AND ORDINANCES.

4. ALL VALVES SHALL BE LOCATED IN GROUPS WHERE SHOWN ON DRAWINGS. VALVES SHALL BE LOCATED 3' AWAY FROM ANY FENCE, MOWSTRIP, WALK, CURB, OR BUILDING.

5. ALL NEW VALVES SHALL BE WIRED USING 2 WIRE DECODER SYSTEM TO MATCH EXISTING. USE 14 GUAGE WIRE ONLY TO EXTEND EXISTING 14 GUAGE WIRE TO CONTROLLER ALL NEW WIRE TO NEW VALVES SHALL BE 2 WIRE SYSTEM WITH PEN-TITE WATER RESISTANT WIRE CONNECTORS. CONTROL CABLE SHALL FOLLOW THE MAINLINE IN THE SAME TRENCHES. TAPE AND BUNDLE 2 FT. OF CABLE EVERY 100 FT., AT EACH TURN IN THE MAINLINE TRENCH, AND AT EACH VALVE.

6. IRRIGATION CONTRACTOR SHALL COORDINATE THE INSTALLATION OF PERMANENT POWER TO THE CONTROLLERS WITH OWNER AND ELECTRICAL CONTRACTOR.

7. PROVIDE AND INSTALL ALL THE MANUFACTURER'S RECOMMENDED SURGE AND LIGHTNING PROTECTION EQUIPMENT ON ALL CONTROLLERS.

8. THE CONTRACTOR SHALL PROVIDE AS-BUILT DRAWINGS OF THE IRRIGATION SPRINKLER SYSTEM SHOWING EXACT MEASURED AND DIMENSIONED LOCATIONS OF ALL VALVES, WIRE SPLICES NOT IN A VALVE BOX AND DRAIN VALVES. TIE DIMENSIONS TO PERMANENT FEATURES SUCH AS STRUCTURES.

9. THE IRRIGATION DESIGN IS SCHEMATIC. ALL PIPING, VALVES, HEADS, ETC., SHOWN OUTSIDE OF THE PLANTING AREA IS FOR GRAPHIC CLARITY ONLY AND SHALL BE INSTALLED WITHIN THE PLANTING AREA. COORDINATE IRRIGATION, PLANTING AND OTHER SITE OPERATIONS. VERIFY AVAILABLE WATER PRESSURE AND FLOW AT SUPPLY SOURCE PRIOR TO BEGINNING WORK. THE CONTRACTOR SHALL FAMILIARIZE HIMSELF WITH ALL GRADE DIFFERENCES, LOCATION OF ALL CONSTRUCTED ITEMS, BUILDINGS DIFFERENCES IN ACTUAL AND DRAWN DIMENSIONS, UNDERGROUND SERVICES, ETC. PRIOR TO BEGINNING CONSTRUCTION. CALL 1-800-624-2444, FOR LOCATION OF UNDERGROUND SERVICES

10. NOTIFY LANDSCAPE ARCHITECT IMMEDIATELY IF IRRIGATION LAYOUT SHOWS ANY DISCREPANCY BETWEEN DESIGNED IRRIGATION SYSTEM AND ACTUAL SITE CONDITIONS, FOR ANY DECISIONS WHICH ARE DEEMED NECESSARY FOR ADJUSTMENT OF DESIGNED SYSTEM. NO MAJOR CHANGES OR SUBSTITUTIONS SHALL BE MADE TO THE IRRIGATION SYSTEM WITHOUT WRITTEN APPROVAL OF THE LANDSCAPE ARCHITECT.

11. INSTALL SLEEVES AND PIPING IN A PARALLEL OR PERPENDICULAR MANNER, FOLLOWING THE GENERAL LAYOUT OF THE PAVING DESIGN. THE CONSTRICTOR SHALL ENSURE COMPLETE SPRINKLER COVERAGE FOR ALL PLANTED AREAS, AND SHALL ADJUST THE IRRIGATION HEADS TO ACCOMPLISH SUCH.FLUSH AND ADJUST HEADS TO ENSURE NO OVERTHROW ONTO WALLS, WALKS OR OTHER HARD SURFACES. STREETS

12. THE IRRIGATION SYSTEM SHALL BE INSTALLED IN ACCORDANCE WILL ALL LOCAL CODES AND ORDINANCES BY A LICENSED LANDSCAPE CONTRACTOR AND EXPERIENCED WORKERS, AND ALL PERMITS SHALL BE OBTAINED AND FEES PAID BY THE CONTRACTOR.

328400-02

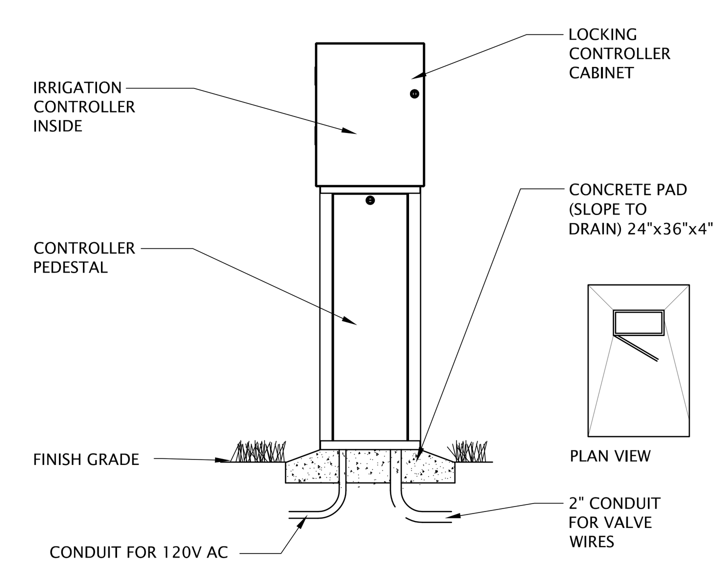

7 PEDESTAL MOUNTED CONTROLLER
3/4" = 12" 328409.16-10

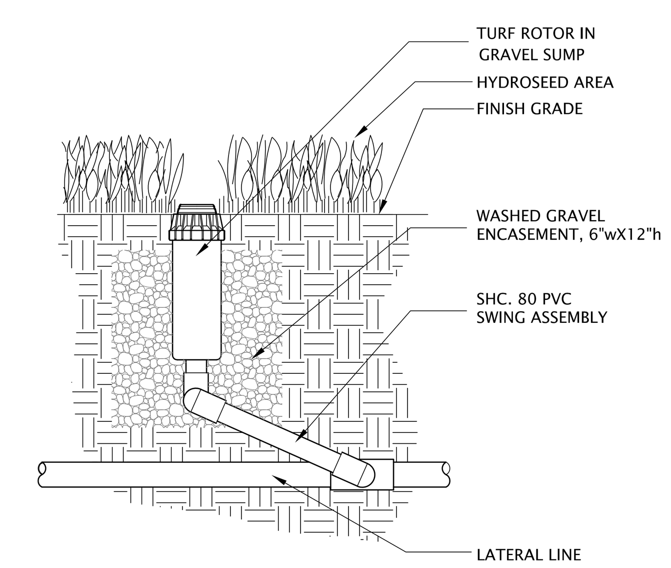

2 TURF ROTOR
1 1/2" = 12" 328403.16-02

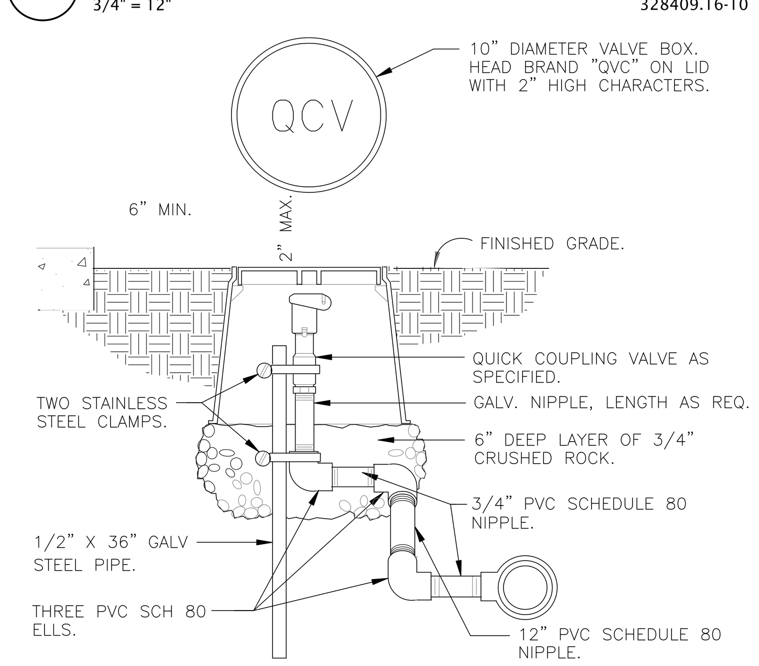

6 QUICK COUPLING VAVLE IN BOX
NTS 328406.43–11

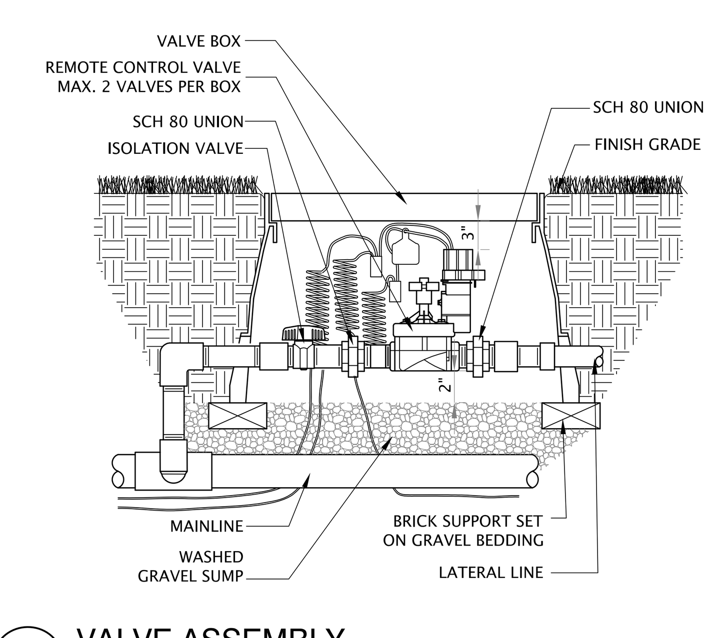

1 VALVE ASSEMBLY
1 1/2" = 12" 328406.13-11

GSBS ARCHITECTS
375 WEST 200 SOUTH
SALT LAKE CITY, UT 84101
P 801.521.8600
F 801.521.7913
www.gsbsarchitects.com

LICENSED LANDSCAPE ARCHITECT DAVID G. GARCE NO. 5403499-5301 Signature 5/31/10 Renewal Date Date STATE OF UTAH

REVISIONS:

Utah Valley University New Science Building

800 West University Parkway
Orem, Utah 84058

Division of Facilities Construction and Management

DRAWN BY:	EJS
CHECKED BY:	
DFCM PROJECT NO.:	09020790
GSBS PROJECT NO.:	2009.115.00
ISSUED DATE:	5/7/2010

IRRIGATION DETAILS

CONCSTRUCTION DOCUMENTS

LI101

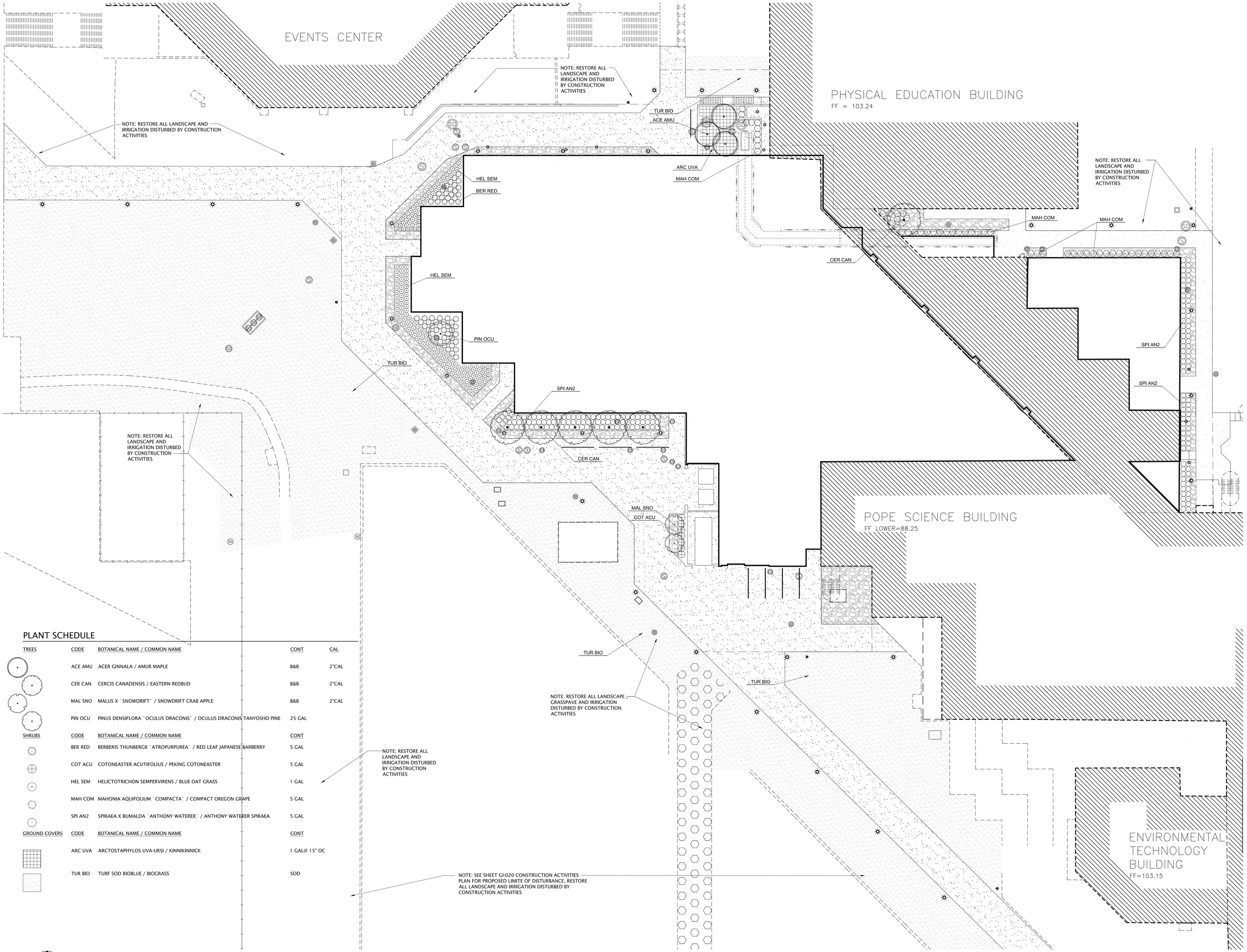

PLANT SCHEDULE

TREES	CODE	BOTANICAL NAME / COMMON NAME	CONT	CAL
	ACE AMU	ACER GINNALA / AMUR MAPLE	B&B	2"CAL
	CER CAN	CERCIS CANADENSIS / EASTERN REDBUD	B&B	2"CAL
	MAL SNO	MALUS X `SNOWDRIFT` / SNOWDRIFT CRAB APPLE	B&B	2"CAL
	PIN OCU	PINUS DENSIFLORA `OCULUS DRACONIS` / OCULUS DRACONIS TANYOSHO PINE	25 GAL	

SHRUBS	CODE	BOTANICAL NAME / COMMON NAME	CONT
	BER RED	BERBERIS THUNBERGII `ATROPURPUREA` / RED LEAF JAPANESE BARBERRY	5 GAL
	COT ACU	COTONEASTER ACUTIFOLIUS / PEKING COTONEASTER	5 GAL
	HEL SEM	HELICTOTRICHON SEMPERVIRENS / BLUE OAT GRASS	1 GAL
	MAH COM	MAHONIA AQUIFOLIUM `COMPACTA` / COMPACT OREGON GRAPE	5 GAL
	SPI AN2	SPIRAEA X BUMALDA `ANTHONY WATERER` / ANTHONY WATERER SPIRAEA	5 GAL

GROUND COVERS	CODE	BOTANICAL NAME / COMMON NAME	CONT
	ARC UVA	ARCTOSTAPHYLOS UVA-URSI / KINNIKINNICK	1 GAL@ 15" OC
	TUR BIO	TURF SOD BIOBLUE / BIOGRASS	SOD

PLANTING PLAN (1 / A100)
SCALE: 1" = 20' - 0"

GSBS ARCHITECTS
375 WEST 200 SOUTH
SALT LAKE CITY, UT 84101
P 801.521.8600
F 801.521.7913
www.gsbsarchitects.com

LICENSED LANDSCAPE ARCHITECT
DAVID G. GARDNER
NO. 5462449-5301
Signature
5/7/2010
Renewal Date
Date
STATE OF UTAH

REVISIONS:

Utah Valley University New Science Building

800 West University Parkway
Orem, Utah 84058

Division of Facilities Construction and Management

DRAWN BY:	EJS
CHECKED BY:	
DFCM PROJECT NO.:	09020790
GSBS PROJECT NO.:	2009.115.00
ISSUED DATE:	5/7/2010

PLANTING PLAN

CONCSTRUCTION DOCUMENTS

LP100

1. LANDSCAPE CONTRACTOR SHALL NOTIFY THE OWNERS REPRESENTATIVE A MINIMUM OF 24 HOURS BEFORE CONSTRUCTION COMMENCES. ANY DESCREPANCIES BETWEEN THE PLAN AND FIELD CONDITIONS SHALL BE BROUGHT TO THE ATTENTION OF THE OWNERS REPRESENTATIVE IMMEDIATELY FOR DECISION.

2. NO CHANGES SHALL BE MADE TO THE PLANT MATERIAL LIST WITHOUT WRITTEN APPROVAL OF THE OWNERS REPRESENTATIVE.

3. THE LANDSCAPE CONTRACTOR SHALL LOCATE AND VERIFY THE EXISTENCE OF ALL UTILITIES PRIOR TO STARTING WORK.

4. THE CONTRACTOR SHALL SUPPLY ALL PLANT MATERIALS IN THE QUANTITIES AND SIZES SUFFICIENT TO COMPLETE THE PLANTING SHOWN ON ALL DRAWINGS.

5. NO PLANT SHALL BE INSTALLED BEFORE ROUGH GRADING HAS BEEN COMPLETED.

6. ALL TREES SHALL BE PLANTED 5' MIN. AWAY FROM WATER SERVICE LATERALS AND 10' MIN. AWAY FROM SEWER LATERALS.

7. THE CONTRACTOR SHALL BE RESPONSIBLE FOR FINE GRADING ALL PLANTED AREAS AND TO ENSURE POSITIVE DRAINAGE OF A MINIMUM 2.5% AWAY FROM BUILDINGS.

8. WITH CONTAINER GROWN STOCK, THE CONTAINER SHALL BE REMOVED AND THE CONTAINER BALL SHALL BE CUT THROUGH THE SURFACE IN TWO VERTICAL LOCATIONS.

9. ALL PLANTS SHALL BE WATERED THOROUGHLY TWICE DURING THE FIRST 24 HOUR PERIOD AFTER PLANTING. ALL PLANTS SHALL THEN BE WATERED AS NECESSARY TO MAINTAIN HEALTHY ESTABLISHMENT.

5 PLANTING NOTES

1/4" = 1'-0" 329301-03

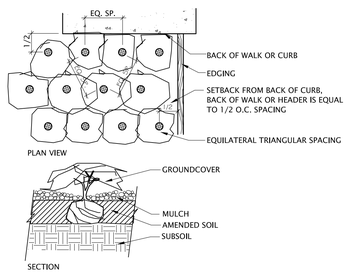

4 GROUNDCOVER PLANTING

1" = 1'-0" 32931 3-02

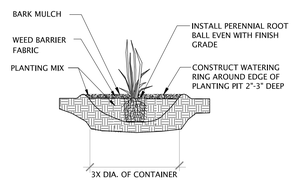

3 PERENNIAL PLANTING

3/8" = 12" 329302-01

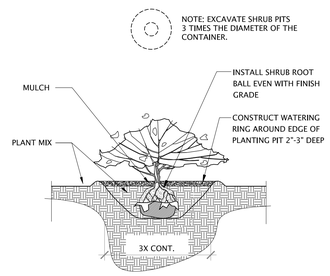

2 SHRUB PLANTING

3/8" = 12" 329333.16-01

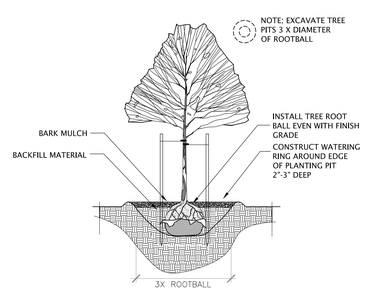

1 TREE PLANTING WITH STAKES

1/4" = 1'-0" 329346.16-01

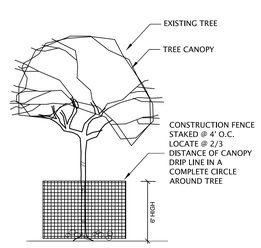

TREE PRESERVATION NOTES
1. TREES WITHIN WORK LIMIT AREA SHALL BE FENCED AT THE DRIPLINE. FENCING MAY OCCUR AT THE COMBINED DRIPLINES OF TREES TO BE PRESERVED.
2. FENCING SHALL BE 6-FOOT TALL CHAIN LINK FENCING WITH STEEL POSTS EMBEDDED IN THE GROUND.
3. NO GRADING SHALL OCCUR WITHIN THE DRIPLINES/FENCED AREA OF EXISTING TREES.
4. NO CONSTRUCTION MATERIALS OR CONSTRUCTION VEHICLES MAY BE STORED WITHIN THE DRIPLINES/FENCING AREAS OF EXISTING TREES.
5. CONSTRUCTION VEHICLES OR MACHINERY MAY NOT PASS BETWEEN TWO OR MORE EXISTING TREES IDENTIFIED FOR PRESERVATION IF THEIR CANOPIES ARE WITHIN 10 FEET OF TOUCHING.
6. TREE PRESERVATION MEASURES MUST BE IN PLACE BEFORE CONSTRUCTION, DEMOLITION AND/OR GRADING ACTIVITIES COMMENCE.
7. THE CONTRACTOR IS REQUIRED TO HAVE AN ARBORIST CERTIFIED BY THE INTERNATIONAL SOCIETY OF ARBORICULTURE (ISA) ON SITE, IF SITE CONSTRUCTION EFFORTS REQUIRE REMOVAL OF EXISTING ROOTS OR BRANCH PRUNING.
8. UNAUTHORIZED TREE REMOVAL IS SUBJECT TO IN-KIND REPLACEMENT EQUAL TO THE MATURE RESOURCE LOST, AS DETERMINED BY THE CITY.
9. THE CONTRACTOR IS REQUIRED TO WATER, FERTILIZE AND ATTEND TO OTHER MAINTANANCE NEEDS OF EXISTING TREES AS NEEDED TO MAINTAIN HEALTHY GROWTH THROUGHOUT THE CONSTRUCTION PERIOD. SIX FEET DIAMETER, MINIMUM, BY SIX-INCH TALL EARTH BERMS SHALL BE CONSTRUCTED AT THE BASE OF EACH TREE TO FUNCTION AS TEMPORARY WATERING BASINS DURING THE CONSTRUCTION PERIOD. TREES SHALL BE WATERED ACCORDING TO WEATHER AND TREE REQUIREMENTS.

6 TREE PRESERVATION

1" = 1'-0" 329301-04

GSBS ARCHITECTS

375 WEST 200 SOUTH
SALT LAKE CITY, UT 84101

P 801.521.8600
F 801.521.7913

www.gsbsarchitects.com

LICENSED LANDSCAPE ARCHITECT
DAVID G. GARDNER
No. 5453489-5301
Signature
5/7/10
Renewal Date
Date
STATE OF UTAH

REVISIONS:

Utah Valley University New Science Building

800 West University Parkway
Orem, Utah 84058

Division of Facilities Construction and Management

DRAWN BY:	EJS
CHECKED BY:	
DFCM PROJECT NO.:	09020790
GSBS PROJECT NO.:	2009.115.00
ISSUED DATE:	5/7/2010

PLANTING DETAILS

CONCSTRUCTION DOCUMENTS

LP101

GENERAL DEMOLITION NOTES:

A. Required *exits*, existing structural elements, fire protection devices and sanitary safeguards shall be maintained at all times during remodeling, *alterations*, repairs or additions to any building or structure.

B. When such required elements or devices are being remodeled, altered or repaired, adequate substitute provisions shall be made.

C. Waste materials shall be removed in a manner which prevents injury or damage to persons adjoining properties and public rights-of-way.

D. The work of demolishing any building shall not be commenced until pedestrian protection is in place as required by 2009 IBC Chapter 3303 and as indicated in these documents.

E. Provision shall be made to prevent the accumulation of water or damage to any foundations on the premises or the adjoining property.

F. Service utility connections shall be discontinued and capped in accordance with the *approved* rules and the requirements of the applicable governing authority.

G. Barriers and Walkways to be provided by General Contractor as needed to protect pedestrians according to the following:

DISTANCE FROM CONSTRUCTION TO LOT LINE	TYPE OF PROTECTION REQUIRED
Less than 5 feet	Barrier and Walkway
5 feet or more, but not more than 1/4 construction height	Barrier and Walkway
5 feet or more, between 1/4 and 1/2 construction height	Barrier
5 feet or more, but more than 1/2 construction height	None

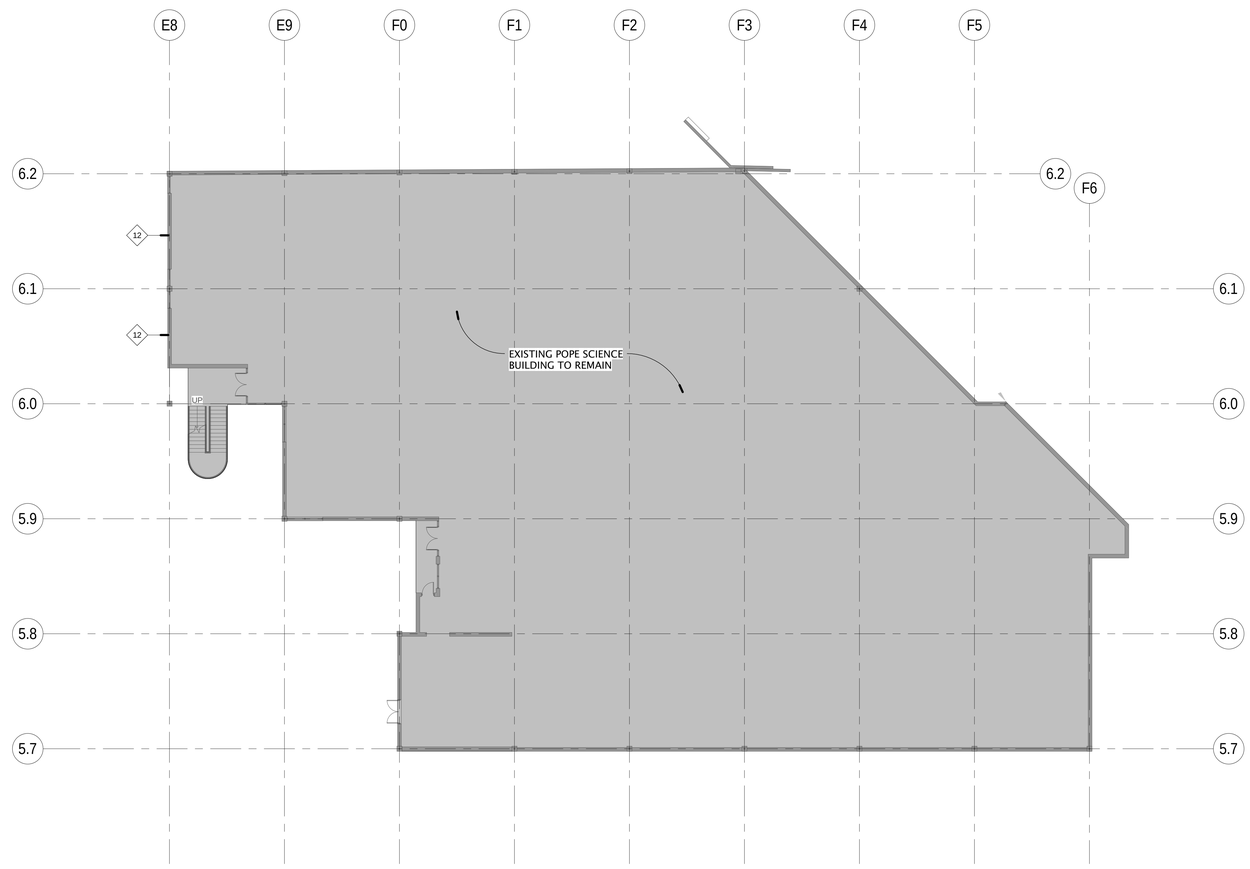

1 AD-101 LEVEL 0 DEMOLITION PLAN
1/16" = 1'-0"
16' 8' 0' 16' 32'

DEMOLITION KEYED NOTES:

1. REMOVE EXISTING ALUM. STOREFRONT SYSTEM AND GLAZING COMPLETE.
2. REMOVE EXISTING CONCRETE FOOTING FLUSH W/ OUTSIDE FACE OF FOUNDATION WALL. MATERIAL TO BE RECYCLED OR CRUSHED FOR RE-USE.
3. REMOVE EXISTING ROOF SYSTEM, STRUCTURE, DRAINAGE SYSTEM, MEMBRANE AND FLASHING COMPLETE. RECYCLE ALL STRUCTURAL AND MISC. STEEL.
4. REMOVE EXISTING CONCRETE BEAM/ COLUMN. MATERIAL TO BE RECYCLED OR CRUSHED FOR RE-USE.
5. REMOVE PORTION OF EXISTING CONCRETE BEAM/ COLUMN AS INDICATED. MATERIAL TO BE RECYCLED OR CRUSHED FOR RE-USE.
6. REMOVE EXISTING CONCRETE FOUNDATION AS INDICATED. MATERIAL TO BE RECYCLED OR CRUSHED FOR RE-USE.
7. REMOVE EXISTING INFILL WALL.
8. REMOVE ROOFING ENTIRELY TO CONCRETE DECK. CAP DRAINS
9. REMOVE EXISTING FLOORS, FOUNDATIONS AND FOOTINGS AS INDICATED
10. REMOVE EXISTING WALLS, WINDOWS AND DOORS AS INDICATED
11. REMOVE EXISTING MECH. AND COMMUNICATION EQUIPMENT
12. REMOVE EXISTING BRICK VENEER AND SUPPORTS COMPLETE
13. EXISTING CONCRETE FLOOR SLAB TO BE REMOVED. CONTRACTOR TO COORDINATE ALL WORK TO ACCOMMODATE NEW UTILITY TUNNEL
14. REMOVE SECTION OF RAILING TO ACCOMMODATE NEW EXHAUST DUCT. COORD. SIZE W/ MECH. DRAWINGS
15. REMOVE EXISTING SECTION(S) OF GUARDRAIL
16. REMOVE EXISTING GLAZING AND ALUMINUM STOREFRONT AS REQUIRED TO ACCOMMODATE NEW EXIT DOOR AND BRICK INFILL WALL PANEL
17. PATCH AND REPLACE CONCRETE FLOOR AS REQUIRED WHERE MECHANICAL ITEMS HAVE BEEN REMOVED. FINISH FLUSH TO MATCH REMAINING ADJACENT FLOOR
18. REMOVE EXISTING PRE-CAST CONCRETE EDGE PAVER AND GUARDRAIL TO ACCOMMODATE ROOF MEMBRANE PLACEMENT. RE-INSTALL OR PROVIDE REPLACEMENT AS NECESSARY

GSBS ARCHITECTS

375 WEST 200 SOUTH
SALT LAKE CITY, UT 84101

P 801.521.8600
F 801.521.7913

www.gsbsarchitects.com

STATE OF UTAH
116302
LICENSED ARCHITECT

REVISIONS:

PROJECT NORTH

Utah Valley University New Science Building

800 West University Parkway
Orem, Utah 84058

Division of Facilities Construction and Management

DRAWN BY:	Author
CHECKED BY:	Checker
DFCM PROJECT NO.:	09020790
GSBS PROJECT NO.:	2009.115.00
ISSUED DATE:	05.07.2010

LEVEL 0 DEMOLITION PLAN

CONSTRUCTION DOCUMENTS

AD-101

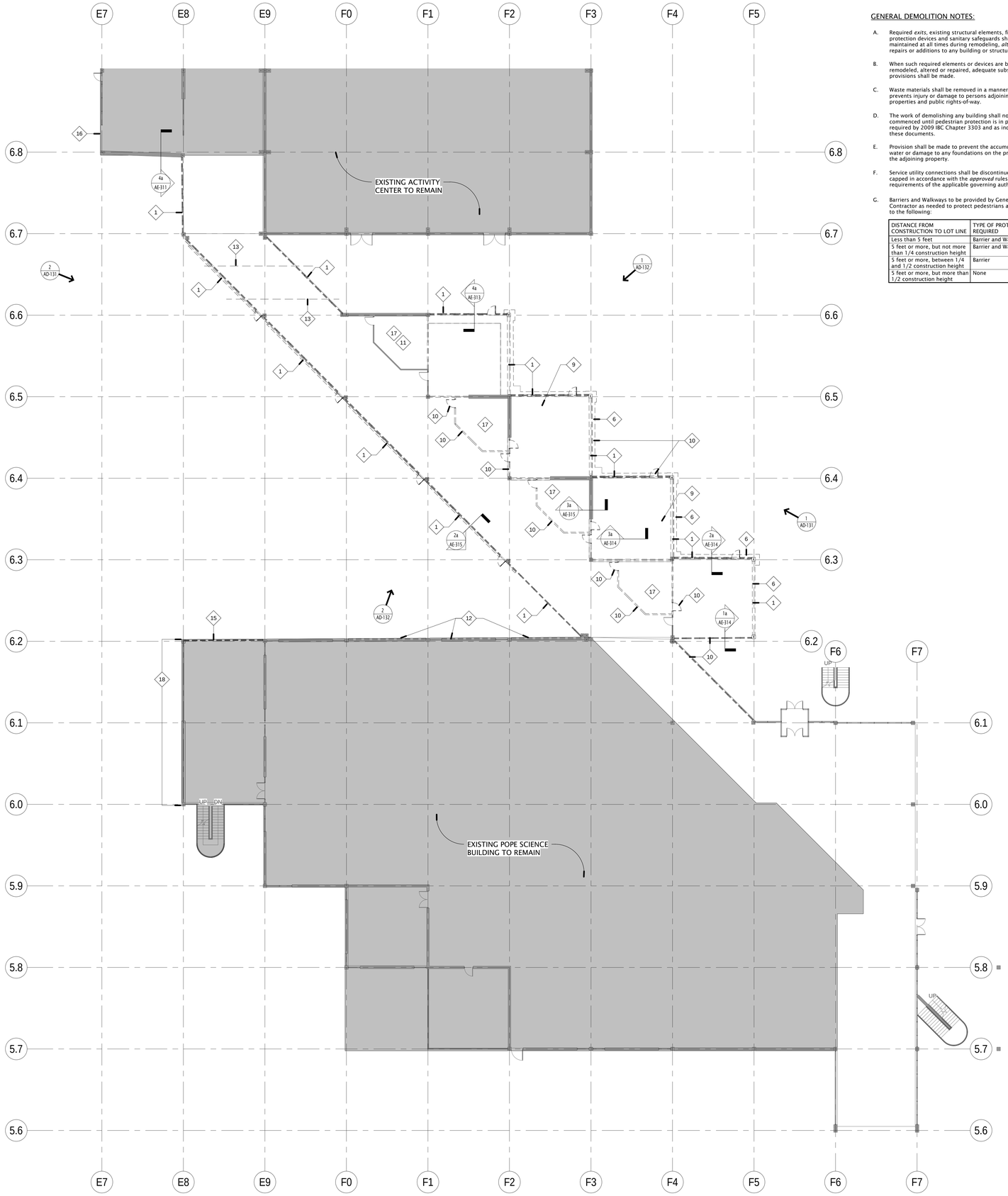

1 AD-111 LEVEL 1 DEMOLITION PLAN

1/16" = 1'-0"

16' 8' 0' 16' 32'

GENERAL DEMOLITION NOTES:

A. Required *exits*, existing structural elements, fire protection devices and sanitary safeguards shall be maintained at all times during remodeling, *alterations*, repairs or additions to any building or structure.

B. When such required elements or devices are being remodeled, altered or repaired, adequate substitute provisions shall be made.

C. Waste materials shall be removed in a manner which prevents injury or damage to persons adjoining properties and public rights-of-way.

D. The work of demolishing any building shall not be commenced until pedestrian protection is in place as required by 2009 IBC Chapter 3303 and as indicated in these documents.

E. Provision shall be made to prevent the accumulation of water or damage to any foundations on the premises or the adjoining property.

F. Service utility connections shall be discontinued and capped in accordance with the *approved* rules and the requirements of the applicable governing authority.

G. Barriers and Walkways to be provided by General Contractor as needed to protect pedestrians according to the following:

DISTANCE FROM CONSTRUCTION TO LOT LINE	TYPE OF PROTECTION REQUIRED
Less than 5 feet	Barrier and Walkway
5 feet or more, but not more than 1/4 construction height	Barrier and Walkway
5 feet or more, between 1/4 and 1/2 construction height	Barrier
5 feet or more, but more than 1/2 construction height	None

DEMOLITION KEYED NOTES:

1. REMOVE EXISTING ALUM. STOREFRONT SYSTEM AND GLAZING COMPLETE.
2. REMOVE EXISTING CONCRETE FOOTING FLUSH W/ OUTSIDE FACE OF FOUNDATION WALL. MATERIAL TO BE RECYCLED OR CRUSHED FOR RE-USE.
3. REMOVE EXISTING ROOF SYSTEM, STRUCTURE, DRAINAGE SYSTEM, MEMBRANE AND FLASHING COMPLETE. RECYCLE ALL STRUCTURAL AND MISC. STEEL.
4. REMOVE EXISTING CONCRETE BEAM/ COLUMN. MATERIAL TO BE RECYCLED OR CRUSHED FOR RE-USE.
5. REMOVE PORTION OF EXISTING CONCRETE BEAM/ COLUMN AS INDICATED. MATERIAL TO BE RECYCLED OR CRUSHED FOR RE-USE.
6. REMOVE EXISTING CONCRETE FOUNDATION AS INDICATED. MATERIAL TO BE RECYCLED OR CRUSHED FOR RE-USE.
7. REMOVE EXISTING INFILL WALL.
8. REMOVE ROOFING ENTIRELY TO CONCRETE DECK. CAP DRAINS
9. REMOVE EXISTING FLOORS, FOUNDATIONS AND FOOTINGS AS INDICATED
10. REMOVE EXISTING WALLS, WINDOWS AND DOORS AS INDICATED
11. REMOVE EXISTING MECH. AND COMMUNICATION EQUIPMENT
12. REMOVE EXISTING BRICK VENEER AND SUPPORTS COMPLETE
13. EXISTING CONCRETE FLOOR SLAB TO BE REMOVED. CONTRACTOR TO COORDINATE ALL WORK TO ACCOMMODATE NEW UTILITY TUNNEL
14. REMOVE SECTION OF RAILING TO ACCOMMODATE NEW EXHAUST DUCT. COORD. SIZE W/ MECH. DRAWINGS
15. REMOVE EXISTING SECTION(S) OF GUARDRAIL
16. REMOVE EXISTING GLAZING AND ALUMINUM STOREFRONT AS REQUIRED TO ACCOMMODATE NEW EXIT DOOR AND BRICK INFILL WALL PANEL
17. PATCH AND REPLACE CONCRETE FLOOR AS REQUIRED WHERE MECHANICAL ITEMS HAVE BEEN REMOVED. FINISH FLUSH TO MATCH REMAINING ADJACENT FLOOR
18. REMOVE EXISTING PRE-CAST CONCRETE EDGE PAVER AND GUARDRAIL TO ACCOMMODATE ROOF MEMBRANE PLACEMENT. RE-INSTALL OR PROVIDE REPLACEMENT AS NECESSARY

GSBS ARCHITECTS

375 WEST 200 SOUTH
SALT LAKE CITY, UT 84101

P 801.521.8600
F 801.521.7913

www.gsbsarchitects.com

STATE OF UTAH 116302 LICENSED ARCHITECT

REVISIONS:

PROJECT NORTH

Utah Valley University New Science Building

800 West University Parkway
Orem, Utah 84058

Division of Facilities Construction and Management

DRAWN BY:	Author
CHECKED BY:	Checker
DFCM PROJECT NO.:	09020790
GSBS PROJECT NO.:	2009.115.00
ISSUED DATE:	05.07.2010

LEVEL 1 DEMOLITION PLAN

CONSTRUCTION DOCUMENTS

AD-111

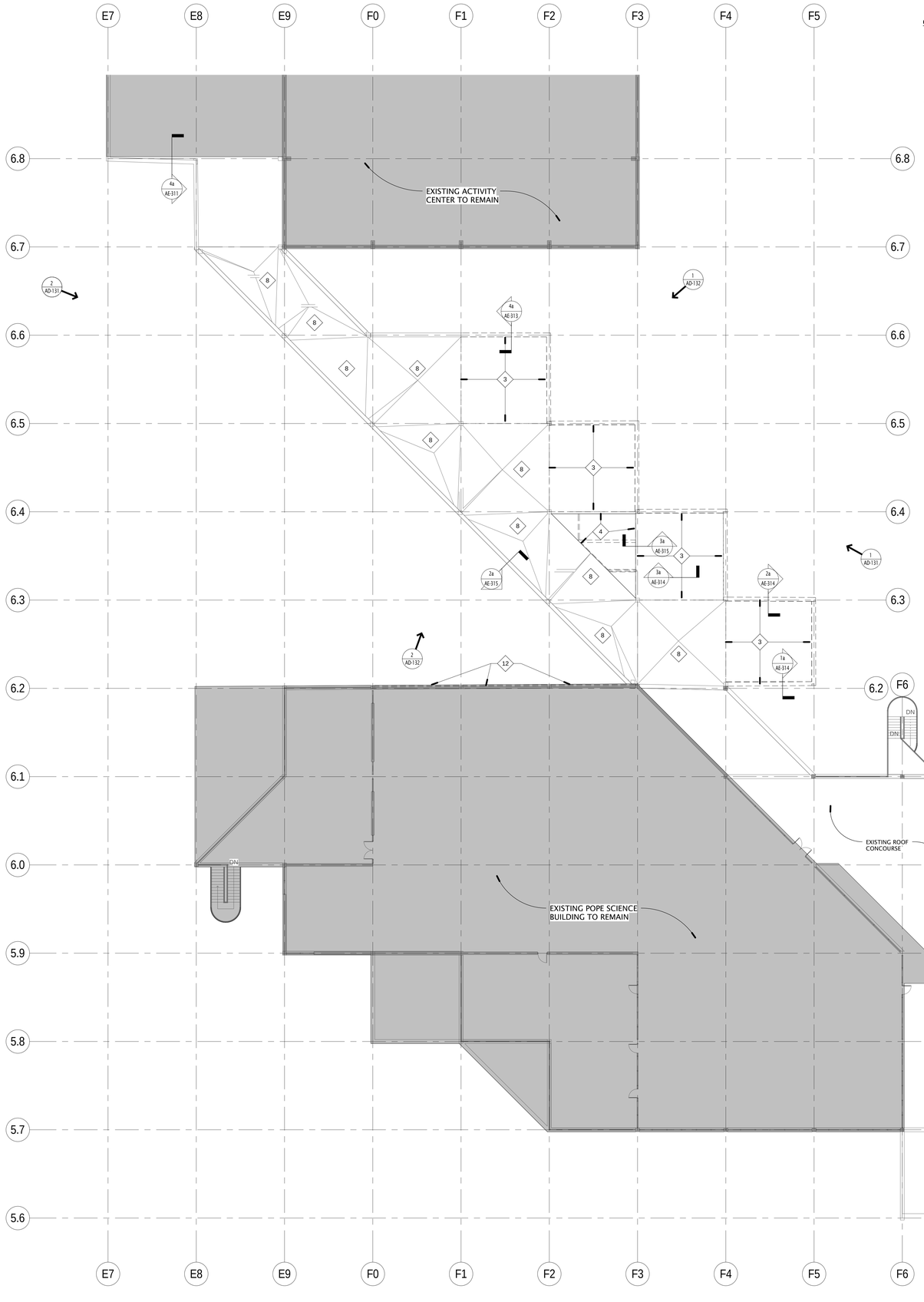

1 AD-121 LEVEL 2 DEMOLITION PLAN

1/16" = 1'-0"

16' 8' 0' 16' 32'

GENERAL DEMOLITION NOTES:

A. Required *exits*, existing structural elements, fire protection devices and sanitary safeguards shall be maintained at all times during remodeling, *alterations*, repairs or additions to any building or structure.

B. When such required elements or devices are being remodeled, altered or repaired, adequate substitute provisions shall be made.

C. Waste materials shall be removed in a manner which prevents injury or damage to persons adjoining properties and public rights-of-way.

D. The work of demolishing any building shall not be commenced until pedestrian protection is in place as required by 2009 IBC Chapter 3303 and as indicated in these documents.

E. Provision shall be made to prevent the accumulation of water or damage to any foundations on the premises or the adjoining property.

F. Service utility connections shall be discontinued and capped in accordance with the *approved* rules and the requirements of the applicable governing authority.

G. Barriers and Walkways to be provided by General Contractor as needed to protect pedestrians according to the following:

DISTANCE FROM CONSTRUCTION TO LOT LINE	TYPE OF PROTECTION REQUIRED
Less than 5 feet	Barrier and Walkway
5 feet or more, but not more than 1/4 construction height	Barrier and Walkway
5 feet or more, between 1/4 and 1/2 construction height	Barrier
5 feet or more, but more than 1/2 construction height	None

DEMOLITION KEYED NOTES:

1. REMOVE EXISTING ALUM. STOREFRONT SYSTEM AND GLAZING COMPLETE.
2. REMOVE EXISTING CONCRETE FOOTING FLUSH W/ OUTSIDE FACE OF FOUNDATION WALL. MATERIAL TO BE RECYCLED OR CRUSHED FOR RE-USE.
3. REMOVE EXISTING ROOF SYSTEM, STRUCTURE, DRAINAGE SYSTEM, MEMBRANE AND FLASHING COMPLETE. RECYCLE ALL STRUCTURAL AND MISC. STEEL.
4. REMOVE EXISTING CONCRETE BEAM/ COLUMN. MATERIAL TO BE RECYCLED OR CRUSHED FOR RE-USE.
5. REMOVE PORTION OF EXISTING CONCRETE BEAM/ COLUMN AS INDICATED. MATERIAL TO BE RECYCLED OR CRUSHED FOR RE-USE.
6. REMOVE EXISTING CONCRETE FOUNDATION AS INDICATED. MATERIAL TO BE RECYCLED OR CRUSHED FOR RE-USE.
7. REMOVE EXISTING INFILL WALL.
8. REMOVE ROOFING ENTIRELY TO CONCRETE DECK. CAP DRAINS
9. REMOVE EXISTING FLOORS, FOUNDATIONS AND FOOTINGS AS INDICATED
10. REMOVE EXISTING WALLS, WINDOWS AND DOORS AS INDICATED
11. REMOVE EXISTING MECH. AND COMMUNICATION EQUIPMENT
12. REMOVE EXISTING BRICK VENEER AND SUPPORTS COMPLETE
13. EXISTING CONCRETE FLOOR SLAB TO BE REMOVED. CONTRACTOR TO COORDINATE ALL WORK TO ACCOMMODATE NEW UTILITY TUNNEL
14. REMOVE SECTION OF RAILING TO ACCOMMODATE NEW EXHAUST DUCT. COORD. SIZE W/ MECH. DRAWINGS
15. REMOVE EXISTING SECTION(S) OF GUARDRAIL
16. REMOVE EXISTING GLAZING AND ALUMINUM STOREFRONT AS REQUIRED TO ACCOMMODATE NEW EXIT DOOR AND BRICK INFILL WALL PANEL
17. PATCH AND REPLACE CONCRETE FLOOR AS REQUIRED WHERE MECHANICAL ITEMS HAVE BEEN REMOVED. FINISH FLUSH TO MATCH REMAINING ADJACENT FLOOR
18. REMOVE EXISTING PRE-CAST CONCRETE EDGE PAVER AND GUARDRAIL TO ACCOMMODATE ROOF MEMBRANE PLACEMENT. RE-INSTALL OR PROVIDE REPLACEMENT AS NECESSARY

GSBS ARCHITECTS

375 WEST 200 SOUTH
SALT LAKE CITY, UT 84101

P 801.521.8600
F 801.521.7913

www.gsbsarchitects.com

STATE OF UTAH
116302
LICENSED ARCHITECT

REVISIONS:

PROJECT NORTH

Utah Valley University New Science Building

800 West University Parkway
Orem, Utah 84058

Division of Facilities Construction and Management

DRAWN BY:	Author
CHECKED BY:	Checker
DFCM PROJECT NO.:	09020790
GSBS PROJECT NO.:	2009.115.00
ISSUED DATE:	05.07.2010

LEVEL 2 DEMOLITION PLAN

CONSTRUCTION DOCUMENTS

AD-121

GSBS ARCHITECTS

375 WEST 200 SOUTH
SALT LAKE CITY, UT 84101

P 801.521.8600
F 801.521.7913

www.gsbsarchitects.com

STATE OF UTAH
116302
LICENSED ARCHITECT

REVISIONS:

DEMOLITION KEYED NOTES:

1. REMOVE EXISTING ALUM. STOREFRONT SYSTEM AND GLAZING COMPLETE.
2. REMOVE EXISTING CONCRETE FOOTING FLUSH W/ OUTSIDE FACE OF FOUNDATION WALL. MATERIAL TO BE RECYCLED OR CRUSHED FOR RE-USE.
3. REMOVE EXISTING ROOF SYSTEM, STRUCTURE, DRAINAGE SYSTEM, MEMBRANE AND FLASHING COMPLETE. RECYCLE ALL STRUCTURAL AND MISC. STEEL.
4. REMOVE EXISTING CONCRETE BEAM/ COLUMN. MATERIAL TO BE RECYCLED OR CRUSHED FOR RE-USE.
5. REMOVE PORTION OF EXISTING CONCRETE BEAM/ COLUMN AS INDICATED. MATERIAL TO BE RECYCLED OR CRUSHED FOR RE-USE.
6. REMOVE EXISTING CONCRETE FOUNDATION AS INDICATED. MATERIAL TO BE RECYCLED OR CRUSHED FOR RE-USE.
7. REMOVE EXISTING INFILL WALL.
8. REMOVE ROOFING ENTIRELY TO CONCRETE DECK. CAP DRAINS
9. REMOVE EXISTING FLOORS, FOUNDATIONS AND FOOTINGS AS INDICATED
10. REMOVE EXISTING WALLS, WINDOWS AND DOORS AS INDICATED
11. REMOVE EXISTING MECH. AND COMMUNICATION EQUIPMENT
12. REMOVE EXISTING BRICK VENEER AND SUPPORTS COMPLETE
13. EXISTING CONCRETE FLOOR SLAB TO BE REMOVED. CONTRACTOR TO COORDINATE ALL WORK TO ACCOMMODATE NEW UTILITY TUNNEL
14. REMOVE SECTION OF RAILING TO ACCOMMODATE NEW EXHAUST DUCT. COORD. SIZE W/ MECH. DRAWINGS
15. REMOVE EXISTING SECTION(S) OF GUARDRAIL
16. REMOVE EXISTING GLAZING AND ALUMINUM STOREFRONT AS REQUIRED TO ACCOMMODATE NEW EXIT DOOR AND BRICK INFILL WALL PANEL
17. PATCH AND REPLACE CONCRETE FLOOR AS REQUIRED WHERE MECHANICAL ITEMS HAVE BEEN REMOVED. FINISH FLUSH TO MATCH REMAINING ADJACENT FLOOR
18. REMOVE EXISTING PRE-CAST CONCRETE EDGE PAVER AND GUARDRAIL TO ACCOMMODATE ROOF MEMBRANE PLACEMENT. RE-INSTALL OR PROVIDE REPLACEMENT AS NECESSARY

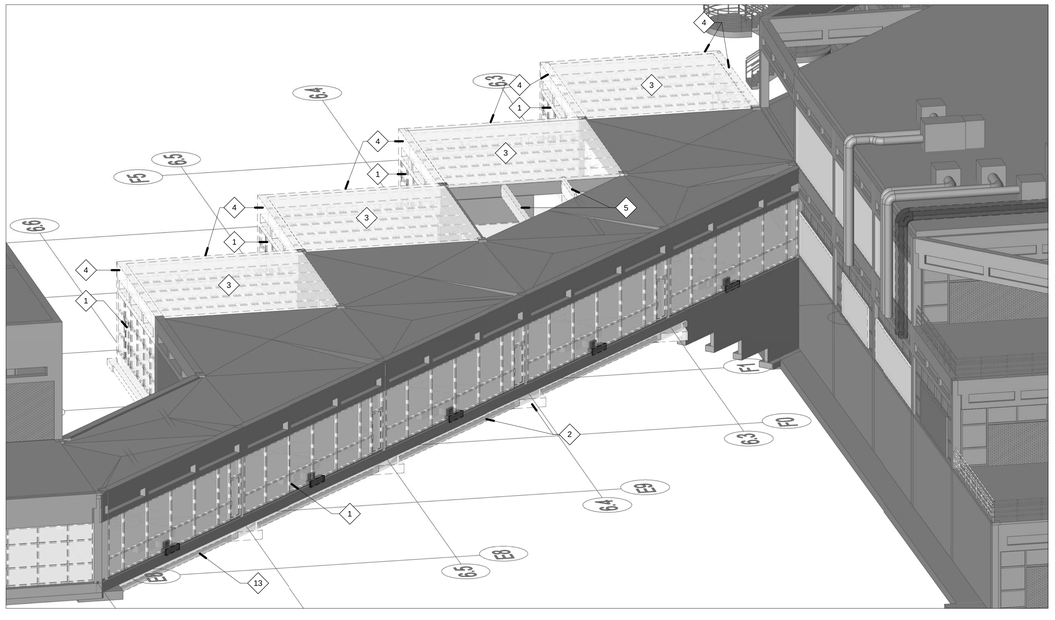

2 AD-131 DEMO WEST

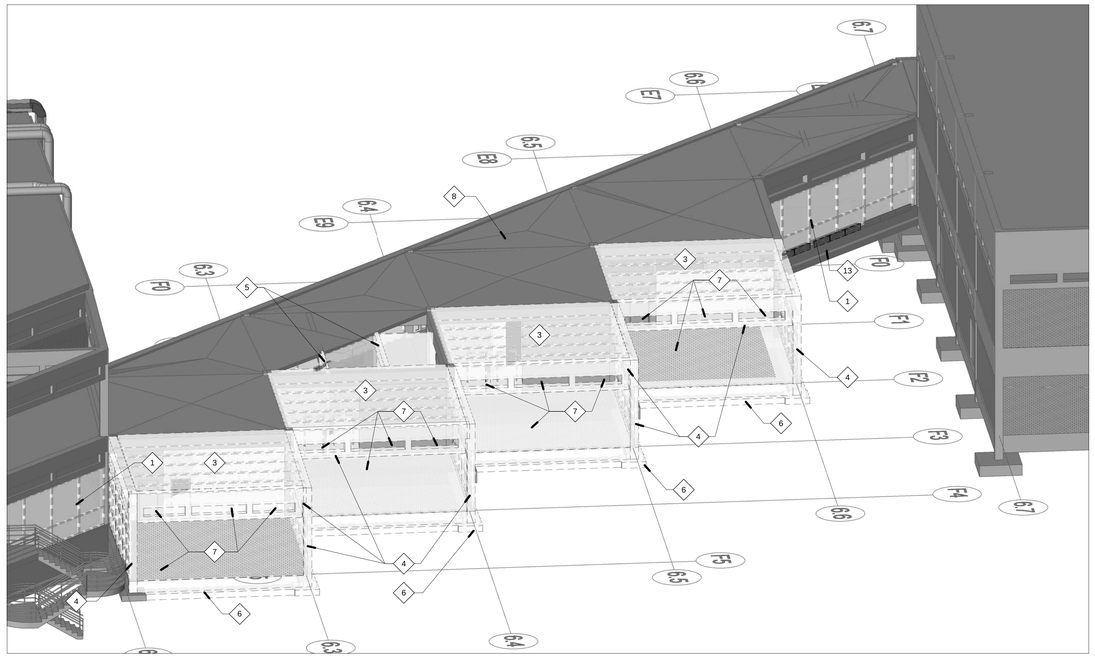

1 AD-131 DEMO EAST

Utah Valley University New Science Building

800 West University Parkway
Orem, Utah 84058

Division of Facilities Construction and Management

DRAWN BY:	Author
CHECKED BY:	Checker
DFCM PROJECT NO.:	09020790
GSBS PROJECT NO.:	2009.115.00
ISSUED DATE:	05.07.2010

DEMO VIEWS

CONSTRUCTION DOCUMENTS

AD-131

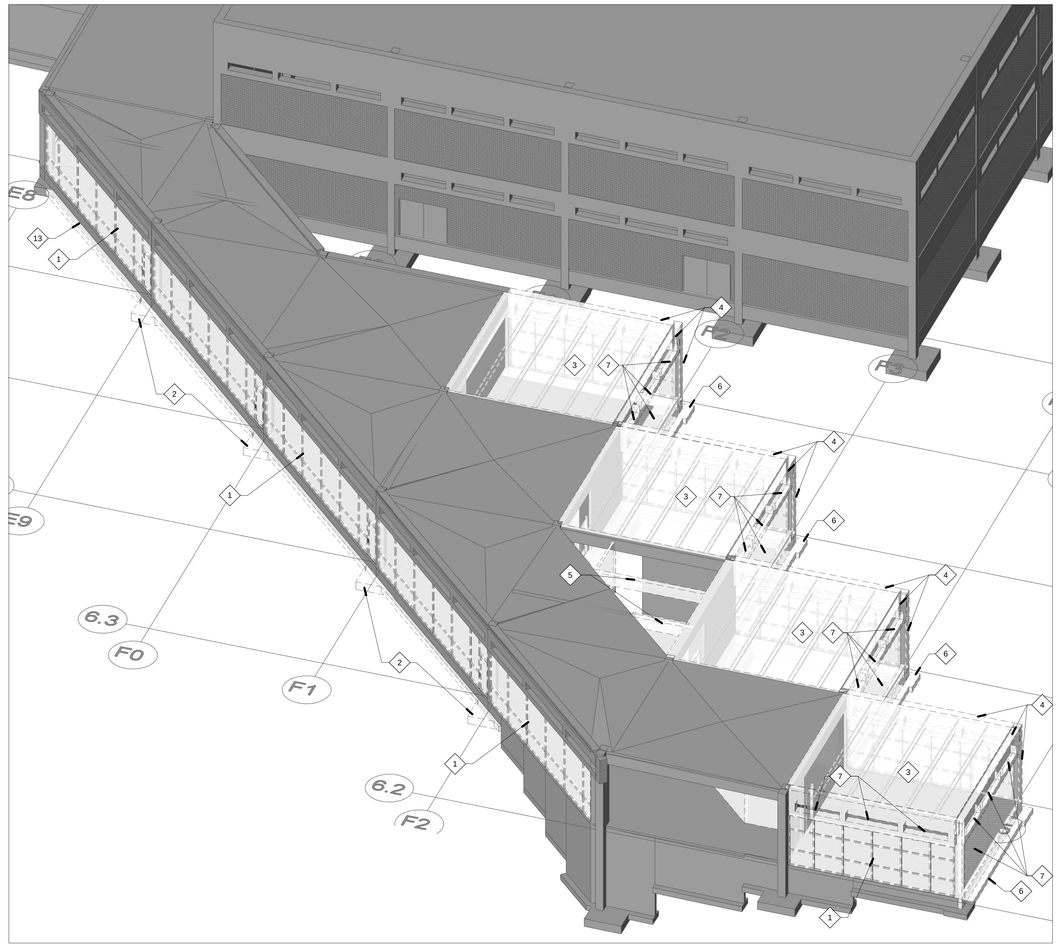

2 AD-132 DEMO SOUTH

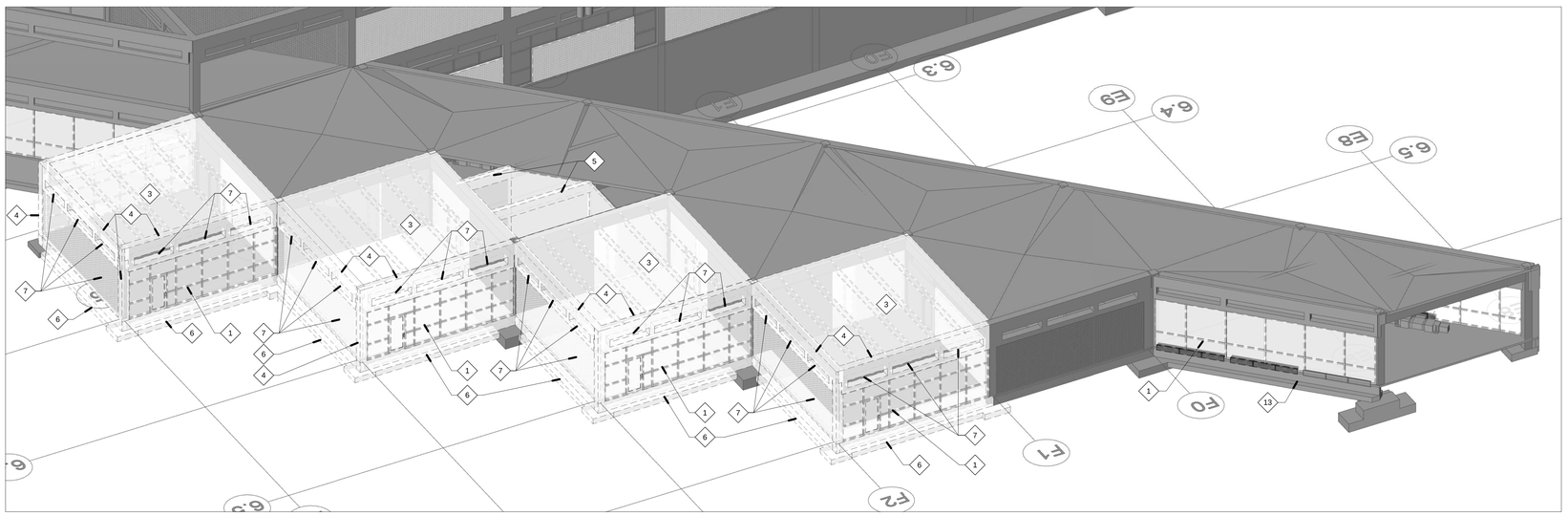

1 AD-132 DEMO NORTH

GSBS ARCHITECTS

375 WEST 200 SOUTH
SALT LAKE CITY, UT 84101

P 801.521.8600
F 801.521.7913

www.gsbsarchitects.com

STATE OF UTAH
116302
LICENSED ARCHITECT

REVISIONS:

DEMOLITION KEYED NOTES:

1. REMOVE EXISTING ALUM. STOREFRONT SYSTEM AND GLAZING COMPLETE.
2. REMOVE EXISTING CONCRETE FOOTING FLUSH W/ OUTSIDE FACE OF FOUNDATION WALL. MATERIAL TO BE RECYCLED OR CRUSHED FOR RE-USE.
3. REMOVE EXISTING ROOF SYSTEM, STRUCTURE, DRAINAGE SYSTEM, MEMBRANE AND FLASHING COMPLETE. RECYCLE ALL STRUCTURAL AND MISC. STEEL.
4. REMOVE EXISTING CONCRETE BEAM/ COLUMN. MATERIAL TO BE RECYCLED OR CRUSHED FOR RE-USE.
5. REMOVE PORTION OF EXISTING CONCRETE BEAM/ COLUMN AS INDICATED. MATERIAL TO BE RECYCLED OR CRUSHED FOR RE-USE.
6. REMOVE EXISTING CONCRETE FOUNDATION AS INDICATED. MATERIAL TO BE RECYCLED OR CRUSHED FOR RE-USE.
7. REMOVE EXISTING INFILL WALL.
8. REMOVE ROOFING ENTIRELY TO CONCRETE DECK. CAP DRAINS
9. REMOVE EXISTING FLOORS, FOUNDATIONS AND FOOTINGS AS INDICATED
10. REMOVE EXISTING WALLS, WINDOWS AND DOORS AS INDICATED
11. REMOVE EXISTING MECH. AND COMMUNICATION EQUIPMENT
12. REMOVE EXISTING BRICK VENEER AND SUPPORTS COMPLETE
13. EXISTING CONCRETE FLOOR SLAB TO BE REMOVED. CONTRACTOR TO COORDINATE ALL WORK TO ACCOMMODATE NEW UTILITY TUNNEL
14. REMOVE SECTION OF RAILING TO ACCOMMODATE NEW EXHAUST DUCT. COORD. SIZE W/ MECH. DRAWINGS
15. REMOVE EXISTING SECTION(S) OF GUARDRAIL
16. REMOVE EXISTING GLAZING AND ALUMINUM STOREFRONT AS REQUIRED TO ACCOMMODATE NEW EXIT DOOR AND BRICK INFILL WALL PANEL
17. PATCH AND REPLACE CONCRETE FLOOR AS REQUIRED WHERE MECHANICAL ITEMS HAVE BEEN REMOVED. FINISH FLUSH TO MATCH REMAINING ADJACENT FLOOR
18. REMOVE EXISTING PRE-CAST CONCRETE EDGE PAVER AND GUARDRAIL TO ACCOMMODATE ROOF MEMBRANE PLACEMENT. RE-INSTALL OR PROVIDE REPLACEMENT AS NECESSARY

Utah Valley University New Science Building

800 West University Parkway
Orem, Utah 84058

Division of Facilities Construction and Management

DRAWN BY:	Author
CHECKED BY:	Checker
DFCM PROJECT NO.:	09020790
GSBS PROJECT NO.:	2009.115.00
ISSUED DATE:	05.07.2010

DEMO VIEWS

CONSTRUCTION DOCUMENTS

AD-132

GSBS ARCHITECTS
375 WEST 200 SOUTH
SALT LAKE CITY, UT 84101
P 801.521.8600
F 801.521.7913
www.gsbsarchitects.com

STATE OF UTAH
116302
LICENSED ARCHITECT

REVISIONS:

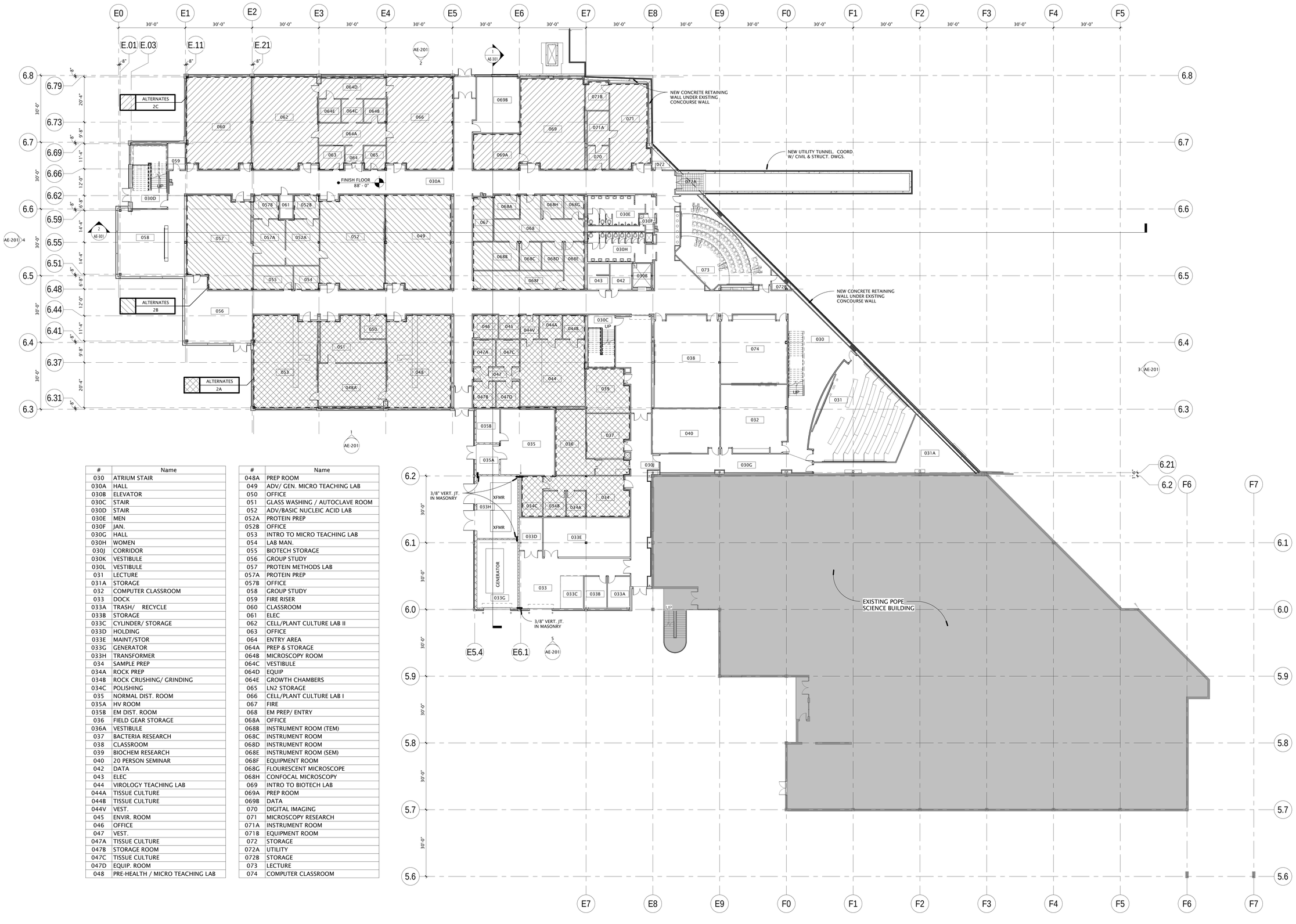

#	Name
030	ATRIUM STAIR
030A	HALL
030B	ELEVATOR
030C	STAIR
030D	STAIR
030E	MEN
030F	JAN.
030G	HALL
030H	WOMEN
030J	CORRIDOR
030K	VESTIBULE
030L	VESTIBULE
031	LECTURE
031A	STORAGE
032	COMPUTER CLASSROOM
033	DOCK
033A	TRASH/ RECYCLE
033B	STORAGE
033C	CYLINDER/ STORAGE
033D	HOLDING
033E	MAINT/STOR
033G	GENERATOR
033H	TRANSFORMER
034	SAMPLE PREP
034A	ROCK PREP
034B	ROCK CRUSHING/ GRINDING
034C	POLISHING
035	NORMAL DIST. ROOM
035A	HV ROOM
035B	EM DIST. ROOM
036	FIELD GEAR STORAGE
036A	VESTIBULE
037	BACTERIA RESEARCH
038	CLASSROOM
039	BIOCHEM RESEARCH
040	20 PERSON SEMINAR
042	DATA
043	ELEC
044	VIROLOGY TEACHING LAB
044A	TISSUE CULTURE
044B	TISSUE CULTURE
044V	VEST.
045	ENVIR. ROOM
046	OFFICE
047	VEST.
047A	TISSUE CULTURE
047B	STORAGE ROOM
047C	TISSUE CULTURE
047D	EQUIP. ROOM
048	PRE-HEALTH / MICRO TEACHING LAB

#	Name
048A	PREP ROOM
049	ADV/ GEN. MICRO TEACHING LAB
050	OFFICE
051	GLASS WASHING / AUTOCLAVE ROOM
052	ADV/BASIC NUCLEIC ACID LAB
052A	PROTEIN PREP
052B	OFFICE
053	INTRO TO MICRO TEACHING LAB
054	LAB MAN.
055	BIOTECH STORAGE
056	GROUP STUDY
057	PROTEIN METHODS LAB
057A	PROTEIN PREP
057B	OFFICE
058	GROUP STUDY
059	FIRE RISER
060	CLASSROOM
061	ELEC
062	CELL/PLANT CULTURE LAB II
063	OFFICE
064	ENTRY AREA
064A	PREP & STORAGE
064B	MICROSCOPY ROOM
064C	VESTIBULE
064D	EQUIP
064E	GROWTH CHAMBERS
065	LN2 STORAGE
066	CELL/PLANT CULTURE LAB I
067	FIRE
068	EM PREP/ ENTRY
068A	OFFICE
068B	INSTRUMENT ROOM (TEM)
068C	INSTRUMENT ROOM
068D	INSTRUMENT ROOM
068E	INSTRUMENT ROOM (SEM)
068F	EQUIPMENT ROOM
068G	FLOURESCENT MICROSCOPE
068H	CONFOCAL MICROSCOPY
069	INTRO TO BIOTECH LAB
069A	PREP ROOM
069B	DATA
070	DIGITAL IMAGING
071	MICROSCOPY RESEARCH
071A	INSTRUMENT ROOM
071B	EQUIPMENT ROOM
072	STORAGE
072A	UTILITY
072B	STORAGE
073	LECTURE
074	COMPUTER CLASSROOM

REFER TO SPECIFICATION SECTION 012300 ALTERNATES AND ARCHITECTURAL / LAB FURNISHINGS / MECHANICAL / LAB PLUMBING / ELECTRICAL / LAB ELECTRICAL DRAWINGS FOR COMPLETE DEFINITION OF 5 ALTERNATES.

SEE LABORATORY FURNISHING (LF) SHEETS FOR ALL LABORATORY FIT-OUT.

PROJECT NORTH

Utah Valley University New Science Building

800 West University Parkway
Orem, Utah 84058

Division of Facilities Construction and Management

DRAWN BY:	Author
CHECKED BY:	Checker
DFCM PROJECT NO.:	09020790
GSBS PROJECT NO.:	2009.115.00
ISSUED DATE:	05.07.2010

LEVEL 0 FLOOR PLAN

1 AE-101 LEVEL 0 FLOOR PLAN
1/16" = 1'-0"
16' 8' 0' 16' 32'

CONSTRUCTION DOCUMENTS

AE-101

GSBS ARCHITECTS
375 WEST 200 SOUTH
SALT LAKE CITY, UT 84101
P 801.521.8600
F 801.521.7913
www.gsbsarchitects.com

STATE OF UTAH LICENSED ARCHITECT 116302

REVISIONS:

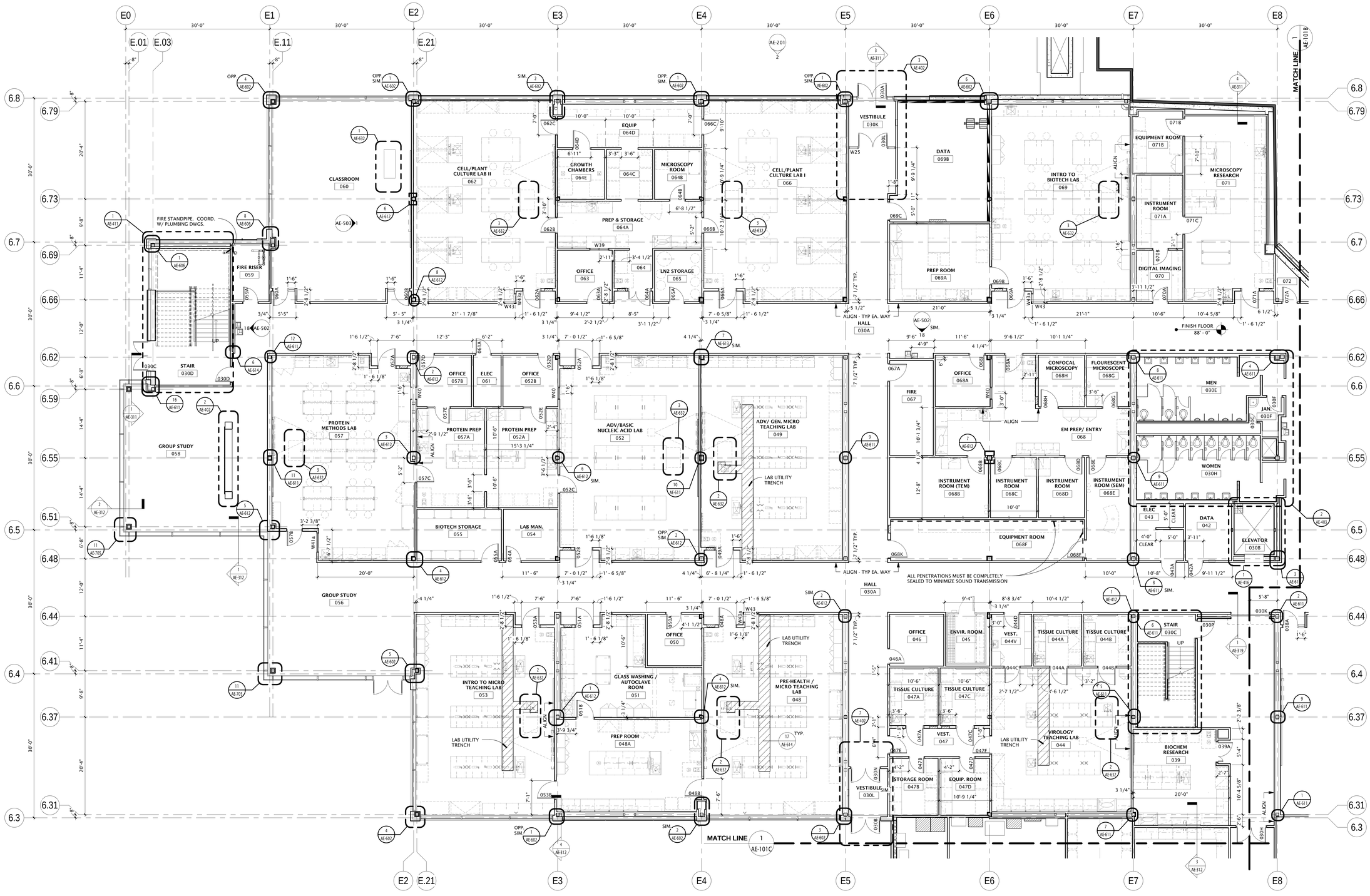

REFER TO STRUCTURAL FRAMING PLANS FOR EXTENT OF STRUCTURAL MEMBERS REQUIRED TO RECEIVE FIREPROOFING.
REFER TO ARCHITECTURAL DETAILS FOR FIREPROOFING TYPE AND ASSEMBLY NUMBERS.

SEE LABORATORY FURNISHING (LF) SHEETS FOR ALL LABORATORY FIT-OUT.

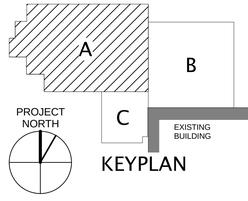

Utah Valley University New Science Building

800 West University Parkway
Orem, Utah 84058

Division of Facilities Construction and Management

DRAWN BY:	Author
CHECKED BY:	Checker
DFCM PROJECT NO.:	09020790
GSBS PROJECT NO.:	2009.115.00
ISSUED DATE:	05.07.2010

LEVEL 0 FLOOR PLAN - AREA A

CONSTRUCTION DOCUMENTS

AE-101A

1 AE-101A LEVEL 0 FLOOR PLAN - AREA A
1/8" = 1'-0"

1 AE-101B LEVEL 0 FLOOR PLAN - AREA B

1/8" = 1'-0"

8' 4' 0' 8' 16'

GSBS ARCHITECTS

375 WEST 200 SOUTH
SALT LAKE CITY, UT 84101

P 801.521.8600
F 801.521.7913

www.gsbsarchitects.com

STATE OF UTAH
116302
LICENSED ARCHITECT

REVISIONS:

REFER TO STRUCTURAL FRAMING PLANS FOR EXTENT OF STRUCTURAL MEMBERS REQUIRED TO RECEIVE FIREPROOFING.
REFER TO ARCHITECTURAL DETAILS FOR FIREPROOFING TYPE AND ASSEMBLY NUMBERS.

SEE LABORATORY FURNISHING (LF) SHEETS FOR ALL LABORATORY FIT-OUT.

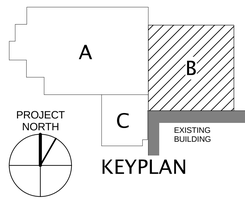

KEYPLAN

Utah Valley University New Science Building

800 West University Parkway
Orem, Utah 84058

Division of Facilities Construction and Management

DRAWN BY:	Author
CHECKED BY:	Checker
DFCM PROJECT NO.:	09020790
GSBS PROJECT NO.:	2009.115.00
ISSUED DATE:	05.07.2010

LEVEL 0 FLOOR PLAN - AREA B

CONSTRUCTION DOCUMENTS

AE-101B

GSBS ARCHITECTS

375 WEST 200 SOUTH
SALT LAKE CITY, UT 84101

P 801.521.8600
F 801.521.7913

www.gsbsarchitects.com

STATE OF UTAH
116302
LICENSED ARCHITECT

REVISIONS:

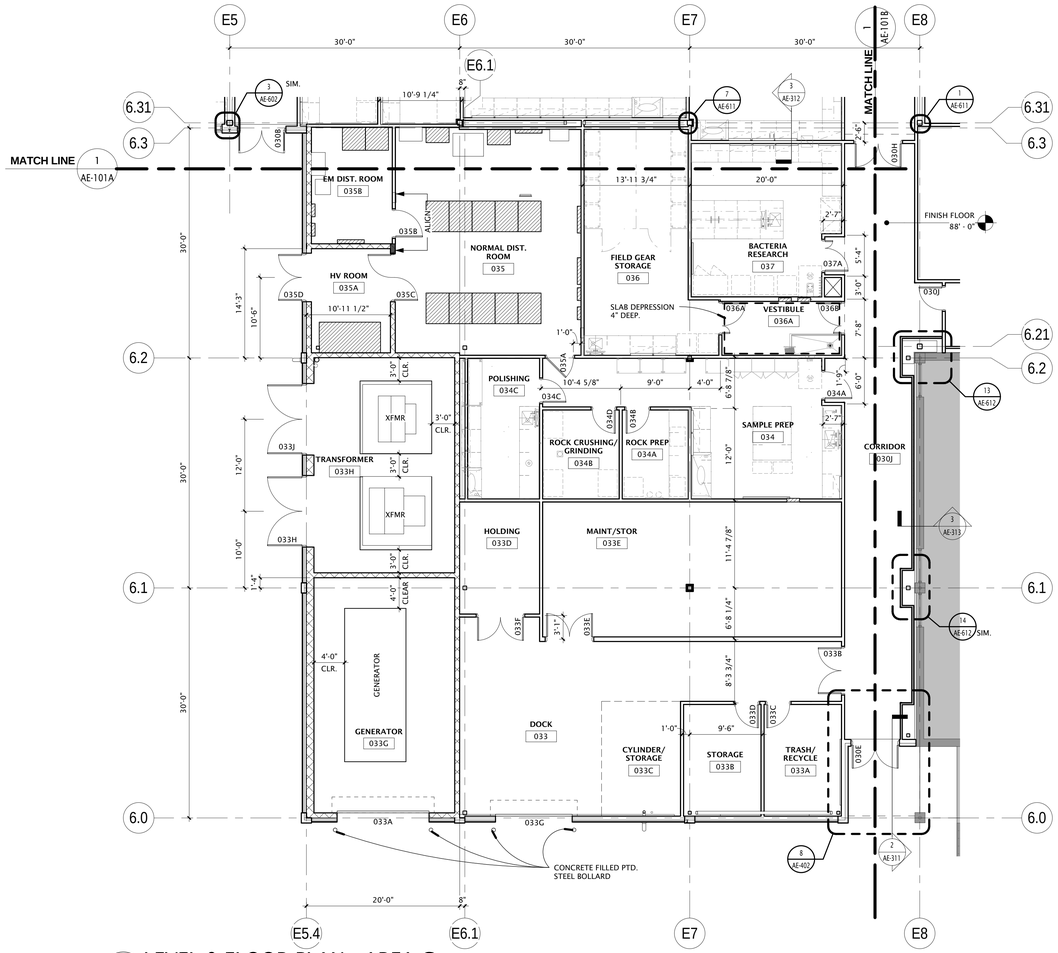

1 LEVEL 0 FLOOR PLAN - AREA C
AE-101C 1/8" = 1'-0"

REFER TO STRUCTURAL FRAMING PLANS FOR EXTENT OF STRUCTURAL MEMBERS REQUIRED TO RECEIVE FIREPROOFING.
REFER TO ARCHITECTURAL DETAILS FOR FIREPROOFING TYPE AND ASSEMBLY NUMBERS.

SEE LABORATORY FURNISHING (LF) SHEETS FOR ALL LABORATORY FIT-OUT.

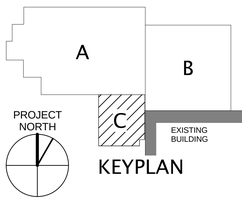

KEYPLAN

Utah Valley University New Science Building

800 West University Parkway
Orem, Utah 84058

Division of Facilities Construction and Management

DRAWN BY:	Author
CHECKED BY:	Checker
DFCM PROJECT NO.:	09020790
GSBS PROJECT NO.:	2009.115.00
ISSUED DATE:	05.07.2010

LEVEL 0 FLOOR PLAN - AREA C

CONSTRUCTION DOCUMENTS

AE-101C

GSBS ARCHITECTS

375 WEST 200 SOUTH
SALT LAKE CITY, UT 84101

P 801.521.8600
F 801.521.7913

www.gsbsarchitects.com

STATE OF UTAH
116302
LICENSED ARCHITECT

REVISIONS:

INDICATES EXTENT OF RECESSED SLAB. SEE DETAILS

GENERAL NOTES

- CLASSROOM FURNITURE (CONFERENCE TABLES, DESKS AND CLASSROOM CHAIRS) ARE SHOWN FOR REFERENCE ONLY. AUDITORIUM AND LECTURE HALL FIXED SEATING IS A PART OF THE BUILD-OUT.
- SEE SHEET AE-140 FOR WALL TYPE LEGEND
- SEE SHEET AE-801 FOR FINISH SCHEDULE
- ALL EXTERIOR CLERESTORY & VISION WINDOWS TO BE OUTFITTED W/ METAL HORIZONTAL LOUVERED BLINDS U.N.O.

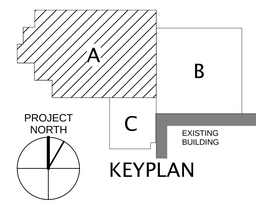

KEYPLAN

Utah Valley University New Science Building

800 West University Parkway
Orem, Utah 84058

Division of Facilities Construction and Management

DRAWN BY:	Author
CHECKED BY:	Checker
DFCM PROJECT NO.:	09020790
GSBS PROJECT NO.:	2009.115.00
ISSUED DATE:	05.07.2010

LEVEL 0 WTFI PLAN- AREA A

1 AE-102A LEVEL 0 WTFI PLAN - AREA A
1/8" = 1'-0"
8' 4' 0' 8' 16'

CONSTRUCTION DOCUMENTS

AE-102A

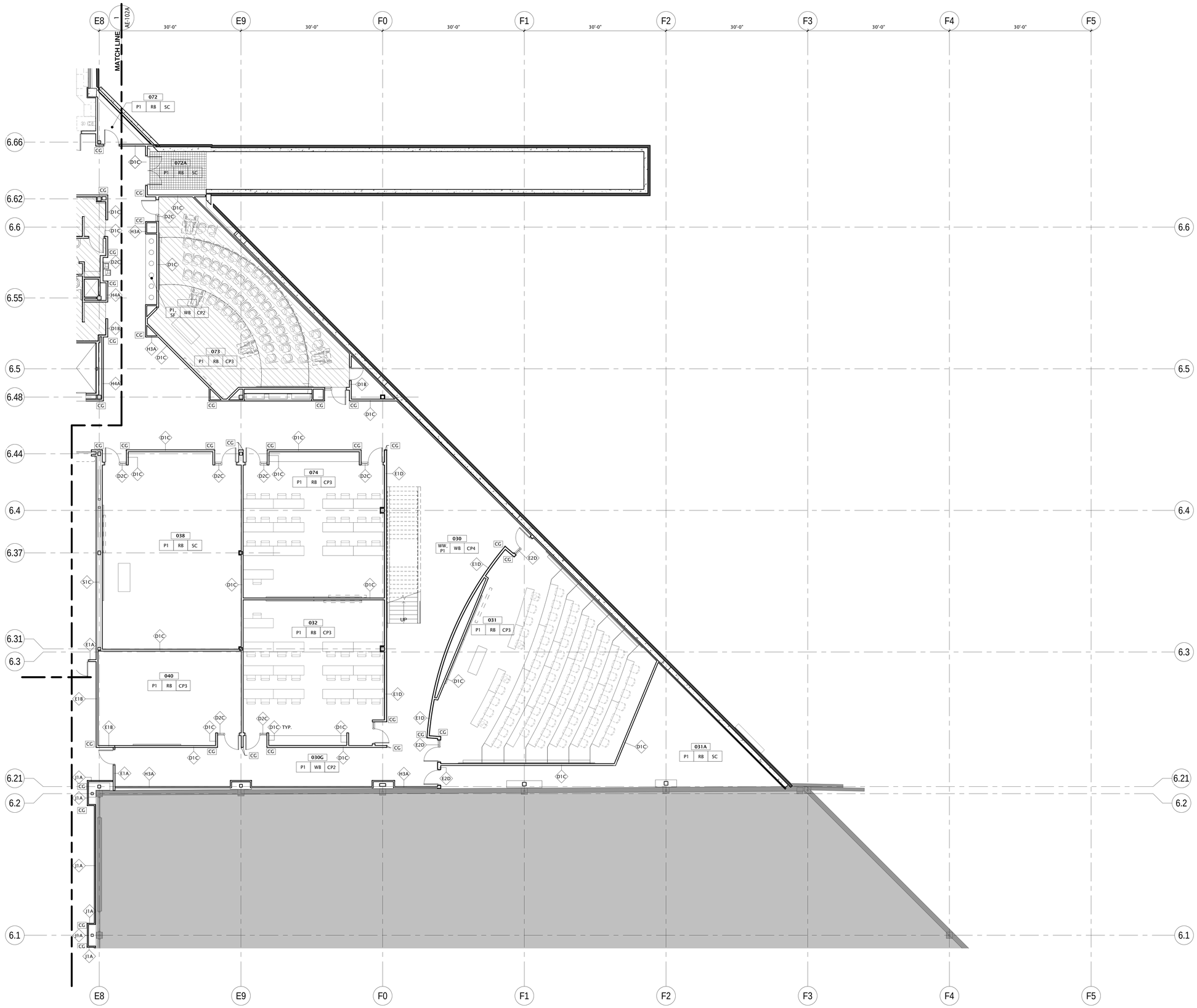

1 AE-102B LEVEL 0 WTFI PLAN - AREA B

1/8" = 1'-0"

8' 4' 0' 8' 16'

GSBS ARCHITECTS

375 WEST 200 SOUTH
SALT LAKE CITY, UT 84101

P 801.521.8600
F 801.521.7913

www.gsbsarchitects.com

STATE OF UTAH
116302
LICENSED ARCHITECT

REVISIONS:

INDICATES EXTENT OF RECESSED SLAB. SEE DETAILS

GENERAL NOTES

- CLASSROOM FURNITURE (CONFERENCE TABLES, DESKS AND CLASSROOM CHAIRS) ARE SHOWN FOR REFERENCE ONLY. AUDITORIUM AND LECTURE HALL FIXED SEATING IS A PART OF THE BUILD-OUT.
- SEE SHEET AE-140 FOR WALL TYPE LEGEND
- SEE SHEET AE-801 FOR FINISH SCHEDULE
- ALL EXTERIOR CLERESTORY & VISION WINDOWS TO BE OUTFITTED W/ METAL HORIZONTAL LOUVERED BLINDS U.N.O.

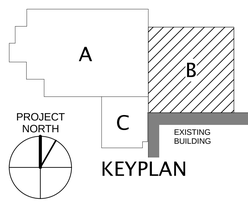

KEYPLAN

Utah Valley University New Science Building

800 West University Parkway
Orem, Utah 84058

Division of Facilities Construction and Management

DRAWN BY:	Author
CHECKED BY:	Checker
DFCM PROJECT NO.:	09020790
GSBS PROJECT NO.:	2009.115.00
ISSUED DATE:	05.07.2010

LEVEL 0 WTFI PLAN- AREA B

CONSTRUCTION DOCUMENTS

AE-102B

GSBS ARCHITECTS

375 WEST 200 SOUTH
SALT LAKE CITY, UT 84101

P 801.521.8600
F 801.521.7913

www.gsbsarchitects.com

STATE OF UTAH
116302
LICENSED ARCHITECT

REVISIONS:

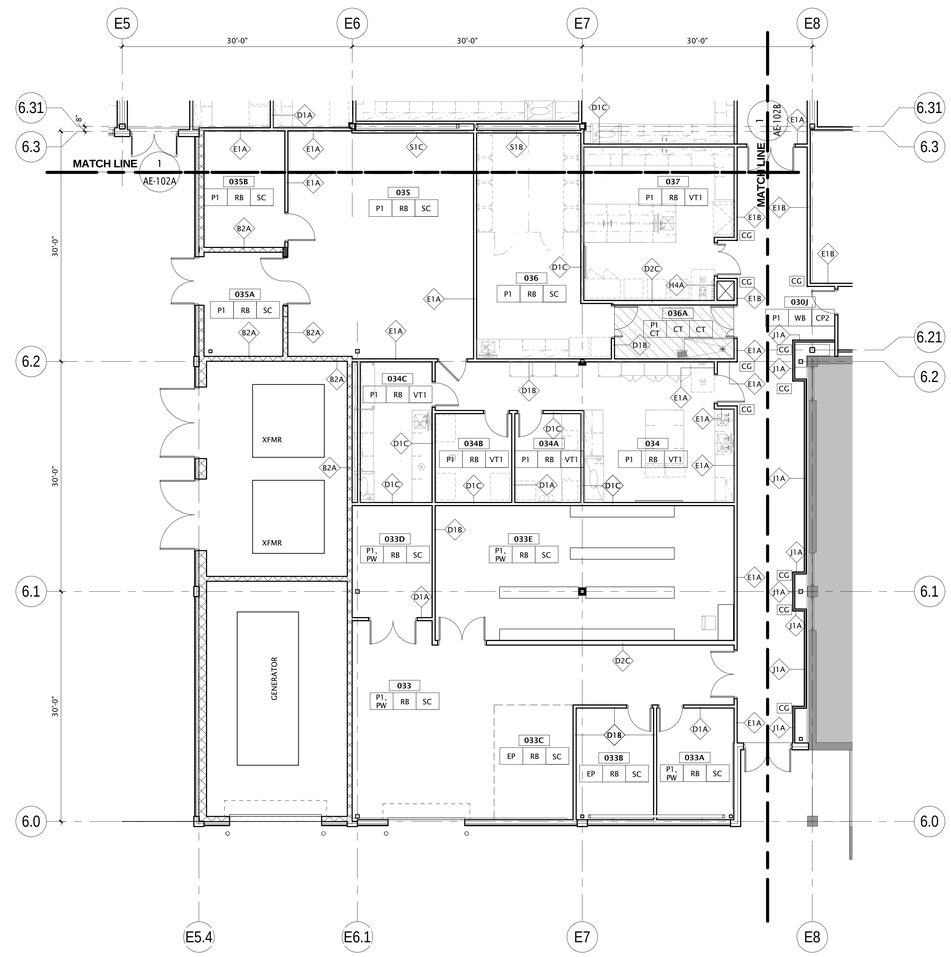

1 AE-102C LEVEL 0 WTFI PLAN - AREA C
1/8" = 1'-0"

INDICATES EXTENT OF RECESSED SLAB. SEE DETAILS

GENERAL NOTES

- CLASSROOM FURNITURE (CONFERENCE TABLES, DESKS AND CLASSROOM CHAIRS) ARE SHOWN FOR REFERENCE ONLY. AUDITORIUM AND LECTURE HALL FIXED SEATING IS A PART OF THE BUILD OUT.
- SEE SHEET AE-140 FOR WALL TYPE LEGEND
- SEE SHEET AE-801 FOR FINISH SCHEDULE
- ALL EXTERIOR CLERESTORY & VISION WINDOWS TO BE OUTFITTED W/ METAL HORIZONTAL LOUVERED BLINDS U.N.O.

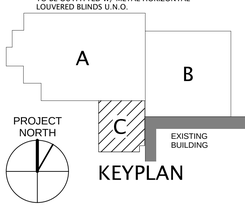

KEYPLAN

Utah Valley University New Science Building

800 West University Parkway
Orem, Utah 84058

Division of Facilities Construction and Management

DRAWN BY:	Author
CHECKED BY:	Checker
DFCM PROJECT NO.:	09020790
GSBS PROJECT NO.:	2009.115.00
ISSUED DATE:	05.07.2010

LEVEL 0 WTFI PLAN- AREA C

CONSTRUCTION DOCUMENTS

AE-102C

GSBS ARCHITECTS

375 WEST 200 SOUTH
SALT LAKE CITY, UT 84101

P 801.521.8600
F 801.521.7913

www.gsbsarchitects.com

STATE OF UTAH
116302
LICENSED ARCHITECT

REVISIONS:

CARPET LEGEND

- CP1
- CP2
- CP3

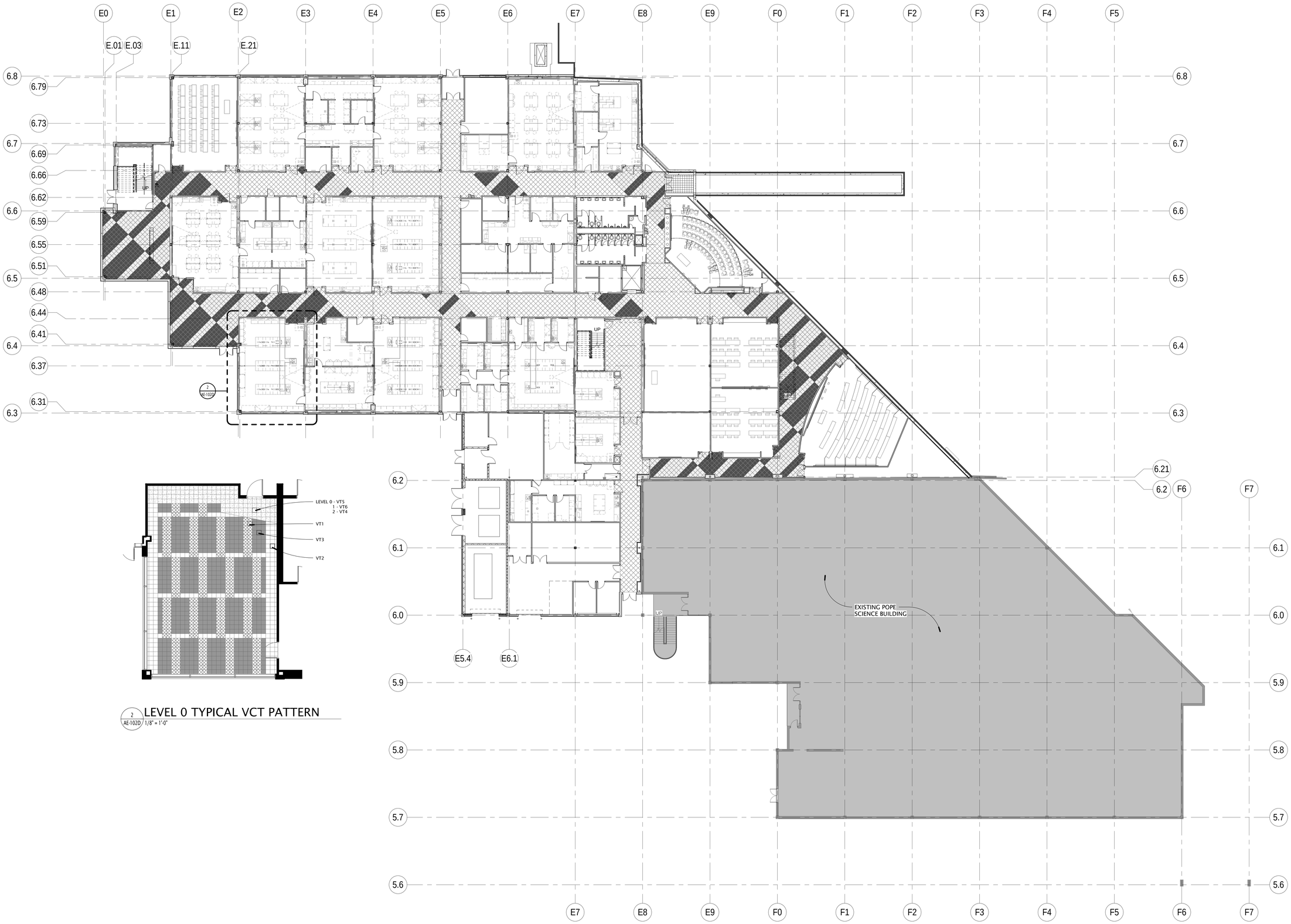

2 AE-102D LEVEL 0 TYPICAL VCT PATTERN
1/8" = 1'-0"

1 AE-102D LEVEL 0 FLOOR PATTERN PLAN
1/16" = 1'-0"

Utah Valley University New Science Building

800 West University Parkway
Orem, Utah 84058

Division of Facilities Construction and Management

DRAWN BY:	Author
CHECKED BY:	Checker
DFCM PROJECT NO.:	09020790
GSBS PROJECT NO.:	2009.115.00
ISSUED DATE:	05.07.2010

LEVEL 0 FLOOR PATTERN PLAN

CONSTRUCTION DOCUMENTS

AE-102D

GSBS ARCHITECTS

375 WEST 200 SOUTH
SALT LAKE CITY, UT 84101

P 801.521.8600
F 801.521.7913

www.gsbsarchitects.com

STATE OF UTAH
116302
LICENSED ARCHITECT

REVISIONS:

1 AE-103A LEVEL 0 REFLECTED CEILING PLAN - AREA A
1/8" = 1'-0"

PLAN LEGEND

ROOM # 100
TYPE A
ELEVATION 9'-0"

TYPE A	2' x 2' LAY-IN ACOUSTICAL TILE IN SUSPENDED GRID
TYPE B	VINYL OR MYLAR FACED PANEL IN SUSPENDED GRID
TYPE C	5/8" GYPSUM BOARD (PAINTED) ON METAL SUSPENSION SYSTEM
TYPE D	5/8" GYPSUM BOARD (EPOXY PAINTED) ON METAL SUSPENSION SYSTEM
TYPE E	SPECIAL/ CUSTOM
TYPE F	2' x 2' LAY-IN METAL IN SUSPENDED GRID
TYPE G	EXPOSED STRUCTURE

SYMBOL LEGEND

- Lay-in Light Fixture
- Suspended or Surface Mounted Linear Light
- Recessed Light Fixture
- Pendant Light Fixture
- Pendant Light Fixture
- Mechanical Diffuser - Supply
- Mechanical Diffuser - Return

NOTE: COORDINATE WITH MECHANICAL AND ELECTRICAL DRAWINGS.

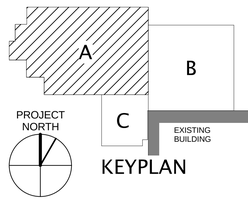

KEYPLAN

Utah Valley University New Science Building

800 West University Parkway
Orem, Utah 84058

Division of Facilities Construction and Management

DRAWN BY:	Author
CHECKED BY:	Checker
DFCM PROJECT NO.:	09020790
GSBS PROJECT NO.:	2009.115.00
ISSUED DATE:	05.07.2010

LEVEL 0 REFLECTED CEILING PLAN - AREA A

CONSTRUCTION DOCUMENTS

AE-103A

1 AE-103B LEVEL 0 REFLECTED CEILING PLAN - AREA B

1/8" = 1'-0"

8' 4' 0' 8' 16'

GSBS ARCHITECTS

375 WEST 200 SOUTH
SALT LAKE CITY, UT 84101

P 801.521.8600
F 801.521.7913

www.gsbsarchitects.com

STATE OF UTAH
116302
LICENSED ARCHITECT

REVISIONS:

PLAN LEGEND

ROOM # 100
TYPE A
ELEVATION 9'-0"

TYPE A	2' x 2' LAY-IN ACOUSTICAL TILE IN SUSPENDED GRID
TYPE B	VINYL OR MYLAR FACED PANEL IN SUSPENDED GRID
TYPE C	5/8" GYPSUM BOARD (PAINTED) ON METAL SUSPENSION SYSTEM
TYPE D	5/8" GYPSUM BOARD (EPOXY PAINTED) ON METAL SUSPENSION SYSTEM
TYPE E	SPECIAL/ CUSTOM
TYPE F	2' x 2' LAY-IN METAL IN SUSPENDED GRID
TYPE G	EXPOSED STRUCTURE

SYMBOL LEGEND

- Lay-in Light Fixture
- Suspended or Surface Mounted Linear Light
- Recessed Light Fixture
- Pendant Light Fixture
- Pendant Light Fixture
- Mechanical Diffuser - Supply
- Mechanical Diffuser - Return

NOTE: COORDINATE WITH MECHANICAL AND ELECTRICAL DRAWINGS.

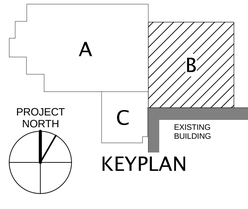

KEYPLAN

Utah Valley University New Science Building

800 West University Parkway
Orem, Utah 84058

Division of Facilities Construction and Management

DRAWN BY:	Author
CHECKED BY:	Checker
DFCM PROJECT NO.:	09020790
GSBS PROJECT NO.:	2009.115.00
ISSUED DATE:	05.07.2010

LEVEL 0 REFLECTED CEILING PLAN - AREA B

CONSTRUCTION DOCUMENTS

AE-103B

GSBS ARCHITECTS

375 WEST 200 SOUTH
SALT LAKE CITY, UT 84101

P 801.521.8600
F 801.521.7913

www.gsbsarchitects.com

STATE OF UTAH
116302
LICENSED ARCHITECT

REVISIONS:

PLAN LEGEND		ROOM # 100
		TYPE A
		ELEVATION 9'-0"
TYPE A	2' x 2' LAY-IN ACOUSTICAL TILE IN SUSPENDED GRID	
TYPE B	VINYL OR MYLAR FACED PANEL IN SUSPENDED GRID	
TYPE C	5/8" GYPSUM BOARD (PAINTED) ON METAL SUSPENSION SYSTEM	
TYPE D	5/8" GYPSUM BOARD (EPOXY PAINTED) ON METAL SUSPENSION SYSTEM	
TYPE E	SPECIAL/ CUSTOM	
TYPE F	2' x 2' LAY-IN METAL IN SUSPENDED GRID	
TYPE G	EXPOSED STRUCTURE	

SYMBOL LEGEND

- Lay-in Light Fixture
- Suspended or Surface Mounted Linear Light
- Recessed Light Fixture
- Pendant Light Fixture
- Pendant Light Fixture
- Mechanical Diffuser - Supply
- Mechanical Diffuser - Return

NOTE: COORDINATE WITH MECHANICAL AND ELECTRICAL DRAWINGS.

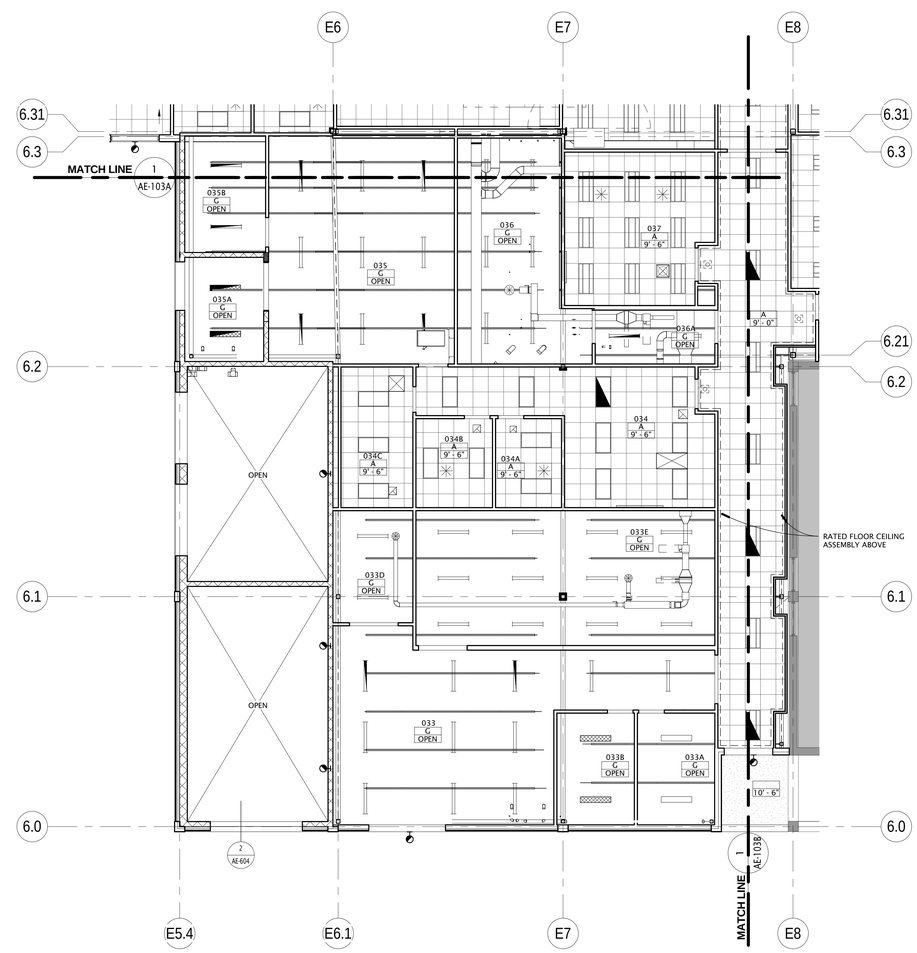

1 AE-103C LEVEL 0 REFLECTED CEILING PLAN - AREA C

1/8" = 1'-0"

8' 4' 0' 8' 16'

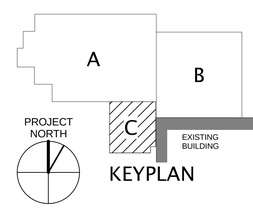

Utah Valley University New Science Building

800 West University Parkway
Orem, Utah 84058

Division of Facilities Construction and Management

DRAWN BY:	Author
CHECKED BY:	Checker
DFCM PROJECT NO.:	09020790
GSBS PROJECT NO.:	2009.115.00
ISSUED DATE:	05.07.2010

LEVEL 0 REFLECTED CEILING PLAN - AREA C

CONSTRUCTION DOCUMENTS

AE-103C

GSBS ARCHITECTS

375 WEST 200 SOUTH
SALT LAKE CITY, UT 84101

P 801.521.8600
F 801.521.7913

www.gsbsarchitects.com

STATE OF UTAH
116302
LICENSED ARCHITECT

REVISIONS:

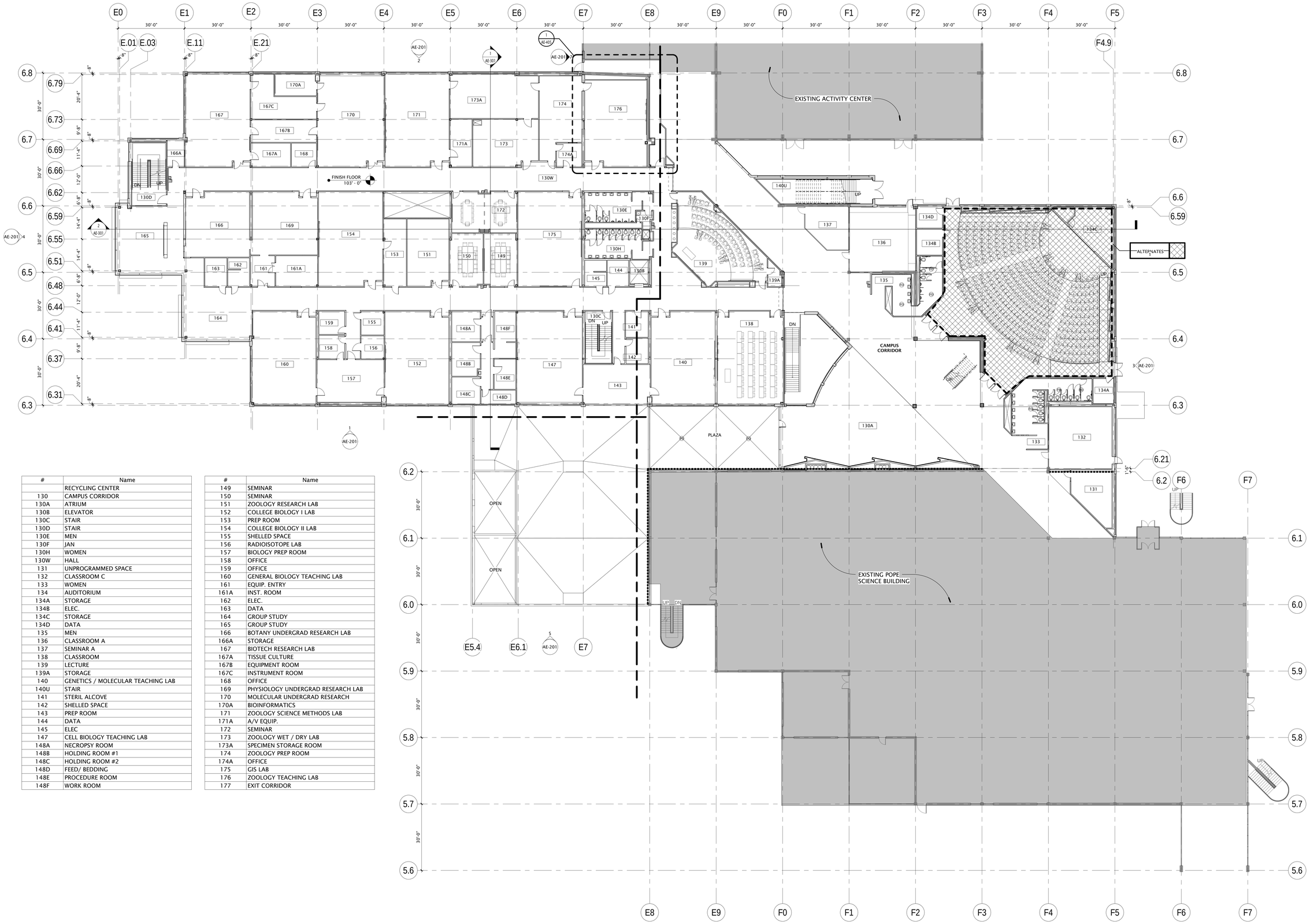

#	Name
	RECYCLING CENTER
130	CAMPUS CORRIDOR
130A	ATRIUM
130B	ELEVATOR
130C	STAIR
130D	STAIR
130E	MEN
130F	JAN
130H	WOMEN
130W	HALL
131	UNPROGRAMMED SPACE
132	CLASSROOM C
133	WOMEN
134	AUDITORIUM
134A	STORAGE
134B	ELEC.
134C	STORAGE
134D	DATA
135	MEN
136	CLASSROOM A
137	SEMINAR A
138	CLASSROOM
139	LECTURE
139A	STORAGE
140	GENETICS / MOLECULAR TEACHING LAB
140U	STAIR
141	STERIL ALCOVE
142	SHELLED SPACE
143	PREP ROOM
144	DATA
145	ELEC
147	CELL BIOLOGY TEACHING LAB
148A	NECROPSY ROOM
148B	HOLDING ROOM #1
148C	HOLDING ROOM #2
148D	FEED/ BEDDING
148E	PROCEDURE ROOM
148F	WORK ROOM

#	Name
149	SEMINAR
150	SEMINAR
151	ZOOLOGY RESEARCH LAB
152	COLLEGE BIOLOGY I LAB
153	PREP ROOM
154	COLLEGE BIOLOGY II LAB
155	SHELLED SPACE
156	RADIOISOTOPE LAB
157	BIOLOGY PREP ROOM
158	OFFICE
159	OFFICE
160	GENERAL BIOLOGY TEACHING LAB
161	EQUIP. ENTRY
161A	INST. ROOM
162	ELEC.
163	DATA
164	GROUP STUDY
165	GROUP STUDY
166	BOTANY UNDERGRAD RESEARCH LAB
166A	STORAGE
167	BIOTECH RESEARCH LAB
167A	TISSUE CULTURE
167B	EQUIPMENT ROOM
167C	INSTRUMENT ROOM
168	OFFICE
169	PHYSIOLOGY UNDERGRAD RESEARCH LAB
170	MOLECULAR UNDERGRAD RESEARCH
170A	BIOINFORMATICS
171	ZOOLOGY SCIENCE METHODS LAB
171A	A/V EQUIP.
172	SEMINAR
173	ZOOLOGY WET / DRY LAB
173A	SPECIMEN STORAGE ROOM
174	ZOOLOGY PREP ROOM
174A	OFFICE
175	GIS LAB
176	ZOOLOGY TEACHING LAB
177	EXIT CORRIDOR

REFER TO SPECIFICATION SECTION 012300 ALTERNATES AND ARCHITECTURAL / LAB FURNISHINGS / MECHANICAL / LAB PLUMBING / ELECTRICAL / LAB ELECTRICAL DRAWINGS FOR COMPLETE DEFINITION OF 5 ALTERNATES.

SEE LABORATORY FURNISHING (LF) SHEETS FOR ALL LABORATORY FIT-OUT.

PROJECT NORTH

Utah Valley University New Science Building

800 West University Parkway
Orem, Utah 84058

Division of Facilities Construction and Management

DRAWN BY:	Author
CHECKED BY:	Checker
DFCM PROJECT NO.:	09020790
GSBS PROJECT NO.:	2009.115.00
ISSUED DATE:	05.07.2010

LEVEL 1 FLOOR PLAN

1 / AE-111 LEVEL 1 FLOOR PLAN
1/16" = 1'-0"
16' 8' 0' 16' 32'

CONSTRUCTION DOCUMENTS

AE-111

GSBS ARCHITECTS

375 WEST 200 SOUTH
SALT LAKE CITY, UT 84101

P 801.521.8600
F 801.521.7913

www.gsbsarchitects.com

STATE OF UTAH
116302
LICENSED ARCHITECT

REVISIONS:

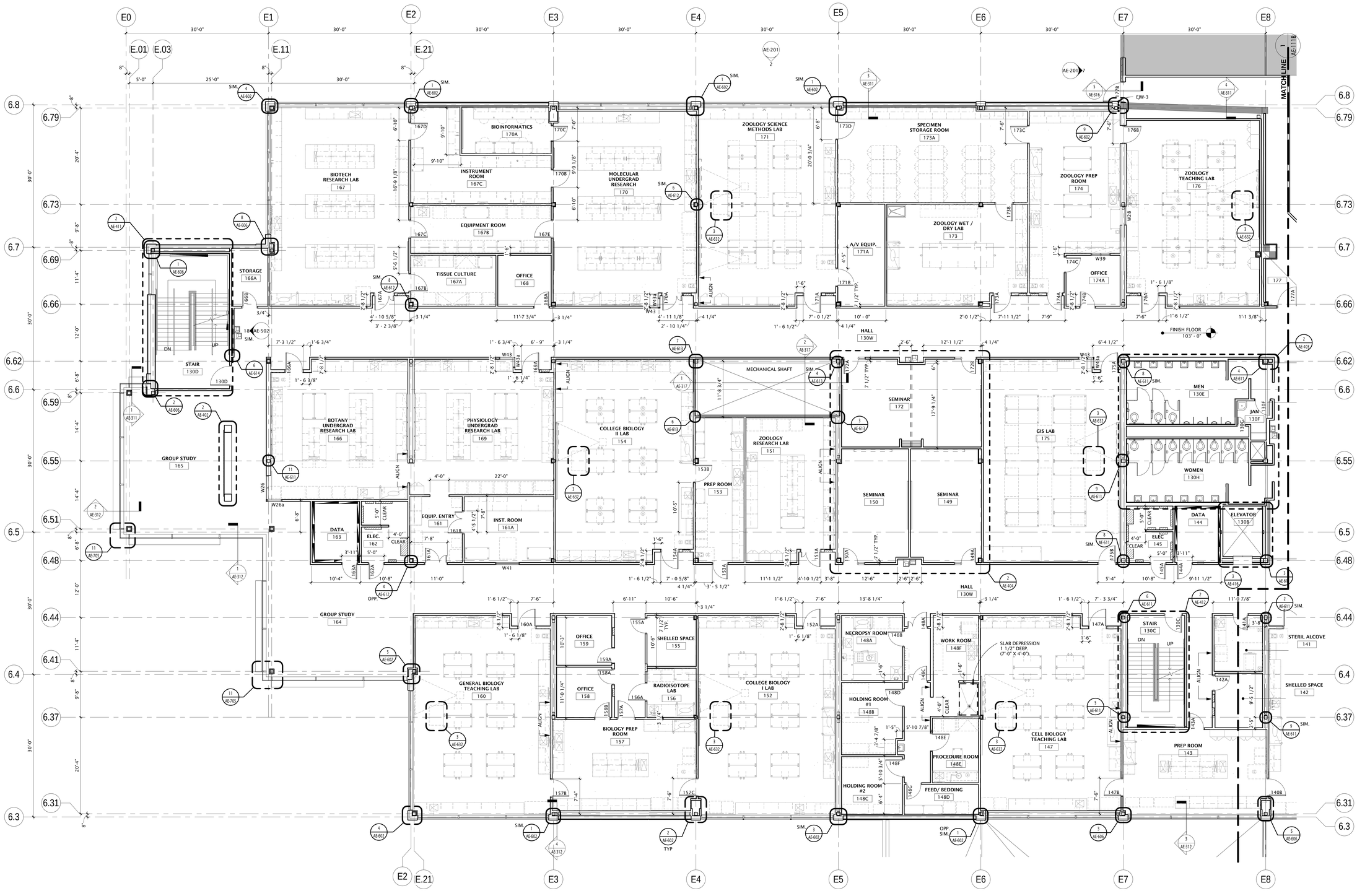

1 LEVEL 1 FLOOR PLAN - AREA A
AE-111A 1/8" = 1'-0"

REFER TO STRUCTURAL FRAMING PLANS FOR EXTENT OF STRUCTURAL MEMBERS REQUIRED TO RECEIVE FIREPROOFING.
REFER TO ARCHITECTURAL DETAILS FOR FIREPROOFING TYPE AND ASSEMBLY NUMBERS.

SEE LABORATORY FURNISHING (LF) SHEETS FOR ALL LABORATORY FIT-OUT.

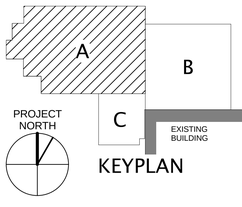

KEYPLAN

Utah Valley University New Science Building

800 West University Parkway
Orem, Utah 84058

Division of Facilities Construction and Management

DRAWN BY:	Author
CHECKED BY:	Checker
DFCM PROJECT NO.:	09020790
GSBS PROJECT NO.:	2009.115.00
ISSUED DATE:	05.07.2010

LEVEL 1 FLOOR PLAN - AREA A

CONSTRUCTION DOCUMENTS

AE-111A

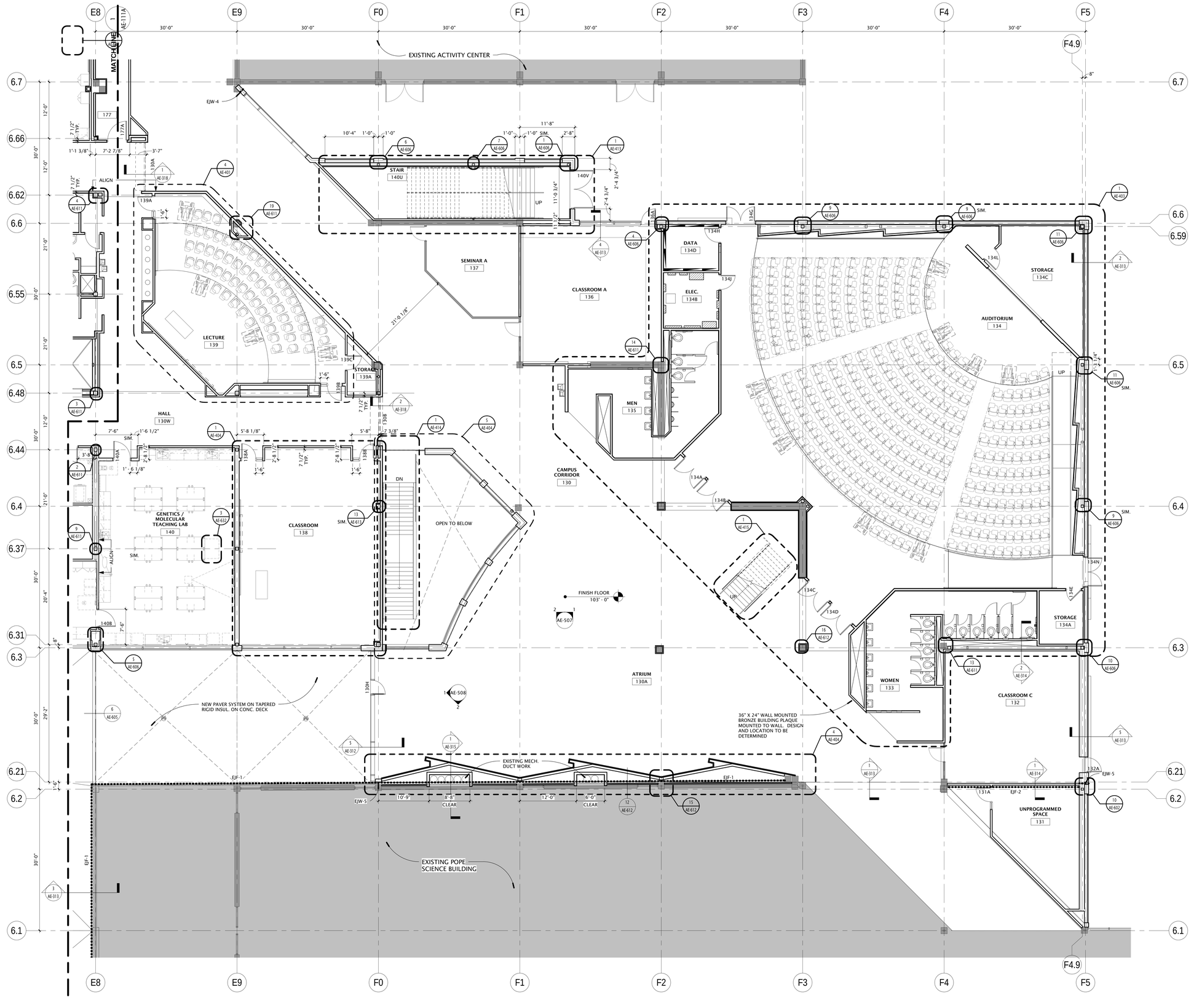

1 AE-111B LEVEL 1 FLOOR PLAN - AREA B

1/8" = 1'-0"

8' 4' 0' 8' 16'

GSBS ARCHITECTS

375 WEST 200 SOUTH
SALT LAKE CITY, UT 84101

P 801.521.8600
F 801.521.7913

www.gsbsarchitects.com

STATE OF UTAH LICENSED ARCHITECT 116302

REVISIONS:

REFER TO STRUCTURAL FRAMING PLANS FOR EXTENT OF STRUCTURAL MEMBERS REQUIRED TO RECEIVE FIREPROOFING.
REFER TO ARCHITECTURAL DETAILS FOR FIREPROOFING TYPE AND ASSEMBLY NUMBERS.

SEE LABORATORY FURNISHING (LF) SHEETS FOR ALL LABORATORY FIT-OUT.

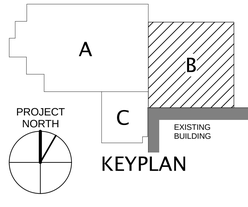

KEYPLAN

Utah Valley University New Science Building

800 West University Parkway
Orem, Utah 84058

Division of Facilities Construction and Management

DRAWN BY:	Author
CHECKED BY:	Checker
DFCM PROJECT NO.:	09020790
GSBS PROJECT NO.:	2009115.00
ISSUED DATE:	05.07.2010

LEVEL 1 FLOOR PLAN - AREA B

CONSTRUCTION DOCUMENTS

AE-111B

GSBS ARCHITECTS

375 WEST 200 SOUTH
SALT LAKE CITY, UT 84101

P 801.521.8600
F 801.521.7913

www.gsbsarchitects.com

STATE OF UTAH
116302
LICENSED ARCHITECT

REVISIONS:

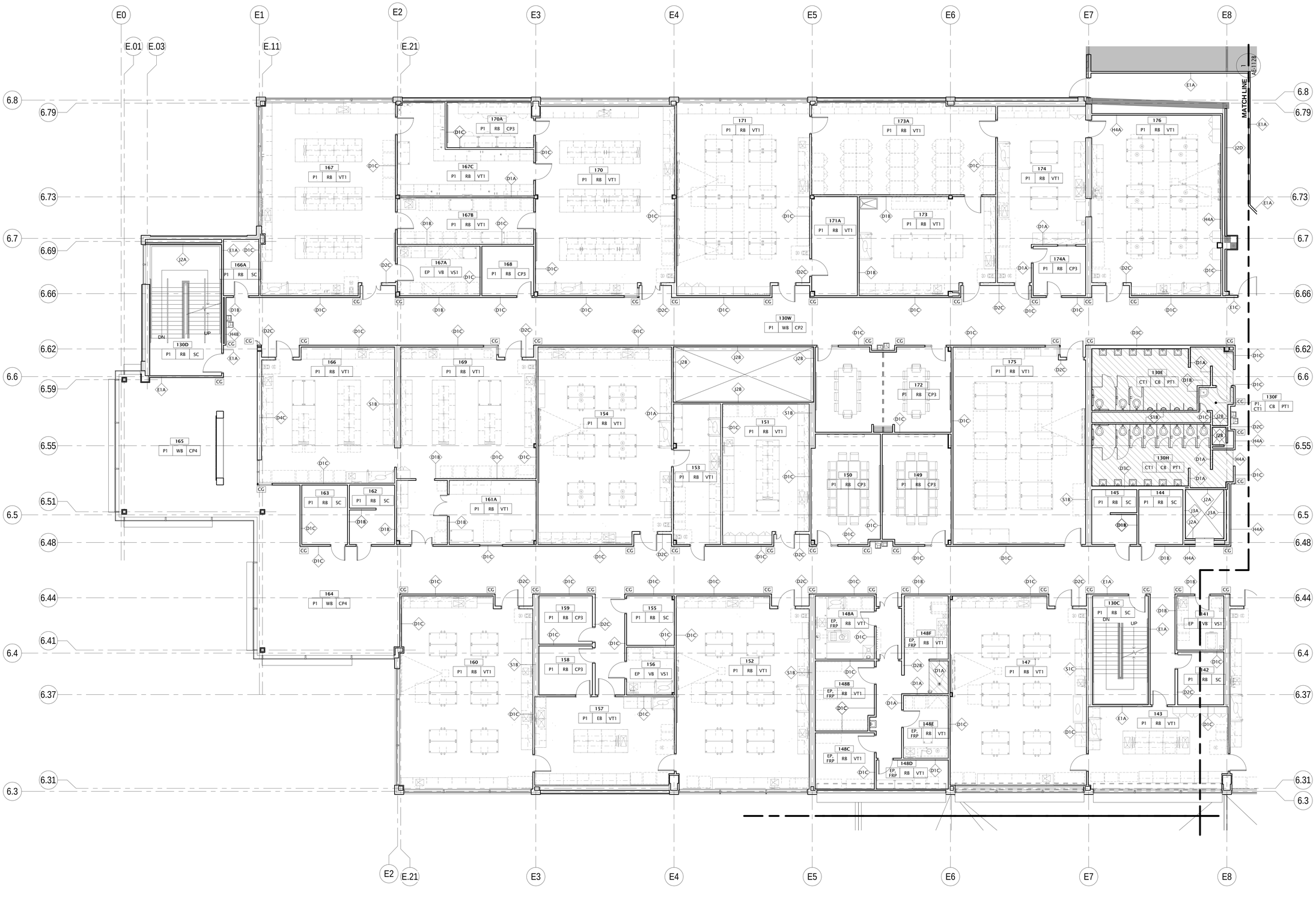

INDICATES EXTENT OF RECESSED SLAB. SEE DETAILS

GENERAL NOTES

- CLASSROOM FURNITURE (CONFERENCE TABLES, DESKS AND CLASSROOM CHAIRS) ARE SHOWN FOR REFERENCE ONLY. AUDITORIUM AND LECTURE HALL FIXED SEATING IS A PART OF THE BUILD-OUT.
- SEE SHEET AE-140 FOR WALL TYPE LEGEND
- SEE SHEET AE-801 FOR FINISH SCHEDULE
- ALL EXTERIOR CLERESTORY & VISION WINDOWS TO BE OUTFITTED W/ METAL HORIZONTAL LOUVERED BLINDS U.N.O.

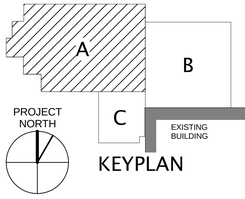

KEYPLAN

Utah Valley University New Science Building

800 West University Parkway
Orem, Utah 84058

Division of Facilities Construction and Management

DRAWN BY:	Author
CHECKED BY:	Checker
DFCM PROJECT NO.:	09020790
GSBS PROJECT NO.:	2009.115.00
ISSUED DATE:	05.07.2010

LEVEL 1 WTFI PLAN - AREA A

1 AE-112A LEVEL 1 WTFI PLAN - AREA A 1/8" = 1'-0"

8' 4' 0' 8' 16'

CONSTRUCTION DOCUMENTS

AE-112A

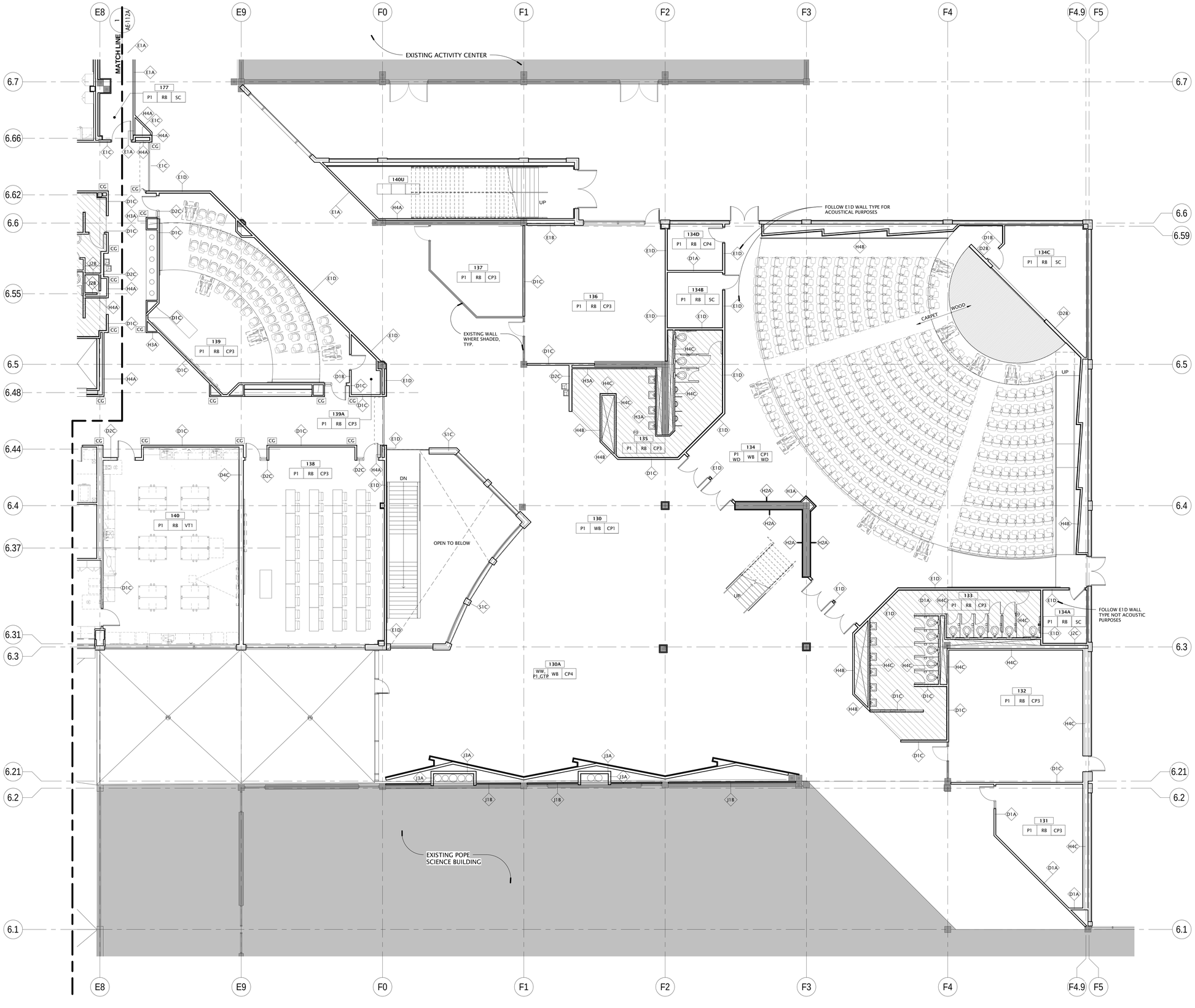

1 LEVEL 1 WTFI PLAN - AREA B
AE-112B 1/8" = 1'-0"
8' 4' 0' 8' 16'

GSBS ARCHITECTS
375 WEST 200 SOUTH
SALT LAKE CITY, UT 84101
P 801.521.8600
F 801.521.7913
www.gsbsarchitects.com

STATE OF UTAH LICENSED ARCHITECT 116302

REVISIONS:

INDICATES EXTENT OF RECESSED SLAB. SEE DETAILS

GENERAL NOTES

- CLASSROOM FURNITURE (CONFERENCE TABLES, DESKS AND CLASSROOM CHAIRS) ARE SHOWN FOR REFERENCE ONLY. AUDITORIUM AND LECTURE HALL FIXED SEATING IS A PART OF THE BUILD-OUT.
- SEE SHEET AE-140 FOR WALL TYPE LEGEND
- SEE SHEET AE-801 FOR FINISH SCHEDULE
- ALL EXTERIOR CLERESTORY & VISION WINDOWS TO BE OUTFITTED W/ METAL HORIZONTAL LOUVERED BLINDS U.N.O.

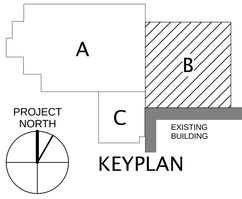

KEYPLAN

Utah Valley University New Science Building

800 West University Parkway
Orem, Utah 84058

Division of Facilities Construction and Management

DRAWN BY:	Author
CHECKED BY:	Checker
DFCM PROJECT NO.:	09020790
GSBS PROJECT NO.:	2009.115.00
ISSUED DATE:	05.07.2010

LEVEL 1 WTFI PLAN - AREA B

CONSTRUCTION DOCUMENTS

AE-112B

GSBS ARCHITECTS
375 WEST 200 SOUTH
SALT LAKE CITY, UT 84101
P 801.521.8600
F 801.521.7913
www.gsbsarchitects.com

STATE OF UTAH 116302 LICENSED ARCHITECT

REVISIONS:

CARPET LEGEND

- CP1
- CP2
- CP3

2 AE-112C LEVEL 1 TYPICAL VCT PATTERN
1/8" = 1'-0"

1 AE-112C LEVEL 1 FLOOR PATTERN PLAN
1/16" = 1'-0"

Utah Valley University New Science Building

800 West University Parkway
Orem, Utah 84058

Division of Facilities Construction and Management

DRAWN BY:	Author
CHECKED BY:	Checker
DFCM PROJECT NO.:	09020790
GSBS PROJECT NO.:	2009.115.00
ISSUED DATE:	05.07.2010

LEVEL 1 FLOOR PATTERN PLAN

CONSTRUCTION DOCUMENTS

AE-112C

GSBS ARCHITECTS

375 WEST 200 SOUTH
SALT LAKE CITY, UT 84101

P 801.521.8600
F 801.521.7913

www.gsbsarchitects.com

STATE OF UTAH
116302
LICENSED ARCHITECT

REVISIONS:

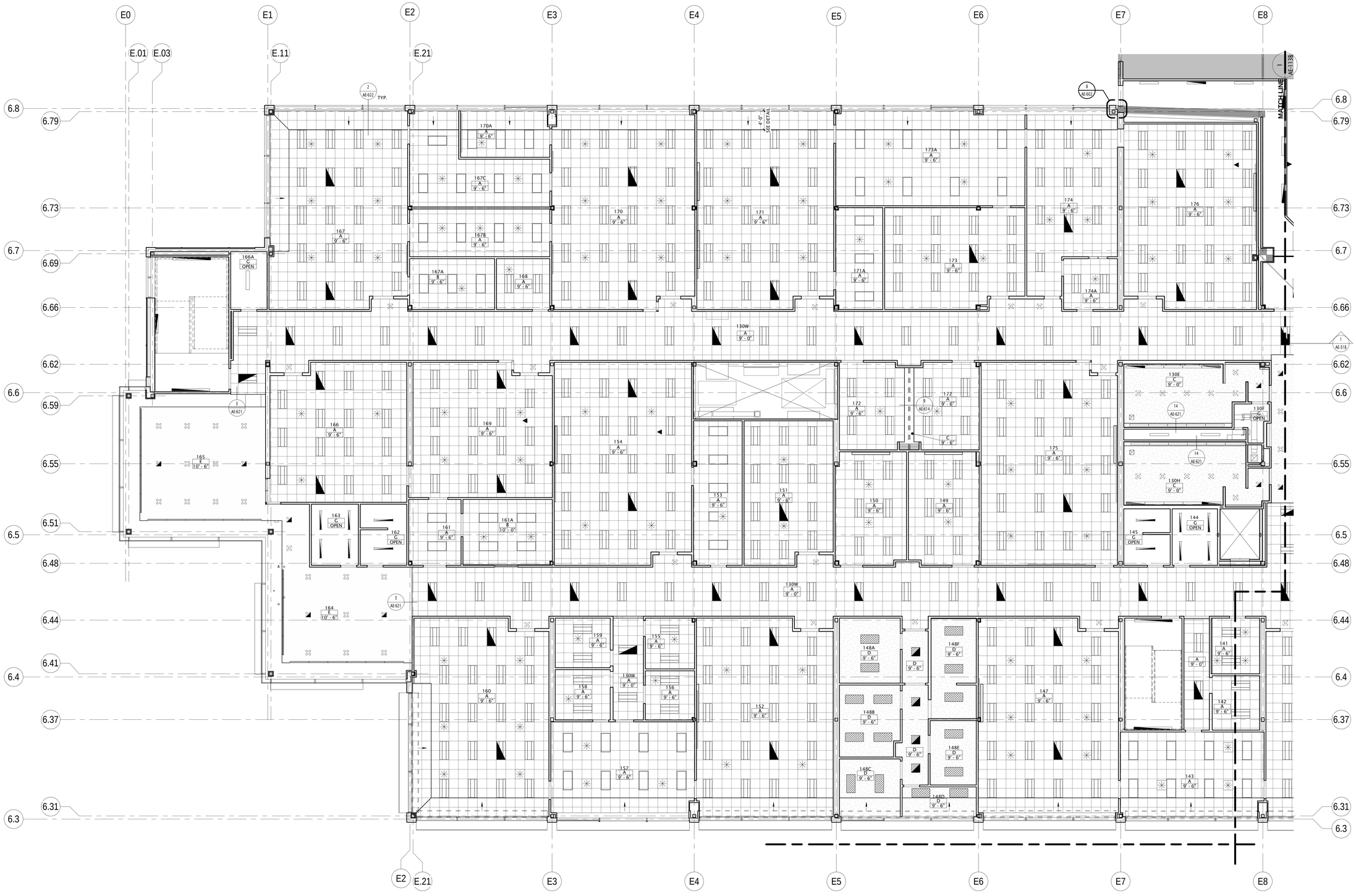

1 AE-113A 1/8" = 1'-0"

8' 4' 0' 8' 16'

LEVEL 1 REFLECTED CEILING PLAN - AREA A

PLAN LEGEND

ROOM #	100
TYPE	A
ELEVATION	9'-0"

TYPE A	2' x 2' LAY-IN ACOUSTICAL TILE IN SUSPENDED GRID
TYPE B	VINYL OR MYLAR FACED PANEL IN SUSPENDED GRID
TYPE C	5/8" GYPSUM BOARD (PAINTED) ON METAL SUSPENSION SYSTEM
TYPE D	5/8" GYPSUM BOARD (EPOXY PAINTED) ON METAL SUSPENSION SYSTEM
TYPE E	SPECIAL/ CUSTOM
TYPE F	2' x 2' LAY-IN METAL IN SUSPENDED GRID
TYPE G	EXPOSED STRUCTURE

SYMBOL LEGEND

- Lay-in Light Fixture
- Suspended or Surface Mounted Linear Light
- Recessed Light Fixture
- Pendant Light Fixture
- Pendant Light Fixture
- Mechanical Diffuser - Supply
- Mechanical Diffuser - Return

NOTE: COORDINATE WITH MECHANICAL AND ELECTRICAL DRAWINGS.

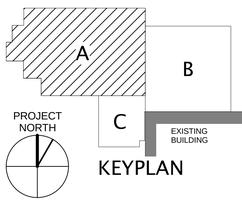

KEYPLAN

Utah Valley University New Science Building

800 West University Parkway
Orem, Utah 84058

Division of Facilities Construction and Management

DRAWN BY:	Author
CHECKED BY:	Checker
DFCM PROJECT NO.:	09020790
GSBS PROJECT NO.:	2009.115.00
ISSUED DATE:	05.07.2010

LEVEL 1 REFLECTED CEILING PLAN - AREA A

CONSTRUCTION DOCUMENTS

AE-113A

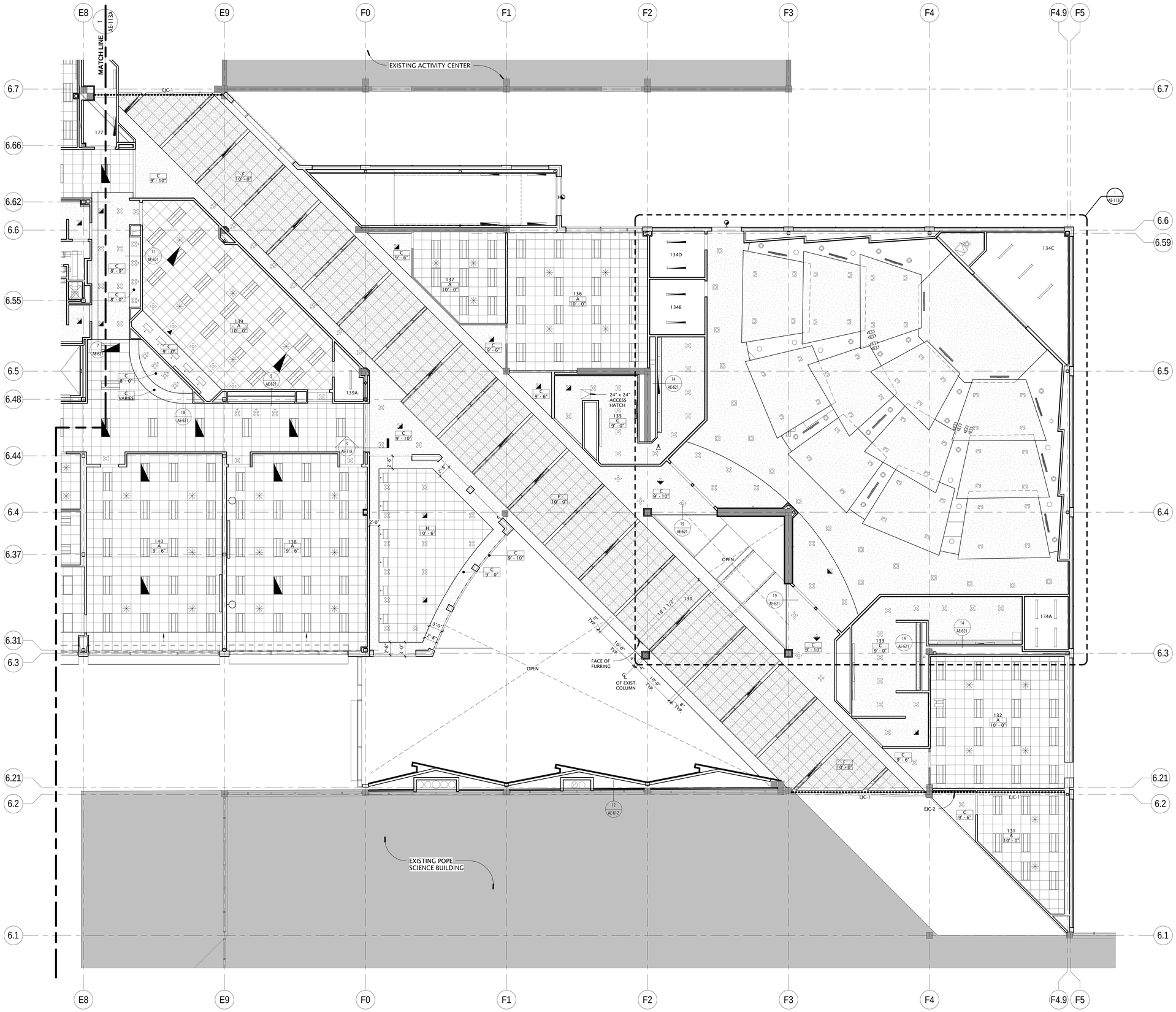

1 AE-113B LEVEL 1 REFLECTED CEILING PLAN - AREA B 1/8" = 1'-0"

8' 4' 0' 8' 16'

GSBS ARCHITECTS

375 WEST 200 SOUTH
SALT LAKE CITY, UT 84101

P 801.521.8600
F 801.521.7913

www.gsbsarchitects.com

STATE OF UTAH 116302 LICENSED ARCHITECT

REVISIONS:

PLAN LEGEND

ROOM # 100
TYPE A
ELEVATION 9'-0"

TYPE A	2' x 2' LAY-IN ACOUSTICAL TILE IN SUSPENDED GRID
TYPE B	VINYL OR MYLAR FACED PANEL IN SUSPENDED GRID
TYPE C	5/8" GYPSUM BOARD (PAINTED) ON METAL SUSPENSION SYSTEM
TYPE D	5/8" GYPSUM BOARD (EPOXY PAINTED) ON METAL SUSPENSION SYSTEM
TYPE E	SPECIAL/ CUSTOM
TYPE F	2' x 2' LAY-IN METAL IN SUSPENDED GRID
TYPE G	EXPOSED STRUCTURE

SYMBOL LEGEND

- Lay-in Light Fixture
- Suspended or Surface Mounted Linear Light
- Recessed Light Fixture
- Pendant Light Fixture
- Pendant Light Fixture
- Mechanical Diffuser - Supply
- Mechanical Diffuser - Return

NOTE: COORDINATE WITH MECHANICAL AND ELECTRICAL DRAWINGS.

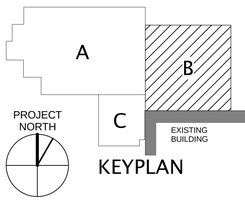

KEYPLAN

Utah Valley University New Science Building

800 West University Parkway
Orem, Utah 84058

Division of Facilities Construction and Management

DRAWN BY:	Author
CHECKED BY:	Checker
DFCM PROJECT NO.:	09020790
GSBS PROJECT NO.:	2009.115.00
ISSUED DATE:	05.07.2010

LEVEL 1 REFLECTED CEILING PLAN - AREA B

CONSTRUCTION DOCUMENTS

AE-113B

GSBS ARCHITECTS
375 WEST 200 SOUTH
SALT LAKE CITY, UT 84101
P 801.521.8600
F 801.521.7913
www.gsbsarchitects.com

STATE OF UTAH 116302 LICENSED ARCHITECT

REVISIONS:

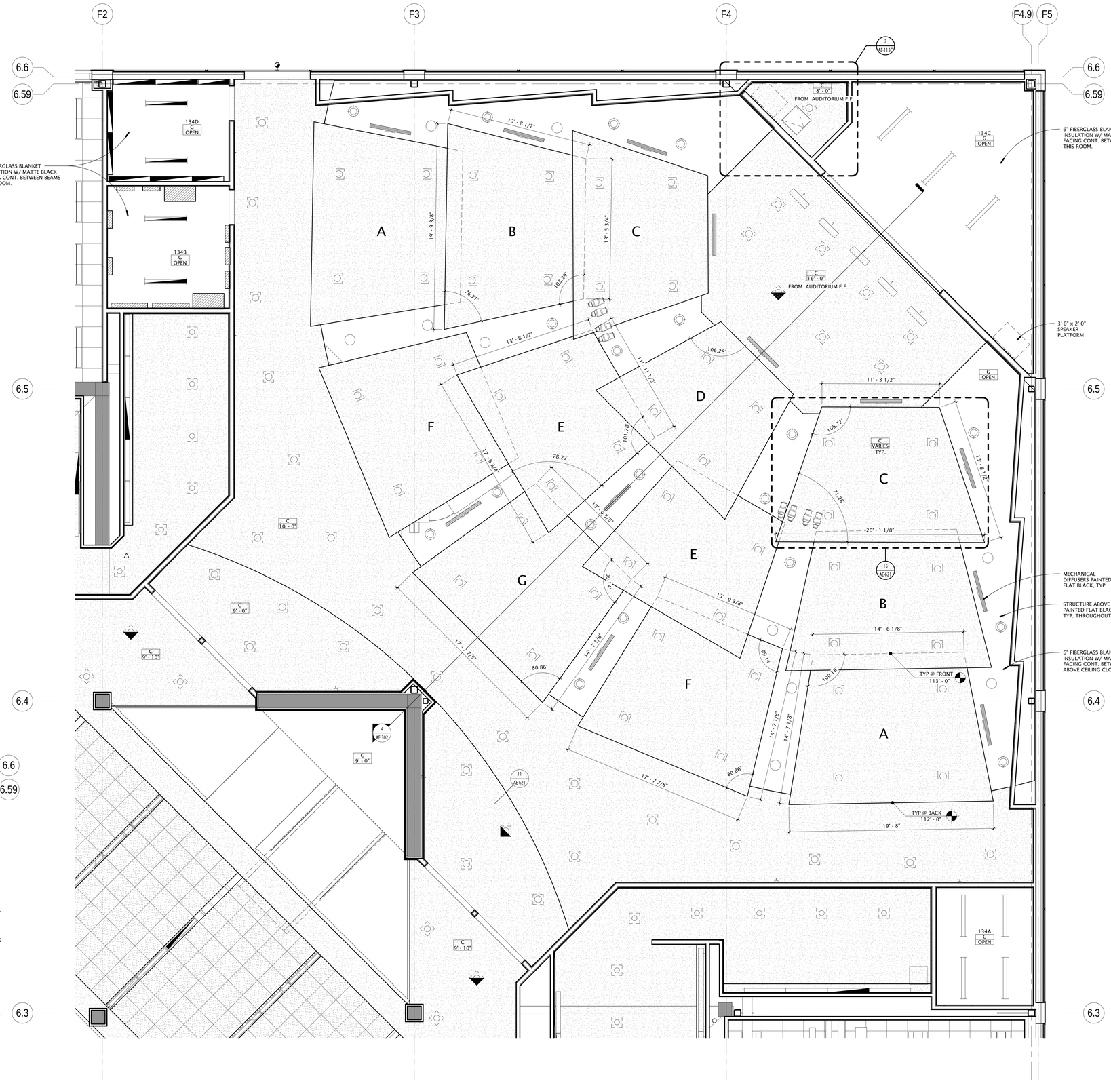

PLAN LEGEND

ROOM #	100
TYPE	A
ELEVATION	9'-0"

TYPE A	2' x 2' LAY-IN ACOUSTICAL TILE IN SUSPENDED GRID
TYPE B	VINYL OR MYLAR FACED PANEL IN SUSPENDED GRID
TYPE C	5/8" GYPSUM BOARD (PAINTED) ON METAL SUSPENSION SYSTEM
TYPE D	5/8" GYPSUM BOARD (EPOXY PAINTED) ON METAL SUSPENSION SYSTEM
TYPE E	SPECIAL/ CUSTOM
TYPE F	2' x 2' LAY-IN METAL IN SUSPENDED GRID
TYPE G	EXPOSED STRUCTURE

SYMBOL LEGEND

- Lay-in Light Fixture
- Suspended or Surface Mounted Linear Light
- Recessed Light Fixture
- Pendant Light Fixture
- Pendant Light Fixture
- Mechanical Diffuser - Supply
- Mechanical Diffuser - Return

NOTE: COORDINATE WITH MECHANICAL AND ELECTRICAL DRAWINGS.

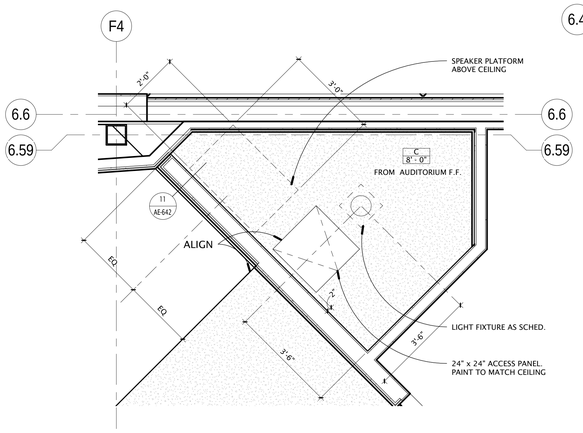

2 / AE-113C ENLARGED REFLECTED CEILING PLAN
1/2" = 1'-0"

1 / AE-113C ENLARGED AUDITORIUM REFLECTED CEILING PLAN
1/4" = 1'-0"

PROJECT NORTH

Utah Valley University New Science Building

800 West University Parkway
Orem, Utah 84058

Division of Facilities Construction and Management

DRAWN BY:	Author
CHECKED BY:	Checker
DFCM PROJECT NO.:	09020790
GSBS PROJECT NO.:	2009.115.00
ISSUED DATE:	05.07.2010

ENLARGED REFLECTED CEILING PLAN

CONSTRUCTION DOCUMENTS

AE-113C

GSBS ARCHITECTS
375 WEST 200 SOUTH
SALT LAKE CITY, UT 84101
P 801.521.8600
F 801.521.7913
www.gsbsarchitects.com

STATE OF UTAH LICENSED ARCHITECT 116302

REVISIONS:

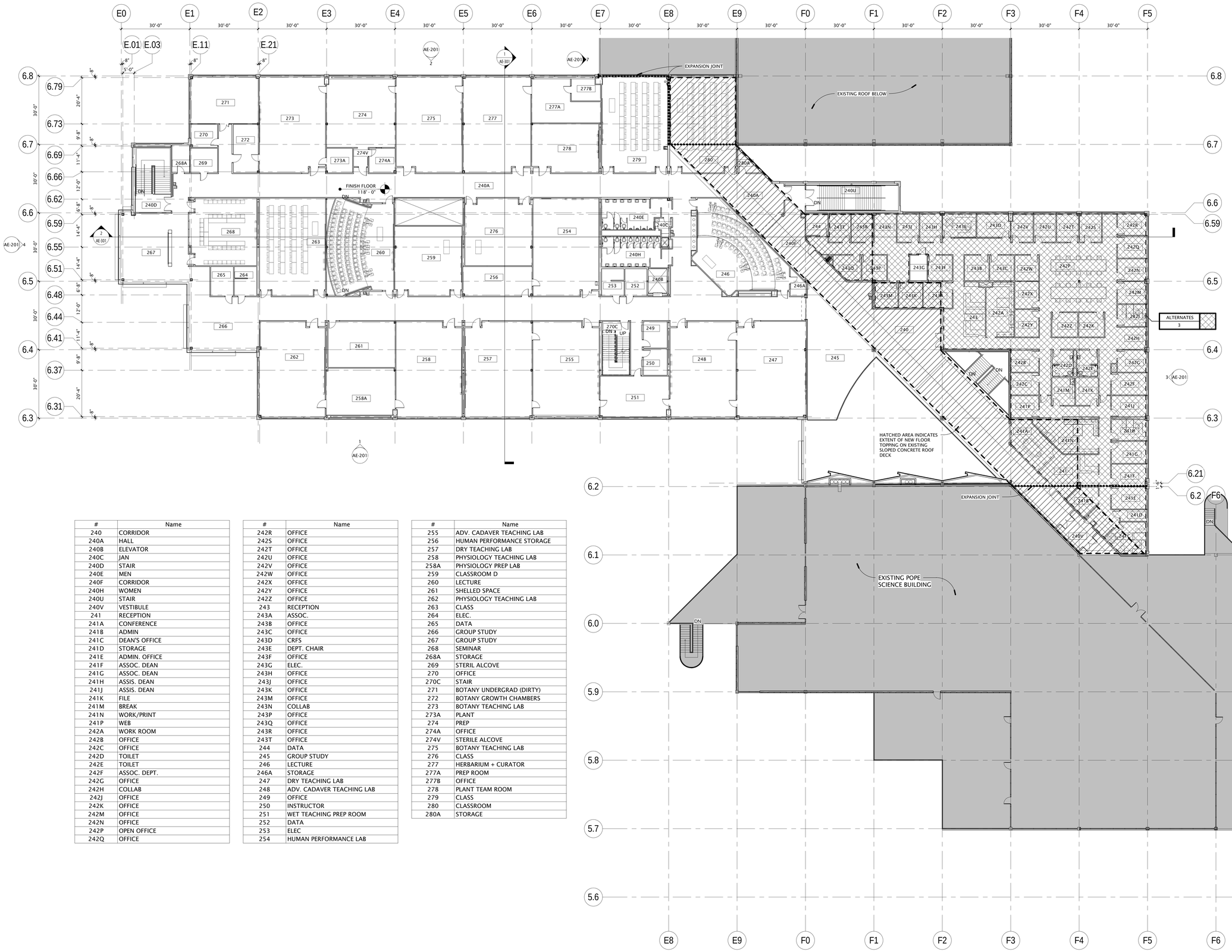

#	Name
240	CORRIDOR
240A	HALL
240B	ELEVATOR
240C	JAN
240D	STAIR
240E	MEN
240F	CORRIDOR
240H	WOMEN
240U	STAIR
240V	VESTIBULE
241	RECEPTION
241A	CONFERENCE
241B	ADMIN
241C	DEAN'S OFFICE
241D	STORAGE
241E	ADMIN. OFFICE
241F	ASSOC. DEAN
241G	ASSOC. DEAN
241H	ASSIS. DEAN
241J	ASSIS. DEAN
241K	FILE
241M	BREAK
241N	WORK/PRINT
241P	WEB
242A	WORK ROOM
242B	OFFICE
242C	OFFICE
242D	TOILET
242E	TOILET
242F	ASSOC. DEPT.
242G	OFFICE
242H	COLLAB
242J	OFFICE
242K	OFFICE
242M	OFFICE
242N	OFFICE
242P	OPEN OFFICE
242Q	OFFICE

#	Name
242R	OFFICE
242S	OFFICE
242T	OFFICE
242U	OFFICE
242V	OFFICE
242W	OFFICE
242X	OFFICE
242Y	OFFICE
242Z	OFFICE
243	RECEPTION
243A	ASSOC.
243B	OFFICE
243C	OFFICE
243D	CRFS
243E	DEPT. CHAIR
243F	OFFICE
243G	ELEC.
243H	OFFICE
243J	OFFICE
243K	OFFICE
243M	OFFICE
243N	COLLAB
243P	OFFICE
243Q	OFFICE
243R	OFFICE
243T	OFFICE
244	DATA
245	GROUP STUDY
246	LECTURE
246A	STORAGE
247	DRY TEACHING LAB
248	ADV. CADAVER TEACHING LAB
249	OFFICE
250	INSTRUCTOR
251	WET TEACHING PREP ROOM
252	DATA
253	ELEC
254	HUMAN PERFORMANCE LAB

#	Name
255	ADV. CADAVER TEACHING LAB
256	HUMAN PERFORMANCE STORAGE
257	DRY TEACHING LAB
258	PHYSIOLOGY TEACHING LAB
258A	PHYSIOLOGY PREP LAB
259	CLASSROOM D
260	LECTURE
261	SHELLED SPACE
262	PHYSIOLOGY TEACHING LAB
263	CLASS
264	ELEC.
265	DATA
266	GROUP STUDY
267	GROUP STUDY
268	SEMINAR
268A	STORAGE
269	STERIL ALCOVE
270	OFFICE
270C	STAIR
271	BOTANY UNDERGRAD (DIRTY)
272	BOTANY GROWTH CHAMBERS
273	BOTANY TEACHING LAB
273A	PLANT
274	PREP
274A	OFFICE
274V	STERILE ALCOVE
275	BOTANY TEACHING LAB
276	CLASS
277	HERBARIUM + CURATOR
277A	PREP ROOM
277B	OFFICE
278	PLANT TEAM ROOM
279	CLASS
280	CLASSROOM
280A	STORAGE

REFER TO SPECIFICATION SECTION 012300 ALTERNATES AND ARCHITECTURAL / LAB FURNISHINGS / MECHANICAL / LAB PLUMBING / ELECTRICAL / LAB ELECTRICAL DRAWINGS FOR COMPLETE DEFINITION OF 5 ALTERNATES.

SEE LABORATORY FURNISHING (LF) SHEETS FOR ALL LABORATORY FIT-OUT.

PROJECT NORTH

Utah Valley University New Science Building

800 West University Parkway
Orem, Utah 84058

Division of Facilities Construction and Management

DRAWN BY:	Author
CHECKED BY:	Checker
DFCM PROJECT NO.:	09020790
GSBS PROJECT NO.:	2009.115.00
ISSUED DATE:	05.07.2010

LEVEL 2 FLOOR PLAN

1 AE-121 LEVEL 2 FLOOR PLAN
1/16" = 1'-0"
16' 8' 0' 16' 32'

CONSTRUCTION DOCUMENTS

AE-121

GSBS ARCHITECTS

375 WEST 200 SOUTH
SALT LAKE CITY, UT 84101

P 801.521.8600
F 801.521.7913

www.gsbsarchitects.com

STATE OF UTAH LICENSED ARCHITECT 116302

REVISIONS:

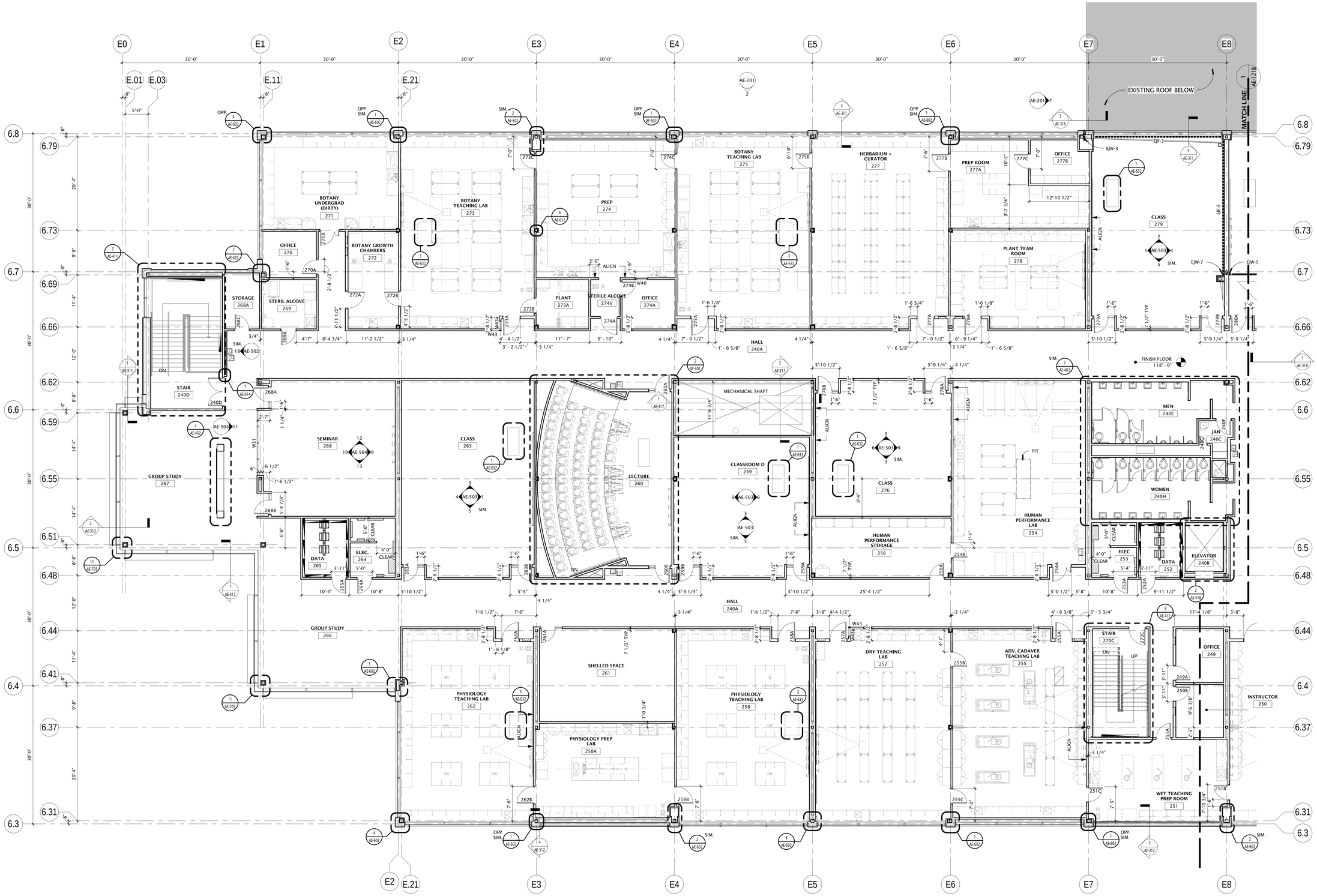

REFER TO STRUCTURAL FRAMING PLANS FOR EXTENT OF STRUCTURAL MEMBERS REQUIRED TO RECEIVE FIREPROOFING.
REFER TO ARCHITECTURAL DETAILS FOR FIREPROOFING TYPE AND ASSEMBLY NUMBERS.

SEE LABORATORY FURNISHING (LF) SHEETS FOR ALL LABORATORY FIT-OUT.

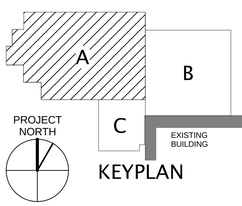

KEYPLAN

Utah Valley University New Science Building

800 West University Parkway
Orem, Utah 84058

Division of Facilities Construction and Management

DRAWN BY:	Author
CHECKED BY:	Checker
DFCM PROJECT NO.:	09020790
GSBS PROJECT NO.:	2009.115.00
ISSUED DATE:	05.07.2010

LEVEL 2 FLOOR PLAN - AREA A

CONSTRUCTION DOCUMENTS

AE-121A

1 AE-121A LEVEL 2 FLOOR PLAN - AREA A
1/8" = 1'-0"

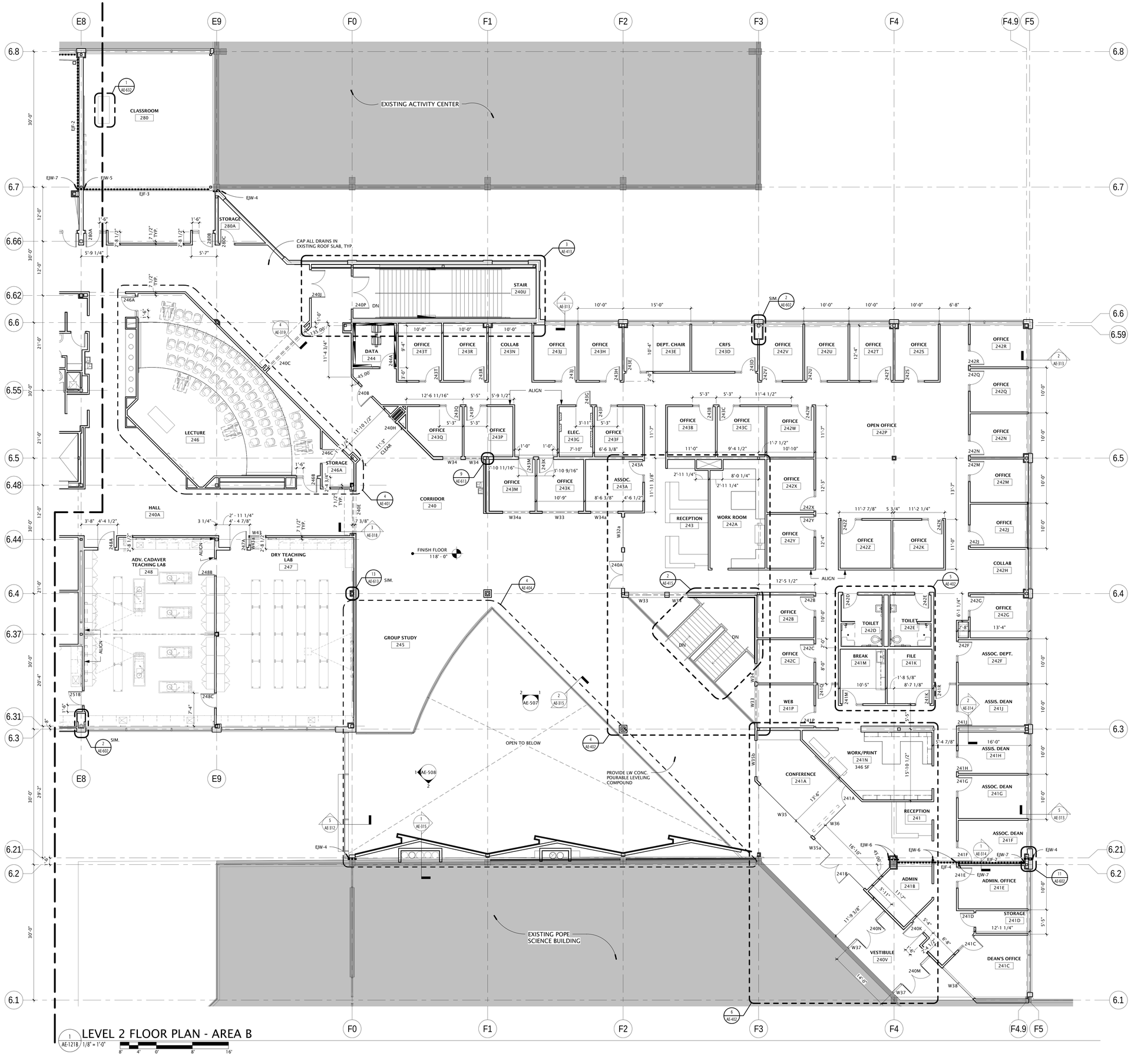

1 LEVEL 2 FLOOR PLAN - AREA B
AE-121B 1/8" = 1'-0"

REFER TO STRUCTURAL FRAMING PLANS FOR EXTENT OF STRUCTURAL MEMBERS REQUIRED TO RECEIVE FIREPROOFING.
REFER TO ARCHITECTURAL DETAILS FOR FIREPROOFING TYPE AND ASSEMBLY NUMBERS.

SEE LABORATORY FURNISHING (LF) SHEETS FOR ALL LABORATORY FIT-OUT.

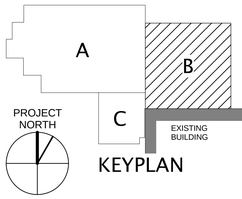

KEYPLAN

GSBS ARCHITECTS
375 WEST 200 SOUTH
SALT LAKE CITY, UT 84101
P 801.521.8600
F 801.521.7913
www.gsbsarchitects.com

STATE OF UTAH LICENSED ARCHITECT 116302

REVISIONS:

Utah Valley University New Science Building

800 West University Parkway
Orem, Utah 84058

Division of Facilities Construction and Management

DRAWN BY:	Author
CHECKED BY:	Checker
DFCM PROJECT NO.:	09020790
GSBS PROJECT NO.:	2009115.00
ISSUED DATE:	05.07.2010

LEVEL 2 FLOOR PLAN - AREA B

CONSTRUCTION DOCUMENTS

AE-121B

GSBS ARCHITECTS

375 WEST 200 SOUTH
SALT LAKE CITY, UT 84101

P 801.521.8600
F 801.521.7913

www.gsbsarchitects.com

STATE OF UTAH
116302
LICENSED ARCHITECT

REVISIONS:

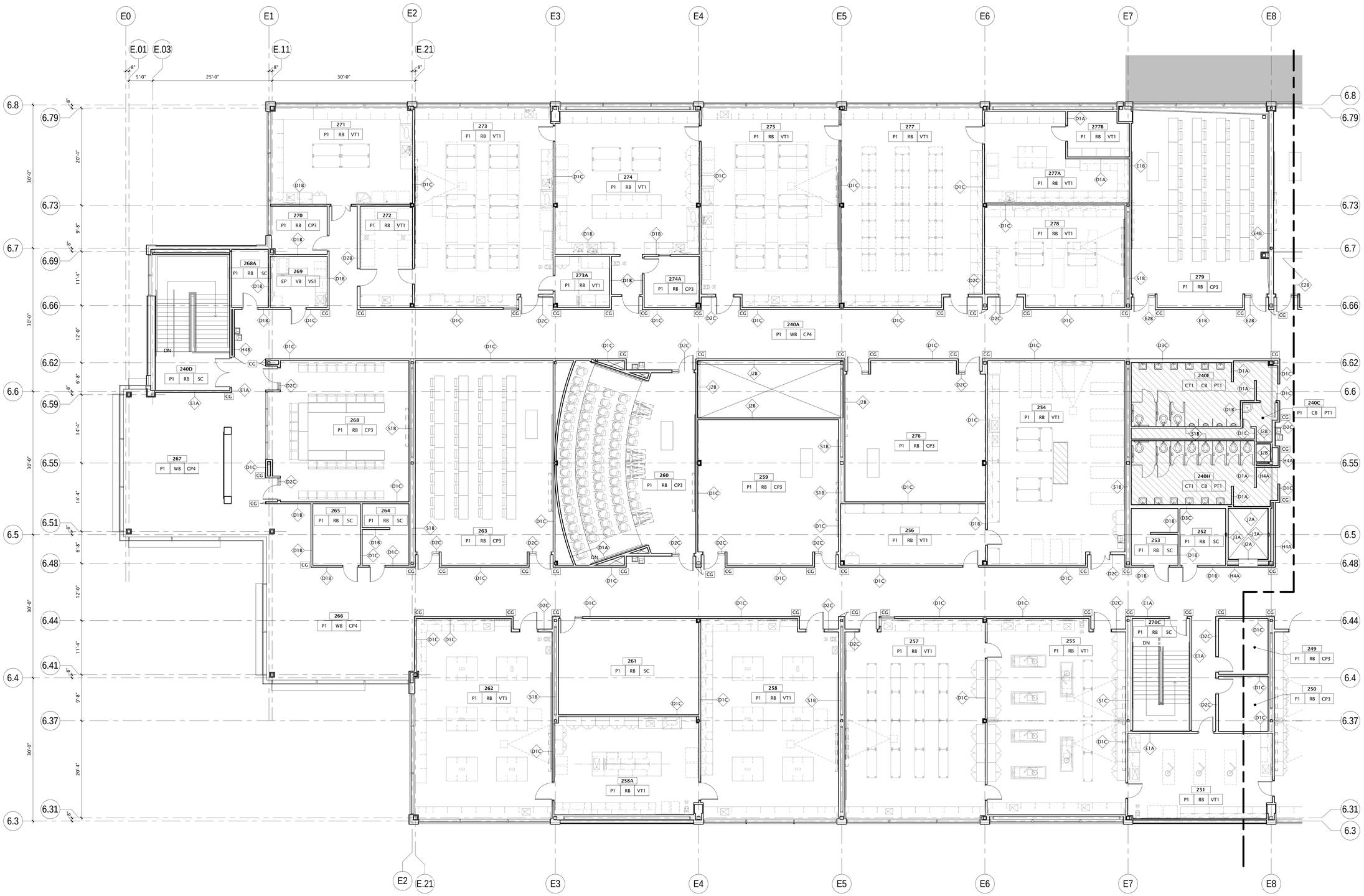

INDICATES EXTENT OF RECESSED SLAB. SEE DETAILS

GENERAL NOTES

- CLASSROOM FURNITURE (CONFERENCE TABLES, DESKS AND CLASSROOM CHAIRS) ARE SHOWN FOR REFERENCE ONLY. AUDITORIUM AND LECTURE HALL FIXED SEATING IS A PART OF THE BUILD-OUT.
- SEE SHEET AE-140 FOR WALL TYPE LEGEND
- SEE SHEET AE-801 FOR FINISH SCHEDULE
- ALL EXTERIOR CLERESTORY & VISION WINDOWS TO BE OUTFITTED W/ METAL HORIZONTAL LOUVERED BLINDS U.N.O.

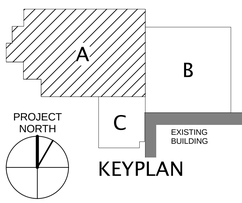

KEYPLAN

Utah Valley University New Science Building

800 West University Parkway
Orem, Utah 84058

Division of Facilities Construction and Management

DRAWN BY:	Author
CHECKED BY:	Checker
DFCM PROJECT NO.:	09020790
GSBS PROJECT NO.:	2009.115.00
ISSUED DATE:	05.07.2010

LEVEL 2 WTFI PLAN- AREA A

CONSTRUCTION DOCUMENTS

AE-122A

1 AE-122A LEVEL 2 WTFI PLAN - AREA A
1/8" = 1'-0"
8' 4' 0' 8' 16'

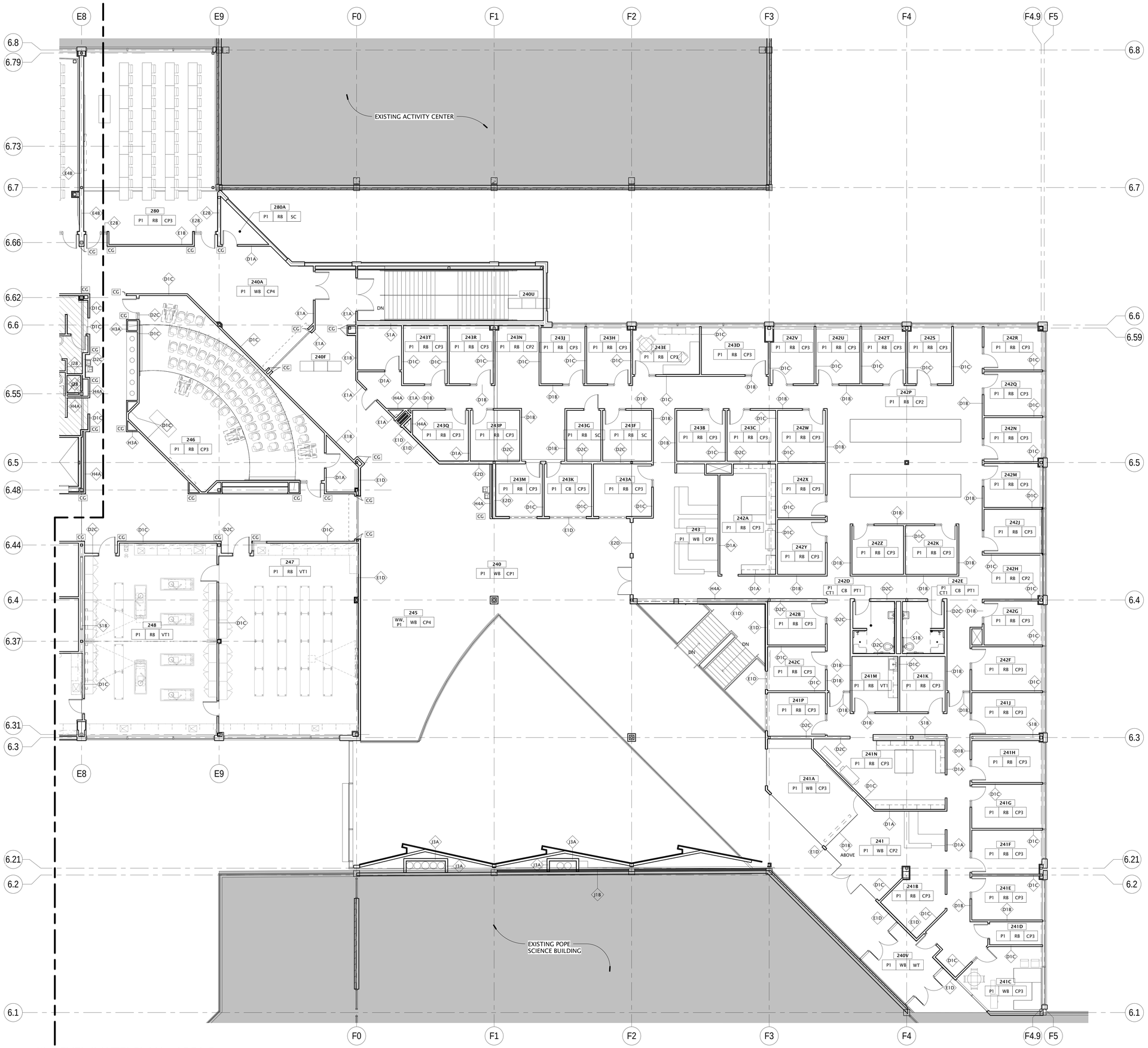

1 LEVEL 2 WTFI PLAN - AREA B
AE-1228 1/8" = 1'-0"

8' 4' 0' 8' 16'

GSBS ARCHITECTS

375 WEST 200 SOUTH
SALT LAKE CITY, UT 84101

P 801.521.8600
F 801.521.7913

www.gsbsarchitects.com

STATE OF UTAH LICENSED ARCHITECT 116302

REVISIONS:

GENERAL NOTES

- CLASSROOM FURNITURE (CONFERENCE TABLES, DESKS AND CLASSROOM CHAIRS) ARE SHOWN FOR REFERENCE ONLY. AUDITORIUM AND LECTURE HALL FIXED SEATING IS A PART OF THE BUILD-OUT.
- SEE SHEET AE-140 FOR WALL TYPE LEGEND
- SEE SHEET AE-801 FOR FINISH SCHEDULE
- ALL EXTERIOR CLERESTORY & VISION WINDOWS TO BE OUTFITTED W/ METAL HORIZONTAL LOUVERED BLINDS U.N.O.

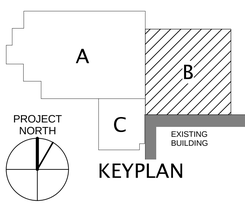

KEYPLAN

Utah Valley University New Science Building

800 West University Parkway
Orem, Utah 84058

Division of Facilities Construction and Management

DRAWN BY:	Author
CHECKED BY:	Checker
DFCM PROJECT NO.:	09020790
GSBS PROJECT NO.:	2009.115.00
ISSUED DATE:	05.07.2010

LEVEL 2 WTFI PLAN- AREA B

CONSTRUCTION DOCUMENTS

AE-122B

GSBS ARCHITECTS
375 WEST 200 SOUTH
SALT LAKE CITY, UT 84101
P 801.521.8600
F 801.521.7913
www.gsbsarchitects.com

STATE OF UTAH 116302 LICENSED ARCHITECT

REVISIONS:

CARPET LEGEND

- CP1
- CP2
- CP3

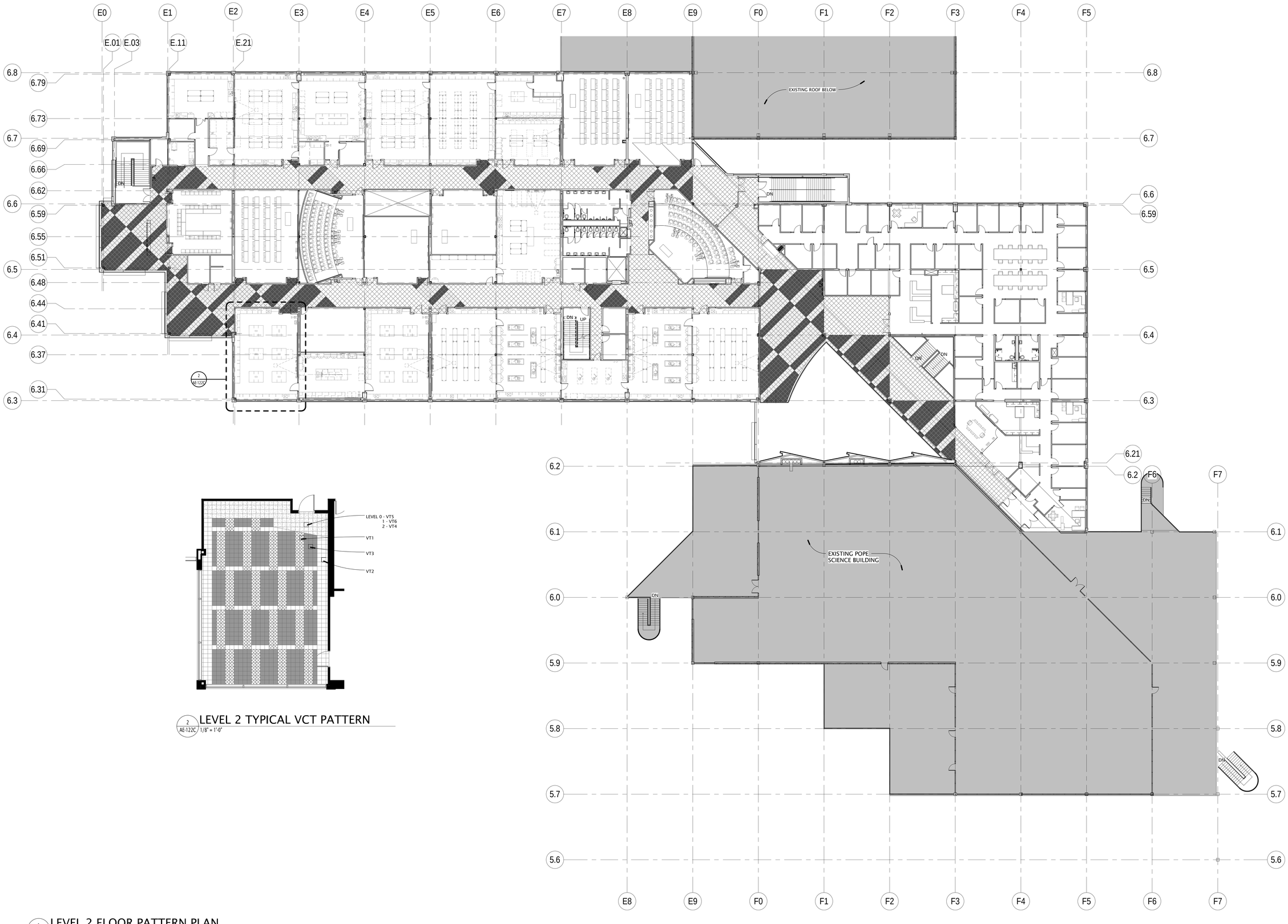

2 AE-122C LEVEL 2 TYPICAL VCT PATTERN
1/8" = 1'-0"

1 AE-122C LEVEL 2 FLOOR PATTERN PLAN
1/16" = 1'-0"

Utah Valley University New Science Building

800 West University Parkway
Orem, Utah 84058

Division of Facilities Construction and Management

DRAWN BY:	Author
CHECKED BY:	Checker
DFCM PROJECT NO.:	09020790
GSBS PROJECT NO.:	2009.115.00
ISSUED DATE:	05.07.2010

LEVEL 2 FLOOR PATTERN PLAN

CONSTRUCTION DOCUMENTS

AE-122C

GSBS ARCHITECTS

375 WEST 200 SOUTH
SALT LAKE CITY, UT 84101

P 801.521.8600
F 801.521.7913

www.gsbsarchitects.com

STATE OF UTAH
116302
LICENSED ARCHITECT

REVISIONS:

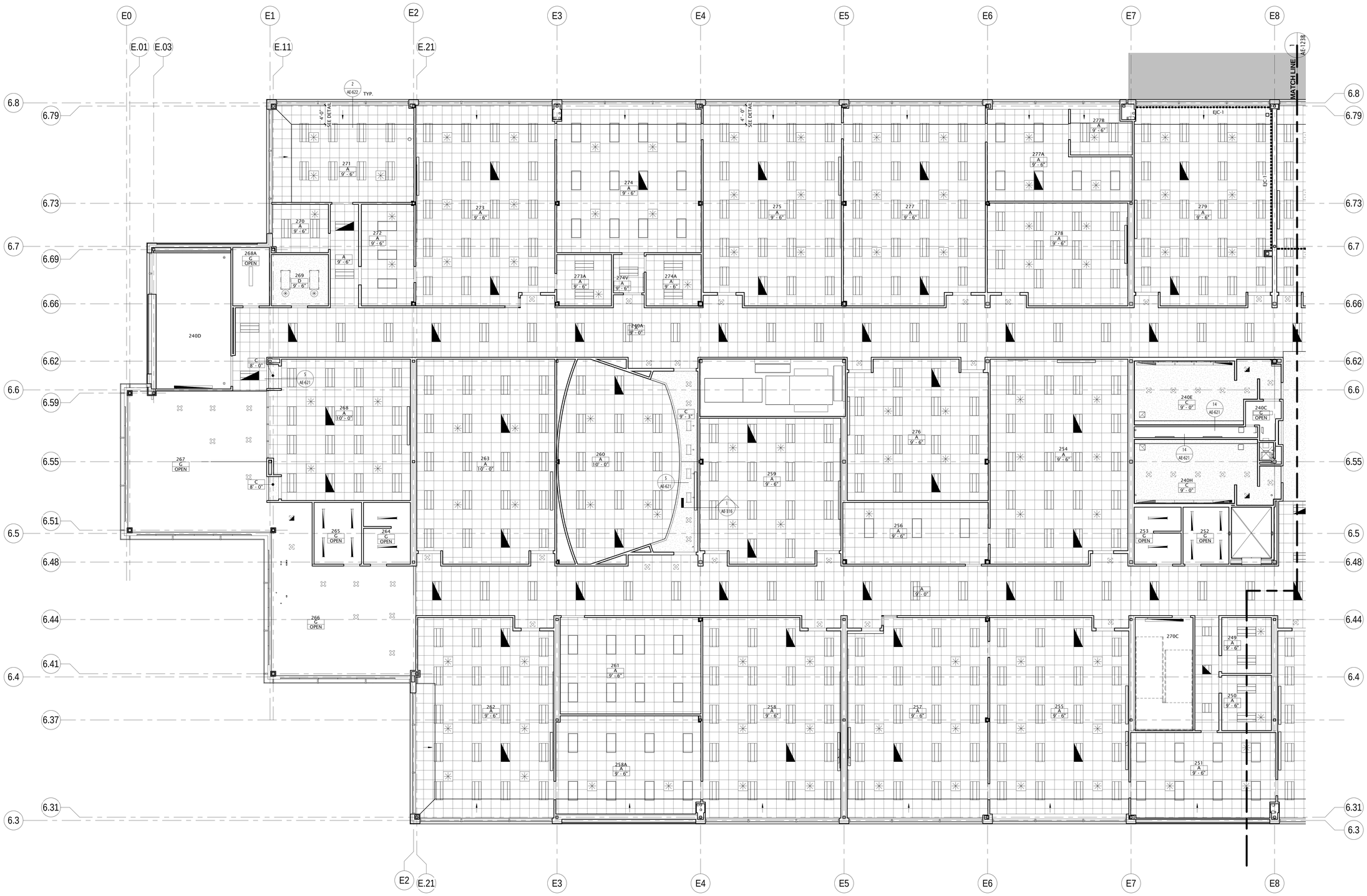

1 AE-123A LEVEL 2 REFLECTED CEILING PLAN - AREA A
1/8" = 1'-0"

8' 4' 0' 8' 16'

PLAN LEGEND

ROOM #	100
TYPE	A
ELEVATION	9'-0"

TYPE A	2' x 2' LAY-IN ACOUSTICAL TILE IN SUSPENDED GRID
TYPE B	VINYL OR MYLAR FACED PANEL IN SUSPENDED GRID
TYPE C	5/8" GYPSUM BOARD (PAINTED) ON METAL SUSPENSION SYSTEM
TYPE D	5/8" GYPSUM BOARD (EPOXY PAINTED) ON METAL SUSPENSION SYSTEM
TYPE E	SPECIAL/ CUSTOM
TYPE F	2' x 2' LAY-IN METAL IN SUSPENDED GRID
TYPE G	EXPOSED STRUCTURE

SYMBOL LEGEND

- Lay-in Light Fixture
- Suspended or Surface Mounted Linear Light
- Recessed Light Fixture
- Pendant Light Fixture
- Pendant Light Fixture
- Mechanical Diffuser - Supply
- Mechanical Diffuser - Return

NOTE: COORDINATE WITH MECHANICAL AND ELECTRICAL DRAWINGS.

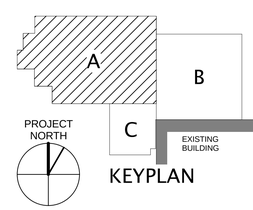

KEYPLAN

Utah Valley University New Science Building

800 West University Parkway
Orem, Utah 84058

Division of Facilities Construction and Management

DRAWN BY:	Author
CHECKED BY:	Checker
DFCM PROJECT NO.:	09020790
GSBS PROJECT NO.:	2009.115.00
ISSUED DATE:	05.07.2010

LEVEL 2 REFLECTED CEILING PLAN - AREA A

CONSTRUCTION DOCUMENTS

AE-123A

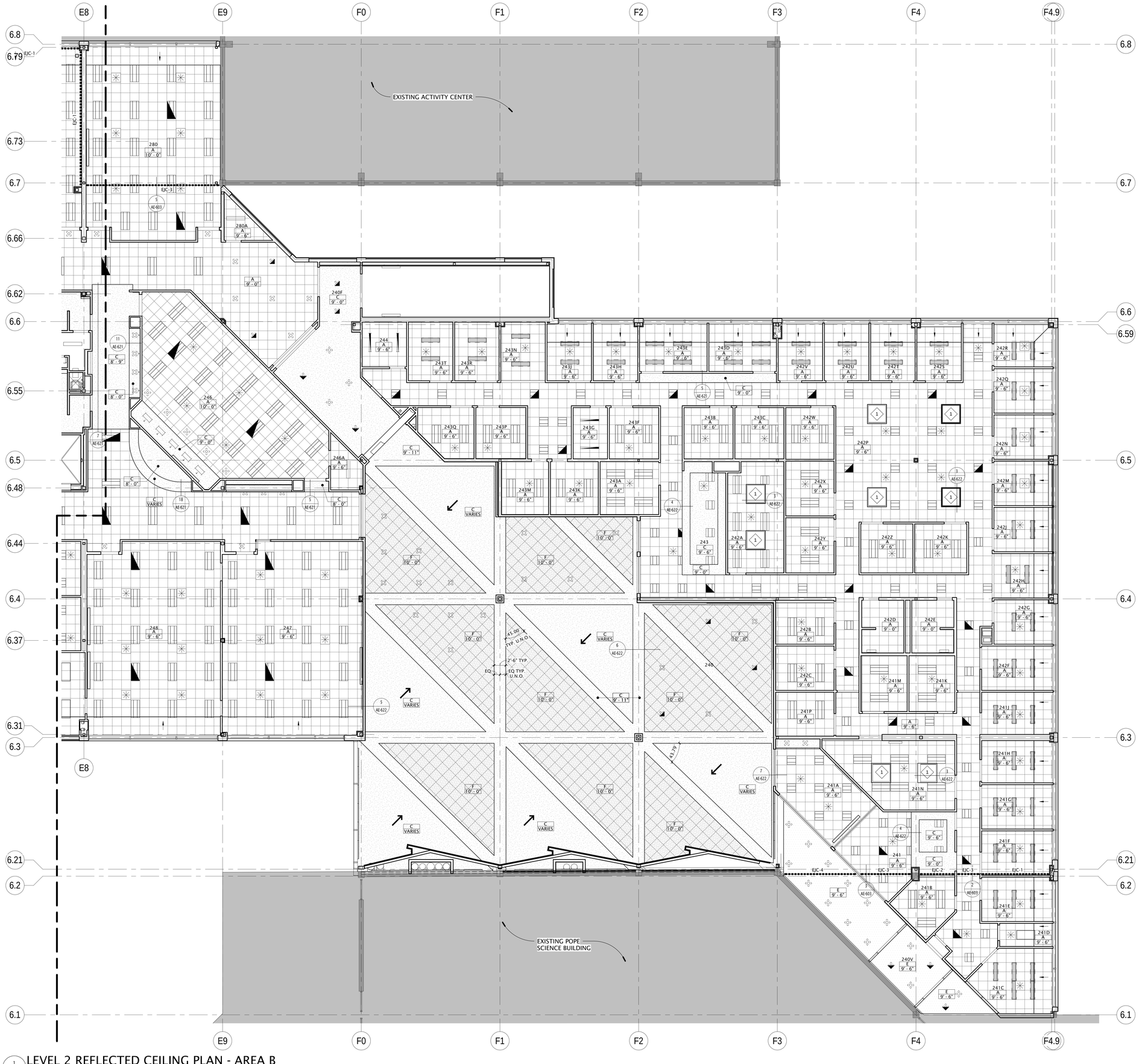

1 AE-123B 1/8" = 1'-0"

LEVEL 2 REFLECTED CEILING PLAN - AREA B

8' 4' 0' 8' 16'

GSBS ARCHITECTS

375 WEST 200 SOUTH
SALT LAKE CITY, UT 84101

P 801.521.8600
F 801.521.7913

www.gsbsarchitects.com

STATE OF UTAH
116302
LICENSED ARCHITECT

REVISIONS:

PLAN LEGEND

ROOM # 100
TYPE A
ELEVATION 9'-0"

TYPE A	2' x 2' LAY-IN ACOUSTICAL TILE IN SUSPENDED GRID
TYPE B	VINYL OR MYLAR FACED PANEL IN SUSPENDED GRID
TYPE C	5/8" GYPSUM BOARD (PAINTED) ON METAL SUSPENSION SYSTEM
TYPE D	5/8" GYPSUM BOARD (EPOXY PAINTED) ON METAL SUSPENSION SYSTEM
TYPE E	SPECIAL/ CUSTOM
TYPE F	2' x 2' LAY-IN METAL IN SUSPENDED GRID
TYPE G	EXPOSED STRUCTURE

SYMBOL LEGEND

- Lay-in Light Fixture
- Suspended or Surface Mounted Linear Light
- Recessed Light Fixture
- Pendant Light Fixture
- Pendant Light Fixture
- Mechanical Diffuser - Supply
- Mechanical Diffuser - Return

NOTE: COORDINATE WITH MECHANICAL AND ELECTRICAL DRAWINGS.

KEY NOTES:

1. 4' x 4' SKYLIGHT

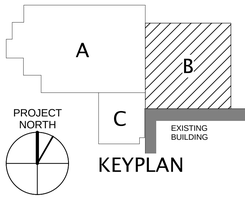

KEYPLAN

Utah Valley University New Science Building

800 West University Parkway
Orem, Utah 84058

Division of Facilities Construction and Management

DRAWN BY:	Author
CHECKED BY:	Checker
DFCM PROJECT NO.:	09020790
GSBS PROJECT NO.:	2009.115.00
ISSUED DATE:	05.07.2010

LEVEL 2 REFLECTED CEILING PLAN - AREA B

CONSTRUCTION DOCUMENTS

AE-123B

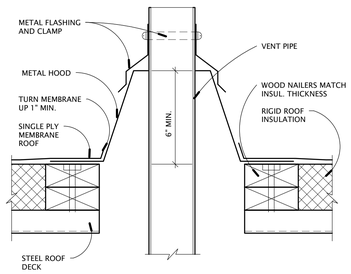

6 / AE-124 WARM PIPE VENT DETAIL
3" = 1'-0"

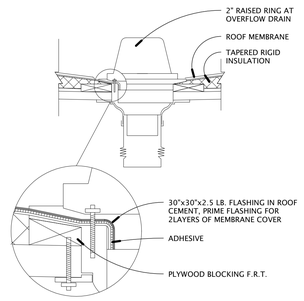

4 / AE-124 ROOF DRAIN
1" = 1'-0"

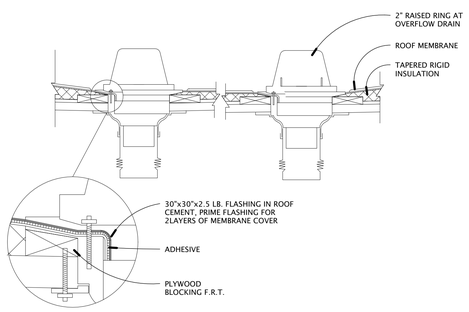

5 / AE-124 ROOF DRAIN SECTION
1" = 1'-0"

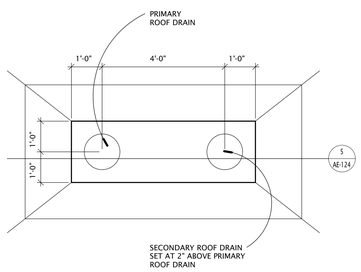

3 / AE-124 ROOF DRAIN PLAN DETAIL
1/2" = 1'-0"

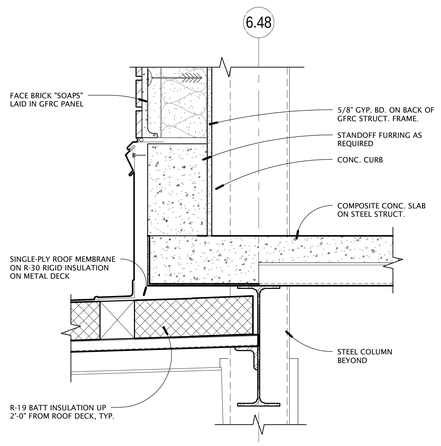

2 / AE-124 PENTHOUSE FLOOR DETAIL
1 1/2" = 1'-0"

AE-202 / 6

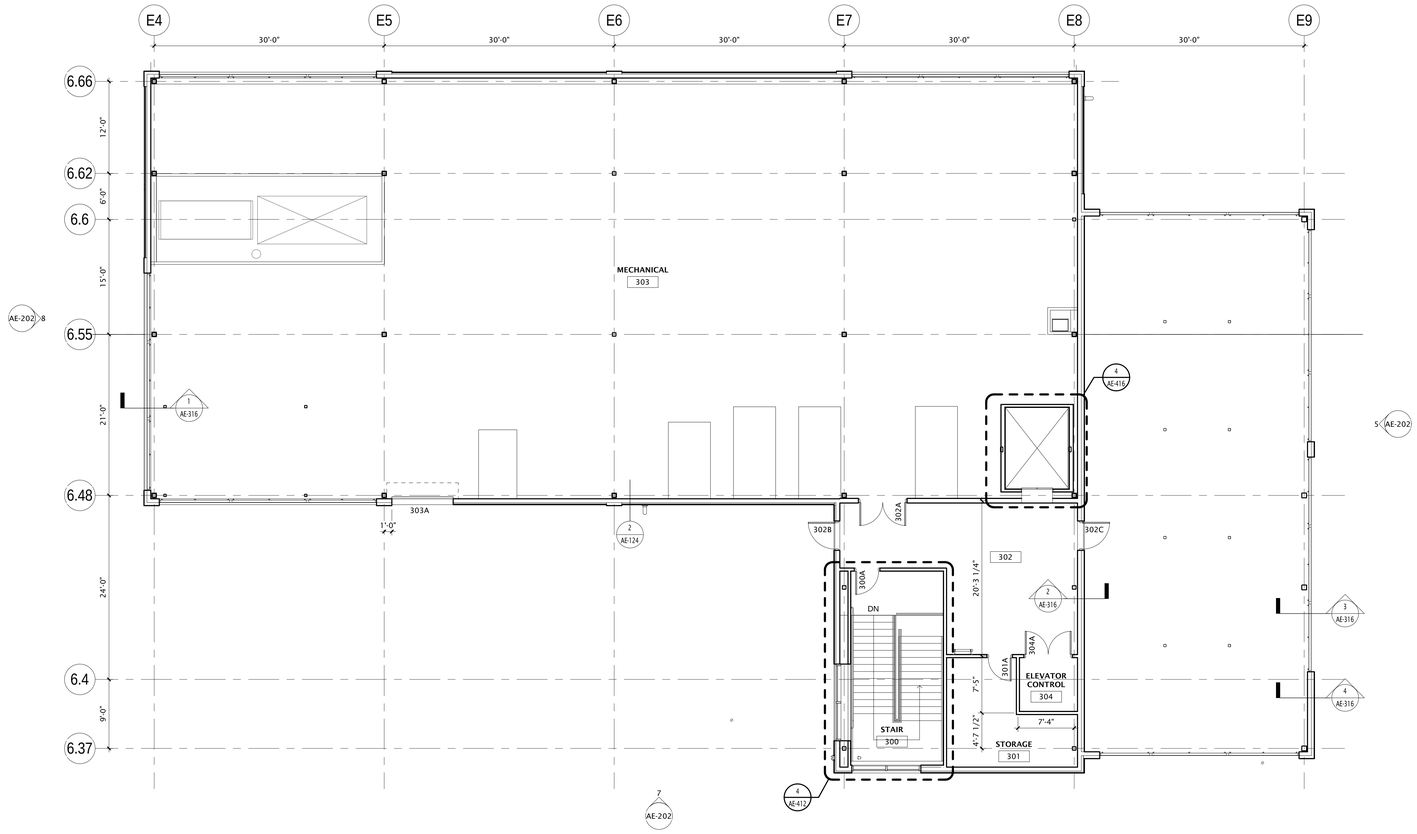

1 / AE-124 PENTHOUSE FLOOR PLAN
1/8" = 1'-0"

GSBS ARCHITECTS
375 WEST 200 SOUTH
SALT LAKE CITY, UT 84101
P 801.521.8600
F 801.521.7913
www.gsbsarchitects.com

STATE OF UTAH 116302 LICENSED ARCHITECT

REVISIONS:

Utah Valley University New Science Building

800 West University Parkway
Orem, Utah 84058

Division of Facilities Construction and Management

DRAWN BY:	Author
CHECKED BY:	Checker
DFCM PROJECT NO.:	09020790
GSBS PROJECT NO.:	2009.115.00
ISSUED DATE:	05.07.2010

PENTHOUSE FLOOR PLAN

CONSTRUCTION DOCUMENTS

AE-124

GSBS ARCHITECTS
375 WEST 200 SOUTH
SALT LAKE CITY, UT 84101
P 801.521.8600
F 801.521.7913
www.gsbsarchitects.com

STATE OF UTAH LICENSED ARCHITECT 116302

REVISIONS:

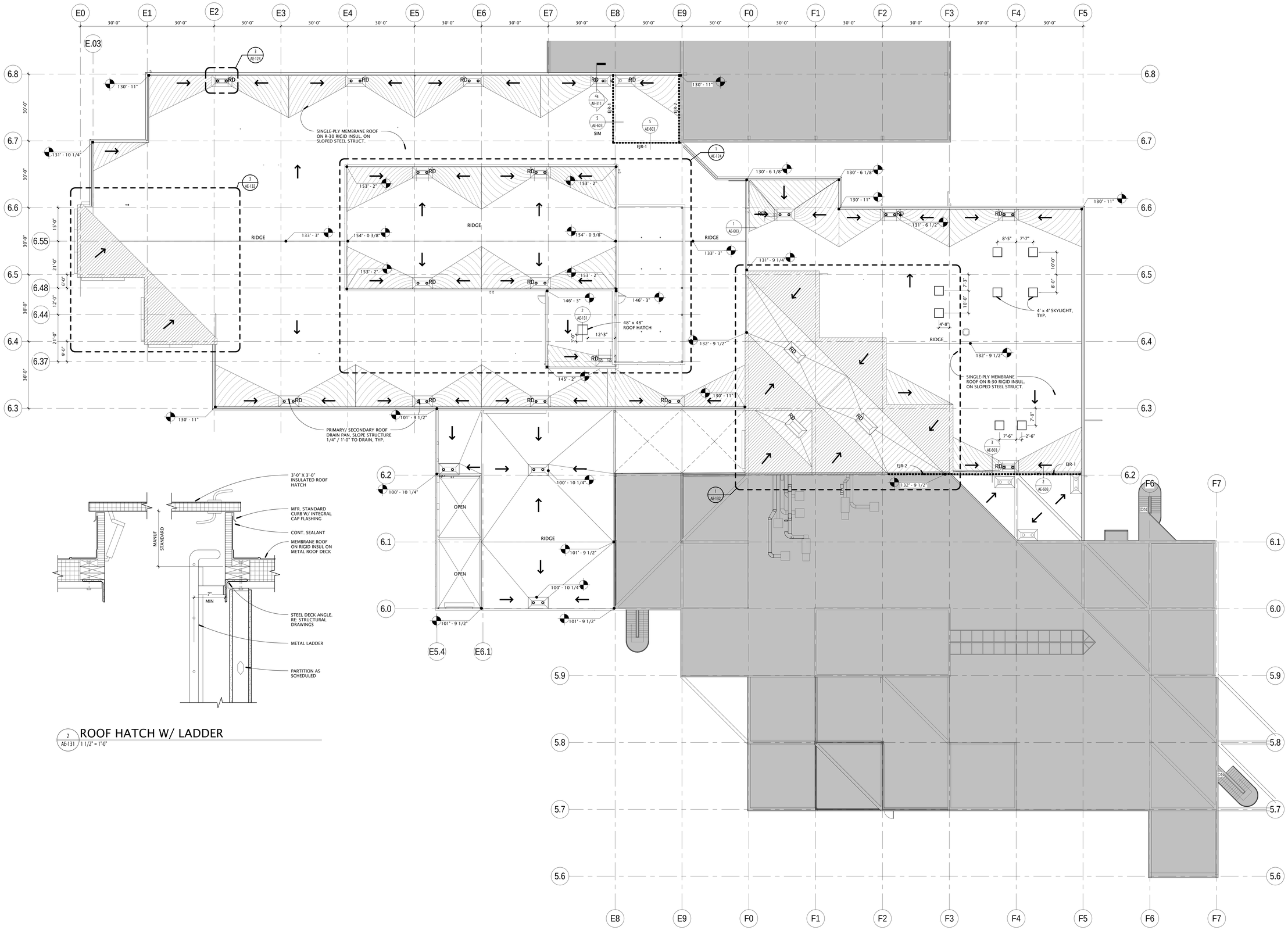

2 AE-131 ROOF HATCH W/ LADDER
1 1/2" = 1'-0"

1 AE-131 ROOF PLAN
1/16" = 1'-0"
16' 8' 0' 16' 32'

Utah Valley University New Science Building

800 West University Parkway
Orem, Utah 84058

Division of Facilities Construction and Management

DRAWN BY:	Author
CHECKED BY:	Checker
DFCM PROJECT NO.:	09020790
GSBS PROJECT NO.:	2009.115.00
ISSUED DATE:	05.07.2010

ROOF PLAN

CONSTRUCTION DOCUMENTS

AE-131

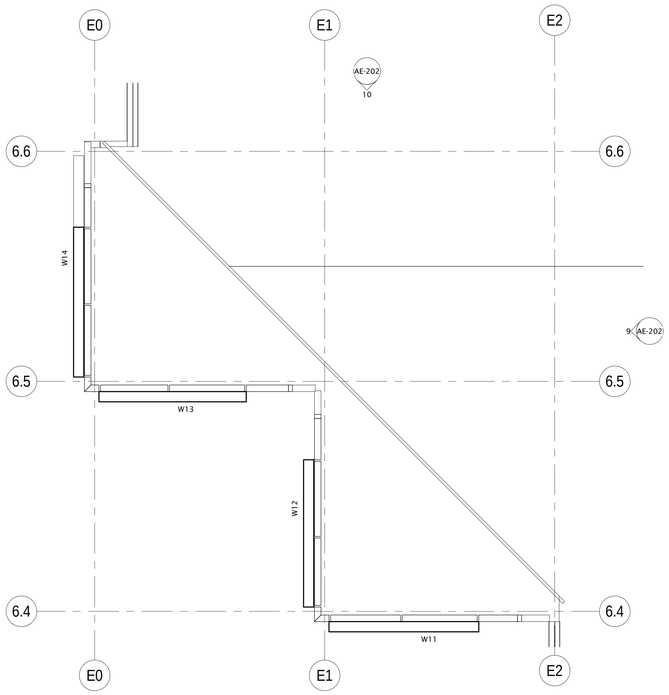

4 AE-132 WEST TOWER GLAZING PLAN
1/8" = 1'-0"

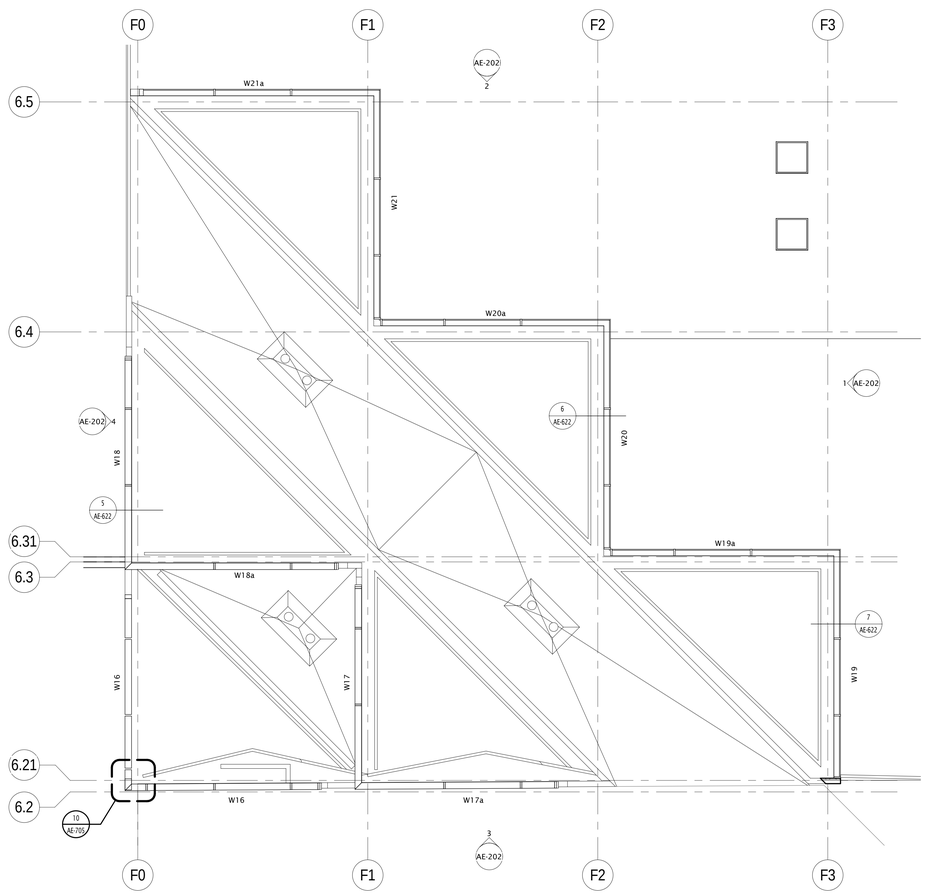

2 AE-132 ATRIUM GLAZING PLAN
1/8" = 1'-0"

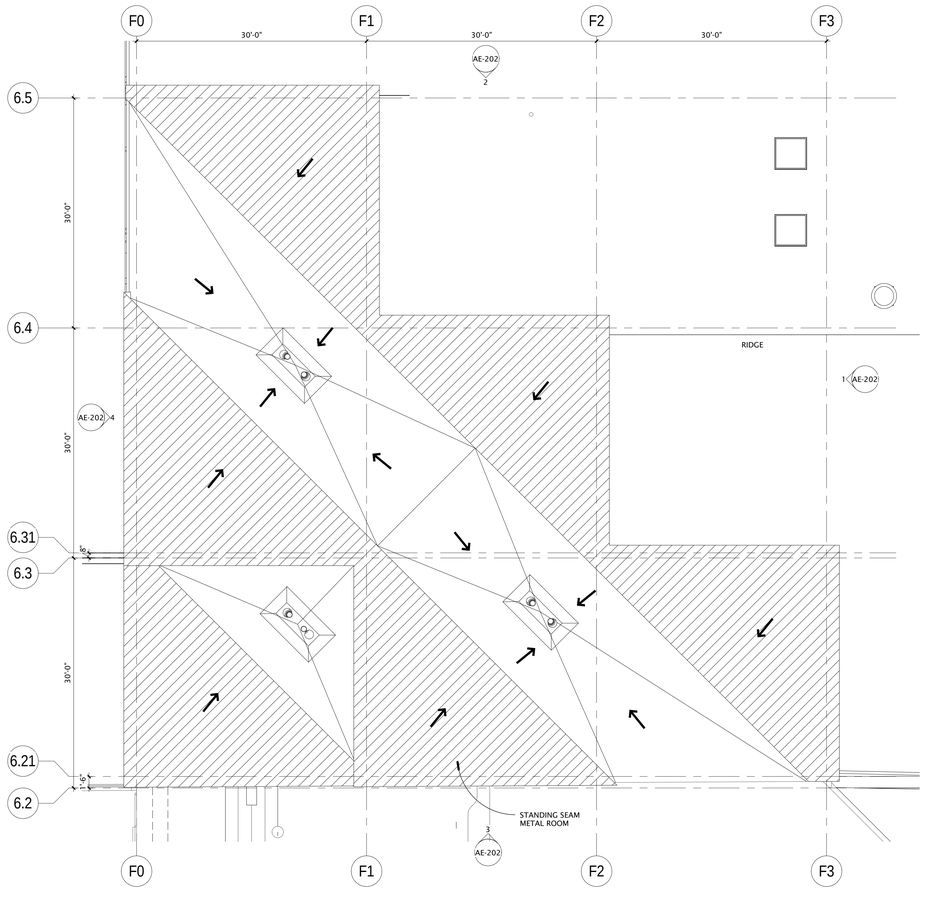

1 AE-132 ATRIUM ROOF PLAN
1/8" = 1'-0"

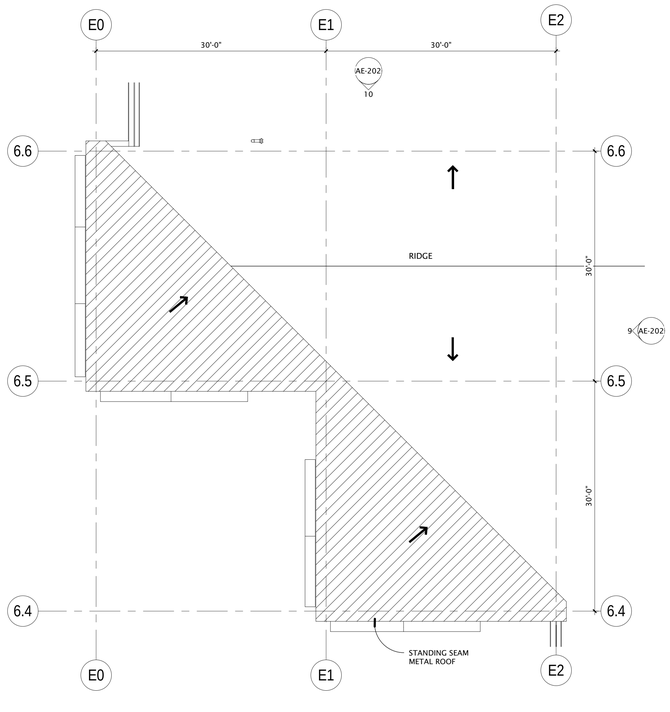

3 AE-132 WEST TOWER ROOF PLAN
1/8" = 1'-0"

GSBS ARCHITECTS
375 WEST 200 SOUTH
SALT LAKE CITY, UT 84101
P 801.521.8600
F 801.521.7913
www.gsbsarchitects.com

STATE OF UTAH
116302
LICENSED ARCHITECT

REVISIONS:

PROJECT NORTH

Utah Valley University New Science Building

800 West University Parkway
Orem, Utah 84058

Division of Facilities Construction and Management

DRAWN BY:	Author
CHECKED BY:	Checker
DFCM PROJECT NO.:	09020790
GSBS PROJECT NO.:	2009.115.00
ISSUED DATE:	05.07.2010

ENLARGED ROOF PLANS

CONSTRUCTION DOCUMENTS

AE-132

GSBS ARCHITECTS

375 WEST 200 SOUTH
SALT LAKE CITY, UT 84101

P 801.521.8600
F 801.521.7913

www.gsbsarchitects.com

STATE OF UTAH
116302
LICENSED ARCHITECT

REVISIONS:

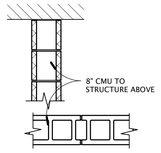

WALL TYPE B2A
1 HR. RATED

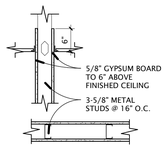

WALL TYPE D1A
NON-RATED

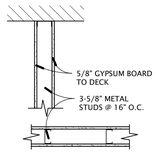

WALL TYPE D1B
NON-RATED

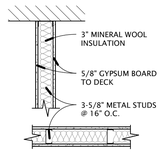

WALL TYPE D1C
NON-RATED STC 49

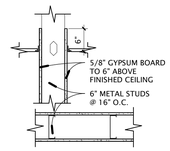

WALL TYPE D2A
NON-RATED

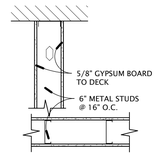

WALL TYPE D2B
NON-RATED

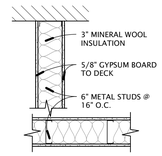

WALL TYPE D2C
NON-RATED STC 49

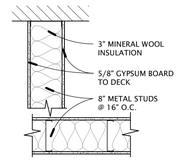

WALL TYPE D3C
NON-RATED STC 49

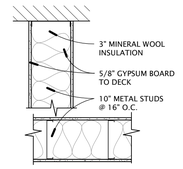

WALL TYPE D4C
NON-RATED STC 49

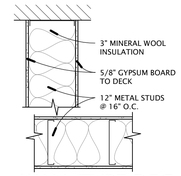

WALL TYPE D5C
NON-RATED STC 49

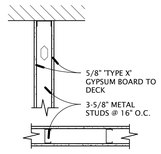

WALL TYPE E1A
1 HR. RATED
UL DES. - U419

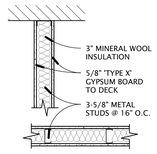

NOTE: JOINTS FINISHED & PERIMETER CAULKED

WALL TYPE E1B
1 HR. RATED STC 49
UL DES. - U419

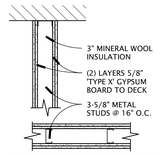

NOTE: JOINTS FINISHED & PERIMETER CAULKED

WALL TYPE E1C
2 HR. RATED
UL DES. - U419

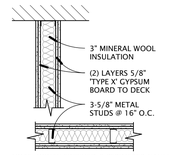

NOTE: JOINTS FINISHED & PERIMETER CAULKED

WALL TYPE E1D
2 HR. RATED STC 49
UL DES. - U419

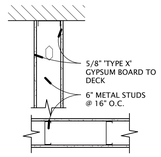

WALL TYPE E2A
1 HR. RATED STC 40
UL DES. - U419

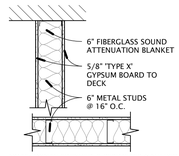

NOTE: JOINTS FINISHED & PERIMETER CAULKED

WALL TYPE E2B
1 HR. RATED STC 50
UL DES. - U419

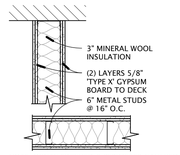

NOTE: JOINTS FINISHED & PERIMETER CAULKED

WALL TYPE E2D
2 HR. RATED STC 49
UL DES. - U419

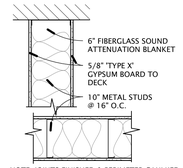

NOTE: JOINTS FINISHED & PERIMETER CAULKED

WALL TYPE E4B
1 HR. RATED STC 50
UL DES. - U419

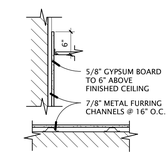

WALL TYPE H1A
NON-RATED

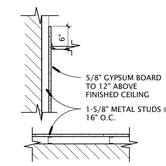

WALL TYPE H2A
NON-RATED

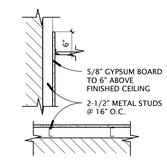

WALL TYPE H3A
NON-RATED

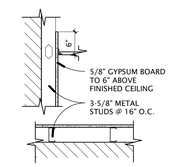

WALL TYPE H4A
NON-RATED

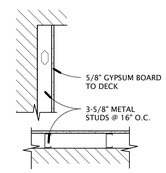

WALL TYPE H4B
NON-RATED

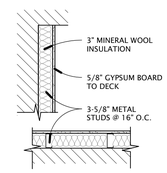

WALL TYPE H4C
NON-RATED

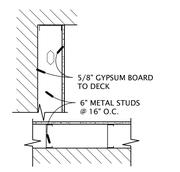

WALL TYPE H5B
NON-RATED

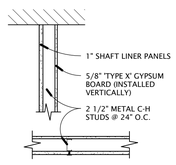

WALL TYPE J1A
1 HR. RATING
UL DES. - U469

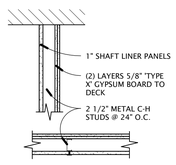

WALL TYPE J1B
2 HR. RATING
UL DES. - U438

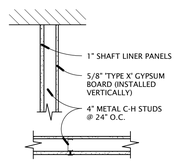

WALL TYPE J2A
1 HR. RATING
UL DES. - U469

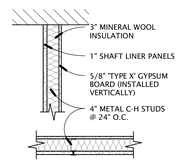

WALL TYPE J2B
1 HR. RATING
UL DES. - U469

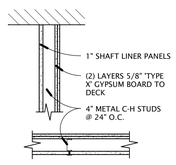

WALL TYPE J2C
2 HR. RATING
UL DES. - U438

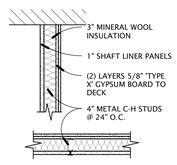

WALL TYPE J2D
2 HR. RATING
UL DES. - U438

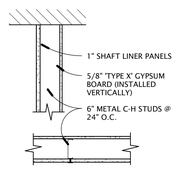

WALL TYPE J3A
1 HR. RATING
UL DES. - U469

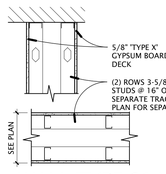

WALL TYPE S1A
1 HR. RATED
UL DES. - U420

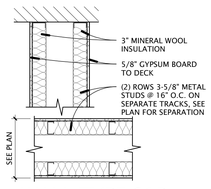

WALL TYPE S1B
NON-RATED STC 49

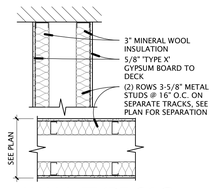

WALL TYPE S1C
1 HR. RATED STC 49
UL DES. - U420

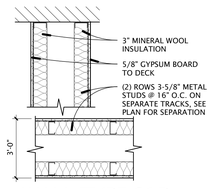

WALL TYPE S1D
NON-RATED STC 49

WALL TYPE NOTES

1. ALL TYPES TO CONTINUE AT DOOR & WINDOW OPENINGS (TOP & BOTTOM) U.N.O.
2. ALL WALLS SCHEDULED WITH AN STC RATING OR SCHEDULED TO INCLUDE SOUND ATTENUATION BLANKETS SHALL BE CONSIDERED ACOUSTICAL PARTITIONS. GYPSUM BOARD AT SUCH PARTITIONS SHALL BE RUN AS TIGHT AS POSSIBLE TO STRUCTURE ABOVE AND ALL PENETRATIONS. ALL PENETRATIONS SHALL BE FULLY SEALED WITH ACOUSTICAL SEALANT AND OPEN DECK FLUTES SHALL BE FILLED WITH INSULATION AND SEALED SUCH THAT THEY ARE CAPABLE OF RESISTING THE PASSAGE OF SMOKE. AT FIRE-RESISTANCE RATED WALLS, PROVIDE THIS IN ADDITION TO FIRE RATING REQUIREMENTS. REFER TO TYP. TOP OF WALL. DETAILS ON A8 SERIES SHEETS.
3. USE WATER RESISTANT GYPSUM BOARD AT ALL WET WALL LOCATIONS, TYP.

Utah Valley University New Science Building

800 West University Parkway
Orem, Utah 84058

Division of Facilities Construction and Management

DRAWN BY:	Author
CHECKED BY:	Checker
DFCM PROJECT NO.:	09020790
GSBS PROJECT NO.:	2009.115.00
ISSUED DATE:	05.07.2010

WALL TYPES

CONSTRUCTION DOCUMENTS

AE-140

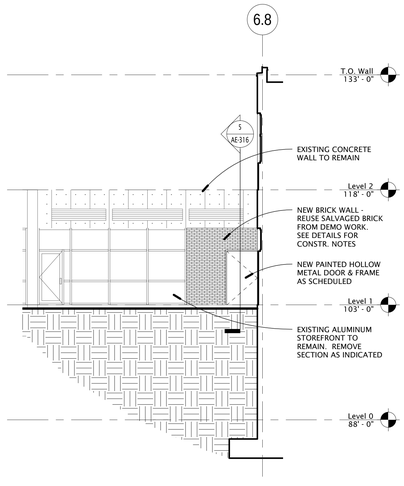

7 AE-201 DOOR 177B ELEVATION
1/8" = 1'-0"

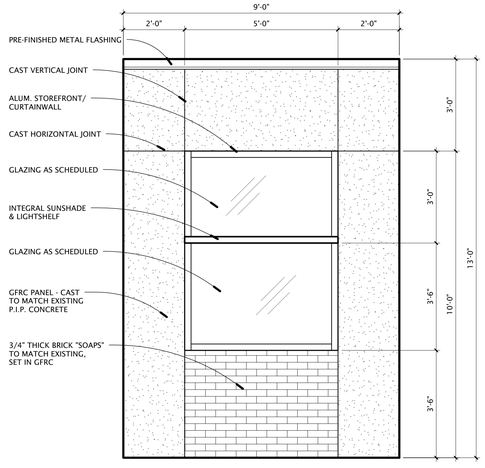

6 AE-201 MOCKUP PANEL ELEVATION
1/2" = 1'-0"

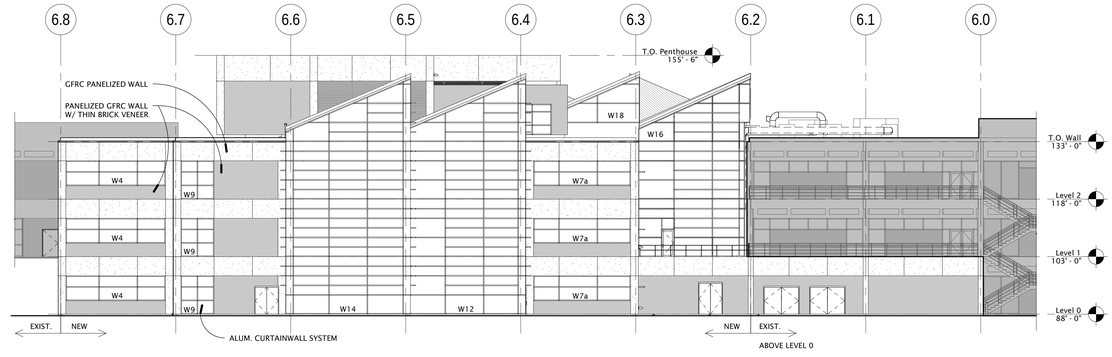

4 AE-201 WEST ELEVATION
1/16" = 1'-0"

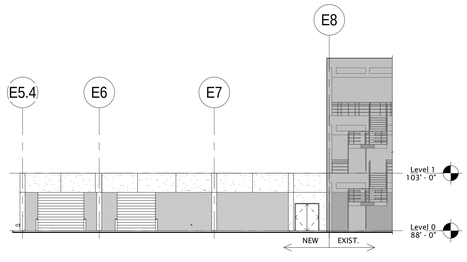

5 AE-201 SOUTH ELEVATION - LEVEL 0
1/16" = 1'-0"

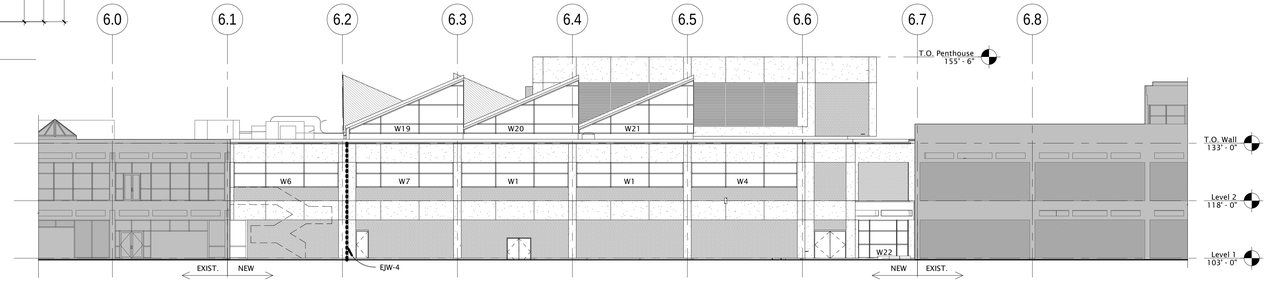

3 AE-201 EAST ELEVATION
1/16" = 1'-0"

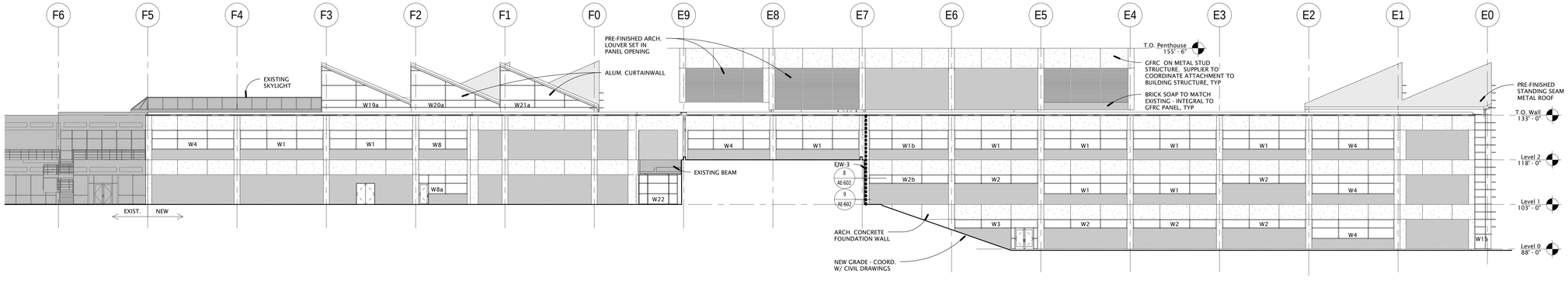

2 AE-201 NORTH ELEVATION
1/16" = 1'-0"

1 AE-201 SOUTH ELEVATION
1/16" = 1'-0"

GSBS ARCHITECTS
375 WEST 200 SOUTH
SALT LAKE CITY, UT 84101
P 801.521.8600
F 801.521.7913
www.gsbsarchitects.com

STATE OF UTAH
116302
LICENSED ARCHITECT

REVISIONS:

Utah Valley University New Science Building

800 West University Parkway
Orem, Utah 84058

Division of Facilities Construction and Management

DRAWN BY:	Author
CHECKED BY:	Checker
DFCM PROJECT NO.:	09020790
GSBS PROJECT NO.:	2009.115.00
ISSUED DATE:	05.07.2010

BUILDING ELEVATIONS

CONSTRUCTION DOCUMENTS

AE-201

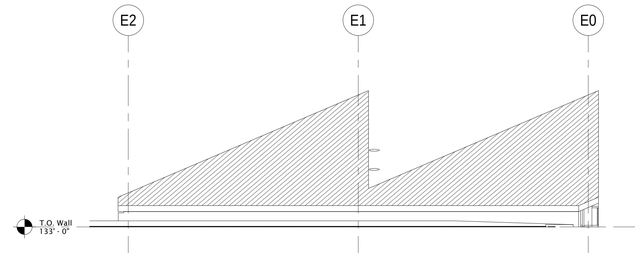

10 AE-202 WEST TOWER NORTH
1/8" = 1'-0"

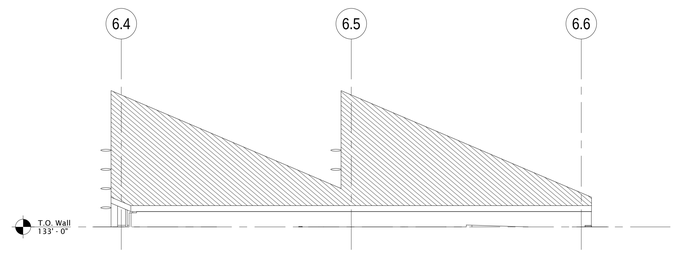

9 AE-202 WEST TOWER EAST
1/8" = 1'-0"

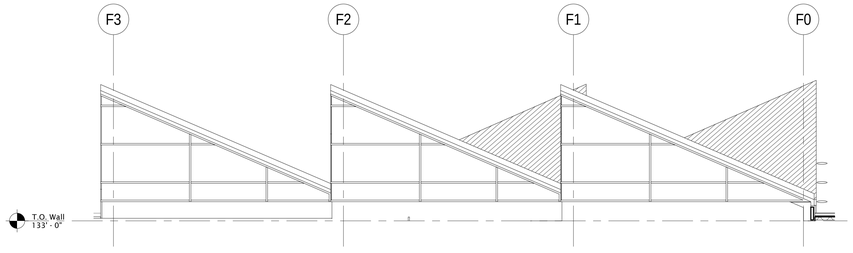

2 AE-202 EXTERIOR ATRIUM NORTH
1/8" = 1'-0"

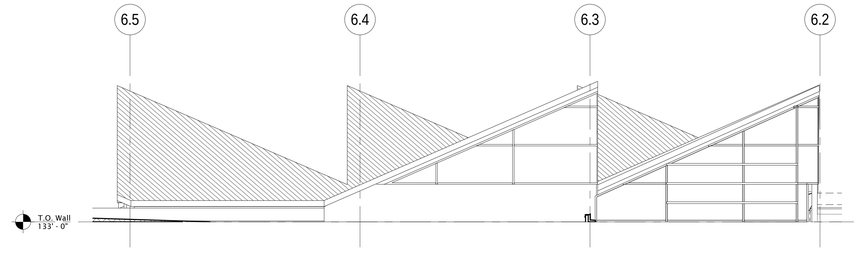

4 AE-202 EXTERIOR ATRIUM WEST
1/8" = 1'-0"

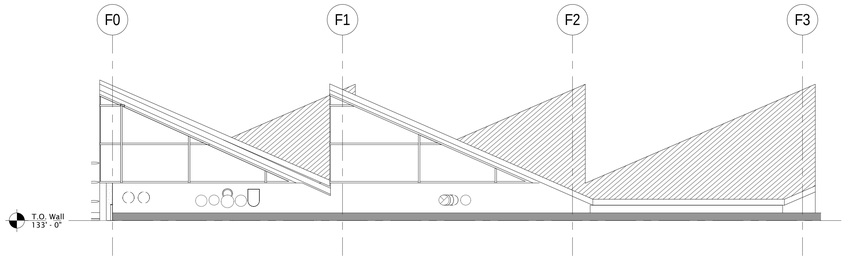

3 AE-202 EXTERIOR ATRIUM SOUTH
1/8" = 1'-0"

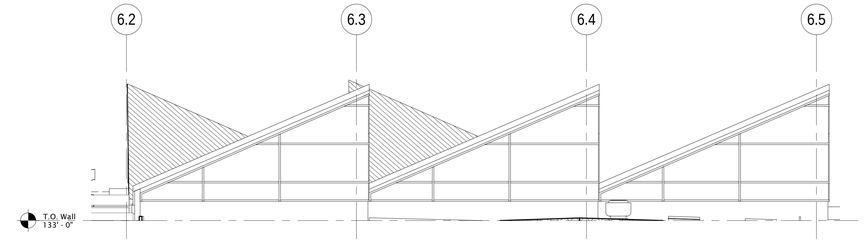

1 AE-202 EXTERIOR ATRIUM EAST
1/8" = 1'-0"

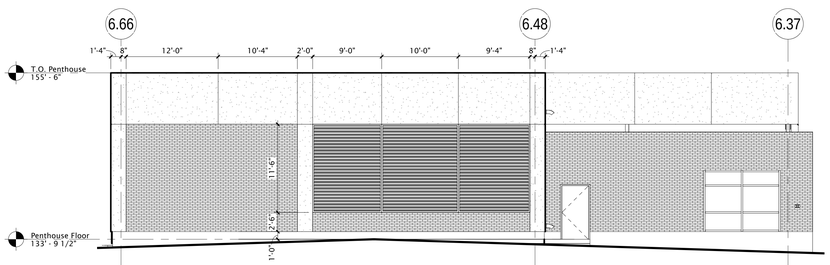

8 AE-202 MECHANICAL WEST
1/8" = 1'-0"

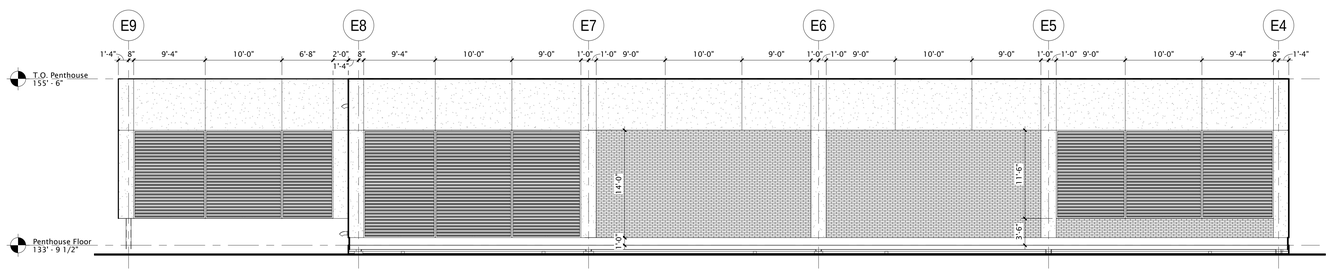

6 AE-202 MECHANICAL NORTH
1/8" = 1'-0"

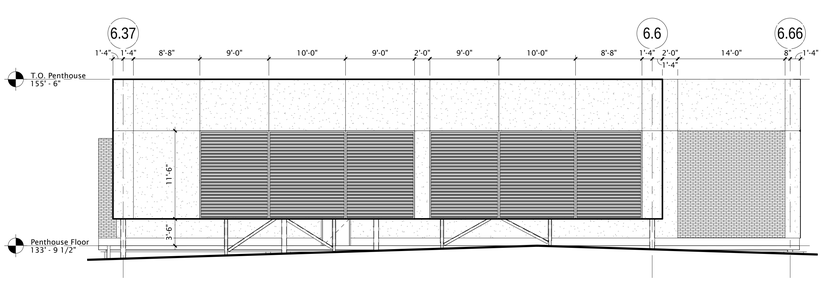

5 AE-202 MECHANICAL EAST
1/8" = 1'-0"

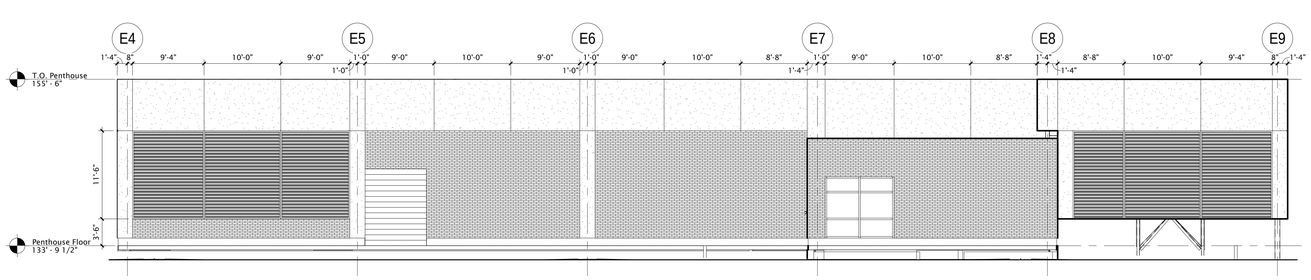

7 AE-202 MECHANICAL SOUTH
1/8" = 1'-0"

GSBS ARCHITECTS
375 WEST 200 SOUTH
SALT LAKE CITY, UT 84101
P 801.521.8600
F 801.521.7913
www.gsbsarchitects.com

STATE OF UTAH
116302
LICENSED ARCHITECT

REVISIONS:

Utah Valley University New Science Building

800 West University Parkway
Orem, Utah 84058

Division of Facilities Construction and Management

DRAWN BY:	Author
CHECKED BY:	Checker
DFCM PROJECT NO.:	09020790
GSBS PROJECT NO.:	2009.115.00
ISSUED DATE:	05.07.2010

BUILDING ELEVATIONS

CONSTRUCTION DOCUMENTS

AE-202

GSBS ARCHITECTS

375 WEST 200 SOUTH
SALT LAKE CITY, UT 84101

P 801.521.8600
F 801.521.7913

www.gsbsarchitects.com

STATE OF UTAH
116302
LICENSED ARCHITECT

REVISIONS:

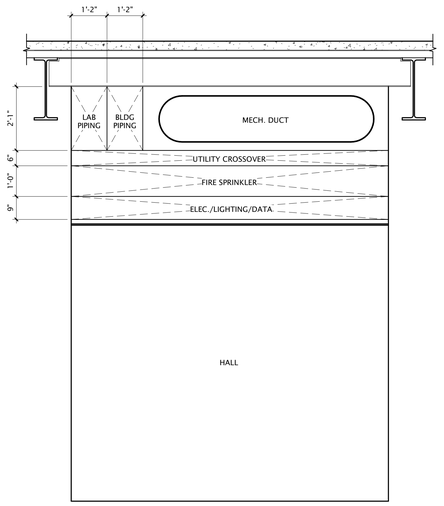

3 AE-301 TYPICAL HALL SECTION
1/2" = 1'-0"

1 AE-301 BUILDING SECTION
1/16" = 1'-0"

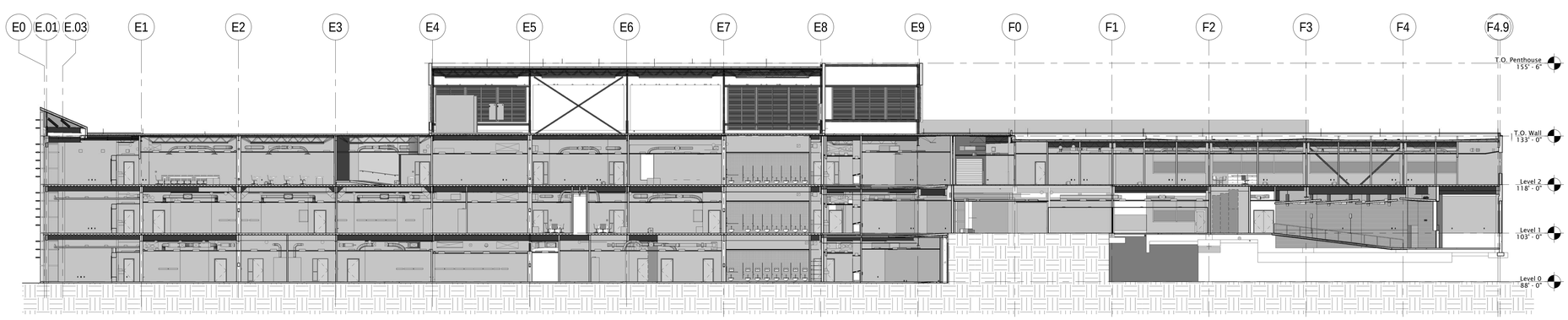

2 AE-301 BUILDING SECTION
1/16" = 1'-0"

Utah Valley University New Science Building

800 West University Parkway
Orem, Utah 84058

Division of Facilities Construction and Management

DRAWN BY:	Author
CHECKED BY:	Checker
DFCM PROJECT NO.:	09020790
GSBS PROJECT NO.:	2009.115.00
ISSUED DATE:	05.07.2010

BUILDING SECTIONS

CONSTRUCTION DOCUMENTS

AE-301

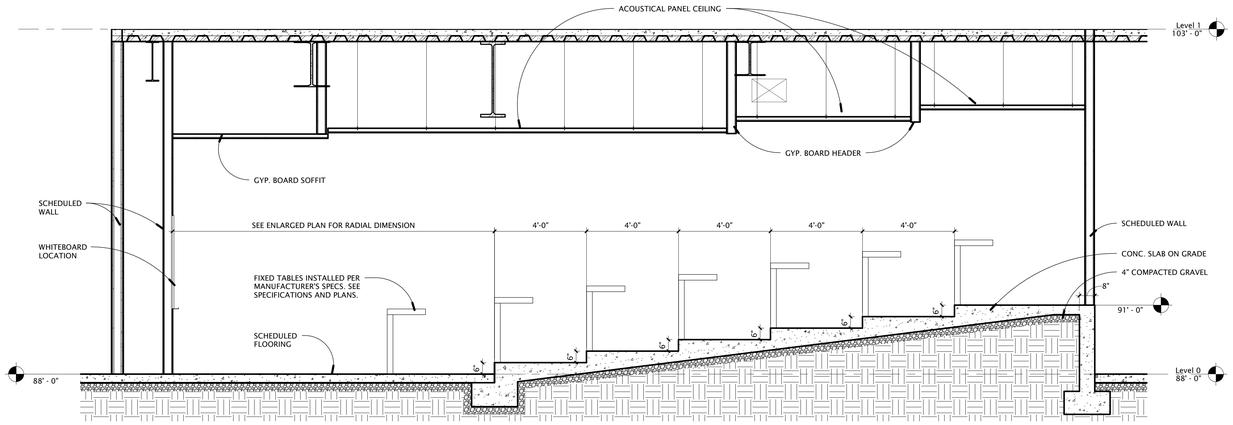

2 AE-302 LECTURE 031
3/8" = 1'-0"

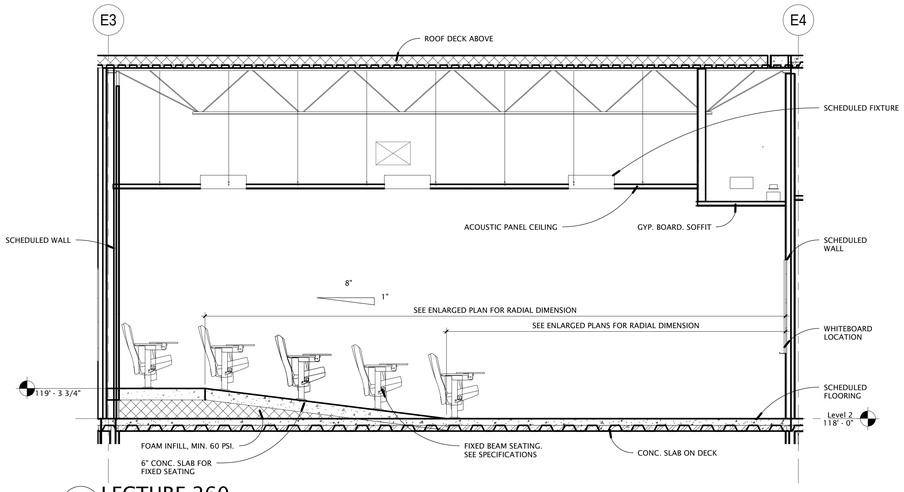

3 AE-302 LECTURE 260
3/8" = 1'-0"

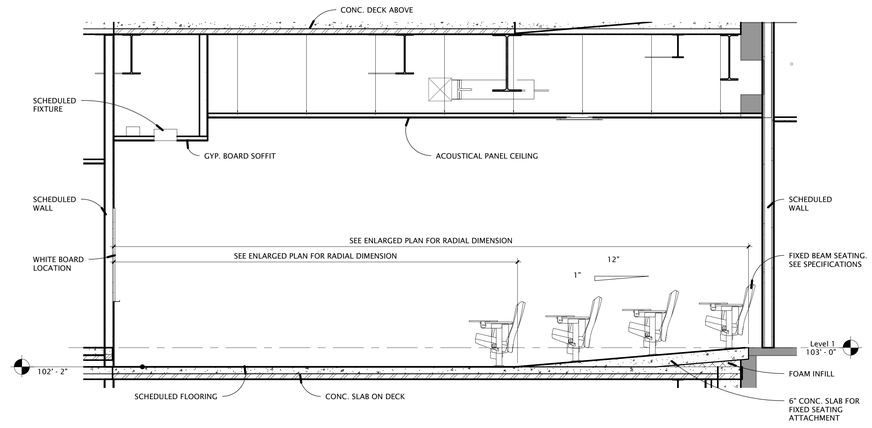

1 AE-302 LECTURE 139
3/8" = 1'-0"

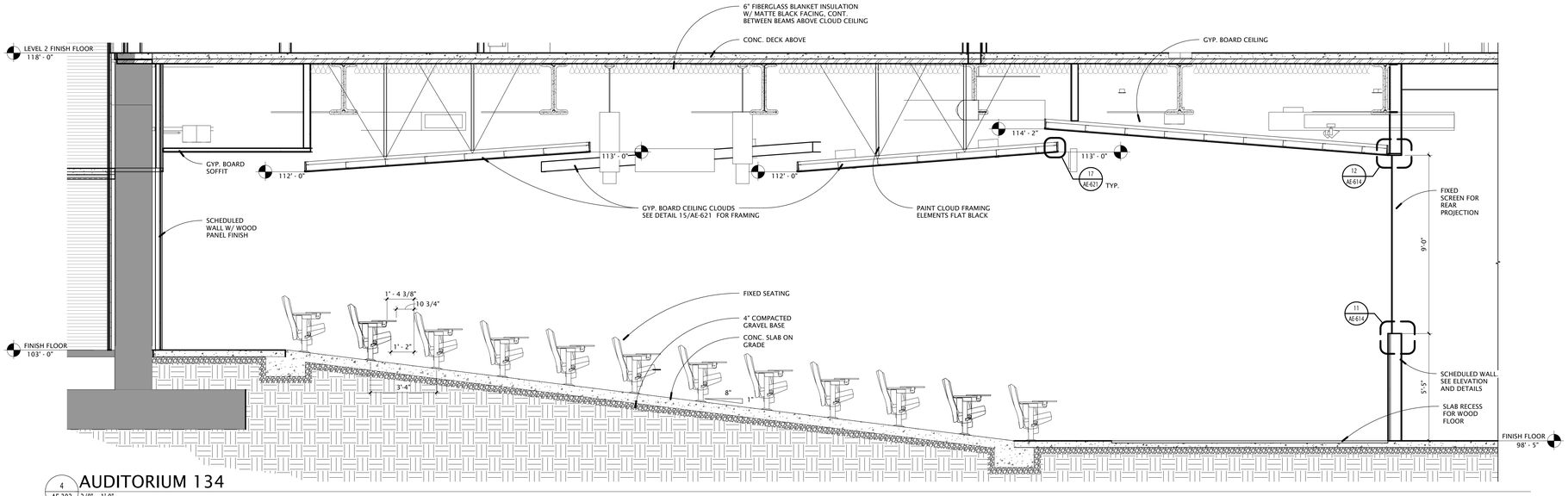

4 AE-302 AUDITORIUM 134
3/8" = 1'-0"

GSBS ARCHITECTS
375 WEST 200 SOUTH
SALT LAKE CITY, UT 84101
P 801.521.8600
F 801.521.7913
www.gsbsarchitects.com

STATE OF UTAH
116302
LICENSED ARCHITECT

REVISIONS:

Utah Valley University New Science Building

800 West University Parkway
Orem, Utah 84058

Division of Facilities Construction and Management

DRAWN BY:	Author
CHECKED BY:	Checker
DFCM PROJECT NO.:	09020790
GSBS PROJECT NO.:	2009.15.00
ISSUED DATE:	05.07.2010

BUILDING SECTIONS

CONSTRUCTION DOCUMENTS

AE-302

GSBS ARCHITECTS

375 WEST 200 SOUTH
SALT LAKE CITY, UT 84101

P 801.521.8600
F 801.521.7915

www.gsbsarchitects.com

STATE OF UTAH
116302
LICENSED ARCHITECT

REVISIONS:

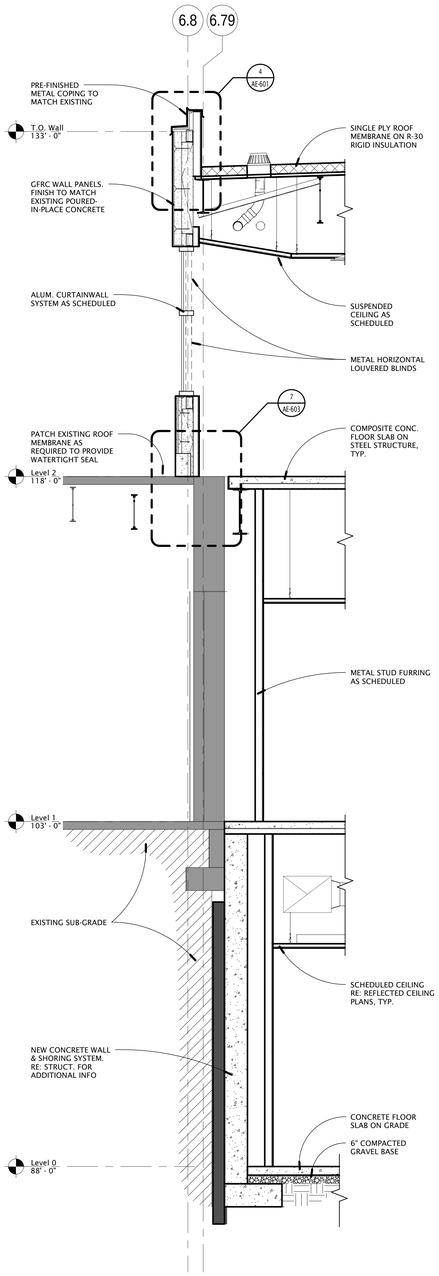

4 AE-311 WALL SECTION
3/8" = 1'-0"

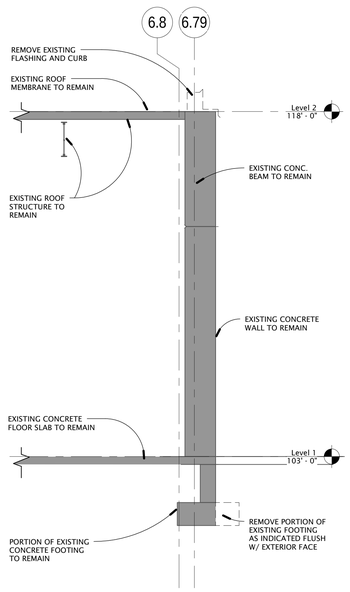

4a AE-311 DEMO WALL SECTION
3/8" = 1'-0"

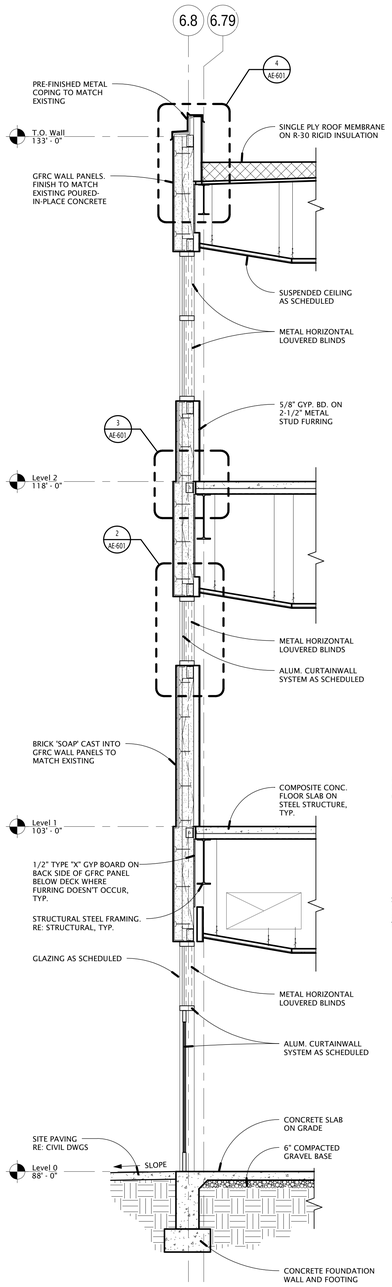

3 AE-311 WALL SECTION
3/8" = 1'-0"

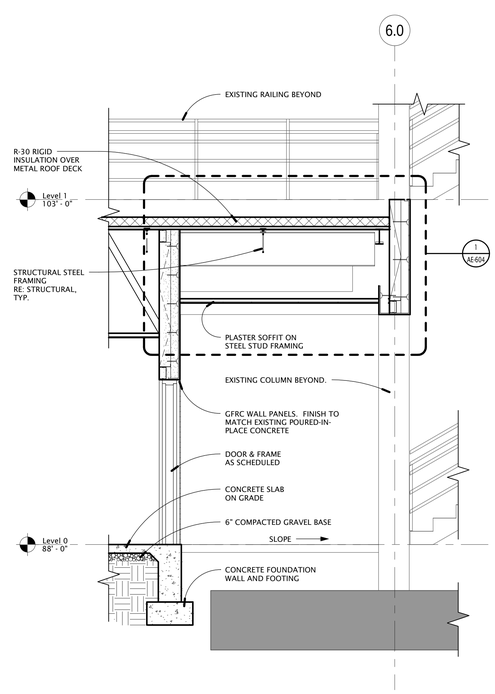

2 AE-311 WALL SECTION
3/8" = 1'-0"

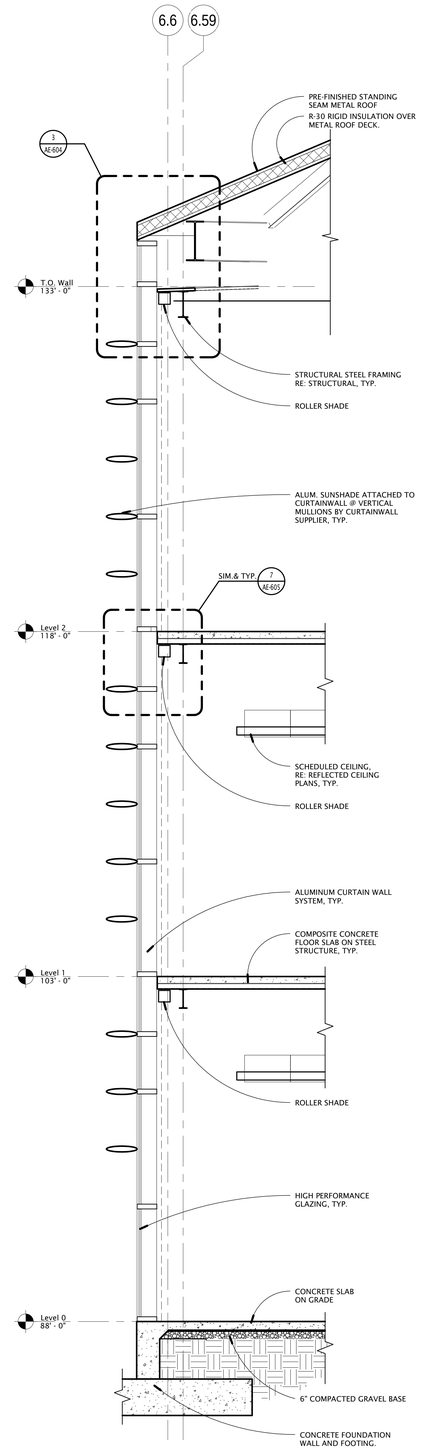

1 AE-311 WALL SECTION
3/8" = 1'-0"

Utah Valley University New Science Building

800 West University Parkway
Orem, Utah 84058

Division of Facilities Construction and Management

DRAWN BY:	Author
CHECKED BY:	Checker
DFCM PROJECT NO.:	09020790
GSBS PROJECT NO.:	2009.115.00
ISSUED DATE:	05.07.2010

WALL SECTIONS

CONSTRUCTION DOCUMENTS

AE-311

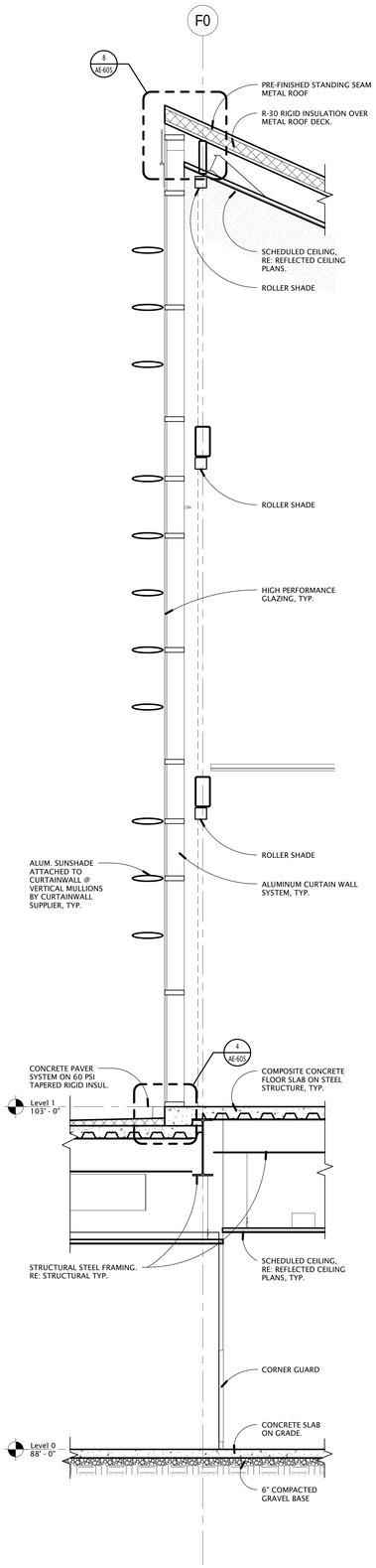

5 AE-312 WALL SECTION
3/8" = 1'-0"

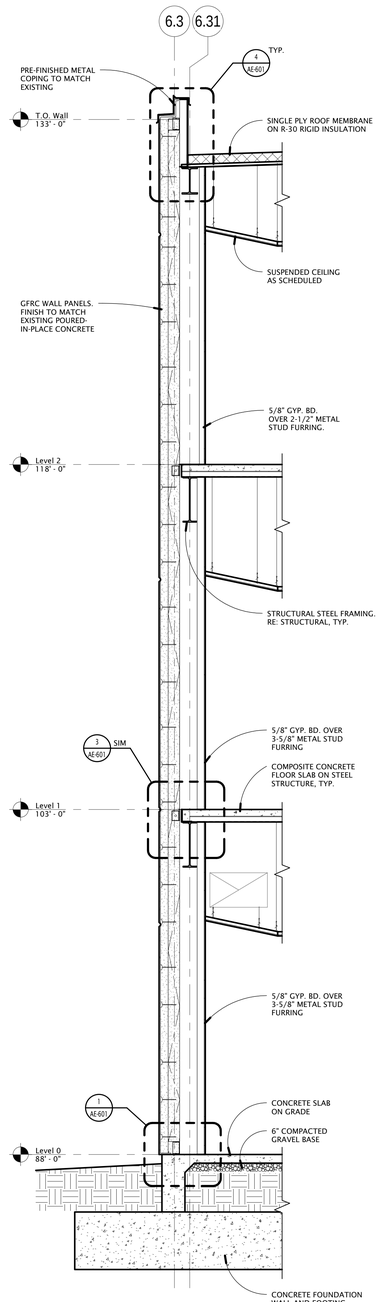

4 AE-312 WALL SECTION
3/8" = 1'-0"

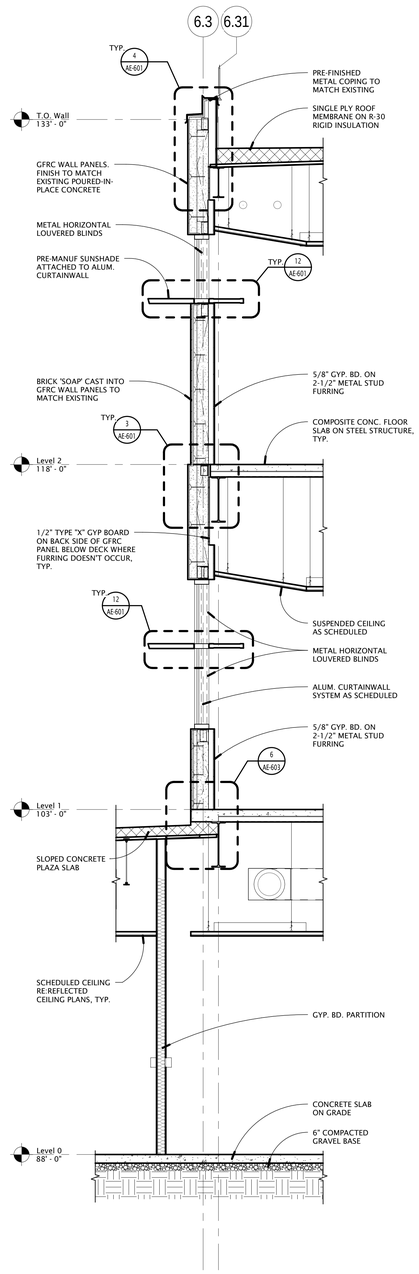

3 AE-312 WALL SECTION
3/8" = 1'-0"

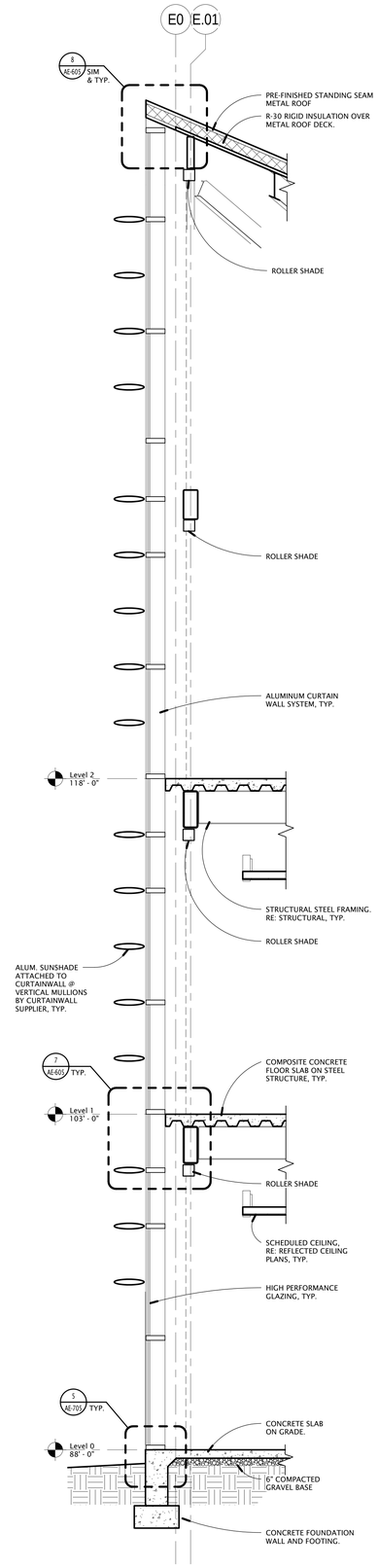

2 AE-312 WALL SECTION
3/8" = 1'-0"

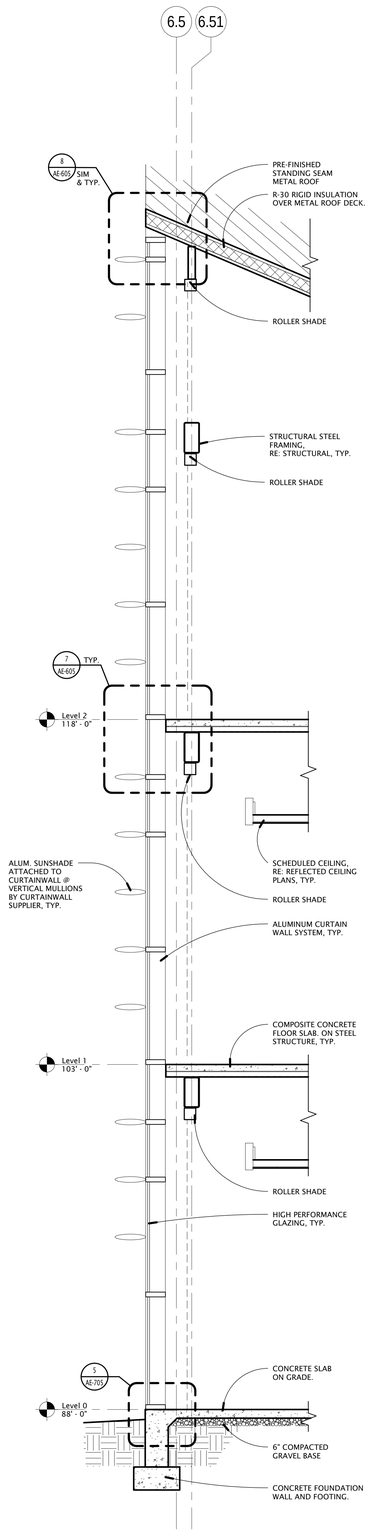

1 AE-312 WALL SECTION
3/8" = 1'-0"

GSBS ARCHITECTS
375 WEST 200 SOUTH
SALT LAKE CITY, UT 84101
P 801.521.8600
F 801.521.7913
www.gsbsarchitects.com

STATE OF UTAH 116302 LICENSED ARCHITECT

REVISIONS:

Utah Valley University New Science Building

800 West University Parkway
Orem, Utah 84058

Division of Facilities Construction and Management

DRAWN BY:	Author
CHECKED BY:	Checker
DFCM PROJECT NO.:	09020790
GSBS PROJECT NO.:	2009.115.00
ISSUED DATE:	05.07.2010

WALL SECTIONS

CONSTRUCTION DOCUMENTS

AE-312

GSBS ARCHITECTS

375 WEST 200 SOUTH
SALT LAKE CITY, UT 84101

P 801.521.8600
F 801.521.7913

www.gsbsarchitects.com

STATE OF UTAH
116302
LICENSED ARCHITECT

REVISIONS:

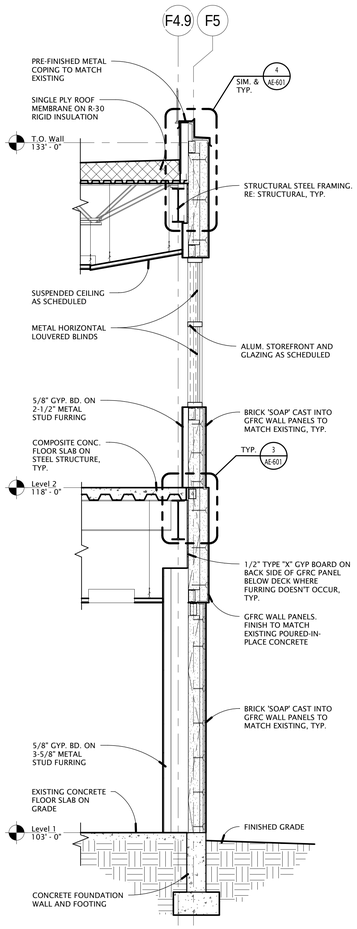

5 AE-313 WALL SECTION
3/8" = 1'-0"

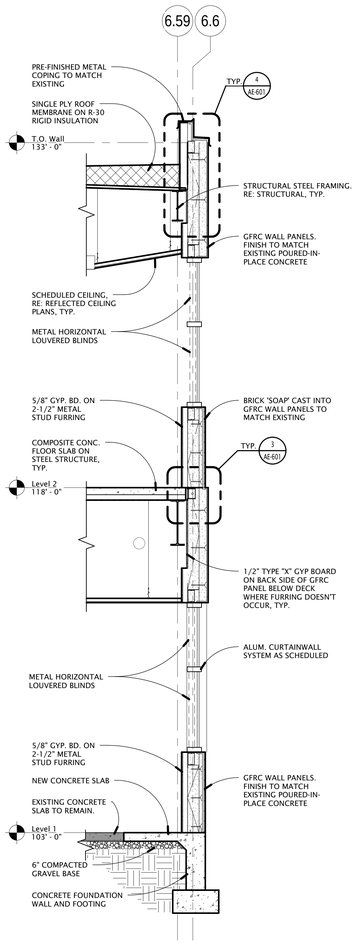

4 AE-313 WALL SECTION
3/8" = 1'-0"

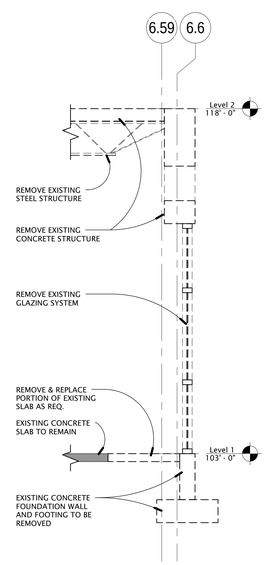

4a AE-313 DEMO WALL SECTION
3/8" = 1'-0"

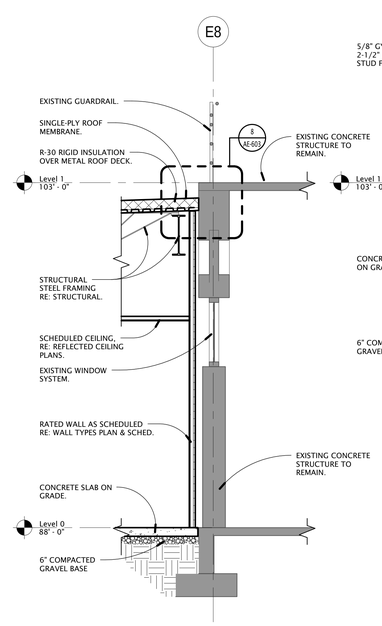

3 AE-313 WALL SECTION
3/8" = 1'-0"

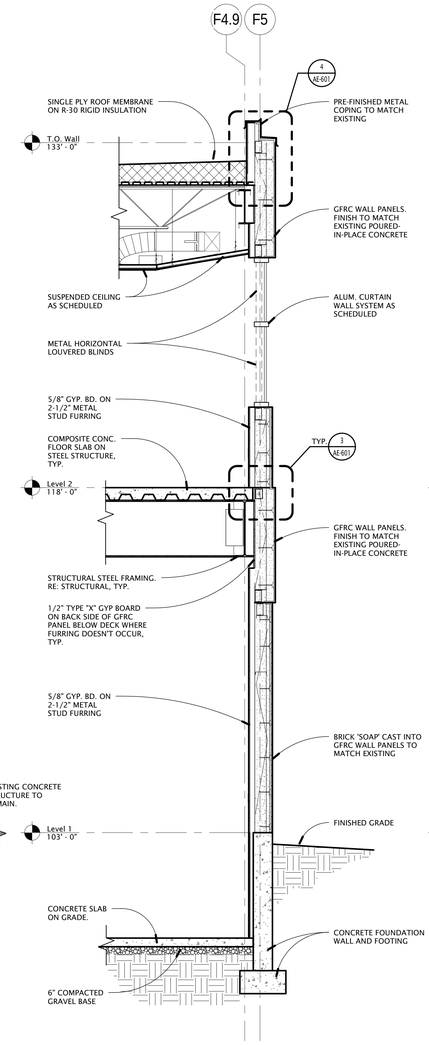

2 AE-313 WALL SECTION
3/8" = 1'-0"

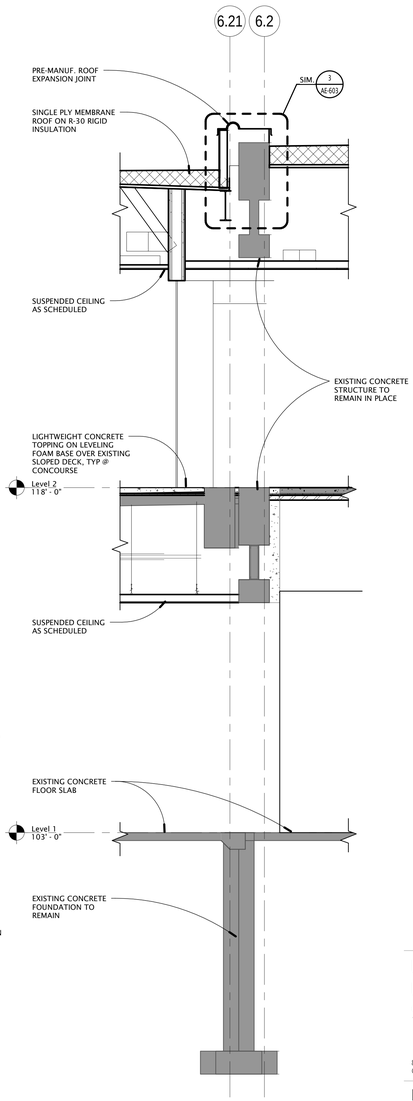

1 AE-313 WALL SECTION
3/8" = 1'-0"

Utah Valley University New Science Building

800 West University Parkway
Orem, Utah 84058

Division of Facilities Construction and Management

DRAWN BY:	Author
CHECKED BY:	Checker
DFCM PROJECT NO.:	09020790
GSBS PROJECT NO.:	2009.115.00
ISSUED DATE:	05.07.2010

WALL SECTIONS

CONSTRUCTION DOCUMENTS

AE-313

GSBS ARCHITECTS

375 WEST 200 SOUTH
SALT LAKE CITY, UT 84101

P 801.521.8600
F 801.521.7913

www.gsbsarchitects.com

STATE OF UTAH
116302
LICENSED ARCHITECT

REVISIONS:

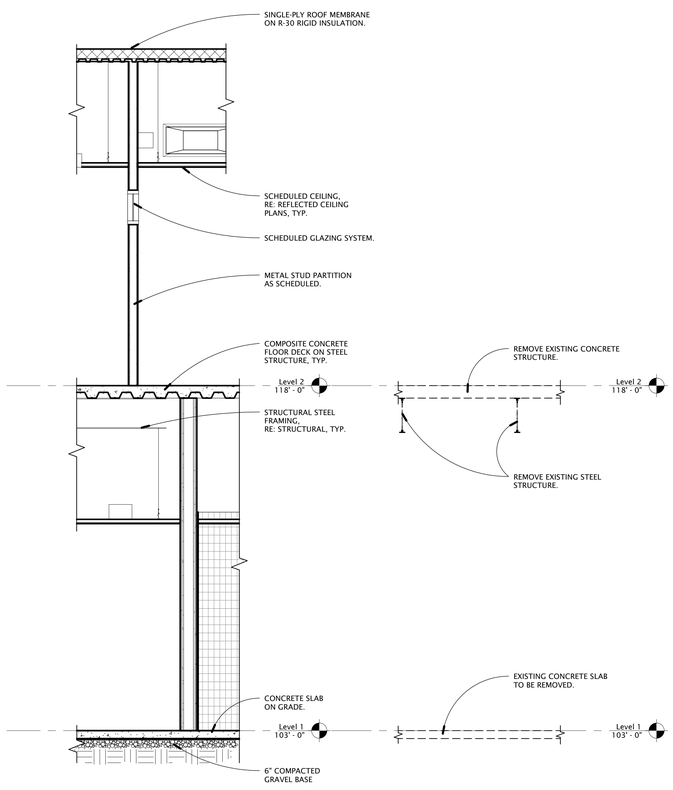

3 AE-314 WALL SECTION 3/8" = 1'-0"

3a AE-314 DEMO WALL SECTION 3/8" = 1'-0"

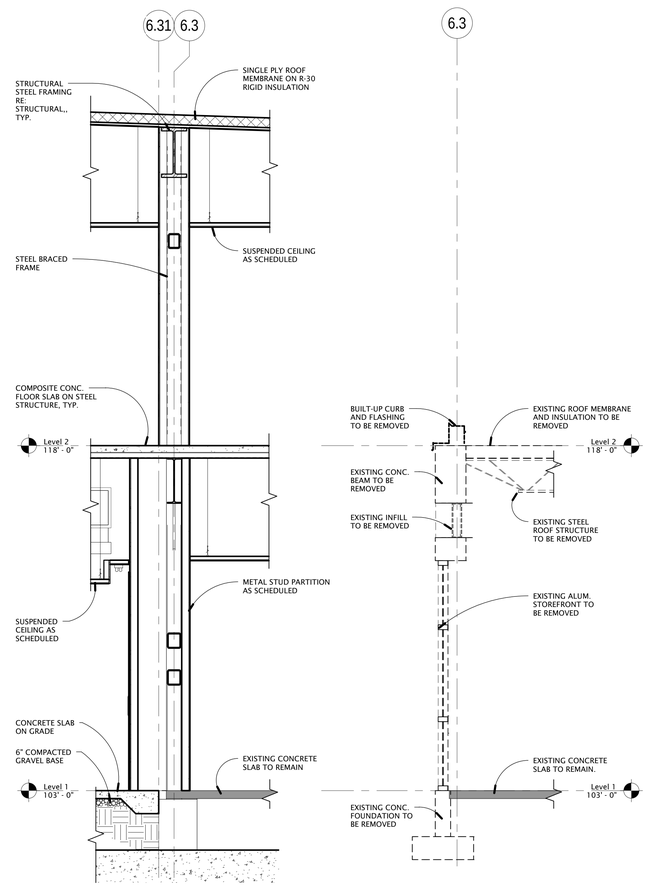

2 AE-314 WALL SECTION 3/8" = 1'-0"

2a AE-314 DEMO WALL SECTION 3/8" = 1'-0"

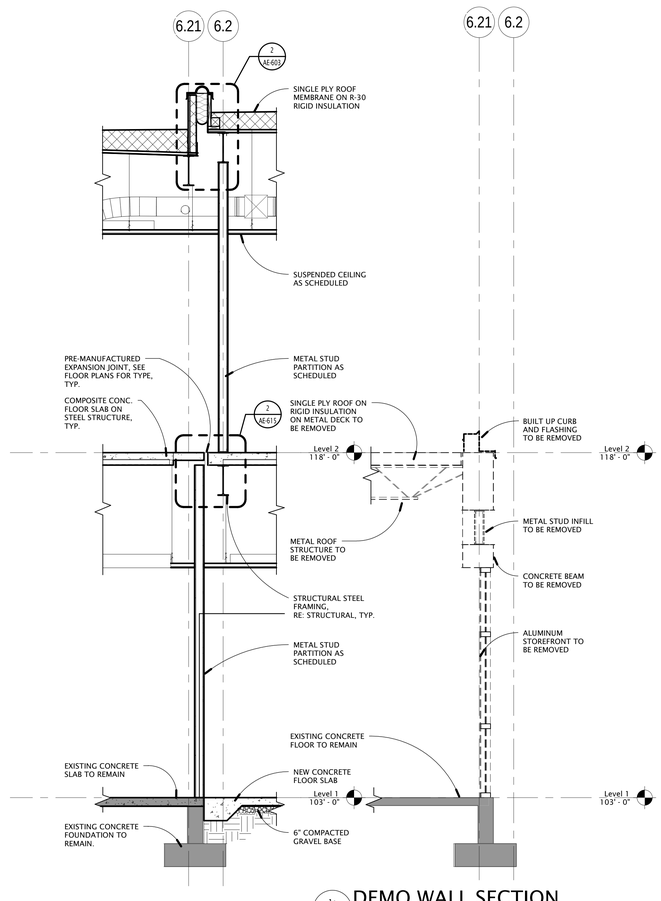

1 AE-314 WALL SECTION 3/8" = 1'-0"

1a AE-314 DEMO WALL SECTION 3/8" = 1'-0"

Utah Valley University New Science Building

800 West University Parkway
Orem, Utah 84058

Division of Facilities Construction and Management

DRAWN BY:	Author
CHECKED BY:	Checker
DFCM PROJECT NO.:	09020790
GSBS PROJECT NO.:	2009.115.00
ISSUED DATE:	05.07.2010

WALL SECTIONS

CONSTRUCTION DOCUMENTS

AE-314

GSBS ARCHITECTS
375 WEST 200 SOUTH
SALT LAKE CITY, UT 84101
P 801.521.8600
F 801.521.7915
www.gsbsarchitects.com

STATE OF UTAH
116302
LICENSED ARCHITECT

REVISIONS:

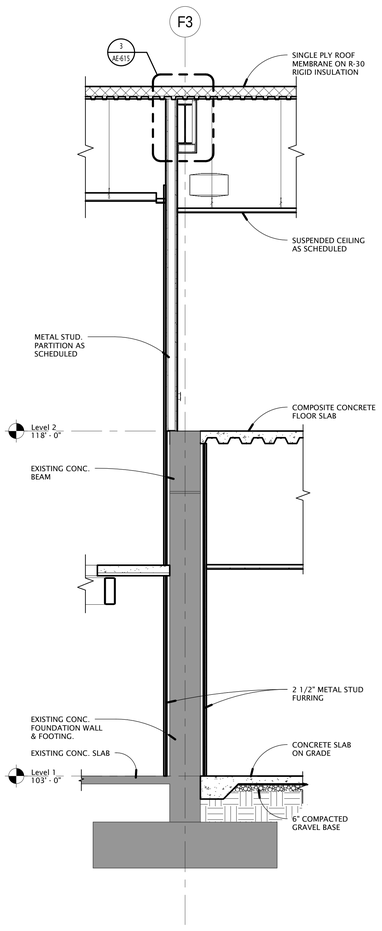

3 AE-315 WALL SECTION
3/8" = 1'-0"

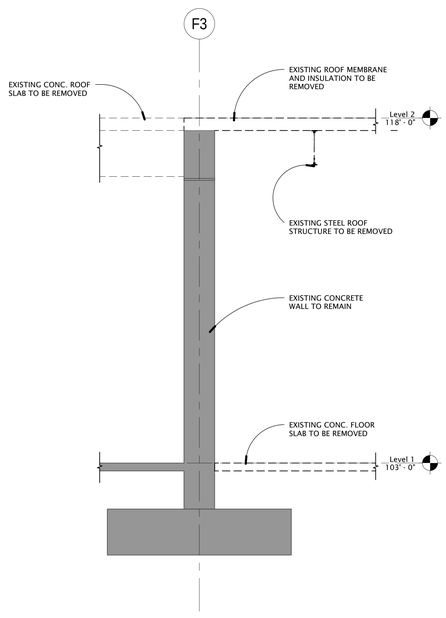

3a AE-315 DEMO WALL SECTION
3/8" = 1'-0"

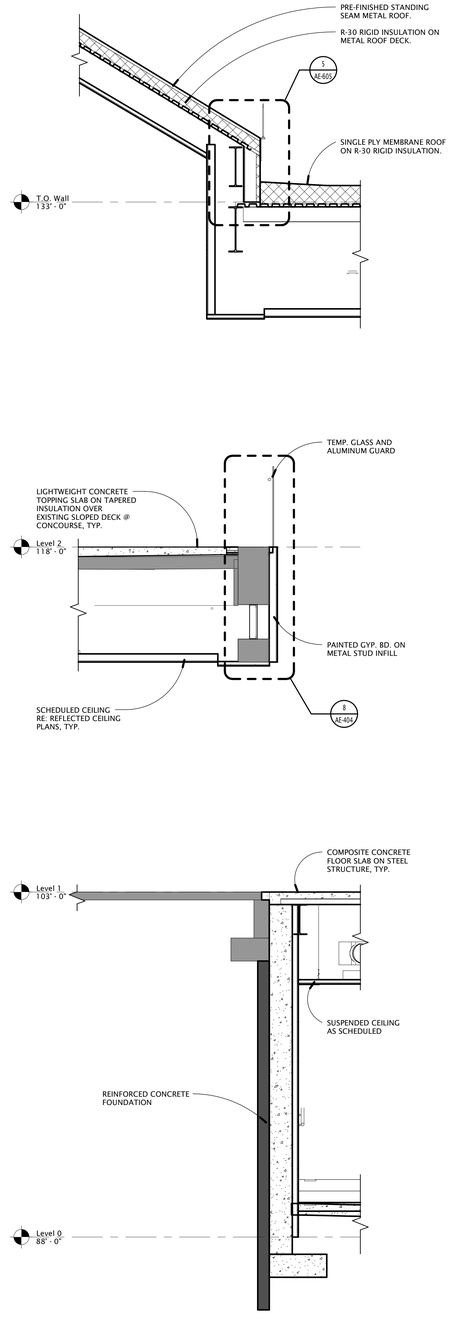

2 AE-315 WALL SECTION
3/8" = 1'-0"

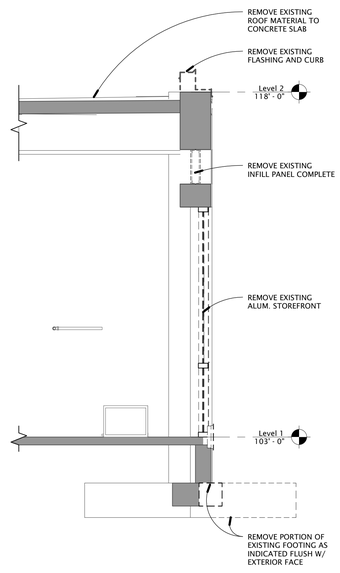

2a AE-315 DEMO WALL SECTION
3/8" = 1'-0"

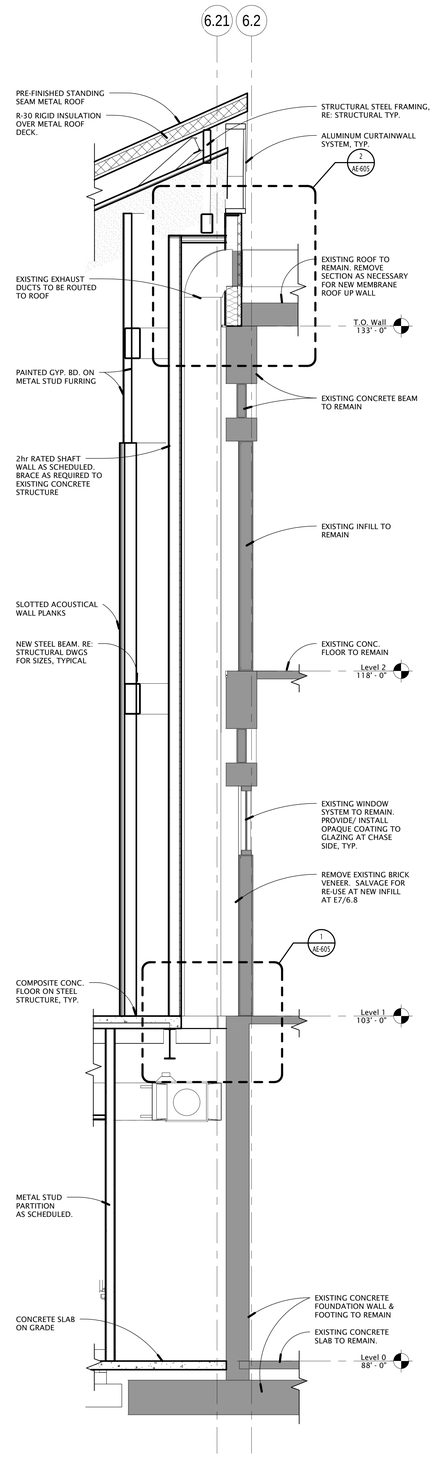

1 AE-315 WALL SECTION
3/8" = 1'-0"

Utah Valley University New Science Building

800 West University Parkway
Orem, Utah 84058

Division of Facilities Construction and Management

DRAWN BY:	Author
CHECKED BY:	Checker
DFCM PROJECT NO.:	09020790
GSBS PROJECT NO.:	2009.115.00
ISSUED DATE:	05.07.2010

WALL SECTIONS

CONSTRUCTION DOCUMENTS

AE-315

GSBS ARCHITECTS

375 WEST 200 SOUTH
SALT LAKE CITY, UT 84101

P 801.521.8600
F 801.521.7913

www.gsbsarchitects.com

STATE OF UTAH
116302
LICENSED ARCHITECT

REVISIONS:

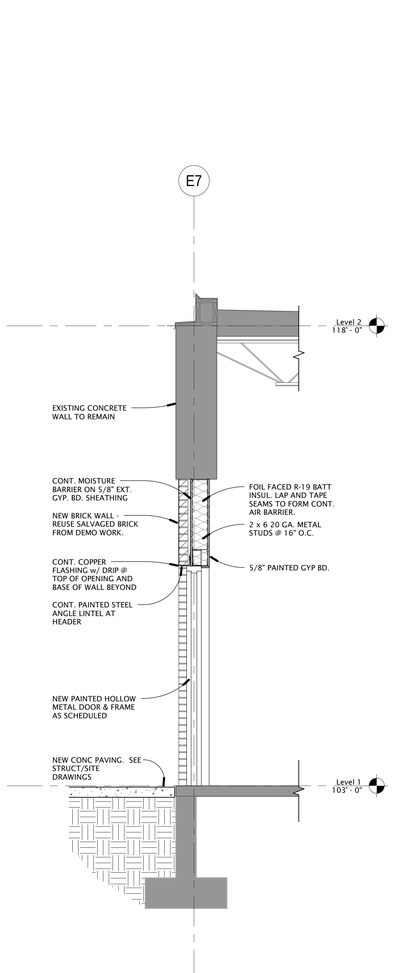

5 AE-316 SECTION THROUGH BRICK INFILL
1/2" = 1'-0"

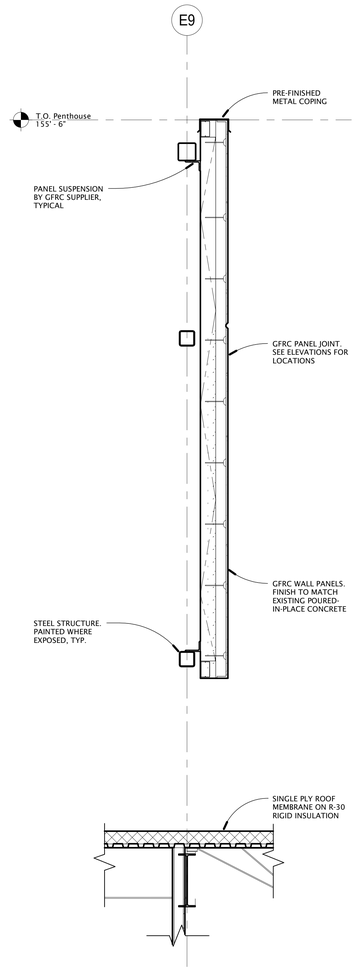

4 AE-316 WALL SECTION
1/2" = 1'-0"

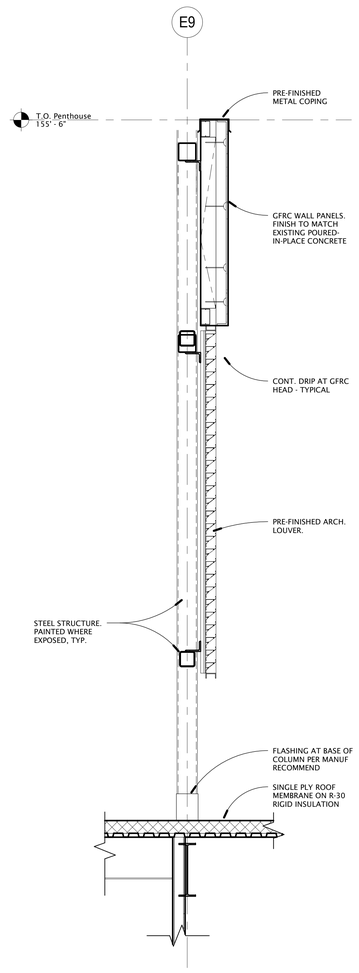

3 AE-316 WALL SECTION
1/2" = 1'-0"

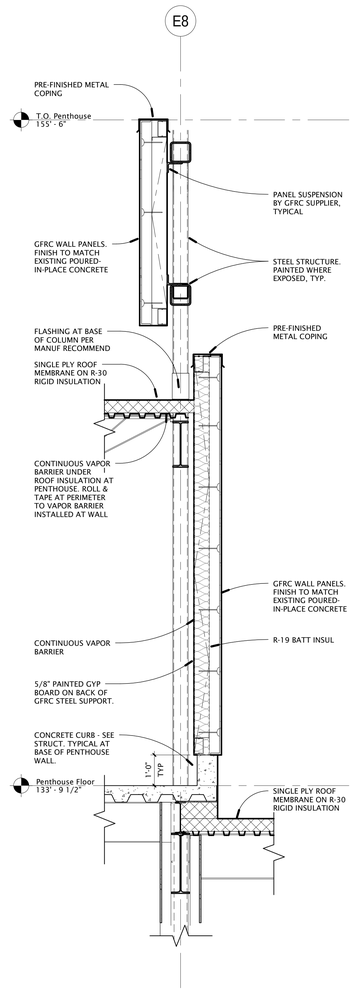

2 AE-316 WALL SECTION
1/2" = 1'-0"

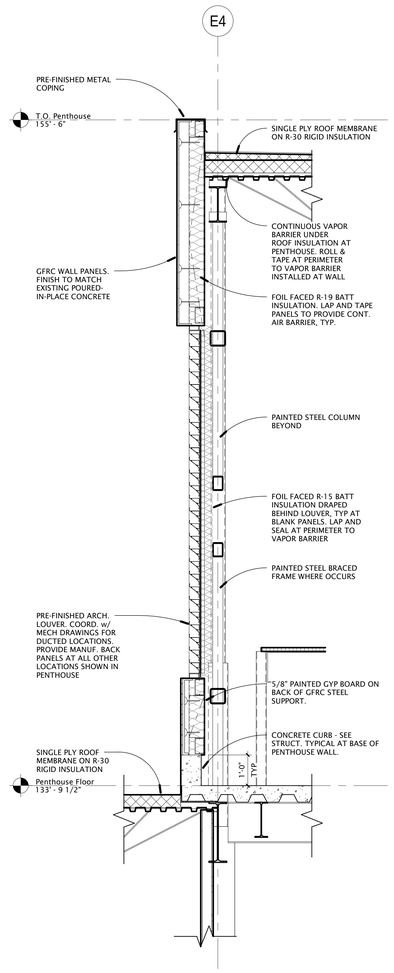

1 AE-316 WALL SECTION
1/2" = 1'-0"

Utah Valley University New Science Building

800 West University Parkway
Orem, Utah 84058

Division of Facilities Construction and Management

DRAWN BY:	Author
CHECKED BY:	Checker
DFCM PROJECT NO.:	09020790
GSBS PROJECT NO.:	2009.115.00
ISSUED DATE:	05.07.2010

WALL SECTIONS

CONSTRUCTION DOCUMENTS

AE-316

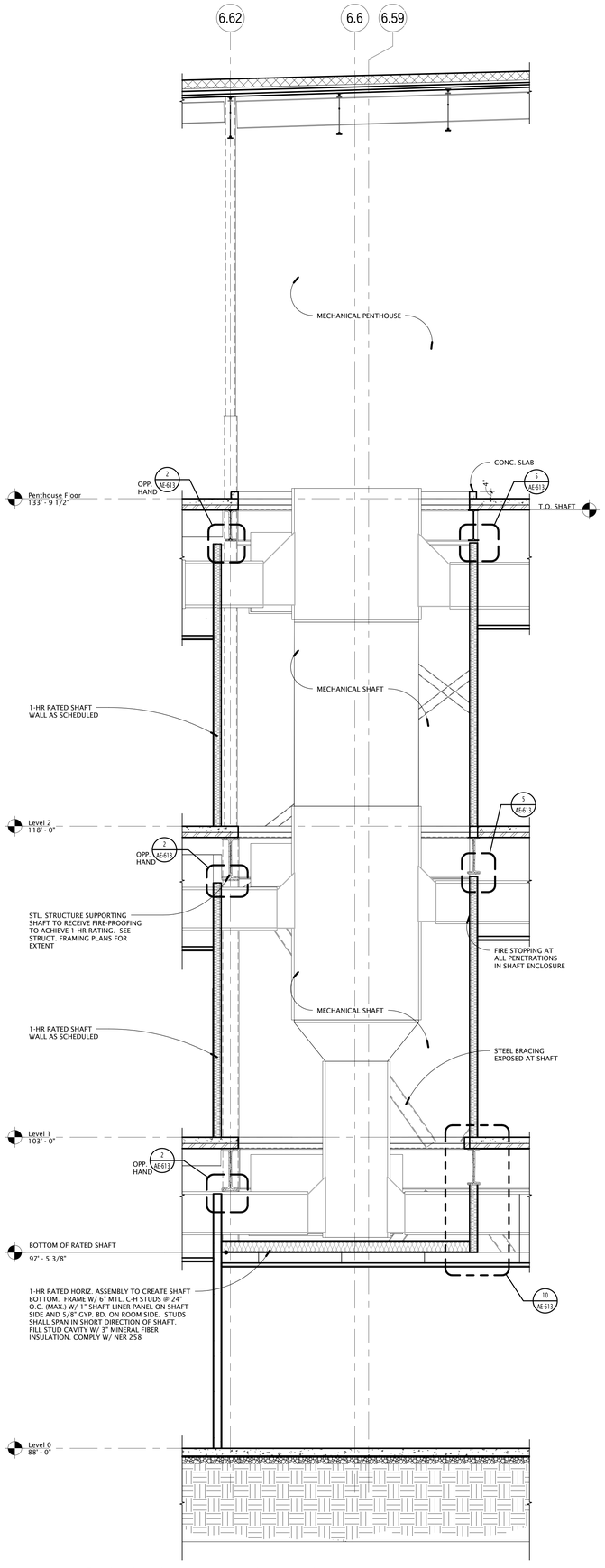

2 AE-317 SECTION THROUGH MECH. SHAFT
3/8" = 1'-0"

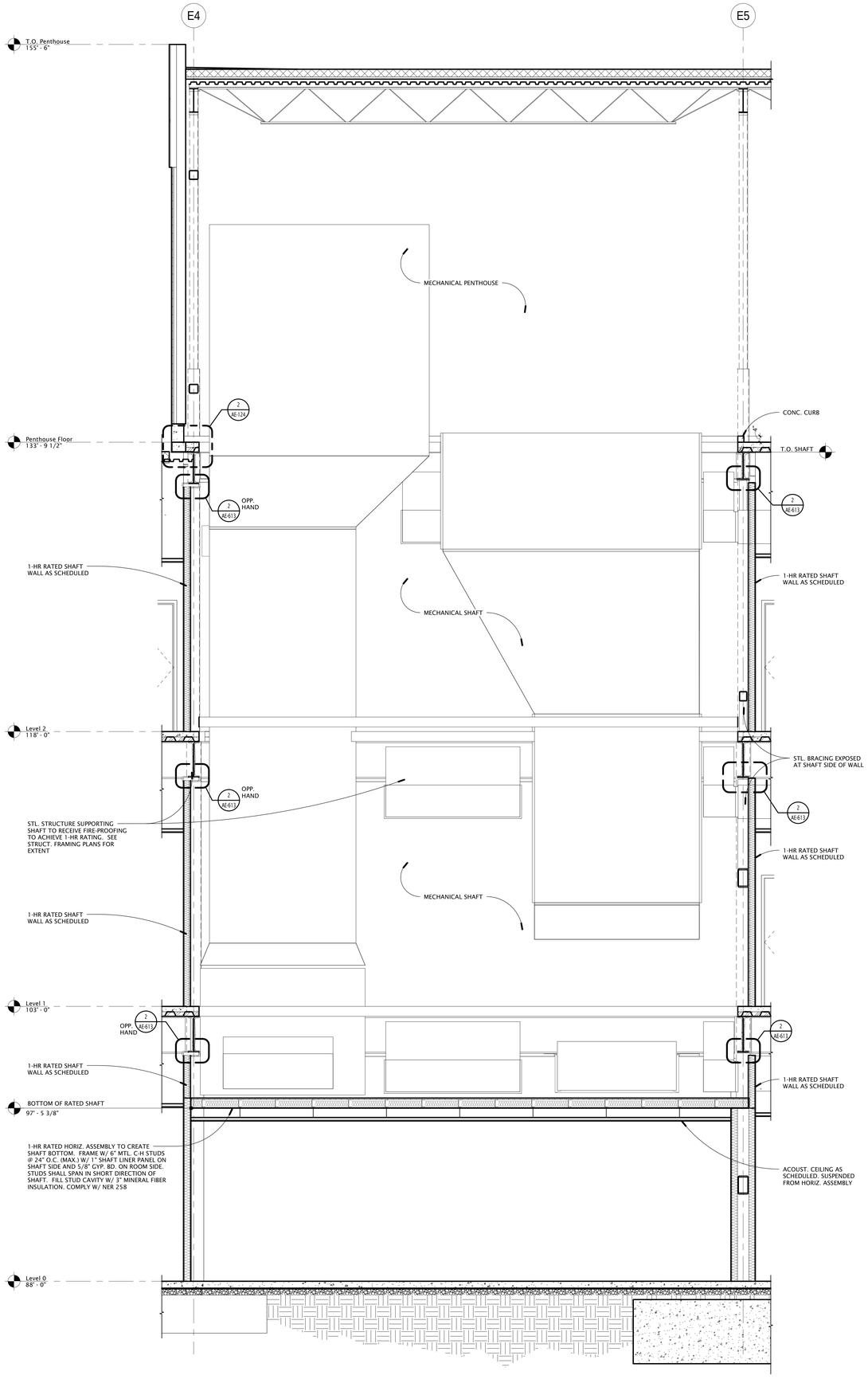

1 AE-317 SECTION THROUGH MECH. SHAFT
3/8" = 1'-0"

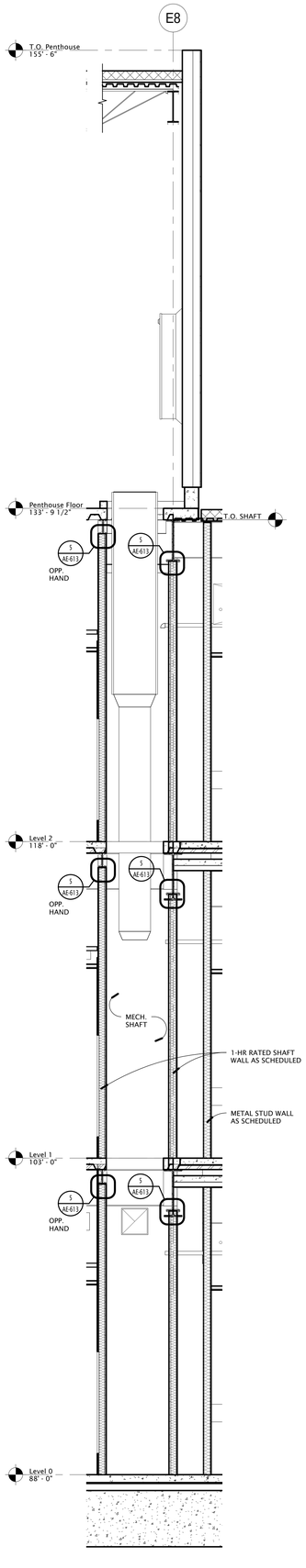

3 AE-317 SECTION THROUGH MECH. SHAFT
3/8" = 1'-0"

GSBS ARCHITECTS
375 WEST 200 SOUTH
SALT LAKE CITY, UT 84101
P 801.521.8600
F 801.521.7913
www.gsbsarchitects.com

STATE OF UTAH
116302
LICENSED ARCHITECT

REVISIONS:

Utah Valley University New Science Building

800 West University Parkway
Orem, Utah 84058

Division of Facilities Construction and Management

DRAWN BY:	Author
CHECKED BY:	Checker
DFCM PROJECT NO.:	09020790
GSBS PROJECT NO.:	2009.115.00
ISSUED DATE:	05.07.2010

SHAFT SECTIONS

CONSTRUCTION DOCUMENTS

AE-317

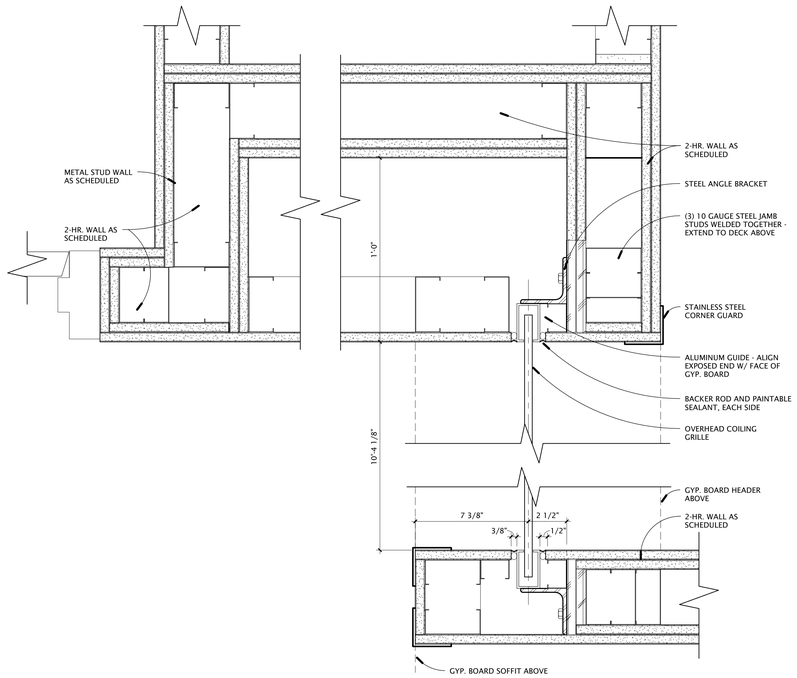

7 AE-318 JAMB DETAIL @ OVERHEAD GRILLE 130A
3" = 1'-0"

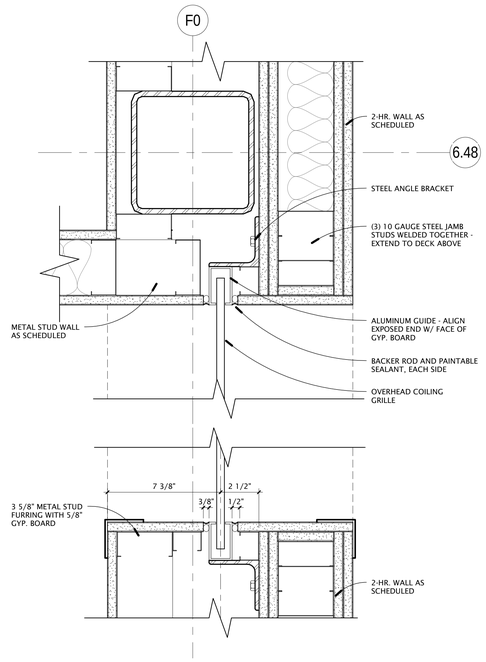

6 AE-318 JAMB DETAIL @ OVERHEAD GRILLE 130B
3" = 1'-0"

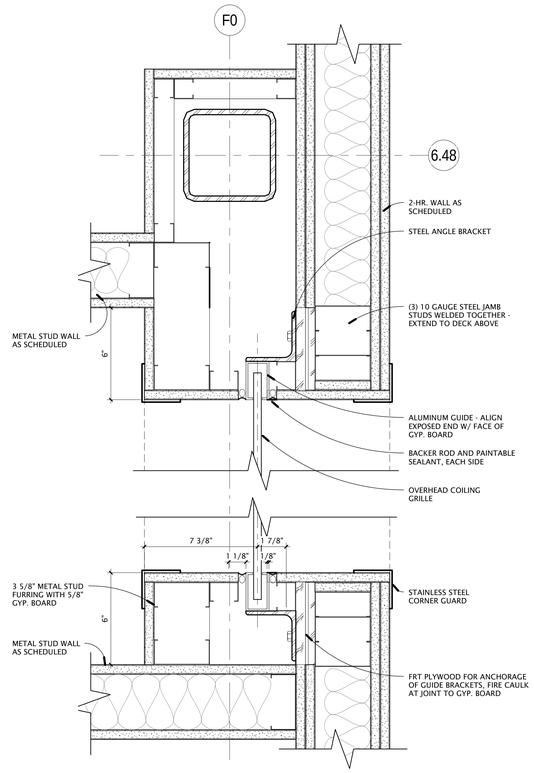

5 AE-318 JAMB DETAIL @ OVERHEAD GRILLE 240E
3" = 1'-0"

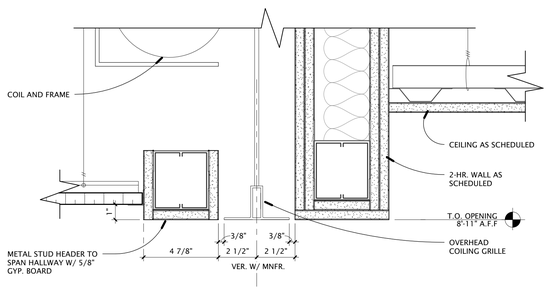

4 AE-318 HEAD DETAIL @ OVERHEAD GRILLE
3" = 1'-0"

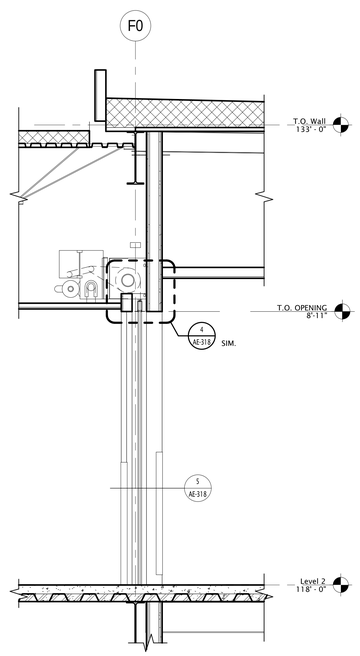

3 AE-318 OVERHEAD GRILL 240E
1/2" = 1'-0"

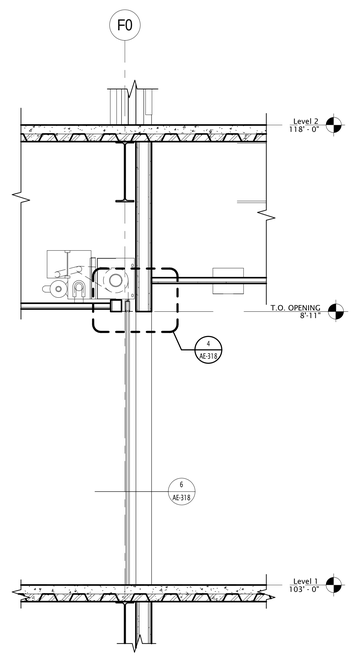

2 AE-318 OVERHEAD GRILL 130B
1/2" = 1'-0"

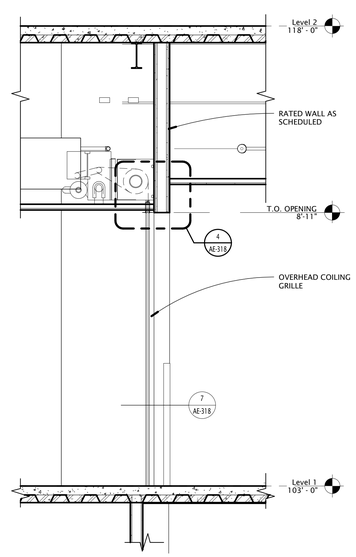

1 AE-318 OVERHEAD GRILL 130A
1/2" = 1'-0"

GSBS ARCHITECTS
375 WEST 200 SOUTH
SALT LAKE CITY, UT 84101
P 801.521.8600
F 801.521.7913
www.gsbsarchitects.com

STATE OF UTAH 116302 LICENSED ARCHITECT

REVISIONS:

Utah Valley University New Science Building

800 West University Parkway
Orem, Utah 84058

Division of Facilities Construction and Management

DRAWN BY:	Author
CHECKED BY:	Checker
DFCM PROJECT NO.:	09020790
GSBS PROJECT NO.:	2009.115.00
ISSUED DATE:	05.07.2010

INTERIOR WALL SECTIONS

CONSTRUCTION DOCUMENTS

AE-318

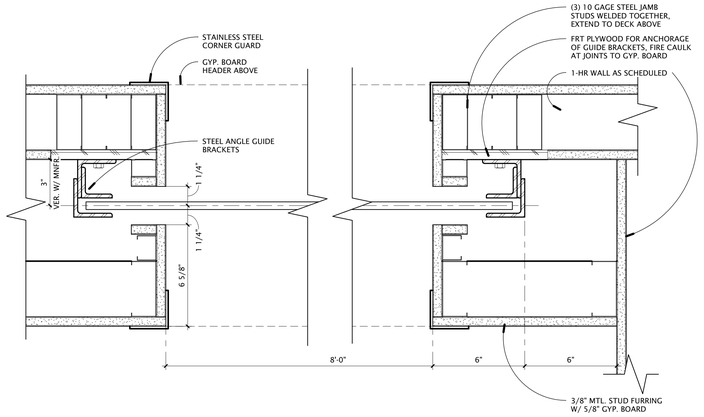

6 / AE-319 JAMB DETAIL @ FIRE DOOR 030K
3" = 1'-0"

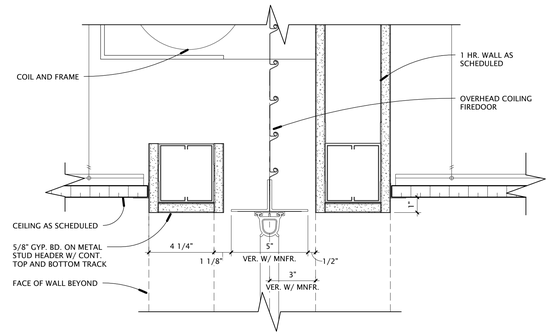

3 / AE-319 HEAD DETAIL @ FIRE DOOR 030K
3" = 1'-0"

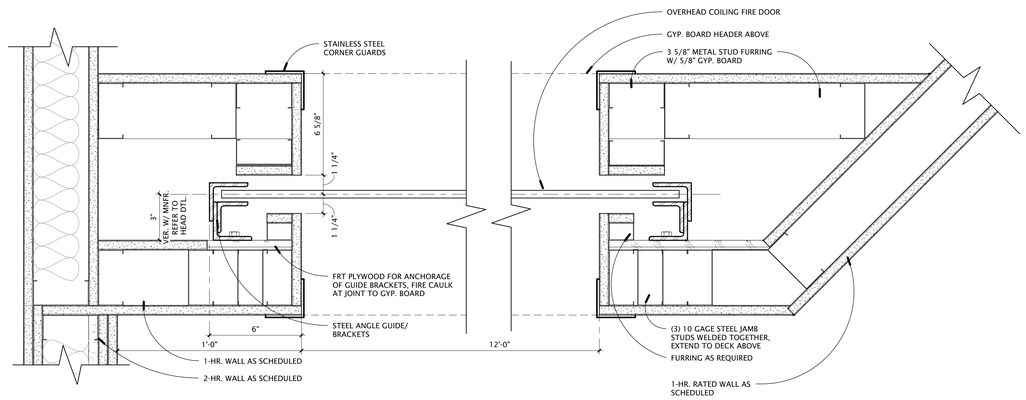

5 / AE-319 JAMB DETAIL @ FIRE DOOR 240C
3" = 1'-0"

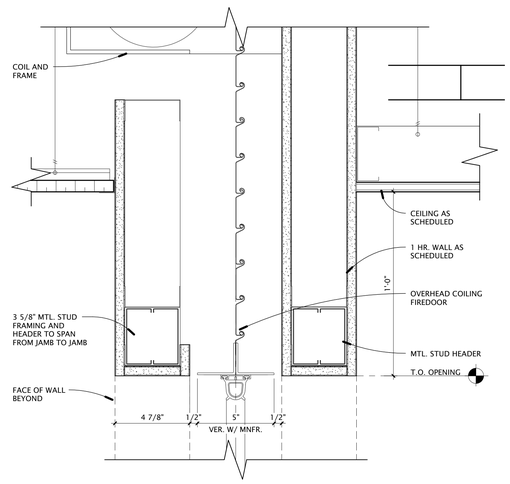

2 / AE-319 HEAD DETAIL @ FIRE DOOR 240C
3" = 1'-0"

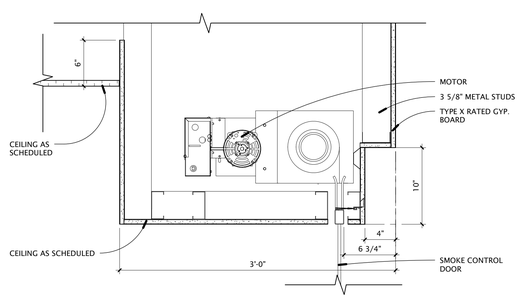

8 / AE-319 SMOKE DOOR HEAD
1 1/2" = 1'-0"

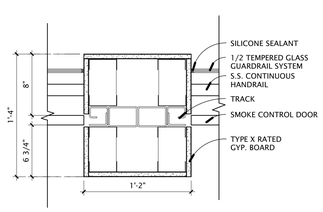

7 / AE-319 SMOKE DOOR JAMB
1 1/2" = 1'-0"

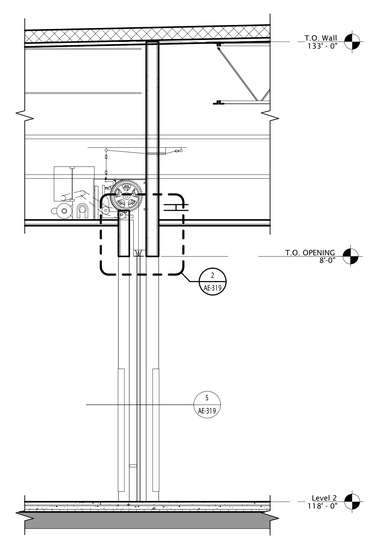

4 / AE-319 FIRE DOOR 240C
1/2" = 1'-0"

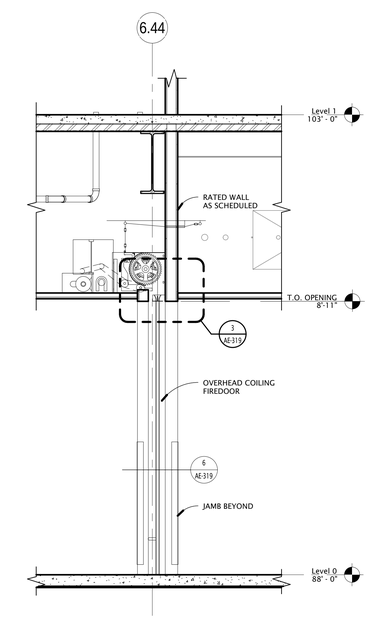

1 / AE-319 FIRE DOOR 030K
1/2" = 1'-0"

GSBS ARCHITECTS
375 WEST 200 SOUTH
SALT LAKE CITY, UT 84101
P 801.521.8600
F 801.521.7913
www.gsbsarchitects.com

STATE OF UTAH LICENSED ARCHITECT 116302

REVISIONS:

Utah Valley University New Science Building

800 West University Parkway
Orem, Utah 84058

Division of Facilities Construction and Management

DRAWN BY:	Author
CHECKED BY:	Checker
DFCM PROJECT NO.:	09020790
GSBS PROJECT NO.:	2009.115.00
ISSUED DATE:	05.07.2010

INTERIOR WALL SECTIONS

CONSTRUCTION DOCUMENTS

AE-319

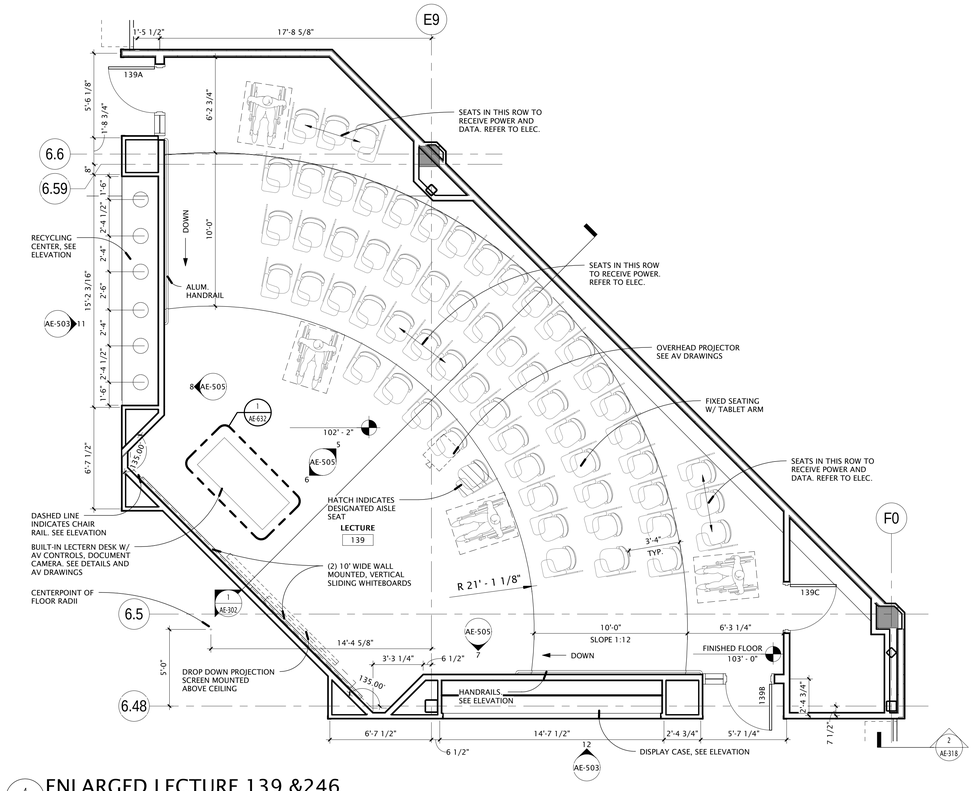

4 AE-401 ENLARGED LECTURE 139 &246
1/4" = 1'-0"

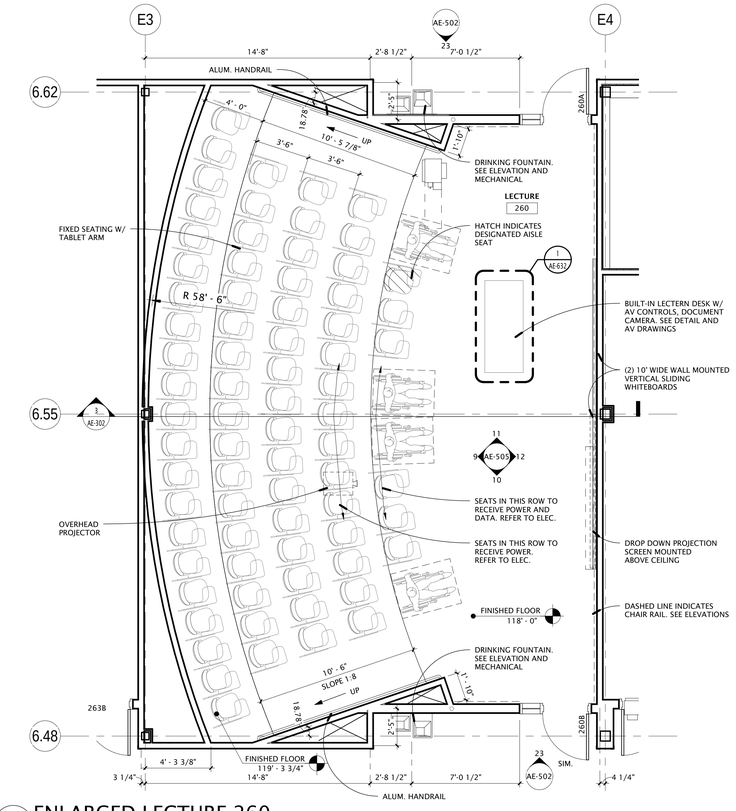

2 AE-401 ENLARGED LECTURE 260
1/4" = 1'-0"

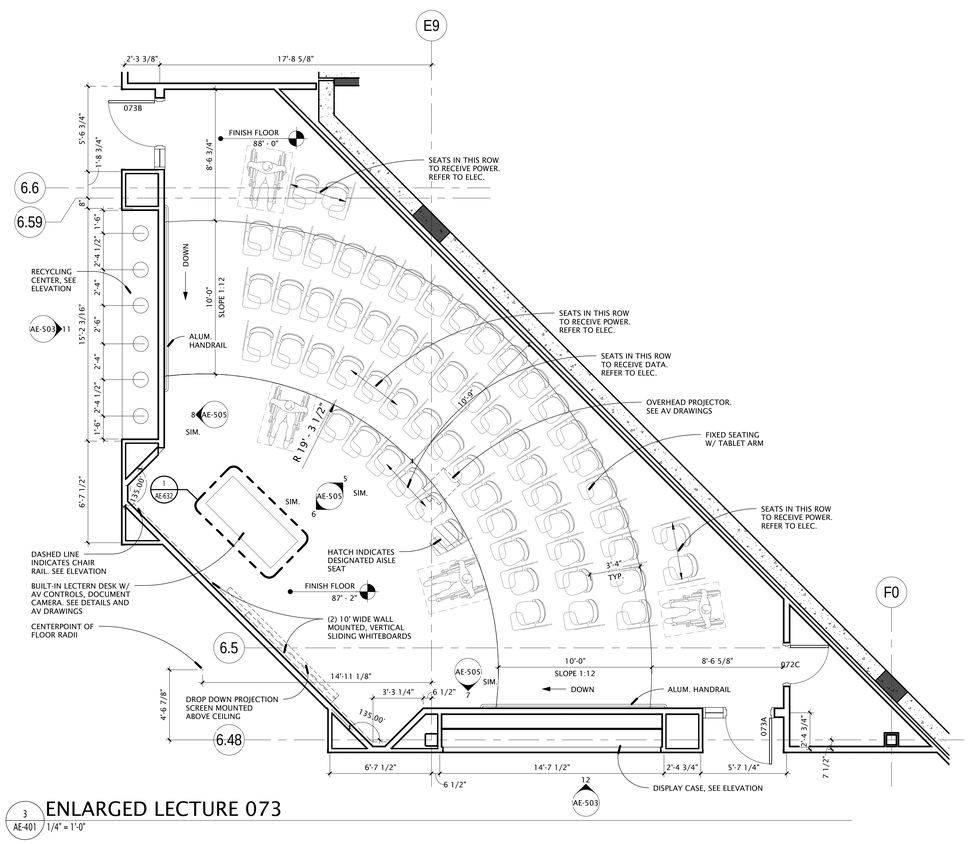

3 AE-401 ENLARGED LECTURE 073
1/4" = 1'-0"

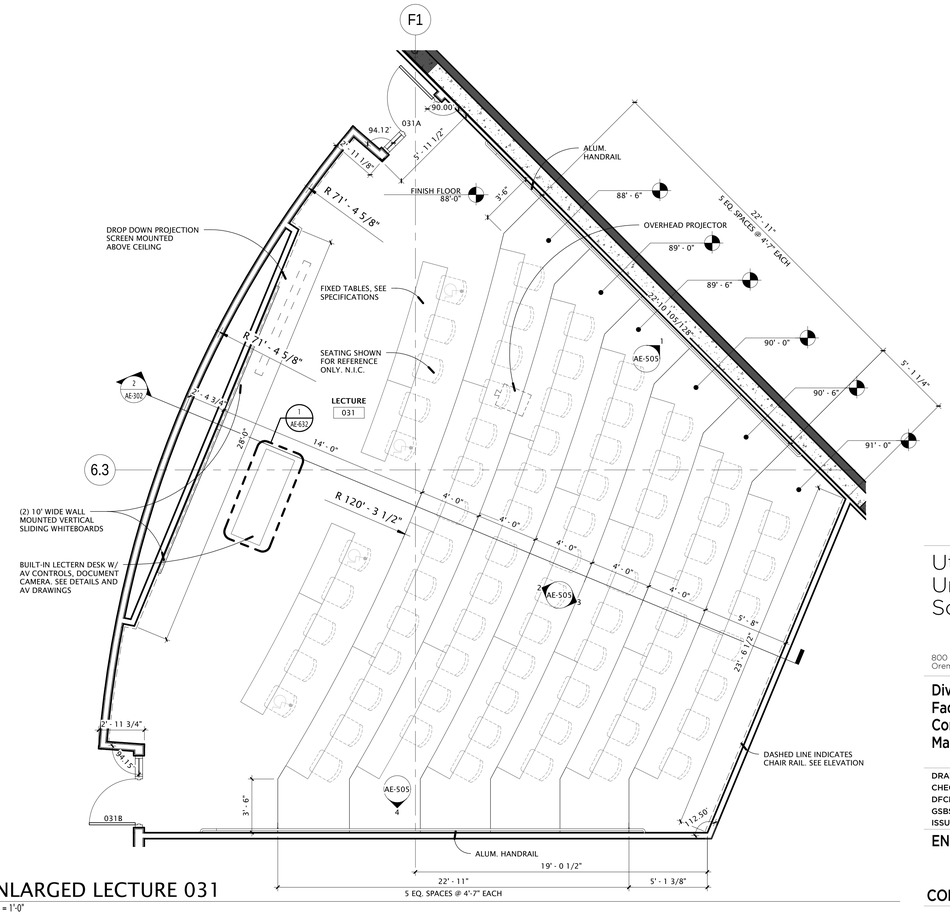

1 AE-401 ENLARGED LECTURE 031
1/4" = 1'-0"

GSBS ARCHITECTS
375 WEST 200 SOUTH
SALT LAKE CITY, UT 84101
P 801.521.8600
F 801.521.7913
www.gsbsarchitects.com

STATE OF UTAH
116302
LICENSED ARCHITECT

REVISIONS:

Utah Valley University New Science Building

800 West University Parkway
Orem, Utah 84058

Division of Facilities Construction and Management

DRAWN BY:	Author
CHECKED BY:	Checker
DFCM PROJECT NO.:	09020790
GSBS PROJECT NO.:	2009.115.00
ISSUED DATE:	05.07.2010

ENLARGED PLANS

CONSTRUCTION DOCUMENTS

AE-401

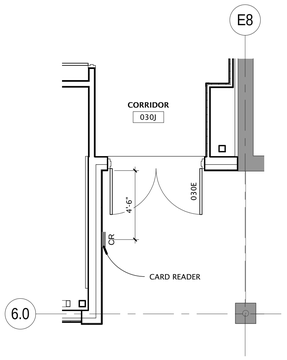

8 AE-402 ENLARGED ENTRY
1/4" = 1'-0"

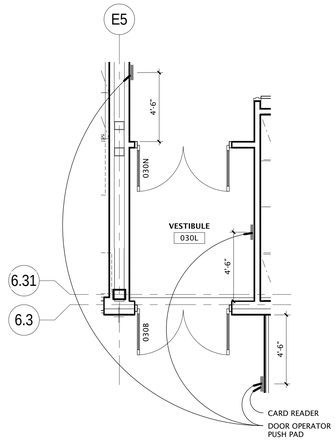

7 AE-402 ENLARGED VESTIBULE
1/4" = 1'-0"

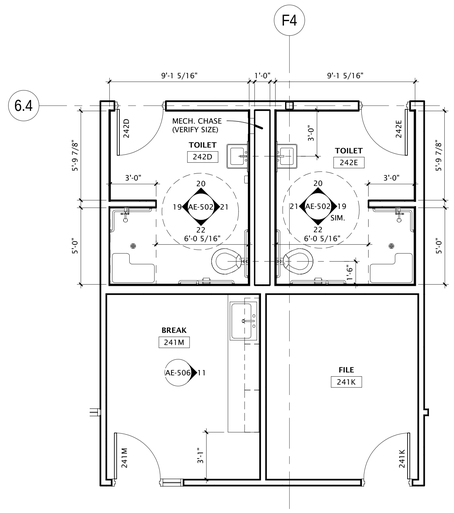

5 AE-402 ENLARGED FACULTY RESTROOMS
1/4" = 1'-0"

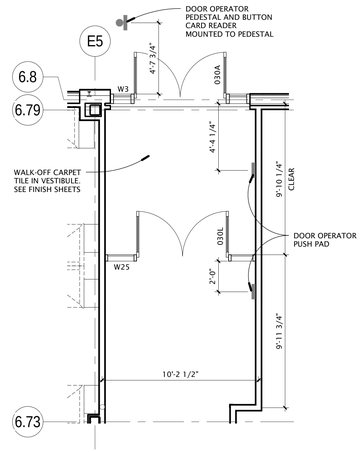

3 AE-402 ENLARGED VESTIBULE
1/4" = 1'-0"

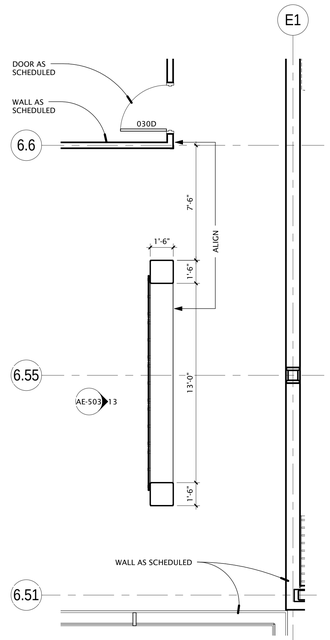

2 AE-402 ENLARGED INTERACTIVE WALL
1/4" = 1'-0"

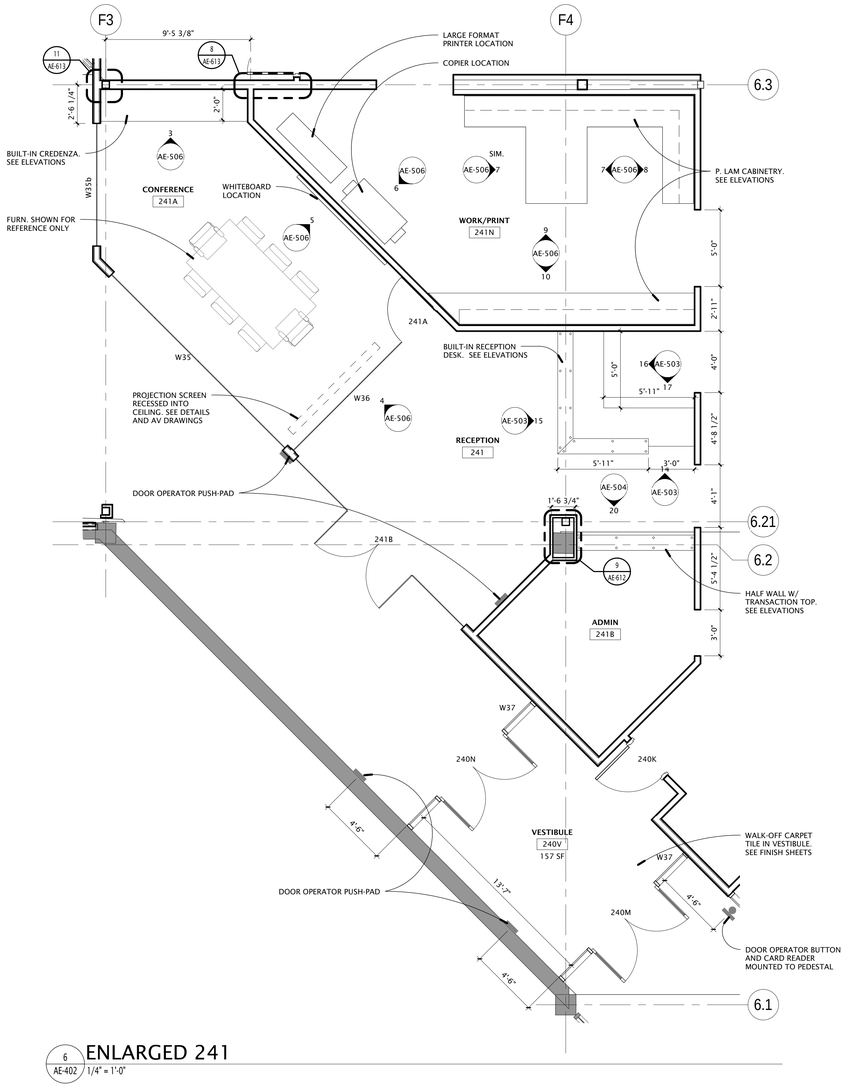

6 AE-402 ENLARGED 241
1/4" = 1'-0"

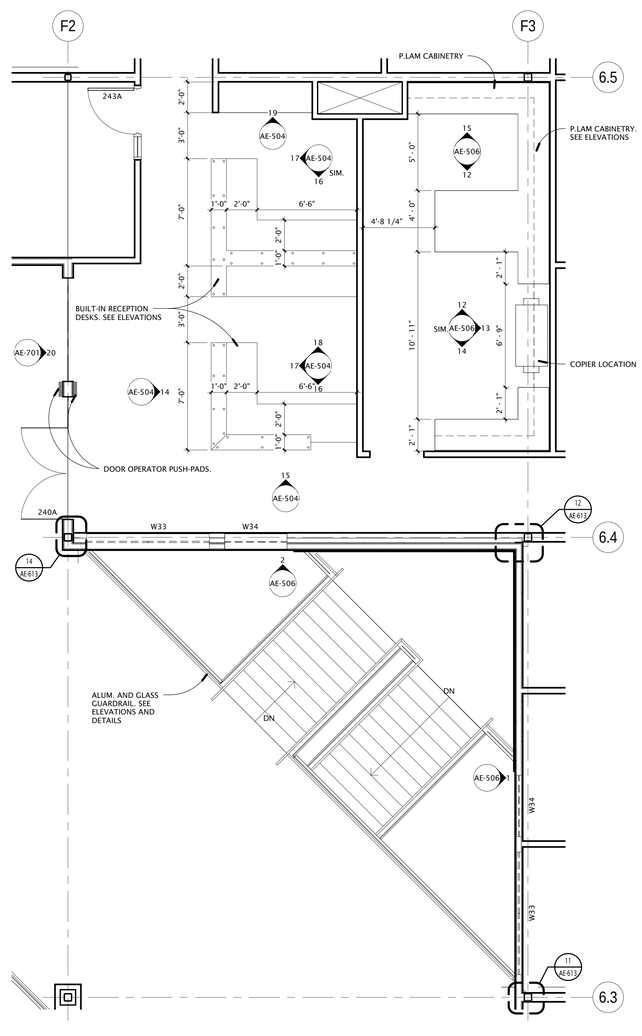

4 AE-402 ENLARGED FACULTY WORK ROOM
1/4" = 1'-0"

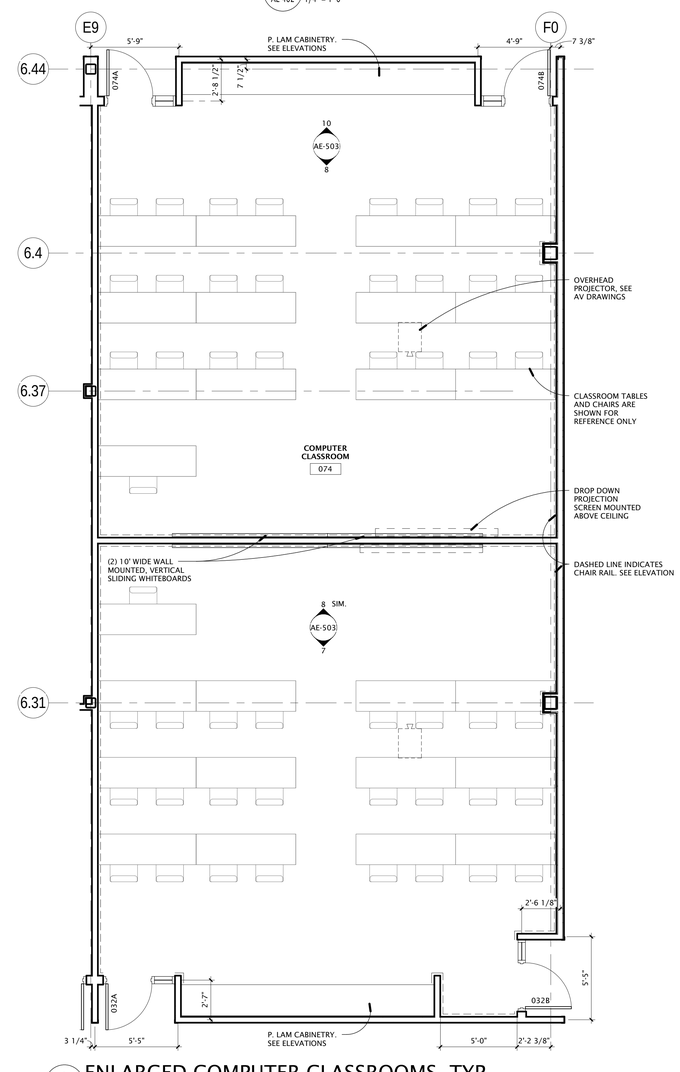

1 AE-402 ENLARGED COMPUTER CLASSROOMS, TYP.
1/4" = 1'-0"

GSBS ARCHITECTS
375 WEST 200 SOUTH
SALT LAKE CITY, UT 84101
P 801.521.8600
F 801.521.7915
www.gsbsarchitects.com

STATE OF UTAH 116302 LICENSED ARCHITECT

REVISIONS:

Utah Valley University New Science Building

800 West University Parkway
Orem, Utah 84058

Division of Facilities Construction and Management

DRAWN BY:	Author
CHECKED BY:	Checker
DFCM PROJECT NO.:	09020790
GSBS PROJECT NO.:	2009.115.00
ISSUED DATE:	05.07.2010

ENLARGED PLANS

CONSTRUCTION DOCUMENTS

AE-402

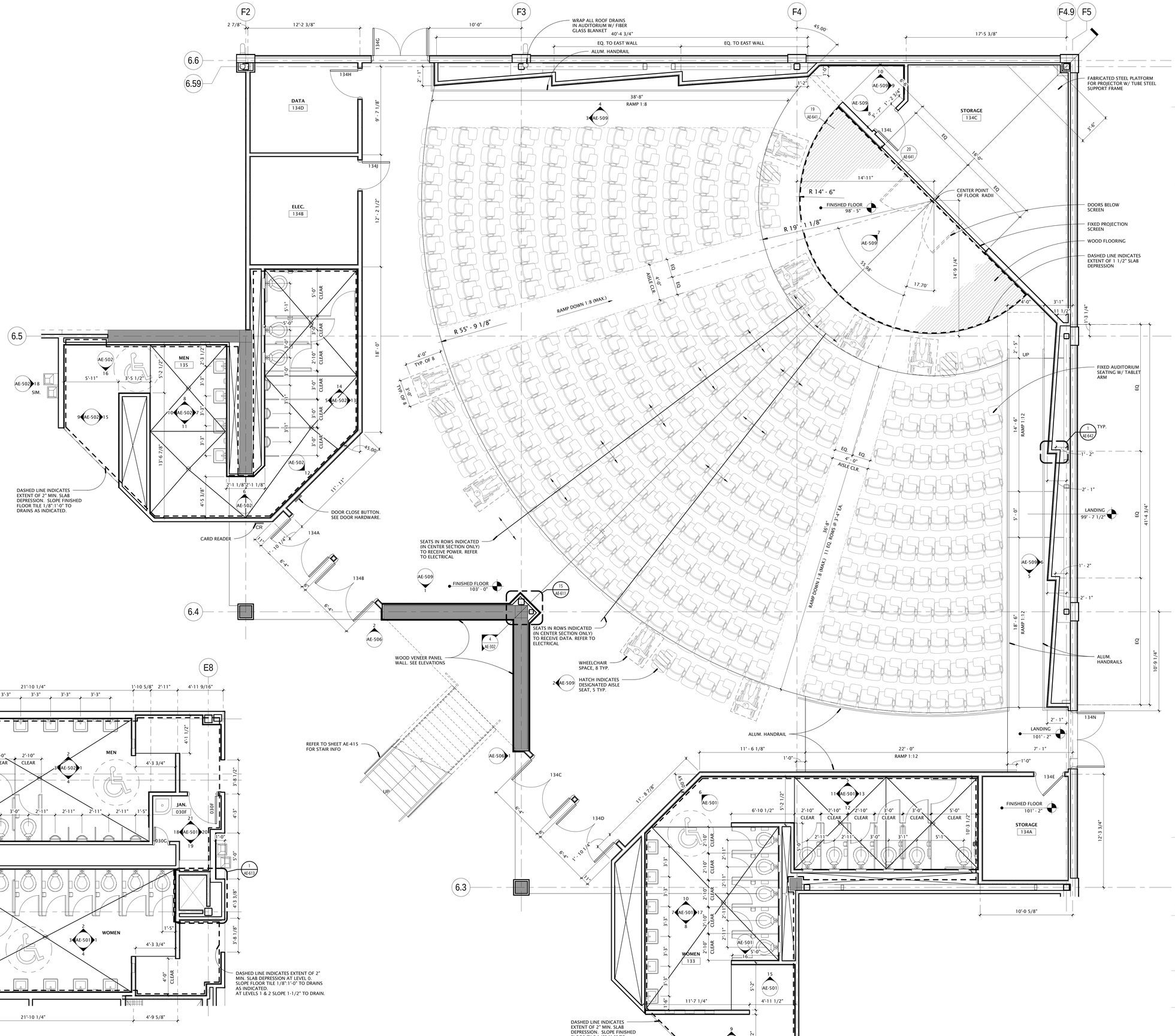

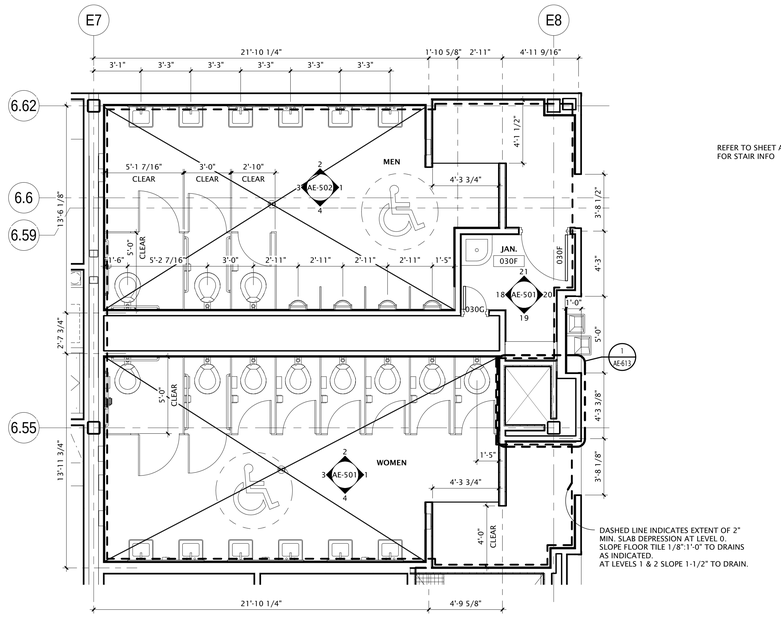

2 AE-403 ENLARGED RESTROOMS
1/4" = 1'-0"

1 AE-403 ENLARGED AUDITORIUM
1/4" = 1'-0"

GSBS ARCHITECTS
375 WEST 200 SOUTH
SALT LAKE CITY, UT 84101
P 801.521.8600
F 801.521.7913
www.gsbsarchitects.com

STATE OF UTAH LICENSED ARCHITECT 116302

REVISIONS:

Utah Valley University New Science Building

800 West University Parkway
Orem, Utah 84058

Division of Facilities Construction and Management

DRAWN BY:	Author
CHECKED BY:	Checker
DFCM PROJECT NO.:	09020790
GSBS PROJECT NO.:	2009.115.00
ISSUED DATE:	05.07.2010

ENLARGED PLANS

CONSTRUCTION DOCUMENTS

AE-403

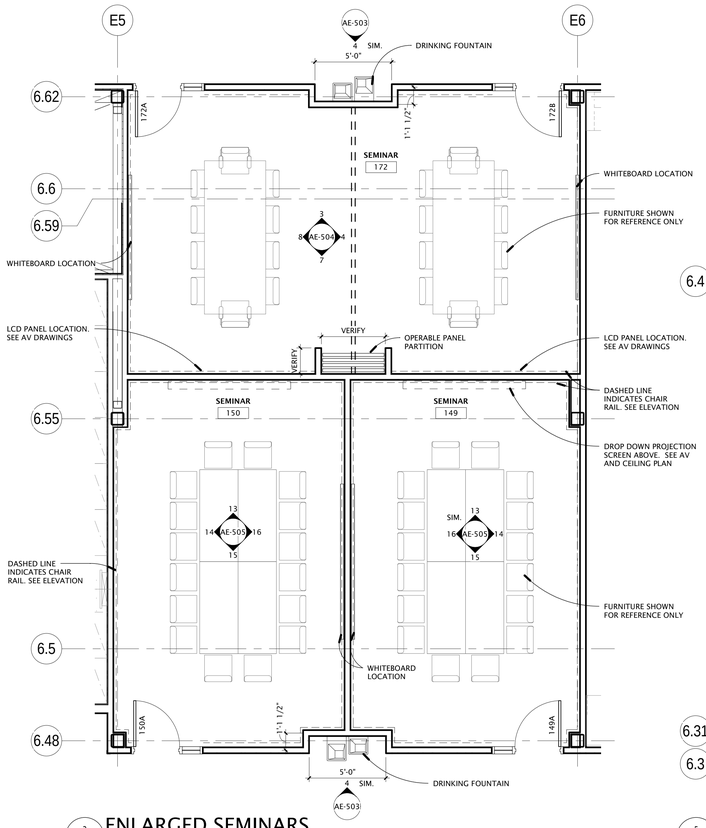

2 AE-404 ENLARGED SEMINARS 1/4" = 1'-0"

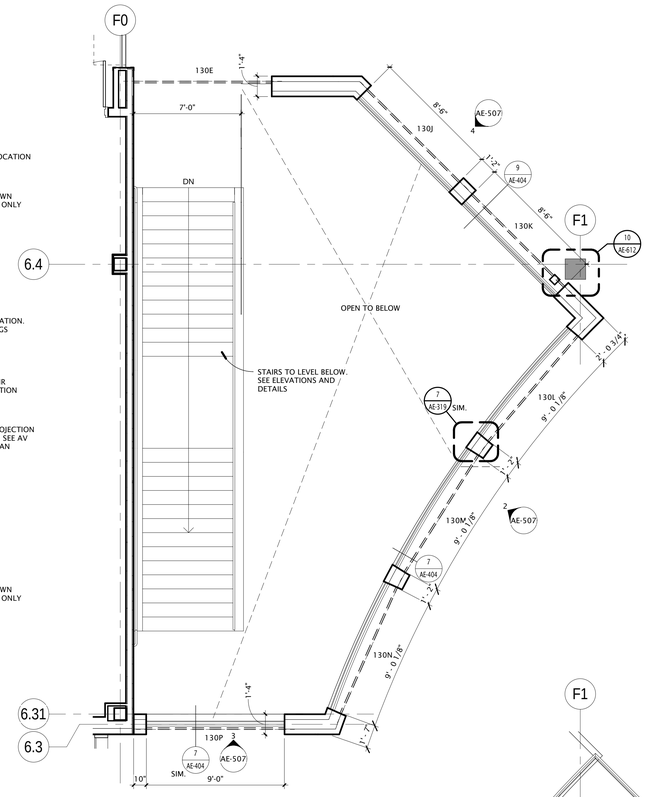

5 AE-404 ENLARGED ATRIUM RAIL LEVEL 1 1/4" = 1'-0"

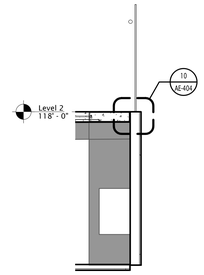

8 AE-404 ATRIUM RAIL 1/2" = 1'-0"

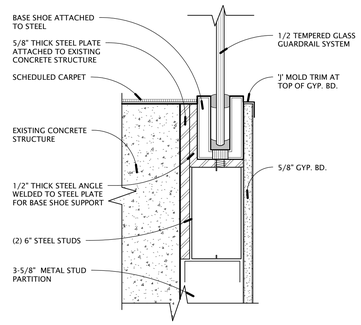

10 AE-404 GUARDRAIL EDGE DETAIL 3" = 1'-0"

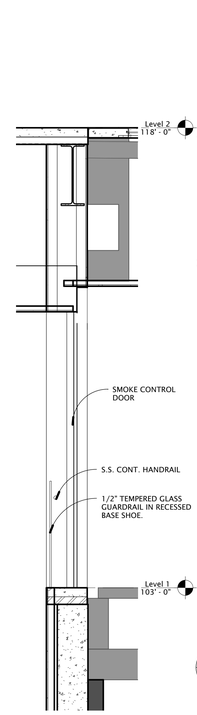

9 AE-404 ATRIUM GLAZING 1/2" = 1'-0"

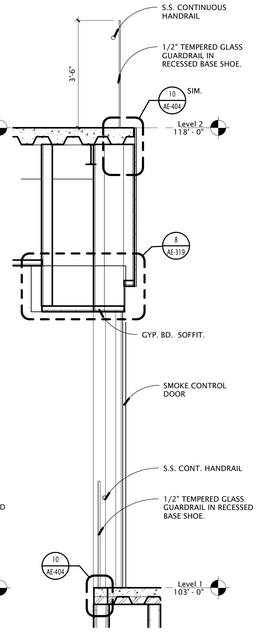

7 AE-404 ATRIUM RAIL DETAIL 1/2" = 1'-0"

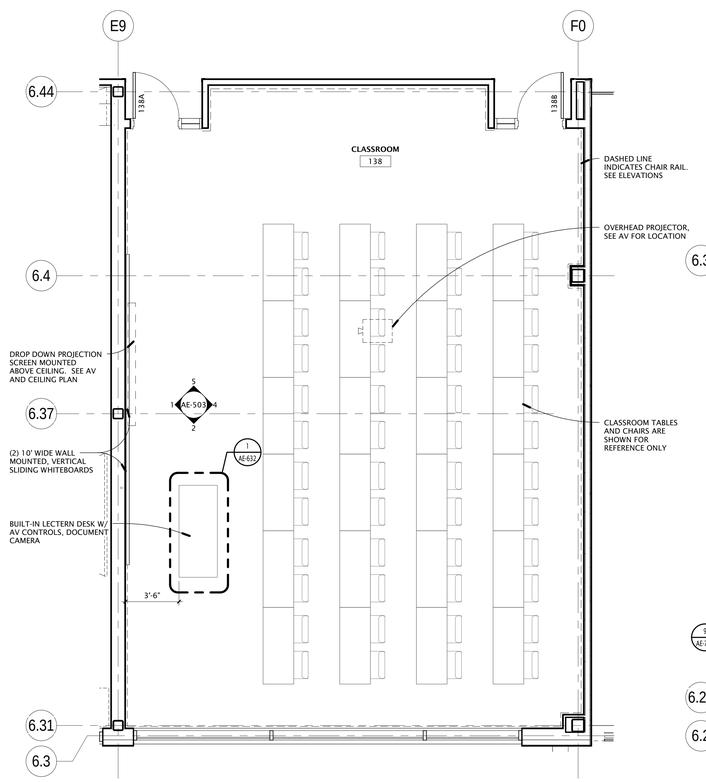

1 AE-404 ENLARGED CLASSROOM 138 1/4" = 1'-0"

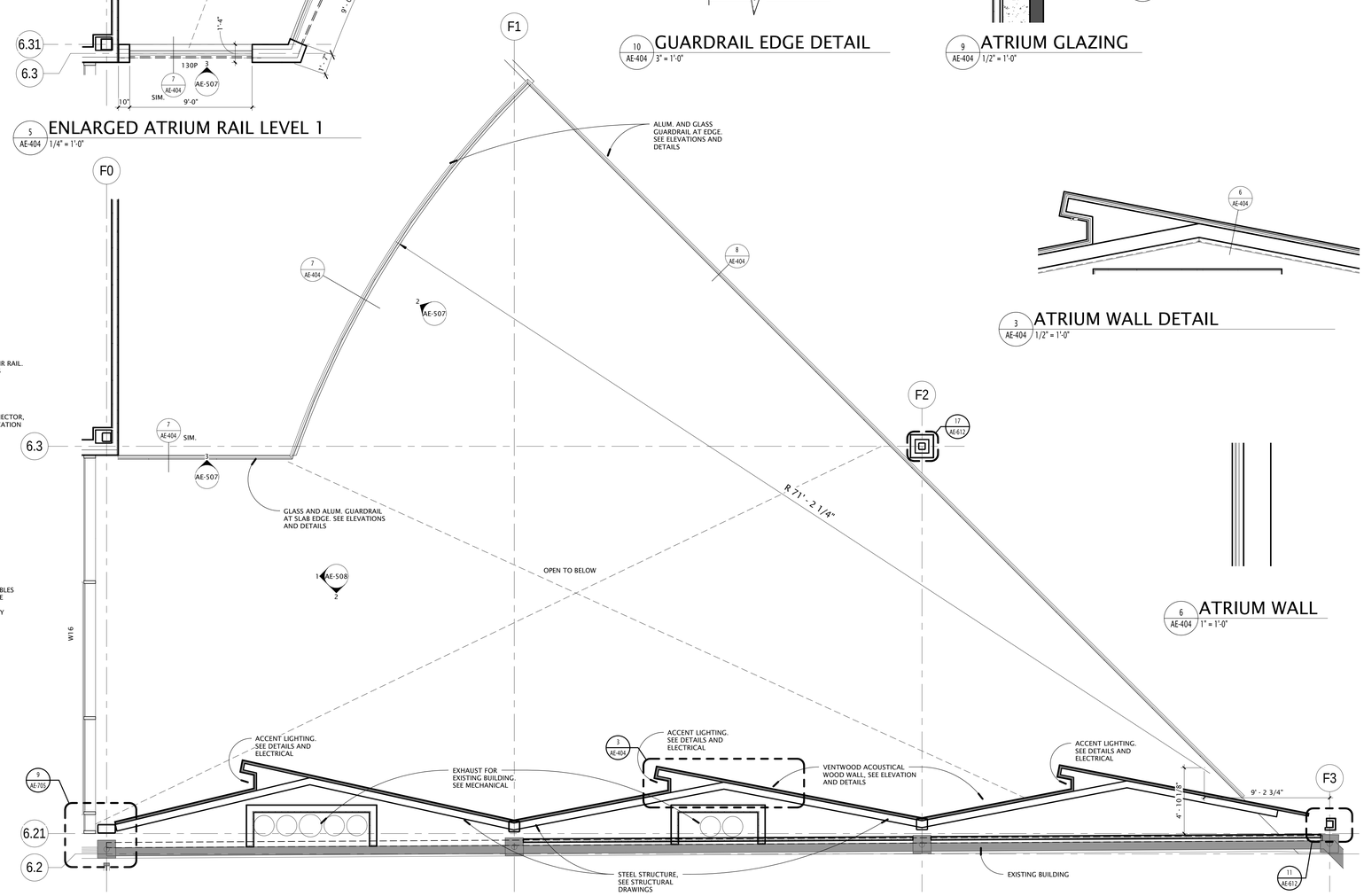

4 AE-404 ENLARGED ATRIUM RAIL LEVEL 2 1/4" = 1'-0"

3 AE-404 ATRIUM WALL DETAIL 1/2" = 1'-0"

6 AE-404 ATRIUM WALL 1" = 1'-0"

GSBS ARCHITECTS
375 WEST 200 SOUTH
SALT LAKE CITY, UT 84101
P 801.521.8600
F 801.521.7913
www.gsbsarchitects.com

STATE OF UTAH LICENSED ARCHITECT 116302

REVISIONS:

Utah Valley University New Science Building

800 West University Parkway
Orem, Utah 84058

Division of Facilities Construction and Management

DRAWN BY:	Author
CHECKED BY:	Checker
DFCM PROJECT NO.:	09020790
GSBS PROJECT NO.:	2009.115.00
ISSUED DATE:	05.07.2010

ENLARGED PLANS

CONSTRUCTION DOCUMENTS

AE-404

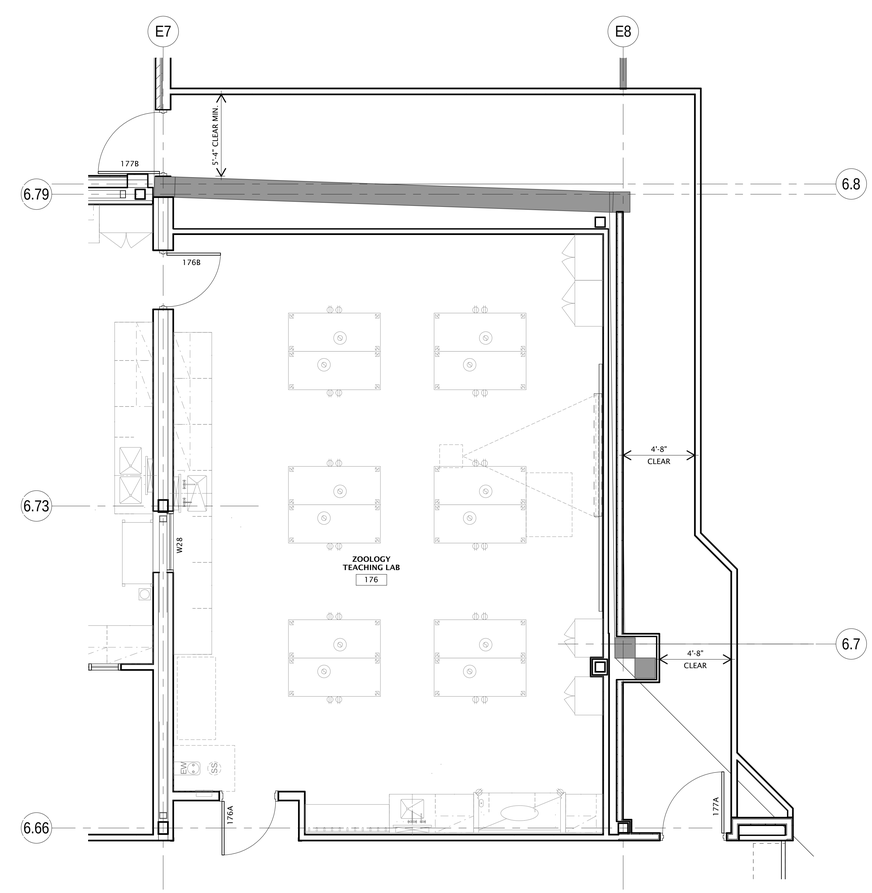

1 AE-405 LEVEL 1 EXIT PLAN
1/4" = 1'-0"

GSBS ARCHITECTS

375 WEST 200 SOUTH
SALT LAKE CITY, UT 84101

P 801.521.8600
F 801.521.7913

www.gsbsarchitects.com

STATE OF UTAH
116302
LICENSED ARCHITECT

REVISIONS:

Utah Valley University New Science Building

800 West University Parkway
Orem, Utah 84058

Division of Facilities Construction and Management

DRAWN BY:	Author
CHECKED BY:	Checker
DFCM PROJECT NO.:	09020790
GSBS PROJECT NO.:	2009.115.00
ISSUED DATE:	05.07.2010

ENLARGED PLANS

CONSTRUCTION DOCUMENTS

AE-405

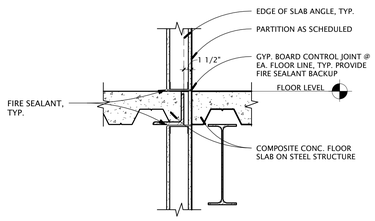

9 AE-411 STAIR DETAIL 1" = 1'-0"

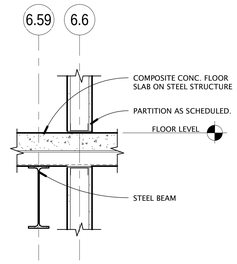

8 AE-411 STAIR DETAIL 1" = 1'-0"

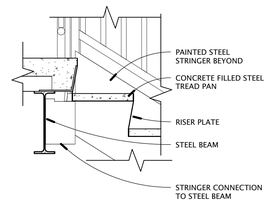

7 AE-411 STAIR DETAIL 1" = 1'-0"

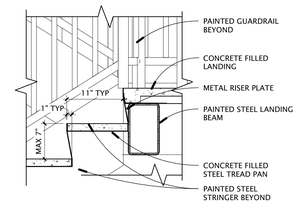

6 AE-411 STAIR DETAIL 1" = 1'-0"

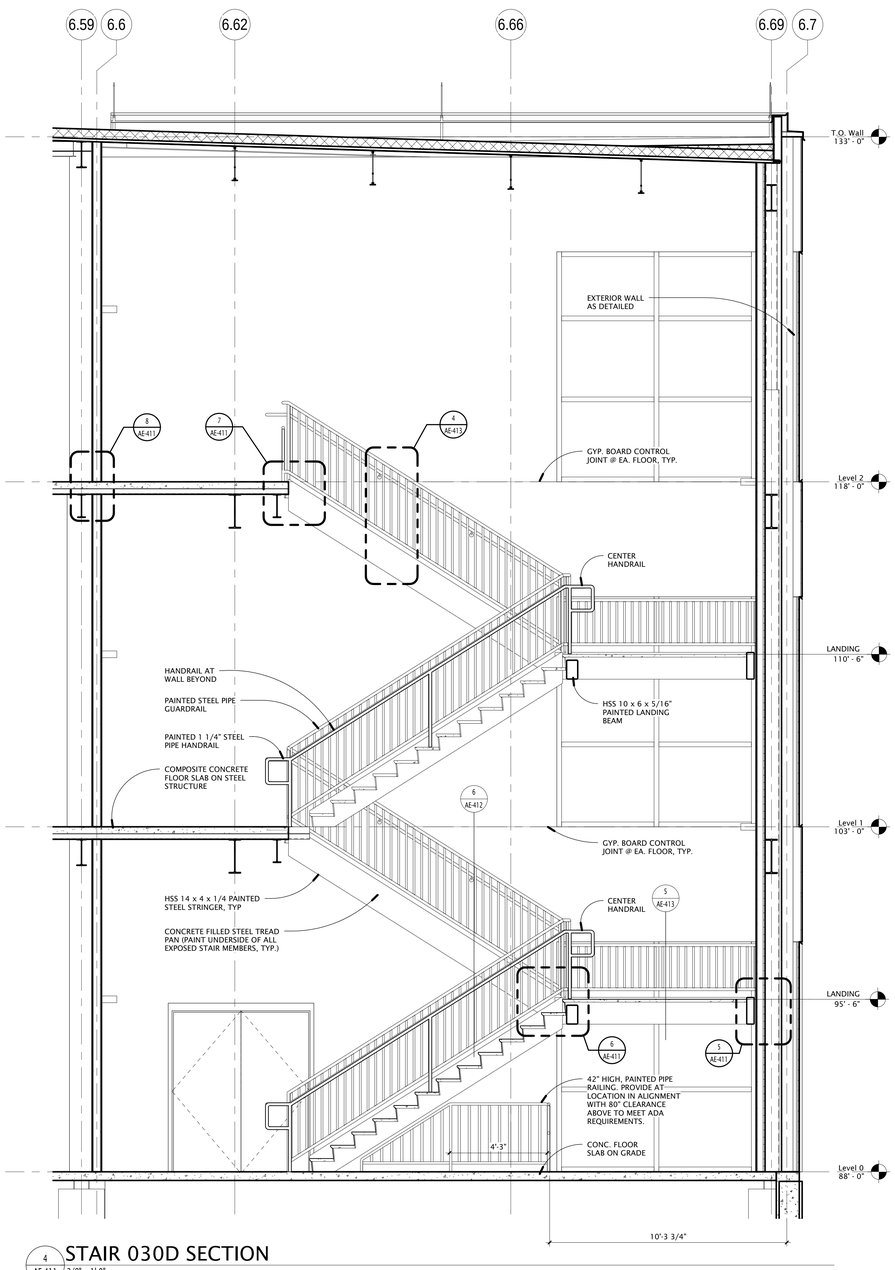

4 AE-411 STAIR 030D SECTION 3/8" = 1'-0"

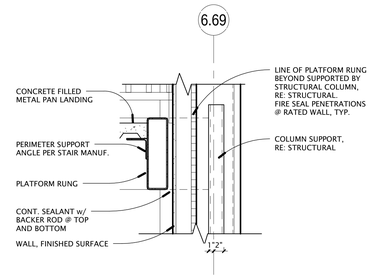

5 AE-411 STAIR DETAIL 1" = 1'-0"

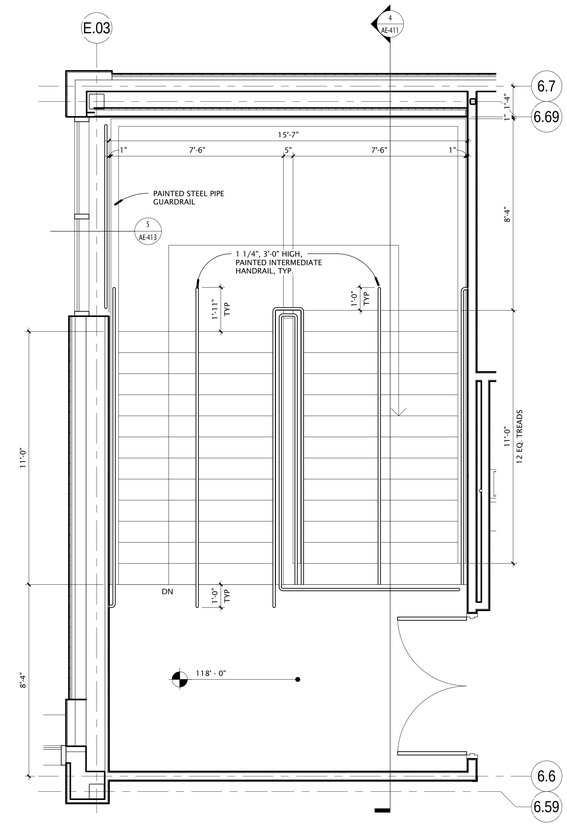

3 AE-411 STAIR 030D LEVEL 2 3/8" = 1'-0"

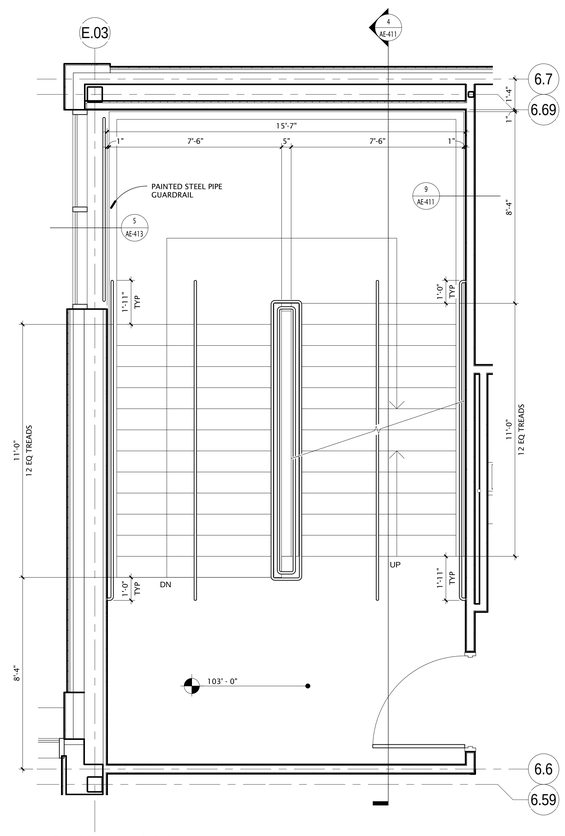

2 AE-411 STAIR 030D LEVEL 1 3/8" = 1'-0"

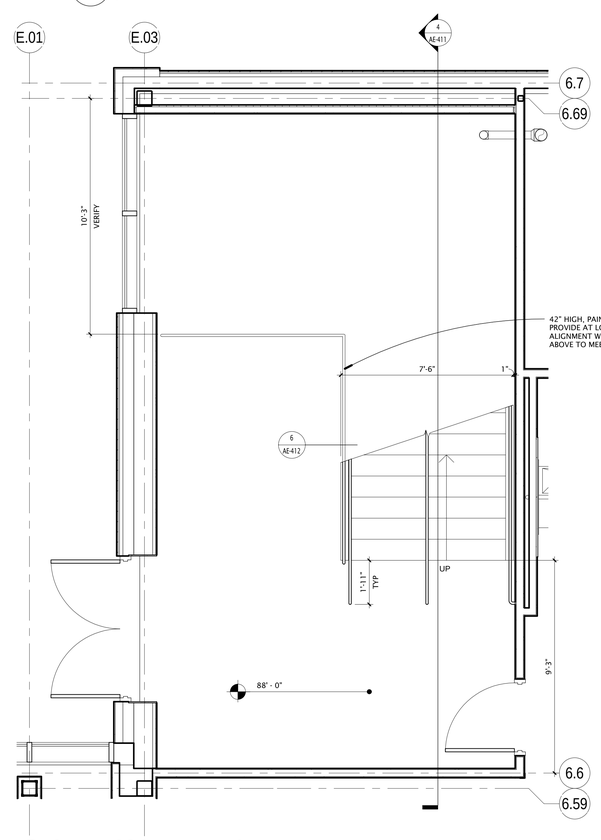

1 AE-411 STAIR 030D LEVEL 0 3/8" = 1'-0"

GSBS ARCHITECTS
375 WEST 200 SOUTH
SALT LAKE CITY, UT 84101
P 801.521.8600
F 801.521.7913
www.gsbsarchitects.com

STATE OF UTAH 116302 LICENSED ARCHITECT

REVISIONS:

Utah Valley University New Science Building

800 West University Parkway
Orem, Utah 84058

Division of Facilities Construction and Management

DRAWN BY:	Author
CHECKED BY:	Checker
DFCM PROJECT NO.:	09020790
GSBS PROJECT NO.:	2009.115.00
ISSUED DATE:	05.07.2010

VERTICAL CIRCULATION

CONSTRUCTION DOCUMENTS

AE-411

GSBS ARCHITECTS
375 WEST 200 SOUTH
SALT LAKE CITY, UT 84101
P 801.521.8600
F 801.521.7915
www.gsbsarchitects.com

STATE OF UTAH 116302 LICENSED ARCHITECT

REVISIONS:

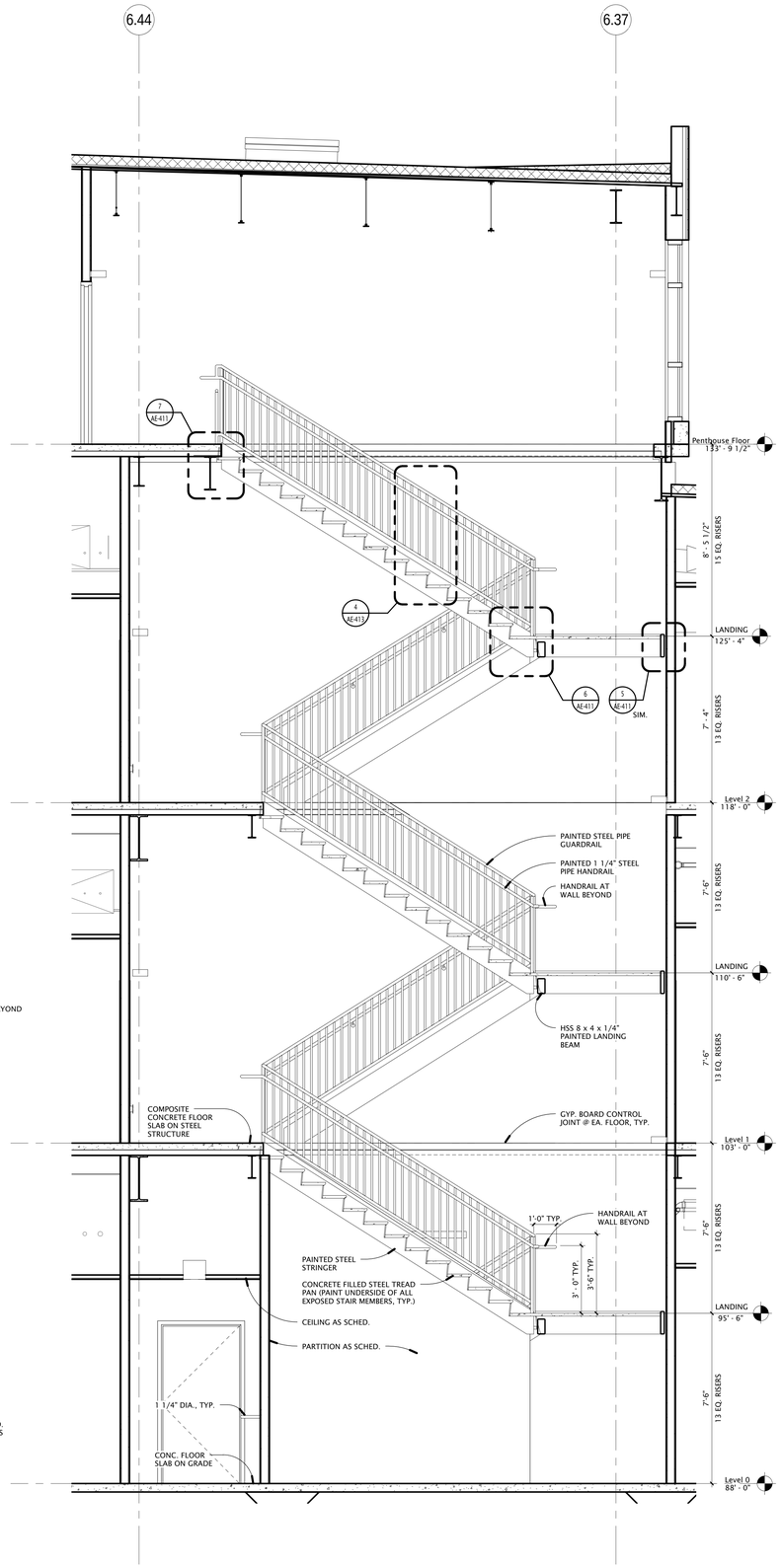

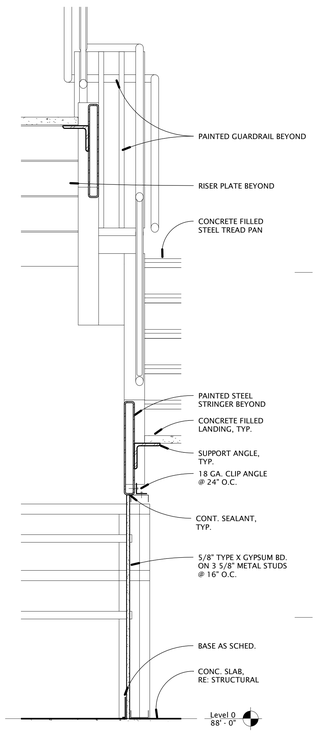

6 AE-412 STAIR DETAIL
1" = 1'-0"

5 AE-412 STAIR 030C SECTION
3/8" = 1'-0"

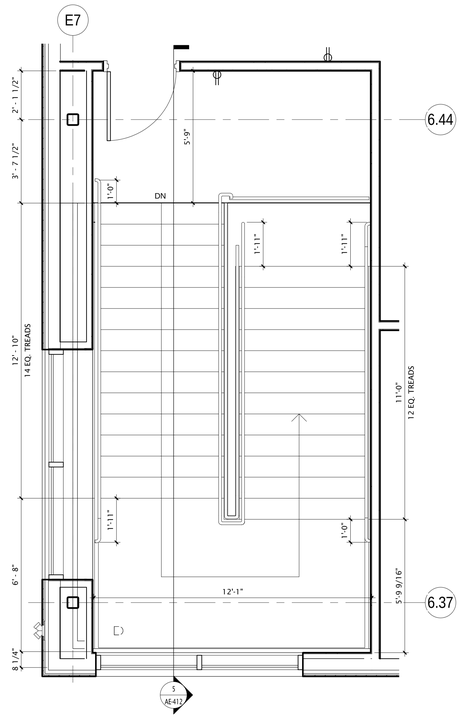

4 AE-412 STAIR 030C ROOF LEVEL
3/8" = 1'-0"

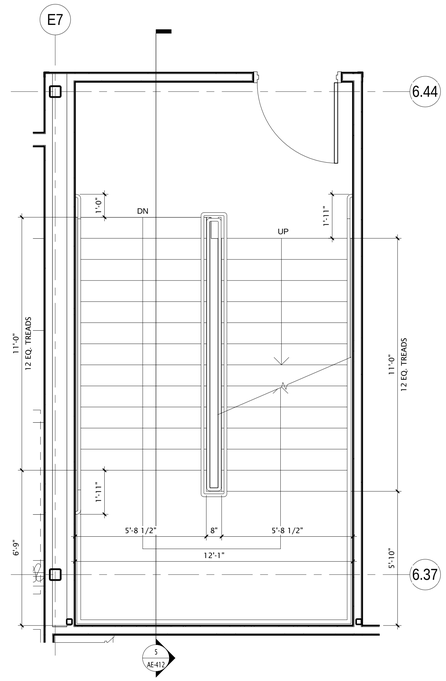

3 AE-412 STAIR 030C LEVEL 2
3/8" = 1'-0"

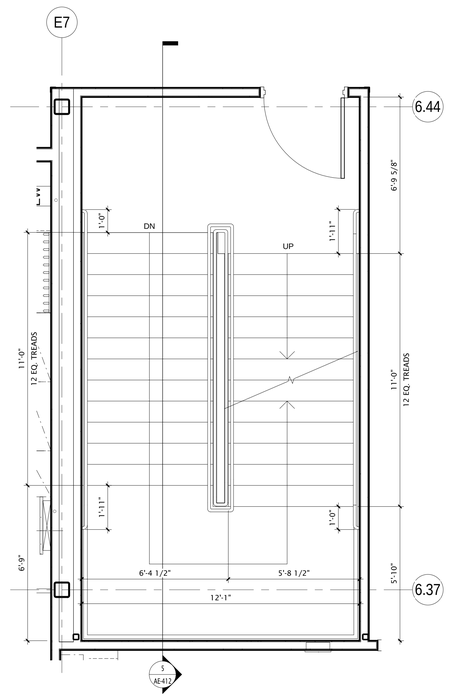

2 AE-412 STAIR 030C LEVEL 1
3/8" = 1'-0"

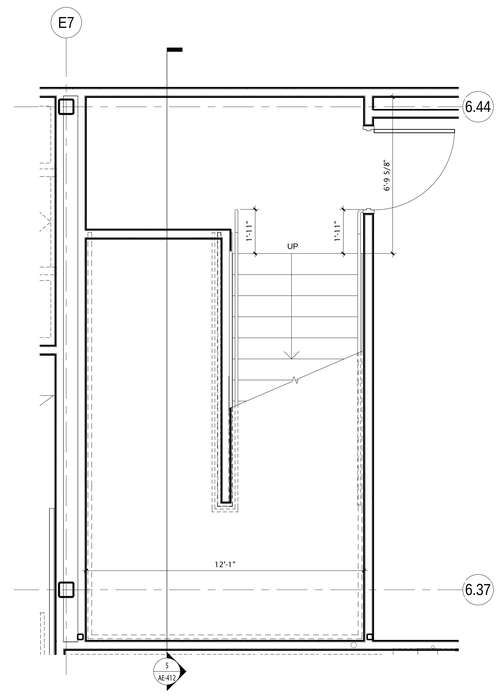

1 AE-412 STAIR 030C LEVEL 0
3/8" = 1'-0"

Utah Valley University New Science Building

800 West University Parkway
Orem, Utah 84058

Division of Facilities Construction and Management

DRAWN BY:	Author
CHECKED BY:	Checker
DFCM PROJECT NO.:	09020790
GSBS PROJECT NO.:	2009.115.00
ISSUED DATE:	05.07.2010

VERTICAL CIRCULATION

CONSTRUCTION DOCUMENTS

AE-412

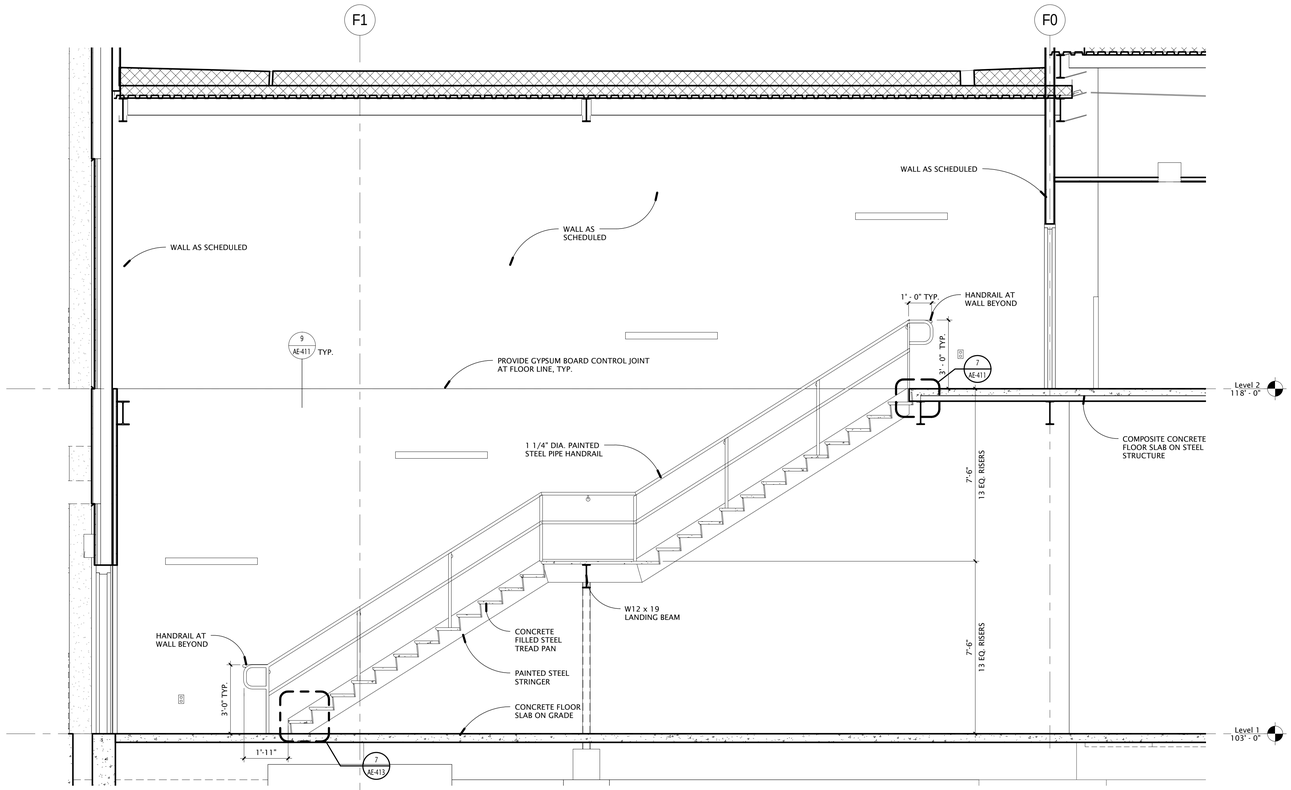

6 AE-413 STAIR 140U SECTION
3/8" = 1'-0"

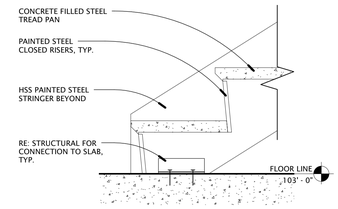

7 AE-413 STAIR BASE DETAIL, TYP.
1 1/2" = 1'-0"

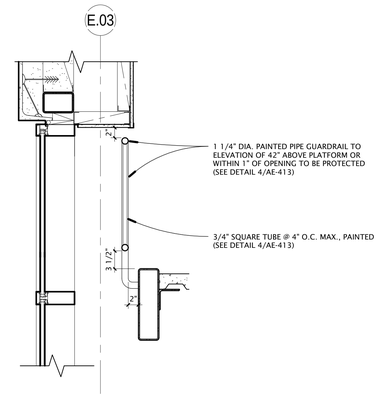

5 AE-413 GUARDRAIL DETAIL
1" = 1'-0"

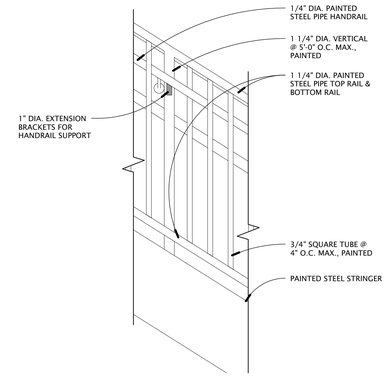

4 AE-413 STAIR DETAIL
1" = 1'-0"

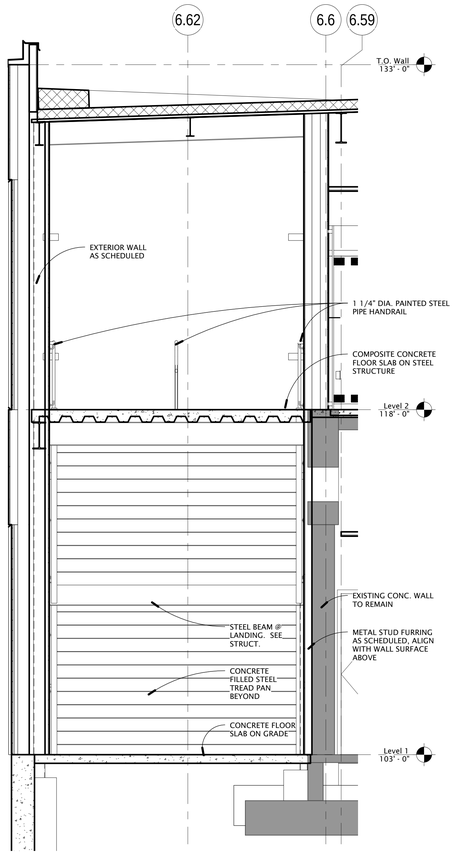

2 AE-413 STAIR 140U SECTION
3/8" = 1'-0"

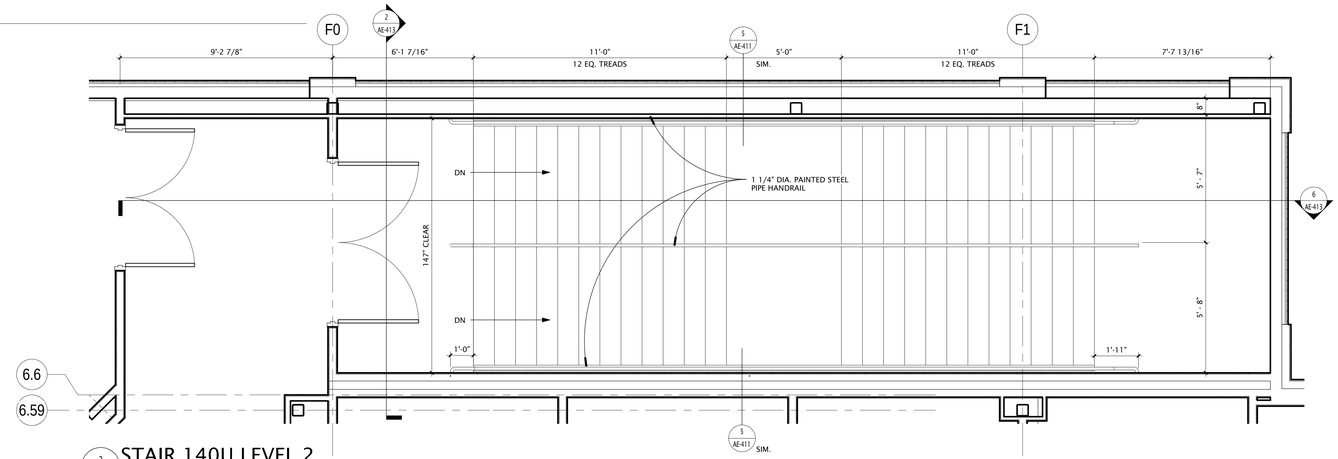

3 AE-413 STAIR 140U LEVEL 2
3/8" = 1'-0"

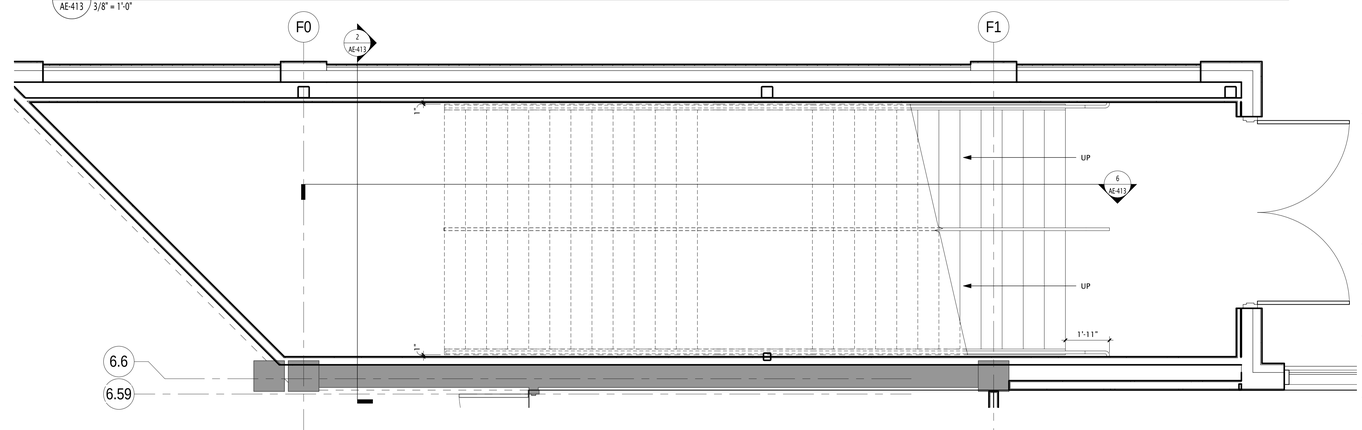

1 AE-413 STAIR 140U LEVEL 1
3/8" = 1'-0"

GSBS ARCHITECTS
375 WEST 200 SOUTH
SALT LAKE CITY, UT 84101
P 801.521.8600
F 801.521.7913
www.gsbsarchitects.com

STATE OF UTAH LICENSED ARCHITECT 116302

REVISIONS:

Utah Valley University New Science Building

800 West University Parkway
Orem, Utah 84058

Division of Facilities Construction and Management

DRAWN BY:	Author
CHECKED BY:	Checker
DFCM PROJECT NO.:	09020790
GSBS PROJECT NO.:	2009.115.00
ISSUED DATE:	05.07.2010

VERTICAL CIRCULATION

CONSTRUCTION DOCUMENTS

AE-413

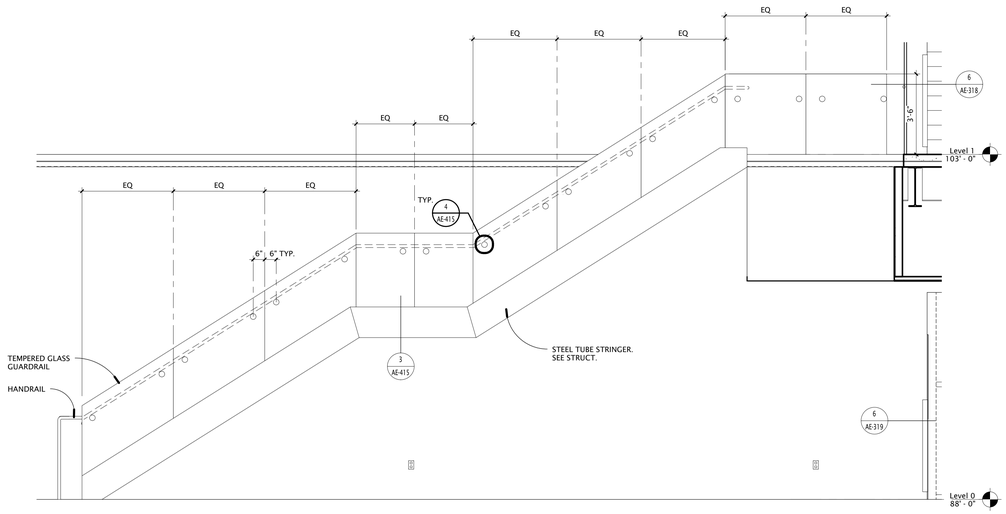

3 AE-414 ATRIUM STAIR ELEVATION
3/8" = 1'-0"

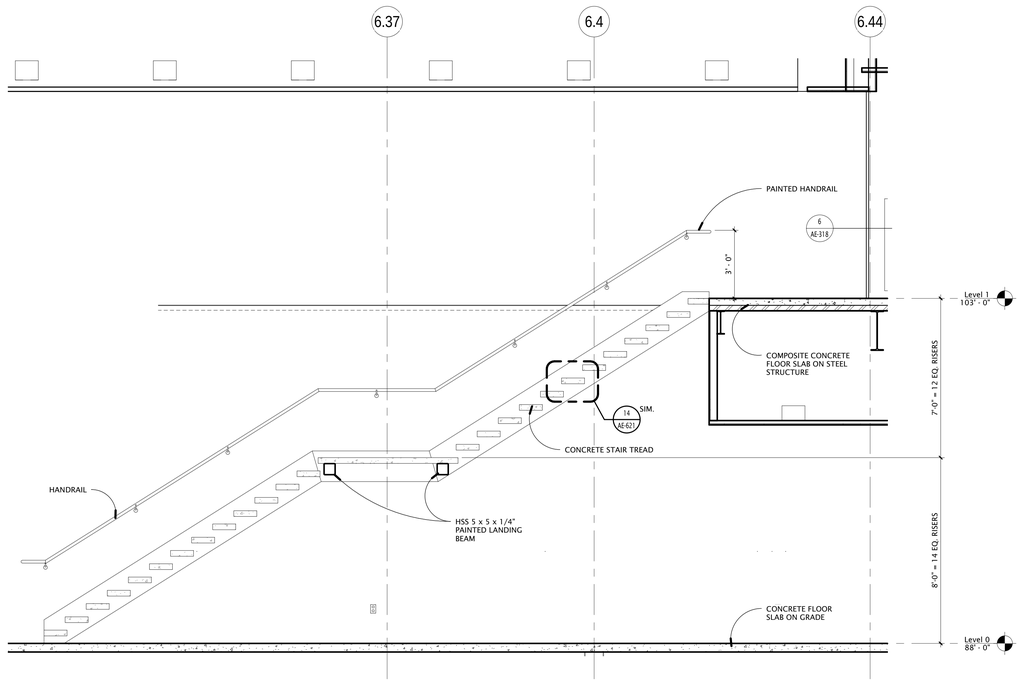

2 AE-414 ATRIUM STAIR SECTION
3/8" = 1'-0"

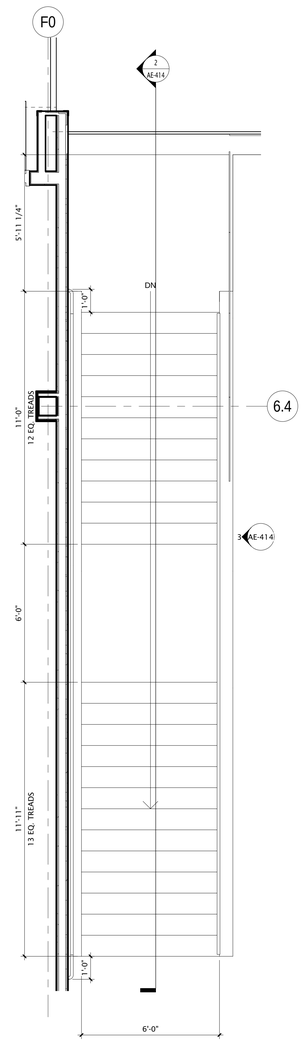

1 AE-414 ATRIUM STAIR LEVEL 1
3/8" = 1'-0"

GSBS ARCHITECTS

375 WEST 200 SOUTH
SALT LAKE CITY, UT 84101

P 801.521.8600
F 801.521.7913

www.gsbsarchitects.com

STATE OF UTAH
116302
LICENSED ARCHITECT

REVISIONS:

Utah Valley University New Science Building

800 West University Parkway
Orem, Utah 84058

Division of Facilities Construction and Management

DRAWN BY:	Author
CHECKED BY:	Checker
DFCM PROJECT NO.:	09020790
GSBS PROJECT NO.:	2009.115.00
ISSUED DATE:	05.07.2010

VERTICAL CIRCULATION

CONSTRUCTION DOCUMENTS

AE-414

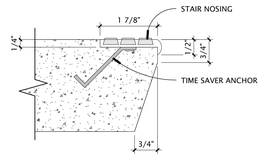

11 AE-415 STAIR NOSING DETAIL
6" = 1'-0"

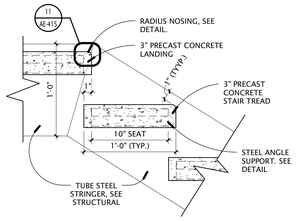

8 AE-415 CONCRETE TREAD DETAIL
1 1/2" = 1'-0"

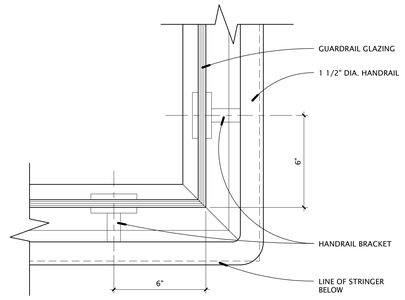

7 AE-415 HANDRAIL CORNER
3" = 1'-0"

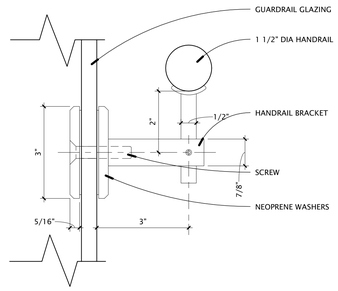

4 AE-415 HANDRAIL @ GLASS GUARDRAIL
6" = 1'-0"

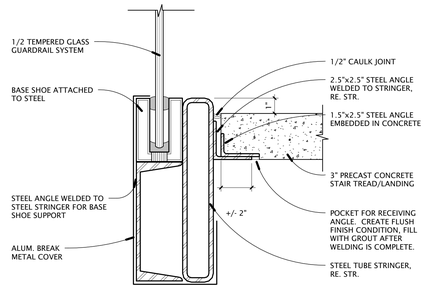

3 AE-415 GLASS GUARDRAIL DETAIL
3" = 1'-0"

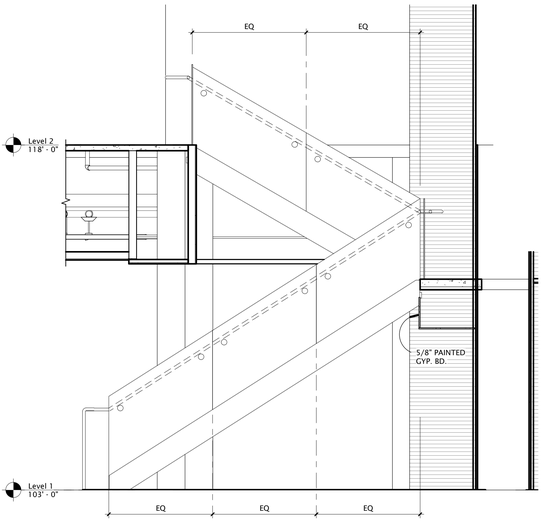

10 AE-415 EAST ATRIUM STAIR ELEVATION
3/8" = 1'-0"

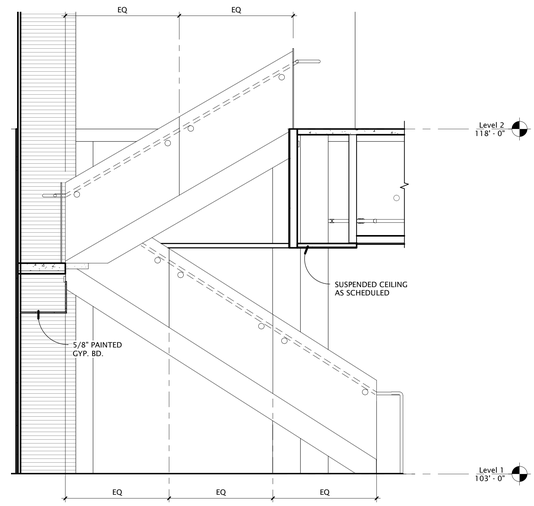

6 AE-415 EAST ATRIUM STAIR ELEVATION
3/8" = 1'-0"

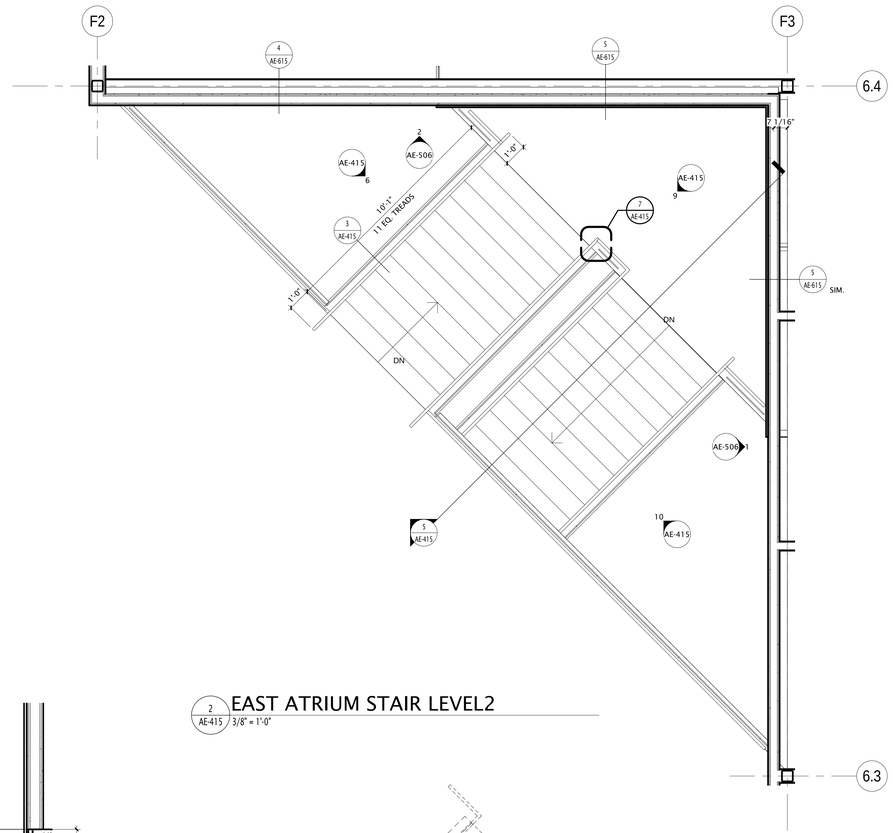

2 AE-415 EAST ATRIUM STAIR LEVEL2
3/8" = 1'-0"

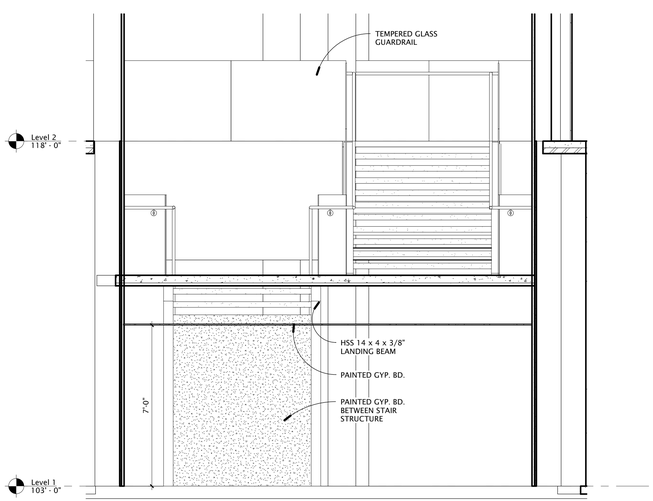

9 AE-415 EAST ATRIUM STAIR ELEVATION
3/8" = 1'-0"

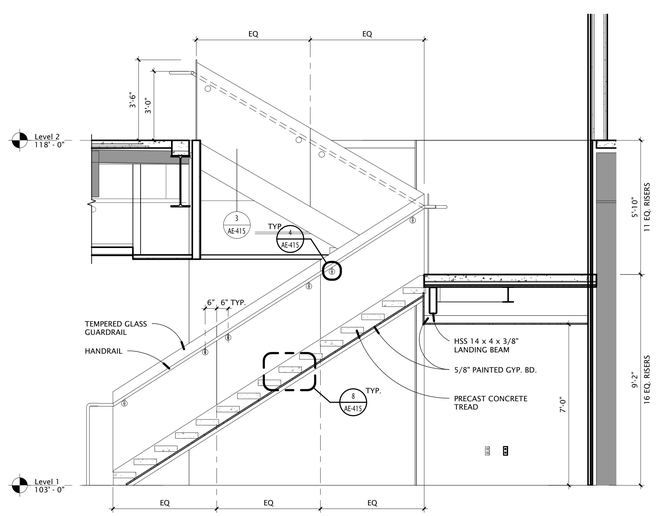

5 AE-415 EAST ATRIUM STAIR SECTION
3/8" = 1'-0"

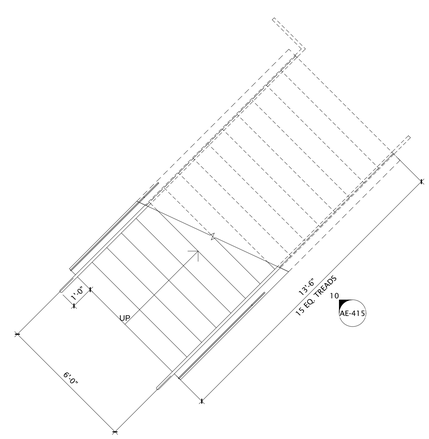

1 AE-415 EAST ATRIUM STAIR LEVEL 1
3/8" = 1'-0"

GSBS ARCHITECTS
375 WEST 200 SOUTH
SALT LAKE CITY, UT 84101
P 801.521.8600
F 801.521.7913
www.gsbsarchitects.com

STATE OF UTAH
116302
LICENSED ARCHITECT

REVISIONS:

Utah Valley University New Science Building

800 West University Parkway
Orem, Utah 84058

Division of Facilities Construction and Management

DRAWN BY:	Author
CHECKED BY:	Checker
DFCM PROJECT NO.:	09020790
GSBS PROJECT NO.:	2009.115.00
ISSUED DATE:	05.07.2010

VERTICAL CIRCULATION

CONSTRUCTION DOCUMENTS

AE-415

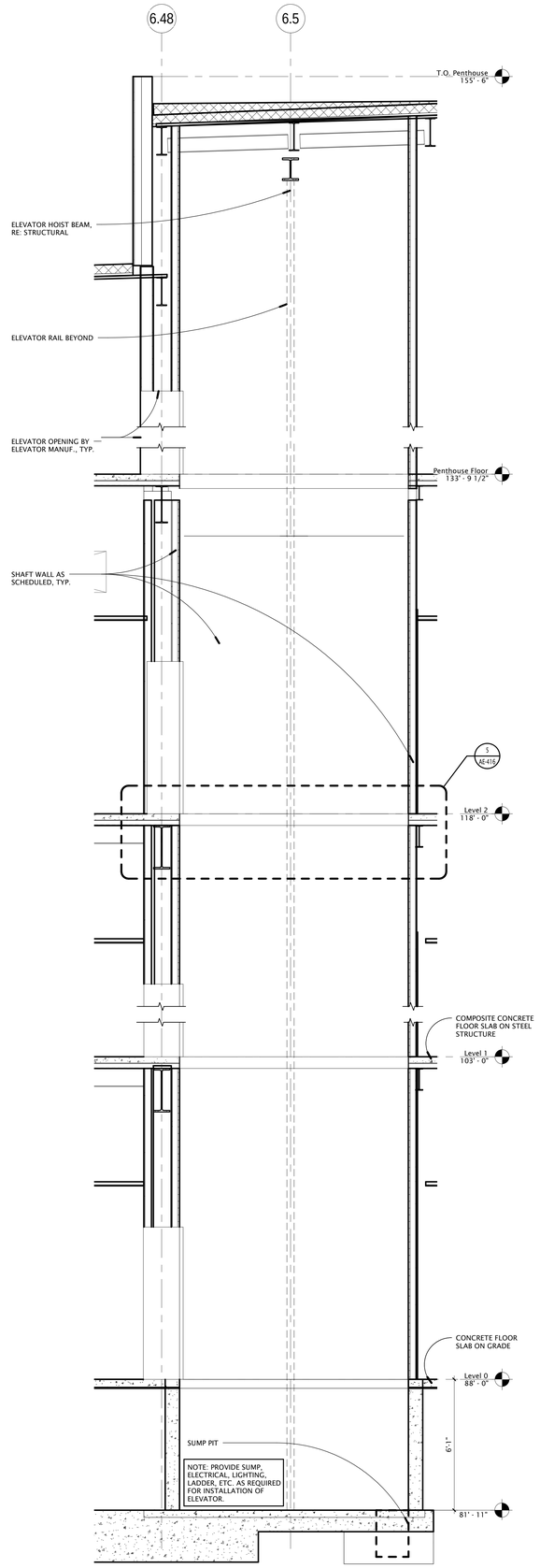

6 AE-416 ELEVATOR SECTION
3/8" = 1'-0"

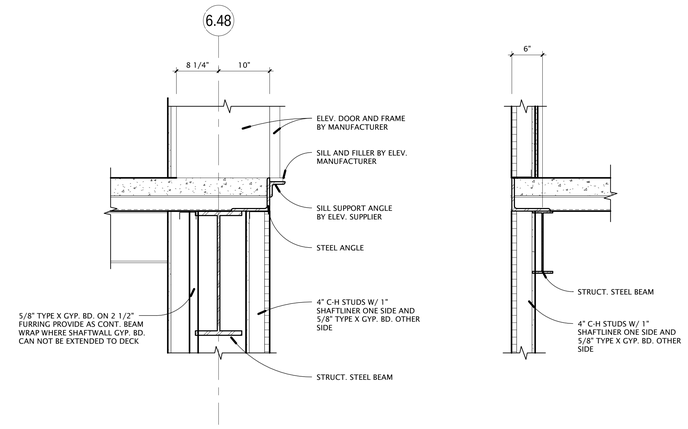

5 AE-416 ELEVATOR DETAIL
1" = 1'-0"

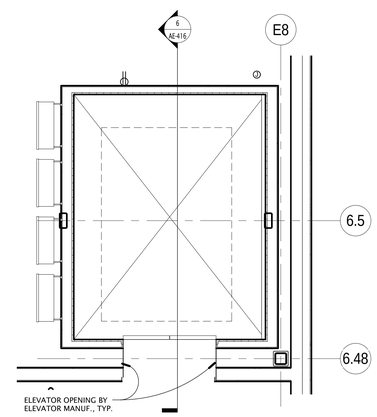

4 AE-416 ELEVATOR ROOF PLAN
3/8" = 1'-0"

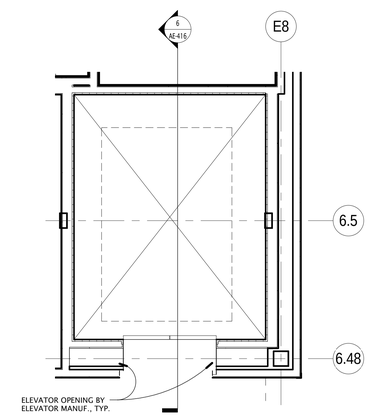

2 AE-416 ELEVATOR LEVEL 2
3/8" = 1'-0"

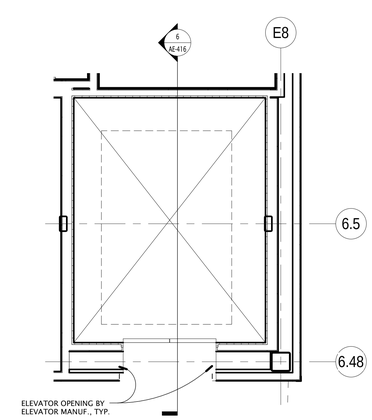

3 AE-416 ELEVATOR LEVEL 1
3/8" = 1'-0"

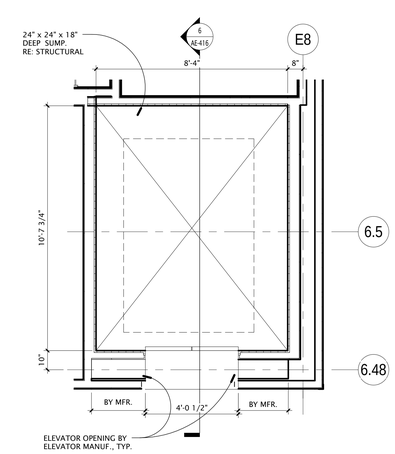

1 AE-416 ELEVATOR LEVEL 0
3/8" = 1'-0"

GSBS ARCHITECTS
375 WEST 200 SOUTH
SALT LAKE CITY, UT 84101
P 801.521.8600
F 801.521.7913
www.gsbsarchitects.com

STATE OF UTAH
116302
LICENSED ARCHITECT

REVISIONS:

Utah Valley University New Science Building

800 West University Parkway
Orem, Utah 84058

Division of Facilities Construction and Management

DRAWN BY:	Author
CHECKED BY:	Checker
DFCM PROJECT NO.:	09020790
GSBS PROJECT NO.:	2009.115.00
ISSUED DATE:	05.07.2010

VERTICAL CIRCULATION

CONSTRUCTION DOCUMENTS

AE-416

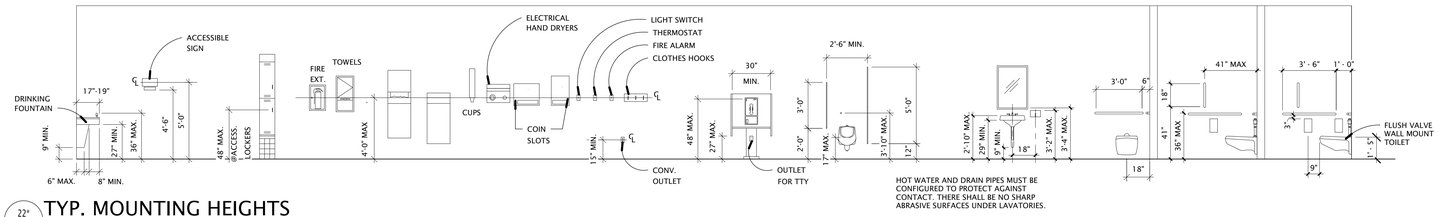

HOT WATER AND DRAIN PIPES MUST BE CONFIGURED TO PROTECT AGAINST CONTACT. THERE SHALL BE NO SHARP ABRASIVE SURFACES UNDER LAVATORIES.

22 / AE-501 TYP. MOUNTING HEIGHTS 1/4" = 1'-0"

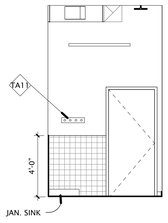

21 / AE-501 JAN. NORTH 1/4" = 1'-0"

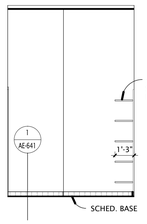

20 / AE-501 JAN. EAST 1/4" = 1'-0"

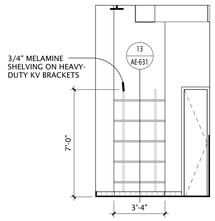

19 / AE-501 JAN. SOUTH 1/4" = 1'-0"

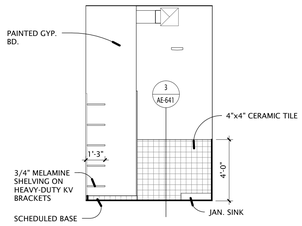

18 / AE-501 JAN. WEST 1/4" = 1'-0"

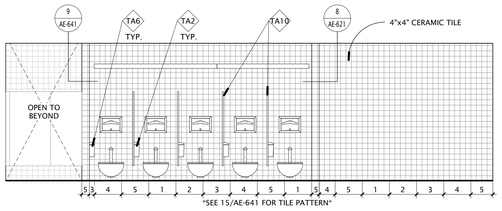

17 / AE-501 WOMEN'S 133 EAST 1/4" = 1'-0"

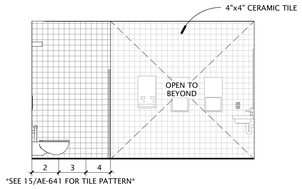

16 / AE-501 WOMEN'S 133 SOUTH 1/4" = 1'-0"

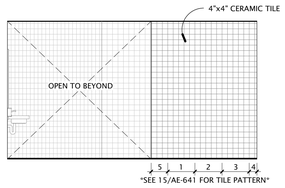

15 / AE-501 WOMEN'S 133 NORTH 1/4" = 1'-0"

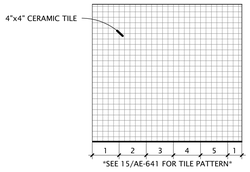

14 / AE-501 WOMEN'S 133 SOUTH 1/4" = 1'-0"

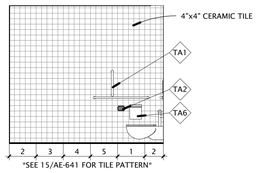

13 / AE-501 WOMEN'S 133 EAST 1/4" = 1'-0"

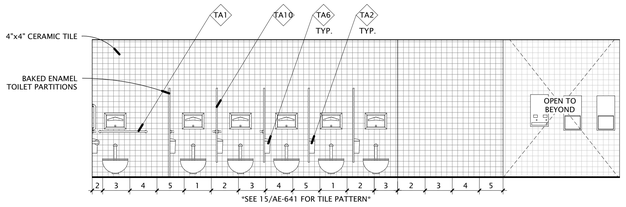

12 / AE-501 WOMEN'S 133 SOUTH 1/4" = 1'-0"

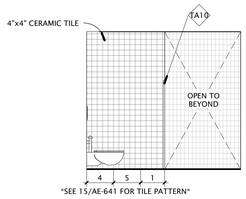

11 / AE-501 WOMEN'S 133 WEST 1/4" = 1'-0"

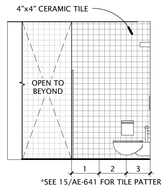

10 / AE-501 WOMEN'S 133 NORTH 1/4" = 1'-0"

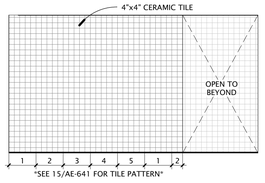

9 / AE-501 WOMEN'S 133 NORTH 1/4" = 1'-0"

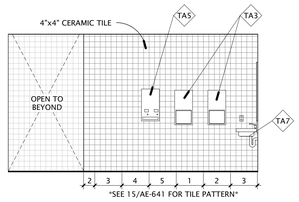

8 / AE-501 WOMEN'S 133 SOUTH 1/4" = 1'-0"

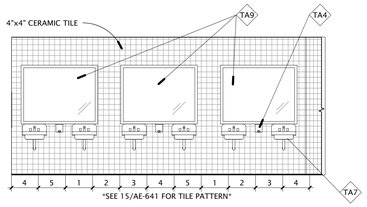

7 / AE-501 WOMEN'S 133 WEST 1/4" = 1'-0"

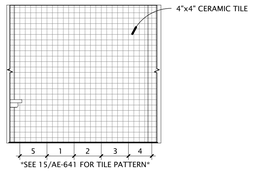

6 / AE-501 WOMEN'S 133 NORTH WEST 1/4" = 1'-0"

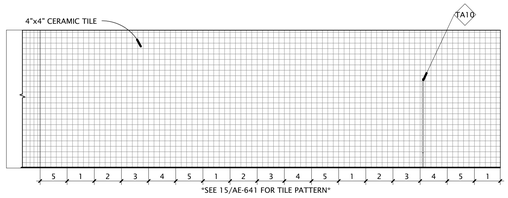

5 / AE-501 WOMEN'S 133 NORTH 1/4" = 1'-0"

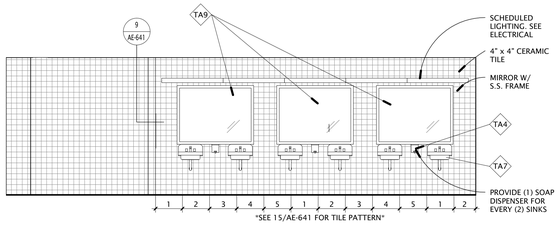

4 / AE-501 WOMEN'S SOUTH 1/4" = 1'-0"

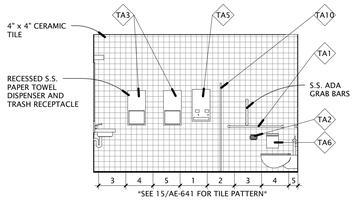

3 / AE-501 WOMEN'S WEST 1/4" = 1'-0"

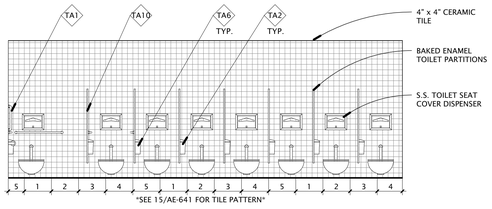

2 / AE-501 WOMEN'S NORTH 1/4" = 1'-0"

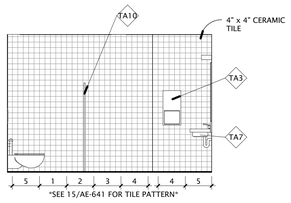

1 / AE-501 WOMEN'S EAST 1/4" = 1'-0"

TOILET ROOM ACCESSORIES KEY

TAG	DESCRIPTION	REMARKS
TA1	1 1/4" OUTSIDE DIA. STAINLESS STEEL GRAB BAR	STAINLESS STEEL, SATIN FINISH, SNAP FLANGE, WALL THICKNESS NOT LESS THAN 18 GAUGE 1 1/2" CLEARANCE BETWEEN WALL SURFACE AND INSIDE FACE OF BAR.
TA2	TOILET TISSUE DISPENSER	PROVIDED BY OWNER & INSTALLED BY G.C.
TA3	PAPER TOWEL DISPENSER	PROVIDED BY OWNER & INSTALLED BY G.C.
TA4	SOAP DISPENSER	PROVIDED BY OWNER & INSTALLED BY G.C.
TA5	SANITARY NAPKIN VENDING UNIT	RECESSED TYPE, STAINLESS STEEL, ALL WELDED CONSTRUCTION. PROVIDE 1 IN EACH WOMEN'S RESTROOM. COIN OPERATED 25 CENT.
TA6	SANITARY NAPKIN DISPOSAL UNITS	SURFACE MOUNTED, STAINLESS STEEL, SELF CLOSING DOOR AND REMOVABLE STAINLESS STEEL RECEPTACLE ALL WELDED CONSTRUCTION. PROVIDE AT EACH WOMEN'S TOILET FIXTURE.
TA7	LAVATORY GUARD	PROVIDE AT EACH LAVATORY
TA8	ADA SHOWER BENCH	?
TA9	1/4" POLISHED PLATE GLASS MIRROR	FRAMED, SIZE PER ELEVATIONS ABOVE EACH LAVATORY AS SPECIFIED IN SECTION 102800
TA10	FLOOR & WALL MOUNTED TOILET & URINAL PARTITIONS	BAKED ENAMEL
TA11	MOP AND BROOM HOLDER	SURFACE MOUNTED, STAINLESS STEEL
TA12	SHOWER CURTAIN ROD	HEAVY DUTY, 1" STAINLESS STEEL TUBING WITH SATIN FINISH. FLANGES TO BE ONE-PIECE SEAMLESS CONSTRUCTION. FASTEN TO WALL. REFER TO PLANS AND ELEVATIONS FOR SPECIFIC DIMENSIONS.
TA13	SHOWER CURTAIN W/ RINGS	OPAQUE, MATTE WHITE VINYL 0.2 mm THICK CURTAIN. ANTIBACTERIAL AND FLAME RETARDANT. CURTAIN SHALL HAVE NICKEL PLATED BRASS GROMMETS @ TOP EVERY 6" HEMMED BOTTOM AND SIDES. SHOWER CURTAIN RINGS SHALL BE STAINLESS STEEL CONSTRUCTION, PROVIDE AT EACH SHOWER.
TA14	BABY CHANGING STATION	HORIZONTAL, WALL MOUNTED UNIT. POLYETHYLENE, CREAM COLOR. PNEUMATIC CYLINDER CONTROLLED. NYLON SAFETY STRAP. HOLDS UP TO 300 LBS.
TA15	SHELF	18 GAUGE SATIN-FINISH STAINLESS STEEL. 3/4" HEMMED EDGES. 16 GAUGE STAINLESS STEEL BRACKETS. REFER TO ELEVATIONS FOR SHELF LENGTH.
TA16	TOWEL HOOK	22 GAUGE SATIN-FINISH STAINLESS STEEL. CONCEALED MOUNTING BRACKET. HOOK TO PROTRUDE NOT MORE THAN 3 1/2"

NOTE:

1. GENERAL CONTRACTOR SHALL PROVIDE FIRE RATED SOLID BLOCKING FOR ALL WALL MOUNTED ITEMS, TYPICAL.
2. ALL BRACES, BRACKETS , HINGES, SCREWS ETC.. FOR ACCESSORY FASTENERS SHALL BE STAINLESS STEEL.

GSBS ARCHITECTS
375 WEST 200 SOUTH
SALT LAKE CITY, UT 84101
P 801.521.8600
F 801.521.7915
www.gsbsarchitects.com

STATE OF UTAH 116302 LICENSED ARCHITECT

REVISIONS:

Utah Valley University New Science Building

800 West University Parkway
Orem, Utah 84058

Division of Facilities Construction and Management

DRAWN BY:	Author
CHECKED BY:	Checker
DFCM PROJECT NO.:	09020790
GSBS PROJECT NO.:	2009.15.00
ISSUED DATE:	05.07.2010

INTERIOR ELEVATIONS

CONSTRUCTION DOCUMENTS

AE-501

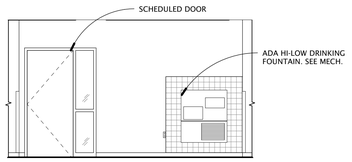

23 AE-502 DRINKING FOUNTAIN 1/4" = 1'-0"

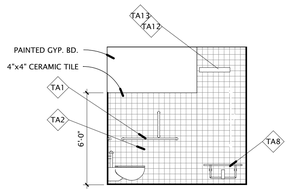

22 AE-502 FACULTY RESTROOM 1/4" = 1'-0"

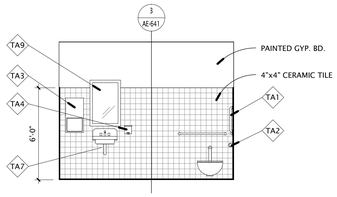

21 AE-502 FACULTY RESTROOM 1/4" = 1'-0"

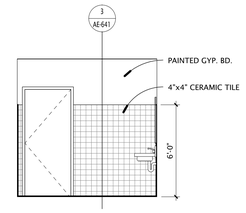

20 AE-502 FACULTY RESTROOM 1/4" = 1'-0"

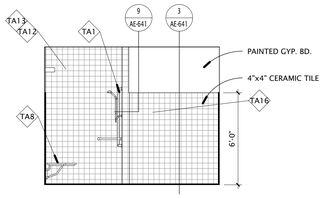

19 AE-502 FACULTY RESTROOM 1/4" = 1'-0"

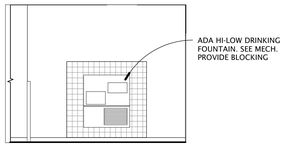

18 AE-502 DRINKING FOUNTAIN 1/4" = 1'-0"

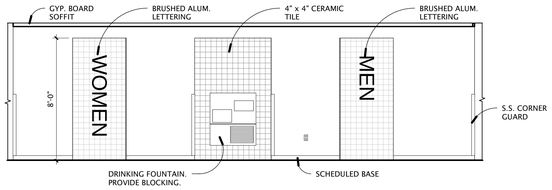

17 AE-502 RESTROOM HALLWAY 1/4" = 1'-0"

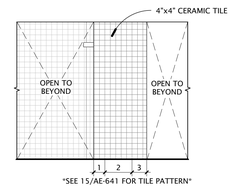

16 AE-502 MEN'S 135 SOUTH 1/4" = 1'-0"

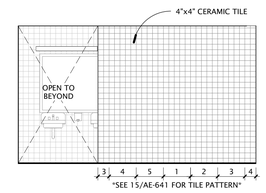

15 AE-502 MEN'S 135 EAST 1/4" = 1'-0"

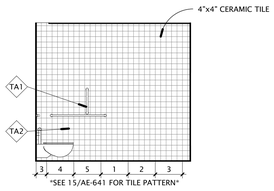

14 AE-502 MEN'S 135 NORTH 1/4" = 1'-0"

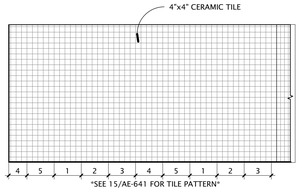

13 AE-502 MEN'S 135 EAST 1/4" = 1'-0"

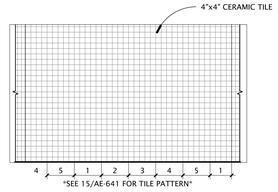

12 AE-502 MEN'S 135 SOUTH EAST 1/4" = 1'-0"

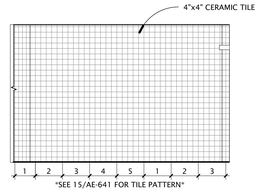

11 AE-502 MEN'S 135 SOUTH 1/4" = 1'-0"

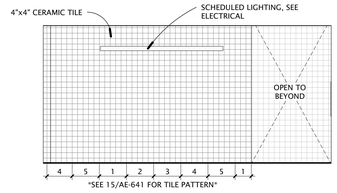

10 AE-502 MEN'S 135 WEST 1/4" = 1'-0"

TOILET ROOM ACCESSORIES KEY		
TAG	DESCRIPTION	REMARKS
TA1	1 1/4" OUTSIDE DIA. STAINLESS STEEL GRAB BAR	STAINLESS STEEL, SATIN FINISH, SNAP FLANGE, WALL THICKNESS NOT LESS THAN 18 GAUGE 1 1/2" CLEARANCE BETWEEN WALL SURFACE AND INSIDE FACE OF BAR.
TA2	TOILET TISSUE DISPENSER	PROVIDED BY OWNER & INSTALLED BY G.C.
TA3	PAPER TOWEL DISPENSER	PROVIDED BY OWNER & INSTALLED BY G.C.
TA4	SOAP DISPENSER	PROVIDED BY OWNER & INSTALLED BY G.C.
TA5	SANITARY NAPKIN VENDING UNIT	RECESSED TYPE, STAINLESS STEEL, ALL WELDED CONSTRUCTION. PROVIDE 1 IN EACH WOMEN'S RESTROOM. COIN OPERATED 25 CENT.
TA6	SANITARY NAPKIN DISPOSAL UNITS	SURFACE MOUNTED, STAINLESS STEEL, SELF CLOSING DOOR AND REMOVABLE STAINLESS STEEL RECEPTACLE ALL WELDED CONSTRUCTION. PROVIDE AT EACH WOMEN'S TOILET FIXTURE.
TA7	LAVATORY GUARD	PROVIDE AT EACH LAVATORY
TA8	ADA SHOWER BENCH	?
TA9	1/4" POLISHED PLATE GLASS MIRROR	FRAMED, SIZE PER ELEVATIONS ABOVE EACH LAVATORY AS SPECIFIED IN SECTION 102800
TA10	FLOOR & WALL MOUNTED TOILET & URINAL PARTITIONS	BAKED ENAMEL
TA11	MOP AND BROOM HOLDER	SURFACE MOUNTED, STAINLESS STEEL
TA12	SHOWER CURTAIN ROD	HEAVY DUTY, 1" STAINLESS STEEL TUBING WITH SATIN FINISH. FLANGES TO BE ONE-PIECE SEAMLESS CONSTRUCTION. FASTEN TO WALL. REFER TO PLANS AND ELEVATIONS FOR SPECIFIC DIMENSIONS.
TA13	SHOWER CURTAIN W/ RINGS	OPAQUE, MATTE WHITE VINYL 0.2 mm THICK CURTAIN. ANTIBACTERIAL AND FLAME RETARDANT. CURTAIN SHALL HAVE NICKEL PLATED BRASS GROMMETS @ TOP EVERY 6" HEMMED BOTTOM AND SIDES. SHOWER CURTAIN RINGS SHALL BE STAINLESS STEEL CONSTRUCTION, PROVIDE AT EACH SHOWER.
TA14	BABY CHANGING STATION	HORIZONTAL, WALL MOUNTED UNIT. POLYETHYLENE, CREAM COLOR. PNEUMATIC CYLINDER CONTROLLED. NYLON SAFETY STRAP. HOLDS UP TO 300 LBS.
TA15	SHELF	18 GAUGE SATIN-FINISH STAINLESS STEEL. 3/4" HEMMED EDGES. 16 GAUGE STAINLESS STEEL BRACKETS. REFER TO ELEVATIONS FOR SHELF LENGTH.
TA16	TOWEL HOOK	22 GAUGE SATIN-FINISH STAINLESS STEEL. CONCEALED MOUNTING BRACKET. HOOK TO PROTRUDE NOT MORE THAN 3 1/2"

NOTE:

1. GENERAL CONTRACTOR SHALL PROVIDE FIRE RATED SOLID BLOCKING FOR ALL WALL MOUNTED ITEMS, TYPICAL.
2. ALL BRACES, BRACKETS , HINGES, SCREWS ETC.. FOR ACCESSORY FASTENERS SHALL BE STAINLESS STEEL.

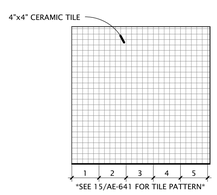

9 AE-502 MEN'S 135 WEST 1/4" = 1'-0"

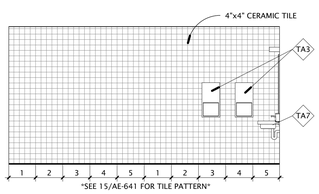

8 AE-502 MEN'S 135 NORTH 1/4" = 1'-0"

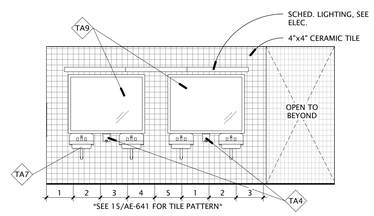

7 AE-502 MEN'S 135 EAST 1/4" = 1'-0"

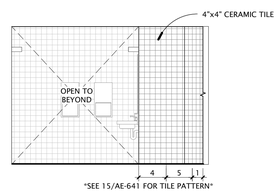

6 AE-502 MEN'S 135 NORTH 1/4" = 1'-0"

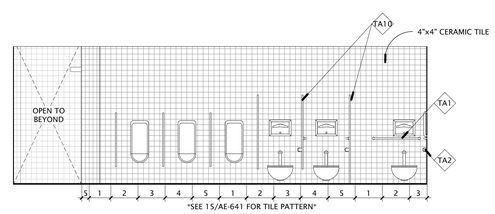

5 AE-502 MEN'S 135 WEST 1/4" = 1'-0"

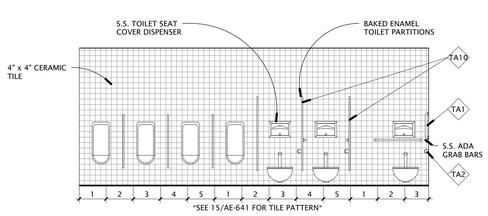

4 AE-502 MEN'S SOUTH 1/4" = 1'-0"

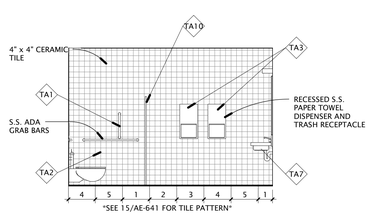

3 AE-502 MEN'S WEST 1/4" = 1'-0"

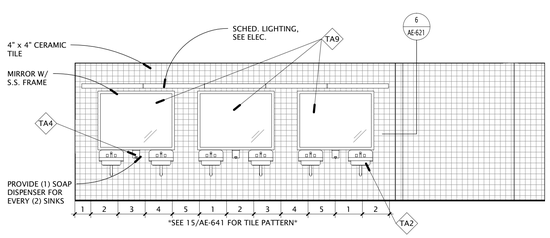

2 AE-502 MEN'S NORTH 1/4" = 1'-0"

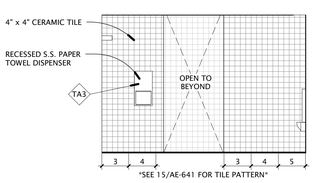

1 AE-502 MEN'S EAST 1/4" = 1'-0"

GSBS ARCHITECTS
375 WEST 200 SOUTH
SALT LAKE CITY, UT 84101
P 801.521.8600
F 801.521.7913
www.gsbsarchitects.com

STATE OF UTAH 116302 LICENSED ARCHITECT

REVISIONS:

Utah Valley University New Science Building

800 West University Parkway
Orem, Utah 84058

Division of Facilities Construction and Management

DRAWN BY:	Author
CHECKED BY:	Checker
DFCM PROJECT NO.:	09020790
GSBS PROJECT NO.:	2009.115.00
ISSUED DATE:	05.07.2010

INTERIOR ELEVATIONS

CONSTRUCTION DOCUMENTS

AE-502

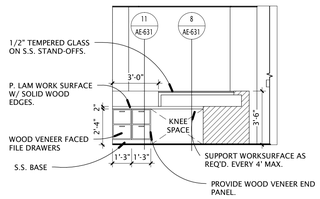

17 AE-503 RECEPTION DESK
1/4" = 1'-0"

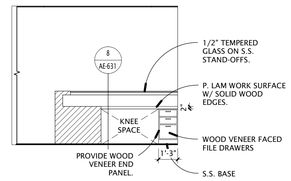

16 AE-503 RECEPTION DESK
1/4" = 1'-0"

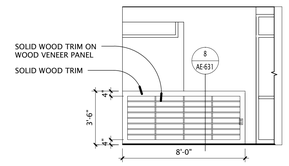

15 AE-503 RECEPTION DESK
1/4" = 1'-0"

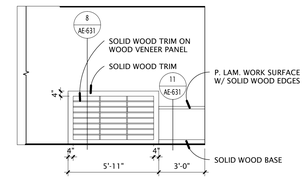

14 AE-503 RECEPTION DESK
1/4" = 1'-0"

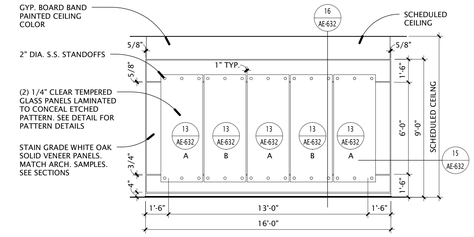

13 AE-503 INTERACTIVE WALL
1/4" = 1'-0"

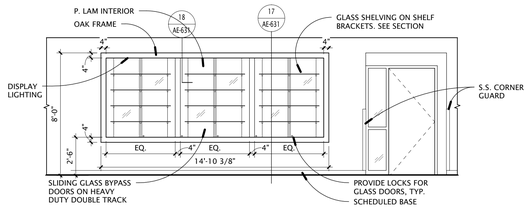

12 AE-503 DISPLAY CASE ELEVATION
1/4" = 1'-0"

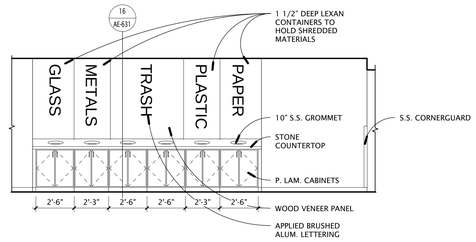

11 AE-503 RECYCLING CENTER
1/4" = 1'-0"

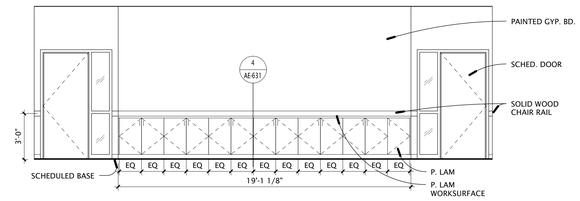

10 AE-503 COMPUTER CLASSROOM ENTRY WALL
1/4" = 1'-0"

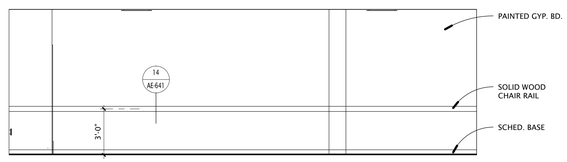

9 AE-503 CLASSROOM SIDE WALL
1/4" = 1'-0"

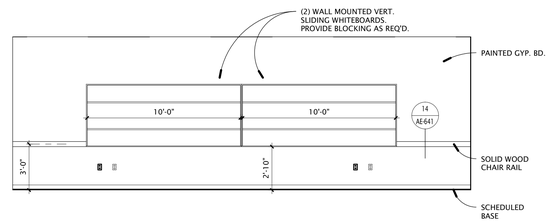

8 AE-503 COMPUTER CLASSROOM TEACHING WALL
1/4" = 1'-0"

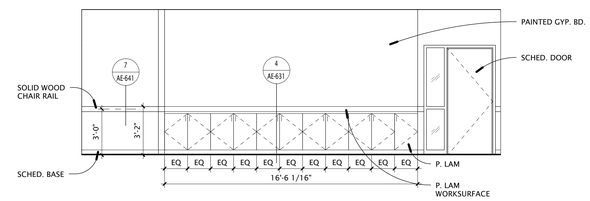

7 AE-503 COMPUTER CLASSROOM REAR WALL
1/4" = 1'-0"

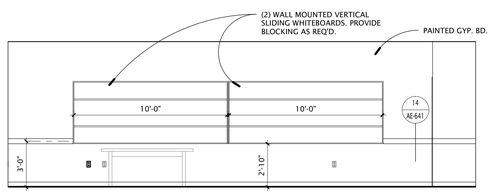

6 AE-503 CLASSROOM TEACHING WALL
1/4" = 1'-0"

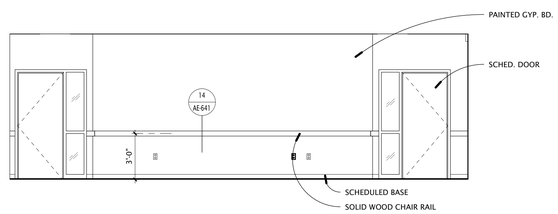

5 AE-503 CLASSROOM ENTRY WALL ELEVATION
1/4" = 1'-0"

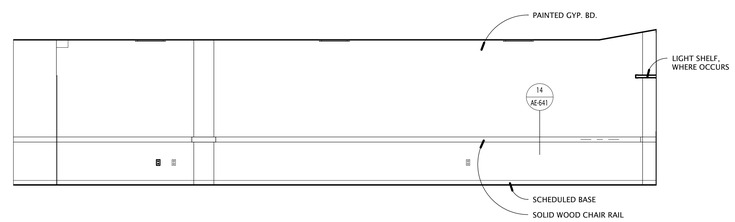

4 AE-503 CLASSROOM SIDE WALL ELEVATION
1/4" = 1'-0"

3 AE-503 CLASSROOM REAR WALL ELEVATION
1/4" = 1'-0"

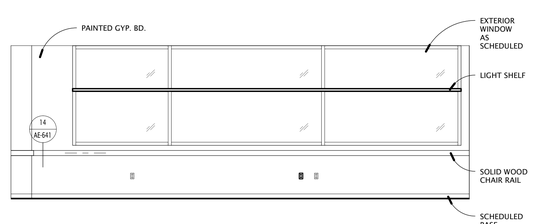

2 AE-503 CLASSROOM REAR WALL ELEVATION
1/4" = 1'-0"

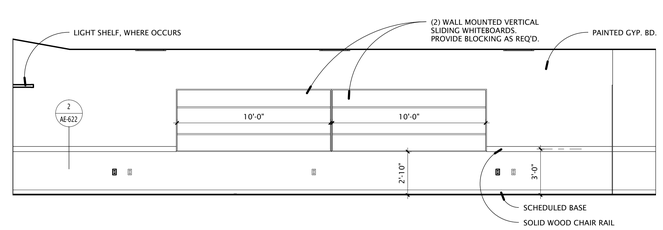

1 AE-503 TYPICAL CLASSROOM TEACHING WALL
1/4" = 1'-0"

GSBS ARCHITECTS
375 WEST 200 SOUTH
SALT LAKE CITY, UT 84101
P 801.521.8600
F 801.521.7915
www.gsbsarchitects.com

STATE OF UTAH 116302 LICENSED ARCHITECT

REVISIONS:

Utah Valley University New Science Building

800 West University Parkway
Orem, Utah 84058

Division of Facilities Construction and Management

DRAWN BY:	Author
CHECKED BY:	Checker
DFCM PROJECT NO.:	09020790
GSBS PROJECT NO.:	2009.115.00
ISSUED DATE:	05.07.2010

INTERIOR ELEVATIONS

CONSTRUCTION DOCUMENTS

AE-503

GSBS ARCHITECTS
375 WEST 200 SOUTH
SALT LAKE CITY, UT 84101
P 801.521.8600
F 801.521.7915
www.gsbsarchitects.com

STATE OF UTAH
116302
LICENSED ARCHITECT

REVISIONS:

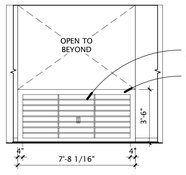

20 AE-504 ADMIN. ELEVATION
1/4" = 1'-0"

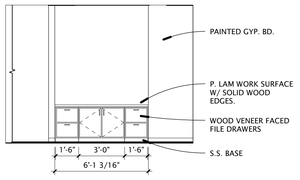

19 AE-504 RECEPTION DESK
1/4" = 1'-0"

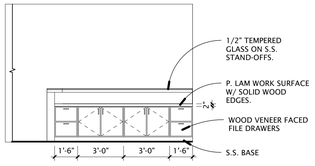

18 AE-504 RECEPTION DESK
1/4" = 1'-0"

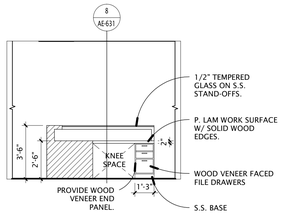

17 AE-504 RECEPTION DESK
1/4" = 1'-0"

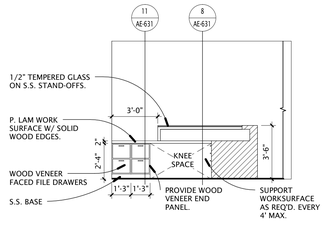

16 AE-504 RECEPTION DESK
1/4" = 1'-0"

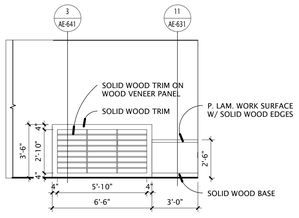

15 AE-504 RECEPTION DESK
1/4" = 1'-0"

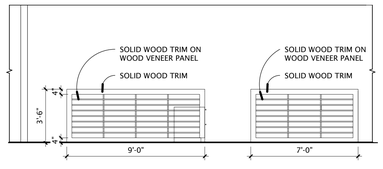

14 AE-504 RECEPTION DESK
1/4" = 1'-0"

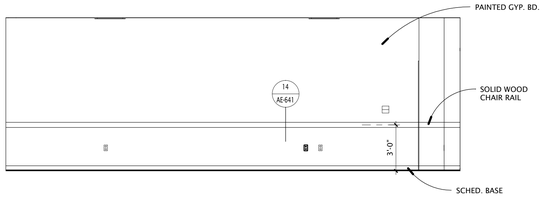

13 AE-504 SEMINAR 268
1/4" = 1'-0"

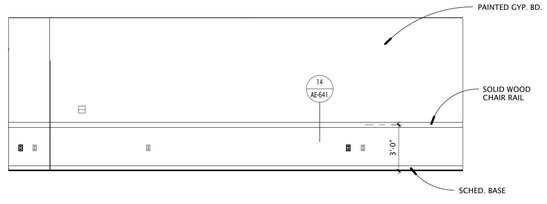

12 AE-504 SEMINAR 268
1/4" = 1'-0"

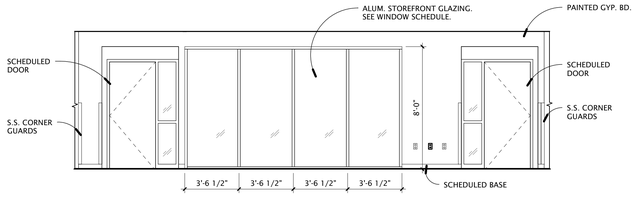

11 AE-504 SEMINAR 268 HALL
1/4" = 1'-0"

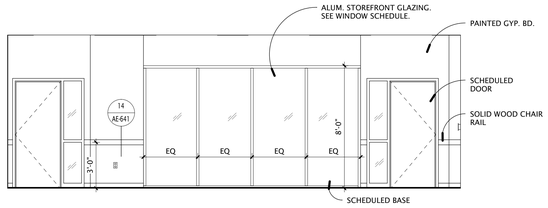

10 AE-504 SEMINAR 268
1/4" = 1'-0"

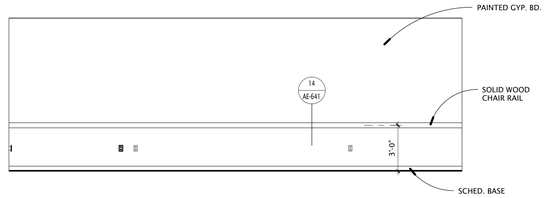

9 AE-504 SEMINAR 268
1/4" = 1'-0"

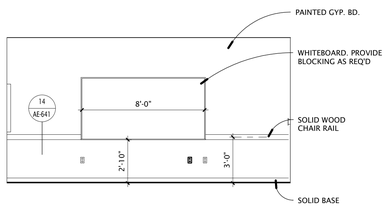

8 AE-504 SEMINAR WEST
1/4" = 1'-0"

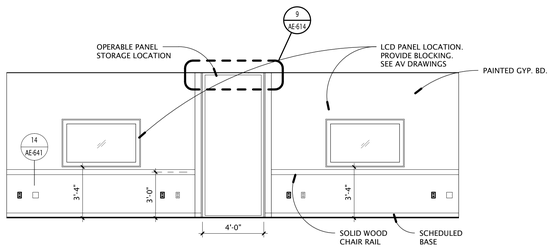

7 AE-504 SEMINAR SOUTH
1/4" = 1'-0"

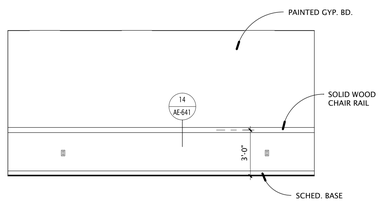

6 AE-504 SEMINAR 040
1/4" = 1'-0"

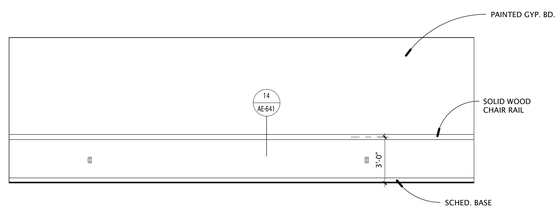

5 AE-504 SEMINAR 040
1/4" = 1'-0"

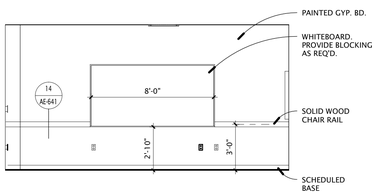

4 AE-504 SEMINAR EAST
1/4" = 1'-0"

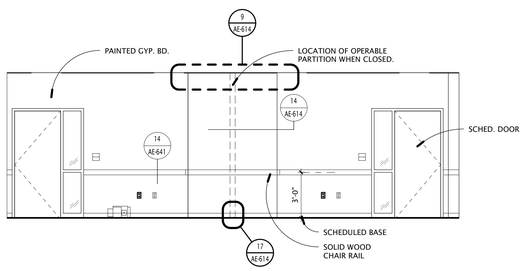

3 AE-504 SEMINAR NORTH
1/4" = 1'-0"

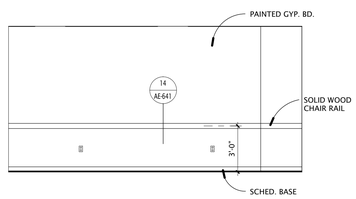

2 AE-504 SEMINAR 040
1/4" = 1'-0"

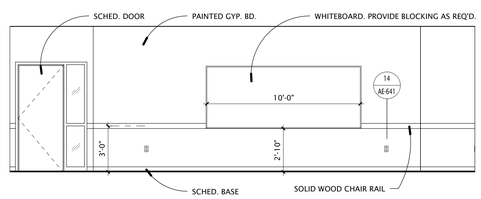

1 AE-504 SEMINAR 040
1/4" = 1'-0"

Utah Valley University New Science Building

800 West University Parkway
Orem, Utah 84058

Division of Facilities Construction and Management

DRAWN BY:	Author
CHECKED BY:	Checker
DFCM PROJECT NO.:	09020790
GSBS PROJECT NO.:	2009.115.00
ISSUED DATE:	05.07.2010

INTERIOR ELEVATIONS

CONSTRUCTION DOCUMENTS

AE-504

GSBS ARCHITECTS
375 WEST 200 SOUTH
SALT LAKE CITY, UT 84101
P 801.521.8600
F 801.521.7915
www.gsbsarchitects.com

STATE OF UTAH 116302 LICENSED ARCHITECT

REVISIONS:

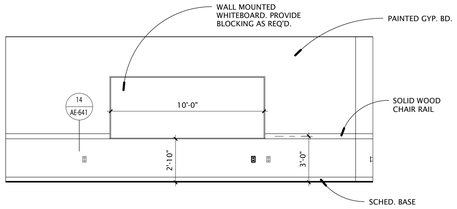

16 AE-505 SEMINAR 1/4" = 1'-0"

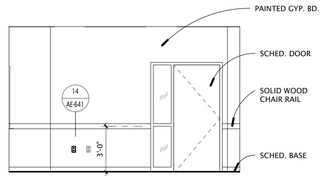

15 AE-505 SEMINAR 1/4" = 1'-0"

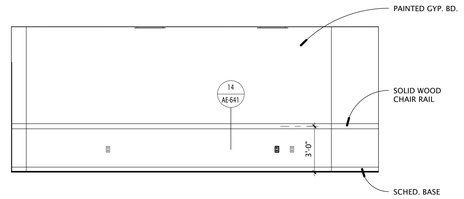

14 AE-505 SEMINAR 1/4" = 1'-0"

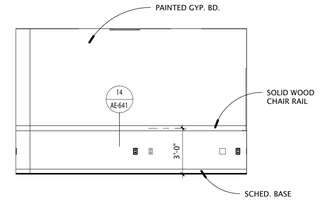

13 AE-505 SEMINAR 1/4" = 1'-0"

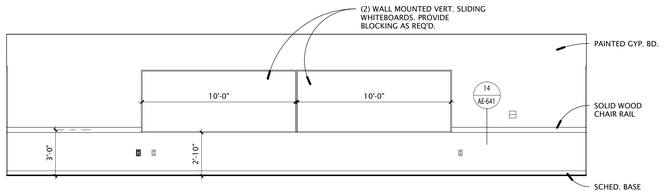

12 AE-505 LECTURE 260 TEACHING WALL 1/4" = 1'-0"

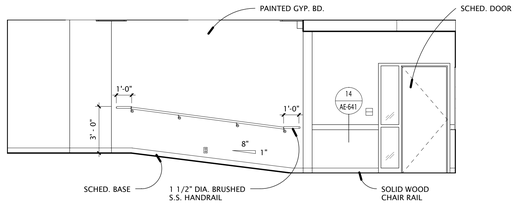

11 AE-505 LECTURE 260 SIDE WALL 1/4" = 1'-0"

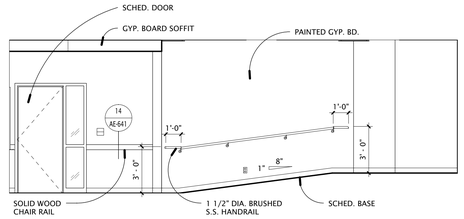

10 AE-505 LECTURE 260 SIDE WALL 1/4" = 1'-0"

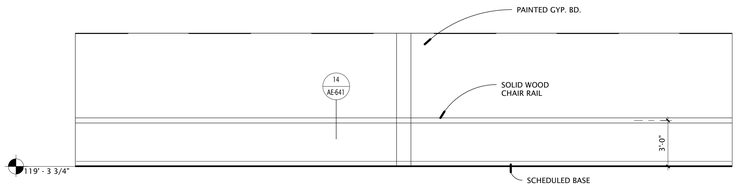

9 AE-505 LECTURE 260 REAR WALL 1/4" = 1'-0"

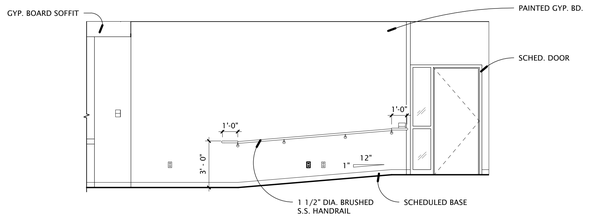

8 AE-505 LECTURE 139 SIDE WALL 1/4" = 1'-0"

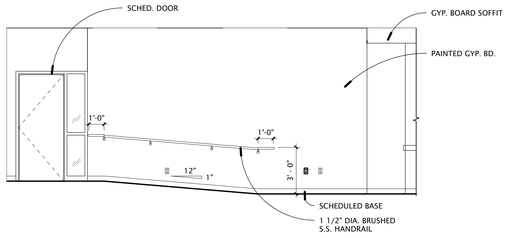

7 AE-505 LECTURE 139 SIDE WALL 1/4" = 1'-0"

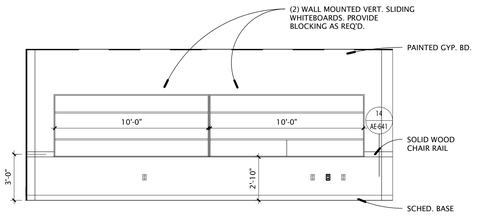

6 AE-505 LECTURE 139 TEACHING WALL 1/4" = 1'-0"

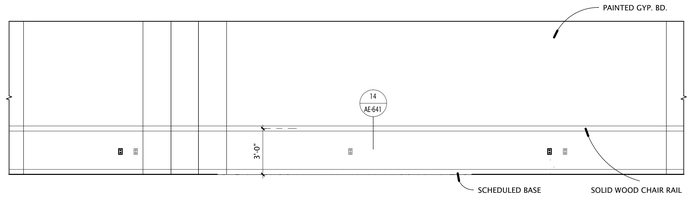

5 AE-505 LECTURE 139 REAR WALL 1/4" = 1'-0"

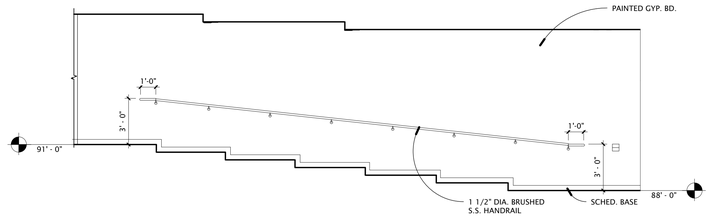

4 AE-505 LECTURE 031 SIDE WALL 1/4" = 1'-0"

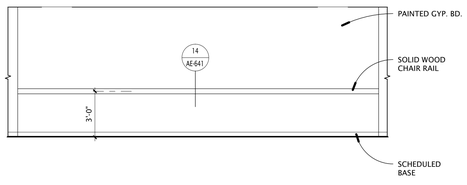

3 AE-505 LECTURE 031 1/4" = 1'-0"

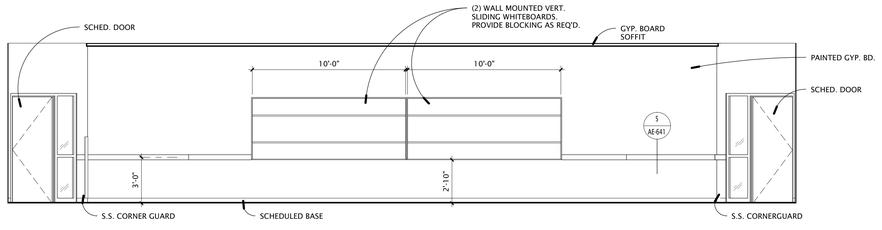

2 AE-505 LECTURE 031 TEACHING WALL 1/4" = 1'-0"

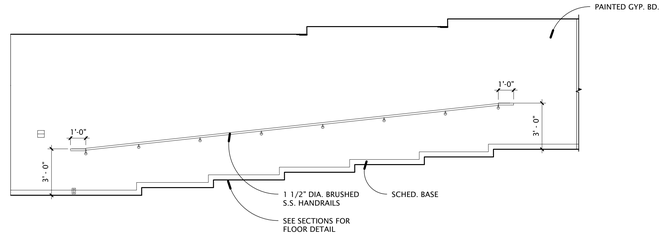

1 AE-505 LECTURE 031 SIDE WALL 1/4" = 1'-0"

Utah Valley University New Science Building

800 West University Parkway
Orem, Utah 84058

Division of Facilities Construction and Management

DRAWN BY:	Author
CHECKED BY:	Checker
DFCM PROJECT NO.:	09020790
GSBS PROJECT NO.:	2009.115.00
ISSUED DATE:	05.07.2010

INTERIOR ELEVATIONS

CONSTRUCTION DOCUMENTS

AE-505

GSBS ARCHITECTS
375 WEST 200 SOUTH
SALT LAKE CITY, UT 84101
P 801.521.8600
F 801.521.7913
www.gsbsarchitects.com

STATE OF UTAH
116302
LICENSED ARCHITECT

REVISIONS:

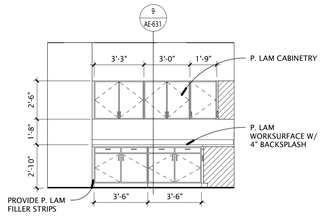

15 AE-506 FACULTY WORK ROOM 1/4" = 1'-0"

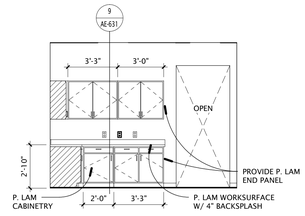

14 AE-506 FACULTY WORK ROOM 1/4" = 1'-0"

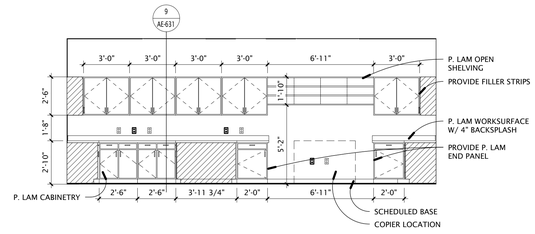

13 AE-506 FACULTY WORK ROOM 1/4" = 1'-0"

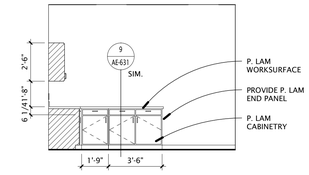

12 AE-506 FACULTY WORK ROOM 1/4" = 1'-0"

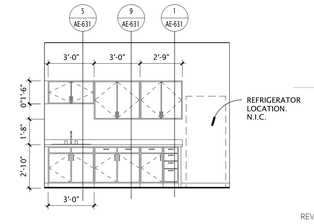

11 AE-506 BREAKROOM 1/4" = 1'-0"

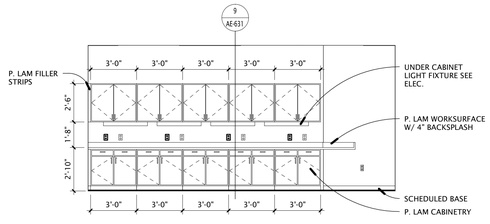

10 AE-506 WORKROOM 1/4" = 1'-0"

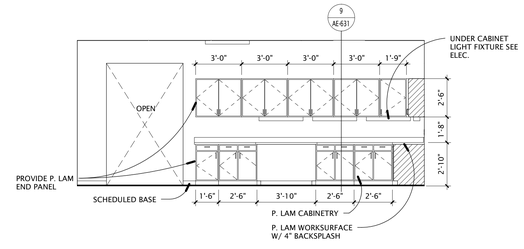

9 AE-506 WORKROOM 1/4" = 1'-0"

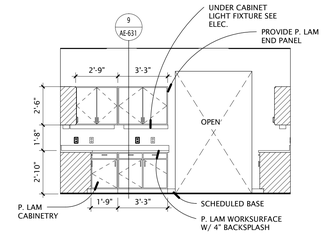

8 AE-506 WORKROOM 1/4" = 1'-0"

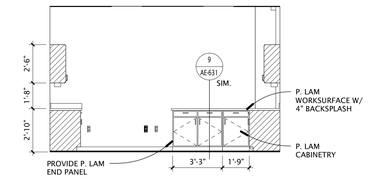

7 AE-506 WORKROOM 1/4" = 1'-0"

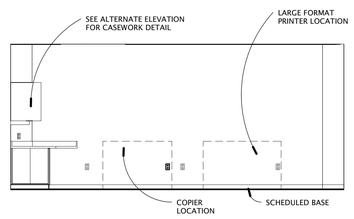

6 AE-506 WORKROOM 1/4" = 1'-0"

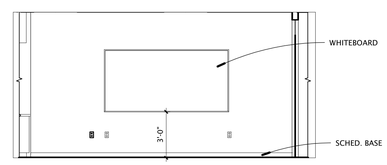

5 AE-506 CONFERENCE ELEVATION 1/4" = 1'-0"

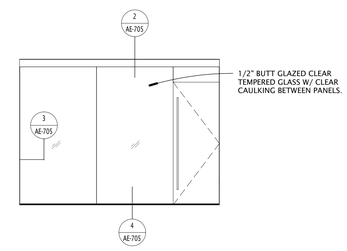

4 AE-506 CONFERENCE ELEVATION 1/4" = 1'-0"

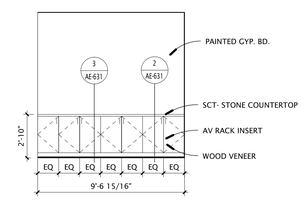

3 AE-506 CONFERENCE ELEVATION 1/4" = 1'-0"

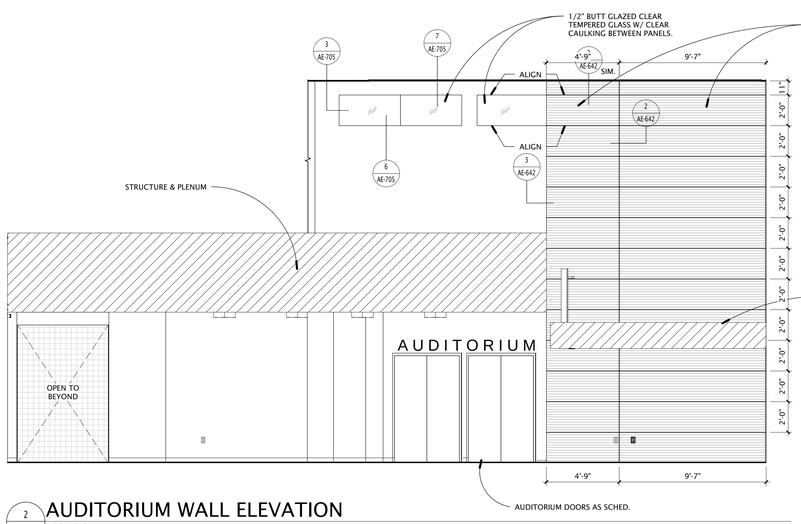

2 AE-506 AUDITORIUM WALL ELEVATION 1/4" = 1'-0"

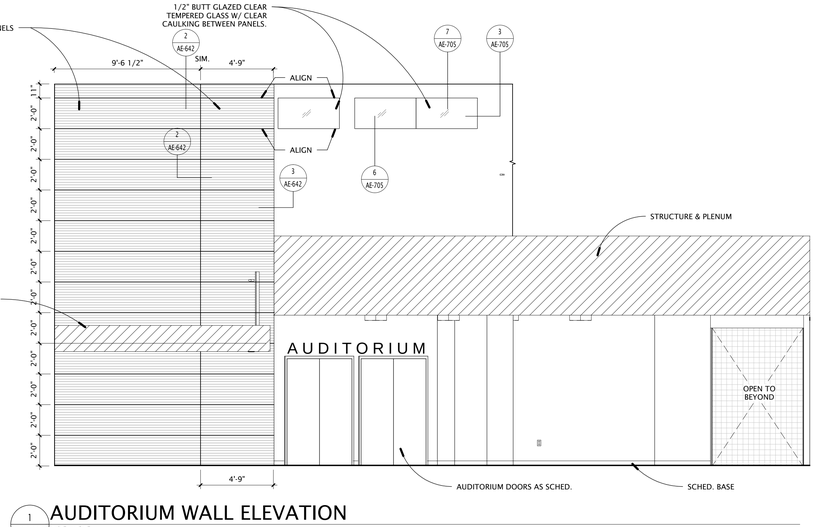

1 AE-506 AUDITORIUM WALL ELEVATION 1/4" = 1'-0"

Utah Valley University New Science Building

800 West University Parkway
Orem, Utah 84058

Division of Facilities Construction and Management

DRAWN BY:	Author
CHECKED BY:	Checker
DFCM PROJECT NO.:	09020790
GSBS PROJECT NO.:	2009.115.00
ISSUED DATE:	05.07.2010

INTERIOR ELEVATIONS

CONSTRUCTION DOCUMENTS

AE-506

GSBS ARCHITECTS

375 WEST 200 SOUTH
SALT LAKE CITY, UT 84101

P 801.521.8600
F 801.521.7913

www.gsbsarchitects.com

STATE OF UTAH
116302
LICENSED ARCHITECT

REVISIONS:

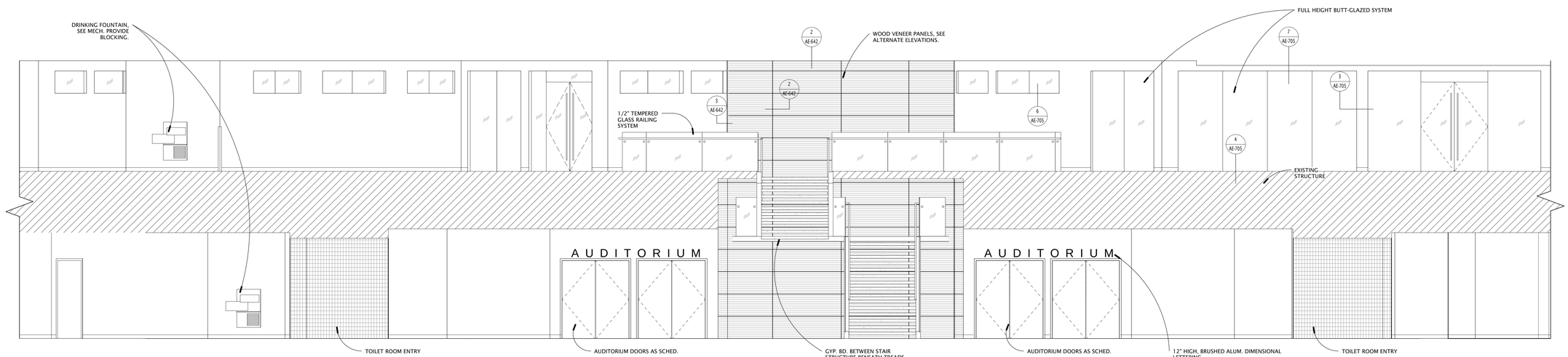

4 AE-507 ATRIUM RAIL
1/4" = 1'-0"

3 AE-507 ATRIUM RAIL
1/4" = 1'-0"

2 AE-507 ATRIUM NORTH WEST
1/4" = 1'-0"

1 AE-507 ATRIUM NORTH EAST
1/4" = 1'-0"

Utah Valley University New Science Building

800 West University Parkway
Orem, Utah 84058

Division of Facilities Construction and Management

DRAWN BY:	Author
CHECKED BY:	Checker
DFCM PROJECT NO.:	09020790
GSBS PROJECT NO.:	2009.115.00
ISSUED DATE:	05.07.2010

INTERIOR ELEVATIONS

CONSTRUCTION DOCUMENTS

AE-507

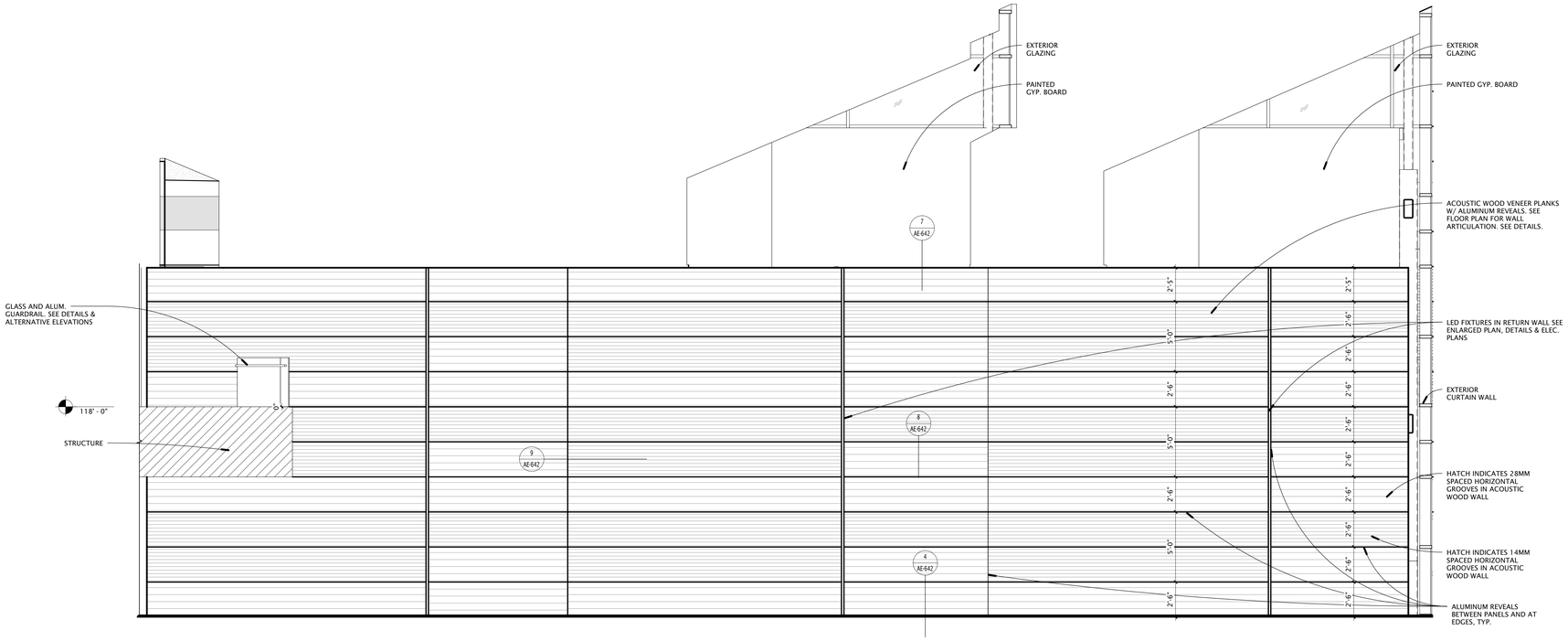

2 AE-508 ATRIUM SOUTH
1/4" = 1'-0"

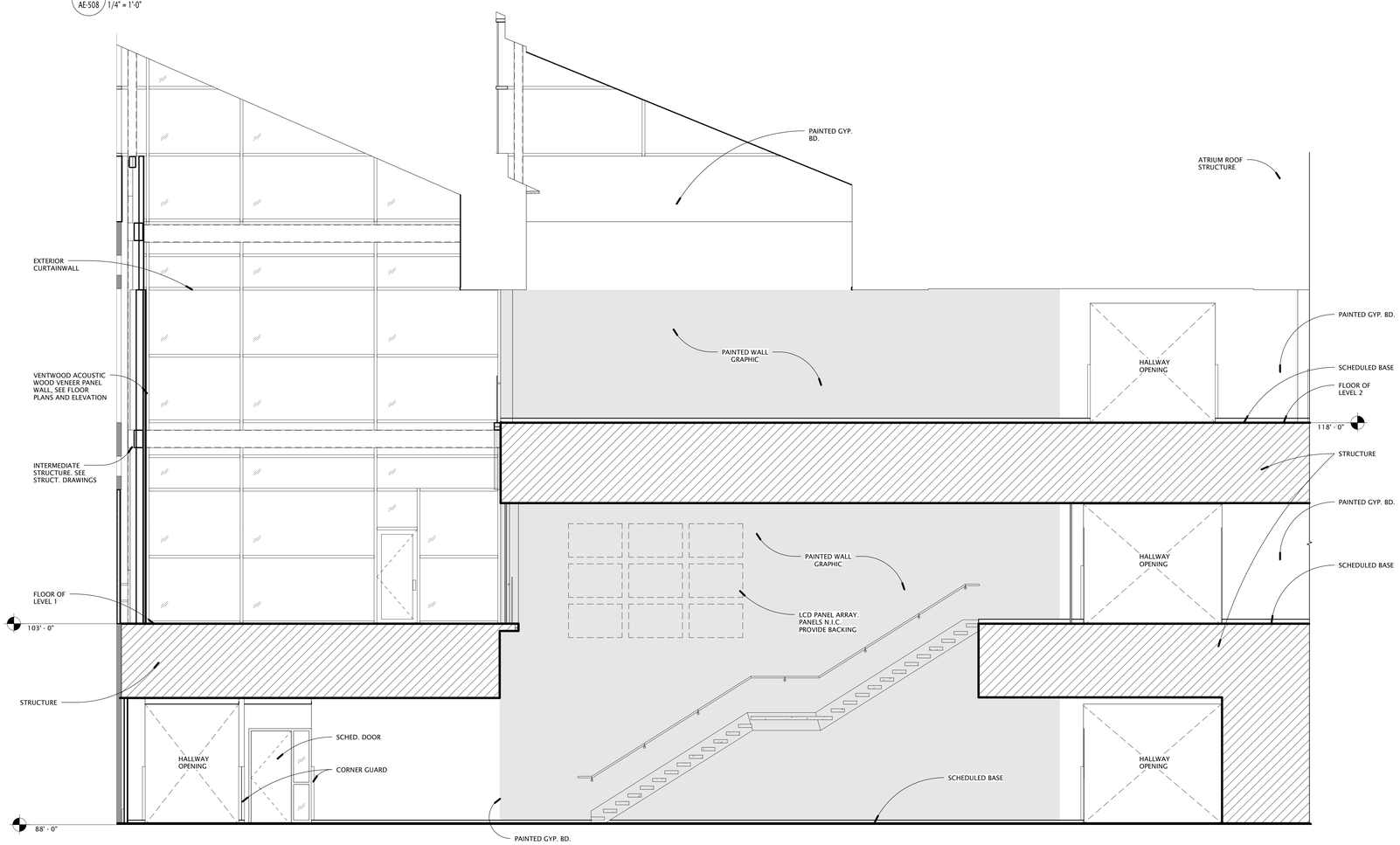

1 AE-508 ATRIUM WEST
1/4" = 1'-0"

GSBS ARCHITECTS
375 WEST 200 SOUTH
SALT LAKE CITY, UT 84101
P 801.521.8600
F 801.521.7915
www.gsbsarchitects.com

STATE OF UTAH
116302
LICENSED ARCHITECT

REVISIONS:

Utah Valley University New Science Building

800 West University Parkway
Orem, Utah 84058

Division of Facilities Construction and Management

DRAWN BY:	Author
CHECKED BY:	Checker
DFCM PROJECT NO.:	09020790
GSBS PROJECT NO.:	2009.115.00
ISSUED DATE:	05.07.2010

INTERIOR ELEVATIONS

CONSTRUCTION DOCUMENTS

AE-508

GSBS ARCHITECTS

375 WEST 200 SOUTH
SALT LAKE CITY, UT 84101

P 801.521.8600
F 801.521.7913

www.gsbsarchitects.com

STATE OF UTAH
116302
LICENSED ARCHITECT

REVISIONS:

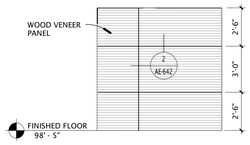

10 AE-509 AUDITORIUM WALL
1/4" = 1'-0"

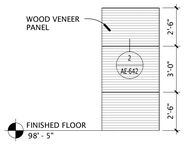

9 AE-509 AUDITORIUM WALL
1/4" = 1'-0"

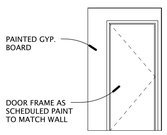

8 AE-509 AUDITORIUM WALL
1/4" = 1'-0"

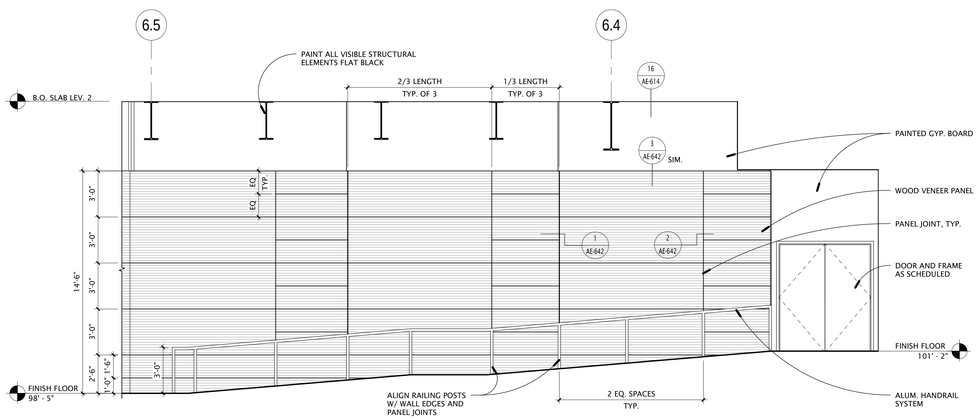

6 AE-509 AUDITORIUM EAST
1/4" = 1'-0"

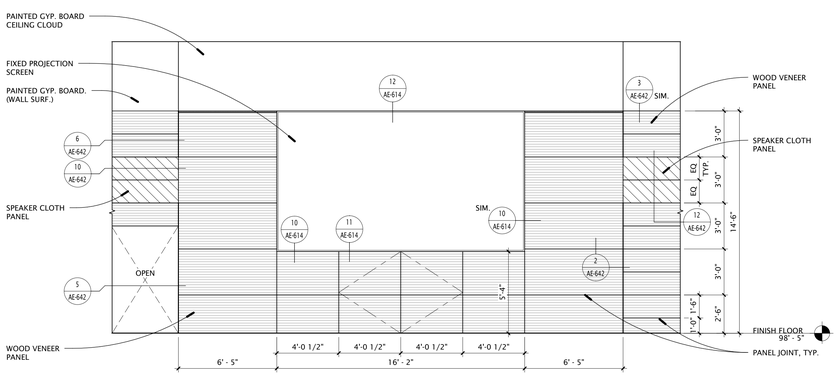

7 AE-509 AUDITORIUM NORTH EAST
1/4" = 1'-0"

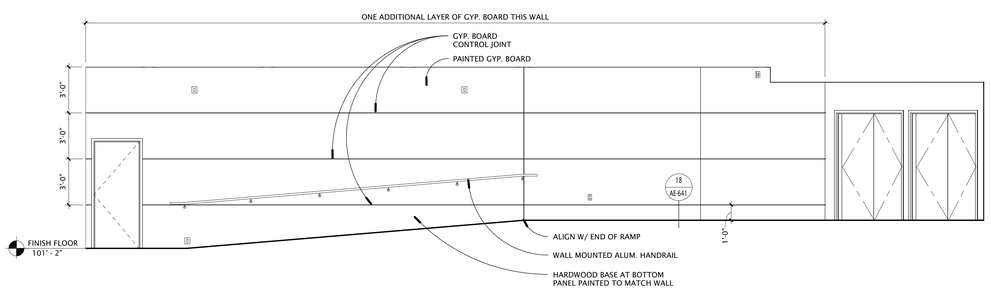

5 AE-509 AUDITORIUM SOUTH
1/4" = 1'-0"

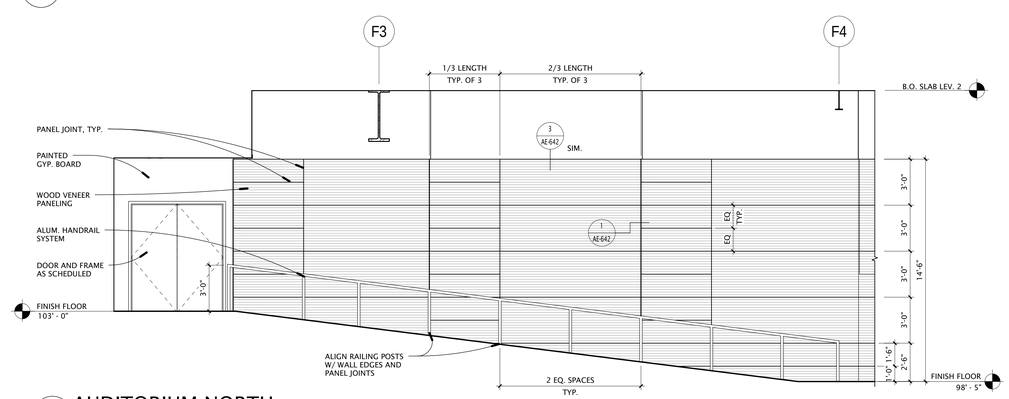

4 AE-509 AUDITORIUM NORTH
1/4" = 1'-0"

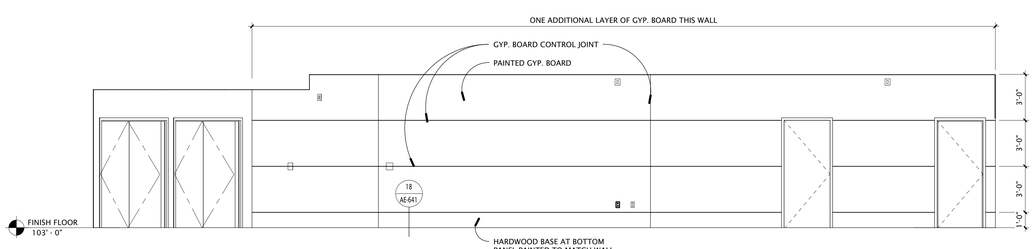

3 AE-509 AUDITORIUM WEST
1/4" = 1'-0"

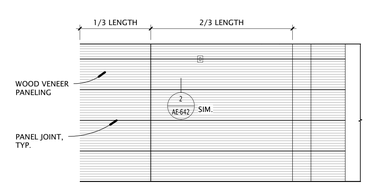

2 AE-509 AUDITORIUM WALL
1/4" = 1'-0"

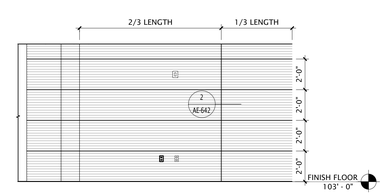

1 AE-509 AUDITORIUM WALL
1/4" = 1'-0"

Utah Valley University New Science Building

800 West University Parkway
Orem, Utah 84058

Division of Facilities Construction and Management

DRAWN BY:	Author
CHECKED BY:	Checker
DFCM PROJECT NO.:	09020790
GSBS PROJECT NO.:	2009.115.00
ISSUED DATE:	05.07.2010

INTERIOR ELEVATIONS

CONSTRUCTION DOCUMENTS

AE-509

BXUV.U438
Fire Resistance Ratings - ANSI/UL 263

Page Bottom

Design/System/Construction/Assembly Usage Disclaimer

- Authorities Having Jurisdiction should be consulted in all cases as to the particular requirements covering the installation and use of UL Listed or Classified products, equipment, system, devices, and materials.
- Authorities Having Jurisdiction should be consulted before construction.
- Fire resistance assemblies and products are developed by the design submitter and have been investigated by UL for compliance with applicable requirements. The published information cannot always address every construction nuance encountered in the field.
- When field issues arise, it is recommended the first contact for assistance be the technical service staff provided by the product manufacturer noted for the design. Users of fire resistance assemblies are advised to consult the general Guide Information for each product category and each group of assemblies. The Guide Information includes specifics concerning alternate materials and alternate methods of construction.
- Only products which bear UL's Mark are considered as Classified, Listed, or Recognized.

Fire Resistance Ratings - ANSI/UL 263

See General Information for Fire Resistance Ratings - ANSI/UL 263

Design No. U438

March 03, 2010

Nonbearing Wall Rating — 2 HR.

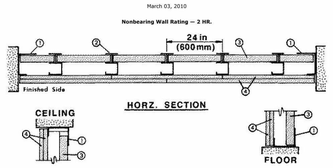

1. **Floor and Ceiling Runners —** "T"-shaped runner, 2-1/2 in. wide with unequal legs of 1 in. and 2 in., fabricated from 24 MSG galv steel (min 20 MSG when Item 4B is used). Runners positioned with short leg toward finished side of wall. Runners attached to structural supports with steel fasteners located not greater than 2 in. from ends and not greater than 24 in. OC.

2. **Steel Studs —** "C-H" -shaped studs, 2-1/2 in. wide by 1-1/2 in. deep, fabricated from 25 MSG galv steel (min 20 MSG when Item 4B is used). Cut to lengths 3/8 to 1/2 in. less than floor to ceiling height and spaced 24 in. or 600 mm OC.

2A. **Steel Studs —** (Not shown)-"E"-shaped studs installed in place of "C-H" -shaped studs (Item 2) to secure the closure liner panels at the ends of walls. Fabricated from 25 MSG galv steel (min 20 MSG when Item 4B is used), 2-1/2 in. wide,

with one leg 1 in. long and two legs 3/4 in. long. Shorter legs 1 in. apart to engage gypsum liner panels. Cut to lengths 3/8 in. less than floor to ceiling height. Sill and lintel of opening formed with "T" -shaped runners (Item 1) secured to "E" - shaped studs with angle clips and steel screws.

3. **Gypsum Board* —** 1 in. thick gypsum wallboard liner panels, supplied in nom 24 in. or 600 mm (for metric spacing) widths. Panels cut 1 in. less in length than floor to ceiling height. Vertical edges inserted in "H" -shaped section of "C-H" studs. Free edge of end panels attached to long leg of "J" -runners with 1-5/8 in. long Type S steel screws spaced not greater than 12 in. OC.

CANADIAN GYPSUM COMPANY — Type SLX.

UNITED STATES GYPSUM CO — Type SLX.

USG MEXICO S A DE C V — Type SLX.

4. **Gypsum Board* —** 1/2 in. thick, 4 ft. or 1200 mm (for metric spacing) wide wallboard applied vertically in two layers. Inner or base layer attached to studs with 1 in. long Type S steel screws spaced 24 in. OC along the edges and in the field of the boards. Outer or face layer attached to studs and J"T" -runners with 1-5/8 in. long Type S steel screws spaced 12 in. along the edges and in the field of the boards, staggered from screws in inner layer. Joints between inner and outer layers staggered.

Outer layer joints covered with paper tape and joint compound. Exposed screw heads covered with joint compound.

As an alternate method, inner wallboard layer applied vertically, outer wallboard layer applied horizontally. Inner layer attached to studs with 1 in. Type S steel screws spaced 24 in. OC along vertical edges and in the field. Outer layer attached to the studs and "T" runners over the inner layer with 1-5/8 in. long Type S steel screws spaced 12 in. OC in the field, along the vertical edges and to the floor and ceiling runners. Outer layer secured to inner layer wallboard with 1-1/2 in. long Type G steel screws located midway between studs and 1 in. from the horizontal joint.

AMERICAN GYPSUM CO — Types AG-C .

CERTAINTEED GYPSUM INC — Type FRPC, ProRoc Type C.

CERTAINTEED GYPSUM CANADA INC — ProRoc Type C.

CANADIAN GYPSUM COMPANY — Type C, IP-X2, or WRC.

GEORGIA-PACIFIC GYPSUM L L C — Types 5, DAPC.

LAFARGE NORTH AMERICA INC — Types LGFC-C, LGFC-C/A.

NATIONAL GYPSUM CO — Types FSK-C, FSW-C, FSMR-C.

PABCO BUILDING PRODUCTS L L C, DBA

PABCO GYPSUM — Types PG-C.

TEMPLE-INLAND — Type TG-C.

UNITED STATES GYPSUM CO — Type C, IP-X2 or WRC.

USG MEXICO S A DE C V — Type C, IP-X2 or WRC.

4A. **Gypsum Board* —** (As an alternate to Item 4) – Nom 5/8 in. thick gypsum panels with beveled, square or tapered edges, applied vertically or horizontally. Vertical joints centered over studs and staggered one stud cavity on opposite sides of studs. Vertical joints in adjacent layers (2-hr system) staggered one stud cavity. Horizontal edge joints and horizontal butt joints on opposite sides of studs need not be staggered or backed with steel framing. Horizontal edge joints and horizontal butt joints in adjacent layers (2-hr system) staggered a minimum of 12 in. For the single layer system, panels attached to steel studs and floor runner with 1 in. long Type S steel screws spaced 8 in. OC when applied horizontally, or 8 in. OC along vertical and bottom edges and 12 in. OC in the field when applied vertically. For the double layer system, base layer panels attached to steel studs and floor runner with 1 in. long Type S steel screws spaced 16 in. OC. Face layer panels attached to steel studs and floor runner with 1-5/8 in. long Type S steel screws spaced 16 in. OC.

CANADIAN GYPSUM COMPANY — Type AR, C, IP-AR, IP-X1, IP-X2, IPC-AR, SCX, SHX, WRC or WRX.

UNITED STATES GYPSUM CO — Type AR, C, FRX-G, IP-AR, IP-X1, IP-X2, IPC-AR, SCX, SHX, WRC or WRX.

USG MEXICO S A DE C V — Type AR, C, IP-AR, IP-X1, IP-X2, IPC-AR, SCX, SHX, WRC or WRX.

4B. **Gypsum Board* —** (Not Shown) - May be used in lieu of Items 4 or 4A for the base layer - Nom 5/8 in. thick lead backed gypsum panels with beveled, square or tapered edges, applied vertically. Vertical joints centered over studs and staggered min 1 stud cavity on opposite sides of studs. Wallboard secured to studs with 1-1/4 in. long Type S-12 steel screws spaced 8 in. OC at perimeter and 12 in. OC in the field. Lead batten strips (Item 6) required behind vertical joints.

RAY-BAR ENGINEERING CORP — Type RB-LBG

4C. **Gypsum Board* —** (As an alternate to Item 4, 4A, 4B) — 5/8 in. thick. Two layers installed as described in Item 4.

NATIONAL GYPSUM CO — Type FSMR-C.

5. **Batts and Blankets*** — (Optional) — (Not shown) — Mineral wool or glass fiber batts partially or completely filling stud cavity. Any mineral wool or glass fiber batt material bearing the UL Classification Marking as to Fire Resistance.

5A. **Fiber, Sprayed*** — As an alternate to Batts and Blankets (Item 5) — Spray applied cellulose fiber. The fiber is applied with water to completely fill the enclosed cavity in accordance with the application instructions supplied with the product. Nominal dry density of 3.0 lb/ft^3. Alternate application method: The fiber is applied with U.S. Greenfiber LLC Type AD100 hot melt adhesive at a nominal ratio of one part adhesive to 6.6 parts fiber to completely fill the enclosed cavity in accordance with the application instructions supplied with the product. Nominal dry density of 2.5 lb/ft^3.

U S GREENFIBER L L C — Cocoon2 Stabilized or Cocoon-FRM (Fire Rated Material)

5B. **Fiber, Sprayed*** — As an alternate to Batts and Blankets (Item 5) and Item 5A - Spray applied cellulose insulation material. The fiber is applied with water to interior surfaces in accordance with the application instructions supplied with the product. Applied to completely fill the enclosed cavity. Minimum dry density of 4.3 pounds per cubic ft.

NU-WOOL CO INC — Cellulose Insulation

5C. **Fiber, Sprayed*** — As an alternate to Batts and Blankets (Item 5) - Spray applied cellulose fiber. The fiber is applied with water to completely fill the enclosed cavity in accordance with the application instructions supplied with the product. The minimum dry density shall be 4.30 lb/ft^3.

INTERNATIONAL CELLULOSE CORP — Cellar-RL

6. **Lead Batten Strips** — For Use with Item 4B - (Not Shown) - Lead batten strips expanded behind vertical joints of lead backed gypsum wallboard (Item 4A) and optional at remaining stud locations. Strips, min 1-1/2 in. wide, max 10 ft long with a max thickness of 0.125 in. Strips placed on the interior face of studs and attached from the exterior face of the stud with two 1 in. long Type S-12 pan head steel screws, one at the top of the strip and one at the bottom of the strip. Lead batten strips to have a purity of 99.9% meeting the Federal specification QQ-L-201f, Grade "C".

6A. **Lead Discs or Tabs —** (Not Shown) - Used in lieu of or in addition to the lead batten strips (Item 6) or optional at other locations - Max 3/4 in. diam by max 0.125 in. thick lead discs compression fitted or adhered over steel screw heads

or max 1/2 in. by 1-1/4 in. by max 0.125 in. thick lead tabs placed on gypsum boards (Item 5) underneath screw locations prior to the installation of the screws. Lead discs or tabs to have a purity of 99.9% meeting the Federal specification QQ-L-201f, Grade "C".

*Bearing the UL Classification Mark

Last Updated on 2010-03-03

Questions? Notice of Disclaimer Page Top

Copyright © 2010 Underwriters Laboratories Inc.®

The appearance of a company's name or product in this database does not in itself assure that products so identified have been manufactured under UL's Follow-Up Service. Only those products bearing the UL Mark should be considered to be Listed and covered under UL's Follow-Up Service. Always look for the Mark on the product.

UL permits the reproduction of the material contained in the Online Certification Directory subject to the following conditions: 1. The Guide Information, Designs and/or Listings (files) must be presented in their entirety and in a non-misleading manner, without any manipulation of the data (or drawings). 2. The statement "Reprinted from the Online Certifications Directory with permission from Underwriters Laboratories Inc." must appear adjacent to the extracted material. In addition, the reprinted material must include a copyright notice in the following format: "Copyright © 2010 Underwriters Laboratories Inc.®"

An independent organization working for a safer world with integrity, precision and knowledge.

BXUV.U420
Fire Resistance Ratings - ANSI/UL 263

Page Bottom

Design/System/Construction/Assembly Usage Disclaimer

- Authorities Having Jurisdiction should be consulted in all cases as to the particular requirements covering the installation and use of UL Listed or Classified products, equipment, system, devices, and materials.
- Authorities Having Jurisdiction should be consulted before construction.
- Fire resistance assemblies and products are developed by the design submitter and have been investigated by UL for compliance with applicable requirements. The published information cannot always address every construction nuance encountered in the field.
- When field issues arise, it is recommended the first contact for assistance be the technical service staff provided by the product manufacturer noted for the design. Users of fire resistance assemblies are advised to consult the general Guide Information for each product category and each group of assemblies. The Guide Information includes specifics concerning alternate materials and alternate methods of construction.
- Only products which bear UL's Mark are considered as Classified, Listed, or Recognized.

Fire Resistance Ratings - ANSI/UL 263

See General Information for Fire Resistance Ratings - ANSI/UL 263

Design No. U420

February 18, 2010

Nonbearing Wall Rating — 1 or 2 HR.

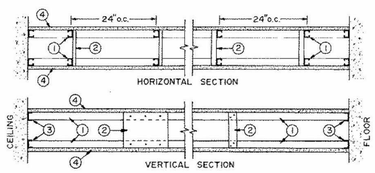

1. **Studs —** Channel shaped, min. 1 5/8 in. depth. Fabricated from No. 25 MSG galv steel. Studs to be cut 1/4 in. less than assembly height.

1A. **Framing Members* — Steel Studs —** As an alternate to Item 1 for a 2 hour rating only - For use with Item 3A, channel shaped studs, min 1-5/8 in. wide, spaced a max of 24 in. OC. Studs to be cut 3/4 in. less than assembly height.

CLARKWESTERN BUILDING SYSTEMS INC — CW ProSTUD

DIETRICH INDUSTRIES INC — DIETRICH ProSTUD

DMFCWBS L L C — ProSTUD

2. **Bracing —** Cut from the steel runners, min. 4-1/4 in. long, fastened to the studs with two No. 8 by 1/2 in. long self-drilling, self-tapping steel screws in each stud. As an alternate, but limits the stud cavity depth to maximum 9-1/2 in., cut from the gypsum wallboard, 9-1/2 in. long and 12 in. wide, fastened to the studs with three Type S wallboard screws in each stud. Vertical spacing of bracing not to exceed 48 in. OC.

3. **Floor and Ceiling Runners —** Channel — shaped 1 5/8 in. wide with 1 in. legs, fabricated from No. 25 MSG galv steel. Attached to floor and ceiling with fasteners spaced 24 in. OC.

3A. **Framing Members* — Floor and Ceiling Runners —** (Not shown) — As an alternate to Item 3 for a 2 hour rating only - For use with Item 1A, channel shaped, min 1-5/8 in. wide, attached to floor and ceiling with fasteners 24 in. OC. max.

CLARKWESTERN BUILDING SYSTEMS INC — CW ProTRAK

DIETRICH INDUSTRIES INC — DIETRICH ProTRAK

DMFCWBS L L C — ProTRAK

4. **Gypsum Board* —** Any 5/8 in. thick gypsum board for fire resistance Classified with beveled, square, or tapered edges.

For 1 Hr Rating — One layer of gypsum board to be used. Applied vertically with joints centered over studs. Fastened to studs with 1 in. long, Type S, gypsum board screws spaced 8 in. OC at the joints, located 3/8 in. from the edges, and 12 in. OC in the field. Fasteners to be spaced 8 in. OC at the runners.

For 2 Hr Rating — Two layers of gypsum board to be used. The inner layer to be applied in the same manner as for the 1 Hr Rating. The outer layer to be fastened to the studs (through the inner layer) using 1 5/8 in. long, Type S, wallboard screws spaced 8 in. OC at the joints, located 3/8 in. from the edges and 12 in. OC in the field.

Fasteners to be spaced 8 in. OC at the runners. Joints to be staggered 24 in. from the inner layer.

See Gypsum Board (CKNX) category for names of manufacturers.

BXUV.U419
Fire Resistance Ratings - ANSI/UL 263

Page Bottom

Design/System/Construction/Assembly Usage Disclaimer

- Authorities Having Jurisdiction should be consulted in all cases as to the particular requirements covering the installation and use of UL Listed or Classified products, equipment, system, devices, and materials.
- Authorities Having Jurisdiction should be consulted before construction.
- Fire resistance assemblies and products are developed by the design submitter and have been investigated by UL for compliance with applicable requirements. The published information cannot always address every construction nuance encountered in the field.
- When field issues arise, it is recommended the first contact for assistance be the technical service staff provided by the product manufacturer noted for the design. Users of fire resistance assemblies are advised to consult the general Guide Information for each product category and each group of assemblies. The Guide Information includes specifics concerning alternate materials and alternate methods of construction.
- Only products which bear UL's Mark are considered as Classified, Listed, or Recognized.

Fire Resistance Ratings - ANSI/UL 263

See General Information for Fire Resistance Ratings - ANSI/UL 263

Design No. U419

February 18, 2010

Nonbearing Wall Ratings — 1, 2, 3 or 4 Hr (See Items 4 & 5)

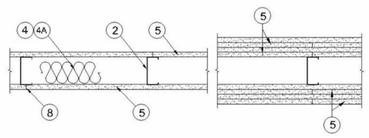

1. **Floor and Ceiling Runners —** (Not shown) — For use with Item 2 - Channel shaped, fabricated from min 25 MSG corrosion-protected steel, min depth to accommodate stud size, with min 1-1/4 in. long legs, attached to floor and ceiling with fasteners 24 in. OC max.

1A. **Framing Members* - Floor and Ceiling Runners —** Not shown - In lieu of Item 1 — For use with Item 2A, proprietary channel shaped, min. 3 5/8 in. depth, fabricated from min. 0.015 in. (min bare metal thickness) galvanized steel, attached to floor and ceiling with fasteners 24 in. OC max. Effective thickness is 0.034 in.

CLARKWESTERN BUILDING SYSTEMS INC — UltraSTEEL®

DIETRICH INDUSTRIES INC — UltraSTEEL®.

1B. **Framing Members* - Floor and Ceiling Runners —** (Not shown - In lieu of Item 1) — For use with Item 2A, proprietary channel shaped, min. 2-1/2 in. deep, fabricated from min. 0.015 in. (min bare metal thickness) galvanized steel, attached to floor and ceiling fasteners 24 in. OC max. Effective thickness is 0.034 in.

CLARKWESTERN BUILDING SYSTEMS INC — UltraSTEEL®

DIETRICH INDUSTRIES INC — UltraSTEEL®.

1C. **Framing Members* - Floor and Ceiling Runner —** Not shown - In lieu of Item 1 — For use with Item 2C, proprietary channel shaped runners, 3-5/8 in. deep attached to floor and ceiling with fasteners 24 in. OC max.

CALIFORNIA EXPANDED METAL PRODUCTS CO — ViperTrack™

CRACO MFG INC — SmartTrack™

MARINO\WARE A DIV OF WARE INDUSTRIES

INC — Viper25™ Track

1D. **Framing Members* - Floor and Ceiling Runner —** Not shown - In lieu of Item 1 — For use with Item 2D, proprietary channel shaped runners, 1-1/4 in. wide by 3-5/8 in. deep fabricated from min 0.020 in. thick galv steel, attached to floor and ceiling with fasteners spaced 24 in. OC max.

MARINO\WARE A DIV OF WARE INDUSTRIES

INC — Viper20S™ Track, Viper20D™ Track

1E. **Framing Members*— Floor and Ceiling Runners —** (Not shown) — In lieu of Item 1 - Channel shaped, attached to floor and ceiling with fasteners 24 in. OC. max.

ALLSTEEL & GYPSUM PRODUCTS INC — Type SUPREME Framing System

CONSOLIDATED FABRICATORS CORP,

BUILDING PRODUCTS DIV — Type SUPREME Framing System

QUAIL RUN BUILDING MATERIALS INC — Type SUPREME Framing System

SCAFCO STEEL STUD MANUFACTURING CO — Type SUPREME Framing System

STEEL CONSTRUCTION SYSTEMS INC — Type SUPREME Framing System

2F. **Framing Members*— Steel Studs —** (Not shown, As an alternate to Item 2) —For use with Item 1G and 5F or SG only, channel shaped studs, min depth as indicated under Item 5F, fabricated from min. 0.015 in. (min bare metal thickness) galvanized steel, spaced a max of 24 in. OC. Studs to be cut 3/4 in. less than assembly height.

CLARKWESTERN BUILDING SYSTEMS INC — CW ProSTUD

DIETRICH INDUSTRIES INC — DIETRICH ProSTUD

DMFCWBS L L C — ProSTUD

2G. **Framing Members* - Metal Studs —** Not shown - In lieu of Item 2 — For use with Item 1H, proprietary channel shaped steel studs, minimum width indicated under Item 5, 1-1/4 in. deep fabricated from min 0.015 in. (min bare metal thickness) galvanized steel. Studs 3/8 in. to 3/4 in. less in lengths than assembly heights.

SUPER STUD BUILDING PRODUCTS — The Edge

3. **Wood Structural Panel Sheathing —** (Optional, For use with Item 5 Only.)- (Not Shown) - 4 ft wide, 7/16 in. thick oriented strand board (OSB) or 15/32 in. thick structural 1 sheathing (plywood) complying with DOC PS1 or PS2, or APA Standard PRP-108, manufactured with exterior glue, applied horizontally or vertically to the steel studs. Vertical joints centered on studs, and staggered one stud space from wallboard joints. Attached to studs with flat-head self-drilling tapping screws with a min. head diam. of 0.292 in. at maximum 6 in. OC. in the perimeter and 12 in. OC. in the field. When used, fastener lengths for gypsum panels increased by min. 1/2 in.

4. **Batts and Blankets* —** (Required as indicated under Item 5) — Mineral wool batts, friction fitted between studs and runners. Min nom thickness as indicated under Item 5. See **Batts and Blankets (BKNV or BZJZ) Categories** for names of Classified companies.

4A. **Batts and Blankets* —** (Optional) — Placed in stud cavities, any glass fiber or mineral wool insulation bearing the UL Classification Marking as to Surface Burning Characteristics and/or Fire Resistance. See **Batts and Blankets (BKNV or BZJZ) Categories** for names of Classified companies.

5. **Gypsum Board* —** Gypsum panels with beveled, square or tapered edges, applied vertically or horizontally. Vertical joints centered over studs and staggered one stud cavity on opposite sides of studs. Vertical joints in adjacent layers (multilayer systems) staggered one stud cavity. Horizontal joints need not be backed by steel framing. Horizontal edge joints and horizontal butt joints on adjacent layers (multilayer systems) staggered a min of 12 in. The thickness and number of layers for the 1 hr, 2 hr, 3 hr and 4 hr ratings are as follows:

Gypsum Board Protection on Each Side of Wall

Rating, Hr	Min Stud Depth, in. Items 2, 2E, and 2G	Min Stud Depth, in. Item 2A	No. of Layers & Thkns of Panel	Min Thkns of Insulation (Item 4)
1	3-1/2	3-5/8	1 layer, 5/8 in. thick	Optional
1	2-1/2	3-5/8	1 layer, 1/2 in. thick	1-1/2 in.
1	1-5/8	3-5/8	1 layer, 3/4 in. thick	Optional
2	1-5/8	2-1/2	2 layers, 1/2 in. thick	Optional
2	1-5/8	2-1/2	2 layers, 5/8 in. thick	Optional
2	3-1/2	3-5/8	1 layer, 3/4 in. thick	3 in.
3	1-5/8	2-1/2	3 layers, 1/2 in. thick	Optional
3	1-5/8	2-1/2	2 layers, 3/4 in. thick	Optional
3	1-5/8	2-1/2	3 layers, 5/8 in. thick	Optional
4	1-5/8	2-1/2	4 layers, 5/8 in. thick	Optional
4	1-5/8	2-1/2	4 layers, 1/2 in. thick	Optional
4	2-1/2	2-1/2	2 layers, 3/4 in. thick	2 in.

CANADIAN GYPSUM COMPANY — 1/2 in. thick Type C, IP-X2 or IPC-AR; WRC, 5/8 in. thick Type AR, C, IP-AR, IP-X1, IP-X2, IPC-AR, SCX, SHX, WRX or WRC; 3/4 in. thick Types IP-X3 or ULTRACODE

UNITED STATES GYPSUM CO — 1/2 in. thick Type C, IP-X2, IPC-AR or WRC; 5/8 in. thick Type SCX, SHX, WRX, IP-X1, AR, C, WRC, FRX-G, IP-AR, IP-X2, IPC-AR ; 3/4 in. thick Types IP-X3 or ULTRACODE

USG MEXICO S A DE C V — 1/2 in. thick Type C, IP-X2, IPC-AR or WRC; 5/8 in. thick Type AR, C, IP-AR, IP-X1, IP-X2, IPC-AR, SCX, SHX, WRX, WRC or; 3/4 in. thick Types IP-X3 or ULTRACODE

When Item 7B, Steel Framing Members*, is used, Nonbearing Wall Rating is limited to 1 Hr. Min. stud depth is 3-1/2 in., min. thickness of insulation (Item 4) is 3 in., and two layers of gypsum board panels (1/2 in. or 5/8 in. thick) shall be attached to furring channels as described in Item 6. One layer of gypsum board panels (1/2 in. or 5/8 in. thick) attached to opposite side of stud without furring channels as described in Item 6.

5A. **Gypsum Board* —** (As an alternate to Item 5) — 5/8 in. thick, 24 to 54 in. wide, applied horizontally as the outer layer to one side of the assembly. Secured as described in Item 6.

CANADIAN GYPSUM COMPANY — Type SHX.

UNITED STATES GYPSUM CO — Type FRX-G, SHX.

USG MEXICO S A DE C V — Type SHX.

5B. **Gypsum Board* —** (Not Shown) - As an alternate to Item 5 when used as the base layer on one or both sides of wall when 5/8 in or ¼ in. thick products are specified. For direct attachment only to steel studs Item 2B, (not to be used with Item 3) - Nom 5/8 in. or ¼ in. may be used as alternate to all 5/8 in. or ¼ in. shown in Item 5, Wallboard Protection on Each Side of Wall table. Nom 5/8 in. or ¼ in. thick lead backed gypsum panels with beveled, square or tapered edges, applied vertically. Vertical joints centered over studs and staggered min 1 stud cavity on opposite sides of studs. Gypsum board secured to 2B steel studs Item 2B with 1-1/4 in. long Type S-12 steel screws spaced 8 in. OC at perimeter and 12 in. OC in the field. To be used with Lead Batten Strips (see Item 11) or Lead Discs or Tabs (see Item 12).

RAY-BAR ENGINEERING CORP — Type RB-LBG

5C. **Gypsum Board* —** (For Use With Item 2C) Rating Limited to 1 Hour. 5/8 in. thick, 48 in. wide, Gypsum panels with beveled, square or tapered edges, applied vertically or horizontally. (Vertical Application) - The gypsum board is to be installed on each side of the studs with 1 in. long Type S coated steel screws spaced 8 in. OC starting 4 in. from the edge of the board at the vertical edges and 12 in. OC starting 6 in. from the edge of the board at the center of each board. Gypsum boards are to be secured to the top and bottom track with screws spaced 8 in. OC starting 4 in. from the board edge. Fasteners shall not penetrate through both the stud and the track at the same time. Vertical joints are to be centered over studs and staggered one stud cavity on opposite sides of studs. (Horizontal Application) - The gypsum board is to be installed on each side of the studs with 1 in. long Type S coated steel screws spaced 8 in. OC starting 4 in. from the edge of the board at the vertical edges and 12 in. OC starting 6 in. from the edge of the board at the center of each board. Gypsum boards are to be secured to the top and bottom track with screws spaced 8 in. OC starting 4 in. from the board edge.

intersecting stud with 1/2 in. long Type S-12 steel screws. Not for use with Item 5A and 5E.

7A. **Framing Members* —** (Not Shown) — (Optional on one or both sides, not shown, for single or double layer systems) — As an alternate to Item 7, furring channels and Steel Framing Members as described below:

a. **Furring Channels —** Formed of No. 25 MSG galv steel. 2-3/8 in. wide by 7/8 in. deep, spaced max. 24 in. OC perpendicular to studs. Channels secured to studs as described in Item b. Gypsum board attached to furring channels as described in Item 6. Not for use with Item 5A and 5E.

b. **Steel Framing Members* —** Used to attach furring channels (Item 7Aa) to studs (Item 2). Clips spaced max. 48 in. OC. RSIC-1 clips secured to studs with No. 8 x 1-1/2 in. minimum self-drilling, S-12 steel screw through the center grommet. RSIC-V clips secured to studs with No. 8 x 9/16 in. minimum self-drilling, S-12 steel screw through the center hole. Furring channels are friction fitted into clips.

PAC INTERNATIONAL INC — Types RSIC-1, RSIC-V.

7B. **Framing Members* —** (Optional, Not Shown) — As an alternate to Item 7, for single or double layer systems, furring channels and Steel Framing Members on only one side of studs as described below:

a. **Furring Channels —** Formed of No. 25 MSG galv steel, spaced 24 in. OC perpendicular to studs. Channels secured to studs as described in Item b. Batts and Blankets placed in stud cavity as described in Item 5. Two layers of gypsum board attached to furring channels as described in Item 5. Not for use with Item 5A and 5E.

b. **Steel Framing Members* —** Used to attach furring channels (Item 7Ba) to one side of studs (Item 2) only. Clips spaced 48 in. OC., and secured to studs with two No. 8 x 2-1/2 in. coarse drywall screws, one through the hole at each end of the clip. Furring channels are friction fitted into clips.

KINETICS NOISE CONTROL INC — Type Isomax

7C. **Framing Members* —** Optional - Not Shown - Used as an alternate method to attach resilient channels (Item 7). Clips attached at each intersection of the resilient channel and the steel studs (Item 2). Resilient channels are friction fitted into clips, and then clips are secured to the steel stud with min. 1 in. long Type S-12 steel screws through the center hole of the clip and the resilient channel flange.

KEENE BUILDING PRODUCTS CO INC — Type RC Assurance.

8. **Joint Tape and Compound —** Vinyl or casein, dry or premixed joint compound applied in two coats to joints and screw heads of outer layers. Paper tape, nom 2 in. wide, embedded in first layer of compound over all joints of outer layer panels. Paper tape and joint compound may be omitted when gypsum panels are supplied with a square edge.

9. **Siding, Brick or Stucco —** (Optional, not shown) — Aluminum, vinyl or steel siding, brick veneer or stucco, meeting the requirements of local code agencies, installed over gypsum panels. Brick veneer attached to studs with corrugated metal wall ties attached to each stud with steel screws, not more than each sixth course of brick.

10. **Caulking and Sealants* —** (Optional, not shown) — A bead of acoustical sealant applied around the partition perimeter for sound control.

UNITED STATES GYPSUM CO — Type AS

11. **Lead Batten Strips —** (Not Shown, For Use With Item 5B) - Lead batten strips, min 1-1/2 in. wide, max 10 ft long with a max thickness of 0.125 in. Strips placed on the interior face of studs and attached from the exterior face of the stud with two 1 in. long Type S-12 pan head steel screws, one at the top of the strip and one at the bottom of the strip. Lead batten strips to have a purity of 99.9% meeting the Federal specification QQ-L-201f, Grade "C". Lead batten strips required behind vertical joints of lead backed gypsum wallboard (Item 5B) and optional at remaining stud locations. Required behind vertical joints.

12. **Lead Discs or Tabs —** (Not Shown, For Use With Item 5B) - Used in lieu of or in addition to the lead batten strips (Item 11) or optional at other locations - Max 3/4 in. diam by max 0.125 in. thick lead discs compression fitted or adhered over steel screw heads or max 1/2 in. by 1-1/4 in. by max 0.125 in. thick lead tabs placed on gypsum boards (Item 5B) underneath screw locations prior to the installation of the screws. Lead discs or tabs to have a purity of 99.9% meeting the Federal specification QQ-L-201f, Grade "C".

13. **Lead Batten Strips —** (Not Shown, For Use With Item 5E) Lead batten strips, 2 in. wide, max 10 ft long with a max thickness of 0.142 in. Strips placed on the face of studs and attached to the stud with two min. 1 in. long min. Type S-8 pan head steel screws, one at the top of the strip and one at the bottom of the strip or with one min. 1 in. long min. Type S-8 pan head steel screw at the top of the strip. Lead batten strips to have a purity of 99.9% meeting the Federal specification QQ-L-201f, Grade "C". Lead batten strips required behind vertical joints of lead backed gypsum wallboard

(Item 5E) and optional at remaining stud locations.

14. **Lead Tabs —** (Not Shown, For Use With Item 5E) 2 in. wide, 5 in. long with a max thickness of 0.142 in. Tabs friction-fit around front face of stud, the stud folded back flange, and the back face of the stud. Tabs required at each location where a screw (that secures the gypsum boards, Item 5E) will penetrate the lead stud. Lead tabs to have a purity of 99.9% meeting the Federal specification QQ-L-201f, Grade "C". Lead tabs may be held in place with standard adhesive tape if necessary.

*Bearing the UL Classification Mark

Last Updated on 2010-02-18

Questions? Notice of Disclaimer Page Top

Copyright © 2010 Underwriters Laboratories Inc.®

The appearance of a company's name or product in this database does not in itself assure that products so identified have been manufactured under UL's Follow-Up Service. Only those products bearing the UL Mark should be considered to be Listed and covered under UL's Follow-Up Service. Always look for the Mark on the product.

UL permits the reproduction of the material contained in the Online Certification Directory subject to the following conditions: 1. The Guide Information, Designs and/or Listings (files) must be presented in their entirety and in a non-misleading manner, without any manipulation of the data (or drawings). 2. The statement "Reprinted from the Online Certifications Directory with permission from Underwriters Laboratories Inc." must appear adjacent to the extracted material. In addition, the reprinted material must include a copyright notice in the following format: "Copyright © 2010 Underwriters Laboratories Inc.®"

An independent organization working for a safer world with integrity, precision and knowledge.

GSBS ARCHITECTS

375 WEST 200 SOUTH
SALT LAKE CITY, UT 84101

P 801.521.8600
F 801.521.7913

www.gsbsarchitects.com

STATE OF UTAH
116302
LICENSED ARCHITECT

REVISIONS:

Utah Valley University New Science Building

800 West University Parkway
Orem, Utah 84058

Division of Facilities Construction and Management

DRAWN BY:	Author
CHECKED BY:	Checker
DFCM PROJECT NO.:	09020790
GSBS PROJECT NO.:	2009.115.00
ISSUED DATE:	05.07.2010

REFERENCED ASSEMBLIES

CONSTRUCTION DOCUMENTS

AE-531

System No. CEJ-264-P

PERIMETER FIRE BARRIER SYSTEM
T-RATING - 1 HR.
F-RATING - 2 HR.
L-RATING < 1 SCFM/LF

CEJ 264 P

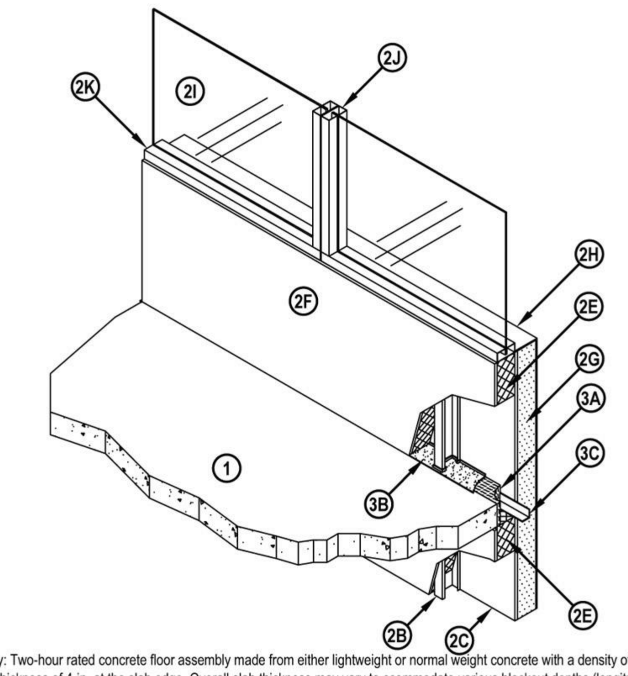

1. Concrete Floor Assembly: Two-hour rated concrete floor assembly made from either lightweight or normal weight concrete with a density of 100-150 pcf, with a min. thickness of 4-in. at the slab edge. Overall slab thickness may vary to ccommodate various blockout depths (longitudinal recesses) formed in the concrete, to house the architectural cover plate. The blockout width may also vary without restriction.
2. Curtain Wall Assembly: The curtain wall assembly shall incorporate the following construction features:
   A. Mounting Attachment: (Not shown) Attachment of the curtain wall framing to the structural framing shall be according to the curtain wall manufacturer's instructions. When required, the mounting attachments to the floor slab shall be connected to the adjacent face of the floor slab, according to the curtain wall manufacturer's instructions. Max. distance between mounting attachments shall be 10 feet.
   B. Steel-Stud Framing: Vertical framing members shall be a min. 3-5/8 in. by 1-5/8 in., 18 GA steel "C" studs secured in an 18 GA steel track top and bottom using #6 x 1.25-inch Bugle head SD PT screws. Vertical framing shall not exceed a spacing of 24 in. o.c.
   C. Sandwiched Wall Surface: Use a min. 1/2 in. thick, 48 in. wide by 96 in. long, exterior grade gypsum wallboard (ASTM C 79), cement board, or fiberglass sheathed gypsum wallboard placed over and secured to framing with min. 1-1/4 in. long Type S drywall screws 8 in. o.c.

   D. Curtain Wall Insulation: (Optional - Not Shown) A faced or un-faced mineral wool or fiberglass** batt insulation installed in each stud cavity in accordance with manufacturer's instructions. (** Listed with Omega Point Laboratories)
   E. Barrier Insulation: Use a nom. 24-in wide by 4 in. thick min. 4 pcf faced or un-faced mineral wool** batt insulation cut to size as required. Install barrier insulation in each stud cavity so that min. 32-inches of barrier insulation is above the top surface of the slab and a min. of 24-in. is below the bottom surface of the slab. Barrier insulation length is min. 24-in. and fitted tightly between vertical framing members filling all studs. Seal all butt joints of barrier insulation with min. 4-in. wide aluminum foil faced tape. The curtain wall insulation shall completely fill the recess of the min. 3-5/8 in. by 1-5/8 in., 18 GA steel "C" studs. (** Listed with Omega Point Laboratories)
   F. Interior Curtain Wall Surface: Apply after Perimeter Cavity Protection (3) is installed. Use a min. 1/2 in. thick, 48 in. wide by 96 in. long, Type X gypsum wallboard (ASTM C 36), placed over and secured to framing with #6 by 1-1/4-in. long Type S drywall screws 8 in. o.c. on the periphery and 12 in. o.c. in the field. Screw heads are covered with joint compound. Joints created between gypsum wallboard are taped and floated with joint compound. Gypsum wallboard only required to be continuously placed a min. 32 in. above the top surface of the slab. Gypsum wallboard below the slab is optional.
   G. Exterior Curtain Wall Insulation: An Exterior Insulation Finish System (EIFS) is composed of an expanded polystyrene foam (EPS) insulation, and a Exterior Curtain Wall Finish (2H). The EIFS system is a monolithic assembly without expansion or control joints. The EPS foam boards measure 24 inches wide by 48 inches long by 4 inches thick with a nominal density of 1 pcf. The EPS foam is attached to the sandwiched wall surface using mechanical fasteners or an adhesive in accordance with manufacturer's recommendations. Install the EPS boards in a running bond (brick-like) pattern and staggered over sandwiched wall surface (2C) joints. Apply pressure to the EPS boards to assist in the bonding process. All EPS boards must be butted together with no gaps or voids between them. Allow a minimum of 12 hours before continuing the application process when using adhesive. The EPS boards must be rasped to remove all irregular seams and establish a continuous flat surface.
   H. Exterior Curtain Wall Finish: The plaster base coat and reinforcing mesh is applied over the Exterior Curtain Wall Insulation (2G). Precut the mesh as needed. The mesh is a woven fiberglass reinforcement fabric that is compatible with the plaster base coat and finish coat materials. Apply 1/16 to 1/8-inch thick plaster base coat to the exposed surface of the EPS foam. Apply the mesh; embed the mesh into the plaster base coat using a trowel. Start at the middle and work outwards towards edges. The final thickness of the plaster base coat with the mesh embedded should be approximately 1/16-inches. Let the base coat dry completely before applying the plaster finish coat. The plaster finish coat is a gypsum based wall coating which may contain silica sand or marble aggregates. Apply the plaster finish coat using a trowel in the same manner as the plaster base coat.
   I. Glass Vision Panels: Glass vision panels shall be a min. 35-1/2 in. above the top surface of the floor assembly. Glass vision panels shall be installed to curtain wall framing according to the curtain wall system manufacturer's guidelines. Use a min. 1/4 in. thick, clear tempered glass with a nom. width of 59 in. and height of 71 in.
   J. Window Gaskets: Secure glass vision panels with a thermal break (thermal-set rubber extrusion).
   K. Window Framing: Steel framing members shall be a min. 3-5/8-in. by 1-5/8-in. 18 GA steel "U" channel or similar construction that is compatible with steel-stud framing (2b). Locate window framing at least 35 in. above the top surface of the floor assembly.
3. Perimeter Cavity Protection: The perimeter cavity (any void between the edge of the floor slab and the interior surface of the sandwiched wall (2C) shall not exceed an 8- in. nom. dimension and the perimeter cavity treatment shall incorporate the following construction features:
   A. Packing Material: Use a min. 4 in. thick, 4 pcf density, mineral wool** batt insulation installed with the fibers running parallel to the slab edge and curtain wall. The packing material shall be compressed 33% in the cavity. Compress the batt insulation into the perimeter cavity such that the top surface of the batt insulation is flush with the top surface of the concrete floor slab. Splices (butt joints) in the lengths of mineral wool batt insulation are to be tightly compressed together, min. compression 0.25-in. per piece. Notch packing material to receive support angle (3C) so that packing material is in contact with Sandwiched Wall Surface (2C). Reference the Introduction to Fire Resistive Joint Systems Section of this Directory for more details on how to determine the compressed percentage of a known insulation width installed in a known nominal joint width and use the same formula for the compressed percentage in the cavity. (** Listed with Omega Point Laboratories)

   B. Fill, Void or Cavity Material: Liquid is to be applied (sprayed, Brushed, or painted) to cover the entire horizontal top surface of the mineral wool installed in the perimeter cavity. Apply a min. 1/8-in. wet (min. 1/16-in. dry) film thickness and overlap the material a min. 1/2 in. onto the Sandwiched Wall Surface (2C) and Concrete Floor Assembly (1). If the spraying process is stopped and the applied liquid cures to an elastomeric film before process is restarted, then overlap the edge of the cured material at least 1/8 in. with the spray. Reference Product Section of this Directory for more details about the Listed product.
   Listed Manufacturer: HILTI, INC. - Joint Sealant Spray CP 672 Speed Spray
   C. Support Angle: Standard 1-1/2 x 1-1/2-in. min. 20 GA galvanized steel angle attached between all studs with self tapping self drilling screws. Set angle at mid height of Packing Material (3A).

XHBN.HW-S-0029
Joint Systems

Page Bottom

Design/System/Construction/Assembly Usage Disclaimer

- Authorities Having Jurisdiction should be consulted in all cases as to the particular requirements covering the installation and use of UL Listed or Classified products, equipment, system, devices, and materials.
- Authorities Having Jurisdiction should be consulted before construction.
- Fire resistance assemblies and products are developed by the design submitter and have been investigated by UL for compliance with applicable requirements. The published information cannot always address every construction nuance encountered in the field.
- When field issues arise, it is recommended the first contact for assistance be the technical service staff provided by the product manufacturer noted for the design. Users of fire resistance assemblies are advised to consult the general Guide Information for each product category and each group of assemblies. The Guide Information includes specifics concerning alternate materials and alternate methods of construction.
- Only products which bear UL's Mark are considered as Classified, Listed, or Recognized.

Joint Systems

See General Information for Joint Systems

System No. HW-S-0029

August 03, 2001

Assembly Rating — 2 Hr

L Rating At Ambient — Less Than 1 CFM/Lin Ft

L Rating At 400 F — Less Than 1 CFM/Lin Ft

Joint Width — 1 in. Max

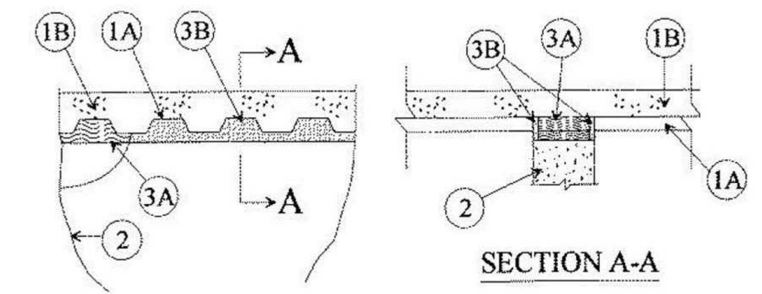

1. **Floor Assembly —** The fire-rated fluted steel deck/concrete floor assembly shall be constructed of the materials and in the manner described in the individual Floor-Ceiling Design in the UL Fire Resistance Directory and shall include the following construction features:

A. **Steel Floor And Form Units* —** Composite or noncomposite max 3 in. deep min 22 ga galv or phos/painted fluted units. Adjacent units button-punched or welded together max 36 in. OC along side joints.

B. **Normal Weight or Light Weight Concrete —** Min 2-1/2 in. thick concrete of the type, density, and compressive strength detailed for the specific Floor-Ceiling Design described in the UL Fire Resistance Directory.

2. **Wall Assembly —** Min 4-1/2 in. thick reinforced lightweight or normal weight (100-150 pcf) structural concrete. Wall may also be constructed of any UL Classified **Concrete Blocks*.**

See **Concrete Blocks** (CAZT) category in the Fire Resistance Directory for names of manufacturers.

3. **Joint System —** Max separation between bottom of floor and top of wall is 1 in. The joint system consists of a packing material and a fill material in the flutes of the steel floor units and between the top of the wall and bottom of the steel floor units, as follows:

A. **Packing Material —** Min 3-3/4 in. thickness of min 4 pcf density mineral wool batt insulation, compress a min of 25% into flutes of the steel floor units and between the top of the wall and bottom of the steel floor units as a permanent form. Packing material to be recessed from each surface of wall to accommodate the required thickness of fill material.

B. **Fill, Void or Cavity Material* —** Sealant min 3/8 in. thickness of fill material installed on each side of the wall in the flutes of the steel floor units and between the top of the wall and the bottom of the steel floor units, flush with each surface of wall. An additional min 3/8 in. bead of fill material to be installed at the wall steel deck interface when wall and deck are in contact.

3M COMPANY — FB-1000 NS

*Bearing the UL Classification Mark

Last Updated on 2001-08-03

Questions? Notice of Disclaimer Page Top

Copyright © 2010 Underwriters Laboratories Inc.®

The appearance of a company's name or product in this database does not in itself assure that products so identified have been manufactured under UL's Follow-Up Service. Only those products bearing the UL Mark should be considered to be Listed and covered under UL's Follow-Up Service. Always look for the Mark on the product.

UL permits the reproduction of the material contained in the Online Certification Directory subject to the following conditions: 1. The Guide Information, Designs and/or Listings (files) must be presented in their entirety and in a non-misleading manner, without any manipulation of the data (or drawings). 2. The statement "Reprinted from the Online Certifications Directory with permission from Underwriters Laboratories Inc." must appear adjacent to the extracted material. In addition, the reprinted material must include a copyright notice in the following format: "Copyright © 2010 Underwriters Laboratories Inc.®"

An independent organization working for a safer world with integrity, precision and knowledge.

XHBN.HW-D-0160
Joint Systems

Page Bottom

Design/System/Construction/Assembly Usage Disclaimer

- Authorities Having Jurisdiction should be consulted in all cases as to the particular requirements covering the installation and use of UL Listed or Classified products, equipment, system, devices, and materials.
- Authorities Having Jurisdiction should be consulted before construction.
- Fire resistance assemblies and products are developed by the design submitter and have been investigated by UL for compliance with applicable requirements. The published information cannot always address every construction nuance encountered in the field.
- When field issues arise, it is recommended the first contact for assistance be the technical service staff provided by the product manufacturer noted for the design. Users of fire resistance assemblies are advised to consult the general Guide Information for each product category and each group of assemblies. The Guide Information includes specifics concerning alternate materials and alternate methods of construction.
- Only products which bear UL's Mark are considered as Classified, Listed, or Recognized.

Joint Systems

See General Information for Joint Systems

System No. HW-D-0160

April 15, 2009

Assembly Ratings — 1 and 2 Hr (See Item 2)

Nominal Joint Width — 1" Max

Class II and III Movement Capabilities — 25% Compression or Extension

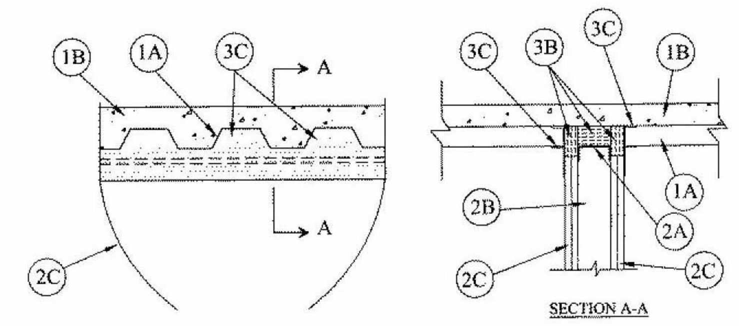

CONFIGURATION A

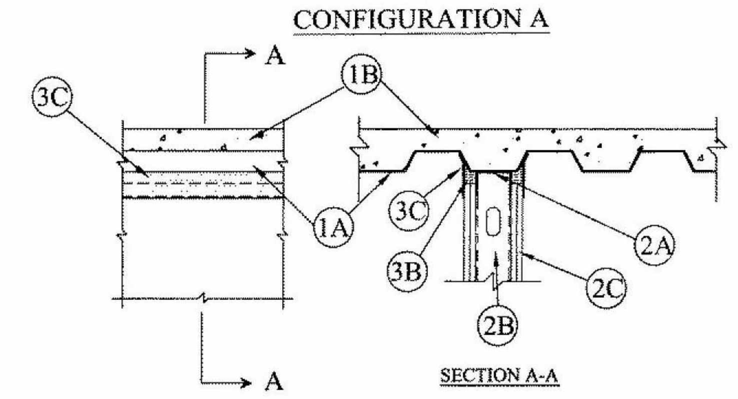

CONFIGURATION B

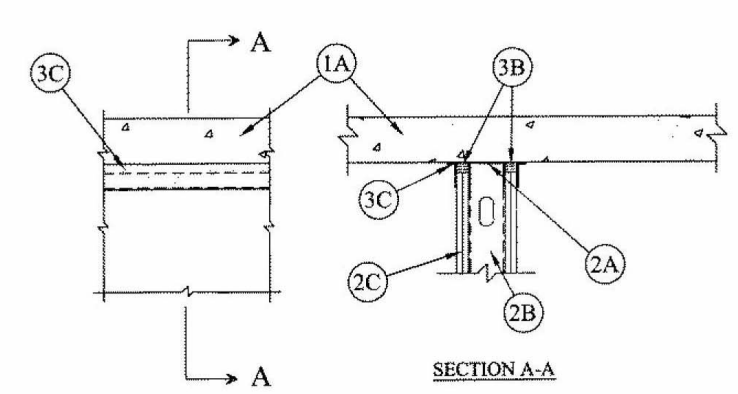

CONFIGURATION C

1. **Floor Assembly —** The fire-rated fluted steel deck/concrete floor assembly shall be constructed of the materials and in the manner described in the individual P900 Series Floor-Ceiling Design in the UL Fire Resistance Directory and shall include the following construction features:

A. **Steel Floor and Form Units* —** Max 3 in. (76 mm) deep galv steel fluted units.

B. **Concrete —** Min 2-1/2 in. (64 mm) thick reinforced concrete, as measured from the top plane of the floor units.

1A. **Floor Assembly —** As an alternate to Item 1, min 4-1/2 in. (114 mm) thick reinforced lightweight or normal weight (100-150 pcf or 1600-2400 kg/m^3) structural concrete.

2. **Wall Assembly —** The 1 or 2 hr fire rated gypsum board/steel stud wall assembly shall be constructed of the materials and in the manner described in the individual U400- or V400 Series Wall or Partition Design in the UL Fire Resistance Directory and shall include the following construction features:

A. **Steel Floor and Ceiling Runners —** Floor and ceiling runners of wall assembly shall consist of galv steel channels sized to accommodate steel studs (Item 2B). Ceiling runner to be provided with min 1-1/4 in. (32 mm) flanges. When U-shaped deflection channel (Item 3A) is used, ceiling runner installed within the deflection channel with 1 in. (25 mm) gap maintained between the top of ceiling runner and top of deflection channel. When deflection channel is not used, ceiling runner to be provided with min. 1-1/2 in. (38 mm) flanges. Ceiling runner is secured to the bottom of the floor with steel fasteners spaced max 24 in. (610 mm) OC or to the valleys of steel floor units (Item 1A) with steel fasteners or by welds spaced max 24 in. (610 mm) OC.

A1. **Light Gauge Framing* — Slotted Ceiling Runner —** As an alternate to the ceiling runner in Item 2A, slotted ceiling runner to consist of galv steel channel with slotted flanges sized to accommodate steel studs (Item 2B). Slotted ceiling runner is secured to bottom of floor with steel fasteners spaced 24 in. (610 mm) OC or to steel floor units (Item 1A) with steel fasteners or by welds spaced max 24 in. (610 mm) OC.

SCAFCO STEEL STUD MANUFACTURING CO

BRADY CONSTRUCTION INNOVATIONS INC,

DBA SLIPTRACK SYSTEMS — SLP-TRK

A2. **Light Gauge Framing* - Vertical Deflection Ceiling Runner —** When the nom joint width is less than or equal to 3/4 in. (19 mm) vertical deflection ceiling runner may be used as an alternate to the ceiling runners in Items 2A and 2A1. Vertical deflection ceiling runner to consist of galv steel channel with slotted vertical deflection clips mechanically fastened within runner. Slotted clips provided with step bushings for permanent fastening of steel studs. Flanges sized to accommodate steel studs (Item 2B). Vertical deflection ceiling runner secured to bottom of floor with steel fasteners spaced 24 in. (610 mm) OC or to steel floor units (Item 1A) with steel fasteners or by welds spaced max 24 in. (610 mm) OC.

THE STEEL NETWORK INC — VertiTrack VTD250, VTD362, VTD400, VTD600 and VTD800

A3. **Light Gauge Framing* - Clipped Ceiling Runner —** As an alternate to the ceiling runner in Items 2A and 2A, clipped runner to consist of galv steel channel with clips preformed in track flanges which positively engage the inside flange of the steel studs (Item 2B). Track sized to accommodate steel studs (Item 2B). Track flanges to be min 2-1/2 in. (64 mm). Clipped ceiling runner installed perpendicular or parallel to direction of fluted steel floor units and secured to valleys with steel fasteners spaced max 12 in. (305 mm) OC. When clipped ceiling runner is used, deflection channel (Item 3A) shall not be used.

TOTAL STEEL SOLUTIONS L L C — Snap Trak

B. **Studs —** Steel studs to be min 3-5/8 in. (92 mm)wide. Studs cut 1/2 to 3/4 in. (13 to 19 mm) less in length than assembly height with bottom nesting in, resting on and attached to the floor runner with sheet metal screws. The top of the studs shall be nesting in ceiling runner without attachment. When slotted ceiling runner (Item 2A1) is used, steel studs secured to slotted ceiling runner with No. 8 by 1/2 in. (13 mm) long wafer head steel screws at midheight of slot on each side of wall. When vertical deflection ceiling runner (Item 2A2) is used, steel studs secured to slotted vertical deflection clips, through the bushings, with steel screws at midheight of each slot. Stud spacing not to exceed 24 in. (610 mm) OC.

C. **Gypsum Board* —** Gypsum board sheets installed to a min total thickness of 5/8 in. (16 mm) and 1-1/4 in. (32 mm) on each side of wall for 1 and 2 hr rated assemblies, respectively. Wall to be constructed as specified in the individual Wall and Partition Design in the UL Fire Resistance Directory, except that a nom 1 in. (25 mm) gap shall be maintained between the top of the gypsum board and the bottom of the steel floor units and the top row of screws shall be installed into the studs 3-1/2 in. (89 mm) below the lower surface the floor.

The hourly fire rating of the joint system is equal to the hourly fire rating of the wall.

3. **Joint System — Max separation between bottom of floor and top of wall is 1 in. (19 mm). The joint system is designed to accommodate a max 25 percent compression or extension from its installed width.** The joint system consists of the following:

Joint Configuration A

A. **Deflection Channel —** (Optional, Not Shown) - A min 3 in. (76 mm) deep by min 24 ga steel U-shaped channel sized to accommodate the ceiling runner (Item 2A). Deflection channel secured to valleys of steel floor units (Item 1A) with steel fasteners or by welds spaced max 24 in. (610 mm) OC. The ceiling runner (Item 2A) is installed within the deflection channel to maintain a 1 in. (25 mm) gap between the top of the ceiling runner and the top of the deflection channel. The ceiling runner is not fastened to the deflection channel.

B. **Forming Material* —** Min 4 pcf (64 kg/m^3) density mineral wool batt insulation cut approx 50 percent wider than the flutes, approx 50 percent thicker than the depth of the steel deck, and with a length equal to the overall width of the wall. Mineral wool compressed and inserted into flutes of the steel floor units between top of ceiling runner and the steel deck. Additional pieces of min 4 pcf (64 kg/m^3) mineral wool batt insulation having a thickness equal to the overall thickness of the gypsum board (Item 2C) are to be cut to 1 in. (25 mm) larger than the opening height and inserted into the opening on both sides of the wall.

FIBREX INSULATIONS INC — FBX Safing Insulation

IIG MINWOOL L L C — MinWool-1200 Safing

ROCK WOOL MANUFACTURING CO — Delta Board

ROXUL ASIA SDN BHD — Type Safe

ROXUL INC — Type Safe

THERMAFIBER INC — Type SAF

C. **Fill, Void or Cavity Material* —** Min 1/8 in. (3.2 mm) dry thickness of fill material sprayed or brushed on each side of the wall to completely cover mineral wool and overlap a min of 1/2 in. (13 mm) onto wallboard gypsum board and steel deck.

UNITED STATES GYPSUM CO — Type SA

Joint Configuration B

A. **Deflection Channel —** (Optional, Not Shown) - A min 3 in. (76 mm) deep by min 24 ga steel U-shaped channel centered on valleys of steel floor units (Item 1A) and sized to accommodate the ceiling runner (Item 2A). Deflection channel secured to valleys of steel floor units (Item 1A) with steel fasteners or by welds spaced max 24 in. (610 mm) OC. The ceiling runner (Item 2A) is installed within the deflection channel to maintain a 1 in. (25 mm) gap between the top of the ceiling runner and the top of the deflection channel. The ceiling runner is not fastened to the deflection channel.

B. **Forming Material* —** Min 4 pcf (64 kg/m^3) density mineral wool batt insulation cut to a thickness equal to the overall thickness of the gypsum board and compressed 50 percent in height and inserted between the top of the gypsum board and the steel deck on both sides of the wall.

FIBREX INSULATIONS INC — FBX Safing Insulation

IIG MINWOOL L L C — MinWool-1200 Safing

ROCK WOOL MANUFACTURING CO — Delta Board

ROXUL ASIA SDN BHD — Type Safe

ROXUL INC — Type Safe

THERMAFIBER INC — Type SAF

C. **Fill, Void or Cavity Material* —** Min 1/8 in. (3.2 mm) dry thickness of fill material sprayed or brushed on each side of the wall to completely cover mineral wool and overlap a min of 1/2 in. (13 mm) onto wall and steel deck.

UNITED STATES GYPSUM CO — Type SA

Joint Configuration C

A. **Deflection Channel —** (Optional, Not Shown) - A min 3 in. (76 mm) deep by min 24 ga steel U-shaped channel and sized to accommodate the ceiling runner (Item 2A). Deflection channel secured to bottom of floor with steel fasteners spaced max 24 in. (610 mm) OC. The ceiling runner (Item 2A) is installed within the deflection channel to maintain a 1 in. (25 mm) gap between the top of the ceiling runner and the top of the deflection channel. The ceiling runner is not fastened to the deflection channel.

B. **Forming Material* —** Min 4 pcf (64 kg/m^3) density mineral wool batt insulation cut to a thickness equal to the overall thickness of the gypsum board and compressed 50 percent in height and inserted between the top of the gypsum board and bottom of floor on both sides of the wall.

FIBREX INSULATIONS INC — FBX Safing Insulation

IIG MINWOOL L L C — MinWool-1200 Safing

ROCK WOOL MANUFACTURING CO — Delta Board

ROXUL ASIA SDN BHD — Type Safe

ROXUL INC — Type Safe

THERMAFIBER INC — Type SAF

C. **Fill, Void or Cavity Material* —** Min 1/8 in. (3.2 mm) dry thickness of fill material sprayed or brushed on each side of the wall to completely cover mineral wool and overlap a min of 1/2 in. (13 mm) onto wall and floor.

UNITED STATES GYPSUM CO — Type SA

*Bearing the UL Classification Mark

Last Updated on 2009-04-15

Questions? Notice of Disclaimer Page Top

Copyright © 2010 Underwriters Laboratories Inc.®

The appearance of a company's name or product in this database does not in itself assure that products so identified have been manufactured under UL's Follow-Up Service. Only those products bearing the UL Mark should be considered to be Listed and covered under UL's Follow-Up Service. Always look for the Mark on the product.

UL permits the reproduction of the material contained in the Online Certification Directory subject to the following conditions: 1. The Guide Information, Designs and/or Listings (files) must be presented in their entirety and in a non-misleading manner, without any manipulation of the data (or drawings). 2. The statement "Reprinted from the Online Certifications Directory with permission from Underwriters Laboratories Inc." must appear adjacent to the extracted material. In addition, the reprinted material must include a copyright notice in the following format: "Copyright © 2010 Underwriters Laboratories Inc.®"

An independent organization working for a safer world with integrity, precision and knowledge.

BXUV.U469
Fire Resistance Ratings - ANSI/UL 263

Page Bottom

Design/System/Construction/Assembly Usage Disclaimer

- Authorities Having Jurisdiction should be consulted in all cases as to the particular requirements covering the installation and use of UL Listed or Classified products, equipment, system, devices, and materials.
- Authorities Having Jurisdiction should be consulted before construction.
- Fire resistance assemblies and products are developed by the design submitter and have been investigated by UL for compliance with applicable requirements. The published information cannot always address every construction nuance encountered in the field.
- When field issues arise, it is recommended the first contact for assistance be the technical service staff provided by the product manufacturer noted for the design. Users of fire resistance assemblies are advised to consult the general Guide Information for each product category and each group of assemblies. The Guide Information includes specifics concerning alternate materials and alternate methods of construction.
- Only products which bear UL's Mark are considered as Classified, Listed, or Recognized.

Fire Resistance Ratings - ANSI/UL 263

General Information for Fire Resistance Ratings - ANSI/UL 263

Design No. U469

March 03, 2010

Assembly Rating — 1 HR

Nonbearing Wall

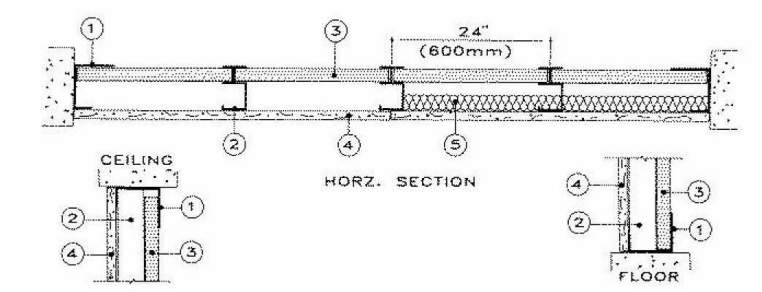

1. **Floor and Ceiling Runners —** "J" - shaped, 2-1/2 in. wide with unequal legs of 1 in. and 2 in., fabricated from 24 MSG galv steel (min 20 MSG steel required when Item 4A is used). Runners attached to structural supports with steel fasteners located not greater than 2 in. from ends and not greater than 24 in. OC.

2. **Steel Studs —** "C-H" shaped studs, 2-1/2 in. wide by 1-1/2 in. deep, fabricated from min 25 MSG galv steel (min 20 MSG steel required when Item 4A is used), spaced 24 in. or 600 mm OC. Vertically restrained walls require studs to be cut 3/8 in. less than floor to ceiling height.

3. **Gypsum Board* —** 1 in. thick gypsum wallboard liner panels, supplied in nominal 24 in. or 600 mm widths. Vertical edges inserted in "H" shaped section of "C-H" studs. Free edge of end panels attached to long leg of "J" runners with 1-5/8 in. long Type S head steel screws spaced not greater than 12 in. OC.

CANADIAN GYPSUM COMPANY — Type SLX.

UNITED STATES GYPSUM CO — Type SLX

USG MEXICO S A DE C V — Type SLX.

4. **Gypsum Board* —** 5/8 in. thick, 4 ft or 1200 mm wide, applied vertically and attached to studs with 1 in. long Type S steel screws spaced 12 in. OC along the edges and in the field of the boards.

AMERICAN GYPSUM CO — Types AGX-1, AG-C.

CERTAINTEED GYPSUM INC — ProRoc Type C.

CERTAINTEED GYPSUM CANADA INC — ProRoc Type C.

CANADIAN GYPSUM COMPANY — Types C, IP-X1, IP-X2, IPC-AR, SCX or WRC.

GEORGIA-PACIFIC GYPSUM L L C — Types 5, DAPC.

LAFARGE NORTH AMERICA INC — Types LGFC-C, LGFC-C/A, LGFC6A

PABCO BUILDING PRODUCTS L L C, DBA

PABCO GYPSUM — Type C, PG-11 or PG-C.

TEMPLE-INLAND — Type X, Veneer Plaster Base - Type X, Water Rated - Type X, Sheathing - Type X, Soffit - Type X, TG-C.

UNITED STATES GYPSUM CO — Types C, FRX-G, IP-X1, IP-X2, IPC-AR, SCX or WRC.

USG MEXICO S A DE C V — Types C, IP-X1, IP-X2, IPC-AR, SCX or WRC.

4A. **Gypsum Board* —** Not Shown - As an Alternate to Item 4. Nom 5/8 in. thick lead backed gypsum panels with beveled, square or tapered edges, applied vertically. Vertical joints centered over studs and staggered min 1 stud cavity on opposite sides of studs. Wallboard secured to studs with 1-1/4 in. long Type S-12 steel screws spaced 8 in. OC at perimeter and 12 in. OC in the field. Lead batten strips (Item 6) required behind vertical joints

RAY-BAR ENGINEERING CORP — Type RB-LBG

5. **Batts and Blankets* —** (Optional) — Mineral wool batts partially or completely filling stud cavity.

THERMAFIBER INC — Type SAFB.

5A. **Fiber, Sprayed* —** As an alternate to Batts and Blankets (Item 5) — Spray applied cellulose material. The fiber is applied with water to completely fill the enclosed cavity in accordance with the application instructions supplied with the product. Nominal dry density of 3.0 lb/ft^3. Alternate application method: The fiber is applied with U.S. Greenfiber LLC Type AD100 hot melt adhesive at a nominal ratio of one part adhesive to 6.6 parts fiber to completely fill the enclosed cavity in

accordance with the application instructions supplied with the product. Nominal dry density of 2.5 lb/ft^3.

U S GREENFIBER L L C — Cocoon2 Stabilized or Cocoon-FRM (Fire Rated Material)

5B. **Fiber, Sprayed* —** As an alternate to Batts and Blankets (Item 5) and Item 5A - Spray applied cellulose insulation material. The fiber is applied with water to interior surfaces in accordance with the application instructions supplied with the product. Applied to completely fill the enclosed cavity. Minimum dry density of 4.3 pounds per cubic ft.

NU-WOOL CO INC — Cellulose Insulation

5C. **Fiber, Sprayed* —** As an alternate to Batts and Blankets (Item 5) - Spray applied cellulose fiber. The fiber is applied with water to completely fill the enclosed cavity in accordance with the application instructions supplied with the product. The minimum dry density shall be 4.30 lbs/ft^3.

INTERNATIONAL CELLULOSE CORP — Celbar-RL

6. **Lead Batten Strips —** For Use with Item 4A - (Not Shown) — Lead batten strips required behind vertical joints of lead backed gypsum wallboard (Item 4A) and optional at remaining stud locations. Strips, min 1-1/2 in. wide, max 10 ft long with a max thickness of 0.125 in. Strips placed on the interior face of studs and attached from the exterior face of the stud with two 1 in. long Type S-12 pan head steel screws, one at the top of the strip and one at the bottom of the strip. Lead batten strips to have a purity of 99.9% meeting the Federal specification QQ-L-201f, Grade "C".

6A. **Lead Discs or Tabs —** (Not Shown) - Used in lieu of or in addition to the lead batten strips (Item 6) or optional at other locations - Max 3/4 in. diam by max 0.125 in. thick lead discs compression fitted or adhered over steel screw heads or max 1/2 in. by 1-1/4 in. by max 0.125 in. thick lead tabs placed on gypsum boards (Item 5) underneath screw locations prior to the installation of the screws. Lead discs or tabs to have a purity of 99.9% meeting the Federal specification QQ-L-201f, Grade "C".

*Bearing the UL Classification Mark

Updated on 2010-03-03

tions? Notice of Disclaimer Page Top

Copyright © 2010 Underwriters Laboratories Inc.®

ppearance of a company's name or product in this database does not in itself assure that products so identified have been manufactured UL's Follow-Up Service. Only those products bearing the UL Mark should be considered to be Listed and covered under UL's Follow-Up :e. Always look for the Mark on the product.

rmits the reproduction of the material contained in the Online Certification Directory subject to the following conditions: 1. The Guide nation, Designs and/or Listings (files) must be presented in their entirety and in a non-misleading manner, without any manipulation of the (or drawings). 2. The statement "Reprinted from the Online Certifications Directory with permission from Underwriters Laboratories Inc." must r adjacent to the extracted material. In addition, the reprinted material must include a copyright notice in the following format: "Copyright © Underwriters Laboratories Inc.®"

An independent organization working for a safer world with integrity, precision and knowledge.

GSBS ARCHITECTS

375 WEST 200 SOUTH
SALT LAKE CITY, UT 84101

P 801.521.8600
F 801.521.7913

www.gsbsarchitects.com

STATE OF UTAH
MICHAEL JOHN STRANSKY
116302
LICENSED ARCHITECT

REVISIONS:

Utah Valley University New Science Building

800 West University Parkway
Orem, Utah 84058

Division of Facilities Construction and Management

DRAWN BY:	Author
CHECKED BY:	Checker
DFCM PROJECT NO.:	09020790
GSBS PROJECT NO.:	2009.115.00
ISSUED DATE:	05.07.2010

REFERENCED ASSEMBLIES

CONSTRUCTION DOCUMENTS

AE-532

GSBS ARCHITECTS

375 WEST 200 SOUTH
SALT LAKE CITY, UT 84101

P 801.521.8600
F 801.521.7913

www.gsbsarchitects.com

STATE OF UTAH
116302
LICENSED ARCHITECT

REVISIONS:

System No. C-AJ-1092
September 03, 2004
(Formerly System No. 487)
F Rating – 2 Hr
T Rating – 0 Hr
L Rating At Ambient – 2 CFM/sq ft
L Rating At 400 F – less than 1 CFM/sq ft

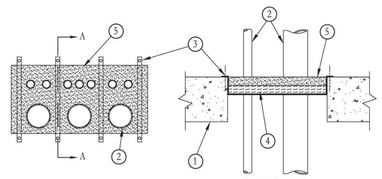

SECTION A-A

1. **Floor or Wall Assembly** – Min 2-1/2 in. thick lightweight or normal weight (100-150 pcf) concrete. When area of through opening exceeds 144 sq in., min concrete thickness is 4-1/2 in. Wall may also be constructed of any UL Classified **Concrete Blocks***. Max area of through opening not to exceed 560 sq in. with max width dimension of 14 in.

   See **Concrete Blocks** (CAZT) category in the Fire Resistance Directory for names of manufacturers.
2. **Pipe or Conduit** – Nom 6 in. diam (or smaller) Schedule 10 (or heavier) steel pipe or steel conduit or nom 4 in. diam (or smaller) steel EMT or Type L (or heavier) copper tubing. Multiple pipes and/or conduits permitted in opening provided a min separation of 1/2 in. is maintained between pipes or conduits. Min annular space between pipes or conduits and edge of through opening is zero in. (point contact). Max annular space is 6 in. Pipes and conduits rigidly supported on both sides of floor or wall assembly.
3. **Support Hanger** – Min 1 in. wide strips of min 0.034 in. (20 gauge) galv steel sheet bent to form a "hat" shape with each "brim" of the hat shape bearing 2 in. on the top surface of the floor and with the "crown" depth sufficient to accommodate the packing material (Item 4) and the required fill material (Item 5) thickness. Support hangers installed across width of opening and spaced max 8 in. O.C. When max dimension of opening is 12 in. and when max annular space is 2-3/4 in., no support hangers are required. Ends of support hangers anchored to top surface of floor with steel anchor bolts, or equivalent, in conjunction with steel fender washers. Support hangers not required in wall assemblies.
4. **Packing Material** –Min 1 in. thickness of mineral wool batt insulation firmly packed into opening as a permanent form. In floors, packing material to be installed atop support hangers (when required) with top surface recessed min 1 in. from top surface of floor. In walls, packing material to be recessed min 1 in. from both surfaces of wall.
5. **Fill, Void or Cavity Material*** – **Caulk or Sealant** – Applied to fill the annular space to a min depth of 1 in. on top surface of floor or on both sides of wall.

   3M COMPANY – CP 25WB+ caulk or FB-3000 WT sealant.

*Bearing the UL Classification Marking

6 AE-533 PENETRATION FIRESTOPPING

System No. C-AJ-5001
March 05, 2007
F Ratings – 1-1/2, 2 and 3 Hr (See Item 4)
T Ratings – 0, 1/2, 3/4 and 1 Hr (See Items 1A and 4)
L Rating At Ambient – 2 CFM per sq ft
L Rating At 400 F – less than 1 CFM per sq ft

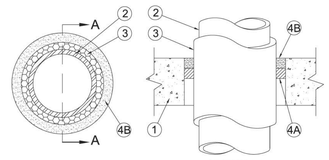

SECTION A-A

1. **Floor or Wall Assembly** – Min 2-1/2 in. (64 mm) thick reinforced lightweight or normal weight (100-150 pcf or 1600-2400 kg/.m³) concrete. Wall may also be constructed of any UL Classified **Concrete Blocks***. Max diam of opening is 18 in. (457 mm)

   See **Concrete Blocks** (CAZT) category in the Fire Resistance Directory for names of manufacturers.

1A. **Steel Sleeve** – (Optional, not shown) – Nom 10 in. (254 mm) (or smaller) Schedule 10 (or heavier) steel sleeve cast or grouted into floor or wall assembly. Sleeve may extend a max of 2 in. (51 mm) above top of floor or beyond either surface of wall. As an alternate, nom 10 in. (254 mm) diam (or smaller) sleeve fabricated from nom 0.019 in. (0.48 mm) thick galv steel cast or grouted into floor or wall assembly flush with floor or wall surfaces. **T Rating is 0 Hr when sleeve is used.**
2. **Through Penetrant** – Nom 4 in. (102 mm) diam (or smaller) Type L (or heavier) copper pipe, nom 12 in. (305 mm) diam (or smaller) service weight (or heavier) cast iron soil pipe, nom 12 in. (305 mm) diam (or smaller) Class 50 (or heavier) ductile iron pressure pipe or nom 12 in. (305 mm) diam (or smaller) Schedule 24 (or heavier) steel pipe centered in the opening and rigidly supported on both sides of the floor or wall assembly.
3. **Pipe Covering#** – Nom 1/2 to 2 in. (13 to 51 mm) thick hollow cylindrical heavy density (min. 3.5 pcf or 56 kg/m³) glass fiber units jacketed on the outside with an all service jacket. Longitudinal joints sealed with metal fasteners or factory-applied self-sealing lap tape. Transverse joints secured with metal fasteners or with butt strip tape supplied with the product.

   See **Pipe and Equipment Covering – Materials#** (BRGU) category in Building Materials Directory for names of manufacturers. Any pipe covering material meeting the above specifications and bearing the UL Classification Marking with a Flame Spread Index of 25 or less and a Smoke Developed Index of 50 or less may be used.
4. **Firestop System** – The details of the firestop system shall be as follows:
   A. **Packing Material** – Min 1 in. (25 mm) thickness of firmly packed mineral wool batt insulation used as a permanent form. Packing material to be recessed from top surface of floor or sleeve or from both surfaces of wall as required to accommodate the required thickness of caulk fill material (Item B).
   B. **Fill, Void or Cavity Material*** – **Caulk or Sealant** – Applied to fill the annular space flush with the top surface of the floor or sleeve or flush with both surfaces of wall. When nom pipe covering thickness is 2 in. (51 mm), min thickness of caulk fill material is 2 in. (51 mm). When nom pipe covering thickness is 1-1/2 in. (38 mm) or less, min thickness of caulk fill material is 1 in. (25 mm). The hourly F and T Ratings of the firestop system are dependent upon the thickness of the floor or wall, the size of pipe, the thickness of pipe covering material and the size of the annular space (between the pipe covering material and the edge of the circular through opening), as shown in the following table:

Min Floor or Wall Thkns In. (mm)	Max Pipe Diam In. (mm)	Nom Pipe Covering Thkns In. (mm)	Annular Space In. (mm)	F Rating Hr	T Rating Hr
2-1/2 (64)	4 (102)	1 or 1-1/2 (25 or 38)	1/2 to 2-3/8 (13 to 60)	2	1
4-1/2 (114)	4 (102)	2 (51)	1/4 to 3-5/8 (6 to 92)	2	1-1/2
2-1/2 (64)	12 (305)	1 (25)	1/2 to 1-1/2 (13 to 38)	2	1/2
4-1/2 (114)	12 (305)	1 (25)	1/2 to 2-3/8 (13 to 60)	3	1
2-1/2 (64)	12 (305)	1/2 (13)	1/2 to 2-3/8 (13 to 60)	2	0

   3M COMPANY – CP 25WB+ or FB-3000 WT

*Bearing the UL Classification Marking

5 AE-533 PENETRATION FIRESTOPPING

System No. W-L-5001
May 19, 2005
F Ratings – 1 and 2 Hr (See Item 1)
T Ratings – 3/4, 1 and 1-1/2 Hr (See Item 3)
L Rating At Ambient – 2 CFM/sq ft
L Rating At 400 F – less than 1 CFM/sq ft

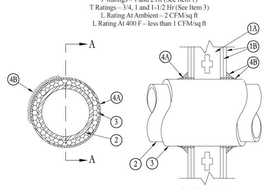

SECTION A-A

1. **Wall Assembly** – The 1 or 2 hr fire-rated gypsum board/stud wall assembly shall be constructed of the materials and in the manner described in the individual U300, U400 or V400 Series Wall or Partition Design in the UL Fire Resistance Directory and shall include the following construction features:
   A. **Studs** – Wall framing may consist of either wood studs or steel channel studs. Wood studs to consist of nom 2 in. by 4 in. (25 mm by 102 mm) lumber spaced 16 in. (406 mm) OC with nom 2 by 4 in. lumber end plates and cross braces. Steel studs to be min 3-5/8 in. (92 mm) wide by 1-3/8 in. (35 mm) deep channels spaced max 24 in. (610 mm) OC.
   B. **Gypsum Board*** – Nom 5/8 in. (16 mm) thick, 4 ft (122 cm) wide with square or tapered edges. The gypsum board type, thickness, number of layers, fastener type and sheet orientation shall be as specified in the individual U300 or U400 Series Design in the UL Fire Resistance Directory. Max diam of opening is 12-1/2 in (368 mm) for wood stud walls and 18 in. (457 mm) for steel stud walls.

   The hourly F Rating of the firestop system is 1 hr when installed in a 1 hr fire rated wall and 2 hr when installed in a 2 hr fire rated wall.
2. **Through Penetrants** – One metallic pipe or tubing to be centered within the firestop system. Pipe or tubing to be rigidly supported on both sides of wall assembly. The following types and sizes of metallic pipes or tubing may be used:
   A. **Steel Pipe** – Nom 12 in. (305 mm) diam (or smaller) Schedule 10 (or heavier) steel pipe.
   B. **Copper Tubing** – Nom 6 in. (152 mm) diam (or smaller) Type L (or heavier) copper tubing.
   C. **Copper Pipe** – Nom 6 in. (152 mm) diam (or smaller) Regular (or heavier) copper pipe.
3. **Pipe Covering#** – Nom 1 in. or 2 in. (25 mm or 51 mm) thick hollow cylindrical heavy density glass fiber units jacketed on the outside with an all service jacket. Longitudinal joints sealed with metal fasteners or factory-applied self-sealing lap tape. Transverse joints sealed with butt strip tape supplied with the product. When nom 1 in. (25 mm) thick pipe covering is used, the annular space between the pipe covering and the circular cutout in the gypsum board layers on each side of the wall shall be min 1/4 in. to max 3/8 in. (6 mm to max 10 mm). When nom 2 in. (51 mm) thick pipe covering is used, the annular space between the pipe covering and the circular cutout in the gypsum board layers on each side of the wall shall be min 1/2 in. to max 3/4 in. (13 mm to max 19 mm).

   See **Pipe and Equipment Covering – Materials** (BRGU) category in Building Materials Directory for names of manufacturers. Any pipe covering material meeting the above specifications and bearing the UL Classification Marking with a Flame Spread Index of 25 or less and a Smoke Developed Index of 50 or less may be used.

   The hourly T Rating of the firestop system is 3/4 hr when nom 1 in. (25 mm) thick pipe covering is used. The hourly T Rating of the firestop system is 1 hr and 1-1/2 hr when nom 2 in. (51 mm) thick pipe covering is used with 1 hr and 2 hr fire rated walls, respectively.
4. **Firestop System** – Installed symmetrically on both sides of wall assembly. The details of the firestop system shall be as follows:
   A. **Fill, Void or Cavity Materials*** – **Wrap Strip** – Nom 1/4 in. (6 mm) thick intumescent elastomeric material faced on one side with aluminum foil, supplied in 2 in. (51 mm) wide strips. Nom 2 in. (51 mm) wide strip tightly wrapped around pipe covering (foil side out) with seam butted. Wrap strip layer securely bound with steel wire or aluminum foil tape and slid into annular space approx 1-1/4 in. (32 mm) such that approx 3/4 in. (19 mm) of the wrap strip width protrudes from the wall surface. One layer of wrap strip is required when nom 1 in. (25 mm) thick pipe covering is used. Two layers of wrap strip are required when nom 2 in. (51 mm) thick pipe covering is used.

      3M COMPANY – FS-195+
   B. **Fill, Void or Cavity Materials*** – **Caulk or Sealant** – Min 1/4 in. (6 mm) diam continuous bead applied to the wrap strip/wall interface and to the exposed edge of the wrap strip layer approx 3/4 in. (19 mm) from the wall surface.

      3M COMPANY – CP 25WB+, IC 15WB+, FireDam 150+ caulk or FB-3000 WT sealant

*Bearing the UL Classification Marking

4 AE-533 PENETRATION FIRESTOPPING

System No. W-L-4037
December 19, 2007
F Ratings – 1 and 2 Hr (See Item 1)
T Ratings – 0 and 1/2 Hr (See Item 1)
L Rating at Ambient – 7 and 22 CFM/sq ft. (See Item 4)
L Rating at 400 F – 4 and 21 CFM/sq ft. (See Item 4)

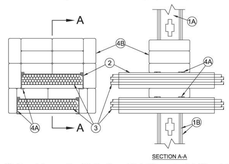

SECTION A-A

1. **Wall Assembly** – The 1 or 2 hr fire-rated gypsum board/stud wall assembly shall be constructed of the materials and in the manner specified in the individual U300, U400 or V400 Series Wall or Partition Designs in the UL Fire Resistance Directory and shall include the following construction features:
   A. **Studs** – Wall framing may consist of either wood studs or steel channel studs. Wood studs to consist of nom 2 by 4 in. (51 by 102 mm) lumber spaced 16 in. (406 mm) OC. Steel studs to be min 3-5/8 in. (92 mm) wide and spaced max 24 in. (610 mm) OC. Additional framing members shall be used to completely frame around opening.
   B. **Gypsum Board*** – Thickness, type, number of layers and fasteners as required in the individual Wall and Partition Design. Max area of opening is 540 sq. in. (84 cm²) with a max dimension of 30 in. (762 mm).

   The hourly F Rating for the firestop system is equal to the hourly fire rating of the wall assembly in which it is installed. The hourly T Rating for the firestop system are 0 and 1/2 hr for 1 and 2 hr rated assemblies, respectively.
2. **Cable Tray** – Max 24 in. (610 mm) wide by max 4 in. (102 mm) deep open ladder cable tray with channel-shaped side rails formed of min 0.058 in. (1.5 mm) thick (16 gauge) galv steel with nom 1 in. (25 mm) diam rungs spaced 9 in. (229 mm) OC or max 24 in. (610 mm) wide by max 4 in. (102 mm) deep open ladder cable tray with channel-shaped side rails formed from 0.060 in. (1.5 mm) thick aluminum with nom 1 in. (25 mm) diam rungs spaced 9 in. (229 mm) OC. Max two cable trays per opening. The annular space between the cable trays is a min 6 in. (152 mm) to max 10 in. (254 mm) The annular space between the cable trays and the periphery of the opening will be min 0 in. (0 mm, point contact) to max 5 in. (127 mm). Cable trays to be rigidly supported on both sides of wall assembly.
3. **Cables** – Aggregate cross-sectional area of cables in cable tray not to exceed 40 percent of the cross-sectional area of the cable tray based on a max 3 in. (76 mm) cable loading depth within the tray. Any combination of the following types and sizes of cables may be used:
   A. Max 1/C 750 kcmil (or smaller) copper conductor cable with cross-linked polyethylene (XLPE) jacket.
   B. Max 300 pair No. 22 AWG (or smaller) copper conductor telecommunication cables with polyvinyl chloride (PVC) insulation and jacket.
   C. Max 7/C No. 12 AWG copper conductor power and control cables with XLPE or PVC insulation with XLPE or PVC jacket.
   D. Max 4/C No. 2/0 AWG copper or aluminum conductor cables with PVC insulation and jacket..
   E. Max 1-10/125 Fiber Optic (FO) cable with PVC insulation and jacket.
   F. Max No. 18 AWG Type RG coaxial cable with polyvinyl chloride insulation.
4. **Firestop System** – The firestop system shall consist of the following:
   A. **Fill Void or Cavity Material*** – **Putty** – Min 1/2 in. (13 mm) thickness of putty formed to a min 1 in. (25 mm) width and applied within annulus at all corners of opening and extending a min 1 in. (25 mm) in both directions from each corners, flush with both surfaces of wall. Additional putty installed inside cable tray side rails to completely fill side rails within the opening and extending approximately 1/2 in. (13 mm) beyond both surfaces of wall. After installation of pillows (Item 4B) all voids within the opening shall be filled with a min 1 in. (25 mm) thickness of putty. The individual cables may be wrapped with a min 1/4 in. (6 mm) thickness, min 2 in. (51 mm) width of putty such that the putty extends approximately 1/2 in. (13 mm) beyond both surfaces of wall.

      3M COMPANY – MP+ or Cable Wrap

      L Ratings are 7 and 4 CFM/sq ft. at ambient and 400° F, respectively, when individual cables are wrapped with 3M Cable Wrap or MP+ putty in accordance with the installation instructions. L Ratings are 22 and 21 CFM/sq ft. at ambient and 400° F, respectively, when individual cables are not wrapped with 3M Cable Wrap or MP+ putty.
   B. **Fill Void or Cavity Material*** – **Pillows** – Max 9 in. (229 mm) long by 6 in. (152 mm) wide by 2 and 3 in. (51 and 76 mm) thick plastic covered pillows packed to a min compression of 35 percent and to fill annular space between cable tray and periphery of opening. Pillows installed with 9 in. (229 mm) dimension projecting through wall and centered within the opening.

      3M COMPANY – Fire Barrier Pillow or Fire Barrier Self-Locking Pillows

*Bearing the UL Classification Mark

3 AE-533 PENETRATION FIRESTOPPING

System No. W-L-2003
May 23, 2005
F Ratings – 1 and 2 Hr (See Item 3)
T Ratings – 1 and 2 Hr (See Item 3)
L Rating At Ambient – 7 CFM/sq ft (See Item 3B)
L Rating At 400 F – less than 1 CFM/sq ft (See Item 3B)

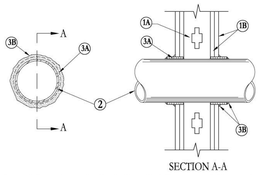

SECTION A-A

1. **Wall Assembly** –The 1 or 2 hr fire-rated gypsum board/stud wall assembly shall be constructed of the materials and in the manner described in the individual U300, U400 or V400 Series Wall or Partition Design in the UL Fire Resistance Directory and shall include the following construction features:
   A. **Studs** – Wall framing may consist of either wood studs or steel channel studs. Wood studs to consist of nom 2 in. by 4 in. (51 mm by 102 mm) lumber spaced 16 in. (406 mm) OC with nom 2 in. by 4 in. (51 mm by 102 mm) lumber end plates and cross braces. Steel studs to be min 3-5/8 in. (92 mm) wide by 1-3/8 in. (35 mm) deep channels spaced max 24 in. (610 mm) OC.
   B. **Gypsum Board*** – 5/8 in. (16 mm) thick, 4 ft (122 cm) wide with square or tapered edges. The gypsum board type, thickness, number of layers, fastener type and sheet orientation shall be as specified in the individual U300 or U400 Series Design in the UL Fire Resistance Directory. Max diam of opening is 3-1/8 in. (79 mm).
2. **Through Penetrants** – One nonmetallic pipe or conduit to be centered in the through opening. The annular space between pipe or conduit and periphery of opening shall be min 1/4 in. (6 mm) and max 3/8 in. (10 mm). Pipe or conduit to be rigidly supported on both sides of the floor-ceiling assembly. The following types and sizes of nonmetallic pipes or conduits may be used:
   A. **Polyvinyl Chloride (PVC) Pipe** – Nom 2 in. (51 mm) diam (or smaller) Schedule 40 solid-core PVC pipe for use in closed (process or supply) or vented (drain, waste or vent) piping system.
   B. **Rigid Nonmetallic Conduit**++ – Nom 2 in. (51 mm) diam (or smaller)(Schedule 40 or 80) PVC conduit installed in accordance with Article 347 of the National electric Code (NFPA No. 70).
   C. **Chlorinated Polyvinyl Chloride (CPVC) Pipe** – Nom 2 in. (51 mm) diam (or smaller) SDR13.5 CPVC pipe for use in closed (process or supply) piping systems.
   D. **Cellular Core Polyvinyl Chloride (ccPVC) Pipe** – Nom 2 in. (51 mm) diam (or smaller) Schedule 40 cellular core PVC pipe for use in closed (process or supply) or vented (drain, waste or vent) piping system.
   E. **Acrylonitrile Butadiene Styrene (ABS) Pipe** – Nom 2 in. (51 mm) diam (or smaller) Schedule 40 solid core ABS pipe for use in closed (process or supply) or vented (drain, waste or vent) piping systems.
   F. **Cellular Core Acrylonitrile Butadiene Styrene (ccABS) Pipe** – Nom 2 in. (51 mm) diam (or smaller) Schedule 40 cellular core ABS pipe for use in closed (process or supply) or vented (drain, waste or vent) piping systems.
3. **Firestop System** –Installed symmetrically on both sides of wall assembly. The hourly F and T Ratings for the firestop system are equal to the hourly fire rating of the wall assembly in which it is installed. The details of the firestop system shall be as follows.
   A. **Fill, Void or Cavity Materials*** – **Wrap Strip** – Nom 1/4 in. (6 mm) thick intumescent elastomeric material faced on one side with aluminum foil, supplied in 2 in. (51 mm) wide strips. Nom 2 in. (51 mm) wide strip tightly wrapped around nonmetallic pipe (foil side out) with seam butted. Wrap strip layer securely bound with steel wire or aluminum foil tape and slid into annular space approx 1-1/4 in. (32 mm) such that approx 3/4 in. (19 mm) of the wrap strip protrudes from the wall surface.

      3M COMPANY – FS-195+
   B. **Fill, Void or Cavity Materials*** – **Caulk, Sealant or Putty** – Min 5/8 in. (16 mm) thickness of caulk or putty applied into annular space between wrap strip and periphery of opening. A nom 1/4 in. (6 mm) diam bead of caulk or putty to be applied to the wrap strip/wall interface and to the exposed edge of the wrap strip layers approx 3/4 in. (19 mm) from the wall surface.

      3M COMPANY – CP 25WB+, IC 15WB+, FireDam 150+ caulk, FB-3000 WT sealant or MP+ Stix putty
      (Note:L Ratings apply only when CP 25WB+ caulk is used. CP 25WB+ not suitable for use with CPVC pipes.)
   C. **Foil Tape** (not shown) – Nom 4 in. (102 mm) wide, 3 mil thick aluminum tape wrapped around pipe prior to the installation of the wrap strip (Item 3A). Min of one wrap, flush with both sides of wall and proceeding outward. Tape is not required for pipes shown in Items 2A, 2B and 2C.

*Bearing the UL Classification Marking

2 AE-533 PENETRATION FIRESTOPPING

System No. C-AJ-2001
May 18, 2005
F Rating – 2 Hr
T Ratings – 0, 1-1/2 and 2 Hr (See Item 3)
L Rating at Ambient – 7 CFM/sq ft (See Item 3B)
L Rating at 400 F – 1 CFM/sq ft (See Item 3B)

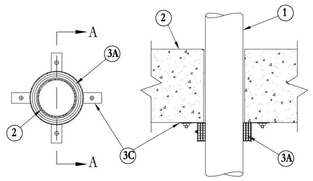

SECTION A-A

1. **Floor or Wall Assembly** – Lightweight or normal weight (100-150 pcf or 1600-2400 kg/m³) concrete. Except as footnoted for floor assembly in table under Item 3, min thickness of solid concrete floor or wall assembly is 4-1/2 in. (114 mm). Floor assembly may also be constructed of any min 6 in. (152 mm) thick UL Classified hollow core **Precast Concrete Units***. Wall may also be constructed of any UL Classified **Concrete Blocks***. Diam of opening through floor or wall to be 0 in. to 1/4 in. (0 mm to 6 mm) larger than the outside diam of nom 2 in. (51 mm) diam and smaller pipes or conduits. Diam of opening to be 0 in. to 1/2 in. (0 mm to 13 mm) larger than the outside diam of nom 2-1/2 in. (64 mm) diam and larger pipes or conduits. Max diam of opening is 7 in. (178 mm).

   See **Concrete Blocks** (CAZT) and **Precast Concrete Units** (CFTV) categories in Fire Resistance Directory for names of manufacturers.
2. **Through Penetrants** – One nonmetallic pipe or conduit to be centered in the through opening. Pipe or conduit to be rigidly supported on both sides of the floor or wall assembly. The following types and sizes of nonmetallic pipes or conduits may be used:
   A. **Polyvinyl Chloride (PVC) Pipe** – Nom 6 in. (152 mm) diam (or smaller) Schedule 40 solid-core PVC pipe for use in closed (process or supply) or vented (drain, waste or vent) piping system.
   B. **Cellular – Core Polyvinyl Chloride (ccPVC) Pipe** – Nom 4 in. (102 mm) diam (or smaller) Schedule 40 cellular core PVC pipe for use in closed (process or supply) or vented (drain, waste or vent) piping system.
   C. **Chlorinated Polyvinyl Chloride (CPVC) Pipe** – Nom 6 in. (152 mm) diam (or smaller) SDR13.5 CPVC pipe for use in closed (process or supply) piping systems.
   D. **Acrylonitrile Butadiene Styrene (ABS) Pipe** – Nom 4 in. (102 mm) diam (or smaller) Schedule 40 solid-core ABS pipe for use in closed (process or supply) or vented (drain, waste or vent) piping systems.
   E. **Cellular Core Acrylonitrile Butadiene Styrene (ccABS) Pipe** – Nom 4 in. (102 mm) diam (or smaller) Schedule 40 cellular core ABS pipe for use in closed (process or supply) or vented (drain, waste or vent) piping systems.
   F. **Polybutylene (PB) Pipe** – Nom 3 in. (76 mm) diam (or smaller) SDR11 (or heavier) PB pipe for use in closed (process or supply) or vented (drain, waste or vent) piping systems.
   G. **Rigid Nonmetallic Conduit**++ – Nom 4 in. (102 mm) diam (or smaller) (Schedule 40 or 80) PVC conduit installed in accordance with Article 347 of the National Electric Code (NFPA No. 70).
   H. **Flame Retardant Polypropylene (FRPP) Pipe** – Nom 4 in. (102 mm) diam (or smaller) Schedule 40 (or heavier) FRPP pipe for use in closed (process or supply) or vented (drain, waste or vent) piping systems.

   See **Rigid Nonmetallic Conduit** (DZKT) category in UL Electrical Construction Materials Directory for names of manufacturers.
3. **Firestop System** – The details of the firestop system shall be as follows:
   A. **Fill, Void or Cavity Materials*** – **Wrap Strip** – Nom 1/4 in. (6 mm) thick intumescent elastomeric material faced on one side with aluminum foil, supplied in 1 in. and 2 in. (25 mm and 51 mm) wide strips. Strips tightly wrapped around nonmetallic pipe (foil side exposed) with the edges butted against the underside of the concrete floor or both sides of wall surface. Sufficient layers of wrap strip shall be installed to lap a min of 3/16 in. (5 mm) on the concrete around the entire perimeter of the through opening. The min wrap strip width and the min number of layers of wrap required is dependent upon the pipe type, the nom pipe diam, the wall of floor thickness and the hourly T Rating required, as shown in the following table.

1 AE-533 PENETRATION FIRESTOPPING

Utah Valley University New Science Building

800 West University Parkway
Orem, Utah 84058

Division of Facilities Construction and Management

DRAWN BY:	Author
CHECKED BY:	Checker
DFCM PROJECT NO.:	09020790
GSBS PROJECT NO.:	2009.115.00
ISSUED DATE:	05.07.2010

REFERENCED ASSEMBLIES

CONSTRUCTION DOCUMENTS

AE-533

BXUV.X752
Fire Resistance Ratings - ANSI/UL 263

Page Bottom

Design/System/Construction/Assembly Usage Disclaimer

- Authorities Having Jurisdiction should be consulted in all cases as to the particular requirements covering the installation and use of UL Listed or Classified products, equipment, system, devices, and materials.
- Authorities Having Jurisdiction should be consulted before construction.
- Fire resistance assemblies and products are developed by the design submitter and have been investigated by UL for compliance with applicable requirements. The published information cannot always address every construction nuance encountered in the field.
- When field issues arise, it is recommended the first contact for assistance be the technical service staff provided by the product manufacturer noted for the design. Users of fire resistance assemblies are advised to consult the general Guide Information for each product category and each group of assemblies. The Guide Information includes specifics concerning alternate materials and alternate methods of construction.
- Only products which bear UL's Mark are considered as Classified, Listed, or Recognized.

Fire Resistance Ratings - ANSI/UL 263

See General Information for Fire Resistance Ratings - ANSI/UL 263

Design No. X752

March 13, 2007

Ratings — 1, 1-1/2, 2, 3 and 4 Hr.

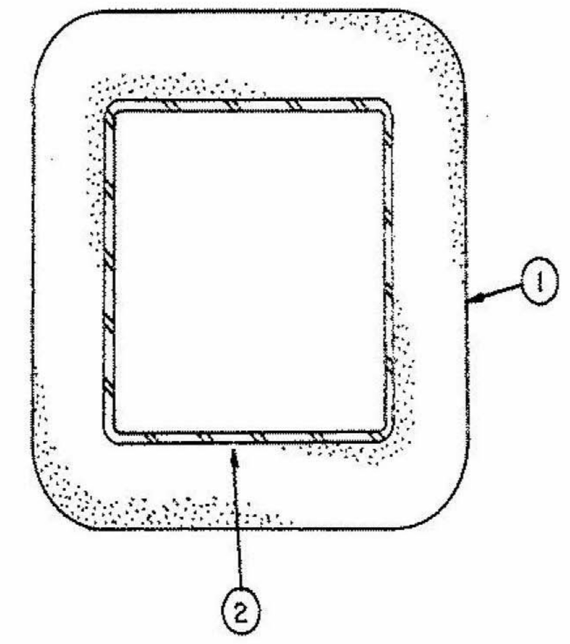

1. **Spray-Applied Fire Resistive Materials* —** Applied by mixing with water and spraying in more than one coat to the thicknesses shown below, to steel surfaces which are clean and free of dirt, loose scale and oil. Min avg and min ind density of 15/14 pcf respectively. Min avg and min ind density of 19/18 pcf respectively for Types 7GP and 7HD. For method of density determination, see Design Information Section, Sprayed Material.

Rating Hr	Min Thkns In.	
	TS 4x4x0.188	TS 4x4x0.375
4	—	2-9/16
3	3-9/16	1-7/8
2	2-5/16	1-1/4
1-1/2	1-11/16	7/8
1	1	9/16

ARABIAN VERMICULITE INDUSTRIES — Type MK-5.

GRACE KOREA INC — Types MK-6/CBF, MK-6/ED, MK-6/HY, MK-6s, Monokote Acoustic 1 .

PYROK INC — Type LD.

SOUTHWEST FIREPROOFING PRODUCTS CO — Types 4, 5, 5EF, 5GP, 5MD, 7GP, 7HD, 8EF, 8GP, 8MD, 9EF, 9GP, 9MD.

W R GRACE & CO - CONN — Types MK-4, MK-5, MK-6/HY, MK-6s, Monokote Acoustic 1 , RG.

2. **Steel Column —** Steel tubular column with min outside dimensions of 4 by 4 in., a min wall thickness of 3/16 in. or 3/8 in. and a min weight of 9.31 or 17.24 pcf respectively.

*Bearing the UL Classification Mark

Last Updated on 2007-03-13

Questions? Notice of Disclaimer Page Top

Copyright © 2010 Underwriters Laboratories Inc.®

The appearance of a company's name or product in this database does not in itself assure that products so identified have been manufactured under UL's Follow-Up Service. Only those products bearing the UL Mark should be considered to be Listed and covered under UL's Follow-Up Service. Always look for the Mark on the product.

UL permits the reproduction of the material contained in the Online Certification Directory subject to the following conditions: 1. The Guide Information, Designs and/or Listings (files) must be presented in their entirety and in a non-misleading manner, without any manipulation of the data (or drawings). 2. The statement "Reprinted from the Online Certifications Directory with permission from Underwriters Laboratories Inc." must appear adjacent to the extracted material. In addition, the reprinted material must include a copyright notice in the following format: "Copyright © 2010 Underwriters Laboratories Inc.®"

An independent organization working for a safer world with integrity, precision and knowledge.

BXUV.X528
Fire Resistance Ratings - ANSI/UL 263

Page Bottom

Design/System/Construction/Assembly Usage Disclaimer

- Authorities Having Jurisdiction should be consulted in all cases as to the particular requirements covering the installation and use of UL Listed or Classified products, equipment, system, devices, and materials.
- Authorities Having Jurisdiction should be consulted before construction.
- Fire resistance assemblies and products are developed by the design submitter and have been investigated by UL for compliance with applicable requirements. The published information cannot always address every construction nuance encountered in the field.
- When field issues arise, it is recommended the first contact for assistance be the technical service staff provided by the product manufacturer noted for the design. Users of fire resistance assemblies are advised to consult the general Guide Information for each product category and each group of assemblies. The Guide Information includes specifics concerning alternate materials and alternate methods of construction.
- Only products which bear UL's Mark are considered as Classified, Listed, or Recognized.

Fire Resistance Ratings - ANSI/UL 263

ee General Information for Fire Resistance Ratings - ANSI/UL 263

Design No. X528

April 22, 2009

Ratings — 1, 2 and 3 Hr.

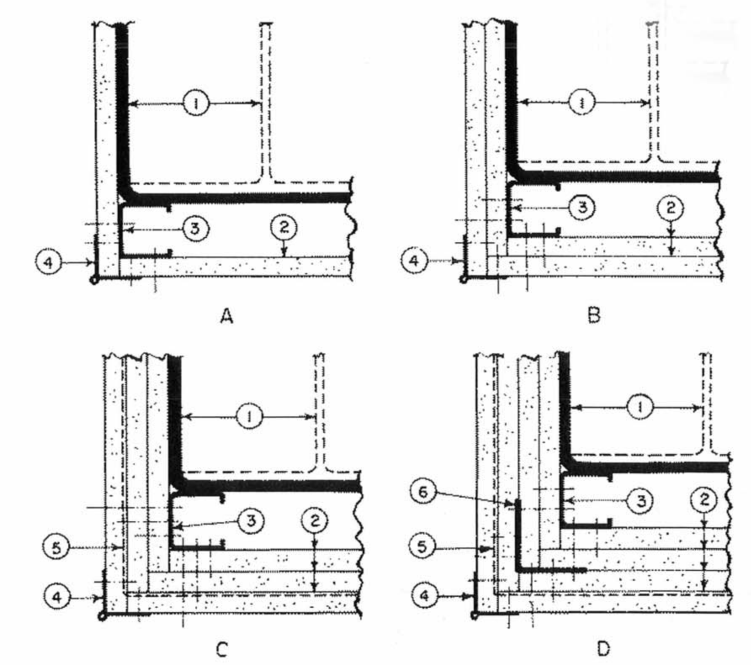

CORNER DETAILS OF WALLBOARD
SUPPORT SYSTEMS WITHOUT STEEL COVERS

1. **Steel Column —** Min sizes of W-shaped and tubular steel columns which appear in the AISC Steel Construction Manual as shown under Item 2.

2. **Gypsum Board* —** For 1 Hr rating, any 5/8 in. or 1/2 in. thick gypsum wallboard Classified for use in fire resistance assemblies. For 2 Hr and 3 Hr ratings, any 5/8 in. or 1/2 in. thick gypsum wallboard Classified for use in other 2 Hr, 3 Hr or 4 Hr Column Designs. Min total thickness of layers in inches for the various ratings and min column sizes are as follows:

W Shaped Column Min Column Size	Rating (Hr)			Corner Details For Various Rating		
	1	2	3	1 Hr	2 Hr	3 Hr
Total thickness (In.)						
W4x13	1	1-1/2	2-1/4	B	C	D
W6x15.5	1	1-1/2	2-1/4	B	C	D
W10x49	1/2	1-1/8	1-7/8	A	B	C
Tube Shaped columns						
TS 4 by 4						
by0.188	1	1-3/4	2-5/8	B	C	D
TS 8 by 8						
by 0.250	5/8	1-1/2	2-1/4	A	C	D

Applied in layers as noted in the above illustrations. Boards are to be applied vertically without horizontal joints.

See **Gypsum Board (CKNX)** category for names of manufacturers.

2A. **Gypsum Board* —** As an alternate to Item 2- 3/4 in. thick gypsum wallboard. For 2 Hr rating, 1-1/2 in. total thickness, installed in accordance with corner detail B. For 3 Hr rating, 2-1/4 in. total thickness installed in accordance with corner detail C. Boards are to be applied vertically without horizontal joints.

CANADIAN GYPSUM COMPANY — Type IP-X3 or ULTRACODE

UNITED STATES GYPSUM CO — Type IP-X3 or ULTRACODE

USG MEXICO S A DE C V — Type IP-X3 or ULTRACODE

3. **Steel Stud —** 1-5/8 in. wide with 1-5/16 and 1-7/16 in. legs having a 1/4- in. folded flange, fabricated from No. 25 MSG galv steel. Length to be 1/2 in. less than the assembly height.

3A. **As an alternate to Item 3 Steel Framing Members* —** galv. steel clips spaced 4 ft OC and 1-1/4 in. from top and bottem of column. A No. 28 MSG galv steel support angle with 1-1/4 in. length shall be placed over clips and secured with screws attaching the wallboard. The angle cut 1 in. less than assembly height splices in angle to occur over clips. The clips for use with wide flange columns only.

JOHN WAGNER ASSOCIATES INC, DBA

GRABBER — Types CB, CB1Clips.

4. **Corner Beads —** No. 28 MSG galv steel, 1-1/4 in. legs to be attached to the wallboard with No. 6 by 1 in. screws spaced 12 in. OC max.

5. **Tie Wire —** No. 18 SWG steel wire spaced 24 in. OC used with second layer of wallboard.

6. **Screws —** For attaching first layer of wallboard to steel studs, and third layer of wallboard to 2 in. by 2 in. steel angle (25 Ga) to be No. 6 by 1 in. (or 1-1/4 in. for 3/4 in. thick wallboard) Phillips head self-drilling, self-tapping double lead screws spaced 24 in. OC For attaching second layer of wallboard to steel studs and fourth layer of wallboard to 2 in. by 2 in. steel angle (25 Ga) to be No. 6 by 1-3/4 in. (or 2-1/4 in. for 3/4 in. thick wallboard) steel screws of the same type spaced 12 in. OC For attaching third layer of wallboard to steel studs to be No. 8 by 2-1/4 in. screws of the same type spaced 12 in. OC

7. **Finishing System —** (Not Shown) — Joint compound applied over corner beads to a thickness of 1/16 in.

*Bearing the UL Classification Mark

Last Updated on 2009-04-22

Questions? Notice of Disclaimer Page Top

Copyright © 2010 Underwriters Laboratories Inc.®

The appearance of a company's name or product in this database does not in itself assure that products so identified have been manufactured under UL's Follow-Up Service. Only those products bearing the UL Mark should be considered to be Listed and covered under UL's Follow-Up Service. Always look for the Mark on the product.

UL permits the reproduction of the material contained in the Online Certification Directory subject to the following conditions: 1. The Guide Information, Designs and/or Listings (files) must be presented in their entirety and in a non-misleading manner, without any manipulation of the data (or drawings). 2. The statement "Reprinted from the Online Certifications Directory with permission from Underwriters Laboratories Inc." must appear adjacent to the extracted material. In addition, the reprinted material must include a copyright notice in the following format: "Copyright © 2010 Underwriters Laboratories Inc.®"

An independent organization working for a safer world with integrity, precision and knowledge.

BXUV.G705
Fire Resistance Ratings - ANSI/UL 263

Page Bottom

Design/System/Construction/Assembly Usage Disclaimer

- Authorities Having Jurisdiction should be consulted in all cases as to the particular requirements covering the installation and use of UL Listed or Classified products, equipment, system, devices, and materials.
- Authorities Having Jurisdiction should be consulted before construction.
- Fire resistance assemblies and products are developed by the design submitter and have been investigated by UL for compliance with applicable requirements. The published information cannot always address every construction nuance encountered in the field.
- When field issues arise, it is recommended the first contact for assistance be the technical service staff provided by the product manufacturer noted for the design. Users of fire resistance assemblies are advised to consult the general Guide Information for each product category and each group of assemblies. The Guide Information includes specifics concerning alternate materials and alternate methods of construction.
- Only products which bear UL's Mark are considered as Classified, Listed, or Recognized.

Fire Resistance Ratings - ANSI/UL 263

See General Information for Fire Resistance Ratings - ANSI/UL 263

Design No. G705

May 15, 2009

Restrained Assembly Ratings — 1, 1-1/2, 2 or 3 Hr.

Unrestrained Assembly Ratings — 1, 1-1/2, 2 or 3 Hr. (See Item 2 and 5)

Unrestrained Beam Ratings — 1, 1-1/2, 2 or 3 Hr. (See Items 2 and 5)

Load Restricted for Canadian Applications — See Guide BXUV7

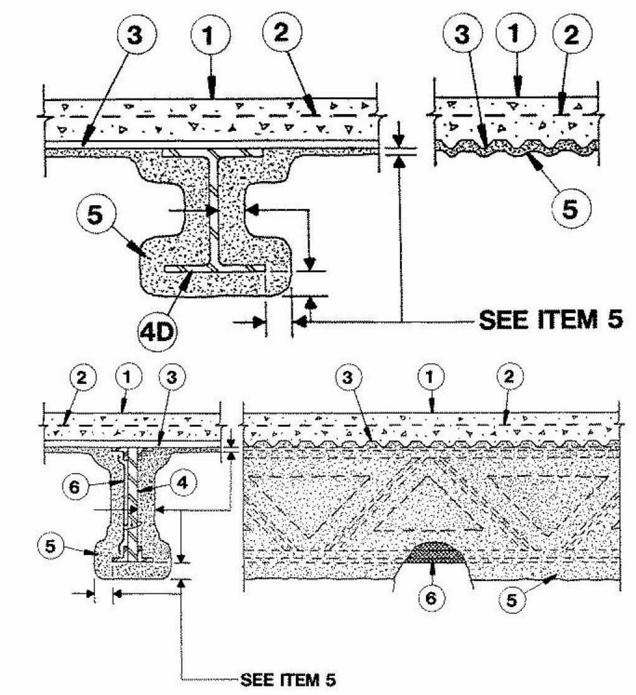

1. **Normal Weight or Lightweight Concrete —** Normal weight concrete: carbonate or siliceous aggregate concrete, 147 to 150 pcf unit weight, 3500 psi compressive strength, vibrated. Lightweight concrete: expanded shale, clay, or slate aggregate by rotary-kiln method, 110 to 118 pcf unit weight, 3000 psi compressive strength, vibrated, 2 oz air entrainment per bag of cement. For 1-1/2 and 2 h assembly ratings, the 2-3/4 in. concrete topping thickness may be reduced to 2-1/2 in. when noncomposite joists are used. The Unrestrained Assembly Rating depends on the type of concrete aggregate and joist spacing as shown below.

Unrestrained Assembly Rating

	Max Joist Spacing 3 ft, 6 in.	Joist Spacing Greater Than 3 ft, 6 in. O.C.
Lightweight Aggregate	1-1/2 h	1-1/2 h
Normal Weight Aggregate	2 h	1-1/2 h

2. **Welded Wire Fabric —** 6x6-8/8 SWG.

3. **Steel Floor and Form Units —** No. 28 MSG galv corrugated sheet steel min, 2-1/2 in. pitch and 1/2 in. depth of corrugations. Units welded to each joist, 36 welds per 100 sq ft of form units, with at least one weld at each joint.

4. **Steel Joists —** Min 16K6 or heavier with min 3/4 in. diam or large cross sectional area for web members with horizontal bridging, Item 7. As an alternate, any LH Series steel joists spanning no greater than 60 ft may be used. For spans greater than 60 ft, LH Series joists may be used provided that the deflection under their published total load shall not be greater than 1/277 of the joist span.

4A. **Steel Joist —** As an alternate to Item 4, composite or noncomposite welded or bolted to end supports. May be uncoated or provided with a shop coat of paint. Designed per S.J.I. specifications for a max design stress of 30,000 psi. Top chords shall consist of two angles measuring 1-1/2 by 1-1/2 by 0.156 in. thick. Bottom chord shall consist of two round bars measuring 0.675 in. in diam. or two angles measuring 1 by 1 0.125 in. thick. The second web member at each end shall consist of a 0.654 in. diam round bar. Primary web members, including the end web members, shall consist of 0.774 in. diam round bars. All remaining non-primary web members shall consist of 0.5 in. diam round bars. Horizontal bridging (Item 7) per S.J.I. specifications is required when noncomposite joists are used.

4B. **Composite Joists —** (Not Shown) — As an alternate to Item 4 and 4A, steel joists designed for full composite action with the concrete slab. Min overall depth 13 in. Min area of joist members shall be 0.708 sq in. for top and bottom chord angles and 0.442 sq in for web. Designated in accordance with SJI Specifications for K-Series joists as revised in November 15, 1989.

4C. **Structural Steel Members* —** (Not Shown) As an alternate to 4, 4A and 4B-(not shown) — Composite joists with top chord embedded in concrete slab. Welded to end supports. Min area of joist members shall be 0.708 sq in. for top and bottom chord angles and 0.442 sq in. for web.

VESCOM STRUCTURAL SYSTEMS INC — Type V

4D. **Steel Joists —** As an alternate to Items 4, 4A, 4B or 4C - may be either uncoated or provided with a shop coat of paint. Composite or noncomposite. Welded or bolted to end supports. Designed per S.J.I. specifications for a max design stress of 30 ksi. The top chords shall consist of two angles measuring 1-1/4 by 1-1/4 by 0.127 in. thick. Bottom chords shall consist of two round bars measuring 0.566 in. in diam. or two angles measuring 1 by 1 by 0.125 in. thick. Bearing plates shall consist of two angles measuring 1-1/2 by 2 by 0.188 in. thick and 5-1/16 in. long. Web members shall consist of 0.565 in. diam bars. The min depth and weight shall be 8 in. and 4.9 lb/ft, respectively.

4E. **Steel Beam —** As an alternate to steel joists (Items 4-4D), W8x28 min size.

5. **Spray-Applied Fire Resistive Materials* —** Applied by mixing with water and spraying in one or more coats to the thicknesses shown below, to steel surfaces which are clean and free of dirt, loose scale and oil. Use of Type PC Pre-coat is required on steel floor and form units. Type PC Pre-coat shall be applied to cover approx 70 percent of the surface. Thickness of Type PC Pre-coat is included in the total thickness of the protection material. Min average and min individual density of 15 and 14 pcf, respectively. For method of density determination, see Design Information Section, Sprayed Material.

Restrained Assembly Rating, Hr	Unrestrained Assembly & Beam Rating, Hr	Min Thkns, In. Deck	Min Thkns, In. Joist (Item 4, 4B, 4C)	Min Thkns, In. Joist (Item 4A)	Min Thkns, In. Joist (Item 4D) Normal Weight Concrete	Min Thkns, In. Joist (Item D) Lightweight Concrete	Min Thkns, In. Beam (Item E)
1	1	1/2	1-1/2	9/16+	1+	1-1/8+	5/16
1-1/2	1	1/2	1-1/2	1	1-9/16	1-3/4	5/16
2	1	1/2	1-1/2	1-3/8	2-1/16	2-1/4	5/16
2	1-1/2	1/2	1-1/2	1-3/8	2-1/16	2-1/4	1/2
2	2	1/2	1-1/2	1-3/8	2-1/16	2-1/4	11/16
3	2	1/2	1-1/2	2-1/4	—	—	11/16
3	3	1	2-1/4	2-1/4	—	—	1-1/16

BERLIN CO LTD — Types 300, 300ES, 300N or SB.

ISOLATEK INTERNATIONAL — Type 300, Type 300ES, Type 300N, or Type SB and Type PC.

+ - When bottom chords consist of 1 by 1 by 0.125 in. thick steel angles. the thickness of spray-applied fire resistive material shall be increased by 1/4 in. on the bottom chord only.

5A. **Spray-Applied Fire Resistive Materials* — (As an alternate to Item 5) —** Applied by mixing with water and spraying in one or more coats to the thicknesses shown below, to steel surfaces which are clean and free of dirt, loose scale and oil. Use of Type PC Pre-coat is required on steel floor and form units. Type PC Pre-coat shall be applied to cover approx 70 percent of the surface. Thickness of Type PC Pre-coat is included in the total thickness of the protection material. Min average and min individual density of 17.5 and 16 pcf, respectively, for Type 300TW. Min average and min individual density of 22 and 19 pcf, respectively, for Type 400. For method of density determination, see Design Information Section, Sprayed Material.

ISOLATEK INTERNATIONAL — Type 300TW or Type 400.

6. **Metal Lath —** (Optional) — Metal lath may be used to facilitate the spray application of spray-applied resistive material on steel bar joists and trusses. The diamond mesh, 3/8 in. expanded steel lath, 1.7 to 3.4 lb/sq yd is secured to one side of each steel joist with No. 18 SWG galv steel wire at joist web and bottom chord members, spaced 15 in. O.C. max. When used, the metal lath is to be fully covered with spray-applied resistive material with no min thickness requirements.

6A. **Nonmetallic fabric mesh —** (Optional, Not Shown) — As an alternate to metal lath, glass fiber mesh, weighing approx 2.5 oz/sq yd, polypropylene fabric mesh, weighing approx 1.25 oz/sq yd or equivalent, may be used to facilitate the spray application. The mesh is secured to one side of each joist web member. The method of attaching the mesh must be sufficient to hold the mesh and the spray-applied resistive material in place during application until it has cured. An acceptable method to attach the mesh is by embedding the mesh in min 1/4 in. long beads of hot melted glue. The beads of glue shall be spaced a max of 12 in. O.C. along the top chord of the bar joist. Another method to secure the mesh is by 1-1/4 in. long by 1/2 in. wide hairpin clips formed from No. 18 SWG or heavier steel wire

7. **Horizontal Bridging —** (Not Shown) — Min 1-1/4x1-1/4x1/8 in. thick steel angles for use with noncomposite joists (Item 4 and 4A). Number and spacing per Steel Joist Institute specifications. Welded to top and bottom chord of the joists. Min thickness of spray-applied resistive material on bridging angles is min thickness on steel joist.

*Bearing the UL Classification Mark

Last Updated on 2009-05-15

Questions? Notice of Disclaimer Page Top

Copyright © 2010 Underwriters Laboratories Inc.®

The appearance of a company's name or product in this database does not in itself assure that products so identified have been manufactured under UL's Follow-Up Service. Only those products bearing the UL Mark should be considered to be Listed and covered under UL's Follow-Up Service. Always look for the Mark on the product.

UL permits the reproduction of the material contained in the Online Certification Directory subject to the following conditions: 1. The Guide Information, Designs and/or Listings (files) must be presented in their entirety and in a non-misleading manner, without any manipulation of the data (or drawings). 2. The statement "Reprinted from the Online Certifications Directory with permission from Underwriters Laboratories Inc." must appear adjacent to the extracted material. In addition, the reprinted material must include a copyright notice in the following format: "Copyright © 2010 Underwriters Laboratories Inc.®"

An independent organization working for a safer world with integrity, precision and knowledge.

GSBS ARCHITECTS

375 WEST 200 SOUTH
SALT LAKE CITY, UT 84101

P 801.521.8600
F 801.521.7913

www.gsbsarchitects.com

STATE OF UTAH
MICHAEL JOHN STRANSKY
116302
LICENSED ARCHITECT

REVISIONS:

Utah Valley University New Science Building

800 West University Parkway
Orem, Utah 84058

Division of Facilities Construction and Management

DRAWN BY:	Author
CHECKED BY:	Checker
DFCM PROJECT NO.:	09020790
GSBS PROJECT NO.:	2009.115.00
ISSUED DATE:	05.07.2010

REFERENCED ASSEMBLIES

CONSTRUCTION DOCUMENTS

AE-534

GSBS ARCHITECTS

375 WEST 200 SOUTH
SALT LAKE CITY, UT 84101

P 801.521.8600
F 801.521.7913

www.gsbsarchitects.com

STATE OF UTAH
116302
LICENSED ARCHITECT

REVISIONS:

DIVISION: 09—FINISHES
Section: 09260—Gypsum Board Assemblie:

REPORT HOLDER:

USG CORPORATION
550 WEST ADAMS STREET
CHICAGO, ILLINOIS 60661

EVALUATION SUBJECT:

USG Drywall Shaft Partition Systems

1.0 SUBJECT

USG® Drywall Shaft Partition Systems

2.0 PROPERTY FOR WHICH EVALUATION IS SOUGH1

Fire Resistance

3.0 DESCRIPTION

CAVITY SHAFT WALL SYSTEMS

A. One-Hour Cavity Shaft Wall (Nonload-Bearing)

1. Two and one-half-inch-wide, minimum No. 25 gauge "J" floor and ceiling runners.

2. One-inch-thick SHEETROCK brand Gypsum Liner panels 24 inches wide - no screw attachment.

3. Minimum No. 25 gauge USG Steel C-H stud. Screws not required to attach stud to runner. E-shaped studs may be used for closure panels at end walls or columns. (If "J" runners are used at end walls, the gypsum liner is fastened at the ends with $1^{3}/_{8}$-inch Type S screws 12 inches on center.) The H-Section of C-H stud normally faces shaft.

4. A single ply $^{5}/_{8}$-inch USG SHEETROCK FIRECODE® Type C gypsum panels installed vertically with 1 inch Type S screws 12 inches on center in field and at edges - 6 inches from top, bottom and ends. Joints and screw heads are finished with SHEETROCK Joint Tape and SHEETROCK Joint Compound on this ply, when required for decorative purposes.

an overlap of the wall of not less than 1 inch is maintained. The angles are secured to the framed opening with the same type of screws (2 screws on each side angle 3 inches from each end; 3 screws on each head and sill angle with 1 screw in the center and 1 at each end 3 inches from ends).

C. Two-Hour Cavity shaft Wall - Alternative (Nonload-Bearing)

1. Two and one-half-inch-wide, minimum No. 25 gauge "J" floor and ceiling runners.

2. One-inch-thick SHEETROCK brand Gypsum Liner Panels 24 inches wide - no screw attachment.

3. Minimum No. 25 gauge USG STEEL C-H stud. Screws not required to attach stud to runner. E-shaped studs are used fro closure panels at end walls or columns, or in lieu of C-H stud. (If "J" runners are used at end walls, the gypsum liner is fastened at the ends with $1^{3}/_{8}$ inch Type S screws, 12 inches on center.) The H-Section of C-H stud normally faces shaft.

4. One-half-inch USG SHEETROCK FIRECODE® Type C or $^{5}/_{8}$-inch SHEETROCK FIRECODE® Type X gypsum panels applied vertically and attached with 1-inch type S screws at 12 inches on center in field and at edges - 6 inches from top, bottom and ends. Joints and screw heads are finished with SHEETROCK Joint Tape and SHEETROCK Joint Compound on outer layer only, when required for decorative purposes. Vertical joint must be staggered on opposite sides of the walls.

D. Two-Hour Cavity Shaft Sound Wall (Nonload-Bearing) STC Over 50

1. Two and one-half-inch wide, minimum No. 25 gauge "J" floor and ceiling runners.]

2. One-inch-thick SHEETROCK brand Gypsum Liner Panels 24 inches wide - no screw attachment.

3. Minimum No. 25 gauge USG Steel C-H stud. Screws not required to attach stud to runner. E-shaped studs are used for closure panels at end walls or columns, or in lieu of C-H stud. (If "J" runners are used at end walls, the gypsum is fastened at the ends with $1^{3}/_{8}$-inch Type S screws, 12 inches on center.) The H-Section of C-H stud normally faces shaft.

4. One and one-half-inch thick USG THERMAFIBER® Sound Attenuation Blanket.

5. One-half-inch SHEETROCK FIRECODE® Type C or $^{5}/_{8}$-inch SHEETROCK FIRECODE® Type X gypsum panels applied vertically and attached with 1-inch Type S screws at 12 inches on center. Joints and screw heads are finished with SHEETROCK Joint Tape and SHEETROCK Joint Compound on outer layer only, when required for decorative purposes. Vertical joints in the base layer must be staggered with the vertical joints in the finish layer.

6. USG RC-1 resilient channels at 24 inches on center horizontally and attached with $^{5}/_{8}$-inch panhead screws.

B. Two-Hour Cavity Shaft Wall (Nonload-Bearing)

1. Two and one-half-inch-wide, minimum No. 25 gauge "J" floor and ceiling runner.

2. One-inch-thick SHEETROCK brand Gypsum Liner Panels 24 inches wide - no screw attachment.

3. Minimum No. 25 gauge USG Steel C-H stud. Screws not required to attach stud to runner. E-shaped studs are used for closure panels at end walls or columns, or in lieu of C-H stud. (If "J" runners are used at end walls, the gypsum liner is fastened at the ends with $1^{3}/_{8}$ inch Type S screws, 12 inches on center.) The H-Section of C-H stud normally faces shaft.

4. Gypsum panels attached as follows:

   a. Base layer: $^{1}/_{2}$-inch SHEETROCK FIRECODE® TYPE C or $^{5}/_{8}$-inch SHEETROCK FIRECODE® Type X gypsum panels applied vertically with 1-inch Type S screws 24 inches on center in field and at edges.

   b. Finish layer: $^{1}/_{2}$-inch SHEETROCK FIRECODE® Type C or $^{5}/_{8}$-inch SHEETROCK FIRECODE® Type X gypsum panels applied vertically or horizontally and attached with $1^{3}/_{8}$ inch Type S screws at 12 inches on center in field and at edges - 6 inches from top, bottom and ends. When applied vertically, the joints must be staggered with the joints in the base layer.

Joints and screw heads on outer layer only are finished with SHEETROCK Joint Tape and SHEETROCK Joint Compound when required for decorative purposes.

5. Fire Damper (optional) (not shown) - $1^{1}/_{2}$ hour curtain-type fire damper encased in a No. 22 gauge galvanized sleeve, installed in a 48 inches wide × 36 inches high opening framed with E-Studs and J-Runners. No. 16 gauge galvanized steel, $1^{1}/_{2}$ inches × $1^{1}/_{2}$ inches mounting angles are attached to the damper sleeve on the face layer side of the wall only around all 4 sides of the sleeve using 2 inch long No. 10 sheet screws 2 inches from each end and 6 inches o.c. The mounting angles must be installed such that

E. Three-Hour Cavity Shaft Wall (Nonload-Bearing)

1. Two and one-half-inch-wide, minimum No. 25 gauge "J" floor and ceiling runners.

2. One-inch-thick SHEETROCK brand Gypsum Liner Panels 24 inches wide - no screw attachment.

3. Minimum No. 25 gauge USG Steel C-H stud. Screws not required to attach stud to runner. E-shaped studs are used for closure panels at end walls or columns, or in lieu of C-H stud. (If "J" runners are used at end walls, the gypsum liner is fastened at the ends with $1^{3}/_{8}$ inch Type S screws, 12 inches on center.) The H-Section of C-H stud normally faces shaft.

4. Gypsum panels attached as follows:

   a. Base layer: $^{5}/_{8}$ inch SHEETROCK FIRECODE® Type C gypsum panels applied vertically or horizontally with 1 inch Type S screws at 24 inches on center in field and at edges.

   b. Middle layer: $^{5}/_{8}$ inch SHEETROCK FIRECODE® Type C gypsum panels applied vertically or horizontally with $1^{3}/_{8}$ inch Type S screws at 24 inches on center in field and at edges. When applied vertically the joints must be staggered with the base and finish layer joints.

   c. Finish layer: $^{5}/_{8}$ inch USG SHEETROCK FIRECODE® Type C gypsum panels applied vertically or horizontally and attached with $2^{1}/_{4}$ inch Type S screws at 16 inches on center in field and at edges - 6 inches from top, bottom and ends.

Joint and screw heads on outer layer only are finished with SHEETROCK Joint Tape and SHEETROCK Joint Compound systems, when required for decorative purposes.

SOLID AND VENT SHAFT SYSTEMS

F. Two-Hour 2-inch Solid Gypsum Partition (Nonload-Bearing)

1. No. 22 gauge metal angles.

2. One-half-inch USG SHEETROCK FIRECODE Type C gypsum panels laminated to core panels with SHEETROCK Setting Type Joint Compound.

3. One-inch USG V-Edge Gypsum Coreboard 2 feet 0 inch wide (attachment - No. 22 gauge angle: 1 inch Type S screws).

4. No. 22 gauge metal angles.

An alternative assembly sequence for F above: Where construction is limited to application of gypsum panels from one side, "L" runners are anchored to floor and ceiling with suitable attachments at 24 inches on center. If "L" runners frame an opening in concrete, a 2-inch-by-2-inch "L" runner is used to permit fasteners to be driven further from concrete edge. The 1 inch coreboard is fastened to angle runners with two $1^{3}/_{8}$-inch Type S screws placed 3 inches in from each edge. Two layers of $^{1}/_{2}$ inch USG SHEETROCK FIRECODE® Type C gypsum panels are laminated to one side of 1 inch coreboard with all vertical joints being offset at least 3 inches. Joints need not be taped or finished on inside.

Alternative Construction: As an alternative for all of the above described constructions, Imperial Gypsum Base of the same thickness and core type shall be substituted for the gypsum panels. Joints on the face layer, other than the inside of shaft or duct partitions, may be covered with tape and the entire surface is covered with a minimum of $^{1}/_{16}$ inch of USG Veneer Plaster (Imperial or Diamond Interior Finish) in accordance with manufacturer's directions.

3. USG Cavity Shaft Wall System

To provide a fire-resistive protection to corridor ceilings or the underside of stairs.

USG "J" runners are attached to all existing horizontal and vertical framing intersected at the boundaries of the area to be protected. The "J" runners are attached to the existing framing members using mechanical fasteners spaced at a maximum of 24 inches on center and having an assigned design load of 200 pounds in either shear or pullout. USG C-H studs of the required gauge are attached to the "J" runners at 24 inches on center by means of two Types S-12, $^{1}/_{2}$-inch panhead screws to frame the walls and/or soffits of the enclosures. Corners of the enclosure which do not intersect existing framing are built up of two "J" runners fastened together with two Type S-12, $^{1}/_{2}$-inch panhead screws at 24 inches on center. The USG C-H studs are fastened to the "J" runners as previously described. One-inch-thick SHEETROCK brand Gypsum Liner Panels, 24 inches wide, is installed on the interior face of the enclosure within the slots of the C-H studs. No screw attachments are required. Where the Gypsum Liner Panel intersects the "J" runners against the existing horizontal and/or vertical framing, $1^{3}/_{8}$-inch Type S screws are installed at a maximum of 12 inches on center.

Gypsum panels are attached to the exterior surfaces of the framing in the manner required for the fire-resistive rating as follows:

1. One-hour construction consists of one layer of $^{5}/_{8}$ inch SHEETROCK FIRECODE® Type C gypsum panels applied parallel to the C-H studs, with all vertical joint on studs. The panels are fastened to each C-H stud and end "J" runners with 1-inch Type S screws 12 inches on center in the field and at edges. Joints and screw heads on the outer face panels are finished with SHEETROCK Joint Tape and SHEETROCK Joint Compound.

2. Two-hour construction consists of a base layer of $^{1}/_{2}$-inch SHEETROCK FIRECODE® Type C panels applied parallel to the C-H studs and attached with 1-inch Type S screws at 24 inches on center in the field and at edges. The finish layer of $^{1}/_{2}$-inch SHEETROCK FIRECODE® Type C panels are applied either parallel or normal to the C-H studs, with joints staggered 24 inches from the base layer. One and five-eights-inch Type S screws at 12 inches on center in the field and at edges fasten the finish layer. Joints and screw heads on the outer layer only are finished with SHEETROCK Joint Tape and SHEETROCK Joint Compound.

7.0 CONDITIONS OF USE

The National Evaluation Service Committee finds that, in their opinion, the USG® Drywall Shaft Partition Systems described in this report are alternates to types of fire-resistive construction specified in the 1990 BOCA National Building Code, the 1988 Standard Building Code with 1989/1990 Revisions, and the 1988 Uniform Building Code with 1990 Accumulative Supplement, subject to the following conditions:

1. The report does not include structural evaluation of the products listed.

2. All cut openings and horizontal joints in metal-framed shaft partitions with coreboard must be cased with system metal framing.

H. USG Cavity Shaft Wall for Two-Hour Horizontal Membrane or Horizontal Duct Shaft Protection

Basically the same as described in paragraph "G" above, but uses three layers of $^{1}/_{2}$ inch SHEETROCK FIRECODE® Type C gypsum panels. (See Figure III-H at the end of this report.) The base layer is applied identical to the base layer described in item G.2. above. The second layer is applied the same as the base layer, except that joints are offset 24 inches and $1^{3}/_{8}$-inch type S screws are 4 inches on center. The face layer is installed perpendicular to the C-H studs with $2^{1}/_{4}$-inch screws 12 inches on center. Butt joints in face layer fall between C-H studs and are secured with $1^{1}/_{2}$-inch Type G screws 8 inches on center. Treatment of wallboard joints and fasteners is not necessary.

I. Materials

USG Steel C-H studs are roll formed from ASTM A 526 steel having a minimum yield strength of 33,000 psi.

Cement for laminating - SHEETROCK Setting Type Joint Compound.

For taping and sealing joints - SHEETROCK Joint Tape and SHEETROCK Joint Compound.

SHEETROCK FIRECODE® is a USG registered trademark for a Type X core gypsum panel. Type C is a USG trademark for an improved Type X core. USG Type C panels may be substituted for any Type X gypsum panel permitted by the code, provided the panel thickness is the same.

4.0 INSTALLATION

USG Drywall Shaft Partition Systems shall be installed in accordance with the fire rated assembly details and other information contained in this report.

5.0 IDENTIFICATION

Face panels are bundled in two panel groups and bound with a red, white and blue tape with panel designation printed on the tape.

SHEETROCK brand Gypsum Liner Panels are shipped unbundled in units with end banding. The face and back paper is green. The long edges are paper wrapped and have a $^{5}/_{8}$-inch bevel on top and bottom edge. The back of each liner panel has an Underwriters Laboratories, Inc. Label that denotes UL design U438, lists USG File No. R 1319 and identifies the panel as USG Type SLX (shaft liners fire-rated).

6.0 EVIDENCE SUBMITTED

Results of fire-endurance tests conducted in accordance with ASTM E 119.

3. System G shaft walls are limited for use as corridor ceilings or as the horizontal enclosure on the underside of stairs (i.e. "Stair Soffits").

4. Assembly described in paragraph H may be used to protect two-hour horizontal ducts (horizontal duct shafts) or where a two-hour horizontal membrane is required and is not part of a floor/ceiling or roof/ceiling assembly. This system is designed to support its own dead weight only and should not be used where there is an attic or loft above, or any probability of storage.

This report is subject to periodic re-examination. For information on the current status of this report, contact the ICC-ES.

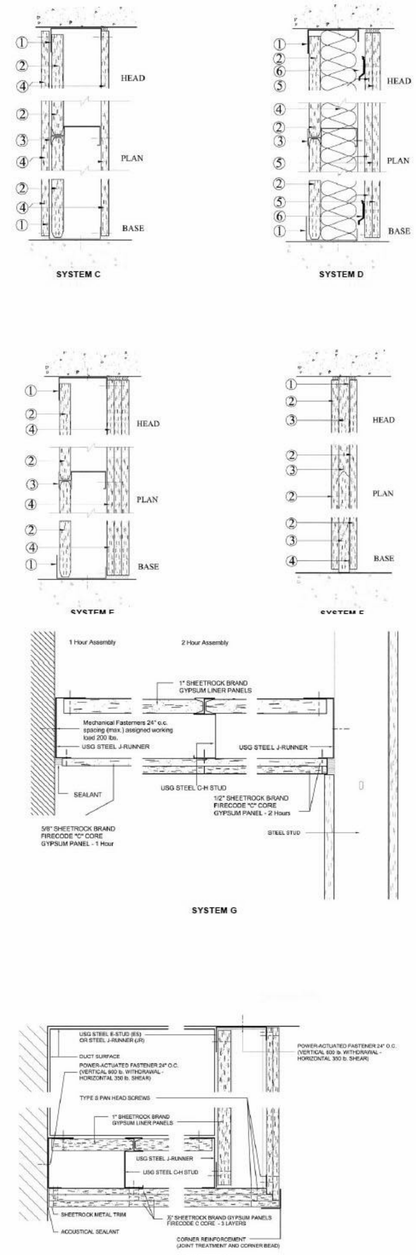

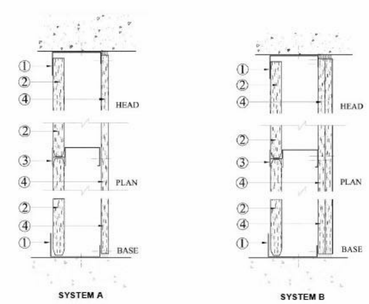

Utah Valley University New Science Building

800 West University Parkway
Orem, Utah 84058

Division of Facilities Construction and Management

DRAWN BY:	Author
CHECKED BY:	Checker
DFCM PROJECT NO.:	09020790
GSBS PROJECT NO.:	2009.115.00
ISSUED DATE:	05.07.2010

REFERENCED ASSEMBLIES

CONSTRUCTION DOCUMENTS

AE-535

1 AE-535 NER-258
12" = 1'-0"

ONLINE CERTIFICATIONS DIRECTORY

BXUV.U906
Fire Resistance Ratings - ANSI/UL 263

Page Bottom

Design/System/Construction/Assembly Usage Disclaimer

- Authorities Having Jurisdiction should be consulted in all cases as to the particular requirements covering the installation and use of UL Listed or Classified products, equipment, system, devices, and materials.
- Authorities Having Jurisdiction should be consulted before construction.
- Fire resistance assemblies and products are developed by the design submitter and have been investigated by UL for compliance with applicable requirements. The published information cannot always address every construction nuance encountered in the field.
- When field issues arise, it is recommended the first contact for assistance be the technical service staff provided by the product manufacturer noted for each product category and each group of assemblies. The Guide Information includes specifics concerning alternate materials and alternate methods of construction.
- Only products which bear UL's Mark are considered as Classified, Listed, or Recognized.

Fire Resistance Ratings - ANSI/UL 263

See General Information for Fire Resistance Ratings - ANSI/UL 263

Design No. U906

April 07, 2009

Bearing Wall Rating — 2 HR.

Nonbearing Wall Rating — 2 HR.

Load Restricted for Canadian Applications — See Guide BXUVZ

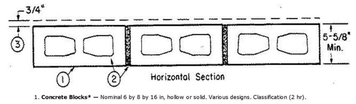

1. **Concrete Blocks* —** Nominal 6 by 8 by 16 in, hollow or solid. Various designs. Classification (2 hr).

See **Concrete Blocks** category for list of eligible manufacturers.

ANCHOR CONCRETE PRODUCTS INC

GAGNE & SON CONCRETE BLOCK INC

Allowable compressive stress of 57% of max allowable compressive stress in accordance with the empirical design method.

OLDCASTLE APG NE DBA ARTHUR WHITCOMB

WESTBROOK CONCRETE BLOCK CO INC

Allowable compressive stress of 75.6% of max allowable compressive stress in accordance with the empirical design method.

2. **Mortar —** Blocks laid in full bed of mortar, nom. 3/8 in. thick, of not less than 2-1/4 and not more than 3-1/2 parts of clean sharp sand to 1 part Portland cement (proportioned by volume) and not more than 50 percent hydrated lime (by cement volume). Vertical joints staggered.

3. **Portland Cement Stucco or Gypsum Plaster —** Add 1/2 hr to Classification if used. Attached to concrete blocks (Item 1).

4. **Foamed Plastic* —** (Optional-Not Shown) — 1-1/2 in. thick max, 4 ft wide sheathing attached to concrete blocks (Item 1).

THE DOW CHEMICAL CO — Type Thermax

*Bearing the UL Classification Mark

3 AE-536 U906 12" = 1'-0"

ONLINE CERTIFICATIONS DIRECTORY

BXUV.U499
Fire Resistance Ratings - ANSI/UL 263

Page Bottom

Design/System/Construction/Assembly Usage Disclaimer

- Authorities Having Jurisdiction should be consulted in all cases as to the particular requirements covering the installation and use of UL Listed or Classified products, equipment, system, devices, and materials.
- Authorities Having Jurisdiction should be consulted before construction.
- Fire resistance assemblies and products are developed by the design submitter and have been investigated by UL for compliance with applicable requirements. The published information cannot always address every construction nuance encountered in the field.
- When field issues arise, it is recommended the first contact for assistance be the technical service staff provided by the product manufacturer noted for the design. Users of fire resistance assemblies are advised to consult the general Guide Information for each product category and each group of assemblies. The Guide Information includes specifics concerning alternate materials and alternate methods of construction.
- Only products which bear UL's Mark are considered as Classified, Listed, or Recognized.

Fire Resistance Ratings - ANSI/UL 263

See General Information for Fire Resistance Ratings - ANSI/UL 263

Design No. U499

February 29, 2008

Nonbearing Wall Rating — 1 Hr.

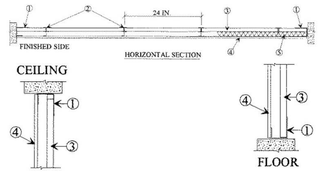

1. **Channel Track —** "7" -shaped channel, 2-1/2 in. deep with unequal legs of 1 in. and 2 in., fabricated from No. 25 MSG galv steel. Channels attached to structural supports with steel fasteners located not greater than 2 in. from ends and not greater than 24 in. OC.

2. **Steel Studs —** "T" shaped studs, min 2-1/2 in. deep by 1-1/2 in. wide, fabricated from min 25 MSG galv steel, spaced 24 in. OC. Vertically restrained walls require studs to be cut 1/2 in. less than floor to ceiling height.

2A. **Steel Studs —** (Not Shown) — "C-H" -shaped studs, min 2-1/2 in. deep by 1-1/2 in. wide, fabricated from min 25 MSG galv steel, spaced 24 in. OC. Vertically restrained walls require studs to be cut 1/2 in. less than floor to ceiling height.

2B. **Steel Studs —** (Not Shown) — "C-T" - shaped studs, min 2-1/2 in. deep by 1-1/2 in. wide, fabricated from min 25 MSG galv steel, spaced 24 in. OC. Vertically restrained walls require studs to be cut 1/2 in. less than floor to ceiling height.

2C. **Furring Channels —** (Optional, not shown) - Resilient furring channels fabricated from min. 25 MSG corrosion protected steel, installed horizontally, and spaced vertically a max. 24 in. OC. Flange portion of channel attached to each intersecting stud on side of stud opposite the 1 in. liner panels with 1/2 in. long Type S or S-12 pan-head steel screws. When furring channels are used, wallboard to be installed vertically only.

3. **Gypsum Board* —** 1 in. thick gypsum wallboard liner panels, supplied in nominal 24 in. widths. Vertical edges inserted in "T" studs. Free edge of end panels attached to long leg of "7" runners with 1-5/8 in. long Type S self-drilling, self-tapping bugle head steel screws spaced not greater than 24 in. OC.

NATIONAL GYPSUM CO — Types FSW, FSW-B .

4. **Gypsum Board* —** 5/8 in. thick, 4 ft wide, applied horizontally or vertically and attached to studs with 1 in. long Type S steel screws spaced 12 in. OC along the edges and in the field of the boards. When Furring Channels (Item 2C) are used, gypsum board attached vertically to furring channels with 1 in. long Type S steel screws spaced 12 in. OC.

NATIONAL GYPSUM CO — Types FSK-C, FSW, FSW-S, FSW-C, FSWR-C.

4A. **Gypsum Board* —** 5/8 in. thick, 4 ft wide, applied vertically and attached to studs with 1 in. long Type S steel screws spaced 12 in. OC along the edges and in the field of the boards. When Furring Channels (Item 2C) are used, gypsum board attached vertically to furring channels with 1 in. long Type S steel screws spaced 12 in. OC.

NATIONAL GYPSUM CO — Types FSW-3, FSWR-C.

5. **Batts and Blankets* —** (Optional) — Mineral wool or glass fiber batts partially or completely filling stud cavity. Any mineral wool or glass fiber batt bearing the UL Classification Marking as to Fire Resistance. See Batts and Blankets (BZJZ)Category For Names Of Classified Companies.

5A. **Fiber, Sprayed* —** As an alternate to Batts and Blankets (Item 5) — Spray applied cellulose material. The fiber is applied with water to completely fill the enclosed cavity in accordance with the application instructions supplied with the product. Nominal dry density of 3.0 lb/ft^3. Alternate application method: The fiber is applied with U.S. Greenfiber LLC Type AD100 hot melt adhesive at a nominal ratio of one part adhesive to 6.6 parts fiber to completely fill the enclosed cavity in accordance with the application instructions supplied with the product. Nominal dry density of 2.5 lb/ft^3.

U S GREENFIBER L L C — Cocoon2 Stabilized or Cocoon-FRM (Fire Rated Material)

5B. **Fiber, Sprayed* —** As an alternate to Batts and Blankets (Item 5) and Item 5A - Spray applied cellulose insulation material. The fiber is applied with water to interior surfaces in accordance with the application instructions supplied with the product. Applied to completely fill the enclosed cavity. Minimum dry density of 4.3 pounds per cubic ft.

NU-WOOL CO INC — Cellulose Insulation

*Bearing the UL Classification Mark

2 AE-536 U499 12" = 1'-0"

ONLINE CERTIFICATIONS DIRECTORY

BXUV.U498
Fire Resistance Ratings - ANSI/UL 263

Page Bottom

Design/System/Construction/Assembly Usage Disclaimer

- Authorities Having Jurisdiction should be consulted in all cases as to the particular requirements covering the installation and use of UL Listed or Classified products, equipment, system, devices, and materials.
- Authorities Having Jurisdiction should be consulted before construction.
- Fire resistance assemblies and products are developed by the design submitter and have been investigated by UL for compliance with applicable requirements. The published information cannot always address every construction nuance encountered in the field.
- When field issues arise, it is recommended the first contact for assistance be the technical service staff provided by the product manufacturer noted for the design. Users of fire resistance assemblies are advised to consult the general Guide Information for each product category and each group of assemblies. The Guide Information includes specifics concerning alternate materials and alternate methods of construction.
- Only products which bear UL's Mark are considered as Classified, Listed, or Recognized.

Fire Resistance Ratings - ANSI/UL 263

See General Information for Fire Resistance Ratings - ANSI/UL 263

Design No. U498

June 06, 2009

Nonbearing Wall Rating — 2 Hr

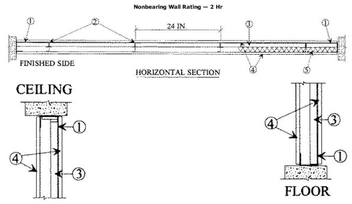

1. **Channel Track —** "7" shaped channel, 2-1/2 in. wide with unequal legs of 1 in. and 2 in., fabricated from 25 MSG galv steel channel attached to structural supports with steel fasteners located not greater than 2 in. from ends and not greater than 24 in. OC.

2. **Steel Studs —** "T" shaped studs, min 2-1/2 in. deep by 1-1/2 in. wide, fabricated from min 25 MSG galv steel, spaced 24 in. OC. Vertically restrained walls require studs to be cut 1/2 in. less than floor to ceiling height.

2A. **Steel Studs —** (Not Shown) — "C-H" -shaped studs, min 2-1/2 in. deep by 1-1/2 in. wide, fabricated from min 25 MSG galv steel, spaced 24 in. OC. Vertically restrained walls require studs to be cut 1/2 in. less than floor to ceiling height.

2B. **Steel Studs —** (Not Shown) — "C-T" - shaped studs, min 2-1/2 in. deep by 1-1/2 in. wide, fabricated from min 25 MSG galv steel, spaced 24 in. OC. Vertically restrained walls require studs to be cut 1/2 in. less than floor to ceiling height.

2C. **Furring Channels —** (Optional, not shown) - Resilient furring channels fabricated from min. 25 MSG corrosion protected steel, installed horizontally, and spaced vertically a max. 24 in. OC. Flange portion of channel attached to each intersecting stud on side of stud opposite the

3. **Gypsum Board* —** 1 in. thick gypsum wallboard liner panels, supplied in nominal 24 in. widths. Vertical edges inserted in "T" studs. Free edge of end panels attached to long leg of channel track with 1-5/16 in. long Type S self-drilling, self-tapping bugle head steel screws spaced 1 in. from both ends.

NATIONAL GYPSUM CO — Types FSW , FSW-B, FSW-7.

4. **Gypsum Board* —** 1/2 in. thick, 4 ft wide applied either horizontally or vertically and attached to studs and runners with 1 in. long Type S steel screws spaced 12 in. OC. When Furring Channels (Item 2C) are used, gypsum board attached vertically to furring channels with 1 in. long Type S steel screws spaced 12 in. OC. Outer layer joints covered with paper tape and joint compound. Exposed screw heads covered with joint compound.

When used in widths other than 48 in., gypsum board to be installed horizontally.

NATIONAL GYPSUM CO — Types FSK-C, FSW-G, FSW-C, FSWR-C.

4A. **Gypsum Board* —** (As an alternate to Item 4) — 5/8 in. thick. Installed as described in Item 4.

NATIONAL GYPSUM CO — Types FSWR-C, FSK, FSK-C, FSW-G, FSW-C, FSW, FSW-3, and FSW-S.

5. **Batts and Blankets* —** (Optional) — Mineral wool or glass fiber batts partially or completely filling stud cavity. Any mineral wool or glass fiber batt bearing the UL Classification Marking as to Fire Resistance. See Batts and blankets (BZJZ)Category For Names of Classified Companies.

5A. **Fiber, Sprayed* —** As an alternate to Batts and Blankets (Item 5) — Spray applied cellulose material. The fiber is applied with water to completely fill the enclosed cavity in accordance with the application instructions supplied with the product. Nominal dry density of 3.0 lb/ft^3. Alternate application method: The fiber is applied with U.S. Greenfiber LLC Type AD100 hot melt adhesive at a nominal ratio of one part adhesive to 6.6 parts fiber to completely fill the enclosed cavity in accordance with the application instructions supplied with the product. Nominal dry density of 2.5 lb/ft^3.

U S GREENFIBER L L C — Cocoon2 Stabilized or Cocoon-FRM (Fire Rated Material)

5B. **Fiber, Sprayed* —** As an alternate to Batts and Blankets (Item 5) and Item 5A - Spray applied cellulose insulation material. The fiber is applied with water to interior surfaces in accordance with the application instructions supplied with the product. Applied to completely fill the enclosed cavity. Minimum dry density of 4.3 pounds per cubic ft.

NU-WOOL CO INC — Cellulose Insulation

*Bearing the UL Classification Mark

1 AE-536 U498 12" = 1'-0"

GSBS ARCHITECTS

375 WEST 200 SOUTH
SALT LAKE CITY, UT 84101

P 801.521.8600
F 801.521.7913

www.gsbsarchitects.com

STATE OF UTAH
116302
LICENSED ARCHITECT

REVISIONS:

Utah Valley University New Science Building

800 West University Parkway
Orem, Utah 84058

Division of Facilities Construction and Management

DRAWN BY:	Author
CHECKED BY:	Checker
DFCM PROJECT NO.:	09020790
GSBS PROJECT NO.:	2009.15.00
ISSUED DATE:	05.07.2010

REFERENCED ASSEMBLIES

CONSTRUCTION DOCUMENTS

AE-536

GSBS ARCHITECTS

375 WEST 200 SOUTH
SALT LAKE CITY, UT 84101

P 801.521.8600
F 801.521.7913

www.gsbsarchitects.com

STATE OF UTAH
116302
LICENSED ARCHITECT

REVISIONS:

System No. CW-D-2042

Design No. FS 117W
August 1, 2003
FIRE PENETRATION SEAL (Mechanical)
Penetrating Item Type A
T-Rating - 0 hr
F-Rating - 2 hr

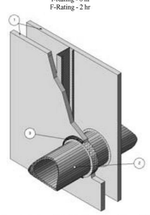

1. GYPSUM WALL ASSEMBLY: The framed opening in the wall shall be 4 in. to 6 in. wider and higher than the diameter of the penetrating item such that, when the penetrating item is centered in the opening, a 2 in. to 3 in. clearance is present between the penetrating item and the framing on all four sides. Two-hour fire-rated wall assembly shall include one of the following features:
   A. Max. diameter of opening in gypsum wallboard layers is to be 25-1/2 in. for steel stud wall assemblies. When steel studs are used and the diameter of the opening exceeds the width of the stud cavity, the opening shall be framed on all sides using lengths of steel stud installed between the vertical studs and screw-attached to the steel studs at each end. Min. 25 GA galvanized steel studs spaced 24 in. o.c. measuring 3-5/8 in. wide with 1-1/4-in. legs. Studs attached with min. #6 x 3/8-in. long steel stud framing screws to channel shaped floor and ceiling runners, measuring 1/2-in. deep by 3-5/8-in wide, which are secured to floor and ceiling with 1-in. concrete fasteners spaced max. 18-in. o.c. Studs and runners covered with two layers of 5/8 in. thick, Type X gypsum wallboard on each face. The base layer of gypsum wallboard fastened to steel studs with #6 1-1/8 in. long bugle head phillips drywall screws 12 in. o.c. The face layer of gypsum wallboard fastened with #6 1-5/8 in. bugle head phillips drywall screws spaced 8 in. o.c. Joint Tape and Compound - vinyl or casein, dry or premixed joint compound applied to face layers of gypsum wallboard in two coats to all exposed screw heads and gypsum wallboard joints. A min. 2-in. wide paper, plastic or fiberglass tape embedded in first layer of compound over joints in gypsum wallboard.
   B. Max. diameter of opening in gypsum wallboard layers is to be 14-1/2 in. for wood stud wall assemblies. Wood studs are to consist of min. nom 2 x 4 lumber max. spaced 16 in. o.c. Studs attached with min. 16d common nails to 2 x 4 lumber floor and ceiling runners measuring, which are secured to floor and ceiling with 3-in. concrete fasteners spaced max. 18-in. o.c. Studs and runners covered with two layers of 5/8 in. thick, TypeX gypsum wallboard on each face. The base layer of gypsum wallboard fastened to wood studs with #6 1-1/8 in. bugle head phillips drywall screws spaced 12 in. o.c. The face layer of gypsum wallboard fastened with #6 1-5/8 in. bugle head phillips drywall screws spaced 8 in. o.c. Joint Tape and Compound - vinyl or casein, dry or premixed joint compound applied to face layers of gypsum wallboard in two coats to all exposed screw heads and gypsum wallboard joints. A min. 2-in. wide paper, plastic or fiberglass tape embedded in first layer of compound over joints in gypsum wallboard.
2. PENETRATING ITEM: One metallic pipe, conduit or tubing to be installed concentrically within the through opening. The penetrating item is to be rigidly supported on both sides of the wall assembly. A nom. annular space of 3/4 in. is required within the fire stop system. The following types and sizes of metallic pipes, conduit or tubing may be used:
   A. Steel Pipe: Schedule 10 (or heavier) nom. 24 in. diameter (or smaller) steel pipe.
   B. Steel Pipe: Schedule 5 (or heavier) nom. 4 in. diameter (or smaller) steel pipe.
   C. Conduit: Nom. 4 in. diameter (or smaller) electrical metallic tubing or steel conduit.
   D. Copper Tubing: Type L (or heavier) nom. 6 in. diameter (or smaller) copper tubing.
3. FILL, VOID OR CAVITY MATERIAL: Min. of 1-1/4 in. thickness of sealant fill material is to be applied within the annulus on both faces of the wall through-penetration. Additional material is to be applied around the outer perimeter of the penetrating item, such that a min. 1/4 in. crown is formed.
   Listed Manufacturer:
   3M –
   Firestopping
   Firestopping Sealant
   3M Fire Barrier™ 2000 Silicone Joint Sealant
   3M Fire Barrier™ 2000+ Silicone Joint Sealant

6 AE-537 PENETRATION FIRESTOPPING
12" = 1'-0"

May 21, 2008
F Rating — 2 Hr
T Rating — 1/4 Hr
Linear Opening Width — 8 In. Max
L Rating At Ambient — Less Than 1 CFM/Lin Ft
L Rating At 400°F — Less Than 1 CFM/Lin Ft
Class II Movement Capabilities - 5% Vertical Shear (See Item 3)

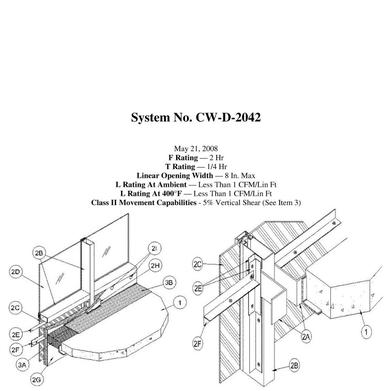

1. **Floor Assembly —** Min 4-1/2 in. (114 mm) thick reinforced lightweight or normal weight (100-150 pcf or 1600-2400 kg/m^3) structural concrete. Perimeter of floor assembly to be provided with min 3 by 3 by 1/4 in. (76 by 76 by 6 mm) thick cast-in-place structural steel angle for weld-attachment of mullion mounting clips (Item 2A).
2. **Curtain Wall Assembly —** The curtain wall assembly shall incorporate the following construction features:
   A. **Mullion Mounting Clips —** Min 4 in. (102 mm) long angles with one nom 4 in. (102 mm) leg for attachment to edge of floor assembly and with one leg approx 4 in. (102 mm) longer than distance to nearest face of mullion. Clips to be formed of min 1/4 in. (6 mm) thick steel. Clips welded to steel angle at edge of floor assembly (Item 1) on each side of vertical mullion (Item 2B) at each floor level. Each clip to be provided with elongated holes to accommodate designed amount of movement. Top edge of each clip to be recessed min 1/2 in. (13 mm) below top surface of floor.
   B. **Framing —** The rectangular tubing mullions (vertical members) and transoms (horizontal members) shall be min 2-1/2 in. (64 mm) wide by 5 in. (127 mm) deep and shall be formed from min 0.085 in. (2.2 mm) thick aluminum. Mullions spaced max 60 in. (152 cm) OC and secured to mullion mounting clips (Item 2A) at each floor level with two 3/8-16 by 4 in. (102 mm) long hex head steel bolts in conjunction with Steel nuts and washers. Interior face of mullions to be max 8 in. (204 mm) from edge of floor assembly. Transoms to be spaced min 36 in. (91 cm) OC. The minimum height from the top of the floor to the bottom of the vision panel sill is 6 in. (152 mm).
   C. **Spandrel Panels —** The spandrel panels shall consist of one of the following types:
      a. **Glass Panels —** Nom 1/4 in. (6 mm) thick opaque heat-strengthened glass. Each panel secured in position with aluminum pressure plates in conjunction with glazing gaskets and steel screws.
      b. **Aluminum Panels —** Nom 1/8 in. (3 mm) thick aluminum panels with 1/4 in. (6 mm) thick edges. Each panel secured in position with aluminum pressure plates in conjunction with gaskets and steel screws.
      c. **Stone Panels —** Nom 1-3/16 in. (46 mm) thick polished granite spandrel panels with 1 in. (25 mm) thick gauged edges. Each panel secured in position with aluminum pressure plates in conjunction with gaskets and steel screws.
   D. **Vision Panels —** Nom 1/4 in. (6 mm) thick transparent heat-strengthened glass or nom 1 in. (25 mm) thick insulated glass units with two layers of nom 1/4 in. (6 mm) thick transparent heat-strengthened glass separated by a 1/2 in. (25 mm) air space. Each panel secured in position with aluminum pressure plates in conjunction with glazing gaskets and steel screws.
   E. **Spandrel Panel Perimeter Angles —** Nom 1-1/2 by 1-1/2 in. (38 by 38 mm) No. 22 gauge (0.031 in. or 0.79 mm thick) galvanized steel angles installed around entire perimeter of each spandrel panel. Angles recessed from interior face of framing as necessary to accommodate thickness of curtain wall insulation (Item 2G). Angles cut to be discontinuous at mullion mounting clips (Item 2A). Angles screw-attached to mullions and transom along sides and top of each spandrel panel with No. 8 by 1 in. (25 mm) long self-drilling, self-tapping steel screws spaced max 12 in. (305 mm) OC. Angle along bottom of each spandrel panel to be screw-attached to leg of angle on mullion at each end without any direct attachment to transom. At mullion mounting clips, a length of steel angle shall be installed to bridge between the perimeter angles over the mullion mounting clip. The "bridge" shall be cut approx 6 in. (152 mm) longer than the clear space between angles and shall be secured to the perimeter angles with one No. 8 by 1 in. (25
   F. **Stiffener Tee —** Two nom 1-1/2 by 1-1/2 in. (38 by 38 mm) No. 20 gauge (0.038 in. or 0.97 mm thick) galv steel angles secured together, back-to-back, to form stiffener tee for installation in each horizontal seam of the curtain wall insulation (Item 2G) . The angle legs forming the stem of the tee shall be secured together using No. 8 by 1/2 in. (13 mm) long self-drilling, self-tapping steel screws spaced max 8 in. (204 mm) OC. The tee shall be installed with a clearance of 1/8 to 1/4 in. (3 to 6 mm) at each end and shall be screw-attached to the spandrel panel perimeter angles (Item 2E) with No. 10 by 3/4 in. (19 mm) long self-drilling, self-tapping steel screws, with steel washers, through two predrilled 1/4 in. (6 mm) diam holes at each end. One stiffener tee shall be located with its stem at an elevation 2 in. (51 mm) below the top plane of the floor at each floor level.
   G. **Curtain Wall Insulation*** — Min 2 in. (51 mm) thick mineral wool batt insulation faced on one side with aluminum foil/scrim vapor retarder, supplied in min 36 in. (914 cm) wide batts. Insulation batts to be installed with no vertical seams. Insulation panels tightly-fitted between vertical mullions and between the stem of the stiffener tee (Item 2F) and the transom, flush with the interior surface of framing. Insulation panels secured to spandrel panel perimeter angles and to each stiffener tee with cup head weld pins (Item 2D) or 2-1/2 in. (64 mm) long steel screws with min 1-1/2 in. (38 mm) diameter galv steel clinch shields spaced max 12 in. (305 mm) OC. The horizontal seam between insulation panels shall be located 2 in. (51 mm) below the top plane of the floor at each floor level.

THERMAFIBER INC — FIRESPAN 90

H. **Framing Covers - Curtain Wall Insulation*** — Min 8 in. (204 mm) wide strips cut from the same min 2 in. (51 mm) thick mineral wool batt insulation used for the curtain wall insulation (Item 2G). Framing covers to be centered over mullions and secured to the spandrel panel perimeter angles with cup head weld pins (Item 2D) or 4-1/2 in. (114 mm) long steel screws with min 1-1/2 in. (38 mm) diameter galv steel clinch shields spaced max 12 in. (305 mm) OC. Where more than one spandrel panel (Item 2C) occurs between vertically separated vision panels, the horizontal transom between spandrel panels shall also be covered with an 8 in. (204 mm) wide framing cover in the same manner as on the vertical mullions. Framing covers on mullions to abut the mineral wool batt safing material (Item 3A) above and below floor.

THERMAFIBER INC — FIRESPAN 90

I. **Weld Pin —** In lieu of steel screws, No. 12 gauge (2 mm diam) galv steel weld pin with nom 1-3/16 in. (30 mm) diam galv steel cup head. Cup head weld pins provided in two lengths. One length to be equal to thickness of curtain wall insulation (Item 2G) and second length to be equal to thickness of curtain wall insulation plus thickness of framing cover (Item 2H). Cup head weld pins inserted through curtain wall insulation and mullion covers and welded to spandrel panel perimeter angles max 12 in. (305 mm) OC.
J. **Light Gauge Framing* - Spiral Anchor —** (Not Shown) - As an alternate to the weld pins (Item 2I), galv steel wire spiral anchors may be used to secure the framing covers (Item 2H) to the curtain wall insulation (Item 2G) on each side of the mullion. Nom length of spiral anchors to be equal to thickness of curtain wall insulation plus thickness of framing cover. Spiral anchors driven through mullion covers and into curtain wall insulation and spaced max 12 in. OC.

THERMAFIBER INC

3. **Safing System —** Max separation between edge of floor assembly and face of framing members (at time of installation) is 8 in. (204 mm). The safing system is designed to accommodate vertical shear movement up to a max of 5 percent of its installed width. The safing system shall incorporate the following construction features:
   A. **Forming Material* —** Nom 4 pcf (64 kg/m^3) density mineral wool batt insulation. Batt sections cut to a min 4 in. (102 mm) width and stacked to a thickness which is min 25 percent greater than the width of linear gap between the curtain wall insulation and the edge of the concrete floor slab. The stacked forming material is compressed 20 percent in the thickness direction and inserted cut-edge-first into the linear gap such that its top surface is flush with the top surface of the floor assembly. A max of one tightly-butted seam is permitted between mullions. Additional pieces of forming material to be friction-fit into spaces between mullion mounting clips at each mullion location.

THERMAFIBER INC — SAF

B. **Fill, Void or Cavity Material* —** Min 1/8 in. (3 mm) wet thickness (min 1/16 in. or 1.6 mm dry thickness) of fill material spray-applied over top of forming material and lapping min 1/2 in. (13 mm) onto the top surface of the floor and onto the curtain wall insulation and framing covers.

SPECIFIED TECHNOLOGIES INC — SpecSeal AS200 Elastomeric Spray or SpecSeal Fast Tack Spray

*Bearing the UL Classification Mark

4 AE-537 FIRE RESISTIVE JOINT SYSTEM

System No. HW-D-0020

January 20, 2006
Assembly Ratings – 1 & 2 Hr (See Items 2 & 3B)
L Rating at Ambient – Less than 1 CFM/Lin Ft
L Rating at 400 F – Less than 1 CFM/Lin Ft
Nominal Joint Width – 1 In.
Class II Movement Capabilities – 25% Compression or Extension

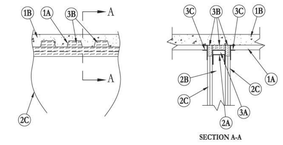

SECTION A-A

1. **Floor Assembly** – The fire-rated fluted steel deck/concrete floor assembly shall be constructed of the materials and in the manner described in the individual D700 or D900 Series Floor-Ceiling Design in the UL Fire Resistance Directory and shall include the following construction features:
   A. **Steel Floor And Form Units*** – Max 3 in. (76 mm) deep galv steel fluted floor deck.
      A1. **Spray Applied Fire Resistive Material*** – (Optional, not shown) – Prior to the installation of the Deflective Channel, Forming Material and Fill, Void or Cavity Material (Items 3A, 3B, 3C), the steel floor units may be sprayed with a min 5/16 in. (8 mm) thickness to max 11/16 in. (18 mm) thickness of fire resistive material
      WR Grace & Co. Conn Construction Products Div. – Type MK-6/HY.
   B. **Concrete** – Min 2-1/2 in. (64 mm) thick reinforced concrete, as measured from the top plane of the floor units.

1A. **Roof Assembly** – (Not Shown) – As an alternate to the floor assembly, a fire rated fluted steel deck roof assembly may be used. The roof assembly shall be constructed of the materials and in the manner described in the individual P900 Series Roof-Ceiling Design in the UL Fire Resistance Directory. **The hourly rating of the roof assembly shall be equal to or greater than the hourly rating of the wall assembly.** The roof assembly shall include the following construction features:
   A. **Steel Roof Deck** – Max 3 in. (76 mm) deep galv steel fluted roof deck.
   B. **Roof Insulation** – Max 2-1/4 in. (57 mm) thick poured insulating concrete, as measured from the top plane of the floor units.

2. **Wall Assembly** – The 1 or 2 hr fire rated gypsum board/steel stud wall assembly shall be constructed of the materials and in the manner described in the individual U400 or V400 Series Wall and Partition Design in the UL Fire Resistance Directory and shall include the following construction features:
   A. **Steel Floor And Ceiling Runners** – Floor and ceiling runners of wall assembly shall consist of galv steel channels sized to accommodate steel studs (Item 2B). When deflection channel (Item 3A) is used, ceiling runner to be provided with 3 in. (76 mm) flanges. Ceiling runner installed within the deflection channel with 1 in. (25 mm) gap maintained between the top of ceiling runner and top of deflection channel. When deflection channel is not used, flange height of ceiling runner shall be min 3/4 in. (19 mm) greater than nom joint width. Ceiling runner is installed perpendicular to direction of fluted steel deck and secured to valleys with steel masonry anchors or by welds spaced max 24 in. (610 mm) OC. When optional spray-applied fire resistive material is used on the steel deck and when deflection channel is not used, ceiling runner secured through spray-applied material to each valley of steel deck with min 3/16 in. (5 mm) diam steel masonry anchors spaced max 12 in. (305 mm) OC.
      A1. **Light Gauge Framing*** – **Slotted Ceiling Runner** – As an alternate to the ceiling runner in Item 2A, slotted ceiling runner to consist of galv steel channel with slotted flanges sized to accommodate steel studs (Item 2B). Slotted ceiling runner installed perpendicular to direction of fluted steel deck and secured to valleys with steel masonry anchors spaced max 24 in. (610 mm) OC. When slotted ceiling runner is used, deflection channel (Item 3A) shall not be used. When optional spray-applied fire resistive material is used on the steel deck, slotted ceiling runner secured through spray-applied material to each valley of steel deck with min 3/16 in. (5 mm) diam steel masonry anchors spaced max 12 in. (305 mm) OC.
      METAL-LITE INC – The System
      SCAFCO STEEL STUD MANUFACTURING CO, **SLIPTRACK SYSTEMS INC** – SLP-TRK
      A2. **Light Gauge Framing*** – **Clipped Ceiling Runner** – As an alternate to the ceiling runner in Items 2A and 2A1, clipped runner to consist of galv steel channel with clips preformed in track flanges which positively engage the inside flange of the steel studs (Item 2B). Track sized to accommodate steel studs (Item 2B). Track flanges to be min 2-1/2 in. (64 mm). Clipped ceiling runner installed perpendicular to direction of fluted steel deck and secured to valleys with steel concrete anchors spaced 24 in. (610 mm) OC. When clipped ceiling runner is used, deflection channel (Item 3A) shall not be used. When optional spray-applied fire resistive material is used on steel deck, clipped ceiling runner is secured through spray-applied material to each valley of steel deck with min 3/16 in. (5 mm) diam steel masonry anchors spaced max 12 in. (305 mm) OC.
      TOTAL STEEL SOLUTIONS L L C – Snap Trak
      A3. **Light Gauge Framing** – **Floor and Ceiling Runners** – As an alternate to the ceiling and floor runners in Item 2A, 2A1 and 2A2, floor and ceiling runners to consist of galv steel channel sized to accommodate the **Light Gauge Framing* Slotted Stud** (Item 2B1) or **Light Gauge Framing* Slider C-Clip System** (Item 2B2). Floor and ceiling runners to be provided with min 1-1/4 in. and 3 in. (32 and 76 mm) flanges, respectively. Ceiling runner installed perpendicular to direction of fluted steel deck and secured to valleys with steel masonry anchors spaced max 12 in. (305 mm) OC. When ceiling runner is used, deflection channel (Item 3A) shall not be used. When optional spray-applied fire resistive material is used on the steel deck, ceiling runner is secured through spray-applied material to each valley of steel deck with min 3/16 in. (5 mm) diam steel masonry anchors spaced max 12 in. (305 mm) OC.
      STEELER INC – Floor and Ceiling Runners
      A4. **Light Gauge Framing*** – **Notched Ceiling Runner** – As an alternate to the ceiling runners in Items 2A through 2A3, notched ceiling runners to consist of C-shaped galv steel channel with notched return flanges sized to accommodate steel studs (Item 2B). Notched ceiling runner installed perpendicular to direction of fluted steel deck and secured to valleys with steel masonry anchors spaced max 24 in. (610 mm) OC. When notched ceiling runner is used, deflection channel (Item 3A) shall not be used. When optional spray-applied fire resistive material is used on the steel deck, notched ceiling runner secured through spray-applied material to each valley of steel deck with min 3/16 in. (5 mm) diam steel masonry anchors spaced max 12 in. (305 mm) OC.
      DENMAR STEEL INC – Type SCR
   B. **Studs** – Steel studs to be min 3-1/2 in. (89 mm) wide. Studs cut 1/2 to 3/4 in. (13 to 19 mm) less in length than assembly height with bottom nesting in and resting on floor runner and with top nesting in ceiling runner without attachment. When slotted ceiling runner (Item 2A1) is used, steel studs secured to slotted ceiling runner with No. 8 by 1/2 in. (13 mm) long wafer head steel screws at midheight of slot on each side of wall. Stud spacing not to exceed 24 in (610 mm) OC.
      B1. **Light Gauge Framing*** – **Slotted Studs** – Slotted steel stud to be used in conjunction with **Light Gauge Framing*** – **Floor and Ceiling Runners** (Item 2A3). Slotted studs to be min 3-1/2 in. (89 mm) wide. Slotted steel studs cut 1 in. (25 mm) less in length than assembly height with bottom nesting in and secured to both ceiling and floor runners. Ceiling runner secured to preformed slot within steel stud by means of No. 10 by 3/4 in. (19 mm) long low profile head steel screw. Floor runner attached to bottom of steel stud by means of No. 8 by 1/2 in. (13 mm) long pan head steel screw. Slotted steel stud spacing not to exceed 24 in. (610 mm) OC.
      STEELER INC – Slotted Stud
      B2. **Light Gauge Framing*** – **Slider C-Clip System** – As an alternate to the **Light Gauge Framing*** – **Slotted Steel Studs** (Item 2B1), a Slider C-Clip System consisting of a C-shaped steel clip with a slotted opening and a steel stud to be used in conjunction with **Light Gauge Framing**–**Floor and Ceiling Runners** (Item 2A3). Steel clips and studs to be min 3-1/2 in. (89 mm) wide. Steel clip inserted into inside flange of steel stud without attachment. Total length of steel stud cut 1 in. (25 mm) less than assembly height with bottom of steel stud nesting in and secured to floor runner. Floor runner attached to bottom of steel stud by means of No. 8 by 1/2 in. (13 mm) long pan head steel screw. Ceiling runner secured to steel C-Clip by means of No. 10 by 3/4 in. (19 mm) long pan head steel screw located 3/8 in. (10 mm) below top of ceiling runner. Top row of gypsum board screws shall be centered within the preformed slot of the C-Clip. Steel stud and steel clips spacing not to exceed 24 in. (610 mm) OC.
      STEELER INC – Slider C Clip System
   C. **Gypsum Board*** – Gypsum board sheets installed to a min total thickness of 5/8 in. and 1-1/4 in. (16 and 32 mm) on each side of wall for 1 and 2 hr rated assemblies, respectively. Wall to be constructed as specified in the individual Wall and Partition Design in the UL Fire Resistance Directory, except that a nom 1 in. (25 mm) gap shall be maintained between the top of the gypsum board and the bottom of the steel floor or roof deck and the top row of screws shall be installed into the studs 3-1/2 in. (89 mm) below the lower surface the floor or roof deck. **The hourly fire rating of the joint system is equal to the hourly fire rating of the wall.**

3. **Joint System – Max separation between bottom of floor or roof and top of wall is 1 in. (25 mm). The joint system is designed to accommodate a max 25 percent compression or extension from its installed width.** – The joint system consists of a deflection channel, forming material and a fill material, as follows:
   A. **Deflection Channel** (Optional) – A nom 3-5/8 in. (92 mm) wide by 3 in. (76 mm) deep min 24 ga steel U-shaped channel. Deflection channel installed perpendicular to direction of fluted steel deck and secured to valleys with steel masonry anchors or by welds spaced max 24 in. (610 mm) OC. When optional spray-applied fire resistive material is used on the steel deck, deflection channel secured through spray-applied material to each valley of steel deck with min 1-1/2 in. (38 mm) long by min 3/16 in. (5 mm) diam steel masonry anchors spaced max 12 in. (305 mm) OC. The ceiling runner (Item 2A) is installed within the deflection channel to maintain a 1 in. (25 mm) gap between the top of the ceiling runner and the top of the deflection channel. The ceiling runner is not fastened to the deflection channel.
   B. **Forming Material*** – Min 4 in. (102 mm) thickness of min 4 pcf (64 kg/m^3) density mineral wool batt insulation cut to the shape of the fluted deck, approx 20 percent larger than the area of the flutes and compressed into flutes of the steel floor or roof deck between the top of the deflection channel or ceiling runner and the steel deck. Additional pieces of min 4 pcf (64 kg/m^3) mineral wool batt insulation are to be cut to the contour of the flutes with an additional 1-3/8 in. (35 mm) high section at the bottom of the shapes to fill the 1 in. (25 mm) gap between the top of the gypsum board and bottom of the steel floor or roof deck. The additional pieces of mineral wool are compressed and firmly packed into the flutes and the gap between the top of the gypsum board and bottom of the steel floor units on both sides of the wall and shall be a min 3/4 in. (19 mm) thick for 1 hr Rated Design and a min 1-1/2 in. (38 mm) thick for 2 hr Rated Design.
      FIBREX INSULATIONS INC – FBX Safing Insulation
      HG MINWOOL L L C – MinWool-1200 Safing
      ROCK WOOL MANUFACTURING CO – Delta Board or Delta-8
      ROXUL INC – Type Safe
      THERMAFIBER INC – Type SAF
   C. **Fill,Void or Cavity Material*** – Min 1/16 in. (1.6 mm) dry (1/8 in. or 3.2 mm wet) thickness of fill material sprayed or brushed on each side of the wall in the flutes of the steel floor or roof deck units and between the top of the gypsum board and the bottom of the steel floor or roof deck units to completely cover mineral wool and overlap a min of 1/2 in. (13 mm) into gypsum board and steel floor deck on both sides of wall. When the steel floor deck is coated with spray-applied material (Item A1), the fill material shall overlap min 2 in. (51 mm) onto the spray-applied material.
      3M COMPANY – FireDam™ Spray 200

*Bearing the UL Classification Mark

3 AE-537 FIRE RESISTIVE JOINT SYSTEM

System No. HW-D-0172

September 28, 2001
Assembly Rating – 2 Hr
L Rating at Ambient – Less than 1 CFM/Lin Ft.
L Rating at 400 F – Less than 1 CFM/Lin Ft.
Nominal Joint Width – 1 In.
Class II Movement Capabilities – 25% Compression & Extension

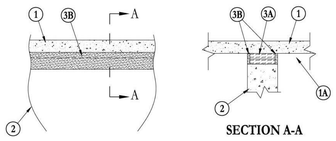

SECTION A-A

1. **Floor Assembly** – Min 4-1/2 in thick steel-reinforced lightweight or normal weight (100-150 pcf) structural concrete.
2. **Wall Assembly** – Min 6-1/8 in. thick steel-reinforced lightweight or normal weight (100-150 pcf) concrete. Wall may also be constructed of any UL Classified **Concrete Blocks***.
   See **Concrete Blocks** (CAZT) category in Fire Resistance Directory for names of manufacturers.
3. **Joint System – Max separation between bottom of floor and top of wall is 1 in. The joint system is designed to accommodate a max 25 percent compression or extension from its installed width.** The joint system consists of the following:
   A. **Forming Material*** – Min 4 pcf mineral wool batt insulation cut into min 5-5/8 in. wide strips, compressed approximately 33 percent in thickness to fill the max 1 in. gap between the top of wall and bottom of floor. Mineral wool to be recessed from both surfaces of wall to accommodate the required thickness of fill material.
      FIBREX INSULATION INC – FBX Safing Insulation
      OWENS CORNING HT INC, **DIV OF OWENS CORNING** – Safing Insulation/MW
      ROCK WOOL MANUFACTURING CO – Delta Board or Delta -8
      ROXUL INC – Type Safe
      THERMAFIBER L L C – Type SAF
   B. **Fill,Void or Cavity Material*** – **Sealant** – Min 1/4 in. thickness of sealant installed on each side of wall between top of wall and bottom of floor, flush with each surface of wall.
      3M COMPANY – Fire Barrier 1000 NS

*Bearing the UL Classification Mark

2 AE-537 FIRE RESISTIVE JOINT SYSTEM

System No. C-AJ-1009

December 07, 1999
(Formerly System No. 122)
F Rating – 2 Hr
T Rating – 0 Hr
L Rating At Ambient – Less Than 1 CFM/sq ft (See Item 5)
L Rating At 400 F – Less Than 1 CFM/sq ft (See Item 5)

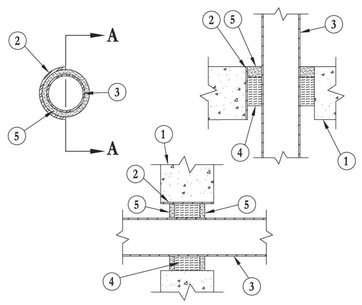

SECTION A-A
(WALL ASSEMBLY)

1. **Floor or Wall Assembly** – Min 5 in. thick reinforced normal weight (100-150 pcf) concrete. Wall may also be constructed of any UL Classified **Concrete Blocks***. Max diam of opening is 6 in.
   See **Concrete Blocks** (CAZT) category in the Fire Resistance Directory for names of manufacturers.
2. **Metallic Sleeve** (Optional) – Nom 6 in. diam (or smaller) electrical metallic tubing, steel conduit or cast iron pipe cast or grouted into floor or wall assembly, flush with floor or wall surfaces.
3. **Through Penetrants** – One metallic pipe or conduit to be centered within the firestop system. A nom annular space of 3/4 in. is required within the firestop system. Pipe or conduit to be rigidly supported on both sides of floor or wall assembly. The following types and sizes of metallic pipes or conduits may be used:
   A. **Steel Pipe** – Nom 4 in. diam (or smaller) Schedule 5 (or heavier) steel pipe.
   B. **Conduit** – Nom 4 in. (or smaller) diam steel electrical metallic tubing or steel conduit.
4. **Packing Material** – Min 3 in. thickness of min 4 pcf mineral wool batt insulation firmly packed into opening as a permanent form. Packing material to be recessed from top surface of floor as required to accommodate the required thickness of fill material. Packing material to be centered in walls mid depth and recessed to allow for installation of fill material.
5. **Fill, Void or Cavity Material*** – **Sealant** – Min 1/2 in. thickness of fill material applied within the annulus, flush with top surface of floor. In walls, fill material to be applied on each side of packing material.
   3M COMPANY – FB-2000 or FB-2000+ (floors only).
   (Note: L Ratings apply only when FB-2000+ is used.)

*Bearing the UL Classification Marking

5 AE-537 PENETRATION FIRESTOPPING

System No. WW-D-0013

November 18, 2003
Assembly Rating – 4 Hr
Nominal Joint Width – 2 In.
Class II Movement Capabilities – 10.9% Compression or Extension

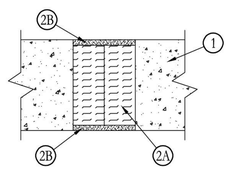

1. **Wall Assembly** – Min 6 in. thick steel-reinforced lightweight or normal weight (100-150 pcf) structural concrete. Wall may also be constructed of any UL Classified **Concrete Blocks***.
2. **Joint System – Max width of joint (at time of installation of joint system) is 2 in. The joint system is designed to accommodate a max 10.9 percent compression or extension from its installed width.** The joint system shall consist of the following:
   A. **Forming Material*** – Min 4.0 pcf mineral wool batt insulation installed in joint opening as a permanent form. Batt cut to min width of 5 in. and installed edge-first into joint opening, parallel with joint direction, such that batt sections are compressed min 50 percent in thickness and such that the compressed batt sections are recessed from both surfaces of wall to accommodate the required thickness of fill material. Adjoining lengths of batt to be tightly-butted with butted seams spaced min 48 in. apart along the length of the joint.
      HG MINWOOL L L C – Safing Insulation/MW
      ROCK WOOL MANUFACTURING CO – Delta Safing Board
      ROXUL INC – Type Safe
      THERMAFIBER L L C – Type SAF
   B. **Fill,Void or Cavity Material*** – Min 1/2 in. thickness of fill material applied within the joint, flush with both surfaces of wall.
      3M COMPANY – FB 2000+

*Bearing the UL Classification Mark

1 AE-537 FIRE RESISTIVE JOINT SYSTEM

Utah Valley University New Science Building

800 West University Parkway
Orem, Utah 84058

Division of Facilities Construction and Management

DRAWN BY:	Author
CHECKED BY:	Checker
DFCM PROJECT NO.:	09020790
GSBS PROJECT NO.:	2009.15.00
ISSUED DATE:	05.07.2010

REFERENCED ASSEMBLIES

CONSTRUCTION DOCUMENTS

AE-537

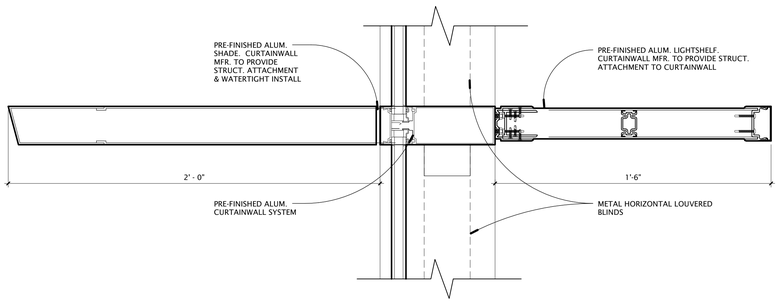

12 AE-601 SUNSHADE/ LIGHTSHELF DETAIL
3" = 1'-0"

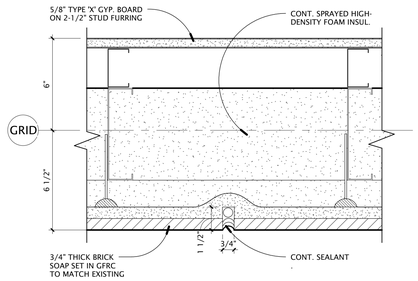

9 AE-601 GFRC CAST JOINT DETAIL
3" = 1'-0"

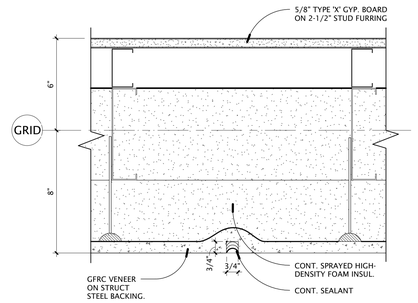

7 AE-601 GFRC CAST JOINT DETAIL
3" = 1'-0"

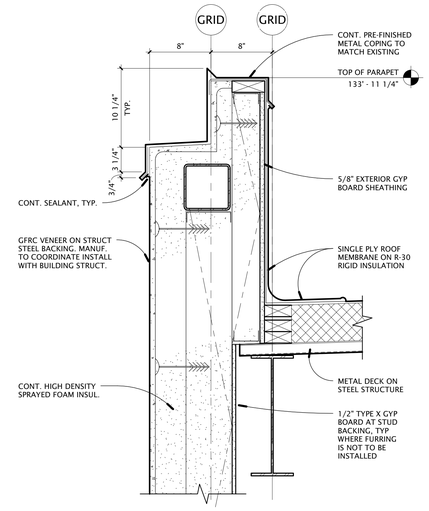

4 AE-601 TYPICAL TOP OF WALL DETAIL
1 1/2" = 1'-0"

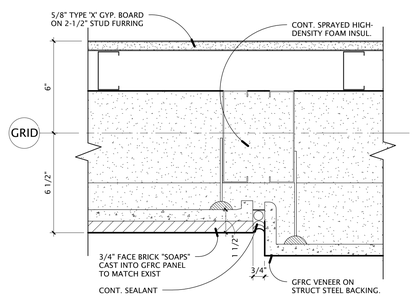

8 AE-601 GFRC PANEL JOINT DETAIL
3" = 1'-0"

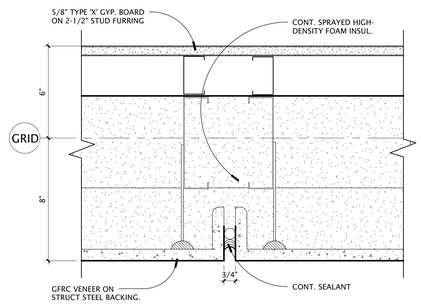

6 AE-601 GFRC PANEL JOINT DETAIL
3" = 1'-0"

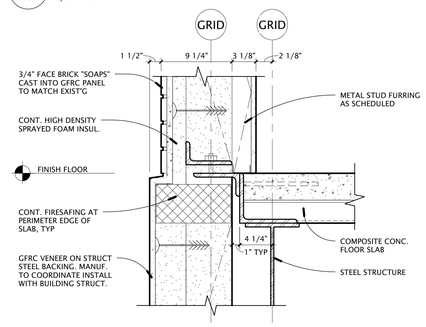

3 AE-601 TYPICAL SLAB EDGE DETAIL
1 1/2" = 1'-0"

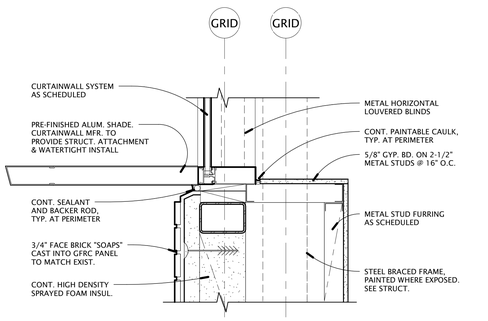

11 AE-601 SUNSHADE @ HIGH WINDOWS
1 1/2" = 1'-0"

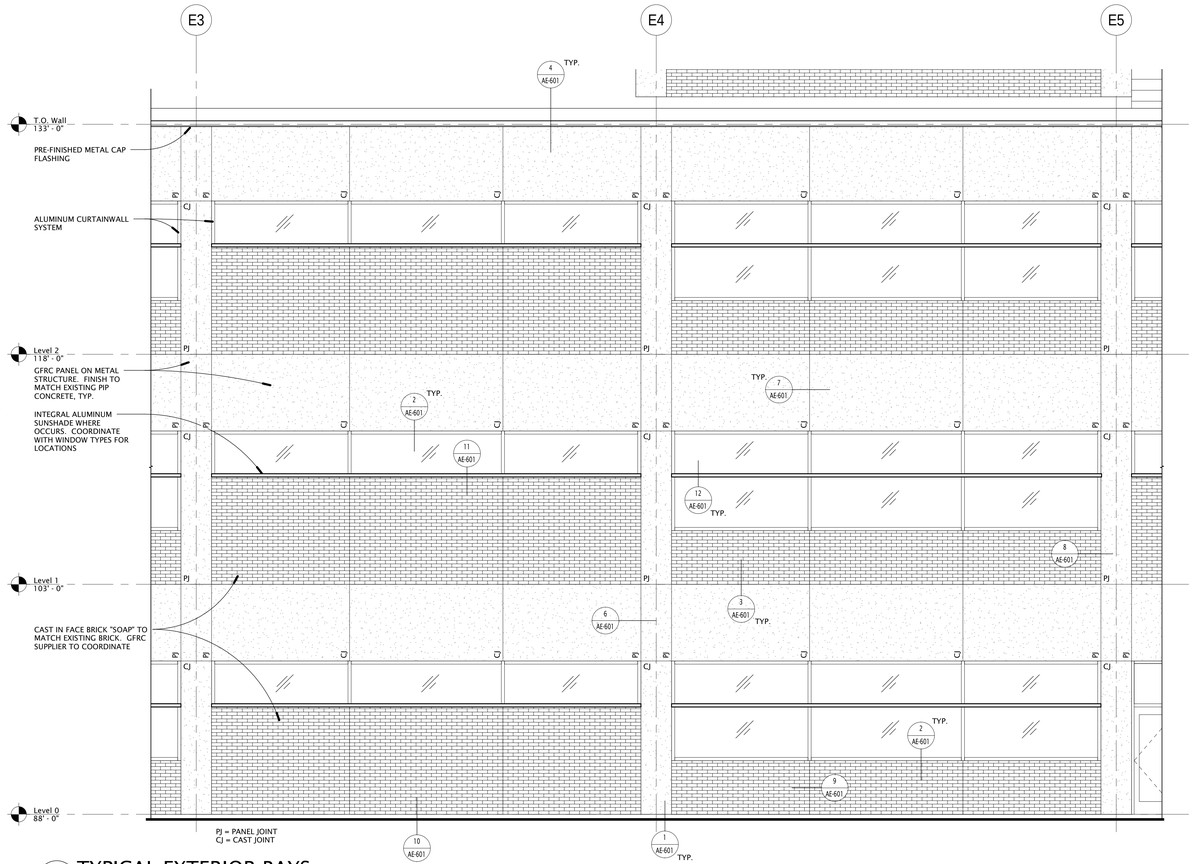

5 AE-601 TYPICAL EXTERIOR BAYS
1/4" = 1'-0"

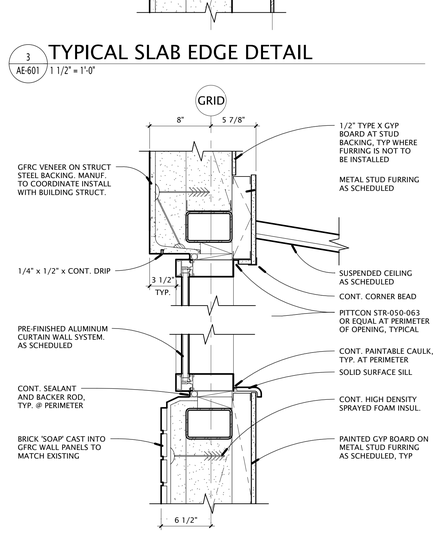

2 AE-601 TYPICAL WINDOW DETAIL
1 1/2" = 1'-0"

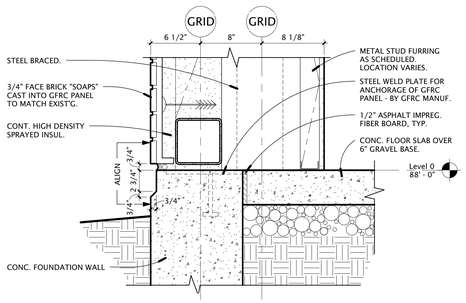

10 AE-601 TYPICAL BASE OF WALL DETAIL
1 1/2" = 1'-0"

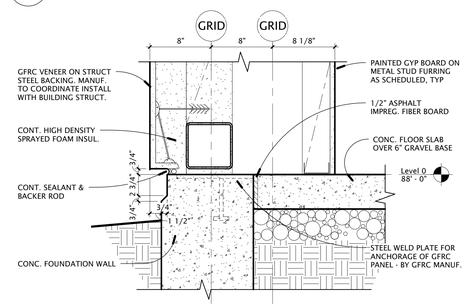

1 AE-601 TYPICAL BASE OF WALL DETAIL @ COLUMN
1 1/2" = 1'-0"

GSBS ARCHITECTS
375 WEST 200 SOUTH
SALT LAKE CITY, UT 84101
P 801.521.8600
F 801.521.7913
www.gsbsarchitects.com

STATE OF UTAH 116302 LICENSED ARCHITECT

REVISIONS:

Utah Valley University New Science Building

800 West University Parkway
Orem, Utah 84058

Division of Facilities Construction and Management

DRAWN BY:	Author
CHECKED BY:	Checker
DFCM PROJECT NO.:	09020790
GSBS PROJECT NO.:	2009.115.00
ISSUED DATE:	05.07.2010

EXTERIOR DETAILS

CONSTRUCTION DOCUMENTS

AE-601

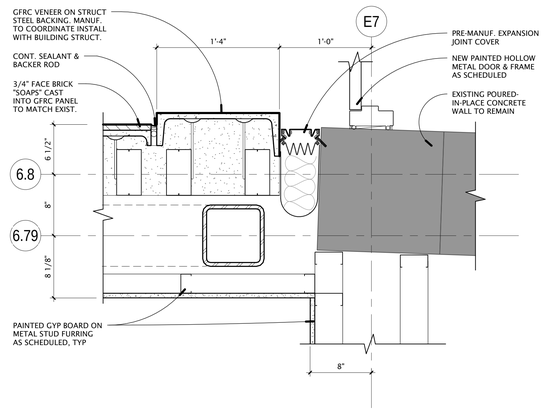

9 AE-602 COLUMN DETAIL
1 1/2" = 1'-0"

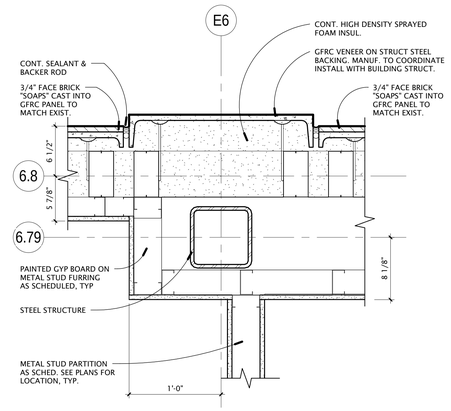

6 AE-602 COLUMN DETAIL
1 1/2" = 1'-0"

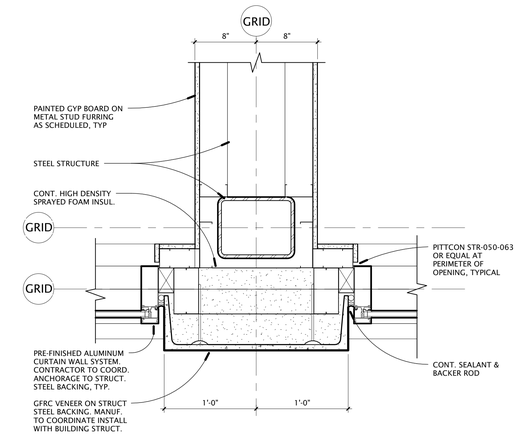

3 AE-602 EXTERIOR COLUMN COVER
1 1/2" = 1'-0"

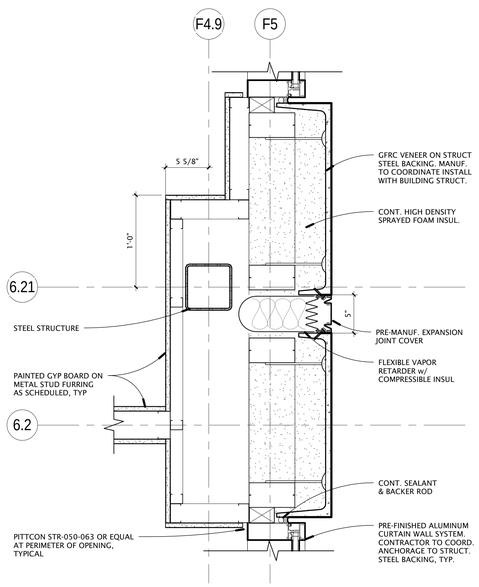

11 AE-602 COLUMN DETAIL
1 1/2" = 1'-0"

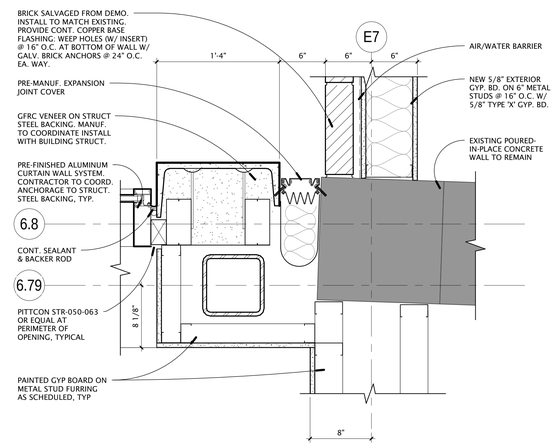

8 AE-602 COLUMN DETAIL
1 1/2" = 1'-0"

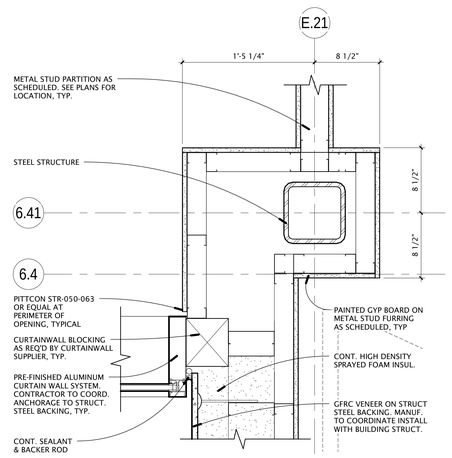

5 AE-602 COLUMN DETAIL
1 1/2" = 1'-0"

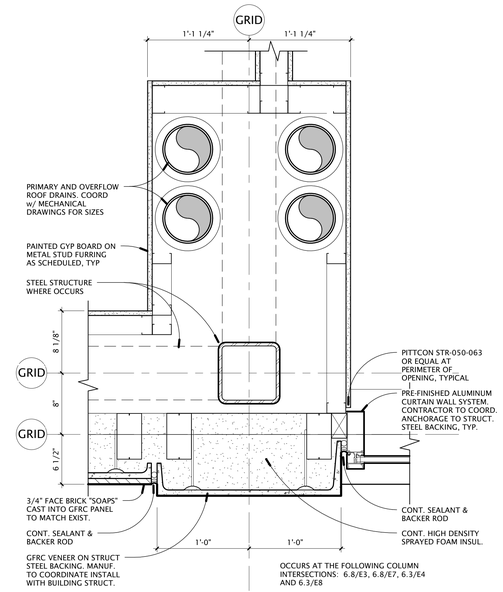

2 AE-602 ROOF DRAIN COLUMN DETAIL
1 1/2" = 1'-0"

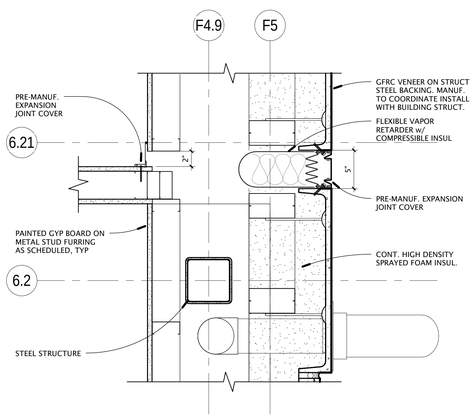

10 AE-602 COLUMN DETAIL
1 1/2" = 1'-0"

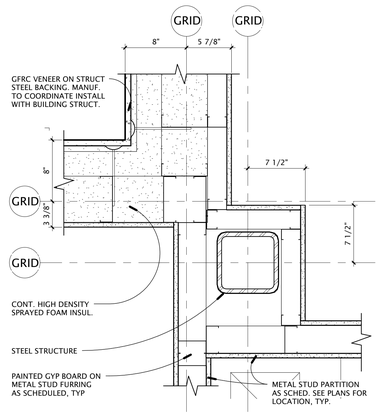

7 AE-602 COLUMN DETAIL
1 1/2" = 1'-0"

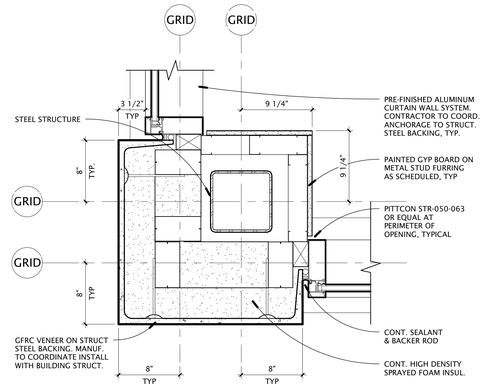

4 AE-602 TYPICAL CORNER COLUMN COVER
1 1/2" = 1'-0"

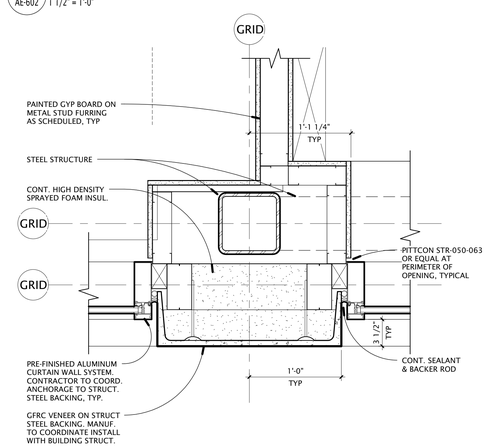

1 AE-602 EXTERIOR COLUMN COVER
1 1/2" = 1'-0"

GSBS ARCHITECTS
375 WEST 200 SOUTH
SALT LAKE CITY, UT 84101
P 801.521.8600
F 801.521.7913
www.gsbsarchitects.com

STATE OF UTAH LICENSED ARCHITECT 116302

REVISIONS:

Utah Valley University New Science Building

800 West University Parkway
Orem, Utah 84058

Division of Facilities Construction and Management

DRAWN BY:	Author
CHECKED BY:	Checker
DFCM PROJECT NO.:	09020790
GSBS PROJECT NO.:	2009.115.00
ISSUED DATE:	05.07.2010

EXTERIOR DETAILS

CONSTRUCTION DOCUMENTS

AE-602

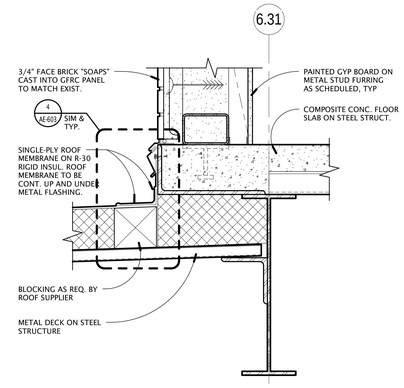

6 AE-603 ROOF TO WALL CONNECTION
1 1/2" = 1'-0"

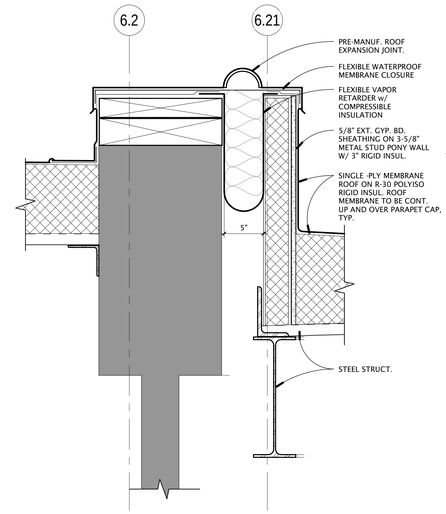

3 AE-603 ROOF EXPANSION JOINT
1 1/2" = 1'-0"

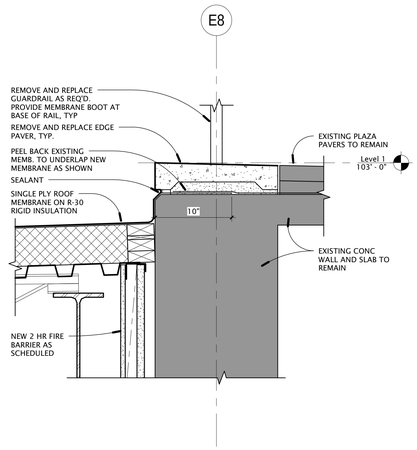

8 AE-603 ROOF TO EXIST. WALL
1 1/2" = 1'-0"

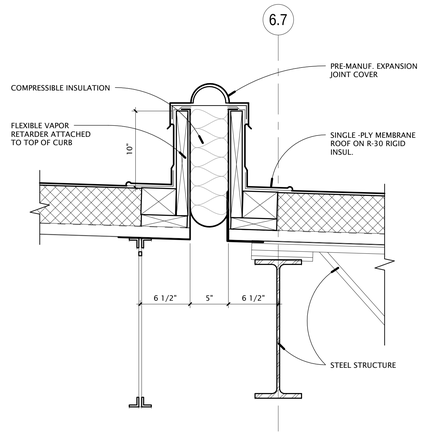

5 AE-603 ROOF EXPANSION JOINT
1 1/2" = 1'-0"

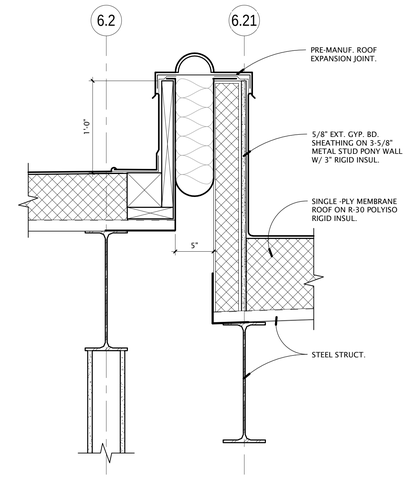

2 AE-603 ROOF EXPANSION JOINT
1 1/2" = 1'-0"

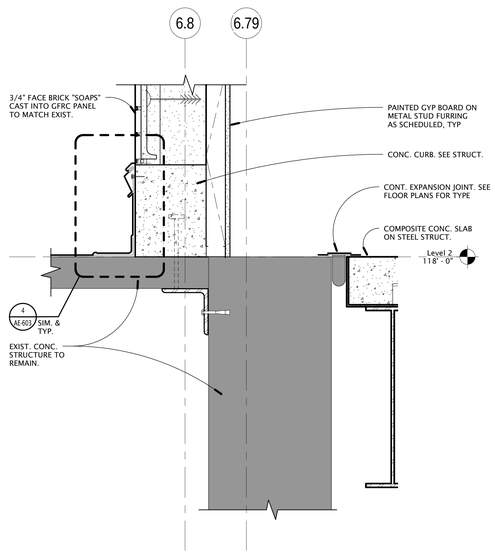

7 AE-603 BOTTOM OF WALL
1 1/2" = 1'-0"

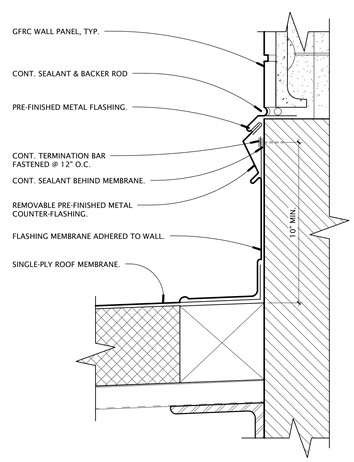

4 AE-603 TYP. ROOF MEMBRANE CONNECTION TO WALL
3" = 1'-0"

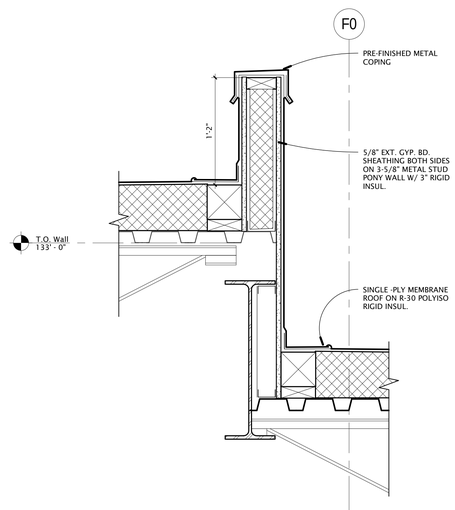

1 AE-603 ROOF TRANSITION
1 1/2" = 1'-0"

GSBS ARCHITECTS
375 WEST 200 SOUTH
SALT LAKE CITY, UT 84101
P 801.521.8600
F 801.521.7915
www.gsbsarchitects.com

STATE OF UTAH 116302 LICENSED ARCHITECT

REVISIONS:

Utah Valley University New Science Building

800 West University Parkway
Orem, Utah 84058

Division of Facilities Construction and Management

DRAWN BY:	Author
CHECKED BY:	Checker
DFCM PROJECT NO.:	09020790
GSBS PROJECT NO.:	2009.115.00
ISSUED DATE:	05.07.2010

EXTERIOR DETAILS

CONSTRUCTION DOCUMENTS

AE-603

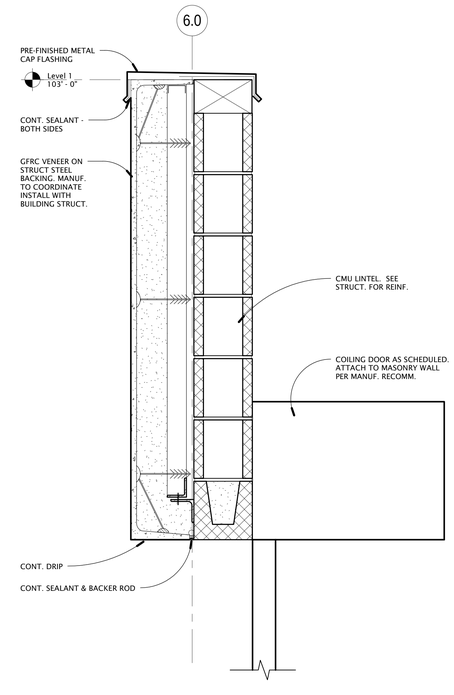

2 AE-604 TOP OF WALL / COILING DOOR HEAD DETAIL
1 1/2" = 1'-0"

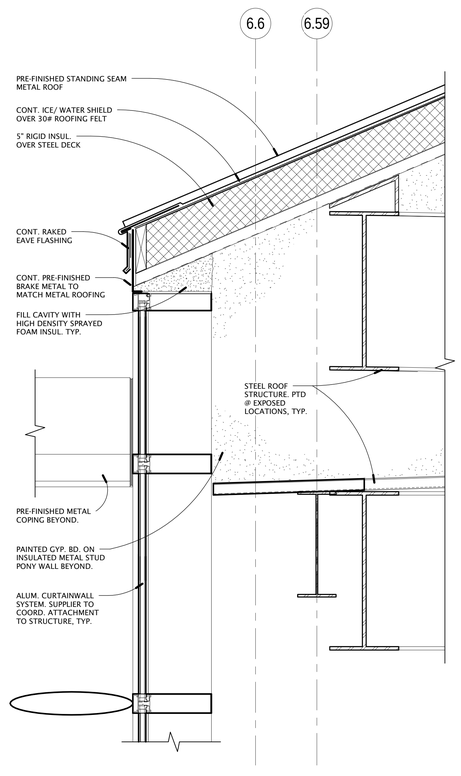

3 AE-604 ROOF EDGE DETAIL
1 1/2" = 1'-0"

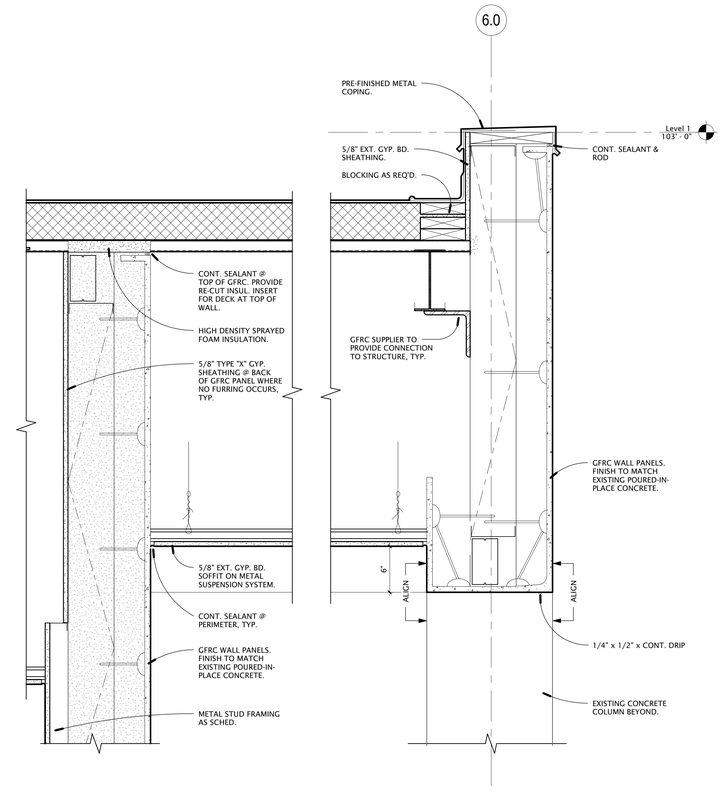

1 AE-604 EXTERIOR SOFFIT / ROOF DETAIL
1 1/2" = 1'-0"

GSBS ARCHITECTS
375 WEST 200 SOUTH
SALT LAKE CITY, UT 84101
P 801.521.8600
F 801.521.7913
www.gsbsarchitects.com

STATE OF UTAH
116302
LICENSED ARCHITECT

REVISIONS:

Utah Valley University New Science Building

800 West University Parkway
Orem, Utah 84058

Division of Facilities Construction and Management

DRAWN BY:	Author
CHECKED BY:	Checker
DFCM PROJECT NO.:	09020790
GSBS PROJECT NO.:	2009.115.00
ISSUED DATE:	05.07.2010

EXTERIOR DETAILS

CONSTRUCTION DOCUMENTS

AE-604

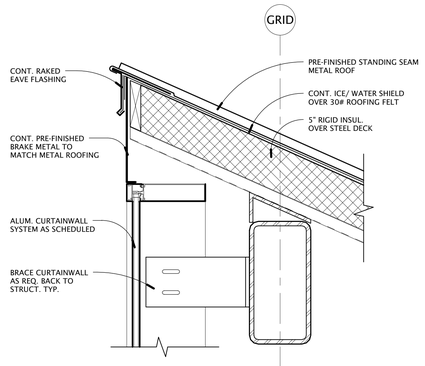

8 AE-605 ROOF EDGE DETAIL
1 1/2" = 1'-0"

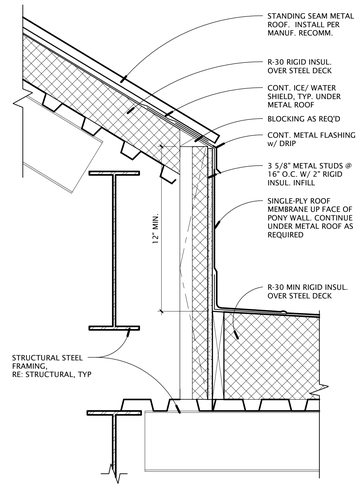

5 AE-605 ROOF EDGE DETAIL
1 1/2" = 1'-0"

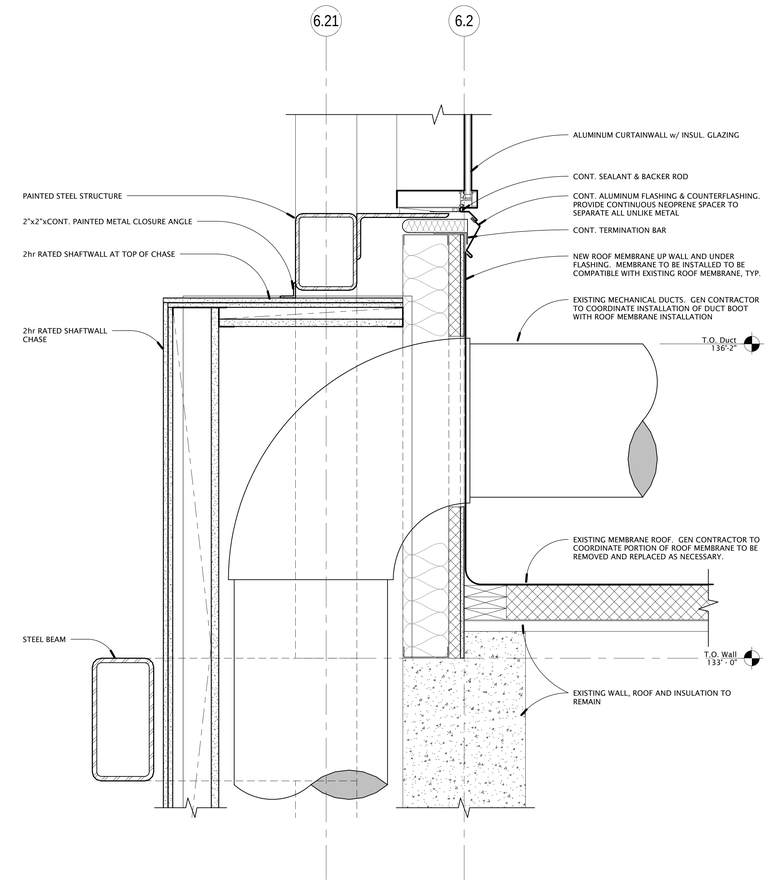

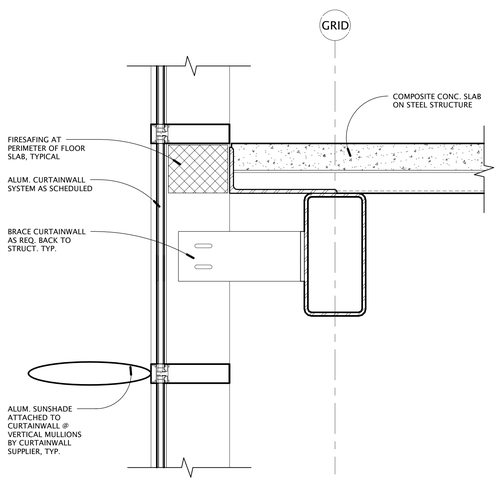

7 AE-605 SLAB EDGE @ CURTAINWALL
1 1/2" = 1'-0"

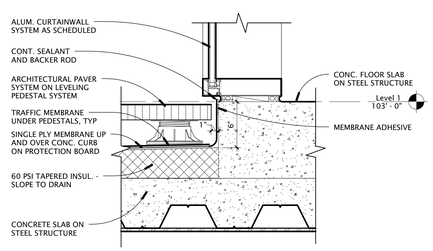

4 AE-605 WINDOW BASE
1 1/2" = 1'-0"

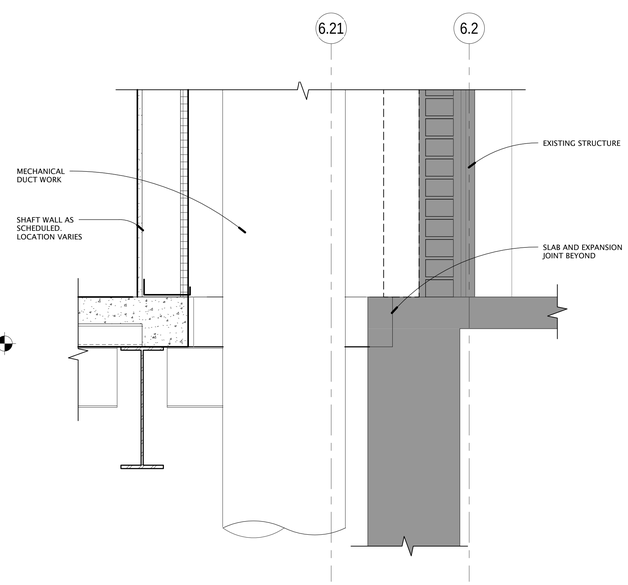

2 AE-605 LAB VENT DETAIL
1 1/2" = 1'-0"

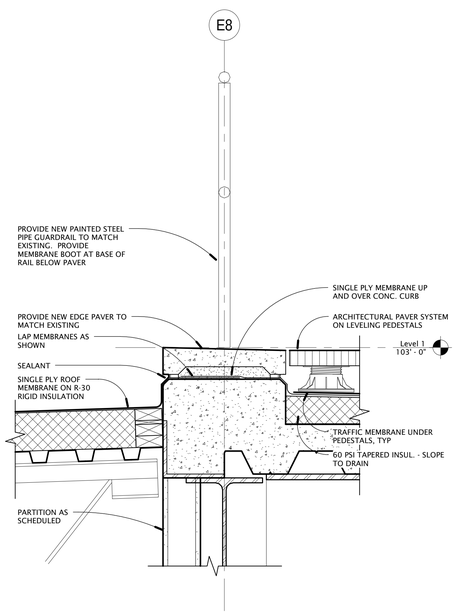

6 AE-605 PAVER SYSTEM EDGE
1 1/2" = 1'-0"

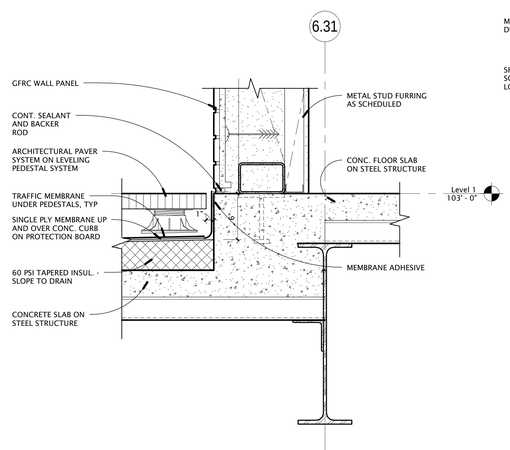

3 AE-605 ROOF/ FLOOR DETAIL
1 1/2" = 1'-0"

1 AE-605 WALL/ FLOOR DETAIL
1 1/2" = 1'-0"

GSBS ARCHITECTS
375 WEST 200 SOUTH
SALT LAKE CITY, UT 84101
P 801.521.8600
F 801.521.7913
www.gsbsarchitects.com

STATE OF UTAH 116302 LICENSED ARCHITECT

REVISIONS:

Utah Valley University New Science Building

800 West University Parkway
Orem, Utah 84058

Division of Facilities Construction and Management

DRAWN BY:	Author
CHECKED BY:	Checker
DFCM PROJECT NO.:	09020790
GSBS PROJECT NO.:	2009.115.00
ISSUED DATE:	05.07.2010

EXTERIOR DETAILS

CONSTRUCTION DOCUMENTS

AE-605

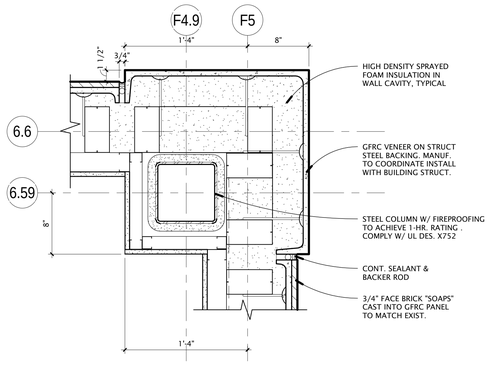

11 AE-606 RATED COLUMN DETAIL
1 1/2" = 1'-0"

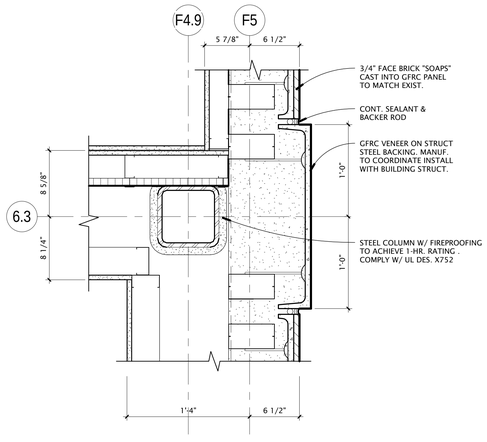

10 AE-606 RATED COLUMN DETAIL
1 1/2" = 1'-0"

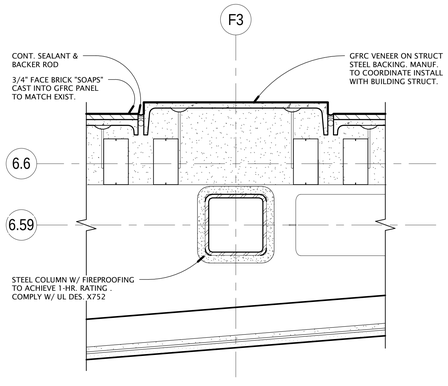

9 AE-606 RATED COLUMN DETAIL
1 1/2" = 1'-0"

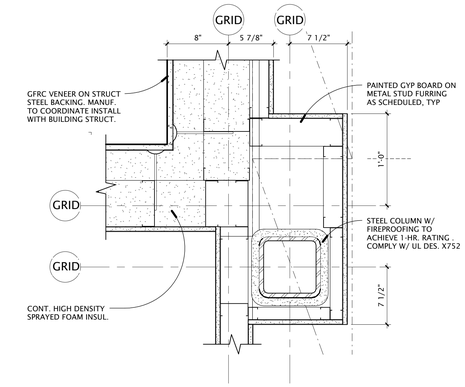

8 AE-606 RATED COLUMN DETAIL
1 1/2" = 1'-0"

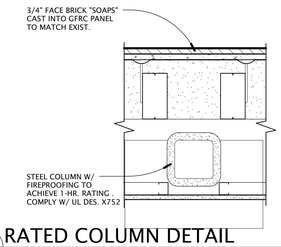

7 AE-606 RATED COLUMN DETAIL
1 1/2" = 1'-0"

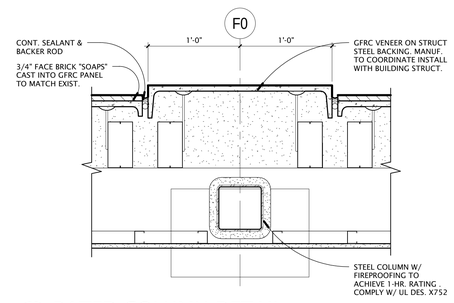

6 AE-606 RATED COLUMN DETAIL
1 1/2" = 1'-0"

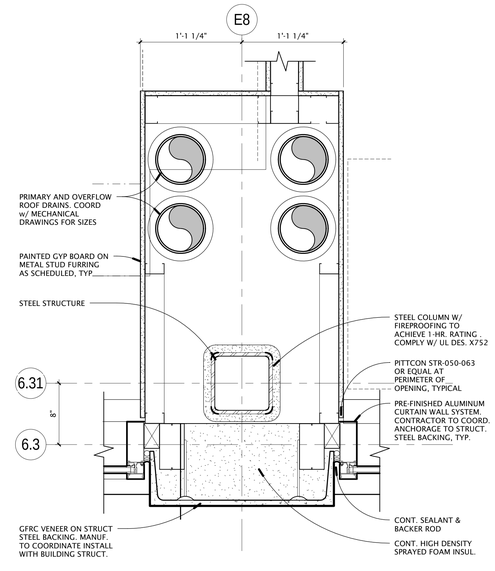

5 AE-606 RATED COLUMN DETAIL
1 1/2" = 1'-0"

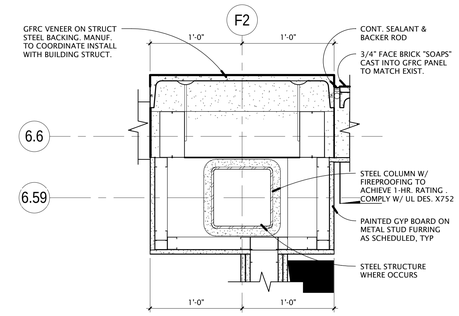

4 AE-606 RATED COLUMN DETAIL
1 1/2" = 1'-0"

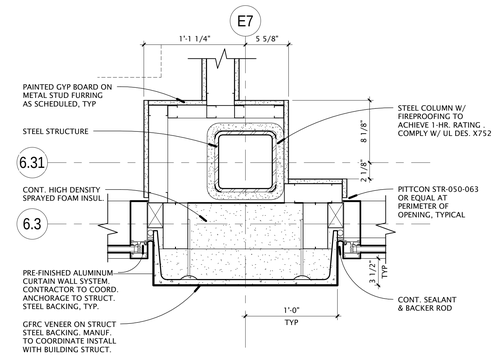

3 AE-606 RATED COLUMN DETAIL
1 1/2" = 1'-0"

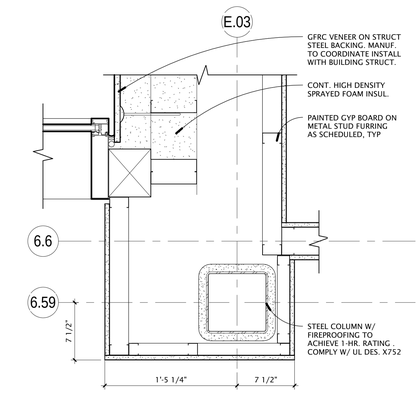

2 AE-606 RATED COLUMN DETAIL
1 1/2" = 1'-0"

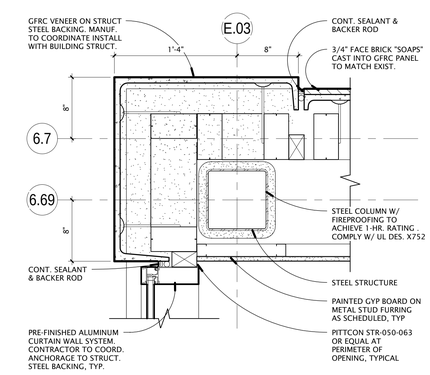

1 AE-606 RATED COLUMN DETAIL
1 1/2" = 1'-0"

GSBS ARCHITECTS
375 WEST 200 SOUTH
SALT LAKE CITY, UT 84101
P 801.521.8600
F 801.521.7915
www.gsbsarchitects.com

STATE OF UTAH
116302
LICENSED ARCHITECT

REVISIONS:

Utah Valley University New Science Building

800 West University Parkway
Orem, Utah 84058

Division of Facilities Construction and Management

DRAWN BY:	Author
CHECKED BY:	Checker
DFCM PROJECT NO.:	09020790
GSBS PROJECT NO.:	2009.115.00
ISSUED DATE:	05.07.2010

EXTERIOR DETAILS

CONSTRUCTION DOCUMENTS

AE-606

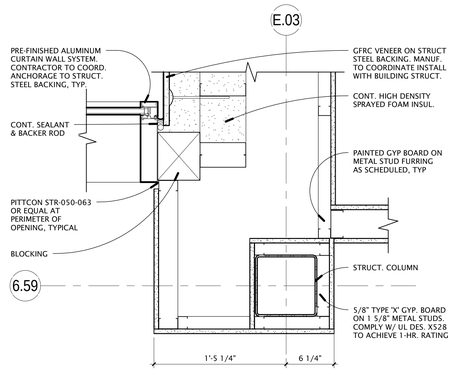

16 AE-611 RATED COLUMN DETAIL
1 1/2" = 1'-0"

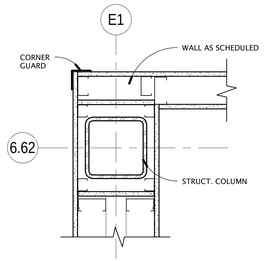

12 AE-611 RATED COLUMN DETAIL
1 1/2" = 1'-0"

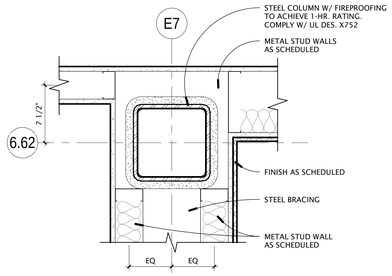

8 AE-611 RATED COLUMN DETAIL
1 1/2" = 1'-0"

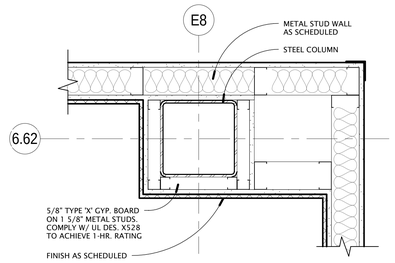

4 AE-611 RATED COLUMN DETAIL
1 1/2" = 1'-0"

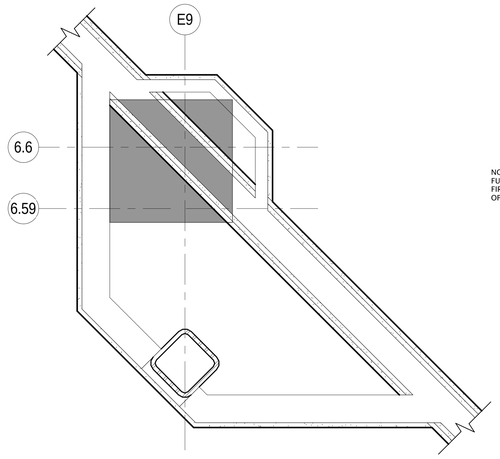

19 AE-611 RATED COLUMN DETAIL
1 1/2" = 1'-0"

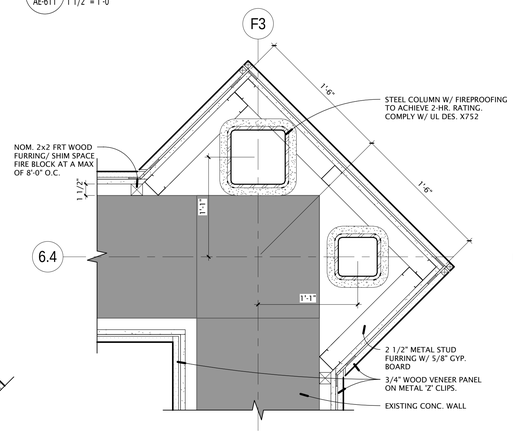

15 AE-611 RATED COLUMN DETAIL
1 1/2" = 1'-0"

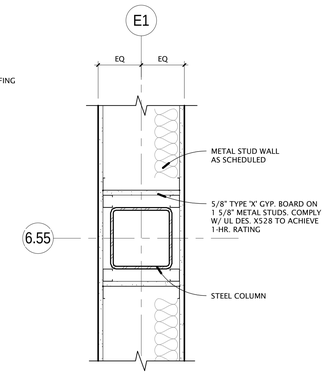

11 AE-611 RATED COLUMN DETAIL
1 1/2" = 1'-0"

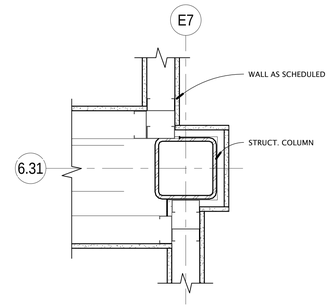

7 AE-611 RATED COLUMN DETAIL
1 1/2" = 1'-0"

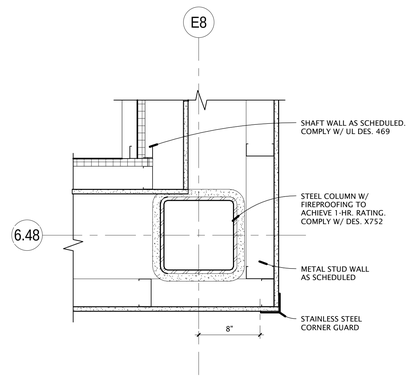

3 AE-611 RATED COLUMN DETAIL
1 1/2" = 1'-0"

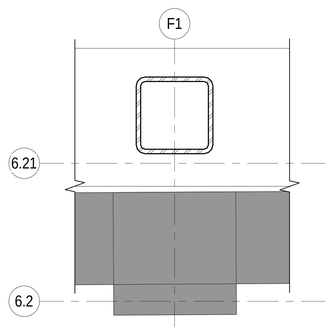

18 AE-611 RATED COLUMN DETAIL
1 1/2" = 1'-0"

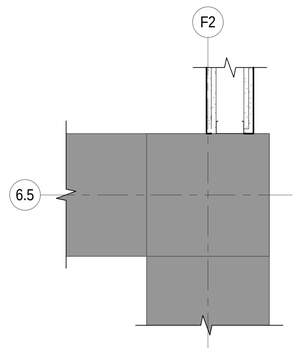

14 AE-611 RATED COLUMN DETAIL
1 1/2" = 1'-0"

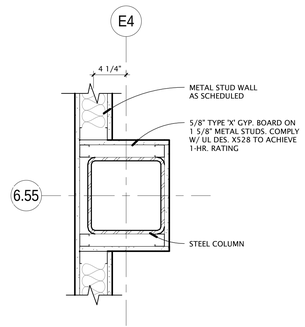

10 AE-611 RATED COLUMN DETAIL
1 1/2" = 1'-0"

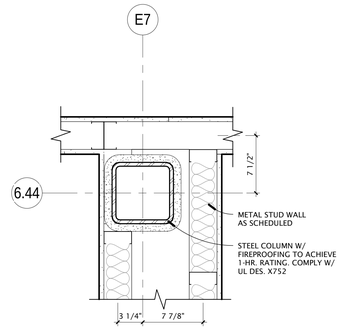

6 AE-611 RATED COLUMN DETAIL
1 1/2" = 1'-0"

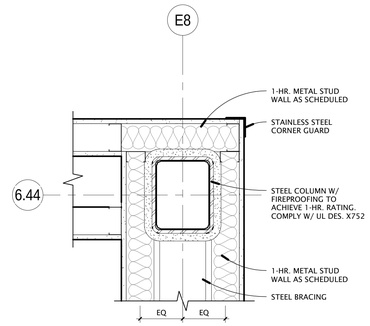

2 AE-611 RATED COLUMN DETAIL
1 1/2" = 1'-0"

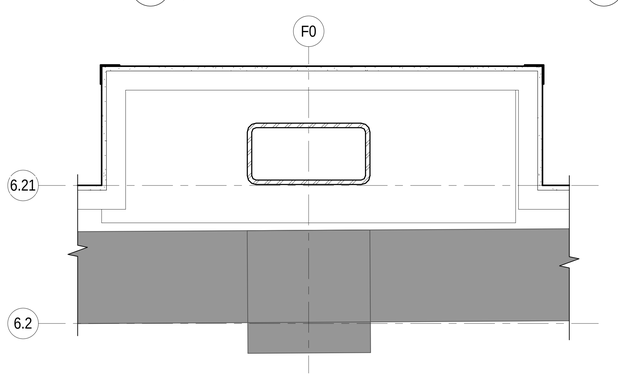

17 AE-611 RATED COLUMN DETAIL
1 1/2" = 1'-0"

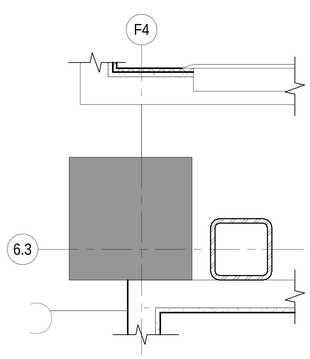

13 AE-611 RATED COLUMN DETAIL
1 1/2" = 1'-0"

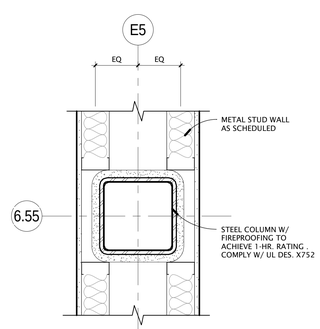

9 AE-611 RATED COLUMN DETAIL
1 1/2" = 1'-0"

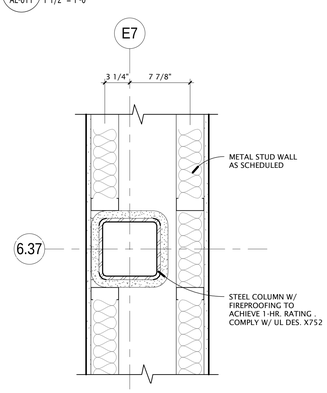

5 AE-611 RATED COLUMN DETAIL
1 1/2" = 1'-0"

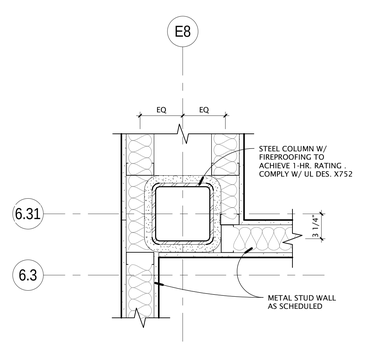

1 AE-611 RATED COLUMN DETAIL
1 1/2" = 1'-0"

GSBS ARCHITECTS
375 WEST 200 SOUTH
SALT LAKE CITY, UT 84101
P 801.521.8600
F 801.521.7913
www.gsbsarchitects.com

STATE OF UTAH 116302 LICENSED ARCHITECT

REVISIONS:

Utah Valley University New Science Building

800 West University Parkway
Orem, Utah 84058

Division of Facilities Construction and Management

DRAWN BY:	Author
CHECKED BY:	Checker
DFCM PROJECT NO.:	09020790
GSBS PROJECT NO.:	2009.115.00
ISSUED DATE:	05.07.2010

INTERIOR DETAILS

CONSTRUCTION DOCUMENTS

AE-611

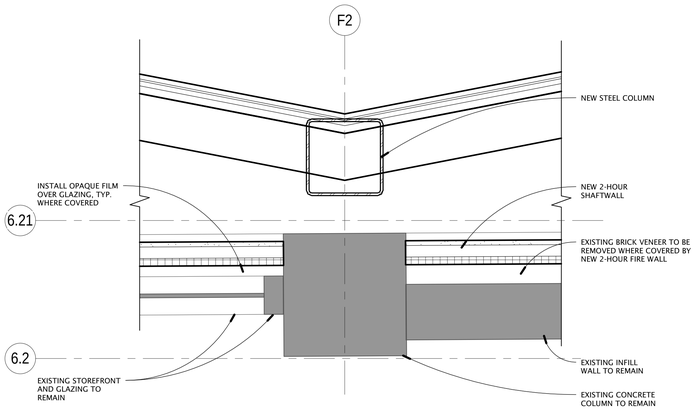

15 / AE-612 COLUMN DETAIL
1 1/2" = 1'-0"

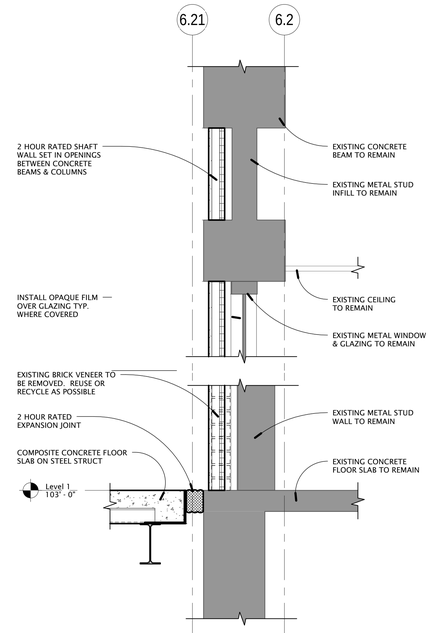

12 / AE-612 WALL SECTION DETAIL
1" = 1'-0"

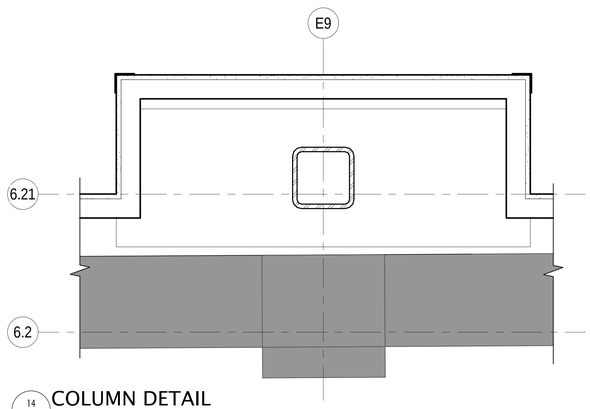

14 / AE-612 COLUMN DETAIL
1 1/2" = 1'-0"

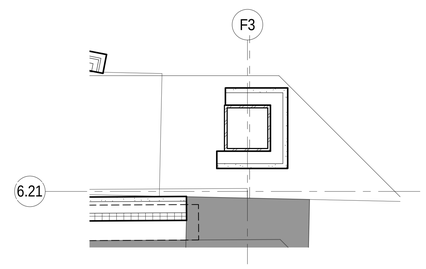

11 / AE-612 COLUMN DETAIL
1 1/2" = 1'-0"

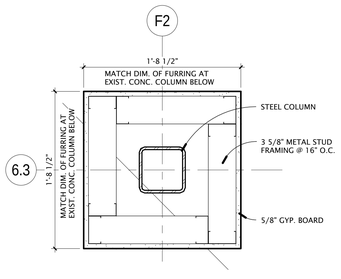

17 / AE-612 COLUMN DETAIL
1 1/2" = 1'-0"

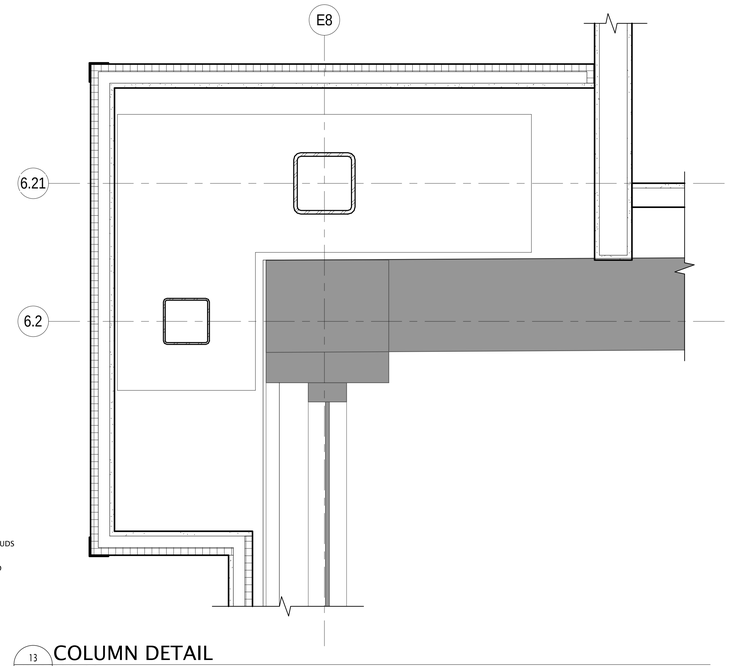

13 / AE-612 COLUMN DETAIL
1 1/2" = 1'-0"

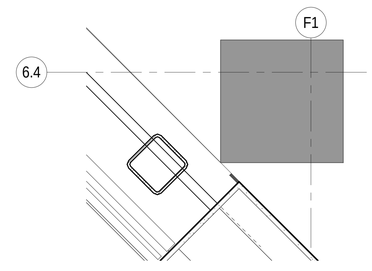

10 / AE-612 COLUMN DETAIL
1 1/2" = 1'-0"

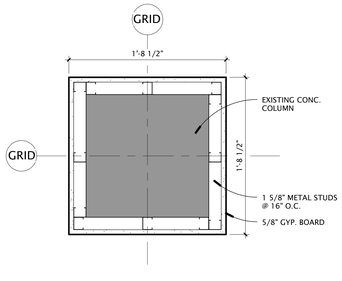

16 / AE-612 COLUMN DETAIL
1 1/2" = 1'-0"

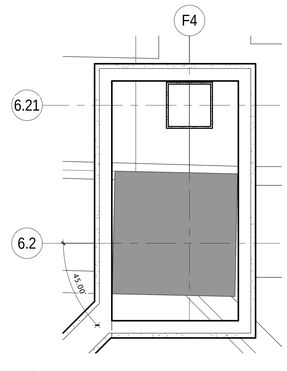

9 / AE-612 COLUMN DETAIL
1 1/2" = 1'-0"

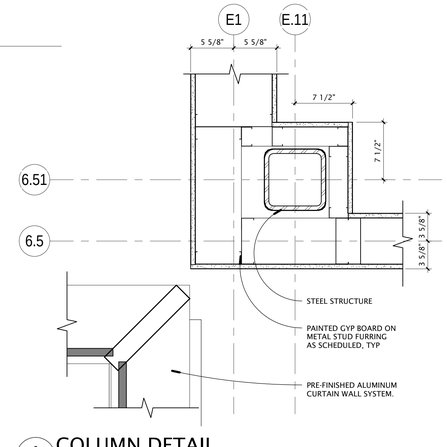

5 / AE-612 COLUMN DETAIL
1 1/2" = 1'-0"

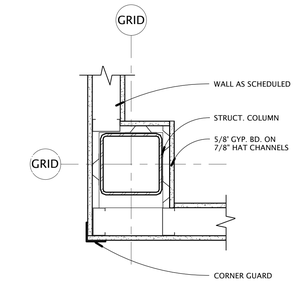

8 / AE-612 COLUMN DETAIL
1 1/2" = 1'-0"

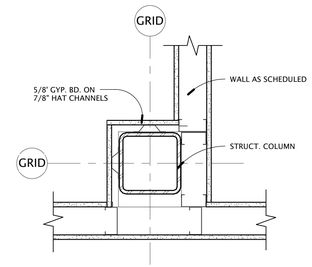

4 / AE-612 COLUMN DETAIL
1 1/2" = 1'-0"

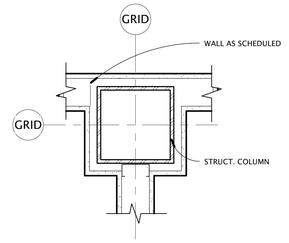

7 / AE-612 COLUMN DETAIL
1 1/2" = 1'-0"

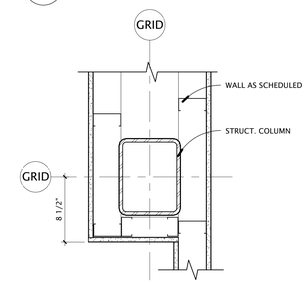

3 / AE-612 COLUMN DETAIL
1 1/2" = 1'-0"

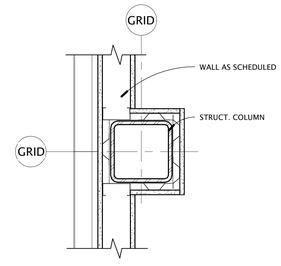

6 / AE-612 COLUMN DETAIL
1 1/2" = 1'-0"

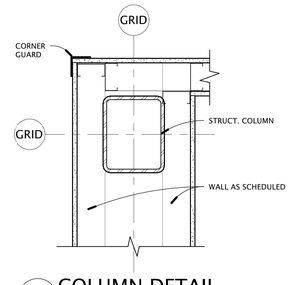

2 / AE-612 COLUMN DETAIL
1 1/2" = 1'-0"

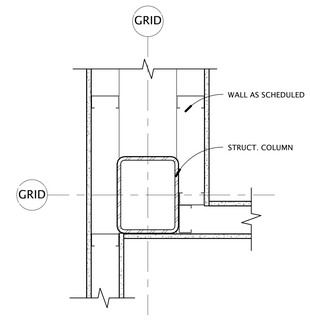

1 / AE-612 COLUMN DETAIL
1 1/2" = 1'-0"

GSBS ARCHITECTS
375 WEST 200 SOUTH
SALT LAKE CITY, UT 84101
P 801.521.8600
F 801.521.7913
www.gsbsarchitects.com

STATE OF UTAH
116302
LICENSED ARCHITECT

REVISIONS:

Utah Valley University New Science Building

800 West University Parkway
Orem, Utah 84058

Division of Facilities Construction and Management

DRAWN BY:	Author
CHECKED BY:	Checker
DFCM PROJECT NO.:	09020790
GSBS PROJECT NO.:	2009.115.00
ISSUED DATE:	05.07.2010

INTERIOR DETAILS

CONSTRUCTION DOCUMENTS

AE-612

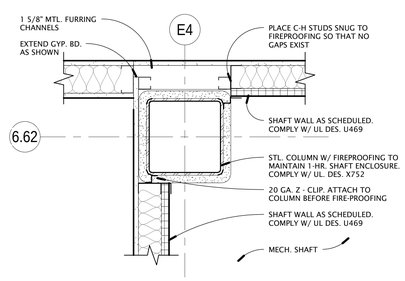

7 AE-613 PLAN DETAIL AT MECH. SHAFT
1 1/2" = 1'-0"

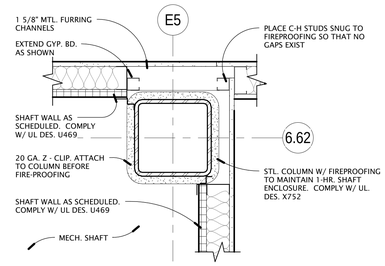

4 AE-613 RATED COLUMN DETAIL
1 1/2" = 1'-0"

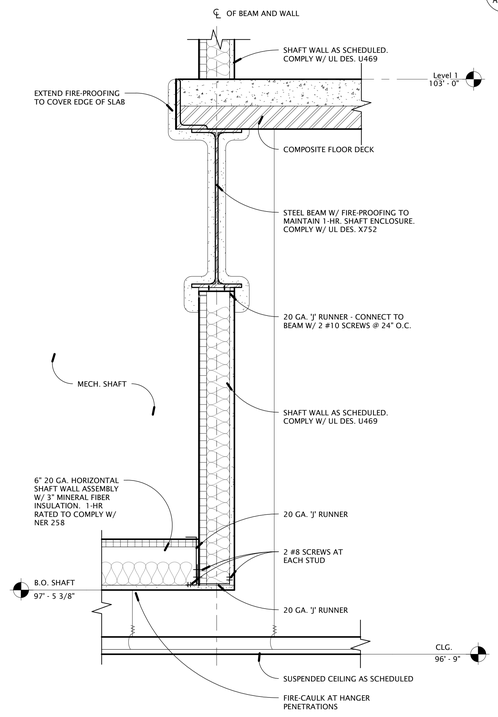

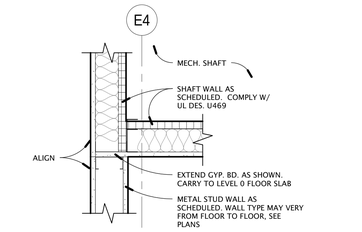

6 AE-613 PLAN DETAIL AT SHAFT
1 1/2" = 1'-0"

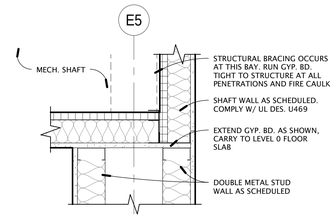

3 AE-613 PLAN DETAIL AT SHAFT
1 1/2" = 1'-0"

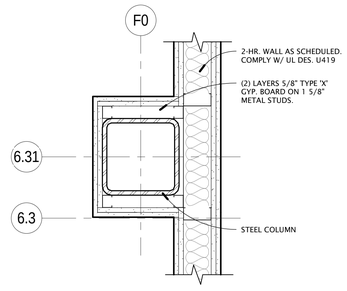

13 AE-613 WALL DETAIL
1 1/2" = 1'-0"

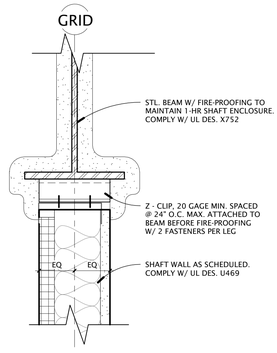

5 AE-613 TOP OF SHAFT WALL DETAIL
3" = 1'-0"

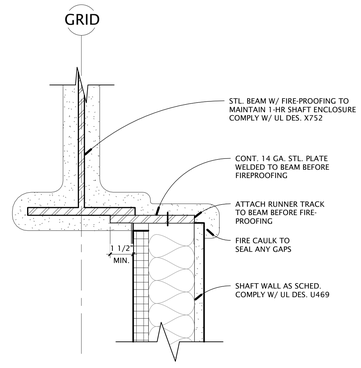

2 AE-613 TOP OF SHAFT WALL DETAIL
3" = 1'-0"

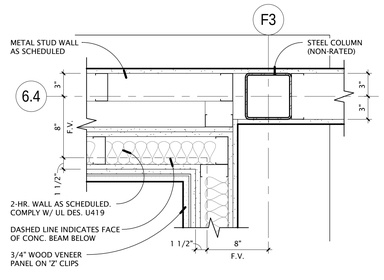

12 AE-613 WALL DETAIL
1 1/2" = 1'-0"

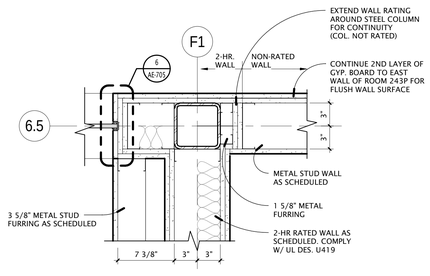

9 AE-613 2 HOUR WALL DETAIL
1 1/2" = 1'-0"

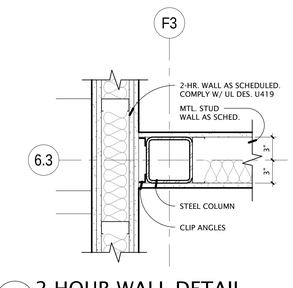

11 AE-613 2 HOUR WALL DETAIL
1 1/2" = 1'-0"

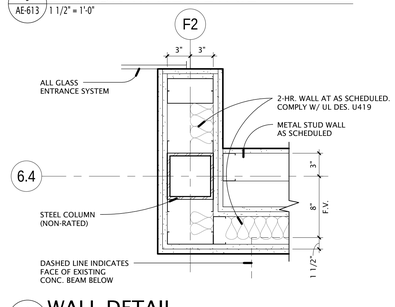

8 AE-613 WALL DETAIL
1 1/2" = 1'-0"

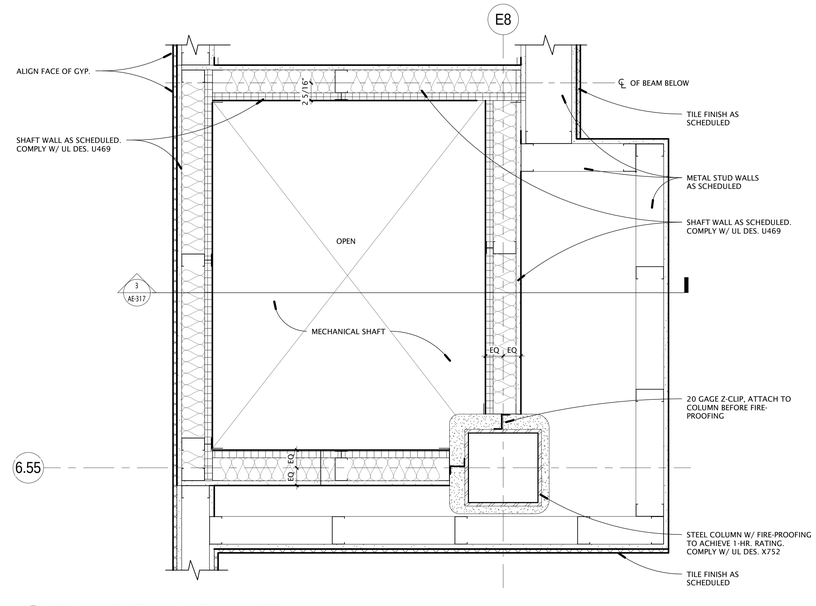

1 AE-613 PLAN DETAIL AT SHAFT
1 1/2" = 1'-0"

GSBS ARCHITECTS
375 WEST 200 SOUTH
SALT LAKE CITY, UT 84101
P 801.521.8600
F 801.521.7915
www.gsbsarchitects.com

STATE OF UTAH
116302
LICENSED ARCHITECT

REVISIONS:

Utah Valley University New Science Building

800 West University Parkway
Orem, Utah 84058

Division of Facilities Construction and Management

DRAWN BY:	Author
CHECKED BY:	Checker
DFCM PROJECT NO.:	09020790
GSBS PROJECT NO.:	2009.115.00
ISSUED DATE:	05.07.2010

INTERIOR DETAILS

CONSTRUCTION DOCUMENTS

AE-613

GSBS ARCHITECTS
375 WEST 200 SOUTH
SALT LAKE CITY, UT 84101
P 801.521.8600
F 801.521.7913
www.gsbsarchitects.com

STATE OF UTAH 116302 LICENSED ARCHITECT

REVISIONS:

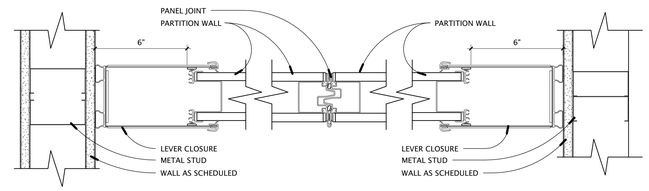

14 AE-614 OPERABLE PARTITION CLOSURE/PANEL JOINT
3" = 1'-0"

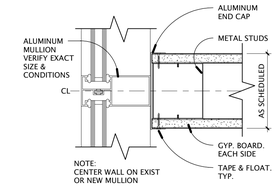

5 AE-614 TYPICAL WALL @ MULLION
3" = 1'-0"

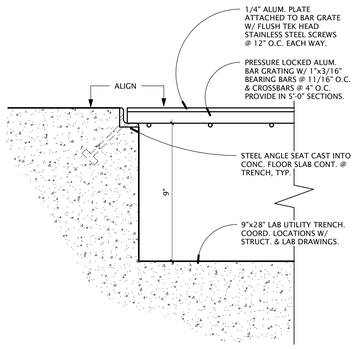

17 AE-614 UTILITY TRENCH DETAIL
3" = 1'-0"

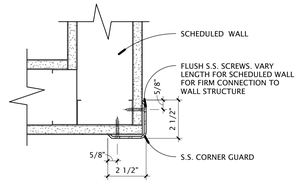

13 AE-614 CORNER GUARD
3" = 1'-0"

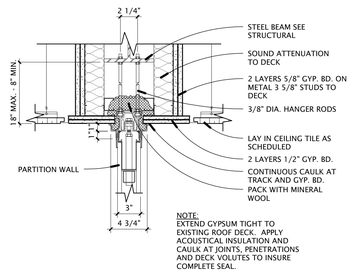

9 AE-614 OPERABLE PARTITION SOFFIT
1 1/2" = 1'-0"

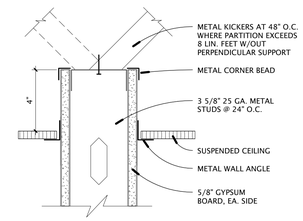

4 AE-614 TYPICAL TOP OF WALL
3" = 1'-0"

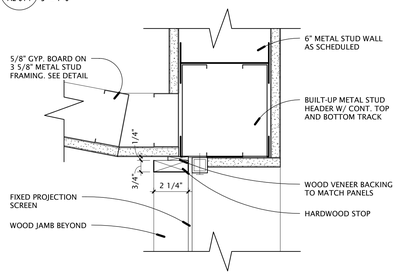

12 AE-614 PROJECTION SCREEN DETAIL
3" = 1'-0"

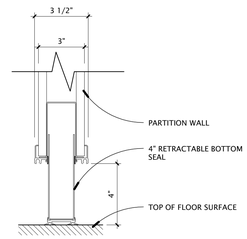

8 AE-614 OPERABLE PARTITION BASE
3" = 1'-0"

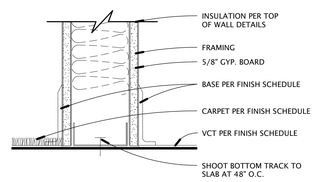

3 AE-614 TYPICAL BOTTOM OF WALL
3" = 1'-0"

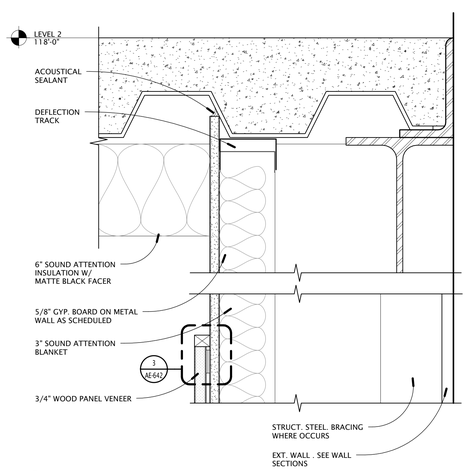

16 AE-614 WOOD PANEL DETAIL
3" = 1'-0"

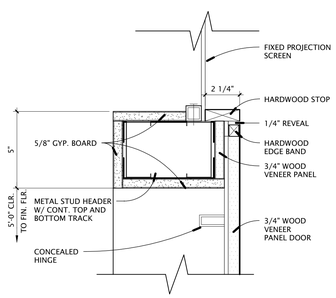

11 AE-614 PROJECTION SCREEN DETAIL
3" = 1'-0"

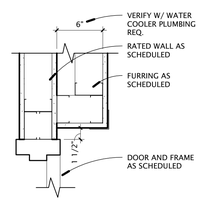

7 AE-614 FURRING DETAIL
1 1/2" = 1'-0"

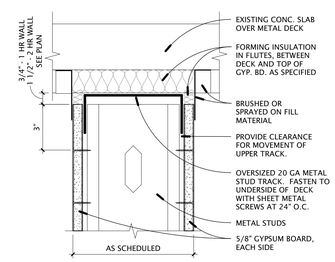

2 AE-614 TYP. T.O. RATED WALL
3" = 1'-0"

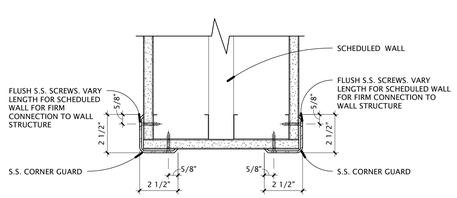

15 AE-614 CORNER GUARD AT ENDWALL
3" = 1'-0"

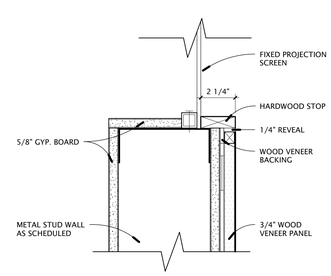

10 AE-614 PROJECTION SCREEN DETAIL
3" = 1'-0"

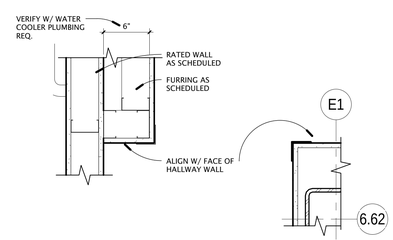

6 AE-614 FURRING DETAIL
1 1/2" = 1'-0"

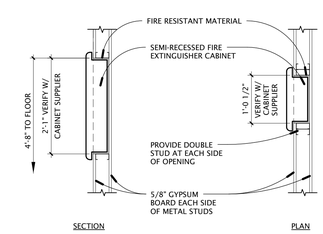

1 AE-614 FIRE EXTINGUISHER CABINET
3/4" = 1'-0"

Utah Valley University New Science Building

800 West University Parkway
Orem, Utah 84058

Division of Facilities Construction and Management

DRAWN BY:	Author
CHECKED BY:	Checker
DFCM PROJECT NO.:	09020790
GSBS PROJECT NO.:	2009.115.00
ISSUED DATE:	05.07.2010

INTERIOR DETAILS

CONSTRUCTION DOCUMENTS

AE-614

GSBS ARCHITECTS

375 WEST 200 SOUTH
SALT LAKE CITY, UT 84101

P 801.521.8600
F 801.521.7913

www.gsbsarchitects.com

STATE OF UTAH
116302
LICENSED ARCHITECT

REVISIONS:

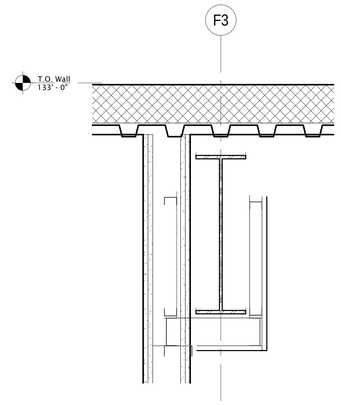

3 / AE-615 TOP OF WALL DETAIL
1 1/2" = 1'-0"

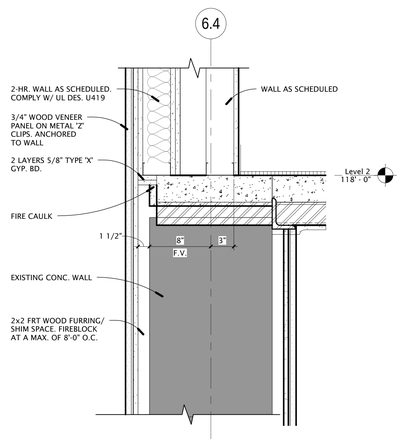

5 / AE-615 WALL DETAIL
1 1/2" = 1'-0"

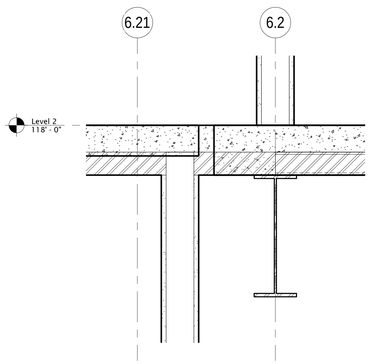

2 / AE-615 EXPANSION JOINT DETAIL
1 1/2" = 1'-0"

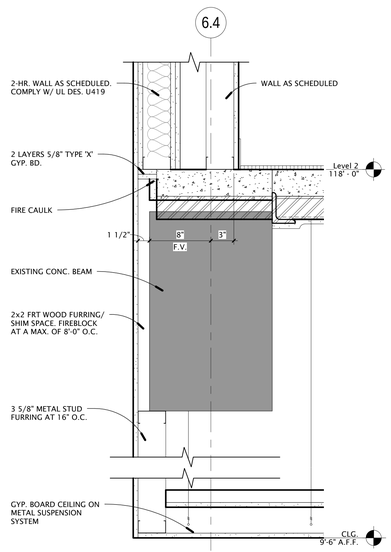

4 / AE-615 WALL DETAIL
1 1/2" = 1'-0"

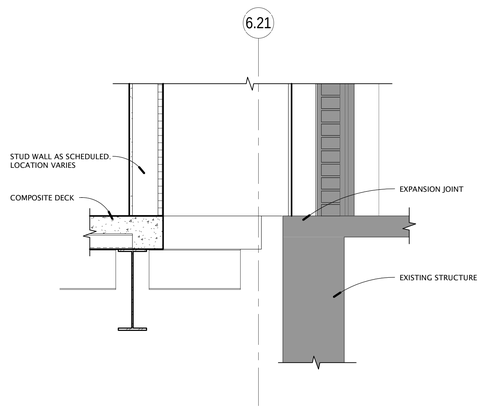

1 / AE-615 EXPANSION JOINT DETAIL
1" = 1'-0"

Utah Valley University New Science Building

800 West University Parkway
Orem, Utah 84058

Division of Facilities Construction and Management

DRAWN BY:	Author
CHECKED BY:	Checker
DFCM PROJECT NO.:	09020790
GSBS PROJECT NO.:	2009.115.00
ISSUED DATE:	05.07.2010

INTERIOR DETAILS

CONSTRUCTION DOCUMENTS

AE-615

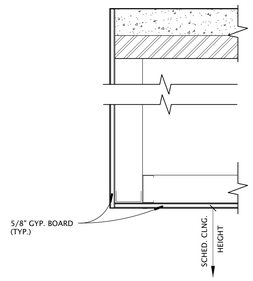

19 AE-621 SOFFIT DETAIL
1 1/2" = 1'-0"

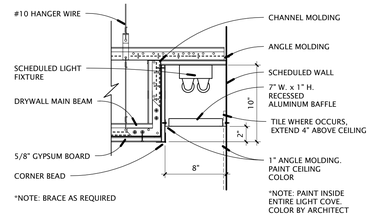

14 AE-621 COVELIGHTING DETAIL
1 1/2" = 1'-0"

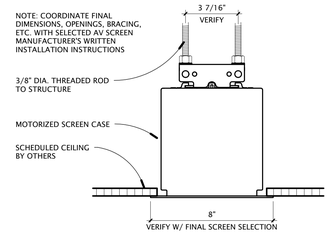

9 AE-621 AV PROJECTOR SCREEN
3" = 1'-0"

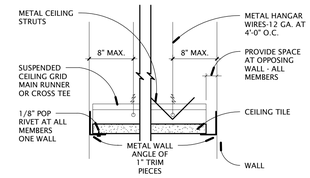

4 AE-621 SEISMIC BRACING DETAIL
3" = 1'-0"

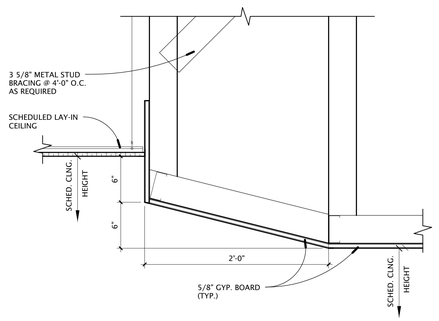

18 AE-621 SOFFIT DETAIL
1 1/2" = 1'-0"

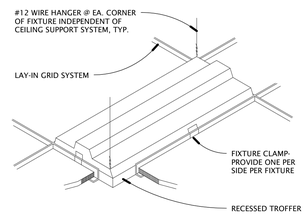

13 AE-621 FIXTURE SUPPORT DETAIL
1 : 1

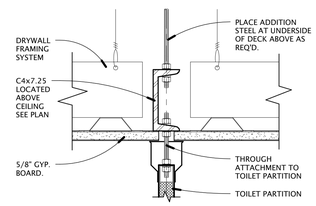

8 AE-621 TOILET PARTITION DETAIL AT CEILING
3" = 1'-0"

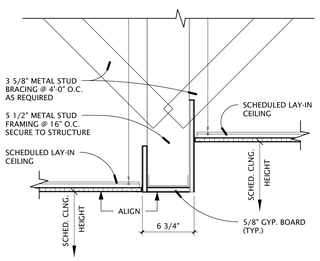

3 AE-621 SOFFIT DETAIL
1 1/2" = 1'-0"

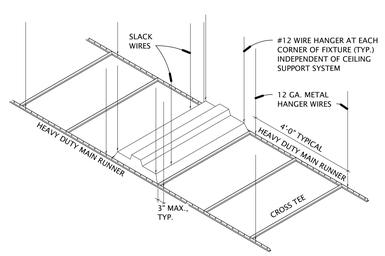

12 AE-621 TYP. FIXTURE SUPPORT ISO.
1/64" = 1'-0"

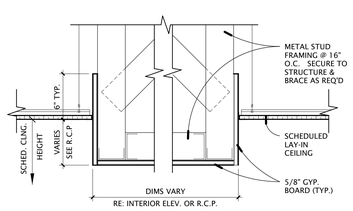

7 AE-621 SOFFIT DETAIL
1 1/2" = 1'-0"

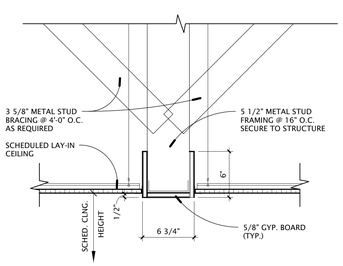

2 AE-621 SOFFIT DETAIL
1 1/2" = 1'-0"

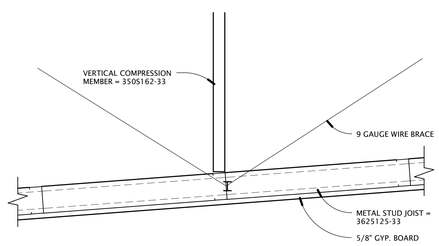

16 AE-621 CLOUD DETAIL
1 1/2" = 1'-0"

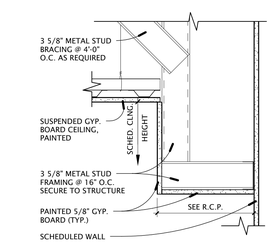

11 AE-621 GYP. BOARD SOFFIT DETAIL
1 1/2" = 1'-0"

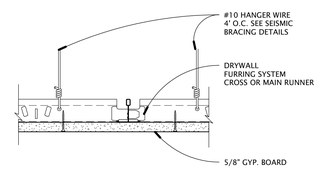

6 AE-621 SUSPENDED GYP. BD.
3" = 1'-0"

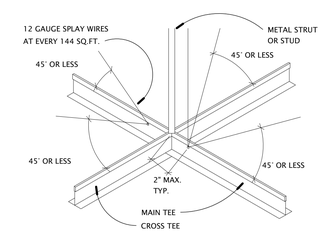

NOTE 1- ALL SPLAY WIRES TO BE IN LINE WITH ATTACHED COMPONENT

NOTE 2- ALL SPLAY WIRES TO BE TAUT AND TIED BOTH ENDS WITH MINIMUM OF THREE TURNS IN 1" OF RUN.

NOTE 3- COMPLY WITH IBC 2006

NOTE 4- SPLAY WIRES SHALL ATTACH TO STRUCTURAL GIRDER OR JOIST ONLY, DO NOT ATTACH TO ROOF DECK.

NOTE 5- METAL STRUT FASTENED TO THE MAIN RUNNER SHALL BE EXTENDED TO AND FASTENED TO THE STRUCTURAL MEMBERS SUPPORTING THE ROOF OR FLOOR ABOVE. THE STRUT SHALL BE ADEQUATE TO RESIST THE VERTICAL COMPONENT INDUCED BY THE BRACING WIRES.

NOTE 6- ALL LIGHT FIXTURES SHALL BE POSITIVELY ATTACHED TO THE SUSPENDED CEILING SYSTEM. WHEN INTERMEDIATE SYSTEMS ARE USED, ATTACH NO. 12 GAGE HANGERS TO THE GRID MEMBERS WITHIN 3" OF EACH CORNER OF EACH FIXTURE. LIGHT FIXTURES WEIGHING LESS THAN 56 LBS. SHALL HAVE TWO NO. 12 GAGE HANGERS CONNECTED FROM THE FIXTURE HOUSING TO THE STRUCTURE ABOVE. COMPLY WITH IBC 2006

NOTE 7- ALL LIGHT FIXTURES SHALL BE POSITIVELY ATTACHED 20 LBS., SHALL BE POSITIVELY ATTACHED TO THE CEILING SUSPENSION MAIN RUNNERS. TERMINALS OR SERVICES WEIGHING 20 LBS., BUT NOT MORE THAN 56 LBS., SHALL IN ADDITION HAVE TWO NO. 12 GAGE HANGERS CONNECTED TO THE CEILING SYSTEM HANGERS OR TO THE STRUCTURE ABOVE. TERMINALS OR SERVICES WEIGHING MORE THAN 56 LBS. SHALL BE SUPPORTED DIRECTLY FROM THE STRUCTURE ABOVE BY APPROVED HANGERS. COMPLY WITH IBC 2006

NOTE 8- ALL GRID SYSTEM IN SEISMIC ZONE D OR GREATER ARE REQUIRED TO BE HEAVY DUTY. REFERE REQUIREMENTS TO ASCE 7 REQUIREMENTS.

1 AE-621 SEISMIC BRACING DETAIL TYP.
1 1/2" = 1'-0"

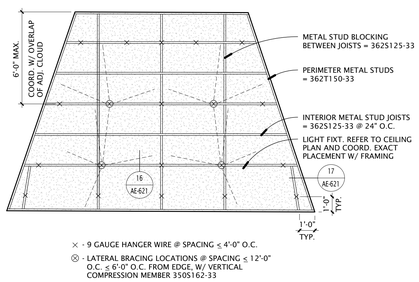

15 AE-621 CEILING CLOUD FRAMING PLAN
1/4" = 1'-0"

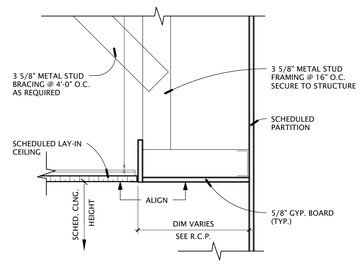

10 AE-621 SOFFIT DETAIL
1 1/2" = 1'-0"

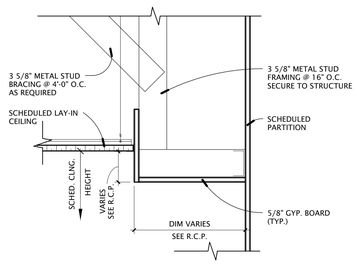

5 AE-621 SOFFIT DETAIL
1 1/2" = 1'-0"

GSBS ARCHITECTS
375 WEST 200 SOUTH
SALT LAKE CITY, UT 84101
P 801.521.8600
F 801.521.7913
www.gsbsarchitects.com

STATE OF UTAH 116302 LICENSED ARCHITECT

REVISIONS:

Utah Valley University New Science Building

800 West University Parkway
Orem, Utah 84058

Division of Facilities Construction and Management

DRAWN BY:	Author
CHECKED BY:	Checker
DFCM PROJECT NO.:	09020790
GSBS PROJECT NO.:	2009.115.00
ISSUED DATE:	05.07.2010

CEILING DETAILS

CONSTRUCTION DOCUMENTS

AE-621

GSBS ARCHITECTS

375 WEST 200 SOUTH
SALT LAKE CITY, UT 84101

P 801.521.8600
F 801.521.7913

www.gsbsarchitects.com

STATE OF UTAH
116302
LICENSED ARCHITECT

REVISIONS:

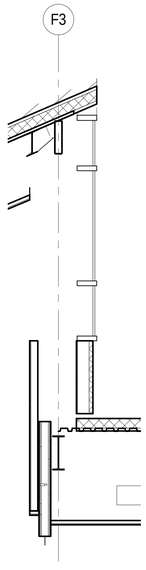

7 AE-622 CEILING ROOF DETAIL
3/8" = 1'-0"

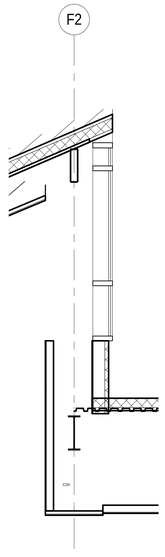

6 AE-622 CEILING ROOF DETAIL
3/8" = 1'-0"

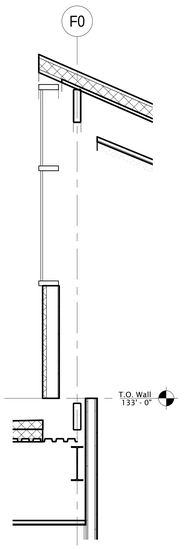

5 AE-622 CEILING ROOF DETAIL
3/8" = 1'-0"

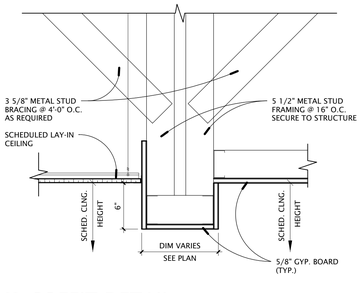

4 AE-622 SOFFIT DETAIL
1 1/2" = 1'-0"

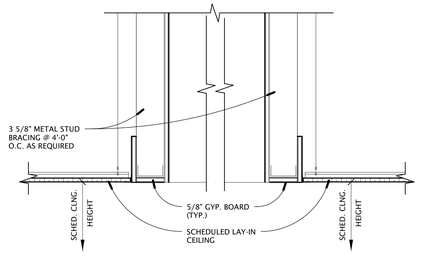

3 AE-622 SKYLIGHT DETAIL
1 1/2" = 1'-0"

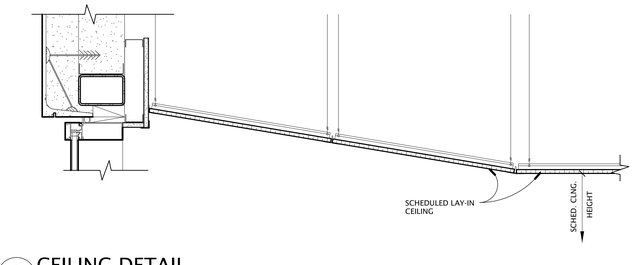

2 AE-622 CEILING DETAIL
1 1/2" = 1'-0"

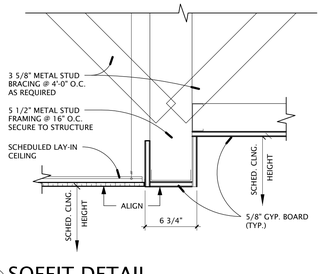

1 AE-622 SOFFIT DETAIL
1 1/2" = 1'-0"

Utah Valley University New Science Building

800 West University Parkway
Orem, Utah 84058

Division of Facilities Construction and Management

DRAWN BY:	Author
CHECKED BY:	Checker
DFCM PROJECT NO.:	09020790
GSBS PROJECT NO.:	2009.115.00
ISSUED DATE:	05.07.2010

CEILING DETAILS

CONSTRUCTION DOCUMENTS

AE-622

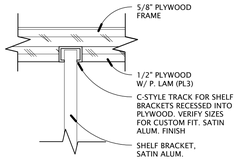

18 AE-631 SHELF BRACKET TRACK DETAIL
6" = 1'-0"

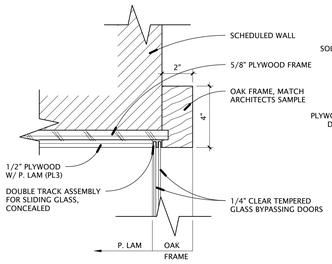

15 AE-631 DISPLAY FRAME DETAIL
3" = 1'-0"

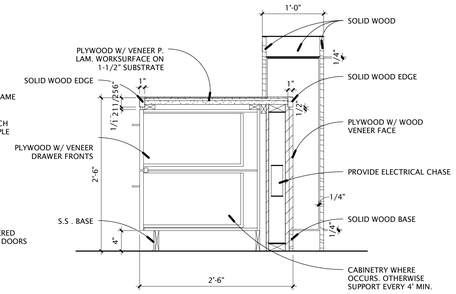

11 AE-631 RECEPTION DESK SECTION 2
1" = 1'-0"

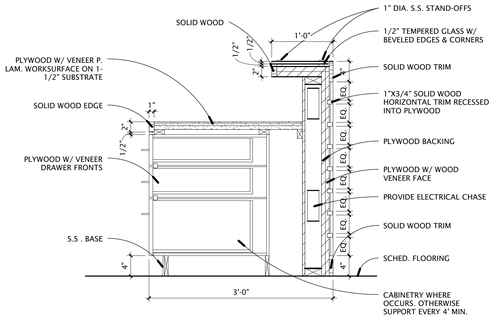

8 AE-631 RECEPTION DESK SECTION
1" = 1'-0"

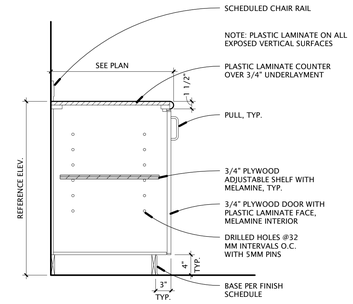

4 AE-631 CABINETRY CREDENZA
1" = 1'-0"

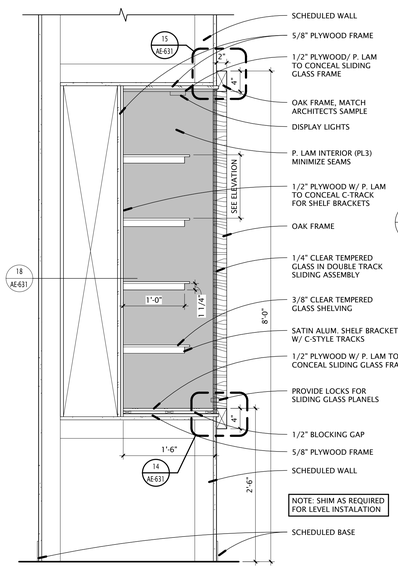

17 AE-631 DISPLAY CASE SECTION
1" = 1'-0"

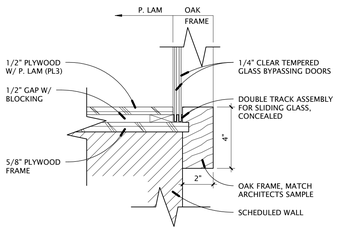

14 AE-631 DISPLAY FRAME DETAIL
3" = 1'-0"

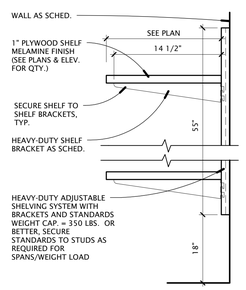

13 AE-631 SHELVING W/ METAL BRACKETS
1 1/2" = 1'-0"

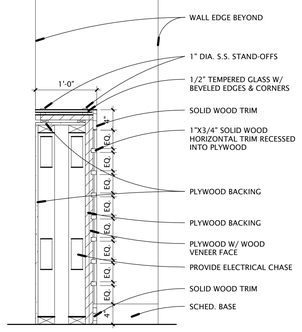

10 AE-631 TRANSACTION SECTION
1" = 1'-0"

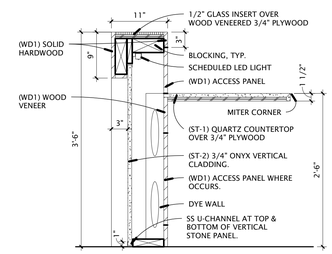

7 AE-631 RECEPTION DESK SECTION
1" = 1'-0"

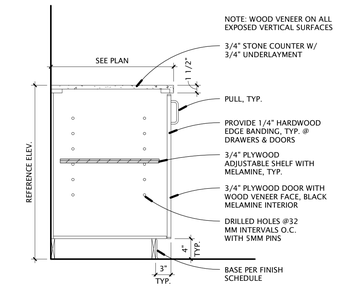

3 AE-631 CABINETRY CREDENZA
1" = 1'-0"

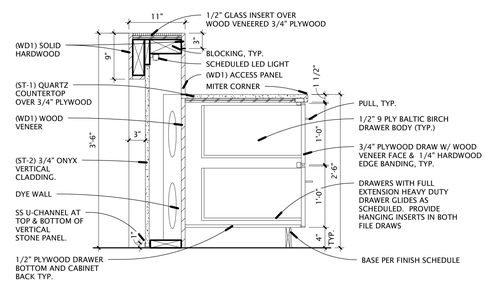

6 AE-631 RECEPTION DESK SECTION
1" = 1'-0"

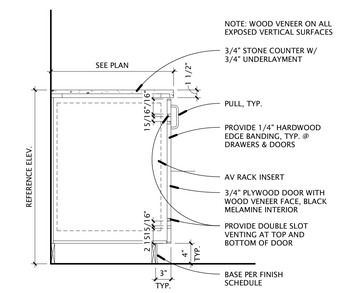

2 AE-631 CABINETRY CREDENZA W/AV RACK INSERT
1" = 1'-0"

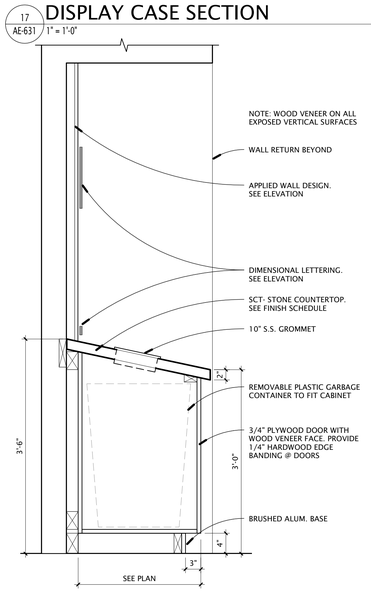

16 AE-631 RECYCLE CENTER SECTION
1" = 1'-0"

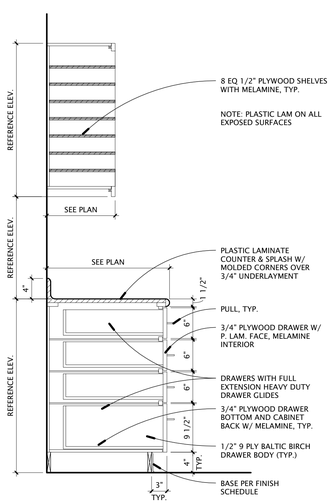

12 AE-631 CABINETRY SECTION
1" = 1'-0"

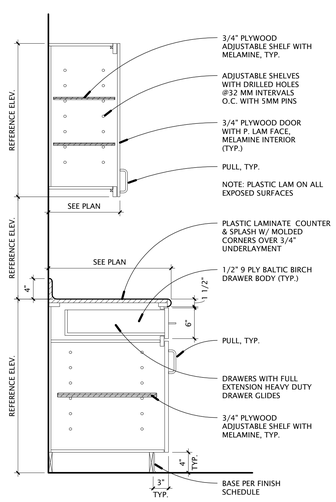

9 AE-631 CABINETRY SECTION
1" = 1'-0"

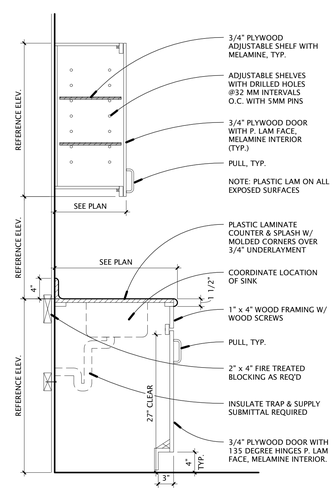

5 AE-631 CABINETRY SECTION
1" = 1'-0"

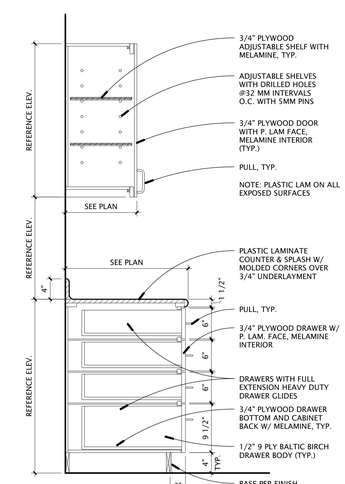

1 AE-631 CABINETRY SECTION
1" = 1'-0"

GSBS ARCHITECTS
375 WEST 200 SOUTH
SALT LAKE CITY, UT 84101
P 801.521.8600
F 801.521.7913
www.gsbsarchitects.com

STATE OF UTAH 116302 LICENSED ARCHITECT

REVISIONS:

Utah Valley University New Science Building

800 West University Parkway
Orem, Utah 84058

Division of Facilities Construction and Management

DRAWN BY:	Author
CHECKED BY:	Checker
DFCM PROJECT NO.:	09020790
GSBS PROJECT NO.:	2009.115.00
ISSUED DATE:	05.07.2010

CABINETRY DETAILS

CONSTRUCTION DOCUMENTS

AE-631

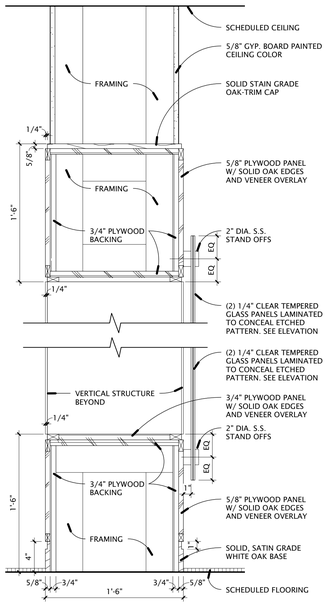

16 AE-632 INTERACTIVE WALL SECTION
1 1/2" = 1'-0"

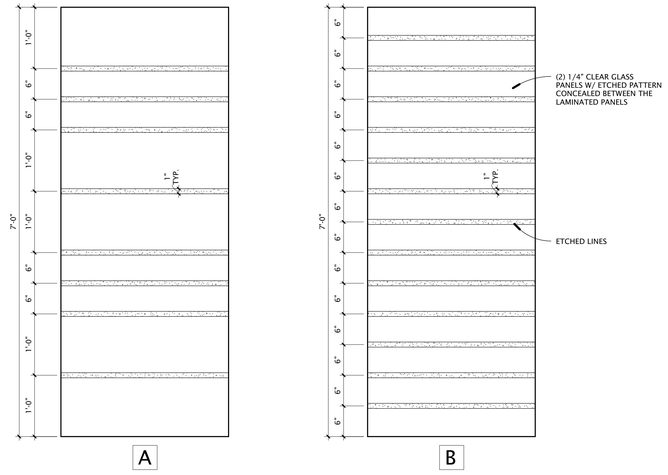

13 AE-632 INTERACTIVE WALL GLASS PATTERN
1" = 1'-0"

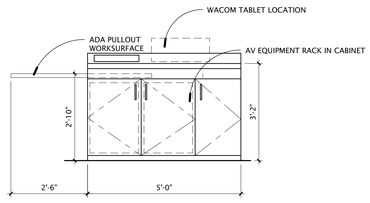

12 AE-632 LAB LECTERN BACK
1/2" = 1'-0"

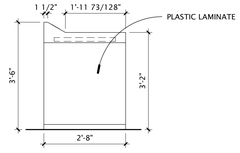

9 AE-632 LAB LECTERN SIDE
1/2" = 1'-0"

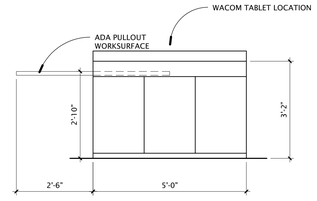

6 AE-632 LAB LECTERN FRONT
1/2" = 1'-0"

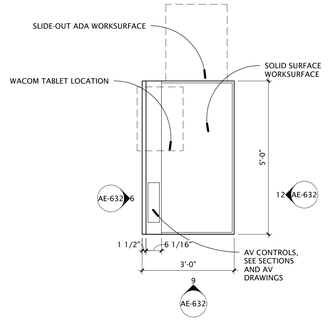

3 AE-632 ENLARGED LAB LECTERN
1/2" = 1'-0"

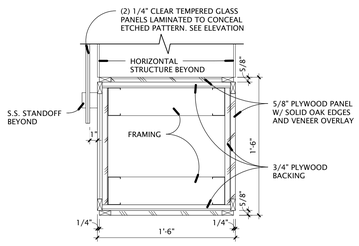

15 AE-632 INTERACTIVE WALL SECTION
1 1/2" = 1'-0"

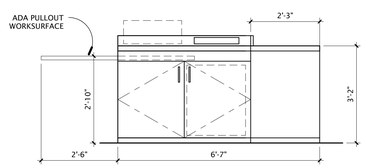

11 AE-632 WET LECTERN BACK
1/2" = 1'-0"

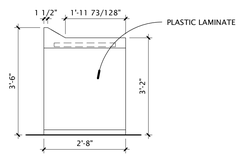

8 AE-632 WET LECTERN SIDE
1/2" = 1'-0"

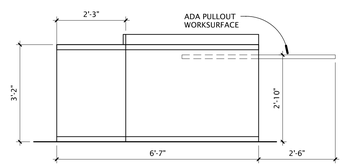

5 AE-632 WET LECTERN FRONT
1/2" = 1'-0"

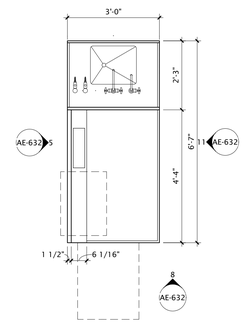

2 AE-632 ENLARGED WET LECTERN
1/2" = 1'-0"

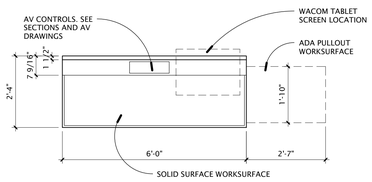

14 AE-632 TYP. TEACHING LECTERN ENL. PLAN
1/2" = 1'-0"

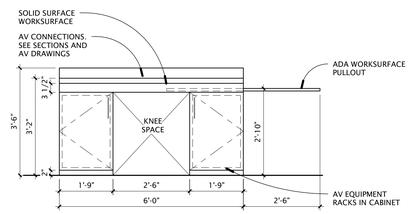

10 AE-632 LECTERN BACK
1/2" = 1'-0"

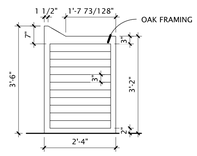

7 AE-632 LECTERN SIDE
1/2" = 1'-0"

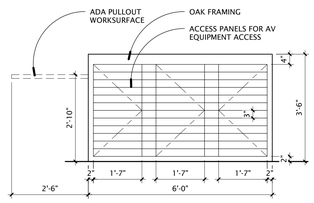

4 AE-632 LECTERN FRONT
1/2" = 1'-0"

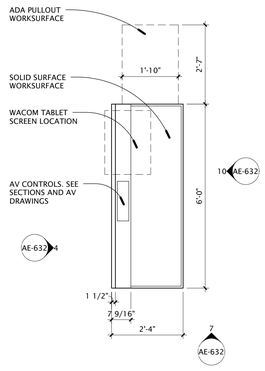

1 AE-632 ENLARGED LECTERN PLAN
1/2" = 1'-0"

GSBS ARCHITECTS
375 WEST 200 SOUTH
SALT LAKE CITY, UT 84101
P 801.521.8600
F 801.521.7913
www.gsbsarchitects.com

STATE OF UTAH
116302
LICENSED ARCHITECT

REVISIONS:

Utah Valley University New Science Building

800 West University Parkway
Orem, Utah 84058

Division of Facilities Construction and Management

DRAWN BY:	Author
CHECKED BY:	Checker
DFCM PROJECT NO.:	09020790
GSBS PROJECT NO.:	2009.115.00
ISSUED DATE:	05.07.2010

CABINETRY DETAILS

CONSTRUCTION DOCUMENTS

AE-632

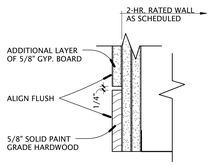

18 / AE-641 WOOD FLOOR DETAIL
3" = 1'-0"

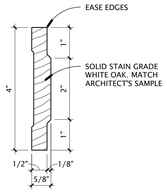

14 / AE-641 CHAIR RAIL
6" = 1'-0"

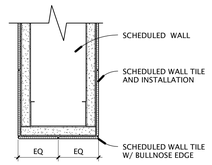

9 / AE-641 TILE AT ENDWALL
3" = 1'-0"

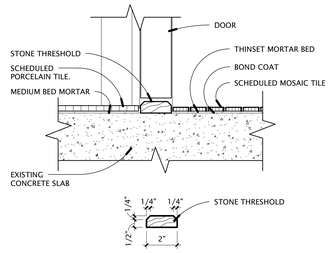

4 / AE-641 PORCELAIN-MOSAIC TRANSITION
3" = 1'-0"

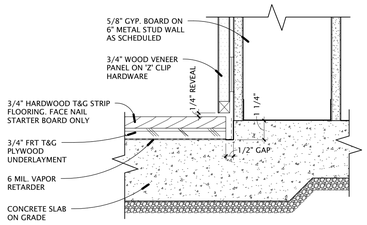

20 / AE-641 WOOD FLOOR DETAIL
3" = 1'-0"

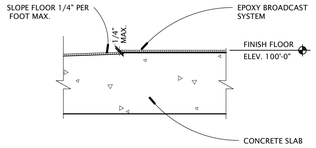

17 / AE-641 ADA SHOWER SILL DETAIL
1 1/2" = 1'-0"

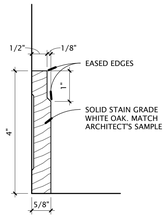

13 / AE-641 WOOD BASE
6" = 1'-0"

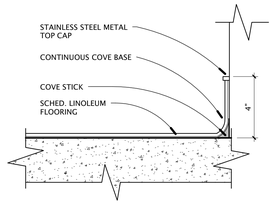

8 / AE-641 LINOLEUM COVE BASE
3" = 1'-0"

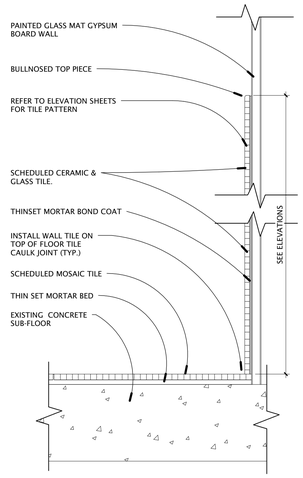

3 / AE-641 RESTROOM TILE WAINSCOT
3" = 1'-0"

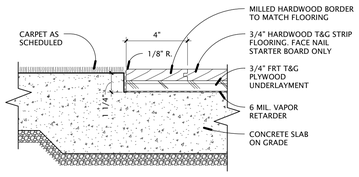

19 / AE-641 WOOD FLOOR DETAIL
3" = 1'-0"

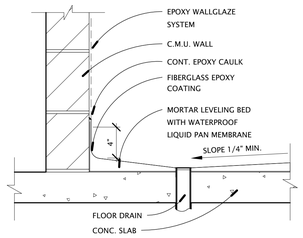

16 / AE-641 SHOWER PAN DETAIL
1 1/2" = 1'-0"

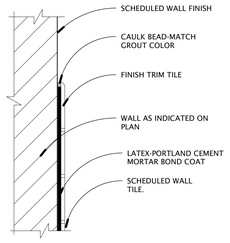

12 / AE-641 TILE WAINSCOT DETAIL
3" = 1'-0"

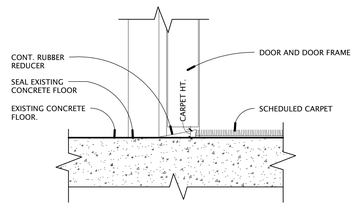

7 / AE-641 CARPET-CONCRETE TRANSITION
3" = 1'-0"

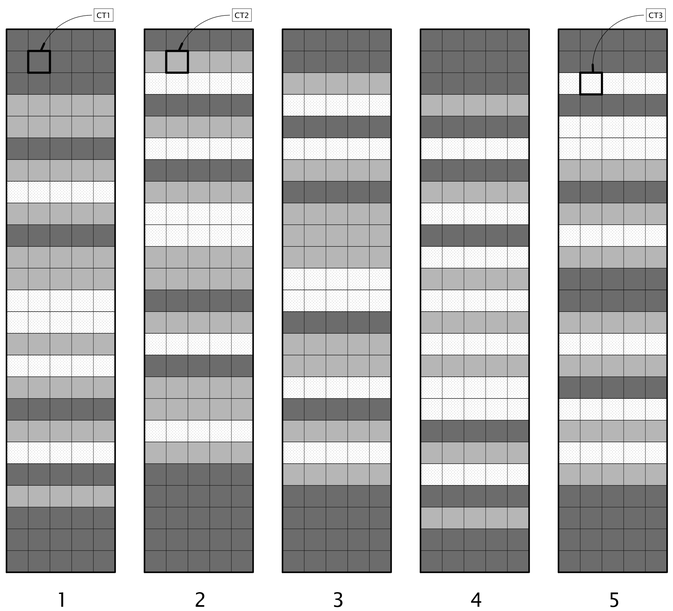

15 / AE-641 TOILET ROOM WALL TILE PATTERN
1" = 1'-0"

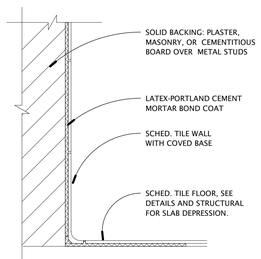

11 / AE-641 TILE BASE AT TILE WALL
3" = 1'-0"

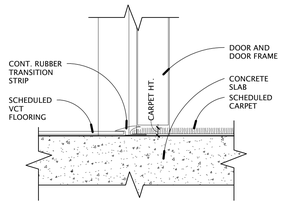

6 / AE-641 CARPET-VCT TRANSITION
3" = 1'-0"

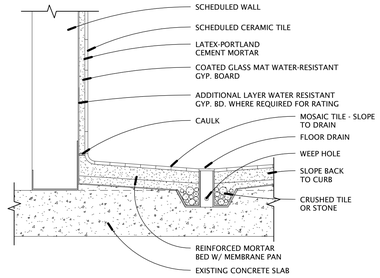

2 / AE-641 SHOWER WALL DETAIL
1 1/2" = 1'-0"

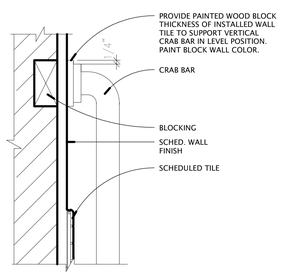

10 / AE-641 GRAB BAR DETAIL
3" = 1'-0"

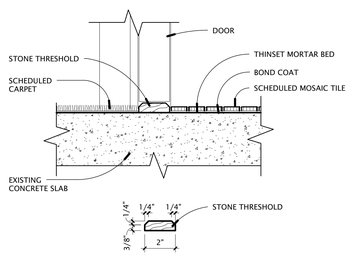

5 / AE-641 CARPET-TILE TRANSITION
3" = 1'-0"

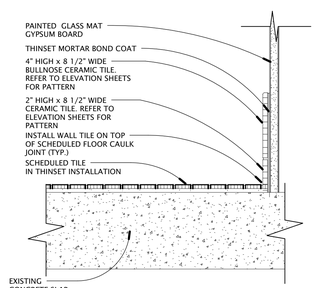

1 / AE-641 RESTROOM TILE BASE
3" = 1'-0"

GSBS ARCHITECTS
375 WEST 200 SOUTH
SALT LAKE CITY, UT 84101
P 801.521.8600
F 801.521.7913
www.gsbsarchitects.com

STATE OF UTAH
116302
LICENSED ARCHITECT

REVISIONS:

Utah Valley University New Science Building

800 West University Parkway
Orem, Utah 84058

Division of Facilities Construction and Management

DRAWN BY:	Author
CHECKED BY:	Checker
DFCM PROJECT NO.:	09020790
GSBS PROJECT NO.:	2009.115.00
ISSUED DATE:	05.07.2010

FINISH DETAILS

CONSTRUCTION DOCUMENTS

AE-641

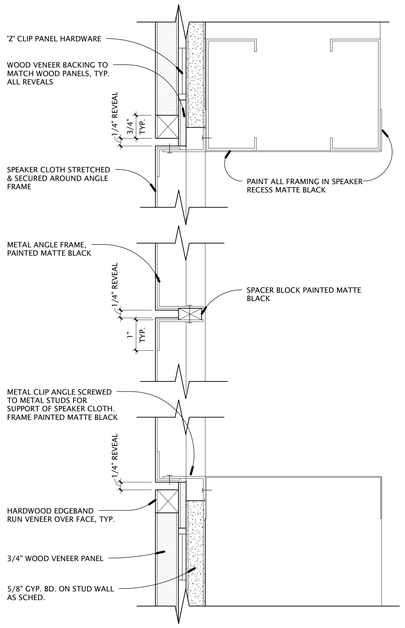

12 AE-642 SPEAKER PANEL DETAIL
6" = 1'-0"

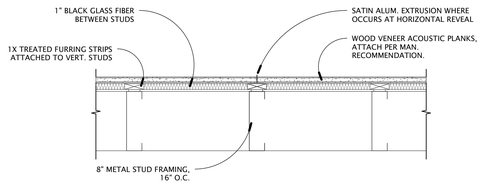

9 AE-642 ACOUSTIC WOOD WALL SECTION (TOP)
1 1/2" = 1'-0"

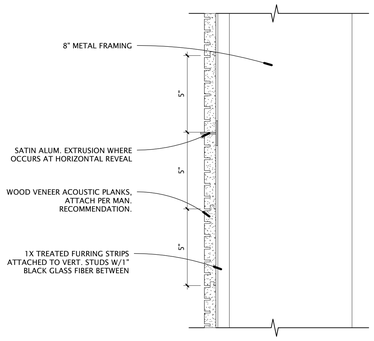

8 AE-642 ACOUSTIC WOOD WALL SECTION
3" = 1'-0"

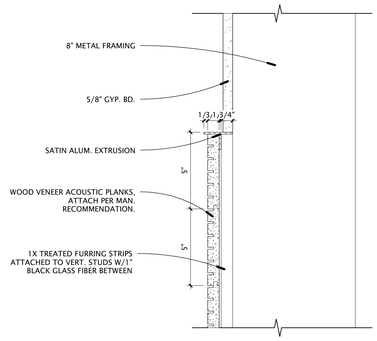

7 AE-642 TOP OF ACOUSTIC WOOD WALL
3" = 1'-0"

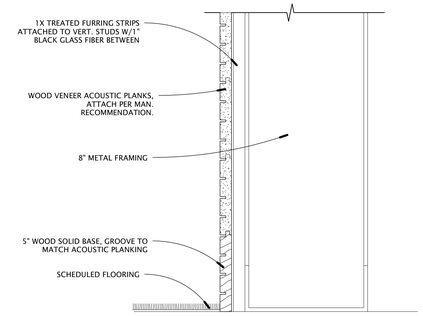

4 AE-642 ACOUSTIC WOOD WALL BASE SECTION
3" = 1'-0"

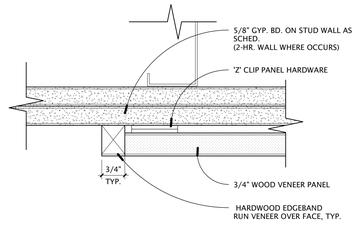

3 AE-642 WOOD PANEL DETAIL
6" = 1'-0"

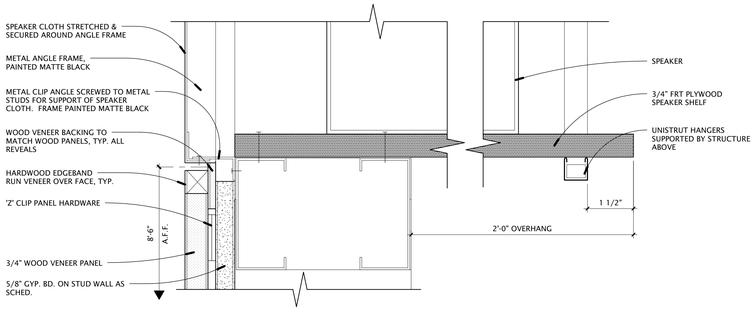

11 AE-642 SPEAKER PLATFORM
6" = 1'-0"

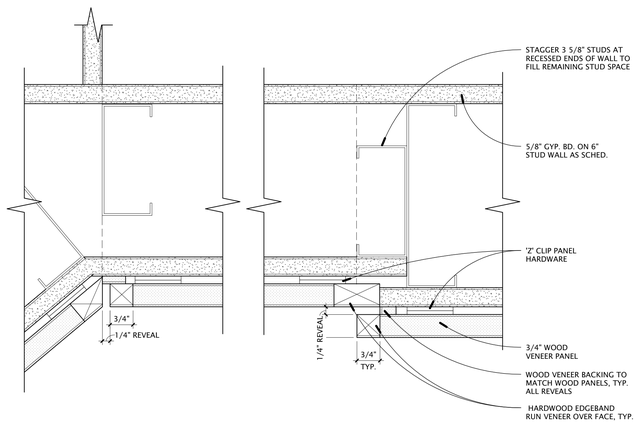

6 AE-642 WOOD PANEL DETAIL
6" = 1'-0"

2 AE-642 WOOD PANEL DETAIL
6" = 1'-0"

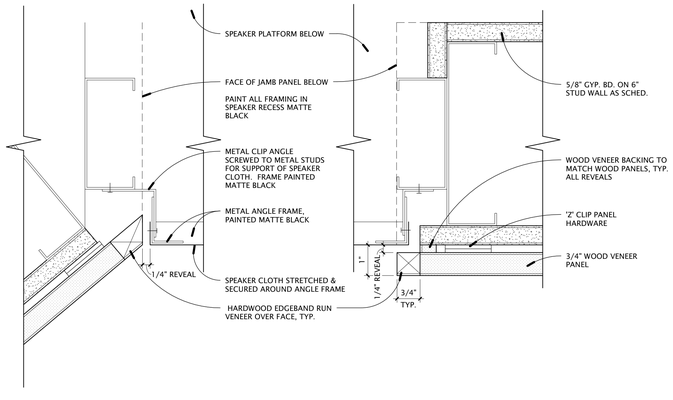

10 AE-642 SPEAKER PANEL DETAIL
6" = 1'-0"

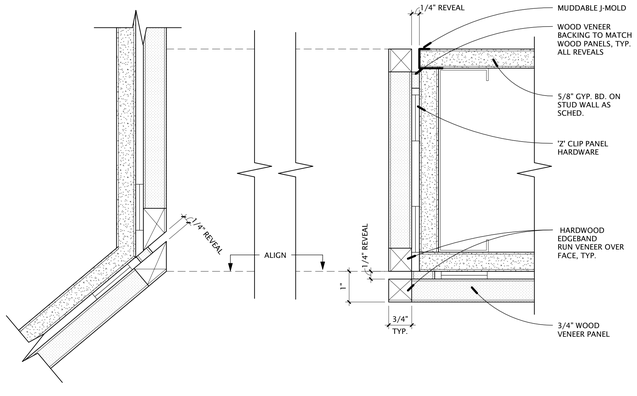

5 AE-642 WOOD PANEL DETAIL
6" = 1'-0"

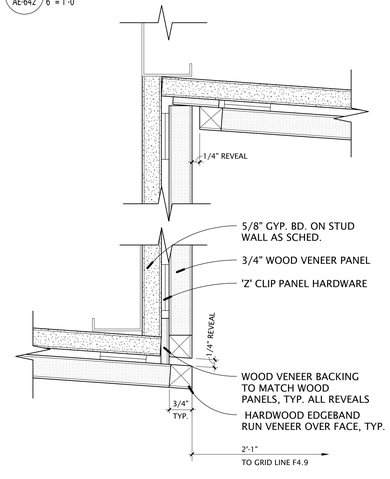

1 AE-642 WOOD PANEL DETAIL
6" = 1'-0"

GSBS ARCHITECTS
375 WEST 200 SOUTH
SALT LAKE CITY, UT 84101
P 801.521.8600
F 801.521.7913
www.gsbsarchitects.com

STATE OF UTAH 116302 LICENSED ARCHITECT

REVISIONS:

Utah Valley University New Science Building

800 West University Parkway
Orem, Utah 84058

Division of Facilities Construction and Management

DRAWN BY:	Author
CHECKED BY:	Checker
DFCM PROJECT NO.:	09020790
GSBS PROJECT NO.:	2009.115.00
ISSUED DATE:	05.07.2010

FINISH DETAILS

CONSTRUCTION DOCUMENTS

AE-642

GSBS ARCHITECTS

375 WEST 200 SOUTH
SALT LAKE CITY, UT 84101

P 801.521.8600
F 801.521.7913

www.gsbsarchitects.com

STATE OF UTAH
116302
LICENSED ARCHITECT

REVISIONS:

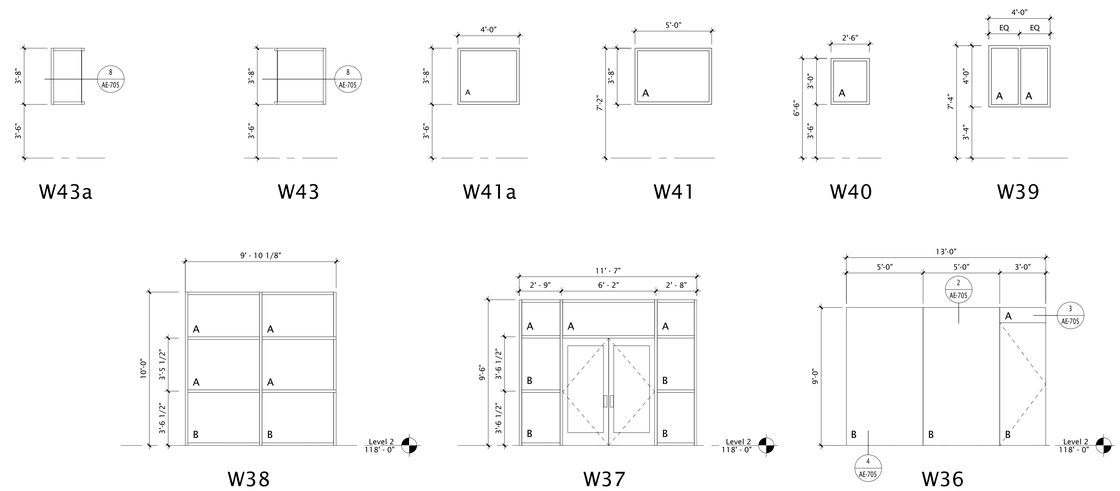

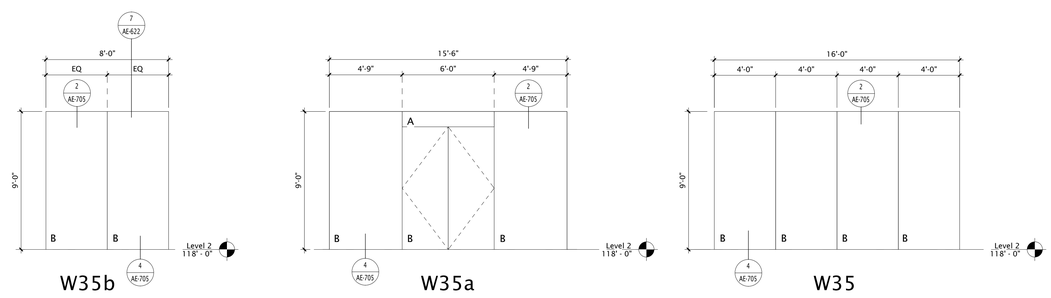

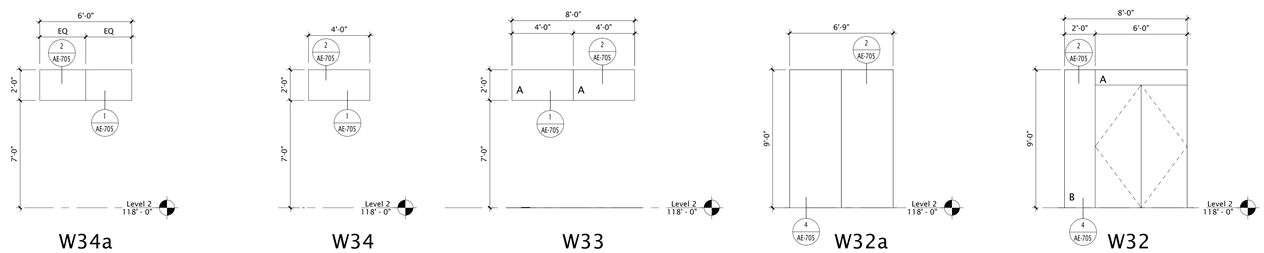

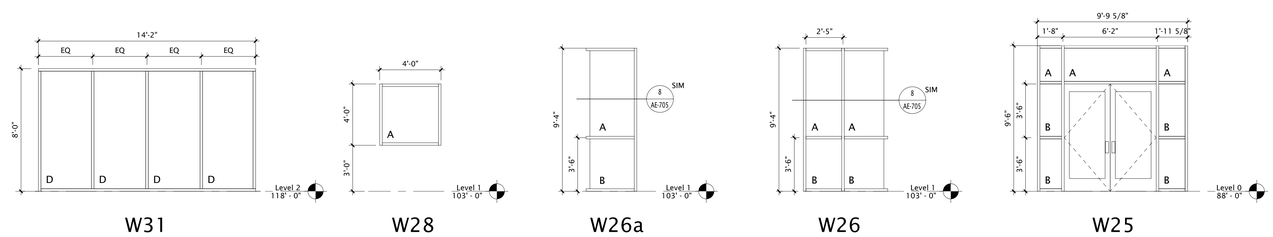

GLAZING SCHEDULE

A - 1/4" CLEAR
B - 1/4" CLEAR, TEMPERED
C - 1" INSUL. UNIT (ULTRA-CLEAR)
D - 1" INSUL. UNIT, TEMPERED (ULTRA-CLEAR)
E - 1" INSUL. UNIT (GRAY)
F - 1" INSUL. UNIT, TEMPERED (GRAY)
G - 1" INSUL. UNIT (GRAY, SPANDREL PANEL)
H - 1/2" CLEAR, TEMPERED
J - 3/4" CLEAR, TEMPERED

Utah Valley University New Science Building

800 West University Parkway
Orem, Utah 84058

Division of Facilities Construction and Management

DRAWN BY:	Author
CHECKED BY:	Checker
DFCM PROJECT NO.:	09020790
GSBS PROJECT NO.:	2009.115.00
ISSUED DATE:	05.07.2010

INTERIOR WINDOW TYPES

CONSTRUCTION DOCUMENTS

AE-701

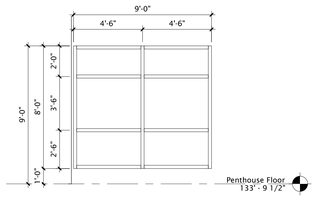

W42

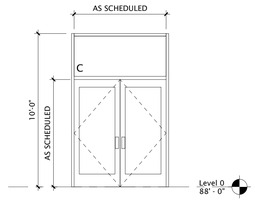

W10

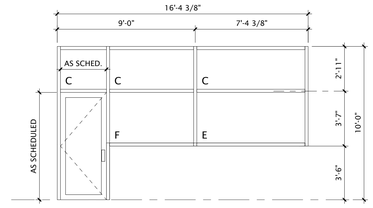

W8a

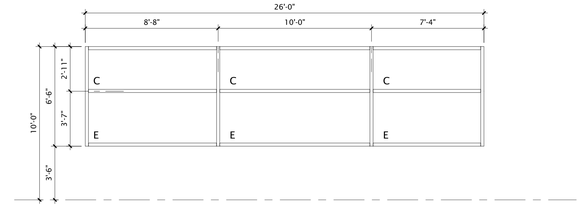

W4

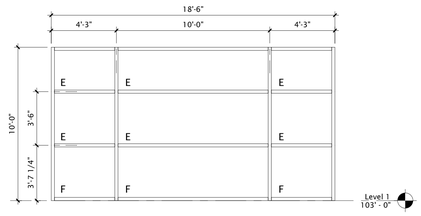

W22

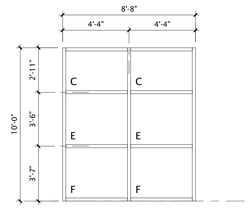

W9

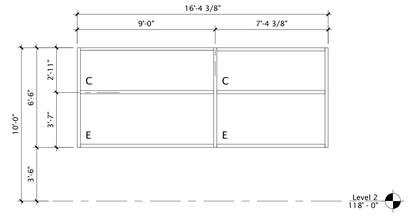

W8

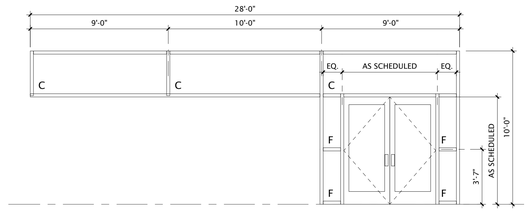

W3

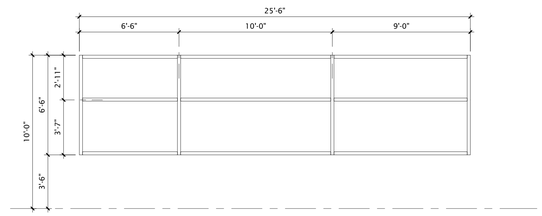

W7

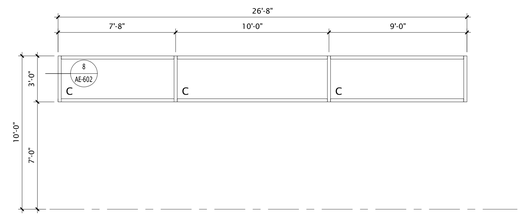

W2b

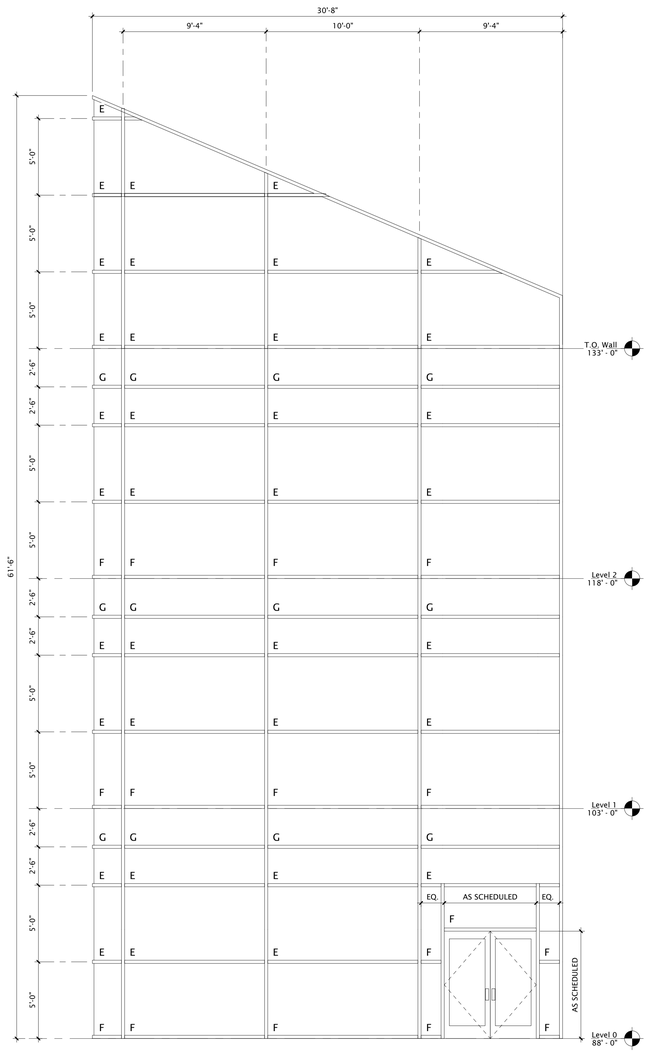

W11

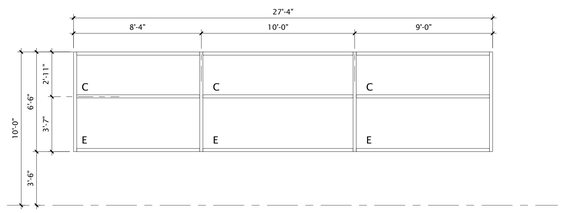

W6

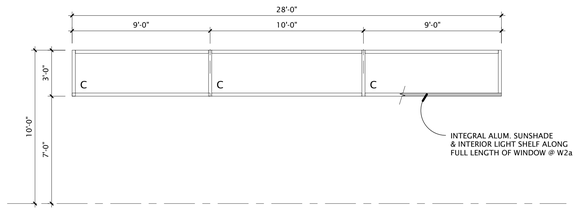

W2

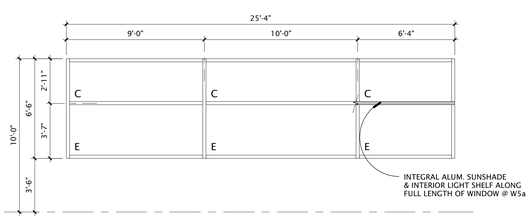

W5

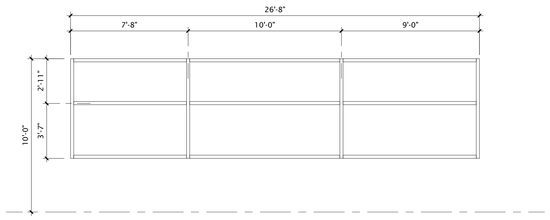

W1b

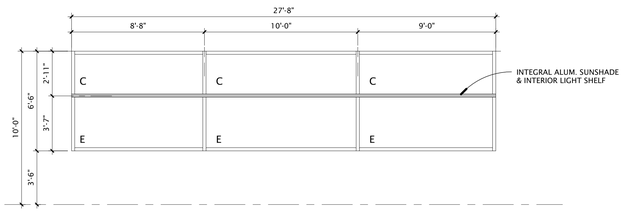

W4a

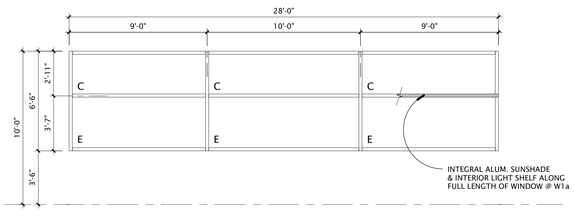

W1

GSBS ARCHITECTS

375 WEST 200 SOUTH
SALT LAKE CITY, UT 84101

P 801.521.8600
F 801.521.7913

www.gsbsarchitects.com

STATE OF UTAH
116302
LICENSED ARCHITECT

REVISIONS:

GLAZING SCHEDULE

A - 1/4" CLEAR
B - 1/4" CLEAR, TEMPERED
C - 1" INSUL. UNIT (ULTRA-CLEAR)
D - 1" INSUL. UNIT, TEMPERED (ULTRA-CLEAR)
E - 1" INSUL. UNIT (GRAY)
F - 1" INSUL. UNIT, TEMPERED (GRAY)
G - 1" INSUL. UNIT (GRAY, SPANDREL PANEL)
H - 1/2" CLEAR, TEMPERED
J - 3/4" CLEAR, TEMPERED

Utah Valley University New Science Building

800 West University Parkway
Orem, Utah 84058

Division of Facilities Construction and Management

DRAWN BY:	Author
CHECKED BY:	Checker
DFCM PROJECT NO.:	09020790
GSBS PROJECT NO.:	2009.115.00
ISSUED DATE:	05.07.2010

EXTERIOR WINDOW TYPES

CONSTRUCTION DOCUMENTS

AE-702

GSBS ARCHITECTS

375 WEST 200 SOUTH
SALT LAKE CITY, UT 84101

P 801.521.8600
F 801.521.7913

www.gsbsarchitects.com

STATE OF UTAH
116302
LICENSED ARCHITECT

REVISIONS:

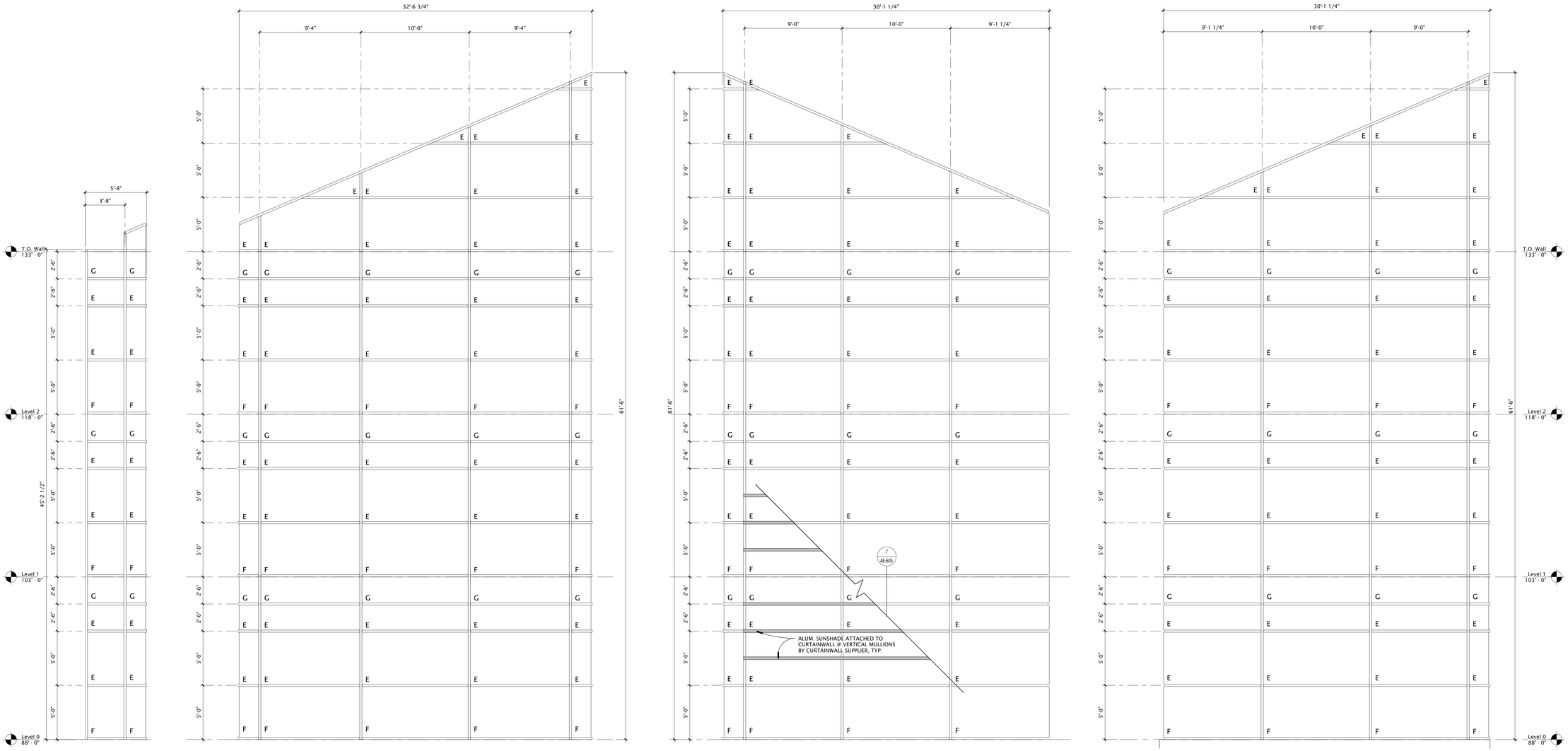

GLAZING SCHEDULE

A - 1/4" CLEAR
B - 1/4" CLEAR, TEMPERED
C - 1" INSUL. UNIT (ULTRA-CLEAR)
D - 1" INSUL. UNIT, TEMPERED (ULTRA-CLEAR)
E - 1" INSUL. UNIT (GRAY)
F - 1" INSUL. UNIT, TEMPERED (GRAY)
G - 1" INSUL. UNIT (GRAY, SPANDREL PANEL)
H - 1/2" CLEAR, TEMPERED
J - 3/4" CLEAR, TEMPERED

Utah Valley University New Science Building

800 West University Parkway
Orem, Utah 84058

Division of Facilities Construction and Management

DRAWN BY:	Author
CHECKED BY:	Checker
DFCM PROJECT NO.:	09020790
GSBS PROJECT NO.:	2009.115.00
ISSUED DATE:	05.07.2010

EXTERIOR WINDOW TYPES

CONSTRUCTION DOCUMENTS

AE-703

GSBS ARCHITECTS

375 WEST 200 SOUTH
SALT LAKE CITY, UT 84101

P 801.521.8600
F 801.521.7913

www.gsbsarchitects.com

STATE OF UTAH
116302
LICENSED ARCHITECT

REVISIONS:

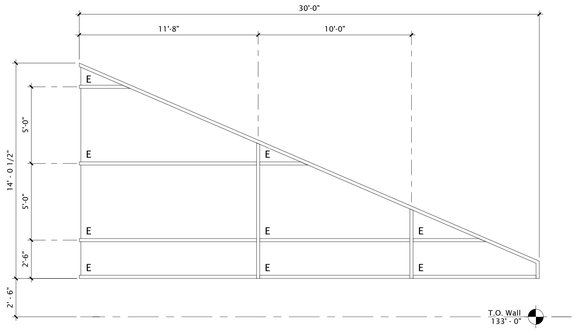

W20a

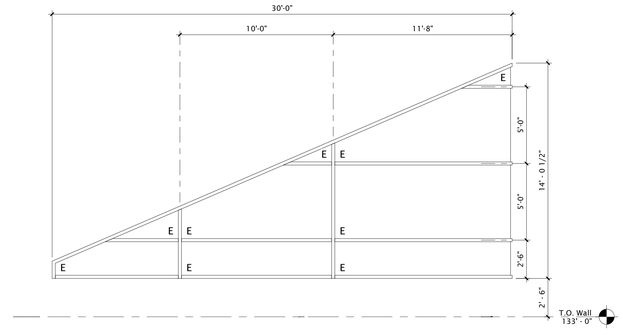

W21

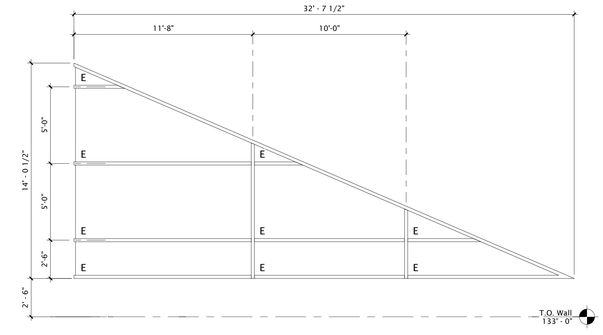

W21a

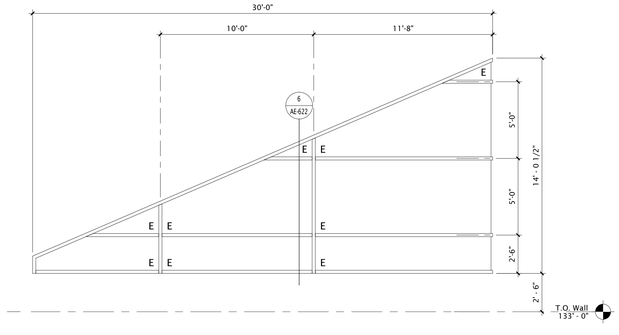

W20

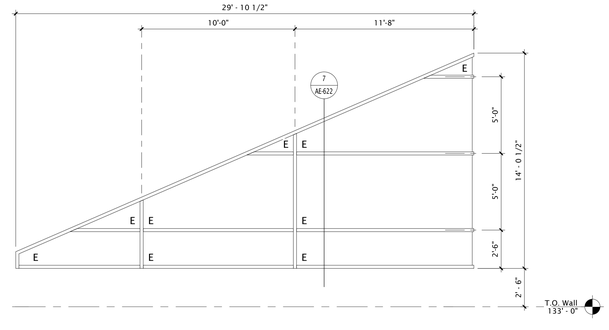

W19

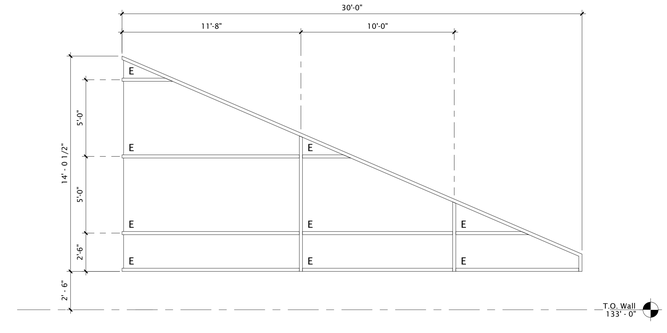

W19a

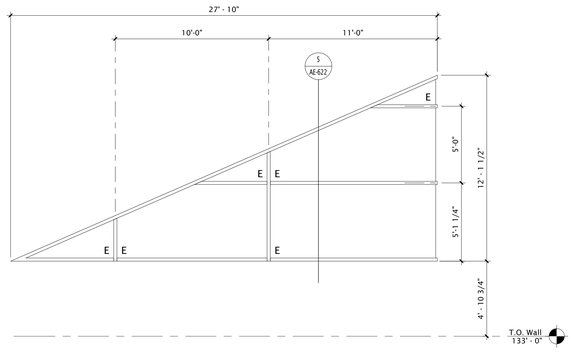

W18

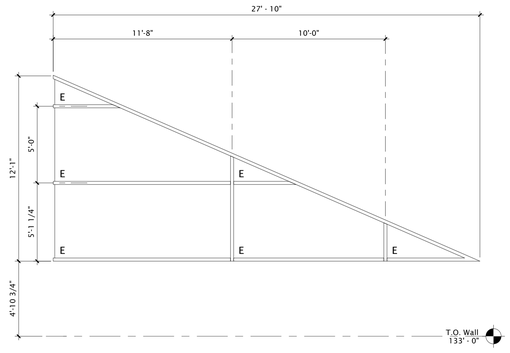

W18a

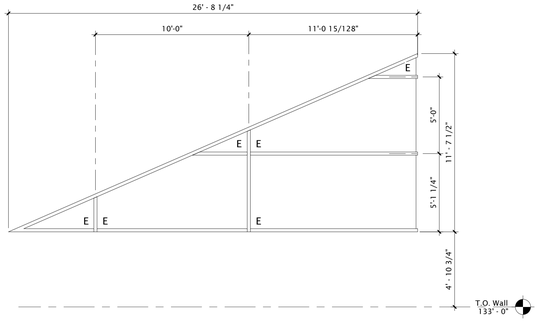

W17

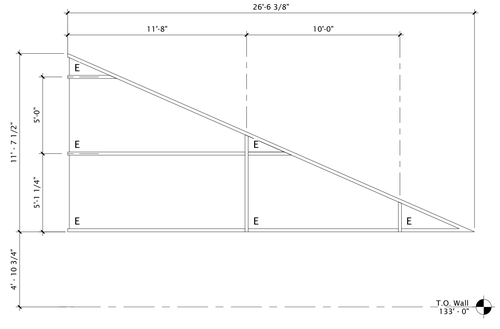

W17a

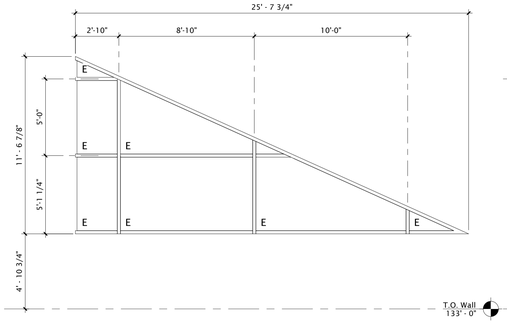

W16a

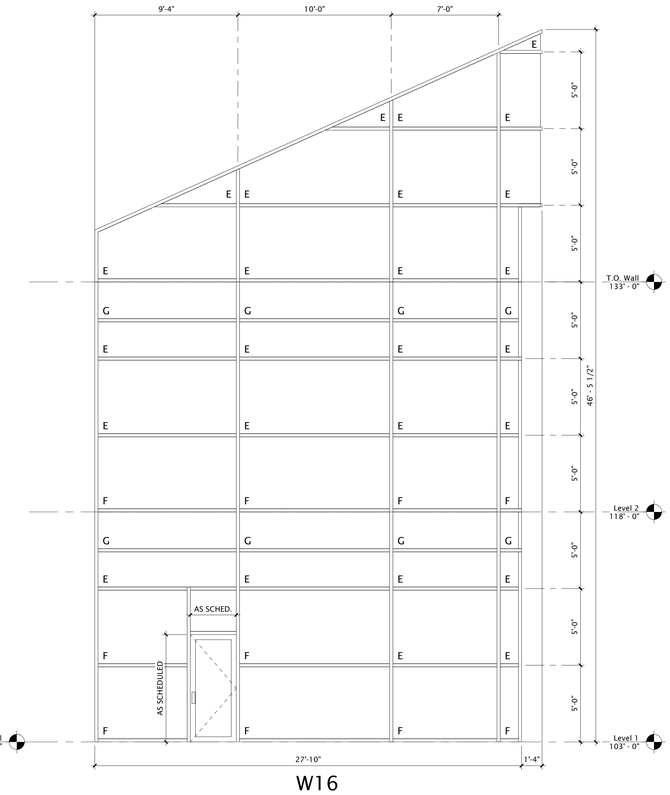

W16

GLAZING SCHEDULE

A -	1/4" CLEAR
B -	1/4" CLEAR, TEMPERED
C -	1" INSUL. UNIT (ULTRA-CLEAR)
D -	1" INSUL. UNIT, TEMPERED (ULTRA-CLEAR)
E -	1" INSUL. UNIT (GRAY)
F -	1" INSUL. UNIT, TEMPERED (GRAY)
G -	1" INSUL. UNIT (GRAY, SPANDREL PANEL)
H -	1/2" CLEAR, TEMPERED
J -	3/4" CLEAR, TEMPERED

Utah Valley University New Science Building

800 West University Parkway
Orem, Utah 84058

Division of Facilities Construction and Management

DRAWN BY:	Author
CHECKED BY:	Checker
DFCM PROJECT NO.:	09020790
GSBS PROJECT NO.:	2009.115.00
ISSUED DATE:	05.07.2010

EXTERIOR WINDOW TYPES

CONSTRUCTION DOCUMENTS

AE-704

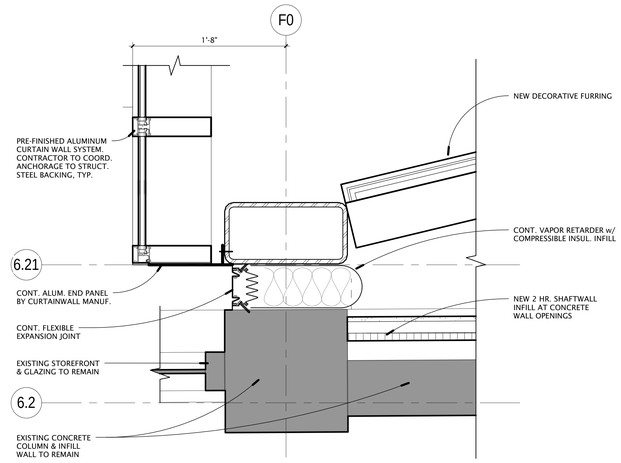

9 AE-705 COLUMN DETAIL
1 1/2" = 1'-0"

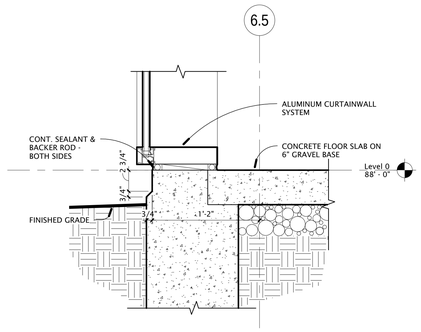

5 AE-705 BASE OF CURTAINWALL
1 1/2" = 1'-0"

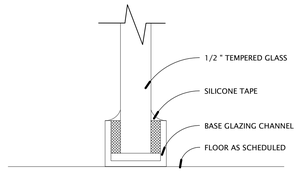

4 AE-705 WINDOW BASE
12" = 1'-0"

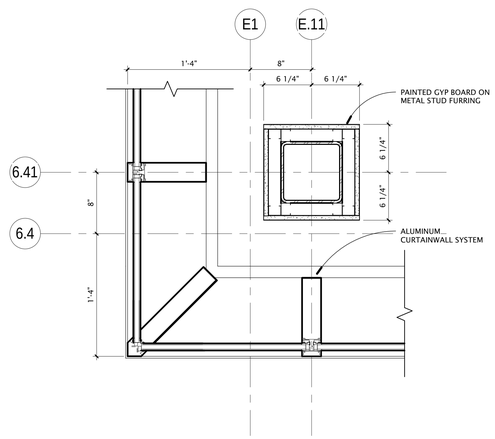

11 AE-705 TOWER GLAZING CORNER
1 1/2" = 1'-0"

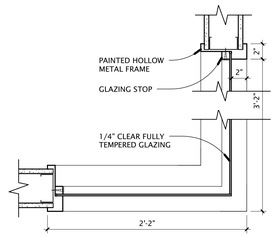

8 AE-705 LAB WINDOW
1 1/2" = 1'-0"

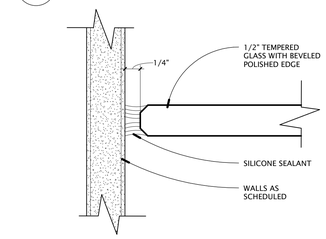

3 AE-705 FRAMELESS WINDOW JAMB DTL
12" = 1'-0"

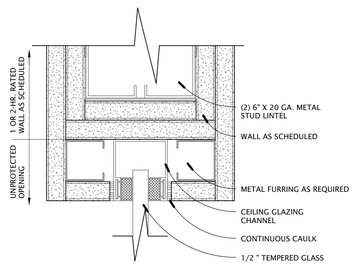

7 AE-705 FRAMELESS WINDOW HEAD DTL @ RATED WALL
6" = 1'-0"

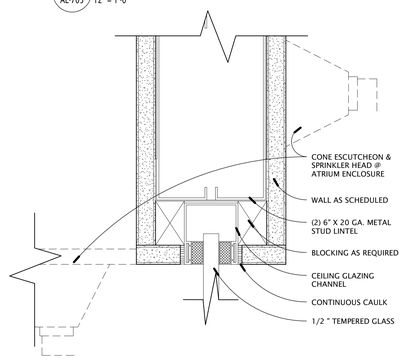

2 AE-705 FRAMELESS WINDOW HEAD DTL
6" = 1'-0"

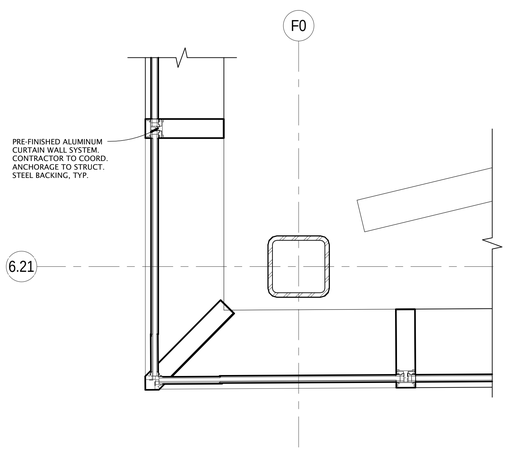

10 AE-705 ATRIUM GLAZING CORNER
1 1/2" = 1'-0"

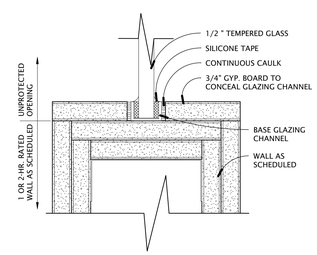

6 AE-705 FRAMELESS WINDOW SILL/JAMB DTL @ RATED WALL
6" = 1'-0"

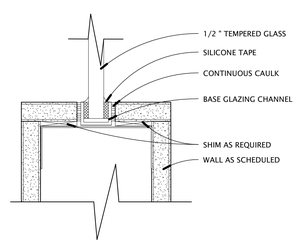

1 AE-705 FRAMELESS WINDOW SILL DTL
6" = 1'-0"

GSBS ARCHITECTS
375 WEST 200 SOUTH
SALT LAKE CITY, UT 84101
P 801.521.8600
F 801.521.7913
www.gsbsarchitects.com

STATE OF UTAH
116302
LICENSED ARCHITECT

REVISIONS:

Utah Valley University New Science Building

800 West University Parkway
Orem, Utah 84058

Division of Facilities Construction and Management

DRAWN BY:	Author
CHECKED BY:	Checker
DFCM PROJECT NO.:	09020790
GSBS PROJECT NO.:	2009.115.00
ISSUED DATE:	05.07.2010

GLAZING DETAILS

CONSTRUCTION DOCUMENTS

AE-705

FINISHES						
Code	Description	Manufacturer	Product Name / Number	Color / Finish	Size	Comments
	WALLS					
P1	WALL PAINT	ICI PAINTS	41YY 70/112 IVORY SILK	Eggshell	n/a	General Paint - Gyp. Board Walls
P2	WALL PAINT	ICI PAINTS	30YY 50/176 HISTORIC TAN	Eggshell	n/a	Accent Paint - Gyp. Board Walls
P3	WALL PAINT	ICI PAINTS	30YY 36/185 SURREY BEIGE	Eggshell	n/a	Accent Paint - Gyp. Board Walls
P4	WALL PAINT	ICI PAINTS	30YY 27/226 KHAKI MOSS	Eggshell	n/a	Accent Paint - Gyp. Board Walls
P5	WALL PAINT	ICI PAINTS	90YY 33/062 HEATHER GREY	Eggshell	n/a	Accent Paint - Gyp. Board Walls
P6	WALL PAINT	ICI PAINTS	20YY 40/337 COGNAC BRANDY	Eggshell	n/a	Accent Paint - Gyp. Board Walls
P7	WALL PAINT	ICI PAINTS	70BG 28/060 GENTRY BLUE	Eggshell	n/a	Accent Paint - Gyp. Board Walls
P8	WALL PAINT	ICI PAINTS	70YY 26/137 PALO VERDE	Eggshell	n/a	Accent Paint - Gyp. Board Walls
P9	WALL PAINT	ICI PAINTS	80YR 17/406 BURIED TREASURE	Eggshell	n/a	Accent Paint - Gyp. Board Walls
P10	WALL PAINT	ICI PAINTS	10GG 26/046 THUNDERCLOUD	Eggshell	n/a	Accent Paint - Gyp. Board Walls
P11	WALL PAINT	ICI PAINTS	40YY 20/081 PLATEAU GREY	Eggshell	n/a	Accent Paint - Gyp. Board Walls
P12	CEILING PAINT	ICI PAINTS	TBD	FLAT		GYP. BD CEILING PAINT
PW	PAINTED PLYWOOD	REFER TO FINISH PLAN		Semi-gloss	n/a	
EP	EPOXY PAINT	SEE SPECIFICATIONS		TBD	n/a	
FRP	FIBERGLASS REINFORCED PANEL	SEE SPECIFICATIONS		TBD	SEE ELEVATIONS	
CT1	CERAMIC WALL TILE	Daltile	Ceramic Wall Tile	0166 ELEMENTAL TAN	4" x 4"	Restroom Wall Tile
Grout		Mapei	Unsanded	TBD		
CT2	CERAMIC WALL TILE	Daltile	Ceramic Wall Tile	ALMOND	4" x 4"	Restroom Wall Tile
Grout		Mapei	Unsanded	TBD		
CT3	CERAMIC WALL TILE	Daltile	Ceramic Wall Tile	BISCUIT	4" x 4"	Restroom Wall Tile
Grout		Mapei	Unsanded	TBD		
CHR	CHAIR RAIL	SOLID WOOD	STAIN GRADE	TBD		SEE DETAILS AND ELEVATIONS
	FLOORING					
CP1	CARPET TILE	INTERFACE	HAPPENING 1463202500	2957 RETROSPECTIVE	50CM X 50CM	MONOLITHIC INSTALLATION - SEE FINISH PLAN
CP2	CARPET TILE	INTERFACE	ON BOARD 123630250H	100746 OAK	50CM X 50CM	MONOLITHIC INSTALLATION - SEE FINISH PLAN
CP3	CARPET TILE	INTERFACE	ON BOARD 123630250H	100740 WALNUT	50CM X 50CM	MONOLITHIC INSTALLATION - SEE FINISH PLAN
WT	WALK-OFF CARPET TILE	INTERFACE				
EF	EPOXY FLOOR	SEE SPECIFICATIONS		TBD		
VS1	SHEET VINYL	TBD		TBD		SEE FINISH PLANS
PT1	FLOOR TILE	DALTILE	PORCELAIN MOSAIC TILE	TBD	2"x2"	SEE FINISH PLANS
PT2	FLOOR TILE	DALTILE	PORCELAIN MOSAIC TILE	TBD	2"x2"	SEE FINISH PLANS
VT1	VCT	MANNINGTON COMMERCIAL	BRUSHWORK	703 ECRU	12" x 12"	SEE FINISH PLANS
VT2	VCT	MANNINGTON COMMERCIAL	SOLIDPOINT	319 SUEDE	12" x 12"	SEE FINISH PLANS
VT3	VCT	MANNINGTON COMMERCIAL	BRUSHWORK	713 FLORENTINE	12" x 12"	SEE FINISH PLANS
VT4	VCT	MANNINGTON COMMERCIAL	SOLIDPOINT	340 BLUE RIDGE	12" x 12"	SEE FINISH PLANS
VT5	VCT	MANNINGTON COMMERCIAL	SOLIDPOINT	345 SILVER LEAF	12" x 12"	SEE FINISH PLANS
VT6	VCT	MANNINGTON COMMERCIAL	SOLIDPOINT	338 CHERRYWOOD	12" x 12"	SEE FINISH PLANS
VT7	VCT	MANNINGTON COMMERCIAL	SOLIDPOINT	363 ITALIAN STRAW	12" x 12"	SEE FINISH PLANS
SC	SEALED CONCRETE	SEE SPECIFICATIONS				
	BASE					
RB1	RUBBER BASE	ROPPE	?	TBD	4"	
WB	WOOD BASE	SOLID WOOD	STAIN GRADE	TBD		SEE DETAILS AND ELEVATIONS
VB	COVED VINYL BASE	MATCH VS1		MATCH SHEET VINYL FLOOR	6"	
EB	EPOXY COVED BASE	EPOXY BASE		MATCH FLOOR EPOXY	6"	
CB	CERAMIC TILE BASE	DALTILE		MATCH CT1	6"	SEE DETAILS AND ELEVATIONS
	MISCELLANEOUS					
PL1	PLASTIC LAMINATE	WILSONART		7941K-18 TAN ECHO	n/a	VERTICAL SURFACES
PL2	PLASTIC LAMINATE	FORMICA		3698-58 BELUGA BEIGE	n/a	WORKSURFACES
SCT	STONE COUNTERTOP	ICE STONE		HEIRLOOM GREY		SEE ELEVATIONS
SS	STAINLESS STEEL					

GSBS ARCHITECTS

375 WEST 200 SOUTH
SALT LAKE CITY, UT 84101

P 801.521.8600
F 801.521.7913

www.gsbsarchitects.com

STATE OF UTAH
116302
LICENSED ARCHITECT

REVISIONS:

Utah Valley University New Science Building

800 West University Parkway
Orem, Utah 84058

Division of Facilities Construction and Management

DRAWN BY:	Author
CHECKED BY:	Checker
DFCM PROJECT NO.:	09020790
GSBS PROJECT NO.:	2009.115.00
ISSUED DATE:	05.07.2010

FINISH SCHEDULE

CONSTRUCTION DOCUMENTS

AE-801

GENERAL NOTES

1. ALL WALL BENCHTOPS AND MOVABLE TABLES SHALL BE 30" DEEP INCLUDING WALL BENCH BACK SPLASH (UNLESS OTHERWISE NOTED).
2. ALL ISLAND BENCHTOPS SHALL BE 60" DEEP (UNLESS OTHERWISE NOTED).
3. ALL BENCHES AND TABLES SHALL BE 36" HIGH (UNLESS OTHERWISE NOTED).
4. ALL BENCH/TABLE TOPS TO BE 1" THICK EPOXY RESIN (UNLESS OTHERWISE NOTED).
5. ALL BACK AND SIDE SPLASHES TO BE 3/4" THICK AND 4" HIGH, PIPEDROP CURBS TO BE 3/4" THICK AND 5" HIGH (UNLESS OTHERWISE NOTED).
6. PROVIDE SIDESPLASHES AT ALL BENCH TOPS AGAINST FUME HOODS AND/OR ADJACENT WALLS.
7. OVERALL LENGTH OF BENCHTOPS SHALL BE DETERMINED BY CASEWORK SIZES AND DIMENSIONS AS INDICATED ON PLANS. TOPS SHALL OVERHANG 1/2" AT EACH END AND 1" FROM FRONT OF BASE CABINETS AND TABLES. WHEN OVERALL DIMENSIONS ARE GIVEN, 1/2" OVERHANG IS NOT INCLUDED.
8. ALL CASEWORK, FUME HOODS AND ANY OTHER FURNISHINGS WITH EXPOSED-TO-VIEW BACKS AND SIDES SHALL BE FINISHED.
9. INSTALL CLOSURE PANELS BETWEEN BACK OF CABINETS OR HOODS AND WALLS AT EXPOSED ENDS AND BETWEEN BASE CABINETS AND/OR HOODS THAT ARE SET BACK TO BACK.
10. ALL PENETRATIONS THROUGH BENCHTOP SHALL BE SEALED WITH SEALANT.
11. BACKS OF COUNTERTOPS AND SPLASHES AGAINST WALLS SHALL BE SEALED TO THE WALL WITH SEALANT.
12. CONTRACTOR SHALL FIELD VERIFY ALL DIMENSIONS PRIOR TO FABRICATION.
13. OWNER'S REPRESENTATIVE WILL SELECT COLORS FOR ALL COMPONENTS OF PROJECT INDICATED ON THESE DRAWINGS. COLOR SELECTION WILL BE FROM THE CASEWORK MANUFACTURER'S STANDARD COLOR LINE.
14. FREE STANDING SHELVING AND CASEWORK LESS THAN 18" DEEP SHALL BE SECURED TO PREVENT TIPPING. SUBMIT SHOP DRAWINGS OF ATTACHMENT PRIOR TO INSTALLATION.
15. SAFETY SHOWER/EYEWASH UNITS SHALL COMPLY WITH ANSI STANDARDS FOR USABILITY BY THE PHYSICALLY DISABLED. SAFETY SHOWER/EYEWASH UNITS SHALL BE FURNISHED UNDER DIVISION 11 FOR INSTALLATION UNDER DIVISION 22.
16. FOR LABORATORY SERVICE FITTING TYPES, LOCATIONS AND ORDER, SEE LABORATORY FURNISHINGS PLANS. THESE FITTINGS SHALL BE PROVIDED UNDER DIVISION 11, FOR INSTALLATION UNDER DIVISION 22.
17. WHERE NO FUME HOOD OCCURS ADJACENT TO CORROSIVE STORAGE OR SOLVENT STORAGE CABINETS, ROUTE VENT PIPE (IN PIPE CHASE) UP NEAREST PIPE DROP ENCLOSURE TO EXHAUST DUCT SYSTEM FOR CONNECTION BY DIVISION 23.
18. WHERE FUME HOOD OCCURS ADJACENT TO CORROSIVE STORAGE CABINETS, ROUTE VENT PIPE (IN PIPE CHASE) TO FUME HOOD AND EXTEND 4" ABOVE FUME HOOD WORK SURFACE BEHIND BAFFLE.
19. ALL SNORKEL EXHAUST SHOWN ON THESE DRAWINGS, INCLUDING FLEXIBLE DUCT HOSE, SHALL BE PROVIDED UNDER DIVISION 11. DIVISION 23 SHALL PROVIDE DUCTWORK TO 6" BELOW CEILING OR 9'-0" ABOVE FINISHED FLOOR AT OPEN CEILINGS AND MAKE FINAL CONNECTION TO SNORKEL.
20. LOCATION OF EQUIPMENT, SUCH AS FUME HOODS, OVERHEAD SERVICE CARRIERS, BRACES OR ANY OTHER ITEMS THAT MAY INTERFERE WITH LIGHTING, STRUCTURAL OR MECHANICAL SYSTEMS, SHALL BE CAREFULLY COORDINATED. NOTIFY OWNER'S REPRESENTATIVE OF DISCREPANCIES PRIOR TO PROCEEDING WITH WORK.
21. UNLESS OTHERWISE NOTED, ALL MISCELLANEOUS CHANNELS, BRACKETS AND FITTINGS INDICATED ON ALL LABORATORY FURNISHINGS DRAWINGS SHALL BE SUPPLIED, INSTALLED AND PAINTED UNDER DIVISION 11.
22. CONTRACTOR SHALL EXAMINE ALL LABORATORY FURNISHINGS PLANS AND COORDINATE WITH REFLECTED CEILING PLANS FOR PROPER CEILING HEIGHTS & PIPE DROP ENCLOSURE HEIGHTS AND LOCATIONS.
23. OVERHEAD SERVICE CARRIERS, HEAVY DUTY UNISTRUT AND OTHER STRUCTURALLY ANCHORED AND SUSPENDED DEVICES WHICH REQUIRE COORDINATION WITH OTHER TRADES SHALL BE THE RESPONSIBILITY OF THIS DIVISION (UNLESS OTHERWISE NOTED). ADDITIONAL FRAMING MAY BE REQUIRED TO ACCOMMODATE ANCHORAGE AROUND DUCTWORK OR OTHER OBSTRUCTIONS.
24. ALL BULLETIN BOARDS, MARKER BOARDS, CHALKBOARDS, PROJECTION SCREENS, COAT RACKS AND FIRE EXTINGUISHERS ARE INDICATED ON THE "LF" DRAWINGS FOR COORDINATION ONLY.
25. SERVICE FITTINGS SHOWN ON THE "LF" PLAN DRAWINGS ARE FOR LOCATION ONLY. REFER TO DETAILS AND SPECIFICATIONS FOR ACTUAL FITTINGS.
26. ELECTRICAL DEVICES SHALL BE PROVIDED UNDER DIVISION 26. ELECTRICAL DEVICES SHOWN ON THE "LF" DRAWINGS ARE FOR THE LOCATION OF CASEWORK CUTOUTS. DEVICES SHOWN AT CONTROLLED ENVIRONMENTAL ROOMS, FUME HOODS AND LAMINAR FLOW HOODS SHALL BE PROVIDED BY THE EQUIPMENT SUPPLIER.
27. ALL WALL MOUNTED RACEWAYS SHALL BE MOUNTED 43" A.F.F. TO THE BOTTOM OF THE RACEWAY U.O.N.
28. ALL CASEWORK, SINKS, SHELVING AND SUPPORTS INSIDE CONTROLLED ENVIRONMENTAL ROOMS SHALL BE STAINLESS STEEL CONSTRUCTION (UNLESS OTHERWISE NOTED)

TYPICAL ABBREVIATIONS

ADA	AMERICAN DISABILITIES ACT
A.F.F.	ABOVE FINISHED FLOOR
ARCH	ARCHITECTURAL DOCUMENTS
CFM	CUBIC FEET/MINUTE
CLG.	CEILING
CLR.	CLEARANCE
DIA	DIAMETER
DIV.	DIVISION
EQUIP	EQUIPMENT
FZR	FREEZER
GA.	GAUGE
G.C.	GENERAL CONTRACTOR
H.D.	HEAVY DUTY
MAX.	MAXIMUM
MIN.	MINIMUM
MTD.	MOUNTED
N.T.S.	NOT TO SCALE
O.C.	ON CENTER
OFOI	OWNER FURNISHED, OWNER INSTALLED
OFCI	OWNER FURNISHED, CONTRACTOR INSTALLED
O.H.	OVERHEAD
OHSC	OVERHEAD SERVICE CARRIER
REF	REFRIGERATOR
SIM.	SIMILAR
SPEC	SPECIFICATIONS
ST.STL.	STAINLESS STEEL
TEMP	TEMPERATURE
TYP.	TYPICAL
UC	UNDER COUNTER
U.O.N.	UNLESS OTHERWISE NOTED
WP	WEATHERPROOF

LABORATORY SERVICE ABBREVIATIONS

CHWS	CHILLED WATER SUPPLY
CHWR	CHILLED WATER RETURN
CO2	CARBON DIOXIDE
CW	POTABLE COLD WATER
CWA	COLD WATER WITH ASPIRATOR
DI	DEIONIZED WATER
DH	DRENCH HOSE
DIS	DISTILLED WATER
EW	EYEWASH
HW	POTABLE HOT WATER
ICW	INDUSTRIAL COLD WATER
IHW	INDUSTRIAL HOT WATER
LG	LABORATORY GAS
LV	LABORATORY VACUUM
LN	LIQUID NITROGEN
LPS	LOW PRESSURE STEAM
MPS	MEDIUM PRESSURE STEAM
N2	NITROGEN GAS
PCWS	PROCESS COOLING WATER SUPPLY
PCWR	PROCESS COOLING WATER RETURN
PW	PURIFIED WATER
RO	REVERSE OSMOSIS WATER
SG	SPECIAL GAS
SS	SAFETY SHOWER
(IR)	INFRA-RED
__(V)	SERVICE VALVE - PROVIDED UNDER DIV. 22

LABORATORY SYMBOLS LEGEND

	SYMBOL LEGEND	DESCRIPTION		DETAIL
1		PIPE DROP ENCLOSURE	1 LF402	2 LF402
2		DRYING RACK		9 LF402
3		ADJUSTABLE WALL SHELVES (2 TIER U.O.N.)		7 LF402
4		ADJUSTABLE ISLAND BENCH SHELVING (2 TIER U.O.N.)		5 LF402
5		CYLINDER RESTRAINT		7 LF403
6		CYLINDER RACK ASSEMBLY		8 LF403
7		HEAVY DUTY SHELVING UNIT		1 LF403
8		SNORKEL FUME EXHAUST - SEE EXHAUST SCHEDULE		7 LF400
9		OVERHEAD SERVICE CARRIER		3 LF403
10		SAFETY STATION WITH EYEWASH UNIT	7 LF500	8 LF500
11		BENCHTOP SLEEVE/THROUGH-PORT		2 LF404
12		WIRE SHELVING UNIT		2 LF403
13		ELLIPTICAL SLEEVE/THROUGH-PORT		3 LF404
14		BLACKOUT CURTAINS		9 LF403
15		HEALTH CUBICLE CURTAINS		9 LF403
16		WATER PURIFIER - OWNER FURNISHED, OWNER INSTALLED		
17		PROJECTION SCREEN (SEE ARCHITECTURAL DOCUMENTS, SHOWN FOR COORDINATION ONLY)		
18		MARKER BOARD (SEE ARCHITECTURAL DOCUMENTS, SHOWN FOR COORDINATION ONLY)		
	WCxx	WALL CABINET - SEE CASEWORK MENU		
	TAxx	TALL STORAGE CABINET - SEE CASEWORK MENU		
	MT	MOVABLE TABLE - SEE CASEWORK MENU		9 LF400
		LEG POST UNDER BENCH/TABLE TOP		
	6"CFH	CHEMICAL FUME HOOD - SEE EXHAUST SCHEDULE	3 LF400 / 2 LF400	1 LF400
	BSC	BIOLOGICAL SAFETY CABINET		
	LFH	LAMINAR FLOW HOOD		
		CONTROLLED ENVIRONMENTAL ROOM PANELS		
		OWNER FURNISHED, OWNER INSTALLED EQUIPMENT		
		EPOXY RESIN SINK - SEE SINK SCHEDULE		1 LF500
		STAINLESS STEEL SINK - SEE SINK SCHEDULE		4 LF500
		CUP SINK - SEE SINK SCHEDULE	3 LF500	2 LF500
	FD	FLOOR DRAIN (SHOWN FOR COORDINATION ONLY)		
	FS	FLOOR SINK (SHOWN FOR COORDINATION ONLY)		
		ADA COMPLIANT AREA		
	GSV	GAS SHUT-OFF VALVE BOX, REFER TO LP SERIES DRAWINGS		
		COAT HOOKS (SEE ARCHITECTURAL DOCUMENTS, SHOWN FOR COORDINATION ONLY)		

LABORATORY BENCHTOP SCHEDULE

E EPOXY RESIN BENCHTOP
S STAINLESS STEEL BENCHTOP
P PLASTIC LAMINATE BENCHTOP
W WOOD BENCHTOP

+30", +34", +36" INDICATES BENCHTOP HEIGHT ABOVE FINISH FLOOR

NOTE:

FOR BENCHTOP TRANSITION HEIGHT REFER TO DETAIL: 3 LF401

DETAIL SYMBOLS LEGEND

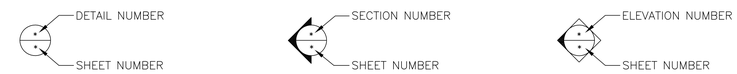

INTERIOR DOOR CLEARANCES (ADA COMPLIANT)

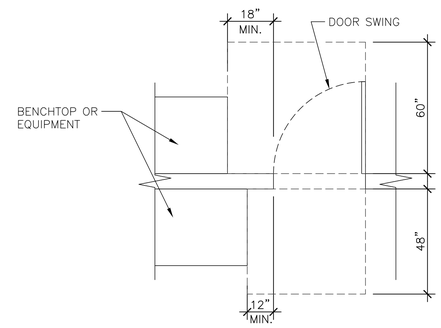

ELECTRICAL AND ADA APPROACH CLEARANCES AT SS/EW

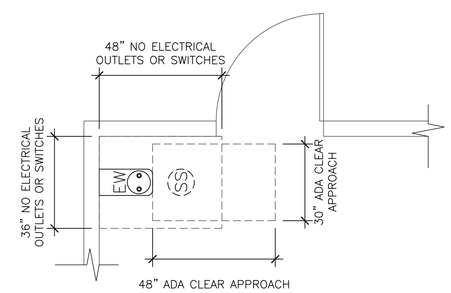

GSBS ARCHITECTS
375 WEST 200 SOUTH
SALT LAKE CITY, UT 84101
P 801.521.8600
F 801.521.7913
www.gsbsarchitects.com

REVISIONS:

RFD
RESEARCH FACILITIES DESIGN
3905 Fifth Avenue, Suite 400
San Diego, California 92103
TEL 619 - 297 - 0159
FAX 619 - 294 - 4901

STATE OF UTAH
RICHARD M. HEINZ
No. 4934727-0301
LICENSED ARCHITECT
May 07, 2010

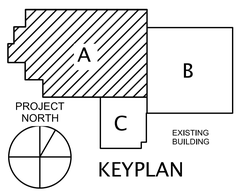

KEYPLAN

Utah Valley University New Science Building

800 West University Parkway
Orem, Utah 84058

Division of Facilities Construction and Management

DRAWN BY:	Author
CHECKED BY:	Checker
DFCM PROJECT NO.:	09020790
GSBS PROJECT NO.:	2009.115.00
ISSUED DATE:	05.07.2010

LAB FURNISHINGS KEYSHEET AND LEGENDS

CONSTRUCTION DOCUMENTS

LF-001

EXHAUST EQUIPMENT SCHEDULES

CHEMICAL FUME HOODS

DRAWING REFERENCE	HOOD SIZE AND TYPE	TYPE OF SASH	TYPE OF SILL	NUMBER OF VERTICAL SASHES	NOMINAL VERTICAL SASH HEIGHT	HORIZONTAL SASH CONFIGURATION		DESIGN OPERATING CONDTIONS			MAXIMUM OPERATING CONDTIONS			MINIMUM VAV AIR FLOW (NOTE 1)	MIN STATIC PRESSURE AT HOOD OUTLET	HOOD COLLAR SIZE	EXHAUST CONNECTION BY MECHANICAL	REMARKS
						NUMBER OF SASHES	NUMBER OF TRACKS	SASH OPENING	FACE VELOCITY	AIRFLOW	SASH OPENING	FACE VELOCITY	AIRFLOW					
								INCH	FPM	CFM	INCH	FPM	CFM	CFM	INCH OF WATER	INCH	INCH DIAMETER	
4' CFH	4' CHEMICAL FUME HOOD	VERTICAL	AIRFOIL	1	30	-	-	18	100	500	28.5	100	800	200	0.50	6 x 18	8	
4' ACFH	4' ADA CHEMICAL FUME HOOD	VERTICAL	AIRFOIL	1	30	-	-	18	100	500	28.5	100	800	200	0.50	6 x 18	8	
4' RIH	4' RADIOISOTOPE HOOD	VERTICAL	AIRFOIL	1	30	-	-	28.5	125	1,000	28.5	125	1,000	CAV	0.50	6 x 18	12	
5' CFH	5' CHEMICAL FUME HOOD	VERTICAL	AIRFOIL	1	30	-	-	18	100	650	28.5	100	1,050	250	0.50	6 x 18	10	
6' CFH	6' CHEMICAL FUME HOOD	VERTICAL	AIRFOIL	1	30	-	-	18	100	800	28.5	100	1,300	300	0.50	6 x 24	12	
6' ACFH	6' ADA CHEMICAL FUME HOOD	VERTICAL	AIRFOIL	1	30	-	-	18	100	800	28.5	100	1,300	300	0.50	6 x 24	12	

NOTES:
1. MINIMUM VARIABLE AIR VOLUME (VAV) EXHAUST AIRFLOW CORRESPONDS TO 25" DEEP WORK SURFACE. FOR EXTENDED DEPTHS, APPLY AIRFLOW CORRECTION PER MANUFACTURER'S RECOMMENDATIONS.

OTHER EXHAUST EQUIPMENT

DRAWING REFERENCE	EQUIPMENT	EXHAUST AIR FLOW	STATIC PRESSURE	EXHAUST DUCT CONNECTION SIZE	REMARKS
		CFM	INCH OF WATER	INCH	
BA	SNORKEL EXHAUST	60	0.8	3	BASED ON MOVEX MODEL TERFU T-1500-75 SNORKEL.
BB	EQUIPMENT EXHAUST	75	0.5	3	TERMINATE EXHAUST DUCT 6-INCH BELOW CEILING WITH TRIM COLLAR. PROVIDE MANUAL VOLUME DAMPER ABOVE CEILING.
BC	ANIMAL NECROPSY TABLE	450	0.6	8	PROVIDE DUCT TRANSITION AT NECROPSY TABLE CONNECTION.

CONTROLLED ENVIRONMENTAL ROOM SCHEDULE

ROOM NUMBER	DIMENSIONS (FT-IN)			OPERATING TEMPE RANGE (°C)	TEMP TOLERANCE (±°C)	RELATIVE HUMIDITY RANDGE (% RH)	RELATIVE HUMIDITY TOLERANCE (±% RH)	SUPPLY AND EXHAUST AIR (CFM)	ELECTRICAL REQUIREMENTS (AMPS)		CONDENSING UNIT					RAMP REQUIRED (Y/N)	STANDBY POWER REQUIRED (Y/N)	NOTES
									4 WIRE 120V/208V-3	3 WIRE 208V-3	GENERAL INFORMATION			COOLING WATER REQUIREMENTS				
	EXTERNAL LENGTH	EXTERNAL WIDTH	INTERNAL CEILING HEIGHT						CONTROL PANEL	CONDENSING UNIT	TYPE	LOCATION	APPROX. DIMENSIONS (FT)	MAX SUPPLY TEMP (°F)	MAX FLOW RATE (GPM)			
045	11'-0"	8'-4"	8'-0"	4°C	1°	N/A	N/A	25	20	20	WATER COOLED	TOP OF ROOM	3.5 x 2.5 x 3H	85	3	N	Y	

NOTES:
1. PROVIDE DEHUMIDIFICATION USING ROOM REFRIGERATION SYSTEM TO AVOID CONDENSATION ON INTERIOR SURFACES.
2. CONNECTION OF SUPPLY AIR INLET TO LABORATORY VENTILATION SYSTEM UPSTREAM OF ZONE REHEAT COIL BY DIVISION 23. CONNECTION OF EXHAUST AIR OUTLET TO LABORATORY EXHAUST SYSTEM BY DIVISION 23.

GSBS ARCHITECTS

375 WEST 200 SOUTH
SALT LAKE CITY, UT 84101

P 801.521.8600
F 801.521.7913

www.gsbsarchitects.com

REVISIONS:

RFD
RESEARCH FACILITIES DESIGN
3965 Fifth Avenue, Suite 400
San Diego, California 92103
TEL 619 297 0159
FAX 619 294 4901

STATE OF UTAH
RICHARD M. HEINZ
No. 4934727-0301
LICENSED ARCHITECT

May 07, 2010

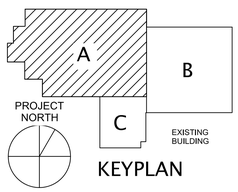

KEYPLAN

Utah Valley University New Science Building

800 West University Parkway
Orem, Utah 84058

Division of Facilities Construction and Management

DRAWN BY:	Author
CHECKED BY:	Checker
DFCM PROJECT NO.:	09020790
GSBS PROJECT NO.:	2009.115.00
ISSUED DATE:	05.07.2010

LAB FURNISHINGS SCHEDULES

CONSTRUCTION DOCUMENTS

LF-002

LABORATORY SERVICE FITTING SCHEDULE

ABBREV.	FITTING TYPE	MOUNTING	NOTES	DETAIL
DH	DRENCH HOSE	DECK	AT LABORATORY SINK (FED FROM INDUSTRIAL COLD WATER)	6 / LF501
RO	REVERSE OSMOSIS WATER	DECK	AT LABORATORY SINK	3 / LF500
		DECK (ADA)	AT ADA LABORATORY SINK (PROVIDE WRIST BLADE HANDLE)	3 / LF500
		PANEL	AT PIPE DROP FOR OFOI PURIFICATION UNIT	9 / LF500
ICW	INDUSTRIAL COLD WATER	HOOD	REMOTE AT FUME HOOD CUP SINK	1 / LF502
		HOOD (ADA)	REMOTE AT FUME HOOD CUP SINK (PROVIDE BALL VALVE LEVER HANDLES AT ADA HOODS)	2 / LF502
		DECK	AT LABORATORY SINK	4 / LF501
		DECK (ADA)	AT LABORATORY SINK (PROVIDE WRIST BLADE HANDLE)	5 / LF501
ICW(V)	INDUSTRIAL COLD WATER (SHUT-OFF VALVE)	WALL	SHUT-OFF VALVE AT UC WASHER BY DIVISION 22	
IHW(V)	INDUSTRIAL HOT WATER (SHUT-OFF VALVE)	WALL	SHUT-OFF VALVE AT UC WASHER BY DIVISION 22	
IHWICW	INDUSTRIAL HOT WATER/ INDUSTRIAL COLD WATER	DECK	AT LABORATORY SINK	9 / LF500
		DECK (ADA)	AT LABORATORY SINK (PROVIDE WRIST BLADE HANDLE)	1 / LF501
IHWICW (SPRAY)	INDUSTRIAL HOT WATER/ INDUSTRIAL COLD WATER	DECK	AT LABORATORY SINK	2 / LF501
PCWS/R	PROCESS CHILLED WATER SUPPLY/RETURN	WALL		7 / LF502
LG	LABORATORY GAS	DECK	AT WALL BENCH	8 / LF501
		HOOD	REMOTE	4 / LF502
		HOOD (ADA)	REMOTE PROVIDE BALL VALVE LEVER HANDLES AT ADA HOODS)	4 / LF502
SG	SPECIAL GAS	DECK	AT WALL BENCH	8 / LF501
		WALL		6 / LF502
LV	LABORATORY VACCUM	HOOD	REMOTE	3 / LF502
		HOOD (ADA)	REMOTE PROVIDE BALL VALVE LEVER HANDLES AT ADA HOODS)	4 / LF502
		DECK	AT WALL BENCH	7 / LF501
SS/EW	SAFETY SHOWER/ EYEWASH UNIT	WALL	BOWL AND SKIRT	7 / LF500
		WALL (RECESSED)	PULL-DOWN EYEWASH	8 / LF500

NOTES:

1. FOR INDUSTRIAL WATER 'DO NOT DRINK' SIGN AT FAUCETS, REFER TO DETAIL: 5 / LF502
2. FOR FIXTURE SPACING REFER TO DETAILS: 5 / LF500 6 / LF500
3. SERVICE ABBREVIATION __(V) REFERS TO SERVICE VALVE - PROVIDED UNDER DIVISION 22.

LABORATORY SINK SCHEDULE

SINK NUMBER	DESCRIPTION	OUTLET	WIDTH x DEPTH x HEIGHT (INSIDE DIMENSIONS)	REMARKS	DETAIL
SK1	EPOXY RESIN	SIDE	21" x 17" x 10"	DROP-IN	1 / LF500
SK2	EPOXY RESIN	SIDE	28" x 15" x 12"	DROP-IN	1 / LF500
SK3	EPOXY RESIN	CORNER	18" x 15" x 5"	SINK REQUIRES ADA FITTINGS	1 / LF500
SK4	STAINLESS STEEL	CENTER	22" x 16" x 10"	INTEGRAL WITH TOP	4 / LF500
SK5	STAINLESS STEEL	CENTER	18" x 15" x 5"	DROP-IN, REQUIRES ADA FITTINGS	4 / LF500
SK6	STAINLESS STEEL	CENTER	30" x 18" x 10"	DROP-IN	4 / LF500
SK7	STAINLESS STEEL	CENTER	(2) 24" x 24" x 12" BOWLS	@ SCULLERY SINK	* / LF
SK8	STAINLESS STEEL	CENTER	19" x 16" x 6"	WALL-HUNG HANDWASHING SINK	
CS1	EPOXY RESIN	CENTER	3" x 6"	OVAL, TYPICAL @ FUME HOOD W/ RAISED LIP	2 / LF500
CS2	EPOXY RESIN	CENTER	6" x 14"	RECTANGULAR	3 / LF500

GSBS ARCHITECTS

375 WEST 200 SOUTH
SALT LAKE CITY, UT 84101

P 801.521.8600
F 801.521.7913

www.gsbsarchitects.com

REVISIONS:

RFD
RESEARCH FACILITIES DESIGN
3965 Fifth Avenue, Suite 400
San Diego, California 92103
TEL 619 . 297 . 0159
FAX 619 . 294 . 4901

STATE OF UTAH
RICHARD M. HEINZ
No. 4934727-0301
LICENSED ARCHITECT

May 07, 2010

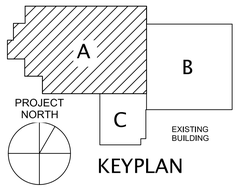

KEYPLAN

Utah Valley University New Science Building

800 West University Parkway
Orem, Utah 84058

Division of Facilities Construction and Management

DRAWN BY:	Author
CHECKED BY:	Checker
DFCM PROJECT NO.:	09020790
GSBS PROJECT NO.:	2009.115.00
ISSUED DATE:	05.07.2010

LAB FURNISHINGS SCHEDULES AND GENERAL NOTES

CONSTRUCTION DOCUMENTS

LF-003

D24 — BASE CABINET TYPE; WIDTH (INCHES - TYPICAL)

A24L — BASE CABINET TYPE; WIDTH; DOOR HINGE ON LEFT SIDE

A24R — BASE CABINET TYPE; WIDTH; DOOR HINGE ON RIGHT SIDE

LD24 — SITTING HEIGHT AT BASE CABINET & KO; BASE CABINET TYPE; WIDTH

KO24 — KNEE OPENING; WIDTH

KOX24 — KNEE OPENING (A) AT ADA SINK/ (D) W/ DRAWER/ (E) FOR EQUIP; WIDTH (X = A, D, OR E)

MT60X — MOVABLE TABLE; WIDTH (NOTE: 30" DEPTH ASSUMED ON GENERAL NOTES); MOVABLE TABLE TYPE (C) ON CASTERS (X = C)

MT6024 — MOVABLE TABLE; WIDTH; DEPTH

WA36 — WALL-HUNG CABINET; WALL CABINET DOOR TYPE; WIDTH

TD48 — TALL STORAGE CABINET; TALL CABINET DOOR TYPE; WIDTH

FP — FILLER PANEL

* — DESIGNATES KEY LOCKABLE CASEWORK

NOTES:

1. FOR CABINET BACKING HEIGHTS REFER TO: 9 / LF401
2. FOR SHELVING AND CYLINDER RESTRAINT BACKING HEIGHTS REFER TO: * / LF

CASEWORK LEGEND & NOTES

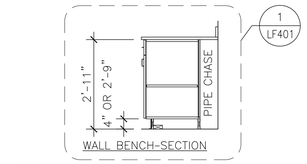

NOTE:
ALL SHELVES TO BE ADJUSTABLE U.O.N.

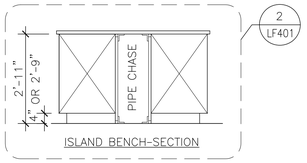

STANDING HEIGHT BASE CABINETS (+36" OR +34")

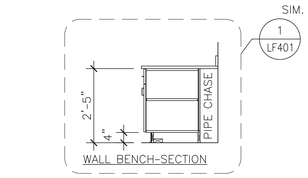

NOTE:
ALL SHELVES TO BE ADJUSTABLE U.O.N.

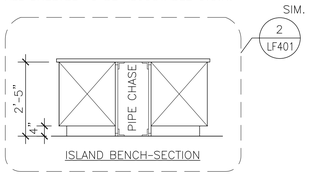

SITTING HEIGHT BASE CABINETS (+30")

BASE CABINETS HEIGHTS LEGEND

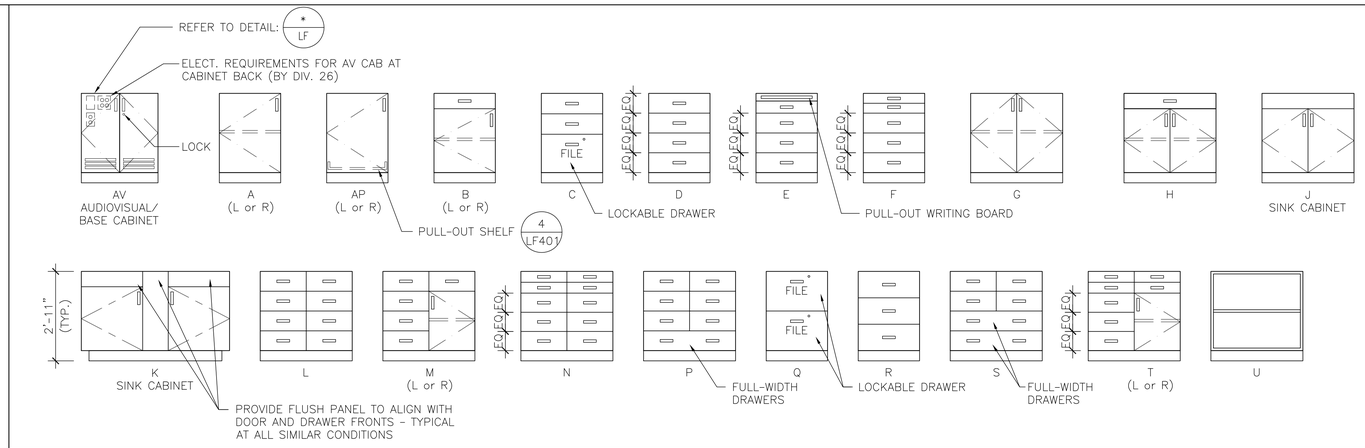

STANDING HEIGHT BASE CABINETS (PLASTIC LAMINATE - U.O.N.)

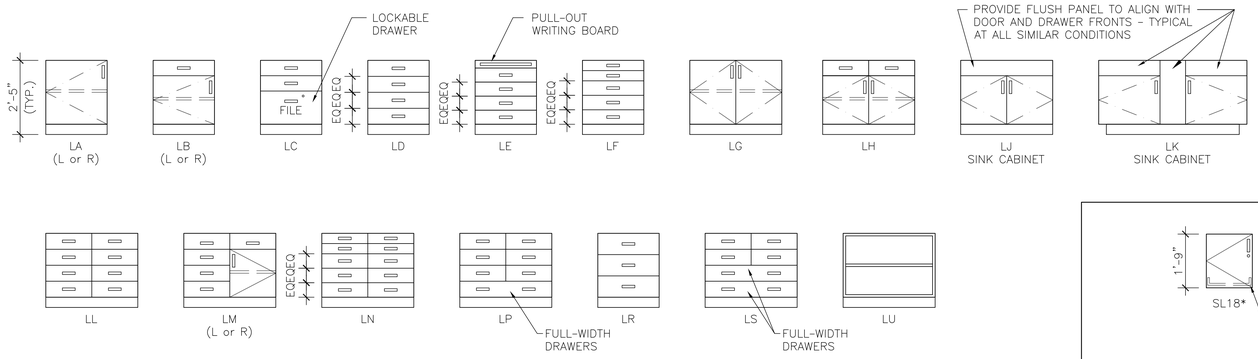

SITTING HEIGHT BASE CABINETS (PLASTIC LAMINATE - U.O.N.)

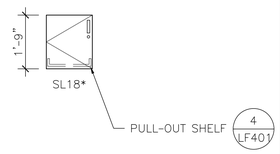

SUSPENDED CABINETS

NOTE: NOT ALL CABINET SHOWN ARE USED. REFER TO FLOOR PLANS FOR ACTUAL CABINET TYPES.

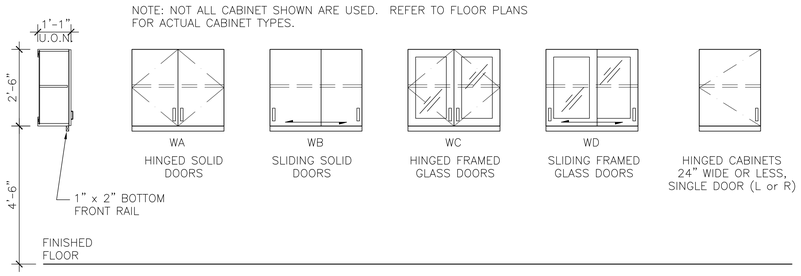

WALL CABINETS (PLASTIC LAMINATE - U.O.N.)

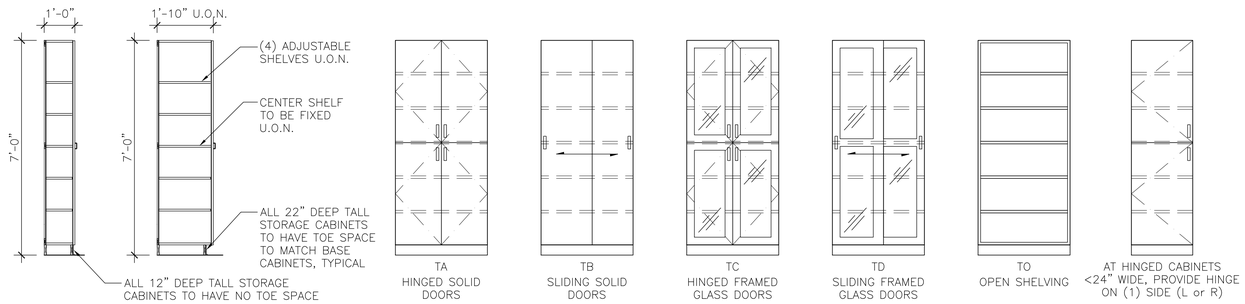

TALL STORAGE CABINETS (PLASTIC LAMINATE - U.O.N.)

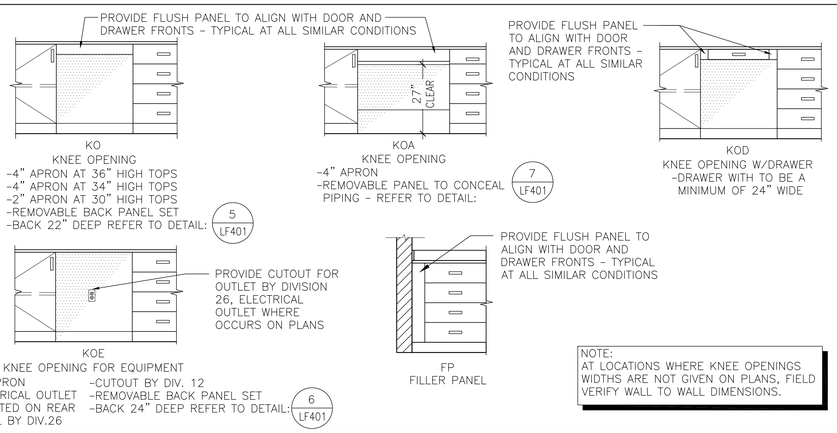

NOTE:
AT LOCATIONS WHERE KNEE OPENINGS WIDTHS ARE NOT GIVEN ON PLANS, FIELD VERIFY WALL TO WALL DIMENSIONS.

KNEE OPENINGS

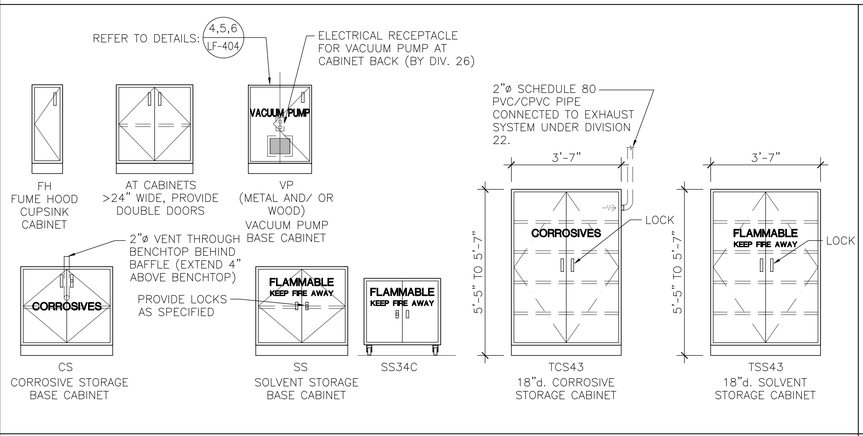

SPECIAL BASE CABINETS (METAL - U.O.N.)

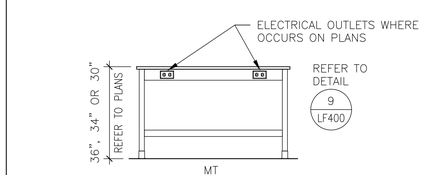

-MTxx: MOVABLE TABLE
-MTxxC: MOVABLE TABLE w/ LOCKING CASTERS
-MTxxD: MOVABLE TABLE w/ DRAWER
-MTxxCD: MOVABLE TABLE w/ LOCKING CASTERS & DRAWER

NOTE:
REFER TO FLOOR PLANS FOR MOVABLE TABLE:
-HEIGHTS
-TYPES &
-ADA DESIGNATION

MOVABLE TABLES (WOOD - U.O.N.)

GSBS ARCHITECTS
375 WEST 200 SOUTH
SALT LAKE CITY, UT 84101
P 801.521.8600
F 801.521.7913
www.gsbsarchitects.com

REVISIONS:

RFD
RESEARCH FACILITIES DESIGN
3965 Fifth Avenue, Suite 400
San Diego, California 92103
TEL 619 . 297 . 0159
FAX 619 . 294 . 4901

STATE OF UTAH
RICHARD M. HEINZ
No. 4934727-0301
LICENSED ARCHITECT
May 07, 2010

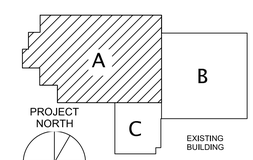

KEYPLAN

Utah Valley University New Science Building

800 West University Parkway
Orem, Utah 84058

Division of Facilities Construction and Management

DRAWN BY:	Author
CHECKED BY:	Checker
DFCM PROJECT NO.:	09020790
GSBS PROJECT NO.:	2009.115.00
ISSUED DATE:	05.07.2010

LAB FURNISHINGS
CASEWORK
MENU

CONSTRUCTION DOCUMENTS

LF-004

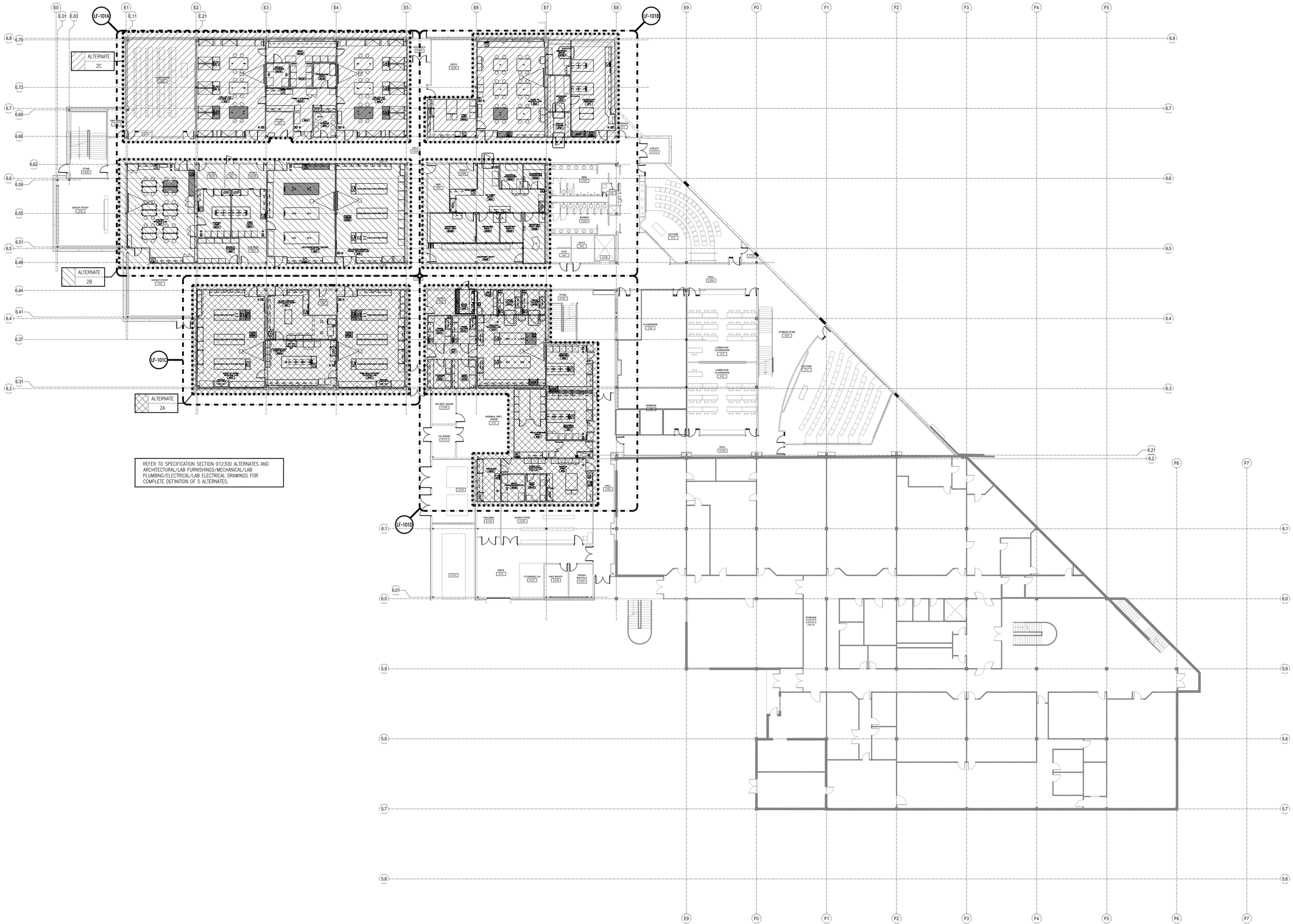

1 LF-101 **LEVEL 0 FLOOR PLAN**

1/16" = 1'-0"

GSBS ARCHITECTS
375 WEST 200 SOUTH
SALT LAKE CITY, UT 84101
P 801.521.8600
F 801.521.7913
www.gsbsarchitects.com

REVISIONS:

RFD
RESEARCH FACILITIES DESIGN
3965 Fifth Avenue, Suite 400
San Diego, California 92103
TEL 619 297 0159
FAX 619 294 4901

STATE OF UTAH
RICHARD M. HEINZ
No. 4934727-0301
LICENSED ARCHITECT

May 07, 2010

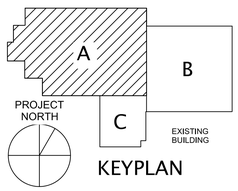

KEYPLAN

Utah Valley University New Science Building

800 West University Parkway
Orem, Utah 84058

Division of Facilities Construction and Management

DRAWN BY:	Author
CHECKED BY:	Checker
DFCM PROJECT NO.:	09020790
GSBS PROJECT NO.:	2009.15.00
ISSUED DATE:	05.07.2010

LAB FURNISHINGS LEVEL 0 FLOOR PLAN

CONSTRUCTION DOCUMENTS

LF-101

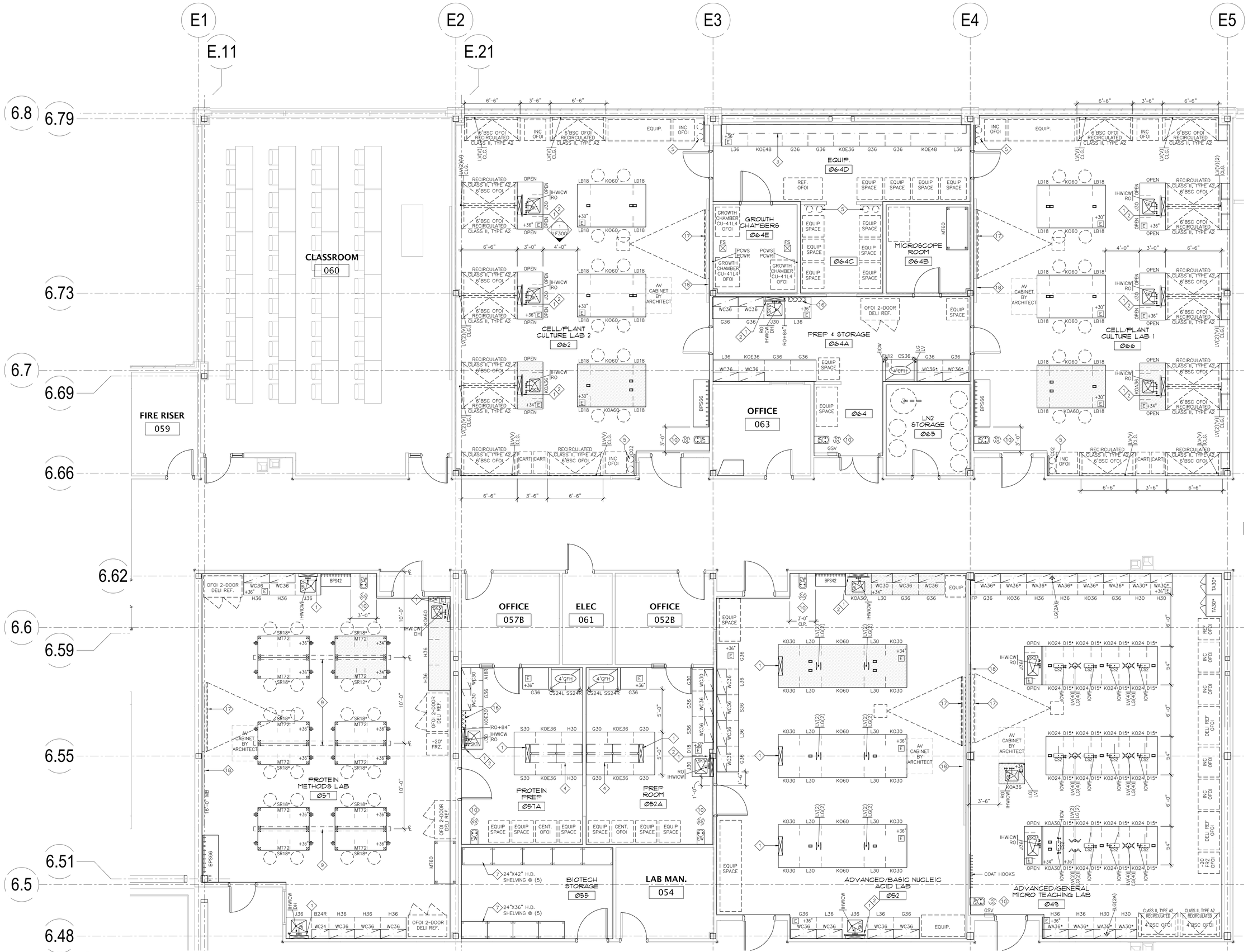

1 LF-101A **LEVEL 0 PARTIAL FLOOR PLAN**

1/4" = 1'-0"

0 1' 2' 4' 8'

GSBS ARCHITECTS

375 WEST 200 SOUTH
SALT LAKE CITY, UT 84101

P 801.521.8600
F 801.521.7913

www.gsbsarchitects.com

REVISIONS:

RFD
RESEARCH FACILITIES DESIGN
3965 Fifth Avenue, Suite 400
San Diego, California 92103
TEL 619 . 297 . 0159
FAX 619 . 294 . 4901

STATE OF UTAH
RICHARD M. HEINZ
No. 4934727-0301
LICENSED ARCHITECT

May 07, 2010

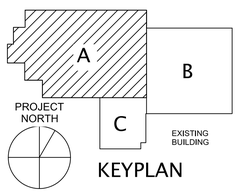

KEYPLAN

Utah Valley University New Science Building

800 West University Parkway
Orem, Utah 84058

Division of Facilities Construction and Management

DRAWN BY:	Author
CHECKED BY:	Checker
DFCM PROJECT NO.:	09020790
GSBS PROJECT NO.:	2009.115.00
ISSUED DATE:	05.07.2010

LAB FURNISHINGS
LEVEL 0
PARTIAL FLOOR PLAN

CONSTRUCTION DOCUMENTS

LF-101A

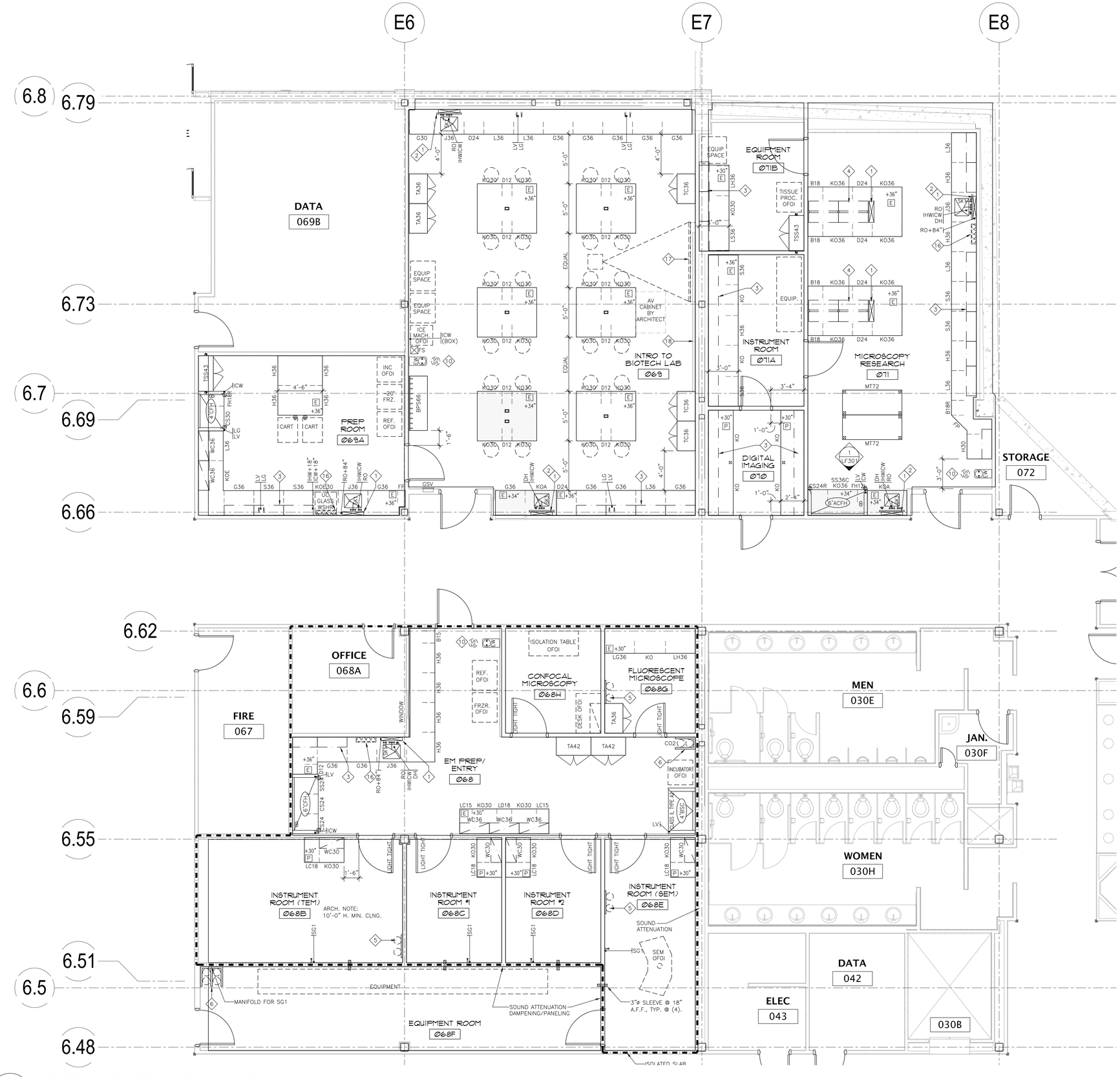

1 LF-101B

LEVEL 0 PARTIAL FLOOR PLAN

1/4" = 1'-0"

0 1' 2' 4' 8'

GSBS ARCHITECTS

375 WEST 200 SOUTH
SALT LAKE CITY, UT 84101

P 801.521.8600
F 801.521.7913

www.gsbsarchitects.com

REVISIONS:

RFD
RESEARCH FACILITIES DESIGN
3965 Fifth Avenue, Suite 400
San Diego, California 92103
TEL 619 · 297 · 0159
FAX 619 · 294 · 4901

STATE OF UTAH
RICHARD M. HEINZ
No. 4934727-0301
LICENSED ARCHITECT

May 07, 2010

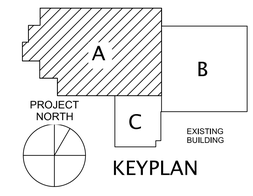

KEYPLAN

Utah Valley University New Science Building

800 West University Parkway
Orem, Utah 84058

Division of Facilities Construction and Management

DRAWN BY:	Author
CHECKED BY:	Checker
DFCM PROJECT NO.:	09020790
GSBS PROJECT NO.:	2009.115.00
ISSUED DATE:	05.07.2010

LAB FURNISHINGS
LEVEL 0
PARTIAL FLOOR PLAN

CONSTRUCTION DOCUMENTS

LF-101B

GSBS ARCHITECTS

375 WEST 200 SOUTH
SALT LAKE CITY, UT 84101

P 801.521.8600
F 801.521.7913

www.gsbsarchitects.com

REVISIONS:

RFD
RESEARCH FACILITIES DESIGN
3965 Fifth Avenue, Suite 400
San Diego, California 92103
TEL 619 · 297 · 0159
FAX 619 · 294 · 4901

STATE OF UTAH
RICHARD M. HEINZ
No. 4934727-0301
LICENSED ARCHITECT

May 07, 2010

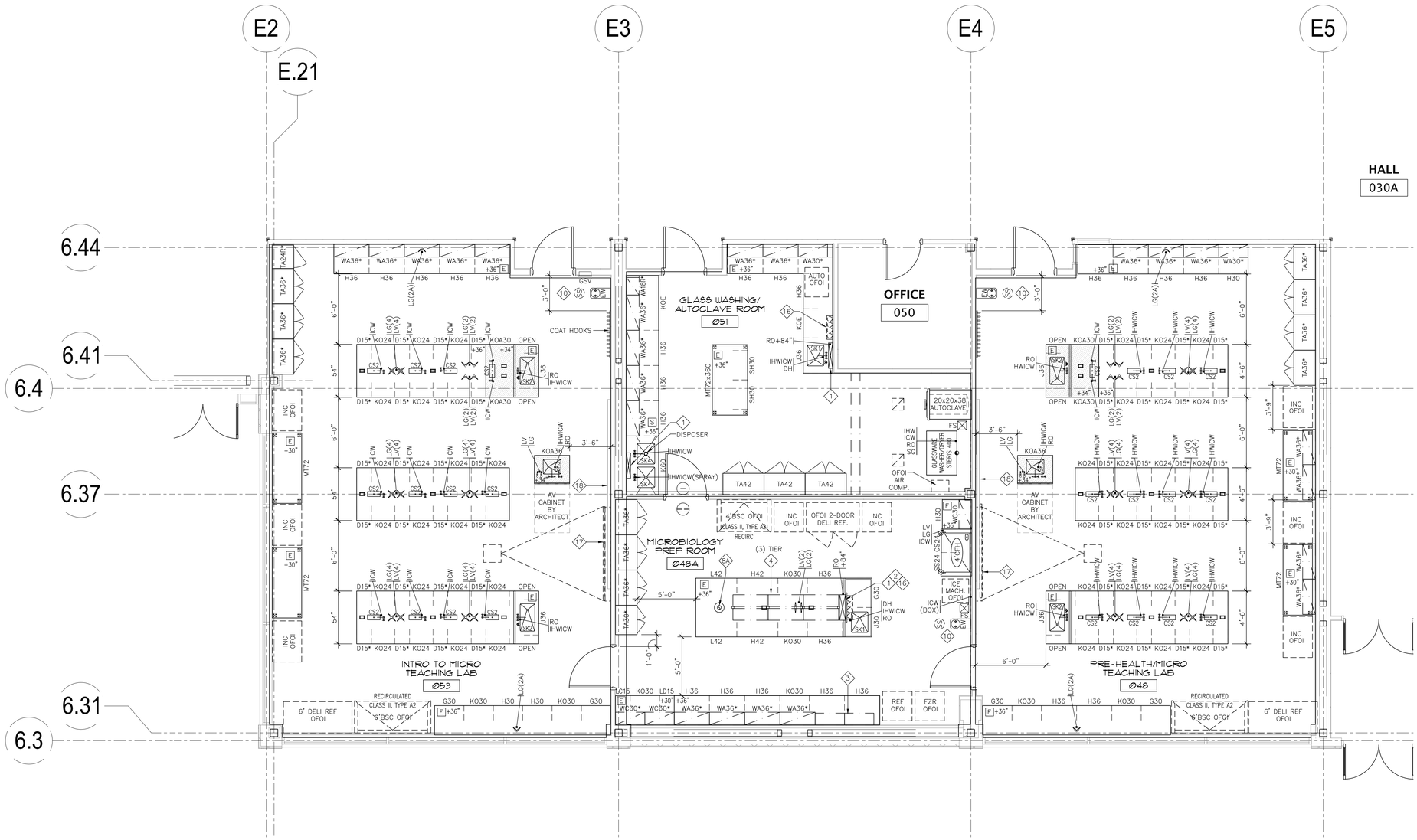

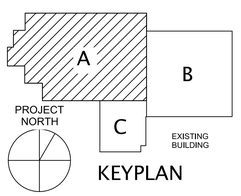

Utah Valley
University New
Science Building

800 West University Parkway
Orem, Utah 84058

Division of
Facilities
Construction and
Management

DRAWN BY:	Author
CHECKED BY:	Checker
DFCM PROJECT NO.:	09020790
GSBS PROJECT NO.:	2009.115.00
ISSUED DATE:	05.07.2010

LAB FURNISHINGS
LEVEL 0
PARTIAL FLOOR PLAN

CONSTRUCTION DOCUMENTS

LF-101C

1
LF-101C

LEVEL 0 PARTIAL FLOOR PLAN

1/4" = 1'-0"

0 1' 2' 4' 8'

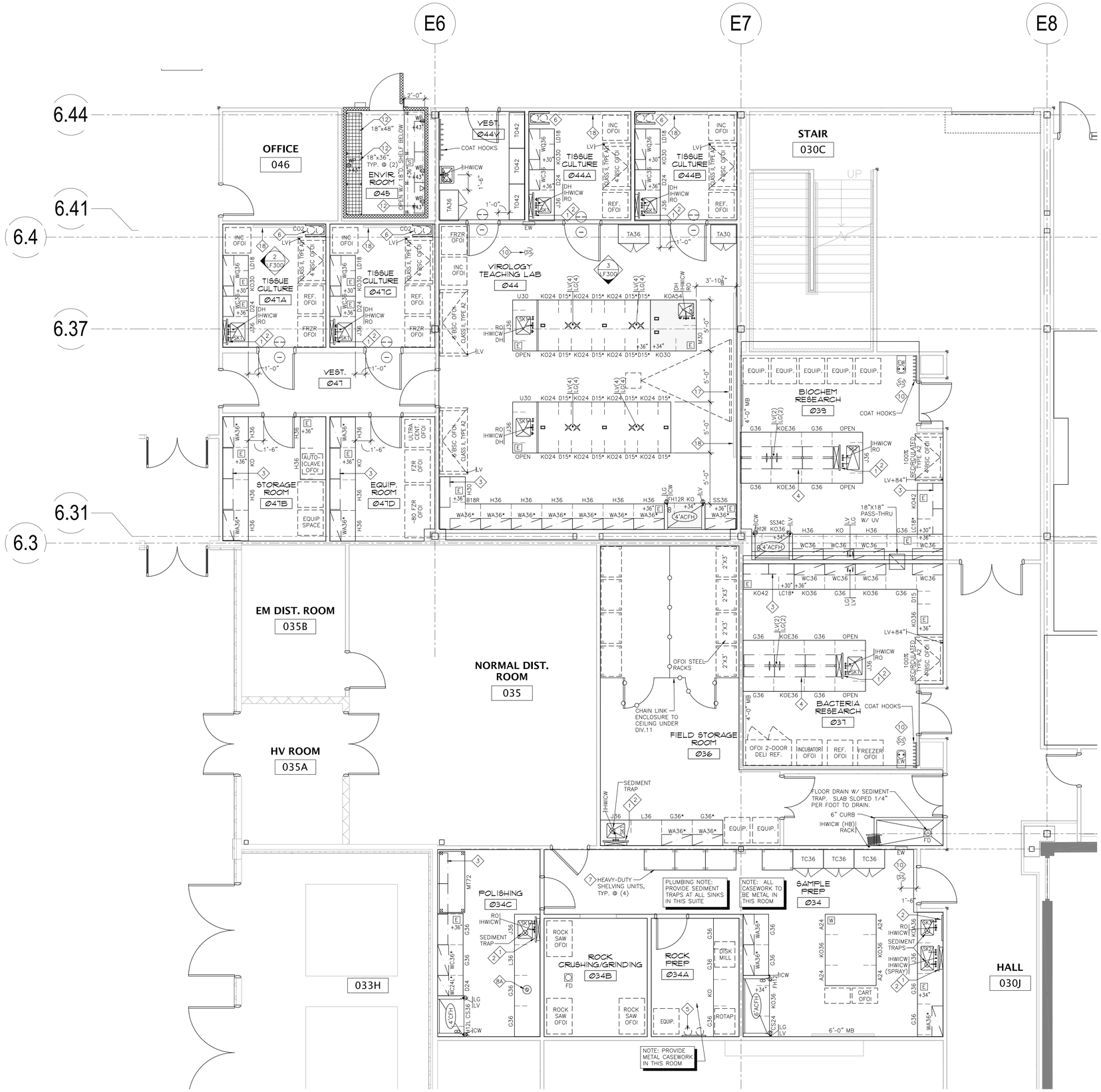

1
LF-101D

LEVEL 0 PARTIAL FLOOR PLAN

1/4" = 1'-0"

0 1' 2' 4' 8'

GSBS ARCHITECTS

375 WEST 200 SOUTH
SALT LAKE CITY, UT 84101

P 801.521.8600
F 801.521.7913

www.gsbsarchitects.com

REVISIONS:

RFD
RESEARCH FACILITIES DESIGN
3965 Fifth Avenue, Suite 400
San Diego, California 92103
TEL 619 . 297 . 0159
FAX 619 . 294 . 4901

STATE OF UTAH
RICHARD M. HEINZ
No. 4934727-0301
LICENSED ARCHITECT

May 07, 2010

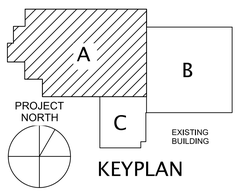

KEYPLAN

Utah Valley University New Science Building

800 West University Parkway
Orem, Utah 84058

Division of Facilities Construction and Management

DRAWN BY:	Author
CHECKED BY:	Checker
DFCM PROJECT NO.:	09020790
GSBS PROJECT NO.:	2009.115.00
ISSUED DATE:	05.07.2010

LAB FURNISHINGS
LEVEL 0
PARTIAL FLOOR PLAN

CONSTRUCTION DOCUMENTS

LF-101D

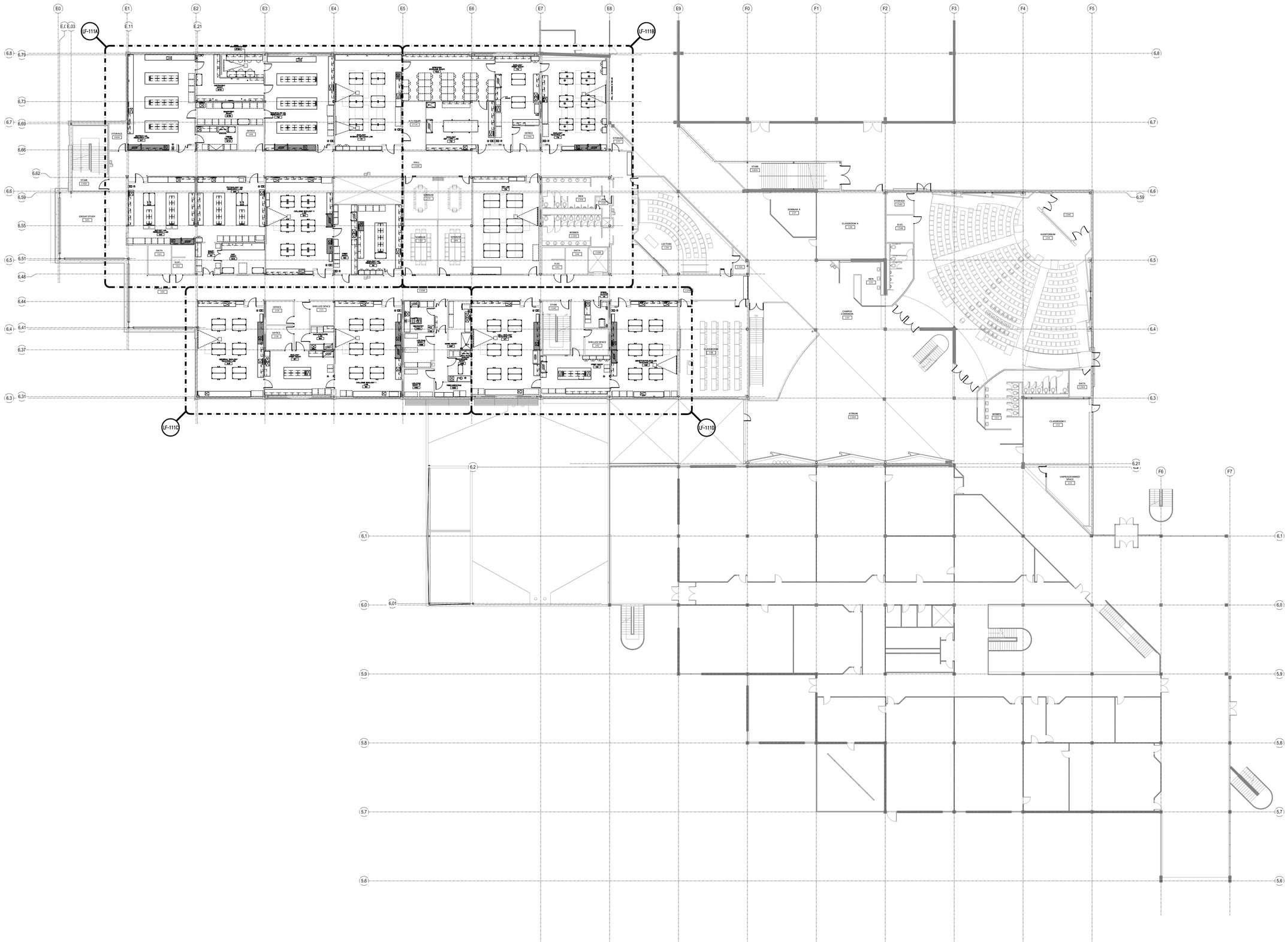

1
LF-111

LEVEL 1 FLOOR PLAN

1/16" = 1'-0"

GSBS ARCHITECTS

375 WEST 200 SOUTH
SALT LAKE CITY, UT 84101

P 801.521.8600
F 801.521.7913

www.gsbsarchitects.com

REVISIONS:

RFD
RESEARCH FACILITIES DESIGN
3965 Fifth Avenue, Suite 400
San Diego, California 92103
TEL 619 . 297 . 0159
FAX 619 . 294 . 4901

STATE OF UTAH
RICHARD M. HEINZ
No. 4934727-0301
LICENSED ARCHITECT

May 07, 2010

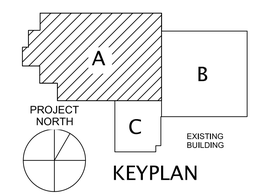

KEYPLAN

Utah Valley University New Science Building

800 West University Parkway
Orem, Utah 84058

Division of Facilities Construction and Management

DRAWN BY:	Author
CHECKED BY:	Checker
DFCM PROJECT NO.:	09020790
GSBS PROJECT NO.:	2009.115.00
ISSUED DATE:	05.07.2010

LAB FURNISHINGS
LEVEL 1
PARTIAL FLOOR PLAN

CONSTRUCTION DOCUMENTS

LF-111

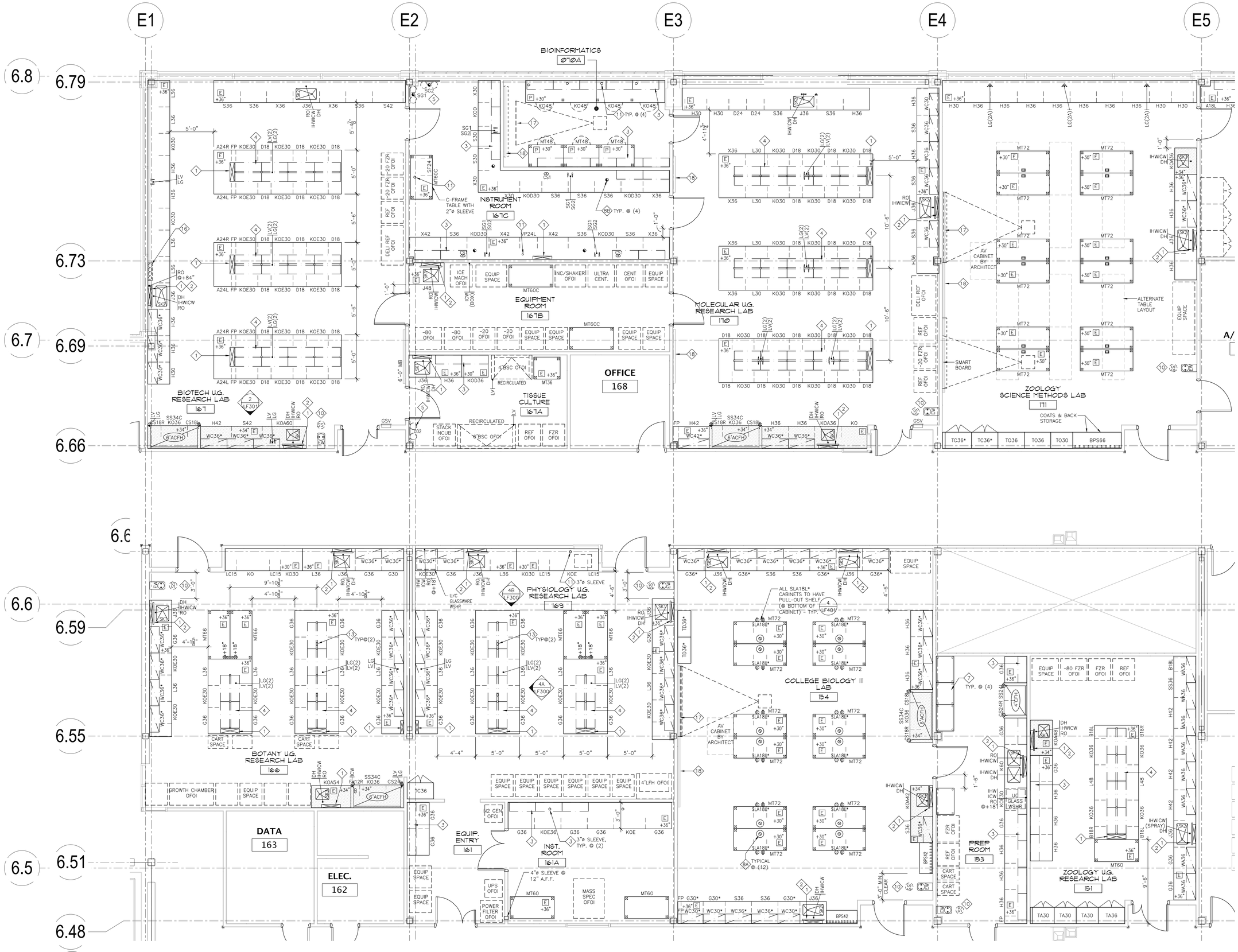

1 LF-111A **LEVEL 1 PARTIAL FLOOR PLAN**

1/4" = 1'-0"

0 1' 2' 4' 8'

GSBS ARCHITECTS

375 WEST 200 SOUTH
SALT LAKE CITY, UT 84101

P 801.521.8600
F 801.521.7913

www.gsbsarchitects.com

REVISIONS:

RFD
RESEARCH FACILITIES DESIGN
3965 Fifth Avenue, Suite 400
San Diego, California 92103
TEL 619 . 297 . 0159
FAX 619 . 294 . 4901

STATE OF UTAH
RICHARD M. HEINZ
No. 4934727-0301
LICENSED ARCHITECT

May 07, 2010

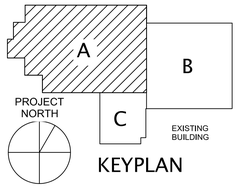

KEYPLAN

Utah Valley University New Science Building

800 West University Parkway
Orem, Utah 84058

Division of Facilities Construction and Management

DRAWN BY:	Author
CHECKED BY:	Checker
DFCM PROJECT NO.:	09020790
GSBS PROJECT NO.:	2009.115.00
ISSUED DATE:	05.07.2010

LAB FURNISHINGS
LEVEL 1
PARTIAL FLOOR PLAN

CONSTRUCTION DOCUMENTS

LF-111A

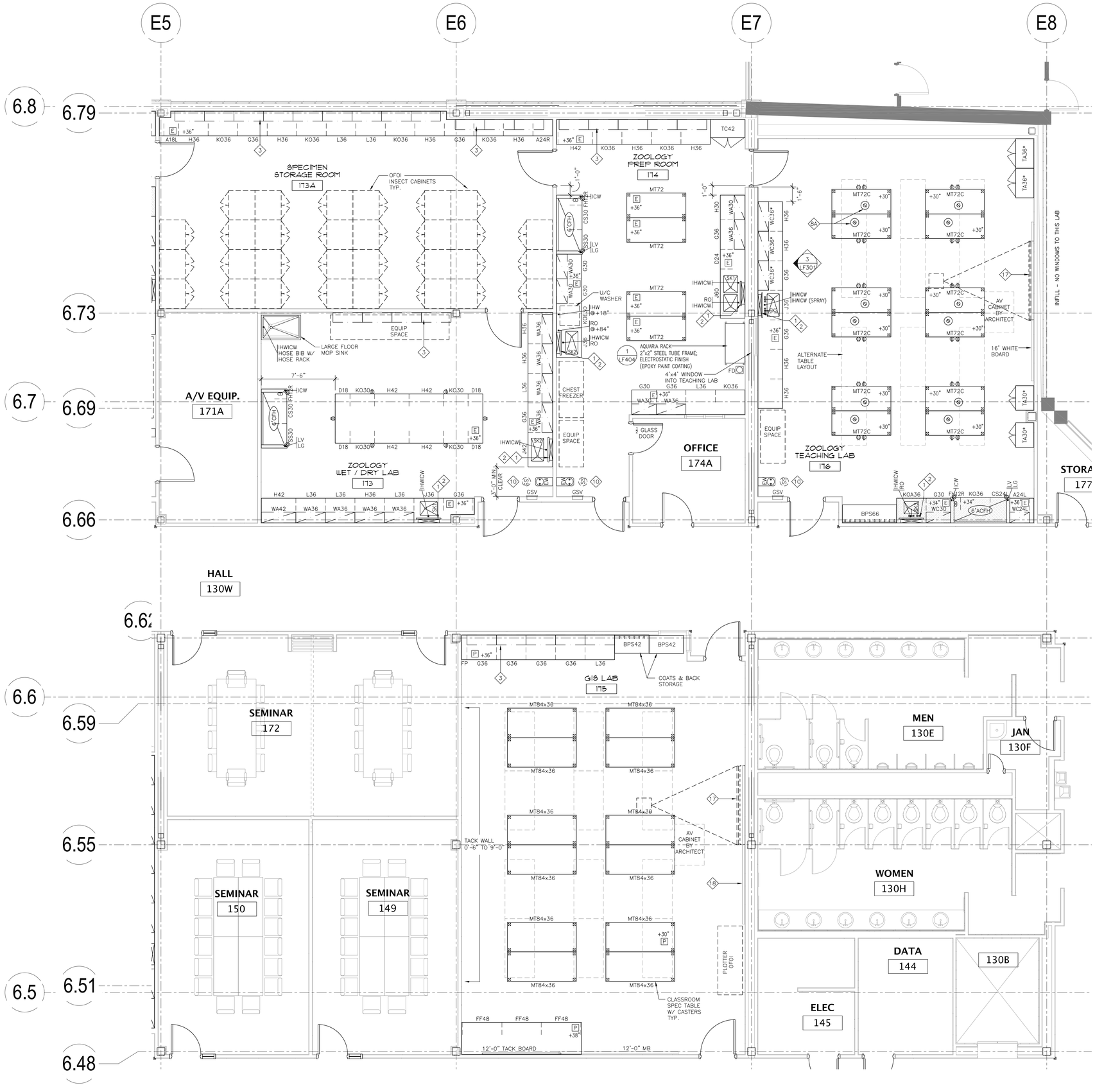

1 LF-111B

LEVEL 1 PARTIAL FLOOR PLAN

1/4" = 1'-0"

0 1' 2' 4' 8'

GSBS ARCHITECTS
375 WEST 200 SOUTH
SALT LAKE CITY, UT 84101
P 801.521.8600
F 801.521.7913
www.gsbsarchitects.com

REVISIONS:

RFD
RESEARCH FACILITIES DESIGN
3965 Fifth Avenue, Suite 400
San Diego, California 92103
TEL 619 297 0159
FAX 619 294 4901

STATE OF UTAH
RICHARD M. HEINZ
No. 4934727-0301
LICENSED ARCHITECT
May 07, 2010

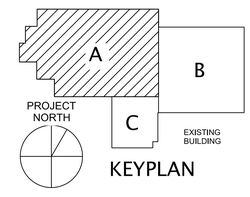

KEYPLAN

Utah Valley University New Science Building

800 West University Parkway
Orem, Utah 84058

Division of Facilities Construction and Management

DRAWN BY:	Author
CHECKED BY:	Checker
DFCM PROJECT NO.:	09020790
GSBS PROJECT NO.:	2009.115.00
ISSUED DATE:	05.07.2010

LAB FURNISHINGS
LEVEL 1
PARTIAL FLOOR PLAN

CONSTRUCTION DOCUMENTS

LF-111B

GSBS ARCHITECTS
375 WEST 200 SOUTH
SALT LAKE CITY, UT 84101
P 801.521.8600
F 801.521.7913
www.gsbsarchitects.com

REVISIONS:

RFD
RESEARCH FACILITIES DESIGN
3965 Fifth Avenue, Suite 400
San Diego, California 92103
TEL 619 . 297 . 0159
FAX 619 . 294 . 4901

STATE OF UTAH
RICHARD M. HEINZ
No. 4934727-0301
LICENSED ARCHITECT
May 07, 2010

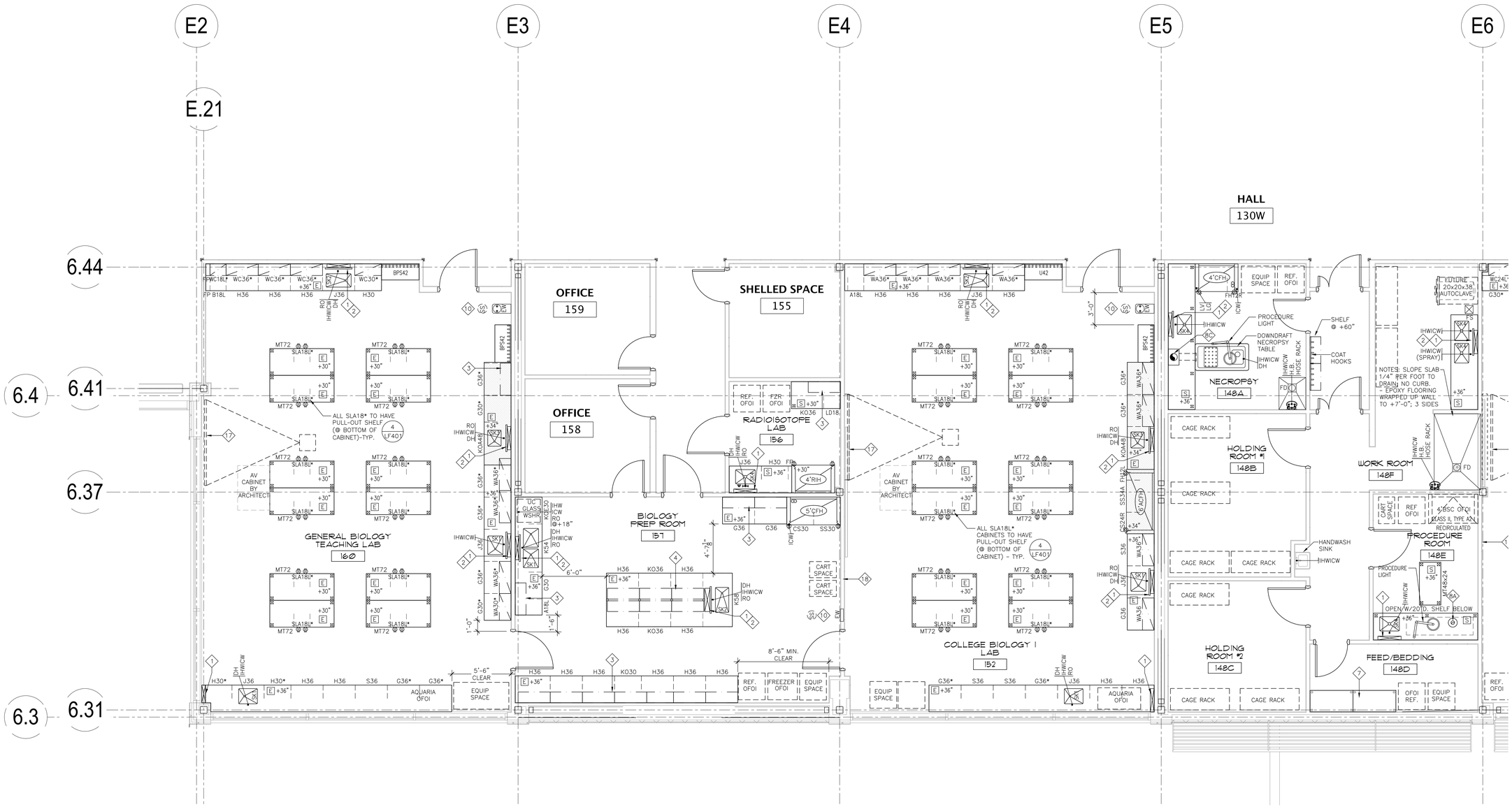

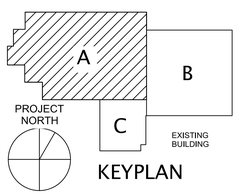

Utah Valley University New Science Building

800 West University Parkway
Orem, Utah 84058

Division of Facilities Construction and Management

DRAWN BY:	Author
CHECKED BY:	Checker
DFCM PROJECT NO.:	09020790
GSBS PROJECT NO.:	2009.115.00
ISSUED DATE:	05.07.2010

LAB FURNISHINGS
LEVEL 1
PARTIAL FLOOR PLAN

CONSTRUCTION DOCUMENTS

LF-111C

1 / LF-111C LEVEL 1 PARTIAL FLOOR PLAN
1/4" = 1'-0"
0 1' 2' 4' 8'

GSBS ARCHITECTS
375 WEST 200 SOUTH
SALT LAKE CITY, UT 84101
P 801.521.8600
F 801.521.7913
www.gsbsarchitects.com

REVISIONS:

RFD
RESEARCH FACILITIES DESIGN
3965 Fifth Avenue, Suite 400
San Diego, California 92103
TEL 619 297 0159
FAX 619 294 4901

STATE OF UTAH
RICHARD M. HEINZ
No. 4934727-0301
LICENSED ARCHITECT
May 07, 2010

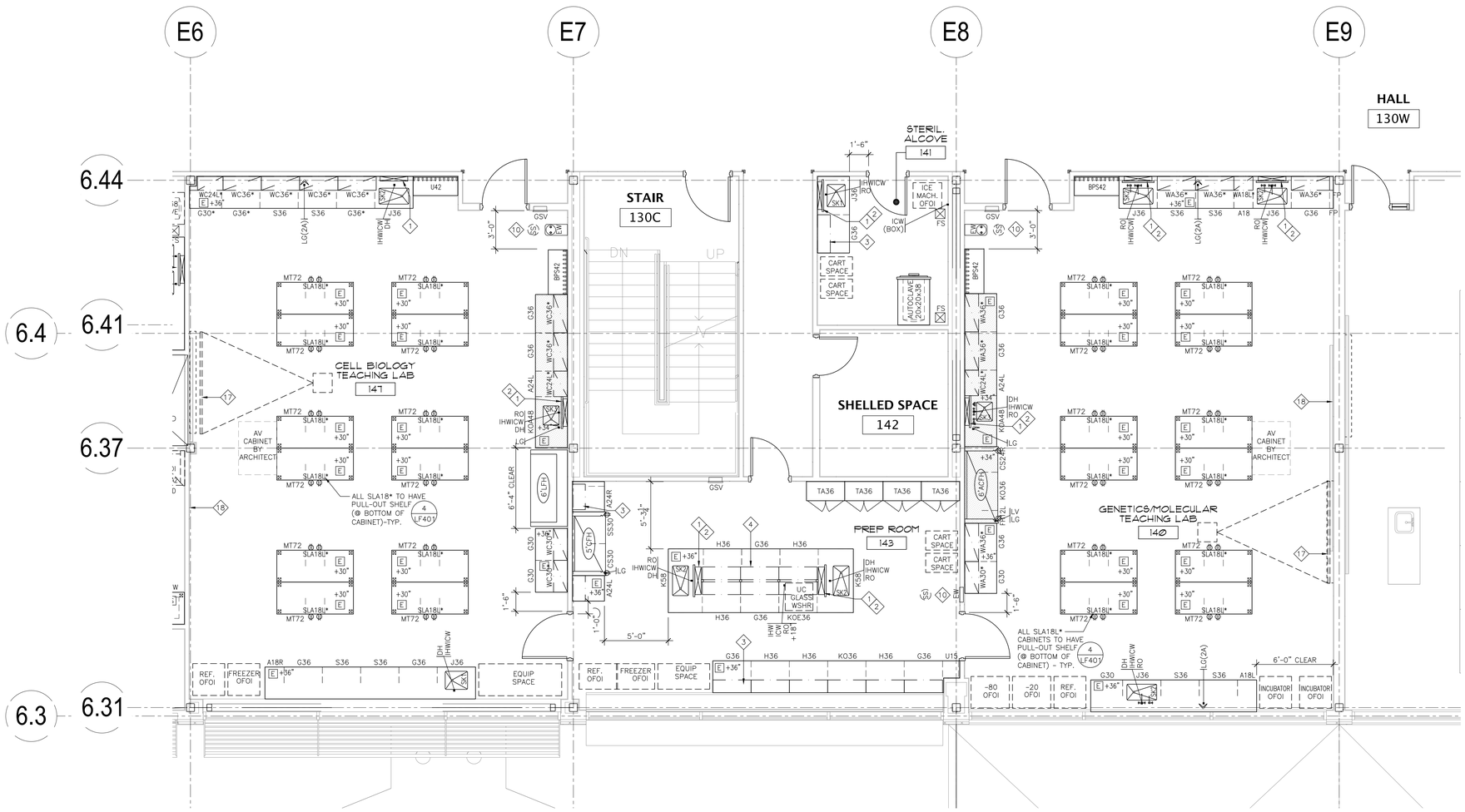

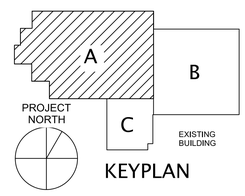

Utah Valley University New Science Building

800 West University Parkway
Orem, Utah 84058

Division of Facilities Construction and Management

DRAWN BY:	Author
CHECKED BY:	Checker
DFCM PROJECT NO.:	09020790
GSBS PROJECT NO.:	2009.115.00
ISSUED DATE:	05.07.2010

LAB FURNISHINGS
LEVEL 1
PARTIAL FLOOR PLAN

CONSTRUCTION DOCUMENTS

LF-111D

1 / LF-111D LEVEL 1 PARTIAL FLOOR PLAN

1/4" = 1'-0"

0 1' 2' 4' 8'

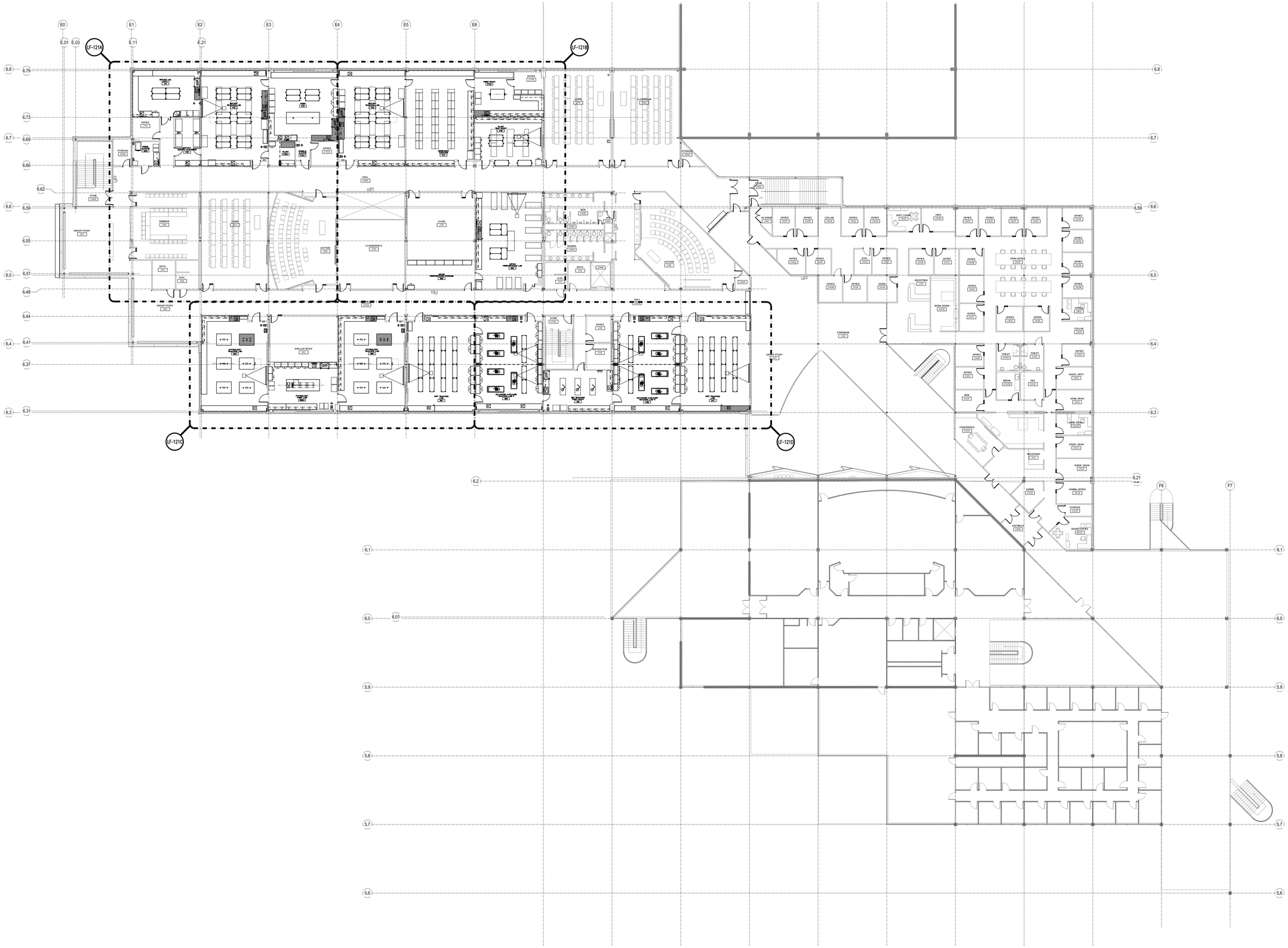

1
LF-121

LEVEL 2 FLOOR PLAN

1/16" = 1'-0"

GSBS ARCHITECTS

375 WEST 200 SOUTH
SALT LAKE CITY, UT 84101

P 801.521.8600
F 801.521.7913

www.gsbsarchitects.com

REVISIONS:

RFD

RESEARCH FACILITIES DESIGN
3965 Fifth Avenue, Suite 400
San Diego, California 92103
TEL 619 . 297 . 0159
FAX 619 . 294 . 4901

STATE OF UTAH
RICHARD M. HEINZ
No. 4934727-0301
LICENSED ARCHITECT

May 07, 2010

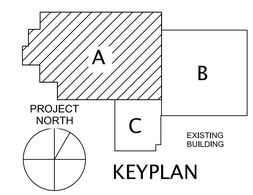

KEYPLAN

Utah Valley University New Science Building

800 West University Parkway
Orem, Utah 84058

Division of Facilities Construction and Management

DRAWN BY:	Author
CHECKED BY:	Checker
DFCM PROJECT NO.:	09020790
GSBS PROJECT NO.:	2009.115.00
ISSUED DATE:	05.07.2010

LAB FURNISHINGS
LEVEL 2
PARTIAL FLOOR PLAN

CONSTRUCTION DOCUMENTS

LF-121

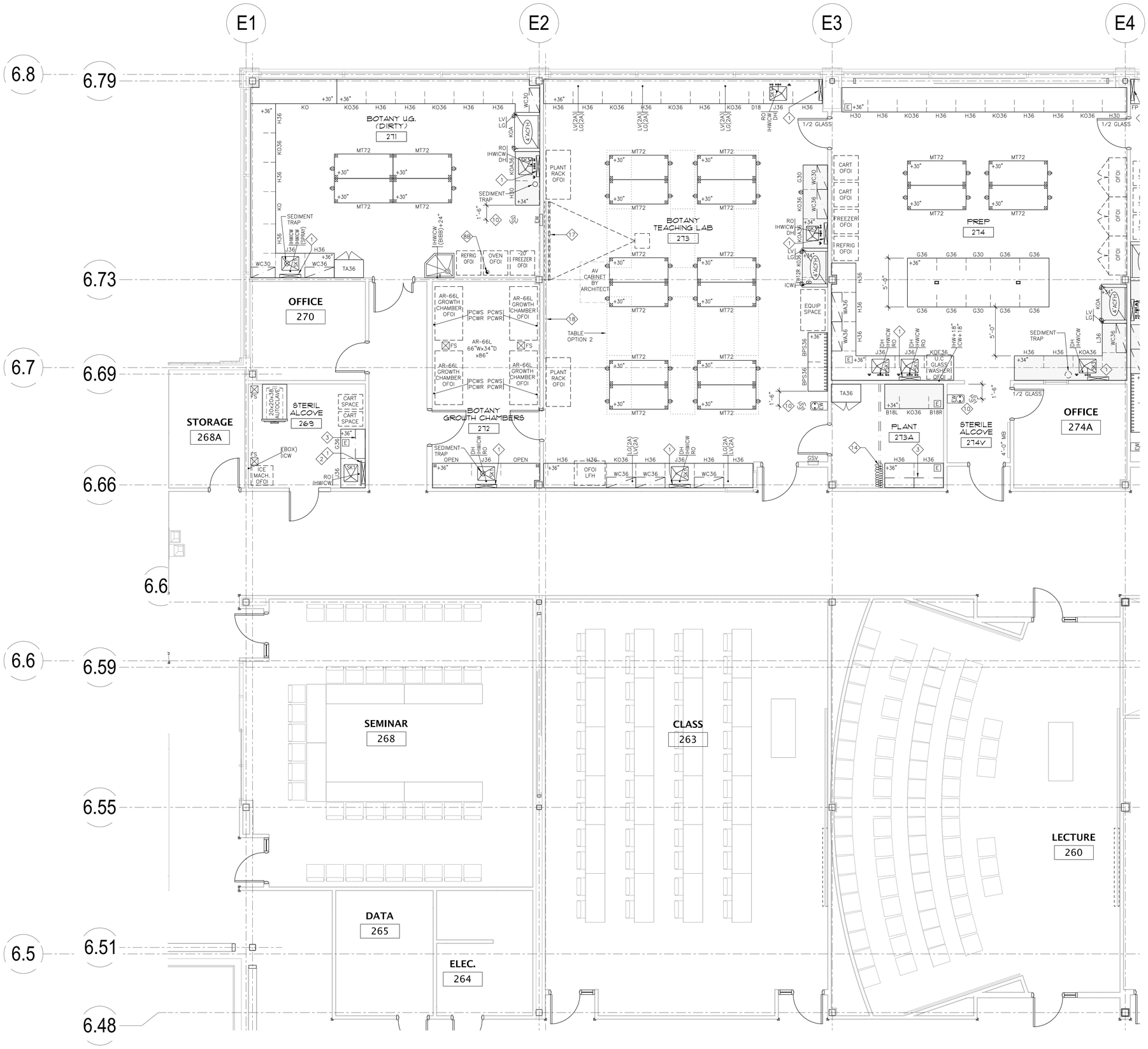

1 LF-121A **LEVEL 2 PARTIAL FLOOR PLAN**

1/4" = 1'-0"

0 1' 2' 4' 8'

GSBS ARCHITECTS

375 WEST 200 SOUTH
SALT LAKE CITY, UT 84101

P 801.521.8600
F 801.521.7913

www.gsbsarchitects.com

REVISIONS:

RFD
RESEARCH FACILITIES DESIGN
3965 Fifth Avenue, Suite 400
San Diego, California 92103
TEL 619 . 297 . 0159
FAX 619 . 294 . 4901

STATE OF UTAH
RICHARD M. HEINZ
No. 4934727-0301
LICENSED ARCHITECT

May 07, 2010

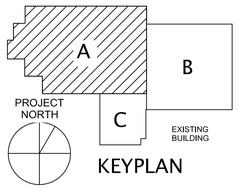

KEYPLAN

Utah Valley University New Science Building

800 West University Parkway
Orem, Utah 84058

Division of Facilities Construction and Management

DRAWN BY:	Author
CHECKED BY:	Checker
DFCM PROJECT NO.:	09020790
GSBS PROJECT NO.:	2009.115.00
ISSUED DATE:	05.07.2010

LAB FURNISHINGS
LEVEL 2
PARTIAL FLOOR PLAN

CONSTRUCTION DOCUMENTS

LF-121A

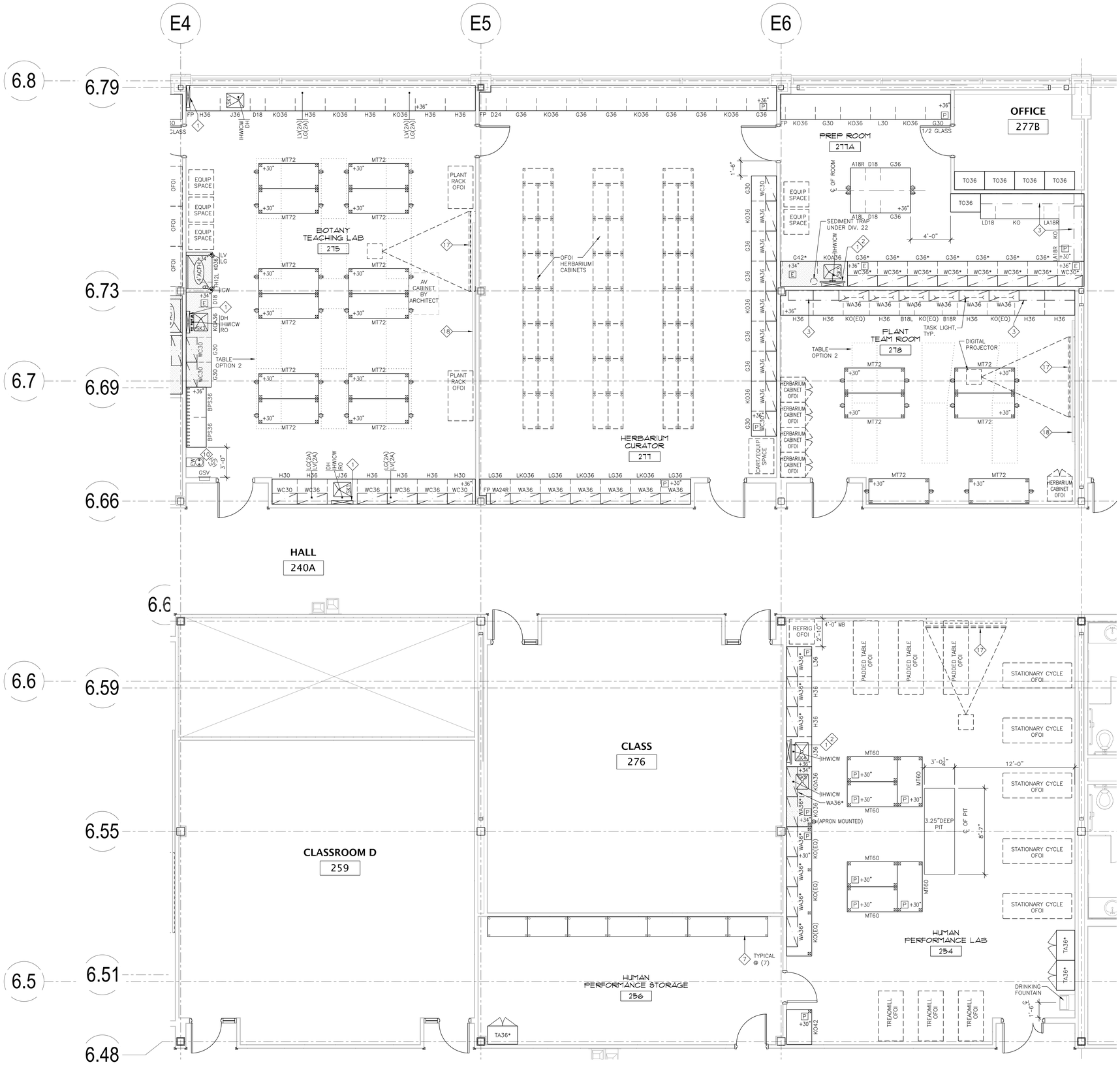

1 LF-121B **LEVEL 2 PARTIAL FLOOR PLAN**

1/4" = 1'-0" 0 1' 2' 4' 8'

GSBS ARCHITECTS

375 WEST 200 SOUTH
SALT LAKE CITY, UT 84101

P 801.521.8600
F 801.521.7913

www.gsbsarchitects.com

REVISIONS:

RFD
RESEARCH FACILITIES DESIGN
3965 Fifth Avenue, Suite 400
San Diego, California 92103
TEL 619 . 297 . 0159
FAX 619 . 294 . 4901

STATE OF UTAH
RICHARD M. HEINZ
No. 4934727-0301
LICENSED ARCHITECT
May 07, 2010

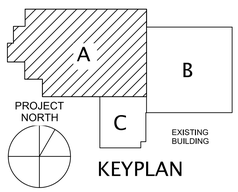

KEYPLAN

Utah Valley University New Science Building

800 West University Parkway
Orem, Utah 84058

Division of Facilities Construction and Management

DRAWN BY:	Author
CHECKED BY:	Checker
DFCM PROJECT NO.:	09020790
GSBS PROJECT NO.:	2009.115.00
ISSUED DATE:	05.07.2010

LAB FURNISHINGS
LEVEL 2
PARTIAL FLOOR PLAN

CONSTRUCTION DOCUMENTS

LF-121B

GSBS ARCHITECTS
375 WEST 200 SOUTH
SALT LAKE CITY, UT 84101
P 801.521.8600
F 801.521.7913
www.gsbsarchitects.com

REVISIONS:

RFD
RESEARCH FACILITIES DESIGN
3965 Fifth Avenue, Suite 400
San Diego, California 92103
TEL 619 . 297 . 0159
FAX 619 . 294 . 4901

STATE OF UTAH
RICHARD M. HEINZ
No. 4934727-0301
LICENSED ARCHITECT
May 07, 2010

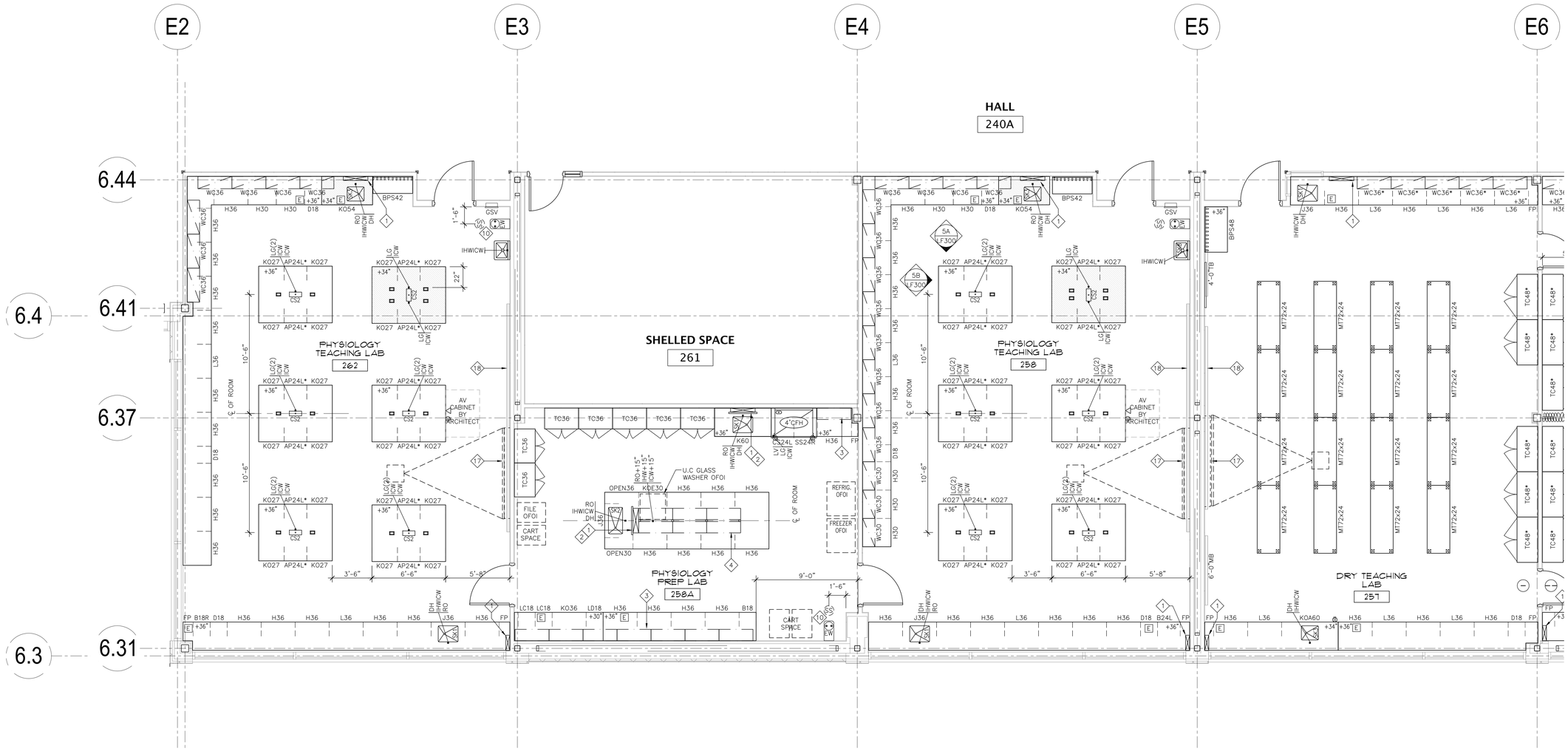

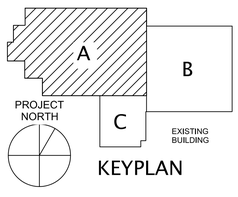

Utah Valley University New Science Building

800 West University Parkway
Orem, Utah 84058

Division of Facilities Construction and Management

DRAWN BY:	Author
CHECKED BY:	Checker
DFCM PROJECT NO.:	09020790
GSBS PROJECT NO.:	2009.115.00
ISSUED DATE:	05.07.2010

LAB FURNISHINGS
LEVEL 2
PARTIAL FLOOR PLAN

CONSTRUCTION DOCUMENTS

LF-121C

1 / LF-121C LEVEL 2 PARTIAL FLOOR PLAN
1/4" = 1'-0"
0 1' 2' 4' 8'

GSBS ARCHITECTS
375 WEST 200 SOUTH
SALT LAKE CITY, UT 84101
P 801.521.8600
F 801.521.7913
www.gsbsarchitects.com

REVISIONS:

RFD
RESEARCH FACILITIES DESIGN
3965 Fifth Avenue, Suite 400
San Diego, California 92103
TEL 619 · 297 · 0159
FAX 619 · 294 · 4901

STATE OF UTAH
RICHARD M. HEINZ
No. 4934727-0301
LICENSED ARCHITECT
May 07, 2010

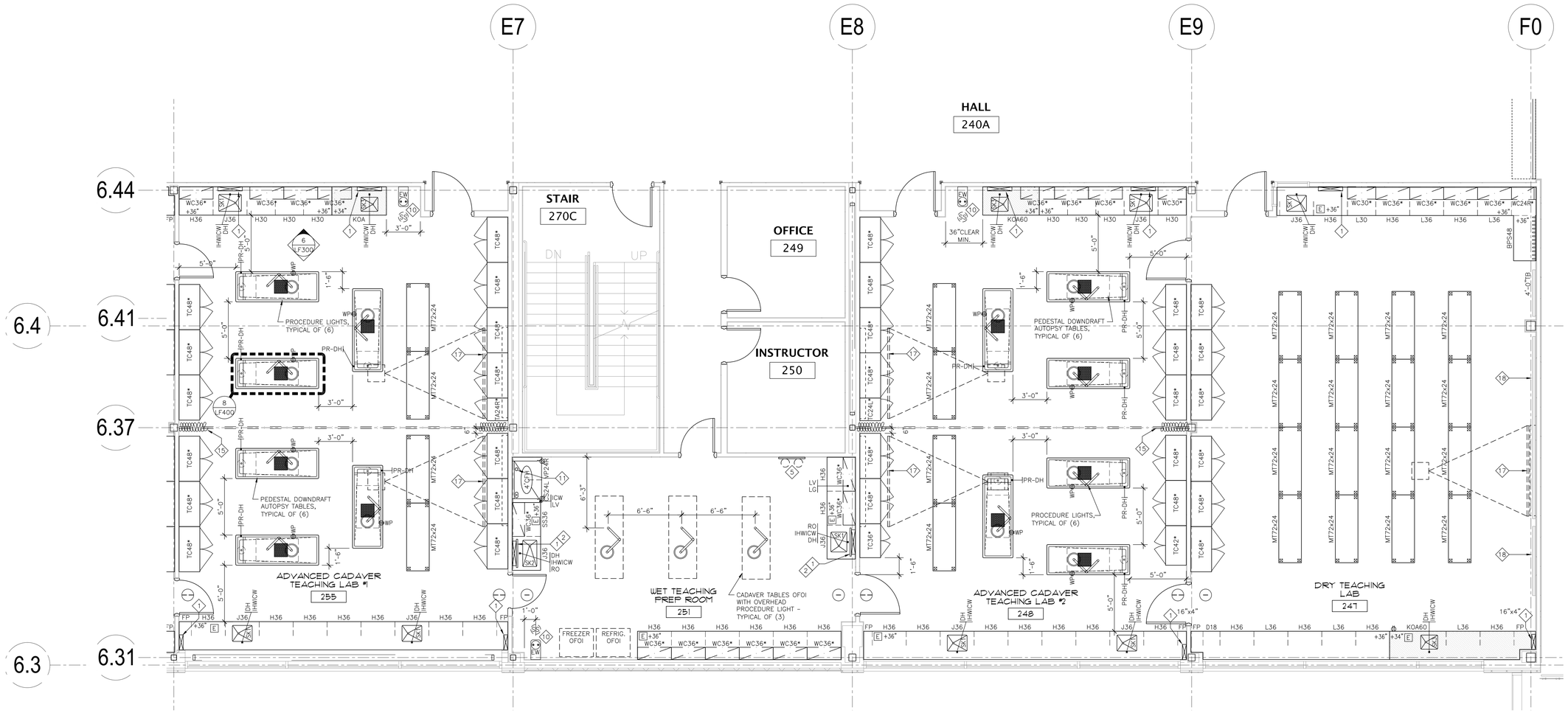

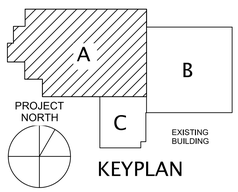

KEYPLAN

Utah Valley University New Science Building

800 West University Parkway
Orem, Utah 84058

Division of Facilities Construction and Management

DRAWN BY:	Author
CHECKED BY:	Checker
DFCM PROJECT NO.:	09020790
GSBS PROJECT NO.:	2009.115.00
ISSUED DATE:	05.07.2010

LAB FURNISHINGS
LEVEL 2
PARTIAL FLOOR PLAN

CONSTRUCTION DOCUMENTS

LF-121D

1 / LF-121D LEVEL 2 PARTIAL FLOOR PLAN
1/4" = 1'-0"
0 1' 2' 4' 8'

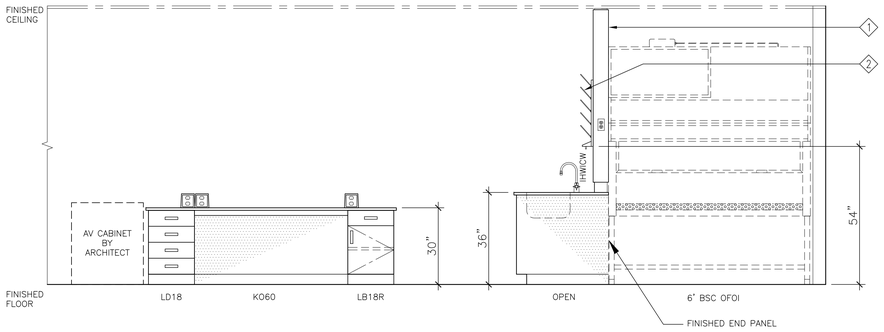

CELL/PLANT CULTURE LAB 2 - 062

1/2"=1'-0" (1)

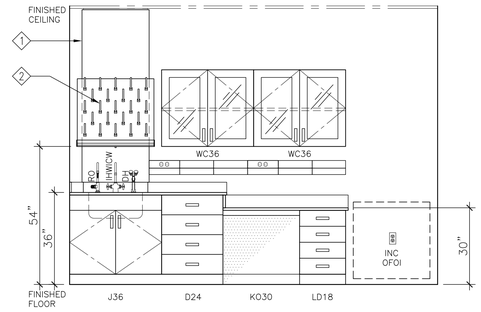

TISSUE CULTURE #1 - 047A

1/2"=1'-0" (2)

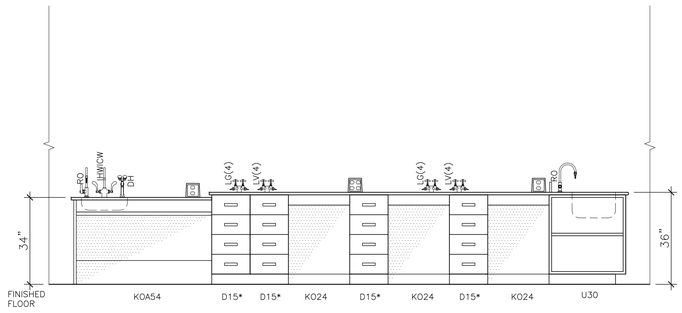

VIROLOGY TEACHING LAB - 044

1/2"=1'-0" (3)

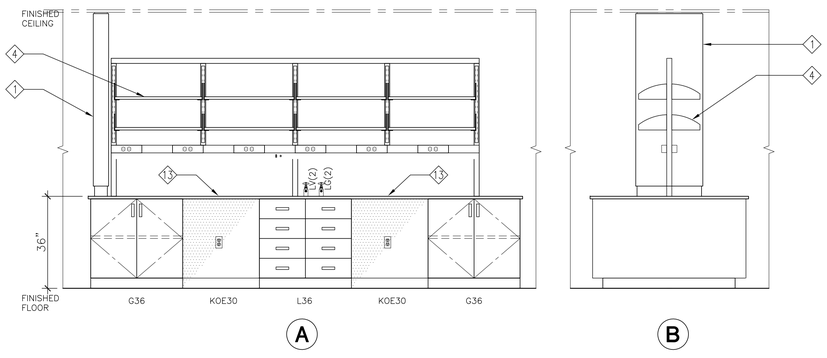

PHYSIOLOGY U.G. RESEARCH LAB - 169

1/2"=1'-0" (4)

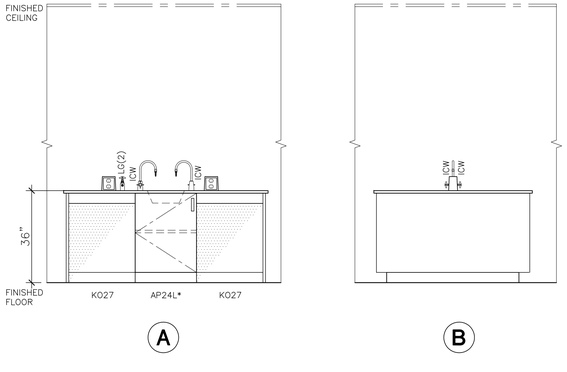

PHYSIOLOGY TEACHING LAB #2 - 258

1/2"=1'-0" (5)

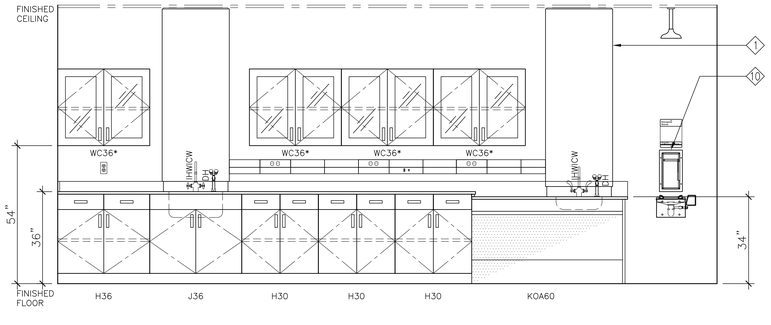

ADVANCED CADAVER TEACHING LAB #1 - 255

1/2"=1'-0" (6)

GSBS ARCHITECTS
375 WEST 200 SOUTH
SALT LAKE CITY, UT 84101
P 801.521.8600
F 801.521.7913
www.gsbsarchitects.com

REVISIONS:

RFD
RESEARCH FACILITIES DESIGN
3965 Fifth Avenue, Suite 400
San Diego, California 92103
TEL 619 . 297 . 0159
FAX 619 . 294 . 4901

STATE OF UTAH
RICHARD M. HEINZ
No. 4934727-0301
LICENSED ARCHITECT

May 07, 2010

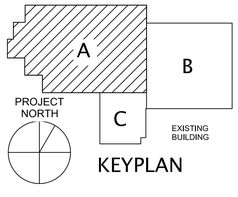

KEYPLAN

Utah Valley University New Science Building

800 West University Parkway
Orem, Utah 84058

Division of Facilities Construction and Management

DRAWN BY:	Author
CHECKED BY:	Checker
DFCM PROJECT NO.:	09020790
GSBS PROJECT NO.:	2009.115.00
ISSUED DATE:	05.07.2010

LAB FURNISHINGS ELEVATIONS

CONSTRUCTION DOCUMENTS

LF-300

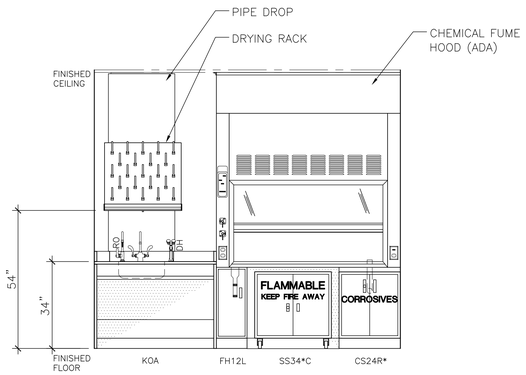

MICROSCOPY RESEARCH - 071

1/2"=1'-0" (1)

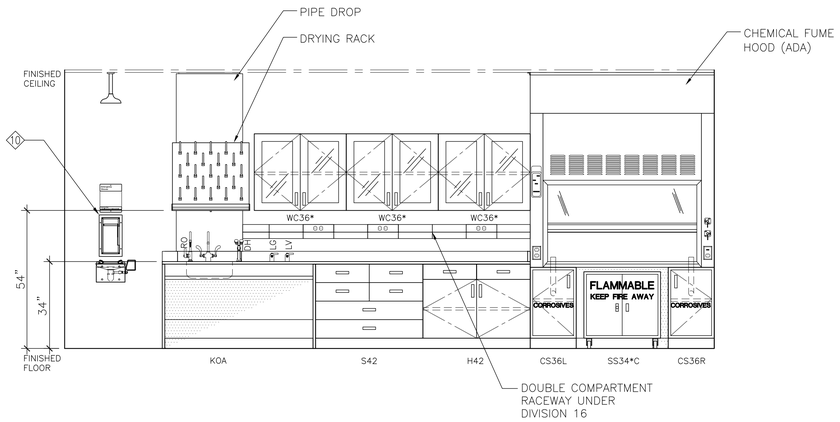

BIOTECH U.G. RESEARCH LAB - 167

1/2"=1'-0" (2)

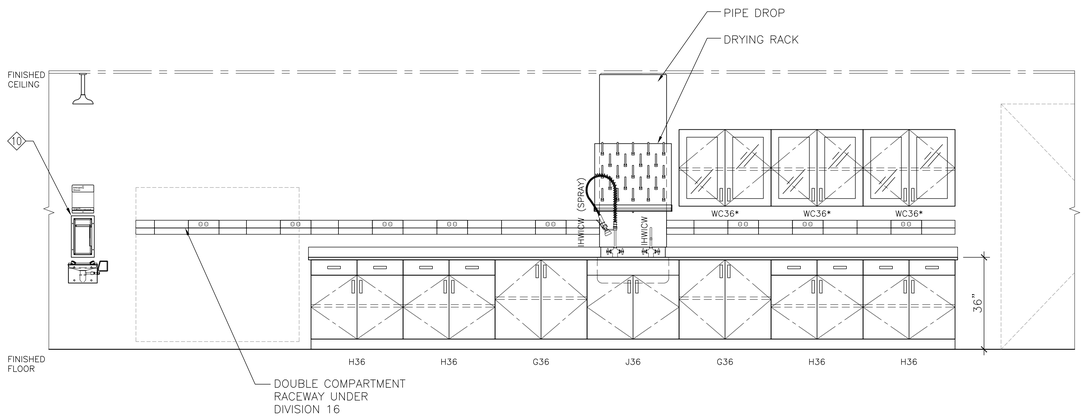

ZOOLOGY TEACHING LAB - 176

1/2"=1'-0" (3)

NOT USED

1/2"=1'-0" (4)

NOT USED

1/2"=1'-0" (5)

NOT USED

1/2"=1'-0" (6)

GSBS ARCHITECTS
375 WEST 200 SOUTH
SALT LAKE CITY, UT 84101
P 801.521.8600
F 801.521.7913
www.gsbsarchitects.com

REVISIONS:

RFD
RESEARCH FACILITIES DESIGN
3965 Fifth Avenue, Suite 400
San Diego, California 92103
TEL 619 297 0159
FAX 619 294 4901

STATE OF UTAH
RICHARD M. HEINZ
No. 4934727-0301
LICENSED ARCHITECT

May 07, 2010

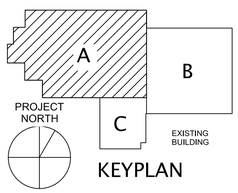

KEYPLAN

Utah Valley University New Science Building

800 West University Parkway
Orem, Utah 84058

Division of Facilities Construction and Management

DRAWN BY:	Author
CHECKED BY:	Checker
DFCM PROJECT NO.:	09020790
GSBS PROJECT NO.:	2009.115.00
ISSUED DATE:	05.07.2010

LAB FURNISHINGS ELEVATIONS

CONSTRUCTION DOCUMENTS

LF-301

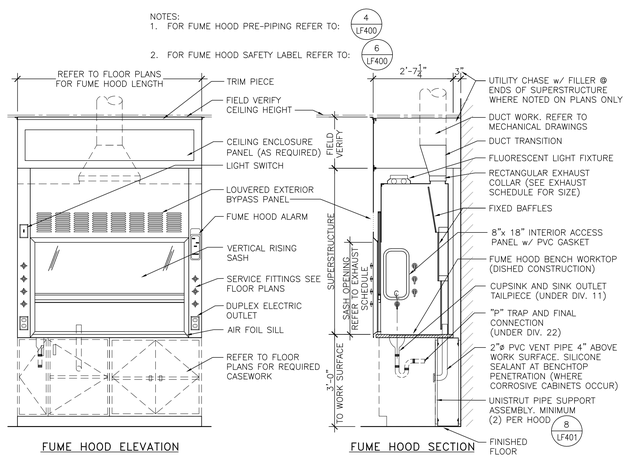

FUME HOOD - AIR FOIL SILL VERTICAL SASH

1/2"=1'-0" (1)

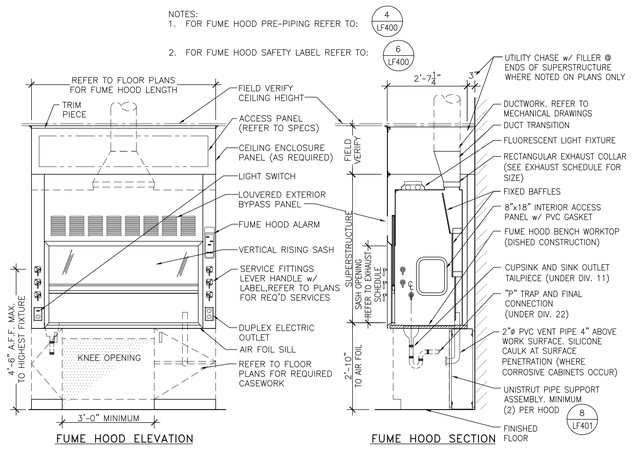

FUME HOOD - AIR FOIL SILL (ADA)

1/2"=1'-0" (2)

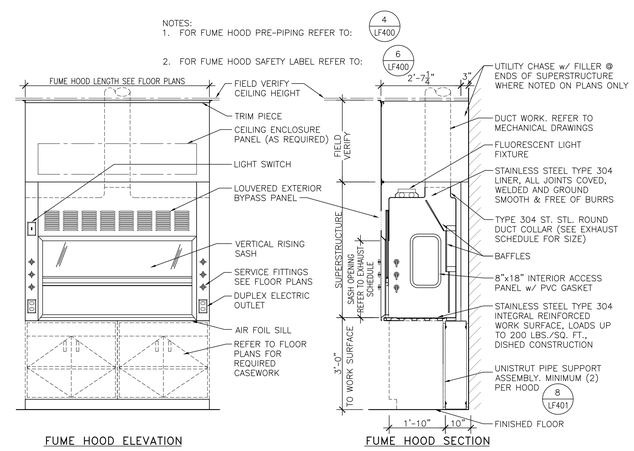

FUME HOOD - RADIOISOTOPE

1/2"=1'-0" (3)

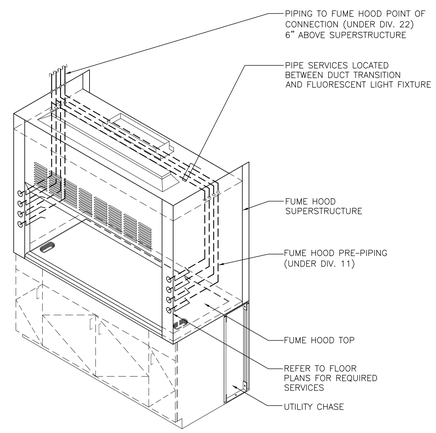

FUME HOOD - PRE-PIPING

1/2"=1'-0" (4)

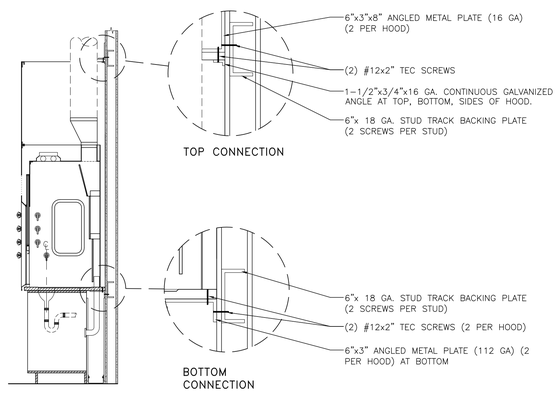

ANCHORAGE DETAIL - HOOD

NTS (5)

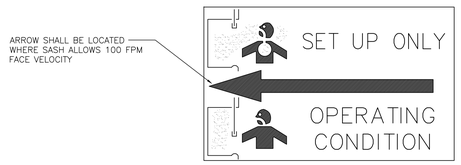

FUME HOOD - SAFETY LABEL

1/2"=1'-0" (6)

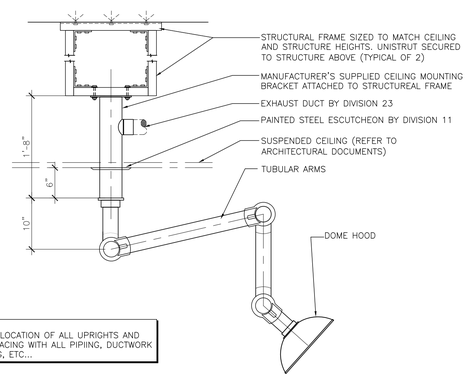

SNORKEL - CEILING MOUNTED

1"=1'-0" (7)

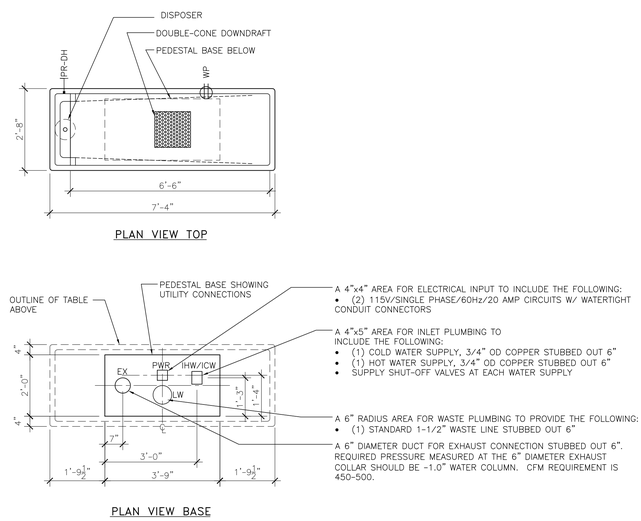

PEDESTAL AUTOPSY TABLE

1/2"=1'-0" (8)

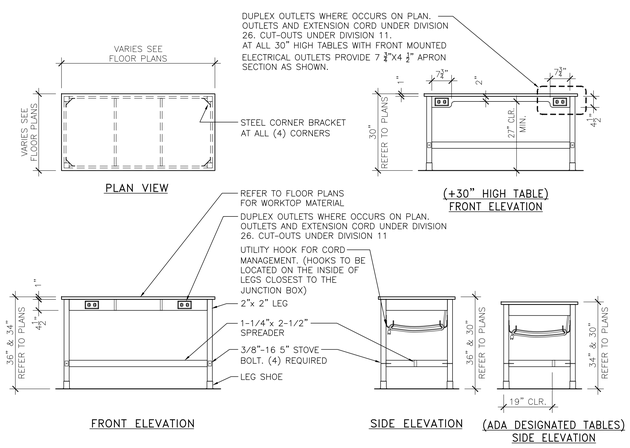

MOVABLE LABORATORY TABLE

1/2"=1'-0" NTS (9)

GSBS ARCHITECTS
375 WEST 200 SOUTH
SALT LAKE CITY, UT 84101
P 801.521.8600
F 801.521.7913
www.gsbsarchitects.com

REVISIONS:

RFD
RESEARCH FACILITIES DESIGN
3965 Fifth Avenue, Suite 400
San Diego, California 92103
TEL 619 . 297 . 0159
FAX 619 . 294 . 4901

STATE OF UTAH
RICHARD M. HEINZ
No. 4934727-0301
LICENSED ARCHITECT
May 07, 2010

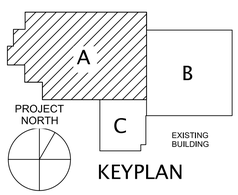

Utah Valley University New Science Building

800 West University Parkway
Orem, Utah 84058

Division of Facilities Construction and Management

DRAWN BY:	Author
CHECKED BY:	Checker
DFCM PROJECT NO.:	09020790
GSBS PROJECT NO.:	2009.115.00
ISSUED DATE:	05.07.2010

LAB FURNISHINGS DETAILS

CONSTRUCTION DOCUMENTS

LF-400

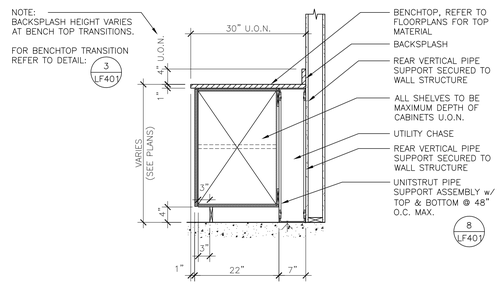

WALL MOUNTED CASEWORK

3/4"=1'-0" (1)

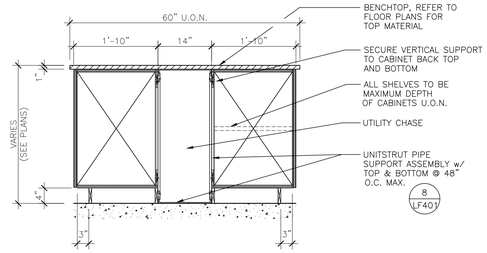

ISLAND BENCH CASEWORK

3/4"=1'-0" (2)

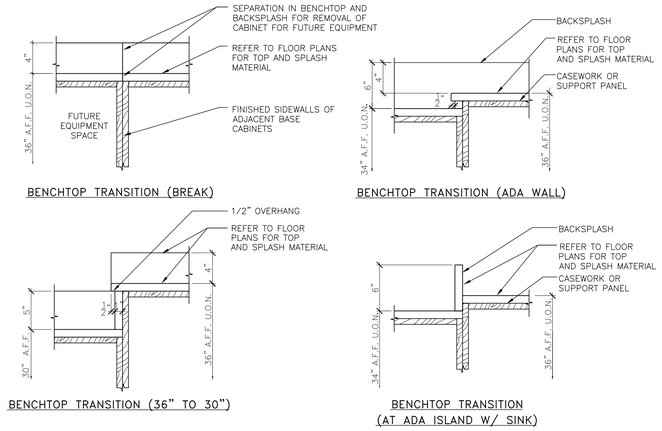

BENCHTOP TRANSITION

1-1/2"=1'-0" (3)

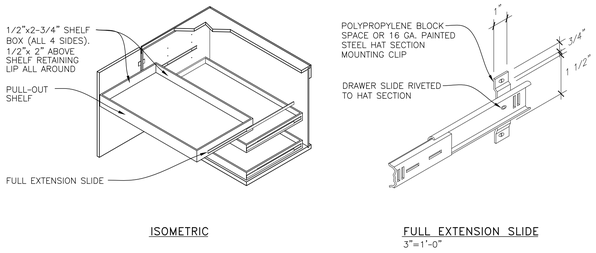

PULL-OUT SHELF

1/2"=1'-0" (4)

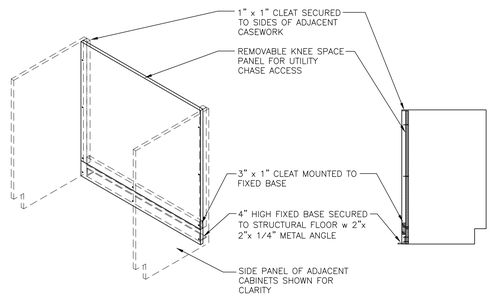

REMOVABLE KNEE SPACE PANEL

3/4"=1'-0" (5)

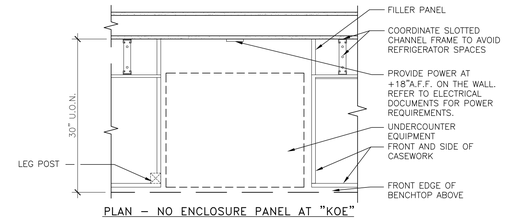

REAR ENCLOSURE PANEL @ UNDERCOUNTER EQUIPMENT

1"=1'-0" (6)

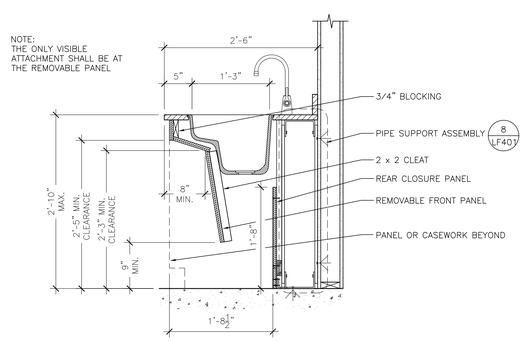

KNEE OPENING (ADA)

1"=1'-0" (7)

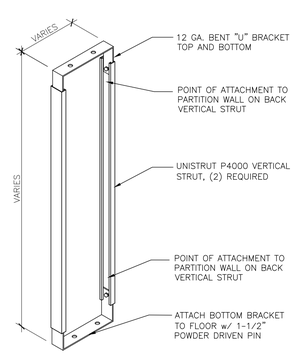

PIPE SUPPORT ASSEMBLY

1 1/2"=1'-0" (8)

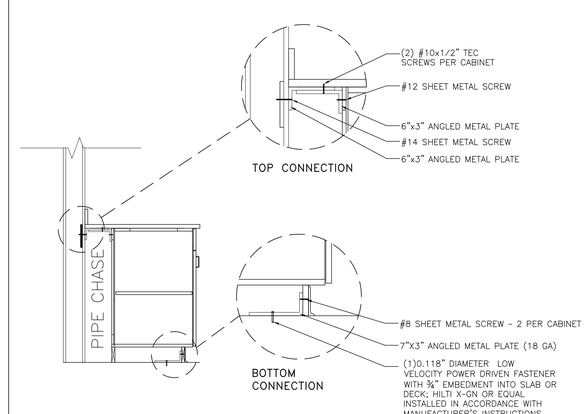

ANCHORAGE DETAIL - CASEWORK

NTS (9)

GSBS ARCHITECTS
375 WEST 200 SOUTH
SALT LAKE CITY, UT 84101
P 801.521.8600
F 801.521.7913
www.gsbsarchitects.com

REVISIONS:

RFD
RESEARCH FACILITIES DESIGN
3965 Fifth Avenue, Suite 400
San Diego, California 92103
TEL 619 . 297 . 0159
FAX 619 . 294 . 4901

STATE OF UTAH
RICHARD M. HEINZ
No. 4934727-0301
LICENSED ARCHITECT

May 07, 2010

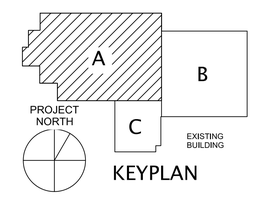

KEYPLAN

Utah Valley University New Science Building

800 West University Parkway
Orem, Utah 84058

Division of Facilities Construction and Management

DRAWN BY:	Author
CHECKED BY:	Checker
DFCM PROJECT NO.:	09020790
GSBS PROJECT NO.:	2009.115.00
ISSUED DATE:	05.07.2010

LAB FURNISHINGS DETAILS

CONSTRUCTION DOCUMENTS

LF-401

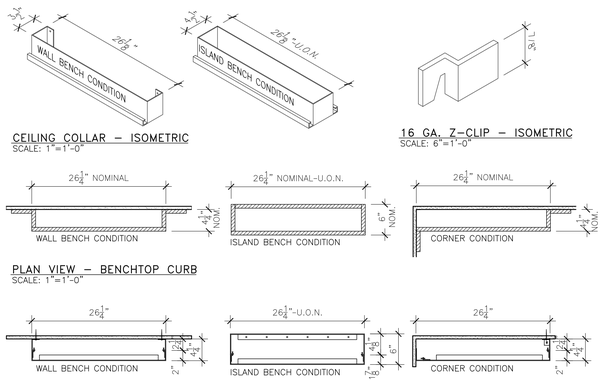

PIPE DROP ENCLOSURE

1"=1'-0" (1)

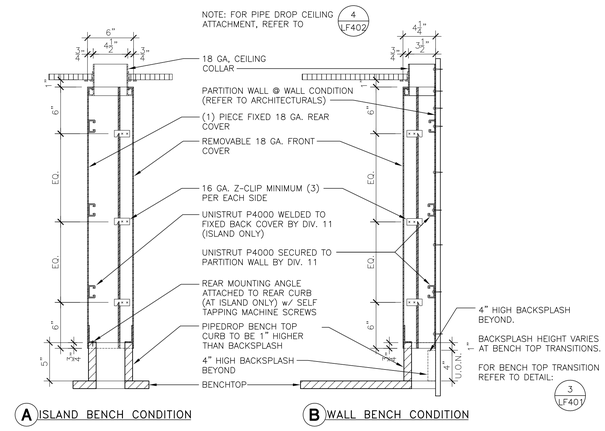

PIPE DROP ENCLOSURE

1-1/2"=1'-0" (2)

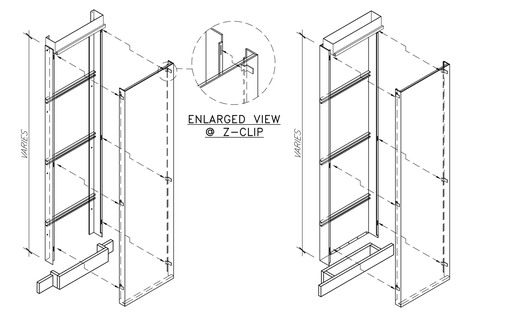

PIPE DROP ENCLOSURE

1/2"=1'-0" (3)

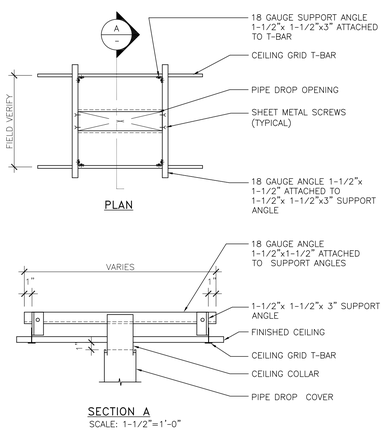

ISLAND BENCH PIPE DROP CEILING ATTACHMENT

3/4"=1'-0" (4)

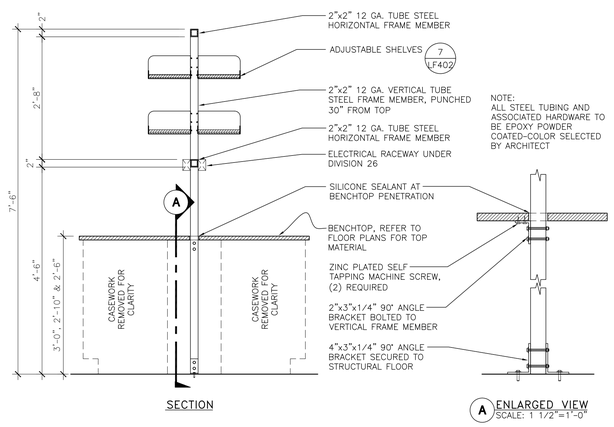

ADJUSTABLE ISLAND BENCH REAGENT SHELF

3/4"=1'-0" (5)

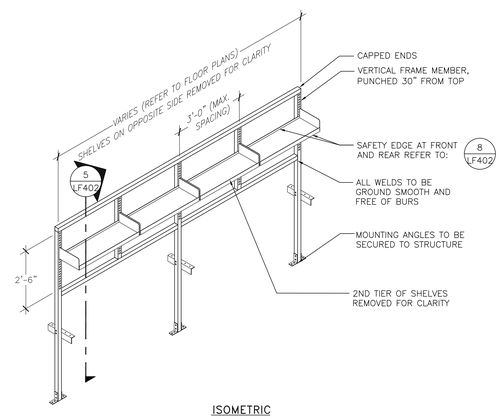

ISLAND BENCH REAGENT SHELVES

3/8"=1'-0" (6)

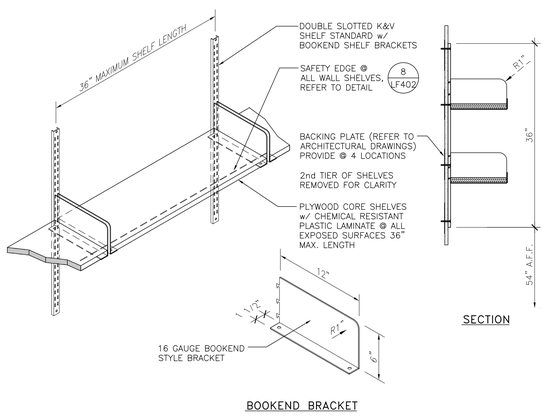

ADJUSTABLE WALL SHELVING

1"=1'-0" (7)

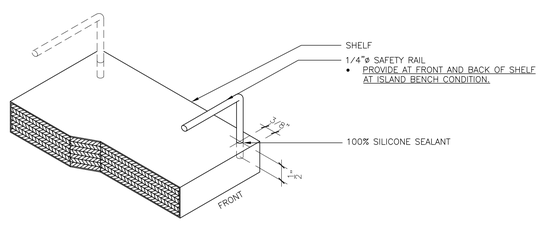

SAFEY EDGE AT SHELF

6"=1'-0" (8)

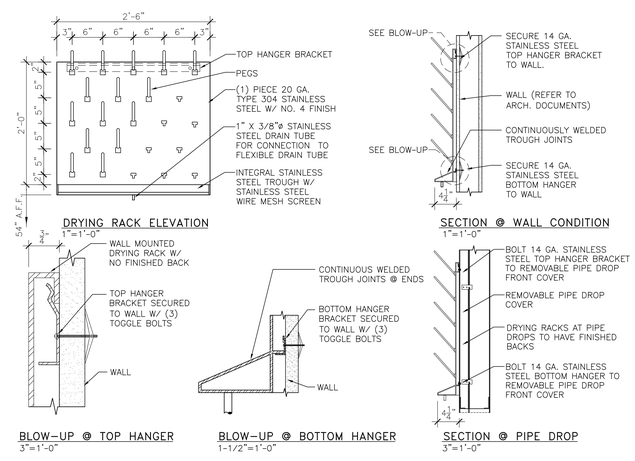

DRYING RACK

AS NOTED NTS (9)

GSBS ARCHITECTS
375 WEST 200 SOUTH
SALT LAKE CITY, UT 84101
P 801.521.8600
F 801.521.7913
www.gsbsarchitects.com

REVISIONS:

RFD
RESEARCH FACILITIES DESIGN
3965 Fifth Avenue, Suite 400
San Diego, California 92103
TEL 619 . 297 . 0159
FAX 619 . 294 . 4901

STATE OF UTAH
RICHARD M. HEINZ
No. 4934727-0301
LICENSED ARCHITECT
May 07, 2010

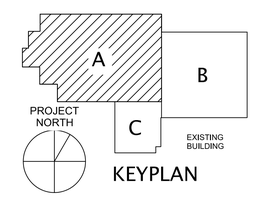

KEYPLAN

Utah Valley University New Science Building

800 West University Parkway
Orem, Utah 84058

Division of Facilities Construction and Management

DRAWN BY:	Author
CHECKED BY:	Checker
DFCM PROJECT NO.:	09020790
GSBS PROJECT NO.:	2009.115.00
ISSUED DATE:	05.07.2010

LAB FURNISHINGS DETAILS

CONSTRUCTION DOCUMENTS

LF-402

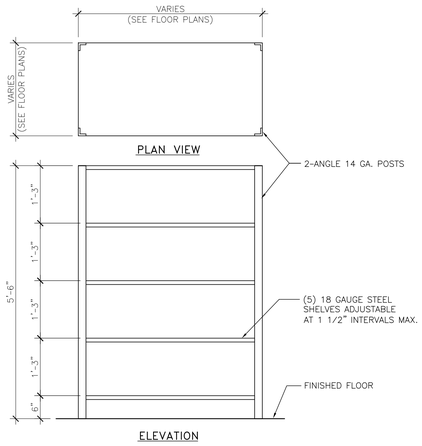

HEAVY DUTY SHELVING UNIT

3/4"=1'-0" (1)

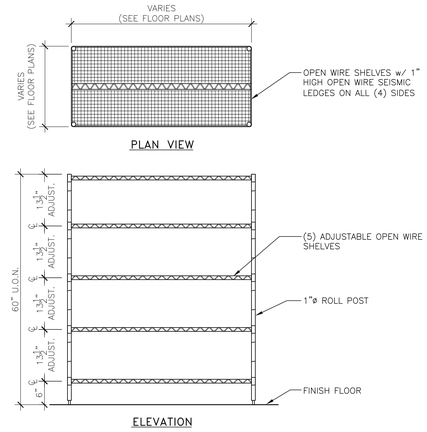

WIRE SHELVING UNIT

(2)

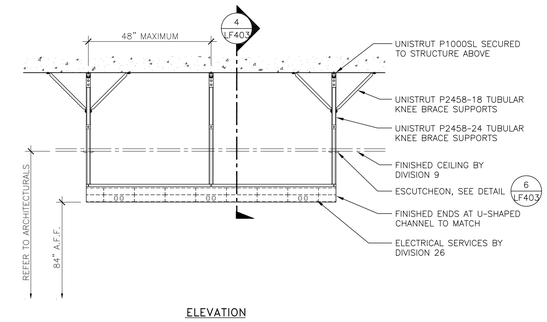

OVERHEAD SERVICE CARRIER

1/2"=1'-0" (3)

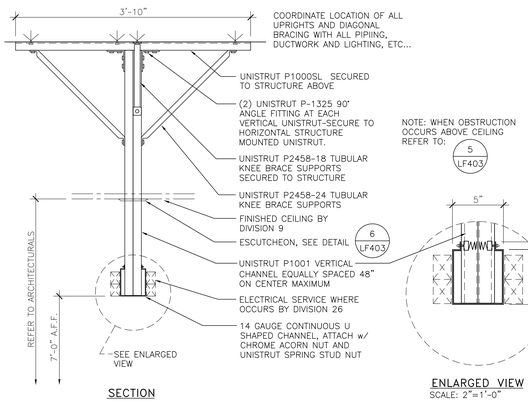

OVERHEAD SERVICE CARRIER

1"=1'-0" (4)

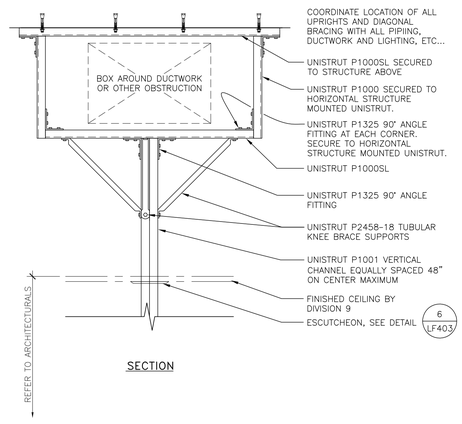

OVERHEAD SUPPORT w/ OBSTRUCTION

1"=1'-0" (5)

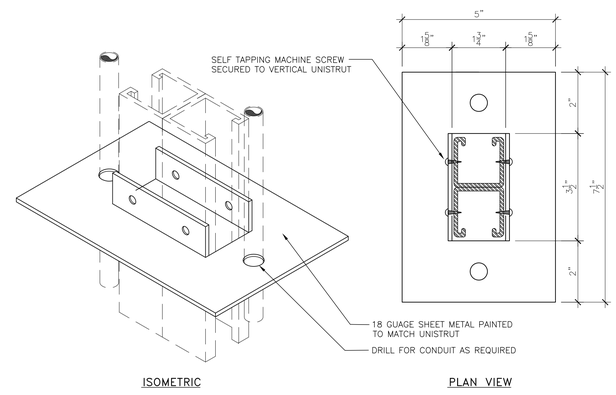

ESCUTCHEON

6"=1'-0" (6)

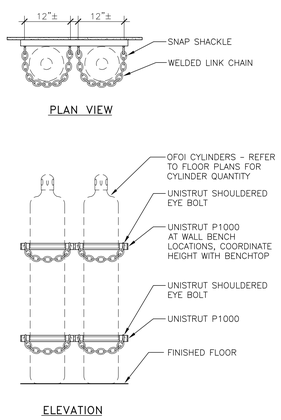

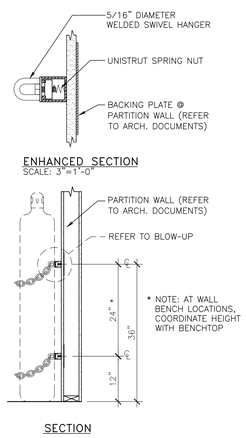

CYLINDER RESTRAINT

3/4"=1'-0" (7)

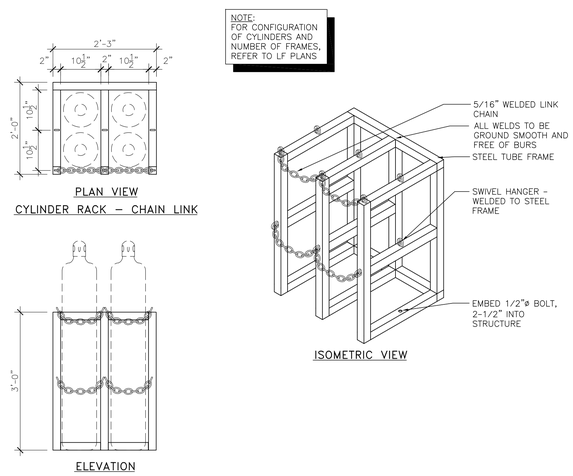

CYLINDER RACK

3/4"=1'-0" (8)

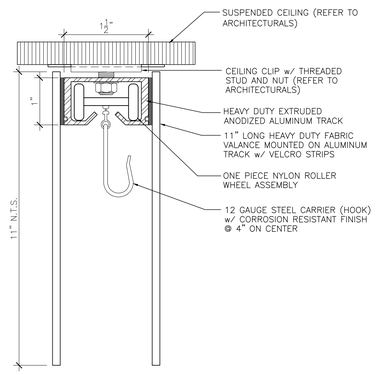

BLACKOUT/HEALTH CUBICLE CURTAIN TRACK

SCALE: FULL NTS (9)

GSBS ARCHITECTS

375 WEST 200 SOUTH
SALT LAKE CITY, UT 84101

P 801.521.8600
F 801.521.7913

www.gsbsarchitects.com

REVISIONS:

RFD
RESEARCH FACILITIES DESIGN
3965 Fifth Avenue, Suite 400
San Diego, California 92103
TEL 619 . 297 . 0159
FAX 619 . 294 . 4901

STATE OF UTAH
RICHARD M. HEINZ
No. 4934727-0301
LICENSED ARCHITECT

May 07, 2010

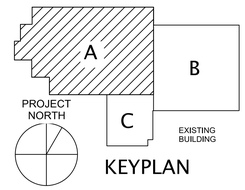

KEYPLAN

Utah Valley University New Science Building

800 West University Parkway
Orem, Utah 84058

Division of Facilities Construction and Management

DRAWN BY:	Author
CHECKED BY:	Checker
DFCM PROJECT NO.:	09020790
GSBS PROJECT NO.:	2009.115.00
ISSUED DATE:	05.07.2010

LAB FURNISHINGS DETAILS

CONSTRUCTION DOCUMENTS

LF-403

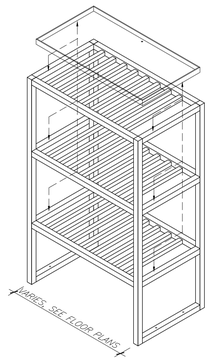

ISOMETRIC

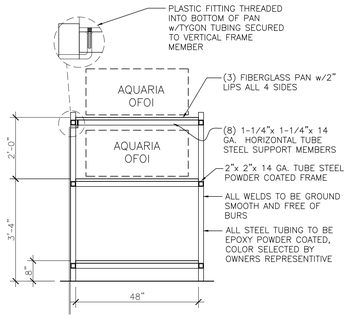

SECTION

AQUARIA RACK

1/2"=1'-0" (1)

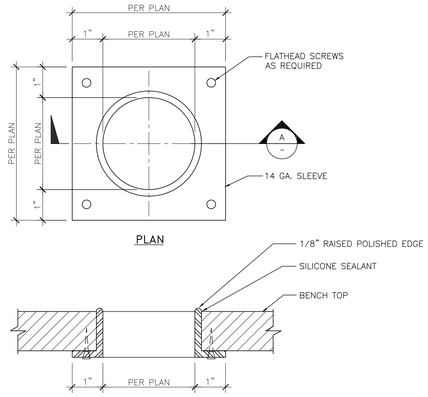

PLAN

SECTION A

SLEEVE/THROUGH PORT

6"=1'-0" (2)

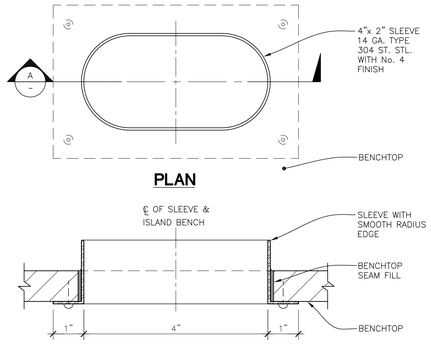

PLAN

SECTION A

ELLIPTICAL SLEEVE/THROUGH PORT

6"=1'-0" NOT_USED (3)

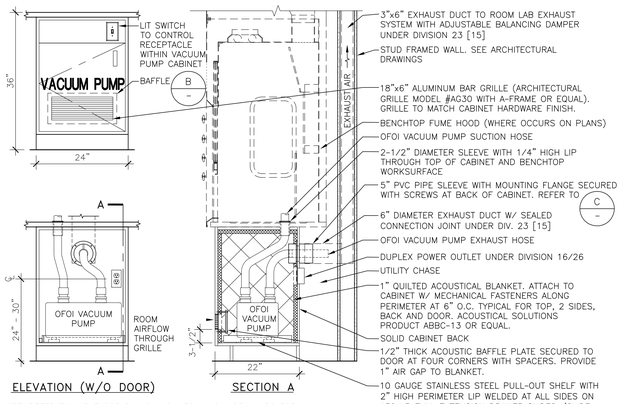

ELEVATION (W/O DOOR)

SECTION A

NOTE: REFER TO LAB FLOOR PLANS AND MECHANICAL DRAWINGS FOR LOCATIONS OF CONNECTIONS TO FUME HOODS AND VACUUM PUMP CABINETS.

VACUUM PUMP CABINET

3/4"=1'-0" (4)

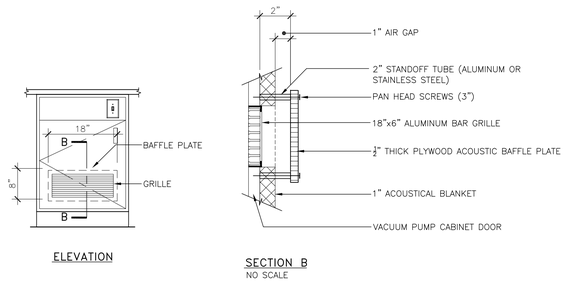

ELEVATION

SECTION B
NO SCALE

VACUUM PUMP CABINET

3/4"=1'-0" (5)

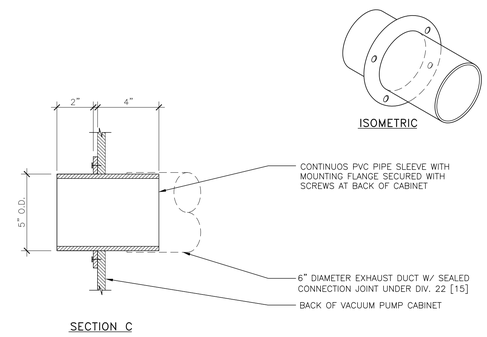

ISOMETRIC

SECTION C

EXHAUST SLEEVE

NTS (6)

NOT_USED (7)

NOT_USED (8)

NOT_USED (9)

GSBS ARCHITECTS
375 WEST 200 SOUTH
SALT LAKE CITY, UT 84101
P 801.521.8600
F 801.521.7913
www.gsbsarchitects.com

REVISIONS:

RFD
RESEARCH FACILITIES DESIGN
3965 Fifth Avenue, Suite 400
San Diego, California 92103
TEL 619 . 297 . 0159
FAX 619 . 294 . 4901

STATE OF UTAH
RICHARD M. HEINZ
No. 4934727-0301
LICENSED ARCHITECT

May 07, 2010

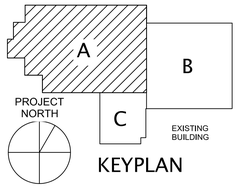

KEYPLAN

Utah Valley University New Science Building

800 West University Parkway
Orem, Utah 84058

Division of Facilities Construction and Management

DRAWN BY:	Author
CHECKED BY:	Checker
DFCM PROJECT NO.:	09020790
GSBS PROJECT NO.:	2009.115.00
ISSUED DATE:	05.07.2010

LAB FURNISHINGS DETAILS

CONSTRUCTION DOCUMENTS

LF-404

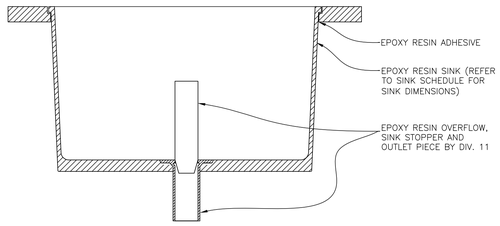

DROP-IN SINK 3"=1'-0" (1)

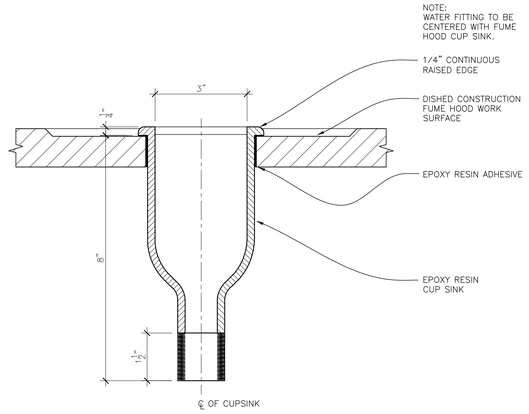

SIMILAR AT ROOM 167C WITH NO RAISED LIP

RAISED LIP EPOXY RESIN CUPSINK @ HOODS ONLY 6"=1'-0" (2)

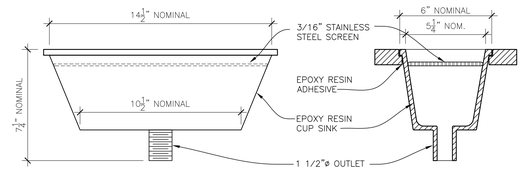

RECTANGULAR CUPSINK 3"=1'-0" (3)

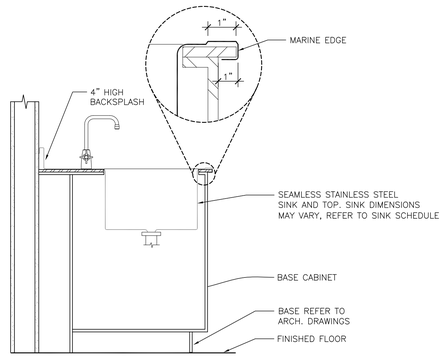

STAINLESS STEEL SINK 1/2"=1'-0" (4)

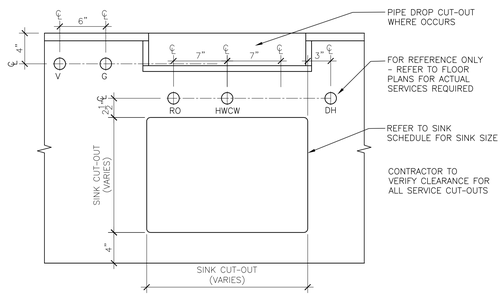

PLAN VIEW

FIXTURE SPACING AT SINKS 1_1/2"=1'-0" (5)

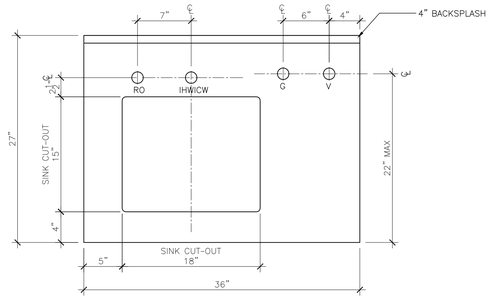

PLAN VIEW

NOTE: CONTRACTOR TO VERIFY CLEARANCE FOR ALL SERVICE CUT-OUTS

FIXTURE SPACING AT DEMO SINKS 1_1/2"=1'-0" (6)

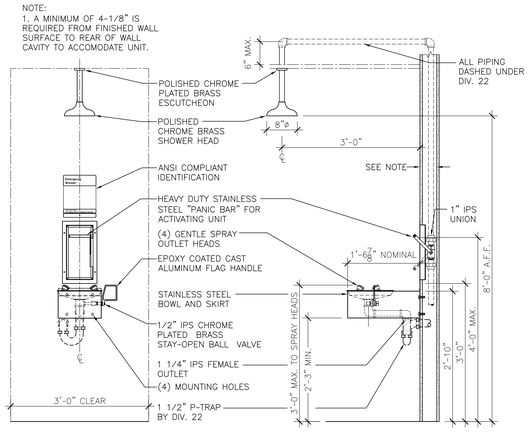

SAFETY SHOWER/EYEWASH UNIT 3/4"=1'-0" (7)

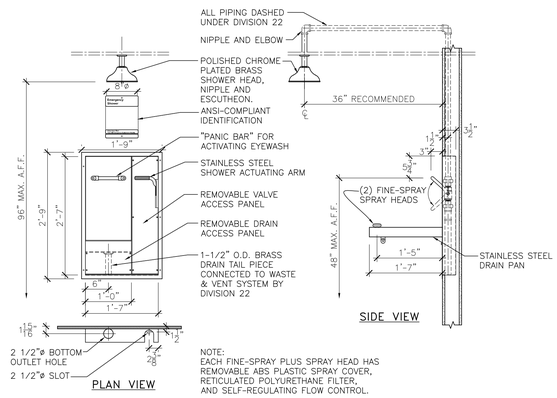

PLAN VIEW

SIDE VIEW

NOTE:
EACH FINE-SPRAY PLUS SPRAY HEAD HAS REMOVABLE ABS PLASTIC SPRAY COVER, RETICULATED POLYURETHANE FILTER, AND SELF-REGULATING FLOW CONTROL.

SAFETY SHOWER & RECESSED EYEWASH UNIT 3/4"=1'-0" (8)

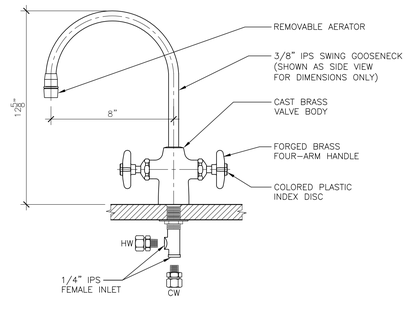

IHWICW - DECK 3"=1'-0" (9)

GSBS ARCHITECTS
375 WEST 200 SOUTH
SALT LAKE CITY, UT 84101
P 801.521.8600
F 801.521.7913
www.gsbsarchitects.com

REVISIONS:

RFD
RESEARCH FACILITIES DESIGN
3965 Fifth Avenue, Suite 400
San Diego, California 92103
TEL 619 . 297 . 0159
FAX 619 . 294 . 4901

STATE OF UTAH
RICHARD M. HEINZ
No. 4934727-0301
LICENSED ARCHITECT
May 07, 2010

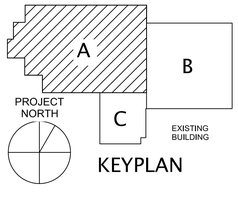

KEYPLAN

Utah Valley University New Science Building

800 West University Parkway
Orem, Utah 84058

Division of Facilities Construction and Management

DRAWN BY:	Author
CHECKED BY:	Checker
DFCM PROJECT NO.:	09020790
GSBS PROJECT NO.:	2009.115.00
ISSUED DATE:	05.07.2010

LAB FURNISHINGS DETAILS

CONSTRUCTION DOCUMENTS

LF-500

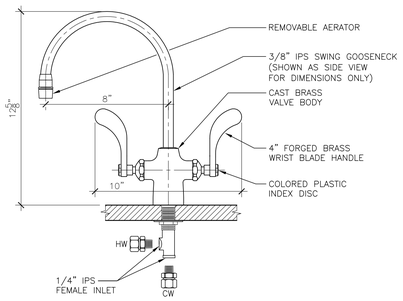

IHWICW (ADA) - DECK

3"=1'-0" (1)

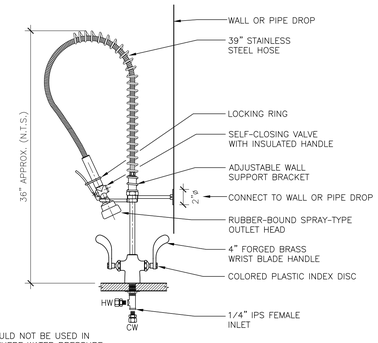

NOTE:
THIS HOSE SHOULD NOT BE USED IN APPLICATIONS WHERE WATER PRESSURE EXCEEDS 90 PSI.

(HANDLES SHOWN ROTATED FOR CLARITY)

IHWICW (SPRAY) - DECK

3"=1'-0" (2)

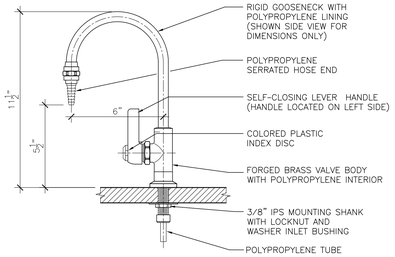

NOTES:
ALL COMPONENTS IN CONTACT WITH PURE WATER SHALL BE POLYPROPYLENE.

RO - DECK

3"=1'-0" (3)

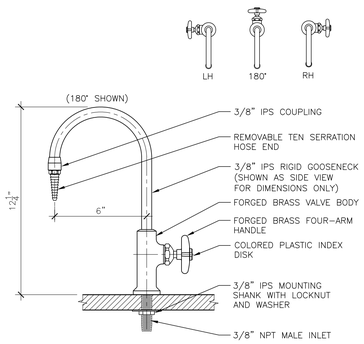

ICW - DECK

3"=1'-0" (4)

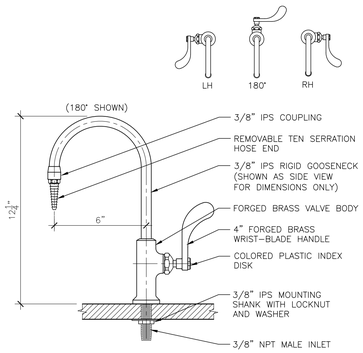

ICW (ADA) - DECK

3"=1'-0" (5)

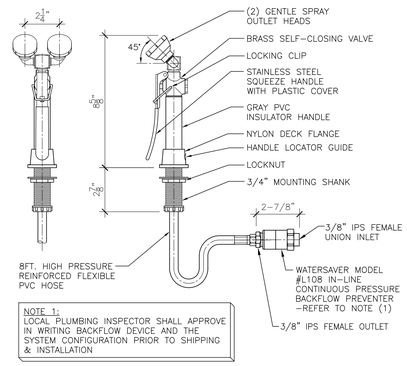

NOTE 1:
LOCAL PLUMBING INSPECTOR SHALL APPROVE IN WRITING BACKFLOW DEVICE AND THE SYSTEM CONFIGURATION PRIOR TO SHIPPING & INSTALLATION

DH - DECK

3"=1'-0" (6)

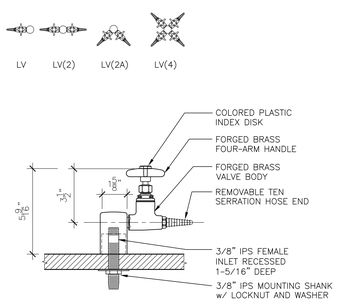

LV - DECK

3"=1'-0" (7)

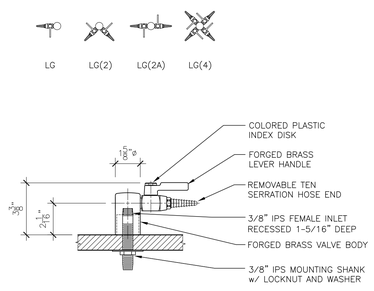

LG, SG - DECK

3"=1'-0" (8)

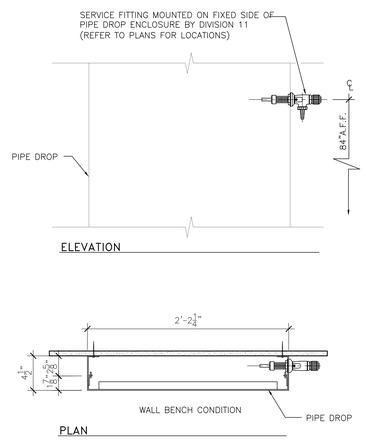

RO - PIPE DROP (MOUNTING)

1-1/2"=1'-0" (9)

GSBS ARCHITECTS

375 WEST 200 SOUTH
SALT LAKE CITY, UT 84101

P 801.521.8600
F 801.521.7913

www.gsbsarchitects.com

REVISIONS:

RFD
RESEARCH FACILITIES DESIGN
3965 Fifth Avenue, Suite 400
San Diego, California 92103
TEL 619 . 297 . 0159
FAX 619 . 294 . 4901

STATE OF UTAH
RICHARD M. HEINZ
No. 4934727-0301
LICENSED ARCHITECT

May 07, 2010

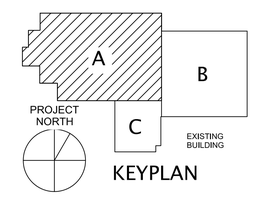

KEYPLAN

Utah Valley University New Science Building

800 West University Parkway
Orem, Utah 84058

Division of Facilities Construction and Management

DRAWN BY:	Author
CHECKED BY:	Checker
DFCM PROJECT NO.:	09020790
GSBS PROJECT NO.:	2009.115.00
ISSUED DATE:	05.07.2010

LAB FURNISHINGS DETAILS

CONSTRUCTION DOCUMENTS

LF-501

NOTES:
1. FITTING TO BE CENTERED WITH FUME HOOD CUP SINK.

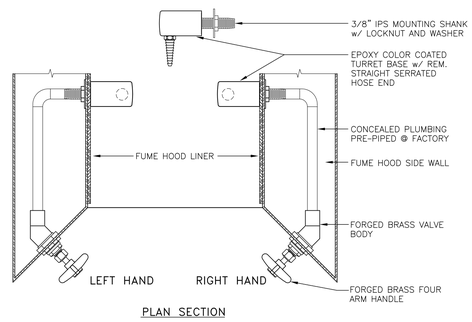

PLAN SECTION

ICW - FUME HOOD

3"=1'-0" (1)

NOTES:
1. FITTING TO BE CENTERED WITH FUME HOOD CUP SINK.

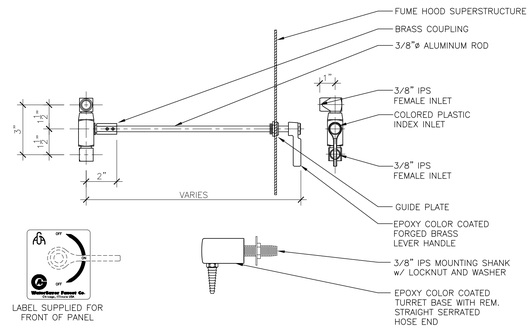

ICW (ADA) - FUME HOOD

3"=1'-0" (2)

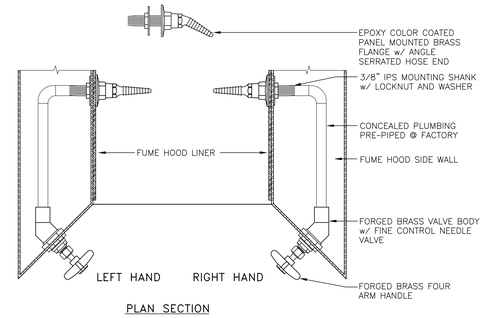

PLAN SECTION

LV - FUME HOOD

3"=1'-0" (3)

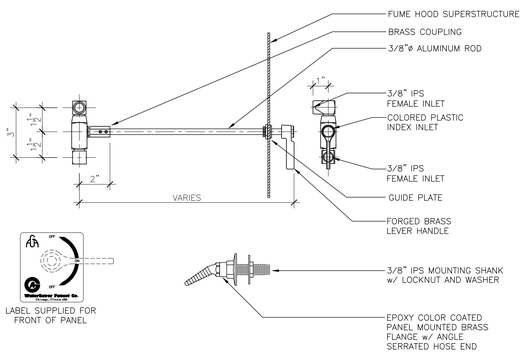

LV (ADA), LG (ADA) - FUME HOOD

3"=1'-0" (4)

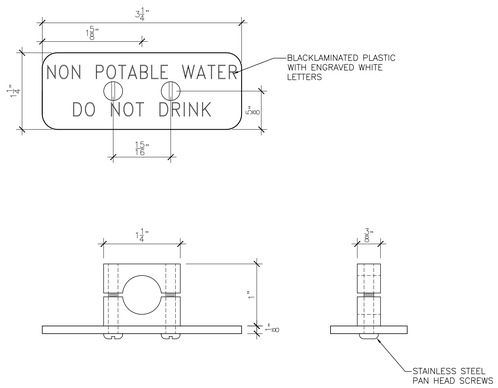

INDUSTRIAL WATER SIGN

12"=1'-0" (5)

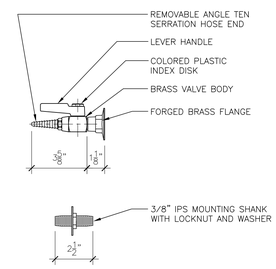

SG - WALL

3"=1'-0" (6)

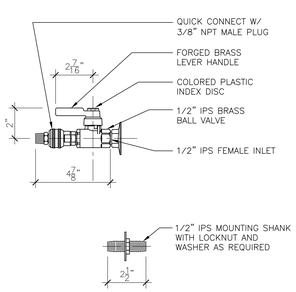

PCWS/R - WALL

3"=1'-0" (7)

NOT USED

(8)

NOT USED

NTS (9)

GSBS ARCHITECTS
375 WEST 200 SOUTH
SALT LAKE CITY, UT 84101
P 801.521.8600
F 801.521.7913
www.gsbsarchitects.com

REVISIONS:

RFD
RESEARCH FACILITIES DESIGN
3965 Fifth Avenue, Suite 400
San Diego, California 92103
TEL 619 . 297 . 0159
FAX 619 . 294 . 4901

STATE OF UTAH
RICHARD M. HEINZ
No. 4934727-0301
LICENSED ARCHITECT
May 07, 2010

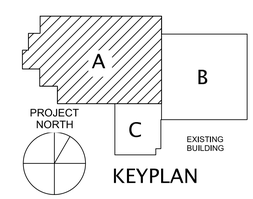

KEYPLAN

Utah Valley University New Science Building

800 West University Parkway
Orem, Utah 84058

Division of Facilities Construction and Management

DRAWN BY:	Author
CHECKED BY:	Checker
DFCM PROJECT NO.:	09020790
GSBS PROJECT NO.:	2009.115.00
ISSUED DATE:	05.07.2010

LAB FURNISHINGS DETAILS

CONSTRUCTION DOCUMENTS

LF-502

I. Design Criteria

A. Governing Building Code: 2009 International Building Code (IBC)

B. Floor Live Loading:
1. Office: ..... 80 psf Live Load + 20 psf Partition Load
2. Exit Facilities & Corridors: ..... 100 psf Live Load
3. Mechanical Rooms: ..... 125 psf Live Load or actual weights, if larger

C. Roof Live Loading:
1. Roof Live Load: ..... 20 psf
2. Roof Snow Load: ..... 30 psf + Drift per IBC
   a. Ground Snow Load, P_g: ..... 43 psf
   b. Snow Exposure Factor, C_e: 1.0
   c. Importance Factor, I_S: 1.1
   d. Thermal Factor, C_t: 1.0

D. Earthquake:
1. Occupancy Category: III
2. Seismic Design Category ..... D
3. Spectral Response Accelerations.
   S_S = 1.148 g S_{DS} = 0.797 g
   S_1 = 0.485 g S_{D1} = 0.49 g
4. Soil Site Class: ..... D on improved soil
   F_a = 1.041 F_v = 1.515
5. Basic Seismic-Force-Resisting System: ..... SCBF
   R = 6 C_d = 5 Ω_0 = 2.5
6. Importance Factor, I_E: 1.25
7. Design Base Shear: ..... 1978 kips
8. Design Story Drift, Δ: ..... 1.5% H in
9. Analysis Procedure: ..... Model Response Spectrum Analysis (Dynamic)

E. Wind:
1. Basic Wind Speed (3-second gust): ..... 90 mph
2. Importance Factor, I_W: 1.15
3. Exposure: C
4. Internal Pressure Coefficient, GC_{pi}: 0.18
5. Topographic Factor, K_{zt}: 1.0
6. Components and Cladding Design Pressure - Walls:
   a. Within 36 feet of building corner
      (1) Tributary Area < 50 sq. ft. ..... 35 psf
      (2) Tributary Area >= 50 sq. ft. ..... 30 psf
   b. All other areas
      (1) Tributary Area < 50 sq. ft. ..... 29 psf
      (2) Tributary Area >= 50 sq. ft. ..... 25 psf
7. Components and Cladding Design Pressure – Roof:
   a. Within 36 feet of building corner.
      (1) Tributary Area < 50 sq. ft. ..... 66 psf
      (2) Tributary Area >= 50 sq. ft. ..... 39 psf
      (3) Tributary Area >= 100 sq. ft. ..... 28 psf
   b. Within 36 feet of building edge.
      (1) Tributary Area < 50 sq. ft. ..... 44 psf
      (2) Tributary Area >= 50 sq. ft. ..... 33 psf
      (3) Tributary Area >= 100 sq. ft. ..... 28 psf
   c. All other areas ..... 26 psf

F. Foundation:
1. Subsurface Conditions:
   Soils report and log of borings was obtained by the Owner for the Engineer's use in the design of the foundation, and is not a part of the Contract Documents. This report and log of borings is available for the Contractor's information, but is not a warranty of the subsurface conditions. The Contractor may use the report at his own risk.
2. Soils Report by RB&G Engineering, Inc, dated November 30, 2009.
3. Soil Bearing Pressure: ..... 5,000 psf, on Compacted Fill above improved soil with stone columns.
4. Lateral Soil Pressure Fluid Equivalent Density.
   a. Active: ..... 38 pcf (retaining walls)
   b. At Rest: ..... 56 pcf (rigid foundation walls)
   c. Passive: ..... 300 pcf
   d. Increase for Seismic: ..... 24 pcf
5. Coefficient of Friction: 0.4

G. Classification for Fire Rated Construction:
1. For the purpose of determining fire-resistive assemblies, open-web steel framing members shall be considered unrestrained. All other steel floor and roof framing members shall be considered restrained.
2. Diagonal members in vertical braced frames shall be considered as secondary members for fire proofing protection

II. Earthwork

A. Clearing: The entire building area shall be scraped to remove the top 4 inches of soil, including all vegetation and debris.

B. Near surface is liquefiable soil: The depth of this material is approximately 15 feet. Do not place any footing on this material. Improve soil by using stone columns/aggregate piers extended below elevation 70'-0" min. Remove all liquefiable soil material from below footings and slab on grade and replace it with 2'-0" min compacted structural fill.

C. Proof rolling: The natural undisturbed soil below all footings shall be proof rolled prior to placing concrete. Remove all soft spots and replace with compacted structural fill.

D. Compacted structural fill: All fill material shall be a well-graded granular material with a maximum size less than 3 inches and with not more than 15 percent passing a No. 200 sieve. It shall be compacted to 95 percent of the maximum laboratory density as determined by ASTM D1557. All fill shall be tested (See Specifications and the Quality Assurance section of the GSN).

III. Concrete

A. Materials shall comply with the Standards specified in American Concrete Institute (ACI) 318-05, "Building Code Requirements for Structural Concrete."
1. Compressive strengths of concrete at 28 days shall be as follows:
   a. Footings: ..... 3000 psi
   b. Mat Footings: ..... 4000 psi
   c. Slabs on Grade: ..... 3000 psi
   d. Walls: ..... 4000 psi
   e. Columns: ..... 4000 psi
   f. Joists, Beams and Suspended Slabs: ..... 4000 psi
   g. Lightweight concrete over Steel Deck: ..... 3000 psi
   h. All other Site Cast Concrete: ..... 4000 psi
2. Concrete Density (Maximum Air Dry Weight):
   a. Normal weight concrete shall be approximately 145 to 155 pounds per cubic foot.
   b. Lightweight concrete shall not exceed 110 pounds per cubic foot and shall be made of lightweight coarse aggregates and a blend of lightweight and normal weight fines.
3. Reinforcement steel:
   a. ASTM A615 Grade 60, fy = 60,000 psi min. unless noted otherwise.
   b. Reinforcement at concrete moment frames and shear wall jambs shall be ASTM A706 or ASTM A615 Grade 60, with the following properties:
      (1) Actual yield strength based on mill tests shall not exceed 78,000 psi.
      (2) Retest shall not exceed 81,000 psi.
      (3) Ratio of actual ultimate tensile stress to the actual yield strength shall not be less than 1.25.
      (4) Mill tests shall be submitted to the Engineer.
4. Admixtures:
   a. Air-entraining admixtures, comply with ASTM C 260 (when used).
      (1) When air content of a trowel finished floor slab exceeds 3%, there is an increased risk for delaminations and blistering to occur. When this situation is present, the contractor shall pay special attention to the finishing procedures to help minimize such risks. Refer to ACI 302.1R-96 "Guide for Concrete Floor and Slab Construction" for proper finishing guidelines.
   b. Calcium chloride shall not be added to the concrete mix.
5. Only one grade or type of concrete shall be poured on the site at any given time.
6. Plastic coated tie wires and chairs shall be used to support reinforcing bars, tie bars and tendons.

B. Formwork shall comply with ACI Standards Publication 347 and the project specifications. The contractor shall be responsible for the design, detailing, care, placement and removal of the formwork and shores.

C. Concrete cover requirements for deformed bar reinforcing steel shall comply with ACI 318, "Building Code Requirements for Structural Concrete".
1. Cast-in-place Concrete: Clear Cover
   a. Cast against and permanently exposed to earth: ..... 3"
   b. Formed concrete exposed to earth or weather:
      #6 thru #18 bars ..... 2"
      #5 and smaller bars ..... 1.1/2"
   c. Concrete not exposed to weather or in contact with ground:
      Slabs, Walls, Joists, #11 bars and smaller ..... 3/4"
      Beams, Columns: Primary Reinf., Ties, Stirrups, Spirals ..... 1.1/2"
   d. Concrete Tilt-Up Panels:
      #8 and smaller bars ..... 1"
      #9 thru #18 bars ..... 2"

D. Construction Joints and Control Joints:
1. Provide a continuous 2 X 4 keyway or a surface intentionally roughened to a full amplitude of approximately ¼" in all wall footings. Adjust the keyway as necessary to provide for proper bar placement. A continuous keyway shall not be used for concrete shear wall to footing connections, unless specifically indicated. Refer to project plans, schedules and details for the shear wall to footing connection requirements.
2. All horizontal and vertical construction joints shall have a continuous 2 X 4 keyway along the joint or joints shall be intentionally roughened to a full amplitude of approximately ¼", unless noted otherwise.
3. Provide reinforcement dowels to match the member reinforcement across the joint except for shear walls, unless noted otherwise. For dowels across construction joints and wall to footing connections of concrete shear walls, refer to specific project plans, schedules, and details.
4. Construction joints in suspended concrete pours shall be made at the center of spans.
5. Slabs on grade shall have construction or control joints spaced not to exceed 30 times the slab thickness in any direction. All discontinuous control or construction joints shall be reinforced with 2 - #4 x 48". See structural details. Construction joints shall not exceed a distance of 125'-0" o.c. in any direction.
6. Control joints shall be installed in slabs on grade so the length to width ratio of the slab is no more than 1.25:1. Control joints shall be completed within 12 hours of concrete placement. Control joints may be installed by:
   a. Saw cut a depth of 1/4 the thickness of the slab
   b. Tooled joints a depth of 1/4 the thickness of the slab
7. Control joints in visually exposed walls, unless noted otherwise: (Joints shall line up with masonry and architectural joints, see drawings.)
   a. Vertical control joints at 10'-0" on center.
   b. Reinforcing shall be continuous through control and construction joints, unless noted otherwise.
   c. Control joints in concrete foundation walls shall line up with masonry control joints.
8. Control joints shall be installed in suspended slabs over steel decking by sawcutting along all interior grid lines. Joints centered above the purlins shall be ¾" deep and shall have #4 X 5'-0" at 16" o.c. reinforcing, placed perpendicular (and centered) to the purlin. Joints centered above the girders shall be ¾" deep and shall have #4 X 10'-0" at 16" o.c. reinforcing placed perpendicular (and centered) to the girder. The #4 bar reinforcing centered above the grid lines is in addition to the specified WWF continuous throughout the suspended slabs over steel decking. Reinforcing shall be placed 1" below the top of the slab.

E. Detailing: All reinforcing, including WWF, shall be detailed, bolstered & supported to comply with ACI 315, "Details and Detailing of Concrete Reinforcement" and the Concrete Reinforcing Steel Institute (CRSI) recommendations. Reinforcing bars shall not be welded unless specifically shown on drawings.
1. Lap splice lengths shall be detailed to comply with the "Reinforcing Bar Lap Splice Schedule" contained within the contract drawings. Splices may be made with mechanical splices capable of 125% tension capacity of the bar being spliced. Mechanical splices shall be the positive connecting type coupler. They shall be covered by a current ICC Code Evaluation Report. Use "Cadwld" splice "Lentom" taper threaded rebar splices, "Bar-Lock" lockshear bolt coupling sleeves, or approved equivalent. If mechanical splices are used, splices or couplers on adjacent bars shall be staggered a minimum of 24" apart along the longitudinal axis of the reinforcing bars.
2. All embedments and dowels shall be securely tied to formwork or to adjacent reinforcing prior to the placement of concrete.
3. Use chairs or other support devices recommended by the CRSI to support and tie reinforcement bars and WWF prior to placing concrete. WWF shall be continuously supported at 36" o.c. maximum.
4. Provide corner bars at intersecting wall corners using the same bar size and spacing as the horizontal wall reinforcing. Unless noted otherwise, corner bar lap lengths shall conform with reinforcing bar lap splice lengths as noted above.
5. All vertical reinforcing shall be doweled to footings, or to the structure below. Dowels shall be the same size and at the same spacing as the vertical reinforcing scheduled (or detailed) for the element above. Lap splice lengths shall comply as noted above or as shown in the drawings. Dowels extending into footings shall terminate with a 90 degree standard ACI hook and shall extend to within 4" of the bottom of the footing. Footing dowels (#8 bars and smaller) with hooks need not extend more than 20" into footings.
6. Horizontal wall reinforcing shall terminate at ends of walls and openings into the far end of the jamb column with a 90-degree standard ACI hook, unless shown otherwise. Lap horizontal bar splices as noted above or as shown in the drawings. Horizontal wall reinforcing shall be continuous through construction and control joints. Splices in horizontal reinforcement shall be staggered, so the splice laps will not overlap. Splices in two curtains where used shall not occur in the same location, splice laps shall not overlap.
7. Wall Openings 8" to 36" wide: Place 2- #5 bars (or 1 - #7 bar in 10" walls and thinner) around all openings 8" or larger in any direction, and extend the reinforcing bars a minimum of 24" beyond the corner of the openings, unless noted otherwise. Where 24" is not available, extend bars as far beyond the opening as possible and terminate them with a 90 degree standard ACI hook.
8. Wall Openings 36" wide and wider: Provide reinforced concrete lintels per Concrete Lintel Schedule over the top of, and 2-#5 bars (or 1 - #7 bar in 10" walls and thinner) and on all sides and below every unscheduled opening, unless noted otherwise. Bars for all openings shall extend a minimum of 24" beyond the corners of the opening. Vertical bars shall extend from floor level below to the floor, or roof, level above. Where 24" extension is not possible, extend bars as far beyond the opening as possible and terminate them with a 90 degree standard ACI hook.
9. Provide 2-#5 X 4'-0" diagonal bars (or 1 - #7 x 4'-0" bar in 10" walls and thinner) at the corners of all openings. Diagonal bars shall be centered on the corner of the opening. All recesses in concrete walls that interrupt reinforcing steel shall be reinforced the same as an opening.
10. Contractor shall coordinate placement of all openings, curbs, dowels, sleeves, conduits, bolts, inserts and other embedded items prior to concrete placement.
11. All tied columns shall have ties spaced at one-half the required tie spacing for a distance of one-sixth of the column height above and below all floor (or beam) and roof (or beam) levels or any other point of lateral support, unless noted or detailed otherwise on the structural drawings.
12. Column cross-ties shall have a 135 degree hook at one end and a 90 degree hook at the other. The hooks shall engage the vertical column reinforcement. The 135 degree hooks of consecutive cross-ties engaging the same vertical bars shall engage alternate vertical bars
13. Splices in vertical column reinforcing will be permitted at floor levels only, unless shown otherwise. Where changes in the cross section of the column occur, the longitudinal bars shall be offset in a region where lateral support is afforded. Where offset, the slope of the inclined portion of the bar shall not exceed 1 to 6 (horizontal to vertical). In the case of tied columns, the ties shall be spaced not over three inches on center for a distance of one foot above and one foot below the point of offset.
14. All reinforcement shall be bent cold, and shall be bent only once at the same location. All reinforcement shall be shop bent, unless otherwise permitted by the engineer.

F. Minimum Reinforcing: Wall reinforcing shall be as follows, unless noted otherwise:

Wall Thickness	Horizontal Reinf.	Vertical Reinf.
6"	#4 @ 13" o.c.	#4 @ 18" o.c.
8"	#5 @ 15" o.c.	#4 @ 16" o.c.
10"	#5 @ 12" o.c.	#4 @ 13" o.c.
12"	#4 @ 13" o.c. Each Face	#4 @ 16" o.c. Each Face
Others	0.25% of Wall Area	0.15% of Wall Area

Place steel in the center of the wall (except in walls thicker than 10" and where shown otherwise). Walls thicker than 10" shall have two curtains of reinforcing (placed near each face of the wall), unless otherwise shown on the structural drawings. Spacing shall not exceed three times the wall thickness nor 18". In addition to the above reinforcing, 2 - #5 (or 1 - #7 in 10" walls and thinner) x continuous horizontal bars shall be placed at the bottom of the wall (near the footing) and at each floor level, at the roof level and at the top of wall.

G. No aluminum conduit or product containing aluminum or any other material injurious to concrete shall be embedded in concrete.

H. Unless otherwise noted, all slabs on grade shall be 4.5" thick.

I. Concrete Void Filler: Shall be expanded polystyrene, Type IX, 2.0 lbs. ft cubed density (ASTM C303/D 1622).
1. Not to be used as Site Backfill
2. Manufactures:
   a. ACH Foam Technologies: www.achfoam.com
   b. R Control: www.r-control.com
   c. Dow building Solutions: www.dow.com.
   d. Substitutions: See Specifications Section 016000—Product requirements.

IV. Masonry

A. Materials, unless noted otherwise:
1. Concrete Masonry Units: ASTM C 90, Lightweight, minimum unit strength of 2800 psi average or better. (fm = 2000 psi)
2. Hollow Clay Units: Hollow Brick, ASTM C652, Grade SW, minimum unit strength of 6600 psi average or better. (fm = 2500 psi)
3. Mortar: Use Type "S" according to IBC Section 2103.8, and tested according to ASTM C270. Admixtures shall not be added to the mortar mix. (2000 psi minimum compressive strength).
4. Grout: Conform to IBC Table 2103.12 or ASTM C476. Proportioned according to IBC Section 2103.12 and tested according to ASTM C1019. Grout shall attain a minimum compressive strength equal to or greater than f'm but shall not be less than 2000 psi at 28 days.
5. Reinforcing: Grade 60 reinforcing steel shall comply with ASTM A615. Wire joint reinforcing shall comply with ASTM A951.
6. Deformed Bar Anchors (DBA): All DBAs shall comply with ASTM A496.
7. Anchor Bolts (AB): ASTM A307 with ASTM A563 heavy hex nuts and hardened washers, Grade A, unless noted otherwise.
8. Headed Stud Anchors (HSA): Manufacture all HSAs in conformance with ASTM A108 with dimensions complying with AISC specifications.

B. Construction Requirements:
1. Mortar Joints: Joints shall be "concave", "V-joint" or "weathered raked" for structural members unless noted otherwise on architectural drawings.
2. Masonry walls, beams and columns shall be constructed with running bond, unless noted otherwise.
3. Grouting Requirements: Comply with IBC Section 2104 and ACI 530.1/ASCE 6/TMS 602. Grout shall be mechanically consolidated and mechanically reconsolidated according to ACI 530.1/ASCE 6/TMS 602 Section 3.5 E.
4. Reinforcing Bars shall not be welded unless specifically shown on drawings. In such cases, use only AWS standards. Do not substitute reinforcing bars for DBAs or HSAs.
5. Control Joints: Spacing shall not exceed 40'-0". See architectural drawings for locations.
6. Grout all beam and joist pockets solid after installation of beams and joists.
7. Masonry Veneer Attachment and Reinforcing:
   a. To steel stud and wood stud walls: Veneer shall be attached to the studs Dur-O-Wal D/A 213 S seismic veneer anchors or Hohmann & Barnard DW-10 or DW-10HS seismic veneer anchors (or equal) spaced at 16" o.c. Veneer anchors shall be attached to studs with #10 corrosion resistant self drilling screws. Attach the veneer to the anchors with Dur-O-Wal Seismic Steel Pintles or Hohmann & Barnard 3/16" Byna-Tie with Seismiclips (or equal) spaced at a maximum of 16" o.c. in both directions. Anchor ties shall engage to a galvanized No. 9 gauge horizontal joint reinforcement wire in the veneer which shall be continuous and shall be placed at 16" o.c. maximum at the center of the veneer.
   b. Other methods of attachment may be used after written acceptance by the architect and structural engineer.
   c. Steel Lintels: Provide steel angle lintels at all openings through the masonry veneer. Provide one inch of bearing for each foot of width of opening, with a minimum bearing of six inches. See the Steel Angle Lintel Schedule for size.

C. Detailing Requirements:
1. Standards: Reinforcing detailing shall comply with American Concrete Institute (ACI) Standard 315, "Details and Detailing of Concrete Reinforcement."
2. Reinforcement Protection (cover):
   a. Joint reinforcement shall have not less than 5/8" mortar coverage from the exposed face
   b. Other reinforcement shall have a minimum coverage of one bar diameter over all the bars, but not less than 3/4". When masonry is exposed to soil, minimum coverage shall be 1.5".
3. Vertical steel reinforcement shall be placed and secured against displacement prior to grouting by wire positioners or other suitable devices: at intervals not exceeding 112 bar diameters, at the grout lift heights, or at bar splice locations, whichever is less. Vertical reinforcing shall be located at the center of the wall, unless noted otherwise.
4. Lap Splice Lengths: Lap all masonry reinforcing bars per the "Masonry Reinforcing Bar Lap Splice Schedule." Joint reinforcement shall lap a minimum of 6".
5. Corner Bars: Horizontal reinforcement shall be continuous at all corners and at intersecting walls. Provide corner bars with the required lap splice length.
6. Dowels: All vertical reinforcing shall be doweled to the foundation wall, footing (structure below) and to the structure above with the same size dowel, spacing (and in the same core) as the vertical wall reinforcing unless noted otherwise.
7. Wall Openings 24" wide and wider: Provide reinforced masonry lintels per Masonry Lintel Schedule over the top of, and 2 - #5 bars, in grouted spaces, on all sides and adjacent to every unscheduled opening, unless noted otherwise. Bars for all openings shall extend a minimum of 48 bar diameters beyond the corners of the opening. Vertical bars shall extend from floor level below to the floor , or roof, level above. Where a 48 bar diameter extension is not possible, extend bars as far beyond the opening as possible and terminate them with a 90 degree standard ACI hook.
8. Horizontal wall reinforcing shall be continuous through joining concrete walls, masonry walls, columns, and pilasters. Provide a key between the wall and the column or pilaster. Horizontal wall reinforcing shall be placed inside the column vertical reinforcing.
9. Anchor bolts and headed stud anchors shall be set in a grouted cell. Anchor bolts and headed stud anchors shall have 1" grout surrounding the shank at its penetration. Grout shall be flush with the face or top of the masonry.
10. All masonry column ties shall terminate with 135 degree hooks plus a 6 bar diameter extension (4" minimum).
11. The exposed face of all embed plates shall be set flush with the face of masonry wall or column.

D. Minimum Reinforcing:
All masonry walls shall be reinforced as follows, unless shown otherwise on the drawings. Reinforcing shall be placed in grouted cells.

Wall Thickness	Horizontal Reinf.	Vertical Reinf.
6"	#4 @ 48" o.c.	#5 @ 32" o.c.
8"	#5 @ 48" o.c.	#5 @ 32" o.c.
10"	#6 @ 48" o.c.	#6 @ 32" o.c.
12"	2 - #5 @ 48" o.c.	#6 @ 32" o.c.

Drawing List

Dwg. No.	Drawing Name
SE001	GENERAL STRUCTURAL NOTES
SE002	GENERAL STRUCTURAL NOTES
SB101	OVERALL FOOTING & FOUNDATION PLAN
SB101A	PARTIAL FOOTING & FOUNDATION PLAN - AREA A
SB101B	PARTIAL FOOTING & FOUNDATION PLAN - AREA B
SB101C	PARTIAL FOOTING & FOUNDATION PLAN - AREA C
SB501	TYPICAL FOOTING & FOUNDATION DETAILS
SB502	TYPICAL FOOTING & FOUNDATION DETAILS
SB503	TYPICAL FOOTING & FOUNDATION DETAILS
SB504	TYPICAL FOOTING & FOUNDATION DETAILS
SB505	TUNNEL SECTIONS
SB506	FOUNDATION DETAILS
SB510	FOUNDATION & SHORING WALL DETAILS
SB601	CONCRETE SCHEDULES
SB602	MASONRY SCHEDULES
SF111	OVERALL LEVEL 1 FLOOR FRAMING PLAN
SF111A	PARTIAL LEVEL 1 FLOOR FRAMING PLAN - AREA A
SF111B	PARTIAL LEVEL 1 FLOOR FRAMING PLAN - AREA B
SF111C	PARTIAL LEVEL 1 FLOOR FRAMING PLAN - AREA C
SF121	OVERALL LEVEL 2 FLOOR FRAMING PLAN
SF121A	PARTIAL LEVEL 2 FLOOR FRAMING PLAN - AREA A
SF121B	PARTIAL LEVEL 2 FLOOR FRAMING PLAN - AREA B
SF131	OVERALL ROOF FRAMING PLAN
SF131A	PARTIAL ROOF / P.H. FLOOR FRAMING PLAN - AREA A
SF131B	PARTIAL ROOF FRAMING PLAN - AREA B
SF141	OVERALL HIGH ROOF FRAMING PLAN
SF141A	PENTHOUSE ROOF FRAMING PLAN - AREA A
SF141B	PARTIAL ROOF FRAMING PLAN - AREA B
SF201	BRACED FRAME ELEVATIONS
SF202	BRACED FRAME ELEVATIONS
SF203	BRACED FRAME ELEVATIONS
SF211	BRACED FRAME SCHEDULE & DETAILS
SF212	BRACED FRAME DETAILS
SF213	BRACED FRAME DETAILS
SF501	TYPICAL FLOOR FRAMING DETAILS
SF502	TYPICAL FLOOR FRAMING DETAILS
SF503	TYPICAL FLOOR FRAMING DETAILS
SF504	TYPICAL FLOOR FRAMING DETAILS
SF505	FLOOR FRAMING DETAILS
SF521	TYPICAL ROOF FRAMING DETAILS
SF522	TYPICAL ROOF FRAMING DETAILS
SF523	TYPICAL ROOF FRAMING DETAILS
SF524	TYPICAL ROOF FRAMING DETAILS
SF525	TYPICAL ROOF FRAMING DETAILS
SF526	ROOF FRAMING DETAILS
SF601	STRUCTURAL STEEL SCHEDULES
SF602	STEEL COLUMN SCHEDULE

PLAN MARKS

BF-#	BRACED FRAME
CB-#	CONCRETE BEAM
CC-#	CONCRETE COLUMN
CDP-#	CONC DRILLED PIER
CFW-#	CONC FDTN. WALL
CGB-#	CONC GRADE BEAM
CJ-#	CONCRETE JOIST
CL-#	CONCRETE LINTEL
CP-#	CONCRETE PIER
CRW-#	CONC RETAINING WALL
CSG-#	CONC SLAB ON GRADE
CSS-#	CONC SUSPENDED SLAB
CSW-#	CONC SHEAR WALL
CW-#	CONCRETE WALL
FC#	CONTINUOUS FOOTING
FM#	MAT FOOTING
FR#	RECTANGULAR FOOTING
FS#	SQUARE FOOTING
FTS#	THICKEND SLAB FOOTING
MC-#	MASONRY COLUMN
MF-#	MOMENT FRAME
ML-#	MASONRY LINTEL
MP-#	MASONRY PIER
MW-#	MASONRY WALL
PD-#	PLYWOOD DIAPHRAGM
PSW-#	PLYWOOD SHEAR WALL
SBP-#	STEEL BASE PLATE
SC-#	STEEL COLUMN
SCP-#	STEEL CAP PLATE
SD-#	STEEL DECK

CONSTRUCTION NOTES

1. THE CONTRACTOR SHALL FIELD VERIFY ALL EXISTING CONDITIONS PRIOR TO CONSTRUCTION. ALL DISCREPANCIES SHALL BE BROUGHT TO THE ATTENTION OF THE DESIGN TEAM IN A TIMELY MANNER SUCH THAT WORK SHALL NOT BE DELAYED.

MICRO-PILE NOTES

1. ALL PILE DESIGNS SHALL BE THE RESPONSIBILITY OF THE (SUB)CONTRACTOR. DESIGN OF PILES SHALL BE PERFORMED BY A QUALIFIED ENGINEER LICENSED IN THE STATE OF UTAH. THE DESIGN OF THE PILES SHALL BE BASED ON THE GEOTECHNICAL REPORT DATED NOVEMBER, 2009 BY RB&G.

2. PILE SHALL BE DESIGNED FOR THE FOLLOWING ALLOWABLE LOADS. A MINIMUM SAFETY FACTOR OF 3.0 SHALL BE USED FOR END BEARING AND 2.5 SHALL BE USED FOR SKIN FRICTION/ADHESION. EXCEPT, FOR FORCES MARKED WITH AN *, A SAFETY FACTOR OF 2.0 MAY BE USED. PILE STIFFNESS SHALL BE ENGINEERED SUCH THAT MAXIMUM DEFLECTIONS AT THIS LOAD ARE LIMITED TO 3/8 INCH. PILE MARKS NOTED ON THE PLANS SHALL APPLY TO ALL OF THE PILES TYP U.N.O.

3.ALL PILES SHAL BE DESIGNED FOR AN ALLOWABLE LOAD OF 60 KIPS AND 60KIPS DOWNLOAD.

4. PILES AND PLIE SHORING WALLS SHALL BE DESIDNED FOR COMBINED AXIAL AND LATERAL LOADS WHERE APPLICABLE. SEE GEOTECHNICL REPORT FOR SOIL LATERAL FORCES INCLUDING SEISMIC LOADING.

5. SEE SPECIFICATIONS FOR ADDTIONAL REQUIREMENTS.

HELICAL PIER NOTES

1. HELICAL PIERS SHALL HAVE ALLOWABLE AXIAL LOAD CAPACITY OF 45 KIPS AND ULTIMATE AXIAL LOAD CAPACITY OF 100 KIPS WITH 1/4 INCH SETTLEMENT. INPLACE LOAD TESTING IS REQUIRED . CONTRACTOR SHALL FORWARD A DESCRIPTION OF CHOSEN TEST METHOD TO GEOTECHNICAL ENGINEER FOR REVIEW.

2. HELICAL PIERS SHALL BE MANUFACTURED BY A.B. CHANCE CO. ACCORDING TO ICBO EVALUATION SERVICE REPORT NUMBER ER-5110. INSTALLER/MANUFACTURER SHALL SUBMIT STRUCTURAL CALCULATIONS STAMPED BY AN ENGINEER LICENSED TO PRACTICE IN THE STATE OF UTAH. COMBINED FLEXURAL AND COMPRESSIVE STRESSES AND COLUMN BUCKLING OF THE PIERS DUE TO COMPRESSION LOADS MUST BE INCLUDED IN THE ANALYSIS, AS WELL AS DESIGN OF THE BRACKET TO TRANSMIT LOADS FROM THE STRUCTURE TO THE PIER.

3. SPECIAL INSPECTION IS REQUIRED FOR INSTALLATION OF THE HELICAL PIERS AND FOUNDATION BRACKETS. ITEMS TO BE INSPECTED ARE VERIFICATION OF CATALOG NUMBERS, TYPES AND CONFIGURATIONS OF HELICAL PIER LEAD SECTIONS, EXTENSIONS, BRACKETS, BOLT TYPE AND TORQUE, INSTALLATION PROCEDURE AND DEPTH, INCLINATION AND POSITION OF HELICAL PIER, SHAFT OF PIER EXTENSION IN FULL CONTACT WITH T-SHAPED BRACKET, CONCRETE ANCHOR BOLT SIZE, TYPE AND INSTALLATION PROCEDURE, FULL-SURFACE CONTACT OF FOUNDTION BRACKETS WITH CONCRETE, AND TIGHTNESS OF BOLTS.

4. HELICALPIERS SHALL EXTEND THROUGH ALL COLLAPSIBLE SOILS TO GRAVEL SOILS BELOW. HELICAL PIERS SHALL ALSO EXTEND BELOW EXTISTING FOOTING, FOUNDATIONS AND AIR INTAKE PIPES.

5. SEE SPECIFICATIONS FOR ADDITIONAL REQUIREMENTS.

ABBREVIATIONS

AB	ANCHOR BOLT (S)
ABV	ABOVE
@	AT
ALT	ALTERNATE
APPROX	APPROXIMATE
ARCH	ARCHITECT(URAL)
BM	BEAM
BLW	BELOW
BRG	BEARING
BTWN	BETWEEN
BLDG	BUILDING
BOT	BOTTOM
C.J.	CONSTRUCTION JOINT OR CONTROL JOINT
CJP	COMPLETE JOINT PENETRATION
CMU	CONC MASONRY UNIT
COL	COLUMN
CONC	CONCRETE
CONST	CONSTRUCTION
CONT	CONTINUOUS
CONTR	CONTRACTOR
CTR	CENTER
DB	DECK BEARING
DBA	DEFORMED BAR ANCHORS
DBL	DOUBLE
DET	DETAIL
DIA (OR ∅)	DIAMETER
DIM	DIMENSION
DN	DOWN
DWG	DRAWING
DWL	DOWEL
EA	EACH
E.J.	EXPANSION JOINT (SEISMIC SEPARATION JOINT)
ELEV	ELEVATION
ELEC	ELECTRICAL
EQUIP	EQUIPMENT
EQ	EQUAL
EXIST	EXISTING
EXP	EXPANSION / EXPOSED
EXT	EXTERIOR
E.F.	EACH FACE
E.W.	EACH WAY
F.D	FLOOR DRAIN
FDTN	FOUNDATION
F.F.	FINISH FLOOR
FIN	FINISH
FL	FLOOR
FT	FOOT
FTG	FOOTING
FV	FIELD VERIFY
GA	GAUGE
GALV	GALVANIZED
GLB	GLU-LAMINATED BEAM
GR	GRADE
GSN	GENERAL STRUCTURAL NOTES
HB	HORIZONTAL BRIDGING
HT	HEIGHT
HORIZ	HORIZONTAL
HSA	HEADED STUD ANCHORS
IBC	INTERNATIONAL BUILDING CODE
ICBO	INTERNATIONAL CONFERENCE OF BUILDING OFFICIALS
ICC	INTERNATIONAL CODE COUNCIL
IN.	INCH
INSUL	INSULATION
INT	INTERIOR
I.F.	INSIDE FACE
JT	JOINT
JST	JOIST
KLF	KIPS PER LINEAL FOOT
KSF	KIPS PER SQUARE FOOT
KSI	KIPS PER SQUARE INCH
K	KIPS - 1,000 POUNDS
LF	LINEAL FOOT
LBS	POUNDS
LLH	LONG LEG HORIZONTAL
LLV	LONG LEG VERTICAL
MAS	MASONRY
MAX	MAXIMUM
MCJ	MASONRY C.J.
MECH	MECHANICAL
MFR	MANUFACTURER
MIN	MINIMUM
MISC	MISCELLANEOUS
NIC	NOT IN CONTRACT
NTS	NOT TO SCALE
OPNG	OPENING
OPP	OPPOSITE
O.C.	ON CENTER
O.F.	OUTSIDE FACE
OWSJ	OPEN WEB STEEL JOIST
PCF	POUNDS/CUBIC FOOT
PL	PLATE
PLF	POUNDS/LINEAL FOOT
PNL	PANEL
PSF	POUNDS/SQ FOOT
PSI	POUNDS/SQ INCH
PT	POINT
REINF	REINFORCING
R.D.	ROOF DRAIN
REQ'D	REQUIRED
SHT	SHEET
SI	SPECIAL INSPECTION
SOG	SLAB ON GRADE
STD	STANDARD
STIFF	STIFFENER
STL	STEEL
SQ	SQUARE
SIM	SIMILAR
SR	SHEAR REINFORCING
STR	STRUCTURAL
STAG	STAGGERED
T&B	TOP AND BOTTOM
TEMP	TEMPERATURE
THDS	THREADS
T.O.	TOP OF
TOC	TOP OF CONCRETE
TOF	TOP OF FOOTING
TOS	TOP OF SLAB
TOW	TOP OF WALL
TYP	TYPICAL
UNO	UNLESS NOTED OTHERWISE
VERT	VERTICAL
W/	WITH
WWF	WELDED WIRE FABRIC

GSBS ARCHITECTS
375 WEST 200 SOUTH
SALT LAKE CITY, UT 84101
P 801.521.8600
F 801.521.7913
www.gsbsarchitects.com

LICENSED CERTIFIED STRUCTURAL ENGINEER
NO. 144210
RONALD JAMES REAVELEY
UTAH

REVISIONS:

REAVELEY ENGINEERS + ASSOCIATES
Consulting Structural Engineers
P 801.486.3883
F 801.485.0911
675 E 500 S, Suite 400
Salt Lake City, Utah 84102
www.reaveley.com

Utah Valley University New Science Building

800 West University Parkway
Orem, Utah 84058

Division of Facilities Construction and Managment

DRAWN BY:	Author
CHECKED BY:	Checker
DFCM PROJECT NO.:	
GSBS PROJECT NO.:	2009.115.00
ISSUED DATE:	05.07.10

GENERAL STRUCTURAL NOTES

CONSTRUCTION DOCUMENTS

SE001

V. Structural Steel

A. Material:
1. W-Shapes: ASTM A992, (F_y = 50 ksi), except as noted otherwise.
2. All Other Shapes and Plates: ASTM A36 (Fy = 36 ksi), except as noted otherwise.
3. Rectangular and Square Hollow Structural Sections (HSS): ASTM A500, Grade B (Fy = 46 ksi).
4. Steel Pipe: ASTM A53, Grade B (Fy = 35 ksi).
5. Deformed Bar Anchors (DBA): ASTM A496.
6. Headed Stud Anchors (HSA): ASTM A108, with dimensions complying with AISC specifications.
7. Anchor Rods: ASTM F1554, Grade 36 with ASTM A563 heavy hex nuts and ASTM F436 hardened washers, unless noted otherwise.
8. All steel shapes and plates which are a part of the seismic force resisting system shall have Charpy V-Notch absorbed energy of 20 ft-lbs. or greater at 70 degrees Fahrenheit, as indicated below.
   a. Shapes: Group 3 (with flanges 1.1/2" or thicker), Groups 4 and 5.
   b. Plates: 2" and thicker.
   c. Test Frequency: Each heat.

B. Fabrication and construction shall comply with the following Codes and Standards:
1. American Institute of Steel Construction (AISC) 360-05, "Specification for Structural Steel Buildings," dated March 9, 2005.
2. AISC 341-05, "Seismic Provisions for Structural Steel Buildings" dated March 9, 2005, including Supplement No. 1, dated November 16, 2005.
3. AISC 303-05, "Code of Standard Practice for Steel Buildings and Bridges" excluding the following: Section 3.3 (last sentence of first paragraph), Section 4.4, Section 4.4.1, Section 4.4.2, Section 4.5, and Section 7.13.3.
   a. The architectural drawings are the prime contract drawings. Consultants' drawings by other disciplines are supplementary to the architectural drawings. The structural drawings shall be used in conjunction with the architectural drawings. Detailing and shop drawing production for structural elements will require information (including dimensions) contained in architectural, structural, and/or other consultants' drawings. Refer to VII. Special Instructions, notes VII.B and VII.C on this sheet.
4. AISC 358-05, "Prequalified Connections for Special and Intermediate Steel Moment Frames for Seismic Applications," dated December 13, 2005.
5. AISC/RCSC 2004, "Specification for Structural Joints Using ASTM A325 or A490 Bolts"
6. American Welding Society (AWS) D1.1-04, "Structural Welding Code – Steel" (specific items do not apply when they conflict with the AISC requirements).
7. Steel Joist Institute (SJI) 2005 "Standard Specification, Load Tables and Weight Tables for Steel Joists and Joist Girders," and "Recommended Code of Standard Practice."
8. American Iron and Steel Institute (AISI) 2001, "North American Specification for the Design of Cold-Formed Steel Structural Members."

C. Structural shapes and plates shall be fabricated from newly rolled (milled) one-piece sections without splices, unless specifically noted otherwise on the structural drawings. Connections for structural steel shall comply with the structural drawings, unless written approval is given by the structural engineer.

D. Welding:
1. Certification of Welders: All shop and field welding shall be executed by AWS certified welders who have been specifically certified for the type of work to be performed. Certification shall be considered current if dated within the past 12 months. Welders will be considered certified if they have been certified under AWS and their work records are current within every six-month period thereafter as required by AWS. Certification and records must comply with AWS Standards. Certification and appropriate records must be provided to the architect prior to beginning work.
2. Electrodes: E-70 XX or as noted otherwise. E60 XX may be used for welding steel floor and roof decks.
3. Minimum Welds: All intersecting steel shapes that are not bolted shall be connected by a fillet weld all around, unless noted otherwise. Fillet weld sizes that are not shown shall be 1/16" less than the thinnest of the connected parts for thicknesses 1/4" and larger. Fillet welds on plates less than 1/4" shall be of the same size as the thinnest of the connected parts.
4. Reinforcing Bars: Do not weld rebar except as specifically detailed in the drawings. In such cases, use only AWS standards. Do not substitute reinforcing bars for deformed bar anchors (DBAs), machine bolts, or headed stud anchors (HSAs).
5. Bolts: Do not apply any welds, including "tack" welds to bolts, including anchor bolts, except as specifically detailed in the drawings.
6. It is recommended the steel erection contractor and steel fabricator contact the Quality Assurance Agency prior to beginning any of the above welds. A program of joint preparation and welding procedures should be worked out between the two parties before the welding is started so that correct welds will be made from the beginning.
7. Headed Stud Anchor (HSA) welding and Deformed Bar Anchor (DBA) welding shall conform to the manufacturer's specifications. Welding shall comply with AWS D1.1 Section 7.6 through 7.8 and Annex IX.
8. Braced Frame welding: lengths shown for fillet welds for brace-to-gusset, gusset-to-baseplate, and column-to-gusset connections are minimums, intended for establishing gusset plate dimensions. Weld entire contact length at these joints, typical.

E. Bolted Connections:
1. Use ASTM A325N bolts for steel to steel connections, as noted herein or as noted on the drawings. A325N bolts shall be used in connections for simple span framing and beam (or girder) to bearing plate connections. Tighten bolts to a snug tight condition. A snug tight condition is usually attained by a few impacts of an impact wrench or the full effort of a man using an ordinary spud wrench. Bolts shall be tightened until all plies of the joint are in firm contact.
2. Use ASTM A325SC bolts for all steel to steel connections in moment frames and connections subject to vibrations, unless noted otherwise. Tighten bolts by the turn of the nut, calibrated wrench, or direct tension indicator method. Alternate fastener designs as defined by AISC shall be submitted to the engineer for review and acceptability prior to installation.
3. Provide hardened washers beneath the turned element of all bolts or nuts. Provide hardened beveled washers, to compensate for the lack of parallelism, where the outer face of the bolted parts has a slope greater than one in twenty with respect to the plane normal to the bolt axis. Hardened washers or plates installed over oversized holes or slotted holes shall be at least 5/16" thick and shall conform to ASTM F436. Plates or bars installed at slotted holes shall have a size sufficient to completely cover the slot after installation.
4. Where a steel to steel beam connection is not detailed in the drawings, provide a standard AISC framed connection with the capacity to support one half of the total uniform load capacity of the given shape for the span and for the steel specified.
5. Bolts, nuts and washers shall not be reused.

F. Steel Lintels:
Provide steel angle lintels at all openings through the masonry veneer. Provide one inch of bearing for each foot of width of opening, with a minimum bearing of six inches. See the Steel Angle Lintel Schedule for size.

G. Beam Web Stiffener Plates:
Provide full-height web stiffener plates to each side of all beams above all bearing points. Stiffener plates shall be the thickness noted below unless noted otherwise and shall be welded on both sides of the stiffener plate with fillet welds (noted below) all around.

Beam Web stiffener thickness	For beams with flange widths between	Weld Size
1/4 inch thick	Greater than 0" and less than 8 1/4"	3/16"
3/8 inch thick	Greater than 8 1/4" and less than 12 1/4"	1/4"
1/2 inch thick	Greater than 12 1/4" and less than 16 1/2"	5/16"
5/8 inch thick	Greater than 16 1/2" and less than 20 3/4"	3/8"

H. Composite Beams
1. Composite beams are indicated on the framing plans with the suffix ( ). The number inside the brackets indicates number of studs for this beam. Beams shall have the studs spaced uniformly over the entire beam length.
2. Beams which have more than one number inside the symbol (, ,), such as (W, X, Y, Z), shall have "W" number of studs spaced evenly over the first "section of beam", "X" number of studs spaced evenly over the second "section of beam", "Y" number of studs spaced evenly over the third "section of beam", and "Z" number of studs spaced evenly over the fourth "section of beam". A "section of beam" is defined as that portion of beam located between the column and the nearest intersecting framing member or that portion of beam located between two adjacent intersecting framing members.
3. All headed stud type shear connectors shall be in conformance with ASTM A108. Dimensions shall comply with AWS. Use 3/4" diameter studs. Headed studs shall extend 2" minimum above the top of the steel deck after welding. Headed studs shall be applied through the metal deck to the top flange of the steel section, or welded directly to the steel section.
4. The minimum center-to-center spacing of stud connectors shall be six (6) diameters along the longitudinal axis of the supporting composite beam and four (4) diameters transverse to the longitudinal axis of the supporting composite beam. The maximum center to center spacing shall not exceed 32".
5. C= 0.00" on the plans denotes precamber dimension (upward) in inches.

I. Open Web Steel Joists and Girders:
1. The steel joist supplier shall be responsible for the design of all open web steel joists and girders. Joists or girders with slopes greater than 1/2 inch per foot shall be designed to meet or exceed the load capacities, listed in the SJI load tables, of the joist or girder sizes indicated on the framing plan, as if the joists or girders were installed level.
2. Open web joists and girders shall be designed with deflection limits of L/240 for total load and L/360 for live load, where L is the joist span.
3. Where uplift loads due to wind are indicated, rows of bottom chord bridging shall be provided at the first bottom chord panel points per SJI Specifications. This is in addition to the bridging shown on the framing plans.
4. Provide special bearing ends to accommodate slopes from sloped joists, sloped girders or sloped bearing conditions.
5. Camber. All joists shall be cambered as specified in the SJI specifications, unless noted otherwise.
6. Field Modifications: Do not modify any joist or girder, including holes through the top and bottom chords, without the written consent and direction from the manufacturer.
7. Shop Drawings and Design Calculations: Shop drawings for all joists and girders used in the project shall be submitted for review. Prior to the fabrication of joists and girders, the open web steel joist and girder manufacturer shall prepare complete joist and girder calculations under the direct supervision of a professional engineer licensed in the State of Utah. Calculations shall be submitted for review for joists and girders designated as SPECIAL or SP and for all joists or girders with axial loads or additional concentrated loads (as noted on the drawings). Submitted calculations shall bear the seal of a professional engineer licensed in the State of Utah.
8. Stabilizer Plates: Provide steel joist and joist girder stabilizer plates as indicated. Stabilizer plates shall be 6" x 6" with a 13/16" diameter hole with 1.1/2" minimum edge distance, and shall extend 3" minimum below the bottom chord of the joist or girder. Plate thickness shall be equal to the chord gap minus 1/4", or 3/4", whichever is less.
9. Verify size, weight, location and configuration of all roof top equipment with architect and mechanical engineer. Provide steel frames for support of roof top equipment as indicated on structural details in the structural drawings. Coordinate openings with the mechanical and general contractor.
10. All concentrated loads greater than 100 pounds supported by open web steel joists and girders shall be located within 6 inches of joist or girder panel points or the joist or girder shall be reinforced with an additional web member. Refer to the "TYPICAL DETAIL AT ADDITIONAL CONCENTRATED POINT LOAD" in the structural drawings.
11. Concentrated point loads, single or multiple, totaling 100 pounds or less can be located at any point along the top or bottom chord of an open web steel joist or girder between adjacent panel points without meeting the requirements above. A limit of four concentrated 100# maximum point loads per joist or girder will be permitted on spans of 12' or greater, one concentrated 100# max. load on spans less than 12', unless specifically noted otherwise on the structural drawings.
12. Joist bridging shall never be used to support hanging loads.
13. Bracing of miscellaneous items (mechanical, electrical, plumbing, etc.) to the bottom chord of joists or girders will not be allowed in any instance. All lateral braces must connect to the top flange/top chord of the framing member above unless noted otherwise on the structural drawings.
14. A certificate of compliance in accordance with IBC section 1704.2.2 shall be submitted by the steel joist manufacturer to the building official upon completion of fabrication.

J. Steel Floor Deck:
1. Steel floor deck shall comply with the latest requirements of the Steel Deck Institute (SDI). Submit ICC Code Evaluation Report with load and lateral shear capacities with shop drawings.
2. Steel floor deck shall be 3" deep X 20 gauge minimum phosphatized/painted composite (deck shall be galvanized (G60) when used above or below mechanical equipment rooms), type "W" deck with interlocking side seams with the following properties:

	20 Gauge	18 Gauge
Minimum S (in^3/ft) =	0.534	0.767
Minimum I (in^4/ft) =	0.896	1.203

Painted deck shall be coated with special paint to receive sprayed-on fire proofing, where required.
3. A 3 1/2" thick (6 1/2" overall) lightweight concrete (f'c = 3,000 psi @ 28 days unless noted otherwise) slab shall be poured over the steel deck. Reinforce slab with 6" x 6" - W2.1/W2.1 welded wire fabric (minimum) or reinforce slab with 2 pounds per cubic yard minimum polypropylene fibrillated fiber reinforcement, as per specifications. Welded Wire Fabric shall be placed 1" to 1 1/2" below the top of the slab.
4. Steel deck with 3 1/2" thick (6 1/2" overall) lightweight concrete slab shall have a minimum diaphragm shear capacity of 1780 lbs/ft. for a 8'-0" deck span.
5. Weld deck to supporting framing members with 3/4" diameter puddle welds at the following spacing (Closer spacings may be used to develop minimum shear requirements.):
   a. 12" o.c. to supports perpendicular to deck corrugations (4 welds per 36" wide sheet).
   b. 12" o.c. to all supports parallel to deck corrugations.
   c. Stud welds may take the place of puddle welds where studs are welded through the deck to the top flange of beams.
   d. All welded surfaces shall be dry before welding deck or studs to supports.
6. Attach interlocking seams with 3/16" button punch at 18" o.c. or 1 1/2" top seam weld at 36" o.c. between adjacent pieces of deck. Crimp seams before button punching or welding interlocking seams. Closer spacings may be used to develop minimum shear requirements.
7. All deck shall be 3-span continuous minimum where possible. In areas where 3-span conditions are not possible, the deck shall meet the above loading criteria for the span condition. The contractor shall provide heavier gauge deck or provide shoring as required for one or two span conditions to meet the equivalent loading of the above deck under a three span condition.
8. Deck shall have a minimum bearing length of 2".

K. Steel Roof Deck:
1. Steel roof deck shall comply with the latest requirements of the Steel Deck Institute (SDI). Submit ICC Code Evaluation Report with load and lateral shear capacities with shop drawings.
2. Steel roof deck shall be 1 1/2" deep X 20 Gauge minimum galvanized (G60), type "B" wide rib deck with interlocking side seams with the following properties:

	20 Gauge	18 Gauge
Minimum S (in^3/ft)=	0.234	0.322
Minimum I (in^4/ft)=	0.213	0.296

Painted roof deck shall be coated with special paint to receive sprayed-on fire proofing, where required.
3. Minimum allowable deck diaphragm shear values shall be 1100 lb/ft. for a 6'-0" deck span.
4. Weld steel roof deck to supporting framing members with 3/4" diameter puddle welds at the following spacings (Closer spacings may be used to develop minimum shear requirements.):
   a. 6" o.c. to all supports perpendicular to deck corrugations (7 welds per 36" sheet).
   b. 6" o.c. to the following supports parallel to deck corrugations: All perimeter supports, all concrete or masonry walls, all joists or joist girders with a "T/C" designation, and all steel beams which are on a grid line with braced frames or moment frames.
   c. 12" o.c. to all other supports parallel to deck corrugations.
   d. All welded surfaces shall be dry before welding deck to supports.
5. Attach interlocking seams with 1 1/2" long top seam welds at 12" o.c. minimum between adjacent pieces of decking. Crimp side seams before welding. Closer spacings may be used to develop minimum shear requirements.
6. Alternate means of deck attachment and fastening using screws, pins or other mechanical fastening methods are permitted with approval of the engineer. The contractor shall submit the proposed attachment system and the code evaluation report demonstrating the system has the strength to meet the required deck shears specified above (in item 3) and on the plans. The flexibility factor of the proposed deck attachment system shall be equal to or less than the flexibility factor for the specified welded deck attachment system. If the alternate attachment method is approved, it is the responsibility of the contractor to ensure that the deck type and profile is compatible with the fastening system being used.
7. Provide a 2" minimum bearing and a 4-inch lap at the splice points of all pieces of deck.
8. All deck shall be 3-span continuous minimum where possible. The contractor shall provide heavier gauge deck as required for one or two span conditions to meet equivalent loading of the above deck under a three span condition.
9. Steel roof deck shall not be used to support loads from plumbing, HVAC ducts, light fixtures, architectural elements or equipment of any kind, unless specifically noted otherwise. Lightweight suspended acoustical ceilings with a total weight per wire not exceeding 50# may be hung from the steel roof deck. The hangers should be staggered to distribute the load over multiple deck flutes.

L. Cold-Formed Steel
1. Light Gauge Steel Framing:
   a. Where steel framing size designators are used in the drawings, they follow the convention established by the Steel Stud Manufacturers' Association (SSMA) and the North American Steel Framing Alliance (NASFA). Framing members provided shall comply with the designations according to this convention.
   b. All load bearing stud (and/or) joist framing members along with all runner, bridging, and end track shall be of the designation shown on the plans. All studs with base metal thickness of 54 mil and 68 mil, and joists with base metal thickness of 54 mil, 68 mil and 97 mil, shall be formed from steel meeting the requirements of ASTM A570 except that the steel shall have a 50,000 psi yield stress. All track and end closures with base metal thickness of 54 mil and 68 mil, bridging with base metal thickness of 54 mil, and studs and track with base metal thickness of 43 mil and 33 mil, shall be formed from steel with a minimum yield of 33,000 psi. All components shall be galvanized.
   c. Follow all manufacturers' recommendations for the use of these products.
   d. Unless noted otherwise, all welded connections shall be done using 1/8" AWS type 6013 or 7014 rod with a welding heat of 60-110 amperes depending on the gauge of material and the fit of the parts. Wire tying of framing components shall not be permitted.
   e. All interior non-bearing steel stud walls that extend above the ceiling but do not attach to the floor or roof diaphragm (above) shall have diagonal braces at 45 degrees (+/-). The KL/r ratio of the brace shall not exceed 200 and shall not be spaced further apart than 10'-0". Connect diagonal braces to the top of the steel stud walls and to the underside of the top flange of the steel beams, open web joists or girders, etc. with 1/8" fillet welds all around. Diagonal angle braces may be connected to 8" x 8" x 1/4" steel plates which shall be anchored to the floor or roof decks which have concrete fill above with 2- 3/8" dia. expansion anchors for each plate. Connect angle to plate with a 1/4" fillet weld all around. Connect diagonal braces to roof decking which does not have concrete fill above per the non-bearing wall brace connection details shown on the structural drawings. Diagonal braces may be constructed from cold-formed light gauge steel studs but must conform to the kl/r ratio of less than 200 requirement. When diagonal brace lengths exceed 10'-0" (+/-), cold-formed box sections made from two 600S137-54 steel studs will likely be required.
2. Prefabricated Systems: Submit complete shop drawings and calculations of all elements for review. Submittals shall bear the stamp of a Professional Engineer registered in the State of Utah.

O. Metal Bar Grating:
1. Metal bar grating shall comply with the most recent requirements of the National Association of Architectural Metals Manufacturers, Metal Bar Grating Division (NAAMM MBG). Products shall conform to the latest edition of the Metal Bar Grating Manual, ANSI/NAAMM MBG 531, or the Heavy Duty Metal Bar Grating Manual, ANSI/NAAMM MBG 532, as appropriate.
2. Materials: Unless noted otherwise, metal bar grating of the following types shall conform with the following standards:
   a. Steel: ASTM A569 (allowable fiber unit stress F = 18,000 psi)
   b. Stainless Steel: ASTM A167, alloys 304/316 (allowable fiber unit stress F = 20,000 psi)
   c. Aluminum: ASTM B221, alloys 6063-T6/6061-T6 (allowable fiber unit stress F = 12,000 psi)
3. Metal bar grating shall be provided with mill finish, unless otherwise noted.
4. Unless noted otherwise, provide W-19-4 (1.1/2" x 3/16") Steel grating in locations where metal bar grating is specified.
5. All metal bar grating shall be firmly and positively anchored to supporting members. Unless noted otherwise, weld grating to supporting members with 3/16" fillet welds, 3/4" long. Locate welds at each end of bearing bars approximately 6 in from each side of grating panel. At intermediate supports in panel, locate one weld at middle of panel.

VII. Special Instructions

A. The project specifications are not superseded by the General Structural Notes but are intended to be complementary to them. Consult the specifications for additional requirements in each section. Notes and specific details on the drawings shall take precedence over General Structural Notes and typical details.

B. The architectural drawings are the prime contract drawings. Consultant drawings by other disciplines are supplementary to the architectural drawings. All omissions or conflicts, including dimensions, between the various elements of the consultants' drawings and/or specifications shall be brought to the attention of the Architect before proceeding with any work involved. In case of conflict, follow the most stringent requirement as directed by the Architect without additional cost to the owner. Any work done by the contractor after discovery of such discrepancy shall be done at the contractor's risk.

C. The structural drawings shall be used in conjunction with the architectural drawings. Primary structural elements and overall structural layout are indicated within the structural plans and details. Some secondary elements, architectural layouts, alcoves, elevations, slopes, depressions, curbs, mechanical equipment and electrical equipment, are not indicated within the structural drawings. Detailing and shop drawing production for structural elements will require information (including dimensions) contained in the architectural, structural and/or other consultants' drawings.

D. Shoring and Bracing Requirements:
1. Floor and Roof Structures -- The General Contractor is responsible for the method and sequence of all structural erection. He shall provide temporary shoring and bracing as his method of erection requires to provide adequate vertical and lateral support. Shoring and bracing shall remain in place as the chosen method requires until all permanent members are in place and all final connections are completed, including all roof and floor attachments. The building shall not be considered stable until all connections are complete.
2. Foundation walls must be braced until the complete floor or roof systems is completed. Do not backfill until floor or roof systems are in place.
3. Walls above grade shall be braced until the structural system is complete. Walls shall not be considered to be self supporting.

E. All expansion joints (E.J.) shown in the structural drawings shall be considered seismic separation joints, unless noted otherwise.

F. Submittals: A copy of all shop drawings that have been submitted for review must be kept at the construction site for reference. These drawings must bear the appropriate review stamps. The shop drawing review shall not relieve the contractor of the responsibility of completing the project according to the contract documents. The general contractor shall review and mark all shop drawings prior to submitting them to the Architect for his review. Shop Drawings made from reproductions of (these) contract drawings will be rejected.

G. Project Coordination: It shall be the responsibility of the general contractor to coordinate with all trades any and all items that are to be integrated into the structural system. Openings or penetrations through, or attachments to the structural system that are not indicated on these drawings shall be the responsibility of the general contractor and shall be coordinated with the Architect/Engineers. The order of construction is the responsibility of the general contractor. It is the contractor's obligation to provide all items necessary for his chosen procedure.

H. Contractor shall field verify all dimensions, and conditions. If the contract drawings do not represent actual conditions, contractor shall notify architect/engineer prior to fabrication or construction within that area.

I. Notice of Copyright: The structural drawings, plans, schedules, notes and details are hereby copyrighted by Reaveley Engineers and Associates, Inc., All Rights reserved. Submission or distribution of documents to meet official regulatory requirements or for similar purposes in connection with the project is not to be construed as publication in derogation of Reaveley Engineers & Associates, Inc.'s reserved rights. The documents defining the structure are instruments of service prepared by Reaveley Engineers and Associates, Inc. for one use only. Furthermore, these documents shall not be reproduced, or copied, in whole or in part by the contractor or his subcontractors for preparation of shop drawings or other submittals.

VIII. Quality Assurance

A. Quality Assurance Agency Requirements:
1. The owner shall engage a qualified Quality Assurance Agency (QAA) to provide all special inspection and quality assurance testing for the project. All quality assurance personnel assigned to the project shall demonstrate competence, to the satisfaction of the building official, for inspection of the particular type of construction or operation requiring special inspection.
2. Prior to construction, the QAA shall prepare a written Quality Assurance Implementation Plan (QAIP) for the project. The QAIP shall include a list of personnel assigned to the project including management personnel, inspection procedures and frequency, proposed testing methods and frequency of testing, and reporting procedures. The QAIP shall also outline methods of documenting deficiencies and reporting corrections. A copy of the QAIP shall be given to the contractor for review and coordination with subcontractors.
3. Prior to construction, the QAA shall submit the following information to the Architect and Engineer of Record for approval:
   a. A copy of the Quality Assurance Implementation Plan for the project.
   b. A copy of the appropriate certification and training records for each individual performing inspections or testing.
   c. A list of the testing equipment designated for the project and recent calibration records for the equipment.
   d. Sample inspection and testing reports and the distribution list for the reports.
4. The special inspector shall inspect the work per Chapter 17 of the IBC for conformance with the contract documents. The special inspector shall send reports to the owner, building official, architect, engineer, and contractor. All discrepancies shall be brought to the immediate attention of the contractor for correction. The QAA shall submit a final signed report stating that the special inspection work was, to the best of their knowledge, in conformance with the plans, specifications and applicable workmanship provisions of the IBC.

B. Seismic Force Resisting Systems
1. Elements that are a part of the Main Seismic Force Resisting System for the structure may require increased quality assurance inspection and testing. The Main Seismic Force Resisting system for the structure includes the following elements:
   a. Concrete shear walls.
   b. Steel braces, columns and beams that are part of a steel braced frame.
   c. Footings and foundation systems that directly support walls, columns and braces referenced above.
   d. Roof decking.
   e. Floor decking and/or slab systems.
   f. All elements labeled as "drag struts" or "chords."
   g. Connections between the elements referenced above.

C. Special Inspection: Special Inspection shall be provided for the following elements per IBC sections 1704 and 1707:
1. Concrete and elements embedded in concrete shall be special inspected prior to and during placement of concrete. Special inspection of concrete shall include the following:
   a. Reinforcing steel size and placement.
   b. Post-tensioned strand placement and stressing.
   c. Surface preparation at cold joints including placement of keyways.
   d. Bolt and embed size, configuration and placement.
   e. Concrete shall receive continuous special inspection during placement, and periodic inspection after placement to ensure proper curing and weather protection procedures.
   f. Shotcrete placement shall receive continuous special inspection.
2. Structural steel fabrication and erection shall be special inspected, including the following:
   a. High strength bolts per IBC 1704.3.3 and IBC section 2209.
   b. Fillet welds smaller than 5/16" per AWS D1.1.
   c. Fillet welds larger than 5/16", multiple pass welds, and all groove welds shall receive continuous special inspection during weld placement per AWS D1.1.
   d. Welding of reinforcing steel shall receive continuous special inspection during weld placement per AWS D1.1.
   e. Welding of Headed Stud Anchors (HSA) and Deformed Bar Anchors (DBA) shall be inspected to comply with AWS D1.1 Section 7.6 through 7.8 and Annex IX.
   f. Welding or fastening of floor or roof deck per AWS D1.3. or per the code evaluation report for the fastening method.
3. Structural Masonry: Special inspection shall be provided, as follows:
   a. As masonry construction begins, and periodically during construction, verify the following are in compliance:
      (1) Proportions of site-mixed mortar and grout.
      (2) Placement of masonry units and construction of mortar joints.
      (3) Locations of reinforcement, connectors and embeds.
      (4) Protection of masonry during cold or hot weather.
   b. Prior to grouting, verify the following are in compliance:
      (1) Grout space.
      (2) Size and location of structural elements.
      (3) Grade, size and placement of reinforcement, connectors and embeds.
      (4) Construction of all mortar joints.
   c. Continuous inspection is required during placement of grout and during preparation of grout specimens, mortar specimens, and/or prisms for testing.
4. Post-installed anchors, including but not limited to expansion anchors, adhesive anchors and rebar dowels, and low velocity fasteners, shall receive special inspection per the code evaluation reports for the anchors.
   a. Continuous special inspection is required during the installation of all adhesive anchors and rebar dowels. Special inspector shall verify the following:
      (1) Anchor size and steel grade.
      (2) Hole diameter, location, and type of drill bit.
      (3) Cleanliness of hole and anchor.
      (4) Adhesive application.
      (5) Anchor embedment.
5. Piling, drilled pier and caisson construction shall receive continuous special inspection during installation and testing.

D. Structural Testing: The following materials shall be tested per IBC sections 1704 and 1708. The owner reserves the right to test any and all materials using any appropriate non-destructive procedure. Any items found to be deficient shall be corrected and retested at no additional cost to the owner.
1. Earthwork: All compacted structural fill shall be tested to verify soil gradation, lift thickness, and compaction requirements. See the specifications and earthwork section of the GSN for testing frequency and acceptability criteria.
2. Concrete Strength Verification and Testing. All concrete shall be tested to verify strength, slump, unit weight, air content, and temperature. See the specifications for testing criteria, testing frequency and acceptability criteria.
3. Masonry Strength Verification:
   a. Masonry strength, f'm shall be verified using the "Unit Strength Method" per IBC Section 2105.2.2.1 and as follows: Prior to construction, the masonry units and grout shall be tested for compressive strength. Certificates of compliance with strength requirements of the masonry units and grout shall be submitted by the masonry and grout suppliers. During construction, the masonry units and grout shall be tested for every 5,000 square feet of masonry constructed per GSN IV.A, above. Proportions of materials in mortar and grout delivered to the site shall be verified.
   b. The contractor has the option of using the "Masonry Prism Test Method" per IBC Section 2105.2.2.2, in lieu of the "Unit Strength Method."
4. Welded connections shall be tested for compliance according to IBC Table 1704.3, AWS D1.1 and the contract specifications and plans. As a minimum, the testing shall include the following:
   a. All complete penetration groove welds shall be tested 100 percent either by ultrasonic testing or by radiography.
   b. Partial penetration groove welds shall be tested either by ultrasonic testing or radiography. A minimum of 50% of these welds shall be tested.
   c. Base metal thicker than 1 1/2", when subjected to through thickness weld shrinkage strains, shall be ultrasonically inspected for discontinuities directly behind such welds and three inches above and below the weld after joint assembly completion.
   d. Any material discontinuities shall be accepted or rejected on the basis of the defect rating in accordance with the testing in AWS D1.1 Chapter 6, excluding Sections 6.1 through and including 6.6. All deficient welds shall be corrected and retested at no additional cost to the owner.
5. Post-installed anchors, including but not limited to expansion anchors, adhesive anchors, and low velocity fasteners, shall be tested per the code evaluation reports for the anchors.

E. Structural Observations by the Engineer of Record.
1. The Engineer of Record may perform structural observations at critical phases of the project. Copies of the engineer's report will be distributed to the architect, contractor, owner, QAA, and DFCM Building Official.
2. Observation visits to the site by the Engineer's field representatives shall not be construed as inspection or approval of construction.
3. Notification of Engineer: The contractor shall notify the engineer twenty-four hours prior to:
   a. Placing concrete in any footing.
   b. Closing any wall forms.
   c. Placing concrete in any column, beam or suspended slab.
   d. Grouting any masonry.
   e. Completing the welding of major sections of steel decking.
   f. Completing the welding of Braced Frames and Collectors.

F. Contractor Responsibility: The contractor shall prepare and submit a written statement of responsibility to the building official and the owner prior to commencement of work on the project. As a minimum the statement shall contain the following information:
1. Acknowledgement of the quality assurance requirements for the structure.
2. Acknowledgement of receipt of the Quality Assurance Implementation Plan (QAIP) from the testing agency.
3. Acknowledgement that control will be exercised to obtain conformance to the Contract Documents and the QAIP.
4. Quality control procedures within the contractors organization, methods and frequency of reporting, and distribution of the reports.
5. Identification and qualifications of the person(s) responsible for quality control and their position(s) in the organization.

GSBS ARCHITECTS
375 WEST 200 SOUTH
SALT LAKE CITY, UT 84101
P 801.521.8600
F 801.521.7913
www.gsbsarchitects.com

LICENSED CERTIFIED STRUCTURAL ENGINEER
NO. 144210
RONALD JAMES REAVELEY
UTAH

REVISIONS:

REAVELEY ENGINEERS + ASSOCIATES
Consulting Structural Engineers
P 801.486.3883
F 801.485.0911
675 E 500 S, Suite 400
Salt Lake City, Utah 84102
www.reaveley.com

Utah Valley University New Science Building

800 West University Parkway
Orem, Utah 84058

Division of Facilities Construction and Managment

DRAWN BY:	Author
CHECKED BY:	Checker
DFCM PROJECT NO.:	
GSBS PROJECT NO.:	2009.115.00
ISSUED DATE:	05.07.10

GENERAL STRUCTURAL NOTES

CONSTRUCTION DOCUMENTS

SE002

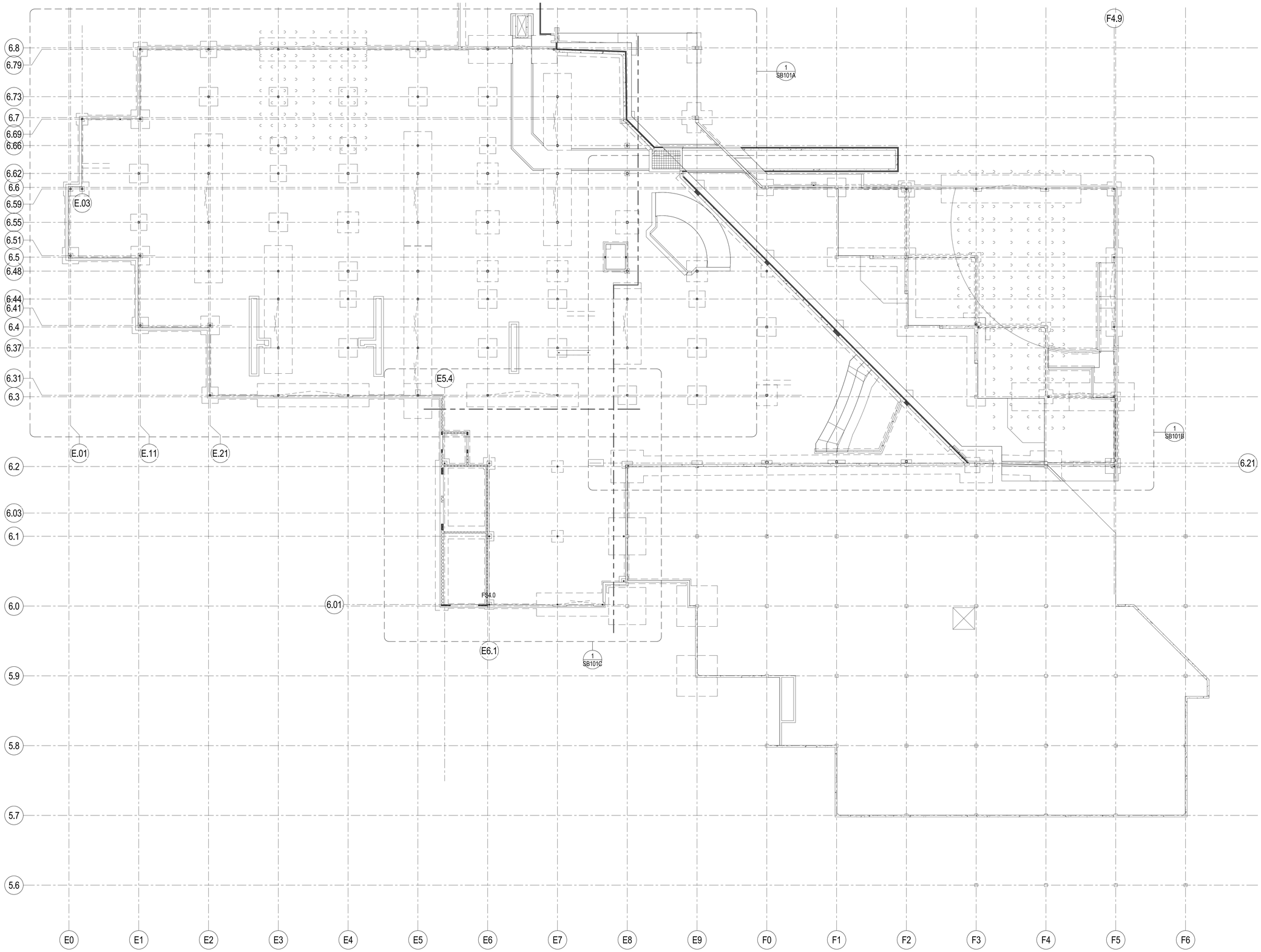

A1 / SB101 OVERALL FOOTING & FOUNDATION PLAN

SCALE: 1/16" = 1'-0"

GSBS ARCHITECTS

375 WEST 200 SOUTH
SALT LAKE CITY, UT 84101

P 801.521.8600
F 801.521.7913

www.gsbsarchitects.com

LICENSED CERTIFIED STRUCTURAL ENGINEER
NO. 144210
RONALD JAMES REAVELEY
UTAH

REVISIONS:

REAVELEY
ENGINEERS + ASSOCIATES
Consulting Structural Engineers

P: 801.486.3883
F: 801.485.0911

675 E.500 S. Suite 400
Salt Lake City, Utah 84102
www.reaveley.com

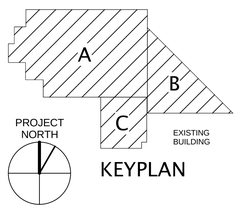

KEYPLAN

Utah Valley University New Science Building

800 West University Parkway
Orem, Utah 84058

Division of Facilities Construction and Managment

DRAWN BY:	Author
CHECKED BY:	Checker
DFCM PROJECT NO.:	
GSBS PROJECT NO.:	2009.115.00
ISSUED DATE:	05.07.10

OVERALL FOOTING & FOUNDATION PLAN

CONSTRUCTION DOCUMENTS

SB101

SEE SB101B FOR FOUNDATION PLAN NOTES & LEGEND

STONE COLUMN PLAN NOTES

1. ALL FOOTING SIZES ARE BASED ON THE ALLOWABLE SOIL BEARING PRESSURE 5,000 PSF ON 2'-0" STRUCTURAL FILL ABOVE IMPOVED SOIL, WHICH ARE STONE COLUMNS/AGGREGATE PIERS.

2. STONE COLUMNS SHALL BE DESIGNED AND INSTALLED BY A (SUB)CONTRACTOR WITH A MINIMUM OF 5 YEARS EXPERIENCE.

3. STONE COLUMNS SHALL BE DESIGNED AS A GROUP UNDER EACH STRUCTURAL FOOTING TO MEET THE 5,000 PSF MIN. BEARING PRESSURE.

4. PROVIDE ADDITIONAL STONE COLUMNS SPACED AT 6'-0" MAXIMUM EACH WAY BETWEEN EACH STONE COLUMN GROUP UNDER TO REDUCE THE LIQUEFACTION INDUCED SETTLEMENT.

5. ALL STONE COLUMNS SHALL EXTEND DOWN TO ELEVATION 70'-0" AS THE MINIMUM REQUIREMENT PER SOIL REPORT. SEE DETAIL A4/SB501 FOR SECTION THROUGH THE FOOTING.

6. THE EXTERIOR LIMIT OF STONE COLUMNS SHALL BE DEFINED BY DETAIL A4/SB501.

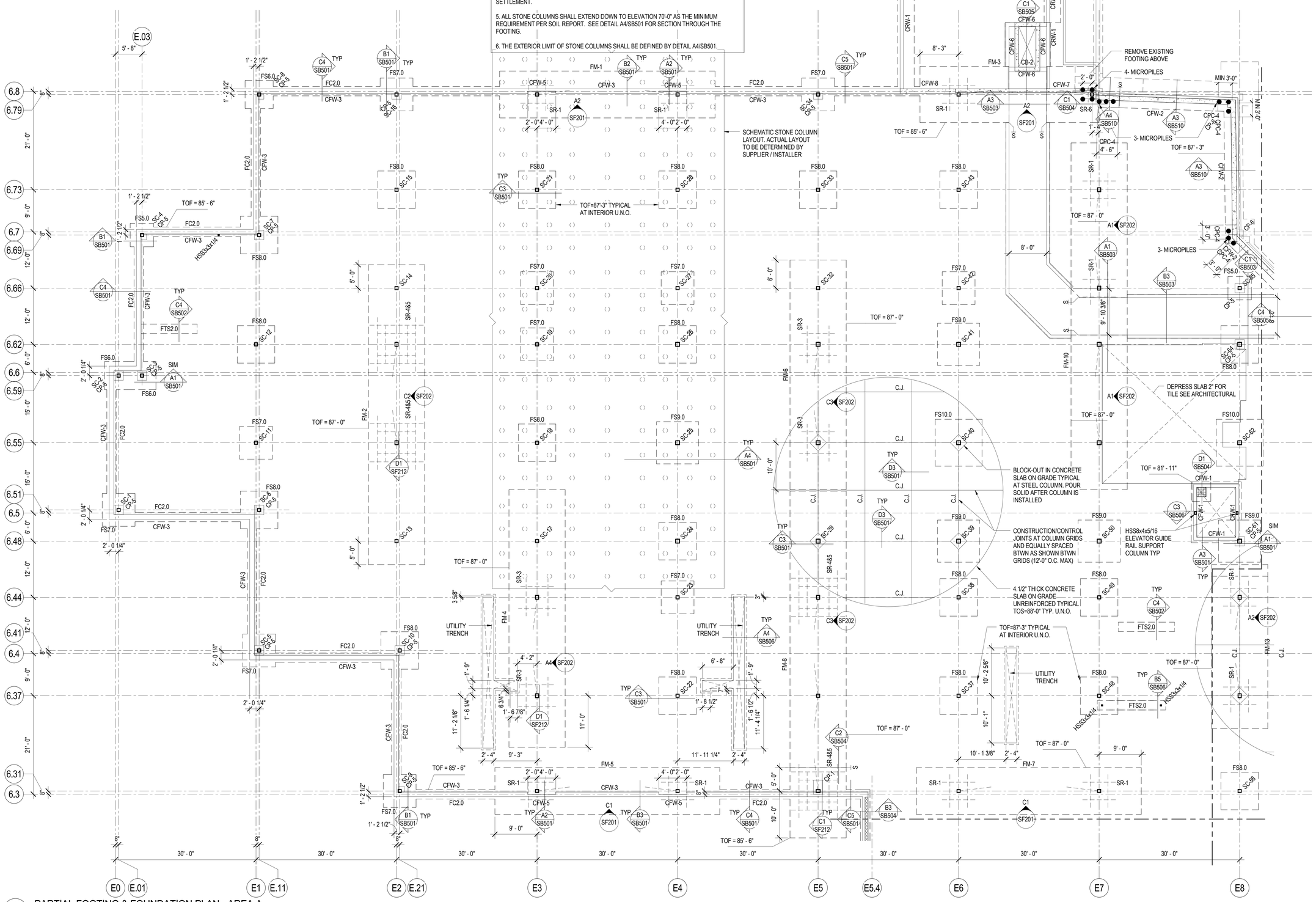

1 PARTIAL FOOTING & FOUNDATION PLAN - AREA A
SB101A SCALE: 1/8" = 1'-0"

GSBS ARCHITECTS
375 WEST 200 SOUTH
SALT LAKE CITY, UT 84101
P 801.521.8600
F 801.521.7915
www.gsbsarchitects.com

LICENSED CERTIFIED STRUCTURAL ENGINEER
NO. 144210
RONALD JAMES REAVELEY
UTAH

REVISIONS:

REAVELEY ENGINEERS + ASSOCIATES
Consulting Structural Engineers
P: 801.486.3883
F: 801.485.0911
675 E 500 S, Suite 400
Salt Lake City, Utah 84102
www.reaveley.com

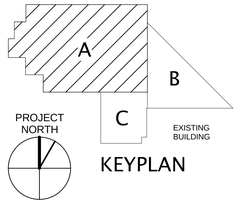

KEYPLAN

Utah Valley University New Science Building

800 West University Parkway
Orem, Utah 84058

Division of Facilities Construction and Managment

DRAWN BY:	Author
CHECKED BY:	Checker
DFCM PROJECT NO.:	
GSBS PROJECT NO.:	2009.115.00
ISSUED DATE:	05.07.10

PARTIAL FOOTING & FOUNDATION PLAN - AREA A
CONSTRUCTION DOCUMENTS

SB101A

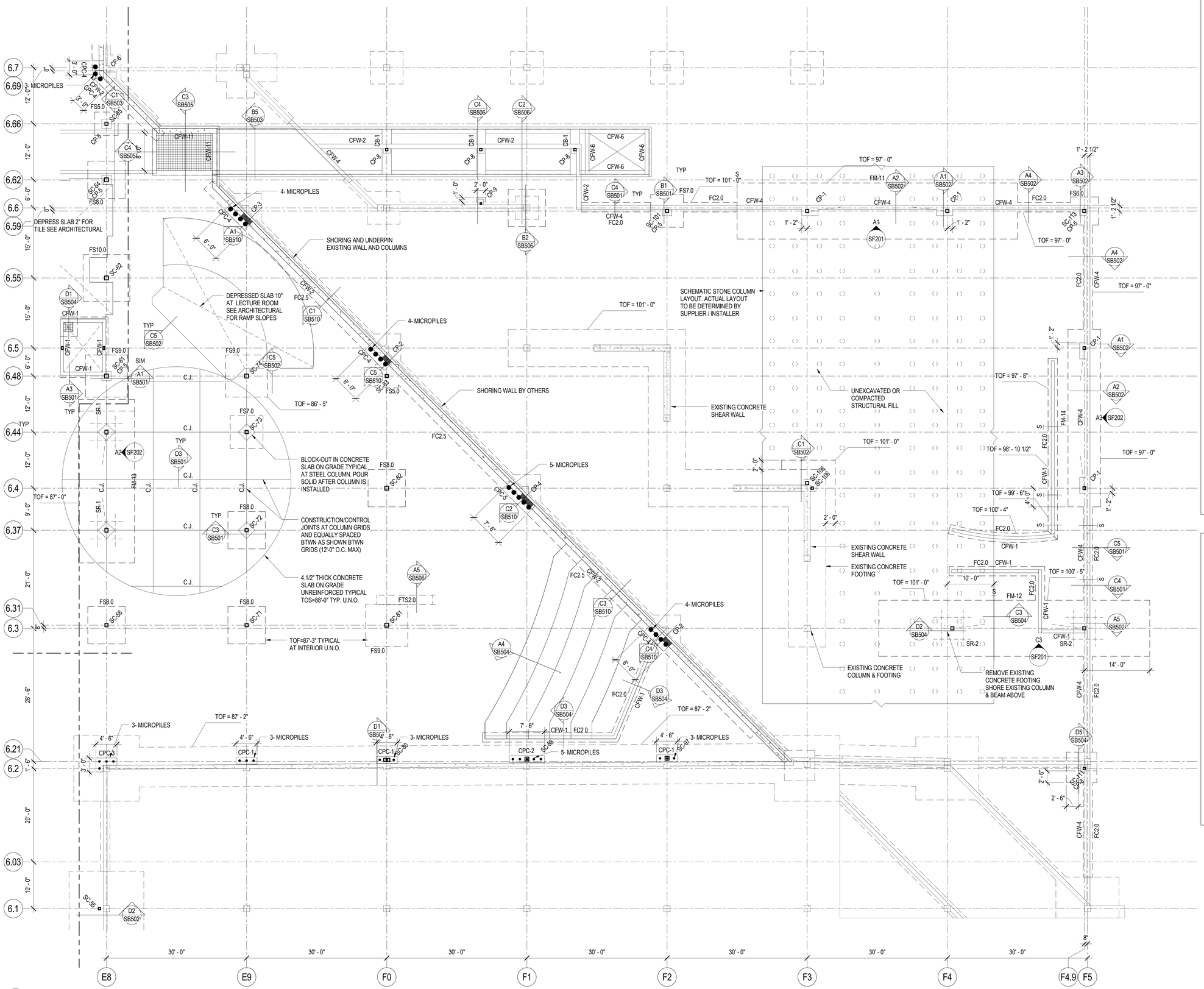

1 SB101B PARTIAL FOOTING & FOUNDATION PLAN - AREA B

SCALE: 1/8" = 1'-0"

FOOTING & FOUNDATION PLAN LEGEND

- FOOTING STEP
- FOOTING - CONTINUOUS
- FOOTING - THICKENED SLAB
- FOOTING - SQUARE FOOTING - RECTANGULAR FOOTING - MAT FOOTING
- MICRO PILE. SEE SE001 FOR MICRO PILE NOTES
- HELICAL PIER. SEE SE001 FOR HELICAL PIER NOTES
- CONCRETE WALL, CONCRETE FOUNDATION WALL, OR CONCRETE RETAINING WALL
- CONCRETE FOUNDATION WALL - RECESSED
- CONCRETE PIER IN CONCRETE WALL. TOP OF PIER RECESSED 8" BELOW SLAB. TYP U.N.O.
- CONCRETE COLUMN
- CONCRETE JAMB COLUMN POURED MONOLITHIC WITH CONCRETE WALL
- TEMPORARY RETAINING WALL/ PERMANENT SHORING WALL.
- MASONRY WALL
- MASONRY WALL - RECESSED
- MASONRY COLUMN IN MASONRY WALL
- STEEL COLUMN - TUBE
- STEEL COLUMN - WIDE FLANGE
- STEEL COLUMN - PIPE
- STEEL BRACED FRAME - ABOVE
- 0" CHANGE IN ELEVATION
- SLAB BLOCK-OUT AT COLUMN
- CJ SLAB CONTROL/CONSTRUCTION JOINT
- SPECIAL SLAB AREA
- RECESSED/DEPRESSED SLAB
- OPENING

FOOTING & FOUNDATION PLAN NOTES

1. SEE ARCHITECTURAL, CIVIL AND LANDSCAPE DRAWINGS FOR EXTERIOR CONCRETE WORK AT DOORS, SIDEWALKS ETC.

2. SEE ARCHITECTURAL DRAWINGS AND FINISH SCHEDULE FOR SLAB AREAS TO RECEIVE FLOOR TILE.

3. SEE ARCHITECTURAL DRAWINGS FOR SLAB DEPRESSIONS AND SLOPES TO DRAINS, ETC.

4. SEE ARCHITECTURAL, CIVIL AND LANDSCAPE DRAWINGS FOR ADDITIONAL EXTERIOR CONCRETE RETAINING AND / OR SITE WALLS NOT SHOWN ON THE STRUCTURAL DRAWINGS.

5. SEE D1/SB501 FOR TYPICAL EXTERIOR CONCRETE FOOTING STEP DETAIL.

6. SEE D2/SB501 FOR TYPICAL REINFORCEMENT AT WALL CORNERS AND INTERSECTIONS.

7. SEE D3/SB501 FOR TYPICAL DETAIL AT SLAB JOINTS IN CONCRETE SLABS ON GRADE.

8. SEE D4/SB501 FOR TYPICAL DETAIL AT DEPRESSED CONCRETE SLABS ON GRADE.

9. SEE D5/SB501 FOR REINFORCEMENT AT DISCONTINUOUS CONSTRUCTION / CONTROL JOINTS IN CONCRETE SLAB ON GRADE.

10. REFER TO GENERAL STRUCTURAL NOTES AND SEE A4/SB501 FOR COMPACTED STRUCTURAL FILL REQUIREMENTS BELOW FOOTINGS.

GSBS ARCHITECTS
375 WEST 200 SOUTH
SALT LAKE CITY, UT 84101
P 801.521.8600
F 801.521.7913
www.gsbsarchitects.com

LICENSED CERTIFIED STRUCTURAL ENGINEER
NO. 144210
RONALD JAMES REAVELEY
UTAH

REVISIONS:

REAVELEY ENGINEERS + ASSOCIATES
Consulting Structural Engineers
P 801.486.3883
F 801.485.0911
675 E 500 S, Suite 490
Salt Lake City, Utah 84102
www.reaveley.com

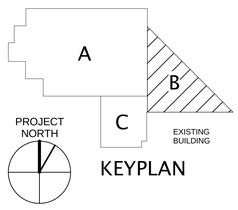

KEYPLAN

Utah Valley University New Science Building

800 West University Parkway
Orem, Utah 84058

Division of Facilities Construction and Managment

DRAWN BY:	Author
CHECKED BY:	Checker
DFCM PROJECT NO.:	
GSBS PROJECT NO.:	2009.115.00
ISSUED DATE:	05.07.10

PARTIAL FOOTING & FOUNDATION PLAN - AREA B
CONSTRUCTION DOCUMENTS

SB101B

SEE SB101B FOR FOUNDATION PLAN NOTES & LEGEND

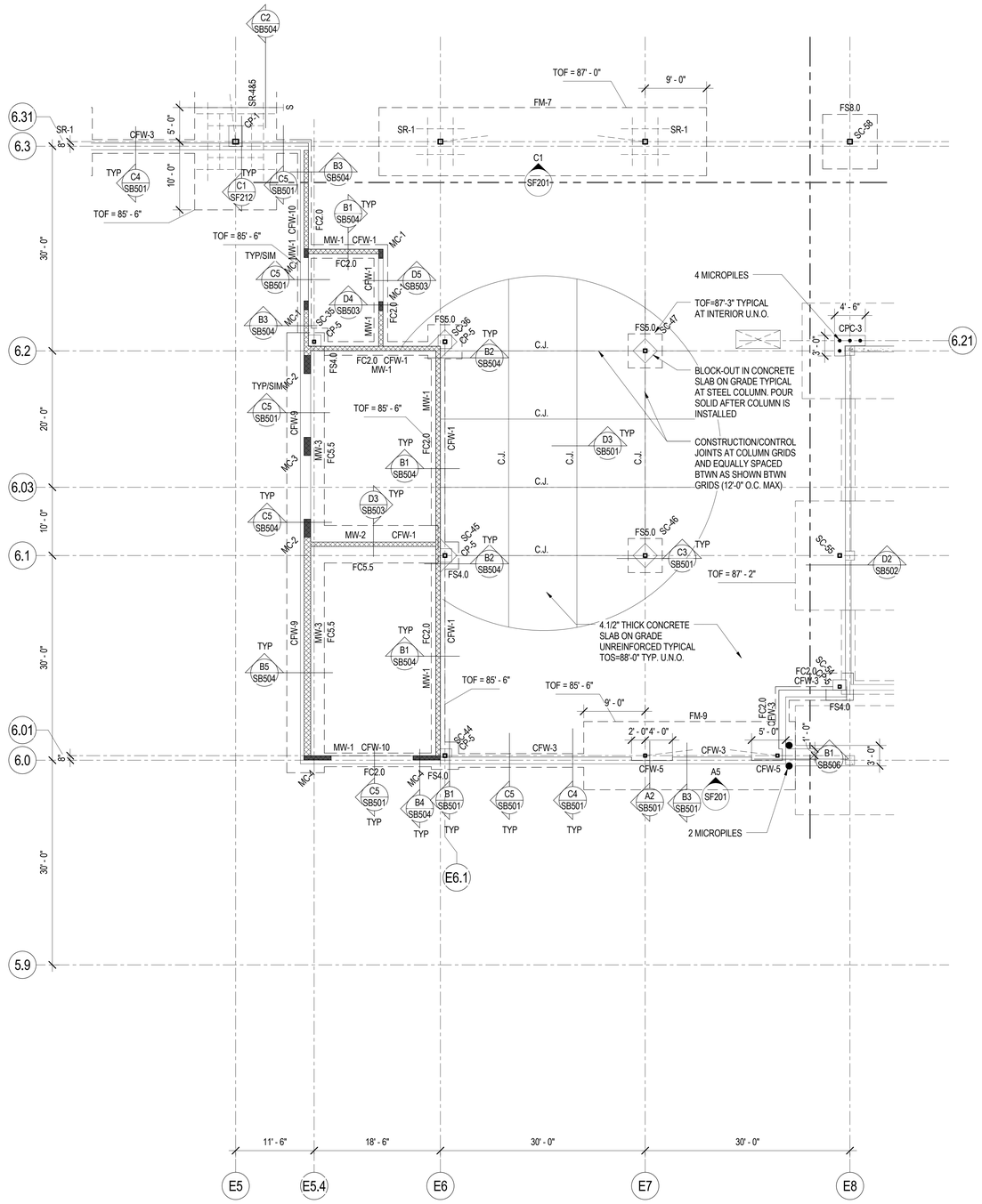

1 SB101C PARTIAL FOOTING & FOUNDATION PLAN - AREA C

SCALE: 1/8" = 1'-0"

GSBS ARCHITECTS

375 WEST 200 SOUTH
SALT LAKE CITY, UT 84101

P 801.521.8600
F 801.521.7915

www.gsbsarchitects.com

LICENSED CERTIFIED STRUCTURAL ENGINEER
NO. 144210
RONALD JAMES REAVELEY
UTAH

REVISIONS:

REAVELEY ENGINEERS + ASSOCIATES
Consulting Structural Engineers

P 801.486.3883
F 801.485.0911

675 E 500 S, Suite 490
Salt Lake City, Utah 84102
www.reaveley.com

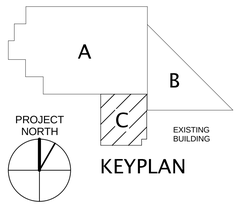

KEYPLAN

Utah Valley University New Science Building

800 West University Parkway
Orem, Utah 84058

Division of Facilities Construction and Managment

DRAWN BY:	Author
CHECKED BY:	Checker
DFCM PROJECT NO.:	
GSBS PROJECT NO.:	2009.115.00
ISSUED DATE:	05.07.10

PARTIAL FOOTING & FOUNDATION PLAN - AREA C
CONSTRUCTION DOCUMENTS

SB101C

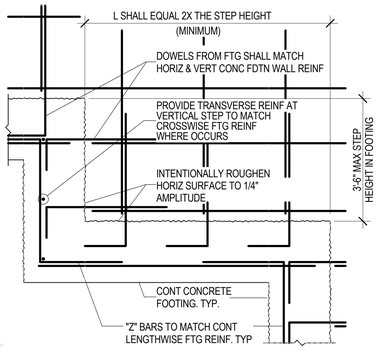

D1 SB501 TYPICAL STEP FOOTING DETAIL

NO SCALE

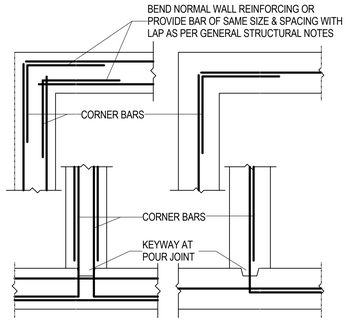

D2 SB501 PLAN VIEW - TYPICAL WALL CORNERS & INTERSECTION

NO SCALE

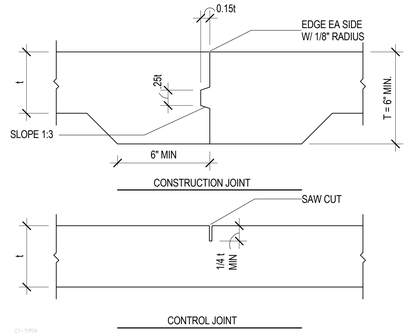

D3 SB501 TYPICAL SLAB JOINTS

NO SCALE

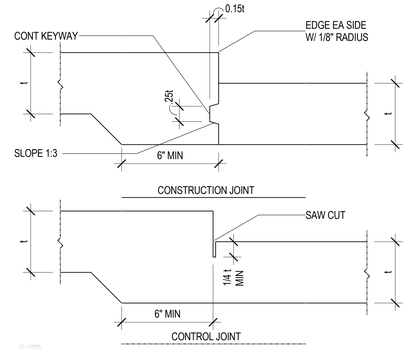

D4 SB501 TYP SLAB JOINTS AT DEPRESSED SLAB

NO SCALE

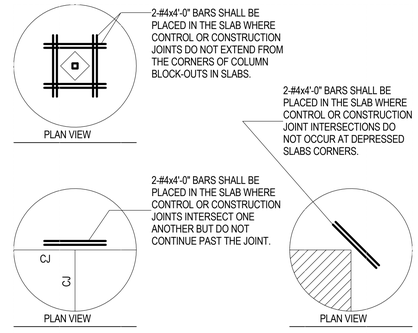

D5 SB501 TYPICAL SLAB REINF AT DISCONTINUOUS SLAB JOINTS

NO SCALE

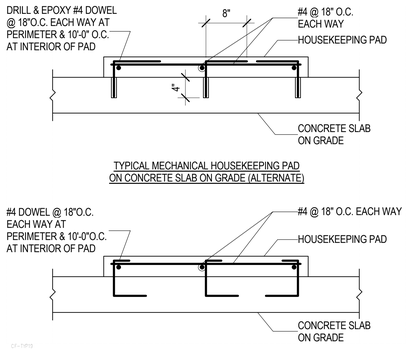

C1 SB501 TYP MECHANICAL HOUSEKEEPING PAD ON CONCRETE SLAB ON GRADE

NO SCALE

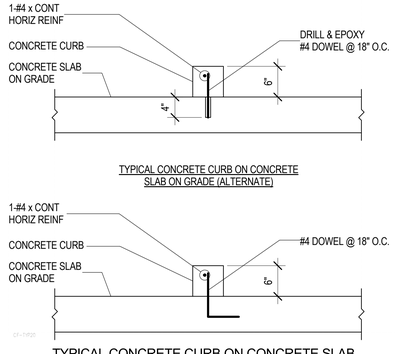

C2 SB501 TYPICAL CONCRETE CURB ON CONCRETE SLAB ON GRADE

NO SCALE

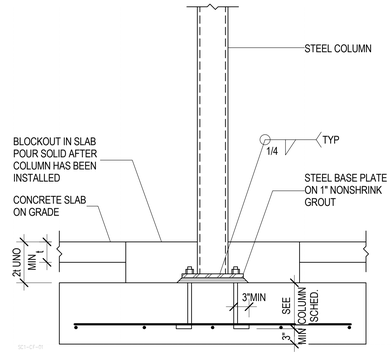

C3 SB501 TYPICAL STEEL COLUMN BASE

NO SCALE

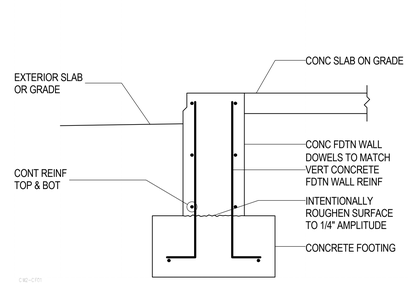

C4 SB501 TYP 12" EXTERIOR CONCRETE FOUNDATION WALL

NO SCALE

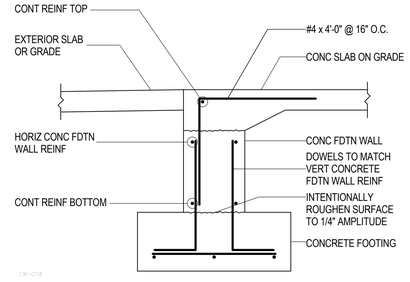

C5 SB501 TYP CONCRETE SLAB TO FOUNDATION WALL AT DOOR OPENING

NO SCALE

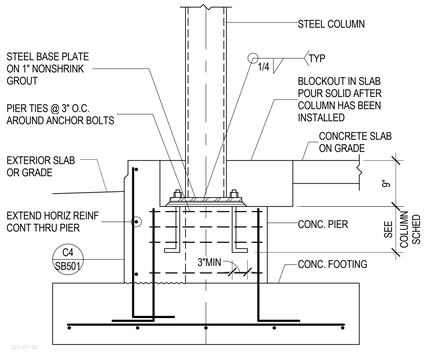

B1 SB501 TYP STEEL COLUMN BASE AT CONC PIER IN FOUNDATION WALL

NO SCALE

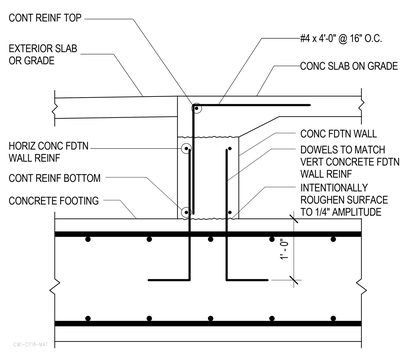

B2 SB501 TYPICAL CONCRETE SLAB TO FOUNDATION WALL AT DOOR OPENING AT MAT MAT FOOTING

NO SCALE

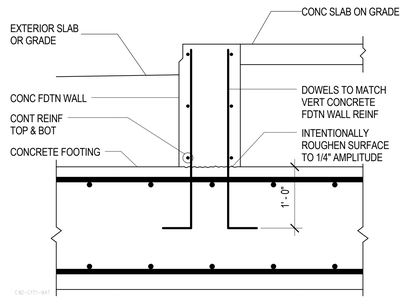

B3 SB501 TYPICAL 12" EXTERIOR CONCRETE FOUNDATION WALL AT MAT FOOTING

NO SCALE

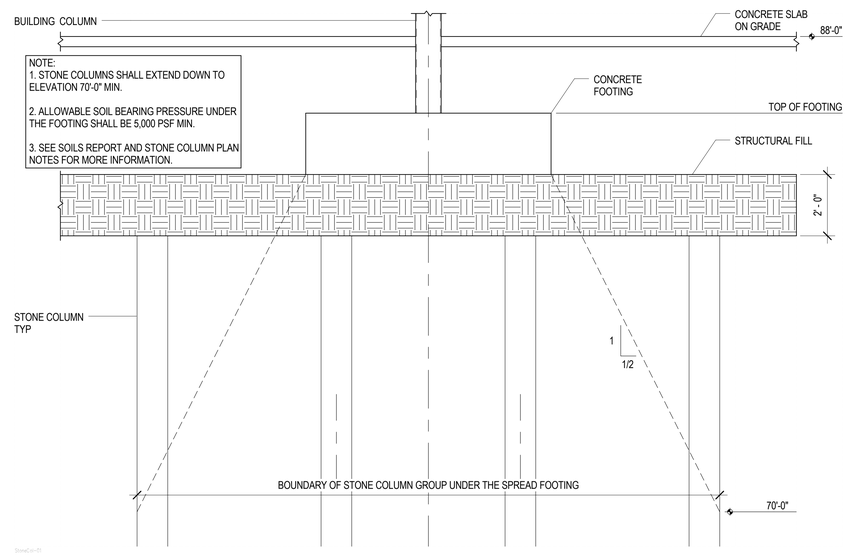

A4 SB501 TYPICAL SECTION FOR STONE COLUMN GROUP UNDER THE SPREAD FOOTING

NO SCALE

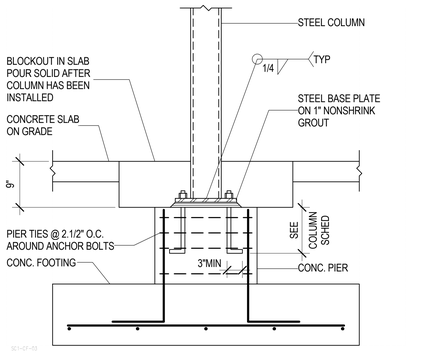

A1 SB501 TYPICAL STEEL COLUMN BASE AT CONCRETE PIER

NO SCALE

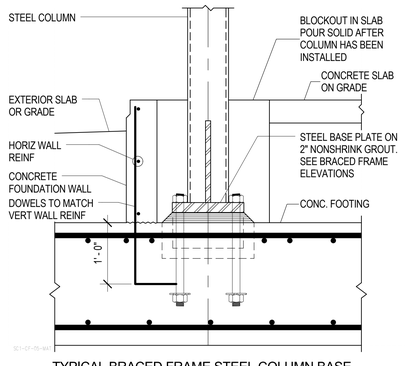

A2 SB501 TYPICAL BRACED FRAME STEEL COLUMN BASE AT CONC PIER IN FOUNDATION WALL

NO SCALE

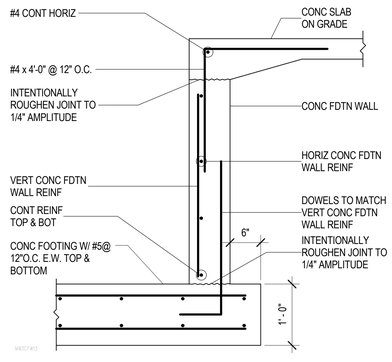

A3 SB501 TYPICAL ELEVATOR PIT DETAIL

NO SCALE

GSBS ARCHITECTS
375 WEST 200 SOUTH
SALT LAKE CITY, UT 84101
P 801.521.8600
F 801.521.7913
www.gsbsarchitects.com

LICENSED CERTIFIED STRUCTURAL ENGINEER
NO. 144210
RONALD JAMES REAVELEY
UTAH

REVISIONS:

REAVELEY
ENGINEERS + ASSOCIATES
Consulting Structural Engineers
P: 801.486.3883
F: 801.485.0911
675 E.500 S. Suite 490
Salt Lake City, Utah 84102
www.reaveley.com

Utah Valley University New Science Building

800 West University Parkway
Orem, Utah 84058

Division of Facilities Construction and Managment

DRAWN BY:	Author
CHECKED BY:	Checker
DFCM PROJECT NO.:	
GSBS PROJECT NO.:	2009.115.00
ISSUED DATE:	05.07.10

TYPICAL FOOTING & FOUNDATION DETAILS

CONSTRUCTION DOCUMENTS

SB501

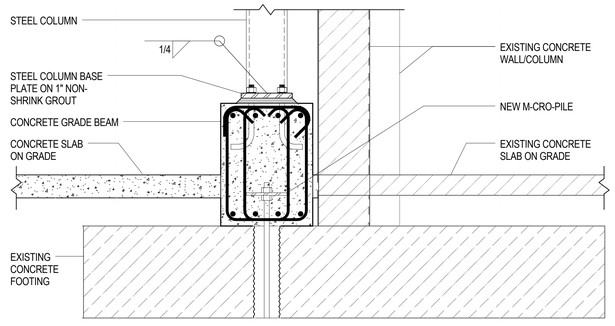

D1 / SB502 TYPICAL CONCRETE PILE CAP ON EXISTING CONCRETE FOOTING

NO SCALE

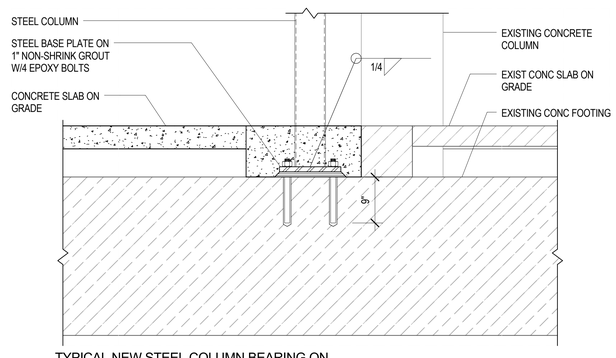

D2 / SB502 TYPICAL NEW STEEL COLUMN BEARING ON EXISTING FOOTING

NO SCALE

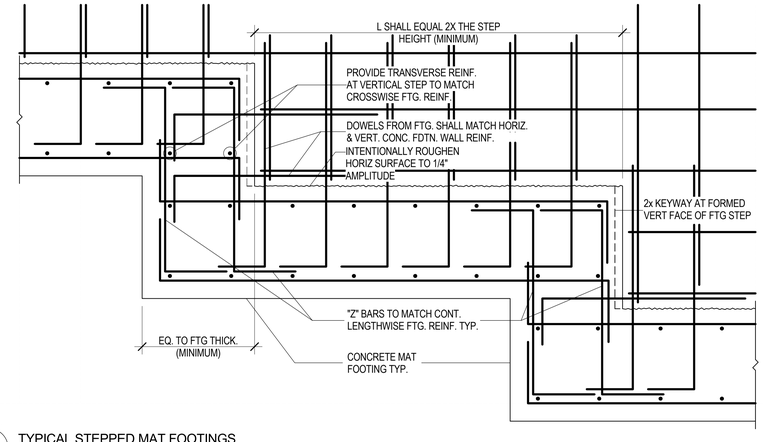

D4 / SB502 TYPICAL STEPPED MAT FOOTINGS

NO SCALE

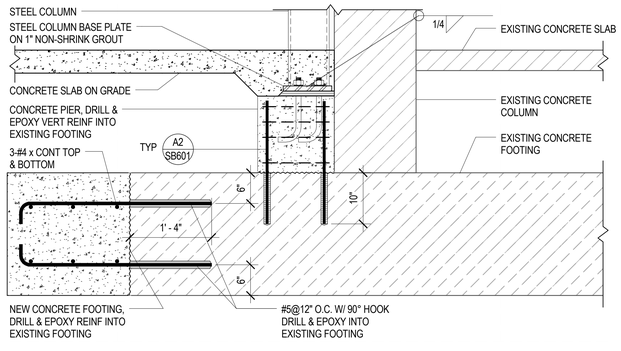

C1 / SB502 NEW STEEL COLUMN ON EXISTING FOOTING

NO SCALE

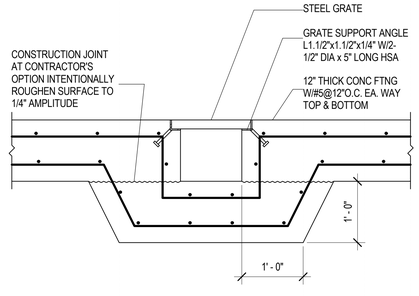

C3 / SB502 TYPICAL SUMP PIT AT ELEVATOR

NO SCALE

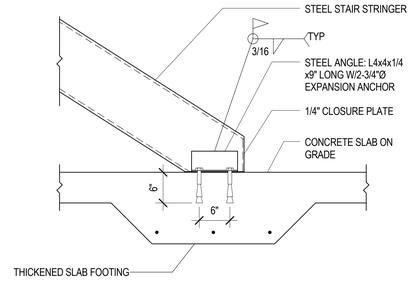

C4 / SB502 TYPICAL STAIR STRINGER CONNECTION TO CONC SLAB ON GRADE

NO SCALE

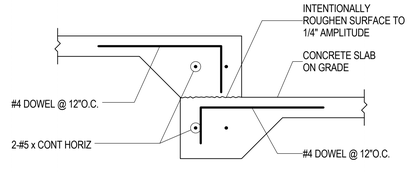

C5 / SB502 TYPICAL STEP IN CONCRETE SLAB ON GRADE

NO SCALE

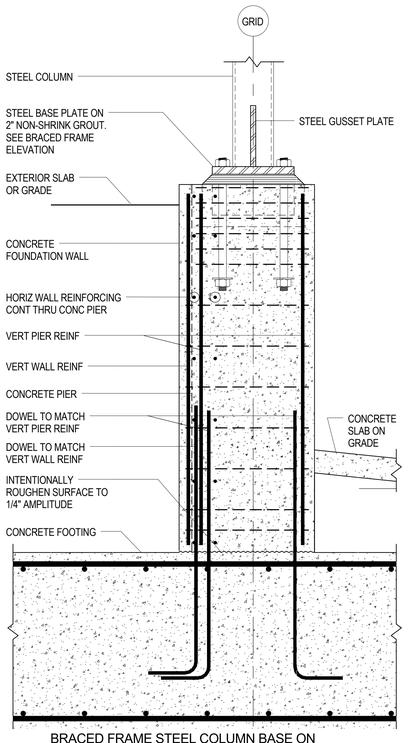

A1 / SB502 BRACED FRAME STEEL COLUMN BASE ON CONCRETE PIER

NO SCALE

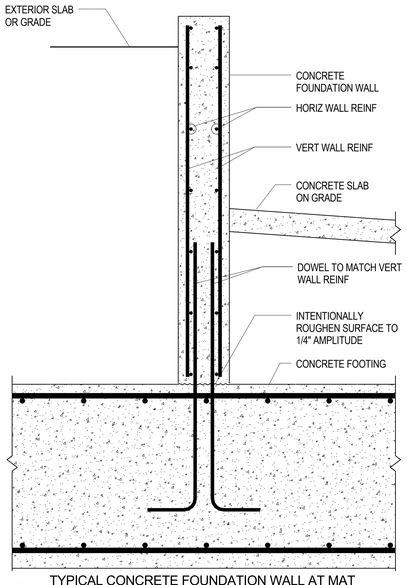

A2 / SB502 TYPICAL CONCRETE FOUNDATION WALL AT MAT FOOTING

NO SCALE

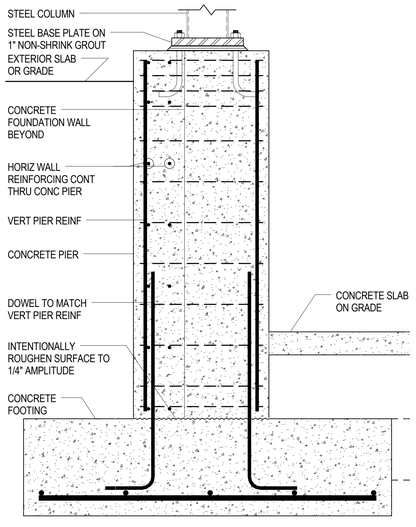

A3 / SB502 TYPICAL STEEL COLUMN ON CONCRETE PIER

NO SCALE

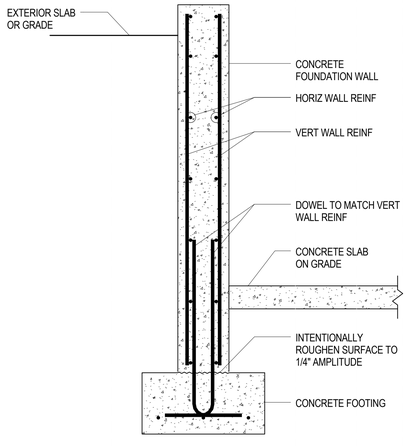

A4 / SB502 TYPICAL CONCRETE FOUNDATION WALL DETAIL

NO SCALE

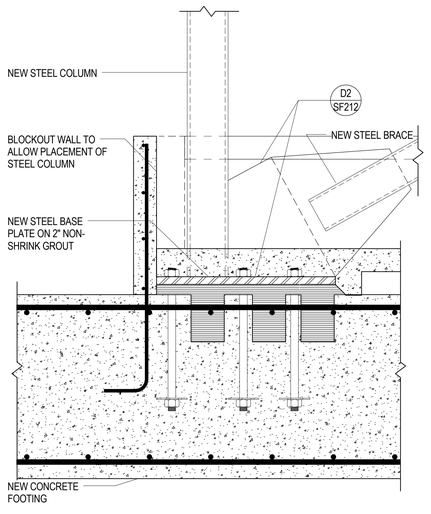

A5 / SB502 BRACED FRAME STEEL COLUMN BASE

NO SCALE

GSBS ARCHITECTS
375 WEST 200 SOUTH
SALT LAKE CITY, UT 84101
P 801.521.8600
F 801.521.7913
www.gsbsarchitects.com

LICENSED CERTIFIED STRUCTURAL ENGINEER NO. 144210 RONALD JAMES REAVELEY UTAH

REVISIONS:

REAVELEY ENGINEERS + ASSOCIATES
Consulting Structural Engineers
P 801.486.3883
F 801.485.0911
675 E 500 S, Suite 400
Salt Lake City, Utah 84102
www.reaveley.com

Utah Valley University New Science Building

800 West University Parkway
Orem, Utah 84058

Division of Facilities Construction and Managment

DRAWN BY:	Author
CHECKED BY:	Checker
DFCM PROJECT NO.:	
GSBS PROJECT NO.:	2009.115.00
ISSUED DATE:	05.07.10

TYPICAL FOOTING & FOUNDATION DETAILS

CONSTRUCTION DOCUMENTS

SB502

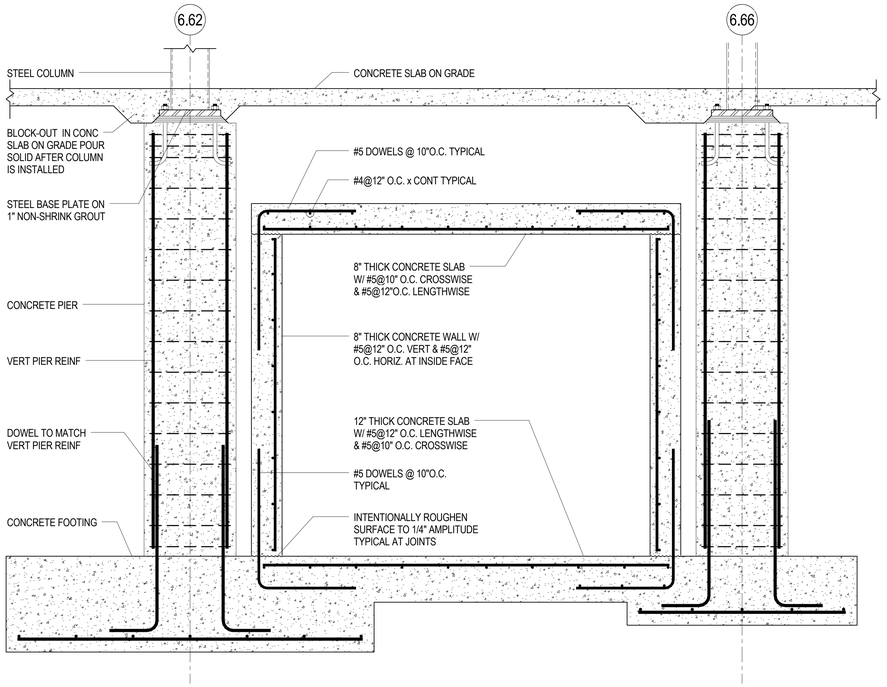

C1 / SB503 UTILITY TUNNEL SECTION AT CONCRETE PIERS

SCALE: 3/4" = 1'-0"

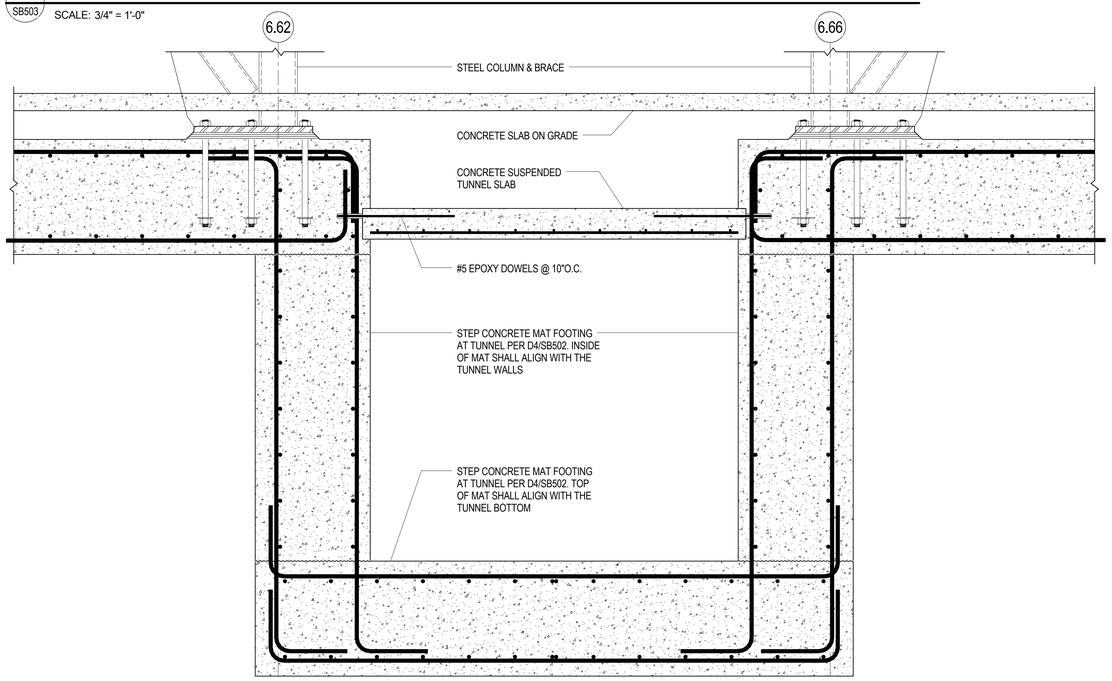

A1 / SB503 UTILITY TUNNEL SECTION AT MAT FOOTING STEP

SCALE: 3/4" = 1'-0"

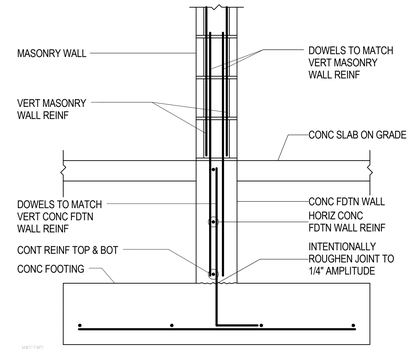

D3 / SB503 TYP MASONRY WALL ON FOUNDATION WALL

NO SCALE

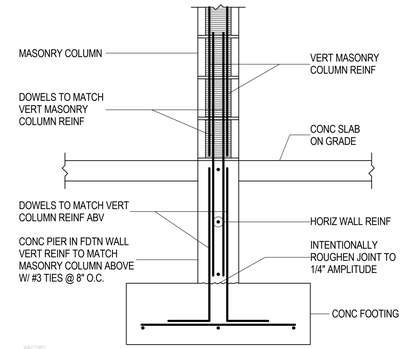

D4 / SB503 TYP MASONRY COLUMN ON CONCRETE FOUNDATION WALL

NO SCALE

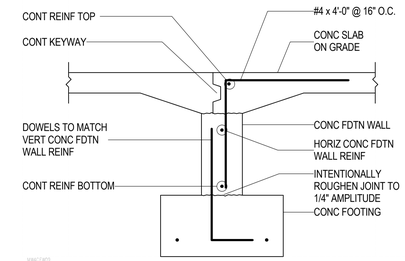

D5 / SB503 TYPICAL SLAB AT DOOR OPENING

NO SCALE

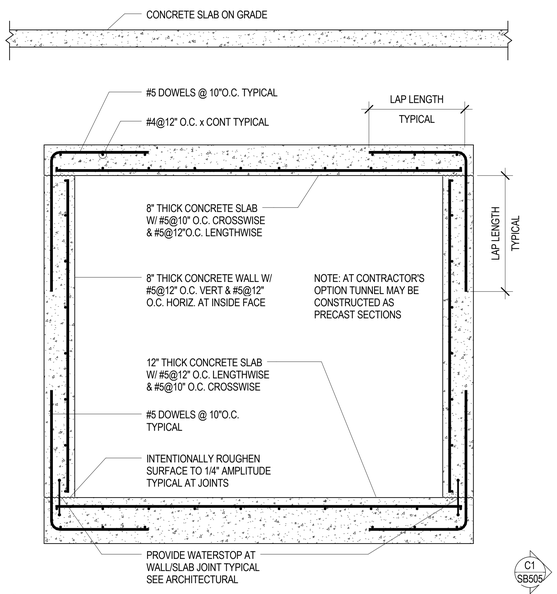

B3 / SB503 TYPICAL UTILITY TUNNEL SECTION

SCALE: 3/4" = 1'-0"

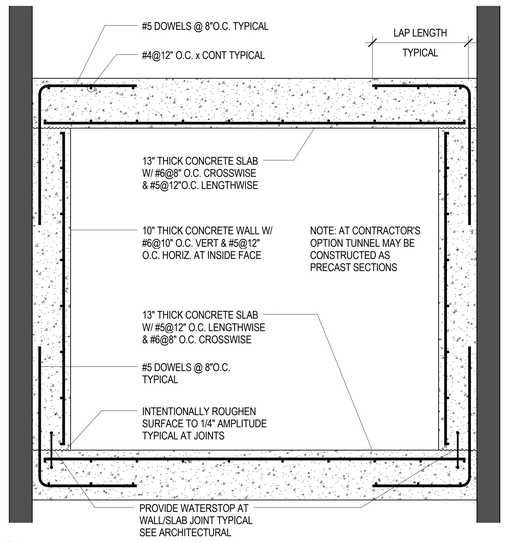

C1 / SB505

B5 / SB503 TYPICAL UTILITY TUNNEL SECTION BELOW EXISTING BUILDING

SCALE: 3/4" = 1'-0"

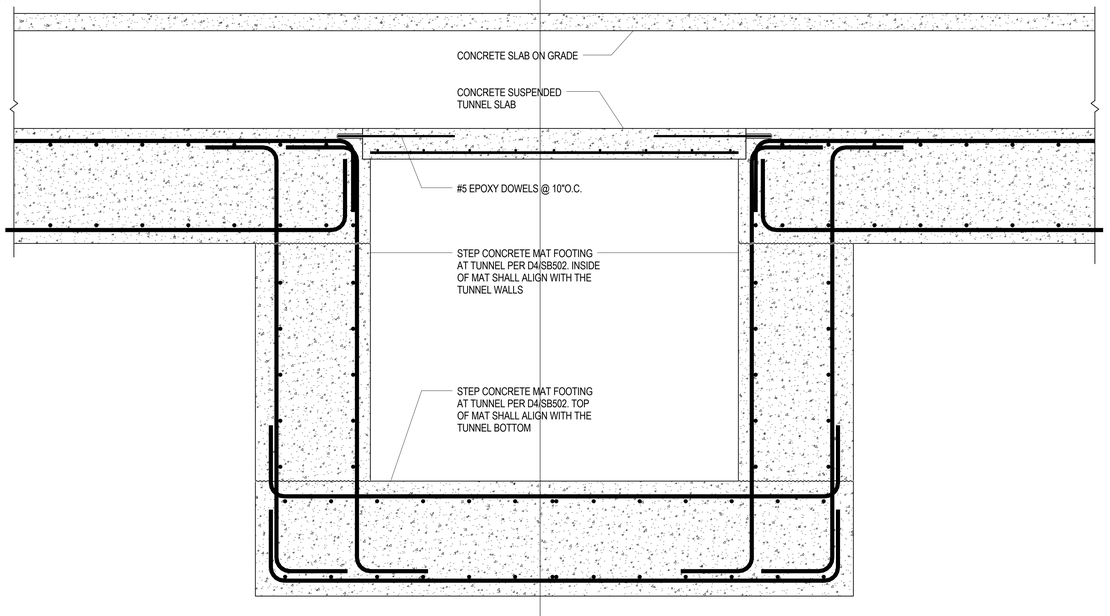

A3 / SB503 MAT FOOTING STEP AT TUNNEL

SCALE: 3/4" = 1'-0"

GSBS ARCHITECTS
375 WEST 200 SOUTH
SALT LAKE CITY, UT 84101
P 801.521.8600
F 801.521.7913
www.gsbsarchitects.com

LICENSED CERTIFIED STRUCTURAL ENGINEER NO. 144210 RONALD JAMES REAVELEY UTAH

REVISIONS:

REAVELEY ENGINEERS + ASSOCIATES
Consulting Structural Engineers
P 801.486.3883
F 801.485.0911
675 E 500 S, Suite 400
Salt Lake City, Utah 84102
www.reaveley.com

Utah Valley University New Science Building

800 West University Parkway
Orem, Utah 84058

Division of Facilities Construction and Managment

DRAWN BY:	Author
CHECKED BY:	Checker
DFCM PROJECT NO.:	
GSBS PROJECT NO.:	2009.115.00
ISSUED DATE:	05.07.10

TYPICAL FOOTING & FOUNDATION DETAILS

CONSTRUCTION DOCUMENTS

SB503

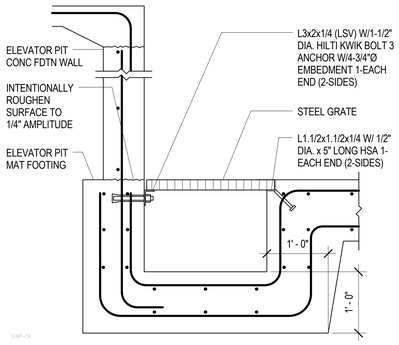

D1 / SB504 TYPICAL SUMP PIT AT ELEVATOR WALL

NO SCALE

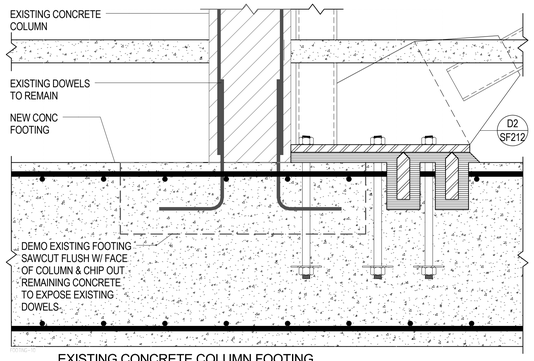

D2 / SB504 EXISTING CONCRETE COLUMN FOOTING REMOVAL & NEW CONCRETE FOOTING

NO SCALE

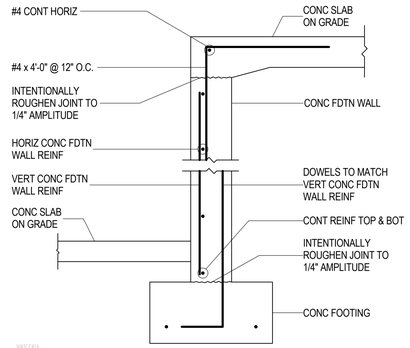

D3 / SB504 TYPICAL CONCRETE FOUNDATION WALL

NO SCALE

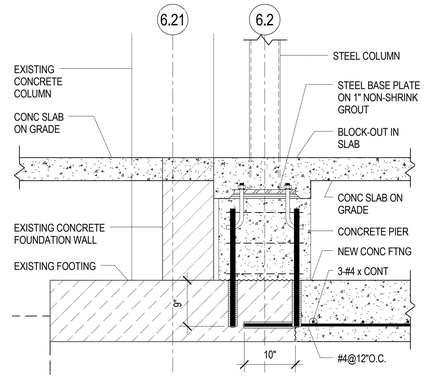

D5 / SB504 NEW PIER & FOOTING AT EXISTING

NO SCALE

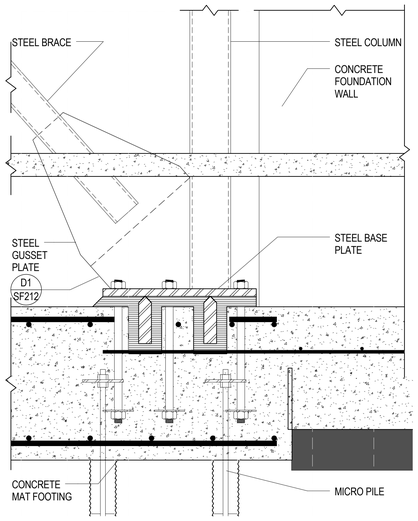

C1 / SB504 BRACED FRAME STEEL COLUMN BASE

NO SCALE

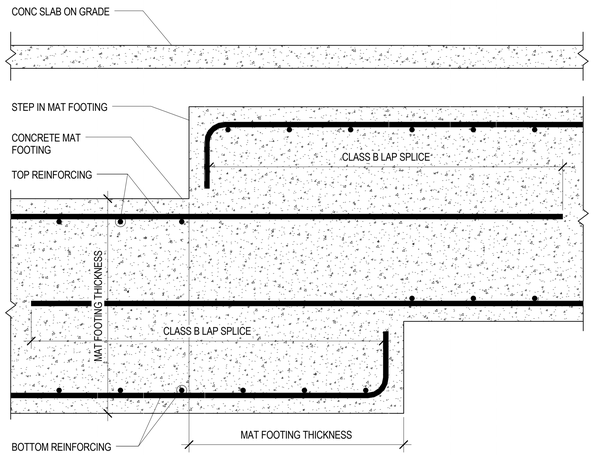

C2 / SB504 TYPICAL MAT FOOTING STEP; STEP HT>10"

NO SCALE

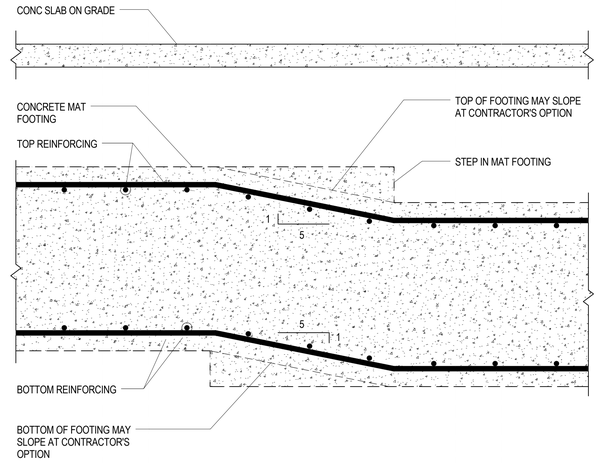

C3 / SB504 TYPICAL MAT FOOTING STEP ; STEP HT<10"

NO SCALE

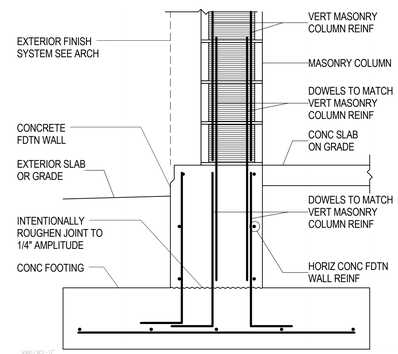

C5 / SB504 TYPICAL MASONRY COLUMN ON CONCRETE FOUNDATION WALL

NO SCALE

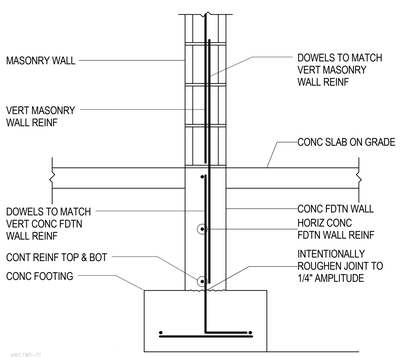

B1 / SB504 TYPICAL MASONRY WALL ON FOUNDATION WALL

NO SCALE

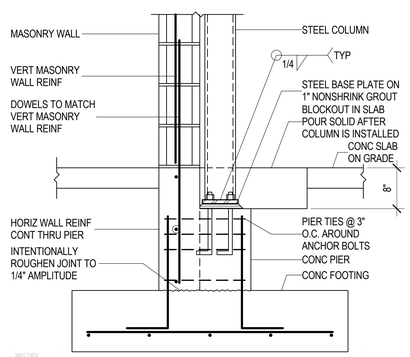

B2 / SB504 TYP STEEL COLUMN ON CONC PIER AT MASONRY WALL ON CONC FDTN WALL

NO SCALE

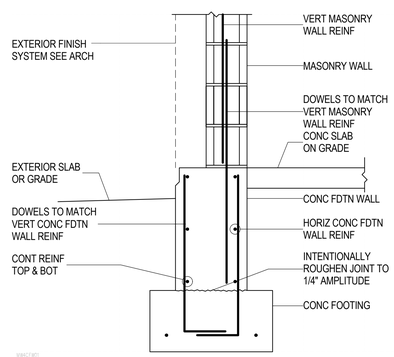

B3 / SB504 TYPICAL MASONRY WALL ON CONCRETE FOUNDATION WALL

NO SCALE

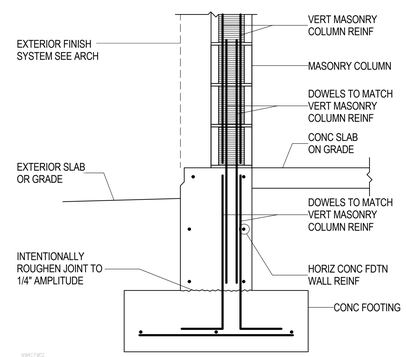

B4 / SB504 TYPICAL MASONRY COLUMN ON CONCRETE FOUNDATION WALL

NO SCALE

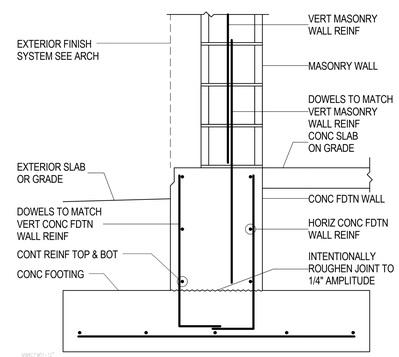

B5 / SB504 TYPICAL MASONRY WALL ON CONCRETE FOUNDATION WALL

NO SCALE

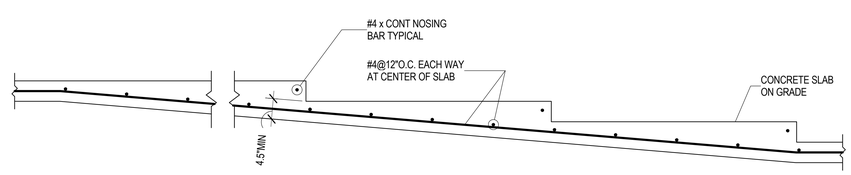

A4 / SB504 TYPICAL STEPS IN CONCRETE SLAB ON GRADE AT LECTURE ROOM

NO SCALE

GSBS ARCHITECTS

375 WEST 200 SOUTH
SALT LAKE CITY, UT 84101

P 801.521.8600
F 801.521.7913

www.gsbsarchitects.com

LICENSED CERTIFIED STRUCTURAL ENGINEER NO. 144210 RONALD JAMES REAVELEY UTAH

REVISIONS:

REAVELEY ENGINEERS + ASSOCIATES
Consulting Structural Engineers

P: 801.486.3883
F: 801.485.0911

675 E 500 S, Suite 400
Salt Lake City, Utah 84102
www.reaveley.com

Utah Valley University New Science Building

800 West University Parkway
Orem, Utah 84058

Division of Facilities Construction and Managment

DRAWN BY:	Author
CHECKED BY:	Checker
DFCM PROJECT NO.:	
GSBS PROJECT NO.:	2009.115.00
ISSUED DATE:	05.07.10

TYPICAL FOOTING & FOUNDATION DETAILS

CONSTRUCTION DOCUMENTS

SB504

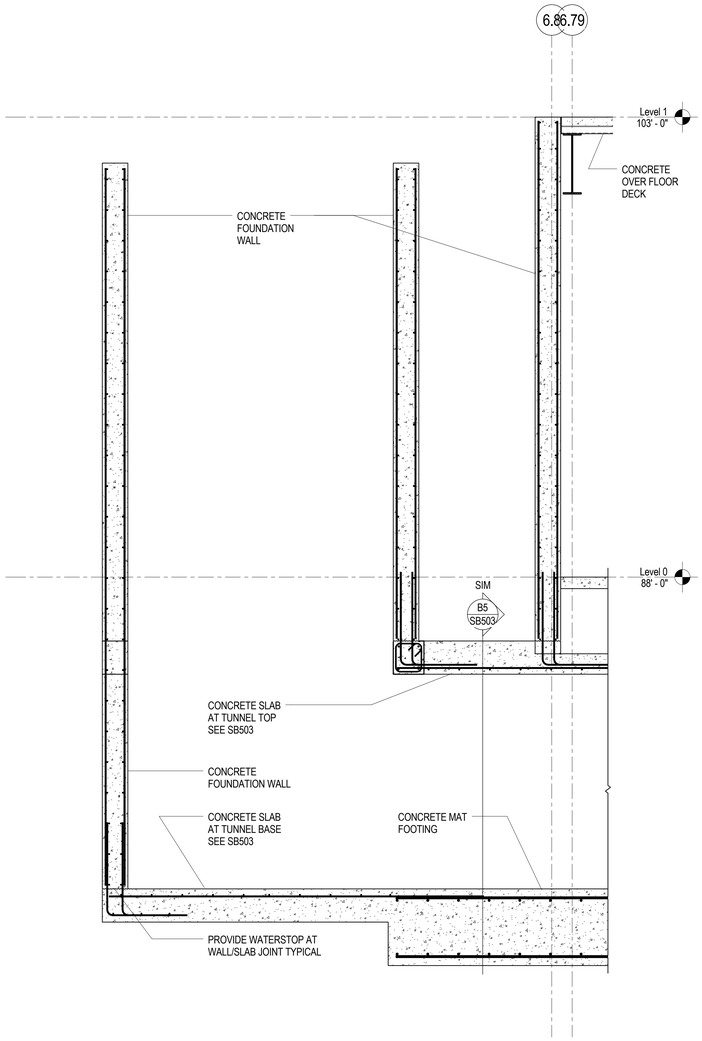

C1 SB505 SECTION THROUGH TUNNEL ACCESS

SCALE: 1/2" = 1'-0"

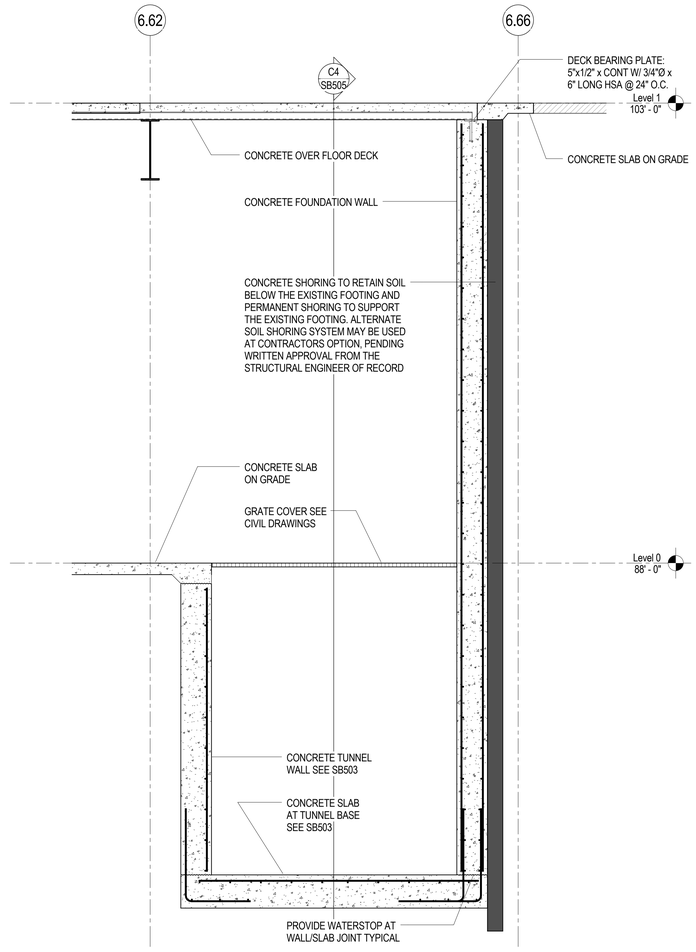

C3 SB505 SECTION THROUGH TUNNEL TRANSITION

SCALE: 1/2" = 1'-0"

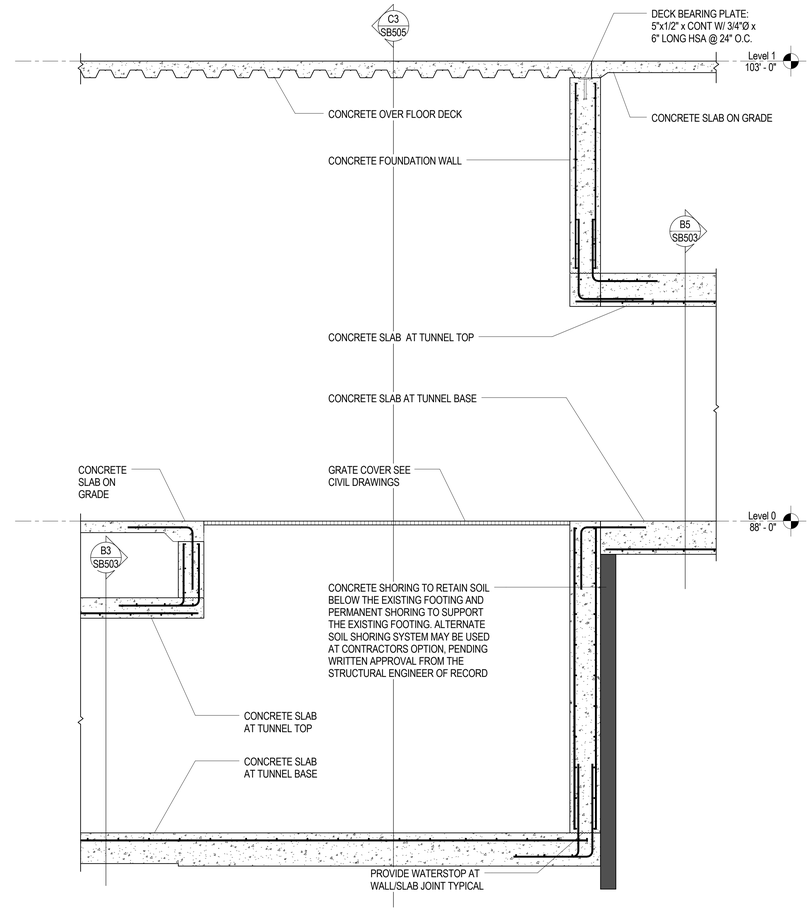

C4 SB505 SECTION THROUGH TUNNEL TRANSITION

SCALE: 1/2" = 1'-0"

GSBS ARCHITECTS

375 WEST 200 SOUTH
SALT LAKE CITY, UT 84101

P 801.521.8600
F 801.521.7915

www.gsbsarchitects.com

LICENSED CERTIFIED STRUCTURAL ENGINEER
NO. 144210
RONALD JAMES REAVELEY
UTAH

REVISIONS:

REAVELEY ENGINEERS + ASSOCIATES
Consulting Structural Engineers

P: 801.486.3883
F: 801.485.0911

675 E 500 S, Suite 400
Salt Lake City, Utah 84102
www.reaveley.com

Utah Valley University New Science Building

800 West University Parkway
Orem, Utah 84058

Division of Facilities Construction and Managment

DRAWN BY:	Author
CHECKED BY:	Checker
DFCM PROJECT NO.:	
GSBS PROJECT NO.:	2009.115.00
ISSUED DATE:	05.07.10

TUNNEL SECTIONS

CONSTRUCTION DOCUMENTS

SB505

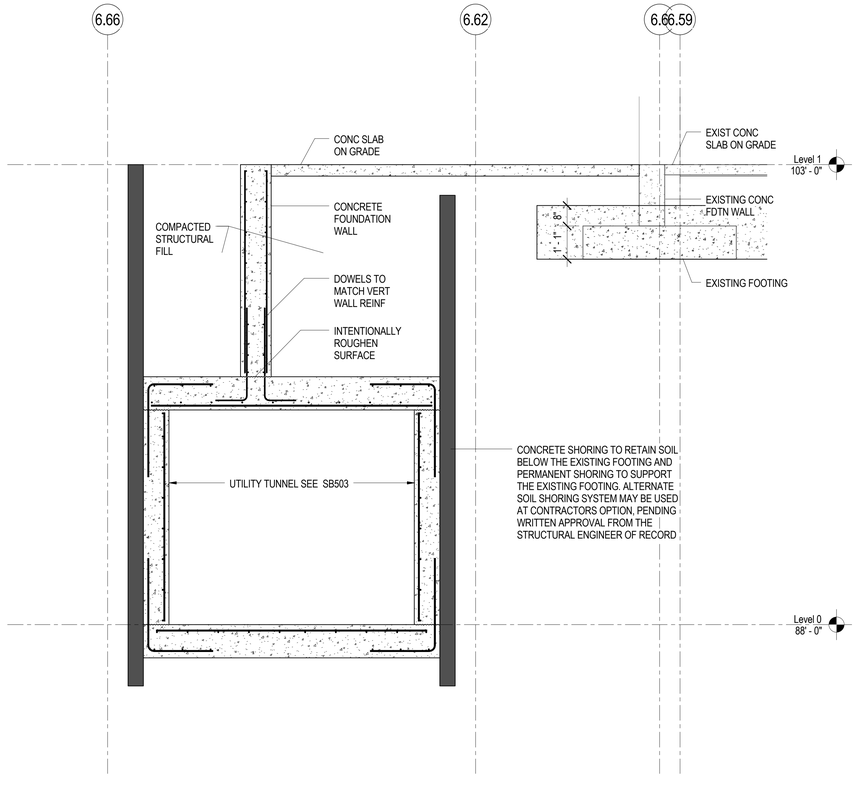

C2 SB506 TUNNEL BELOW STAIR ALONG GRID 6.6
SCALE: 1/2" = 1'-0"

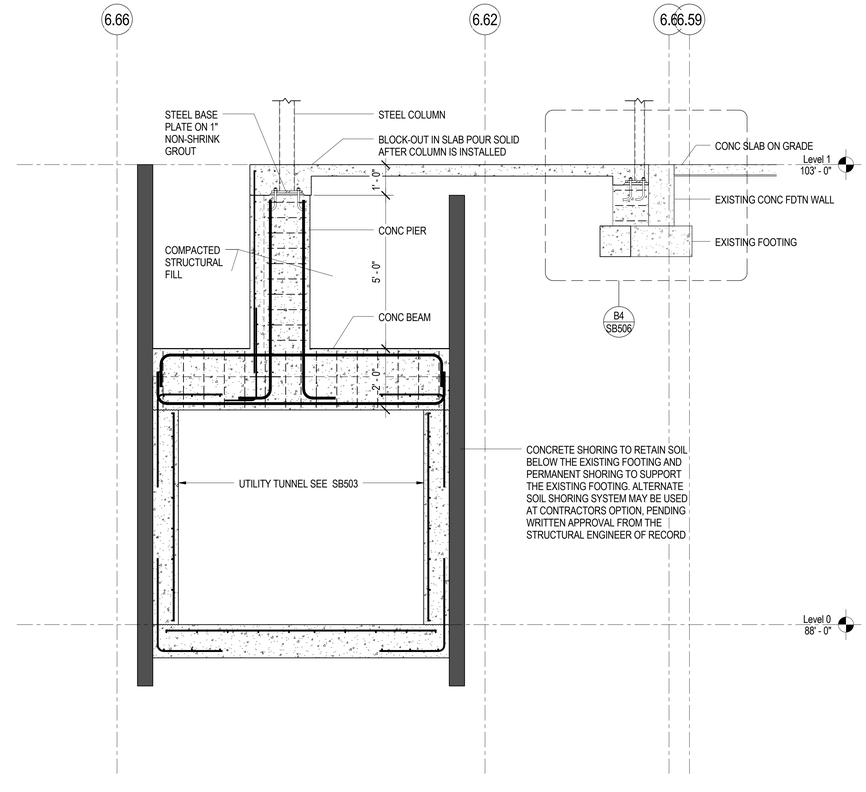

C4 SB506 TUNNEL BELOW STAIR ALONG GRID 6.6
SCALE: 1/2" = 1'-0"

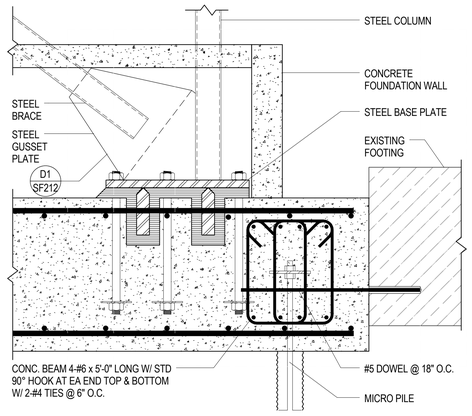

B1 SB506 BRACED FRAME BASE AGAINST EXISTING
NO SCALE

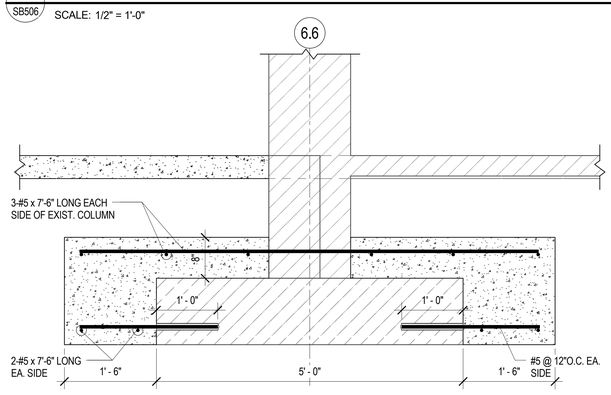

B2 SB506 NEW CONCRETE FOOTING AT EXISTING
NO SCALE

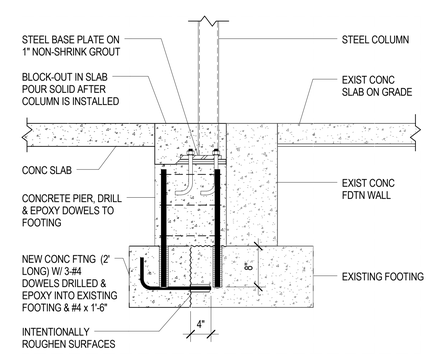

B4 SB506 NEW STEEL COLUMN & PIER AT EXISTING
NO SCALE

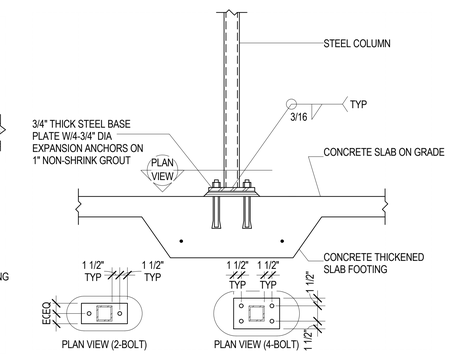

B5 SB506 TYPICAL STAIR LANDING SUPPORT COLUMN BASE DETAIL
NO SCALE

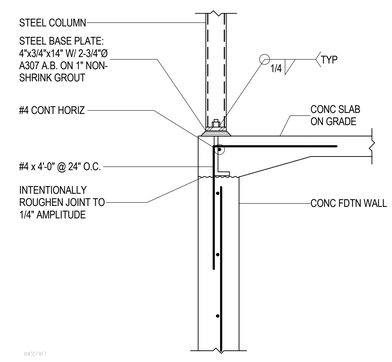

C3 SB506 TYP ELEVATOR GUIDE RAIL SUPPORT COLUMN BEARING ON CONC FDTN WALL
NO SCALE

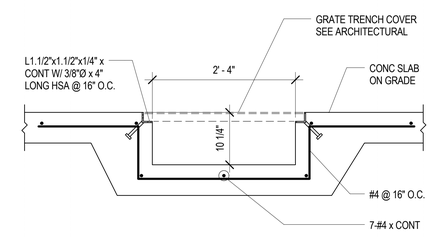

A4 SB506 TYPICAL TRENCH DRAIN IN CONCRETE SLAB ON GRADE
NO SCALE

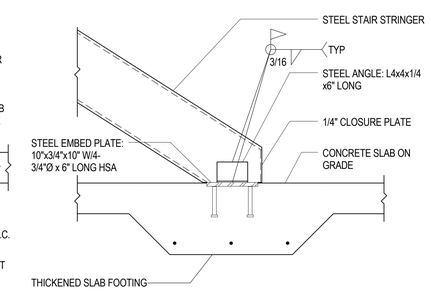

A5 SB506 STAIR STRINGER CONNECTION TO CONC SLAB ON GRADE AT ATRIUM
NO SCALE

GSBS ARCHITECTS
375 WEST 200 SOUTH
SALT LAKE CITY, UT 84101
P 801.521.8600
F 801.521.7913
www.gsbsarchitects.com

LICENSED CERTIFIED STRUCTURAL ENGINEER
NO. 14210
RONALD JAMES REAVELEY
UTAH

REVISIONS:

REAVELEY ENGINEERS + ASSOCIATES
Consulting Structural Engineers
P 801.486.3883
F 801.485.0911
675 E 500 S, Suite 400
Salt Lake City, Utah 84102
www.reaveley.com

Utah Valley University New Science Building

800 West University Parkway
Orem, Utah 84058

Division of Facilities Construction and Managment

DRAWN BY:	Author
CHECKED BY:	Checker
DFCM PROJECT NO.:	
GSBS PROJECT NO.:	2009.115.00
ISSUED DATE:	05.07.10

FOUNDATION DETAILS

CONSTRUCTION DOCUMENTS

SB506

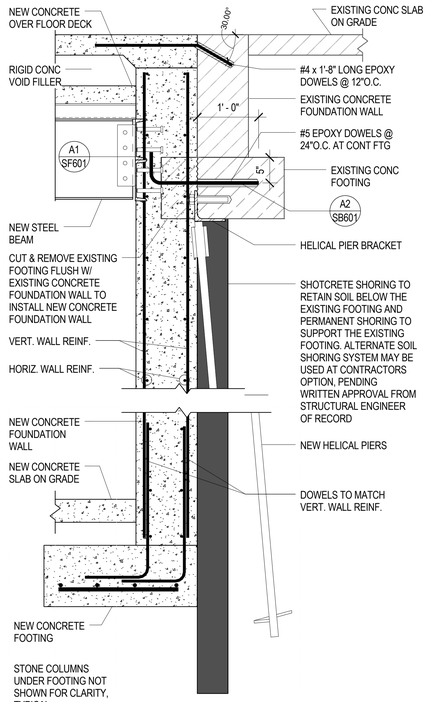

C1 / SB510 — NEW CONCRETE FOUNDATION WALL AT EXISTING STRUCTURE
NO SCALE

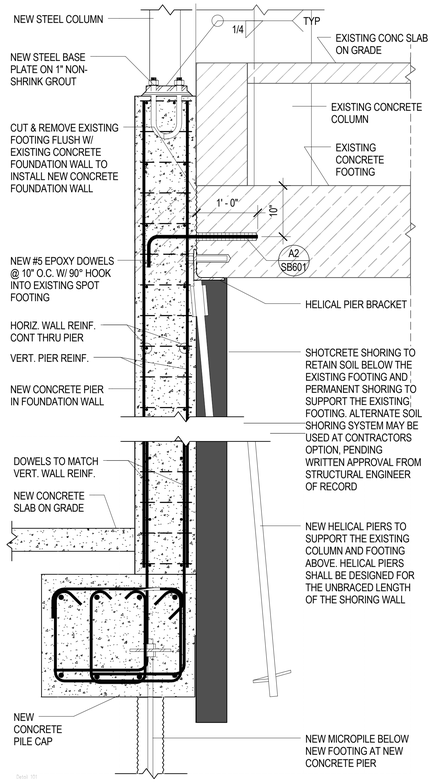

C2 / SB510 — NEW CONCRETE COLUMN & CONCRETE FOUNDATION WALL AT EXISTING STRUCTURE
NO SCALE

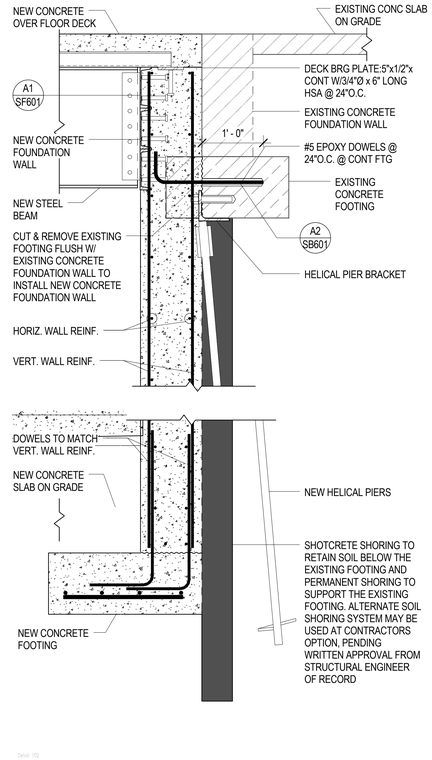

C3 / SB510 — NEW CONCRETE FOUNDATION WALL AT EXISTING STRUCTURE
NO SCALE

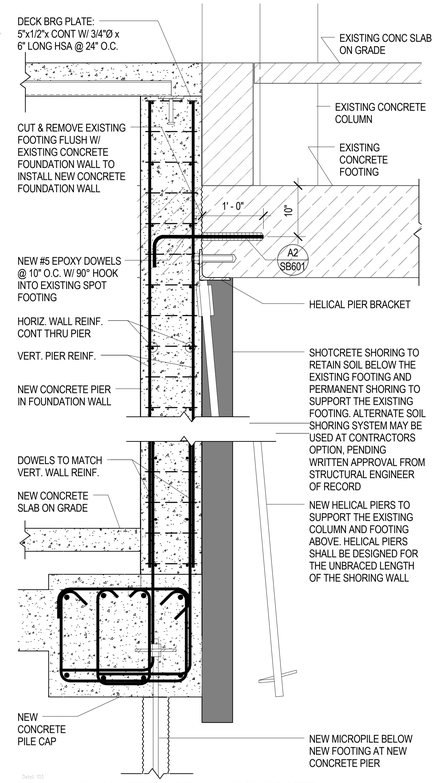

C4 / SB510 — NEW CONCRETE COLUMN & CONCRETE FOUNDATION WALL AT EXISTING STRUCTURE
NO SCALE

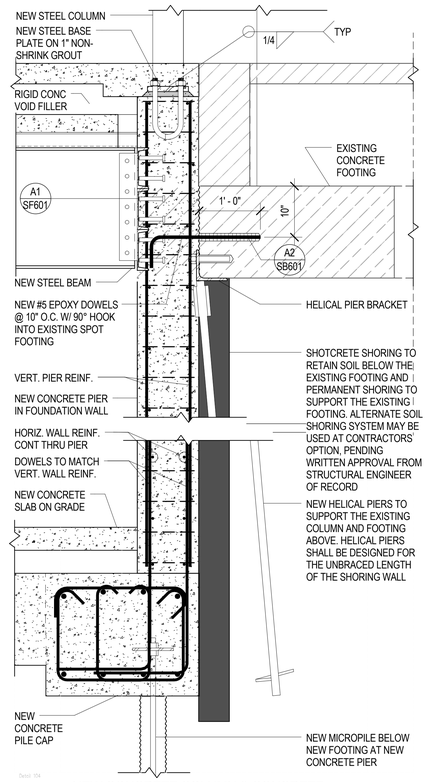

C5 / SB510 — NEW CONCRETE COLUMN & CONCRETE FOUNDATION WALL AT EXISTING STRUCTURE
NO SCALE

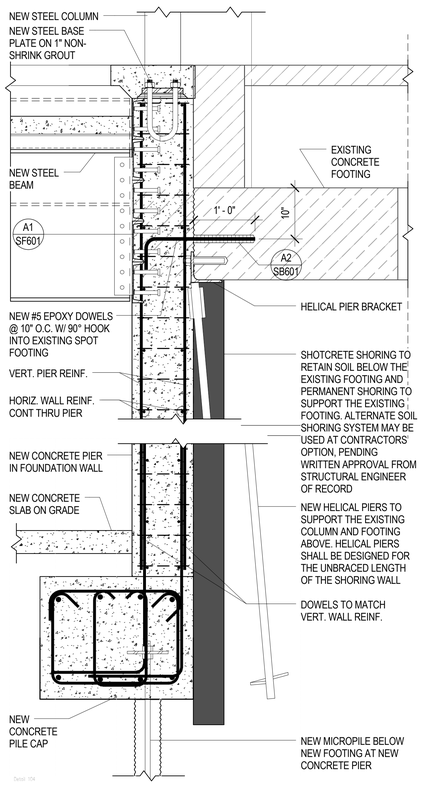

A1 / SB510 — NEW CONCRETE COLUMN & CONCRETE FOUNDATION WALL AT EXISTING STRUCTURE
NO SCALE

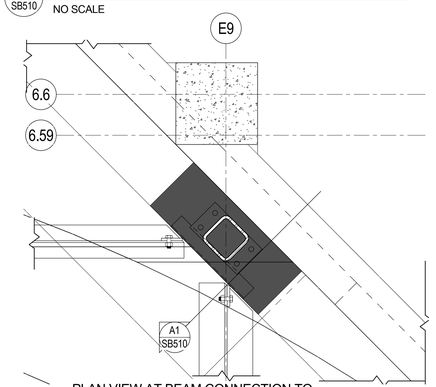

B2 / SB510 — PLAN VIEW AT BEAM CONNECTION TO CONCRETE WALL
NO SCALE

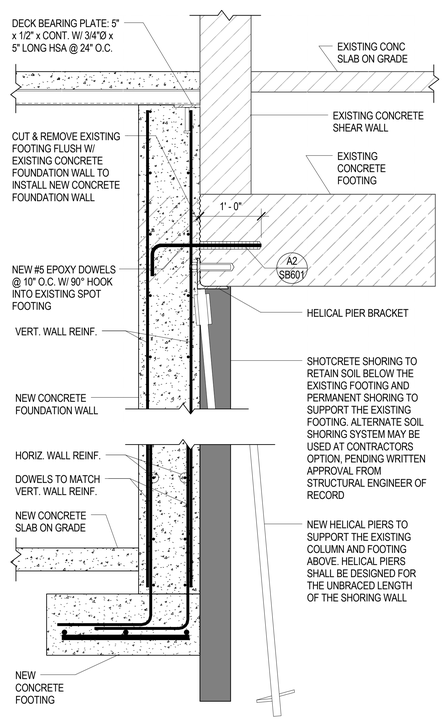

A3 / SB510 — NEW SHORING/FOUNDATION WALL AT EXISTING SHEAR WALL
NO SCALE

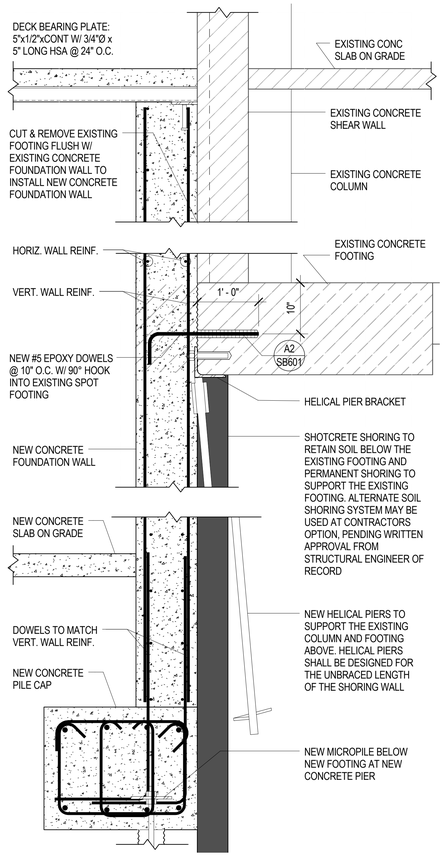

A4 / SB510 — NEW SHORING/FOUNDATION WALL AT EXISTING SHEAR WALL
NO SCALE

GSBS ARCHITECTS
375 WEST 200 SOUTH
SALT LAKE CITY, UT 84101
P 801.521.8600
F 801.521.7913
www.gsbsarchitects.com

LICENSED CERTIFIED STRUCTURAL ENGINEER
NO. 144210
RONALD JAMES REAVELEY
UTAH

REVISIONS:

REAVELEY ENGINEERS + ASSOCIATES
Consulting Structural Engineers
P 801.486.3883
F 801.485.0911
675 E 500 S, Suite 400
Salt Lake City, Utah 84102
www.reaveley.com

Utah Valley University New Science Building

800 West University Parkway
Orem, Utah 84058

Division of Facilities Construction and Managment

DRAWN BY:	Author
CHECKED BY:	Checker
DFCM PROJECT NO.:	
GSBS PROJECT NO.:	2009.115.00
ISSUED DATE:	05.07.10

FOUNDATION & SHORING WALL DETAILS

CONSTRUCTION DOCUMENTS

SB510

CONCRETE FOUNDATION WALL SCHEDULE

MARK	THICK	VERTICAL REINFORCING	HORIZONTAL REINFORCING	T & B HORIZ. BARS	PLACEMENT TYPE
CFW-1	8"	#4 @ 13" O.C.	#5 @ 15" O.C.	1-#5	TYPE A
CFW-2	1' - 0"	#4 @ 10" O.C. O.F. #6 @ 9" O.C. I.F.	#4 @ 12" O.C. E.F.	2- #6	TYPE C
CFW-3	1' - 0"	#4 @ 13" O.C. E.F.	#4 @ 13" O.C. E.F.	2- #6	TYPE C
CFW-4	10"	#4 @ 12" O.C. O.F.	#4 @ 12" O.C. E.F.	2- #5	TYPE C
CFW-5	6"	#4 @ 13" O.C. O.F.	#4 @ 13" O.C. O.F.	1-#6	TYPE B
CFW-6	10"	#4 @ 12" O.C. E.F.	#6 @ 8" O.C. I.F. #4@12" O.C. O.F.	2- #6	TYPE D
CFW-7	10"	#4 @ 10" O.C. O.F. #6 @ 8" O.C. I.F.	#4 @ 10" O.C. E.F.	2- #6	TYPE C
CFW-8	1' - 0"	#6 @ 8" O.C. O.F. #4 @ 8" O.C. I.F.	#4 @ 13" O.C. E.F.	2- #6	TYPE C
CFW-9	1' - 6"	#5 @ 12" O.C. E.F.	#5 @ 12" O.C. E.F.	2- #6	TYPE C
CFW-10	1' - 2"	#4 @ 12" O.C. E.F.	#4 @ 12" O.C. E.F.	2- #6	TYPE C
CFW-11	1' - 0"	#4 @ 10" O.C. O.F. #6 @ 9" O.C. I.F.	#6 @ 12" O.C. E.F.	2- #6	TYPE C

CONCRETE FOUNDATION WALL PLACEMENT TYPE

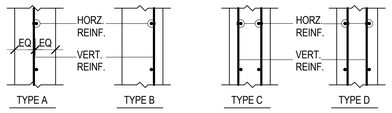

E.F. = EACH FACE
O.F. = OUTSIDE FACE (AGAINST SOIL)
I.F. = INSIDE FACE
3L = THREE LAYERS

CONCRETE PIER SCHEDULE

MARK	SIZE	VERT. REINF.	TIE REINF.	REMARKS
CP-1	42" x 24"	12- #9	5- #3@8" O.C.	SEE B1/SB601
CP-2	24" x 12"	8- #6	2-#3 @ 8" O.C.	
CP-3	36" x 12"	12- #8	#3 @ 8" O.C.	
CP-4	40" x 12"	12- #8	#3 @ 8" O.C.	
CP-5	24" x 24"	8- #8	2-#3 @ 12" O.C.	
CP-6	22" x 22"	8- #7	2-#3 @ 12" O.C.	
CP-7	31" x 15" x 31"	11- #7	4-#4 @ 12" O.C.	
CP-8	18" x 18"	4-#9	#4 @ 12" O.C.	
CP-9	16" x 16"	4- #8	#3 @ 12" O.C.	

CONCRETE PILE CAP SCHEDULE

MARK	DEPTH	WIDTH	HORIZ. REINF.	TIE REINF.	REMARKS
CPC-1	24"	18"	4-#7 T&B W/ 90 HOOKS	2-#4 @ 5"O.C.	SEE A1/SB601
CPC-2	24"	18"	4-#10 T&B W/ 90 HOOKS	2-#4 @ 5"O.C.	SEE A1/SB601
CPC-3	24"	18"	4-#7 T&B W/ 90 HOOKS	2-#4 @ 5"O.C.	SEE A1/SB601
CPC-4	24"	30"	5-#9 T&B W/ 90 HOOKS	3-#4 @ 5"O.C.	SEE A1/SB601
CPC-5	24"	30"	5-#10 T&B W/ 90 HOOKS	3-#4 @ 5"O.C.	SEE A1/SB601

CONCRETE BEAM SCHEDULE

MARK	DEPTH	WIDTH	HORIZ. REINF.	TIE REINF.	REMARKS
CB-1	2'-0"	2'-0"	4-#9 BOTTOM & 3-#7 TOP	#4@12" O.C.	HOOK ALL HORIZ
CB-2	13"	12"	2- #6 TOP & BOTTOM	#3@8" O.C.	

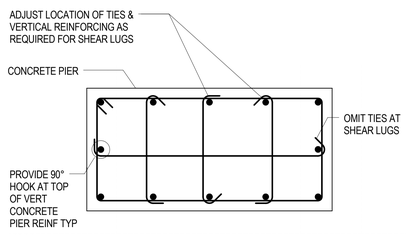

B1 / SB601 TYPICAL CONCRETE PIER PLAN VIEW - CP-1
SCALE: 1" = 1'-0"

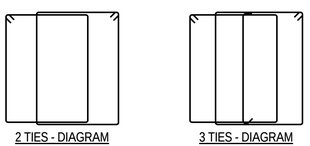

A1 / SB601 TYPICAL CONCRETE PILE CAP TIE DIAGRAMS
SCALE: 1" = 1'-0"

CONCRETE REINFORCING BAR LAP SPLICE SCHEDULE

BAR SIZE Fy = 60 KSI	TENSION BARS																COMP. BARS
	f'c = 3000 PSI				f'c = 4000 PSI				f'c = 5000 PSI				f'c = 6000 PSI				f'c = ALL
	REGULAR		TOP		REGULAR		TOP		REGULAR		TOP		REGULAR		TOP		
	CLASS		CLASS		CLASS		CLASS		CLASS		CLASS		CLASS		CLASS		
	A	B	A	B	A	B	A	B	A	B	A	B	A	B	A	B	
#3	17"	22"	22"	28"	15"	19"	19"	25"	13"	17"	17"	22"	12"	16"	16"	20"	12"
#4	22"	29"	29"	38"	19"	25"	25"	33"	17"	23"	23"	29"	16"	21"	21"	27"	15"
#5	28"	36"	36"	47"	24"	31"	31"	41"	22"	28"	28"	36"	20"	26"	26"	33"	19"
#6	33"	43"	43"	56"	29"	37"	37"	49"	26"	34"	34"	44"	24"	31"	31"	40"	23"
#7	48"	63"	63"	81"	42"	54"	54"	71"	38"	49"	49"	63"	34"	45"	45"	58"	27"
#8	55"	72"	72"	93"	48"	62"	62"	81"	43"	56"	56"	72"	39"	51"	51"	66"	30"
#9	62"	81"	81"	105"	54"	70"	70"	91"	48"	63"	63"	81"	44"	57"	57"	74"	34"
#10	70"	91"	91"	118"	61"	79"	79"	102"	54"	71"	71"	92"	50"	64"	64"	84"	39"
#11	78"	101"	101"	131"	67"	87"	87"	114"	60"	78"	78"	102"	55"	71"	71"	93"	43"

NOTES: THESE NOTES SHALL BE USED FOR ALL SPLICES, UNLESS NOTED OTHERWISE ON DRAWINGS.

1. TOP BARS ARE HORIZONTAL BARS, SPLICED SO THAT 12" OR MORE OF FRESH CONCRETE IS CAST IN THE MEMBER BELOW THE REINFORCING BAR.
2. CLASS A SPLICES MAY BE USED ONLY WHEN 50% OR LESS OF THE BARS ARE SPLICED WITHIN THE LAP SPLICE LENGTH.
3. CLASS B SPLICES SHALL BE USED FOR ALL SPLICES IN SLABS, BEAMS, JOISTS, WALLS, MOMENT RESISTING COLUMNS, AND JAMB COLUMNS, UNLESS THEY MEET THE REQUIREMENTS OF NOTE #2 ABOVE.
4. TIES AND STIRRUPS SHALL NOT BE SPLICED.
5. A. FOR BUNDLED BARS OF THREE OR LESS, LAP SPLICE LENGTHS SHALL BE MULTIPLIED BY 1.2.
   B. FOR BUNDLED BARS OF FOUR OR MORE, LAP LENGTHS SHALL BE MULTIPLIED BY 1.33.
   C. INDIVIDUAL BAR SPLICES WITHIN A BUNDLE SHALL NOT OVERLAP. ENTIRE BUNDLES SHALL NOT BE LAP SPLICED.
6. FOR ALL LIGHTWEIGHT CONCRETE, LAP LENGTHS SHALL BE MULTIPLIED BY 1.3.
7. FOR ALL EPOXY COATED BARS WITH COVER LESS THAN 3 BAR DIAMETERS OF CLEAR SPACING LESS THAN 6 BAR DIAMETERS THE LAP SPLICE LENGTHS SHALL BE MULTIPLIED BY 1.5. FOR ALL OTHER EPOXY BARS THE SPLICE LENGTHS SHALL BE MULTIPLIED BY 1.2
8. THE BAR LAP SPLICE LENGTHS SHALL BE MULTIPLIED BY 1.5 WHEN EITHER OF THE FOLLOWING IS TRUE:
   A. CLEAR SPACING OF BARS BEING DEVELOPED IS LESS THAN ONE BAR DIAMETER, CLEAR COVER IS LESS THAN ONE BAR DIAMETER AND STIRRUPS OR TIES ALONG THE LENGTH OF THE SPLICE ARE LESS THAN THE CODE MINIMUM.
   B. CLEAR SPACING OF BARS BEING DEVELOPED IS LESS THAN 2 BAR DIAMETERS AND CLEAR COVER IS LESS THAN ONE BAR DIAMETER.

AS PER ACI 318-05

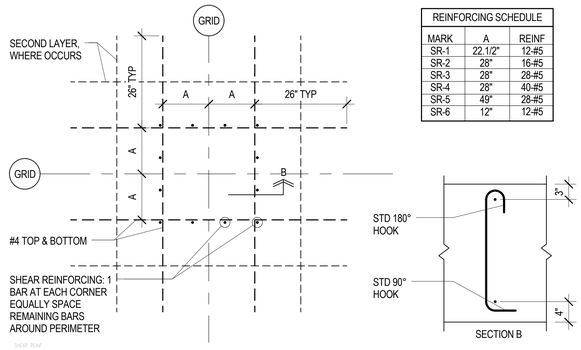

REINFORCING SCHEDULE		
MARK	A	REINF
SR-1	22.1/2"	12-#5
SR-2	28"	16-#5
SR-3	28"	28-#5
SR-4	28"	40-#5
SR-5	49"	28-#5
SR-6	12"	12-#5

C2 / SB601 MAT FOOTING SHEAR REINFORCING DETAIL & SCHEDULE
NO SCALE

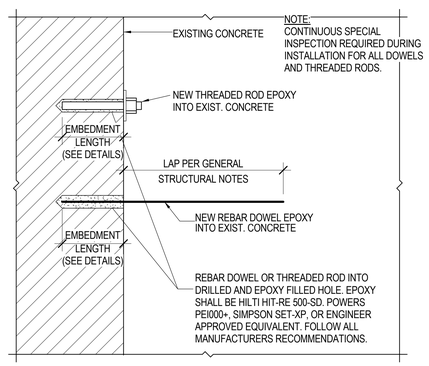

A2 / SB601 EPOXY ANCHORING SCHEDULE WITH DETAIL
NO SCALE

CONCRETE FOOTING SCHEDULE

MARK	WIDTH	LENGTH	THICK	CROSSWISE REINFORCING NO.	SIZE	LENGTH	SPACE	LENGTHWISE REINFORCING NO.	SIZE	LENGTH	SPACE	REMARKS
FTS2.0	2' - 0"	CONT.	1' - 0"	--	NONE	REQ'D	--	3	#4	CONT.	9"	
FC2.0	2' - 0"	CONT.	1' - 0"	--	NONE	REQ'D	--	3	#4	CONT	10"	
FC2.5	2' - 6"	CONT.	1' - 0"	--	#4	2' 0"	10"	4	#4	CONT	8"	
FC5.5	5' - 6"	CONT.	1' - 6"	--	#6	5' 0"	10"	7	#5	CONT	10"	TOP & BOTTOM
FS4.0	4' - 0"	4' - 0"	1' - 2"	7	#4	3' 6"	7"	7	#4	3' 6"	7"	
FS5.0	5' - 0"	5' - 0"	1' - 6"	10	#4	4' 6"	6"	10	#4	4' 6"	6"	
FS6.0	6' - 0"	6' - 0"	1' - 7"	9	#5	5' 6"	8.25"	9	#5	5' 6"	8.25"	
FS7.0	7' - 0"	7' - 0"	1' - 11"	8	#6	6' 6"	11.14"	8	#6	6' 6"	11.14"	
FS8.0	8' - 0"	8' - 0"	2' - 1"	11	#6	7' 6"	9"	11	#6	7' 6"	9"	
FS9.0	9' - 0"	9' - 0"	2' - 5"	13	#6	8' 6"	8.5"	13	#6	8' 6"	8.5"	
FS10.0	10' - 0"	10' - 0"	2' - 8"	12	#7	9' 6"	10.36"	12	#7	9' 6"	10.36"	
FM-1	10' - 0"	46' - 0"	2' - 6"		#6	9' 6"	9.5" O.C.	17	#10	37' 6"	7" O.C.	TOP & BOTTOM
FM-2	12' - 0"	64' - 0"	3' - 6"		#7	11' 6"	8.5" O.C.	20	#11	63' 6"	7" O.C.	TOP & BOTTOM
FM-3	12' - 0"	SEE PLAN	2' - 6"		#7	9' 6"	12" O.C. TOP 8"O.C. BOT	13	#8 TOP #10 BOT	38' 6"	12" O.C.	TOP & BOTTOM
FM-4	12' - 0"	55' - 0"	3' - 0"		#6 TOP #8 BOT	11' 6"	9" O.C.	16 TOP 31 BOT	#10 TOP #11 BOT	54' 6"	9" O.C. TOP 4.5" O.C. BOT	TOP & BOTTOM
FM-5	10' - 0"	48' - 0"	2' - 6"		#6 TOP #7 BOT	9' 6"	9" O.C.	13	#8 TOP #10 BOT	47' 6"	9" O.C.	TOP & BOTTOM
FM-6	12' - 0"	49' - 0"	3' - 6"		#7 TOP #8 BOT	11' 6"	7" O.C.	13	#9 TOP #11 BOT	48' 6"	10" O.C.	TOP & BOTTOM
FM-7	10' - 0"	48' - 0"	2' - 6"		#6 TOP #7 BOT	9' 6"	8" O.C.	11	#8 TOP #11 BOT	47' 6"	10" O.C.	TOP & BOTTOM
FM-8	12' - 0"	74' - 0"	3' - 6"		#7 TOP #8 BOT	11' 6"	10" O.C.	20 TOP 41 BOT	#10 TOP 2-#11 BOT	73' 6"	7" O.C. TOP 5" O.C. BOT	TOP & BOTTOM
FM-9	10' - 0"	31' - 0"	2' - 6"		#6 TOP #7 BOT	9' 6"	8" O.C.	10	#8	30' 6"	11" O.C.	TOP & BOTTOM
FM-10	12' - 0"	74' - 0"	2' - 6"		#6	11' 6"	9" O.C.	12 TOP 23 BOT	#8 TOP #11 BOT	73' 6"	12" O.C. TOP 6" O.C. BOT	TOP & BOTTOM
FM-11	12' - 0"	60' - 0"	3' - 0"		#6 TOP #7 BOT	11' 6"	8" O.C.	12 TOP 23 BOT	#8 TOP #11 BOT	59' 6"	12" O.C. TOP 6" O.C. BOT	TOP & BOTTOM
FM-12	12' - 0"		3' - 0"		#6 TOP #8 BOT	11' 6"	8" O.C. TOP 6.5" O.C. BOT	12 TOP 20 BOT	#8 TOP #11 BOT	57' 6"	8" O.C.	TOP & BOTTOM
FM-13	12' - 0"	35' - 0"	2' - 6"		#6 TOP #7 BOT	11' 6"	12" O.C. TOP 6.5"O.C. BOT	14	#7 TOP #10 BOT	34' 6"	9" O.C.	TOP & BOTTOM
FM-14	7' - 0"	38' - 0"	2' - 0"		#6 TOP #7 BOT	6' 6"	10" O.C.	14 TOP 9 BOT	#10 TOP #7 BOT	37' 6"	6" O.C. TOP 10" O.C. BOT	TOP & BOTTOM

1. PLACE ALL FOOTING REINFORCING IN BOTTOM OF FOOTING WITH 3" CLEAR CONCRETE COVER UNLESS NOTED OTHERWISE.
2. TOP REINFORCING, WHERE SPECIFIED, SHALL BE PLACED IN THE TOP OF THE FOOTING WITH 2" CLEAR CONCRETE COVER.
3. SPOT FOOTINGS SHALL BE CENTERED UNDER COLUMNS AND CONTINUOUS FOOTINGS SHALL BE CENTERED UNDER WALLS, UNLESS NOTED OTHERWISE.
4. ALL FOOTINGS SHALL BE FORMED. FOOTINGS SHALL NOT BE EARTH FORMED OR OVERSIZED WITHOUT WRITTEN PERMISSION FROM THE STRUCTURAL ENGINEER.

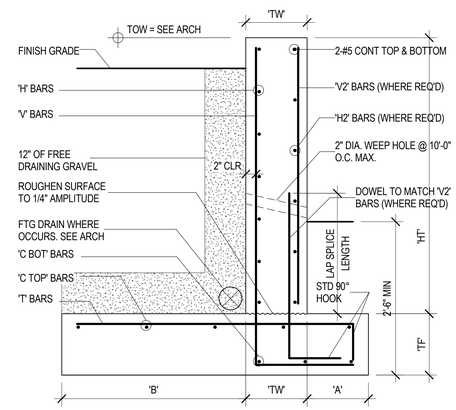

CONCRETE RETAINING WALL SCHEDULE

MARK	'HT'	'A'	'B'	'TW'	'TF'	'V' BARS SIZE	'V' BARS SPACE	'H' BARS SIZE	'H' BARS SPACE	'V2' BARS SIZE	'V2' BARS SPACE	'H2' BARS SIZE	'H2' BARS SPACE	'T' BARS SIZE	'T' BARS SPACE	'C TOP' BARS SIZE	'C TOP' BARS SPACE	'C BOT' BARS SIZE	'C BOT' BARS SPACE
CRW-1	5'-0"	1'-0"	2'-4"	8"	12"	#5	12"	#4	12"	-	-	-	-	#5	12"	#5	12"	#4	10"
CRW-2	8'-0"	1'-6"	7'-6"	10"	16"	#5	9"	#4	12"	#4	12"	#4	12"	#5	10"	#5	9"	#5	11"
CRW-3	13'-0"	1'-6"	12'-0"	12"	20"	#9	8"	#4	12"	#4	12"	#4	12"	#7	7"	#6	12"	#5	12"

NOTES:
1. 'V' BARS SHALL NOT BE SPLICED BELOW MID-HEIGHT OF WALL
2. FOR WALLS WITH 'HT' OF 9'-0" & GREATER. ONE HALF OF THE 'V' BARS CAN BE DISCONTIUED FROM MID-HEIGHT TO TOP OF WALL.

A4 / SB601 TYPICAL CONCRETE RETAINING WALL SCHEDULE AND DETAIL
NO SCALE

GSBS ARCHITECTS
375 WEST 200 SOUTH
SALT LAKE CITY, UT 84101
P 801.521.8600
F 801.521.7913
www.gsbsarchitects.com

LICENSED CERTIFIED STRUCTURAL ENGINEER NO. 144210 RONALD JAMES REAVELEY UTAH

REVISIONS:

REAVELEY ENGINEERS + ASSOCIATES
Consulting Structural Engineers
P 801.486.3883
F 801.485.0911
675 E 500 S, Suite 490
Salt Lake City, Utah 84102
www.reaveley.com

Utah Valley University New Science Building

800 West University Parkway
Orem, Utah 84058

Division of Facilities Construction and Managment

DRAWN BY:	Author
CHECKED BY:	Checker
DFCM PROJECT NO.:	
GSBS PROJECT NO.:	2009.115.00
ISSUED DATE:	05.07.10

CONCRETE SCHEDULES

CONSTRUCTION DOCUMENTS

SB601

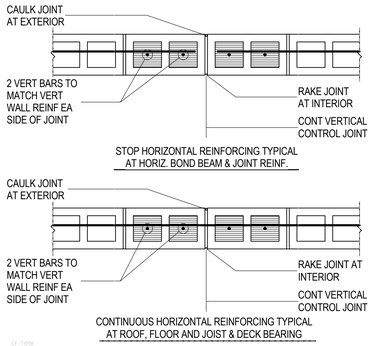

D2 / SB602 TYPICAL CONTROL JOINTS IN 8" MASONRY WALLS

NO SCALE

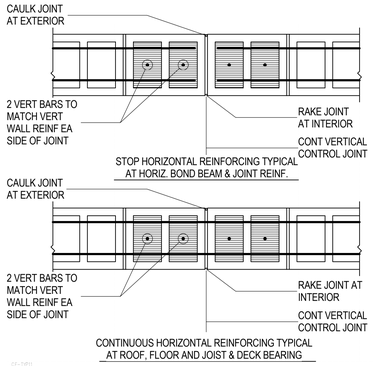

C2 / SB602 TYPICAL CONTROL JOINTS IN 12" MASONRY WALLS

NO SCALE

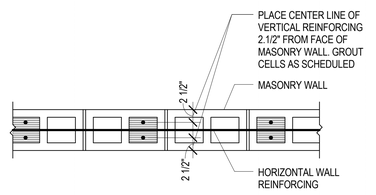

B2 / SB602 TYPICAL MASONRY WALL REINFORCING PLACEMENT FOR 2 CURTAINS OF VERT. REINF.

NO SCALE

MASONRY LINTEL SCHEDULE

MARK	LINTEL DEPTH	LINTEL WIDTH	MASONRY TYPE	LINTEL HORIZONTAL	LINTEL STIRRUPS	MAXIMUM SPAN	REMARKS
ML-1	8"	6",8",10" OR 12"	BRICK OR CMU	1- #7 CONT.	-----	3'-4"	
ML-2	16"	6",8",10" OR 12"	BRICK OR CMU	1- #7 CONT. TOP & BOT.	#3 @ 8" O.C.	5'-4"	
ML-3	24"	6",8",10" OR 12"	BRICK OR CMU	1- #7 CONT. TOP & BOT.	#3 @ 8" O.C.	8'-0"	
ML-4	32"	6",8",10" OR 12"	BRICK OR CMU	1- #7 CONT. TOP & BOT.	#3 @ 8" O.C.	10'-0"	
ML-5	48"	6",8",10" OR 12"	BRICK OR CMU	1- #7 CONT. TOP & BOT.	#3 @ 8" O.C.		

NOTES:

1. MASONRY LINTELS ML-1 THROUGH ML-4 SHALL BE USED OVER OPENINGS IN MASONRY WALLS WHEN A SPECIFIC MASONRY LINTEL IS NOT OTHERWISE SPECIFIED. THE MASONRY LINTEL TO BE USED SHALL BE DETERMINED BY THE MAXIMUM SPAN AS SPECIFIED IN THIS SCHEDULE. WHEN A SPECIFIC MASONRY LINTEL IS CALLED OUT ON THE PLAN, THE MAXIMUM SPAN AS NOTED IN THIS SCHEDULE SHALL NOT APPLY

2. MASONRY LINTELS ML-1 THROUGH ML-4 SHALL NOT BE LOCATED BELOW ANY FLOOR, OR ROOF BEAM, OR GIRDER, OR ANY OTHER CONCENTRATED LOAD UNLESS SHOWN SPECIFICALLY ON THE PLAN SHEET. JOISTS SHALL NOT BEAR ON ANY LINTEL LESS THAN 16" DEEP.

3. FOR MASONRY LINTELS NOT SHOWN ON THE DRAWINGS THAT CARRY ANY FLOOR, OR ROOF BEAM, OR GIRDER, OR ANY OTHER CONCENTRATED LOAD, OR THAT SPAN GREATER THAN 10'-0" CONSULT THE STRUCTURAL ENGINEER.

4. EXTEND ALL HORIZONTAL REINFORCING 48 BAR DIAMETERS BEYOND THE EDGE OF THE OPENING. IF HORIZONTAL REINFORCING CANNOT BE EXTENDED 48 BAR DIAMETERS BEYOND THE EDGE OF THE OPENING, PROVIDE 90 DEGREE STANDARD HOOK.

5. GROUT MASONRY LINTELS MONOLITHICALLY WITH THE SUPPORT WALL OR COLUMN AT EACH END.

6. SPLICE TOP BARS AT MIDSPAN OF LINTEL ONLY.

7. SPLICE BOTTOM BARS OVER SUPPORTS ONLY.

8. FOR WALL ABOVE LINTEL, DOWEL VERTICAL REINFORCING INTO FULL DEPTH OF THE LINTEL OR 48 BAR DIAMETERS, WHICHEVER IS LESS.

9. HORIZONTAL WALL REINFORCING SHALL CONTINUE THROUGH MASONRY LINTELS. WHERE BOTH HORIZONTAL WALL REINFORCING AND LINTEL REINFORCING WOULD OCCUR IN THE SAME COURSE, THE LARGER BARS ARE TO REPLACE THE SMALLER BARS.

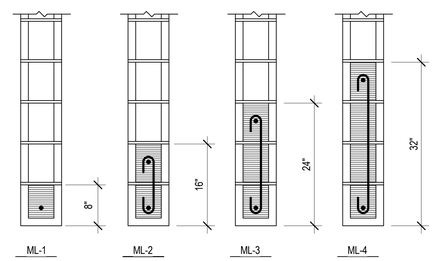

B3 / SB602 TYPICAL MASONRY LINTEL DETAILS

NO SCALE

MASONRY REINFORCING BAR LAP SPLICE SCHEDULE

BAR SIZE	f'm = 2000 psi							f'm = 2500 psi		
	6" CMU	8" CMU		10" CMU		12" CMU		6" ATLAS	8" ATLAS	
	CLASS	CLASS		CLASS		CLASS		CLASS	CLASS	
	A	A	B	A	B	A	B	A	A	B
#3	17"	17"	17"	17"	17"	17"	17"	15"	15"	15"
#4	22"	22"	26"	22"	24"	22"	24"	20"	20"	24"
#5	34"	27"	42"	27"	39"	27"	39"	31"	24"	40"
#6	70"	50"	91"	46"	80"	46"	80"	64"	45"	87"
#7	-	69"	**	53"	**	53"	**	-	63"	**
#8	-	98"	**	75"	**	65"	**	-	89"	**
#9	-	-	-	96"	**	78"	**	-	-	-

NOTES:

1. CLASS A SPLICES MAY BE USED WHEN ONLY ONE BAR IS CONTINUOUS IN THE MASONRY CELL OR COURSE.
2. CLASS B SPLICES SHALL BE USED WHEN TWO BARS ARE CONTINUOUS IN THE MASONRY CELL OR COURSE.
3. ** INDICATES THAT A LAP SPLICE IS NOT ALLOWED AND MECHANICAL BAR COUPLERS ARE REQUIRED FOR THE BAR SPLICES.
4. WHERE VERTICAL BARS HAVE A REQUIRED LAP SPLICE GREATER THAN THE HEIGHT OF THE GROUT POUR, THE BAR SPLICE SHALL BE MADE WITH A MECHANICAL BAR COUPLER. WHERE THE HEIGHT OF THE GROUT POUR EXCEEDS 60 INCHES, HIGH LIFT GROUTING PROCEDURES SHALL BE FOLLOWED.
5. WHERE MECHANICAL BAR COUPLERS ARE USED. THE CONNECTOR SHALL DEVELOP 125% OF THE SPECIFIED YIELD STRENGTH OF THE BAR IN TENSION AND COMPRESSION.

MASONRY WALL SCHEDULE

MARK	WIDTH	MATERIALS	REINFORCING VERTICAL	REINFORCING HORIZONTAL	REMARKS
MW-1	8"	CMU	#5 @ 24" O.C.	#5 @ 48" O.C.	
MW-2	8"	CMU	2-#5 @ 16" O.C.	#5 @ 48" O.C.	
MW-3	12"	CMU	2-#5 @ 16" O.C.	2-#4 @ 48" O.C.	

1. PROVIDE SCHEDULED VERTICAL REINFORCING BARS AT ALL CORNERS, ENDS OF WALLS, AND SPACED AS SCHEDULED, UNLESS NOTED OTHERWISE.
2. HORIZONTAL REINFORCING BARS SHALL BE CONTINUOUS AT ALL CORNERS AND AT INTERSECTING WALLS. PROVIDE CORNER BARS WITH THE REQUIRED LAP SPLICE LENGTH.
3. TERMINATE ALL HORIZONTAL REINFORCING BARS AT ENDS OF WALLS AND EDGES OF OPENINGS WITH A STANDARD HOOK AROUND VERTICAL REINFORCING BARS.
4. SEE PLANS, DETAILS AND GENERAL STRUCTURAL NOTES FOR ADDITIONAL REINFORCING REQUIREMENTS.
5. GROUT SOLID ALL CELLS BELOW GRADE, CELLS CONTAINING EMBEDS (HSA'S, DBA'S, ANCHOR BOLTS, ETC.), AND CELLS CONTAINING REINFORCING. CONSOLIDATE GROUT AS PER THE GENERAL STRUCTURAL NOTES.
6. HORIZONTAL WALL REINFORCING SHALL BE PLACED INSIDE THE VERTICALS OF MASONRY COLUMNS.
7. HORIZONTAL WALL REINFORCING SHALL CONTINUE THROUGH MASONRY LINTELS. WHERE BOTH HORIZONTAL WALL REINFORCING AND LINTEL REINFORCING OCCUR IN THE SAME COURSE, THE LARGER BARS ARE TO REPLACE THE SMALLER BARS.

MASONRY COLUMN SCHEDULE

MARK	SIZE	REINFORCING VERTICAL	REINFORCING TIES	REMARKS
MC-1	8" x 16"	4- #5	NONE	
MC-2	12" x 32"	8- #5	NONE	
MC-3	12" x 32"	8 - #6 FIRST LIFT 8 - #5 2ND LIFT & ABV	NONE	
MC-4	8" x 48"	12 - #5	NONE	

NOTES:

1. THE CENTERLINE OF VERTICAL BARS SHALL BE LOCATED 2.1/2" FROM THE FACE OF THE MASONRY. HORIZONTAL BARS SHALL BE LOCATED TO THE INSIDE OF THE VERTICAL BARS.
2. UNLESS NOTED OTHERWISE, VERTICAL REINFORCING AND TIES SHALL EXTEND FULL HEIGHT OF THE WALL.
3. MASONRY COLUMN VERTICAL BARS OR DOWELS IN CONCRETE FOUNDATION WALLS SHALL BE TIED WITH #3 TIES @ 8" O.C.

GSBS ARCHITECTS
375 WEST 200 SOUTH
SALT LAKE CITY, UT 84101
P 801.521.8600
F 801.521.7913
www.gsbsarchitects.com

LICENSED CERTIFIED STRUCTURAL ENGINEER
NO. 144210
RONALD JAMES REAVELEY
UTAH

REVISIONS:

REAVELEY ENGINEERS + ASSOCIATES
Consulting Structural Engineers
P: 801.486.3883
F: 801.485.0911
675 E 500 S, Suite 490
Salt Lake City, Utah 84102
www.reaveley.com

Utah Valley University New Science Building

800 West University Parkway
Orem, Utah 84058

Division of Facilities Construction and Managment

DRAWN BY:	Author
CHECKED BY:	Checker
DFCM PROJECT NO.:	
GSBS PROJECT NO.:	2009.115.00
ISSUED DATE:	05.07.10

MASONRY SCHEDULES

CONSTRUCTION DOCUMENTS

SB602

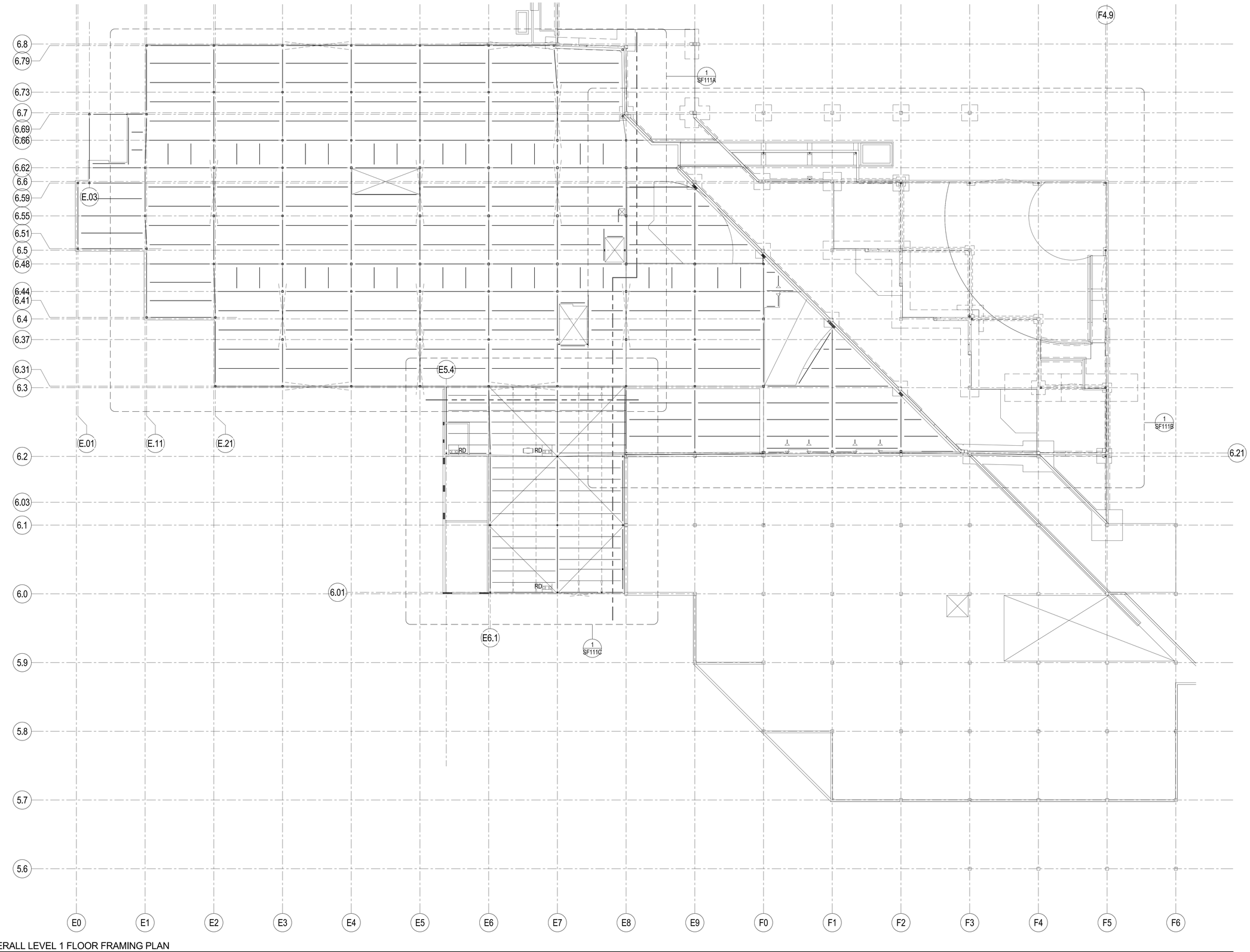

A1
SF111

OVERALL LEVEL 1 FLOOR FRAMING PLAN

SCALE: 1/16" = 1'-0"

GSBS ARCHITECTS

375 WEST 200 SOUTH
SALT LAKE CITY, UT 84101

P 801.521.8600
F 801.521.7913

www.gsbsarchitects.com

LICENSED CERTIFIED STRUCTURAL ENGINEER
NO. 144210
RONALD JAMES REAVELEY
UTAH

REVISIONS:

REAVELEY
ENGINEERS + ASSOCIATES
Consulting Structural Engineers

P: 801.486.3883
F: 801.485.0911

675 E.500 S. Suite 400
Salt Lake City, Utah 84102
www.reaveley.com

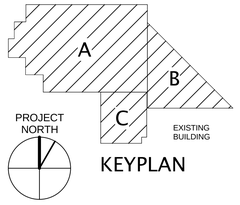

KEYPLAN

Utah Valley University New Science Building

800 West University Parkway
Orem, Utah 84058

Division of Facilities Construction and Managment

DRAWN BY:	Author
CHECKED BY:	Checker
DFCM PROJECT NO.:	
GSBS PROJECT NO.:	2009.115.00
ISSUED DATE:	05.07.10

OVERALL LEVEL 1 FLOOR FRAMING PLAN

CONSTRUCTION DOCUMENTS

SF111

SEE SF111B FOR FLOOR FRAMING PLAN NOTES & LEGEND

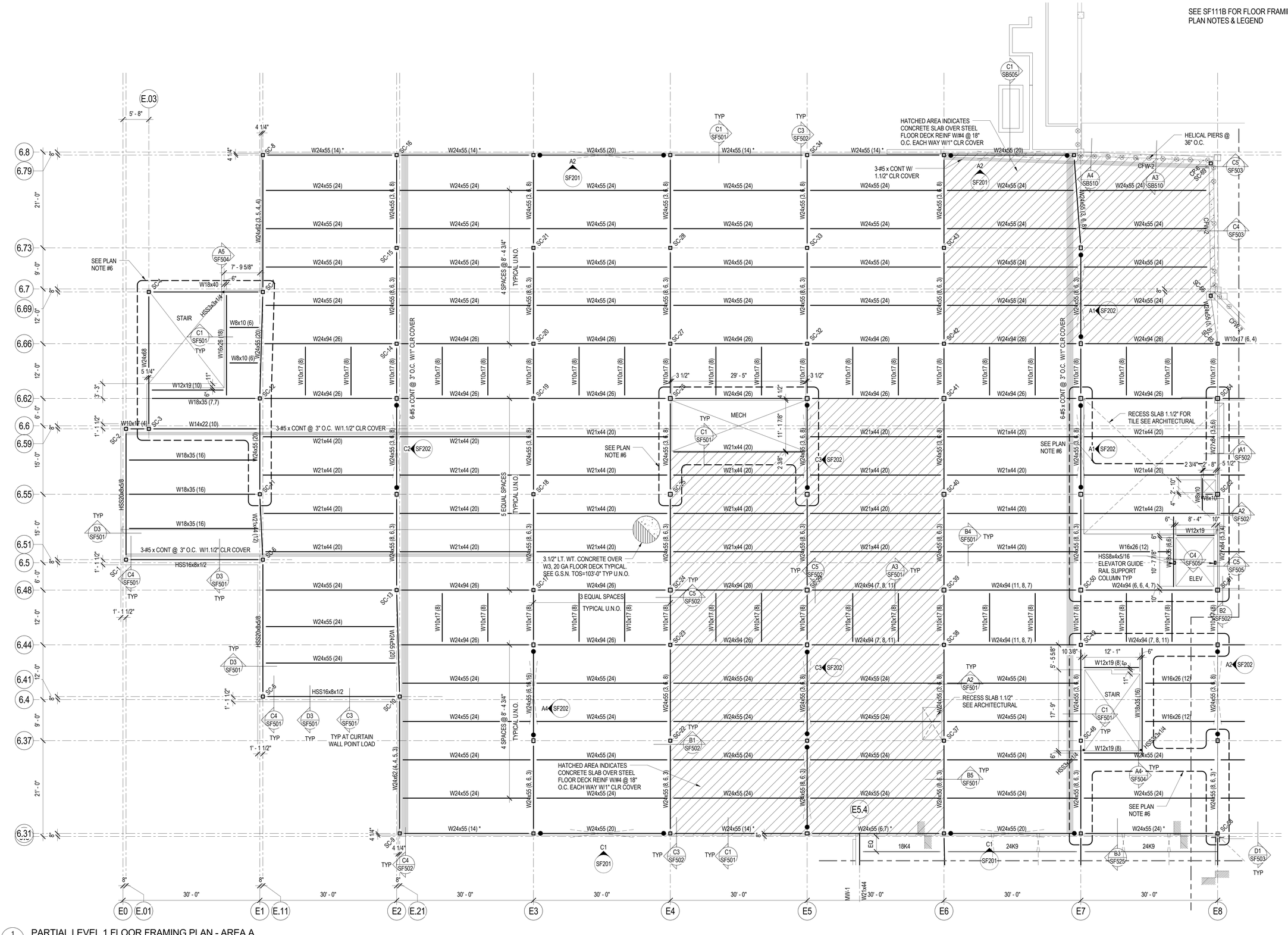

1 SF111A PARTIAL LEVEL 1 FLOOR FRAMING PLAN - AREA A

SCALE: 1/8" = 1'-0"

GSBS ARCHITECTS
375 WEST 200 SOUTH
SALT LAKE CITY, UT 84101
P 801.521.8600
F 801.521.7913
www.gsbsarchitects.com

LICENSED CERTIFIED STRUCTURAL ENGINEER NO. 144210 RONALD JAMES REAVELEY UTAH

REVISIONS:

REAVELEY ENGINEERS + ASSOCIATES
Consulting Structural Engineers
P 801.486.3883
F 801.485.0911
675 E 500 S, Suite 400
Salt Lake City, Utah 84102
www.reaveley.com

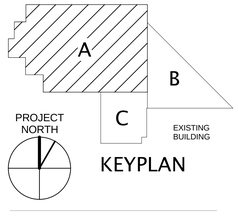

KEYPLAN

Utah Valley University New Science Building

800 West University Parkway
Orem, Utah 84058

Division of Facilities Construction and Managment

DRAWN BY:	Author
CHECKED BY:	Checker
DFCM PROJECT NO.:	
GSBS PROJECT NO.:	2009.115.00
ISSUED DATE:	05.07.10

PARTIAL LEVEL 1 FLOOR FRAMING PLAN - AREA A

CONSTRUCTION DOCUMENTS

SF111A

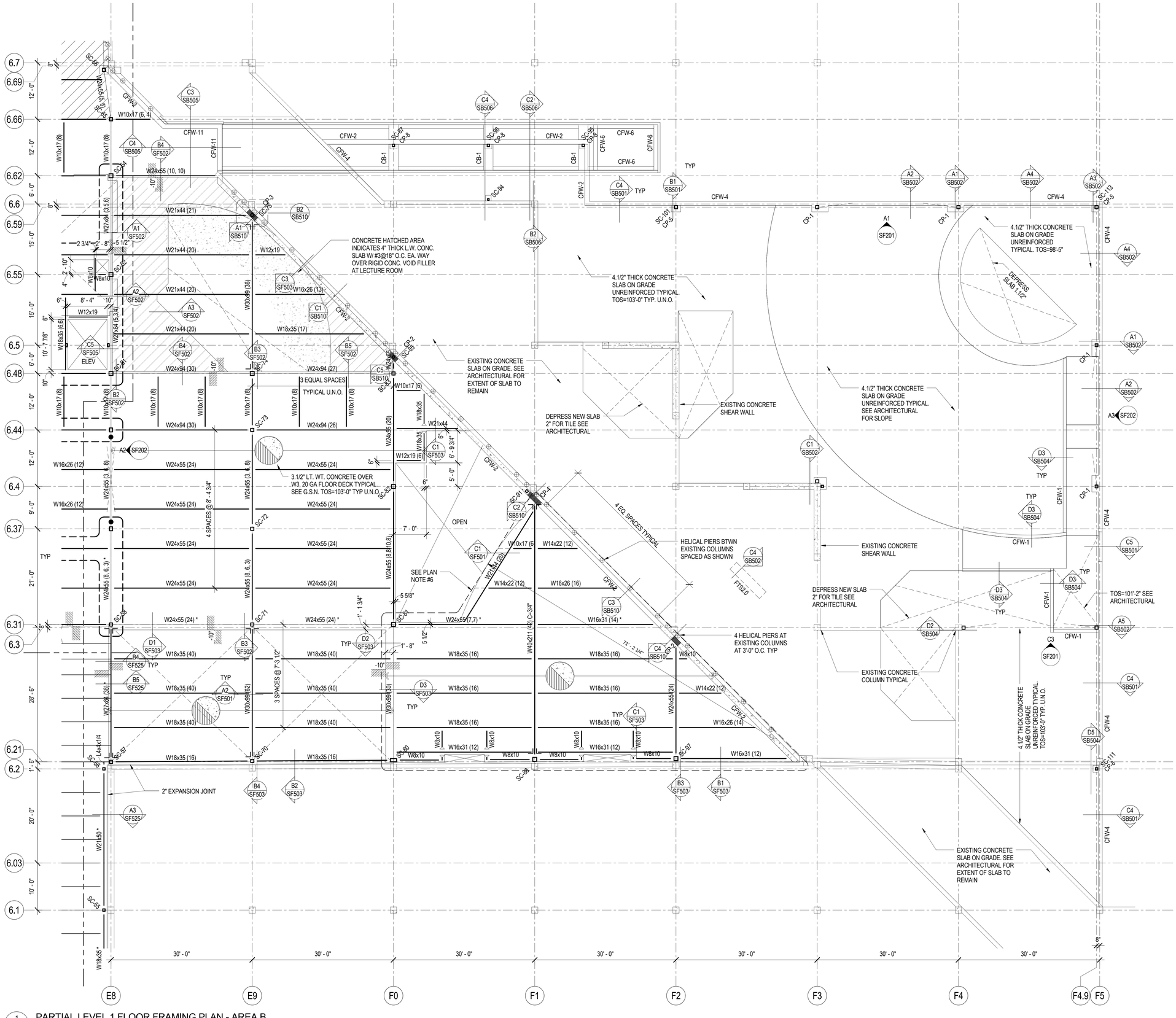

1 SF111B PARTIAL LEVEL 1 FLOOR FRAMING PLAN - AREA B

SCALE: 1/8" = 1'-0"

FLOOR FRAMING PLAN LEGEND

- CONCRETE WALL
- CONCRETE WALL
- CONCRETE LINTEL IN CONCRETE WALL
- CONCRETE COLUMN IN CONCRETE WALL
- CONCRETE COLUMN
- CONCRETE JAMB COLUMN POURED MONOLITHIC WITH CONCRETE WALL
- MASONRY WALL
- MASONRY LINTEL IN MASONRY WALL
- MASONRY COLUMN IN MASONRY WALL
- STEEL COLUMN - TUBE
- STEEL COLUMN - WIDE FLANGE
- STEEL COLUMN - PIPE
- STEEL BRACED FRAME
- MOMENT CONNECTION
- COLLECTOR CONNECTION SEE B1/SF601
- COLLECTOR/CHORD CONNECTION AT BEAMS PARALLEL TO MARK. SEE A4/SF603
- DOUBLE SHEAR CONNECTION SEE B4/SF601
- STEEL BEAM OR GIRDER
- STEEL JOIST OR PURLIN
- CROSS BRIDGING
- HORIZONTAL BRIDGING
- CHANGE IN ELEVATION
- CONCRETE ON METAL DECK
- ROOF DECK
- SPECIAL DECK AREA
- RECESSED/DEPRESSED SLAB ON METAL DECK
- OPENING

FLOOR FRAMING PLAN NOTES

1. SEE GENERAL STRUCTURAL NOTE (III.D.8) AND DETAILS A4 & A5/SF501 FOR CONTROL JOINTS IN SUSPENDED SLABS OVER STEEL DECK.

2. SEE DETAILS B1 & B2/SF501 FOR MISCELLANEOUS FLOOR OPENINGS.

3. SEE GENERAL STRUCTURAL NOTE (V.J.7) FOR STEEL DECK REQUIREMENTS WHERE 3-SPAN CONDITIONS ARE NOT POSSIBLE.

4. PROVIDE 4.1/2" LONG HEADED STUD ANCHORS ON COMPOSITE BEAMS IN THE AREAS OF 1.1/2" SLAB RECESSES.

5. * INDICATES STRUCTURAL MEMBERS THAT ARE SEISMIC COLLECTORS AND/OR CHORDS. BOLTED CONNECTIONS OF THESE MEMBERS SHALL HAVE SLIP CRITICAL BOLTS PER GENERAL STRUCTURAL NOTES SECTION V.E.2

6. DASHED LINES INDICATE EXTENT OF STRUCTURAL STEEL FRAMING TO RECEIVE FIRE-PROOFING (DOES NOT INCLUDE EXISTING CONCRETE BEAMS AND COLUMNS). REFER TO ARCHITECTURAL DRAWINGS FOR FURTHER DEFINITION OF FIRE-PROOFING TYPE AND ASSEMBLY NUMBERS.

7. FOR TYPICAL FLOOR OPENING W/ ANGLE FRAME, SEE DETAIL D1/SF502.

8. FOR TYPICAL MECHANICAL HOUSEKEEPING PAD OVER COMPOSITE FLOOR DECK, SEE DETAIL D2/SF502.

9. FOR TYPICAL CONCRETE CURB ON COMPOSITE FLOOR DECK, SEE DETAIL D3/SF502.

10. FOR TYPICAL COMPOSITE STEEL BEAM AT SLAB RECESS, SEE DETAIL D4/SF502.

11.FOR TYPICAL CONDUIT PLACEMENT IN COMPOSITE DECK, SEE DETAIL D5/SF502.

GSBS ARCHITECTS
375 WEST 200 SOUTH
SALT LAKE CITY, UT 84101
P 801.521.8600
F 801.521.7913
www.gsbsarchitects.com

LICENSED CERTIFIED STRUCTURAL ENGINEER
NO. 144210
RONALD JAMES REAVELEY
UTAH

REVISIONS:

REAVELEY ENGINEERS + ASSOCIATES
Consulting Structural Engineers
P: 801.486.3883
F: 801.485.0911
675 E 500 S, Suite 400
Salt Lake City, Utah 84102
www.reaveley.com

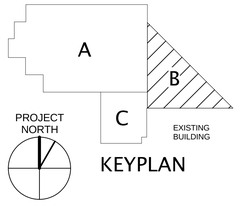

KEYPLAN

Utah Valley University New Science Building

800 West University Parkway
Orem, Utah 84058

Division of Facilities Construction and Managment

DRAWN BY:	Author
CHECKED BY:	Checker
DFCM PROJECT NO.:	
GSBS PROJECT NO.:	2009.115.00
ISSUED DATE:	05.07.10

PARTIAL LEVEL 1 FLOOR FRAMING PLAN - AREA B

CONSTRUCTION DOCUMENTS

SF111B

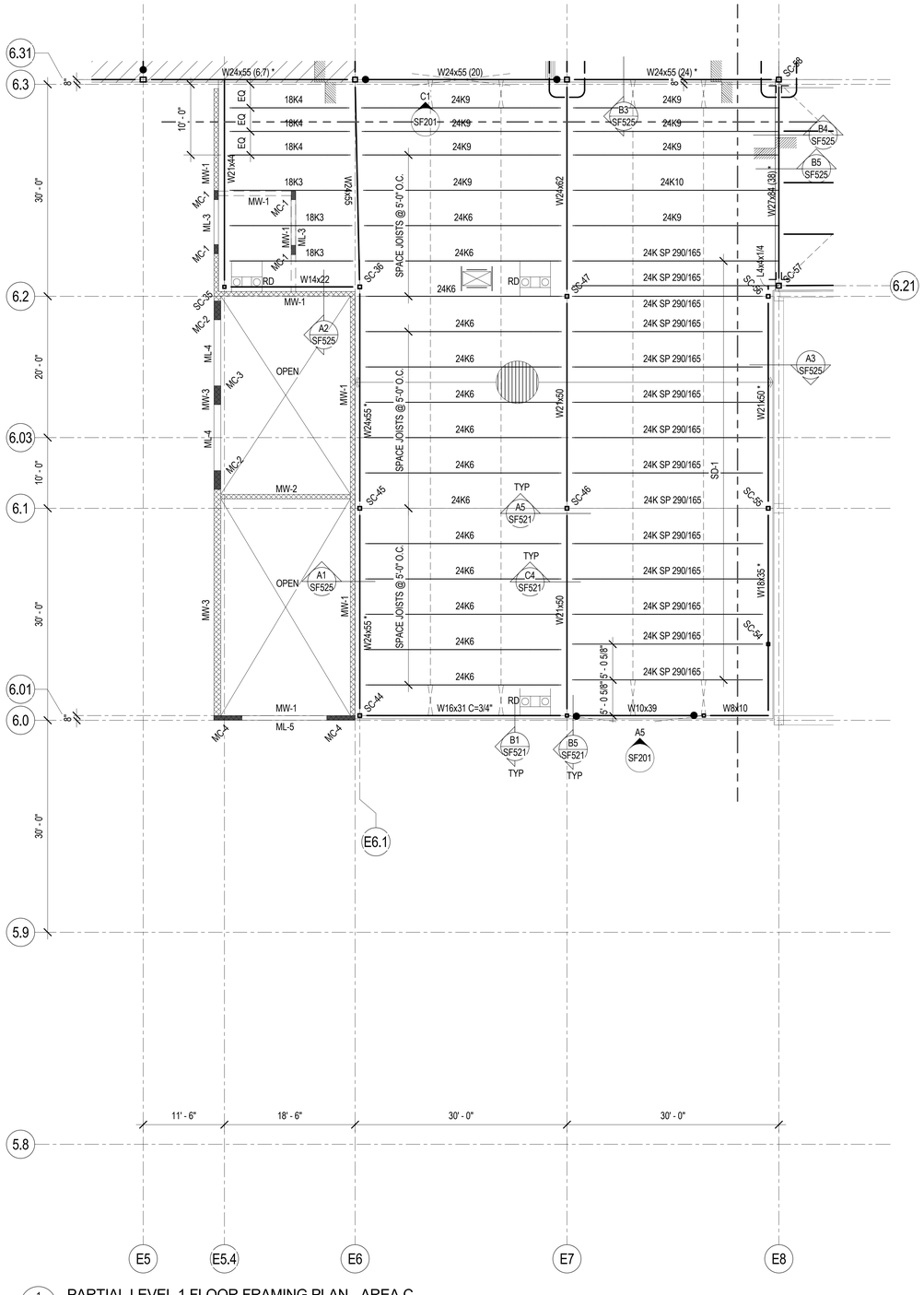

1 / SF111C PARTIAL LEVEL 1 FLOOR FRAMING PLAN - AREA C

SCALE: 1/8" = 1'-0"

ROOF FRAMING PLAN LEGEND

- CONCRETE WALL
- CONCRETE LINTEL IN CONCRETE WALL
- CONCRETE COLUMN IN CONCRETE WALL
- CONCRETE COLUMN
- CONCRETE JAMB COLUMN POURED MONOLITHIC WITH CONCRETE WALL
- MASONRY WALL
- MASONRY LINTEL IN MASONRY WALL
- MASONRY COLUMN IN MASONRY WALL
- STEEL COLUMN - TUBE
- STEEL COLUMN - WIDE FLANGE
- STEEL COLUMN - PIPE
- STEEL BRACED FRAME
- MOMENT CONNECTION
- COLLECTOR CONNECTION SEE B1/SF601
- COLLECTOR/CHORD CONNECTION AT BEAMS PARALLEL TO MARK. SEE A4/SF603
- DOUBLE SHEAR CONNECTION SEE B4/SF601
- STEEL BEAM OR GIRDER
- STEEL JOIST OR PURLIN
- CROSS BRIDGING
- HORIZONTAL BRIDGING
- STEEL STUD WALL - STRUCTURAL
- STEEL HEADER IN STEEL STUD WALL
- 0" CHANGE IN ELEVATION
- CONCRETE ON METAL DECK
- ROOF DECK
- SPECIAL DECK AREA
- RECESSED/DEPRESSED SLAB ON METAL DECK
- OPENING

ROOF FRAMING PLAN NOTES

1. VERIFY SIZE, WEIGHT, LOCATION AND CONFIGURATION OF ALL ROOF TOP EQUIPMENT WITH ARCHITECT AND MECHANICAL ENGINEER. PROVIDE STEEL FRAMES FOR SUPPORT OF ROOF TOP EQUIPMENT AS INDICATED IN DETAIL D3/SF521 COORDINATE OPENINGS WITH MECHANICAL AND ELECTRICAL AND GENERAL CONTRACTORS.

2. ALL ROOF OPENINGS SHALL BE FRAMED AS INDICATED IN DETAIL D2/SF521. FOR ROUND OPENINGS WHICH ARE LESS THAN 12" DIA. SEE DETAIL C1/SF521.

3. SEE ARCHITECTURAL FOR ROOF SLOPES AND DRAINS. SEE D4&D5/SF521 FOR ROOF DRAIN OPENING FRAME.

4. OPEN WEB STEEL JOISTS AND JOIST GIRDERS SHALL BE DESIGNED BY THE MANUFACTURER TO SUPPORT THE MECHANICAL AND LATERAL LOADS SHOWN ON THE ROOF FRAMING PLANS IN ADDITION TO THE UNIFORM AND POINT LOADS SHOWN.

5. ±#.#K ADD - INDICATES ADDITIONAL UPLIFT / DOWNWARD FORCE ON STEEL JOIST IN ADDITION TO REGULAR LOADS.

6. T/C=##K - INDICATES ADDITIONAL TOP CHORD AXIAL FORCE ON STEEL JOIST OR GIRDER IN ADDITION TO REGULAR LOADS. THIS FORCE IS A SEISMIC LRFD LOAD THAT SHALL BE CONSIDERED IN BOTH TENSION AND COMPRESSION; INCLUDES APPLICABLE OVERSTRENGTH FACTORS FROM IBC SECTION 1613 AND ASCE 7 SECTION 12.10. STEEL JOISTS AND GIRDERS WITH T/C FORCE SHALL BE DESIGNED AS COLLECTOR ELEMENTS PER IBC SECTION 1613 AND ASCE 7 SECTION 12.10 WITH STRENGTH TO RESIST APPLICABLE LOAD COMBINATIONS OF IBC SECTION 1605.4 AND ASCE 7 SECTION 12.4.

7. ALL LOADS SUPPORTED BY OPEN WEB STEEL JOISTS AND GIRDERS SHALL BE LOCATED WITHIN 6" OF JOIST OR GIRDER PANEL POINT OR THE JOIST OR GIRDER SHALL BE REINFORCED PER DETAIL D1/SF521.

8. SEE DETAIL C5/SF525 FOR SUPPORT OF HANGING MECHANICAL UNITS.

9. HORIZONTAL AND CROSS BRIDGING SHALL BE SIZED AND SUPPLIED BY THE JOIST MANUFACTURER. CONNECT TO WALLS AS INDICATED IN DETAILS.

10. WHERE SKYLIGHTS OR MECHANICAL UNITS INTERRUPT HORIZONTAL BRIDGING PROVIDE CROSS BRIDGING AT JOIST SPACES ON EACH SIDE. TYPICAL.

11. * INDICATES STRUCTURAL MEMBERS THAT ARE SEISMIC COLLECTORS AND/OR CHORDS. BOLTED CONNECTIONS OF THESE MEMBERS SHALL HAVE SLIP CRITICAL BOLTS PER GENERAL STRUCTURAL NOTES SECTION V.E.2

12. SD-# INDICATES ADDITIONAL SNOW DRIFT ON STEEL JOIST PER THE SNOW DRIFT SCHEDULE. SEE A5/SF601

GSBS ARCHITECTS
375 WEST 200 SOUTH
SALT LAKE CITY, UT 84101
P 801.521.8600
F 801.521.7915
www.gsbsarchitects.com

LICENSED CERTIFIED STRUCTURAL ENGINEER
NO. 144210
RONALD JAMES REAVELEY
UTAH

REVISIONS:

REAVELEY ENGINEERS + ASSOCIATES
Consulting Structural Engineers
P 801.486.3883
F 801.485.0911
675 E 500 S, Suite 400
Salt Lake City, Utah 84102
www.reaveley.com

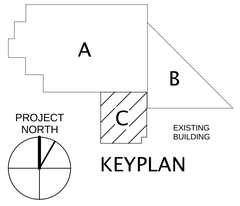

KEYPLAN

Utah Valley University New Science Building

800 West University Parkway
Orem, Utah 84058

Division of Facilities Construction and Managment

DRAWN BY:	Author
CHECKED BY:	Checker
DFCM PROJECT NO.:	
GSBS PROJECT NO.:	2009.115.00
ISSUED DATE:	05.07.10

PARTIAL LEVEL 1 FLOOR FRAMING PLAN - AREA C

CONSTRUCTION DOCUMENTS

SF111C

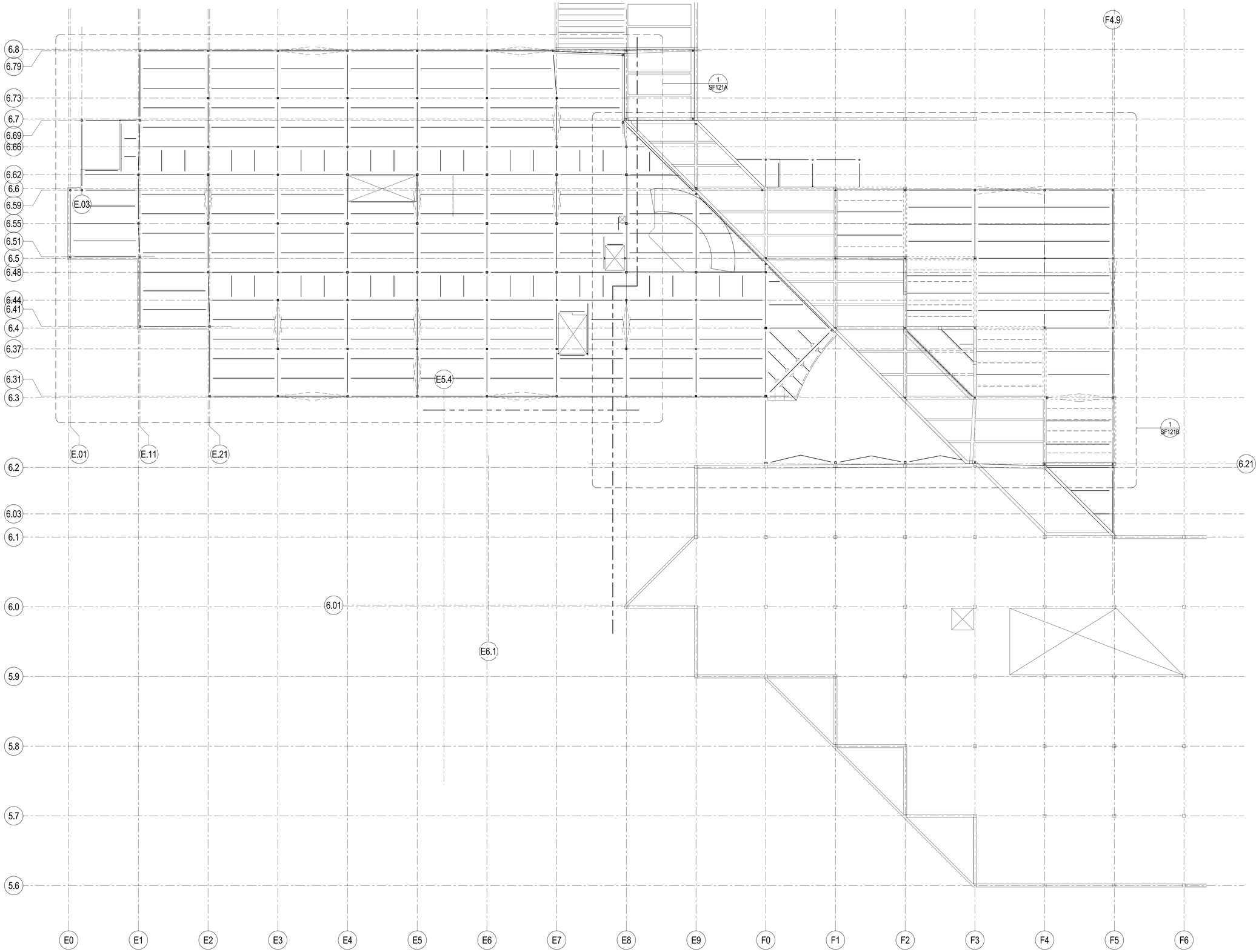

A1 / SF121 OVERALL LEVEL 2 FLOOR FRAMING PLAN

SCALE: 1/16" = 1'-0"

GSBS ARCHITECTS

375 WEST 200 SOUTH
SALT LAKE CITY, UT 84101

P 801.521.8600
F 801.521.7915

www.gsbsarchitects.com

LICENSED CERTIFIED STRUCTURAL ENGINEER
NO. 144210
RONALD JAMES REAVELEY
UTAH

REVISIONS:

REAVELEY
ENGINEERS + ASSOCIATES
Consulting Structural Engineers

P: 801.486.3883
F: 801.485.0911

675 E.500 S. Suite 400
Salt Lake City, Utah 84102
www.reaveley.com

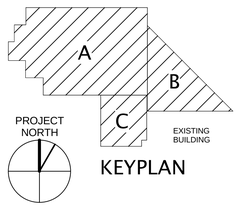

KEYPLAN

Utah Valley University New Science Building

800 West University Parkway
Orem, Utah 84058

Division of Facilities Construction and Managment

DRAWN BY:	Author
CHECKED BY:	Checker
DFCM PROJECT NO.:	
GSBS PROJECT NO.:	2009.115.00
ISSUED DATE:	05.07.10

OVERALL LEVEL 2 FLOOR FRAMING PLAN

CONSTRUCTION DOCUMENTS

SF121

SEE SF121B FOR FLOOR FRAMING PLAN NOTES & LEGEND

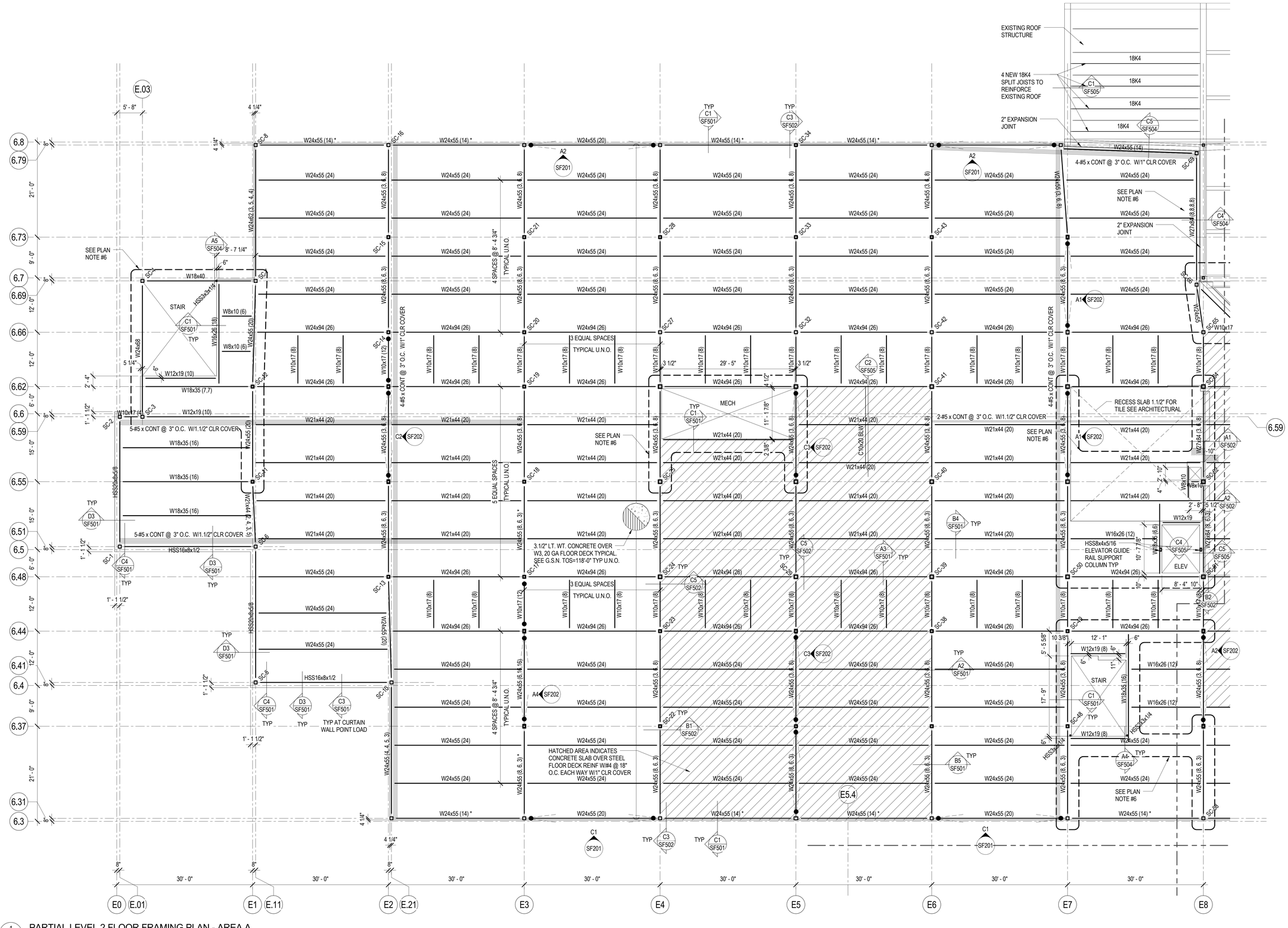

1 SF121A/ PARTIAL LEVEL 2 FLOOR FRAMING PLAN - AREA A

SCALE: 1/8" = 1'-0"

GSBS ARCHITECTS
375 WEST 200 SOUTH
SALT LAKE CITY, UT 84101
P 801.521.8600
F 801.521.7915
www.gsbsarchitects.com

LICENSED CERTIFIED STRUCTURAL ENGINEER NO. 144210 RONALD JAMES REAVELEY UTAH

REVISIONS:

REAVELEY ENGINEERS + ASSOCIATES
Consulting Structural Engineers
P: 801.486.3883
F: 801.485.0911
675 E 500 S, Suite 400
Salt Lake City, Utah 84102
www.reaveley.com

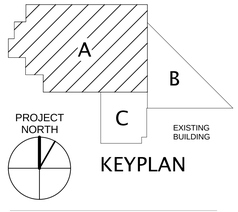

KEYPLAN

Utah Valley University New Science Building

800 West University Parkway
Orem, Utah 84058

Division of Facilities Construction and Managment

DRAWN BY:	Author
CHECKED BY:	Checker
DFCM PROJECT NO.:	
GSBS PROJECT NO.:	2009.115.00
ISSUED DATE:	05.07.10

PARTIAL LEVEL 2 FLOOR FRAMING PLAN - AREA A

CONSTRUCTION DOCUMENTS

SF121A

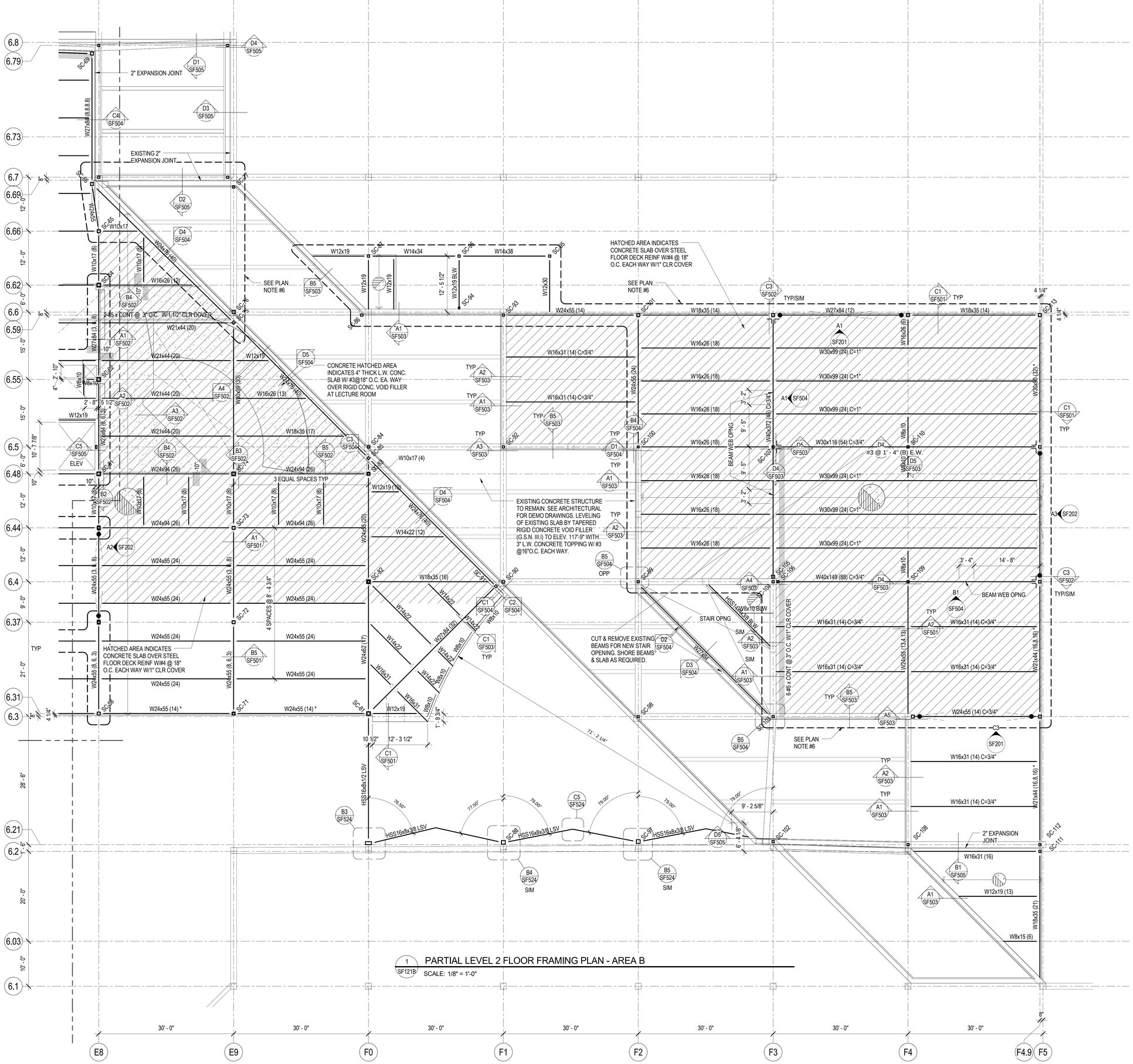

1 SF121B PARTIAL LEVEL 2 FLOOR FRAMING PLAN - AREA B

SCALE: 1/8" = 1'-0"

FLOOR FRAMING PLAN LEGEND

- CONCRETE WALL
- CONCRETE WALL
- CONCRETE LINTEL IN CONCRETE WALL
- CONCRETE COLUMN IN CONCRETE WALL
- CONCRETE COLUMN
- CONCRETE JAMB COLUMN POURED MONOLITHIC WITH CONCRETE WALL
- MASONRY WALL
- MASONRY LINTEL IN MASONRY WALL
- MASONRY COLUMN IN MASONRY WALL
- STEEL COLUMN - TUBE
- STEEL COLUMN - WIDE FLANGE
- STEEL COLUMN - PIPE
- STEEL BRACED FRAME
- MOMENT CONNECTION
- COLLECTOR CONNECTION SEE B1/SF601
- COLLECTOR/CHORD CONNECTION AT BEAMS PARALLEL TO MARK. SEE A4/SF603
- DOUBLE SHEAR CONNECTION SEE B4/SF601
- STEEL BEAM OR GIRDER
- STEEL JOIST OR PURLIN
- CROSS BRIDGING
- HORIZONTAL BRIDGING
- CHANGE IN ELEVATION
- CONCRETE ON METAL DECK
- ROOF DECK
- SPECIAL DECK AREA
- RECESSED/DEPRESSED SLAB ON METAL DECK
- OPENING

FLOOR FRAMING PLAN NOTES

1. SEE GENERAL STRUCTURAL NOTE (III.D.8) AND DETAILS A4 & A5/SF501 FOR CONTROL JOINTS IN SUSPENDED SLABS OVER STEEL DECK.

2. SEE DETAILS B1 & B2/SF501 FOR MISCELLANEOUS FLOOR OPENINGS.

3. SEE GENERAL STRUCTURAL NOTE (V.J.7) FOR STEEL DECK REQUIREMENTS WHERE 3-SPAN CONDITIONS ARE NOT POSSIBLE.

4. PROVIDE 4.1/2" LONG HEADED STUD ANCHORS ON COMPOSITE BEAMS IN THE AREAS OF 1.1/2" SLAB RECESSES.

5. * INDICATES STRUCTURAL MEMBERS THAT ARE SEISMIC COLLECTORS AND/OR CHORDS. BOLTED CONNECTIONS OF THESE MEMBERS SHALL HAVE SLIP CRITICAL BOLTS PER GENERAL STRUCTURAL NOTES SECTION V.E.2

6. DASHED LINES INDICATE EXTENT OF STRUCTURAL STEEL FRAMING TO RECEIVE FIRE-PROOFING (DOES NOT INCLUDE EXISTING CONCRETE BEAMS AND COLUMNS). REFER TO ARCHITECTURAL DRAWINGS FOR FURTHER DEFINITION OF FIRE-PROOFING TYPE AND ASSEMBLY NUMBERS.

7. FOR TYPICAL FLOOR OPENING W/ ANGLE FRAME, SEE DETAIL D1/SF502.

8. FOR TYPICAL MECHANICAL HOUSEKEEPING PAD OVER COMPOSITE FLOOR DECK, SEE DETAIL D2/SF502.

9. FOR TYPICAL CONCRETE CURB ON COMPOSITE FLOOR DECK, SEE DETAIL D3/SF502.

10. FOR TYPICAL COMPOSITE STEEL BEAM AT SLAB RECESS, SEE DETAIL D4/SF502.

11.FOR TYPICAL CONDUIT PLACEMENT IN COMPOSITE DECK, SEE DETAIL D5/SF502.

GSBS ARCHITECTS
375 WEST 200 SOUTH
SALT LAKE CITY, UT 84101
P 801.521.8600
F 801.521.7913
www.gsbsarchitects.com

LICENSED CERTIFIED STRUCTURAL ENGINEER NO. 144210 RONALD JAMES REAVELEY UTAH

REVISIONS:

REAVELEY ENGINEERS + ASSOCIATES
Consulting Structural Engineers
P: 801.486.3883
F: 801.485.0911
675 E 500 S, Suite 490
Salt Lake City, Utah 84102
www.reaveley.com

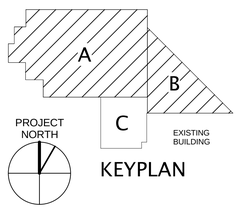

KEYPLAN

Utah Valley University New Science Building

800 West University Parkway
Orem, Utah 84058

Division of Facilities Construction and Managment

DRAWN BY:	Author
CHECKED BY:	Checker
DFCM PROJECT NO.:	
GSBS PROJECT NO.:	2009.115.00
ISSUED DATE:	05.07.10

PARTIAL LEVEL 2 FLOOR FRAMING PLAN - AREA B

CONSTRUCTION DOCUMENTS

SF121B

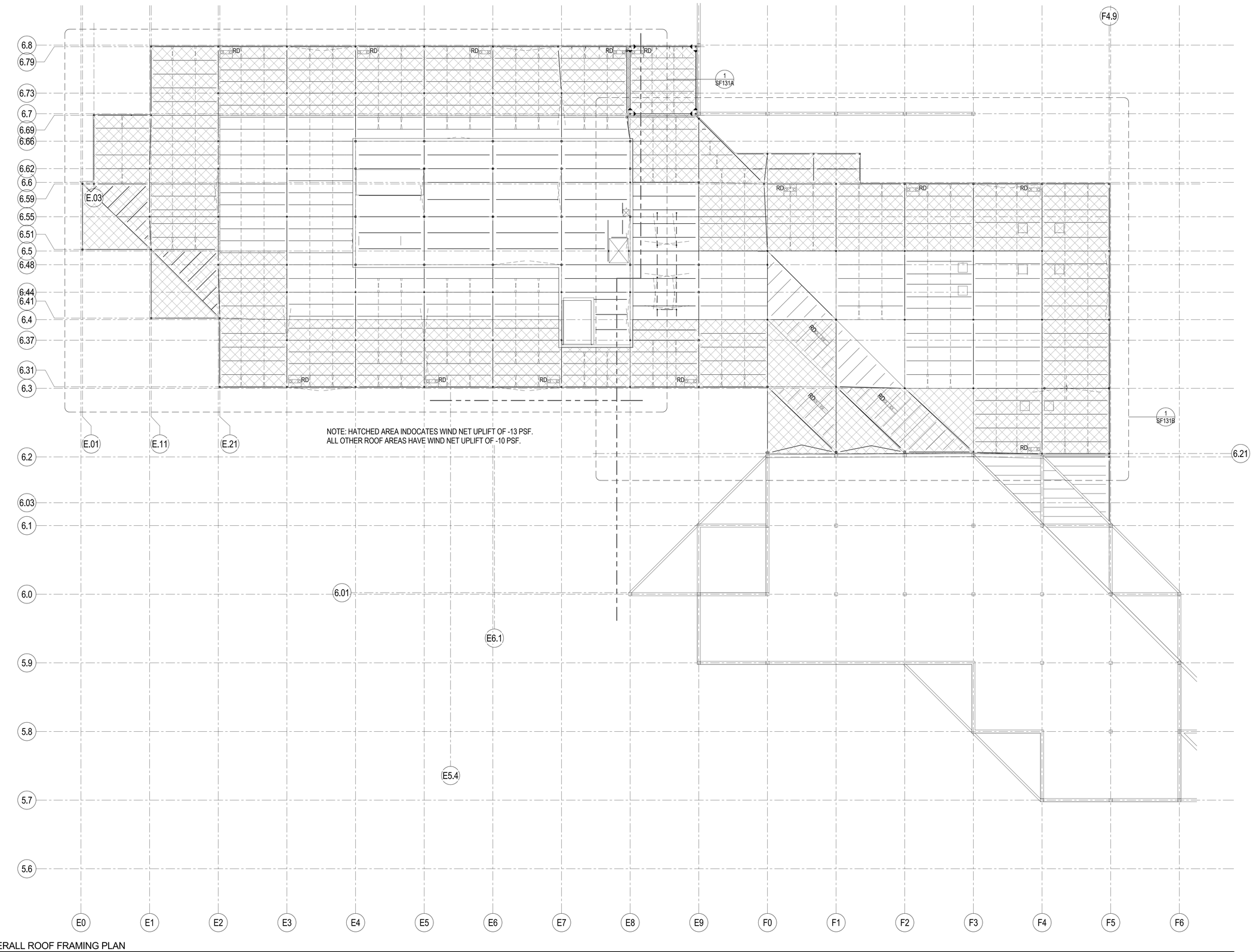

NOTE: HATCHED AREA INDOCATES WIND NET UPLIFT OF -13 PSF.
ALL OTHER ROOF AREAS HAVE WIND NET UPLIFT OF -10 PSF.

A1 / SF131 OVERALL ROOF FRAMING PLAN

SCALE: 1/16" = 1'-0"

GSBS ARCHITECTS

375 WEST 200 SOUTH
SALT LAKE CITY, UT 84101

P 801.521.8600
F 801.521.7915

www.gsbsarchitects.com

LICENSED CERTIFIED STRUCTURAL ENGINEER
NO. 144210
RONALD JAMES REAVELEY
UTAH

REVISIONS:

REAVELEY
ENGINEERS + ASSOCIATES
Consulting Structural Engineers

P: 801.486.3883
F: 801.485.0911

675 E.500 S. Suite 490
Salt Lake City, Utah 84102
www.reaveley.com

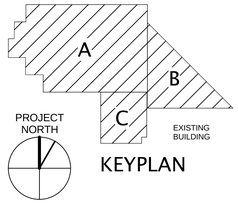

KEYPLAN

Utah Valley University New Science Building

800 West University Parkway
Orem, Utah 84058

Division of Facilities Construction and Managment

DRAWN BY:	Author
CHECKED BY:	Checker
DFCM PROJECT NO.:	
GSBS PROJECT NO.:	2009.115.00
ISSUED DATE:	05.07.10

OVERALL ROOF FRAMING PLAN

CONSTRUCTION DOCUMENTS

SF131

SEE SF131B FOR ROOF FRAMING PLAN NOTES & LEGEND

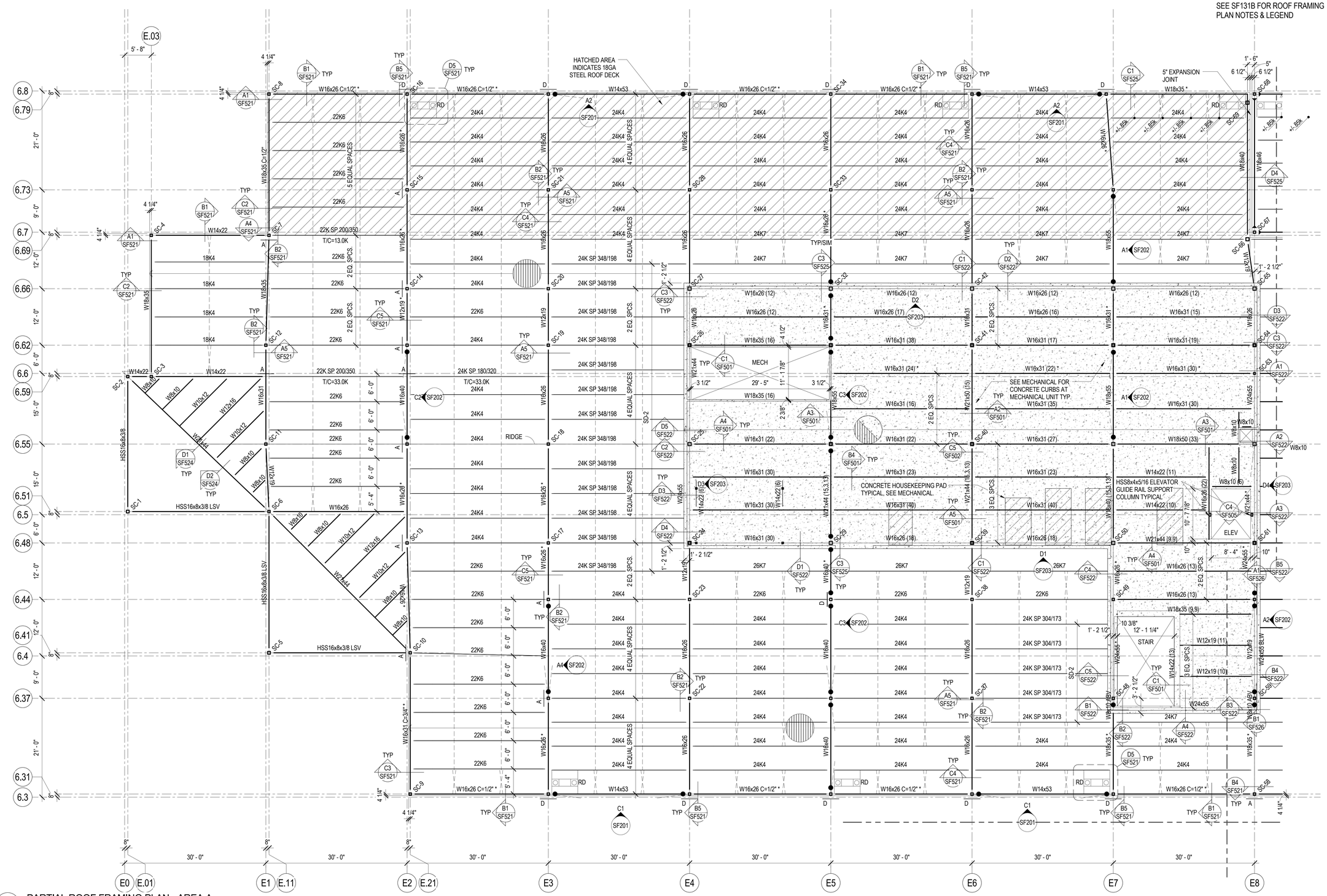

1 SF131A/ PARTIAL ROOF FRAMING PLAN - AREA A

SCALE: 1/8" = 1'-0"

GSBS ARCHITECTS

375 WEST 200 SOUTH
SALT LAKE CITY, UT 84101

P 801.521.8600
F 801.521.7913

www.gsbsarchitects.com

LICENSED CERTIFIED STRUCTURAL ENGINEER NO. 144210 RONALD JAMES REAVELEY UTAH

REVISIONS:

REAVELEY ENGINEERS + ASSOCIATES
Consulting Structural Engineers

P: 801.486.3883
F: 801.485.0911

675 E 500 S, Suite 400
Salt Lake City, Utah 84102
www.reaveley.com

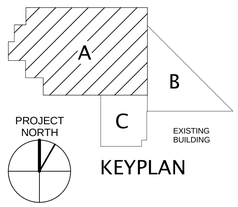

KEYPLAN

Utah Valley University New Science Building

800 West University Parkway
Orem, Utah 84058

Division of Facilities Construction and Managment

DRAWN BY:	Author
CHECKED BY:	Checker
DFCM PROJECT NO.:	
GSBS PROJECT NO.:	2009.115.00
ISSUED DATE:	05.07.10

PARTIAL ROOF / P.H. FLOOR FRAMING PLAN - AREA A

CONSTRUCTION DOCUMENTS

SF131A

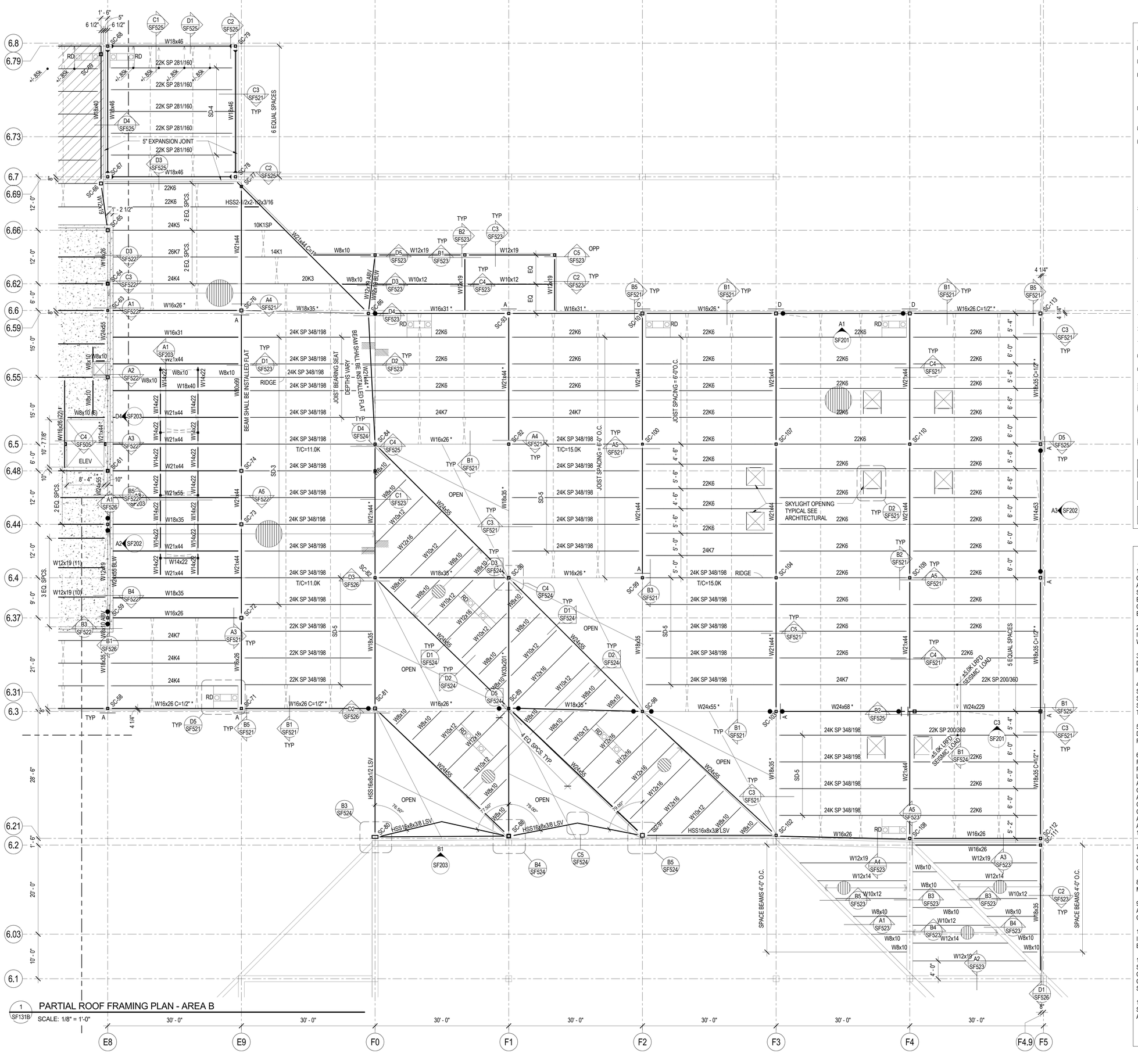

1 SF131B PARTIAL ROOF FRAMING PLAN - AREA B

SCALE: 1/8" = 1'-0"

ROOF FRAMING PLAN LEGEND

- CONCRETE WALL
- CONCRETE LINTEL IN CONCRETE WALL
- CONCRETE COLUMN IN CONCRETE WALL
- CONCRETE COLUMN
- CONCRETE JAMB COLUMN POURED MONOLITHIC WITH CONCRETE WALL
- MASONRY WALL
- MASONRY LINTEL IN MASONRY WALL
- MASONRY COLUMN IN MASONRY WALL
- STEEL COLUMN - TUBE
- STEEL COLUMN - WIDE FLANGE
- STEEL COLUMN - PIPE
- STEEL BRACED FRAME
- MOMENT CONNECTION
- COLLECTOR CONNECTION SEE B1/SF601
- COLLECTOR/CHORD CONNECTION AT BEAMS PARALLEL TO MARK. SEE A4/SF603
- DOUBLE SHEAR CONNECTION SEE B4/SF601
- STEEL BEAM OR GIRDER
- STEEL JOIST OR PURLIN
- CROSS BRIDGING
- HORIZONTAL BRIDGING
- STEEL STUD WALL - STRUCTURAL
- STEEL HEADER IN STEEL STUD WALL
- CHANGE IN ELEVATION
- CONCRETE ON METAL DECK
- ROOF DECK
- SPECIAL DECK AREA
- RECESSED/DEPRESSED SLAB ON METAL DECK
- OPENING

ROOF FRAMING PLAN NOTES

1. VERIFY SIZE, WEIGHT, LOCATION AND CONFIGURATION OF ALL ROOF TOP EQUIPMENT WITH ARCHITECT AND MECHANICAL ENGINEER. PROVIDE STEEL FRAMES FOR SUPPORT OF ROOF TOP EQUIPMENT AS INDICATED IN DETAIL D3/SF521 COORDINATE OPENINGS WITH MECHANICAL AND ELECTRICAL AND GENERAL CONTRACTORS.

2. ALL ROOF OPENINGS SHALL BE FRAMED AS INDICATED IN DETAIL D2/SF521. FOR ROUND OPENINGS WHICH ARE LESS THAN 12" DIA. SEE DETAIL C1/SF521.

3. SEE ARCHITECTURAL FOR ROOF SLOPES AND DRAINS. SEE D4&D5/SF521 FOR ROOF DRAIN OPENING FRAME.

4. OPEN WEB STEEL JOISTS AND JOIST GIRDERS SHALL BE DESIGNED BY THE MANUFACTURER TO SUPPORT THE MECHANICAL AND LATERAL LOADS SHOWN ON THE ROOF FRAMING PLANS IN ADDITION TO THE UNIFORM AND POINT LOADS SHOWN.

5. ±#.#K ADD - INDICATES ADDITIONAL UPLIFT / DOWNWARD FORCE ON STEEL JOIST IN ADDITION TO REGULAR LOADS.

6. T/C=###K - INDICATES ADDITIONAL TOP CHORD AXIAL FORCE ON STEEL JOIST OR GIRDER IN ADDITION TO REGULAR LOADS. THIS FORCE IS A SEISMIC LRFD LOAD THAT SHALL BE CONSIDERED IN BOTH TENSION AND COMPRESSION; INCLUDES APPLICABLE OVERSTRENGTH FACTORS FROM IBC SECTION 1613 AND ASCE 7 SECTION 12.10. STEEL JOISTS AND GIRDERS WITH T/C FORCE SHALL BE DESIGNED AS COLLECTOR ELEMENTS PER IBC SECTION 1613 AND ASCE 7 SECTION 12.10 WITH STRENGTH TO RESIST APPLICABLE LOAD COMBINATIONS OF IBC SECTION 1605.4 AND ASCE 7 SECTION 12.4.

7. ALL LOADS SUPPORTED BY OPEN WEB STEEL JOISTS AND GIRDERS SHALL BE LOCATED WITHIN 6" OF JOIST OR GIRDER PANEL POINT OR THE JOIST OR GIRDER SHALL BE REINFORCED PER DETAIL D1/SF521.

8. SEE DETAIL C5/SF525 FOR SUPPORT OF HANGING MECHANICAL UNITS.

9. HORIZONTAL AND CROSS BRIDGING SHALL BE SIZED AND SUPPLIED BY THE JOIST MANUFACTURER. CONNECT TO WALLS AS INDICATED IN DETAILS.

10. WHERE SKYLIGHTS OR MECHANICAL UNITS INTERRUPT HORIZONTAL BRIDGING PROVIDE CROSS BRIDGING AT JOIST SPACES ON EACH SIDE. TYPICAL.

11. * INDICATES STRUCTURAL MEMBERS THAT ARE SEISMIC COLLECTORS AND/OR CHORDS. BOLTED CONNECTIONS OF THESE MEMBERS SHALL HAVE SLIP CRITICAL BOLTS PER GENERAL STRUCTURAL NOTES SECTION V.E.2

12. SD-# INDICATES ADDITIONAL SNOW DRIFT ON STEEL JOIST PER THE SNOW DRIFT SCHEDULE. SEE A5/SF601

GSBS ARCHITECTS
375 WEST 200 SOUTH
SALT LAKE CITY, UT 84101
P 801.521.8600
F 801.521.7913
www.gsbsarchitects.com

LICENSED CERTIFIED STRUCTURAL ENGINEER NO. 144210 RONALD JAMES REAVELEY UTAH

REVISIONS:

REAVELEY ENGINEERS + ASSOCIATES
Consulting Structural Engineers
P 801.486.3883
F 801.485.0911
675 E 500 S, Suite 400
Salt Lake City, Utah 84102
www.reaveley.com

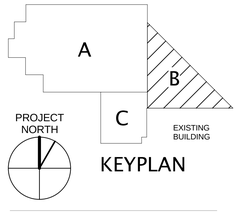

KEYPLAN

Utah Valley University New Science Building

800 West University Parkway
Orem, Utah 84058

Division of Facilities Construction and Managment

DRAWN BY:	Author
CHECKED BY:	Checker
DFCM PROJECT NO.:	
GSBS PROJECT NO.:	2009.115.00
ISSUED DATE:	05.07.10

PARTIAL ROOF FRAMING PLAN - AREA B

CONSTRUCTION DOCUMENTS

SF131B

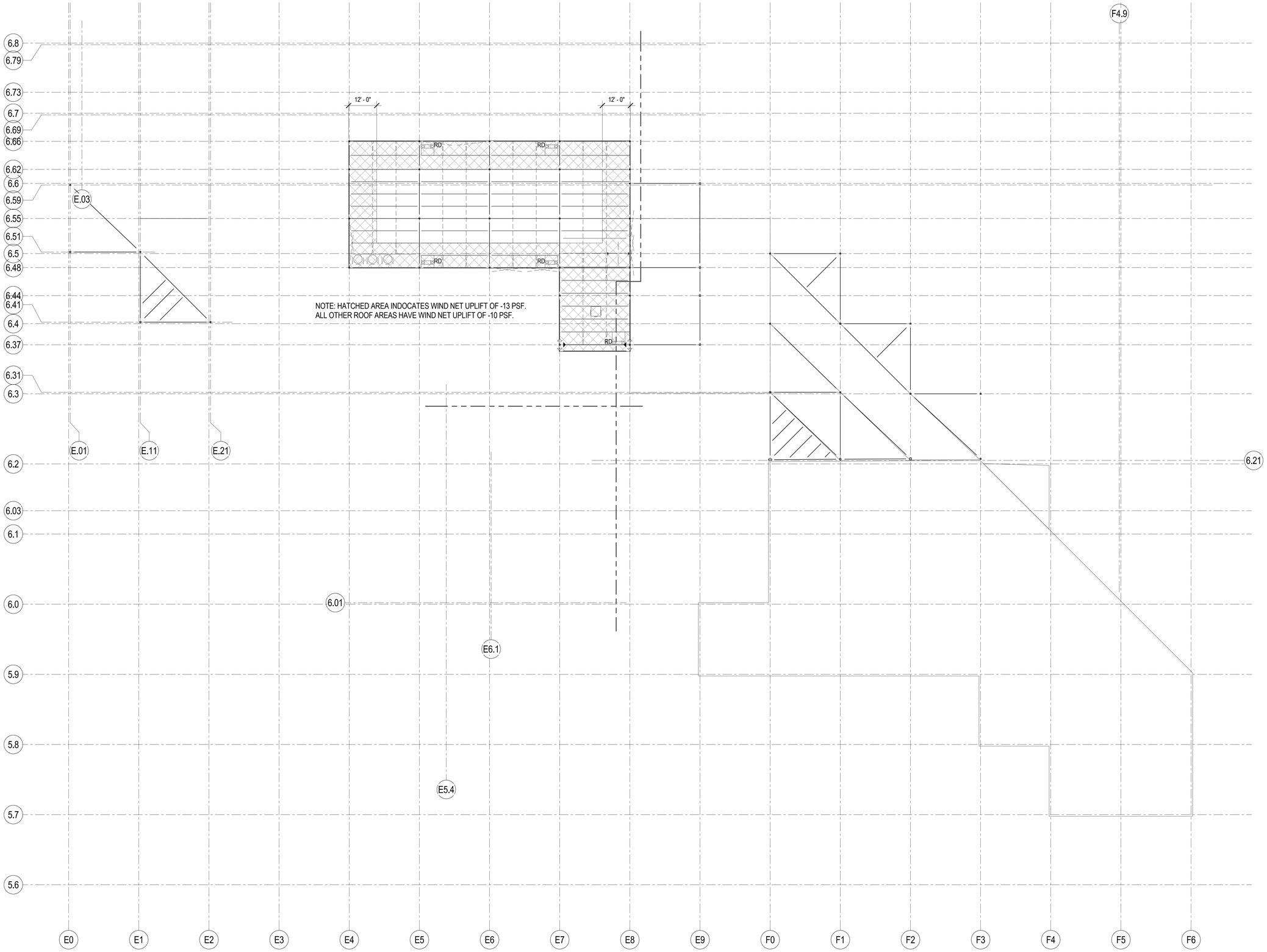

A1 / SF141 OVERALL HIGH ROOF FRAMING PLAN

SCALE: 1/16" = 1'-0"

GSBS ARCHITECTS

375 WEST 200 SOUTH
SALT LAKE CITY, UT 84101

P 801.521.8600
F 801.521.7913

www.gsbsarchitects.com

LICENSED CERTIFIED STRUCTURAL ENGINEER
NO. 144210
RONALD JAMES REAVELEY
UTAH

REVISIONS:

REAVELEY
ENGINEERS + ASSOCIATES
Consulting Structural Engineers

P 801.486.3883
F 801.485.0911

675 E 500 S, Suite 400
Salt Lake City, Utah 84102
www.reaveley.com

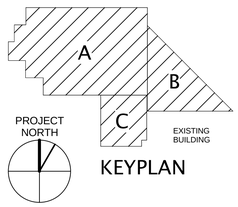

KEYPLAN

Utah Valley University New Science Building

800 West University Parkway
Orem, Utah 84058

Division of Facilities Construction and Managment

DRAWN BY:	Author
CHECKED BY:	Checker
DFCM PROJECT NO.:	
GSBS PROJECT NO.:	2009.115.00
ISSUED DATE:	05.07.10

OVERALL HIGH ROOF FRAMING PLAN

CONSTRUCTION DOCUMENTS

SF141

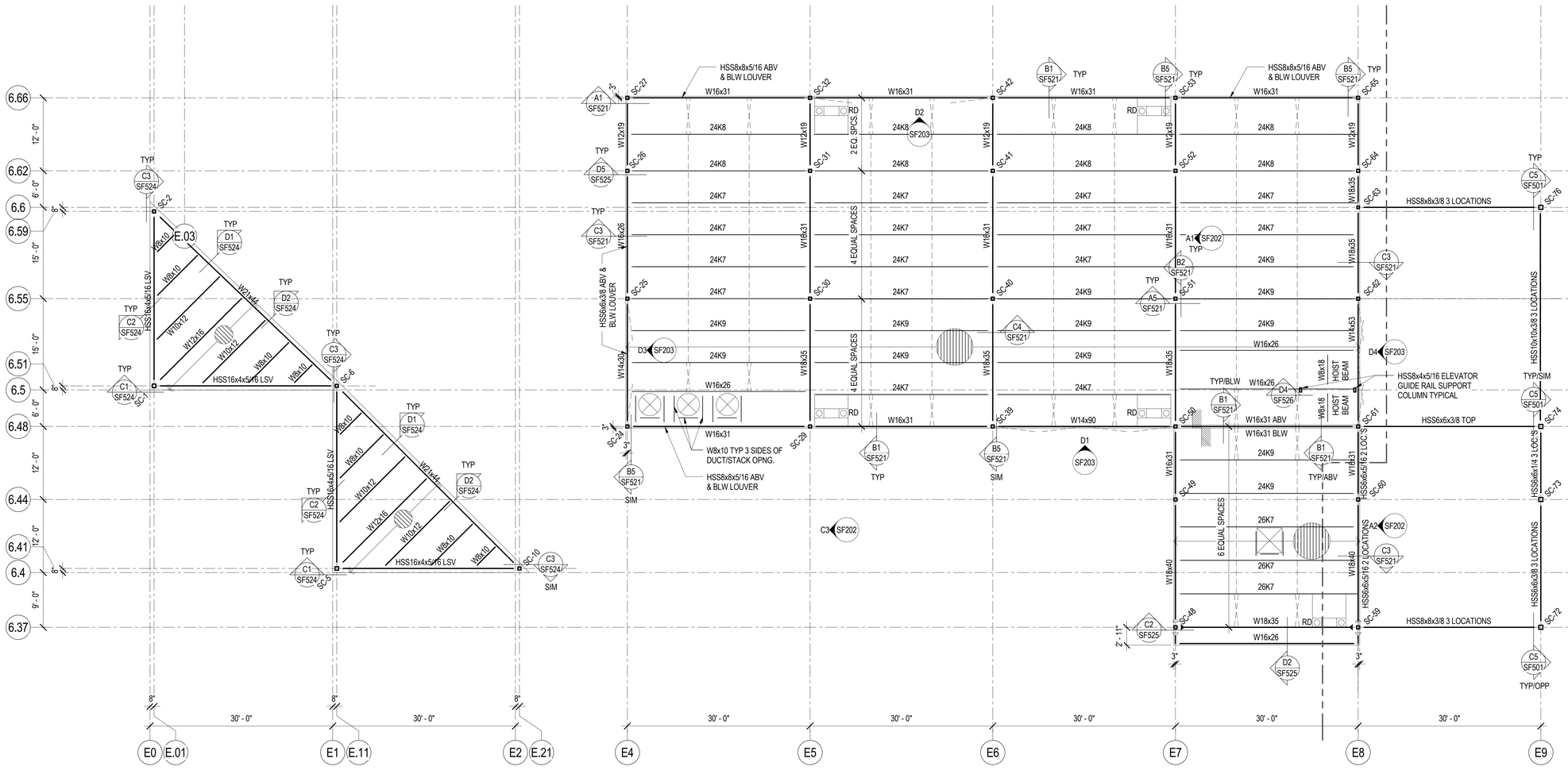

1 / SF141A PENTHOUSE ROOF FRAMING PLAN AREA A

SCALE: 1/8" = 1'-0"

ROOF FRAMING PLAN LEGEND

- CONCRETE WALL
- CONCRETE LINTEL IN CONCRETE WALL
- CONCRETE COLUMN IN CONCRETE WALL
- CONCRETE COLUMN
- CONCRETE JAMB COLUMN POURED MONOLITHIC WITH CONCRETE WALL
- MASONRY WALL
- MASONRY LINTEL IN MASONRY WALL
- MASONRY COLUMN IN MASONRY WALL
- STEEL COLUMN - TUBE
- STEEL COLUMN - WIDE FLANGE
- STEEL COLUMN - PIPE
- STEEL BRACED FRAME
- MOMENT CONNECTION
- COLLECTOR CONNECTION SEE B1/SF601
- COLLECTOR/CHORD CONNECTION AT BEAMS PARALLEL TO MARK. SEE A4/SF603
- DOUBLE SHEAR CONNECTION SEE B4/SF601
- STEEL BEAM OR GIRDER
- STEEL JOIST OR PURLIN
- CROSS BRIDGING
- HORIZONTAL BRIDGING
- STEEL STUD WALL - STRUCTURAL
- STEEL HEADER IN STEEL STUD WALL
- CHANGE IN ELEVATION
- CONCRETE ON METAL DECK
- ROOF DECK
- SPECIAL DECK AREA
- RECESSED/DEPRESSED SLAB ON METAL DECK
- OPENING

ROOF FRAMING PLAN NOTES

1. VERIFY SIZE, WEIGHT, LOCATION AND CONFIGURATION OF ALL ROOF TOP EQUIPMENT WITH ARCHITECT AND MECHANICAL ENGINEER. PROVIDE STEEL FRAMES FOR SUPPORT OF ROOF TOP EQUIPMENT AS INDICATED IN DETAIL D3/SF521 COORDINATE OPENINGS WITH MECHANICAL AND ELECTRICAL AND GENERAL CONTRACTORS.

2. ALL ROOF OPENINGS SHALL BE FRAMED AS INDICATED IN DETAIL D2/SF521. FOR ROUND OPENINGS WHICH ARE LESS THAN 12" DIA. SEE DETAIL C1/SF521.

3. SEE ARCHITECTURAL FOR ROOF SLOPES AND DRAINS. SEE D4&D5/SF521 FOR ROOF DRAIN OPENING FRAME.

4. OPEN WEB STEEL JOISTS AND JOIST GIRDERS SHALL BE DESIGNED BY THE MANUFACTURER TO SUPPORT THE MECHANICAL AND LATERAL LOADS SHOWN ON THE ROOF FRAMING PLANS IN ADDITION TO THE UNIFORM AND POINT LOADS SHOWN.

5. ±#.#K ADD - INDICATES ADDITIONAL UPLIFT / DOWNWARD FORCE ON STEEL JOIST IN ADDITION TO REGULAR LOADS.

6. T/C-##K - INDICATES ADDITIONAL TOP CHORD AXIAL FORCE ON STEEL JOIST OR GIRDER IN ADDITION TO REGULAR LOADS. THIS FORCE IS A SEISMIC LRFD LOAD THAT SHALL BE CONSIDERED IN BOTH TENSION AND COMPRESSION; INCLUDES APPLICABLE OVERSTRENGTH FACTORS FROM IBC SECTION 1613 AND ASCE 7 SECTION 12.10. STEEL JOISTS AND GIRDERS WITH T/C FORCE SHALL BE DESIGNED AS COLLECTOR ELEMENTS PER IBC SECTION 1613 AND ASCE 7 SECTION 12.10 WITH STRENGTH TO RESIST APPLICABLE LOAD COMBINATIONS OF IBC SECTION 1605.4 AND ASCE 7 SECTION 12.4.

7. ALL LOADS SUPPORTED BY OPEN WEB STEEL JOISTS AND GIRDERS SHALL BE LOCATED WITHIN 6" OF JOIST OR GIRDER PANEL POINT OR THE JOIST OR GIRDER SHALL BE REINFORCED PER DETAIL D1/SF521.

8. SEE DETAIL C5/SF525 FOR SUPPORT OF HANGING MECHANICAL UNITS.

9. HORIZONTAL AND CROSS BRIDGING SHALL BE SIZED AND SUPPLIED BY THE JOIST MANUFACTURER CONNECT TO WALLS AS INDICATED IN DETAILS.

10. WHERE SKYLIGHTS OR MECHANICAL UNITS INTERRUPT HORIZONTAL BRIDGING PROVIDE CROSS BRIDGING AT JOIST SPACES ON EACH SIDE. TYPICAL.

11. * INDICATES STRUCTURAL MEMBERS THAT ARE SEISMIC COLLECTORS AND/OR CHORDS. BOLTED CONNECTIONS OF THESE MEMBERS SHALL HAVE SLIP CRITICAL BOLTS PER GENERAL STRUCTURAL NOTES SECTION V.E.2

12. SD.# INDICATES ADDITIONAL SNOW DRIFT ON STEEL JOIST PER THE SNOW DRIFT SCHEDULE. SEE A5/SF601

GSBS ARCHITECTS
375 WEST 200 SOUTH
SALT LAKE CITY, UT 84101
P 801.521.8600
F 801.521.7913
www.gsbsarchitects.com

LICENSED CERTIFIED STRUCTURAL ENGINEER NO. 144210 RONALD JAMES REAVELEY UTAH

REVISIONS:

REAVELEY ENGINEERS + ASSOCIATES
Consulting Structural Engineers
P: 801.486.3883
F: 801.485.0911
675 E 500 S, Suite 490
Salt Lake City, Utah 84102
www.reaveley.com

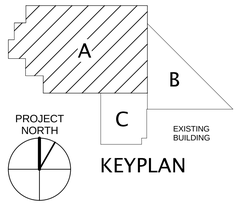

KEYPLAN

Utah Valley University New Science Building

800 West University Parkway
Orem, Utah 84058

Division of Facilities Construction and Managment

DRAWN BY:	Author
CHECKED BY:	Checker
DFCM PROJECT NO.:	
GSBS PROJECT NO.:	2009.115.00
ISSUED DATE:	05.07.10

PENTHOUSE ROOF FRAMING PLAN - AREA A

CONSTRUCTION DOCUMENTS

SF141A

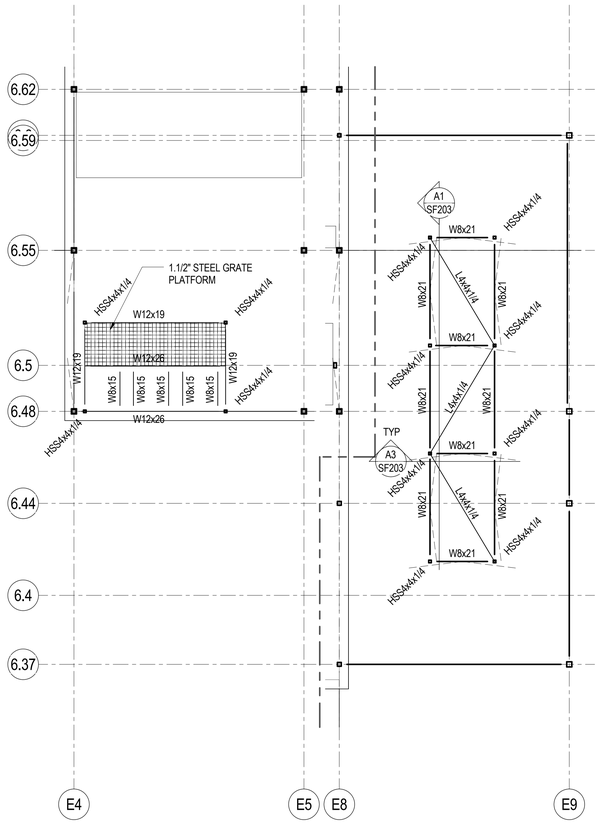

2 SF141B COOLING TOWER PLATFORM FRAMING

SCALE: 1/8" = 1'-0"

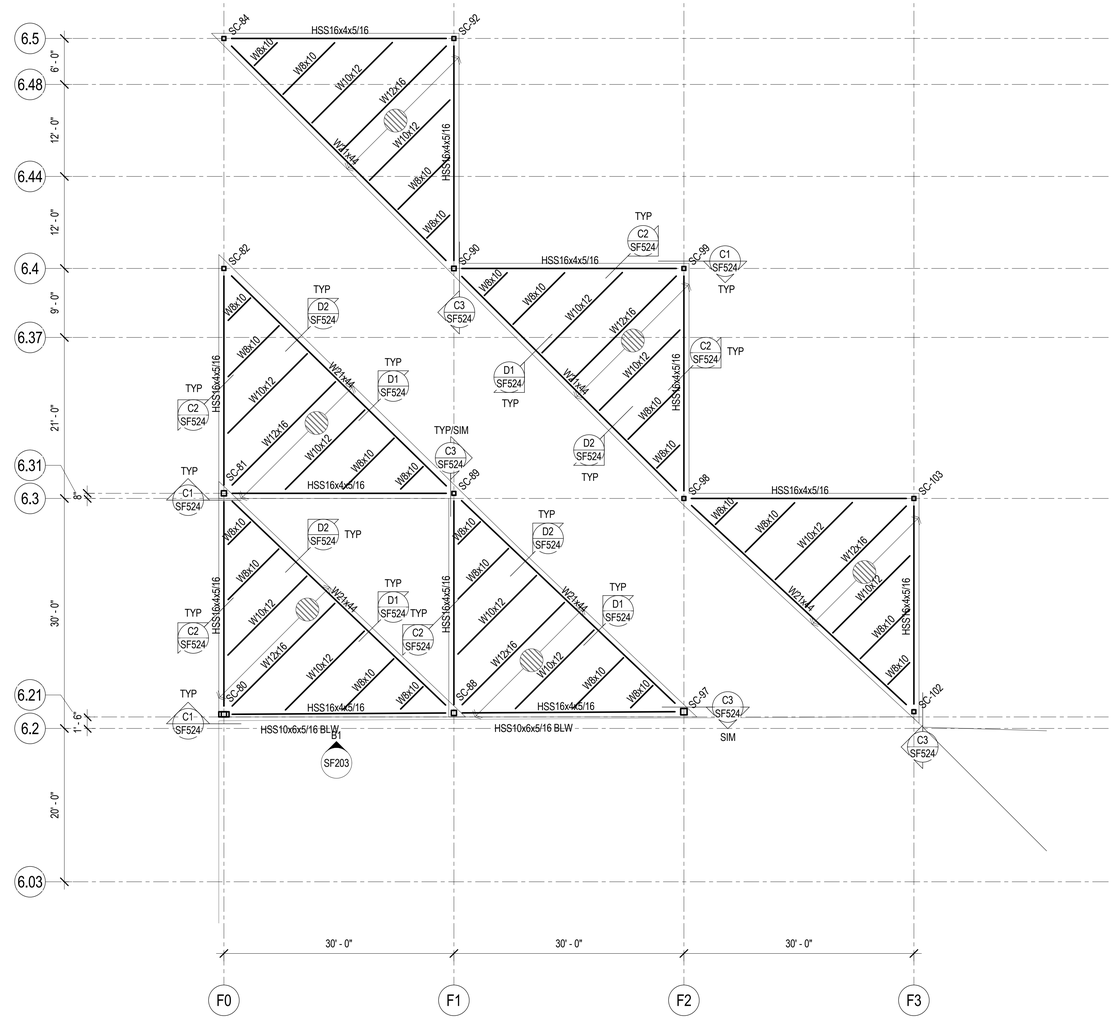

1 SF141B PARTIAL ROOF FRAMING PLAN AREA B

SCALE: 1/8" = 1'-0"

ROOF FRAMING PLAN LEGEND

- CONCRETE WALL
- CONCRETE LINTEL IN CONCRETE WALL
- CONCRETE COLUMN IN CONCRETE WALL
- CONCRETE COLUMN
- CONCRETE JAMB COLUMN POURED MONOLITHIC WITH CONCRETE WALL
- MASONRY WALL
- MASONRY LINTEL IN MASONRY WALL
- MASONRY COLUMN IN MASONRY WALL
- STEEL COLUMN - TUBE
- STEEL COLUMN - WIDE FLANGE
- STEEL COLUMN - PIPE
- STEEL BRACED FRAME
- MOMENT CONNECTION
- COLLECTOR CONNECTION SEE B1/SF601
- A — COLLECTOR/CHORD CONNECTION AT BEAMS PARALLEL TO MARK. SEE A4/SF603
- DOUBLE SHEAR CONNECTION SEE B4/SF601
- STEEL BEAM OR GIRDER
- STEEL JOIST OR PURLIN
- CROSS BRIDGING
- HORIZONTAL BRIDGING
- STEEL STUD WALL - STRUCTURAL
- STEEL HEADER IN STEEL STUD WALL
- 0" — CHANGE IN ELEVATION
- CONCRETE ON METAL DECK
- ROOF DECK
- SPECIAL DECK AREA
- RECESSED/DEPRESSED SLAB ON METAL DECK
- OPENING

ROOF FRAMING PLAN NOTES

1. VERIFY SIZE, WEIGHT, LOCATION AND CONFIGURATION OF ALL ROOF TOP EQUIPMENT WITH ARCHITECT AND MECHANICAL ENGINEER. PROVIDE STEEL FRAMES FOR SUPPORT OF ROOF TOP EQUIPMENT AS INDICATED IN DETAIL D3/SF521 COORDINATE OPENINGS WITH MECHANICAL AND ELECTRICAL AND GENERAL CONTRACTORS.

2. ALL ROOF OPENINGS SHALL BE FRAMED AS INDICATED IN DETAIL D2/SF521. FOR ROUND OPENINGS WHICH ARE LESS THAN 12" DIA. SEE DETAIL C1/SF521.

3. SEE ARCHITECTURAL FOR ROOF SLOPES AND DRAINS. SEE D4&D5/SF521 FOR ROOF DRAIN OPENING FRAME.

4. OPEN WEB STEEL JOISTS AND JOIST GIRDERS SHALL BE DESIGNED BY THE MANUFACTURER TO SUPPORT THE MECHANICAL AND LATERAL LOADS SHOWN ON THE ROOF FRAMING PLANS IN ADDITION TO THE UNIFORM AND POINT LOADS SHOWN.

5. ±#.#K ADD - INDICATES ADDITIONAL UPLIFT / DOWNWARD FORCE ON STEEL JOIST IN ADDITION TO REGULAR LOADS.

6. T/C=##K - INDICATES ADDITIONAL TOP CHORD AXIAL FORCE ON STEEL JOIST OR GIRDER IN ADDITION TO REGULAR LOADS. THIS FORCE IS A SEISMIC LRFD LOAD THAT SHALL BE CONSIDERED IN BOTH TENSION AND COMPRESSION; INCLUDES APPLICABLE OVERSTRENGTH FACTORS FROM IBC SECTION 1613 AND ASCE 7 SECTION 12.10. STEEL JOISTS AND GIRDERS WITH T/C FORCE SHALL BE DESIGNED AS COLLECTOR ELEMENTS PER IBC SECTION 1613 AND ASCE 7 SECTION 12.10 WITH STRENGTH TO RESIST APPLICABLE LOAD COMBINATIONS OF IBC SECTION 1605.4 AND ASCE 7 SECTION 12.4.

7. ALL LOADS SUPPORTED BY OPEN WEB STEEL JOISTS AND GIRDERS SHALL BE LOCATED WITHIN 6" OF JOIST OR GIRDER PANEL POINT OR THE JOIST OR GIRDER SHALL BE REINFORCED PER DETAIL D1/SF521.

8. SEE DETAIL C5/SF525 FOR SUPPORT OF HANGING MECHANICAL UNITS.

9. HORIZONTAL AND CROSS BRIDGING SHALL BE SIZED AND SUPPLIED BY THE JOIST MANUFACTURER. CONNECT TO WALLS AS INDICATED IN DETAILS.

10. WHERE SKYLIGHTS OR MECHANICAL UNITS INTERRUPT HORIZONTAL BRIDGING PROVIDE CROSS BRIDGING AT JOIST SPACES ON EACH SIDE. TYPICAL.

11. * INDICATES STRUCTURAL MEMBERS THAT ARE SEISMIC COLLECTORS AND/OR CHORDS. BOLTED CONNECTIONS OF THESE MEMBERS SHALL HAVE SLIP CRITICAL BOLTS PER GENERAL STRUCTURAL NOTES SECTION V.E.2

12. SD.# INDICATES ADDITIONAL SNOW DRIFT ON STEEL JOIST PER THE SNOW DRIFT SCHEDULE. SEE A5/SF601

GSBS ARCHITECTS

375 WEST 200 SOUTH
SALT LAKE CITY, UT 84101

P 801.521.8600
F 801.521.7913

www.gsbsarchitects.com

LICENSED CERTIFIED STRUCTURAL ENGINEER
NO. 144210
RONALD JAMES REAVELEY
UTAH

REVISIONS:

REAVELEY ENGINEERS + ASSOCIATES
Consulting Structural Engineers

P: 801.486.3883
F: 801.485.0911

675 E 500 S, Suite 400
Salt Lake City, Utah 84102
www.reaveley.com

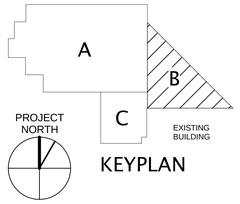

KEYPLAN

Utah Valley University New Science Building

800 West University Parkway
Orem, Utah 84058

Division of Facilities Construction and Managment

DRAWN BY:	Author
CHECKED BY:	Checker
DFCM PROJECT NO.:	
GSBS PROJECT NO.:	2009.115.00
ISSUED DATE:	05.07.10

PARTIAL ROOF FRAMING PLAN - AREA B

CONSTRUCTION DOCUMENTS

SF141B

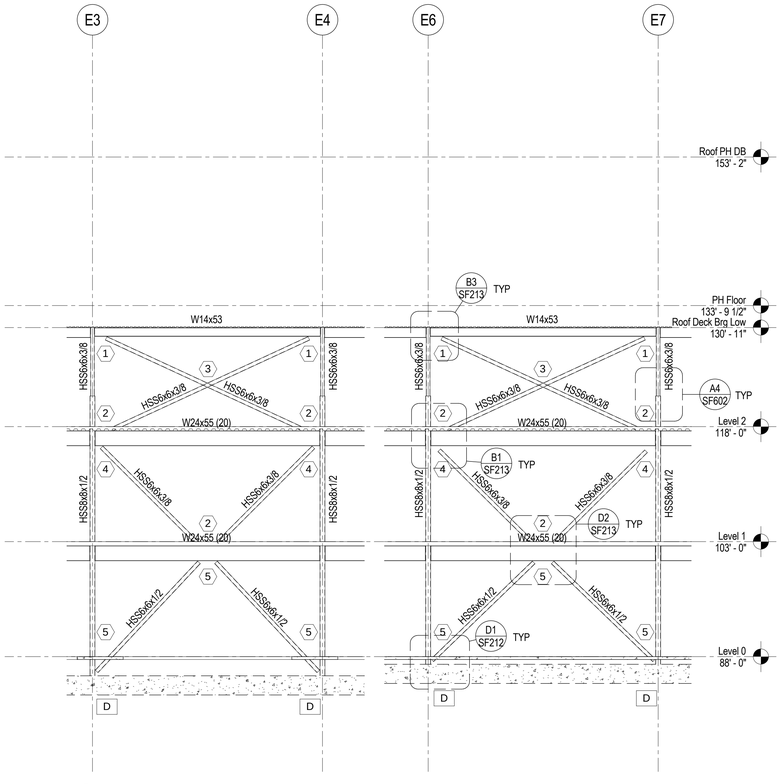

C1 SF201 BRACED FRAME ELEV. ALONG GRID 6.31

SCALE: 1/8" = 1'-0"

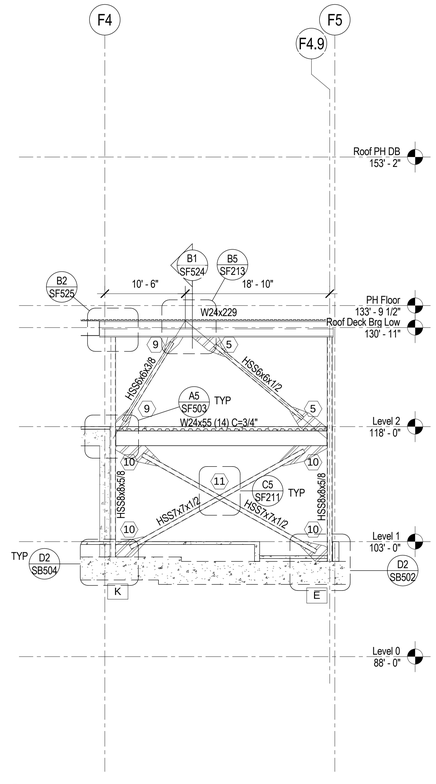

C3 SF201 BRACED FRAME ELEV. ALONG GRID 6.3

SCALE: 1/8" = 1'-0"

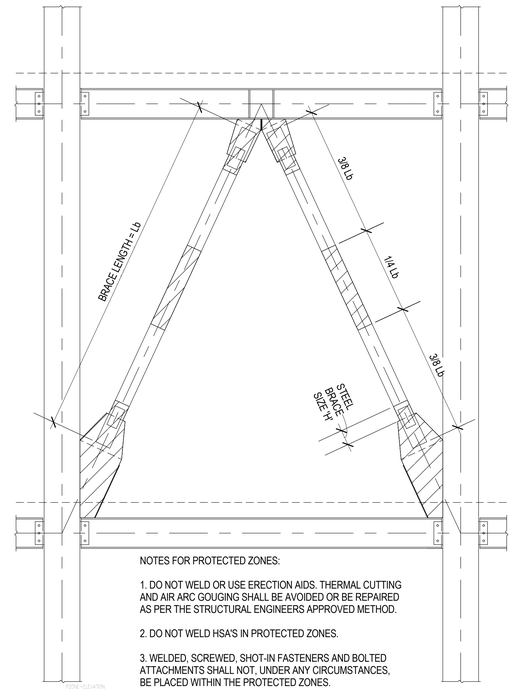

C4 SF201 TYPICAL ELEVATION OF PROTECTED ZONE OF STEEL BRACE FRAME

NO SCALE

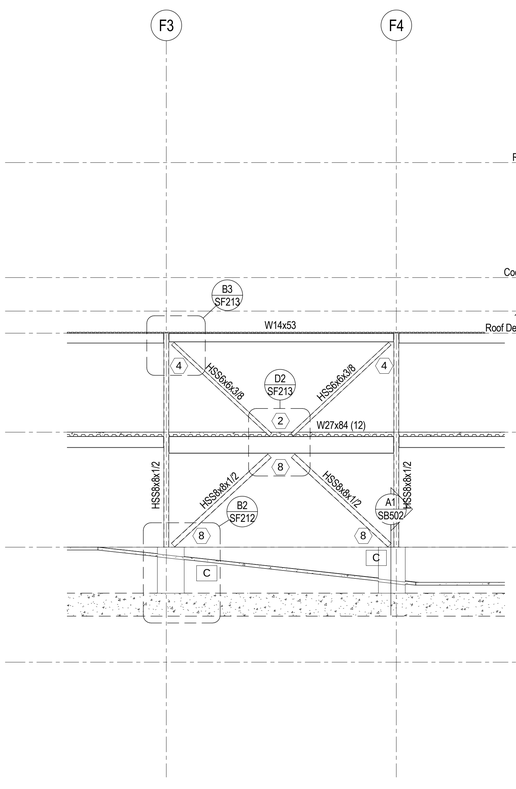

A1 SF201 BRACED FRAME ELEV. ALONG GRID 6.6

SCALE: 1/8" = 1'-0"

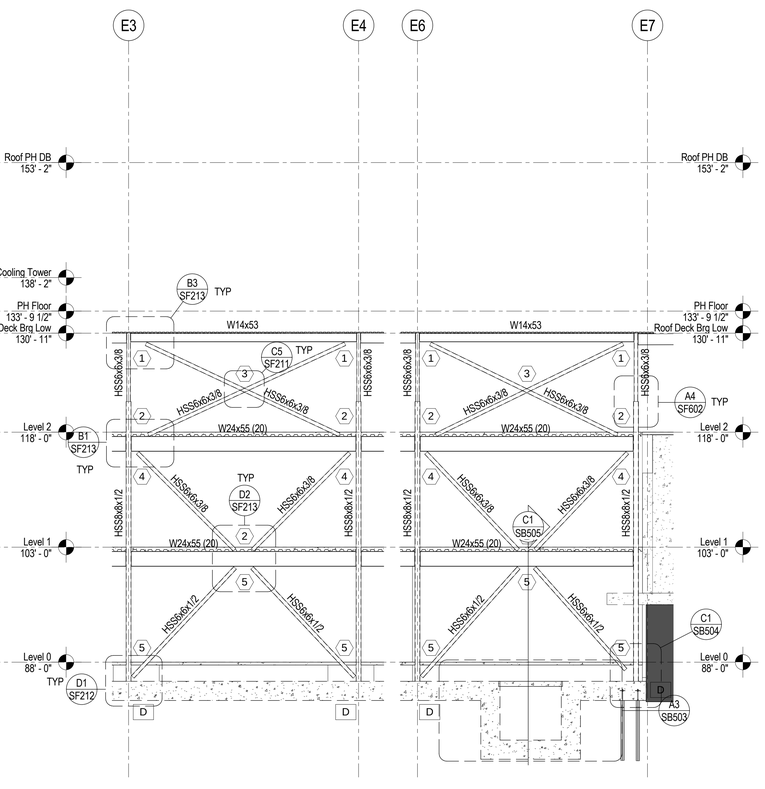

A2 SF201 BRACED FRAME ELEV. ALONG GRID 6.79

SCALE: 1/8" = 1'-0"

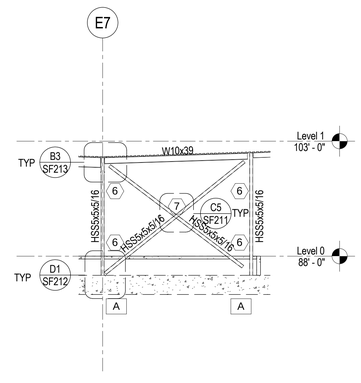

A5 SF201 BRACED FRAME ELEV. ALONG GRID 6.01

SCALE: 1/8" = 1'-0"

BRACED FRAME ELEVATION NOTES AND LEGEND

1. ALL W-SHAPED BRACED FRAME MEMBERS SHALL BE ASTM A992 (Fy = 50KSI) STEEL, U.N.O.

2. ALL HSS-SHAPED BRACED FRAME MEMBERS SHALL BE ASTM A500 GRADE B (Fy = 46KSI) STEEL, U.N.O.

3. (?) INDICATES BRACED FRAME CONNECTION MARK. SEE C1/SF211 FOR BRACED FRAME CONNECTION SCHEDULE.

4. [?] INDICATES BRACED FRAME BASE PLATE. SEE D3/SF211 FOR BRACED FRAME BASE PLATE & ANCHOR BOLT SCHEDULE.

5. VERIFY ALL DATUM ELEVATIONS W/ ARCHITECTURAL DRAWINGS.

6. SEE C4/SF201 FOR PROTECTION ZONES AT STEL BRACED FRAMES.

GSBS ARCHITECTS
375 WEST 200 SOUTH
SALT LAKE CITY, UT 84101
P 801.521.8600
F 801.521.7913
www.gsbsarchitects.com

LICENSED CERTIFIED STRUCTURAL ENGINEER
NO. 144210
RONALD JAMES REAVELEY
UTAH

REVISIONS:

REAVELEY ENGINEERS + ASSOCIATES
Consulting Structural Engineers
P: 801.486.3883
F: 801.485.0911
675 E 500 S, Suite 400
Salt Lake City, Utah 84102
www.reaveley.com

Utah Valley University New Science Building

800 West University Parkway
Orem, Utah 84058

Division of Facilities Construction and Managment

DRAWN BY:	Author
CHECKED BY:	Checker
DFCM PROJECT NO.:	
GSBS PROJECT NO.:	2009.115.00
ISSUED DATE:	05.07.10

BRACED FRAME ELEVATIONS

CONSTRUCTION DOCUMENTS

SF201

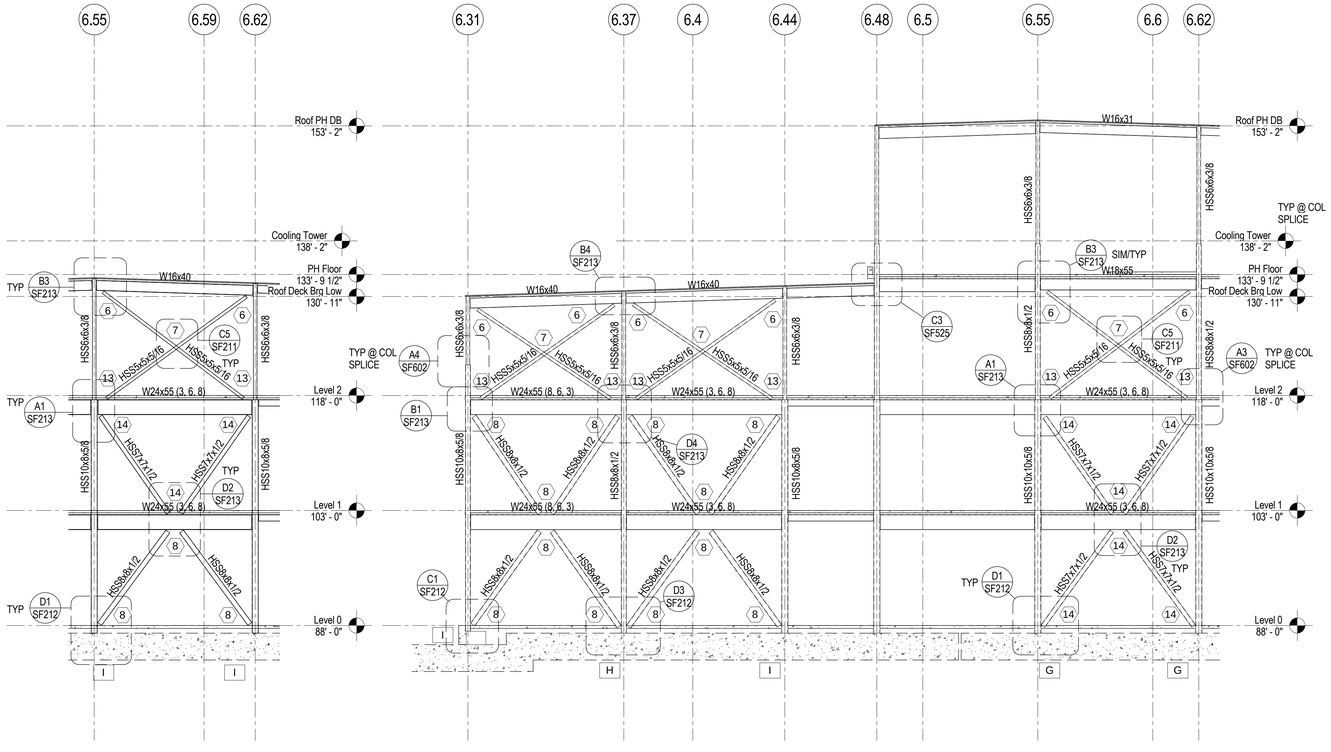

C2 SF202 BRACED FRAME ELEV. ALONG GRID E.2

SCALE: 1/8" = 1'-0"

C3 SF202 BRACED FRAME ELEV. ALONG GRID E.5

SCALE: 1/8" = 1'-0"

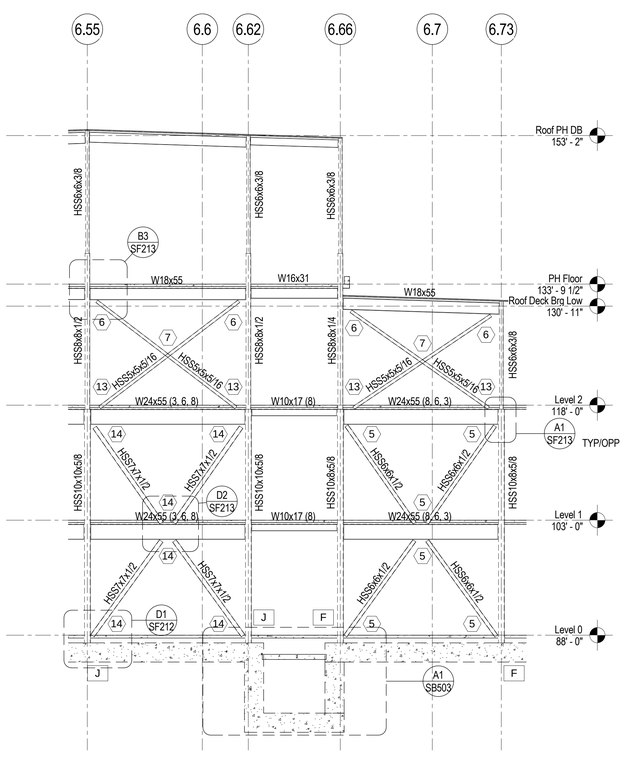

A1 SF202 BRACED FRAME ELEV. ALONG GRID E.7

SCALE: 1/8" = 1'-0"

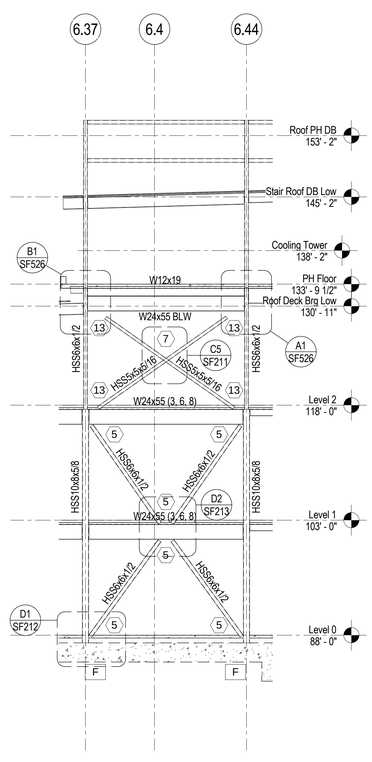

A2 SF202 BRACED FRAME ELEV. ALONG GRID E.8

SCALE: 1/8" = 1'-0"

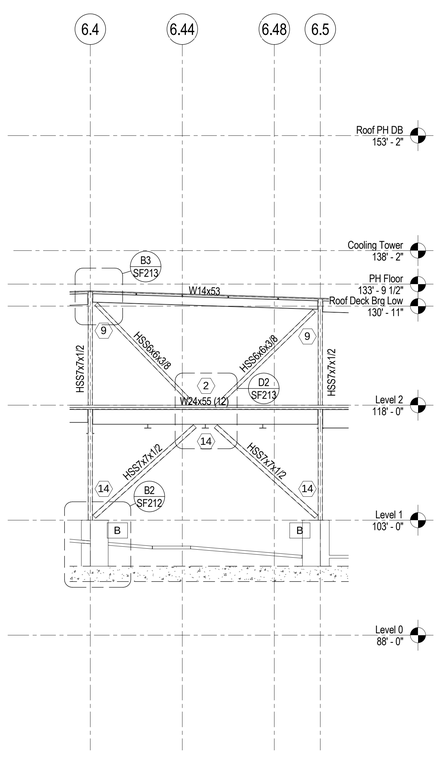

A3 SF202 BRACED FRAME ELEV. ALONG GRID F.5

SCALE: 1/8" = 1'-0"

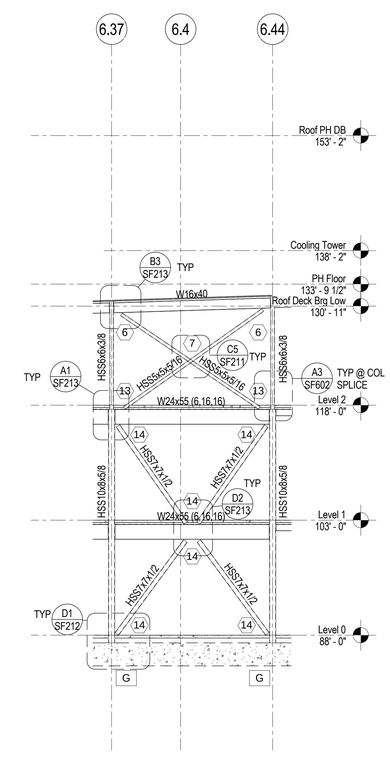

A4 SF202 BRACED FRAME ELEV. ALONG GRID E.3

SCALE: 1/8" = 1'-0"

BRACED FRAME ELEVATION NOTES AND LEGEND

NOTE-FRAME

1. ALL W-SHAPED BRACED FRAME MEMBERS SHALL BE ASTM A992 (Fy = 50KSI) STEEL, U.N.O.

2. ALL HSS-SHAPED BRACED FRAME MEMBERS SHALL BE ASTM A500 GRADE B (Fy = 46KSI) STEEL, U.N.O.

3. (?) INDICATES BRACED FRAME CONNECTION MARK. SEE C1/SF211 FOR BRACED FRAME CONNECTION SCHEDULE.

4. [?] INDICATES BRACED FRAME BASE PLATE. SEE D3/SF211 FOR BRACED FRAME BASE PLATE & ANCHOR BOLT SCHEDULE.

5. VERIFY ALL DATUM ELEVATIONS W/ ARCHITECTURAL DRAWINGS.

6. SEE C4/SF201 FOR PROTECTION ZONES AT STEL BRACED FRAMES.

GSBS ARCHITECTS

375 WEST 200 SOUTH
SALT LAKE CITY, UT 84101

P 801.521.8600
F 801.521.7915

www.gsbsarchitects.com

LICENSED CERTIFIED STRUCTURAL ENGINEER
NO. 144210
RONALD JAMES REAVELEY
UTAH

REVISIONS:

REAVELEY ENGINEERS + ASSOCIATES
Consulting Structural Engineers

P 801.486.3883
F 801.485.0911

675 E 500 S, Suite 400
Salt Lake City, Utah 84102
www.reaveley.com

Utah Valley University New Science Building

800 West University Parkway
Orem, Utah 84058

Division of Facilities Construction and Managment

DRAWN BY:	Author
CHECKED BY:	Checker
DFCM PROJECT NO.:	
GSBS PROJECT NO.:	2009.115.00
ISSUED DATE:	05.07.10

BRACED FRAME ELEVATIONS

CONSTRUCTION DOCUMENTS

SF202

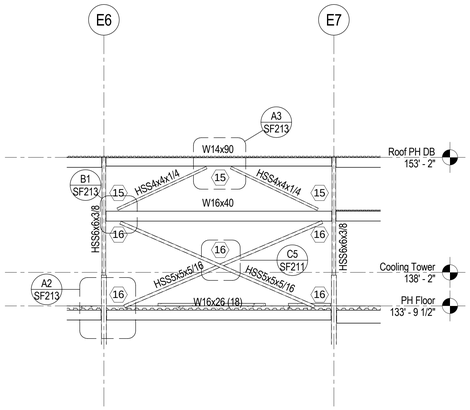

D1 SF203 BRACED FRAME ELEVATION ALONG GRID 6.48

SCALE: 1/8" = 1'-0"

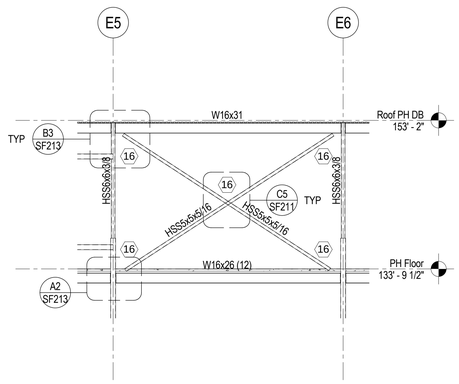

D2 SF203 BRACED FRAME ELEVATION ALONG GRID 6.66

SCALE: 1/8" = 1'-0"

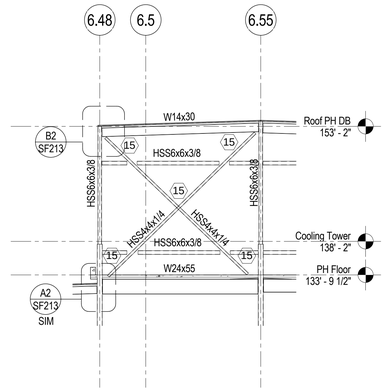

D3 SF203 BRACED FRAME ELEVATION ALONG GRID E4

SCALE: 1/8" = 1'-0"

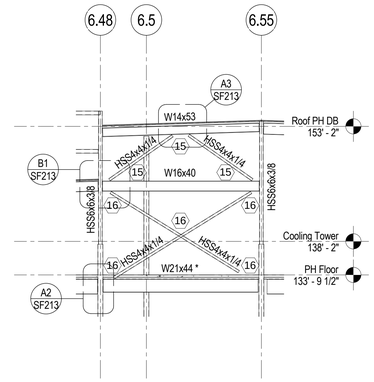

D4 SF203 BRACED FRAME ELEVATION ALONG GRID E8

SCALE: 1/8" = 1'-0"

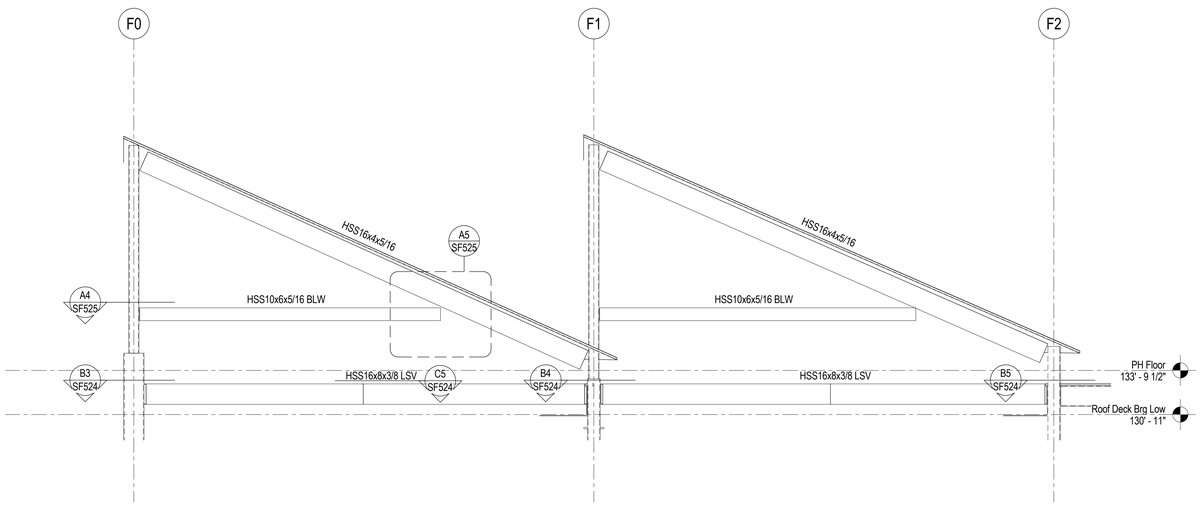

B1 SF203 WALL FRAMING ELEVATION

SCALE: 1/4" = 1'-0"

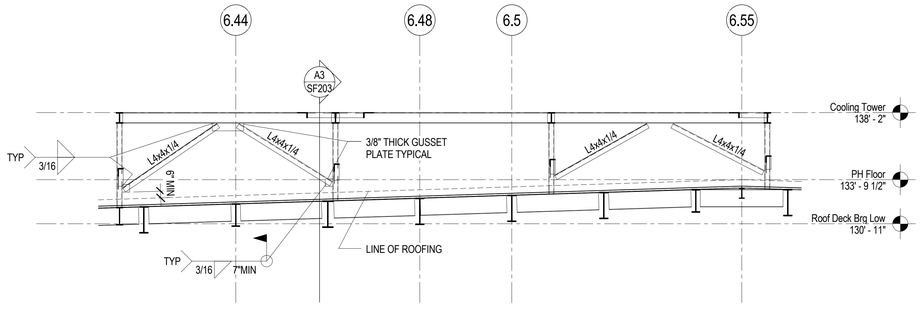

A1 SF203 COOLING TOWER FRAME ELEVATION

SCALE: 1/4" = 1'-0"

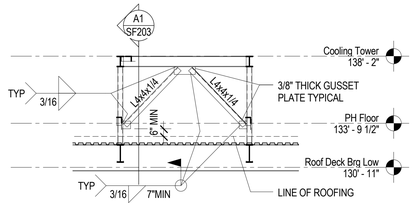

A3 SF203 TYPICAL COOLING TOWER FRAME ELEVATION

SCALE: 1/4" = 1'-0"

BRACED FRAME ELEVATION NOTES AND LEGEND

1. ALL W-SHAPED BRACED FRAME MEMBERS SHALL BE ASTM A992 (Fy = 50KSI) STEEL, U.N.O.

2. ALL HSS-SHAPED BRACED FRAME MEMBERS SHALL BE ASTM A500 GRADE B (Fy = 46KSI) STEEL, U.N.O.

3. (?) INDICATES BRACED FRAME CONNECTION MARK. SEE C1/SF211 FOR BRACED FRAME CONNECTION SCHEDULE.

4. [?] INDICATES BRACED FRAME BASE PLATE. SEE D3/SF211 FOR BRACED FRAME BASE PLATE & ANCHOR BOLT SCHEDULE.

5. VERIFY ALL DATUM ELEVATIONS W/ ARCHITECTURAL DRAWINGS.

6. SEE C4/SF201 FOR PROTECTION ZONES AT STEL BRACED FRAMES.

GSBS ARCHITECTS

375 WEST 200 SOUTH
SALT LAKE CITY, UT 84101

P 801.521.8600
F 801.521.7913

www.gsbsarchitects.com

LICENSED CERTIFIED STRUCTURAL ENGINEER
NO. 144210
RONALD JAMES REAVELEY
UTAH

REVISIONS:

REAVELEY
ENGINEERS + ASSOCIATES
Consulting Structural Engineers

P: 801.486.3883
F: 801.485.0911

675 E 500 S, Suite 400
Salt Lake City, Utah 84102
www.reaveley.com

Utah Valley University New Science Building

800 West University Parkway
Orem, Utah 84058

Division of Facilities Construction and Managment

DRAWN BY:	Author
CHECKED BY:	Checker
DFCM PROJECT NO.:	
GSBS PROJECT NO.:	2009.115.00
ISSUED DATE:	05.07.10

BRACED FRAME ELEVATIONS

CONSTRUCTION DOCUMENTS

SF203

SPECIAL CONCENTRICALLY BRACED FRAME CONNECTION SCHEDULE - TUBE BRACES

MARK	WELDING CRITERIA					GUSSET PLATE		COVER PLATE			NOTES
	T1 WELD THICKNESS	T2 WELD THICKNESS	T3 WELD THICKNESS	T4 WELD THICKNESS	L1 WELD LENGTH	GUSSET PLATE THICKNESS (tg)	GUSSET PLATE WIDTH	COVER PLATE SIZE	T5 WELD THICKNESS	L5 WELD LENGTH	
1	5/16	1/4	1/2	--	18"	1"	20"	4.1/2"x3/8"	5/16	6.1/2"	
2	5/16	5/16	--	1/2	18"	1"	16"	4.1/2"x3/8"	5/16	6.1/2"	
3	5/16	--	--	--	18"	1"	11"	4.1/2"x3/8"	5/16	6.1/2"	
4	5/16	5/16	1/2	--	18"	1"	26"	4.1/2"x3/8"	5/16	6.1/2"	
5	5/16	1/2	1/2	7/16	23"	1"	26"	4"x1/2"	5/16	8"	
6	1/4	5/16	5/16	--	16"	3/4"	22"	3.1/2"x3/8"	1/4	5.1/2"	
7	1/4	--	--	--	16"	3/4"	11"	3.1/2"x3/8"	1/4	5.1/2"	
8	3/8	5/8	9/16	1/2	27"	1.1/4"	30"	6"x1/2"	3/8	9"	
9	5/16	9/16	1/2	7/16	18"	1"	20"	4.1/2"x3/8"	5/16	6.1/2"	
10	5/16	7/16	1/2	--	27"	1.1/4"	28"	5"x1/2"	5/16	9.1/2"	
11	5/16	--	--	--	27"	1.1/4"	28"	5"x1/2"	5/16	9.1/2"	
12											
13	1/4	3/8	--	--	16"	3/4"	14"	3.1/2"x3/8"	1/4	5.1/2"	
14	5/16	1/2	1/2	1/2	27"	1.1/4"	28"	5"x1/2"	5/16	9.1/2"	
15	3/16	3/16	5/16	3/16	5"	3/4"	8"	--	--	--	
16	3/16	3/16	5/16	--	8"	3/4"	10"	--	--	--	

NOTES:
1. ALL GUSSET PLATES SHALL BE ASTM A572 GRADE 50 STEEL.
2. ALL COVER PLATES SHALL BE A572 GRADE 50 STEEL, SEE B5/SF211 FOR DETAIL.

C1 / SF211 SPECIAL CONCENTRICALLY BRACED FRAME CONNECTION SCHEDULE - TUBE BRACES
NO SCALE

BRACED FRAME BASE PLATE & ANCHOR BOLT SCHEDULE

MARK	BASE PLATE						ANCHOR BOLTS					NOTES
	N LENGTH	B WIDTH	THICKNESS	A' DIM	C' DIM	T5 WELD THICK.	SHEAR LUG	NUMBER	SIZE	EMBED DEPTH	GRADE	
A	28"	12"	1.1/4"	2"	6.1/2"	5/16"	(2) 8"x2.1/2"x12"	6	7/8"	24"	105	SEE D4/SF212
B	34"	20"	1.3/4"	2"	9"	5/8"	(2) 9.1/2"x2.3/4"x20"	6	7/8"	30"	105	SEE D4/SF212
C	36"	20"	2.1/4"	3.1/2"	11"	9/16"	(2) 10"x3"x20"	6	1.1/2"	30"	105	SEE D4/SF212
D	30"	15"	2"	2.1/2"	11"	1/2"	(2) 9.1/2"x2.3/4"x15"	6	1.1/4"	24"	105	SEE D4/SF212
E	42"	15"	2"	2.1/2"	9"	3/8"	(3) 9.1/2"x2.3/4"x15"	6	1.1/2"	30"	105	SEE __/SF212
F	30"	15"	1.3/4"	2.1/2"	10"	5/8"	(2) 8.1/2"x2.1/2"x15"	6	1.1/4"	24"	105	SEE D4/SF212
G	32"	18"	2.1/2"	3.1/2"	12"	11/16"	(2) 8"x2.1/2"x18"	6	1.3/4"	30"	105	SEE D4/SF212
H	40"	18"	2"	3.1/2"	--	1/2"	(3) 7"x2"x18"	8	1.1/2"	30"	105	SEE C3/SF212
I	32"	18"	3"	3.1/2"	18"	3/4"	(2) 9.1/2"x2.3/4"x18"	6	2"	30"	105	SEE D4/SF212
J	32"	18"	2.1/2"	3.1/2"	12"	11/16"	(2) 8"x2.1/2"x18"	6	1.1/4"	24"	105	SEE D4/SF212
K	38"	24"	2.1/2"	3.1/2"	4.5"	3/8"	(2) 9.1/2"x2.3/4"x15"	6	1.1/2"	30"	105	SEE D5/SF212

NOTES:
1. ALL BASE PLATES AND SHEAR LUGS SHALL BE ASTM A572 GRADE 50 STEEL, U.N.O.

D3 / SF211 BRACED FRAME BASE PLATE & ANCHOR BOLT SCHEDULE
NO SCALE

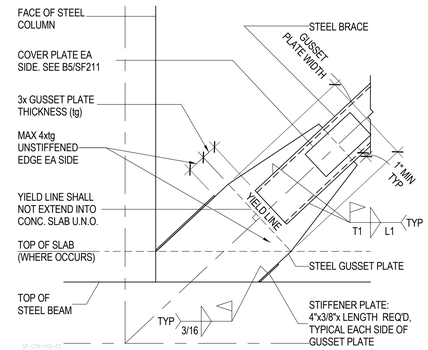

D5 / SF211 TYPICAL GUSSET PLATE CONNECTION AT STEEL BEAM
NO SCALE

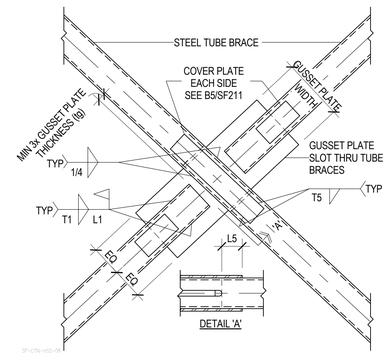

C5 / SF211 TYPICAL BRACED FRAME DETAIL
NO SCALE

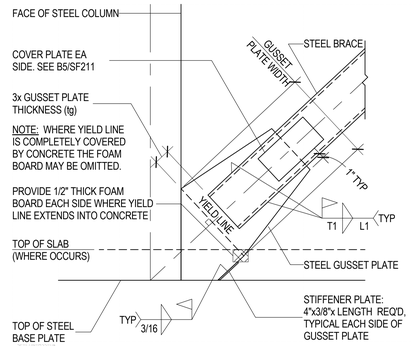

B1 / SF211 TYPICAL STEEL GUSSET PLATE CONNECTION AT STEEL BASE PLATE
NO SCALE

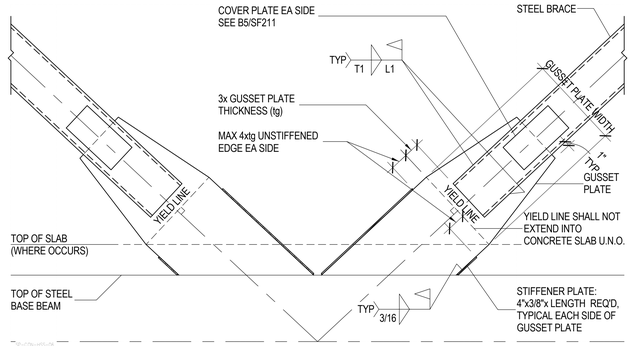

B2 / SF211 TYPICAL STEEL GUSSET PLATE CONNECTION AT STEEL BEAM
NO SCALE

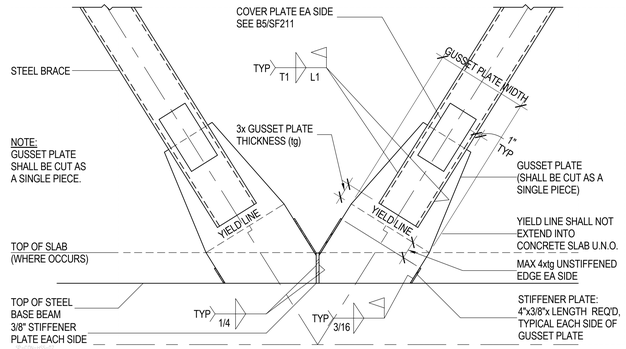

B4 / SF211 TYPICAL STEEL GUSSET PLATE CONNECTION AT STEEL BEAM
NO SCALE

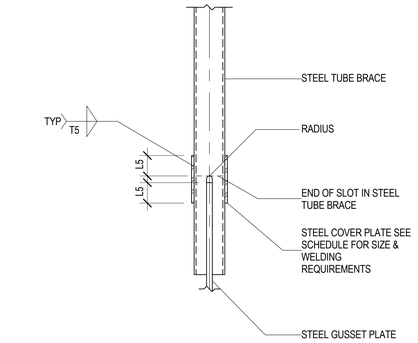

B5 / SF211 TYPICAL STEEL TUBE BRACE COVER PLATE
NO SCALE

GSBS ARCHITECTS
375 WEST 200 SOUTH
SALT LAKE CITY, UT 84101
P 801.521.8600
F 801.521.7915
www.gsbsarchitects.com

LICENSED CERTIFIED STRUCTURAL ENGINEER
NO. 144210
RONALD JAMES REAVELEY
UTAH

REVISIONS:

REAVELEY ENGINEERS + ASSOCIATES
Consulting Structural Engineers
P: 801.486.3883
F: 801.485.0911
675 E 500 S, Suite 400
Salt Lake City, Utah 84102
www.reaveley.com

Utah Valley University New Science Building

800 West University Parkway
Orem, Utah 84058

Division of Facilities Construction and Managment

DRAWN BY:	Author
CHECKED BY:	Checker
DFCM PROJECT NO.:	
GSBS PROJECT NO.:	2009.115.00
ISSUED DATE:	05.07.10

BRACED FRAME SCHEDULE & DETAILS

CONSTRUCTION DOCUMENTS

SF211

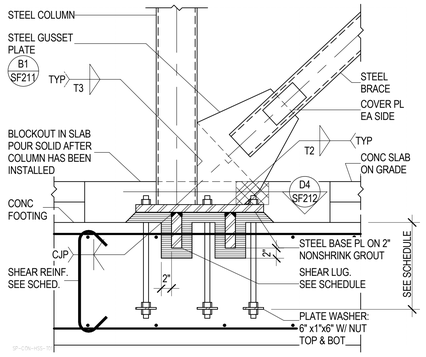

D1 / SF212 TYPICAL BRACED FRAME COLUMN BASE AT CONCRETE FOOTING

NO SCALE

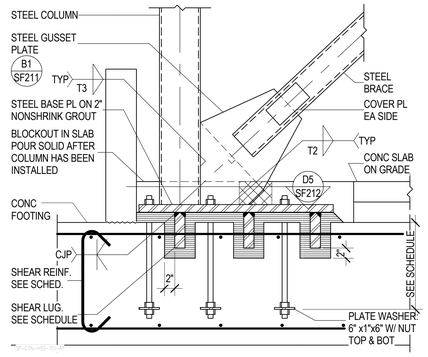

D2 / SF212 TYPICAL BRACED FRAME COLUMN BASE AT CONCRETE FOOTING

NO SCALE

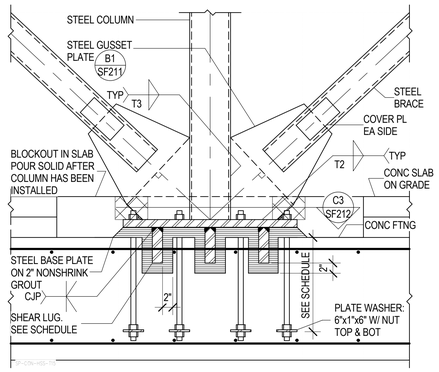

D3 / SF212 TYPICAL BRACED FRAME COLUMN BASE AT CONCRETE PIER

NO SCALE

NOTE:
ADJUST SPACING OF MAT FOOTING TOP REINFORCING TO AVOID SHEAR LUG. IF SPACING EXCEEDS 12", CUT REINFORCING AT SHEAR LUG & ADD SPLICE BAR EACH SIDE OF SHEAR LUG. SPLICE BAR SHALL EXTEND BEYOND CUT BAR A MINIMUM CLASS "B" LAP SPLICE

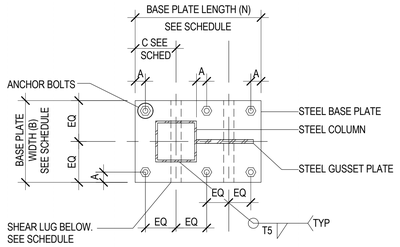

D4 / SF212 TYPICAL BRACED FRAME COLUMN BASE PLATE (PLAN VIEW)

NO SCALE

NOTE:
ADJUST SPACING OF MAT FOOTING TOP REINFORCING TO AVOID SHEAR LUG. IF SPACING EXCEEDS 12", CUT REINFORCING AT SHEAR LUG & ADD SPLICE BAR EACH SIDE OF SHEAR LUG. SPLICE BAR SHALL EXTEND BEYOND CUT BAR A MINIMUM CLASS "B" LAP SPLICE

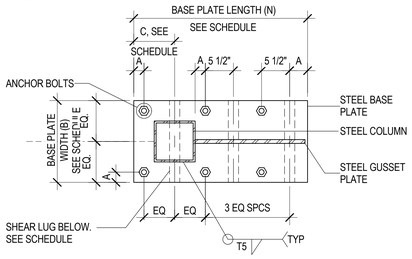

D5 / SF212 TYPICAL BRACED FRAME COLUMN BASE PLATE (PLAN VIEW)

NO SCALE

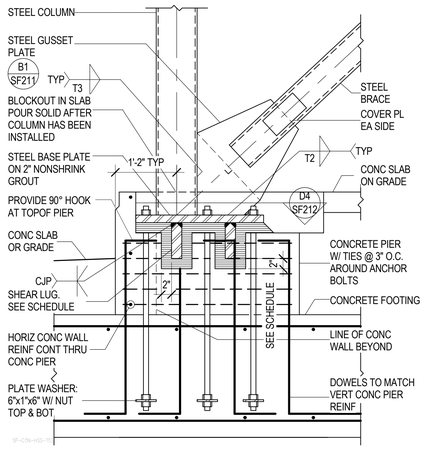

C1 / SF212 TYPICAL BRACED FRAME COLUMN BASE AT CONCRETE PIER

NO SCALE

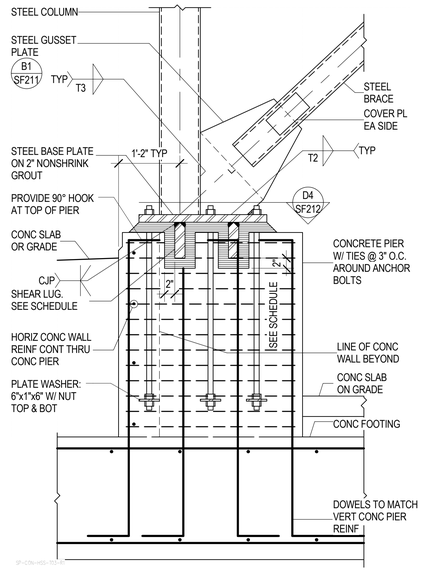

B2 / SF212 TYPICAL BRACED FRAME COLUMN BASE AT CONCRETE PIER

NO SCALE

NOTE:
ADJUST SPACING OF MAT FOOTING TOP REINFORCING TO AVOID SHEAR LUG. IF SPACING EXCEEDS 12", CUT REINFORCING AT SHEAR LUG & ADD SPLICE BAR EACH SIDE OF SHEAR LUG. SPLICE BAR SHALL EXTEND BEYOND CUT BAR A MINIMUM CLASS "B" LAP SPLICE

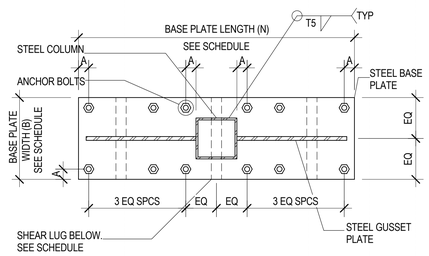

C3 / SF212 TYPICAL BRACED FRAME COLUMN BASE PLATE (PLAN VIEW)

NO SCALE

GSBS ARCHITECTS
375 WEST 200 SOUTH
SALT LAKE CITY, UT 84101
P 801.521.8600
F 801.521.7915
www.gsbsarchitects.com

LICENSED CERTIFIED STRUCTURAL ENGINEER
NO. 144210
RONALD JAMES REAVELEY
UTAH

REVISIONS:

REAVELEY ENGINEERS + ASSOCIATES
Consulting Structural Engineers
P: 801.496.3883
F: 801.485.0911
675 E 500 S, Suite 400
Salt Lake City, Utah 84102
www.reaveley.com

Utah Valley University New Science Building

800 West University Parkway
Orem, Utah 84058

Division of Facilities Construction and Managment

DRAWN BY:	Author
CHECKED BY:	Checker
DFCM PROJECT NO.:	
GSBS PROJECT NO.:	2009.115.00
ISSUED DATE:	05.07.10

BRACED FRAME DETAILS

CONSTRUCTION DOCUMENTS

SF212

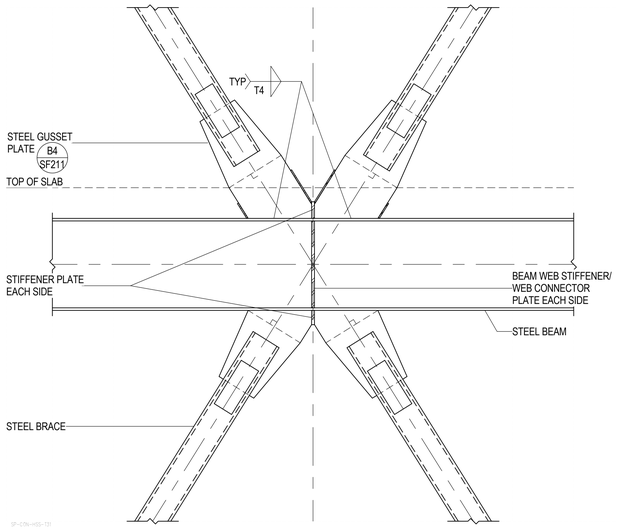

D2 / SF213 TYPICAL BRACED FRAME DETAIL
NO SCALE

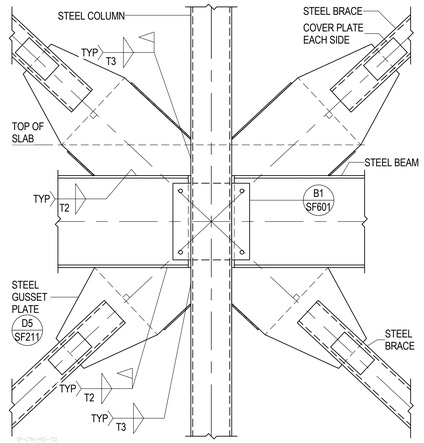

D4 / SF213 TYPICAL BRACED FRAME DETAIL
NO SCALE

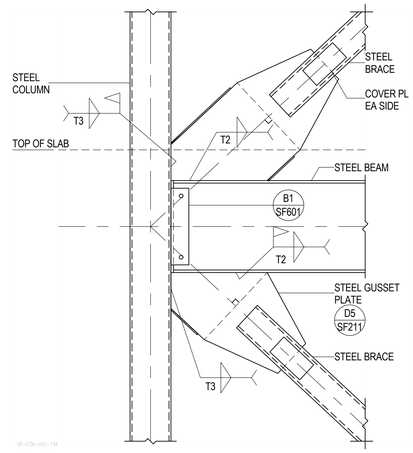

D5 / SF213 TYPICAL BRACED FRAME DETAIL
NO SCALE

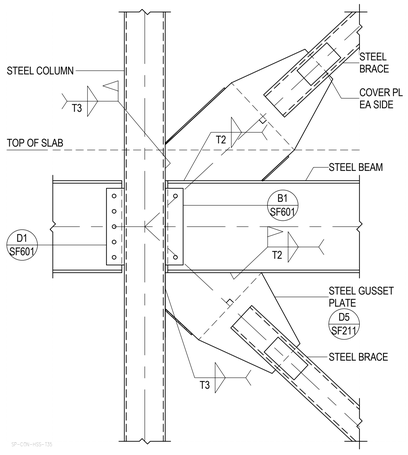

B1 / SF213 TYPICAL BRACED FRAME DETAIL
NO SCALE

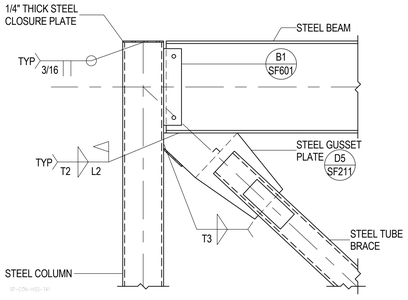

B2 / SF213 TYPICAL BRACED FRAME DETAIL
NO SCALE

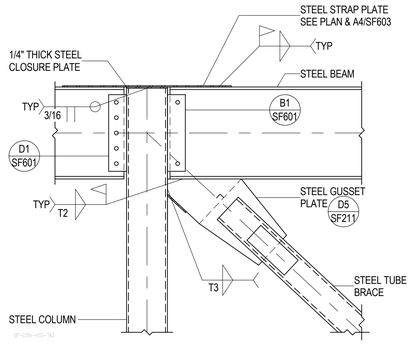

B3 / SF213 TYPICAL BRACED FRAME DETAIL
NO SCALE

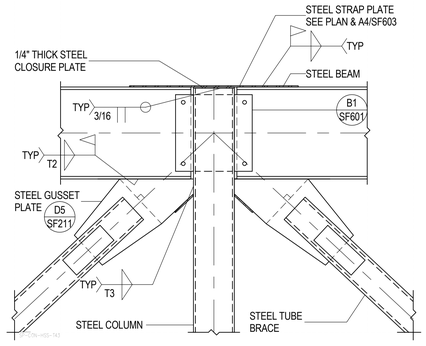

B4 / SF213 TYPICAL BRACED FRAME DETAIL
NO SCALE

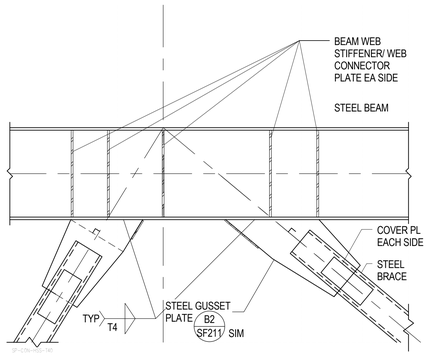

B5 / SF213 TYPICAL BRACED FRAME DETAIL
NO SCALE

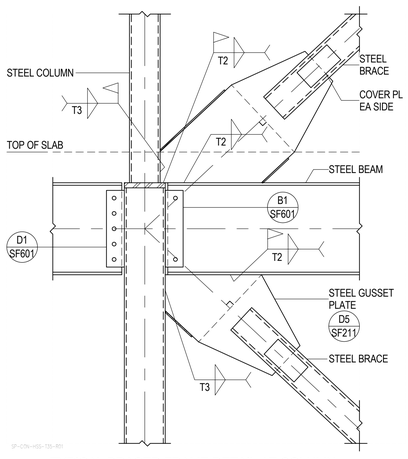

A1 / SF213 TYPICAL BRACED FRAME DETAIL AT COLUMN SPLICE
NO SCALE

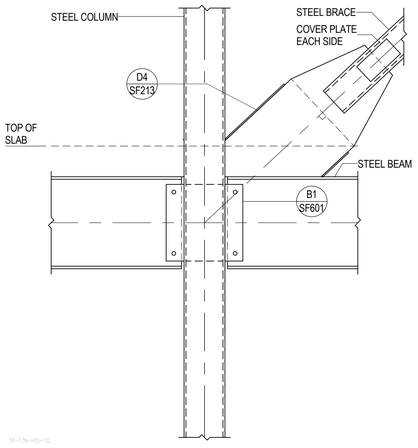

A2 / SF213 TYPICAL BRACED FRAME DETAIL
NO SCALE

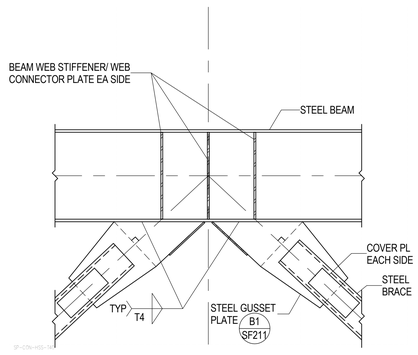

A3 / SF213 TYPICAL BRACED FRAME DETAIL
NO SCALE

GSBS ARCHITECTS
375 WEST 200 SOUTH
SALT LAKE CITY, UT 84101
P 801.521.8600
F 801.521.7913
www.gsbsarchitects.com

LICENSED CERTIFIED STRUCTURAL ENGINEER
NO. 144210
RONALD JAMES REAVELEY
UTAH

REVISIONS:

REAVELEY ENGINEERS + ASSOCIATES
Consulting Structural Engineers
P 801.486.3883
F 801.485.0911
675 E 500 S, Suite 400
Salt Lake City, Utah 84102
www.reaveley.com

Utah Valley University New Science Building

800 West University Parkway
Orem, Utah 84058

Division of Facilities Construction and Managment

DRAWN BY:	Author
CHECKED BY:	Checker
DFCM PROJECT NO.:	
GSBS PROJECT NO.:	2009.115.00
ISSUED DATE:	05.07.10

BRACED FRAME DETAILS

CONSTRUCTION DOCUMENTS

SF213

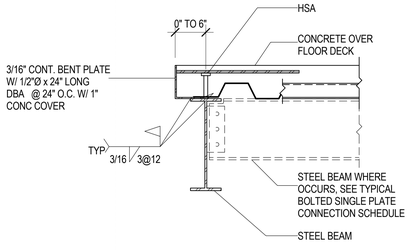

SLAB EDGE FOR 0" UP TO 6"

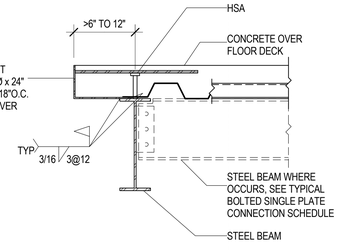

SLAB EDGE FOR >6" UP TO 12"

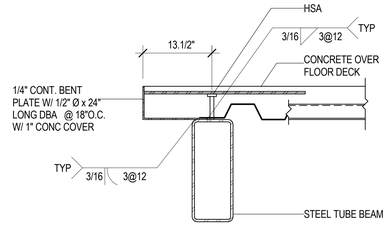

SLAB EDGE @ HSS BEAM, PARALLEL TO PURLINS OR BETWEEN PURLINS

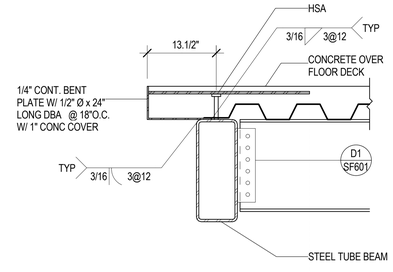

SLAB EDGE @ HSS BEAM

D3 / SF501 SLAB EDGE AT HSS BEAMS

NO SCALE

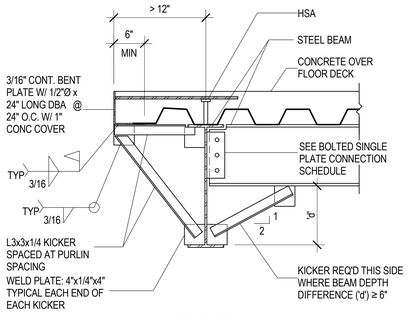

SLAB EDGE FOR >12"

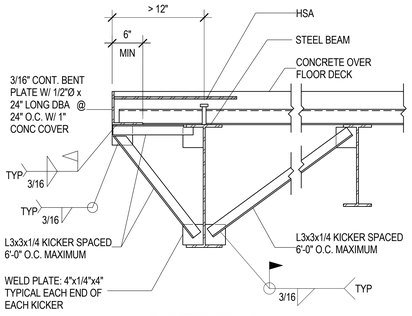

SLAB EDGE FOR >12"

C1 / SF501 TYPICAL SLAB EDGE DETAILS AT COMPOSITE BEAMS

NO SCALE

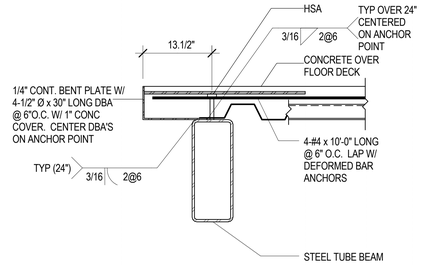

C3 / SF501 SLAB EDGE AT CURTAIN WALL ANCHOR POINT

NO SCALE

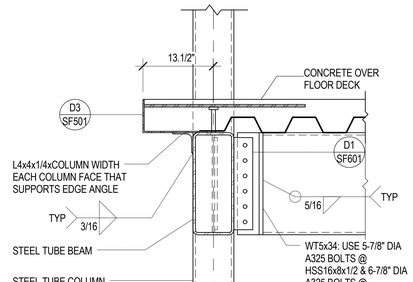

C4 / SF501 SLAB EDGE AT HSS BEAMS AT COLUMN

NO SCALE

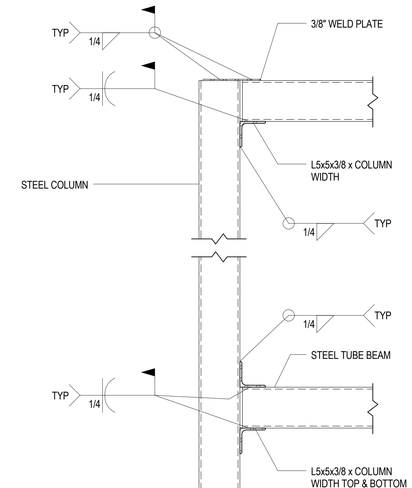

C5 / SF501 TYPICAL STEEL TUBE BEAM CONNECTION TO STEEL COLUMN

NO SCALE

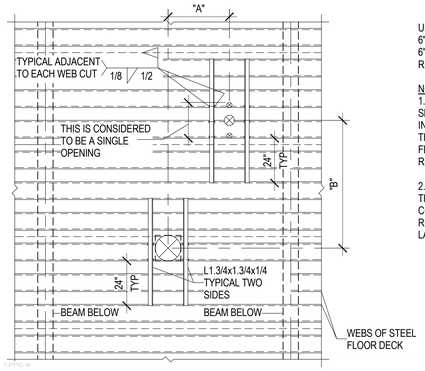

USE THIS DETAIL FOR HOLES LARGER THAN 6" CUTTING 1 TO 3 ADJACENT WEBS. HOLES 6" IN DIAMETER OR LESS NEED NO REINFORCING.

NOTES:
1. PRIOR TO CONCRETE POUR, OPENINGS SHOULD BE BLOCKED OUT AND LEFT INTACT. AFTER THE CONCRETE HAS CURED, THE BLOCKOUT CAN BE REMOVED AND THE FLOOR DECK IN THE AREA OF THE HOLE REMOVED.

2. IF DIMENSIONS "A" AND "B" ARE LESS THAN 32" THE OPENING GROUP MUST BE CONSIDERED AS A SINGLE HOLE, AND REINFORCED AS REQUIRED FOR THE LARGER OPENING. SEE DETAIL B2/SF501.

B1 / SF501 TYPICAL MISCELLANEOUS FLOOR OPENING REINFORCING DETAIL FOR TYPE 'W' DECK

NO SCALE

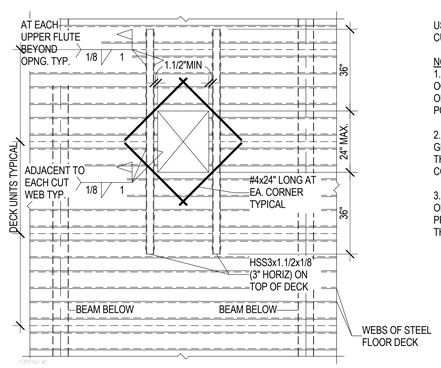

USE THIS DETAIL FOR LARGER HOLES CUTTING 3 TO 4 ADJACENT WEBS.

NOTES:
1. IF THE OPENING OR GROUP OF OPENINGS OCCURS IN ONE DECK UNIT THE OPENING OR OPENING GROUP MAY BE CUT PRIOR TO POURING CONCRETE.

2. IF, AS SHOWN, THE OPENING OR OPENING GROUP CUTS THROUGH TWO DECK UNITS, THE DECKING SHALL NOT BE CUT UNTIL CONCRETE HAS BEEN PLACED AND CURED.

3. WHEN THE MAXIMUM DIMENSION OF AN OPENING OR OPENING GROUP EXCEEDS 24", PROVIDE W8x10 HEADER BEAMS BELOW THE DECK AT ALL SIDES.

B2 / SF501 TYPICAL MISCELLANEOUS FLOOR OPENING REINFORCING DETAIL FOR TYPE 'W' DECK

NO SCALE

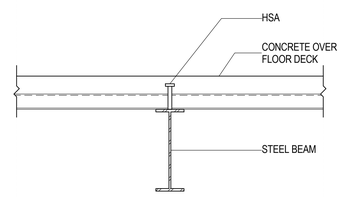

B4 / SF501 TYPICAL COMPOSITE STEEL BEAM

NO SCALE

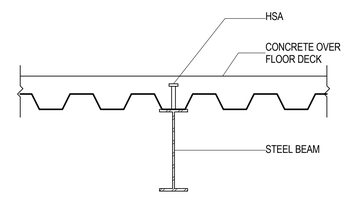

B5 / SF501 TYPICAL COMPOSITE STEEL BEAM

NO SCALE

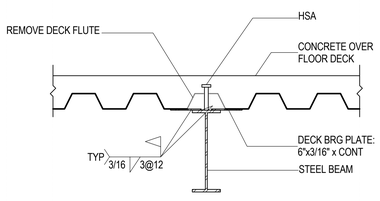

NOTE: THIS DETAIL SHALL APPLY WHEREVER THE DECK FLUTE INTERFERES WITH THE PROPER INSTALLATION OF THE HEADED STUD ANCHOR.

A1 / SF501 TYPICAL ALTERNATE DECK BEARING AT COMPOSITE STEEL BEAM

NO SCALE

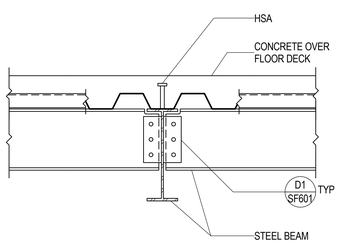

A2 / SF501 TYPICAL COMPOSITE STEEL BEAM W/ STEEL BEAM TWO SIDES

NO SCALE

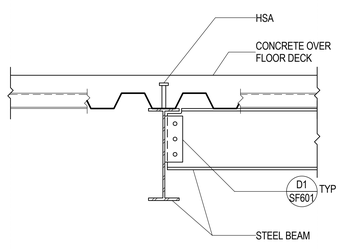

A3 / SF501 TYPICAL COMPOSITE STEEL BEAM W/ STEEL BEAM ONE SIDE

NO SCALE

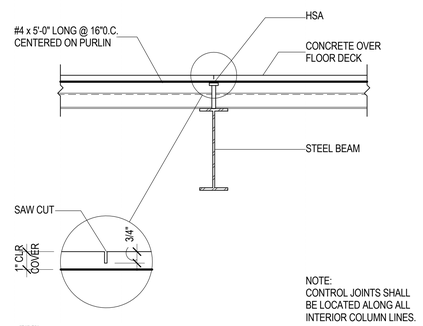

A4 / SF501 TYPICAL COMPOSITE DECK CONTROL JOINT AT STEEL PURLIN

NO SCALE

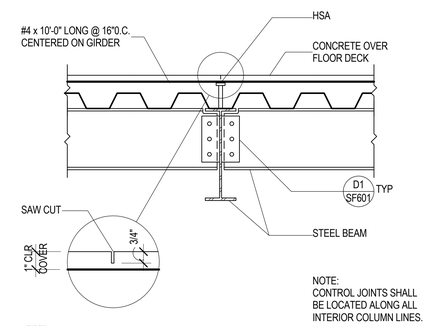

A5 / SF501 TYPICAL COMPOSITE DECK CONTROL JOINT AT STEEL GIRDER

NO SCALE

GSBS ARCHITECTS
375 WEST 200 SOUTH
SALT LAKE CITY, UT 84101
P 801.521.8600
F 801.521.7913
www.gsbsarchitects.com

LICENSED CERTIFIED STRUCTURAL ENGINEER NO. 144210 RONALD JAMES REAVELEY UTAH

REVISIONS:

REAVELEY ENGINEERS + ASSOCIATES
Consulting Structural Engineers
P: 801.486.3883
F: 801.485.0911
675 E 500 S, Suite 490
Salt Lake City, Utah 84102
www.reaveley.com

Utah Valley University New Science Building

800 West University Parkway
Orem, Utah 84058

Division of Facilities Construction and Managment

DRAWN BY:	Author
CHECKED BY:	Checker
DFCM PROJECT NO.:	
GSBS PROJECT NO.:	2009.115.00
ISSUED DATE:	05.07.10

TYPICAL FLOOR FRAMING DETAILS

CONSTRUCTION DOCUMENTS

SF501

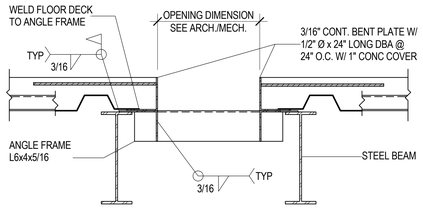

D1 / SF502 TYPICAL FLOOR OPENING W/ ANGLE FRAME
NO SCALE

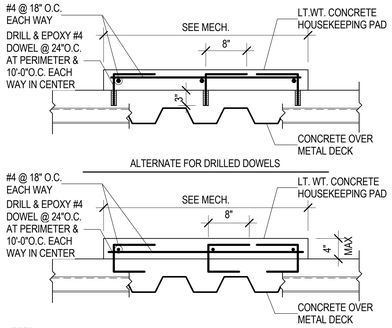

D2 / SF502 TYPICAL MECHANICAL HOUSEKEEPING PAD OVER COMPOSITE FLOOR DECK
NO SCALE

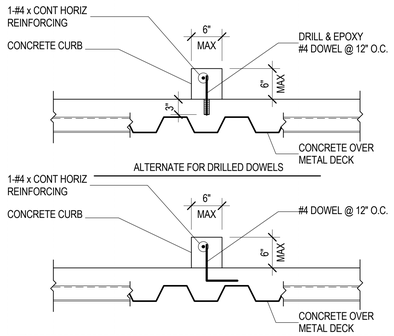

D3 / SF502 TYPICAL CONCRETE CURB ON COMPOSITE FLOOR DECK
NO SCALE

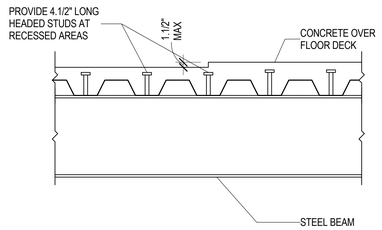

D4 / SF502 TYPICAL COMPOSITE STEEL BEAM AT SLAB RECESS
NO SCALE

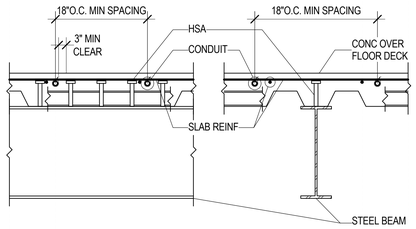

NOTES:
1. MAXIMUM CONDUIT SIZE 1" OUTSIDE DIAMETER.
2. CONDUIT SHALL NOT CROSSOVER.
3. CONDUIT SHALL BE CENTERED OVER A LOW FLUTE WHEN PARALLEL TO DECK FLUTES.
4. CONDUIT SHALL BE TIED IN PLACE BENEATH SLAB REINFORCING.
5. CONDUIT SHALL HAVE 3/4" MINIMUM CONCRETE COVER.

D5 / SF502 TYPICAL CONDUIT PLACEMENT IN COMPOSITE DECK
NO SCALE

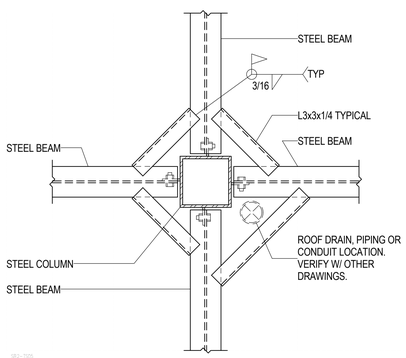

C2 / SF502 TYPICAL DECK BEARING ANGLES AT STEEL COLUMN
NO SCALE

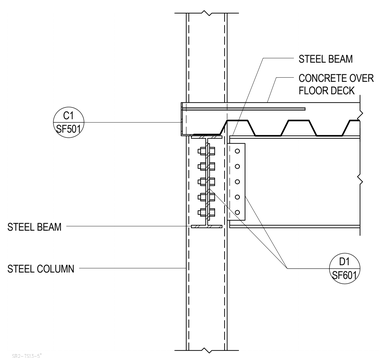

C3 / SF502 TYPICAL BOLTED STEEL BEAM CONNECTION TO STEEL COLUMN AT FLOOR EDGE
NO SCALE

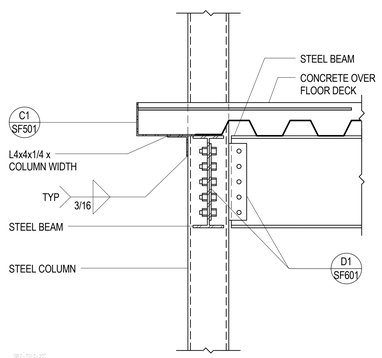

C4 / SF502 TYPICAL BOLTED STEEL BEAM CONNECTION TO STEEL COLUMN AT FLOOR EDGE
NO SCALE

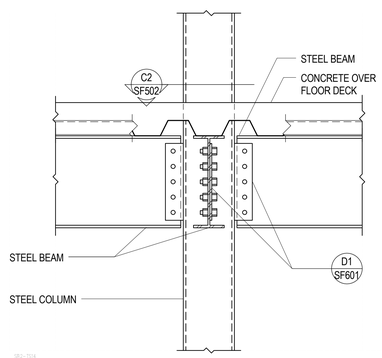

C5 / SF502 TYPICAL BOLTED STEEL BEAM CONNECTION TO STEEL COLUMN
NO SCALE

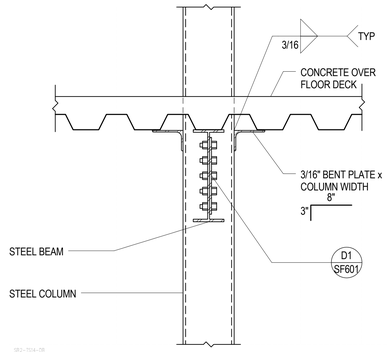

B1 / SF502 TYPICAL DECK BEARING AT STEEL COLUMN
NO SCALE

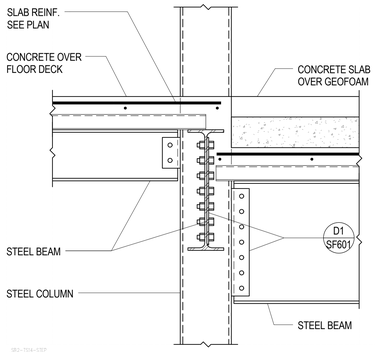

B2 / SF502 TYPICAL BOLTED STEEL BEAM CONNECTION TO STEEL COLUMN
NO SCALE

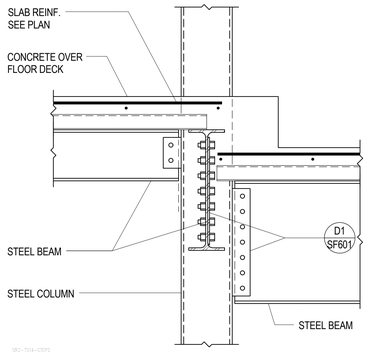

B3 / SF502 TYPICAL BOLTED STEEL BEAM CONNECTION TO STEEL COLUMN
NO SCALE

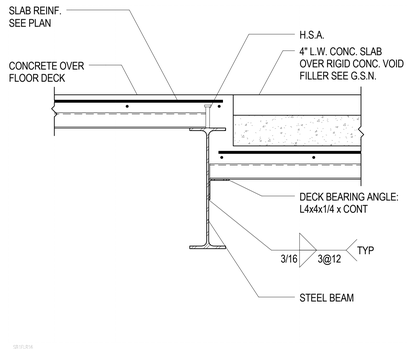

B4 / SF502 TYPICAL COMPOSITE STEEL BEAM AT STEPPED SLAB
NO SCALE

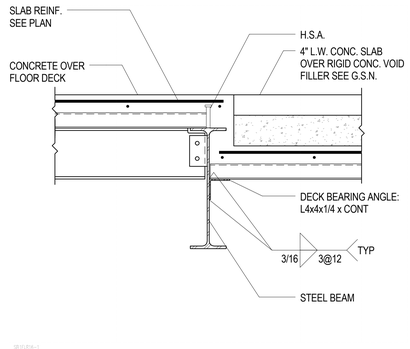

B5 / SF502 TYPICAL COMPOSITE STEEL BEAM AT STEPPED SLAB
NO SCALE

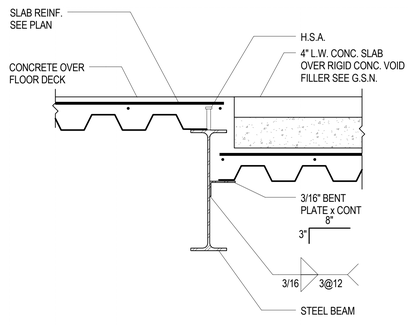

A1 / SF502 TYPICAL COMPOSITE STEEL BEAM AT STEPPED SLAB
NO SCALE

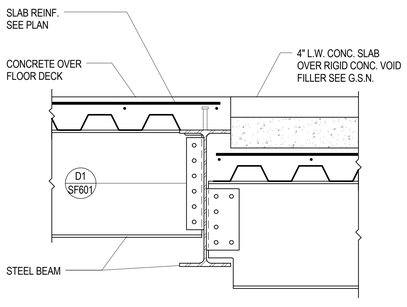

A2 / SF502 TYPICAL COMPOSITE STEEL PURLIN TO STEEL BEAM AT STEPPED SLAB
NO SCALE

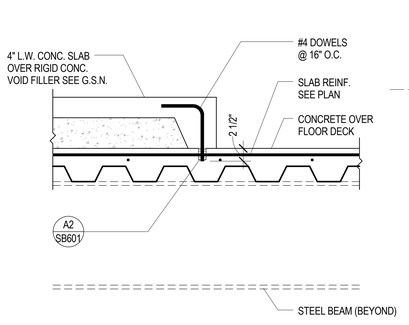

A3 / SF502 TYPICAL OVERBUILD STEP
NO SCALE

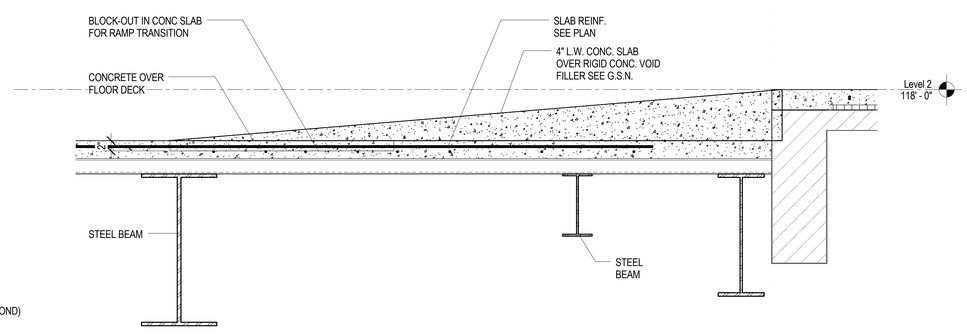

A4 / SF502 TYPICAL LECTURE ROOM SLOPED FLOOR
NO SCALE

GSBS ARCHITECTS
375 WEST 200 SOUTH
SALT LAKE CITY, UT 84101
P 801.521.8600
F 801.521.7915
www.gsbsarchitects.com

LICENSED CERTIFIED STRUCTURAL ENGINEER
NO. 144210
RONALD JAMES REAVELEY
UTAH

REVISIONS:

REAVELEY ENGINEERS + ASSOCIATES
Consulting Structural Engineers
P: 801.486.3883
F: 801.485.0911
675 E 500 S, Suite 490
Salt Lake City, Utah 84102
www.reaveley.com

Utah Valley University New Science Building

800 West University Parkway
Orem, Utah 84058

Division of Facilities Construction and Managment

DRAWN BY:	Author
CHECKED BY:	Checker
DFCM PROJECT NO.:	
GSBS PROJECT NO.:	2009.115.00
ISSUED DATE:	05.07.10

TYPICAL FLOOR FRAMING DETAILS

CONSTRUCTION DOCUMENTS

SF502

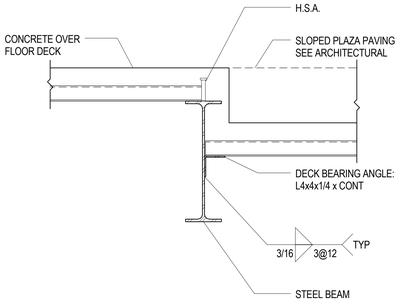

D1 / SF503 TYPICAL COMPOSITE STEEL BEAM AT STEPPED SLAB
NO SCALE

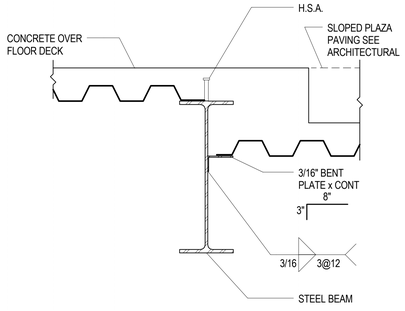

D2 / SF503 TYPICAL COMPOSITE STEEL BEAM AT STEPPED SLAB
NO SCALE

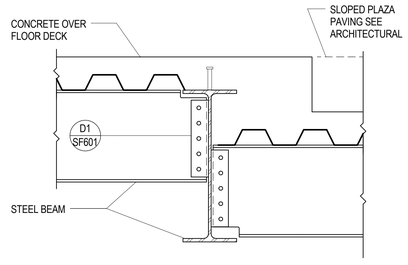

D3 / SF503 TYPICAL COMPOSITE STEEL PURLIN TO STEEL BEAM AT STEPPED SLAB
NO SCALE

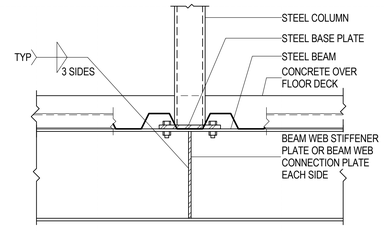

D4 / SF503 STEEL BEAM W/ STEEL COLUMN ABOVE
NO SCALE

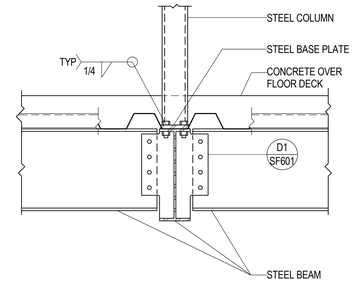

D5 / SF503 STEEL BEAM W/ STEEL COLUMN ABOVE
NO SCALE

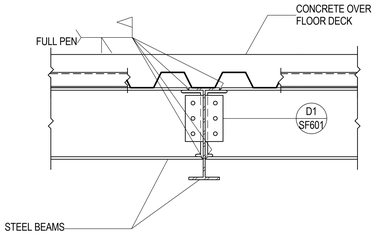

C1 / SF503 TYPICAL STEEL BEAM TO BEAM MOMENT CONNECTION
NO SCALE

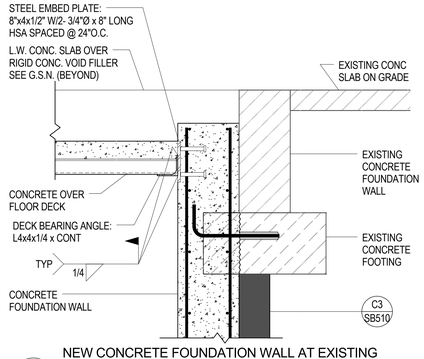

C3 / SF503 NEW CONCRETE FOUNDATION WALL AT EXISTING STRUCUTRE
NO SCALE

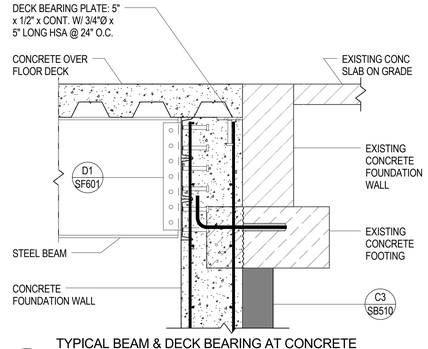

C4 / SF503 TYPICAL BEAM & DECK BEARING AT CONCRETE WALL
NO SCALE

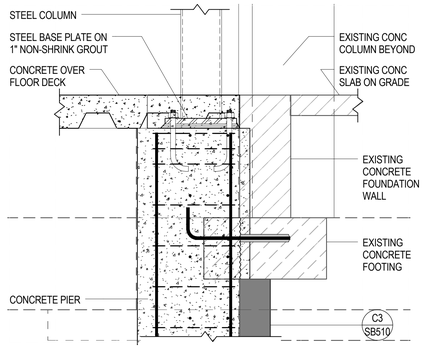

C5 / SF503 STEEL COLUMN BEARING AT CONCRETE PIER
NO SCALE

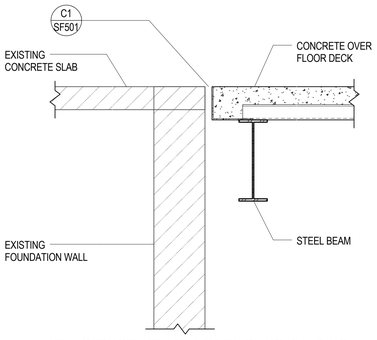

B1 / SF503 NEW STRUCTURE AGAINST EXISTING BUILDING AT LEVEL ONE
NO SCALE

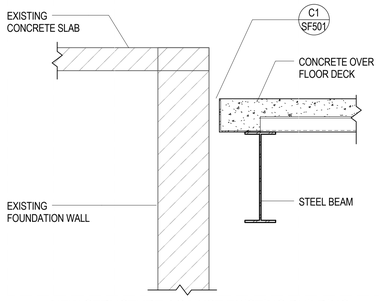

B2 / SF503 NEW STRUCTURE AGAINST EXISTING BUILDING AT LEVEL ONE
NO SCALE

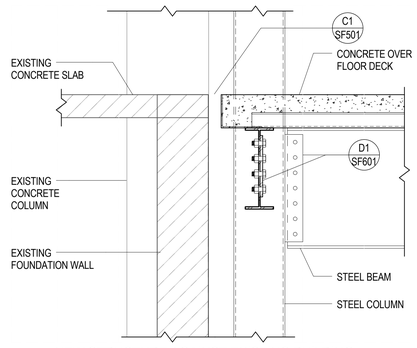

B3 / SF503 NEW STRUCTURE AGAINST EXISTING BUILDING AT LEVEL ONE
NO SCALE

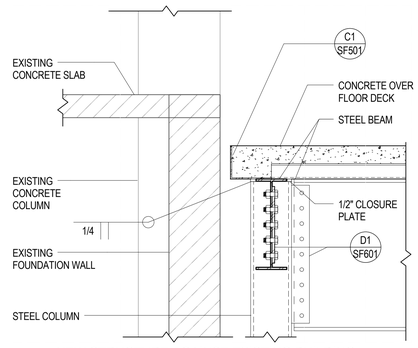

B4 / SF503 NEW STRUCTURE AGAINST EXISTING BUILDING AT LEVEL ONE
NO SCALE

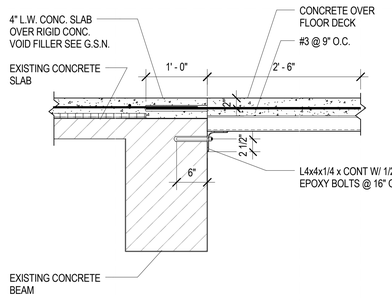

B5 / SF503 TYPICAL NEW FLOOR DECK CONNECTION TO EXISTING STRUCTURE
NO SCALE

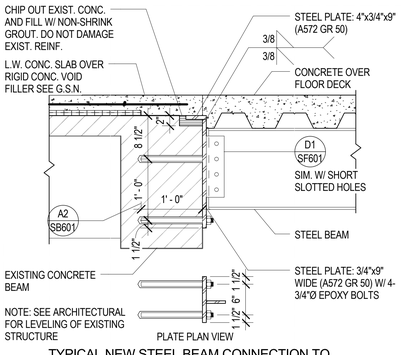

A1 / SF503 TYPICAL NEW STEEL BEAM CONNECTION TO EXISTING STRUCTURE
NO SCALE

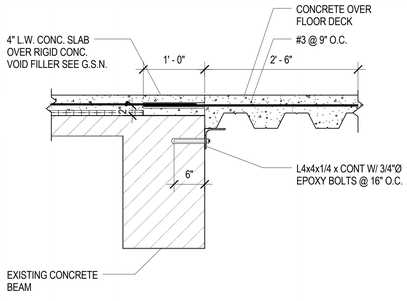

A2 / SF503 TYPICAL NEW FLOOR DECK CONNECTION TO EXISTING STRUCTURE
NO SCALE

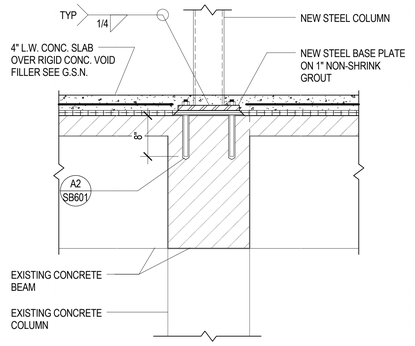

A3 / SF503 TYPICAL NEW COLUMN BEARING ON EXISTING STRUCTURE
NO SCALE

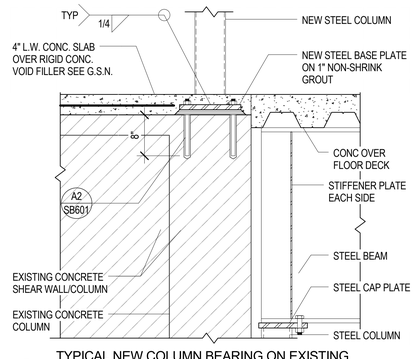

A4 / SF503 TYPICAL NEW COLUMN BEARING ON EXISTING STRUCTURE
NO SCALE

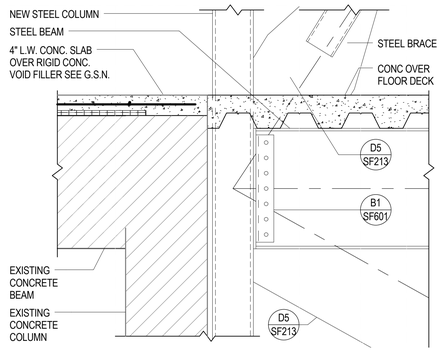

A5 / SF503 NEW COLUMN AGAINST EXISTING STRUCTURE
NO SCALE

GSBS ARCHITECTS
375 WEST 200 SOUTH
SALT LAKE CITY, UT 84101
P 801.521.8600
F 801.521.7913
www.gsbsarchitects.com

LICENSED CERTIFIED STRUCTURAL ENGINEER
NO. 144210
RONALD JAMES REAVELEY
UTAH

REVISIONS:

REAVELEY ENGINEERS + ASSOCIATES
Consulting Structural Engineers
P 801.486.3883
F 801.485.0911
675 E 500 S, Suite 400
Salt Lake City, Utah 84102
www.reaveley.com

Utah Valley University New Science Building

800 West University Parkway
Orem, Utah 84058

Division of Facilities Construction and Managment

DRAWN BY:	Author
CHECKED BY:	Checker
DFCM PROJECT NO.:	
GSBS PROJECT NO.:	2009.115.00
ISSUED DATE:	05.07.10

TYPICAL FLOOR FRAMING DETAILS

CONSTRUCTION DOCUMENTS

SF503

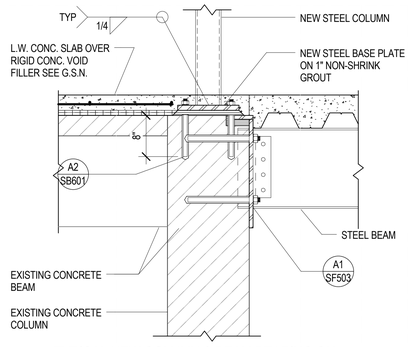

D1 SF504 TYPICAL NEW COLUMN & BEAM BEARING ON EXISTING STRUCTURE

NO SCALE

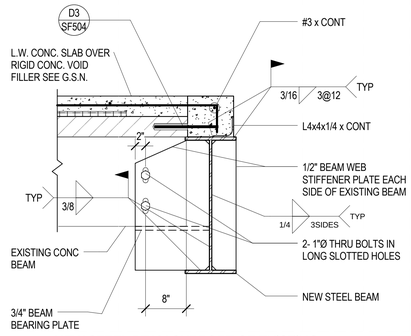

D2 SF504 NEW STEEL BEAM SUPPORT OF EXISTING CONCRETE BEAM

NO SCALE

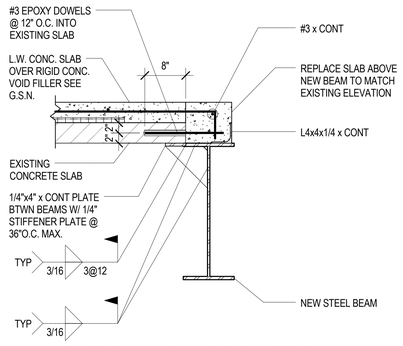

D3 SF504 NEW STEEL BEAM SUPPORT OF EXISTING CONCRETE DECK

NO SCALE

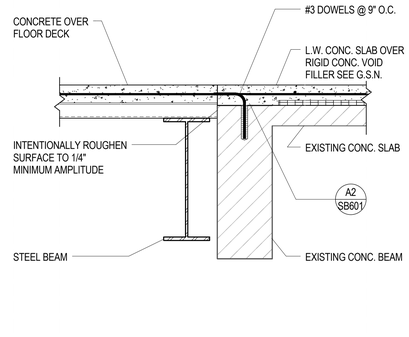

D4 SF504 TYPICAL FLOOR DECK CONNECTION TO EXISTING STRUCTURE

NO SCALE

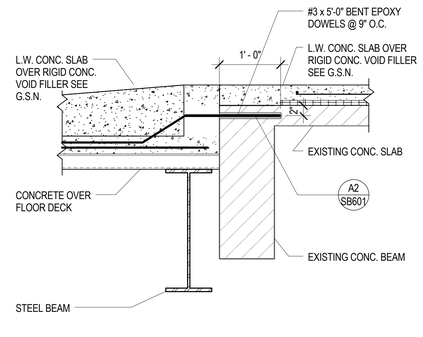

D5 SF504 TYPICAL FLOOR DECK CONNECTION TO EXISTING STRUCTURE

NO SCALE

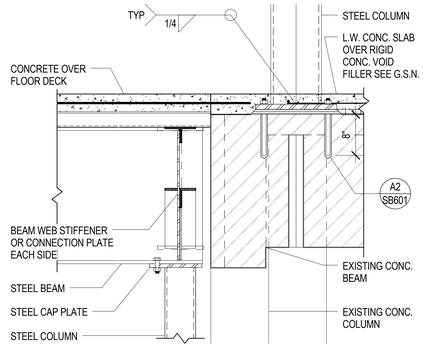

C1 SF504 STEEL BEAM BEARING AT STEEL COLUMN

NO SCALE

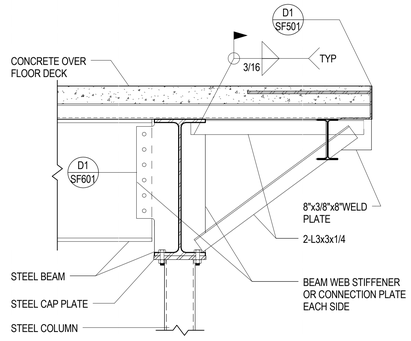

C2 SF504 STEEL BEAM BEARING AT STEEL COLUMN

NO SCALE

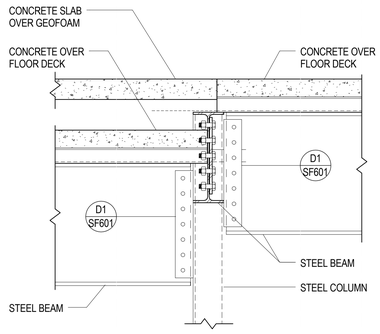

C3 SF504 STEEL BEAM BEARING AT STEEL COLUMN

NO SCALE

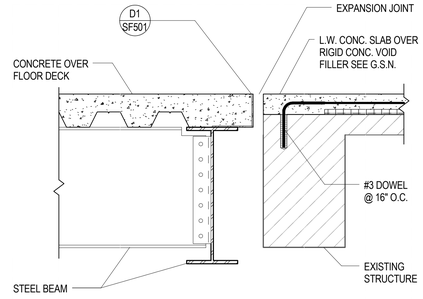

C4 SF504 STEEL BEAM & FLOOR DECK AT EXPANSION JOINT

NO SCALE

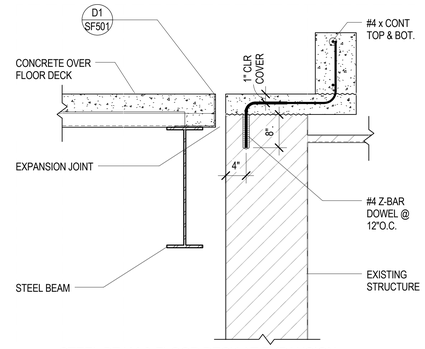

C5 SF504 STEEL BEAM & FLOOR DECK AT EXPANSION JOINT

NO SCALE

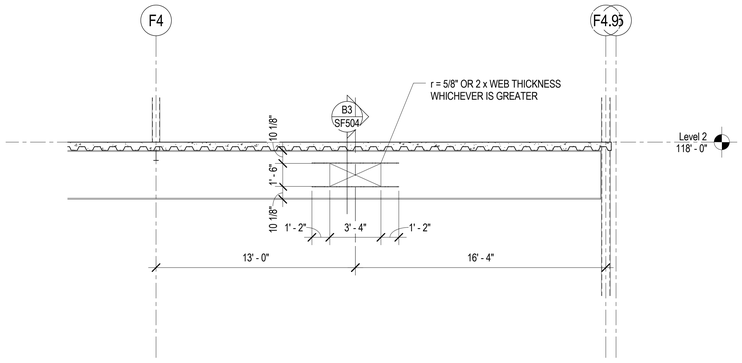

B1 SF504 DUCT OPENING THRU BEAM WEB ALONG GRID 6.4

SCALE: 1/4" = 1'-0"

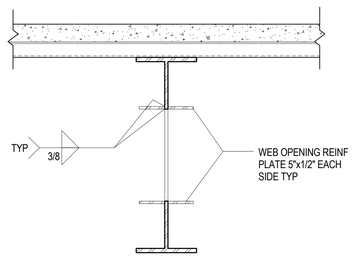

B3 SF504 BEAM WEB REINFORCING AT DUCT OPENING

NO SCALE

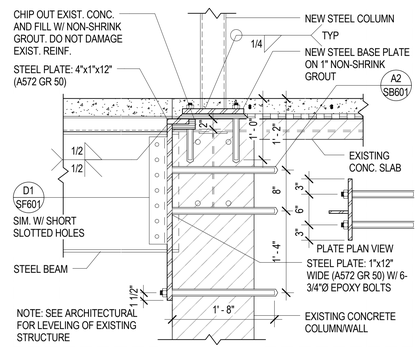

B4 SF504 NEW STEEL BEAM BEARING AT EXISTING WALL/BEAM

NO SCALE

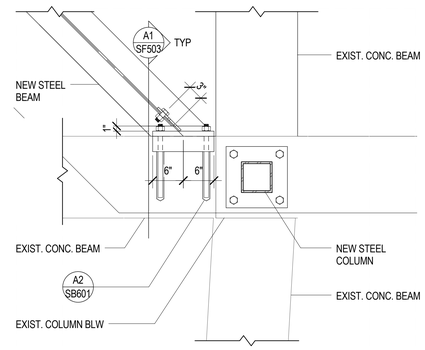

B5 SF504 NEW STEEL BEAM CONNECTION TO EXISTING - PLAN VIEW

NO SCALE

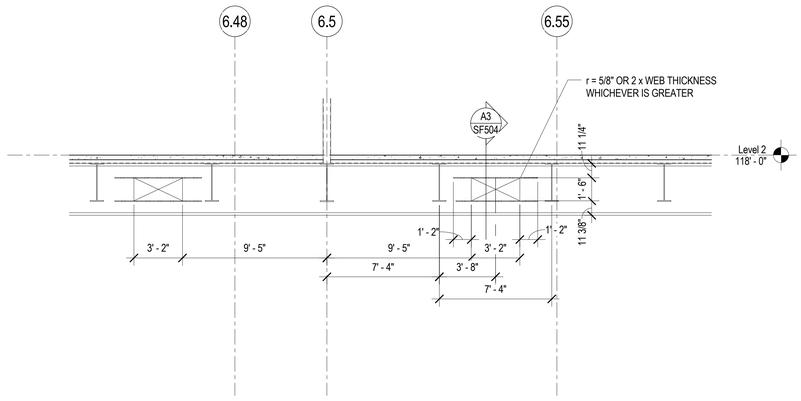

A1 SF504 DUCT OPENING THRU BEAM WEB ALONG GRID F3

SCALE: 1/4" = 1'-0"

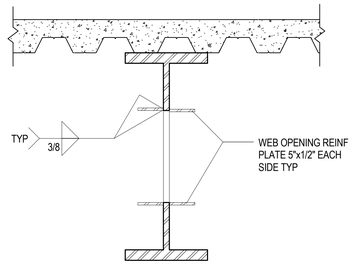

A3 SF504 BEAM WEB REINFORCING AT DUCT OPENING

NO SCALE

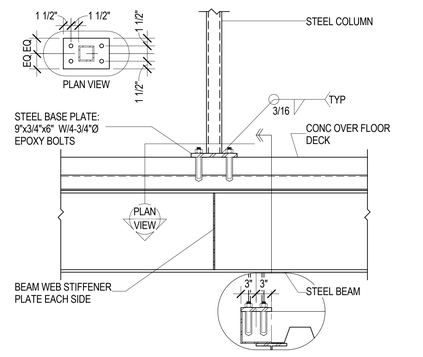

A4 SF504 TYPICAL STAIR DETAIL

NO SCALE

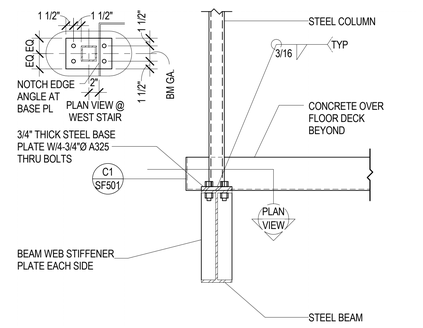

A5 SF504 TYPICAL STAIR DETAIL

NO SCALE

GSBS ARCHITECTS
375 WEST 200 SOUTH
SALT LAKE CITY, UT 84101
P 801.521.8600
F 801.521.7913
www.gsbsarchitects.com

LICENSED CERTIFIED STRUCTURAL ENGINEER NO. 144210 RONALD JAMES REAVELEY UTAH

REVISIONS:

REAVELEY ENGINEERS + ASSOCIATES
Consulting Structural Engineers
P: 801.486.3883
F: 801.485.0911
675 E 500 S, Suite 400
Salt Lake City, Utah 84102
www.reaveley.com

Utah Valley University New Science Building

800 West University Parkway
Orem, Utah 84058

Division of Facilities Construction and Managment

DRAWN BY:	Author
CHECKED BY:	Checker
DFCM PROJECT NO.:	
GSBS PROJECT NO.:	2009.115.00
ISSUED DATE:	05.07.10

TYPICAL FLOOR FRAMING DETAILS

CONSTRUCTION DOCUMENTS

SF504

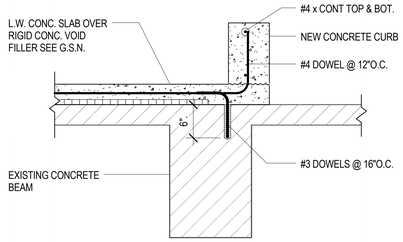

D1 / SF505 NEW CURB/TOPPING ON EXISTING STRUCTURE
NO SCALE

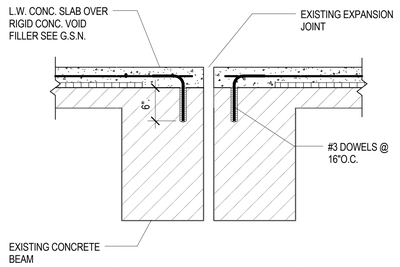

D2 / SF505 NEW CONCRETE TOPPING AT EXIST EXPANSION JOINT
NO SCALE

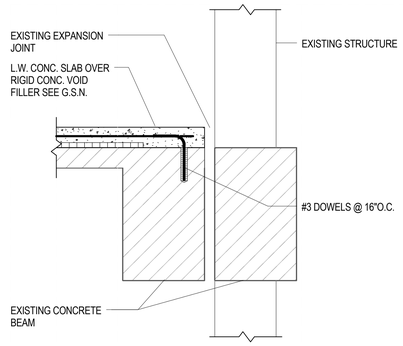

D3 / SF505 EXPANSION JOINT
NO SCALE

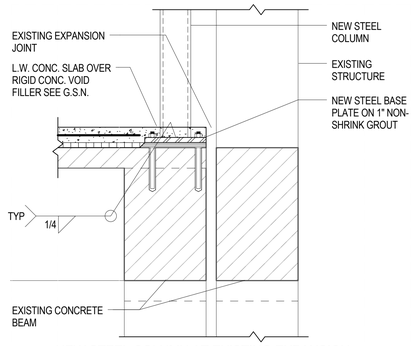

D4 / SF505 NEW STEEL COLUMN AT EXISTING EXPANSION JOINT
NO SCALE

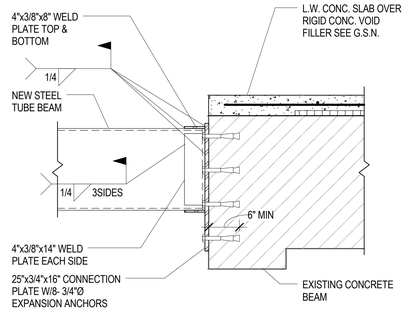

D5 / SF505 STEEL TUBE BEAM CONNECTION TO EXISTING CONC BEAM
NO SCALE

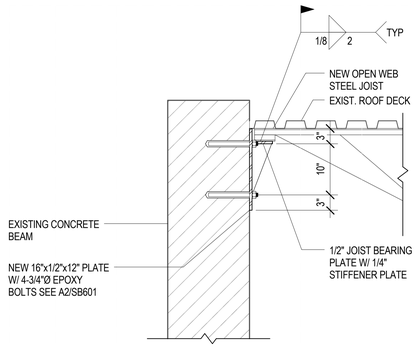

C1 / SF505 NEW STEEL JOIST TO EXISTING CONCRETE BEAM
NO SCALE

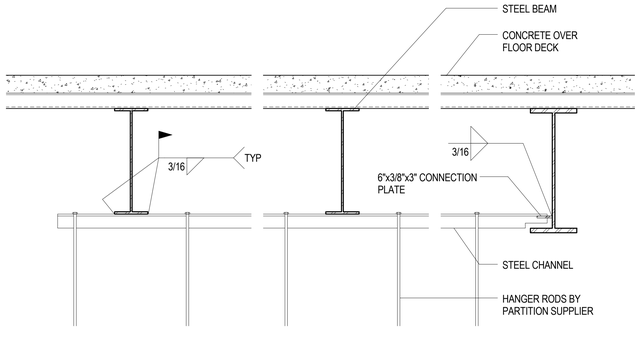

C2 / SF505 TYPICAL HANGING PARTITION SUPPORT DETAIL
NO SCALE

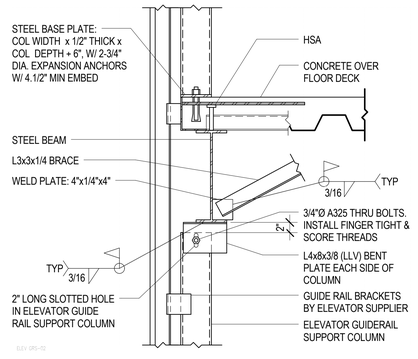

C4 / SF505 TYPICAL ELEVATOR GUIDE RAIL SUPPORT CONNECTION TO STEEL BEAM
NO SCALE

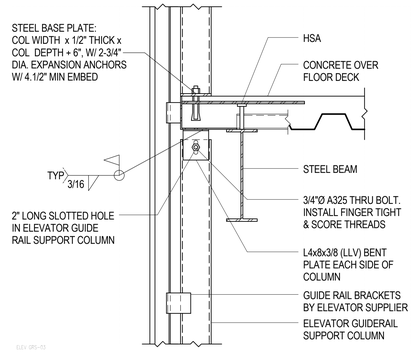

C5 / SF505 TYPICAL ELEVATOR GUIDE RAIL SUPPORT CONNECTION TO FLOOR EDGE
NO SCALE

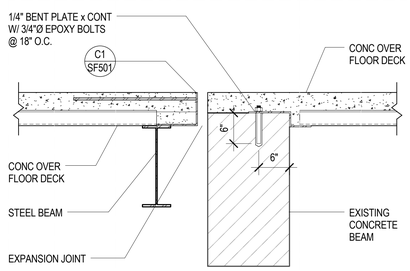

B1 / SF505 FLOOR DECK CONNECTION TO EXISTING BEAM AT EXPANSION JOINT
NO SCALE

GSBS ARCHITECTS
375 WEST 200 SOUTH
SALT LAKE CITY, UT 84101
P 801.521.8600
F 801.521.7913
www.gsbsarchitects.com

LICENSED CERTIFIED STRUCTURAL ENGINEER
NO. 144210
RONALD JAMES REAVELEY
UTAH

REVISIONS:

REAVELEY
ENGINEERS + ASSOCIATES
Consulting Structural Engineers
P 801.486.3883
F 801.485.0911
675 E 500 S, Suite 400
Salt Lake City, Utah 84102
www.reaveley.com

Utah Valley University New Science Building

800 West University Parkway
Orem, Utah 84058

Division of Facilities Construction and Managment

DRAWN BY:	Author
CHECKED BY:	Checker
DFCM PROJECT NO.:	
GSBS PROJECT NO.:	2009.115.00
ISSUED DATE:	05.07.10

FLOOR FRAMING DETAILS

CONSTRUCTION DOCUMENTS

SF505

NOTE: WHEN CONCENTRATED LOADS (GREATER THAN 100#) ON OPEN WEB JOISTS OR GIRDERS ARE LOCATED MORE THAN 6 INCHES FROM THE PANEL WORKPOINTS AT EITHER THE TOP OR BOTTOM CHORD ADDITIONAL DIAGONAL WEB MEMBERS SHALL BE FURNISHED AND INSTALLED AT THE LOCATION OF THE CONCENTRATED LOAD BY THE CONTRACTOR. CONCENTRATED POINT LOADS, SINGLE OR MULTIPLE, TOTALING 100# OR LESS CAN BE LOCATED AT ANY POINT ALONG THE TOP OR BOTTOM CHORD OF AN OPEN WEB JOIST OR GIRDER BETWEEN ADJACENT PANEL POINTS WITHOUT MEETING THESE REQUIREMENTS. A LIMIT OF FOUR CONCENTRATED 100# MAX. POINT LOADS PER JOIST OR GIRDER WILL BE PERMITTED ON SPANS OF 12' & GREATER, ONE CONCENTRATED 100# MAX. LOAD ON SPANS LESS THAN 12', UNLESS SPECIFICALLY NOTED OTHERWISE ON THE DRAWINGS. JOIST BRIDGING SHALL NEVER BE USED TO SUPPORT HANGING LOADS.

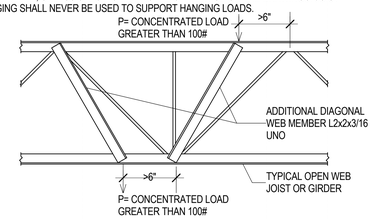

D1 / SF521 TYPICAL DETAIL AT ADDITIONAL CONCENTRATED POINT LOAD
NO SCALE

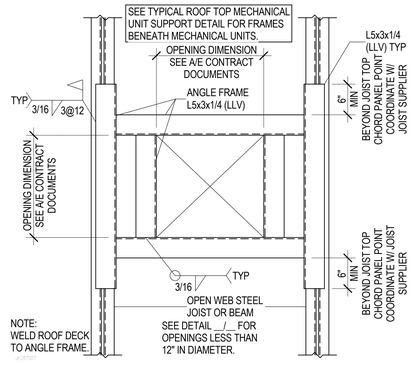

D2 / SF521 TYPICAL ROOF OPENING DETAIL (PLAN VIEW)
NO SCALE

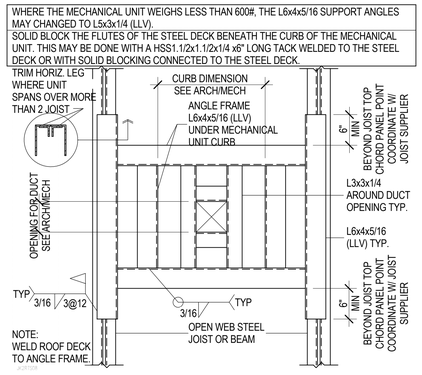

D3 / SF521 TYP ROOF TOP MECHANICAL UNIT SUPPORT DETAIL (PLAN VIEW)
NO SCALE

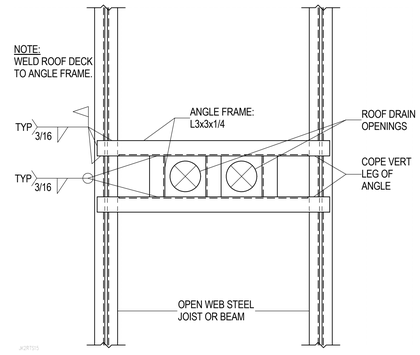

D4 / SF521 TYPICAL ROOF DRAIN OPENING (PLAN VIEW)
NO SCALE

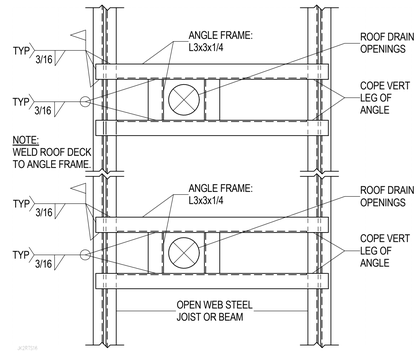

D5 / SF521 TYPICAL ROOF DRAIN OPENING (PLAN VIEW)
NO SCALE

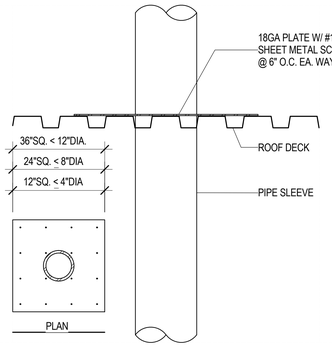

C1 / SF521 TYPICAL PIPE SLEEVE HOLE THRU ROOF DECK
NO SCALE

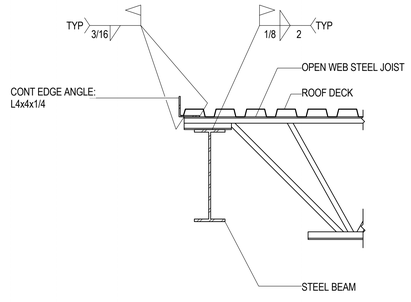

C2 / SF521 TYPICAL JOIST BEARING AT STEEL BEAM
NO SCALE

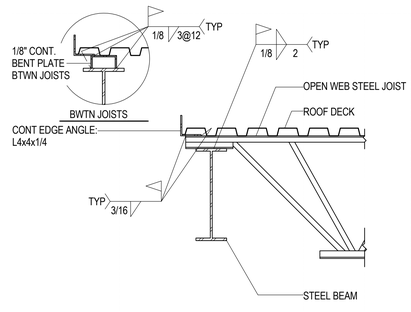

C3 / SF521 TYP JOIST BEARING AT STEEL BEAM W/ CHORD TIE/DRAG STRUT
NO SCALE

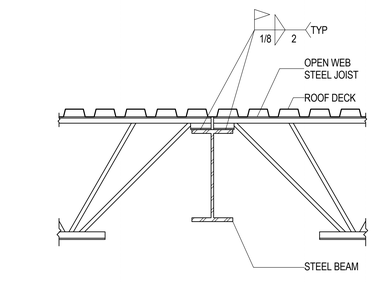

C4 / SF521 TYPICAL JOIST BEARING AT STEEL BEAM
NO SCALE

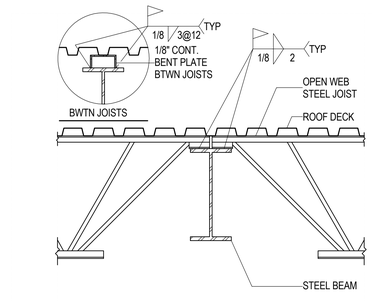

C5 / SF521 TYP JOIST BEARING AT STEEL BEAM W/ CHORD TIE/DRAG STRUT
NO SCALE

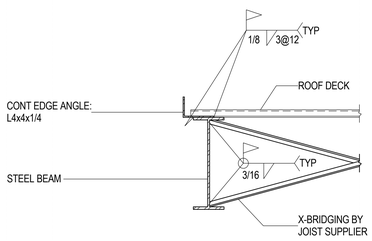

B1 / SF521 TYPICAL EDGE BEAM WITH BRIDGING
NO SCALE

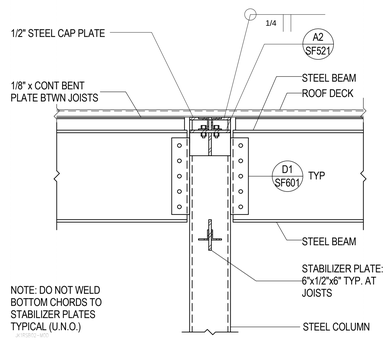

B2 / SF521 TYPICAL STEEL BEAM CONNECTION TO STEEL COLUMN
NO SCALE

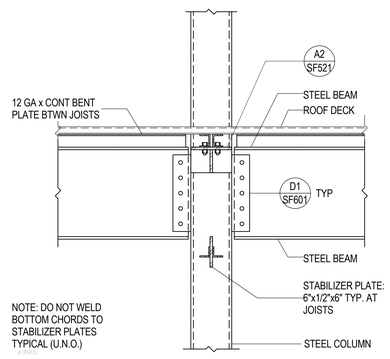

B3 / SF521 TYPICAL STEEL BEAM CONNECTION TO STEEL COLUMN
NO SCALE

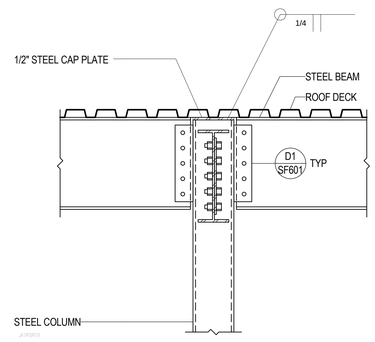

B4 / SF521 TYPICAL STEEL BEAM CONNECTION TO STEEL COLUMN
NO SCALE

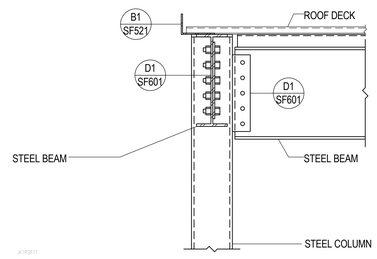

B5 / SF521 TYPICAL STEEL BEAM CONNECTION TO STEEL COLUMN
NO SCALE

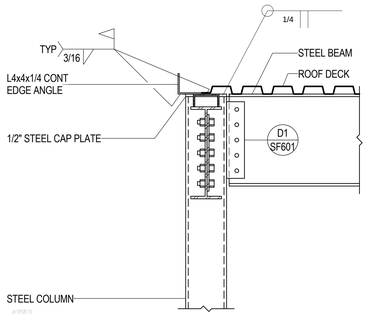

A1 / SF521 TYP STEEL BEAM CONNECTION TO STEEL COLUMN
NO SCALE

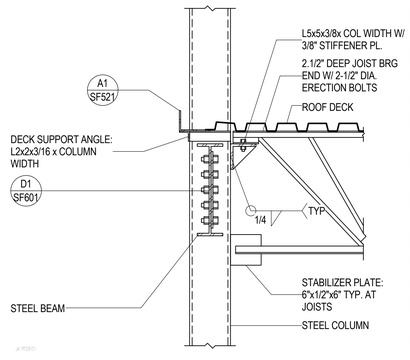

A2 / SF521 TYPICAL STEEL JOIST TO STEEL COLUMN AT LOW ROOF
NO SCALE

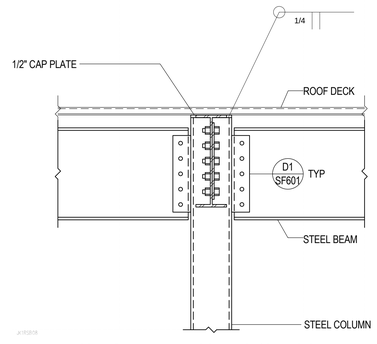

A3 / SF521 TYPICAL STEEL BEAM CONNECTION TO STEEL COLUMN
NO SCALE

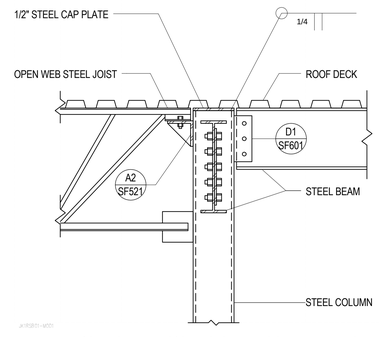

A4 / SF521 TYPICAL STEEL JOIST TO STEEL COLUMN AT LOW ROOF
NO SCALE

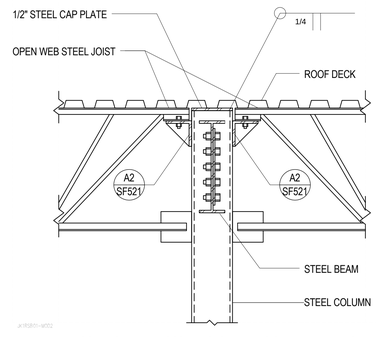

A5 / SF521 TYPICAL STEEL JOIST TO STEEL COLUMN AT LOW ROOF
NO SCALE

GSBS ARCHITECTS
375 WEST 200 SOUTH
SALT LAKE CITY, UT 84101
P 801.521.8600
F 801.521.7913
www.gsbsarchitects.com

LICENSED CERTIFIED STRUCTURAL ENGINEER NO. 144210 RONALD JAMES REAVELEY UTAH

REVISIONS:

REAVELEY ENGINEERS + ASSOCIATES
Consulting Structural Engineers
P: 801.486.3883
F: 801.485.0911
675 E 500 S, Suite 400
Salt Lake City, Utah 84102
www.reaveley.com

Utah Valley University New Science Building

800 West University Parkway
Orem, Utah 84058

Division of Facilities Construction and Managment

DRAWN BY:	Author
CHECKED BY:	Checker
DFCM PROJECT NO.:	
GSBS PROJECT NO.:	2009.115.00
ISSUED DATE:	05.07.10

TYPICAL ROOF FRAMING DETAILS

CONSTRUCTION DOCUMENTS

SF521

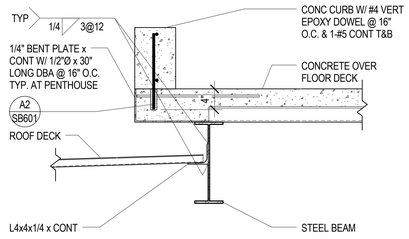

D1 SF522 TYPICAL ROOF DECK BEARING AT STEEL BEAM AT SOUTH EDGE OF PENTHOUSE

NO SCALE

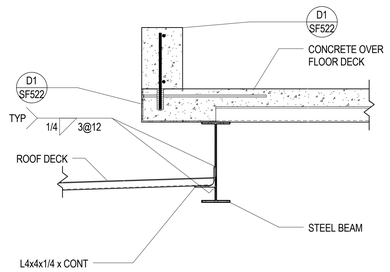

D2 SF522 TYPICAL ROOF DECK BEARING AT STEEL BEAM AT NORTH EDGE OF PENTHOUSE

NO SCALE

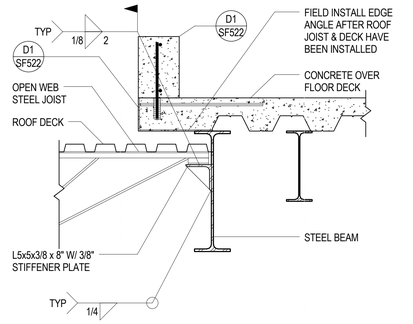

D3 SF522 TYPICAL JOIST BEARING AT STEEL BEAM

NO SCALE

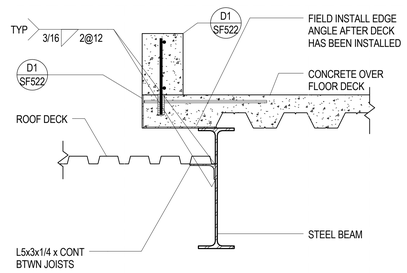

D4 SF522 TYPICAL DECK BEARING AT STEEL BEAM

NO SCALE

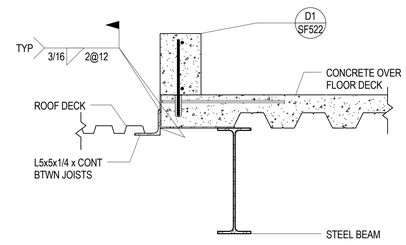

D5 SF522 TYPICAL DECK BEARING AT FLOOR EDGE

NO SCALE

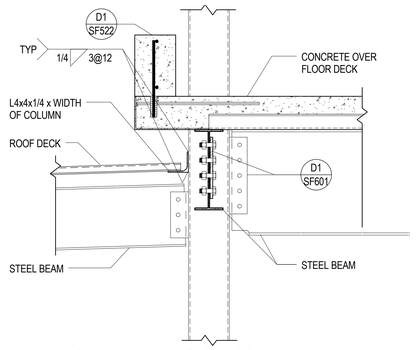

C1 SF522 TYPICAL STEEL BEARING AT COLUMN AT PENTHOUSE EDGE

NO SCALE

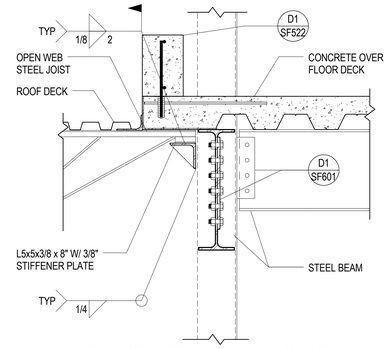

C2 SF522 TYPICAL JOIST/ROOF DECK BEARING AT STEEL COLUMN

NO SCALE

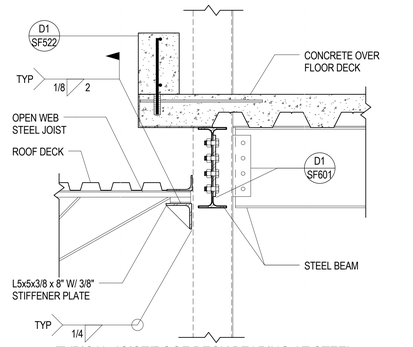

C3 SF522 TYPICAL JOIST/ROOF DECK BEARING AT STEEL COLUMN

NO SCALE

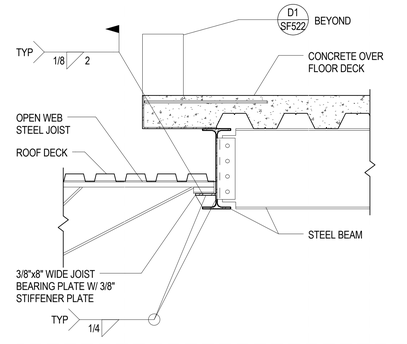

C4 SF522 JOIST BEARING AT STEEL BEAM

NO SCALE

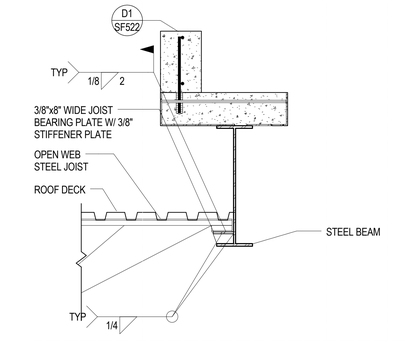

C5 SF522 JOIST BEARING AT STEEL BEAM

NO SCALE

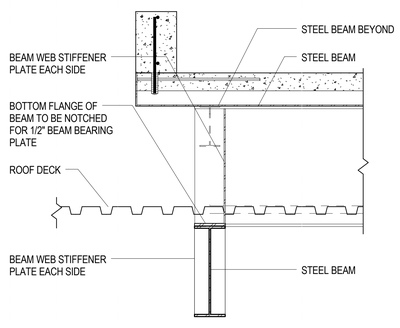

B1 SF522 BEAM BEARING AT PENTHOUSE FLOOR

NO SCALE

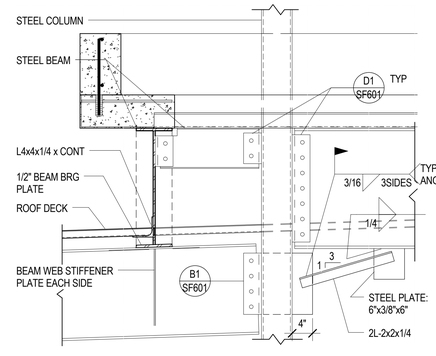

B2 SF522 BEAM BEARING AT PENTHOUSE FLOOR

NO SCALE

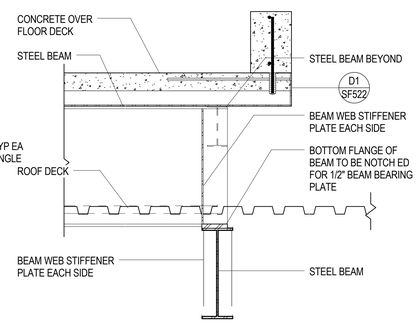

B3 SF522 BEAM BEARING AT PENTHOUSE FLOOR

NO SCALE

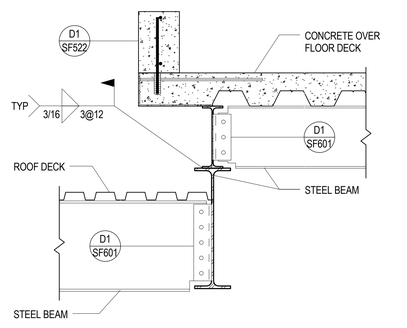

B4 SF522 STEEL BEAM BEARING AT PENTHOUSE FLOOR

NO SCALE

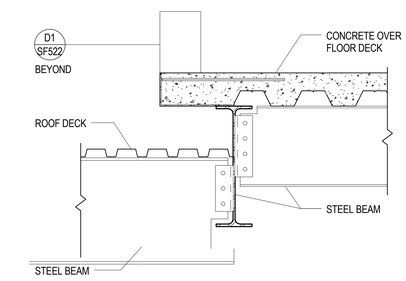

B5 SF522 STEEL BEAM BEARING AT PENTHOUSE FLOOR

NO SCALE

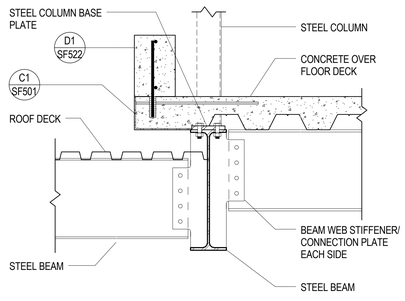

A1 SF522 STEEL BEAM BEARING AT PENTHOUSE FLOOR W/ COLUMN ABOVE

NO SCALE

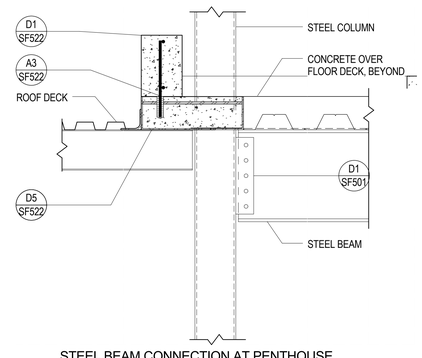

A2 SF522 STEEL BEAM CONNECTION AT PENTHOUSE FLOOR

NO SCALE

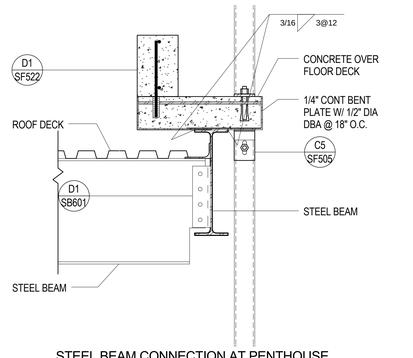

A3 SF522 STEEL BEAM CONNECTION AT PENTHOUSE FLOOR

NO SCALE

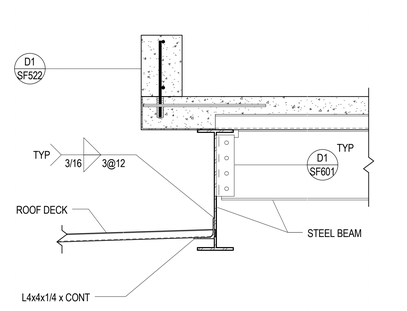

A4 SF522 ROOF DECK BEARING AT PENTHOUSE FLOOR

NO SCALE

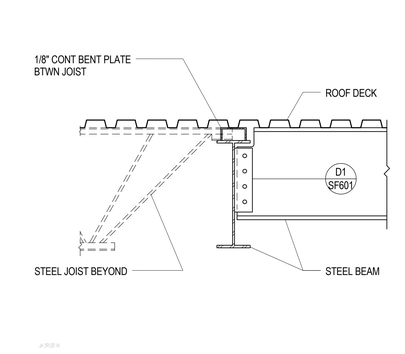

A5 SF522 TYPICAL STEEL BEAM TO BEAM CONNECTION

NO SCALE

GSBS ARCHITECTS
375 WEST 200 SOUTH
SALT LAKE CITY, UT 84101
P 801.521.8600
F 801.521.7913
www.gsbsarchitects.com

LICENSED CERTIFIED STRUCTURAL ENGINEER
NO. 144210
RONALD JAMES REAVELEY
UTAH

REVISIONS:

REAVELEY ENGINEERS + ASSOCIATES
Consulting Structural Engineers
P 801.486.3883
F 801.485.0911
675 E 500 S, Suite 490
Salt Lake City, Utah 84102
www.reaveley.com

Utah Valley University New Science Building

800 West University Parkway
Orem, Utah 84058

Division of Facilities Construction and Managment

DRAWN BY:	Author
CHECKED BY:	Checker
DFCM PROJECT NO.:	
GSBS PROJECT NO.:	2009.115.00
ISSUED DATE:	05.07.10

TYPICAL ROOF FRAMING DETAILS

CONSTRUCTION DOCUMENTS

SF522

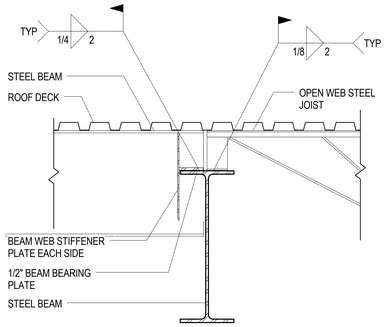

D1 SF523 TYPICAL STEEL BEAM & JOIST BEARING AT STEEL BEAM
NO SCALE

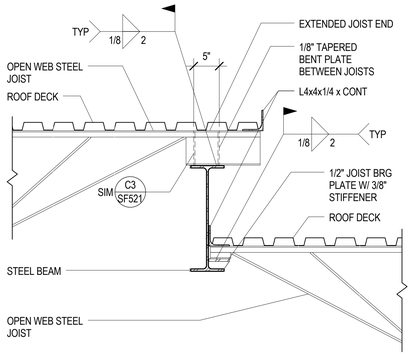

D2 SF523 TYPICAL OPEN WEB JOIST BEARING AT STEEL BEAM
NO SCALE

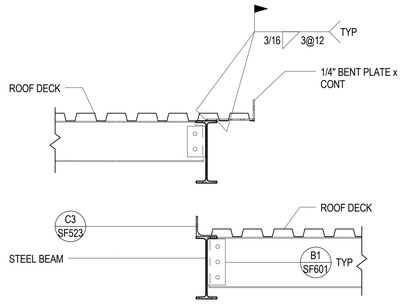

D3 SF523 STEEL BEAM AT ROOF STEP
NO SCALE

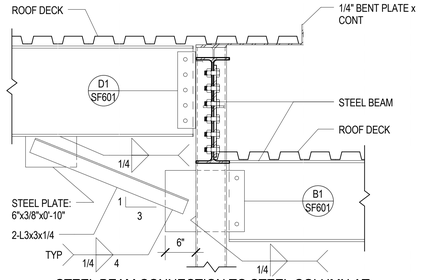

D4 SF523 STEEL BEAM CONNECTION TO STEEL COLUMN AT ROOF STEP
NO SCALE

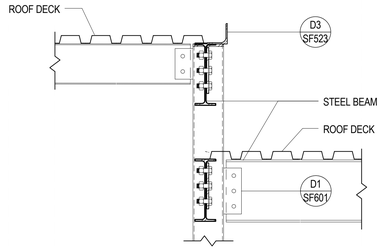

D5 SF523 STEEL BEAM CONNECTION TO STEEL COLUMN AT ROOF STEP
NO SCALE

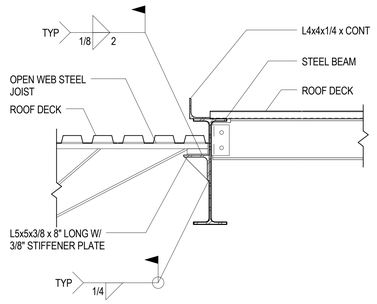

C1 SF523 TYPICAL OPEN WEB JOIST BEARING & BEAM AT STEEL BEAM
NO SCALE

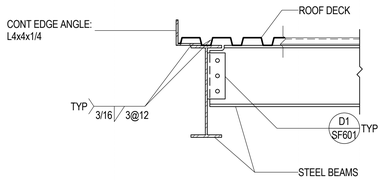

C2 SF523 TYPICAL STEEL ROOF BEAM AT ROOF EDGE DETAIL
NO SCALE

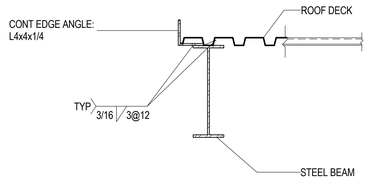

C3 SF523 TYPICAL STEEL ROOF BEAM AT ROOF EDGE DETAIL
NO SCALE

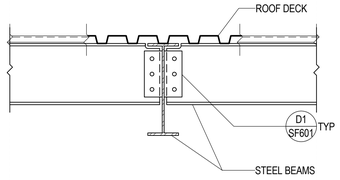

C4 SF523 TYP STEEL ROOF BEAM CONNECTION - TWO SIDES
NO SCALE

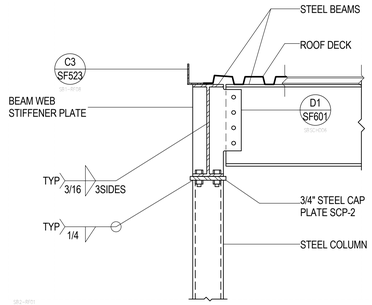

C5 SF523 TYPICAL STEEL BEAM TO STEEL COLUMN
NO SCALE

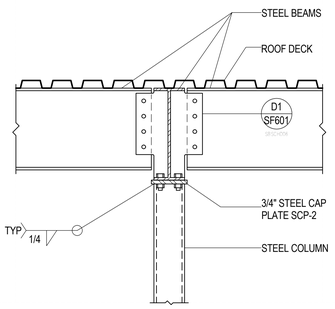

B1 SF523 TYPICAL STEEL BEAM TO STEEL COLUMN
NO SCALE

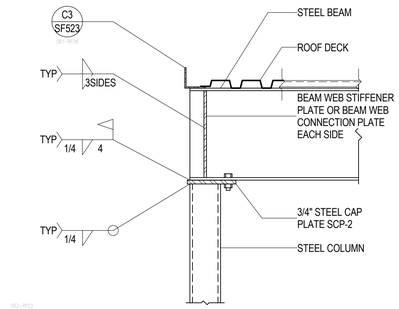

B2 SF523 TYPICAL STEEL BEAM TO STEEL COLUMN
NO SCALE

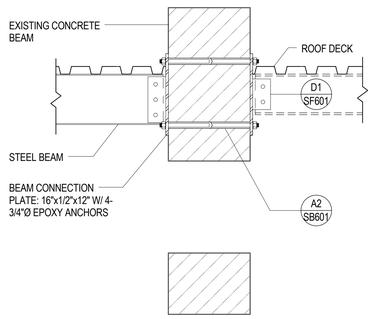

B3 SF523 TYPICAL NEW STEEL BEAM CONNECTION TO EXISTING CONCRETE BEAM
NO SCALE

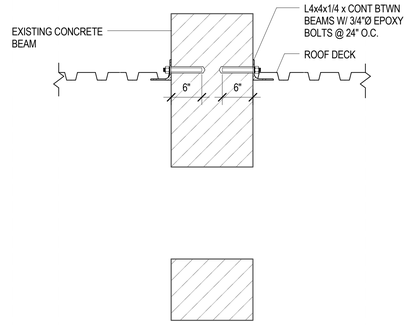

B4 SF523 TYPICAL ROOF DECK CONNECTION TO EXISTING CONCRETE BEAM
NO SCALE

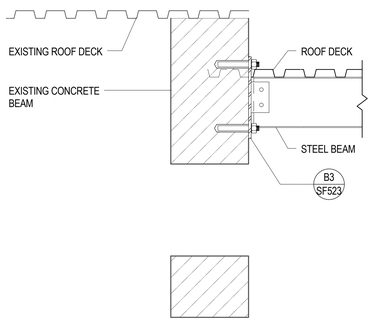

B5 SF523 TYPICAL NEW STEEL BEAM CONNECTION TO EXISTING CONCRETE BEAM
NO SCALE

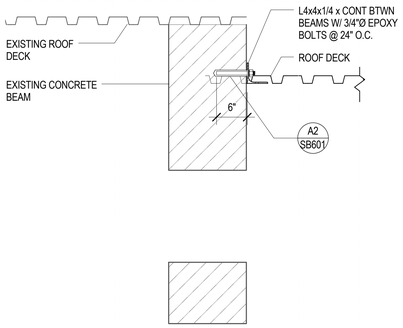

A1 SF523 TYPICAL ROOF DECK CONNECTION TO EXISTING CONCRETE BEAM
NO SCALE

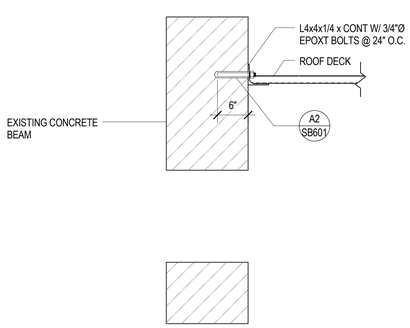

A2 SF523 TYPICAL DECK BEARING AT EXISTING CONCRETE BEAM
NO SCALE

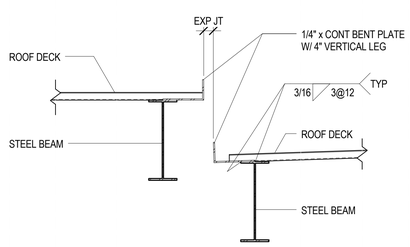

A3 SF523 TYPICAL ROOF DECK AT STEEL BEAM AT EXPANSION JOINT
NO SCALE

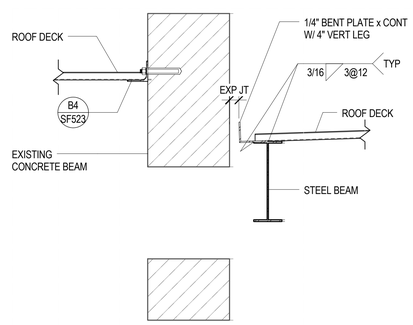

A4 SF523 TYPICAL ROOF DECK AT STEEL BEAM AT EXPANSION JOINT
NO SCALE

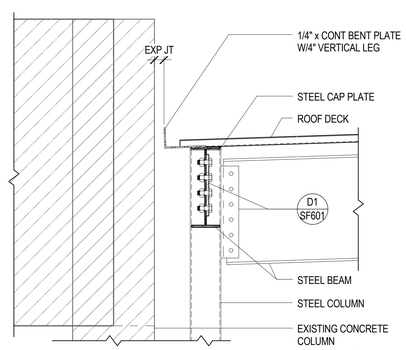

A5 SF523 STEEL BEAM CONNECTIO TO STEEL COLUMN AT EXPANSION JOINT
NO SCALE

GSBS ARCHITECTS
375 WEST 200 SOUTH
SALT LAKE CITY, UT 84101
P 801.521.8600
F 801.521.7913
www.gsbsarchitects.com

LICENSED CERTIFIED STRUCTURAL ENGINEER
NO. 144210
RONALD JAMES REAVELEY
UTAH

REVISIONS:

REAVELEY
ENGINEERS + ASSOCIATES
Consulting Structural Engineers
P 801.486.3883
F 801.485.0911
675 E 500 S, Suite 400
Salt Lake City, Utah 84102
www.reaveley.com

Utah Valley University New Science Building

800 West University Parkway
Orem, Utah 84058

Division of Facilities Construction and Managment

DRAWN BY:	Author
CHECKED BY:	Checker
DFCM PROJECT NO.:	
GSBS PROJECT NO.:	2009.115.00
ISSUED DATE:	05.07.10

TYPICAL ROOF FRAMING DETAILS

CONSTRUCTION DOCUMENTS

SF523

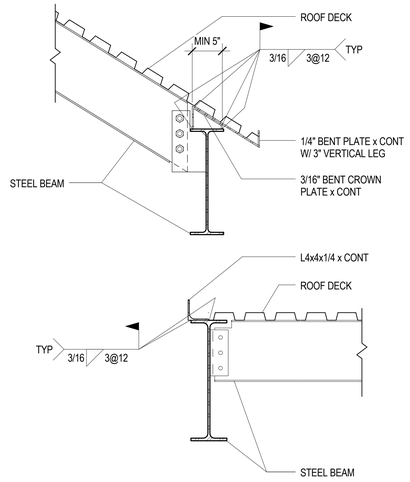

D1 SF524 TYPICAL STEEL BEAM AND ROOF DECK AT BOTTOM OF POP UP ROOF

NO SCALE

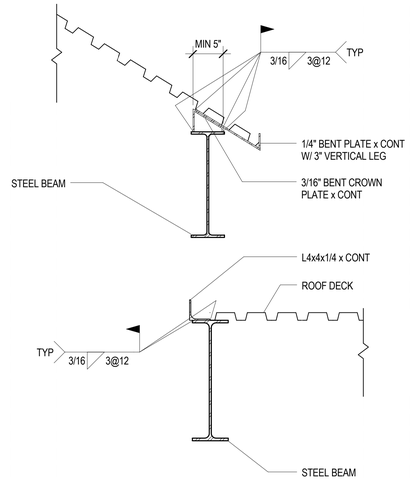

D2 SF524 TYPICAL ROOF DECK BEARING AT BOTTOM OF POP UP ROOF

NO SCALE

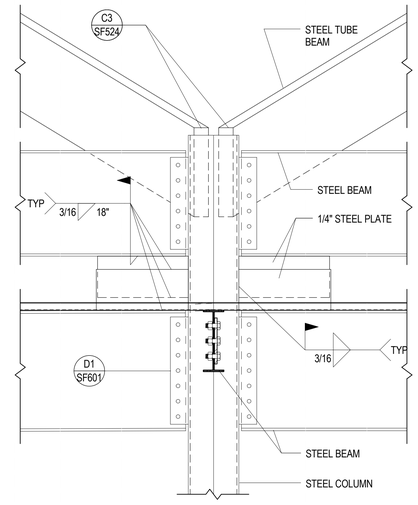

D3 SF524 TYPICAL BEAM CONNECTION TO STEEL COLUMN

NO SCALE

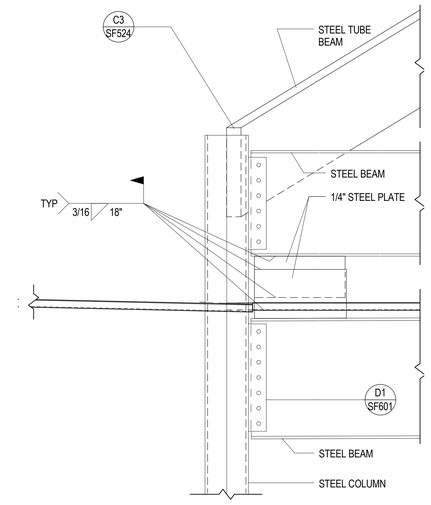

D4 SF524 TYPICAL BEAM CONNECTION TO STEEL COLUMN

NO SCALE

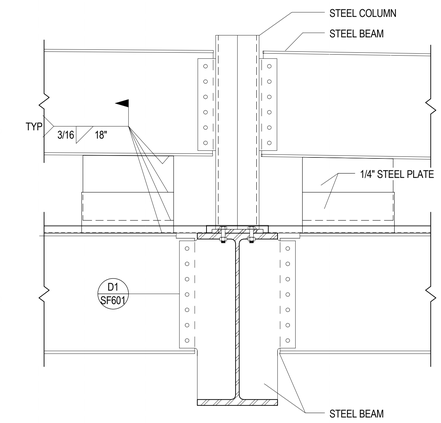

D5 SF524 TYPICAL COLUMN BEARING AT TRANSFER BEAM

NO SCALE

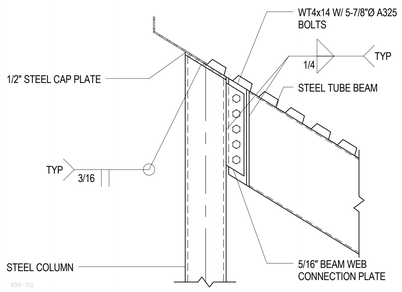

C1 SF524 TYPICAL SLOPED STEEL TUBE CONNECTION TO STEEL COLUMN

NO SCALE

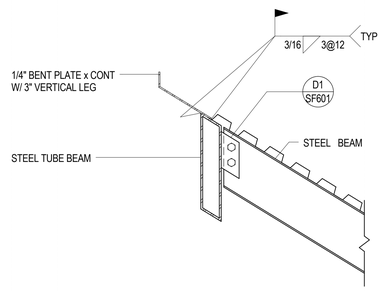

C2 SF524 TYPICAL SLOPED STEEL BEAM CONNECTION TO STEEL TUBE

NO SCALE

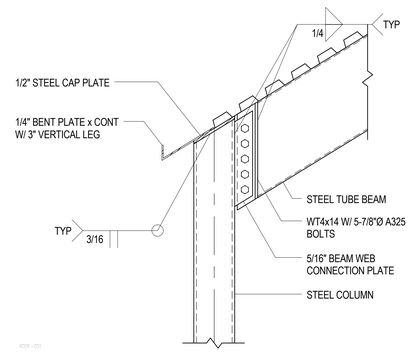

C3 SF524 TYPICAL SLOPED STEEL TUBE CONNECTION TO STEEL COLUMN

NO SCALE

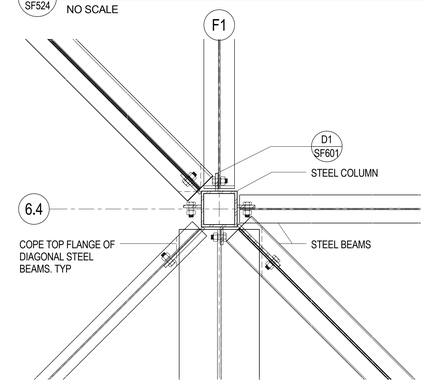

C4 SF524 Detail 28

NO SCALE

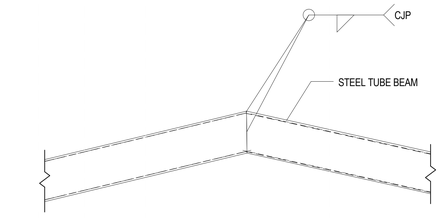

C5 SF524 STEEL TUBE CONNECTION - PLAN

NO SCALE

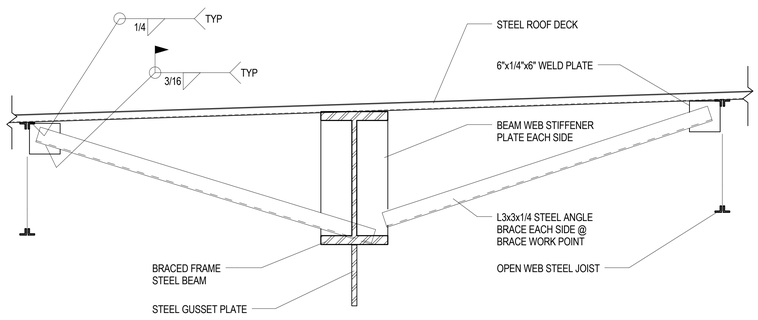

B1 SF524 STEEL ANGLE BRACE TO BRACED FRAME BEAM

NO SCALE

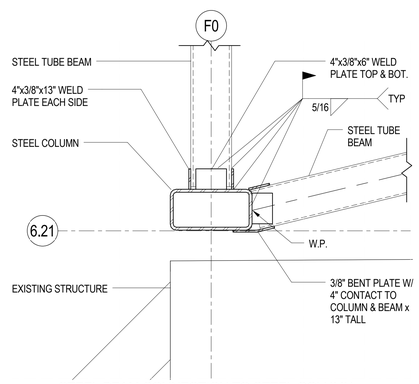

B3 SF524 STEEL BEAM CONNECTION TO STEEL COLUMN - PLAN

NO SCALE

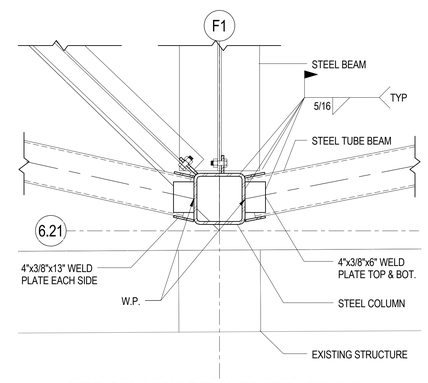

B4 SF524 STEEL BEAM CONNECTION TO STEEL COLUMN - PLAN

NO SCALE

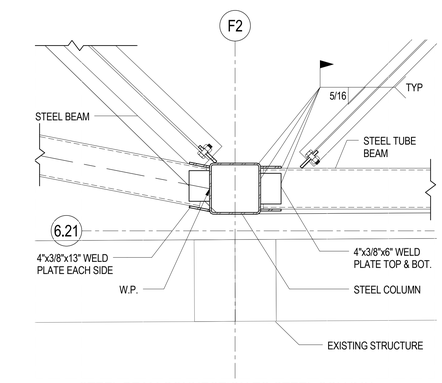

B5 SF524 STEEL BEAM CONNECTION TO STEEL COLUMN - PLAN

NO SCALE

GSBS ARCHITECTS
375 WEST 200 SOUTH
SALT LAKE CITY, UT 84101
P 801.521.8600
F 801.521.7913
www.gsbsarchitects.com

LICENSED CERTIFIED STRUCTURAL ENGINEER
NO. 144210
RONALD JAMES REAVELEY
UTAH

REVISIONS:

REAVELEY ENGINEERS + ASSOCIATES
Consulting Structural Engineers
P 801.486.3883
F 801.485.0911
675 E 500 S, Suite 400
Salt Lake City, Utah 84102
www.reaveley.com

Utah Valley University New Science Building

800 West University Parkway
Orem, Utah 84058

Division of Facilities Construction and Managment

DRAWN BY:	Author
CHECKED BY:	Checker
DFCM PROJECT NO.:	
GSBS PROJECT NO.:	2009.115.00
ISSUED DATE:	05.07.10

TYPICAL ROOF FRAMING DETAILS

CONSTRUCTION DOCUMENTS

SF524

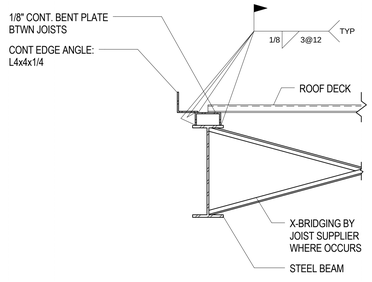

D1 SF525 TYP DECK BEARING AT STEEL BEAM W/ CHORD TIE/DRAG STRUT

NO SCALE

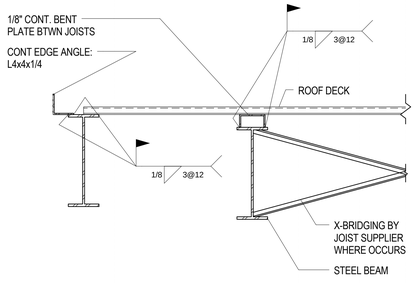

D2 SF525 TYP DECK BEARING AT STEEL BEAM W/ CHORD TIE/DRAG STRUT

NO SCALE

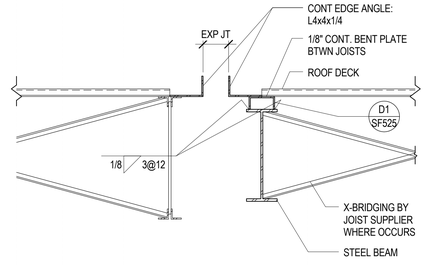

D3 SF525 TYPICAL DECK BEARING AT STEEL BEAM AT EXPANSION JOINT

NO SCALE

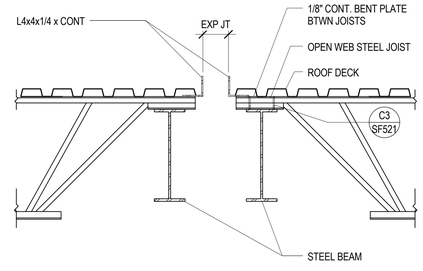

D4 SF525 TYPICAL JOIST BEARING AT STEEL BEAM AT EXPANSION JOINT

NO SCALE

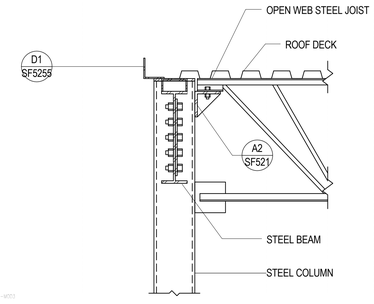

D5 SF525 TYPICAL STEEL JOIST TO STEEL COLUMN AT LOW ROOF

NO SCALE

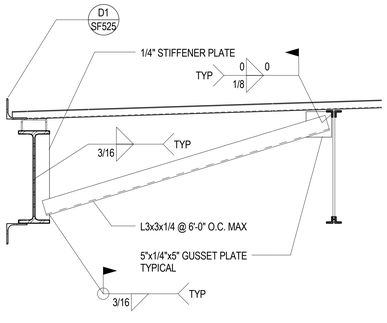

C1 SF525 TYPICAL WALL BRACE

SCALE: 1" = 1'-0"

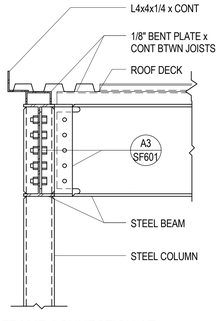

C2 SF525 TYPICAL MOMENT FRAME CONNECTION AT STEEL COLUMN

NO SCALE

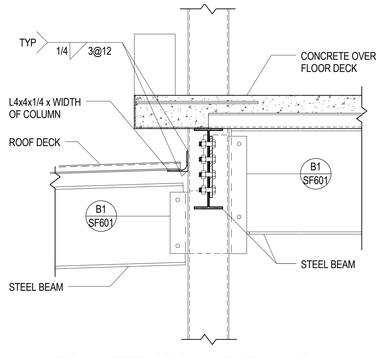

C3 SF525 TYPICAL STEEL BEARING AT COLUMN AT PENTHOUSE EDGE

NO SCALE

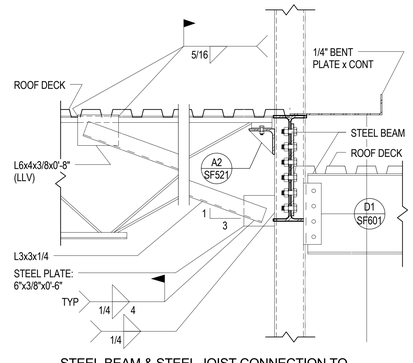

C4 SF525 STEEL BEAM & STEEL JOIST CONNECTION TO STEEL COLUMN AT ROOF STEP

NO SCALE

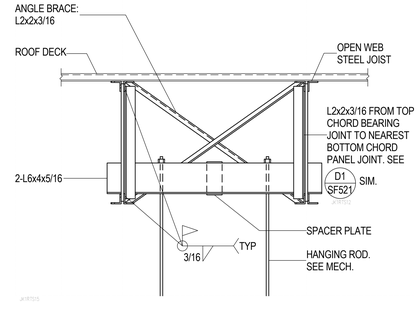

C5 SF525 TYPICAL HANGING MECHANICAL UNIT SUPPORT DETAIL

NO SCALE

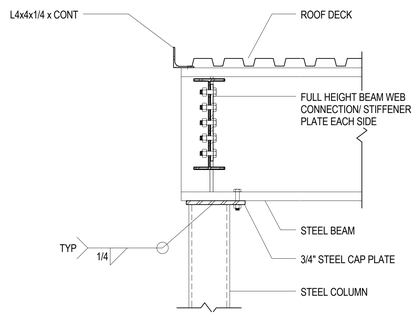

B1 SF525 TYPICAL STEEL BEAM BEARING AT STEEL COLUMN

NO SCALE

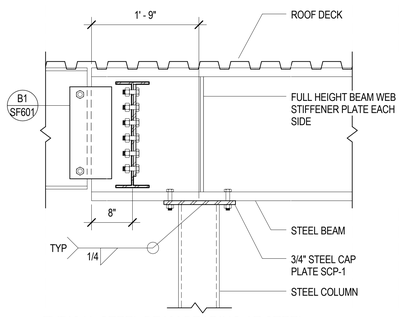

B2 SF525 TYPICAL STEEL BEAM BEARING AT STEEL COLUMN

NO SCALE

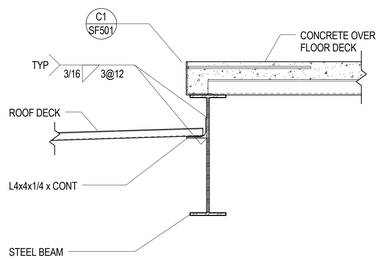

B3 SF525 TYPICAL LOW ROOF DECK BEARING AT STEEL BEAM

NO SCALE

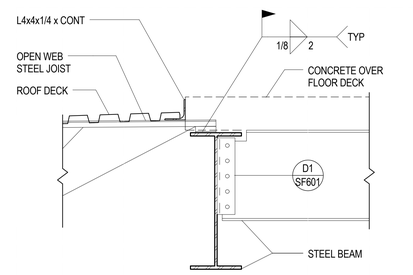

B4 SF525 JOIST BEARING AT STEEL BEAM AT LOW ROOF

NO SCALE

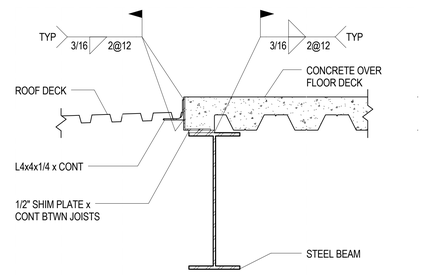

B5 SF525 ROOF/FLOOR DECK BEARING AT STEEL BEAM AT LOW ROOF

NO SCALE

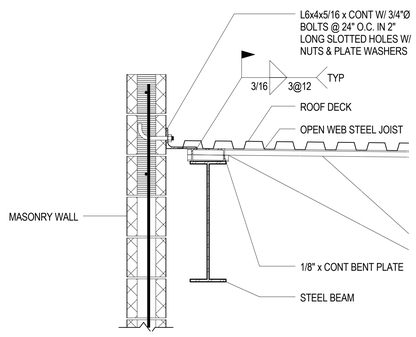

A1 SF525 TYPICAL MASONRY WALL ATTACHMENT TO ROOF

NO SCALE

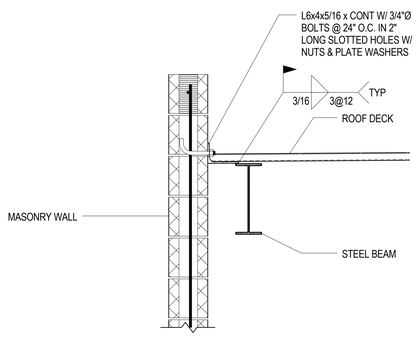

A2 SF525 MASONRY WALL ATTACHMENT TO ROOF

NO SCALE

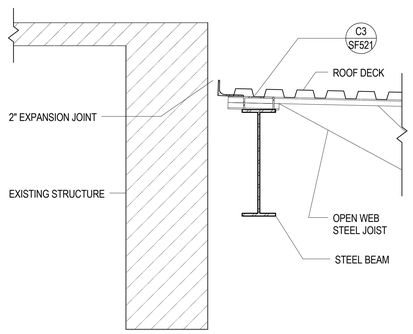

A3 SF525 TYPICAL EXPANSION JOINT AGAINST EXISTING

SCALE: 1" = 1'-0"

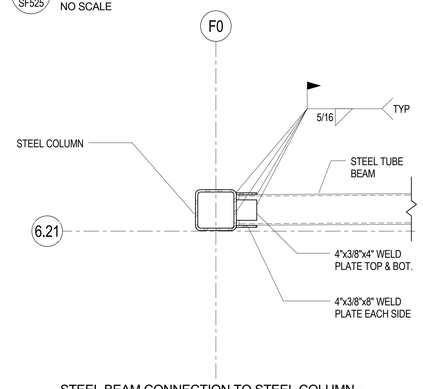

A4 SF525 STEEL BEAM CONNECTION TO STEEL COLUMN - PLAN

NO SCALE

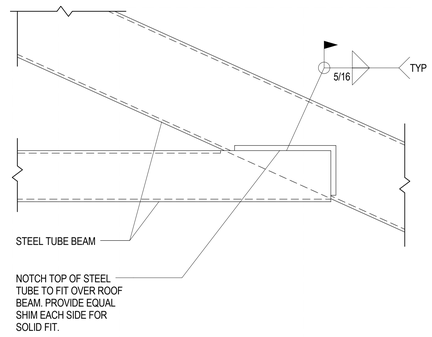

A5 SF525 STEEL TUBE BEAM CONNECTION

NO SCALE

GSBS ARCHITECTS
375 WEST 200 SOUTH
SALT LAKE CITY, UT 84101
P 801.521.8600
F 801.521.7913
www.gsbsarchitects.com

LICENSED CERTIFIED STRUCTURAL ENGINEER NO. 144210 RONALD JAMES REAVELEY UTAH

REVISIONS:

REAVELEY ENGINEERS + ASSOCIATES
Consulting Structural Engineers
P 801.486.3883
F 801.485.0911
675 E 500 S, Suite 490
Salt Lake City, Utah 84102
www.reaveley.com

Utah Valley University New Science Building

800 West University Parkway
Orem, Utah 84058

Division of Facilities Construction and Managment

DRAWN BY:	Author
CHECKED BY:	Checker
DFCM PROJECT NO.:	
GSBS PROJECT NO.:	2009.115.00
ISSUED DATE:	05.07.10

TYPICAL ROOF FRAMING DETAILS

CONSTRUCTION DOCUMENTS

SF525

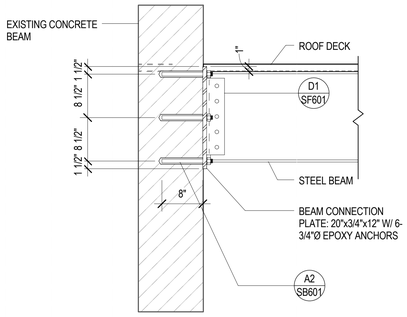

D1 SF526 NEW GIRDER BEARING AT EXISTING CONCRETE BEAM

NO SCALE

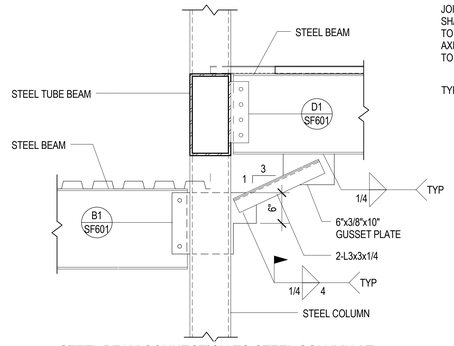

D2 SF526 STEEL BEAM CONNECTION TO STEEL COLUMN AT ROOF STEP

NO SCALE

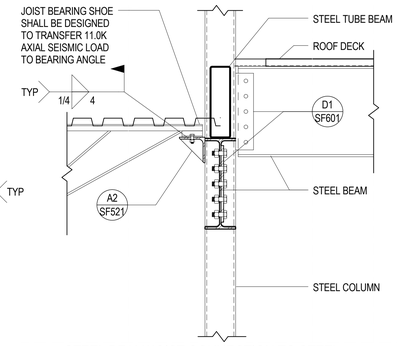

D3 SF526 STEEL BEAM/JOIST CONNECTION TO STEEL COLUMN AT ROOF STEP

NO SCALE

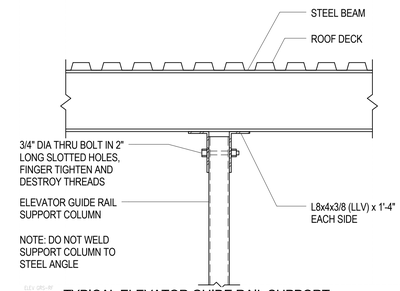

D4 SF526 TYPICAL ELEVATOR GUIDE RAIL SUPPORT COLUMN BRACING AT COMPOSITE DECK

NO SCALE

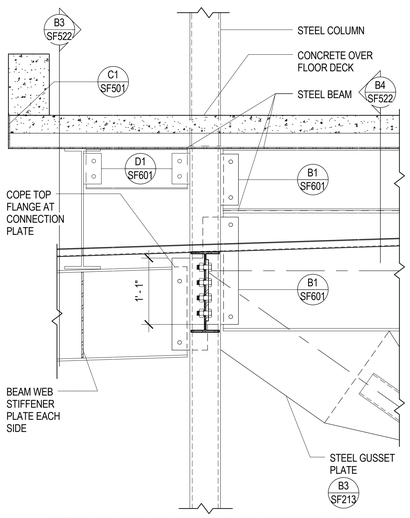

B1 SF526 STEEL BRACED FRAME BEAM CONNECTION AT PENTHOUSE FLOOR

NO SCALE

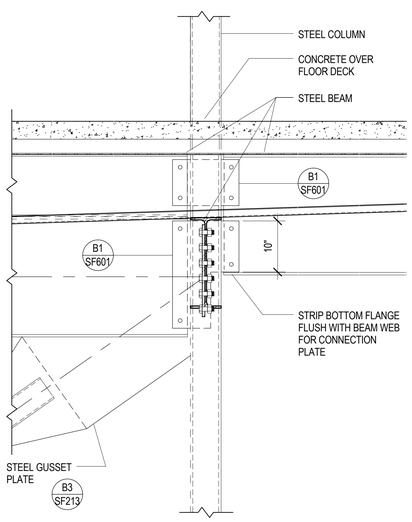

A1 SF526 STEEL BRACED FRAME BEAM AT PENTHOUSE FLOOR

NO SCALE

GSBS ARCHITECTS

375 WEST 200 SOUTH
SALT LAKE CITY, UT 84101

P 801.521.8600
F 801.521.7913

www.gsbsarchitects.com

LICENSED CERTIFIED STRUCTURAL ENGINEER
NO. 144210
RONALD JAMES REAVELEY
UTAH

REVISIONS:

REAVELEY
ENGINEERS + ASSOCIATES
Consulting Structural Engineers

P: 801.486.3883
F: 801.485.0911

675 E 500 S, Suite 490
Salt Lake City, Utah 84102
www.reaveley.com

Utah Valley University New Science Building

800 West University Parkway
Orem, Utah 84058

Division of Facilities Construction and Managment

DRAWN BY:	Author
CHECKED BY:	Checker
DFCM PROJECT NO.:	
GSBS PROJECT NO.:	2009.115.00
ISSUED DATE:	05.07.10

ROOF FRAMING DETAILS

CONSTRUCTION DOCUMENTS

SF526

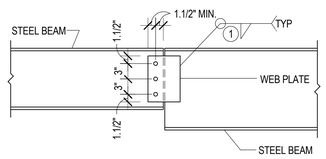

BEAM TO BEAM WEB PLATE CONNECTION

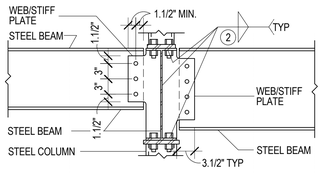

BEAM TO COLUMN WEB/STIFFENER PLATE CONNECTION

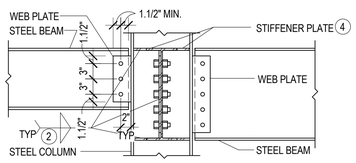

BEAM TO COLUMN WEB PLATE CONNECTION

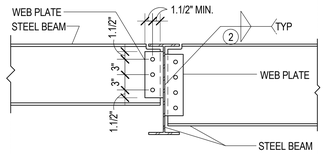

BEAM TO BEAM WEB PLATE CONNECTION

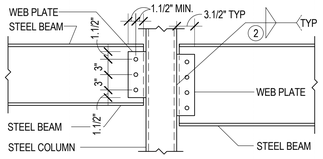

BEAM TO COLUMN WEB PLATE CONNECTION

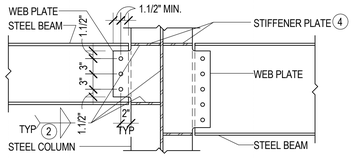

BEAM TO COLUMN WEB PLATE CONNECTION

A325 BOLT SCHEDULE

MAXIMUM BEAM SIZE IN EACH BEAM DEPTH GROUP	WEB PLATE THICKNESS	A325N BOLTS	
		NUMBER	SIZE
W8, C8, W10	5/16"	2	7/8"Ø
W12	5/16"	3	7/8"Ø
W14	3/8"	3	7/8"Ø
W16	3/8"	4	7/8"Ø
W18	7/16"	5	7/8"Ø
W21	7/16"	6	7/8"Ø
W24	1/2"	7	7/8"Ø
W27	1/2"	8	7/8"Ø
W30	5/8"	9	7/8"Ø
W33	5/8"	10	7/8"Ø

NOTES:

1. FILLET WELDS ONE SIDE SHALL EQUAL THE PLATE THICKNESS MINUS 1/16" (1/4" MIN.)
2. FILLET WELDS TWO SIDES SHALL BE 5/8 THE PLATE THICKNESS (1/4" MIN.) EACH SIDE
3. BOLT EDGE DISTANCE SHALL BE 1.1/2" MIN. AT ALL EDGES. BOLT SPACING SHALL BE 3" MIN.
4. THICKNESS EQUALS BEAM FLANGE THICKNESS OF BEAM FRAMING INTO COLUMN WEB. (3/8" MIN.)
5. SEE DETAIL D5/SF601 FOR SKEWED CONNECTION.

D1 / SF601 — TYP BOLTED WEB PLATE CONN. W/ BOLT SCHED. (SINGLE SHEAR)

NO SCALE

NOTE:
DO NOT WELD STIFFENER PLATE INTO THE "K", AND "K1" REGION OF STEEL COLUMNS.

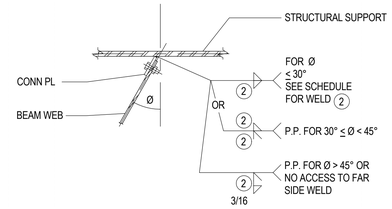

D5 / SF601 — TYPICAL SKEWED CONNECTION PLATE TO SUPPORT CONNECTION

NO SCALE

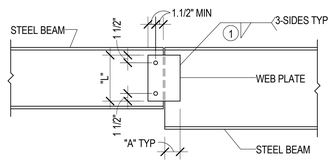

BEAM TO BEAM WEB PLATE CONNECTION

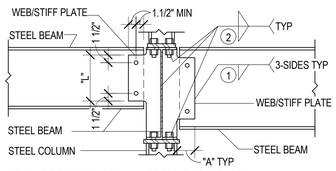

BEAM TO COLUMN WEB/STIFFENER PLATE CONNECTION

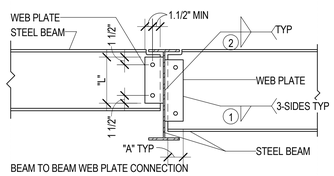

BEAM TO BEAM WEB PLATE CONNECTION

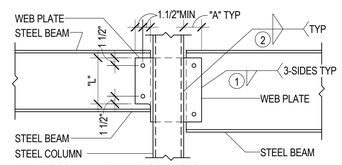

BEAM TO COLUMN WEB PLATE CONNECTION

COLLECTOR/CHORD CONNECTION SCHEDULE

MAXIMUM BEAM SIZE IN EACH BEAM DEPTH GROUP	WEB PLATE			CONNECTION
	LENGTH "L"	WIDTH "A"	THICKNESS	# BOLTS
W10	7"	4"	3/8"	2
W12	10"	4"	3/8"	2
W14	11"	4"	3/8"	2
W16	13"	4"	3/8"	2
W18	15"	4"	3/8"	3
W21	18"	4"	1/2"	3
W24	21"	4"	1/2"	4

NOTES:

1. FILLET WELDS ONE SIDE SHALL EQUAL THE PLATE THICKNESS MINUS 1/16" (1/4" MIN.)
2. FILLET WELDS TWO SIDES SHALL BE 5/8 THE PLATE THICKNESS (1/4" MIN.) EACH SIDE
3. BOLT EDGE DISTANCE SHALL BE 1.1/2" MIN. AT ALL EDGES. BOLT SPACING SHALL BE 3" MIN.
4. THICKNESS EQUALS BEAM FLANGE THICKNESS OF BEAM FRAMING INTO COLUMN WEB. (3/8" MIN.)
5. ERECTION BOLT SHALL BE 7/8"Ø A325N BOLTS.

B1 / SF601 — TYPICAL COLLECTOR/CHORD CONNECTION DETAILS AND SCHEDULE

NO SCALE

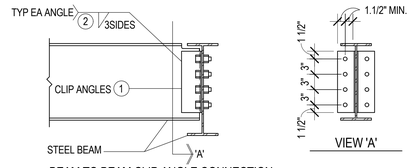

BEAM TO BEAM CLIP ANGLE CONNECTION

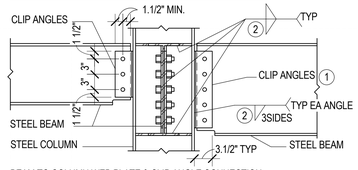

BEAM TO COLUMN WEB PLATE & CLIP ANGLE CONNECTION

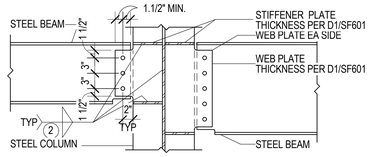

BEAM TO COLUMN CLIP ANGLE CONNECTION

B4 / SF601 — TYPICAL WEB PLATE & BOLTED CLIP ANGLE CONNECTIONS W/ BOLT SCHEDULE (DOUBLE SHEAR)

NO SCALE

A325 BOLT SCHEDULE

MAXIMUM BEAM SIZE IN EACH BEAM DEPTH GROUP	A325N BOLTS	
	NO. PER LEG	SIZE
W8	2	7/8"Ø
W10	2	7/8"Ø
W12	3	7/8"Ø
W14	3	7/8"Ø
W16	4	7/8"Ø
W18	5	7/8"Ø
W21	6	7/8"Ø
W24	7	7/8"Ø
W27	7	7/8"Ø
W30	8	7/8"Ø
W33	9	7/8"Ø
W36	10	7/8"Ø
W40	11	1"Ø

NOTES:

1. CLIP ANGLES: 2-L4x3.1/2. THICKNESS SHALL BE EQUAL TO ONE HALF THE BEAM WEB THICKNESS PLUS 1/16" (1/4" MIN.). FOR TWO ROWS OF BOLTS OR SKEWED CONNECTIONS, USE BENT PLATES.
2. FILLET WELDS SHALL BE ANGLE/PLATE THICKNESS MINUS 1/16" (1/4" MIN.)
3. CONTRACTOR HAS OPTION TO BOLT CLIP ANGLES AT EITHER BEAM WEB IN BEAM TO BEAM CONNECTIONS.
4. BOLT EDGE DISTANCE SHALL BE 1.1/2" MIN. AT ALL BEAM AND CLIP ANGLE EDGES. BOLT SPACING SHALL BE 3" O.C. MIN.

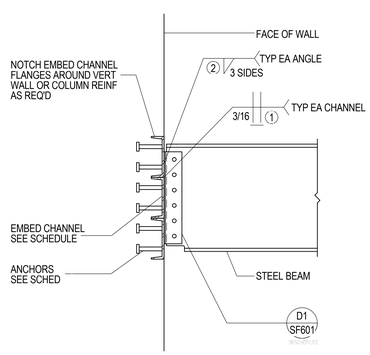

A1 / SF601 — TYPICAL EMBED CHANNEL CONNECTION SCHEDULE

NO SCALE

CONNECTION SCHEDULE

BEAM DEPTH	EMBED CHANNEL	ANCHORS
TO 10"	1-C8x18.75x12"	4-3/4"Ø x 5" STUDS
TO 16"	2-C8x18.75x12"	8-3/4"Ø x 5" STUDS
TO 24"	3-C8x18.75x12"	12-3/4"Ø x 5" STUDS

1. WELD MULTIPLE EMBEDS TOGETHER WITH BUTT WELD EACH SIDE, FULL LENGTH.
2. FILLET WELDS SHALL BE ANGLE THICKNESS MINUS 1/16" (1/4" MIN.)

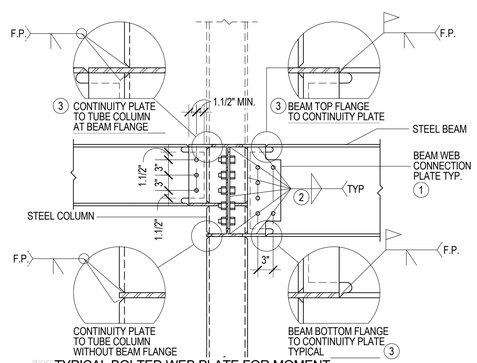

A3 / SF601 — TYPICAL BOLTED WEB PLATE FOR MOMENT FRAME CONNECTIONS TO STEEL TUBE COLUMNS W/ BOLT SCHEDULE

NO SCALE

MOMENT FRAME BOLT SCHEDULE

MAXIMUM BEAM SIZE IN EACH BEAM DEPTH GROUP	A-325SC BOLTS	
	NO. PER LEG	SIZE
W14x22	3	7/8"Ø
W16x31	4	7/8"Ø
W18x46	5	7/8"Ø

NOTES:

1. BEAM WEB CONNECTION PLATES. THICKNESS EQUALS THE BEAM WEB THICKNESS PLUS 1/8" (3/8" MIN.)
2. FILLET WELDS SHALL BE AS FOLLOWS:
   ONE SIDE: PLATE THICKNESS MINUS 1/16" (1/4" MIN)
   TWO SIDES: 1/2 PLATE THICKNESS PLUS 1/16" (1/4" MIN.) EACH SIDE.
3. THICKNESS EQUALS BEAM FLANGE THICKNESS OF THE THICKEST FLANGE OF THE BEAMS FRAMING INTO THE COLUMN FLANGE OR WEB, PLUS 1/8" (3/8" MIN).
4. BOLT EDGE DISTANCE SHALL BE 1.1/2" MIN. AT ALL EDGES. BOLT SPACING SHALL BE 3" MIN.

SNOW DRIFT SCHEDULE		
MARK	DRIFT LENGTH	WD (PSF)
SD-1	18'-3"	87
SD-2	16'-6"	79
SD-3	14'-6"	67
SD-4	16'-0"	75
SD-5	10'-6"	50

NOTES:
FOR OWSJ DESIGN DRIFT LOADS SHALL BE IN ADDITION TO ALL LOADS INDICATED ON PLANS.

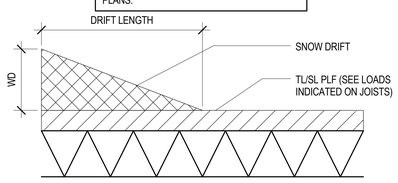

A5 / SF601 — SNOW DRIFT SCHEDULE & DIAGRAM

NO SCALE

GSBS ARCHITECTS
375 WEST 200 SOUTH
SALT LAKE CITY, UT 84101
P 801.521.8600
F 801.521.7913
www.gsbsarchitects.com

LICENSED CERTIFIED STRUCTURAL ENGINEER NO. 144210 RONALD JAMES REAVELEY UTAH

REVISIONS:

REAVELEY ENGINEERS + ASSOCIATES
Consulting Structural Engineers
P: 801.486.3883
F: 801.485.0911
675 E 500 S, Suite 490
Salt Lake City, Utah 84102
www.reaveley.com

Utah Valley University New Science Building

800 West University Parkway
Orem, Utah 84058

Division of Facilities Construction and Managment

DRAWN BY:	Author
CHECKED BY:	Checker
DFCM PROJECT NO.:	
GSBS PROJECT NO.:	2009.115.00
ISSUED DATE:	05.07.10

STRUCTURAL STEEL SCHEDULES

CONSTRUCTION DOCUMENTS

SF601

Roof PH DB																																					Roof PH DB
153' - 2" Cooling Tower	HSS7x7x5/16 SC-1				HSS7x7x5/16 SC-3																				HSS6x6x3/8 SC-24	HSS6x6x3/8 SC-25	HSS6x6x3/8 SC-26	HSS6x6x3/8 SC-27		HSS6x6x3/8 SC-29	HSS6x6x3/8 SC-30	HSS6x6x3/8 SC-31	HSS6x6x3/8 SC-32	153' - 2" Cooling Tower
138' - 2" Roof Deck Brg Low		HSS6x6x5/16 SC-2	HSS6x6x1/4 SC-3	HSS6x6x1/4 SC-4		HSS6x6x3/8 SC-6	HSS6x6x1/4 SC-7	HSS6x6x1/4 SC-8	HSS6x6x1/4 SC-9	HSS6x6x3/8 SC-10	HSS6x6x1/4 SC-11	HSS6x6x1/4 SC-12	HSS6x6x1/4 SC-13	HSS6x6x1/4 SC-14	HSS6x6x1/4 SC-15	HSS6x6x1/4 SC-16	HSS6x6x1/4 SC-17	HSS6x6x1/4 SC-18	HSS6x6x1/4 SC-19	HSS6x6x1/4 SC-20	HSS6x6x1/4 SC-21	HSS6x6x1/4 SC-22	HSS6x6x1/4 SC-23										138' - 2" Roof Deck Brg Low
130' - 11" Level 2																							HSS8x8x1/4 SC-24	HSS8x8x5/16 SC-25	HSS8x8x1/4 SC-26	HSS8x8x1/4 SC-27	HSS6x6x1/4 SC-28	HSS8x8x5/16 SC-29			HSS8x8x1/4 SC-32	130' - 11" Level 2
118' - 0" Level 1	HSS8x8x3/8 SC-1	HSS8x8x5/8 SC-2	HSS8x8x1/4 SC-3	HSS8x8x1/4 SC-4	HSS8x8x3/8 SC-5	HSS8x8x1/2 SC-6	HSS8x8x1/2 SC-7	HSS8x8x5/16 SC-8	HSS8x8x5/16 SC-9	HSS8x8x5/8 SC-10	HSS8x8x3/8 SC-11	HSS8x8x1/2 SC-12	HSS8x8x1/2 SC-13	HSS8x8x3/8 SC-14	HSS8x8x1/2 SC-15	HSS8x8x3/8 SC-16	HSS8x8x3/8 SC-17	HSS8x8x1/2 SC-18	HSS8x8x3/8 SC-19	HSS8x8x3/8 SC-20	HSS8x8x1/2 SC-21	HSS8x8x1/2 SC-22	HSS8x8x3/8 SC-23	HSS10x10x3/8 SC-24	HSS10x10x1/2 SC-25	HSS10x10x3/8 SC-26	HSS8x8x1/2 SC-27	HSS8x8x1/2 SC-28	HSS10x10x1/2 SC-29			HSS8x8x1/2 SC-32	118' - 0" Level 1
103' - 0" Level 0																																					103' - 0" Level 0
88' - 0"	1", SBP-1 W/4- 7/8"Ø A.B.	1", SBP-1 W/4- 7/8"Ø A.B.	7/8", SBP-1 W/4- 7/8"Ø A.B.	7/8", SBP-3 W/4- 7/8"Ø A.B.	1", SBP-1 W/4- 7/8"Ø A.B.	1.1/4", SBP-1 W/4- 7/8"Ø A.B.	1.1/4", SBP-3 W/4- 1"Ø A.B.	1", SBP-3 W/4- 7/8"Ø A.B.	1", SBP-3 W/4- 7/8"Ø A.B.	1.1/4", SBP-1 W/4- 1"Ø A.B.	1", SBP-1 W/4- 1"Ø A.B.	1.1/4", SBP-1 W/4- 1"Ø A.B.	1.1/4", SBP-1 W/4- 1"Ø A.B.	1", SBP-1 W/4- 1"Ø A.B.	1.1/4", SBP-1 W/4- 1"Ø A.B.	1", SBP-2 W/4- 1"Ø A.B.	1", SBP-1 W/4- 1"Ø A.B.	1.1/4", SBP-1 W/4- 1"Ø A.B.	1", SBP-1 W/4- 1"Ø A.B.	1", SBP-1 W/4- 1"Ø A.B.	1.1/4", SBP-1 W/4- 1"Ø A.B.	1.1/4", SBP-1 W/4- 1"Ø A.B.	1", SBP-1 W/4- 1"Ø A.B.	1", SBP-1 W/4- 1"Ø A.B.	1.1/4", SBP-1 W/4- 1.1/8"Ø A.B.	1", SBP-1 W/4- 1"Ø A.B.	1.1/4", SBP-1 W/4- 1"Ø A.B.	1.1/4", SBP-1 W/4- 1"Ø A.B.	1.1/4", SBP-1 W/4- 1.1/8"Ø A.B.			1.1/4", SBP-1 W/4- 1"Ø A.B.	88' - 0"
Column Locations	E.01-6.51	E.01-6.59	E.03-6.59	E.03-6.69	E.11-6.41	E.11-6.51	E.11-6.69	E.11-6.79	E.21-6.31	E.21-6.41	E1-6.55	E1-6.62	E2-6.48	E2-6.66	E2-6.73	E2-6.79	E3-6.48	E3-6.55	E3-6.62	E3-6.66	E3-6.73	E4-6.37	E4-6.44	E4-6.48	E4-6.55	E4-6.62	E4-6.66	E4-6.73	E5-6.48	E5-6.55	E5-6.62	E5-6.66	

Roof PH DB																																					Roof PH DB
153' - 2" Cooling Tower							HSS6x6x3/8 SC-39	HSS6x6x3/8 SC-40	HSS6x6x3/8 SC-41	HSS6x6x3/8 SC-42									HSS6x6x3/8 SC-50	HSS6x6x3/8 SC-51	HSS6x6x3/8 SC-52	HSS6x6x3/8 SC-53					HSS6x6x3/8 SC-59	HSS6x6x3/8 SC-60	HSS6x6x3/8 SC-61	HSS6x6x3/8 SC-62	HSS6x6x1/4 SC-63	HSS6x6x3/8 SC-64	153' - 2" Cooling Tower
138' - 2" Roof Deck Brg Low																HSS6x6x3/8 SC-48	HSS6x6x3/8 SC-49	HSS8x8x5/16 SC-50																			138' - 2" Roof Deck Brg Low
130' - 11" Level 2	HSS6x6x1/4 SC-33	HSS6x6x1/4 SC-34			HSS6x6x1/4 SC-37	HSS6x6x1/4 SC-38	HSS8x8x5/16 SC-39	HSS8x8x3/8 SC-40	HSS8x8x3/8 SC-41	HSS8x8x1/4 SC-42	HSS6x6x1/4 SC-43																HSS6x6x1/4 SC-58			HSS8x8x5/16 SC-61	HSS8x8x3/8 SC-62		HSS8x8x1/4 SC-64	130' - 11" Level 2
118' - 0" Level 1	HSS8x8x1/2 SC-33	HSS8x8x3/8 SC-34			HSS8x8x1/2 SC-37	HSS8x8x3/8 SC-38	HSS10x10x1/2 SC-39	HSS10x10x1/2 SC-40	HSS10x10x1/2 SC-41	HSS8x8x1/2 SC-42	HSS8x8x1/2 SC-43					HSS8x8x1/2 SC-48	HSS8x8x1/2 SC-49	HSS10x10x1/2 SC-50								HSS8x8x1/2 SC-58			HSS10x10x1/2 SC-61	HSS10x10x1/2 SC-62		HSS10x10x3/8 SC-64	118' - 0" Level 1
103' - 0" Level 0			HSS5x5x1/4 SC-35	HSS6x6x1/4 SC-36								HSS6x6x1/4 SC-44	HSS6x6x1/4 SC-45	HSS6x6x5/16 SC-46	HSS6x6x5/16 SC-47								HSS5x5x1/4 SC-54	HSS6x6x1/4 SC-55	HSS6x6x1/4 SC-56	HSS8x8x1/2 SC-57								103' - 0" Level 0
88' - 0"	1.1/4", SBP-1 W/4- 1"Ø A.B.	1", SBP-2 W/4- 1"Ø A.B.	3/4", SBP-3 W/4- 3/4"Ø A.B.	3/4", SBP-2 W/4- 3/4"Ø A.B.	1.1/4", SBP-1 W/4- 1"Ø A.B.	1", SBP-1 W/4- 1"Ø A.B.	1.1/4", SBP-1 W/4- 1.1/8"Ø A.B.	1.1/4", SBP-1 W/4- 1.1/8"Ø A.B.	1.1/4", SBP-1 W/4- 1.1/8"Ø A.B.	1.1/4", SBP-1 W/4- 1"Ø A.B.	1.1/4", SBP-1 W/4- 1"Ø A.B.	3/4", SBP-3 W/4- 3/4"Ø A.B.	3/4", SBP-2 W/4- 3/4"Ø A.B.	3/4", SBP-1 W/4- 3/4"Ø A.B.	3/4", SBP-1 W/4- 3/4"Ø A.B.	1.1/4", SBP-1 W/4- 1"Ø A.B.	1.1/4", SBP-1 W/4- 1"Ø A.B.	1.1/4", SBP-1 W/4- 1"Ø A.B.					3/4", SBP-3 W/4- 3/4"Ø A.B.	3/4", SBP-2 W/4- 3/4"Ø A.B.	3/4", SBP-2 W/4- 3/4"Ø A.B.	3/4", SBP-2 W/4- 3/4"Ø A.B.	1", SBP-1 W/4- 1"Ø A.B.			1.1/4", SBP-1 W/4- 1.1/8"Ø A.B.	1.1/4", SBP-1 W/4- 1.1/8"Ø A.B.		1", SBP-1 W/4- 1"Ø A.B.	88' - 0"
Column Locations	E5-6.73	E5-6.79	E5.4-6.2(1' - 4")	E6(8")-6.2(1' - 4")	E6-6.37	E6-6.44	E6-6.48	E6-6.55	E6-6.62	E6-6.66	E6-6.73	E6.1-6.01	E6.1-6.1	E7-6.1	E7-6.2	E7-6.37	E7-6.44	E7-6.48	E7-6.55	E7-6.62	E7-6.66	E8(-1' - 6")-6.0(10' - 9 1/4")	E8(-1' - 6")-6.1	E8(-1' - 6")-6.2	E8-6.21	E8-6.31	E8-6.37	E8-6.44	E8-6.48	E8-6.55	E8-6.6	E8-6.62	

STEEL COLUMN SCHEDULE

SCALE: 1/8" = 1'-0"

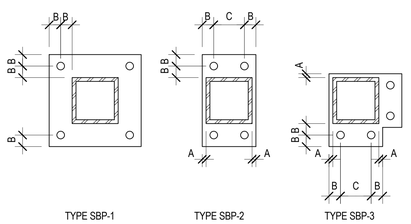

A = 1/2" MIN.
B = 1 1/2" (PER TABLE J3.5 OF THE MANUAL OF STEEL CONSTRUCTION FOR BOLTS LARGER THAN 7/8" DIAMETER)
C = 3" MIN.

A1 / SF602 TYPICAL STEEL BASE PLATES - PLAN VIEW
NO SCALE

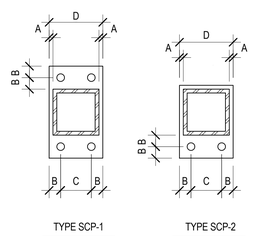

A = 1/2" MIN.
B = 1 1/2" MIN.
C = GAGE OF CONNECTED MEMBER
D = COLUMN WIDTH + 1", BEAM OR GIRDER WIDTH + 1", OR BOLT GAGE + 3", WHICHEVER IS GREATER.

NOTE:
1. ALL BOLTS SHALL BE 7/8" DIA. A325N BOLTS U.N.O.
2. SEE DETAILS FOR REQUIRED PLATE THICKNESS & TYPE.

A2 / SF602 TYPICAL STEEL CAP PLATES - REFLECTED PLAN VIEW
NO SCALE

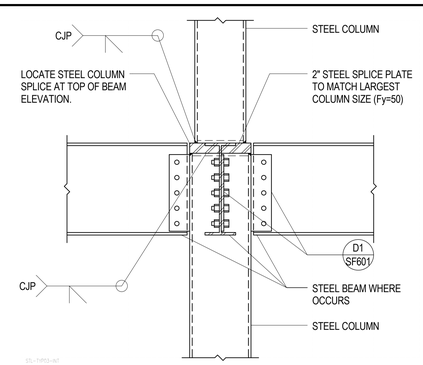

A3 / SF602 TYPICAL INTERIOR STEEL TUBE COLUMN SPLICE DETAIL
NO SCALE

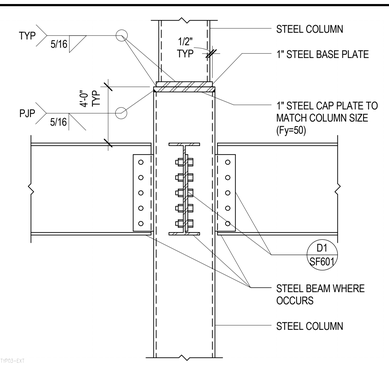

A4 / SF602 TYPICAL EXTERIOR STEEL TUBE COLUMN SPLICE DETAIL
NO SCALE

GSBS ARCHITECTS
375 WEST 200 SOUTH
SALT LAKE CITY, UT 84101
P 801.521.8600
F 801.521.7915
www.gsbsarchitects.com

LICENSED CERTIFIED STRUCTURAL ENGINEER NO. 144210 RONALD JAMES REAVELEY UTAH

REVISIONS:

REAVELEY ENGINEERS + ASSOCIATES
Consulting Structural Engineers
P: 801.486.3883
F: 801.485.0911
675 E 500 S, Suite 400
Salt Lake City, Utah 84102
www.reaveley.com

Utah Valley University New Science Building

800 West University Parkway
Orem, Utah 84058

Division of Facilities Construction and Managment

DRAWN BY:	Author
CHECKED BY:	Checker
DFCM PROJECT NO.:	
GSBS PROJECT NO.:	2009.115.00
ISSUED DATE:	05.07.10

STEEL COLUMN SCHEDULE

CONSTRUCTION DOCUMENTS

SF602

Roof PH DB																																	Roof PH DB
153' - 2" Cooling Tower	HSS6x6x3/8 SC-65							HSS8x8x1/2 SC-72	HSS8x8x1/2 SC-73	HSS8x8x1/2 SC-74		HSS8x8x1/2 SC-76				HSS8x8x1/2 SC-80	HSS8x8x1/2 SC-81							HSS8x8x1/4 SC-88								153' - 2" Cooling Tower
138' - 2" Roof Deck Brg Low																																	138' - 2" Roof Deck Brg Low
130' - 11" Level 2	HSS8x8x1/4 SC-65	HSS8x8x1/2 SC-66	HSS6x6x5/8 SC-67	HSS6x6x5/8 SC-68	HSS8x8x3/8 SC-69		HSS6x6x1/4 SC-71						HSS6x6x1/4 SC-77	HSS6x6x5/8 SC-78	HSS5x5x5/8 SC-79			HSS6x6x3/8 SC-82	HSS6x6x3/8 SC-83	HSS6x6x3/8 SC-84		HSS6x6x5/16 SC-86		HSS10x10x5/8 SC-88		HSS7x7x1/2 SC-90		HSS8x8x3/8 SC-92	HSS6x6x1/4 SC-93				130' - 11" Level 2
118' - 0" Level 1	HSS8x8x1/2 SC-65					HSS7x7x5/8 SC-75															HSS6x6x3/8 SC-85		HSS6x6x1/4 SC-87			HSS6x6x3/8 SC-91				HSS4x4x1/4 SC-94	HSS6x6x1/4 SC-95	HSS6x6x1/4 SC-96	118' - 0" Level 1
103' - 0" Level 0					HSS8x8x3/8 SC-69	HSS6x6x5/8 SC-70	HSS8x8x5/8 SC-71	HSS8x8x1/2 SC-72	HSS8x8x1/2 SC-73	HSS10x10x1/2 SC-74						HSS16x8x5/8 SC-80	HSS10x10x5/8 SC-81	HSS10x10x3/8 SC-82	HSS8x8x3/8 SC-83					HSS10x10x5/8 SC-88								103' - 0" Level 0
88' - 0"	1", SBP-1 W/4- 1"Ø A.B.	1", SBP-3 W/4- 1"Ø A.B.			1", SBP-3 W/4- 1"Ø A.B.	1", SBP-2 W/4- 1"Ø A.B.	1.1/4", SBP-1 W/4- 1"Ø A.B.	1.1/4", SBP-1 W/4- 1"Ø A.B.	1.1/4", SBP-1 W/4- 1"Ø A.B.	1.1/4", SBP-1 W/4- 1.1/8"Ø A.B.	1", SBP-2 W/4- 7/8"Ø A.B.	1", SBP-1 W/4- 1"Ø A.B.	3/4", SBP-2 W/4- 3/4"Ø A.B.			1.1/4", SBP-2 W/4- 1.1/4"Ø A.B.	1.1/4", SBP-1 W/4- 1.1/8"Ø A.B.	1", SBP-1 W/4- 1"Ø A.B.	1", SBP-1 W/4- 7/8"Ø A.B.	1", SBP-1 W/4- 3/4"Ø A.B.	3/4", SBP-2 W/4- 3/4"Ø A.B.	3/4", SBP-1 W/4- 3/4"Ø A.B.	3/4", SBP-2 W/4- 3/4"Ø A.B.	1.1/4", SBP-2 W/4- 1"Ø A.B.	3/4", SBP-2 W/4- 3/4"Ø A.B.	1", SBP-1 W/4- 3/4"Ø A.B.	3/4", SBP-2 W/4- 3/4"Ø A.B.	1", SBP-1 W/4- 3/4"Ø A.B.	3/4", SBP-2 W/4- 3/4"Ø A.B.		3/4", SBP-3 W/4- 3/4"Ø A.B.	3/4", SBP-2 W/4- 3/4"Ø A.B.	88' - 0"
Column Locations	E8-6.66	E8(-1' - 6")-6.69(-10")	E8-6.7	E8-6.79	E8(-1' - 6")-6.79(-1' - 9 7/8")	E9-6.21	E9-6.31	E9-6.37	E9-6.44	E9-6.48	E9-6.59(-1' - 8 1/8")	E9-6.6	E9-6.69(-1' - 6")	E9(-1' - 4")-6.69(8")	E9(-1' - 4")-6.79	F0-6.21(4 1/8")	F0-6.31	F0-6.4	F0-6.48	F0-6.5	F0-6.5(-2' - 6 1/8")	F0(-1' - 6")-6.59	F0-6.66(-5' - 6 1/2")	F1-6.21(6 1/4")	F1-6.3(8")	F1-6.4	F1(-1' - 8")-6.4(-1' - 0")	F1-6.5	F1-6.59	F1(-9' - 10 1/8")-6.59(1' - 7 1/2")	F1(10' - 3 5/8")-6.62(6' - 5 1/2")	F1(-9' - 10 1/8")-6.62(6' - 5 1/2")	

Roof PH DB																		Roof PH DB
153' - 2" Cooling Tower			HSS8x8x3/8 SC-99				HSS8x8x3/8 SC-103											153' - 2" Cooling Tower
138' - 2" Roof Deck Brg Low																		138' - 2" Roof Deck Brg Low
130' - 11" Level 2	HSS10x10x3/8 SC-97	HSS6x6x3/8 SC-98		HSS5x5x3/8 SC-100		HSS6x6x3/8 SC-102		HSS6x6x1/4 SC-104			HSS6x6x1/4 SC-107	HSS6x6x1/4 SC-108	HSS6x6x1/4 SC-109	HSS6x6x1/4 SC-110		HSS6x6x1/4 SC-112		130' - 11" Level 2
118' - 0" Level 1					HSS8x8x5/16 SC-101				HSS8x8x1/2 SC-105	HSS6x6x1/2 SC-106					HSS6x6x5/16 SC-111		HSS8x8x5/16 SC-113	118' - 0" Level 1
103' - 0" Level 0	HSS10x10x3/8 SC-97																	103' - 0" Level 0
88' - 0"	1", SBP-2 W/4- 1"Ø A.B.	1", SBP-1 W/4- 3/4"Ø A.B.	1", SBP-1 W/4- 3/4"Ø A.B.	3/4", SBP-1 W/4- 3/4"Ø A.B.	1", SBP-2 W/4- 7/8"Ø A.B.	1", SBP-1 W/4- 3/4"Ø A.B.	1", SBP-1 W/4- 3/4"Ø A.B.	3/4", SBP-1 W/4- 3/4"Ø A.B.	1", SBP-2 W/4- 3/4"Ø A.B.	3/4", SBP-2 W/4- 3/4"Ø A.B.	3/4", SBP-1 W/4- 3/4"Ø A.B.	3/4", SBP-2 W/4- 3/4"Ø A.B.	3/4", SBP-1 W/4- 3/4"Ø A.B.	3/4", SBP-1 W/4- 3/4"Ø A.B.	3/4", SBP-3 W/4- 3/4"Ø A.B.	3/4", SBP-3 W/4- 3/4"Ø A.B.	3/4", SBP-3 W/4- 3/4"Ø A.B.	88' - 0"
Column Locations	F2-6.21(8 1/4")	F2-6.3	F2-6.4	F2-6.5	F2-6.59	F3-6.21(8 1/4")	F3-6.3	F3-6.4	F3-6.4(1' - 1")	F3(1' - 1")-6.4	F3-6.5	F4-6.21	F4-6.4	F4-6.5	F4.9-6.2	F4.9-6.21	F4.9-6.59	

STEEL COLUMN SCHEDULE

SCALE: 1/8" = 1'-0"

STEEL COLUMN SCHEDULE NOTES

1. UNLESS NOTED OTHERWISE ALL COLUMNS SHALL BE INSTALLED W/ 4-3/4" DIAMETER A.B. W/ 3" (MIN.) HOOKS. PROJECT ANCHOR BOLTS 3" (MIN.) ABOVE THE TOP OF THE BASE PLATE. EMBEDMENT SHALL BE 9" FOR 3/4" DIA, 12" FOR 7/8" DIA, 14" FOR 1" DIA, 16" FOR 1.1/4" DIA MIN. ALL BOLTS SHALL BE INSTALLED W/ HARDENED WASHERS BENEATH THE NUT. ANY BOLT HOLES LARGER THAN THE BOLT DIAMETER PLUS 5/16" SHALL HAVE 5/16" PLATE WASHERS INSTALLED BENEATH THE HARDENED WASHERS.
2. ALL BOLTS IN CAP PLATES SHALL BE 3/4" DIA, A325N BOLTS TYPICAL U.N.O.
3. ALL STEEL COLUMN SPLICES SHALL BE LOCATED PER SPLICE DETAILS SEE SF602, U.N.O.
4. WELDS SHALL NOT BE MADE TO ANCHOR BOLTS.
5. 'COLUMN LOCATIONS' IN THE STEEL COLUMN SCHEDULE SHALL SUPERSEDE THE SC-_ MARK FOR STEEL COLUMN SIZE & LOCATION. SC-_ MARK IS A SECONDARY COLUMN LOCATOR TO COMPLIMENT THE DRAWINGS.
6. SEE A2/SF602 FOR STEEL CAP PLATE TYPES.
7. SEE A1/SF602 FOR STEEL BASE PLATE TYPES

STRAP PLATE CONNECTION SCHEDULE

MARK	STRAP PLATE		FILLET WELD		NOTES
	THICKNESS	B1, B2 WIDTH	T1, T2 WELD THICKNESS	L1, L2 WELD LENGTH	
A	3/8"	3"	1/4"	5"	
B	NOT USED				
C	NOT USED				
D	3/4"	4.1/2"	5/16"	12"	

NOTES:
1. T/C FORCE SHALL BE THE MAXIMUM T/C FORCE INDICATED ON THE STEEL JOIST FRAMING INTO THE STEEL COLUMN IN EACH DIRECTION.

2. ALL STRAP PLATES BE ASTM A572 GRADE 50 STEEL

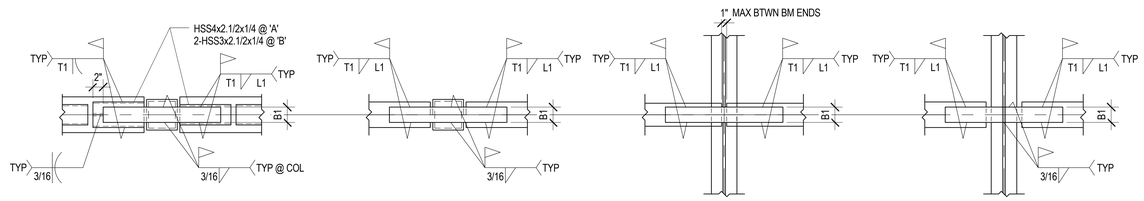

STRAIGHT STRAP AT COLUMN W/ DROPPED BEAMS

STRAIGHT STRAP AT COLUMN

STRAIGHT STRAP AT BEAM (BEARING ABOVE)

STRAIGHT STRAP AT BEAM

A4 / SF603 TYPICAL STRAP PLATE CONFIGURATIONS & SCHEDULE

NO SCALE

GSBS ARCHITECTS
375 WEST 200 SOUTH
SALT LAKE CITY, UT 84101
P 801.521.8600
F 801.521.7915
www.gsbsarchitects.com

LICENSED CERTIFIED STRUCTURAL ENGINEER NO. 144210 RONALD JAMES REAVELEY UTAH

REVISIONS:

REAVELEY ENGINEERS + ASSOCIATES
Consulting Structural Engineers
P: 801.486.3883
F: 801.485.0911
675 E 500 S, Suite 400
Salt Lake City, Utah 84102
www.reaveley.com

Utah Valley University New Science Building

800 West University Parkway
Orem, Utah 84058

Division of Facilities Construction and Managment

DRAWN BY:	Author
CHECKED BY:	Checker
DFCM PROJECT NO.:	
GSBS PROJECT NO.:	2009.115.00
ISSUED DATE:	05.07.10

STEEL COLUMN SCHEDULE

CONSTRUCTION DOCUMENTS

SF603