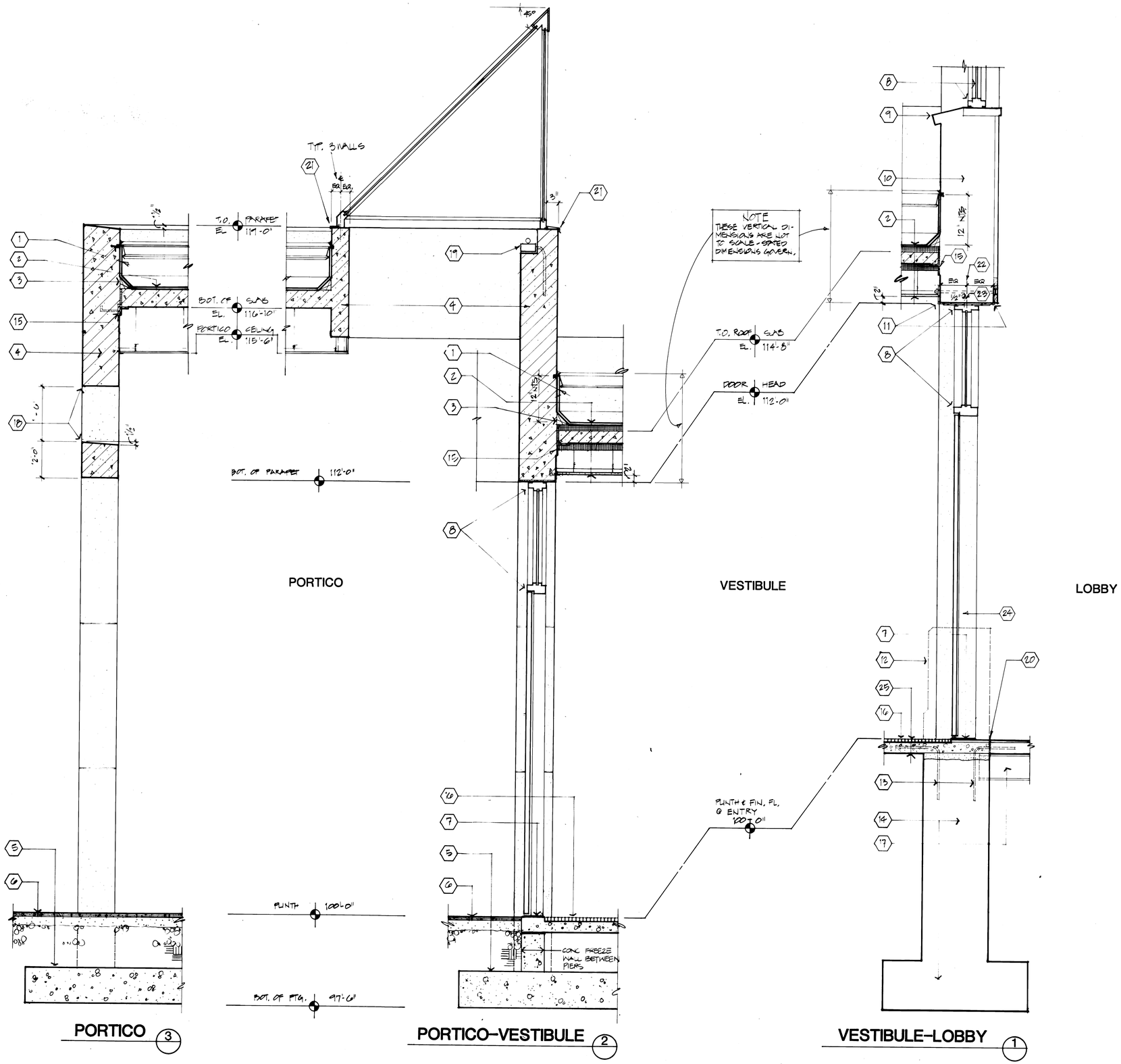

SCALE: 3/4" = 1'-0"

REFERENCE NOTES

1. Roof membrane carried up parapet wall & into reglet (reglet in C.I.P. channel).
2. Roof system: Mono-membrane on precast reinforced concrete slab w/2" rigid insulation top & bottom w/suspended GPDW ceiling, dimensions as shown on drawings (omit rigid insulation @ portico roof).
3. Cant strip.
4. Precast concrete wall panel/parapet wall.
5. Continuous mat footing as scheduled, re: Struct. for thickness.
6. Precast concrete paver ~~re: Struct. for thickness.~~
7. Metal threshold.
8. H.M. frame as scheduled.
9. Exist. brick rowlock or metal clad concrete sill (reliable info. on exist. condition not available as of this writing). Remove metal covers where they occur, repair concrete sills as req'd.
10. Exist. masonry wall.
11. Steel angle(s), re: Struct.
12. Top 3'-0" +/- of exist. concrete foundation wall removed.
13. C.I.P. concrete slab doweled into exist. foundation wall as shown, re: Struct.
14. Exist. foundation wall & footing.
15. Roof connection per precaast manufacturer.
16. Recessed floor mat; top of mat to align flush w/top of new floor pavers in lobby.
17. Exist. steel floor joist.
18. 1'-6" X 1'-6" openings centered above openings in portico, re: Sheet 1/AR203.
19. Cast-in light fixture; precast manufacturer to cast-in all req'd. equip. as specified by Elect. Engineer (j-box, conduit runs, etc.). Re: reflected ceiling plans & elec. plans for other req'mts. Provide additional rein.
20. 1/2" expansion material.
21. Flashing per skylight manufacturer's recommendation.
22. Centerline of hollow metal frame.
23. Centerline of steel pipe column within frame.
24. 3" struc pipe column within frame with base plates and anchors. Re: Struc 1/S804.
25. Recessed floor mat on depressed conc slab. Coordinate elev. of slab w/mat manufacturer.

COOPER ROBERTS
ARCHITECTS, A.I.A
202 WEST 300 NORTH
SALT LAKE CITY, UT 84103
(801) 355-5915

ANDERSON MASON DALE
1615 SEVENTEENTH STREET
DENVER, COLORADO 80202
(303) 294-9448

SOUTH CITY CAMPUS of SALT LAKE COMMUNITY COLLEGE

WALL SECTIONS - AREA 8D

REVISIONS:
As-Built

PROJECT NUMBER:
DATE:
DRAWN:
CHECKED:
APPROVED:

SHEET OF
AR403

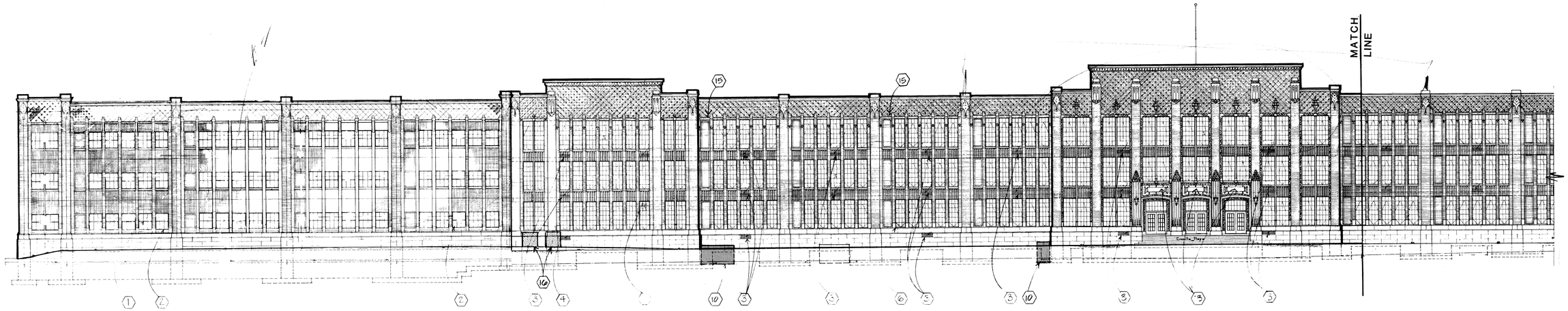

WEST ELEVATION
SCALE: 1/16" = 1'-0"

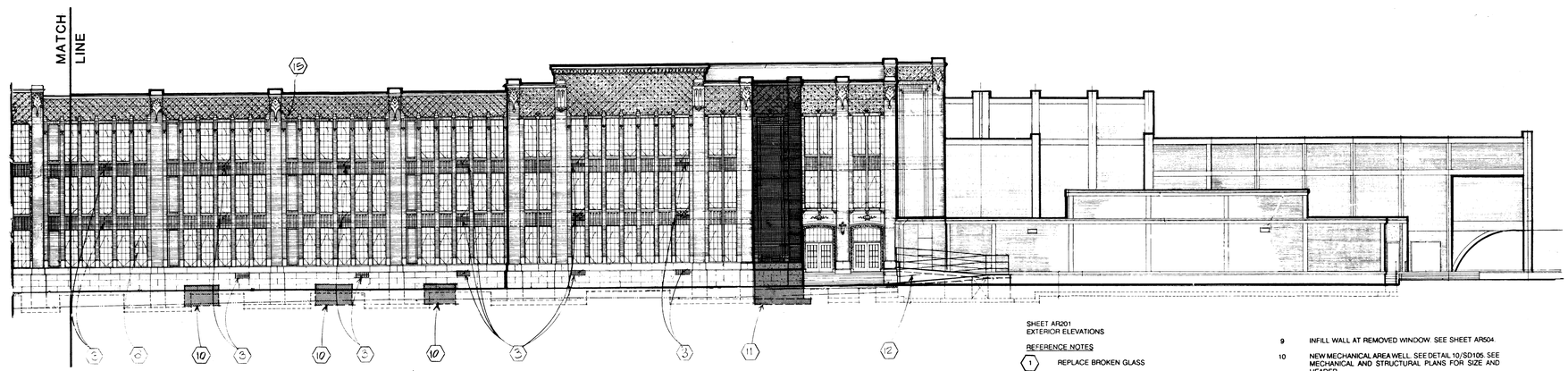

WEST ELEVATION
SCALE: 1/16" = 1'-0"

SHEET AR201
EXTERIOR ELEVATIONS

REFERENCE NOTES

1. REPLACE BROKEN GLASS
2. REMOVE VENT AND REPLACE WITH SASH AND GLASS TO MATCH EXISTING
3. PAINT EXISTING 12" X 39" MECHANICAL GRILL. INFILL OPENING FROM INSIDE WITH 8" CMU. SEE DETAIL 1/AR124
4. PAINT EXISTING 10" X 56" MECHANICAL GRILL
5. REMOVE EXISTING VENT AND REPLACE WITH GLAZING, SASH, MULLIONS, TO MATCH EXISTING
6. REMOVE EXISTING COOLING UNIT AND REPLACE WITH GLAZING, SASH, MULLIONS, TO MATCH EXISTING
7. REMOVE EXISTING PLEXIGLASS GLAZING AND REPLACE WITH NEW INSULATING GLASS PANELS
8. STRIP EXISTING PAINT FROM GLAZING AND RESTORE WINDOW TO MATCH EXISTING.
9. INFILL WALL AT REMOVED WINDOW. SEE SHEET AR504.
10. NEW MECHANICAL AREA WELL. SEE DETAIL 10/SD105. SEE MECHANICAL AND STRUCTURAL PLANS FOR SIZE AND HEADER.
11. NEW ELEVATOR SHAFT. SEE SHEET AR502 AND AR503
12. NEW RAMP. SEE 6/SD105.
13. REMOVE EXISTING CAST CONCRETE SIGNS AND INSTALL NEW CAST CONCRETE SIGNS TO READ "SOUTH / CITY / CAMPUS". MATCH EXISTING COLOR, SIZE AND LETTER STYLE.
14. INFILL WINDOW OPENINGS. SEE D/AR504.
15. NEW SCUPPER - SEE ROOF PLAN
16. NEW ELECTRICAL EQUIPMENT ON PADS. SEE ELECTRICAL SITE PLAN.

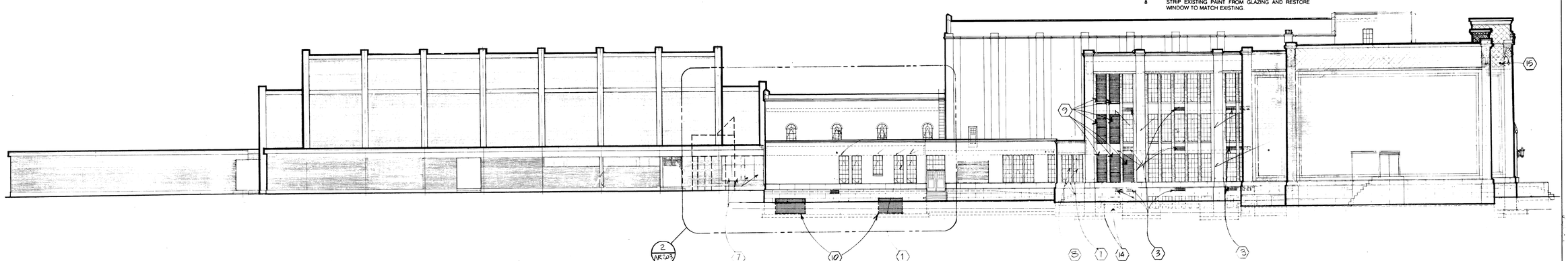

NORTH ELEVATION
SCALE: 1/16" = 1'-0"

COOPER ROBERTS
ARCHITECTS, A.I.A
202 WEST 300 NORTH
SALT LAKE CITY, UT 84103
(801) 355-5915

ANDERSON MASON DALE
1615 SEVENTEENTH STREET
DENVER, COLORADO 80202
(303) 294-9448

SOUTH CITY CAMPUS of SALT LAKE COMMUNITY COLLEGE

EXTERIOR BUILDING ELEVATIONS

REVISIONS:

PROJECT NUMBER: 88-041
DATE: JANUARY 1990
DRAWN: STAFF
CHECKED: WNC2
APPROVED:

SHEET OF

AR201

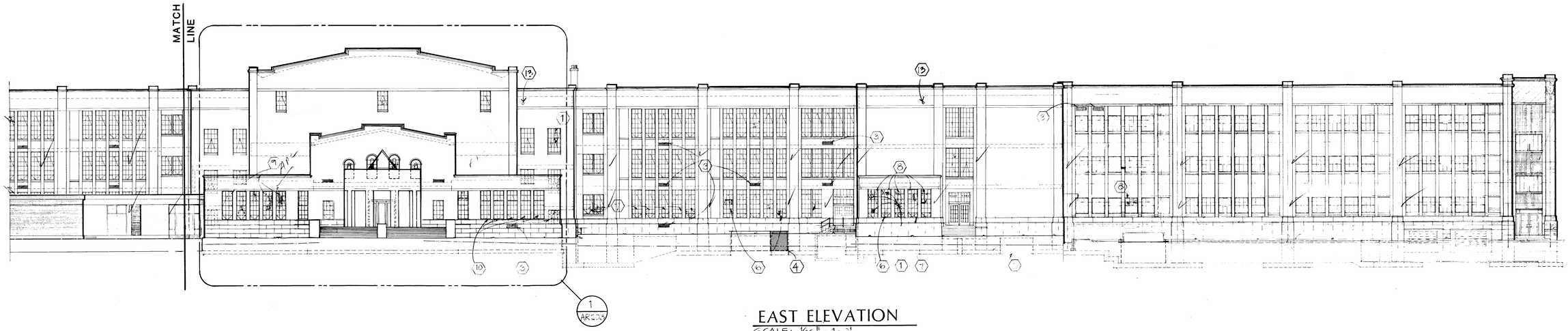

EAST ELEVATION
SCALE: 1/16" = 1'-0"

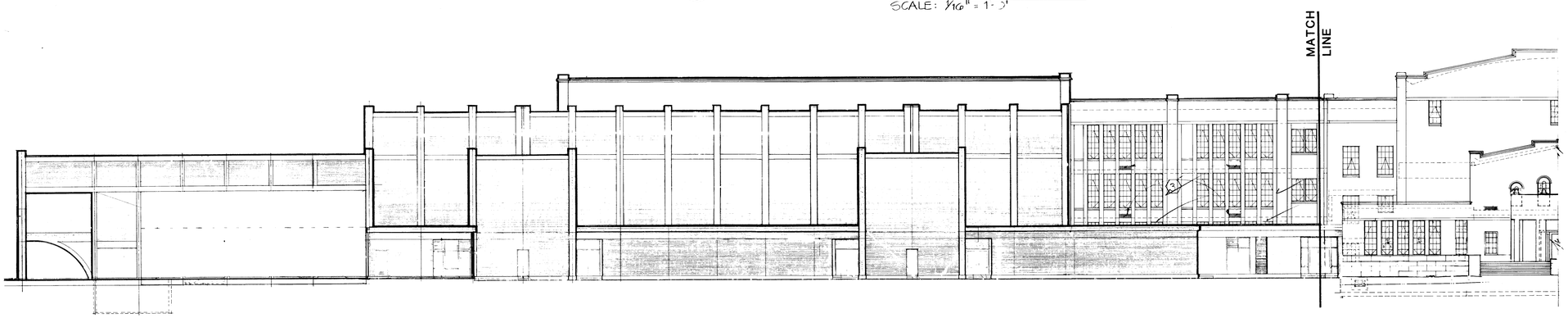

EAST ELEVATION
SCALE: 1/16" = 1'-0"

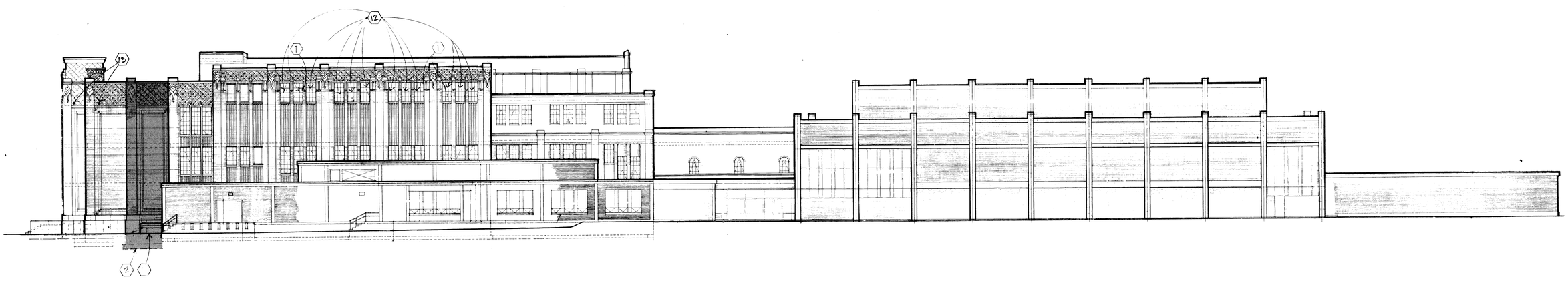

SOUTH ELEVATION
SCALE: 1/16" = 1'-0"

SHEET AR202
EXTERIOR ELEVATIONS

REFERENCE NOTES

1. REPLACE BROKEN GLASS
2. NEW ELEVATOR SHAFT. SEE SHEET AR502 AND AR503
3. PAINT EXISTING 12" X 39" MECHANICAL GRILL. INFILL OPENING FROM INSIDE WITH 8" CMU. SEE DETAIL 1/AR124
4. NEW AREA WELL. SEE DETAIL 10/SD105. SEE MECHANICAL AND STRUCTURAL PLANS FOR SIZE AND HEADER.
5. REMOVE 8'X 10' ROLL-UP DOOR AND RAMP
6. REMOVE EXISTING COOLING UNIT AND REPLACE WITH GLAZING, SASH, MULLIONS, TO MATCH EXISTING
7. REMOVE EXISTING MASONITE PANELS AND REPLACE WITH GLASS TO MATCH EXISTING.
8. STRIP EXISTING PAINT FROM GLAZING AND RESTORE WINDOW TO MATCH EXISTING.
9. REMOVE MASONRY INFILL AND REPLACE WITH NEW WINDOW TO MATCH EXISTING ADJACENT CONFIGURATION. SEE DA103.
10. REMOVE EXISTING WINDOW GRATING
11. NEW RAMP. SEE 6/SD105
12. REMOVE PAINT FROM GLAZING
13. NEW SCUPPER - SEE ROOF PLAN

COOPER ROBERTS
ARCHITECTS, A.I.A
202 WEST 300 NORTH
SALT LAKE CITY, UT 84103
(801) 355-5915

ANDERSON MASON DALE
1615 SEVENTEENTH STREET
DENVER, COLORADO 80202
(303) 294-9448

SOUTH CITY CAMPUS of SALT LAKE COMMUNITY COLLEGE

EXTERIOR BUILDING ELEVATIONS

REVISIONS:

PROJECT NUMBER: 88-041
DATE: JANUARY 1990
DRAWN: STAFF
CHECKED: WNC2
APPROVED:

SHEET OF

AR202

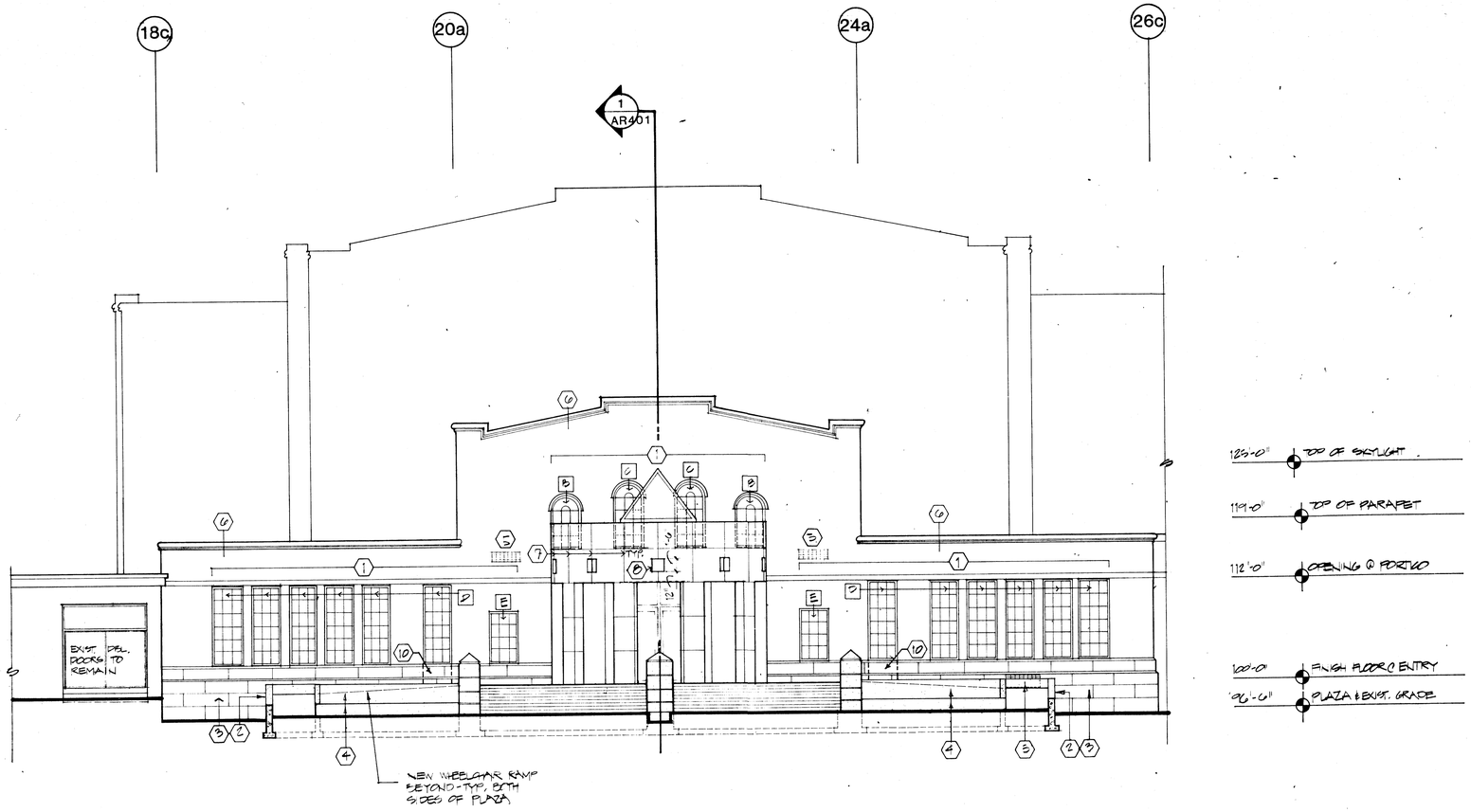

1 ENTRY(EAST)ELEVATION

1/8" : 1'-0"

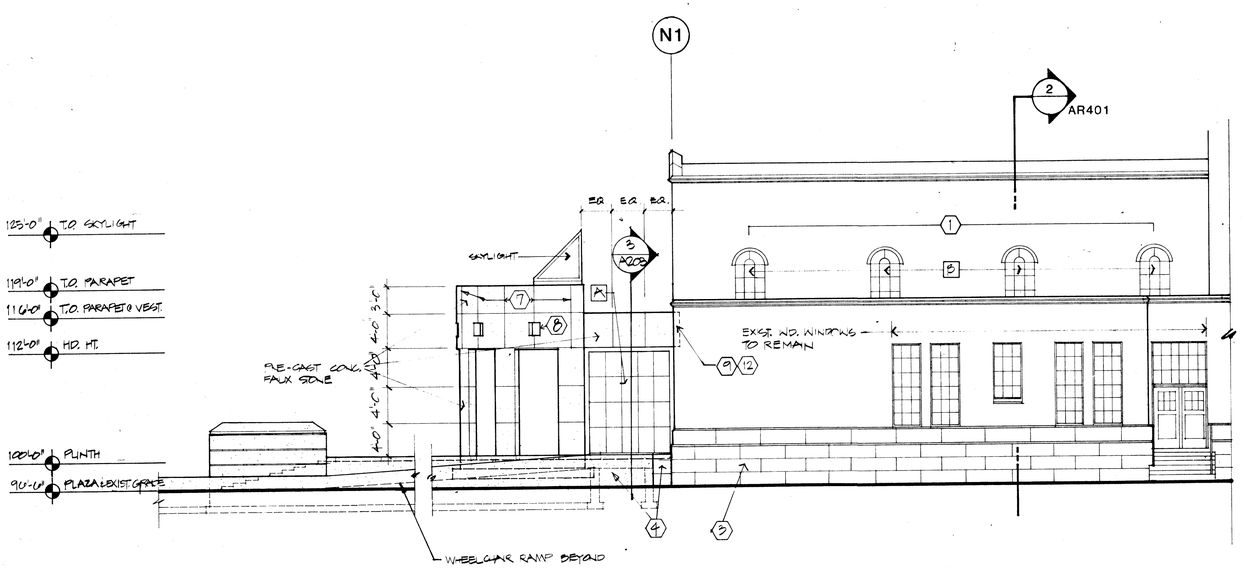

2 NORTH ELEVATION OF ENTRY/LOBBY

1/8" : 1'-0"

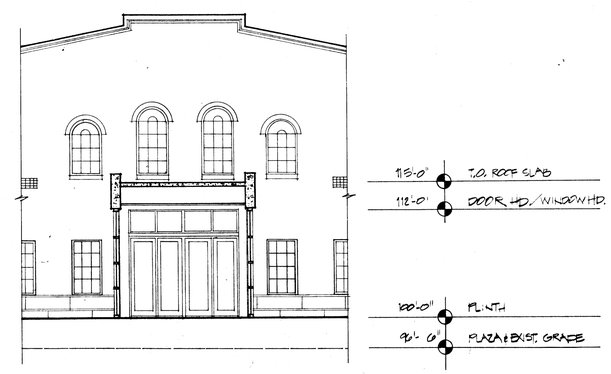

3 PARTIAL ELEVATION at ENTRY

1/8" : 1'-0"

REFERENCE NOTES

Elevations

1. New HM frame windows in exist. masonry openings.
2. Sloped concrete wall @ HC ramp, re: Plaza drawings.
3. Exist. concrete foundation wall. Re: demol. elevations (SHT DA 201) for demol., repair, & new concrete requirements.
4. New concrete wall, re: Plaza drawings.
5. Paint exist. grille, typ.
6. Re-point exist. parapet wall as req'd. Clean, repair exist. terra cotta coping as req'd.
7. Vertical score lines 1/2" w. X 1/2" d. centered above openings & columns as shown (horizontal score lines same dimensions, located as shown on elev.).
8. 1'-6" X 1-6" openings in portico wall, centered above openings, vertical dimensions as shown, re: also 3/AR403.
9. Precast beams. Re: Struc. for connection to existing building.
10. Infill masonry wall to match existing.
11. Precast scuppers
12. Sawcut existing masonry to fit "tight" around precast beam - no gaps greater than 1/4".

☐ Window type re: Sheet AR012

COOPER ROBERTS ARCHITECTS, AIA
202 WEST 300 NORTH
SALT LAKE CITY, UT 84103
(801) 355-5915

ANDERSON MASON DALE
1615 SEVENTEENTH STREET
DENVER, COLORADO 80202
(303) 294-9448

SOUTH CITY CAMPUS of SALT LAKE COMMUNITY COLLEGE

EAST ENTRY EXTERIOR ELEVATION

REVISIONS:

PROJECT NUMBER:
DATE:
DRAWN:
CHECKED:
APPROVED:

SHEET OF
AR203

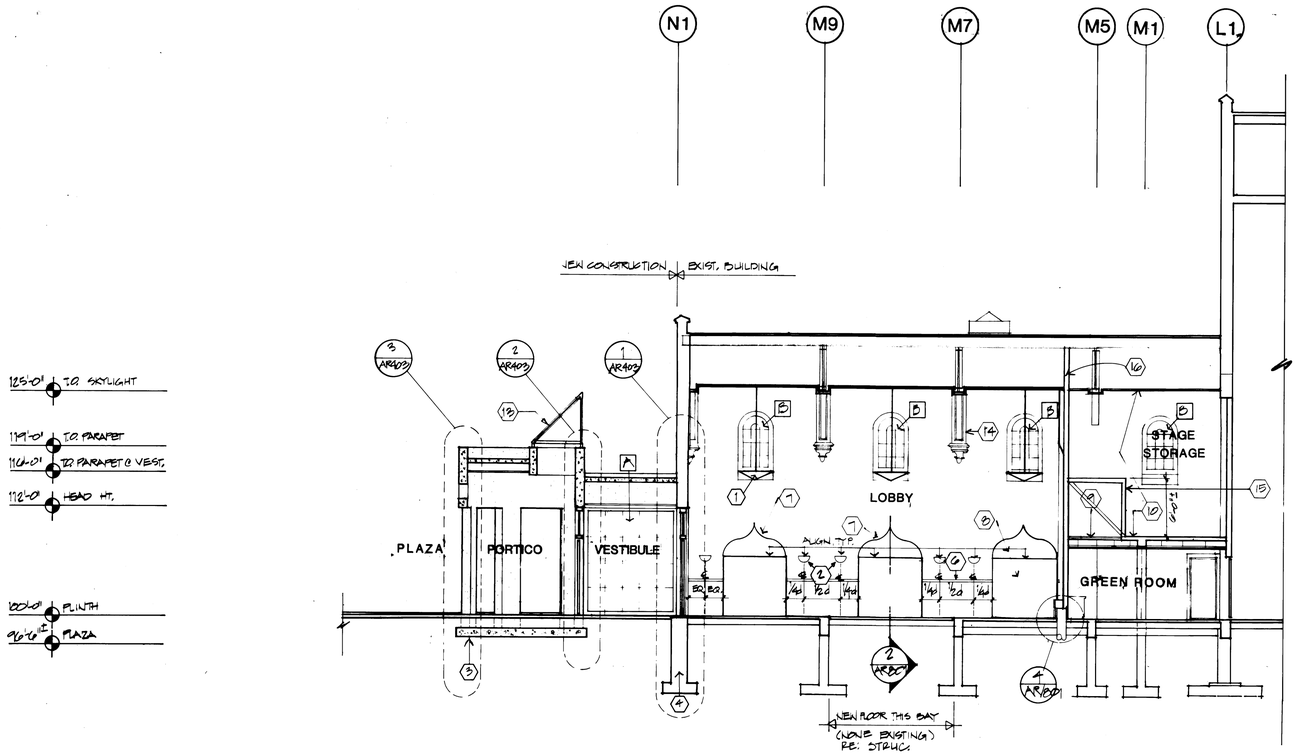

1 SECTION THRU ENTRY/LOBBY

1/8" : 1'-0"

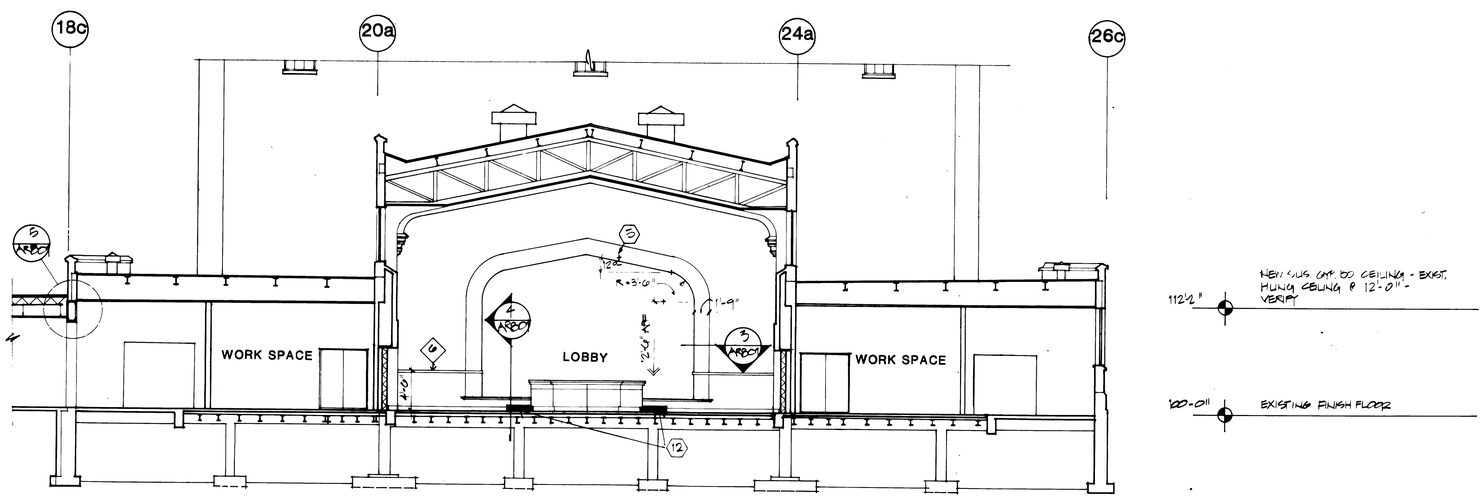

2 CROSS SECTION THRU LOBBY

1/8" : 1'-0"

REFERENCE NOTES

1. New suspended light fixture as scheduled, re: RCP and Elec.
2. New wall mounted sconce light as scheduled. Sconce pairs between openings are spaced at 1/4 points, as shown, re: RCP & Elec.
3. Footing, re: Struct.
4. Exist. foundation wall & footing w/top 3'-0" +/- removed, re: wall sections & Struct.
5. Angle given is approximate. Top of arch to be parallel to ceiling.
6. WM224 oak batten used for wainscot.
7. New openings with new cast plaster ornaments at head to match existing.
8. Existing opening walled up - existing cast plaster head to remain.
9. Iron black frame.
10. Existing floor and clg. to remain.
11. Access doors to chase re: Mech. re: Struc for lintels
12. Mech. grilles re: Mech.
13. Skylight
14. Existing beam covers - patch and repair - paint.
15. METAL STUD BRACING COVERED W/ 5/8" PLYWD.
16. 4" x 20 GAGE METAL STUDS @ 16" O.C.

COOPER ROBERTS ARCHITECTS, A.I.A
202 WEST 300 NORTH
SALT LAKE CITY, UT 84103
(801) 355-5915

ANDERSON MASON DALE
1615 SEVENTEENTH STREET
DENVER, COLORADO 80202
(303) 294-9448

SOUTH CITY CAMPUS of SALT LAKE COMMUNITY COLLEGE

PARTIAL BUILDING SECTION - AREA 8D

REVISIONS:
As-Built

PROJECT NUMBER:
DATE:
DRAWN:
CHECKED:
APPROVED:

SHEET OF
AR401

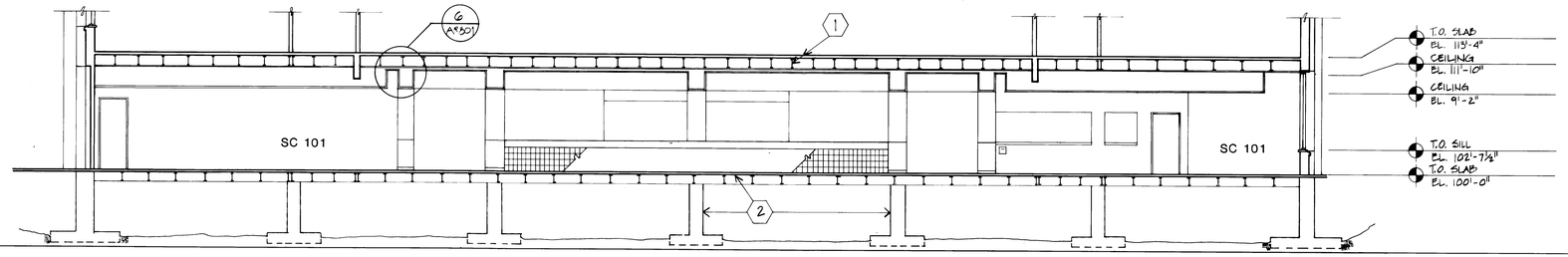

SECTION

1/8" : 1'-0" (1)

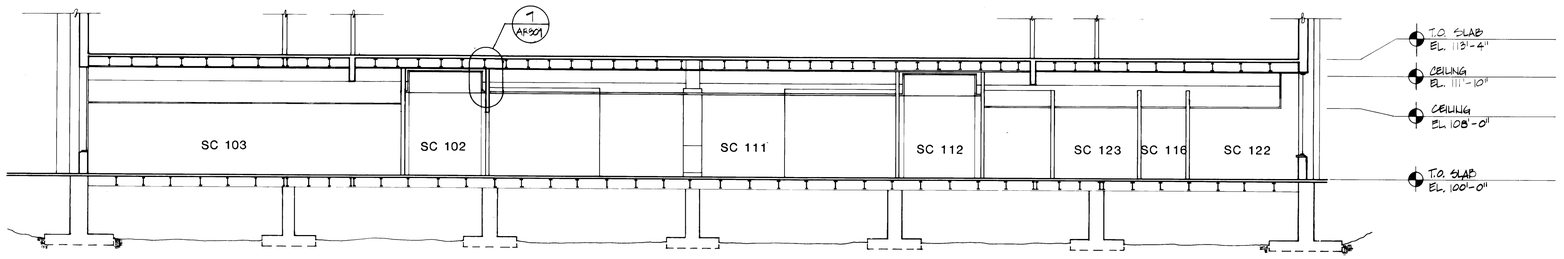

SECTION

1/8" : 1'-0" (2)

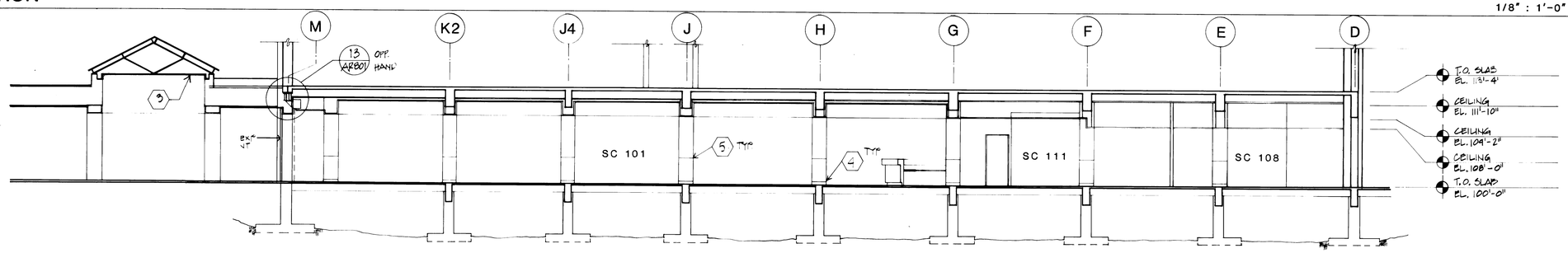

SECTION

1/8" : 1'-0" (3)

REFERENCE NOTES

1 Existing floor slab and beams typ.

2 Existing foundations, floor slab and beams typ.

3 New Skylight re: sheet AR3x4

4 4" Wood Base

5 Gyp Bd Reveal

COOPER ROBERTS
ARCHITECTS, A.I.A
202 WEST 300 NORTH
SALT LAKE CITY, UT 84103
(801) 355-5915

ANDERSON MASON DALE
1615 SEVENTEENTH STREET
DENVER, COLORADO 80202
(303) 294-9448

SOUTH CITY CAMPUS of SALT LAKE COMMUNITY COLLEGE

PARTIAL BUILDING SECTION - AREA 8G

REVISIONS:

As-Built

PROJECT NUMBER:
DATE:
DRAWN:
CHECKED:
APPROVED:

SHEET OF
AR402

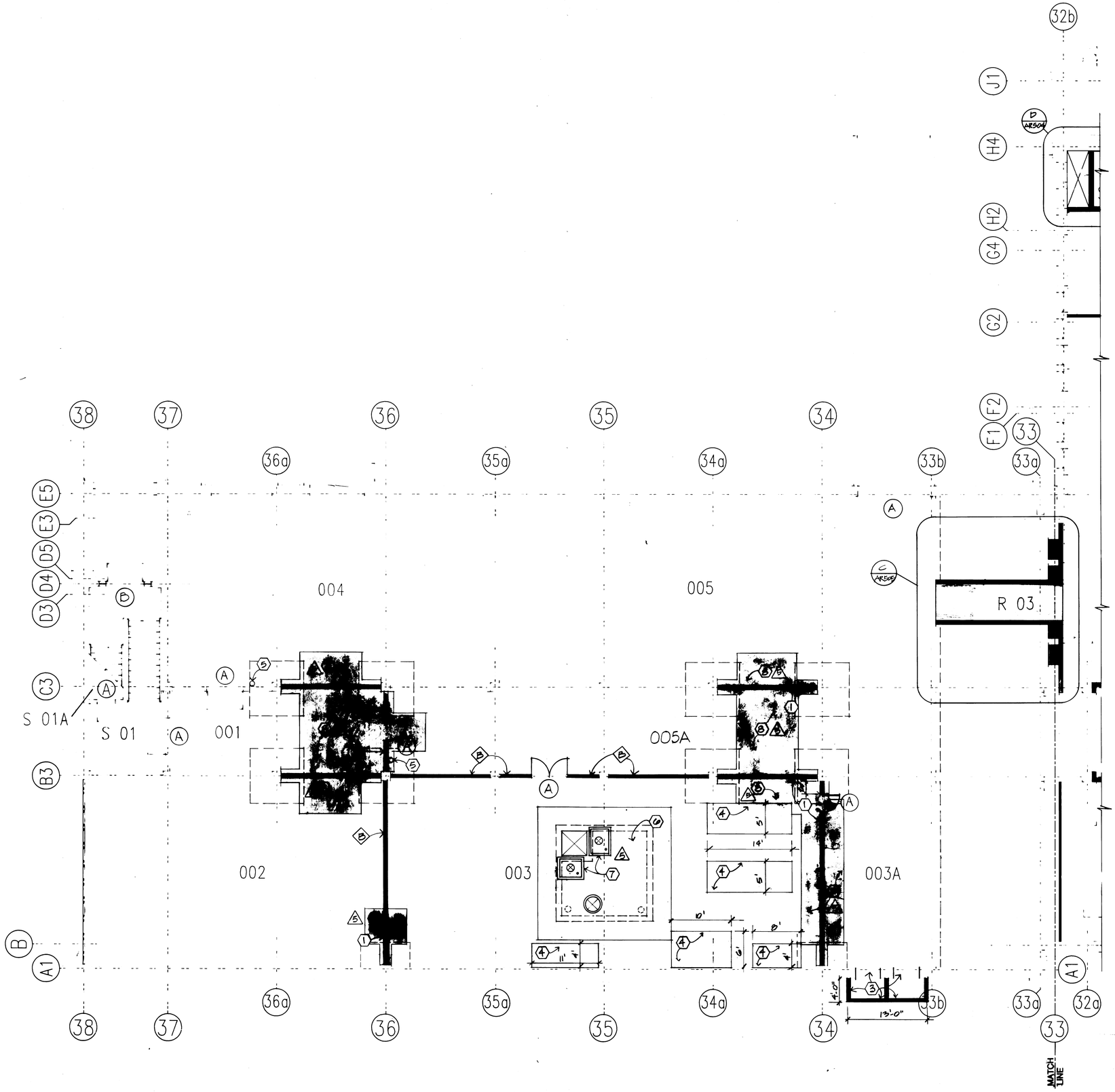

SHEET AR101

REFERENCE NOTES

1 NEW SHEAR WALL. SEE STRUCTURAL.

2/3 NOT USED.

4 NEW 4" THICK CONCRETE [illegible] AS REQUIRED TO [illegible] ABOVE.

5 WALL MOUNTED [illegible]

6 NEW 10' x 12' x 7' DEEP SUMP. SEE MECHANICAL

7 4" HIGH x 4" WIDE CONCRETE CURB INTEGRAL WITH TOP OF SUMP

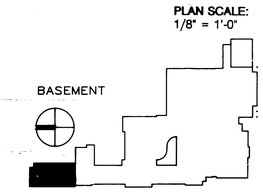

PLAN SCALE:
1/8" = 1'-0"

COOPER ROBERTS
ARCHITECTS, A.I.A.
202 WEST 300 NORTH
SALT LAKE CITY, UT 84103
(801) 355-5915

ANDERSON MASON DALE
1615 SEVENTEENTH STREET
DENVER, COLORADO 80202
(303) 294-9448

SOUTH CITY CAMPUS of SALT LAKE COMMUNITY COLLEGE

PARTIAL BASEMENT FLOOR PLAN
AREA 8A

REVISIONS:
5 ADDENDUM FIVE
As-Built

PROJECT NUMBER: [illegible]
DATE: JANUARY [illegible]
DRAWN: STAFF
CHECKED: WNC2
APPROVED:

SHEET OF

AR101

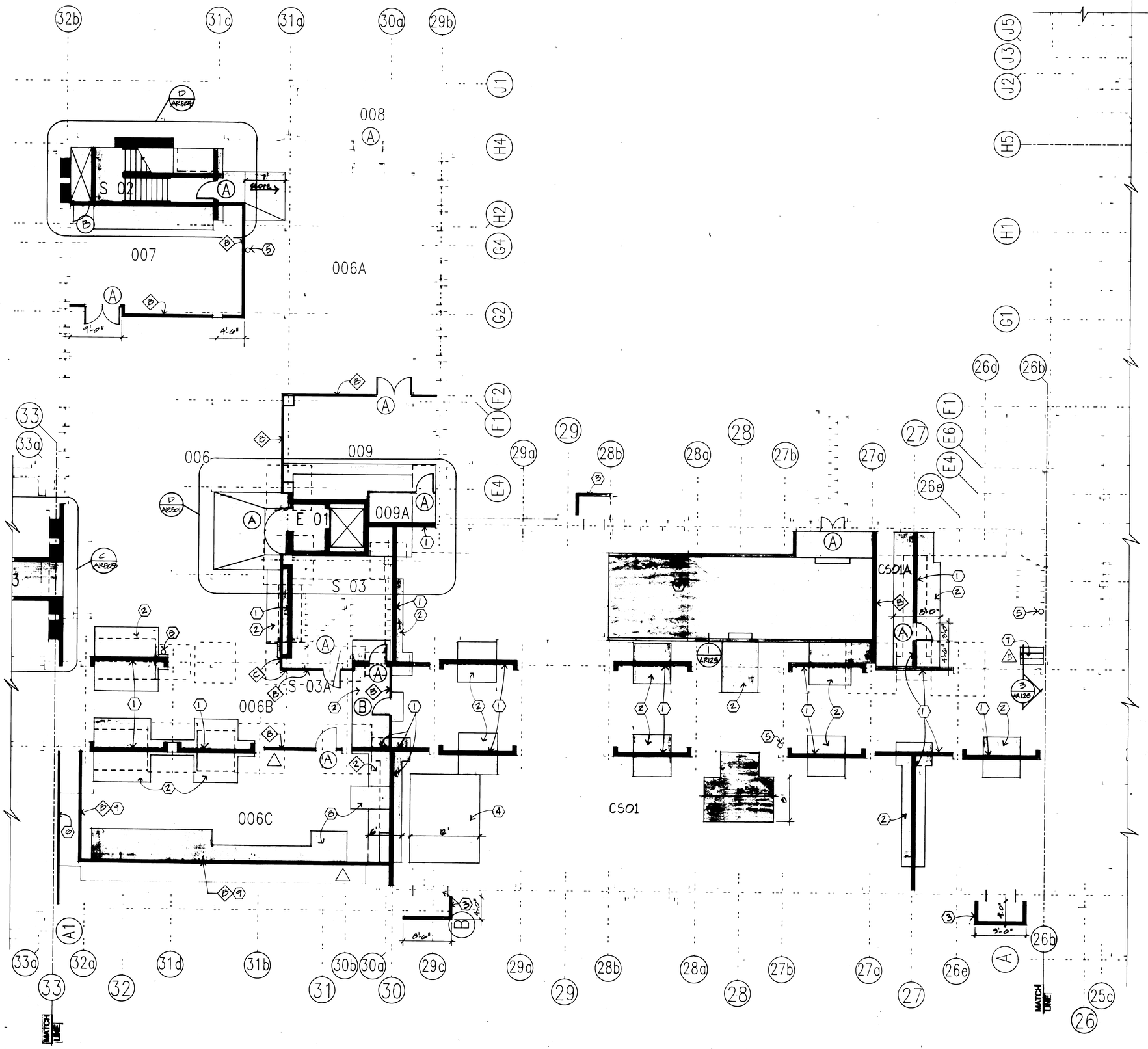

SHEET AR102

REFERENCE NOTES

1. NEW SHEAR WALL. SEE STRUCTURAL.
2. NEW FOOTING - SEE STRUCTURAL
3. NEW AIR INTAKE AREA WELL WITH NEW OPENING SAW CUT IN WALL - SEE MECHANICAL FOR SIZE. SEE STRUCTURAL FOR HEADER. SEE 10/SD105.
4. NEW 4" THICK CONCRETE MECHANICAL PAD. EXCAVATE AS REQUIRED SO TOP OF SLAB IS 7" MIN. BELOW JOISTS ABOVE.
5. WALL MOUNTED FIRE EXTINGUISHER
6. NEW SHOTCRETE ON WALL. SEE STRUCTURAL
7. NEW CONCRETE STEPS WITH 12" TREADS. 7" MAX. RISERS. #5 BAR IN NOSING.
8. NEW 4" CONCRETE ELECTRICAL EQUIPMENT PAD - COORDINATE W/ ELECTRICAL FOR LOCATION
9. LOCATE NEW WALL ON TOP OF EXISTING CONCRETE FOOTING AT OUTSIDE EDGE - EXTEND TO CEILING ABOVE

COOPER ROBERTS ARCHITECTS
202 WEST 300 NORTH
SALT LAKE CITY, UT 84103
(801) 355-5915

ANDERSON MASON DEVE

1615 SEVENTEENTH STREET
DENVER, COLORADO 80202
(303) 294-9448

SOUTH CITY CAMPUS of SALT LAKE COMMUNITY COLLEGE

PARTIAL BASEMENT FLOOR PLAN AREA "B"

REVISIONS:
5 ADDENDUM FIVE
As-Built

PROJECT NO.:
DATE:
DRAWN:
CHECKED:
APPROVED:

SHEET OF

PLAN SCALE: 1/8" = 1'-0"

BASEMENT

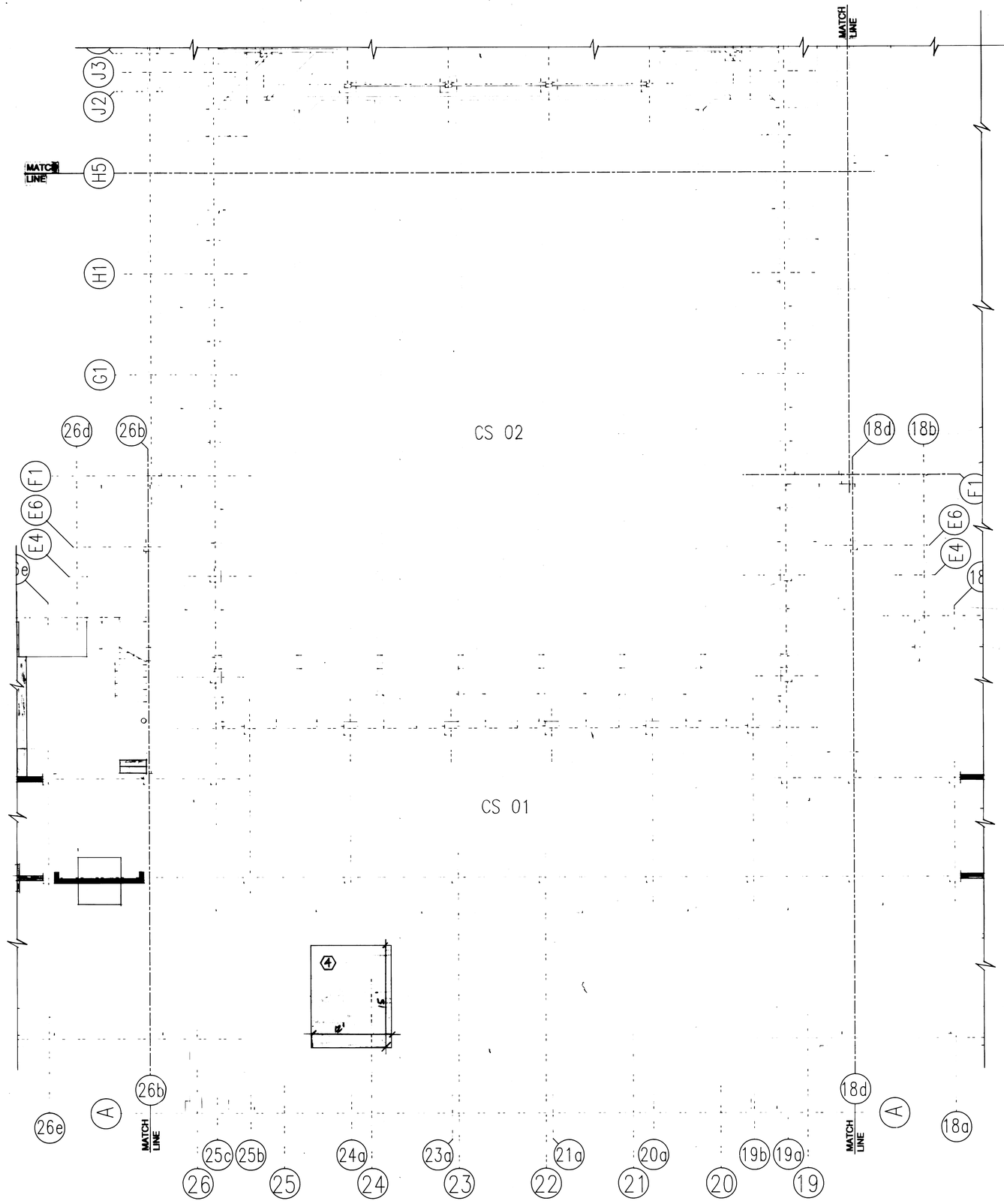

SHEET AR103

REFERENCE NOTES

1-2 NOT USED

3 NEW AIR INTAKE AREA WELL WITH NEW SAW CUT OPENING IN WALL. SEE MECHANICAL FOR SIZE. SEE STRUCTURAL FOR HEADER. SEE 10/SD105.

4 NEW 4" THICK CONCRETE MECHANICAL PAD. EXCAVATE AS REQUIRED SO TOP OF SLAB IS 7" MIN. BELOW JOISTS ABOVE.

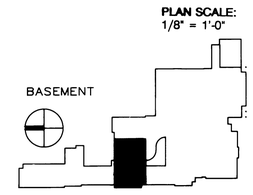

COOPER ROBERTS
ARCHITECTS AIA
202 WEST 300 NORTH
SALT LAKE CITY, UT 84103
(801) 355-5915

ANDERSON MASON DALE
1615 SEVENTEENTH STREET
DENVER, COLORADO 80202
(303) 294-9448

SOUTH CITY CAMPUS of SALT LAKE COMMUNITY COLLEGE

PARTIAL BASEMENT FLOOR PLAN AREA 8C

REVISIONS:

As-Built

PROJECT NUMBER: [illegible]
DATE: JANUARY [illegible]
DRAWN: STAFF
CHECKED: WNC2
APPROVED:

SHEET OF

AR103

SHEET AR104

REFERENCE NOTES

1-2	NOT USED
3	NEW AIR INTAKE AREA WELL WITH NEW SAW CUT OPENING IN WALL. SEE MECHANICAL FOR SIZE. SEE STRUCTURAL FOR HEADER. SEE 16/SD103.
4	NEW 4" THICK CONCRETE MECHANICAL PAD. ELEVATE AS REQUIRED SO TOP OF SLAB IS 7" MIN. BELOW JOISTS ABOVE.
5	NOT USED
6	NEW 36" x 36" 90 MINUTE RATED ACCESS DOOR
7	NEW 8" x 16" UNREINFORCED CONCRETE FOOTING

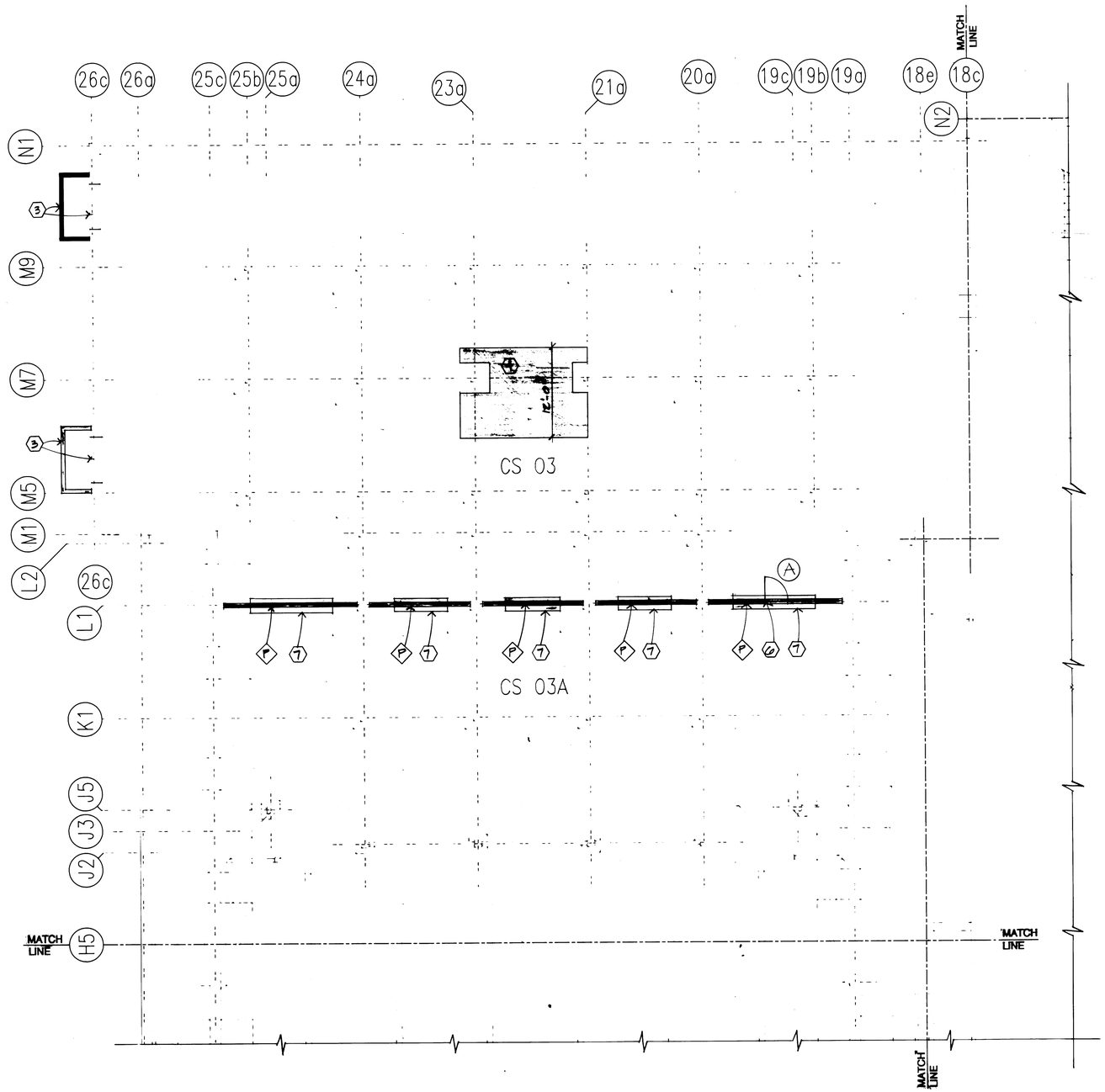

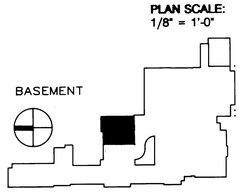

PLAN SCALE:
1/8" = 1'-0"

COOPER ROBERTS
ARCHITECTS AIA

202 WEST 300 NORTH
SALT LAKE CITY, UT 84103
(801) 355-5915

ANDERSON MASON DALL

1615 SEVENTEENTH STREET
DENVER, COLORADO 80202
(303) 294-9448

SOUTH CITY CAMPUS of SALT LAKE COMMUNITY COLLEGE

PARTIAL BASEMENT FLOOR PLAN AREA 8D

REVISIONS:

As-Built

PROJECT NUMBER: 88-[illegible]
DATE: JANUARY 19[illegible]
DRAWN: STAFF
CHECKED: [illegible]
APPROVED:

SHEET OF

AR 104

SHEET AR105

REFERENCE NOTES

1. NEW SHEAR WALL. SEE STRUCTURAL.
2. NEW FOOTING - SEE STRUCTURAL
3. NEW AIR INTAKE AREA WELL WITH NEW SAW CUT OPENING IN WALL. SEE MECHANICAL FOR SIZE. SEE STRUCTURAL FOR HEADER. SEE 16/SD105.
4. NEW 4" THICK CONCRETE MECHANICAL PAD. EXCAVATE AS REQUIRED SO TOP OF SLAB IS 7" MIN. BELOW JOISTS ABOVE.
5. NOT USED
6. NEW SHOTCRETE ON EXISTING WALL. SEE STRUCTURAL
7. NEW 8" x 16" UNREINFORCED CONCRETE FOOTING

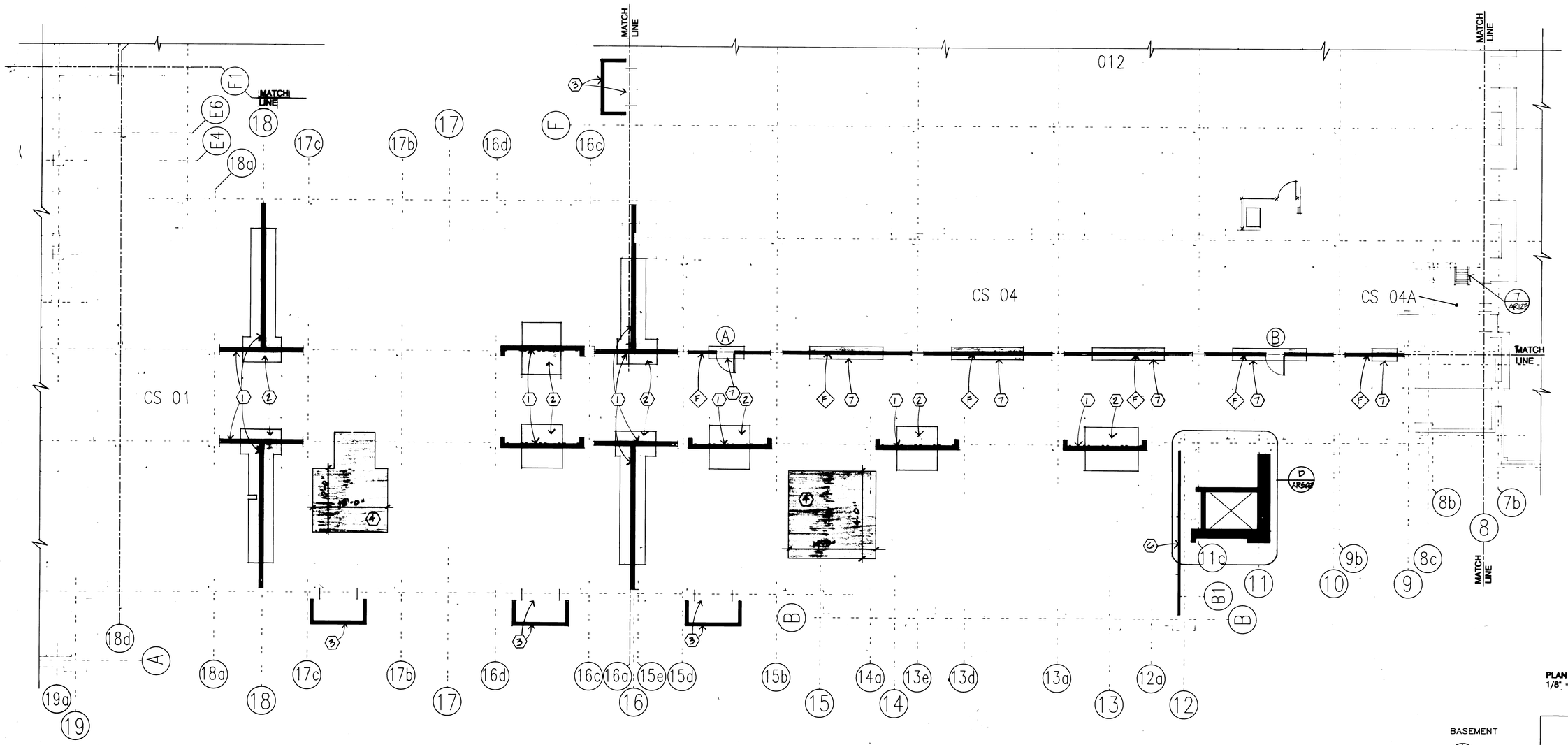

COOPER ROBERTS
ARCHITECTS, A.I.A.
202 WEST 300 NORTH
SALT LAKE CITY, UT 84103
(801) 355-5915

ANDERSON MASON DALE
1615 SEVENTEENTH STREET
DENVER, COLORADO 80202
(303) 294-9448

SOUTH CITY CAMPUS of SALT LAKE COMMUNITY COLLEGE

PARTIAL BASEMENT FLOOR PLAN AREA 8E

REVISIONS:

As-Built

PROJECT NUMBER: [redacted]
DATE: JANUARY 1[redacted]
DRAWN: STAFF
CHECKED: [redacted]
APPROVED:

SHEET OF

AR 105

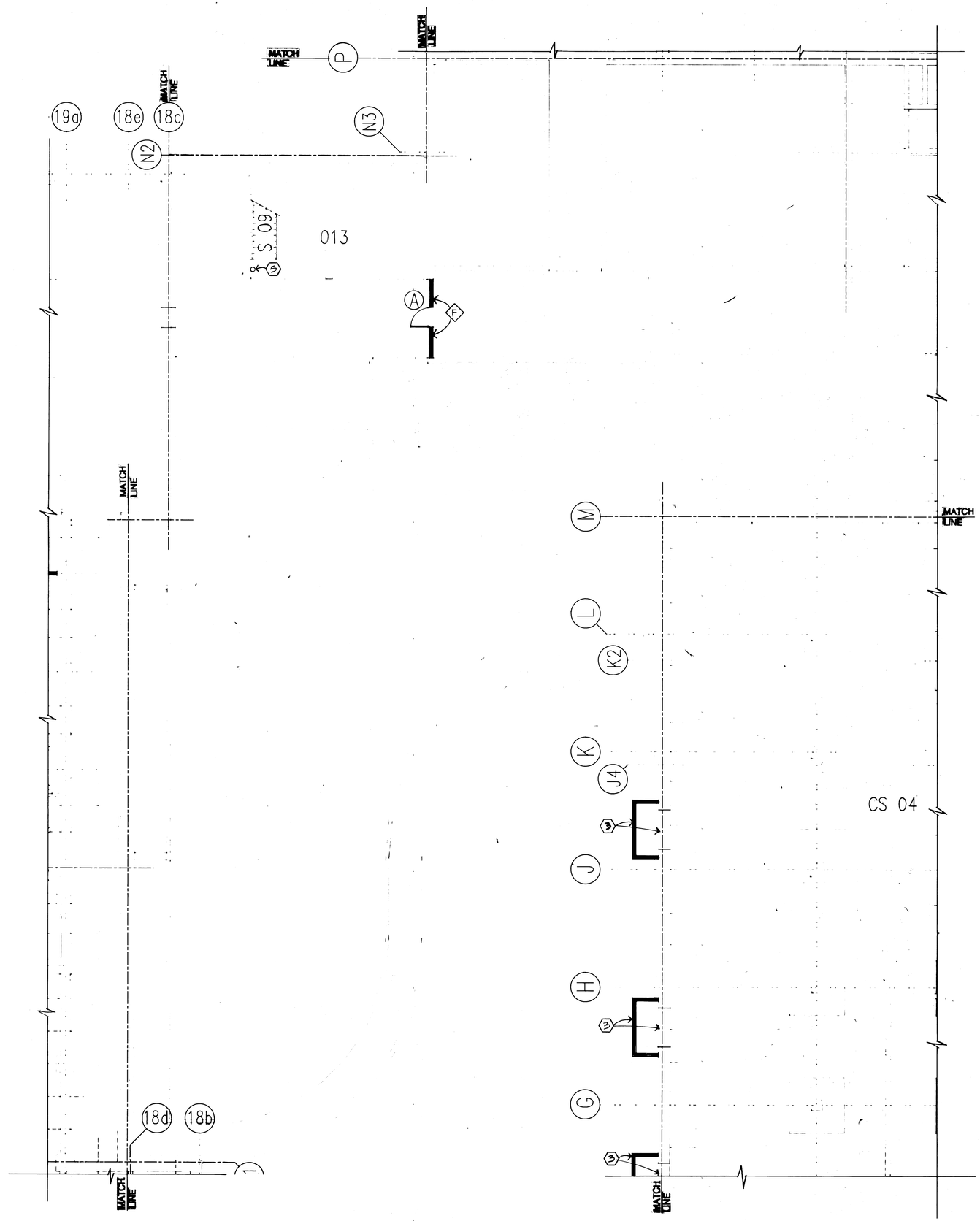

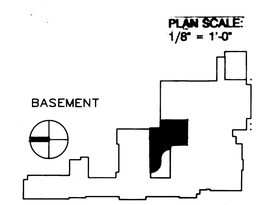

COOPER ROBERTS
ARCHITECTS
202 WEST 300 NORTH
SALT LAKE CITY, UT 84103
(801) 355-5915

ANDERSON MASON DALE
1615 SEVENTEENTH STREET
DENVER, COLORADO 80202
(303) 294-9448

SOUTH CITY CAMPUS of SALT LAKE COMMUNITY COLLEGE

PARTIAL BASEMENT FLOOR PLAN AREA 8F

REVISIONS:

As-Built

PROJECT [redacted]
DATE:
DRAWN [redacted]
CHECKE [redacted]
APPROVED:

SHEET OF

AR10[redacted]

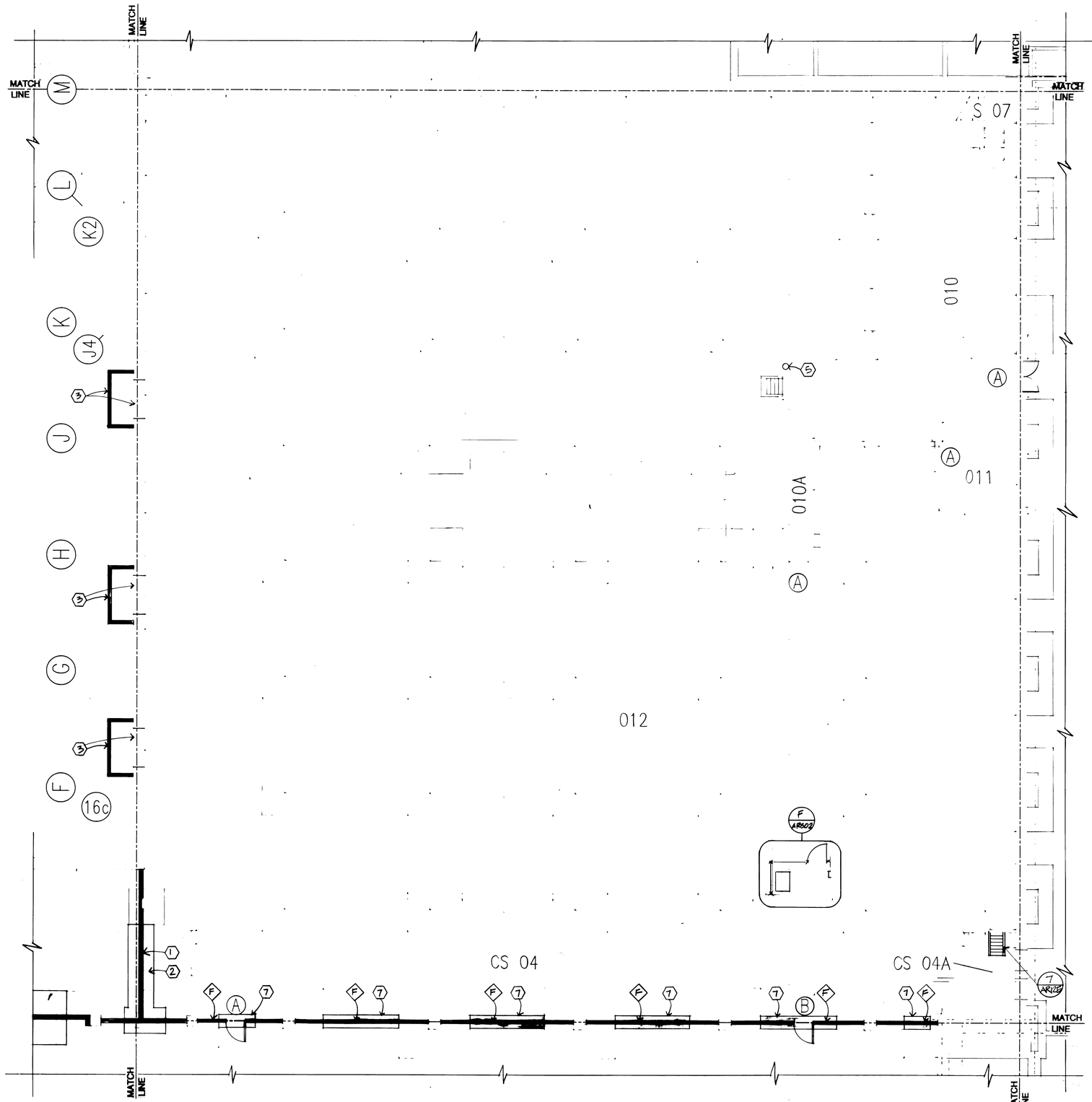

SHEET AR107

REFERENCE NOTES

1. NEW SHEAR WALL. SEE STRUCTURAL.
2. NEW FOOTING - SEE STRUCTURAL
3. NEW AIR INTAKE AREA WELL WITH NEW SAW CUT OPENING IN WALL. SEE MECHANICAL FOR SIZE. SEE STRUCTURAL FOR HEADER. SEE 10/SD105.
4. NEW 4" THICK CONCRETE MECHANICAL PAD. EXCAVATE AS REQUIRED SO TOP OF SLAB IS 7" MIN. BELOW JOISTS ABOVE.
5. WALL MOUNTED FIRE EXTINGUISHER
6. NOT USED
7. NEW 8" x 16" UNREINFORCED CONCRETE FOOTING

PLAN SCALE:
1/8" = 1'-0"

BASEMENT

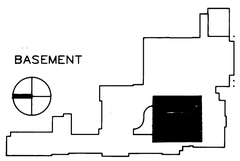

COOPER ROBERTS
ARCHITECTS, A.I.A
202 WEST 300 NORTH
SALT LAKE CITY, UT 84103
(801) 355-5915

ANDERSON MASON DALE
1615 SEVENTEENTH STREET
DENVER, COLORADO 80202
(303) 294-9448

SOUTH CITY CAMPUS of SALT LAKE COMMUNITY COLLEGE

PARTIAL BASEMENT FLOOR PLAN
AREA 8G

REVISIONS:
As-Built

PROJECT NUMBER: 88-041
DATE: JANUARY 1988
DRAWN: STAFF
CHECKED: WHC2
APPROVED:

SHEET OF
AR 107

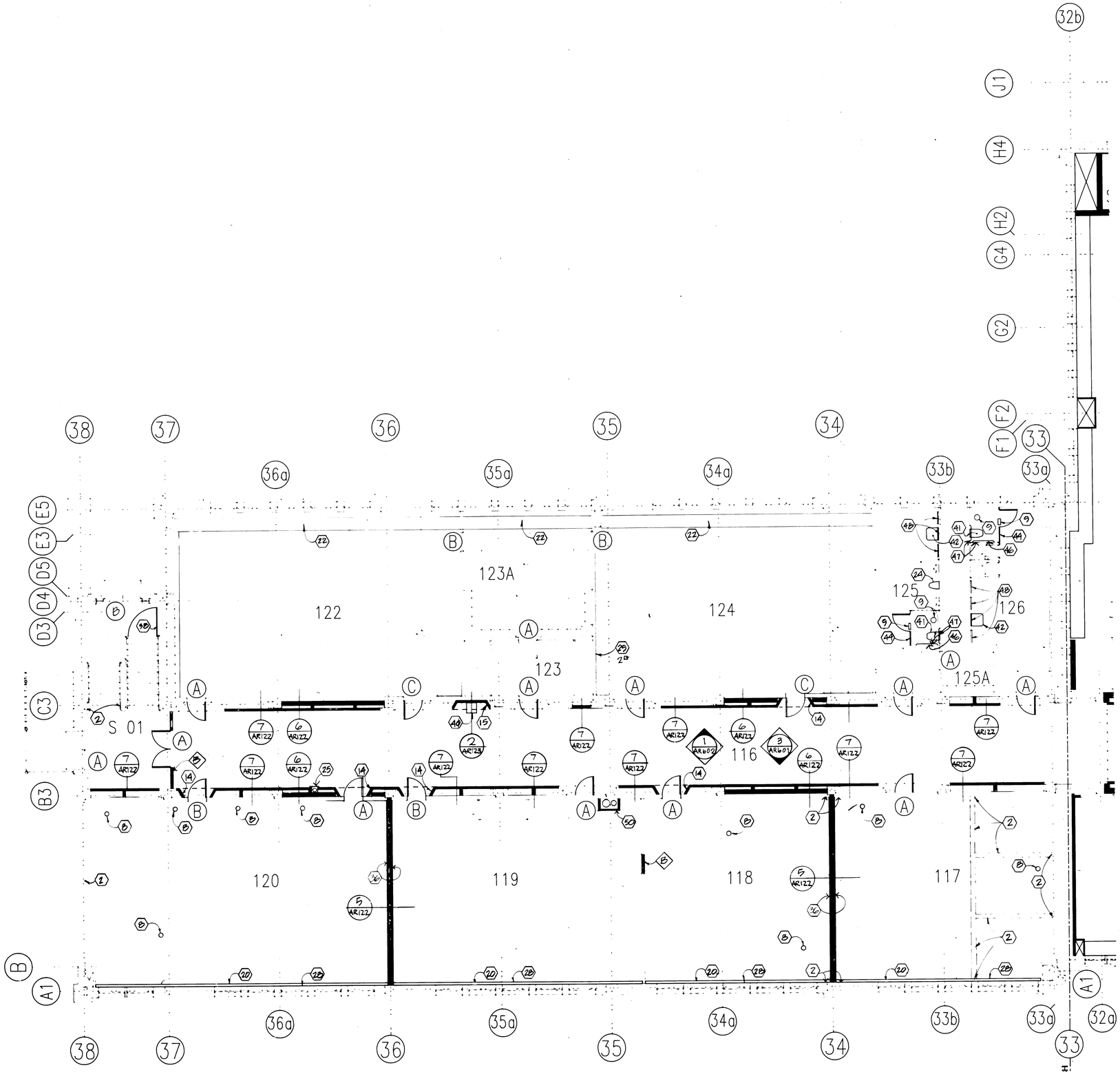

SHEET AR108

REFERENCE NOTES

1	NOT USED
2	REPAIR ALL WALL, CEILING, AND FLOOR SURFACES DAMAGED DURING DEMOLITION AND NEW CONSTRUCTION TO MATCH EXISTING ADJACENT SURFACES.
3-7	NOT USED
8	PATCH HOLE IN FLOOR AT REMOVED PLUMBING FIXTURE. MATCH EXISTING ADJACENT FLOOR FINISH. TYP.ALL HOLES. ALL HOLES NOT SHOWN.
9	NEW CERAMIC TILE ON FLOOR AND WALL AT REMOVED PLUMBING FIXTURE AND TOILET PARTITION
10-13	NOT USED
14	NEW DOOR RECESS TO MATCH EXISTING RECESSES. GRIND FLOOR TO FLUSH OUT WITH EXISTING
15	NEW WATER COOLER RECESS. MATCH EXISTING CORRIDOR RECESSES. GRIND FLOOR TO FLUSH OUT WITH EXISTING FLOOR
16-19	NOT USED
20	NEW FIN TUBE CONVECTOR CABINET - SEE MECHANICAL AND 1/AR125
21	NOT USED
22	REINSTALL SALVAGED CASEWORK AFTER COMPLETION OF MECHANICAL WORK. MAKE MINOR MODIFICATIONS TO CASEWORK AS REQUIRED TO FIT. INSTALL NEW COUNTERTOP AND BACKSPLASH
23	NOT USED
24	NEW URINAL
25	NEW FIRE EXTINGUISHER IN NEW RECESSED CABINET. TOP OF CAB. 5' ABOVE FLOOR.
26-27	NOT USED
28	NEW PLASTER AND LATH OVER EXISTING MASONRY AT REMOVED CABINETS AND CHASE
29	REPAIR DAMAGED PLASTER TO NEW CONDITION
30	NEW 4' HIGH MARKER BOARD - FULL ROOM WIDTH
38	NEW GATE. SEE 16/AR124
39	NOT USED
40	NEW ELECTRIC WATER COOLER
41	NEW TOILET
42	NEW LAVATORY
43	NOT USED
44	NEW TOILET PARTITION
45-46	NOT USED
47	NEW HANDICAP GRAB BARS
48	NEW 1'-8" X 3'-0" MIRROR ABOVE EACH LAVATORY
49	NOT USED
50	NEW MECHANICAL SHAFT. SEE DETAIL 7/AR123.

PLAN SCALE:
1/8" = 1'-0"

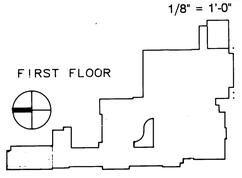

COOPER ROBERTS
ARCHITECTS, A.I.A
202 WEST 300 NORTH
SALT LAKE CITY, UT 84103
(801) 355-5915

ANDERSON MASON DALE
1615 SEVENTEENTH STREET
DENVER, COLORADO 80202
(303) 294-9448

SOUTH CITY CAMPUS of SALT LAKE COMMUNITY COLLEGE

PARTIAL FIRST FLOOR PLAN AREA 8A

REVISIONS:
As-Built

PROJECT NUMBER: 88-041
DATE: JANUARY 1989
DRAWN: STAFF
CHECKED: WNC2
APPROVED:

SHEET OF
AR108

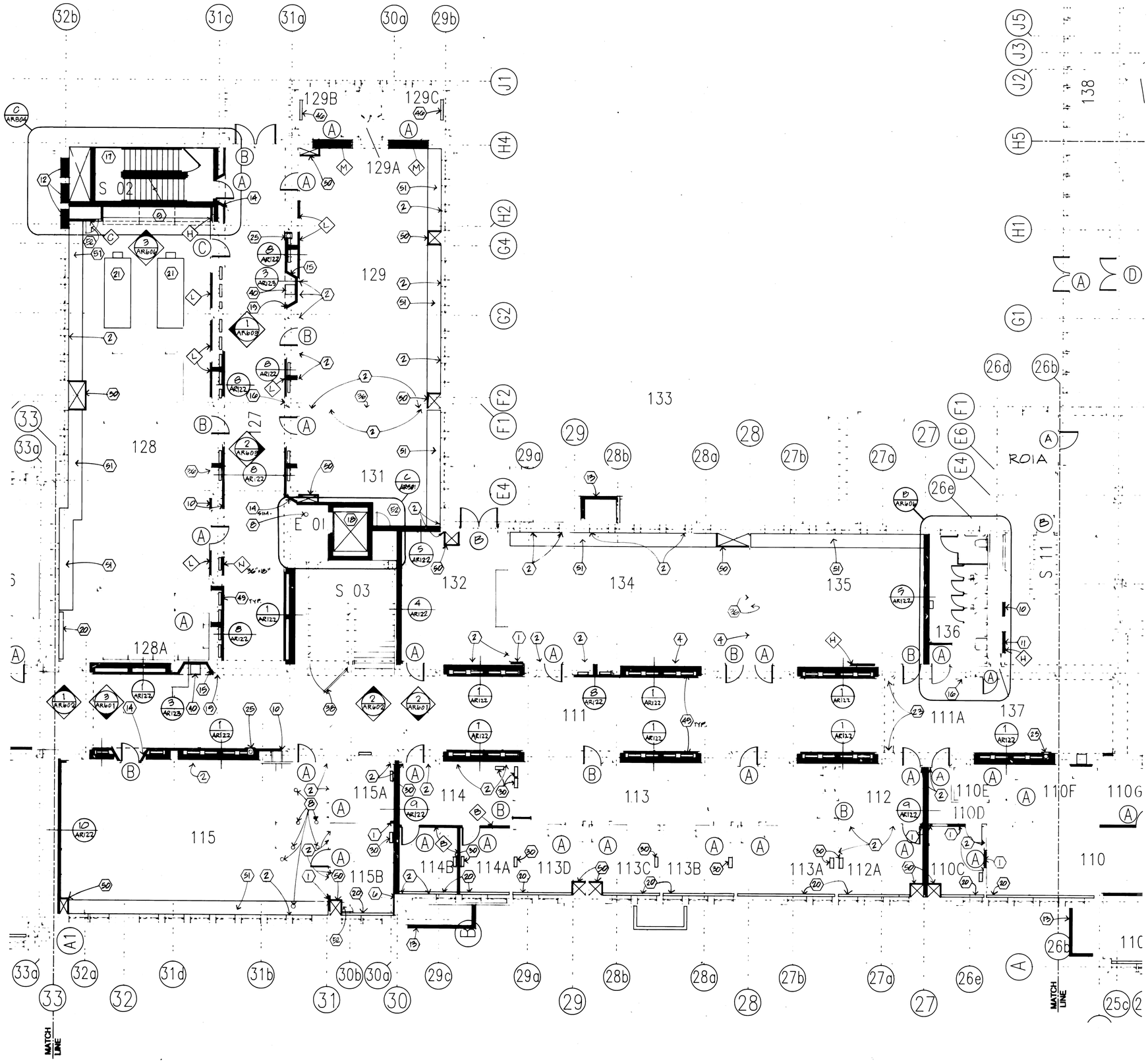

REFERENCE NOTES

AR109

1	INFILL WALL OPENING TO MATCH EXISTING ADJACENT WALL
2	REPAIR ALL WALL, CEILING, AND FLOOR SURFACES DAMAGED DURING DEMOLITION AND NEW CONSTRUCTION TO MATCH EXISTING ADJACENT SURFACES.
3	NOT USED
4	INFILL EXISTING OPENINGS IN CONCRETE FLOOR SLAB. SIZE INDICATED ON DRAWINGS
6	NEW GYP BD ON HAT CHANNELS TO ALIGN W/ GYP. BD ON SHEAR WALL
8	PATCH HOLE IN FLOOR AT REMOVED PLUMBING FIXTURE. MATCH EXISTING ADJACENT FLOOR FINISH. TYP ALL HOLES. ALL HOLES NOT SHOWN.
9	NEW HOODS - SEE MECHANICAL
10	INFILL WALL AT REMOVED TRASH CHUTE. SEE 7/AR124
11	INFILL WALL AT REMOVED FIRE EXTINGUISHER CABINET.
12	INFILL WINDOW OPENING. SEE SHEET AR604.
13	NEW AIR INTAKE AREA WELL - SEE STRUCTURAL, MECHANICAL & 10/SD105
14	NEW DOOR RECESS TO MATCH EXISTING RECESSES. GRIND FLOOR TO FLUSH OUT WITH EXISTING
15	NEW WATER COOLER RECESS. MATCH EXISTING CORRIDOR RECESSES. GRIND FLOOR TO FLUSH OUT WITH EXISTING FLOOR
16	PATCH AND REPAIR HOLES IN PLASTER, AND REPLACE DAMAGED BRICK AT REMOVED WATER COOLER TO MATCH EXISTING WALLS
17	NEW STAIRS IN NEW SHAFT
18	NEW ELEVATOR IN NEW SHAFT
19	REPLACE CRACKED BRICK AND REPOINT BRICK WAINSCOT TO MATCH EXISTING
20	NEW FIN TUBE CONVECTOR CABINET - SEE MECHANICAL
21	RELOCATED SALVAGED CABINETS
22	NOT USED
23	COVER EXISTING ROLL UP CURTAIN TRACK. SEE 3/AR124
24	NOT USED
25	NEW FIRE EXTINGUISHER IN NEW RECESSED CABINET. TOP OF CAB. 5' ABOVE FLOOR.
26-29	NOT USED
30	NEW MECHANICAL GRILLE FLOOR OPENING
36	NEW 4' HIGH CONTINUOUS MARKER BOARD
38	NEW GATE. SEE 4/AR604
39	NOT USED
40	NEW ELECTRIC WATER COOLER
41-45	NOT USED
46	NEW FAN COIL UNIT
47-48	NOT USED
49	NEW RETURN AIR FLOOR OPENING - SEE MECHANICAL
50	NEW MECHANICAL SHAFT - SEE 7/AR123
51	NEW MECHANICAL ENCLOSURE - SEE DETAIL 5/AR124
52	NEW 24" SQUARE ACCESS DOOR

PLAN SCALE:
1/8" = 1'-0"

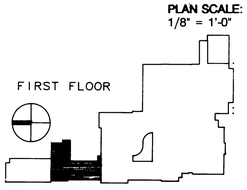

COOPER ROBERTS
ARCHITECTS, A.I.A
202 WEST 300 NORTH
SALT LAKE CITY, UT 84103
(801) 355-5915

ANDERSON MASON DALE
1615 SEVENTEENTH STREET
DENVER, COLORADO 80202
(303) 294-9448

SOUTH CITY CAMPUS of SALT LAKE COMMUNITY COLLEGE

PARTIAL FIRST FLOOR PLAN AREA 8B

REVISIONS:
As-Built

PROJECT NUMBER: 88-041
DATE: JANUARY 1988
DRAWN: STAFF
CHECKED: WNC2
APPROVED:

SHEET OF
AR109

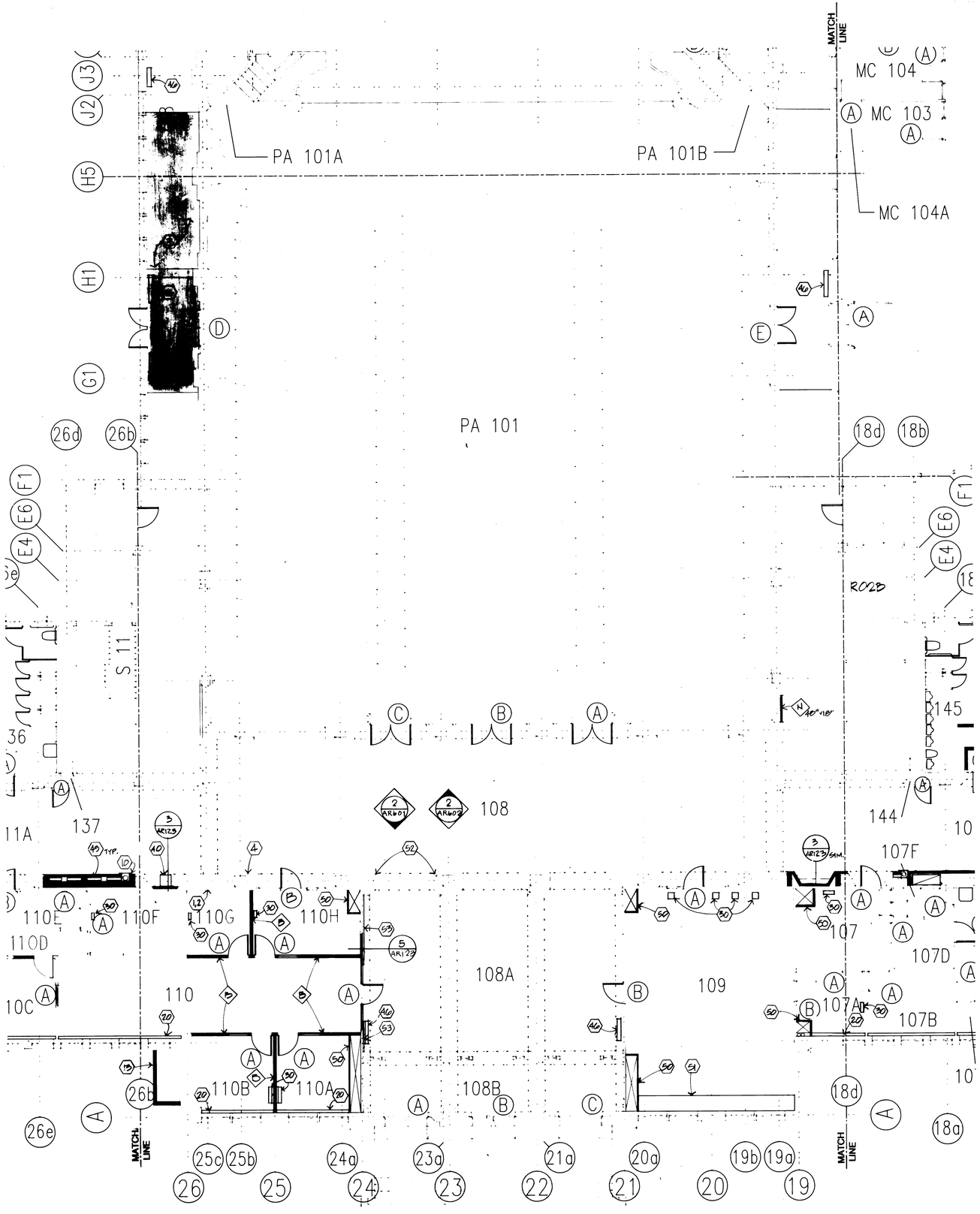

REFERENCE NOTES

1-2	NOT USED
3	NEW LIGHTWEIGHT CONCRETE SLAB OVER EXISTING SLAB. FILL TO PLANE OF ORIGINAL SLAB. TAPER TO TIE INTO EXISTING SLAB WITH FLOORSTONE WHEN THICKNESS IS LESS THAN 1/2".
4	INFILL EXISTING OPENINGS IN CONCRETE FLOOR SLAB. SIZE INDICATED ON DRAWINGS
10	INFILL WALL AT REMOVED TRASH CHUTE
13	NEW AIR INTAKE AREA WELL - SEE STRUCTURAL, MECHANICAL & 10/BD105
14-19	NOT USED
20	NEW FIN TUBE CONVECTOR CABINET - SEE MECHANICAL
21-29	NOT USED
30	NEW MECHANICAL GRILLE FLOOR OPENING
31	NEW TELEPHONE RECESS WITH (2) WALL MOUNTED PAY PHONES AND DIVIDERS (PHONES AND DIVIDERS NOT IN CONTRACT). MATCH EXISTING CORRIDOR RECESSES. GRIND FLOOR TO FLUSH OUT WITH EXISTING FLOOR
32-39	NOT USED
40	NEW ELECTRIC WATER COOLER
41-45	NOT USED
46	NEW FAN COIL UNIT. SEE MECHANICAL.
47-48	NOT USED
49	NEW RETURN AIR FLOOR OPENING - SEE MECHANICAL
50	NEW MECHANICAL SHAFT - SEE 7/AR123
51	NEW MECHANICAL ENCLOSURE - SEE DETAIL 5/AR124
52	REPLACE MARBLE PANELS CHIPPED AT EDGES
53	NEW MARBLE PANELS TO MATCH EXISTING

COOPER ROBERTS
ARCHITECTS, A.I.A
202 WEST 300 NORTH
SALT LAKE CITY, UT 84103
(801) 355-5915

ANDERSON MASON DALE
1615 SEVENTEENTH STREET
DENVER, COLORADO 80202
(303) 294-9448

SOUTH CITY CAMPUS of SALT LAKE COMMUNITY COLLEGE

PARTIAL FIRST FLOOR PLAN AREA 8C

REVISIONS:
1 15 NOVEMBER 1990
As-Built

PROJECT NUMBER: 88-04
DATE: JANUARY 19
DRAWN: STAFF
CHECKED: WNC2
APPROVED:

SHEET OF
AR110

PLAN SCALE: 1/8" = 1'-0"

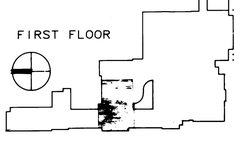

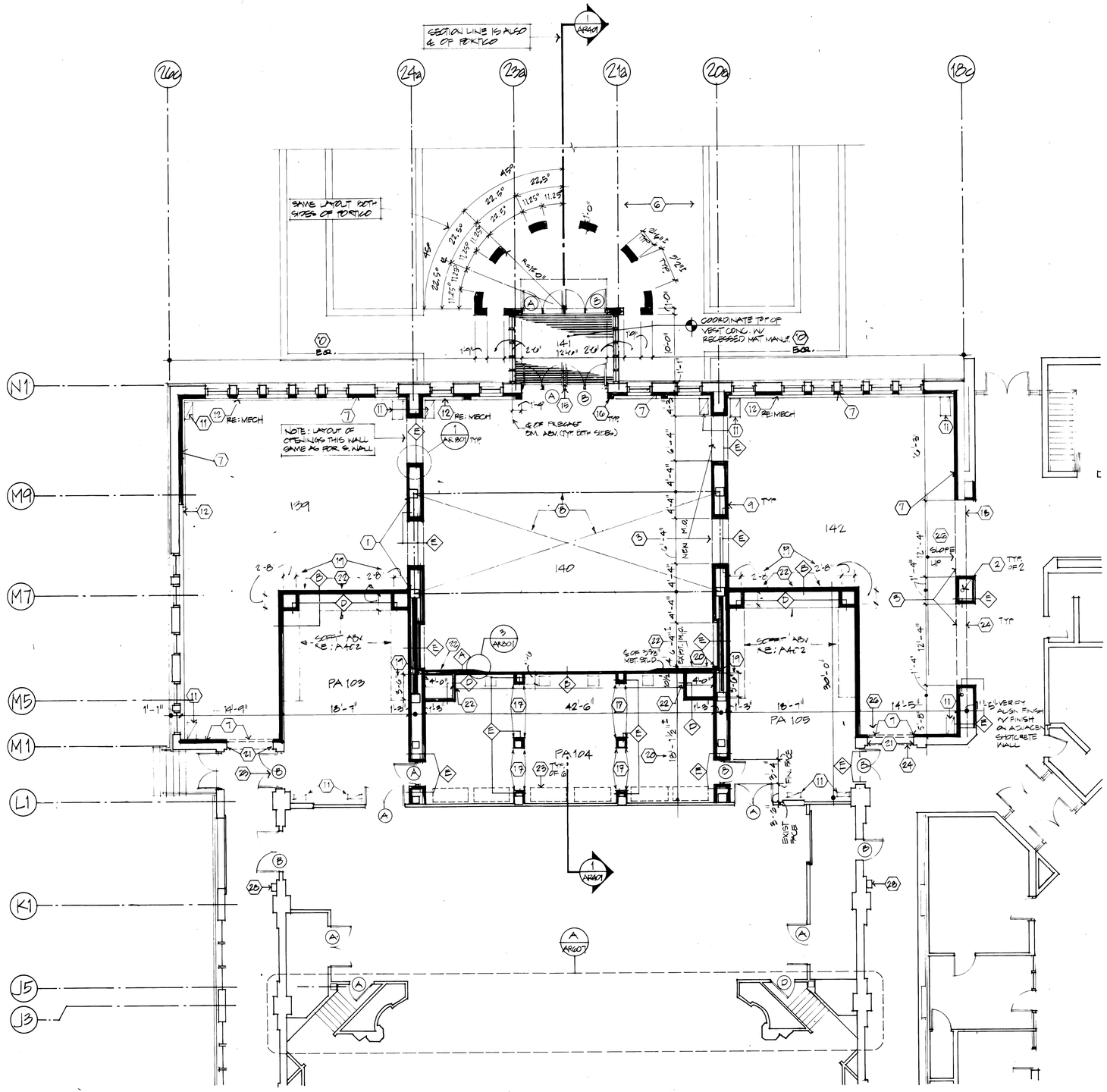

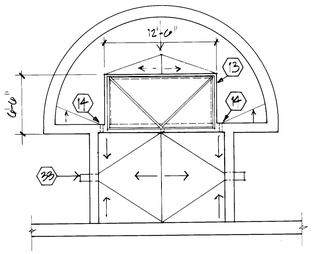

ROOF PLAN at ENTRY

1/8" = 1'-0"

REFERENCE NOTES

1. Exist. columns, typ.
2. New columns, re: Struct.
3. New opening in masonry wall, re: Struct.
4. Patch & repair walls @ new openings to match exist.
5. Precast floor pavers.
6. Entry platform, re: SD104.
7. Struct. wall reinforcements, re: Sruct.
8. New structure and concrete floor, re: Struct.
9. Shaded walls denote new wall construction.
10. New entry doors to be centered between column lines 18c & 26c. Given dimension (12'-6") is clear opening for frame, re: Detail B/AR012 for other req'mts.
11. R.A.G. in floor, re: Mech.
12. Radiator, re: Mech.
13. Curb for skylight, re: AR403 dimensions given are to outside face of curb.
14. Cast-in drain from portico roof to vestibule roof, re: AR403 for elevations.
15. Structural Steel column in center stile of door/window re: Detail 7/AR010.
16. New steel column, re: Struct., with 1-hr. wrap (2 layers 1/2" type 'X' gyp. bd), re: U.L. Detail # X526 for complete specs. (Typ. at 4 columns.)
17. Align finish surfaces.
18. Exist. masonry wall removed to bottom of exist conc. beam @ 12'-0" A.F.F. (verify).
19. Dimensions of Mech. chase are inside clear dimensions (typ. all chases this sheet).
20. This partition to be located by offsetting finish face of new partition w/finish face of exist. opening by 4" as shown. Given dimension (18'-1-1/2") is approximate & for reference only.
21. New opening in exist. masonry wall w/head @ 7'-4" A.F.F., re: 1/AR403 for similar head condition; re: Struc. for lintel size.
22. Wall mounted mechanical grille. Re: Mech.

    new wall construction. Re: Wall type sheet.

23. Portable wardrobe racks (typ of 6). (N.I.C.)
24. Patch conc floor @ new opening.
25. Center door opening between grids.
26. Provide concrete topping on existing slab and slope to corridor floor slab--full length of wall.
27. Fire annunciator panel re: Elec.
28. Surface mounted fire extinguisher.
29. Precast scuppers.
30. Fire curtain re: A/AR607.
31. Provide heavy texture finish to match existing.
32. Masonry lintels @ new opening in existing wall. re: Struc.
33. Precast scuppers. SEE 4/AR203

PLAN SCALE: 1/8" = 1'-0"

FIRST FLOOR PORTICO ROOF PLAN

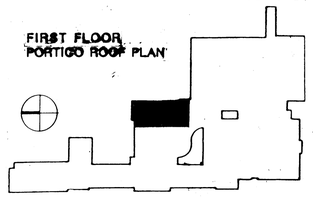

COOPER ROBERTS
ARCHITECTS, A.I.A.
202 WEST 300 NORTH
SALT LAKE CITY, UT 84103
(801) 355-5915

ANDERSON MASON DALL
1615 SEVENTEENTH STREET
DENVER, COLORADO 80202
(303) 294-9448

SOUTH CITY CAMPUS of SALT LAKE COMMUNITY COLLEGE

PARTIAL FIRST FLOOR PLAN - AREA 8D

REVISIONS:

As-Built

PROJECT NUMBER:
DATE:
DRAWN:
CHECKED:
APPROVED:

SHEET OF

AR111

45	NEW 54" HIGH FABRIC WAINSCOT W/ WOOD CHAIR RAIL AROUND ROOM PERIMETER.
46	NEW FAN COIL UNIT. SEE MECHANICAL.
47	NOT USED
48	NEW 1'-6" X 3'-0" MIRROR ABOVE EACH LAVATORY
49	NEW RETURN AIR FLOOR OPENING - SEE MECHANICAL
50	NEW MECHANICAL SHAFT - SEE 7/AR123
51	NEW MECHANICAL ENCLOSURE - SEE DETAIL 5/AR124

REFERENCE NOTES

1	INFILL WALL OPENING TO MATCH EXISTING ADJACENT WALL
2	REPAIR ALL WALL, CEILING AND FLOOR SURFACES DAMAGED DURING DEMOLITION AND NEW CONSTRUCTION TO MATCH EXISTING ADJACENT SURFACES.
3-7	NOT USED
8	PATCH HOLE IN FLOOR AT REMOVED PLUMBING FIXTURE. MATCH EXISTING ADJACENT FLOOR FINISH. TYP.ALL HOLES. ALL HOLES NOT SHOWN.
9-12	NOT USED
13	NEW AIR INTAKE AREA WELL
14	NEW DOOR RECESS TO MATCH EXISTING RECESSES. GRIND FLOOR TO FLUSH OUT WITH EXISTING
15-17	NOT USED
18	NEW ELEVATOR IN NEW SHAFT
19	NOT USED
20	NEW FIN TUBE CONVECTOR CABINET - SEE MECHANICAL
21-22	NOT USED
23	COVER EXISTING ROLL UP CURTAIN TRACK. SEE 3/AR124
24	NOT USED
25	NEW FIRE EXTINGUISHER IN NEW RECESSED CABINET. TOP OF CAB. 5' ABOVE FLOOR.
26	TIE EXISTING SAW CUT TREADS, RISERS AND LANDING TO NEW STAIR TOWER AS SHOWN ON SHEET AR502
27	NEW RAMP AND LANDINGS. SEE SITE PLAN
28	NOT USED
29	REPAIR DAMAGED PLASTER TO NEW CONDITION
30	NEW MECHANICAL GRILLE FLOOR OPENING
31	NOT USED
32	REPLACE TRIM ON MODIFIED CHALKBOARD
33	NOT USED
34	NOT USED
35	REINSTALL SALVAGED CHALKBOARD
36	NEW MARKERBOARD. 4' HIGH x FULL WIDTH OF ROOM
37-39	NOT USED
40	NEW ELECTRIC WATER COOLER
41	NOT USED
42	NEW LAVATORY

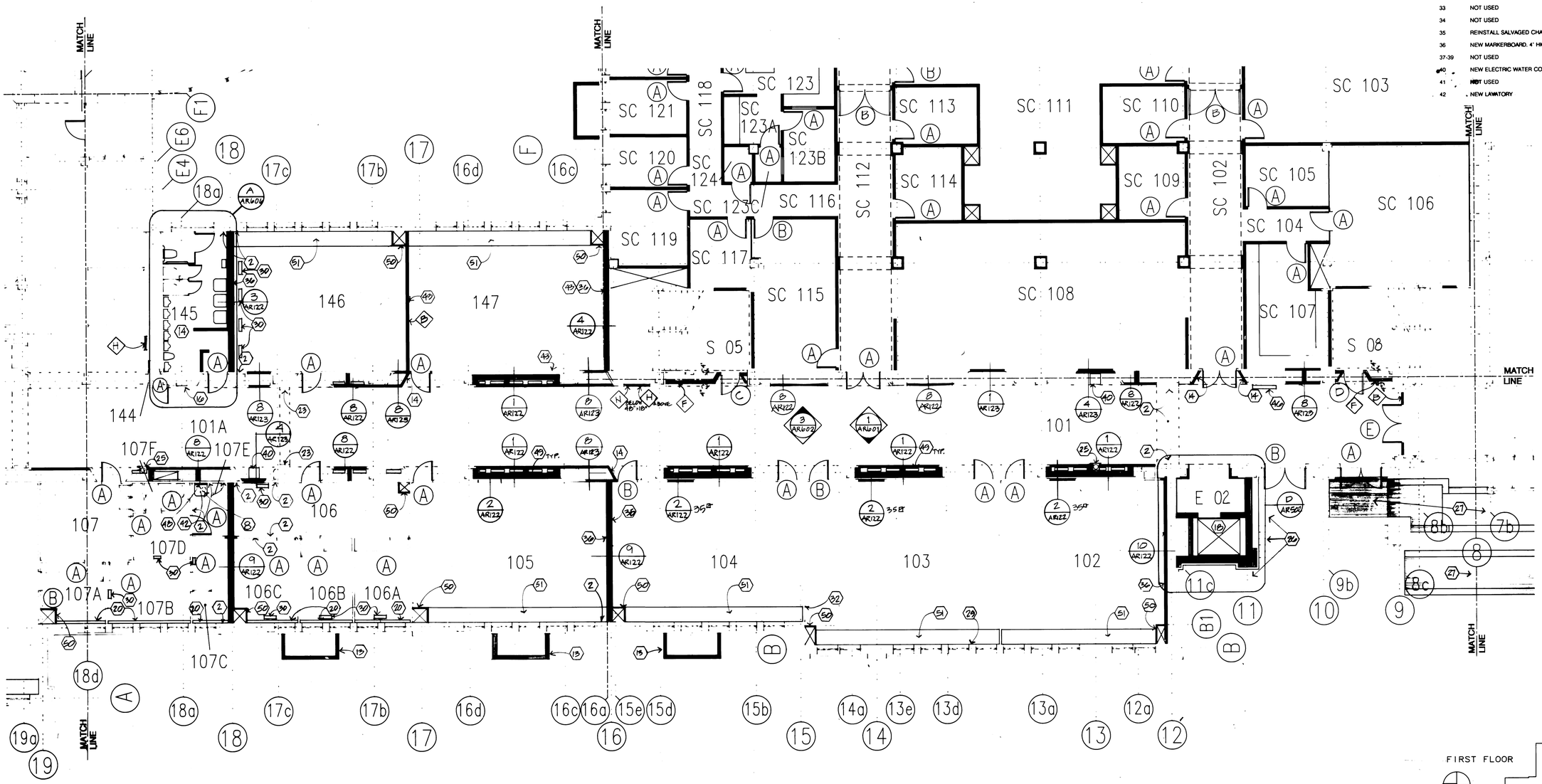

PLAN SCALE:
1/8" = 1'-0"

FIRST FLOOR

COOPER ROBERTS
ARCHITECTS, A.I.A
202 WEST 300 NORTH
SALT LAKE CITY, UT 84103
(801) 355-5915

ANDERSON MASON DALE
1615 SEVENTEENTH STREET
DENVER, COLORADO 80202
(303) 294-9448

SOUTH CITY CAMPUS of SALT LAKE COMMUNITY COLLEGE

PARTIAL FIRST FLOOR PLAN AREA 8E

REVISIONS:
As-Built

PROJECT NUMBER: 89-041
DATE: JANUARY 1990
DRAWN: STAFF
CHECKED: WRC2
APPROVED:

SHEET OF

AR 1-12

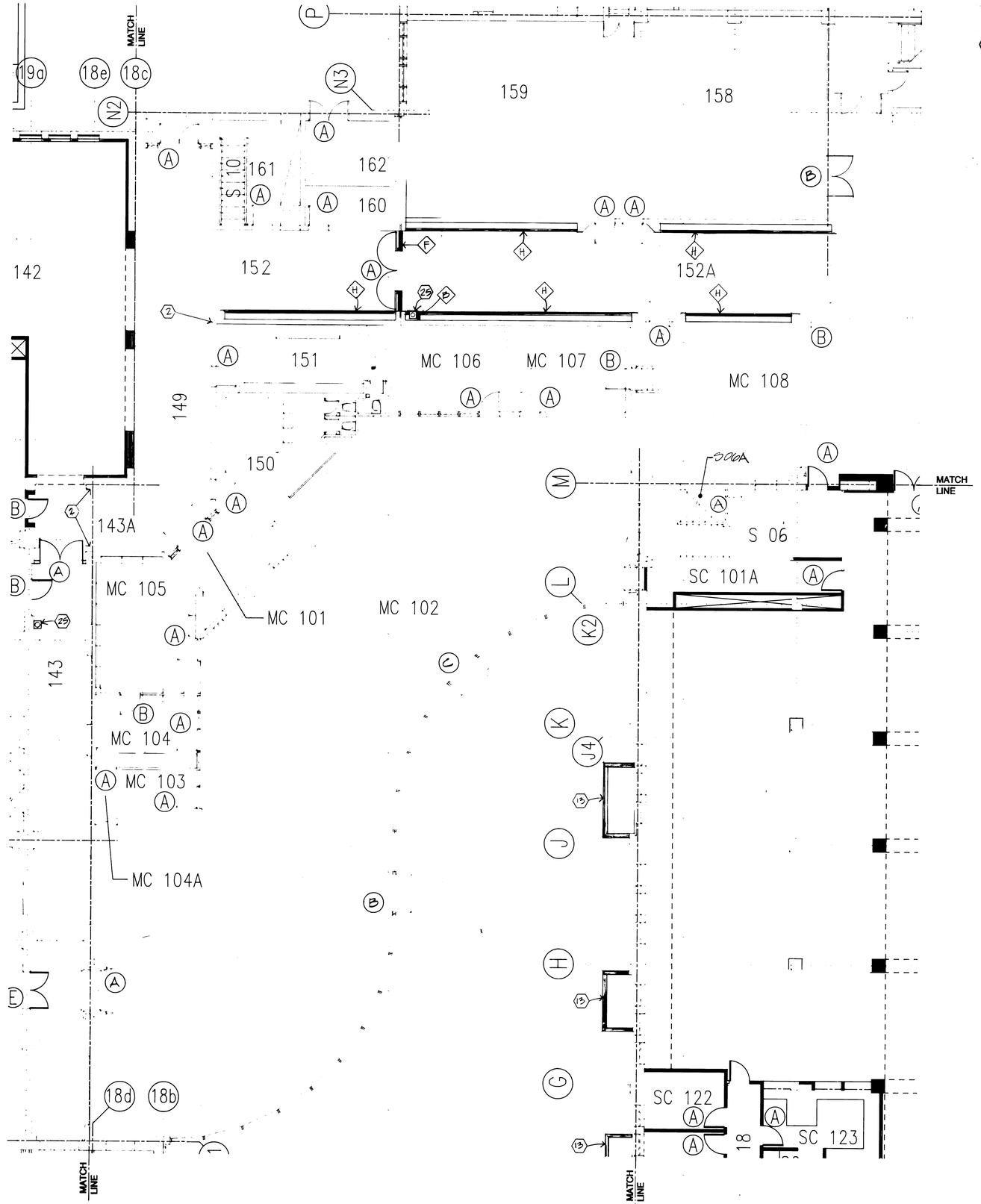

SHEET 113

REFERENCE NOTES

1	INFILL WALL OPENING TO MATCH EXISTING ADJACENT WALL
2	REPAIR ALL WALL, CEILING, AND FLOOR SURFACES DAMAGED DURING DEMOLITION AND NEW CONSTRUCTION TO MATCH EXISTING ADJACENT SURFACES.
3-12	NOT USED
13	NEW AIR INTAKE AREA WELL
14-24	NOT USED
25	NEW FIRE EXTINGUISHER IN NEW SURFACE MOUNTED CABINET. TOP OF CAB. 5' ABOVE FLOOR.
26-53	NOT USED

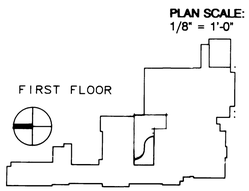

PLAN SCALE:
1/8" = 1'-0"

COOPER ROBERTS
ARCHITECTS, A.I.A
202 WEST 300 NORTH
SALT LAKE CITY, UT 84103
(801) 355-5915

ANDERSON MASON DALE
1615 SEVENTEENTH STREET
DENVER, COLORADO 80202
(303) 294-9448

SOUTH CITY CAMPUS of SALT LAKE COMMUNITY COLLEGE

PARTIAL FIRST FLOOR PLAN AREA 8F

REVISIONS:
As-Built

PROJECT NUMBER: 88-041
DATE: JANUARY 1990
DRAWN: STAFF
CHECKED: WNC2
APPROVED:

SHEET OF
AR113

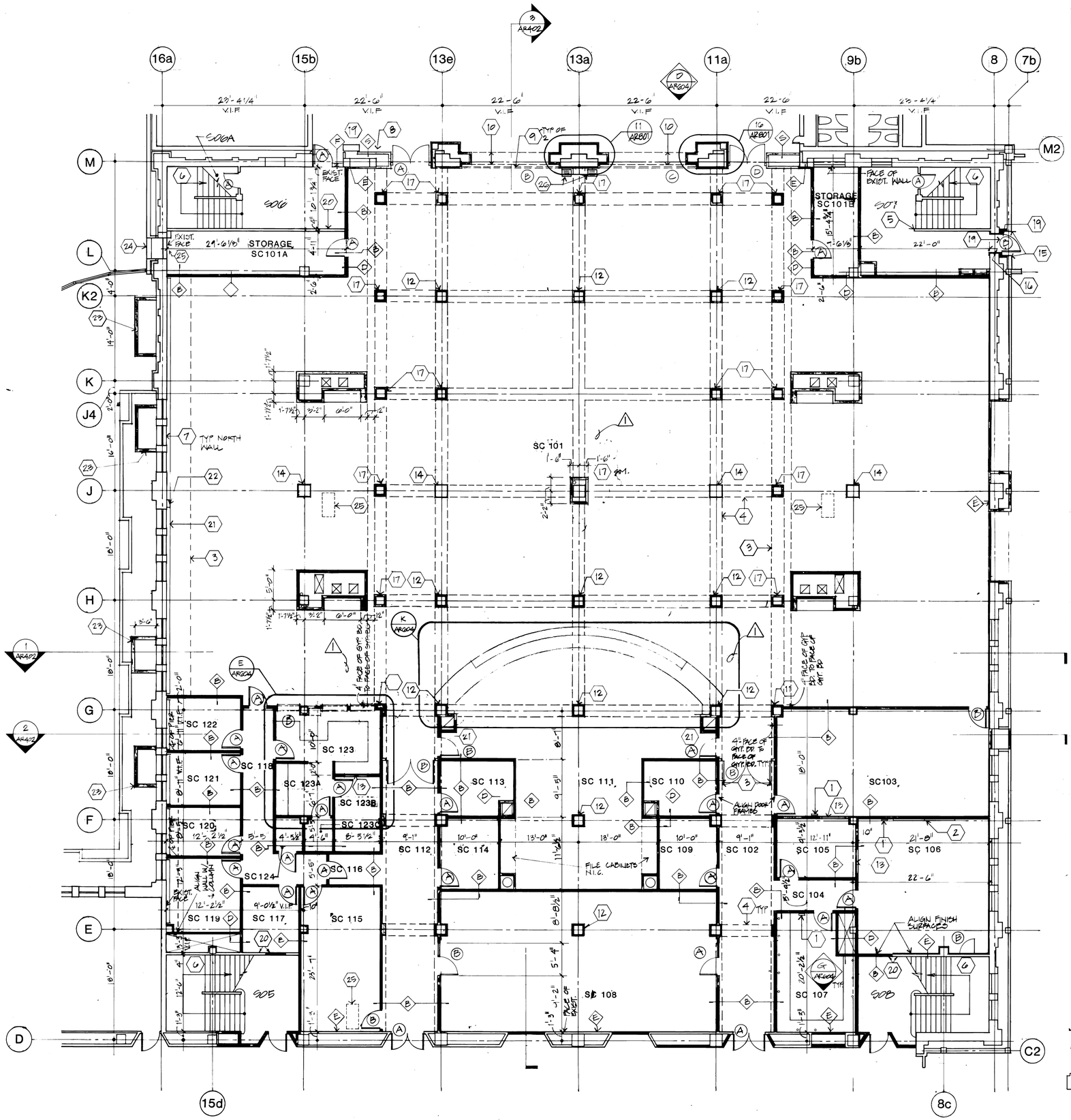

REFERENCE NOTES

1. Clock: Mount @ 6'-6" AFF
2. Chalkboard: Mount 3'-4" AFF
3. Soffit above re: reflected ceiling plan
4. Beam above re: reflected ceiling plan
5. Patch existing wall to match adjacent surface
6. Existing stair
7. Existing windows to remain. Remove existing paint from glass. Recaulk and repaint.
8. New seismic joint cover. Patch and repair adjacent floor.
9. Rolling fire door.
10. Gyp Bd Arch above.
11. New Gyp. Bd column 5/8" gyp bd on 3-5/8" metal studs. (center on grids) 27" from finish face to finish face. Re: elev. of column for location of reveals.
12. Existing concrete column (16"x16" V.I.F.). Wrap column w/2 layer 1/2" gyp bd. on 2-1/2" metal studs to provide 27" from finish face to finish face. Re: elevation of column for location of reveals typ.
13. 4'-0" W x 3'-0" H CLEAR OPENING WINDOW - HOLLOW METAL FRAME (PAINTED) W/ 1/4" CLEAR FLOAT GLASS
14. Existing concrete column (24" x 24" V.I.F.) Wrap column w/ layer 1/2" gyp bd. glued on to existing column. At reveals, provide a smooth-level tapable J-bead @ edge of gyp. bd.
15. Patch existing masonry where cut for new opening. Re: struc. for lintel.
16. New door opening. Re: struc. for lintel.
17. NEW GYPSUM BOARD COLUMN 2 LAYERED GYPSUM BOARD ON 3 5/8" METAL STUDS (CENTER ON GRID) 26 1/2" FROM FINISH FACE TO FINISH FACE RE: ELEVATION OF COLUMN FOR REVEALS
18. 5/8" gyp. bd. on 3-5/8" metal stud. Re: door details for construction.
19. Provide vinyl composition tile @ corridor floor to match existing corridor color & size up to new door frame.
20. 5/8" gyp. bd. both sides on metal studs. V.I.F. thickness of studs needed to provide alignment of finish surfaces to adjacent wall on both sides.
21. Mech. radiator or grille Re: Mech. Paint to match adjacent wall surface.
22. 6"x12" clear gyp bd. pipe chase. Re: Mech.
23. Areaways re: Mech & Struc. See also 11/SD105. Maximum width between existing footings.
24. Provide a 2 hr wall @ existing passageway.
25. New conc floor infill re: Struc.
26. Mech. grille re: Mech - prefinished.

GENERAL NOTES

1. Stud partitions are dimensioned to Existing partitions are dimensioned to finish face. Typ U.O.N.
2. Change of material to occur under door typ U.O.N.
3. Re: reflected ceiling plan for wall heights
4. Repair and patch all existing exposed wall surfaces prior to painting
5. Grind, repair and patch all floor surfaces as needed to provide a smooth level finish
6. Field verify all existing conditions. Notify Architect of any discrepancies between field conditions and these drawings (prior to start of construction)

New wall construction
Re: Wall type sheet

PLAN SCALE
1/8" 1'-0"

FIRST FLOOR

COOPER ROBERTS
ARCHITECTS, A.I.A
202 WEST 300 NORTH
SALT LAKE CITY, UT 84103
(801) 355-5915

ANDERSON MASON DALE
1615 SEVENTEENTH STREET
DENVER, COLORADO 80202
(303) 294-9448

SOUTH CITY CAMPUS of SALT LAKE COMMUNITY COLLEGE

PARTIAL FIRST FLOOR PLAN - AREA 8G

REVISIONS:
1 13 NOV 1990
As-Built

PROJECT NUMBER:
DATE:
DRAWN:
CHECKED:
APPROVED:

SHEET OF
AR114

REFERENCE NOTES

1	NOT USED
2	REPAIR ALL WALL, CEILING, AND FLOOR SURFACES DAMAGED DURING DEMOLITION AND NEW CONSTRUCTION TO MATCH EXISTING ADJACENT SURFACES.
3-4	NOT USED
5	NEW FLOORING ON 4" CONCRETE SLAB ON 6" GRAVEL BASE
6-24	NOT USED
25	NEW FIRE EXTINGUISHER IN NEW RECESSED CABINET. TOP OF CAB. 5' ABOVE FLOOR.
26-30	NOT USED
31	WALL MOUNTED PAY PHONES AND DIVIDERS (N.I.C.)
32-53	NOT USED
54	NEW BENCH AND WALL FINISH BEYOND (ALSO AT ENDS). SEE 6/AR124

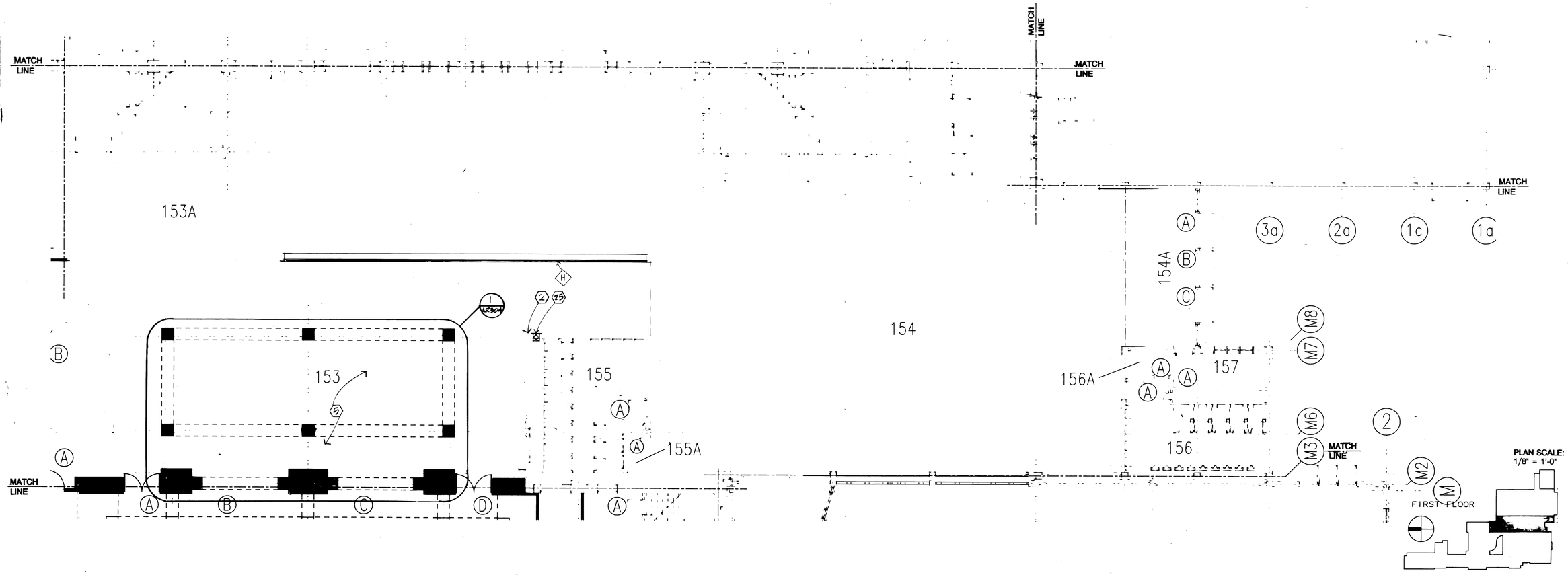

COOPER ROBERTS
ARCHITECTS, A.I.A
202 WEST 300 NORTH
SALT LAKE CITY, UT 84103
(801) 355-5915

ANDERSON MASON DALE
1615 SEVENTEENTH STREET
DENVER, COLORADO 80202
(303) 294-9448

SOUTH CITY CAMPUS of SALT LAKE COMMUNITY COLLEGE

PARTIAL FIRST FLOOR PLAN AREA 81

REVISIONS:
As-Built

PROJECT NUMBER: 88-041
DATE: JANUARY 1990
DRAWN: STAFF
CHECKED: WNCS
APPROVED:

SHEET OF
AR115

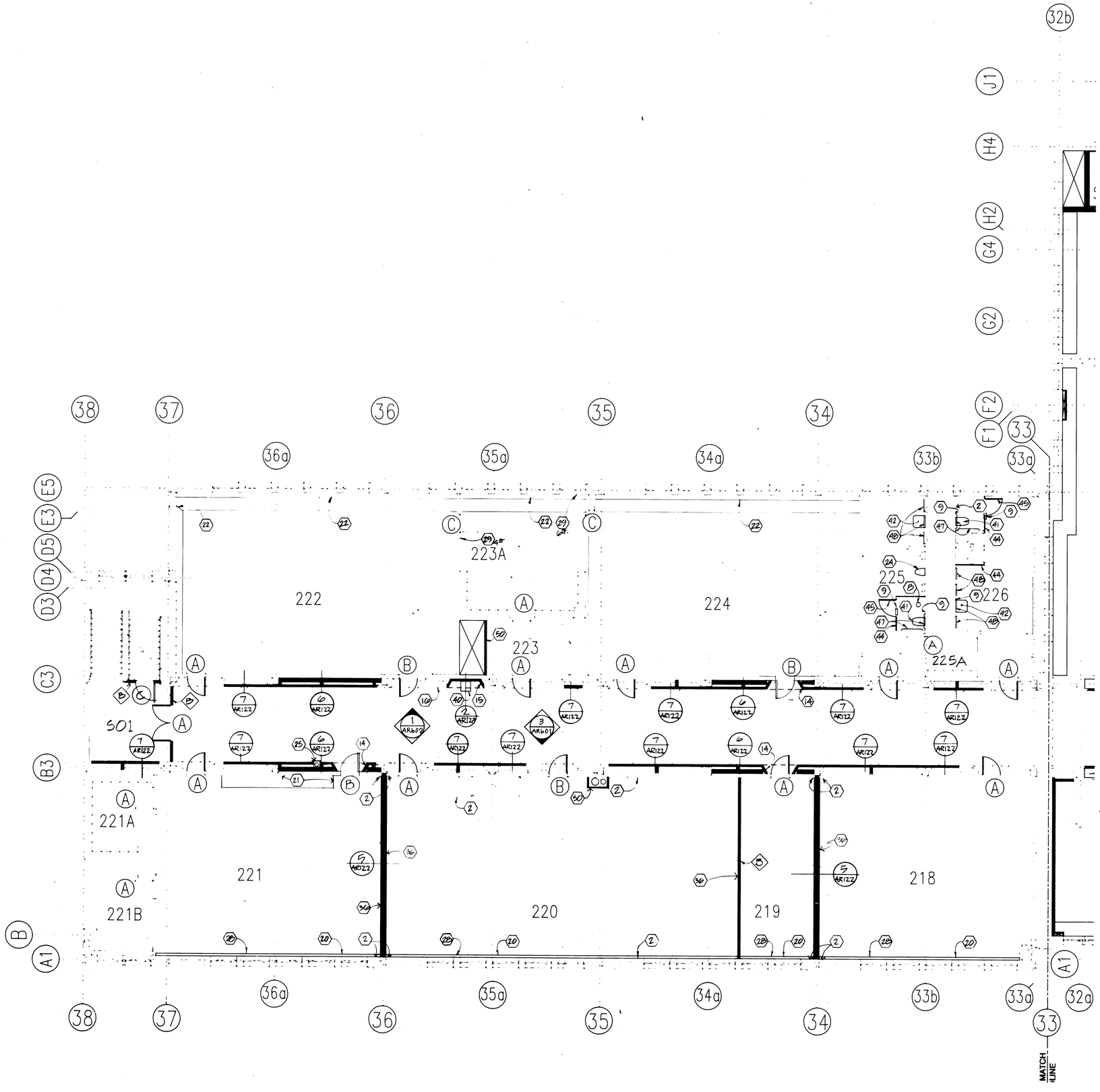

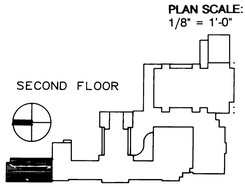

PLAN SCALE:
1/8" = 1'-0"

REFERENCE NOTES

1	NOT USED
2	REPAIR ALL WALL, CEILING, AND FLOOR SURFACES DAMAGED DURING DEMOLITION AND NEW CONSTRUCTION TO MATCH EXISTING ADJACENT SURFACES.
3-7	NOT USED
8	PATCH HOLE IN FLOOR AT REMOVED PLUMBING FIXTURE. MATCH EXISTING ADJACENT FLOOR FINISH. TYP. ALL HOLES. ALL HOLES NOT SHOWN.
9	NEW CERAMIC TILE ON FLOOR AND WALL AT REMOVED PLUMBING FIXTURE AND TOILET PARTITION
10-13	NOT USED
14	NEW DOOR RECESS TO MATCH EXISTING RECESSES. GRIND FLOOR TO FLUSH OUT WITH EXISTING
15	NEW WATER COOLER RECESS. MATCH EXISTING CORRIDOR RECESSES. GRIND FLOOR TO FLUSH OUT WITH EXISTING FLOOR
16	PATCH AND REPAIR HOLES IN PLASTER, AND REPLACE DAMAGED BRICK AT REMOVED WATER COOLER TO MATCH EXISTING WALLS
17-19	NOT USED
20	NEW FIN TUBE CONVECTOR CABINET - SEE MECHANICAL AND 8/AR126
21	SHORTEN AND REINSTALL SALVAGED CABINETS (COORDINATE WITH ARCHITECT). INSTALL NEW END PANEL AS REQUIRED TO MATCH EXISTING.
22	REINSTALL SALVAGED CASEWORK AFTER COMPLETION OF MECHANICAL WORK. MAKE MINOR MODIFICATIONS TO CASEWORK AS REQUIRED TO FIT. INSTALL NEW COUNTERTOP.
23	NOT USED
24	NEW URINAL
25	NEW FIRE EXTINGUISHER IN NEW RECESSED CABINET. TOP OF CAB. 5' ABOVE FLOOR.
26-27	NOT USED
28	NEW PLASTER AND LATH OVER EXISTING MASONRY AT REMOVED CABINETS AND CHASE
29	REPAIR DAMAGED PLASTER TO NEW CONDITION
30-35	NOT USED
36	NEW MARKERBOARD. 4' HIGH x FULL WIDTH OF ROOM
37-39	NOT USED
40	NEW ELECTRIC WATER COOLER
41	NEW TOILET
42	NEW LAVATORY
43	NOT USED
44	NEW TOILET PARTITION
45	NEW TOILET PARTITION DOORS
46	NOT USED
47	NEW HANDICAP GRAB BARS
48	NEW 1'-6" X 3'-0" MIRROR ABOVE EACH LAVATORY
49	NOT USED
50	NEW MECHANICAL SHAFT - SEE 7/AR123

COOPER ROBERTS
ARCHITECTS, A.I.A
202 WEST 300 NORTH
SALT LAKE CITY, UT 84103
(801) 355-5915

ANDERSON MASON DALE
1615 SEVENTEENTH STREET
DENVER, COLORADO 80202
(303) 294-9448

SOUTH CITY CAMPUS of SALT LAKE COMMUNITY COLLEGE

PARTIAL SECOND FLOOR PLAN AREA 8A

REVISIONS:
As-Built

PROJECT NUMBER: 88-041
DATE: JANUARY 1999
DRAWN: STAFF
CHECKED: WNC2
APPROVED:

SHEET OF
AR116

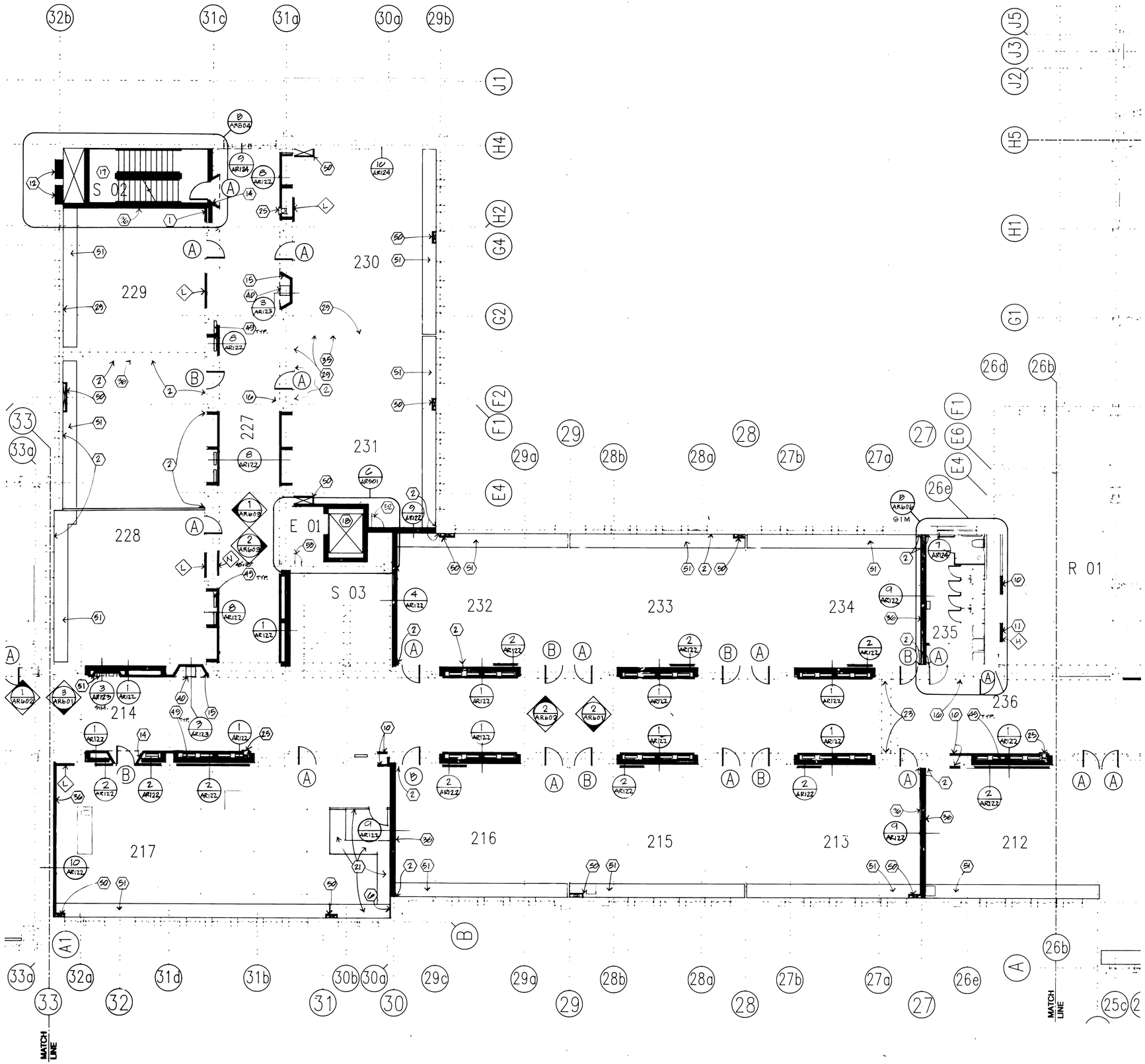

SHEET 117

REFERENCE NOTES

1	INFILL WALL OPENING TO MATCH EXISTING ADJACENT WALL
2	REPAIR ALL WALL, CEILING, AND FLOOR SURFACES DAMAGED DURING DEMOLITION AND NEW CONSTRUCTION TO MATCH EXISTING ADJACENT SURFACES.
3-5	NOT USED
6	NEW GYPSUM BOARD ON HAT CHANNELS TO ALIGN WITH GYPSUM BOARD ON SHEAR WALL
7-9	NOT USED
10	INFILL WALL AT REMOVED TRASH CHUTE. SEE 7/AR124
12	INFILL WINDOW OPENING. SEE SHEET AR504.
13	NOT USED
14	NEW DOOR RECESS TO MATCH EXISTING RECESSES. GRIND FLOOR TO FLUSH OUT WITH EXISTING
15	NEW WATER COOLER RECESS. MATCH EXISTING CORRIDOR RECESSES. GRIND FLOOR TO FLUSH OUT WITH EXISTING FLOOR
16	PATCH AND REPAIR HOLES IN PLASTER, AND REPLACE DAMAGED BRICK AT REMOVED WATER COOLER TO MATCH EXISTING WALLS
17	NEW STAIRS IN NEW SHAFT
18	NEW ELEVATOR IN NEW SHAFT
19-20	NOT USED
21	REINSTALL SALVAGED CABINETS
22	NOT USED
23	COVER EXISTING ROLL UP CURTAIN TRACK. SEE 3/AR124
24 NOT USED	
25	NEW FIRE EXTINGUISHER IN NEW RECESSED CABINET. TOP OF CAB. 5' ABOVE FLOOR.
26-28	NOT USED
29	REPAIR DAMAGED PLASTER TO NEW CONDITION
30	NOT USED
31	NEW TELEPHONE RECESS WITH (2) WALL MOUNTED PAY PHONES AND DIVIDERS (PHONES AND DIVIDERS NOT IN CONTRACT). MATCH EXISTING CORRIDOR RECESSES. GRIND FLOOR TO FLUSH OUT WITH EXISTING FLOOR
32-34	NOT USED
35	REINSTALL SALVAGED CHALKBOARD
36	NEW MARKERBOARD, 4' HIGH x FULL WIDTH OF ROOM
37-39	NOT USED
40	NEW ELECTRIC WATER COOLER
41-48	NOT USED
49	NEW RETURN AIR FLOOR OPENING - SEE MECHANICAL
50	NEW MECHANICAL SHAFT - SEE 7/AR123
51	NEW MECHANICAL ENCLOSURE - SEE DETAIL 5/AR124
52	NEW 24" SQUARE ACCESS DOOR
53	NEW 18" x 30" ACCESS DOOR

PLAN SCALE: 1/8" = 1'-0"

SECOND FLOOR

COOPER ROBERTS ARCHITECTS, A.I.A
202 WEST 300 NORTH
SALT LAKE CITY, UT 84103
(801) 355-5915

ANDERSON MASON DALE
1615 SEVENTEENTH STREET
DENVER, COLORADO 80202
(303) 294-9448

SOUTH CITY CAMPUS of SALT LAKE COMMUNITY COLLEGE

PARTIAL SECOND FLOOR PLAN AREA 8B

REVISIONS:

As-Built

PROJECT NUMBER: 88-041
DATE: JANUARY 1990
DRAWN: STAFF
CHECKED: WNC2
APPROVED:

SHEET OF

AR117

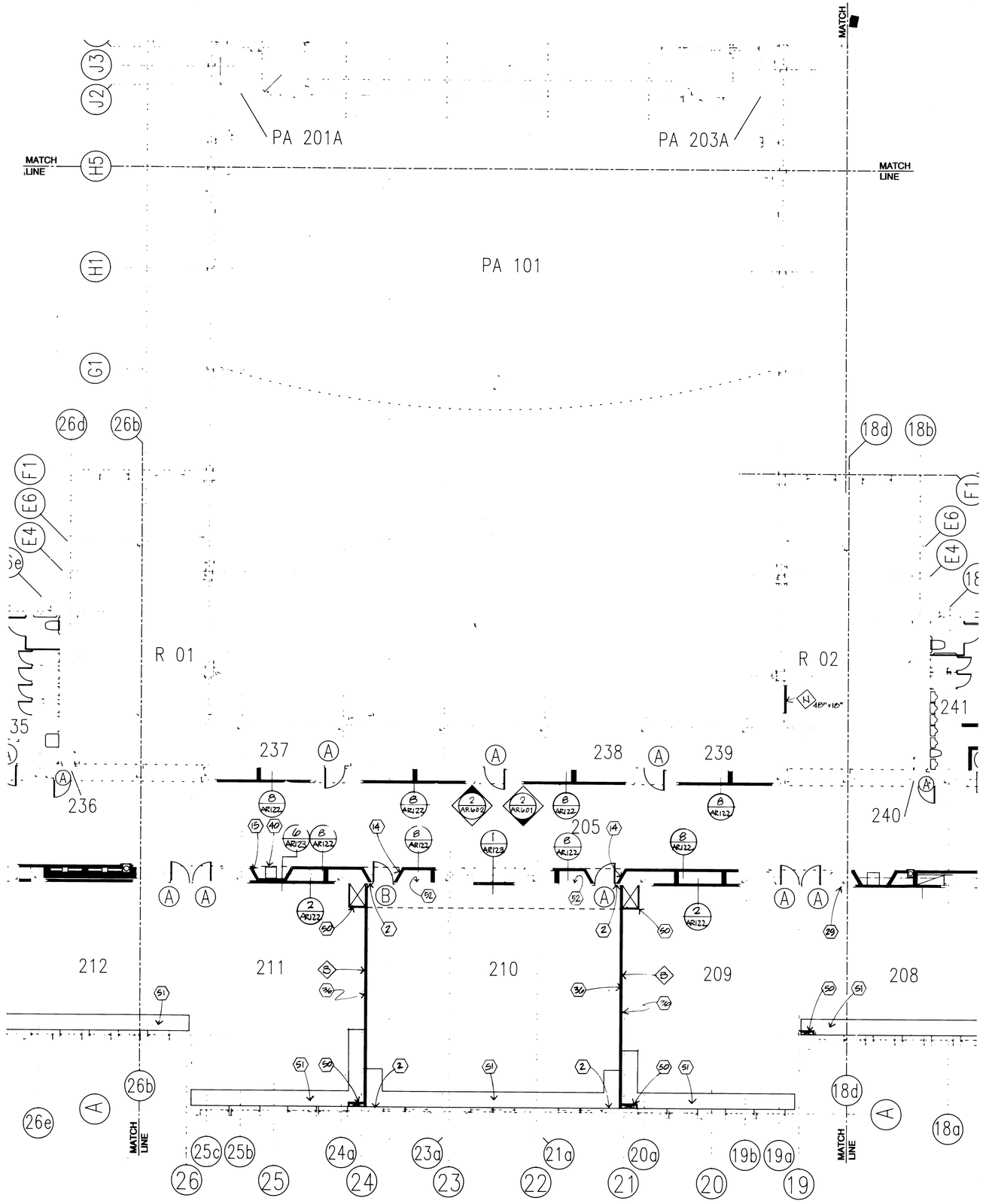

SHEET 118

REFERENCE NOTES

1	NOT USED
2	REPAIR ALL WALL, CEILING, AND FLOOR SURFACES DAMAGED DURING DEMOLITION AND NEW CONSTRUCTION TO MATCH EXISTING ADJACENT SURFACES.
3-13	NOT USED
14	NEW DOOR RECESS TO MATCH EXISTING RECESSES. GRIND FLOOR TO FLUSH OUT WITH EXISTING
15	NEW WATER COOLER RECESS. MATCH EXISTING CORRIDOR RECESSES. GRIND FLOOR TO FLUSH OUT WITH EXISTING FLOOR
16-28	NOT USED
29	REPAIR DAMAGED PLASTER TO NEW CONDITION
30-33	NOT USED
34	NOT USED
36	NEW 4' HIGH MARKERBOARD - FULL ROOM WIDTH
40	NEW ELECTRIC WATER COOLER
41-49	NOT USED
50	NEW MECHANICAL SHAFT - SEE 7/AR123
51	NEW MECHANICAL ENCLOSURE - SEE DETAIL 5/AR124
52	ADD #2 LAYERS OF 5/8" GYPSUM BOARD ON CAVITY SIDE OF CLASSROOM WALL TO EXISTING WOOD STUD FRAMING

COOPER ROBERTS
ARCHITECTS, A.I.A.
202 WEST 300 NORTH
SALT LAKE CITY, UT 84103
(801) 355-5915

ANDERSON MASON DALE
1615 SEVENTEENTH STREET
DENVER, COLORADO 80202
(303) 294-9448

SOUTH CITY CAMPUS of SALT LAKE COMMUNITY COLLEGE

PARTIAL SECOND FLOOR PLAN AREA 8C

REVISIONS:
As-Built

PROJECT NUMBER: 88-041
DATE: JANUARY 1990
DRAWN: STAFF
CHECKED: WNC2
APPROVED:

SHEET OF

AR118

PLAN SCALE: 1/8" = 1'-0"

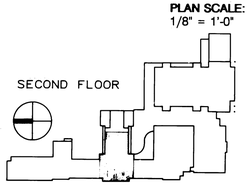

SHEET AR119

1 METAL LADDER. SEE SPECS 05500

2 NEW STIFFENER COLUMNS. SEE STRUCTURAL

3 NEW 30" SQUARE, 90 MINUTE RATED ACCESS DOOR

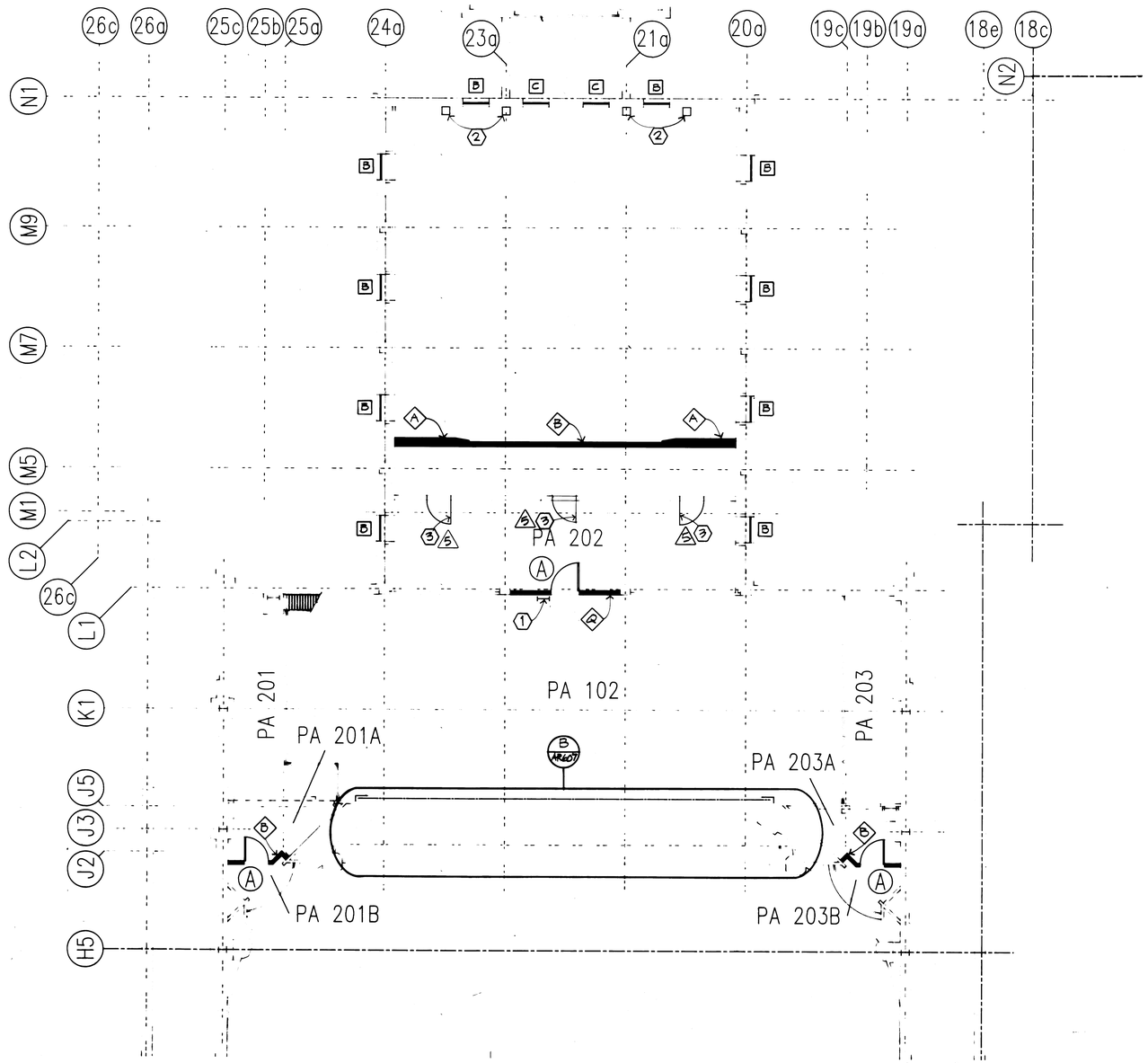

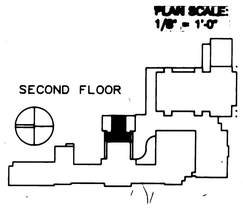

COOPER ROBERTS

202 WEST 300 NORTH
SALT LAKE CITY, UT 84103
(801) 355-5915

ANDERSON MASON

1615 SEVENTEENTH STREET
DENVER, COLORADO 80202
(303) 294-9448

SOLD
CITY CO
of SALT
COMM
COLL

PARTIAL
SECOND FLO
PLAN
AREA 8D

REVISIONS:

ADDENDUM FIVE

As-Built

PROJEC [redacted]
DATE:
DRAWN
CHECK
APPROVED

SHEET OF

SHEET 120

REFERENCE NOTES

1	INFILL WALL OPENING TO MATCH EXISTING ADJACENT WALL
2-6	NOT USED
7	FILL REMOVED W/BOD FLOOR WITH LIGHTWEIGHT CONCRETE
8-9	NOT USED
10	INFILL WALL AT REMOVED TRASH CHUTE. SEE 7/AR194
11-13	NOT USED
14	NEW DOOR RECESS TO MATCH EXISTING RECESSES. GRIND FLOOR TO FLUSH OUT WITH EXISTING
15	NEW WATER COOLER RECESS. MATCH EXISTING CORRIDOR RECESSES. GRIND FLOOR TO FLUSH OUT WITH EXISTING FLOOR
16-17	NOT USED
18	NEW ELEVATOR IN NEW SHAFT
19	REPLACE CRACKED BRICK AND REPOINT BRICK WAINSCOT TO MATCH EXISTING
20-22	NOT USED
23	COVER EXISTING ROLL UP CURTAIN TRACK. SEE 3/AR124
24	NOT USED
25	NEW FIRE EXTINGUISHER IN NEW RECESSED CABINET. TOP OF CAB. 5' ABOVE FLOOR.
26-28	NOT USED
29	REPAIR DAMAGED PLASTER TO NEW CONDITION
30-34	NOT USED
35	REINSTALL SALVAGED CHALKBOARD
36	NEW MARKER BOARD 4' HIGH x FULL WIDTH OF ROOM
40	NEW ELECTRIC WATER COOLER
41-48	NOT USED
49	NEW RETURN AIR FLOOR OPENING - SEE MECHANICAL
50	NEW MECHANICAL SHAFT - SEE 7/AR123
51	NEW MECHANICAL ENCLOSURE - SEE DETAIL 5/AR124

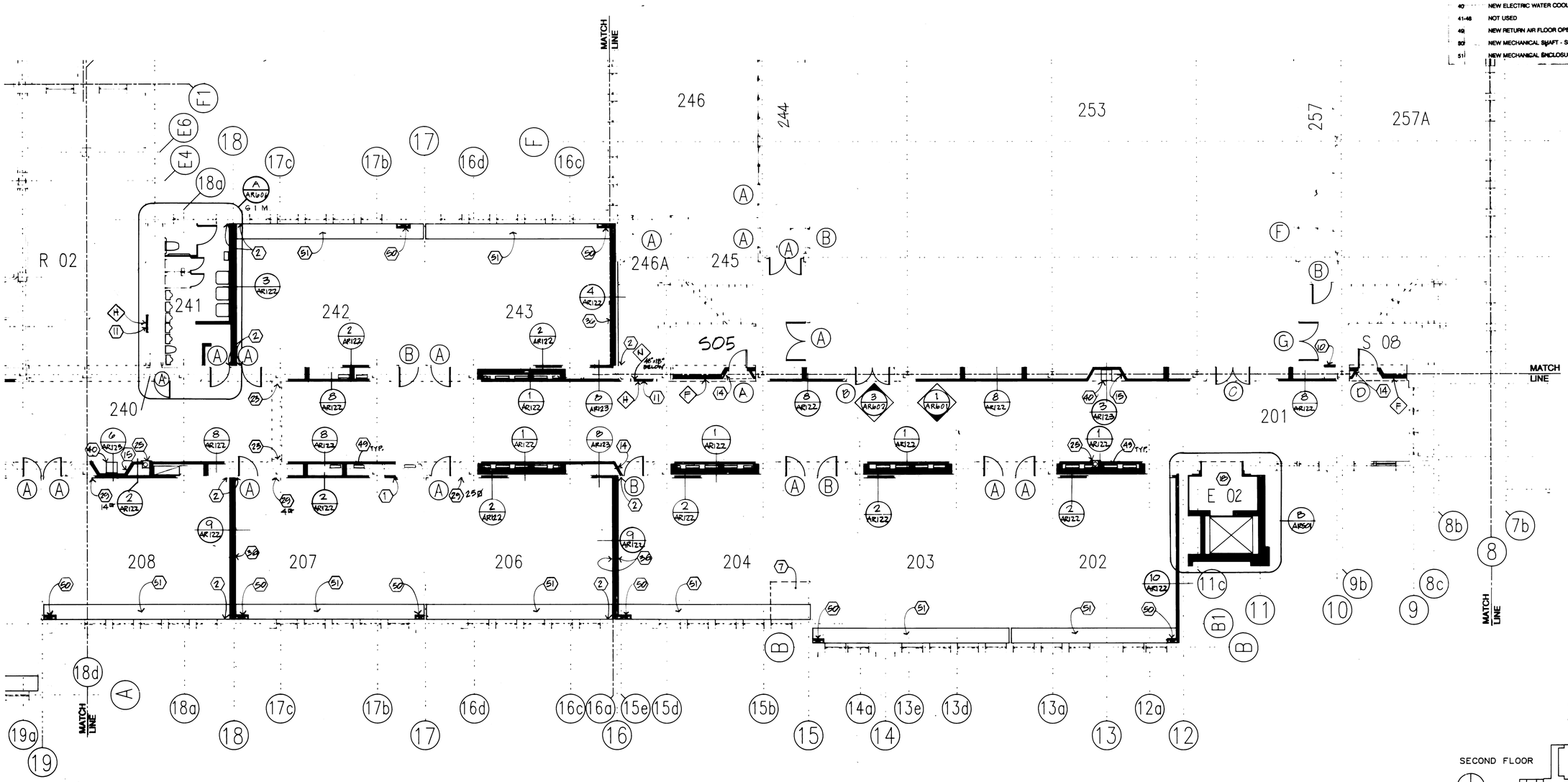

COOPER ROBERTS ARCHITECTS
202 WEST 300 NORTH
SALT LAKE CITY, UT 84103
(801) 355-5915

ANDERSON MASON DALE
1615 SEVENTEENTH STREET
DENVER, COLORADO 80202
(303) 294-9448

SOUTH CITY CAMPUS of SALT LAKE COMMUNITY COLLEGE

PARTIAL SECOND FLOOR PLAN AREA 8E

REVISIONS:

As-Built

PROJECT NUMBER: 88-041
DATE: JANUARY 1988
DRAWN: STAFF
CHECKED: WHC
APPROVED:

SHEET OF

AR120

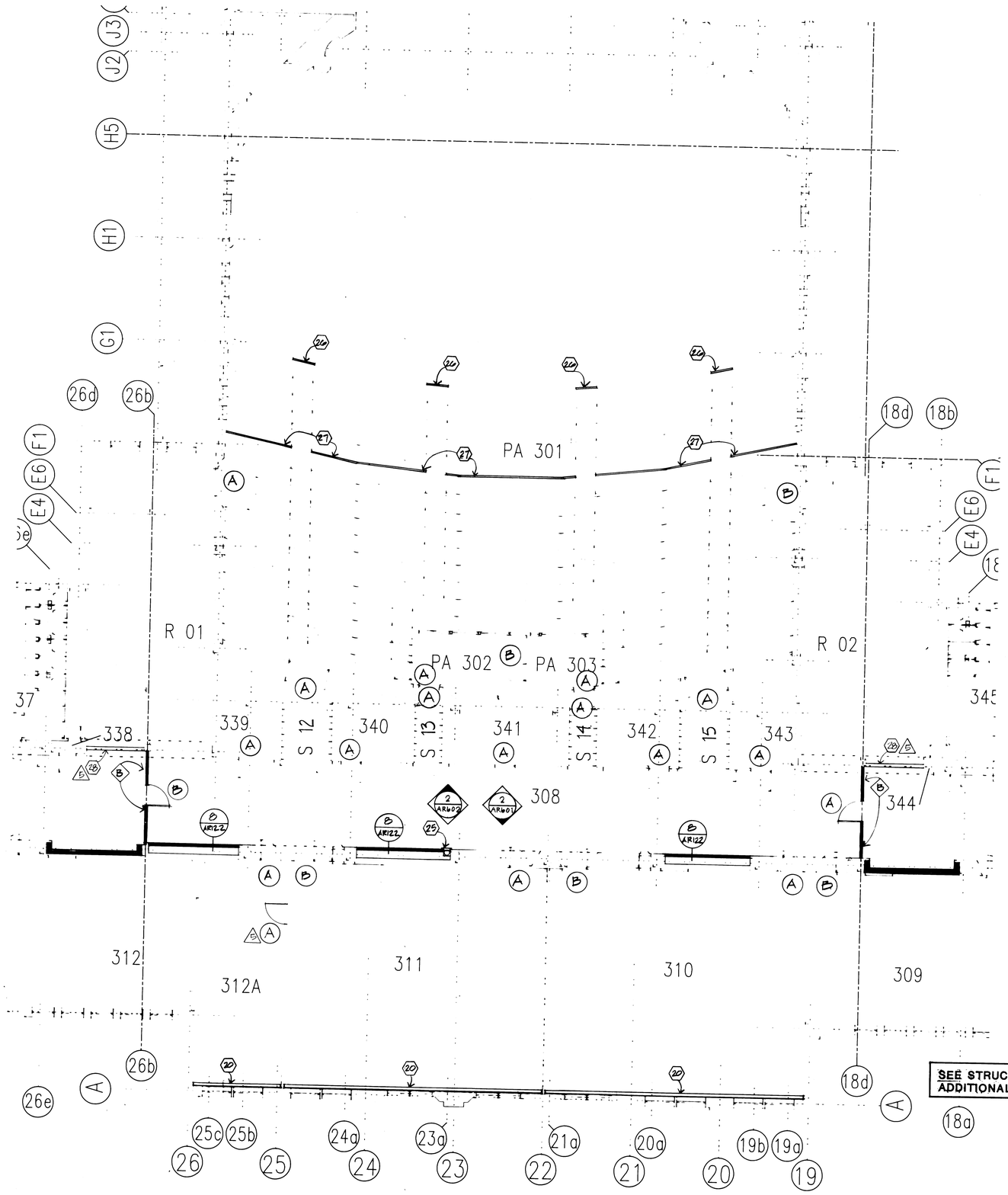

SHEET 121

REFERENCE NOTES

1-19	NOT USED
20	NEW FIN TUBE CONVECTORS WITHOUT CABINETS
21-24	NOT USED
25	NEW FIRE EXTINGUISHER IN NEW RECESSED CABINET. TOP OF CAB. 5' ABOVE FLOOR.
26	NEW MEDAL GUARDRAIL. SEE 4/AR125. (PAINTED PIPE)
27	NEW MEDAL RAILING. SEE 5/AR125. (PAINTED PIPE)
28	ATTACH ONE LAYER OF 5/8" GYPSUM BOARD TO EACH SIDE OF CLOSURE WALL FRAMING ABOVE EXISTING GUARDRAIL WALL

PLAN SCALE: 1/8" = 1'-0"
THIRD FLOOR

COOPER ROBERTS
ARCHITECTS AIA
202 WEST 300 NORTH
SALT LAKE CITY, UT 84103
(801) 355-5915

ANDERSON MASON DALE
1615 SEVENTEENTH STREET
DENVER, COLORADO 80202
(303) 294-9448

SOUTH CITY CAMPUS of SALT LAKE COMMUNITY COLLEGE

PARTIAL THIRD FLOOR PLAN AREA 8C

REVISIONS:
5 ADDENDUM FIVE
As-Built

PROJECT NUMBER: 88-041
DATE: JANUARY 1988
DRAWN: STAFF
CHECKED: WNC2
APPROVED:

SHEET OF

AR121

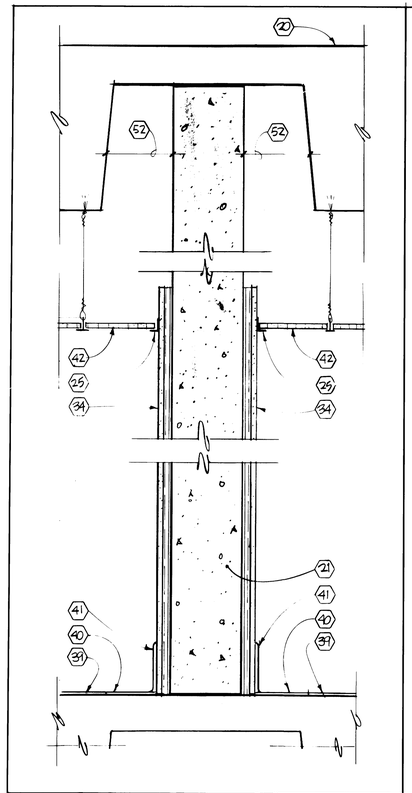

WALL SECTION SCALE: 1½" = 1'-0" (5)

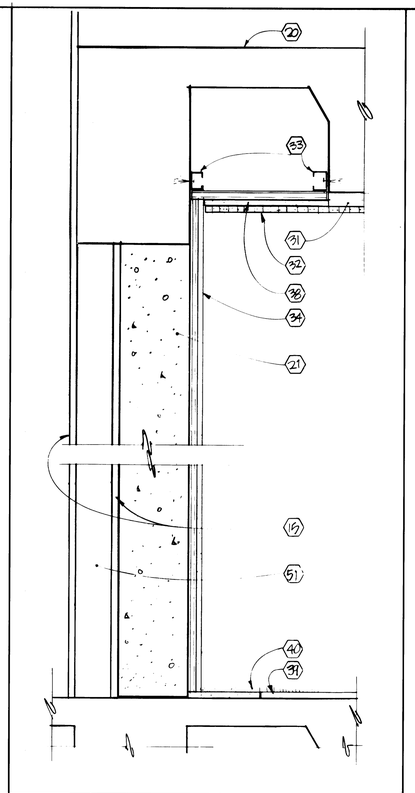

WALL SECTION SCALE: 1½" = 1'-0" (4)

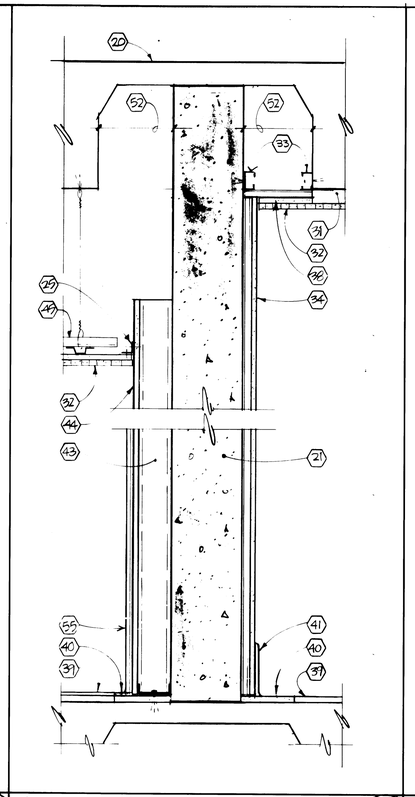

WALL SECTION SCALE: 1½" = 1'-0" (3)

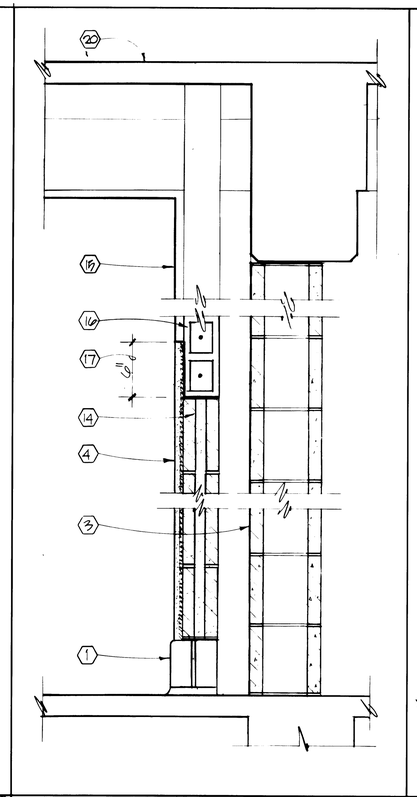

WALL INFILL SCALE: 1½" = 1'-0" (2)

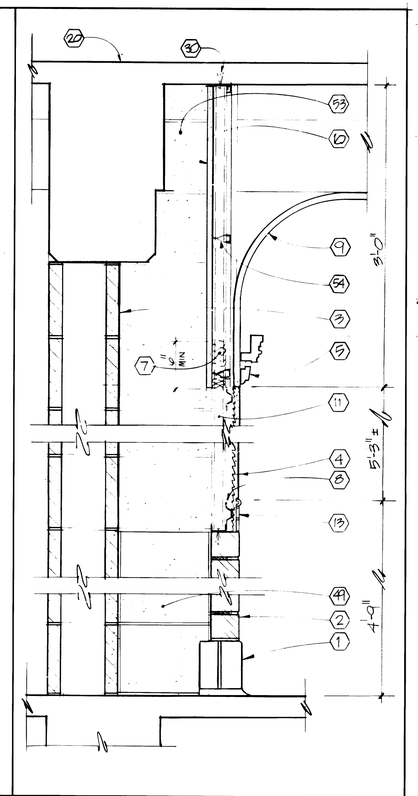

WALL INFILL SCALE: 1½" = 1'-0" (1)

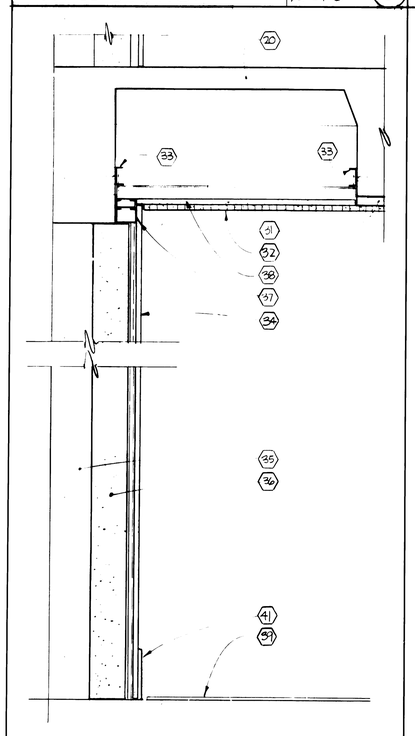

WALL SECTION SCALE: 1½" = 1'-0" (10)

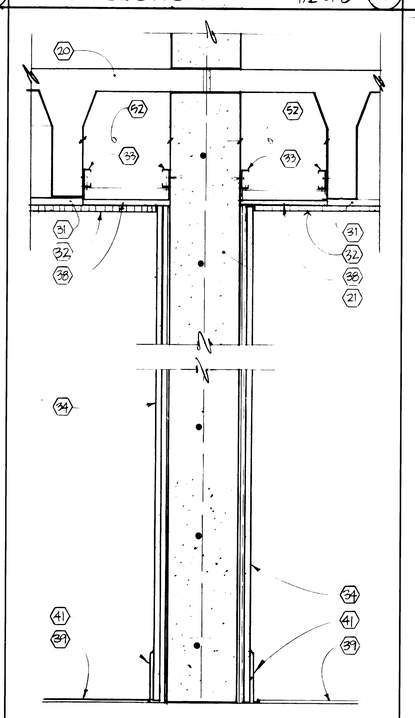

WALL SECTION SCALE: 1½" = 1'-0" (9)

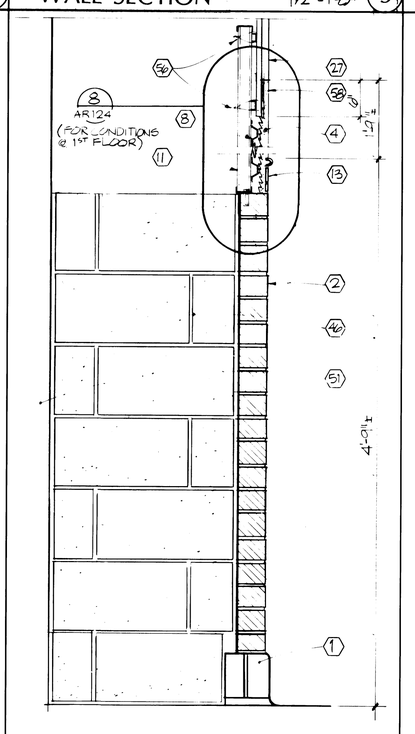

WALL INFILL SCALE: 1½" = 1'-0" (8)

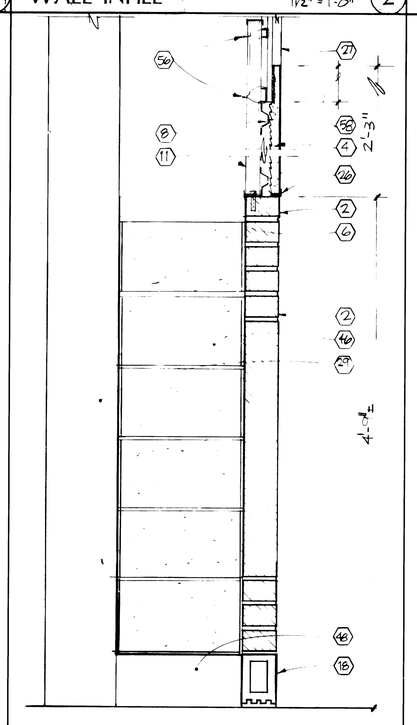

WALL INFILL SCALE: 1½" = 1'-0" (7)

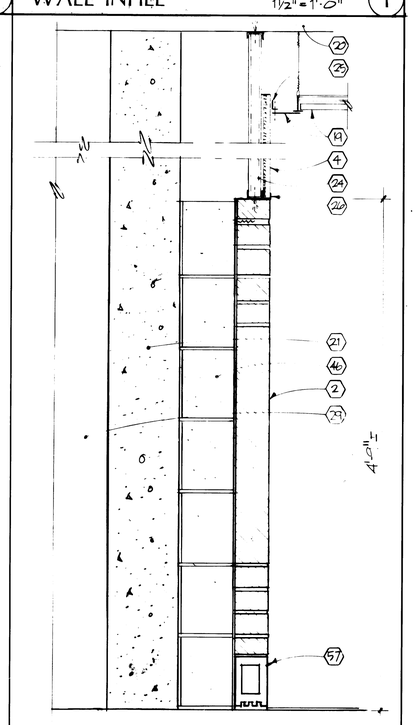

WALL INFILL SCALE: 1½" = 1'-0" (6)

REFERENCE NOTES

1. EXISTING GLAZED MASONRY BASE
2. NEW MASONRY WAINSCOT TO MATCH EXISTING INFILL WITH TIES AT 16" O.C. VERTICALLY AND 4'-0" O.C. HORIZONTALLY
3. CONCRETE BLOCK SHEAR WALL-SEE STRUCTURAL DRAWINGS
4. NEW PLASTER AND LATH-TEXTURE TO MATCH EXISTING
5. EXISTING WOOD PICTURE RAIL
6. 20 GA. x 3-5/8" METAL STUD HORIZONTAL BRACING WALL WITH STUDS @ 24" O.C.
7. NEW SAFE INGS INSULATION-TYP. BETWEEN STUDS & NEW BLOCK SHEAR WALL & RETURNS
8. 7/8" HAT CHANNELS @ 16" O.C. HORIZONTAL
9. EXISTING PLASTER AND LATH RADIUS/COVING
10. NEW 5/8" GYPSUM BOARD CLOSURE PANEL-CONT.
11. NEW 2"x16 GA. METAL STUD FRAMING-W/ STUDS @ 16" O.C. W/ EXPANSION ANCHORS @ 16" O.C. IN BOTTOM TRACK
12. CONCRETE COLUMN BEYOND - (EXISTING)
13. NEW CERAMIC MOSAIC TILE WAINSCOT CAP-MATCH EXIST.
14. NEW 4" X 8" X 16" CONCRETE MASONRY UNIT INFILL
15. EXISTING PLASTER AND LATH FINISH ON EXISTING CLAY TILE UNIT MASONRY-CONT. AROUND PERIMETER OF OPENING
16. EXISTING CLAY TILE UNIT LINTEL COURSE
17. REMOVE 6" OF EXISTING PLASTER OVER EXISTING CLAY TILE MASONRY-EXTEND NEW PLASTER AND LATH OVER EXISTING MASONRY
18. EXISTING GLAZED STRUCTURAL UNIT
19. EXISTINGSUSPENDEDACOUSTICALCEILING-REINSTALLED
20. EXISTING CONCRETE FLOOR STRUCTURE
21. NEW CONCRETE SHEAR WALL - SEE STRUCT. DRAWINGS
22. NEW 20 GA METAL "C" CHANNEL @ 4'-0" O.C.
23. POWDER DRIVEN ANCHORS AT 12" O.C.
24. NEW METAL STUD PARTITION - 1-1/2 X 1-1/2 X 20 GA STUDS @ 16" O.C. WITH EXPANSION ANCHORS TOP AND BOTTOM @ 32" O.C.
25. NEW SUPPORT ANGLE - CONTINUOUS
26. NEW METAL TRIM
27. EXISTING PLASTER AND LATH ON 3/4" x 3/4" STEEL CHANNELS 24" HORIZ. & VERTICALLY
28. NEW 3-5/8 20 GA METAL "C" CHANNEL BRACE TYPICAL @ EACH MASONRY SUPPORT
29. EXISTING CONCRETE MASONRY BLOCK WALL
30. NEW POWDER DRIVER ANCHORS AT 16" O.C.
31. EXISTING PLASTER AND LATH CEILING
32. NEW ACOUSTICAL CEILING TILE - SEE FINISH SCHEDULE
33. NEW 2"x 20 GA METAL "C" CHANNEL CONTINUOUS-ANCHORED TO STRUCTURE WITH POWDER DRIVEN ANCHORS @ 16" O.C.
34. NEW 5/8" GYPSUM BOARD ON 7/8" HAT CHANNELS @ 16" O.C. VERTICALLY
35. EXISTING MASONRY WALL STRUCTURE
36. NEW SHOT-CRETE SHEAR WALL
37. NEW METAL STUD FURRING-CONT.
38. NEW 5/8" GYPSUM BOARD ON 7/8" HAT CHANNELS @ 24" O.C.
39. EXISTING FLOORING
40. NEW FLOORING - SEE FINISH SCHEDULE
41. NEW BASE - SEE FINISH SCHEDULE
42. SALVAGED OR NEW LAY-IN TILE IN EXISTING GRID SYSTEM
43. NEW 16 GA 3-5/8" METAL STUD WALL-STUDS @ 16" O.C. TYPICAL
44. NEW 5/8" GYPSUM BOARD
45. NEW SUSPENDED CEILING SYSTEM - 7/8" HAT CHANNELS @ 24" O.C. ON 1-1/2" CHANNELS SUSPENDED FROM STRUCTURE ABOVE
46. NEW 4" CONCRETE BLOCK SUPPORT WALL AT CENTER OF EACH INFILL WITH MASONRY TIES TO MASONRY WAINSCOT AND EXISTING STRUCTURE @ 16" O.C. VERTICALLY
47. NEW 7/8" HAT CHANNELS AT 16" O.C. VERTICALLY
48. EXISTING CONCRETE BASE
49. NEW 4" CONCRETE BLOCK SUPPORT WALL AT CENTER OF EACH INFILL WITH MASONRY TIES TO WAINSCOT AND NEW BLOCK SHEAR WALL @ 16" O.C. VERTICALLY
50. NEW 20 GA X 2" METAL "C" CHANNEL CONT ANCHOR TO STRUCTURE WITH 1/4" X 1-1/2" EXPANSION ANCHORS @ 32" O.C.
51. EXISTING CLAY TILE MASONRY WALL
52. FIELD VERIFY DIMENSION - VARIES WITH SPECIFIC LOCATIONS
53. NEW CONCRETE SHEAR WALL RETURN
54. WIRE TIE NEW METAL STUDS TO EXISTING HORIZONTAL CHANNELS TYP @ EACH STUD AND EACH CHANNEL
55. NEW 4 X 4 CERAMIC TILE WAINSCOT
56. WIRE TIE NEW METAL STUDS TO A MIN OF 2 (TWO) EXISTING HORIZONTAL STEEL CHANNELS
57. SALVAGED GLAZED STRUCTURAL UNIT
58. REMOVE 6" OF EXISTING PLASTER FROM METAL LATH AND EXTEND NEW PLASTER OVER EXISTING LATH - FINISH TO MATCH EXISTING

COOPER ROBERTS
ARCHITECTS, A.I.A
202 WEST 300 NORTH
SALT LAKE CITY, UT 84103
(801) 355-5915

ANDERSON MASON DALE
1615 SEVENTEENTH STREET
DENVER, COLORADO 80202
(303) 294-9448

SOUTH CITY CAMPUS of SALT LAKE COMMUNITY COLLEGE

PLAN DETAILS

REVISIONS:
As-Built

PROJECT NUMBER: 88-041
DATE: JANUARY 1990
DRAWN: STAFF
CHECKED: WNC2
APPROVED:

SHEET OF
AR122

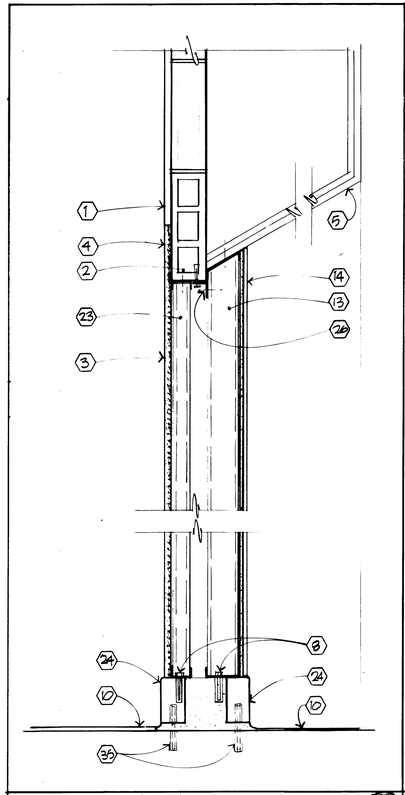

WALL INFILL (4)

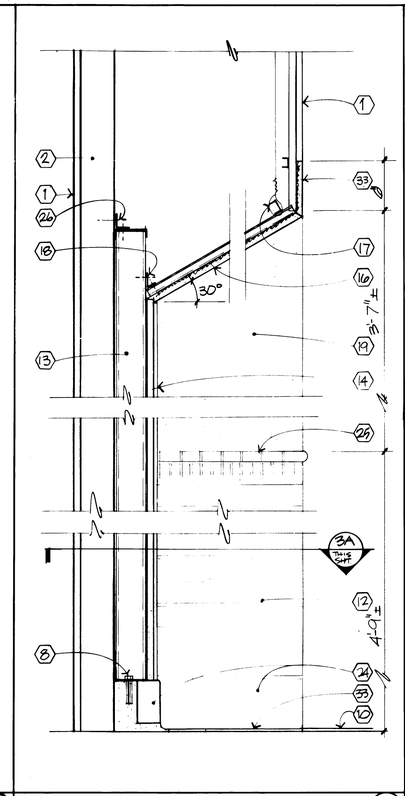

WALL SECTION (3)

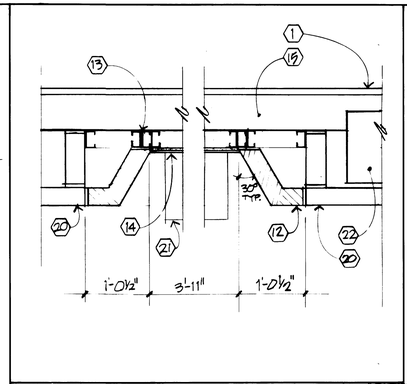

PLAN·E.W.C. ALCOVE (2A)

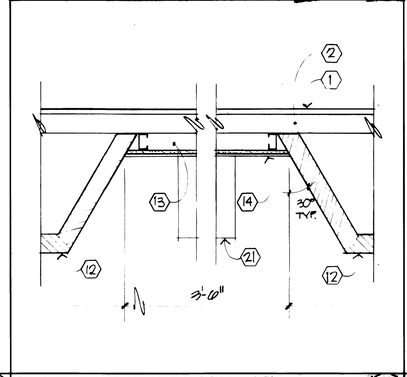

PLAN·E.W.C. ALCOVE (3A)

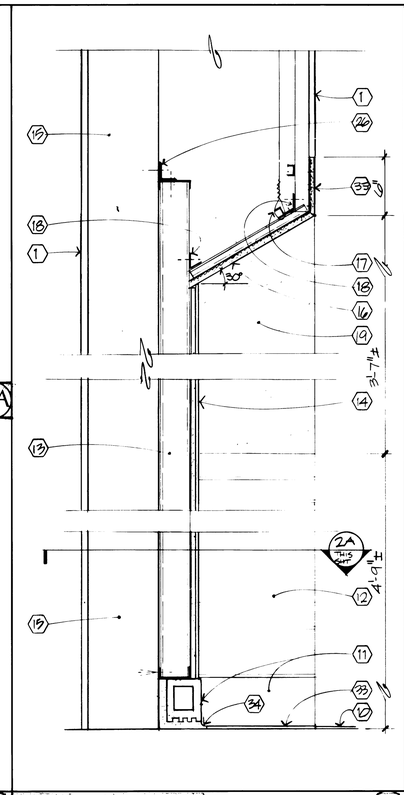

WALL SECTION (2)

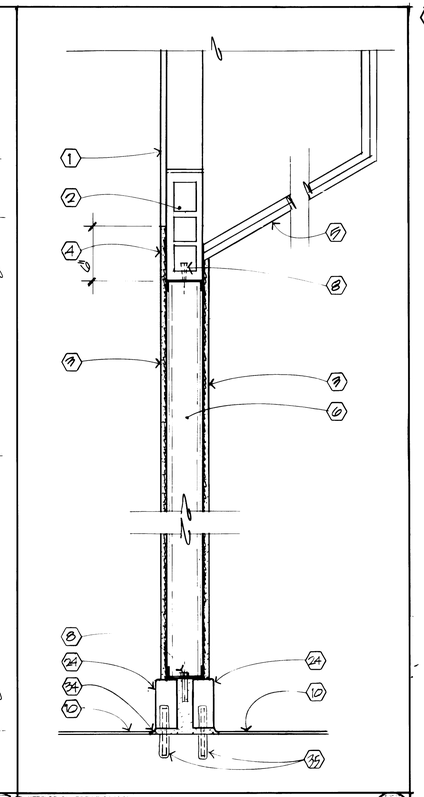

WALL INFILL (1)

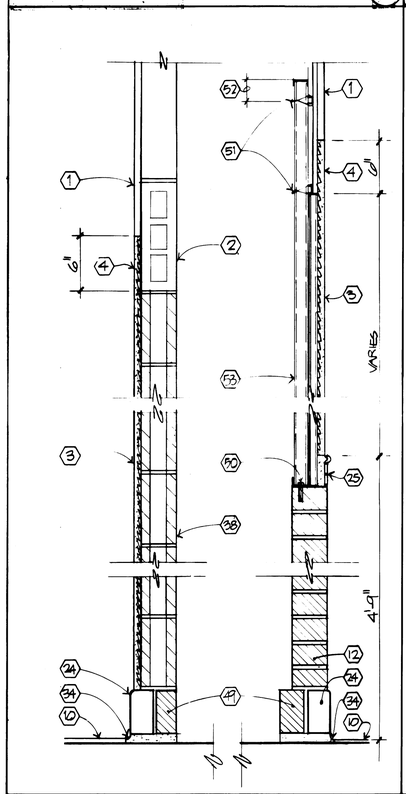

WALL INFILL (8)

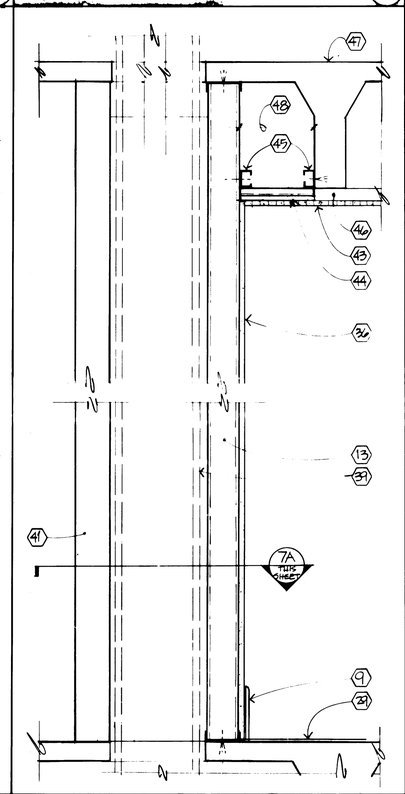

MECHANICAL SHAFT SECTION (7)

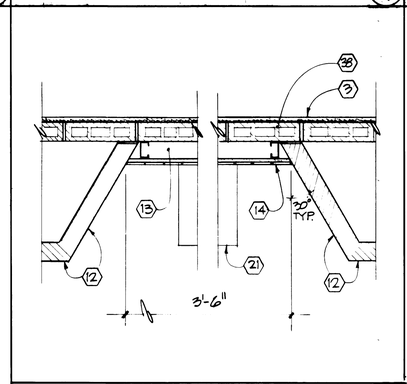

PLAN E.W.C. ALCOVE (6A)

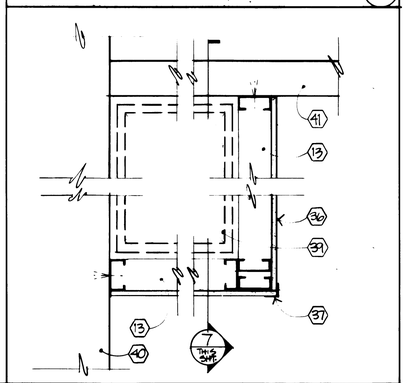

PLAN MECHANICAL SHAFT (7A)

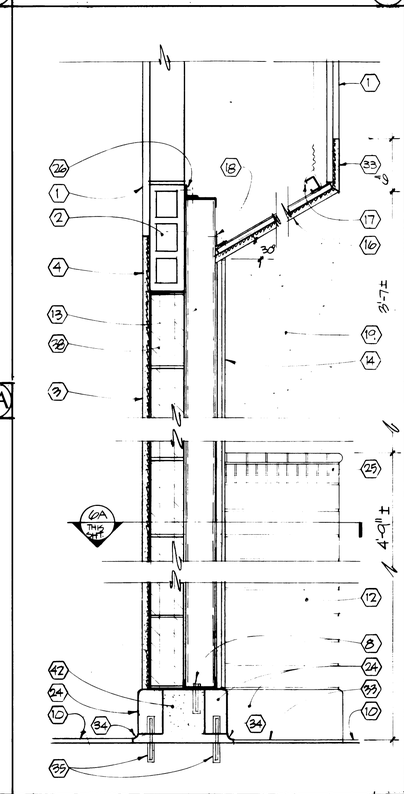

(6)

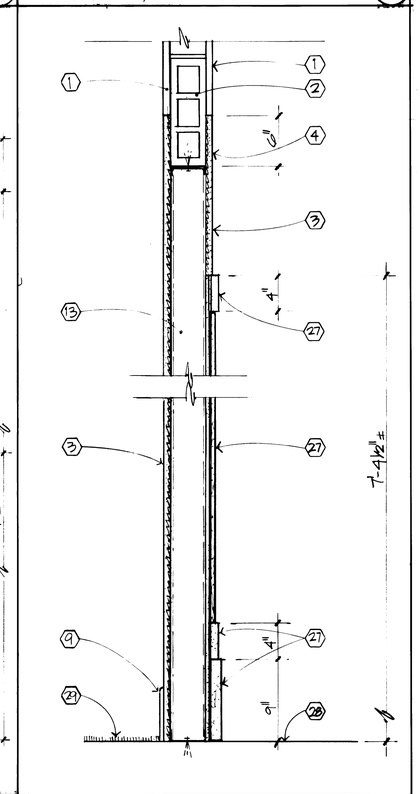

WALL INFILL (5)

REFERENCE NOTES

1. EXISTING PLASTER AND LATH
2. EXISTING CLAY TILE MASONRY
3. NEW PLASTER AND LATH
4. REMOVE 6" OF EXISTING PLASTER OVER EXISTING CLAY TILE MASONRY AND Extend NEW PLASTER AND LATH OVER EXISTING MASONRY
5. EXISTING PLASTER AND LATH SOFFIT
6. NEW 16 GA. METAL STUD PARTITION WITH STUDS @ 16" O.C. - STUDS TO BE WIDTH OF EXISTING WALL
7. NEW POWDER DRIVER ANCHORS @ 16" O.C.
8. NEW 1/4"Ø X 2-1/2" EXPANSION ANCHORS @ 16" O.C.
9. NEW BASE-SEE FINISH SCHEDULE
10. EXISTING FLOORING
11. SALVAGED GLAZED STRUCTURAL UNIT
12. NEW BRICK WAINSCOT-MATCH EXISTING
13. NEW 16 GA X 3-5/8" METAL STUD WALL WITH STUDS @ 16" O.C.
14. NEW CERAMIC TILE
15. EXISTING 8" CONCRETE BLOCK WALL
16. NEW PLASTER AND LATH SOFFIT
17. NEW SUSPENDED FRAMING SYSTEM - 7/8" HAT CHANNELS @ 16" O.C. WITH 1-1/2" CHANNELS @ 1'-0" O.C. SUSPENDED FROM STRUCTURE ABOVE
18. NEW 16 GA X 6" BENT SHEET METAL CONTINUOUS WITH SCREWS AT EACH FRAMING MEMBER
19. NEW PLASTER AND LATH ON NEW FURRING SYSTEM WITH 7/8" HAT CHANNELS @ 16 O.C. VERTICAL AND 1-1/2" CHANNELS AT 2'-0" O.C. HORIZONTAL
20. EXISTING MASONRY WAINSCOT
21. NEW HANDICAP ELECTRIC WATER COOLER
22. EXISTING CONCRETE COLUMN
23. NEW 16 GA X2" METAL STUD WALL WITH STUDS @ 16" O.C.
24. SALVAGED GLAZED CLAY MASONRY BASE
25. NEW CERAMIC TILE WAINSCOT/CAP (MATCH EXISTING)
26. STEEL ANGLE 1/4" X 2 X 2 CONTINUOUS WITH 1/4"Ø X 3" EXPANSION ANCHORS @ 16" O.C. INTO EXISTING CLAY TILE MASONRY AND SELF TAPPING SCREWS AT EACH STUD
27. NEW MARBLE VENEER-PROFILE AND MATERIAL TO MATCH EXISTING
28. EXISTING MARBLE FLOORING
29. NEW FLOORING-SEE FINISH SCHEDULE
30. NEW 7/8 HAT CHANNELS @ 16 O.C.
31. NEW 5/8" GYPSUM BOARD ON EXISTING PLASTER AND NEW FURRING CHANNELS
32. NEW 4 X 8 X 16 CONCRETE BLOCK INFILL
33. NEW FLOORING (SEE FINISH SCHEDULE) ON EXISTING CONCRETE FLOOR
34. NEW COVE FROM FORMED MORTAR - MATCH EXISTING
35. NEW #3 DOWELS - DOWEL INTO EXISTING CONCRETE FLOOR SLAB WITH 2-1/2" DEEP X 1" HOLE AND INTO SALVAGED MASONRY BASE WITH 2" DEEP X 1" HOLE EPOXY GROUT BAR IN PLACE.
36. NEW 5/8" GYPSUM BOARD
37. NEW METAL CORNER TRIM
38. NEW 4 X 8 X 16 CONCRETE MASONRY UNIT INFILL
39. NEW MECHANICAL DUCT - SEE MECHANICAL DRAWINGS FOR SIZE AND LOCATION
40. EXISTING MASONRY WALL
41. EXISTING WALL STRUCTURE
42. GROUT SOLID BETWEEN BASE
43. NEW ACOUSTICAL CEILING TILE - SEE FINISH SCHEDULE
44. NEW 5/8" GYPSUM BOARD ON 7/8" HAT CHANNELS AT 24" O.C.
45. NEW 2" X 20 GA METAL "C" CHANNEL CONTINUOUS - ANCHORED TO EXISTING STRUCTURE WITH POWDER DRIVEN ANCHORS @ 24" O.C. AND ANCHORED TO METAL STUDS AT EACH STUD
46. EXISTING PLASTER AND LATH CEILING
47. EXISTING CONCRETE FLOOR STRUCTURE
48. FIELD VERIFY DIMENSION - VARIES WITH LOCATION OF SHAFT
49. NEW MASONRY - CONTINUOUS
50. NEW 1/4" X 1-1/2" EXPANSION ANCHORS AT 16" O.C.
51. WIRE TIE NEW METAL STUDS TO EXISTING STEEL CHANNELS
52. EXTEND NEW METAL STUD WALL 4" PAST 2ND EXISTING HORIZONTAL STEEL CHANNEL
53. NEW 16 GA X 1-1/2" METAL STUD WALL WITH STUDS AT 16" O.C.
54. REMOVE 6" OF EXISTING PLASTER FROM METAL LATH AND EXTEND NEW PLASTER OVER EXISTING LATH - FINISH TO MATCH EXISTING

COOPER ROBERTS
ARCHITECTS, A.I.A.
202 WEST 300 NORTH
SALT LAKE CITY, UT 84103
(801) 355-5915

ANDERSON MASON DALL
1615 SEVENTEENTH STREET
DENVER, COLORADO 80202
(303) 294-9448

SOUTH CITY CAMPUS of SALT LAKE COMMUNITY COLLEGE

PLAN DETAILS

REVISIONS:

As-Built

PROJECT ~~NUMBER: 88-007~~
DATE: JANUARY 1990
DRAWN: STAFF
CHECKED: WNC2
APPROVED:

SHEET OF

AR123

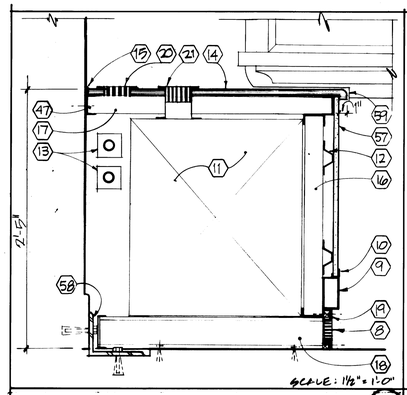

MECH. ENCLOSURE DET. (5)

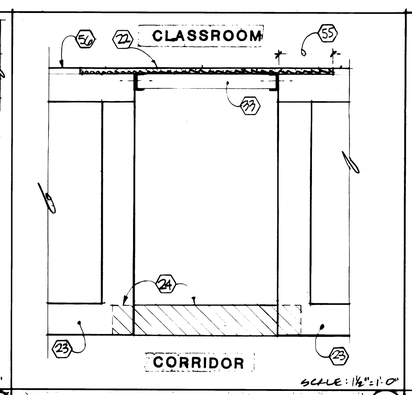

TRASH RECEPTACLE INFILL (4)

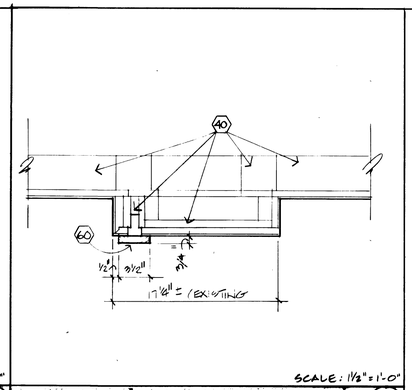

JAMB-EX. ROLL-UP DOOR (3)

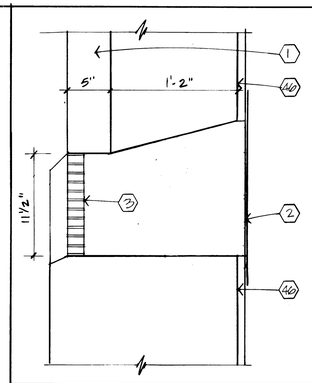

VENT INFILL SCALE: 1½" = 1'-0" (1)

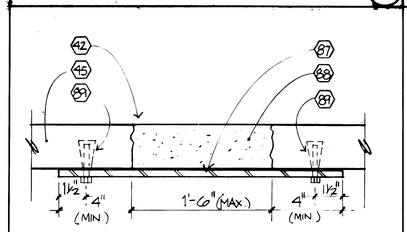

FLOOR PATCH DETAIL (9)

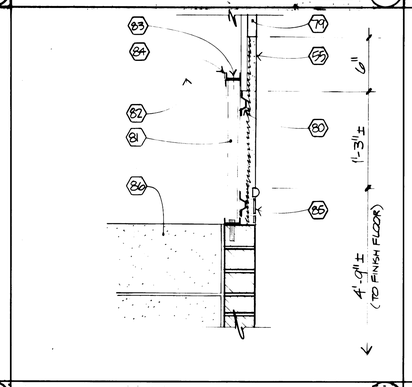

WALL INFILL (8)

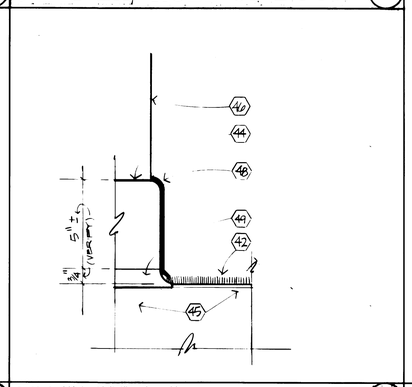

BASE DETAIL SCALE: 3" = 1'-0" (7)

(6)

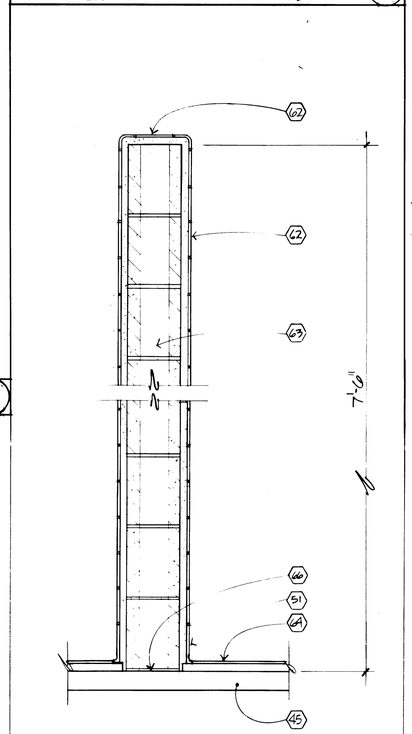

WALL SECTION SCALE: 1½" = 1'-0" (11)

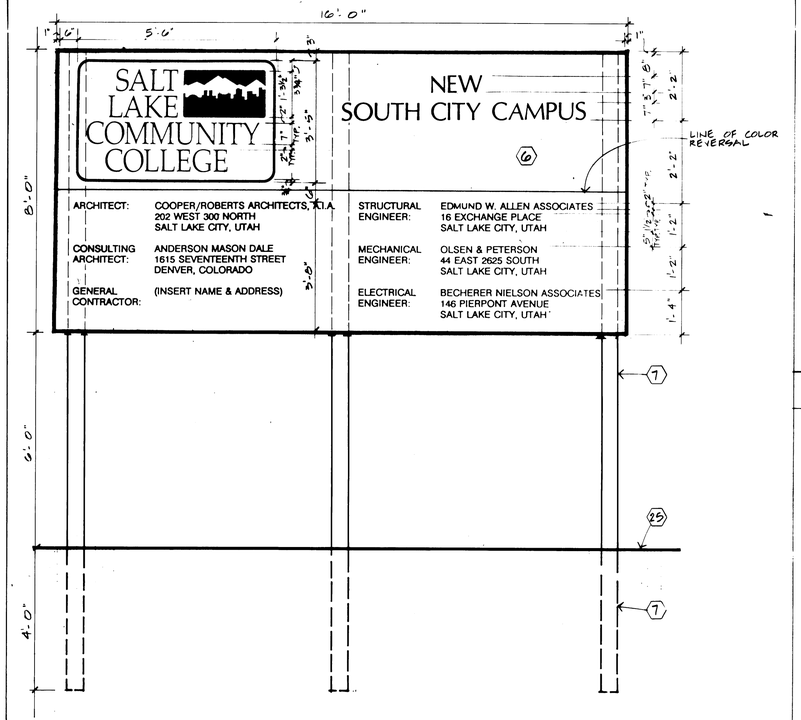

CONSTRUCTION SIGN SCALE: ½" = 1'-0" (17)

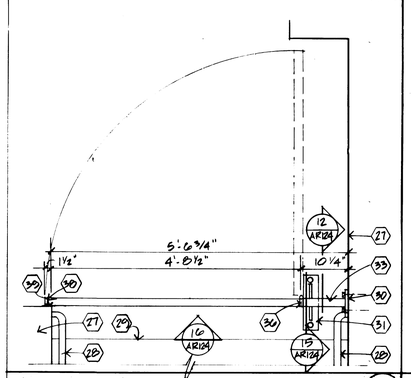

FIRE GATE PLAN SCALE: 3/4" = 1'-0" (13)

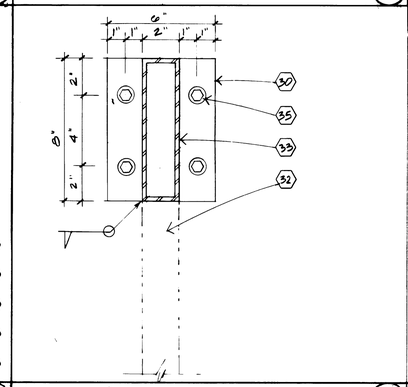

DETAIL SCALE: 3" = 1'-0" (12)

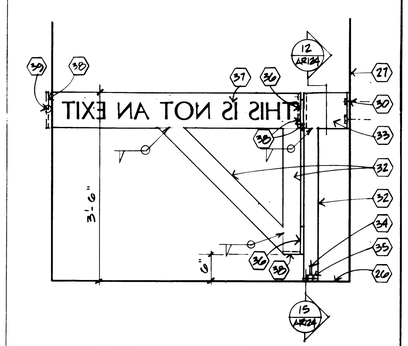

FIRE GATE ELEVATION SCALE: 3/4" = 1'-0" (16)

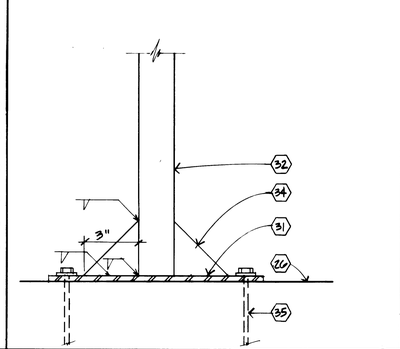

DETAIL SCALE: 3" = 1'-0" (15)

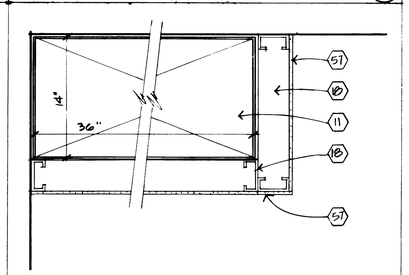

SOFFIT DETAIL SCALE: 1½" = 1'-0" (14)

REFERENCE NOTES:

1. EXISTING STONE
2. NEW SHEET METAL COVER
3. EXISTING GRILLE
4. NEW 8" CMU
5. CUT CMU AS REQUIRED AND DRY PACK MORTAR INTO JOINT
6. NEW 3/4" PAINTED PLYWOOD SIGN. JOIN PLYWOOD PANELS WITH 3/4"x2"x8' PLYWOOD SCREWED TO BACK. ATTACH TO POSTS WITH 1/2" DIA. THROUGH BOLTS @ 12" O.C.. PAINT 2 COLORS AS SELECTED BY ARCHITECT. THE 2 COLORS (i.e.: BACKGROUND AND PRINTING) ARE TO BE REVERSED AT THE LINE SHOWN.
7. NEW 6 x 6 POST. SET IN 4' DEEP HOLE.
8. NEW CONTINUOUS GRILLE
9. NEW ELECTRICAL BUSS DUCT. SEE ELECTRICAL DRAWINGS.
10. NEW J MOULD
11. NEW MECHANICAL DUCT. SEE MECHANICAL DRAWINGS.
12. NEW 7/8" HAT CHANNELS AT 24" O.C.
13. NEW FIN TUBE RADIATORS
14. NEW PLASTIC LAMINATED COUNTERTOP
15. NEW SEALANT, CONTINUOUS
16. NEW 2" METAL STUDS AT 16" O.C.
17. NEW 2" METAL STUDS AT 24" O.C.
18. NEW 3-5/8" METAL STUDS @ 16" O.C. SET ON EDGE, ANCHORED TO FLOOR WITH POWDER DRIVEN FASTENERS @ 12" O.C.
19. NEW BLOCKING AS REQUIRED
20. NEW CONTINUOUS MECHANICAL REGISTER - SEE MECHANICAL DRAWINGS
21. NEW MECHANICAL REGISTER BETWEEN FRAMING - SEE MECHANICAL DRAWINGS
22. NEW PLASTER ON GYPSUM LATH. FINISH TO MATCH EXISTING
23. EXISTING MASONRY WAINSCOT
24. NEW MASONRY INFILL - TOOTH NEW MASONRY INTO EXISTING MASONRY.
25. EXISTING EARTH
26. EXISTING FLOOR
27. EXISTING WALL
28. EXISTING HANDRAIL
29. EXISTING STAIR RISER
30. NEW PAINTED 6" x 8" x 1/4" STEEL PLATE
31. NEW PAINTED 3-1/2" x 12" x 1/4" STEEL PLATE
32. NEW PAINTED 3-1/2" x 2" x 1/4" TS
33. NEW PAINTED 8" x 2" x 1/4" TS
34. NEW PAINTED 1/4" STEEL PLATE, ROUND EDGES
35. NEW 1/2" DIA. x 4" BOLTS SET IN EPOXY GROUT
36. NEW SPRING HINGES
37. NEW SIGN STENCILED ON OTHER SIDE OF THIS GATE. 6" HIGH LETTERS
38. NEW 1/4" STEEL PLATE CAP
39. NEW DOOR STOP
40. EXISTING CONSTRUCTION TO REMAIN
41. REMOVE PORTION OF MORTAR COVE AS REQUIRED
42. NEW FLOOR COVERING - SEE FINISH SCHEDULE
43. NEW CERAMIC TILE BASE
44. EXISTING GLAZED MASONRY BASE
45. EXISTING CONCRETE PAN FLOOR STRUCTURE
46. EXISTING PLASTER FINISH ON MASONRY WALL
47. NEW POWDER DRIVEN FASTENERS AT 24" O.C.
48. NEW RUBBER BASE. FULLY ADHERE AROUND EXISTING MASONRY BASE RADIUS.
49. EXISTING "DURALITE" COVE
50. NEW PLASTER ON NEW BLOCK TO FLUSH OUT WITH AND MATCH EXISTING PLASTER
51. NEW CERAMIC TILE COVE BASE
52. NEW CERAMIC MOSAIC TILE FLOOR. MATCH EXISTING
53. NEW LIGHT WEIGHT CONCRETE FILLER
54. NEW CERAMIC TILE WAINSCOT
55. EXTEND NEW PLASTER AND LATH 6" BEYOND EXISTING OPENING. TYPICAL.
56. EXISTING PLASTER AND LATH ON CLAY TILE UNITS
57. NEW 5/8" GYPSUM BOARD
58. NEW STRUCTURAL STEEL ANGLE, CONTINUOUS. SEE STRUCTURAL.
59. COPE EXISTING CHALK BOARD TRIM TO ACCEPT NEW MECHANICAL ENCLOSURE.
60. NEW NOMINAL 1x4 WOOD TRIM, CONTINUOUS. (FINISH TO MATCH EXISTING)
61. NEW 1-1/2" METAL CHANNELS - CONTINUOUS AROUND OPENING.
62. NEW CERAMIC TILE
63. NEW 6" x 8" x 16" CONCRETE BLOCK PARTITION. REINFORCE PER STRUCTURAL.
64. EXISTING CERAMIC MOSAIC FLOOR TILE
65. EXISTING PLASTER ON LATH ON CHANNELS
66. REMOVE EXISTING FLOORING DOWN TO CONCRETE FLOOR STRUCTURE AS NECESSARY FOR INSTALLATION OF NEW PARTITION.
67. NEW 16 GA. x 6" BENT SHEET METAL BACKING
68. 1-1/2" CHANNEL SUSPENDED FROM STRUCTURE ABOVE
69. CARPET GLUED ON MASONRY WALL
70. CARPET ON PAD
71. 3/4" x 4" OAK TRIM WITH EASED EDGE
72. 2 LAYERS 3/4" CDX PLYWOOD
73. EXISTING MASONRY WALL
74. 3/4" COVE BACKING
75. EXISTING GLAZED STRUCTURAL BASE
76. NEW 8" x 12" WIDE CMU
77. NEW BRICK MASONRY TO MATCH EXISTING ADJACENT MASONRY
78. FIRE RETARDANT TREATED LUMBER
79. EXISTING PLASTER AND GYPSUM LATH ON STEEL CHANNEL GRID
80. NEW 7/8" HAT CHANNELS CONT. - HORIZONTALLY
81. NEW 1-1/2" X 16 GA METAL STUDS @ 16" O.C. WITH 1/4"Ø X 2" EXPANSION ANCHORS @ 16 O.C.
82. EXISTING BRACING TO REMAIN
83. ANCHOR EXISTING CHANNEL TO NEW METAL STUD WALL WITH SELF TAPPING SCREWS @ 12" O.C.
84. EXISTING 1-1/2" X 1/2" STEEL CHANNEL CONTINUOUS
85. NEW CERAMIC MOSAIC WAINSCOT CAP TO MATCH EXISTING
86. NEW CONCRETE BLOCK SUPPORT (BEYOND)
87. 1/4" X REQUIRED (PLATE TO
88. LIGHT WEIGHT CONCRETE INFILL
89. 3/8"Ø X 2-1/2" EXPANSION ANCHORS @ EACH CORNER OF STEEL PLATE

COOPER ROBERTS
ARCHITECTS, A.I.A
202 WEST 300 NORTH
SALT LAKE CITY, UT 84103
(801) 355-5915

ANDERSON MASON DALE
1615 SEVENTEENTH STREET
DENVER, COLORADO 80202
(303) 294-9448

SOUTH CITY CAMPUS of SALT LAKE COMMUNITY COLLEGE

PLAN DETAILS

REVISIONS:
As-Built

PROJECT NUMBER: 88-041
DATE: JANUARY 1990
DRAWN: STAFF
CHECKED: WNC2
APPROVED:

SHEET OF

AR124

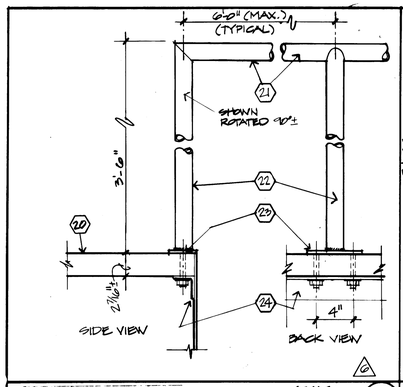

RAIL SECTION SCALE: 1½" = 1'-0" (5)

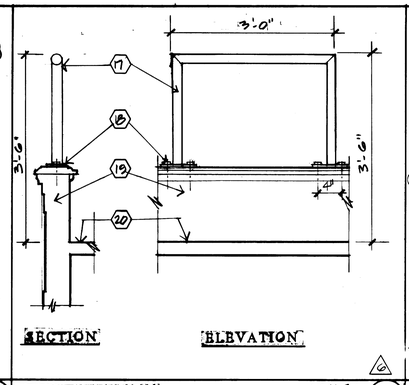

RAIL DETAIL SCALE: 3/4" = 1'-0" (4)

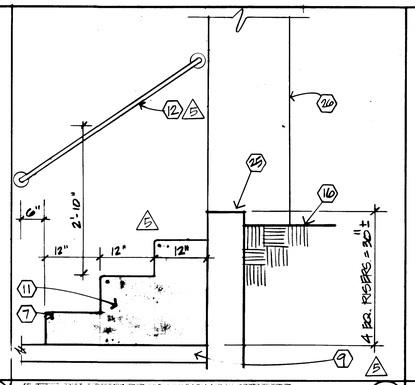

STEPS AT MECH. ROOM SCALE: 3/4" = 1'-0" (3)

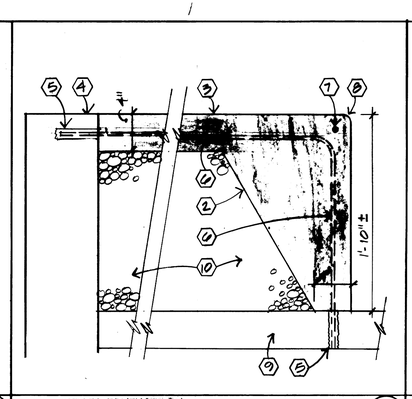

SLAB SECTION SCALE: 1½" = 1'-0" (2)

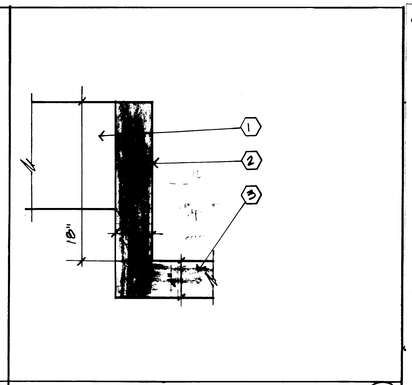

PIT SECTION SCALE: 1½" = 1'-0" (1)

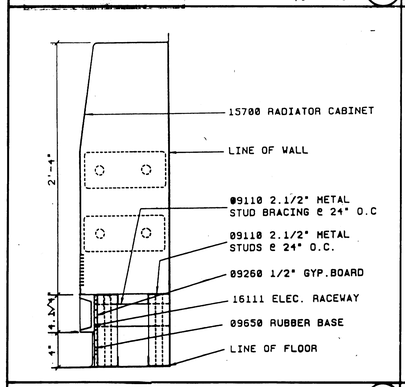

RADIATOR CABINET 1½" = 1'-0" (9)

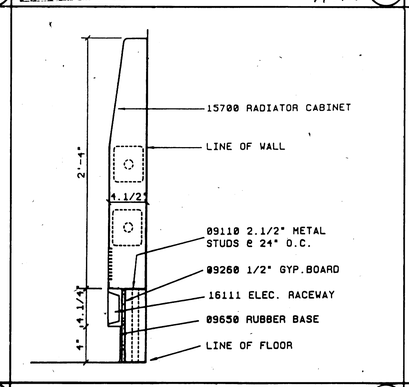

RADIATOR CABINET 1½" = 1'-0" (8)

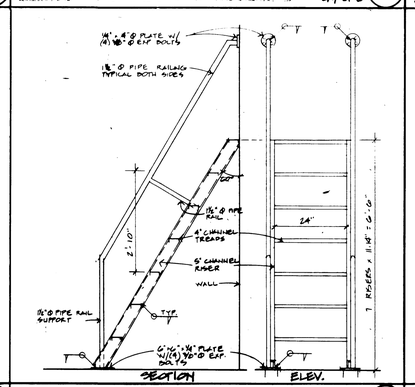

SHIP'S LADDER 1/2" = 1'-0" (7)

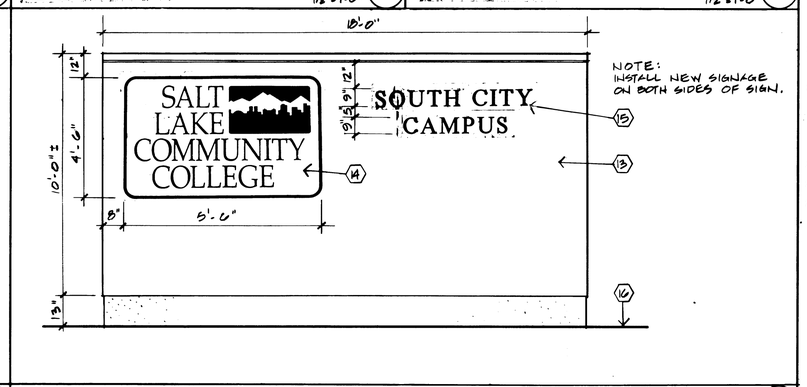

SIGN SCALE: 3/8" = 1'-0" (6)

REFERENCE NOTES

1. EXISTING FOOTING
2. NEW 4" CONCRETE WALL
3. NEW 4" CONCRETE SLAB
4. EXISTING RETAINING WALL
5. DRILL 4" INTO EXISTING CONCRETE AND SET #3 x 18" DOWELS AT 18" O.C. INTO EPOXY GROUT
6. #3 BARS AT 18" O.C. EACH WAY
7. #4 BAR AT NOSE
8. 1" DIA. NOSING
9. EXISTING CONCRETE SLAB
10. COMPACTED FILL
11. CONCRETE STEPS WITH 1" RADIUS AT NOSE
12. 1-1/2" DIA. PIPE RAILING WITH 2 BRACKETS. SEE DETAIL 1/AR504 (SIMILAR).
13. EXISTING BRICK MONUMENT SIGN. REPAIR HOLES WITH MORTAR TO MATCH BRICK COLOR.
14. ANODIZED ALUMINUM PLAQUE. ANCHOR INTO EXISTING BRICK
15. CAST BRASS LETTERS ANCHORED INTO BRICK
16. EXISTING GRADE
17. NEW 1-1/2" NOMINAL DIAMETER PAINTED STEEL PIPE BALCONY AISLE GUARDRAIL WITH MITERED CORNERS - WELD AND GRIND SMOOTH ALL JOINTS
18. PL 3" x 6" x 1/4" STEEL BASE PLATE WELDED TO BOTTOM OF GUARDRAIL POSTS AND ATTACHED TO EXISTING WOOD CAP OF BALCONY WALL WITH (2) 3/8" DIAMETER x 1-1/2" LONG LAG BOLTS
19. EXISTING BALCONY WALL
20. EXISTING BALCONY FLOOR
21. NEW 1-1/2" NOMINAL DIAMETER PAINTED STEEL PIPE BALCONY RAILING WITH MITERED CORNERS - WELD AND GRIND SMOOTH ALL JOINTS
22. NEW 1-1/2" NOMINAL DIAMETER PAINTED STEEL PIPE POSTS WITH MITERED CORNERS - WELD AND GRIND SMOOTH ALL JOINTS
23. PL 3" x 6" x 1/4" STEEL BASE PLATE WELDED TO BOTTOM OF POSTS AND ATTACHED TO EXISTING BALCONY FLOOR STRUCTURE WITH (2) 1/2" DIAMETER THRU-BOLTS WELDED TO BASE PLATE AS SHOWN - DRILL THROUGH EXISTING FLOOR STRUCTURE AS NECESSARY AND PROVIDE WASHERS AS SHOWN
24. EXISTING METAL ANGLE
25. EXISTING CONCRETE WALL
26. EXISTING COLUMN

COOPER ROBERTS ARCHITECTS
202 WEST 300 NORTH
SALT LAKE CITY, UT 84103
(801) 355-5915

ANDERSON MASON DALE
1615 SEVENTEENTH STREET
DENVER, COLORADO 80202
(303) 294-9448

SOUTH CITY CAMPUS of SALT LAKE COMMUNITY COLLEGE

PLAN DETAILS

REVISIONS:
5 ADDENDUM FIVE
6 ADDENDUM SIX
As-Built

PROJECT NUMBER:
DATE: JANUARY 10
DRAWN: STAFF
CHECKED: WMCS
APPROVED:

SHEET OF

AR125

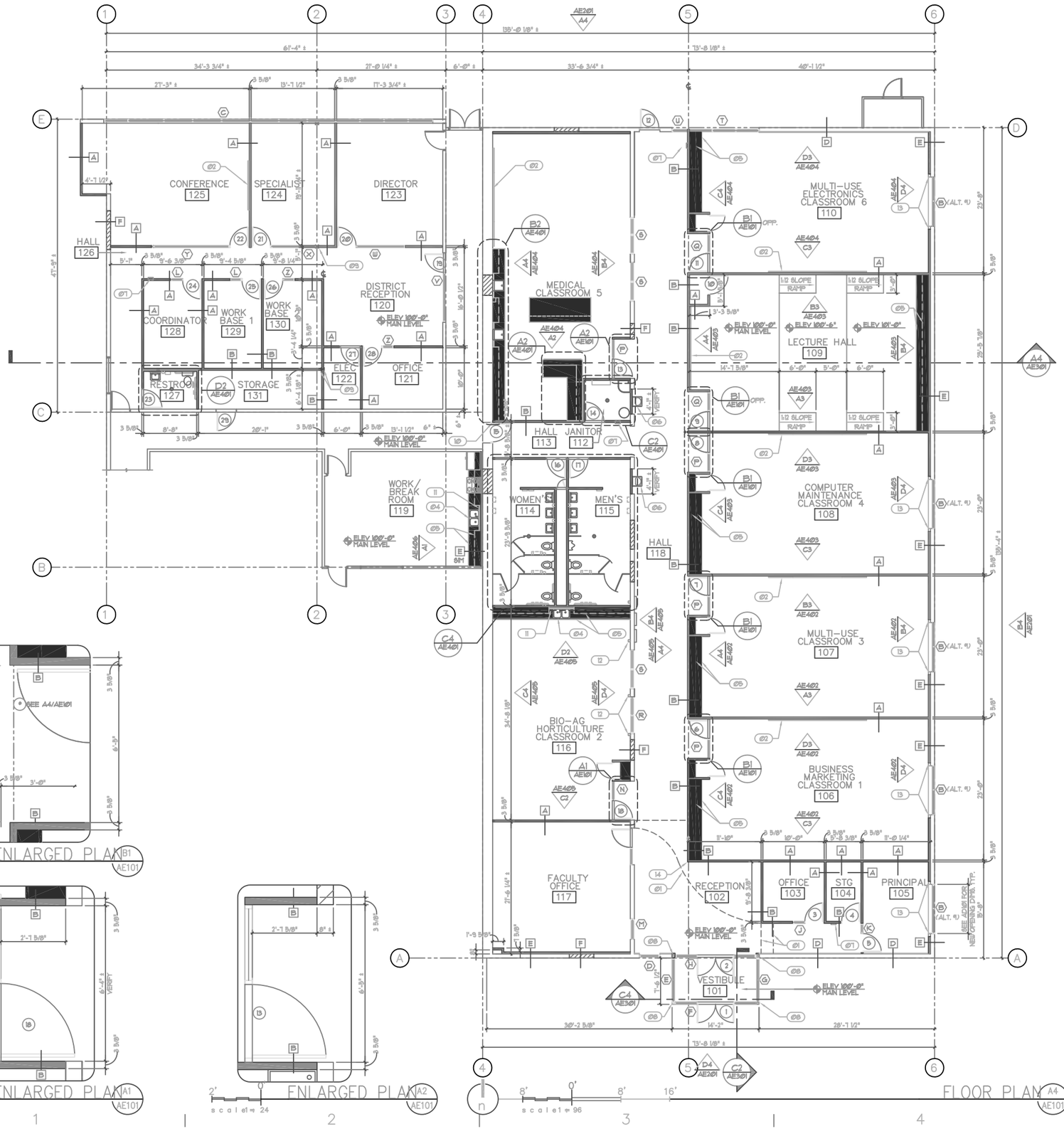

GENERAL NOTES AND LEGEND:

*FOR SHEET AE101 ONLY.

- SEE SHEET AE001 FOR GENERAL NOTES.
- SEE COVER SHEET FOR DRAWING INDEX.
- DO NOT SCALE DRAWINGS.
- CONTRACTOR SHALL VERIFY ALL DIMENSIONS AND CONDITIONS BEFORE BEGINNING WORK, AND SHALL REPORT TO THE ARCHITECT ANY ERRORS, INCONSISTENCIES OR OMISSIONS BEFORE BEGINNING WORK. SEE GENERAL NOTES AND SPECIFICATIONS.
- ALL WORK IS NEW UNO. SEE DEMOLITION SHEETS FOR EXISTING CONDITIONS INFORMATION. SEE SHEET GI002 FOR WALL TYPES.

KEYED NOTE LEGEND:

*FOR SHEET AE101 ONLY.

01 LINE OF NEW SOFFIT ABOVE SHOWN DASHED. SEE CEILING PLAN.
02 WHITE BOARD W/ TACK BOARD. SEE INTERIOR ELEVATIONS AND EQUIPMENT SCHEDULE.
03 ALIGN 6" OF NEW WALL WITH 6" OF EXISTING WINDOW FRAME FOR A COMPLETE AND FINISHED APPEARANCE. SEE DETAIL.
04 SINK. SEE PLUMBING DRAWINGS.
05 (ALT. #) MILLWORK. SEE INTERIOR ELEVATIONS AND DETAILS REFERENCED ON PLAN.
06 ELECTRIC WATER COOLER. SEE PLUMBING DRAWINGS. SEE SHEET AE603 FOR MOUNTING HEIGHTS.
07 FIRE EXTINGUISHER IN SEMI-RECESSED CABINET.
08 STEEL COLUMN. SEE STRUCTURAL DRAWINGS. PAINT WHERE EXPOSED.
09 ALIGN 6" OF NEW WALL WITH 6" OF EXISTING STRUCTURAL COLUMN FOR A COMPLETE AND FINISHED APPEARANCE. PAINT EXPOSED PORTION OF COLUMN. SEE DETAIL.
10 COORDINATE LOCATION OF FINISHED FACE OF NEW WALL WITH EXISTING OPENING FOR A COMPLETE AND FINISHED APPEARANCE.
11 TACK BOARD. SEE INTERIOR ELEVATIONS AND EQUIPMENT SCHEDULE.
12 (BASE BID) STEEL FRAME TO REINFORCE NEW OPENING. PAINT FRAME WHERE EXPOSED. SEE STRUCTURAL DRAWINGS.
13 (ALT. #) STEEL FRAME TO REINFORCE NEW OPENING. PAINT FRAME WHERE EXPOSED. SEE STRUCTURAL DRAWINGS.
14 CORNER GUARD. 6'-0" HIGH. SEE SPECIFICATIONS.

ARCHITECT 0327

ajc architects

703 east 1700 south
salt lake city, utah 84105
ph: 801.466.8818
fx: 801.466.4411
ajc@ajcarchitects.com

OWNER INFORMATION

SALT LAKE SCHOOL DISTRICT
440 EAST 100 SOUTH
SALT LAKE CITY, UTAH

PROJECT DESCRIPTION

ATE CENTER REMODEL AT SALT LAKE COMMUNITY COLLEGE SOUTH CAMPUS
1575 SOUTH STATE ST.
SALT LAKE CITY, UTAH

SHEET NAME:

FLOOR PLAN

REVISIONS

MARK	DATE	DESCRIPTION

ISSUE DATA

ISSUE DATE: AUGUST 2003
ISSUE TYPE: RECORD
DRAWN BY: J. NIELSEN
CHECKED BY: J. JONES
CAD FILE NAME: 0327AE101
DFCM PROJECT #: 197670

SHEET NUMBER:

AE101

SHEET 14 OF 54

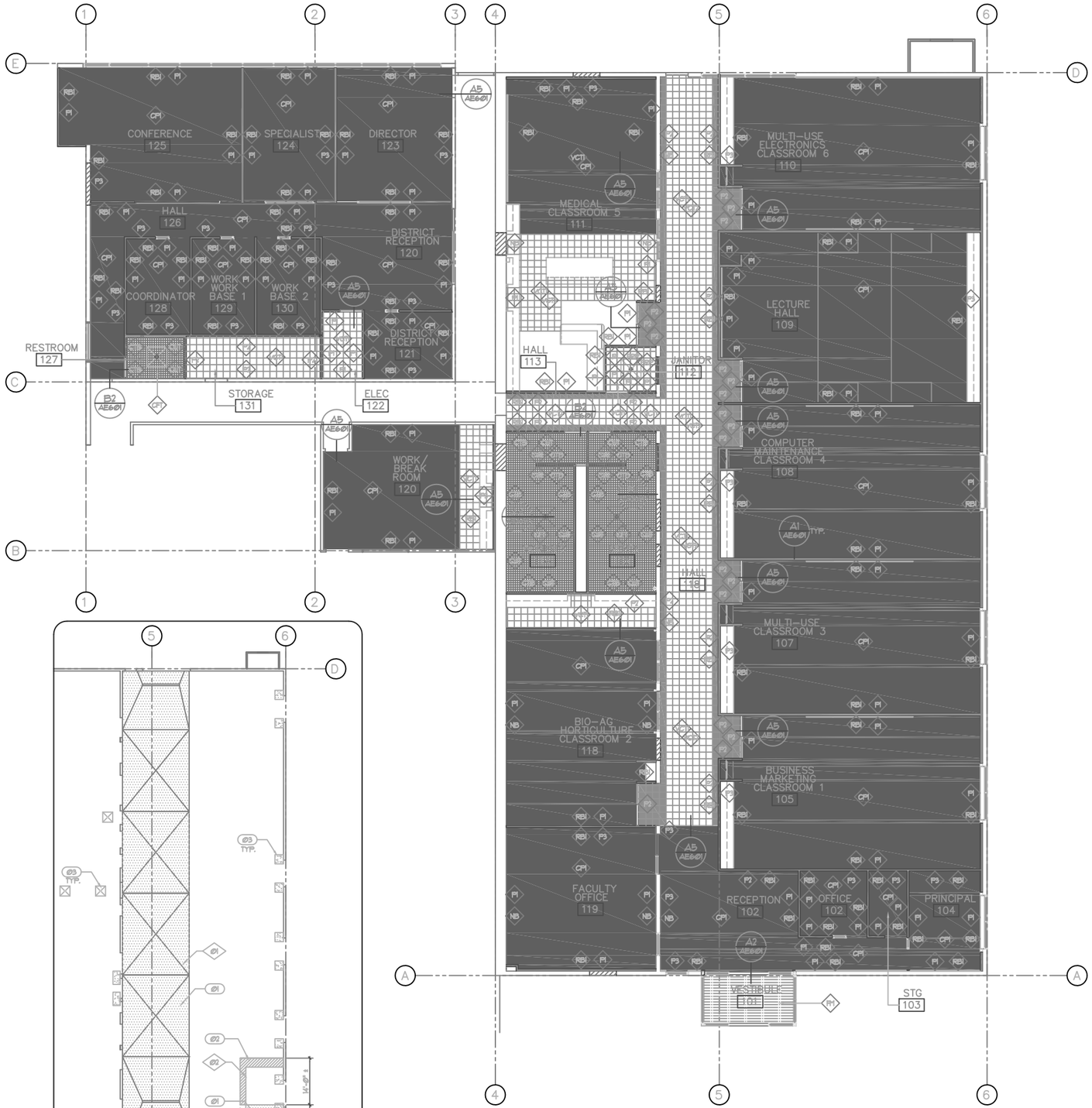

FLOOR FINISH PLAN

scale 1 = 96

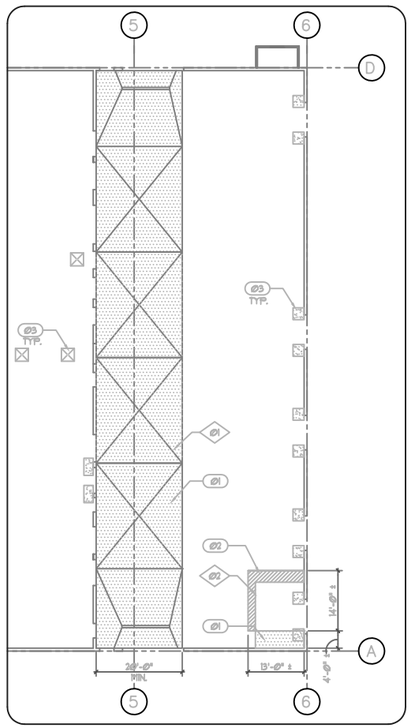

FLOOR LEVELING PLAN

scale 1 = 192

GENERAL NOTES AND LEGEND:

FOR SHEET AE102 ONLY.

- SEE SHEET AE001 FOR GENERAL NOTES.
- SEE COVER SHEET FOR DRAWING INDEX.
- DO NOT SCALE DRAWINGS.
- CONTRACTOR SHALL VERIFY ALL DIMENSIONS AND CONDITIONS BEFORE BEGINNING WORK, AND SHALL REPORT TO THE ARCHITECT ANY ERRORS, INCONSISTENCIES OR OMISSIONS BEFORE BEGINNING WORK. SEE GENERAL NOTES AND SPECIFICATIONS.
- SEE SHEET AE603 FOR FINISH LEGEND.
- THE GRAPHIC PATTERN IS USED TO CLARIFY THE FINISH BOUNDARY ONLY AND DOES NOT SPECIFY THE TYPE OF FINISH. SEE FINISH SYMBOL AND FINISH LEGEND FOR DESCRIPTION OF TYPE OF FINISH.

GRAPHIC PATTERN LEGEND:

FOR SHEET AE102 ONLY. SEE FINISH SYMBOL & SHEET AE603 FOR FINISH LEGEND.

- CARPET. SEE FINISH SYMBOL AND FINISH LEGEND. (CPT)
- CERAMIC FLOOR TILE. SEE FINISH SYMBOL AND FINISH LEGEND. (CFT)
- VINYL COMPOSITE TILE. SEE FINISH SYMBOL AND FINISH LEGEND. (VCT) (VCT)
- ENTRY FLOOR MAT. SEE FINISH SYMBOL AND FINISH LEGEND. RECESSED (FM)
- CONCRETE TOPPING / LEVELING SLAB (CEMENT UNDERLAYMENT) OVER EXISTING, SLOPING SLAB. SEE DETAILS.
- AREA TO GRIND SLAB FOR LEVELING
- CONCRETE SLAB PATCH (3" THICK)

EXISTING KEYED NOTE LEGEND:

FOR SHEET AE102 ONLY.

- Ø1 APPROXIMATE AREA OF EXISTING SLOPED FLOOR.
- Ø2 APPROXIMATE AREA OF EXISTING RAISED PATCHED FLOOR.

KEYED NOTE LEGEND:

FOR SHEET AE102 ONLY.

1. CONCRETE TOPPING / LEVELING SLAB (CEMENT UNDERLAYMENT) FOR LEVELING SLOPED FLOOR. FEATHER TO 1/8" THICK AT EDGES.
2. GRIND DOWN EXISTING PATCHED CONCRETE TO FLUSH W/ ORIGINAL SLAB. APPROXIMATELY 1/2- 1/4"
3. PATCH ALL OPENINGS NEW OPENINGS IN CONCRETE FLOOR THAT WERE REQUIRED FOR NEW CONSTRUCTION. ACTUAL SIZE OF OPENINGS TO BE DETERMINED BY THE GC. SIZES SHOWN ON PLAN ARE NOT TO BE CONSIDERED DEFINITIVE.

ARCHITECT 0327

ajc architec

703 east 1700 south
salt lake city, utah 84105
ph: 801.466.8818
fx: 801.466.4411
ajc@ajcarchitects.com

OWNER INFORMATION

SALT LAKE SCHOOL DISTRICT
440 EAST 100 SOUTH
SALT LAKE CITY, UTAH

PROJECT DESCRIPTION

ATE CENTER REMODEL AT SALT LAKE COMMUNITY COLLEGE SOUTH CAMPUS
1575 SOUTH STATE ST.
SALT LAKE CITY, UTAH

SHEET NAME:

FLOOR FINISH PLAN

REVISIONS

MARK	DATE	DESCRIPTION

ISSUE DATA

ISSUE DATE: AUGUST 2003
ISSUE TYPE: RECORD
DRAWN BY: J. NIELSEN
CHECKED BY: J. JONES
CAD FILE NAME: 0327AE102
DFCM PROJECT #: 197670

SHEET NUMBER:

AE102

SHEET 15 OF 54

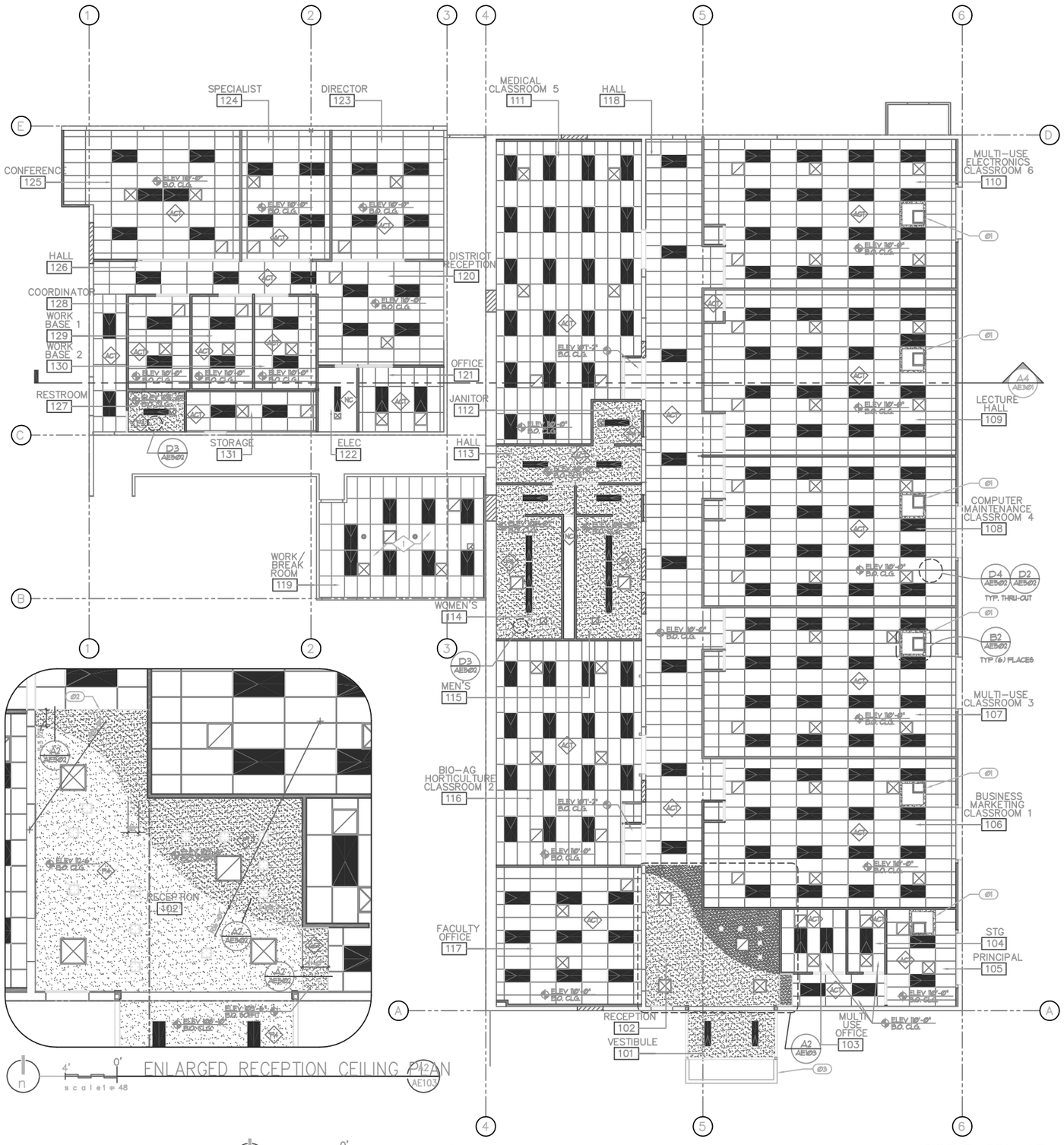

GENERAL NOTES AND LEGEND:

FOR SHEET AE103 ONLY.

- SEE SHEET AE000 FOR GENERAL NOTES.
- SEE COVER SHEET FOR DRAWING INDEX.
- DO NOT SCALE DRAWINGS.
- CONTRACTOR SHALL VERIFY ALL DIMENSIONS AND CONDITIONS BEFORE BEGINNING WORK AND SHALL REPORT TO THE ARCHITECT ANY ERRORS, INCONSISTENCIES OR OMISSIONS BEFORE BEGINNING WORK. SEE GENERAL NOTES AND SPECIFICATIONS.
- THIS IS A REFLECTED CEILING PLAN AND IS NOT INTENDED TO SHOW ALL OF THE LIGHTING. NO WALL MOUNTED FIXTURES ARE SHOWN. SEE LIGHTING AND MECHANICAL PLANS FOR FURTHER COORDINATION.

GYP. BD. CEILING. SEE FINISH SYMBOL. P4 P6

ACOUSTIC CEILING PANELS. SEE FINISH SYMBOL. ACT

FLUOURESCENT LIGHT FIXTURE. SURFACE MOUNT OR LAY-IN CEILING TYP. SEE LIGHTING PLANS. FOR SIZE & TYPE.

RECESSED LIGHT FIXTURE IN CEILING. SEE LIGHTING PLANS FOR SIZE & TYPE.

RECESSED DIRECTIONAL LIGHT FIXTURE IN CEILING. SEE LIGHTING PLANS FOR SIZE & TYPE.

SUPPLY AIR DIFFUSER IN CEILING. SEE MECHANICAL FOR SIZE & TYPE.

RETURN OR EXHAUST AIR GRILLE IN CEILING. SEE MECHANICAL FOR SIZE & TYPE.

DEMOLITION KEYED NOTE LEGEND:

FOR SHEET AE103 ONLY.

1. EXISTING CEILING AND ALL ASSOCIATED EQUIPMENT AND LIGHTING TO REMAIN. PROTECT. REMOVE CEILING AND PATCH ONLY FOR NEW MECHANICAL OPENINGS AND SYSTEMS.

KEYED NOTE LEGEND:

FOR SHEET AE103 ONLY.

01 SKYLIGHT SHAFT.
02 GYP. BD. SOFFIT. SEE DETAIL.
03 SHADE DEVICE.

ARCHITECT 0327

ajc architec

703 east 1700 south
salt lake city, utah 84105
ph: 801.466.8818
fx: 801.466.4411
ajc@ajcarchitects.com

OWNER INFORMATION

SALT LAKE SCHOOL DISTRICT
440 EAST 100 SOUTH
SALT LAKE CITY, UTAH

PROJECT DESCRIPTION

ATE CENTER REMODEL AT SALT LAKE COMMUNITY COLLEGE SOUTH CAMPUS
1575 SOUTH STATE ST.
SALT LAKE CITY, UTAH

SHEET NAME:

REFLECTED CEILING PLAN

REVISIONS

MARK	DATE	DESCRIPTION

ISSUE DATA

ISSUE DATE: AUGUST 2003
ISSUE TYPE: RECORD
DRAWN BY: J. NIELSEN
CHECKED BY: J. JONES
CAD FILE NAME: 0327AE103
DFCM PROJECT #: 197670

SHEET NUMBER:

AE103

SHEET 16 OF 54

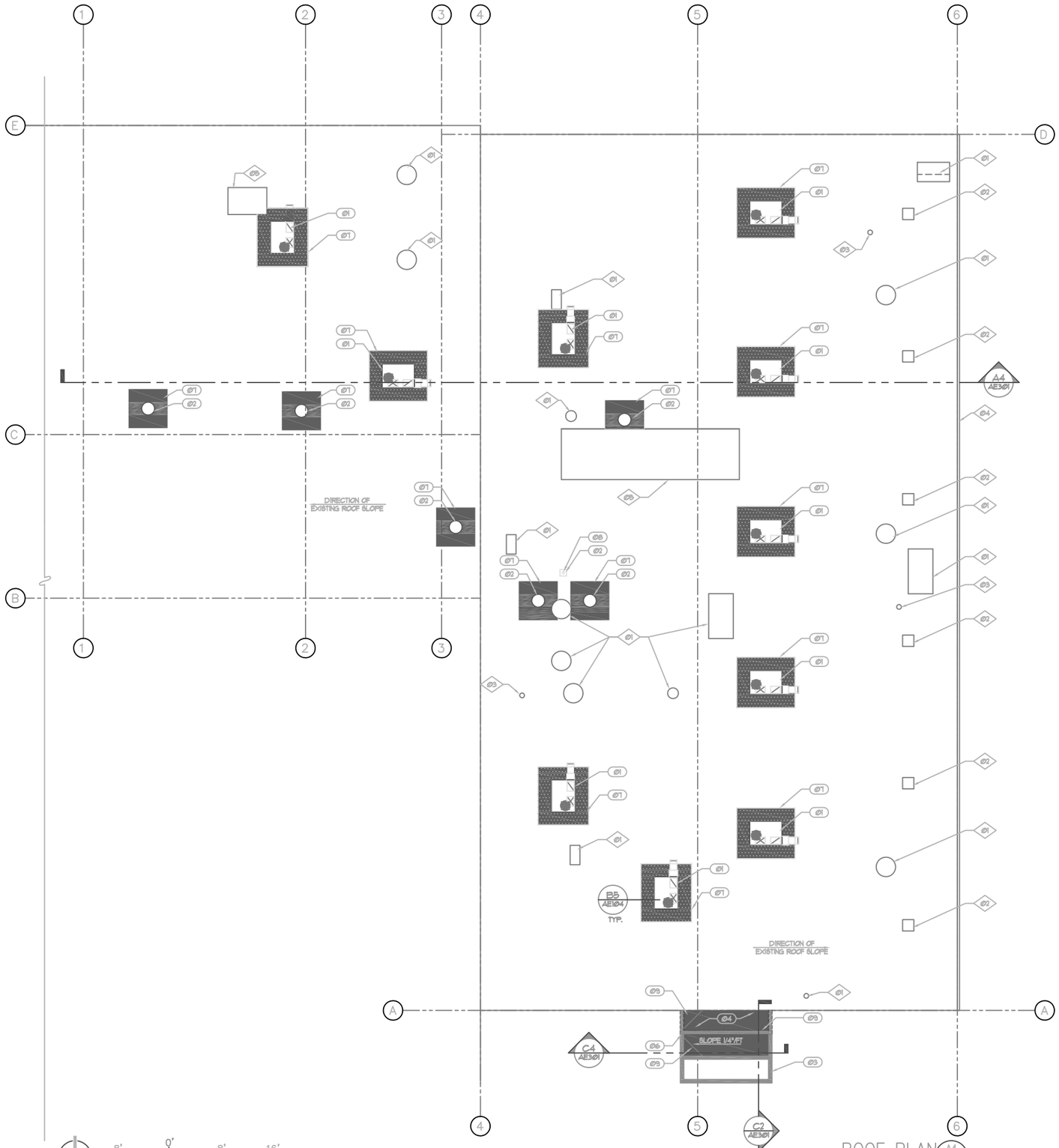

ROOF PLAN A4 AE104

GENERAL NOTES AND LEGEND:

FOR SHEET AE104 ONLY.

- SEE SHEET AE001 FOR GENERAL NOTES.
- SEE COVER SHEET FOR DRAWING INDEX.
- DO NOT SCALE DRAWINGS.
- CONTRACTOR SHALL VERIFY ALL DIMENSIONS AND CONDITIONS BEFORE BEGINNING WORK AND SHALL REPORT TO THE ARCHITECT ANY ERRORS, INCONSISTENCIES OR OMISSIONS BEFORE BEGINNING WORK. SEE GENERAL NOTES AND SPECIFICATIONS.

ROOFING DESCRIPTION

FOR SHEET AE104 ONLY.

- FULLY ADHERED PVC SARNIFIL ROOFING MEMBRANE SEE SPEC.
- MIN. R-28 INSULATION @ VESTIBULE.
- MATCH DEPTHS OF EXISTING INSULATION @ AREAS TO BE PATCHED.
- ALL ROOFING WORK SHALL BE DONE BY A CERTIFIED INSTALLER IN COMPLIANCE WITH AND NOT TO VOID THE EXISTING ROOFING WARRANTY BY SARNIFIL.

GRAPHIC PATTERN LEGEND:

FOR SHEET AE104 ONLY. SEE FINISH SYMBOL 4 SHEET AE603 FOR FINISH LEGEND.

MEMBRANE ROOFING

WALKPAD

DEMOLITION KEYED NOTE LEGEND:

FOR SHEET AE104 ONLY.

- 01 EXISTING EXHAUST FAN / HOOD TO REMAIN.
- 02 EXISTING SKYLIGHT TO REMAIN.
- 03 EXISTING ROOF VENT TO REMAIN.
- 04 EXISTING GUTTER SYSTEM TO REMAIN.
- 05 EXISTING RTU TO REMAIN.

KEYED NOTE LEGEND:

FOR SHEET AE104 ONLY.

- 01 RTU AND CURB. SEE MECHANICAL DRAWINGS. ALL RTU'S SHALL BE LOCATED TO HAVE BEARING ON AT LEAST (2) JOISTS. NO MORE THAN (1) RTU SHALL BEAR ON A PAIR OF JOISTS. COORD. PLACEMENT OF DUCT OPENINGS W/ JOIST SPACING.
- 02 EXHAUST FAN. SEE MECHANICAL DRAWINGS.
- 03 SHADE DEVICE. SEE STRUCTURAL DRAWINGS AND DETAILS.
- 04 ROOF MEMBRANE. SEE DESCRIPTION ABOVE.
- 05 ROOF SCUPPER.
- 06 UPPER SHADE DEVICE SHOWN DASHED. SEE STRUCTURAL DRAWINGS AND DETAILS.
- 07 PATCH/SPLICE NEW MEMBRANE/FLASHING TO EXISTING ROOF MEMBRANE.
- 08 VENT THROUGH ROOF. SEE A5/AE104.
- 09 CRICKET ROOF TO DRAIN.

NOTE:
PROVIDE WALKPAD WHERE SHOWN ON PLAN.

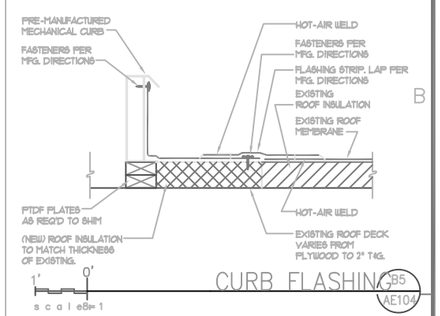

CURB FLASHING B5 AE104

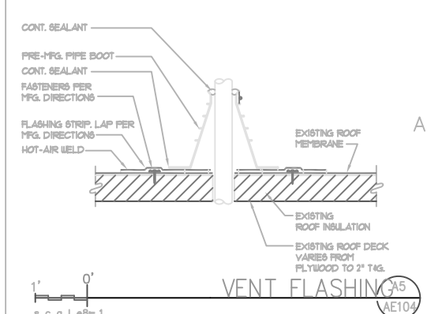

VENT FLASHING A5 AE104

ARCHITECT 0327

ajc architec

703 east 1700 south
salt lake city, utah 84105
ph: 801.466.8818
fx: 801.466.4411
ajc@ajcarchitects.com

OWNER INFORMATION

SALT LAKE SCHOOL DISTRICT
440 EAST 100 SOUTH
SALT LAKE CITY, UTAH

PROJECT DESCRIPTION

ATE CENTER REMODEL AT SALT LAKE COMMUNITY COLLEGE SOUTH CAMPUS
1575 SOUTH STATE ST.
SALT LAKE CITY, UTAH

SHEET NAME:

ROOF PLAN

REVISIONS

MARK	DATE	DESCRIPTION

ISSUE DATA

ISSUE DATE: AUGUST 2003
ISSUE TYPE: RECORD
DRAWN BY: J. NIELSEN
CHECKED BY: J. JONES
CAD FILE NAME: 0327AE104
DFCM PROJECT #: 197670

SHEET NUMBER:

AE104

SHEET 17 OF 54

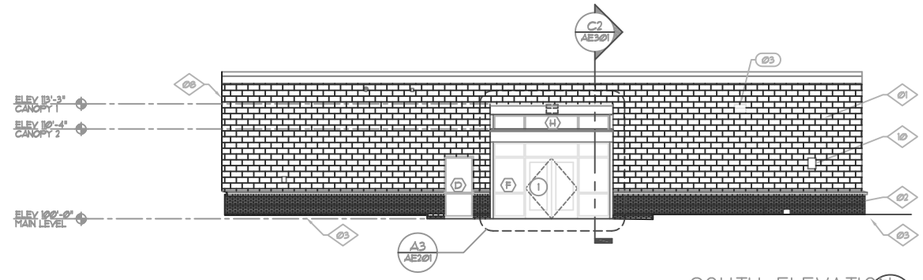

SOUTH ELEVATION
SCALE: 1/8" = 1'-0"
AE201

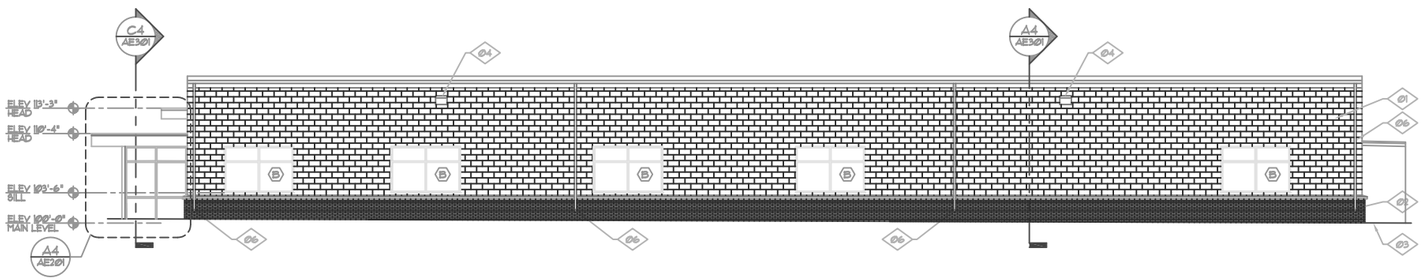

EAST ELEVATION
SCALE: 1/8" = 1'-0"
AE201

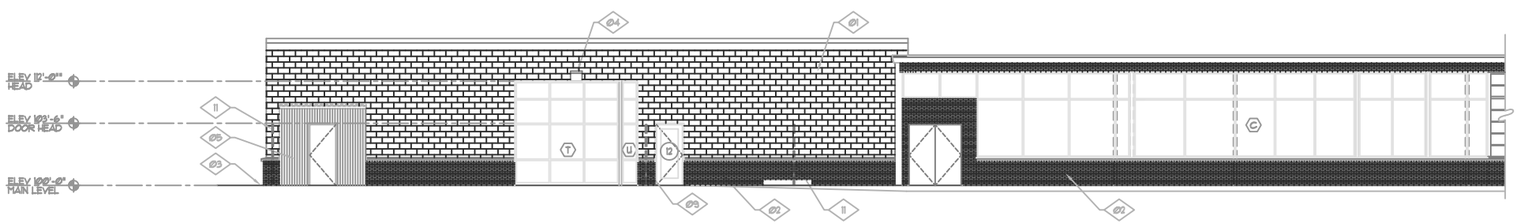

NORTH ELEVATION
SCALE: 1/8" = 1'-0"
AE201

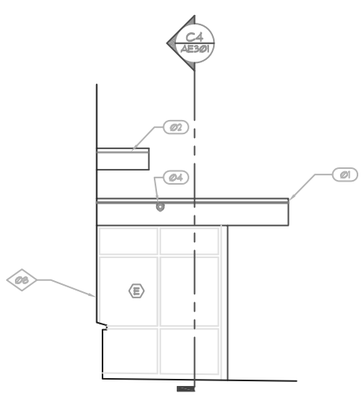

WEST ELEVATION
SCALE: 1/4" = 1'-0"
AE201

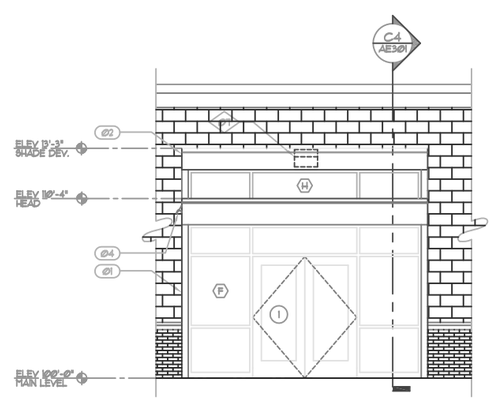

ENLARGED SOUTH ELEVATION
SCALE: 1/4" = 1'-0"
AE201

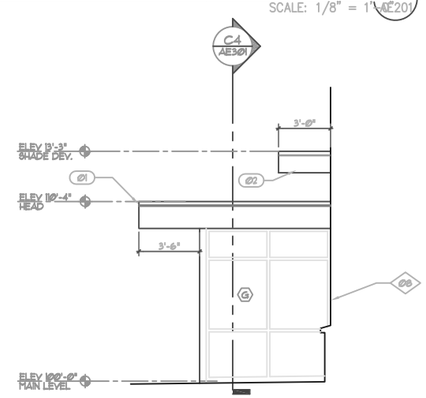

EAST ELEVATION
SCALE: 1/4" = 1'-0"
AE201

GENERAL NOTES AND LEGEND:

*FOR SHEET AE201 ONLY.

- SEE SHEET AE001 FOR GENERAL NOTES.
- SEE COVER SHEET FOR DRAWING INDEX.
- DO NOT SCALE DRAWINGS.
- CONTRACTOR SHALL VERIFY ALL DIMENSIONS AND CONDITIONS BEFORE BEGINNING WORK AND SHALL REPORT TO THE ARCHITECT ANY ERRORS, INCONSISTENCIES OR OMISSIONS BEFORE BEGINNING WORK. SEE GENERAL NOTES AND SPECIFICATIONS.
- ALT. 4: ALL WORK ASSOCIATED W/ WINDOW(S) "B" IS PART OF ALT 4.

DEMOLITION KEYED NOTE LEGEND:

*FOR SHEET AE201 ONLY.

01 EXISTING CMU WALL TO REMAIN. PROTECT DURING ALL PHASES OF DEMOLITION AND CONSTRUCTION.
02 EXISTING BRICK VENEER TO REMAIN. PROTECT DURING ALL PHASES OF DEMOLITION AND CONSTRUCTION.
03 APPROXIMATE LINE OF EXISTING GRADE.
04 EXISTING LIGHT FIXTURE TO REMAIN. CONTRACTOR TO CLEAN LENS. PROTECT DURING ALL PHASES OF DEMOLITION AND CONSTRUCTION.
05 EXISTING SHED TO REMAIN. PROTECT DURING ALL PHASES OF DEMOLITION AND CONSTRUCTION.
06 EXISTING ROOF GUTTER SYSTEM DOWNSPOUT TO REMAIN. SEE ROOF PLAN. PROTECT DURING ALL PHASES OF DEMOLITION AND CONSTRUCTION.
07 EXISTING LIGHT FIXTURE TO BE REMOVED AND CONDUIT CAPPED FOR COMPLETE AND FINISHED APPEARANCE. RELOCATE FIXTURE AS DIRECTED.
08 FACE OF EXISTING BUILDING.
09 EXISTING GATE TO REMAIN. PROTECT DURING ALL PHASES OF DEMOLITION AND CONSTRUCTION.
10 REPAIR HOLE IN EXISTING CMU AS NECESSARY FOR A COMPLETE AND FINISHED APPEARANCE.
11 EXISTING FENCE.

KEYED NOTE LEGEND:

*FOR SHEET AE201 ONLY.

01 VESTIBULE. SEE SECTION AND DETAILS.
02 SHADE DEVICE. SEE SECTION AND DETAILS.
03 NEW LOCATION FOR LIGHT FIXTURE.
04 ROOF DRAIN SCUPPER. SEE PLUMBING.

ARCHITECT 0327

ajc architects

703 east 1700 south
salt lake city, utah 84105
ph: 801.466.8818
fx: 801.466.4411
ajc@ajcarchitects.com

OWNER INFORMATION

SALT LAKE SCHOOL DISTRICT
440 EAST 100 SOUTH
SALT LAKE CITY, UTAH

PROJECT DESCRIPTION

ATE CENTER REMODEL AT SALT LAKE COMMUNITY COLLEGE SOUTH CAMPUS
1575 SOUTH STATE ST.
SALT LAKE CITY, UTAH

SHEET NAME:

EXTERIOR ELEVATIONS

REVISIONS

MARK	DATE	DESCRIPTION

ISSUE DATA

ISSUE DATE: AUGUST 2003
ISSUE TYPE: RECORD
DRAWN BY: J. NIELSEN
CHECKED BY: J. JONES
CAD FILE NAME: 0327AE201
DFCM PROJECT#: 197670

SHEET NUMBER:

AE201

SHEET 18 OF 54