INDEX TO SHEETS

SHEET	NAME
	CIVIL DRAWINGS
G-001	TITLE
G-002	WORK LOCATIONS AND NOTES
	NORTHWEST SITE
C-101	ROUGH GRADING PLAN
C-102	TRACK GRADING PLAN
C-103	DRAINAGE & UTILITY PLAN
C-104	STORM DRAIN PLAN & PROFILE
C-105	STORM DRAIN PLAN & PROFILE
C-106	RETENTION BASIN
	CIVIL DETAILS
C-501	CIVIL DETAILS
	IRRIGATION AND LANDSCAPE PLANS
L-101	IRRIGATION PLAN
L-501	IRRIGATION DETAILS
	TRACK AND FIELD
TF-1	LAYOUT PLAN
TF-2	DIMENSION PLAN
TF-3	TIMING PLAN
TF-4	DETAILS
TF-5	DETAILS
TF-6	DETAILS
TF-7	DETAILS
TF-8	DETAILS

State of Utah–Department of Administrative Services

DIVISION OF FACILITIES CONSTRUCTION AND MANAGEMENT

4110 State Office Building/Salt Lake City, Utah 84114/538-3018

STATE OF UTAH

UTAH VALLEY UNIVERSITY NCAA TRACK AND FIELD

DFCM PROJECT NO. 09026790

TRACK & FIELD DESIGN BY

Track and Field Design

PAIGE DESIGN GROUP

REGISTERED PROFESSIONAL ENGINEER — 9735 — JONATHAN E. KING — STATE OF UTAH

UTAH

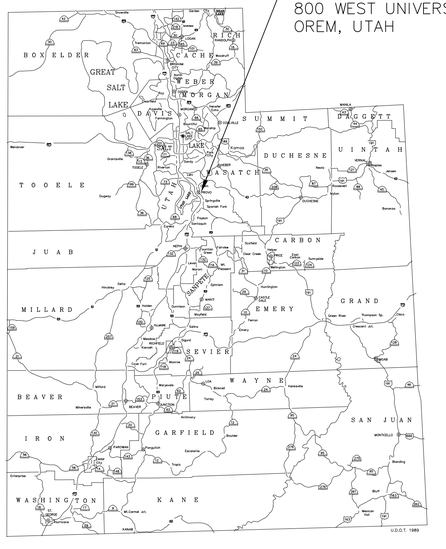

VICINITY MAP

NORTH

LOCATION MAP

BID SET

King Engineering, Inc.
2825 E Cottonwood Parkway
Salt Lake City, Utah 84121
Phone: 801.990.3170
Fax: 801.990.3293
Internet: www.pavementmanagement.com

CREATED BY: KING ENGINEERING, INC.

UVU NCAA TRACK AND FIELD

SITE/LOCATION:

UTAH VALLEY UNIVERSITY
800 S. 1200 W.
OREM, UTAH

PROJECT TITLE:

NCAA TRACK AND FIELD

MARK	DATE	DESCRIPTION

ISSUE TYPE: BID SET

ISSUE DATE: JAN. 14, 2010

DFCM PROJECT NO: 09026790
CAD PROJECT NO: 02-XXX
CAD DWG FILE: G-001.DWG
DRAWN BY: JEK
CHKD BY: JEK
COPYRIGHT: STATE OF UTAH

SHEET TITLE

TITLE SHEET

SHEET NUMBER

G-001

SHEET 1 OF 19

GENERAL CONSTRUCTION NOTES:

1. ALL WORK SHALL COMPLY WITH THE PROJECT DRAWINGS AND PROJECT SPECIFICATIONS. IF CONFLICTS ARE NOTED, CONTRACTOR SHALL CONTACT ENGINEER PRIOR TO START OF CONSTRUCTION.

2. CONTRACTOR SHALL COORDINATE WITH ALL GOVERNING AGENCIES FOR ALL PERMITS REQUIRED FOR CONSTRUCTION. CONTRACTOR SHALL ALSO BE RESPONSIBLE TO COORDINATE WITH APPROPRIATE AUTHORITIES FOR INSPECTION AND REVIEW OF WORK.

3. CONTRACTOR IS RESPONSIBLE FOR ALL PROJECT SAFETY, INCLUDING, BUT NOT LIMITED TO BARRICADES, SIGNING, TRAFFIC CONTROL AND SECURITY.

4. CONTRACTOR SHALL BE RESPONSIBLE TO MAINTAIN UP-TO-DATE "AS-BUILT" DRAWINGS THROUGHOUT THE PROJECT. THESE DRAWINGS SHALL BE PROVIDED TO THE OWNER UPON COMPLETION OF THE PROJECT.

5. CONTRACTOR SHALL TAKE THE NECESSARY MEASURES TO PROTECT ALL FACILITIES (I.E. LIGHT POLES, TRASH CANS, MISC. FEATURES OUTSIDE OF THE WORK AREAS ETC.) DURING CONSTRUCTION.

6. CONTRACTOR SHALL BE RESPONSIBLE FOR ALL TEMPORARY TRAFFIC CONTROL FOR MATERIALS REMOVAL AND DELIVERIES DURING THE CONSTRUCTION OF THE PROJECT.

7. ALL TRAFFIC CONTROL (I.E. SIGNAGE, CONES, BARRICADES) SHALL CONFORM TO THE MOST CURRENT EDITION OF THE MANUAL OF UNIFORM TRAFFIC CONTROL DEVICES AND OREM CITY REQUIREMENTS FOR REMOVALS AND DELIVERIES.

8. THE CONTRACTOR IS RESPONSIBLE FOR ALL CONSTRUCTION LAYOUT AND STAKING.

9. THE CONTRACTOR SHALL NOTIFY UNIVERSITY AND DFCM STAFF 48 HOURS PRIOR TO MOBILIZING TO PROJECT AND BEGINNING DEMOLITION AND REMOVALS.

10. THE CONTRACTOR SHALL PROVIDE AN ON-SITE TOILET AT WORK SITE FOR THE DURATION OF THE PROJECT.

11. THE CONTRACTOR SHALL BARRICADE AND SIGN ALL WORK AREAS DENYING ACCESS TO ALL BUT THE CONTRACTORS EMPLOYEES AND SUBCONTRACTORS.

15. THE CONTRACTOR SHALL PROTECT THE EXISTING SIDEWALK AND CURB AND GUTTER FROM DAMAGE AT ENTRANCES AND EXITS. THE CONTRACTOR SHALL REPAIR ALL DAMAGE TO EXISTING CURB AND GUTTER, STORM DRAINS, ETC. DUE TO CONSTRUCTION ACTIVITIES AT NO COST TO THE OWNER.

16. THE CONTRACTOR SHALL KEEP ALL UVU AND OREM ACCESS ROADS SWEPT AND CLEAN FOR THE DURATION OF THE PROJECT.

17. THE CONTRACTOR SHALL MAINTAIN A WATER TRUCK ON SITE DURING THE DURATION OF THE PROJECT AND SPRINKLE AS REQUIRED FOR DUST CONTROL.

18. THE CONTRACTOR SHALL FURNISH A STORM WATER P0LLUTION PREVENTION PLAN AND IMPLEMENT SUCH A PLAN IN ACCORDANCE WITH ALL LOCAL REGULATION AND LAWS.

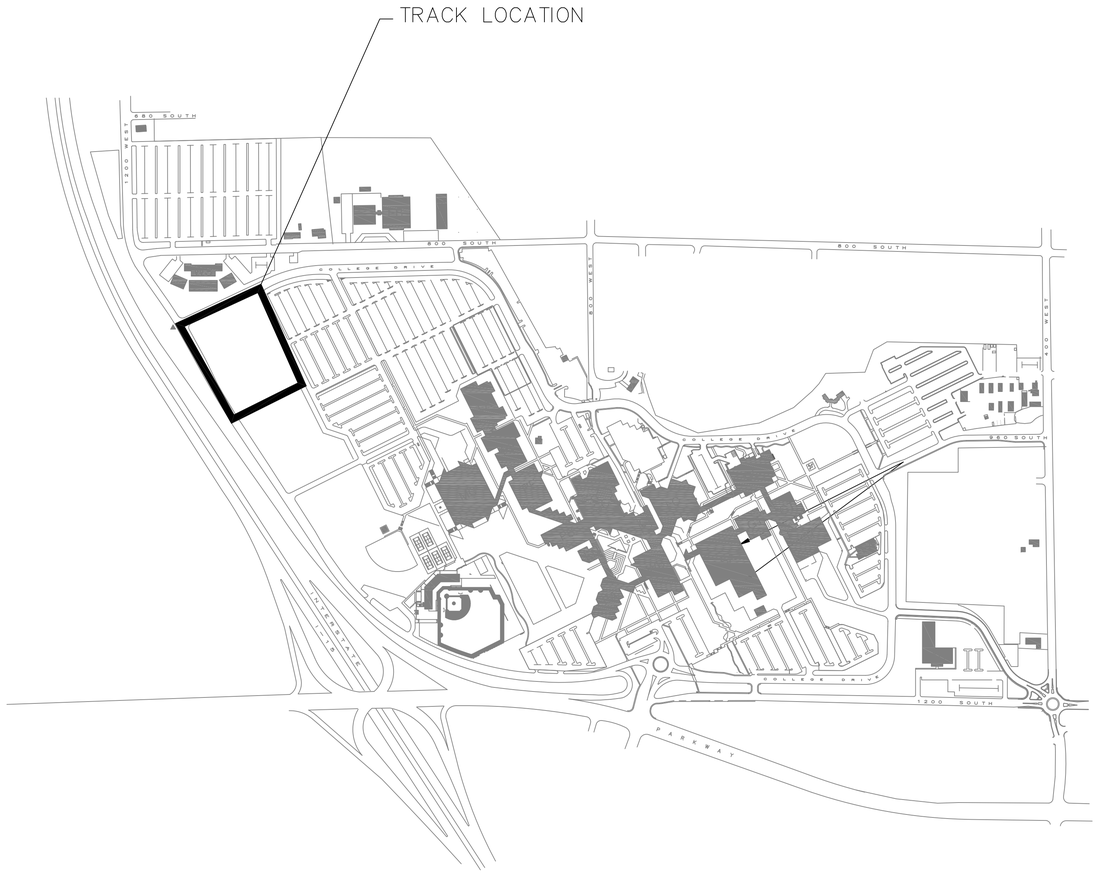

NCAA TRACK AND FIELD LOCATION
UTAH VALLEY UNIVERSITY (UVU)
800 WEST UNIVERSITY AVENUE

NORTH

LICENSED PROFESSIONAL ENGINEER
179735
JONATHAN E. KING
STATE OF UTAH

King Engineering, Inc.
2825 E Cottonwood Parkway
Salt Lake City, Utah 84121
Phone: 801.990.3170
Fax: 801.990.3293
Internet: www.pavementmanagement.com

CREATED BY: KING ENGINEERING, INC.

UVU NCAA TRACK AND FIELD

SITE/LOCATION:

UTAH VALLEY UNIVERSITY
800 S. 1200 W.
OREM, UTAH

PROJECT TITLE:

NCAA TRACK AND FIELD

MARK	DATE	DESCRIPTION

ISSUE TYPE: BID SET

ISSUE DATE: JAN. 14, 2010

DFCM PROJECT NO: 09026790
CAD PROJECT NO: 02-XXX
CAD DWG FILE: G-002.DWG
DRAWN BY: JEK
CHKD BY: JEK
COPYRIGHT: STATE OF UTAH

SHEET TITLE

WORK LOCATIONS AND NOTES

SHEET NUMBER

G-002

NORTH

0 40

SCALE 1"=40'

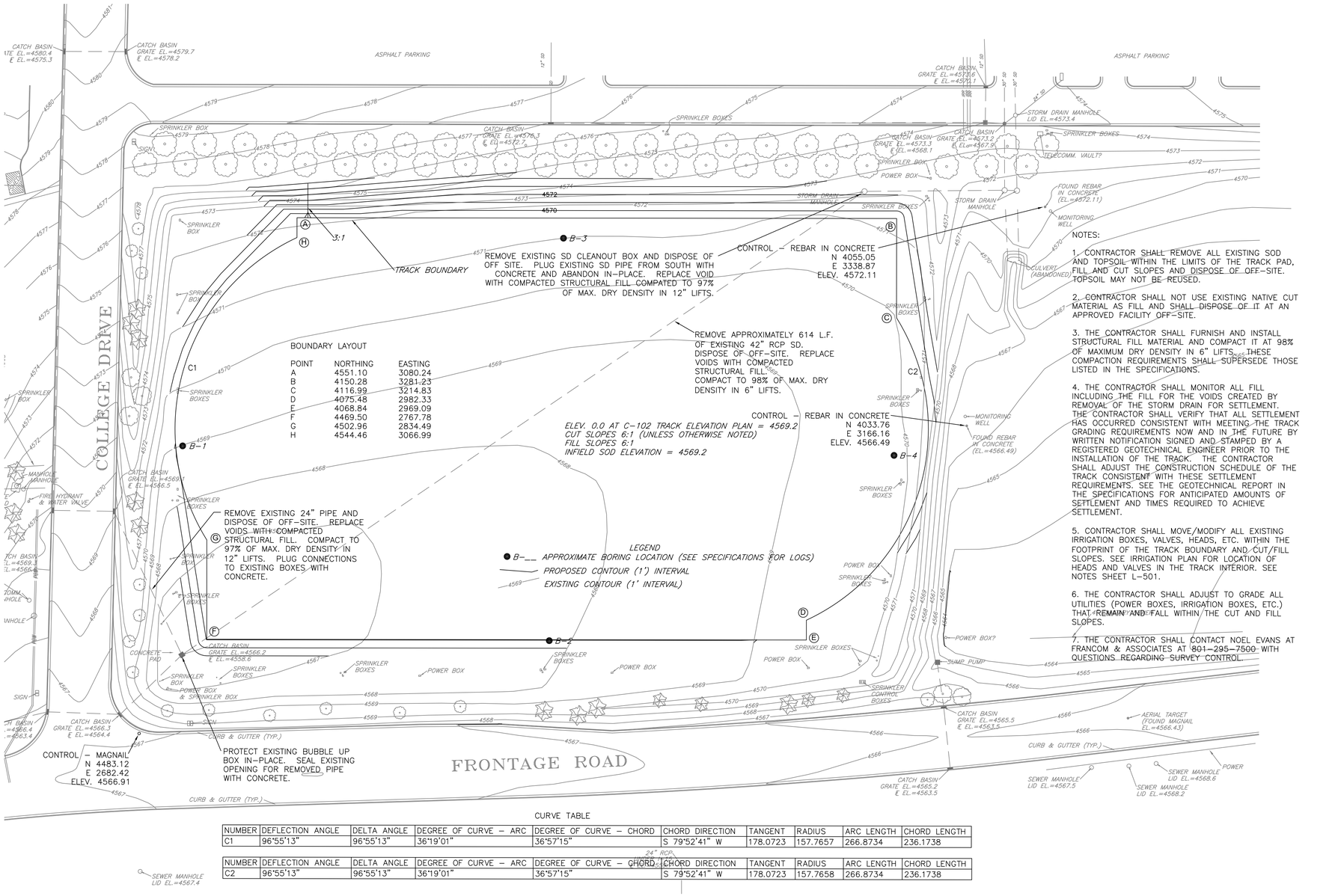

CURVE TABLE

NUMBER	DEFLECTION ANGLE	DELTA ANGLE	DEGREE OF CURVE – ARC	DEGREE OF CURVE – CHORD	CHORD DIRECTION	TANGENT	RADIUS	ARC LENGTH	CHORD LENGTH
C1	96°55'13"	96°55'13"	36°19'01"	36°57'15"	S 79°52'41" W	178.0723	157.7657	266.8734	236.1738

NUMBER	DEFLECTION ANGLE	DELTA ANGLE	DEGREE OF CURVE – ARC	DEGREE OF CURVE – CHORD	CHORD DIRECTION	TANGENT	RADIUS	ARC LENGTH	CHORD LENGTH
C2	96°55'13"	96°55'13"	36°19'01"	36°57'15"	S 79°52'41" W	178.0723	157.7658	266.8734	236.1738

NOTES:

1. CONTRACTOR SHALL REMOVE ALL EXISTING SOD AND TOPSOIL WITHIN THE LIMITS OF THE TRACK PAD, FILL AND CUT SLOPES AND DISPOSE OF OFF–SITE. TOPSOIL MAY NOT BE REUSED.

2. CONTRACTOR SHALL NOT USE EXISTING NATIVE CUT MATERIAL AS FILL AND SHALL DISPOSE OF IT AT AN APPROVED FACILITY OFF–SITE.

3. THE CONTRACTOR SHALL FURNISH AND INSTALL STRUCTURAL FILL MATERIAL AND COMPACT IT AT 98% OF MAXIMUM DRY DENSITY IN 6" LIFTS. THESE COMPACTION REQUIREMENTS SHALL SUPERSEDE THOSE LISTED IN THE SPECIFICATIONS.

4. THE CONTRACTOR SHALL MONITOR ALL FILL INCLUDING THE FILL FOR THE VOIDS CREATED BY REMOVAL OF THE STORM DRAIN FOR SETTLEMENT. THE CONTRACTOR SHALL VERIFY THAT ALL SETTLEMENT HAS OCCURRED CONSISTENT WITH MEETING THE TRACK GRADING REQUIREMENTS NOW AND IN THE FUTURE BY WRITTEN NOTIFICATION SIGNED AND STAMPED BY A REGISTERED GEOTECHNICAL ENGINEER PRIOR TO THE INSTALLATION OF THE TRACK. THE CONTRACTOR SHALL ADJUST THE CONSTRUCTION SCHEDULE OF THE TRACK CONSISTENT WITH THESE SETTLEMENT REQUIREMENTS. SEE THE GEOTECHNICAL REPORT IN THE SPECIFICATIONS FOR ANTICIPATED AMOUNTS OF SETTLEMENT AND TIMES REQUIRED TO ACHIEVE SETTLEMENT.

5. CONTRACTOR SHALL MOVE/MODIFY ALL EXISTING IRRIGATION BOXES, VALVES, HEADS, ETC. WITHIN THE FOOTPRINT OF THE TRACK BOUNDARY AND CUT/FILL SLOPES. SEE IRRIGATION PLAN FOR LOCATION OF HEADS AND VALVES IN THE TRACK INTERIOR. SEE NOTES SHEET L–501.

6. THE CONTRACTOR SHALL ADJUST TO GRADE ALL UTILITIES (POWER BOXES, IRRIGATION BOXES, ETC.) THAT REMAIN AND FALL WITHIN THE CUT AND FILL SLOPES.

7. THE CONTRACTOR SHALL CONTACT NOEL EVANS AT FRANCOM & ASSOCIATES AT 801–295–7500 WITH QUESTIONS REGARDING SURVEY CONTROL.

REGISTERED PROFESSIONAL ENGINEER
#9735
JONATHAN E. KING
STATE OF UTAH

King Engineering, Inc.
2825 E Cottonwood Parkway
Salt Lake City, Utah 84121
Phone: 801.990.3170
Fax: 801.990.3293
Internet: www.pavementmanagement.com

CREATED BY: KING ENGINEERING, INC.

UVU NCAA TRACK AND FIELD

SITE/LOCATION:

UTAH VALLEY UNIVERSITY
800 S. 1200 W.
OREM, UTAH

PROJECT TITLE:

NCAA TRACK AND FIELD

MARK	DATE	DESCRIPTION

ISSUE TYPE: BID SET

ISSUE DATE: JAN. 14, 2010

DFCM PROJECT NO: 09026790
CAD PROJECT NO: 02-XXX
CAD DWG FILE: C-101.DWG
DRAWN BY: AD
CHK'D BY: JEK
COPYRIGHT: STATE OF UTAH

SHEET TITLE

ROUGH GRADING PLAN

SHEET NUMBER

C-101

NORTH

0 40
SCALE 1"=40'

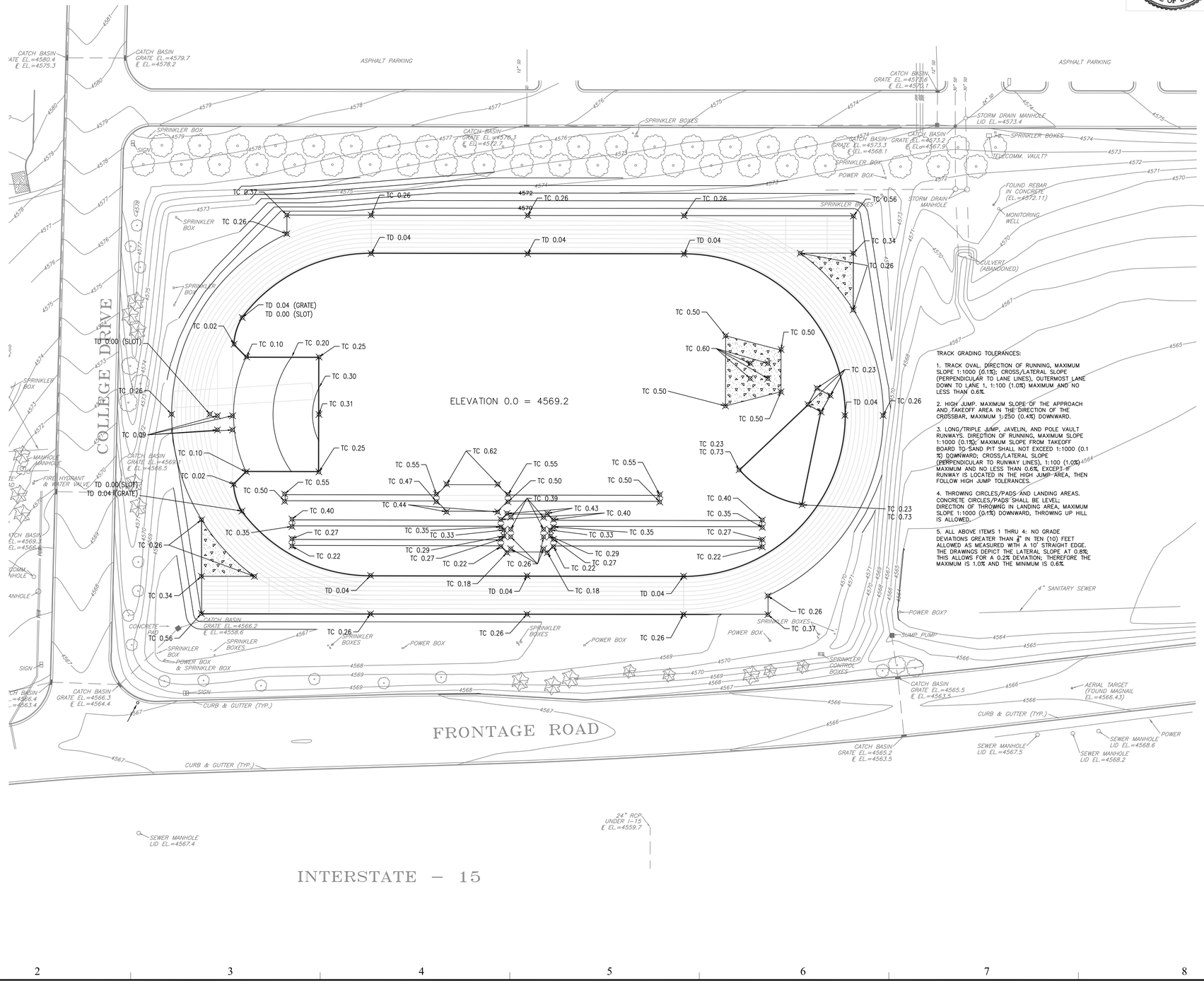

TRACK GRADING TOLERANCES:

1. TRACK OVAL, DIRECTION OF RUNNING, MAXIMUM SLOPE 1:1000 (0.1%); CROSS/LATERAL SLOPE (PERPENDICULAR TO LANE LINES), OUTERMOST LANE DOWN TO LANE 1, 1:100 (1.0%) MAXIMUM AND NO LESS THAN 0.6%.

2. HIGH JUMP. MAXIMUM SLOPE OF THE APPROACH AND TAKEOFF AREA IN THE DIRECTION OF THE CROSSBAR, MAXIMUM 1:250 (0.4%) DOWNWARD.

3. LONG/TRIPLE JUMP, JAVELIN, AND POLE VAULT RUNWAYS. DIRECTION OF RUNNING, MAXIMUM SLOPE 1:1000 (0.1%); MAXIMUM SLOPE FROM TAKEOFF BOARD TO SAND PIT SHALL NOT EXCEED 1:1000 (0.1 %) DOWNWARD; CROSS/LATERAL SLOPE (PERPENDICULAR TO RUNWAY LINES), 1:100 (1.0%) MAXIMUM AND NO LESS THAN 0.6%, EXCEPT IF RUNWAY IS LOCATED IN THE HIGH JUMP AREA, THEN FOLLOW HIGH JUMP TOLERANCES.

4. THROWING CIRCLES/PADS AND LANDING AREAS. CONCRETE CIRCLES/PADS SHALL BE LEVEL; DIRECTION OF THROWING IN LANDING AREA, MAXIMUM SLOPE 1:1000 (0.1%) DOWNWARD, THROWING UP HILL IS ALLOWED.

5. ALL ABOVE ITEMS 1 THRU 4: NO GRADE DEVIATIONS GREATER THAN ½" IN TEN (10) FEET ALLOWED AS MEASURED WITH A 10' STRAIGHT EDGE. THE DRAWINGS DEPICT THE LATERAL SLOPE AT 0.8%. THIS ALLOWS FOR A 0.2% DEVIATION; THEREFORE THE MAXIMUM IS 1.0% AND THE MINIMUM IS 0.6%

REGISTERED PROFESSIONAL ENGINEER
#179735
JONATHAN E. KING
STATE OF UTAH

King Engineering, Inc.
2825 E Cottonwood Parkway
Salt Lake City, Utah 84121
Phone: 801.990.3170
Fax: 801.990.3293
Internet: www.pavementmanagement.com

CREATED BY: KING ENGINEERING, INC.

UVU NCAA TRACK AND FIELD

SITE/LOCATION:

UTAH VALLEY UNIVERSITY
800 S. 1200 W.
OREM, UTAH

PROJECT TITLE:

NCAA TRACK AND FIELD

MARK	DATE	DESCRIPTION

ISSUE TYPE: BID SET

ISSUE DATE: JAN. 14, 2010

DFCM PROJECT NO: 09026790
CAD PROJECT NO: 02-XXX
CAD DWG FILE: C-102.DWG
DRAWN BY: AD
CHKD BY: JEK
COPYRIGHT: STATE OF UTAH

SHEET TITLE

TRACK GRADING PLAN

SHEET NUMBER

C-102

SHEET 4 OF 19

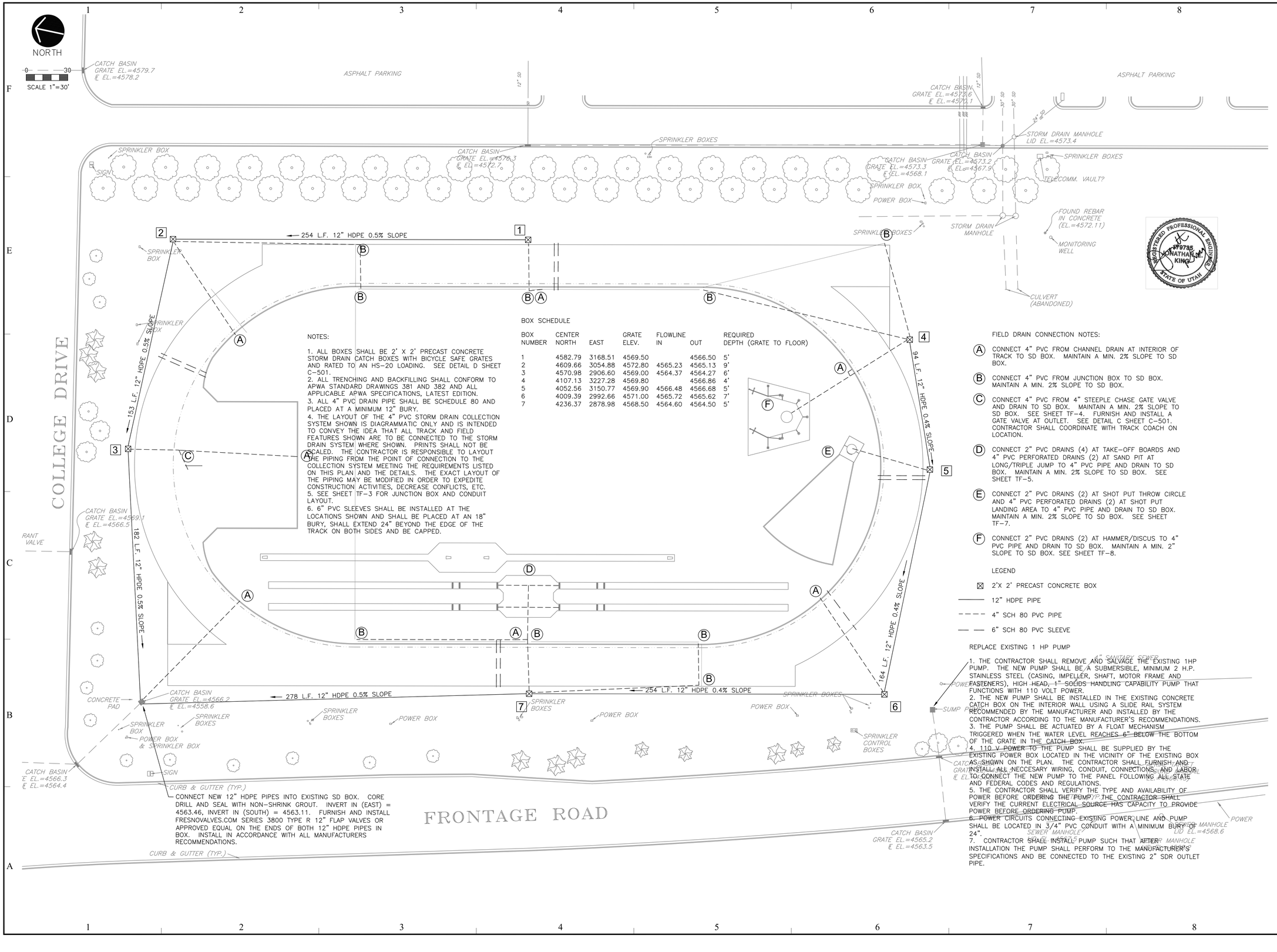

NOTES:

1. ALL BOXES SHALL BE 2' X 2' PRECAST CONCRETE STORM DRAIN CATCH BOXES WITH BICYCLE SAFE GRATES AND RATED TO AN HS-20 LOADING. SEE DETAIL D SHEET C-501.
2. ALL TRENCHING AND BACKFILLING SHALL CONFORM TO APWA STANDARD DRAWINGS 381 AND 382 AND ALL APPLICABLE APWA SPECIFICATIONS, LATEST EDITION.
3. ALL 4" PVC DRAIN PIPE SHALL BE SCHEDULE 80 AND PLACED AT A MINIMUM 12" BURY.
4. THE LAYOUT OF THE 4" PVC STORM DRAIN COLLECTION SYSTEM SHOWN IS DIAGRAMMATIC ONLY AND IS INTENDED TO CONVEY THE IDEA THAT ALL TRACK AND FIELD FEATURES SHOWN ARE TO BE CONNECTED TO THE STORM DRAIN SYSTEM WHERE SHOWN. PRINTS SHALL NOT BE SCALED. THE CONTRACTOR IS RESPONSIBLE TO LAYOUT THE PIPING FROM THE POINT OF CONNECTION TO THE COLLECTION SYSTEM MEETING THE REQUIREMENTS LISTED ON THIS PLAN AND THE DETAILS. THE EXACT LAYOUT OF THE PIPING MAY BE MODIFIED IN ORDER TO EXPEDITE CONSTRUCTION ACTIVITIES, DECREASE CONFLICTS, ETC.
5. SEE SHEET TF-3 FOR JUNCTION BOX AND CONDUIT LAYOUT.
6. 6" PVC SLEEVES SHALL BE INSTALLED AT THE LOCATIONS SHOWN AND SHALL BE PLACED AT AN 18" BURY, SHALL EXTEND 24" BEYOND THE EDGE OF THE TRACK ON BOTH SIDES AND BE CAPPED.

BOX SCHEDULE

BOX NUMBER	CENTER NORTH	CENTER EAST	GRATE ELEV.	FLOWLINE IN	FLOWLINE OUT	REQUIRED DEPTH (GRATE TO FLOOR)
1	4582.79	3168.51	4569.50		4566.50	5'
2	4609.66	3054.88	4572.80	4565.23	4565.13	9'
3	4570.98	2906.60	4569.00	4564.37	4564.27	6'
4	4107.13	3227.28	4569.80		4566.86	4'
5	4052.56	3150.77	4569.90	4566.48	4566.68	5'
6	4009.39	2992.66	4571.00	4565.72	4565.62	7'
7	4236.37	2878.98	4568.50	4564.60	4564.50	5'

FIELD DRAIN CONNECTION NOTES:

(A) CONNECT 4" PVC FROM CHANNEL DRAIN AT INTERIOR OF TRACK TO SD BOX. MAINTAIN A MIN. 2% SLOPE TO SD BOX.

(B) CONNECT 4" PVC FROM JUNCTION BOX TO SD BOX. MAINTAIN A MIN. 2% SLOPE TO SD BOX.

(C) CONNECT 4" PVC FROM 4" STEEPLE CHASE GATE VALVE AND DRAIN TO SD BOX. MAINTAIN A MIN. 2% SLOPE TO SD BOX. SEE SHEET TF-4. FURNISH AND INSTALL A GATE VALVE AT OUTLET. SEE DETAIL C SHEET C-501. CONTRACTOR SHALL COORDINATE WITH TRACK COACH ON LOCATION.

(D) CONNECT 2" PVC DRAINS (4) AT TAKE-OFF BOARDS AND 4" PVC PERFORATED DRAINS (2) AT SAND PIT AT LONG/TRIPLE JUMP TO 4" PVC PIPE AND DRAIN TO SD BOX. MAINTAIN A MIN. 2% SLOPE TO SD BOX. SEE SHEET TF-5.

(E) CONNECT 2" PVC DRAINS (2) AT SHOT PUT THROW CIRCLE AND 4" PVC PERFORATED DRAINS (2) AT SHOT PUT LANDING AREA TO 4" PVC PIPE AND DRAIN TO SD BOX. MAINTAIN A MIN. 2% SLOPE TO SD BOX. SEE SHEET TF-7.

(F) CONNECT 2" PVC DRAINS (2) AT HAMMER/DISCUS TO 4" PVC PIPE AND DRAIN TO SD BOX. MAINTAIN A MIN. 2" SLOPE TO SD BOX. SEE SHEET TF-8.

LEGEND

- ⊠ 2'X 2' PRECAST CONCRETE BOX
- ——— 12" HDPE PIPE
- - - - 4" SCH 80 PVC PIPE
- —— —— 6" SCH 80 PVC SLEEVE

REPLACE EXISTING 1 HP PUMP

1. THE CONTRACTOR SHALL REMOVE AND SALVAGE THE EXISTING 1HP PUMP. THE NEW PUMP SHALL BE A SUBMERSIBLE, MINIMUM 2 H.P. STAINLESS STEEL (CASING, IMPELLER, SHAFT, MOTOR FRAME AND FASTENERS), HIGH HEAD, 1" SOLIDS HANDLING CAPABILITY PUMP THAT FUNCTIONS WITH 110 VOLT POWER.
2. THE NEW PUMP SHALL BE INSTALLED IN THE EXISTING CONCRETE CATCH BOX ON THE INTERIOR WALL USING A SLIDE RAIL SYSTEM RECOMMENDED BY THE MANUFACTURER AND INSTALLED BY THE CONTRACTOR ACCORDING TO THE MANUFACTURER'S RECOMMENDATIONS.
3. THE PUMP SHALL BE ACTUATED BY A FLOAT MECHANISM TRIGGERED WHEN THE WATER LEVEL REACHES 6" BELOW THE BOTTOM OF THE GRATE IN THE CATCH BOX.
4. 110 V POWER TO THE PUMP SHALL BE SUPPLIED BY THE EXISTING POWER BOX LOCATED IN THE VICINITY OF THE EXISTING BOX AS SHOWN ON THE PLAN. THE CONTRACTOR SHALL FURNISH AND INSTALL ALL NECCESARY WIRING, CONDUIT, CONNECTIONS, AND LABOR TO CONNECT THE NEW PUMP TO THE PANEL FOLLOWING ALL STATE AND FEDERAL CODES AND REGULATIONS.
5. THE CONTRACTOR SHALL VERIFY THE TYPE AND AVAILABILITY OF POWER BEFORE ORDERING THE PUMP. THE CONTRACTOR SHALL VERIFY THE CURRENT ELECTRICAL SOURCE HAS CAPACITY TO PROVIDE POWER BEFORE ORDERING PUMP.
6. POWER CIRCUITS CONNECTING EXISTING POWER LINE AND PUMP SHALL BE LOCATED IN 3/4" PVC CONDUIT WITH A MINIMUM BURY OF 24".
7. CONTRACTOR SHALL INSTALL PUMP SUCH THAT AFTER INSTALLATION THE PUMP SHALL PERFORM TO THE MANUFACTURER'S SPECIFICATIONS AND BE CONNECTED TO THE EXISTING 2" SDR OUTLET PIPE.

CONNECT NEW 12" HDPE PIPES INTO EXISTING SD BOX. CORE DRILL AND SEAL WITH NON-SHRINK GROUT. INVERT IN (EAST) = 4563.46, INVERT IN (SOUTH) = 4563.11. FURNISH AND INSTALL FRESNOVALVES.COM SERIES 3800 TYPE R 12" FLAP VALVES OR APPROVED EQUAL ON THE ENDS OF BOTH 12" HDPE PIPES IN BOX. INSTALL IN ACCORDANCE WITH ALL MANUFACTURERS RECOMMENDATIONS.

REGISTERED PROFESSIONAL ENGINEER — 179735 — JONATHAN E. KING — STATE OF UTAH

King Engineering, Inc.
2825 E Cottonwood Parkway
Salt Lake City, Utah 84121
Phone: 801.990.3170
Fax: 801.990.3293
Internet: www.pavementmanagement.com
CREATED BY: KING ENGINEERING, INC.

UVU NCAA TRACK AND FIELD

SITE/LOCATION:

UTAH VALLEY UNIVERSITY
800 S. 1200 W.
OREM, UTAH

PROJECT TITLE:

NCAA TRACK AND FIELD

MARK	DATE	DESCRIPTION
ISSUE TYPE: BID SET		

ISSUE DATE: JAN. 14, 2010

DFCM PROJECT NO: 09026790
CAD PROJECT NO: 02-XXX
CAD DWG FILE: C-103.DWG
DRAWN BY: AD
CHK'D BY: JEK
COPYRIGHT: STATE OF UTAH

SHEET TITLE

DRAINAGE & UTILITY PLAN

SHEET NUMBER

C-103

NORTH

0 30

SCALE 1"=30'

TRENCHING NOTE:

1. ALL TRENCHING AND BACKFILLING SHALL CONFORM TO APWA STANDARD DRAWINGS 381 AND 382 AND ALL APPLICABLE APWA SPECIFICATIONS, LATEST EDITION.

2. ALL TRENCHING SHALL CONFORM TO ALL APPLICABLE LOCAL, STATE AND FEDERAL REGULATIONS REGARDING SAFETY, SHORING AND TRENCHING.

3. THE WATER TABLE VARIES IN DEPTH FROM 9' TO 11' DEEP AND DEWATERING SHALL BE REQUIRED.

NOTES:
1. WHERE THE INSTALLATION OF NEW STORM DRAIN IMPROVEMENTS, REMOVAL OR REINSTALLATION OF EXISTING STORM DRAIN FEATURES (I.E. PIPE, CATCH BASIN, MANHOLE) WILL REQUIRE THE REMOVAL OF EXISTING PAVEMENT AND CURB AND GUTTER THE CONTRACTOR SHALL SAW CUT THE LIMITS OF THE REMOVALS (OR REMOVE THE CONCRETE TO THE NEAREST CLEAN JOINT) AND DISPOSE OF AT AN APPROVED FACILITY OFF SITE. THE CONTRACTOR SHALL REPLACE SUBGRADE VOIDS WITH COMPACTED STRUCTURAL FILL AND ASPHALT PAVEMENT WITH A PAVEMENT PATCH AND CONCRETE CURB AND GUTTER WITH NEW CURB AND GUTTER. SEE DETAILS A AND B SHEET C-501.
2. CONTRACTOR SHALL VERIFY FLOWLINES OF EXISTING PIPE IN EXISTING BOXES AND TIE-INS PRIOR TO LAYING NEW PIPE AND SHALL NOTIFY ENGINEER IN CASE OF ANY DISCREPANCY FROM ELEVATIONS SHOWN ON THIS PLAN.
3. THE CONTRACTOR SHALL REROUTE ALL EXISTING WATER, POWER, COMMUNICATION, PIPES, LINES, CONDUITS CROSSING THE NEW STORM DRAIN ALIGNMENT ABOVE THE NEW PIPE.
4. THE CONTRACTOR SHALL PROVIDE CONCRETE BALLAST FOR MANHOLES 4,5 AND 7 IN ACCORDANCE WITH THE VALUES SHOWN ON THE BOX TABLE.
5. THE CONTRACTOR SHALL RESTRIPE THE PORTIONS OF THE ASPHALT ROADWAY AFFECTED BY THE WORK WITH TWO COATS OF PAINT MATCHING THE EXISTING MARKINGS. WHERE RED PAINTED CONCRETE CURB AND GUTTER IS REPLACED THE CONTRACTOR SHALL REPAINT THE REPLACED CURB WITH 2 COATS OF RED PAINT.

BOX TABLE

BOX	STATION	CENTER NORTH	CENTER EAST	GRATE ELEV.	MAX. BALLAST
1	0+00	4105.71	3390.31	4573.40	N/A
2	0+08.34	4113.20	3386.65	4573.40	N/A
3	0+26.05	4129.85	3386.27	4573.60	N/A
4	3+49.98	4419.28	3241.05	4576.80	0.8 CY CONCRETE
5	6+92.07	4725.74	3087.75	4579.50	3.0 CY CONCRETE
6	9+96.70	4595.49	2812.37	4569.90	N/A
7	11+50.75	4627.99	2662.19	4557.60	2.4 CY CONCRETE

REGISTERED PROFESSIONAL ENGINEER — JONATHAN E. KING — 9735 — STATE OF UTAH

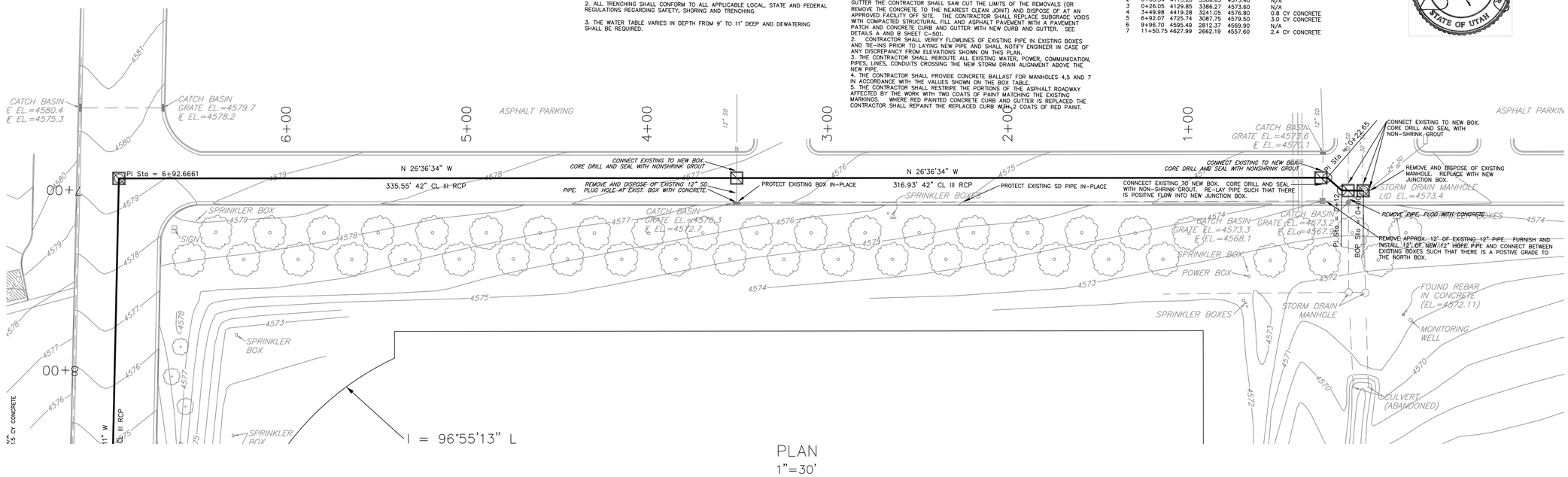

PLAN
1"=30'

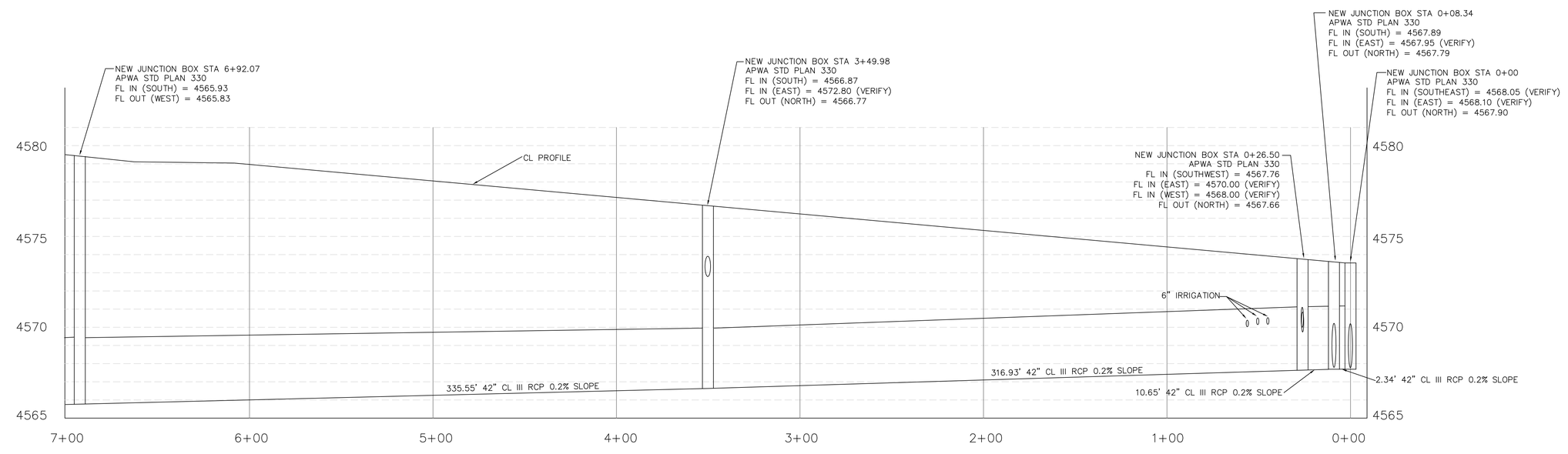

PROFILE
H 1"=30'
V 1"=3'

King Engineering, Inc.
2825 E Cottonwood Parkway
Salt Lake City, Utah 84121
Phone: 801.990.3170
Fax: 801.990.3293
Internet: www.pavementmanagement.com

CREATED BY: KING ENGINEERING, INC.

UVU NCAA TRACK AND FIELD

SITE/LOCATION:

UTAH VALLEY UNIVERSITY
800 S. 1200 W.
OREM, UTAH

PROJECT TITLE:

NCAA TRACK AND FIELD

MARK	DATE	DESCRIPTION

ISSUE TYPE: BID SET

ISSUE DATE: JAN. 14, 2010

DFCM PROJECT NO: 09026790
CAD PROJECT NO: 02-XXX
CAD DWG FILE: C-104.DWG
DRAWN BY: AD
CHKD BY: JEK
COPYRIGHT: STATE OF UTAH

SHEET TITLE

SD PLAN & PROFILE

SHEET NUMBER

C-104

UVU NCAA TRACK AND FIELD

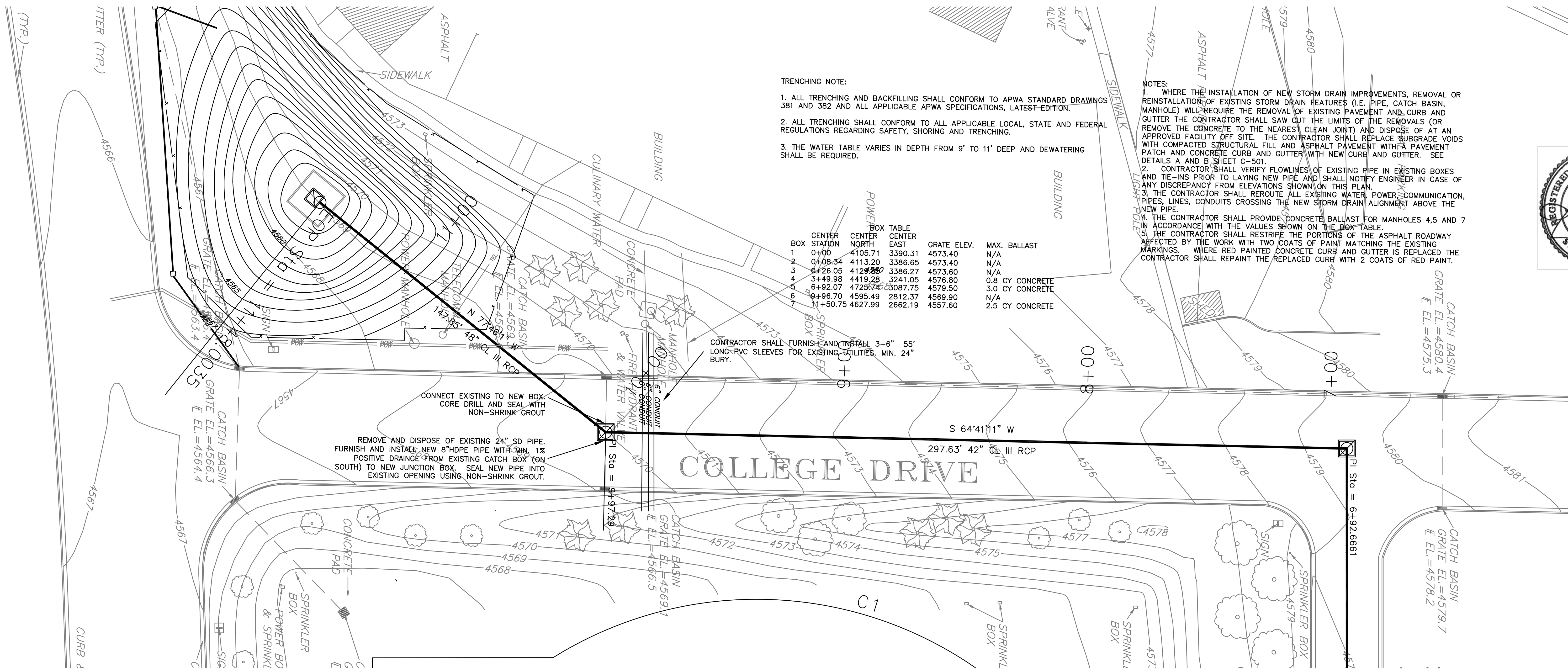

TRENCHING NOTE:

1. ALL TRENCHING AND BACKFILLING SHALL CONFORM TO APWA STANDARD DRAWINGS 381 AND 382 AND ALL APPLICABLE APWA SPECIFICATIONS, LATEST EDITION.

2. ALL TRENCHING SHALL CONFORM TO ALL APPLICABLE LOCAL, STATE AND FEDERAL REGULATIONS REGARDING SAFETY, SHORING AND TRENCHING.

3. THE WATER TABLE VARIES IN DEPTH FROM 9' TO 11' DEEP AND DEWATERING SHALL BE REQUIRED.

BOX TABLE

BOX	CENTER STATION	CENTER NORTH	CENTER EAST	GRATE ELEV.	MAX. BALLAST
1	0+00	4105.71	3390.31	4573.40	N/A
2	0+08.34	4113.20	3386.65	4573.40	N/A
3	0+26.05	4129.55	3386.27	4573.60	N/A
4	3+49.98	4419.28	3241.05	4576.80	0.8 CY CONCRETE
5	6+92.07	4725.74	3087.75	4579.50	3.0 CY CONCRETE
6	9+96.70	4595.49	2812.37	4569.90	N/A
7	11+50.75	4627.99	2662.19	4557.60	2.5 CY CONCRETE

NOTES:
1. WHERE THE INSTALLATION OF NEW STORM DRAIN IMPROVEMENTS, REMOVAL OR REINSTALLATION OF EXISTING STORM DRAIN FEATURES (I.E. PIPE, CATCH BASIN, MANHOLE) WILL REQUIRE THE REMOVAL OF EXISTING PAVEMENT AND CURB AND GUTTER THE CONTRACTOR SHALL SAW CUT THE LIMITS OF THE REMOVALS (OR REMOVE THE CONCRETE TO THE NEAREST CLEAN JOINT) AND DISPOSE OF AT AN APPROVED FACILITY OFF SITE. THE CONTRACTOR SHALL REPLACE SUBGRADE VOIDS WITH COMPACTED STRUCTURAL FILL AND ASPHALT PAVEMENT WITH A PAVEMENT PATCH AND CONCRETE CURB AND GUTTER WITH NEW CURB AND GUTTER. SEE DETAILS A AND B SHEET C-501.
2. CONTRACTOR SHALL VERIFY FLOWLINES OF EXISTING PIPE IN EXISTING BOXES AND TIE-INS PRIOR TO LAYING NEW PIPE AND SHALL NOTIFY ENGINEER IN CASE OF ANY DISCREPANCY FROM ELEVATIONS SHOWN ON THIS PLAN.
3. THE CONTRACTOR SHALL REROUTE ALL EXISTING WATER, POWER, COMMUNICATION, PIPES, LINES, CONDUITS CROSSING THE NEW STORM DRAIN ALIGNMENT ABOVE THE NEW PIPE.
4. THE CONTRACTOR SHALL PROVIDE CONCRETE BALLAST FOR MANHOLES 4,5 AND 7 IN ACCORDANCE WITH THE VALUES SHOWN ON THE BOX TABLE.
5. THE CONTRACTOR SHALL RESTRIPE THE PORTIONS OF THE ASPHALT ROADWAY AFFECTED BY THE WORK WITH TWO COATS OF PAINT MATCHING THE EXISTING MARKINGS. WHERE RED PAINTED CONCRETE CURB AND GUTTER IS REPLACED THE CONTRACTOR SHALL REPAINT THE REPLACED CURB WITH 2 COATS OF RED PAINT.

REGISTERED PROFESSIONAL ENGINEER No. 179735 JONATHAN E. KING STATE OF UTAH

PLAN
1"=30'

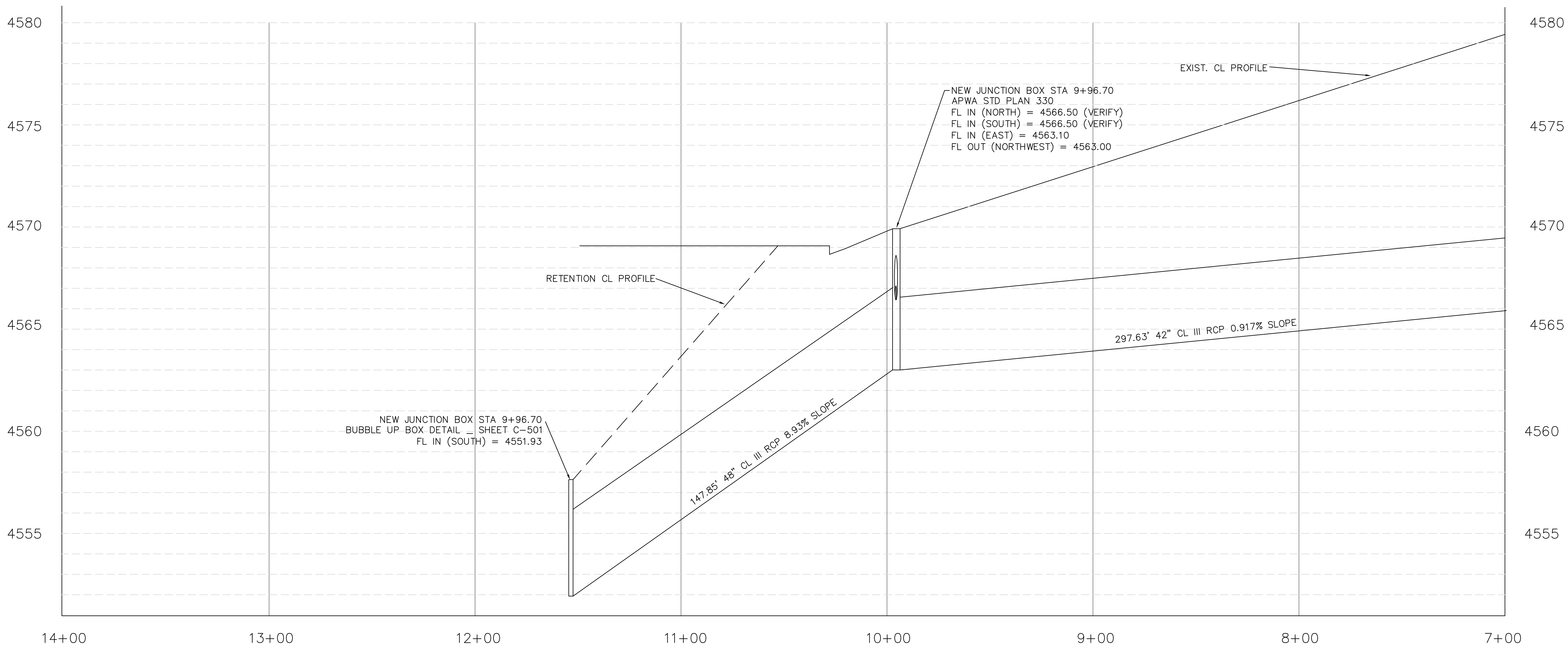

PROFILE
H 1"=30'
V 1"=3'

King Engineering, Inc.
2825 E Cottonwood Parkway
Salt Lake City, Utah 84121
Phone: 801.990.3170
Fax: 801.990.3293
Internet: www.pavementmanagement.com
CREATED BY: KING ENGINEERING, INC.

SITE/LOCATION:
UTAH VALLEY UNIVERSITY
800 S. 1200 W.
OREM, UTAH

PROJECT TITLE:
NCAA TRACK AND FIELD

MARK	DATE	DESCRIPTION

ISSUE TYPE: BID SET
ISSUE DATE: JAN. 14, 2010
DFCM PROJECT NO: 09026790
CAD PROJECT NO: 02-XXX
CAD DWG FILE: C-105.DWG
DRAWN BY: AD
CHK'D BY: JEK

COPYRIGHT: STATE OF UTAH

SHEET TITLE
SD PLAN & PROFILE

SHEET NUMBER
C-105

NORTH

0 20

SCALE 1"=20'

NOTES – STORM DRAIN

1. THE CONTRACTOR SHALL CONTACT BLUE STAKES AND UVU 48 HOURS IN ADVANCE OF DIGGING.
2. THE CONTRACTOR SHALL RESTORE ALL SOD AND IRRIGATION AFFECTED BY THE WORK TO PRE PROJECT CONDITIONS.

FURNISH AND INSTALL APPROXIMATELY 27 L.F. OF NEW 12" HDPE PIPE AS OVERFLOW. INVERT ELEVATION AT RETENTION BASIN = 4566.5, INVERT ELEVATION AT BOX IS 4564.13. INSTALL FRESNOVALVES.COM SERIES 3800 TYPE R FLAP VALVE OR APPROVED EQUAL ON END OF PIPE IN BOX ACCORDING TO ALL MANUFACTURER'S RECOMMENDATIONS. EXPOSE APPROXIMATELY 12" OF PIPE BEYOND TOP OF RIPRAP AT INLET.

CONNECT EXISTING SD PIPE INTO EXISTING CATCH BOX. SEAL WITH NON-SHRINK GROUT. FLOWLINE OUT = 4564.03

FURNISH AND INSTALL NEW 2' X 2' PRECAST CONCRETE STORM DRAIN INLET WITH BICYCLE SAFE GRATE. GRATE ELEV. = 4566.70 . FLOWLINE IN (SOUTH) = 4564.03, FLOWLINE OUT (NORTH) = 4564.03. SEE DETAIL D SHEET C-501. CENTER OF BOX NORTHING = 4669.11, EASTING = 2568.49, VERIFY LOCATION OF EXISTING PIPE PRIOR TO SETTING BOX. CONTRACTOR MAY MODIFY LOCATION OF BOX TO ACCOMMODATE ACTUAL PIPE LOCATION. POINT OF CONNECTION FOR 2" SDR 9 CTS PURPLE POLYPIPE. INSTALL PIPE THROUGH WALL, CORE DRILL AND SEAL WITH NON-SHRINK GROUT. FURNISH AND INSTALL 2" CHECK VALVE ON PIPE AT BOX.

NOTES – PUMP

1. THE CONTRACTOR SHALL FURNISH AND INSTALL A NEW PUMP EITHER IN OR ON THE NEW BUBBLE UP BOX. THE PUMP SHALL BE SUBMERSIBLE, A MINIMUM 2 H.P. STAINLESS STEEL (CASING, IMPELLER, SHAFT, MOTOR FRAME AND FASTENERS), HIGH HEAD, 1" SOLIDS HANDLING CAPABILITY PUMP THAT FUNCTIONS WITH 110 VOLT POWER.
2. THE PUMP SHALL HAVE THE CAPACITY TO BE INSTALLED ON A CONCRETE WALL AND/OR A GALVANIZED STEEL SLIDE RAIL SYSTEM FURNISHED AND INSTALLED BY THE CONTRACTOR. THE PUMP SHALL BE INSTALLED EITHER INSIDE OF THE NEW BUBBLE UP BOX USING A SLIDE RAIL SYSTEM RECOMMENDED BY THE MANUFACTURER OR ATTACHED TO THE CONCRETE APRON ABOVE THE BOX DEPENDING ON GROUNDWATER CONDITIONS. ALL INSTALLATIONS SHALL ME THE MANUFACTURER'S RECOMMENDATIONS.
3. THE PUMP SHALL BE ACTUATED BY A FLOAT MECHANISM. THE TRIGGER ELEVATION SHALL BE SET AFTER THE GROUNDWATER ELEVATION IS VERIFIED.
4. POWER TO THE PUMP SHALL BE SUPPLIED BY THE BUILDING PANEL TO THE NORTH. THE CONTRACTOR SHALL FURNISH AND INSTALL ALL NECESSARY WIRING, CONDUIT, CONNECTIONS, AND LABOR TO CONNECT THE NEW PUMP TO THE PANEL FOLLOWING ALL STATE AND FEDERAL CODES AND REGULATIONS.
5. THE CONTRACTOR SHALL VERIFY THE TYPE AND AVAILABILITY OF POWER BEFORE ORDERING THE PUMP. THE CONTRACTOR SHALL VERIFY THE CURRENT ELECTRICAL SOURCE HAS CAPACITY TO PROVIDE POWER BEFORE ORDERING PUMP.
6. POWER CIRCUITS CONNECTING EXISTING POWER LINE AND PUMP SHALL BE LOCATED IN 3/4" PVC CONDUIT WITH A MINIMUM BURY OF 24".
7. CONTRACTOR SHALL INSTALL PUMP SUCH THAT AFTER INSTALLATION THE PUMP SHALL PERFORM TO THE MANUFACTURER'S SPECIFICATIONS AND SHALL REMOVE EXCESS STORM WATER FROM THE RETENTION BASIN AND TRANSPORT IT TO THE NEW 2' X 2' PRE CAST CONCRETE BOX AS CALLED FOR ON THE DRAWING.
8. THE CONTRACTOR SHALL CONNECT THE PUMP TO THE 2' X 2' CATCH BOX WITH APPROXIMATELY 105 L.F. OF NEW 2" SDR 9 CTS PURPLE POLYPIPE AT A MIN. 24" BURY.

REMOVE APPROXIMATELY 146 L.F. OF EXISTING SD PIPE AND DISPOSE OF AT AN APPROVED FACILITY OFF-SITE.

FURNISH AND INSTALL APPROXIMATELY 108 L.F. OF NEW 8" DIA. HDPE PIPE AT 0.24% GRADE. ALL TRENCHING AND BACKFILLING SHALL CONFORM TO APWA STANDARD DRAWINGS 381 AND 382 AND ALL APPLICABLE APWA SPECIFICATIONS, LATEST EDITION.

FURNISH AND INSTALL NEW 2' X 2' PRECAST CONCRETE STORM DRAIN INLET WITH BICYCLE SAFE GRATE. GRATE ELEV. = 4566.80. FLOWLINE IN (SOUTH = 4564.29, FLOWLINE OUT (NORTH) = 4564.29. SEE DETAIL D SHEET C-501. CENTER OF BOX NORTHING = 4574.24, EASTING = 2624.24

FURNISH AND INSTALL APPROXIMATELY 46 L.F. OF NEW 8" DIA. HDPE PIPE AT 0.24% GRADE. ALL TRENCHING AND BACKFILLING SHALL CONFORM TO APWA STANDARD DRAWINGS 381 AND 382 AND ALL APPLICABLE APWA SPECIFICATIONS, LATEST EDITION.

CONNECT NEW SD PIPE INTO EXISTING CATCH BOX. SEAL WITH NON-SHRINK GROUT. FLOWLINE OUT = 4564.4.

NOTES – RETENTION BASIN

1. THE CONTRACTOR SHALL PROTECT ALL UTILITIES WITHIN THE BOUNDARIES OF THE RETENTION BASIN, WITHIN THE WORK SITE AND ACCESS AREAS EXCEPT AS NOTED.
2. THE CONTRACTOR SHALL FURNISH AND INSTALL A GEOTEXTILE FILTER FABRIC (MIRAFI 150N OR APPROVED EQUAL) AND D-50 12" MEDIAN DIA. CLEAN AND ANGULAR RIP RAP WITHIN THE FENCE BOUNDARY. SEE DETAIL J SHEET C-501. APPROXIMATELY 15,371 S.F.
3. THE CONTRACTOR SHALL VERIFY THE EXISTING GROUNDWATER ELEVATION AND COORDINATE WITH THE ENGINEER THE PUMP INSTALLATION AND FLOAT ELEVATION DURING CONSTRUCTION.
4. THE CONTRACTOR SHALL REPAIR THE EXISTING SOD SURROUNDING THE RETENTION BASIN IN ACCORDANCE WITH ALL UNIVERSITY STANDARDS AND TO THE UNIVERSITIES SATISFACTION. THE CONTRACTOR SHALL MODIFY THE EXISTING IRRIGATION SYSTEM INCLUDING BOXES, VALVES, HEADS, ETC. TO WATER THE REMAINING SOD.
5. THE CONTRACTOR SHALL EXCAVATE THE NATIVE MATERIALS TO THE DESIGN CONTOURS SHOWN AND DISPOSE OF OFF-SITE.

FURNISH AND INSTALL APPROXIMATELY 511 L.F. OF NEW 6' HIGH CHAIN LINK FENCE WITH PRIVACY SLATS. SEE NOTES THIS PAGE AND DETAIL K SHEET C-501.

NOTES – FENCE

1. ALL FENCE SHALL BE 6' HIGH CHAIN LINK WITH ALL NEW ZINC-COATED AND HOT DIPPED GALVANIZED STEEL COMPONENTS INCLUDING POSTS, MESH, CAPS, TENSION BARS, GATES, ETC.
2. ALL POSTS SHALL MEET ASTM A-120 AND SHALL BE SCHEDULE 40 HOT DIPPED ZINC COATED STEEL.
3. USE KNUCKLED SELVAGE ON BOTTOM AND TWISTED AND BARBED SELVAGE ON TOP.
4. THE MESH SHALL BE 9 GAGE 1 ¾" MESH ZINC-COATED STEEL WIRE AND SHALL BE HELICALLY WOVEN INTO A DIAMOND MESH. IT SHALL MEET THE REQUIREMENTS OF ASTM A 90 AND HAVE A MINIMUM OF 1.2 OUNCES OF ZINC APPLIED PER EACH SQUARE FOOT OF FABRIC.
5. FENCE POST SPACING SHALL BE AT 10'-0" MAX.
6. ALL FENCE SHALL HAVE PRIVACY SLATS INSTALLED. THE SLATS SHALL BE TAN. THE CONTRACTOR SHALL COORDINATE THE EXACT COLOR WITH THE OWNER PRIOR TO ORDERING.

FENCE LAYOUT TABLE

POINT	NORTHING	EASTING
A	4669.36	2742.58
B	4611.35	2749.61
C	4596.84	2719.39
D	4592.33	2721.55
E	4565.17	2664.49
F	4575.57	2630.33
G	4662.97	2571.60
H	4707.02	2584.99

* THE CONTRACTOR SHALL INSTALL THE FENCE ALONG THE SOUTH EDGE OF THE NORTH CONCRETE SIDEWALK AS NEARLY AS POSSIBLE.

LEGEND

4560 DESIGN CONTOUR (1' INTERVAL)

4568 EXISTING CONTOUR (1' INTERVAL)

King Engineering, Inc.
2825 E Cottonwood Parkway
Salt Lake City, Utah 84121
Phone: 801.990.3170
Fax: 801.990.3293
Internet: www.pavementmanagement.com

CREATED BY: KING ENGINEERING, INC.

REGISTERED PROFESSIONAL ENGINEER #9735 JONATHAN E. KING STATE OF UTAH

UVU NCAA TRACK AND FIELD

SITE/LOCATION:

UTAH VALLEY UNIVERSITY
800 S. 1200 W.
OREM, UTAH

PROJECT TITLE:

NCAA TRACK AND FIELD

MARK	DATE	DESCRIPTION

ISSUE TYPE: BID SET

ISSUE DATE: JAN. 14, 2010

DFCM PROJECT NO: 09026790
CAD PROJECT NO: 02-XXX
CAD DWG FILE: C-106.DWG
DRAWN BY: AD
CHK'D BY: JEK
COPYRIGHT: STATE OF UTAH

SHEET TITLE

RETENTION BASIN

SHEET NUMBER

C-106

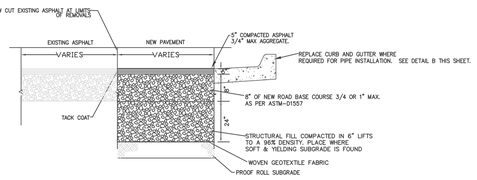

ASPHALT PAVEMENT AT ROAD

A — SCALE: NTS

CONCRETE NOTES:

CONCRETE SHALL HAVE AN MINIMUM 28 DAY UNCONFINED COMPRESSIVE STRENGTH OF 4,000 POUNDS PER SQUARE INCH AND CONTAIN 5 PERCENT +/- 1PERCENT

ALL SAW CUTS MUST BE COMPLETED WITHIN 24 HOURS OF THE "INITIAL SET" OF THE CONCRETE AND SHOULD BE PERFORMED UNDER THE DIRECTION OF THE CONCRETE

INCLUDE PRO MESH FIBER MESH IN ALL CONCRETE MIX OR APPROVED EQUAL. ADD AT 1.5 LBS PER CUBIC YARD OF MIX. MIX WELL FOR A MINIMUM OF 5 MINUTES BEFORE PLACING. SEE SPECIFICATIONS FOR MIX REQUIREMENTS.

PLACE EXPANSION JOINTS AT ALL LOCATIONS WHERE NEW CONCRETE IS ABUTTING EXISTING CONCRETE PADS. PLACE EXPANSION JOINTS AT 40' INTERVALS ON ALL NEW CONCRETE.

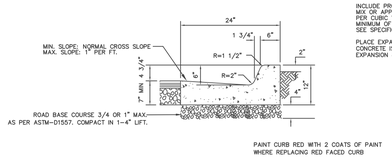

CONCRETE CURB AND GUTER

B — SCALE: NTS

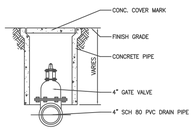

CONTRACTOR SHALL FURNISH OWNER KEY FOR OPERATION

GATE VALVE BOX

C — SCALE: NTS

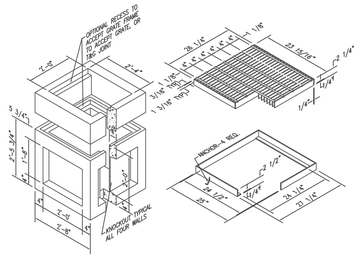

2' X 2' INLET BOX

D — SCALE: NTS

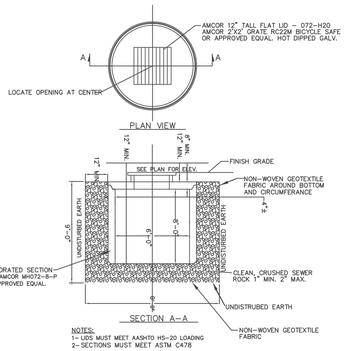

SUMP DRAIN

E — SCALE: NTS

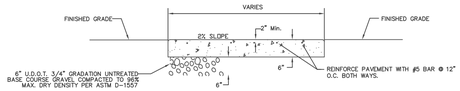

CONCRETE PAD/SIDEWALK

F — SCALE: NTS

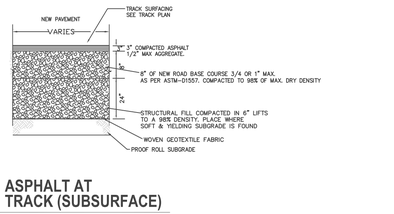

ASPHALT AT TRACK (SUBSURFACE)

I — SCALE: NTS

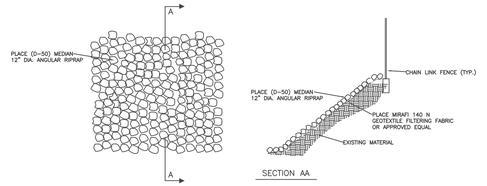

RIPRAP DETAIL

J — SCALE: NTS

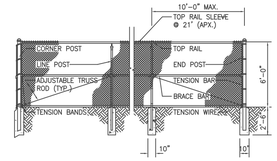

CHAINLINK FENCE

K — SCALE: NTS

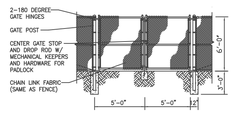

CHAINLINK FENCE GATE

L — SCALE: NTS

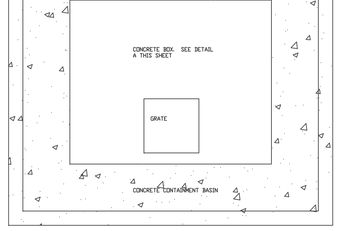

PLAN

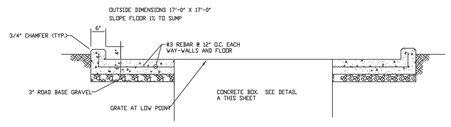

SECTION

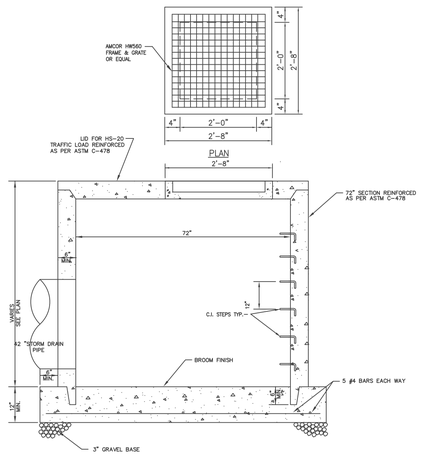

NOTES:
1. THE CONTRACTOR MAY USE THE CAST-IN-PLACE CONCRETE BUBBLE UP BOX SHOWN OR A PRECAST MODEL AS APPROVED BY THE ENGINEER.
2. ALL BOXES AND GRATES SHALL BE RATED TO AN HS-20 LOADING.
3. 4000 PSI CONCRETE 6 ½ BAG MIX.
4. GRATE SHALL BE LOCKABLE.

BUBBLE UP BOX

G — SCALE: NTS

CONCRETE CONTAINMENT BASIN

H — SCALE: NTS

King Engineering, Inc.
2825 E Cottonwood Parkway
Salt Lake City, Utah 84121
Phone: 801.990.3170
Fax: 801.990.3293
Internet: www.pavementmanagement.com

CREATED BY: KING ENGINEERING, INC.

UVU NCAA TRACK AND FIELD

SITE/LOCATION:

UTAH VALLEY UNIVERSITY
800 S. 1200 W.
OREM, UTAH

PROJECT TITLE:

NCAA TRACK AND FIELD

MARK	DATE	DESCRIPTION

ISSUE TYPE: BID SET

ISSUE DATE: JAN. 14, 2010

DFCM PROJECT NO: 09026790
CAD PROJECT NO: 02-XXX
CAD DWG FILE: C-501.DWG
DRAWN BY: JEK
CHK'D BY: JEK
COPYRIGHT: STATE OF UTAH

SHEET TITLE

CIVIL DETAILS

SHEET NUMBER

C-501

SHEET 13 OF 19

REGISTERED PROFESSIONAL ENGINEER — 199735 — JONATHAN E. KING — STATE OF UTAH

NORTH

0 20
SCALE 1"=20'

POWER BOX

SPRINKLER BOXES

SPRINKLER BOX

SPRINKLER BOX

BASIN
EL.=4569.1
4566.5

SEE IRRIGATION NOTES AND SCHEDULE ON SHEET L-501

LANDSCAPE NOTES:

1. THE CONTRACTOR SHALL FURNISH AND INSTALL 6" OF TOPSOIL AND NEW SOD IN ALL INFIELD AREAS THAT ARE NOT PAVED OR IMPROVED. SEE SPECIFICATIONS FOR REQUIREMENTS.
2. THE CONTRACTOR SHALL FURNISH AND INSTALL 6" OF TOPSOIL AND NEW SOD IN ALL AREAS OUTSIDE OF THE TRACK WHERE THE EXISTING SOD HAS BEEN DAMAGED OR REMOVED BY CONSTRUCTION.

'ETE PAD

CATCH BASIN
GRATE EL.=4566.2
E EL.=4558.6

SPRINKLER BOX

SPRINKLER BOXES

POWER BOX & SPRINKLER BOX

SIGN

SPRINKLER BOXES

POWER BOX

SPRINKLER BOXES

POWER BOX

SPRINKLER BOXES

POWER BOX

SPRINKLER CONTROL BOXES

King Engineering, Inc.
2825 E Cottonwood Parkway
Salt Lake City, Utah 84121
Phone: 801.990.3170
Fax: 801.990.3293
Internet: www.pavementmanagement.com

CREATED BY: KING ENGINEERING, INC.

UVU NCAA TRACK AND FIELD

SITE/LOCATION:

UTAH VALLEY
UNIVERSITY
800 S. 1200 W.
OREM, UTAH

PROJECT TITLE:

NCAA TRACK
AND FIELD

MARK	DATE	DESCRIPTION

ISSUE TYPE: BID SET

ISSUE DATE: JAN. 14, 2010

DFCM PROJECT NO: 09026790
CAD PROJECT NO: 02-XXX
CAD DWG FILE: L-101.DWG
DRAWN BY: AD
CHK'D BY: JEK
COPYRIGHT: STATE OF UTAH

SHEET TITLE

IRRIGATION PLAN
NORTHWEST SITE

SHEET NUMBER

L-101

IRRIGATION NOTES

1. THE CONTRACTOR SHALL CONNECT THE NEW IRRIGATION SYSTEM TO EXISTING 6" IRRIGATION MAINS. THE VALVES SHALL BE CONNECTED TO TWO EXISTING CLOCKS LOCATED ON THE SOUTH OF THE TRACK. THE ENTIRE IRRIGATION SYSTEM SHALL BE CONNECTED AND WIRED INTO THE UNIVERSITY MAXICOM SYSTEM. COORDINATE WITH RUSS CLEGG ON EXACT LOCATIONS.

2. THE CONTRACTOR SHALL COMPLY WITH ALL UVU IRRIGATION AND LANDSCAPE STANDARDS AS PROVIDED IN THE PROJECT MANUAL AND SPECIFICATIONS. IN CASE OF DISCREPANCY BETWEEN THESE PLANS AND THE WRITTEN STANDARDS THE WRITTEN STANDARDS SHALL TAKE PRECEDENCE.

3. ANY QUESTIONS REGARDING THE LOCATIONS, TYPES AND CONDITIONS OF THE EXISTING WATER LINE TIE-INS, CONTROLLER, ETC. MAY BE DIRECTED TO RUSS CLEGG OF UVU AT 801-362-9515.

4. THE CONTRACTOR SHALL NOTIFY RUSS CLEGG OF UVU 48 HOURS IN ADVANCE OF DIGGING.

5. SHEET L-101 IS DIAGRAMMATIC ONLY AND ARE INTENDED TO CONVEY THE IDEA OF FULL COVERAGE OF THE IRRIGATION SPRINKLER SYSTEM. PRINTS SHALL NOT BE SCALED. THE IRRIGATION SYSTEM CONTRACTOR SHALL BE RESPONSIBLE FOR THE INSTALLATION LAYOUT OF THE SYSTEM IN ACCORDANCE WITH THE DRAWINGS TO PROPORTIONALLY COVER A GIVEN AREA AS SHOWN. THE LAYOUT MAY BE MODIFIED IF NECESSARY TO OBTAIN COVERAGE TO SUITE THE MANUFACTURERS STANDARD HEADS INDICATED. DO NOT DECREASE THE NUMBER OF HEADS INDICATED UNLESS THIS IS ACCEPTABLE TO THE AGENCY OR ENGINEER. THE SYSTEM SHALL BE TESTED FOR COMPLETE COVERAGE AND ALL NECESSARY PROPER ADJUSTMENTS MADE TO GET FULL AND PROPER COVERAGE PRIOR TO ACCEPTANCE BY THE OWNER.

6. THE SYSTEM IS DESIGN FOR 55 PSI OPERATING PRESSURE ON ALL ROTORS AND 30 PSI OPERATING PRESSURE ON ALL SPRAY HEADS UNLESS OTHERWISE NOTED. CONTRACTOR TO VERIFY PRESSURE AND USE PRESSURE REDUCERS IF NEEDED.

7. ALL IRRIGATION PIPE 2 ½" AND GREATER IN DIAMETER SHALL BE CLASS 200 PVC PIPE, ALL MAINLINE FITTINGS SHALL BE HARCO CAST FITTINGS. ALL PIPE 2" AND LESS IN DIAMETER SHALL BE NEW SCH 40 PVC PIPE. FITTINGS ON ALL LATERAL LINES SHALL BE 40 ASTM 2468 FITTINGS UNLESS OTHERWISE SHOWN IN DETAILS. ALL MAINLINE PIPE SHALL BE PLACED WITHIN 8" PVC SLEEVES WHEN CROSSING UNDER THE TRACK.

8. LIVE SERVICE MAINS SHALL BE INSTALLED A MINIMUM OF 18" BELOW FINISH GRADE. BACKFILL TRENCH AROUND LIVE SERVICE MAIN WITH A MINIMUM OF 8" OF ROCK FREE SOIL. LATERAL LINES SHALL BE PLACED A MINIMUM OF 12" BELOW FINISHED GRADE.

9. ALL LINES SHALL SLOPE TO DRAIN. IF FIELD CONDITIONS NECESSITATE, ADD ADDITIONAL DRAINS. ALL DRAINS SHALL BE KING AUTOMATIC DRAINS OR APPROVED EQUAL. THESE DRAINS SHALL BE INSTALLED FOR COMPLETE DRAINAGE OF THE ENTIRE SYSTEM. PROVIDE A 12" DIA. X 12" DEEP GRAVEL SUMP UNDER EACH DRAIN WHICH DRAIN SHALL BE A MIN. OF 6" BELOW GRADE. ALL MANUAL DRAIN VALVES SHALL BE ENCLOSED IN A 2" PVC PIPE WITH A RUBBER CAP EXTENDING TO 1" ABOVE FINISHED GRADE.

10. ALL VALVES WILL BE LOCATED IN GROUPS WHERE SHOWN ON DRAWINGS. A DRAIN VALVE WITH SUMP AND QUICK COUPLER SHALL BE PROVIDED AND INSTALLED AT EACH GROUP OF VALVES. VALVES SHALL BE LOCATED A MINIMUM OF 3' FROM ANY CURB. EACH QUICK COUPLER SHALL BE POSTED AS 'NON-POTABLE' DRINKING WATER.

11. ALL VALVES TO BE WIRED TO CONTROLLERS USING #14 U.F. WIRE AND PEN-TITE WATER RESISTANT WIRE CONNECTORS. ALL VALVE WIRES UNDER PAVING SHALL BE INSTALLED IN 2" SCH 40 PVC CONDUIT BURIED 24" DEEP. PROVIDE AND INSTALL A DIFFERENT COLOR VALVE WIRE FOR EACH CONTROLLER. RUN ONE EXTRA WIRE FROM THE ADJACENT CONTROLLER TO EACH GROUP OF VALVES FOR FUTURE USE AND STUB INTO THE VALVE BOX.

12. ALL VALVE BOXES SHALL BE JUMBO SIZED PLASTIC BOXES, CARSON BROOKS OR EQUAL.

13. QUANTITIES ARE PROVIDED FOR ESTIMATION PURPOSES ONLY. PROJECT ENGINEER IS NOT RESPONSIBLE FOR QUANTITIES CONTRACTOR SHALL VERIFY ALL QUANTITIES.

14. THE CONTRACTOR SHALL BE RESPONSIBLE FOR REPAIRING ANY SITE ITEMS DAMAGED INSURING THE SOURCES OF CONSTRUCTION.

15. THE CONTRACTOR SHALL PROVIDE AS-BUILT DRAWINGS OF THE IRRIGATION SPRINKLER SYSTEM SHOWING EXACT MEASURED AND DIMENSIONED LOCATIONS OF ALL VALVES, WIRE SPLICES NOT IN A VALVE BOX AND DRAIN VALVES. TIE DIMENSIONS TO PERMANENT FEATURES SUCH AS STRUCTURES OR LIGHT POLES.

16. WHERE CONSTRUCTION ACTIVITIES HAVE DISTURBED THE SITE INSIDE OR OUTSIDE OF THE CONTRACT LIMIT LINE, ALL AREAS SHALL BE REPAIRED AND RESTORED TO ORIGINAL CONDITION. REPAIRED AREAS SHALL BE CONSTRUCTED TO PROVIDE A SMOOTH TRANSITION IN GRADING AND MATERIALS FROM EXISTING TO NEW CONSTRUCTION.

17. ALL VALVES AND BOXES SHALL BE LOCATED OUTSIDE OF THE FOOTPRINT OF THE EVENT SECTORS (HAMMER/DISCUS, JAVELIN, ETC.) COORDINATE WITH RUSS CLEGG OF UVU ON ALL VALVE BOX LOCATIONS.

18. THE NEW IRRIGATION MAIN SHALL HAVE HARCO CAST IRON FITTINGS OR APPROVED EQUAL.

19. THE CONTRACTOR SHALL ADJUST ALL SPRINKLER HEADS TO THE EXTENT POSSIBLE SUCH THAT THEY DO NOT SPRINKLE NO-SODDED AREAS.

20. THE CONTRACTOR SHALL MODIFY/REINSTALL EXISTING IRRIGATION SYSTEM OUTSIDE THE FOOTPRINT OF THE TRACK AT BOTH LOCATIONS SUCH THAT THEY COVER THE SOD AT PRE PROJECT LEVELS OF IRRIGATION AND MEET ALL UNIVERSITY AND ALPINE SCHOOL DISTRICT STANDARDS.

IRRIGATION SCHEDULE

	POINT OF IRRIGATION TIE-IN (VERIFY LOCATION WITH RUSS CLEGG)
	4" RPZ CHECK VALVE WITH GALVINIZED RISERS
	4" CAST IRON GATE VALVE WITH LID
	RAIN BIRD 200 PESB VALVE AND BOX OR APPROVED EQUAL(CARSON BROOKS OR EQUAL)
	6" CLASS 200 GASKETED PVC IRRIGATION MAIN
	MAXICOM COMMUNICATION WIRE TW/PE CABLE IN 2" CONDUIT WITH PULL BOXES EVERY 150'

SYMBOL	MANUFACTURER/MODEL/DESCRIPTION	PSI
Q T H TT TQ F	HUNTER INST-06-CV-8 8` radius Turf Spray 6" popup	30
Q T H	HUNTER INST-06-CV-10 10` radius Turf Spray 6" popup	30
Q T H TT TQ F	HUNTER INST-06-CV-15 15` radius Turf Spray 6" popup	30

SYMBOL	MANUFACTURER/MODEL/DESCRIPTION	PSI	GPM	RADIUS
2.0SR	HUNTER I-20-04-SS 2.0 SR Turf Rotor, 4" popup, adjustable and full circle, with check valve	55	2.0	18'
3	HUNTER I-20-04-SS 3 Turf Rotor, 4" popup, adjustable and full circle, with check valve	55	3.4	39'
6.0	HUNTER I-20-04-SS 6.0 Turf Rotor, 4" popup, adjustable and full circle, with check valve	55	6.7	44'
7	HUNTER I-25-04-SS 7 Turf Rotor, 4" popup, adjustable and full circle, with check valve	55	7.3	48'
10	HUNTER I-25-04-SS 10 TURF ROTOR, 4" popup, adjustable, and full circle, with check valve	55	10.6	51'

SYMBOL	MANUFACTURER/MODEL/DESCRIPTION
	Rain Bird SRC,1" Quick Coupler Valve, one piece body Place post at each valve showing it as non-potable irrigation water

Irrigation Lateral Line: PVC Class 200 for 2 ½" Dia. and above, PVC Schedule 40 for 2" Dia. and smaller pipe. Only lateral transition pipe sizes 1" and above are indicated on the plan, with all others being 3/4" in size.

Irrigation Mainline: 6" PVC Class 200

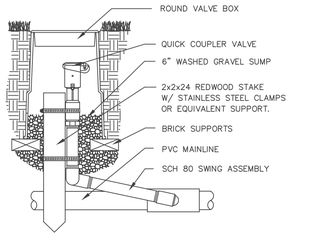

QUICK COUPLER
SCALE: NTS — A

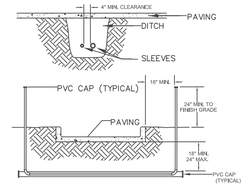

NOTES:
1. ALL PVC IRRIGATION SLEEVES TO BE CLASS 200 PIPE.
2. ALL JOINTS TO BE SOLVENT WELDED AND WATERTIGHT.
3. WHERE THERE IS MORE THAN ONE SLEEVE, EXTEND THE SMALLER SLEEVE TO 24-INCHES MINIMUM ABOVE FINISH GRADE.
4. MECHANICALLY TAMP TO 95% PROCTOR.

SLEEVING DETAIL
SCALE: NTS — B

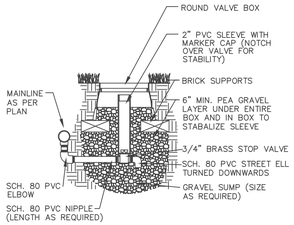

MAINLINE DRAIN
SCALE: NTS — C

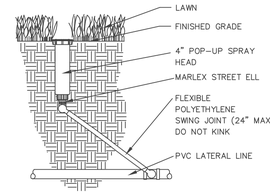

6" POPUP SPRAYHEAD
SCALE: NTS — D

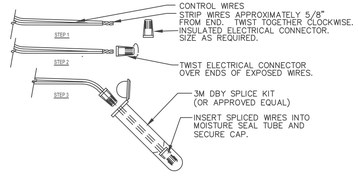

WIRE SPLICING AND VALVE BOX
SCALE: NTS — E

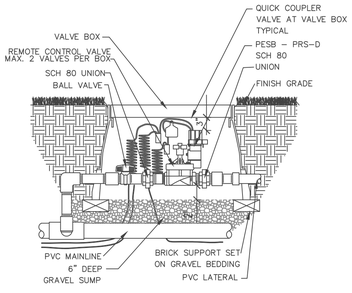

VALVE ASSEMBLY
SCALE: NTS — F

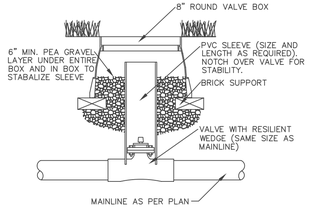

GATE VALVE
SCALE: NTS — G

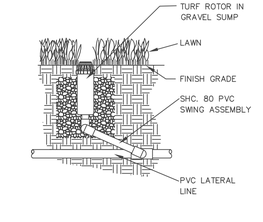

ROTOR DETAIL
SCALE: NTS — H

King Engineering, Inc.
2825 E Cottonwood Parkway
Salt Lake City, Utah 84121
Phone: 801.990.3170
Fax: 801.990.3293
Internet: www.pavementmanagement.com

CREATED BY: KING ENGINEERING, INC.

UVU NCAA TRACK AND FIELD

SITE/LOCATION:

UTAH VALLEY UNIVERSITY
800 S. 1200 W.
OREM, UTAH

PROJECT TITLE:

NCAA TRACK AND FIELD

MARK	DATE	DESCRIPTION

ISSUE TYPE: BID SET

ISSUE DATE: JAN. 14, 2010

DFCM PROJECT NO: 09026790
CAD PROJECT NO: 02-XXX
CAD DWG FILE: L-501.DWG
DRAWN BY: AD
CHK'D BY: JEK
COPYRIGHT: STATE OF UTAH

SHEET TITLE

IRRIGATION DETAILS

SHEET NUMBER

L-501

SHEET 11 OF 19

NORTH

0 30

SCALE 1"=30'

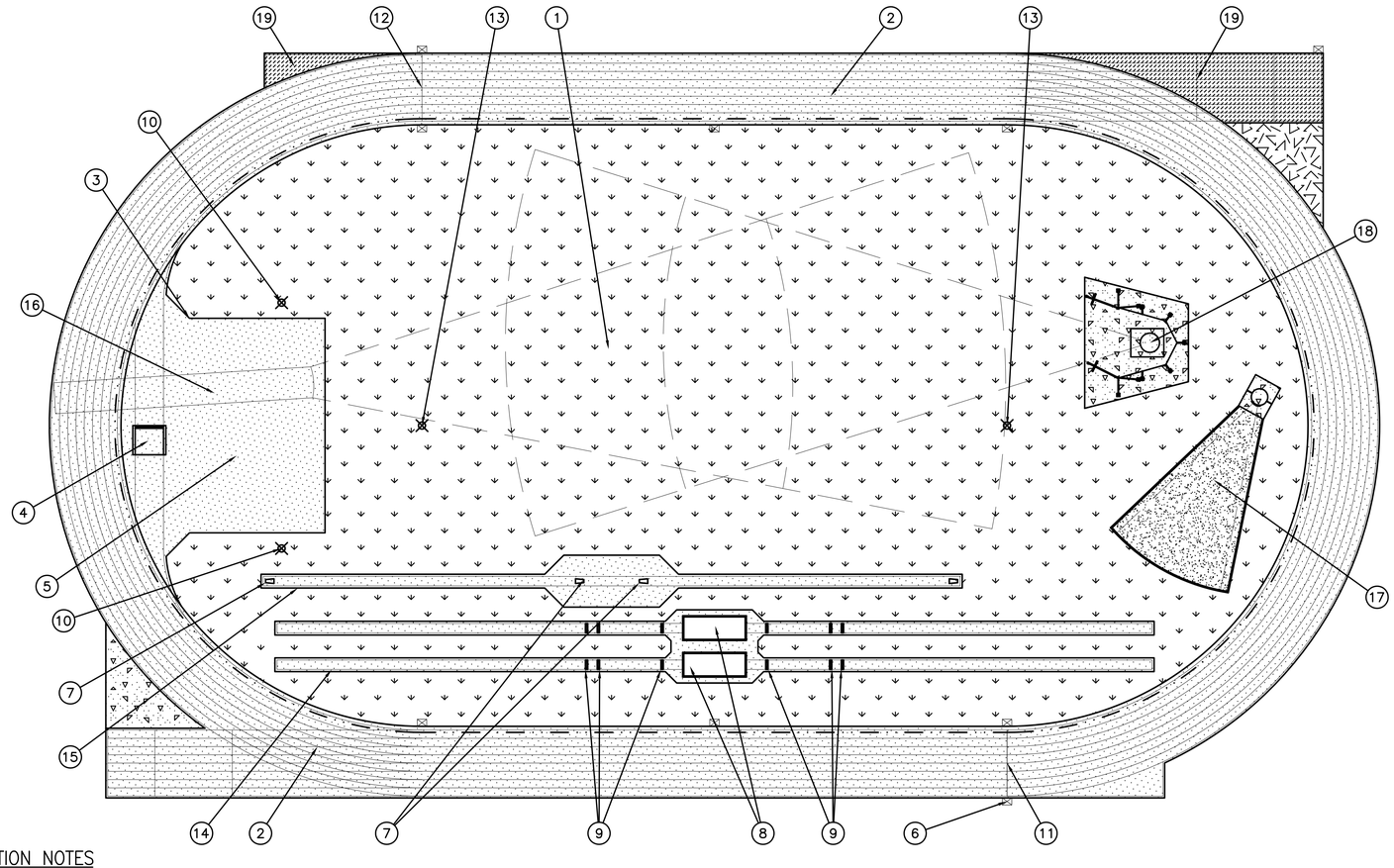

CONSTRUCTION NOTES

1. Proposed natural grass athletic field.
2. New track & field synthetic surface with 8 x 42" lanes and a 130.000' radius. Construct per Details 01/TF-4 & 02/TF-4. All track line markings to meet NCAA requirements.
3. Construct infield border per Detail 03/TF-4.
4. Construct steeplechase water jump with water supply and drain per Details 05/TF-4 and 06/TF-4. See Civil and Utility Drawings for additional information.
5. High jump area (No painted lines)
6. Construct junction box per Details 05/TF-8 & 06/TF-8 (Typ. of 9).
7. Construct pole vault box per Details 02/TF-6 & 02/TF-6.
8. Construct sand pit per Details 02/TF-5 & 03/TF-5. See Civil and Utility Drawings for additional information.
9. Construct take off boards per Detail 04/TF-5. See Civil and Utility Drawings for additional information. (12 boards required)
10. Steeplechase water jump radius point-no monument required.
11. Common finish line.
12. Alternate finish line.
13. Construct radius point per Detail 04/TF-4.
14. Construct long/triple jump area per Details 01/TF-5 & 05/TF-5.
15. Construct pole vault area per Details 01/TF-6, & 05/TF-5.
16. Painted javelin runway.
17. Construct shot put per Details 01/TF-7, 02/TF-7, 03/TF-7, 04/TF-7 & 05/TF-7.
18. Construct hammer/discus per Details 01/TF-8, 02/TF-8, 03/TF-8 & 04/TF-8.
19. ALTERNATE BID: Reverse sprint chute & runout

SURFACING LEGEND

- Proposed track & field synthetic surfacing. Area = 6,460 sy. (Quantity to be verified by Contractor)
- ALTERNATE BID: Proposed track & field synthetic surfacing. Area = 270 sy. (Quantity to be verified by Contractor)
- Proposed natural grass athletic field. Area = 93,800 sf. (Quantity to be verified by Contractor)
- Proposed shot put landing material. Area = 2,555 sf. (Quantity to be verified by Contractor)
- Proposed concrete slabs. Area = 2,940 sf. (Quantity to be verified by Contractor)
- ALTERNATE BID: Proposed concrete slabs. Area = 820 sf. (Quantity to be verified by Contractor)

King Engineering, Inc.
2825 E Cottonwood Parkway
Salt Lake City, Utah 84121
Phone: 801.990.3170
Fax: 801.990.3293
Internet: www.pavementmanagement.com

CREATED BY: KING ENGINEERING, INC.

UVU NCAA TRACK AND FIELD

SITE/LOCATION:

UTAH VALLEY UNIVERSITY
800 S. 1200 W.
OREM, UTAH

PROJECT TITLE:

NCAA TRACK AND FIELD

MARK	DATE	DESCRIPTION

ISSUE TYPE: BID SET

ISSUE DATE: JAN. 14, 2010

DFCM PROJECT NO: 09026790
CAD PROJECT NO: 02-XXX
CAD DWG FILE: C-101.DWG
DRAWN BY: TPM
CHKD BY: DJP
COPYRIGHT: STATE OF UTAH

SHEET TITLE

TRACK & FIELD LAYOUT PLAN

SHEET NUMBER

TF-1

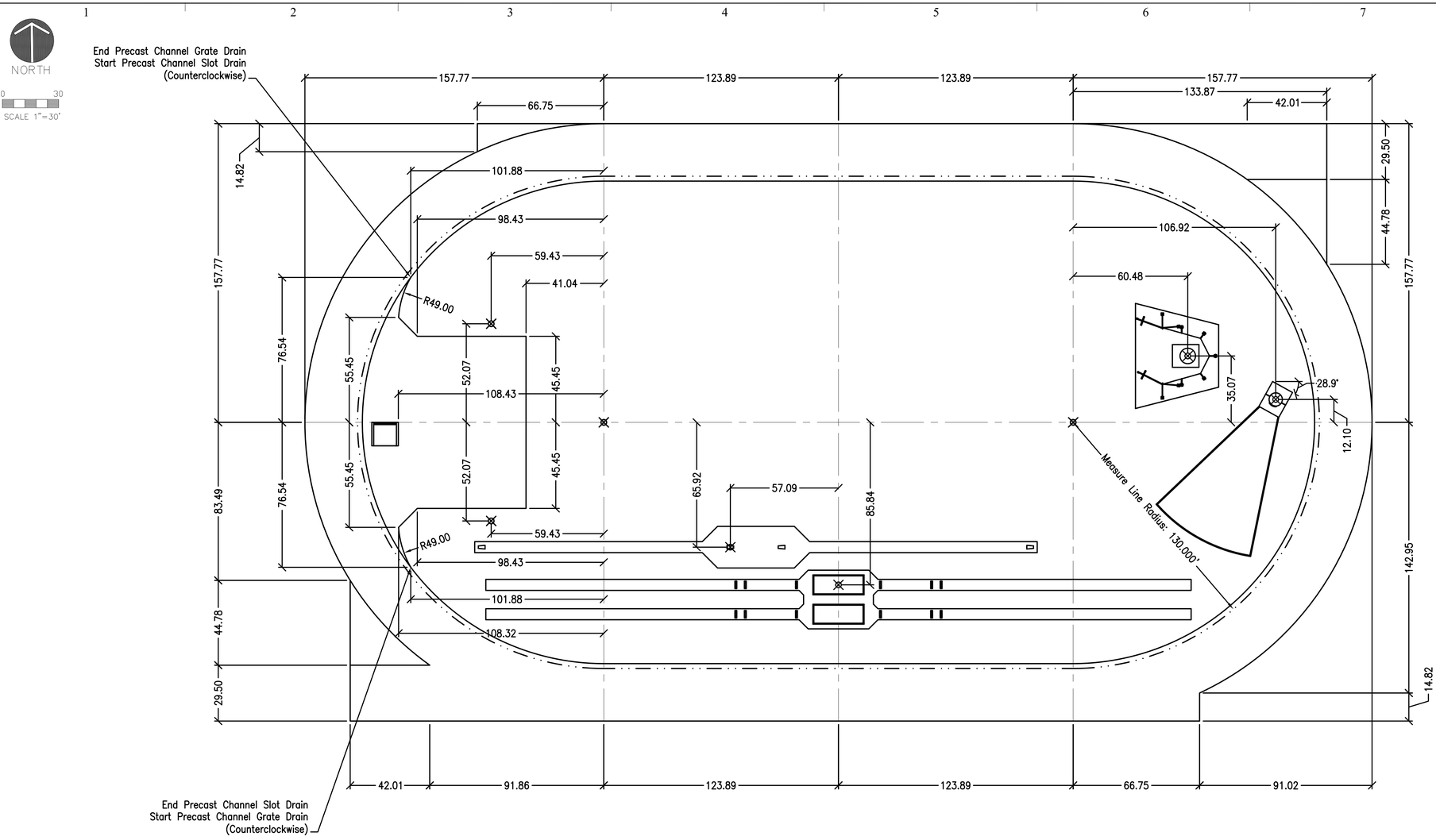

DIMENSION NOTES:

1. All dimensions are in feet.
2. Long/triple jump sand pit dimensions are to the center of pit.
3. Pole vault box dimensions are to the center of the box.
4. Radius point dimensions are to center of point.
5. Throwing circle dimensions are to center of circle.
6. Throwing circle angles are to radial / center lines.
7. All other dimensions are to face of concrete.

King Engineering, Inc.
2825 E Cottonwood Parkway
Salt Lake City, Utah 84121
Phone: 801.990.3170
Fax: 801.990.3293
Internet: www.pavementmanagement.com

CREATED BY: KING ENGINEERING, INC.

UVU NCAA TRACK AND FIELD

SITE/LOCATION:

UTAH VALLEY UNIVERSITY
800 S. 1200 W.
OREM, UTAH

PROJECT TITLE:

NCAA TRACK AND FIELD

MARK	DATE	DESCRIPTION

ISSUE TYPE: BID SET

ISSUE DATE: JAN. 14, 2010

DFCM PROJECT NO: 09026790
CAD PROJECT NO: 02-XXX
CAD DWG FILE: C-101.DWG
DRAWN BY: TPM
CHK'D BY: DJP
COPYRIGHT: STATE OF UTAH

SHEET TITLE

TRACK & FIELD DIMENSION PLAN

SHEET NUMBER

TF-2

NORTH

0 30
SCALE 1"=30'

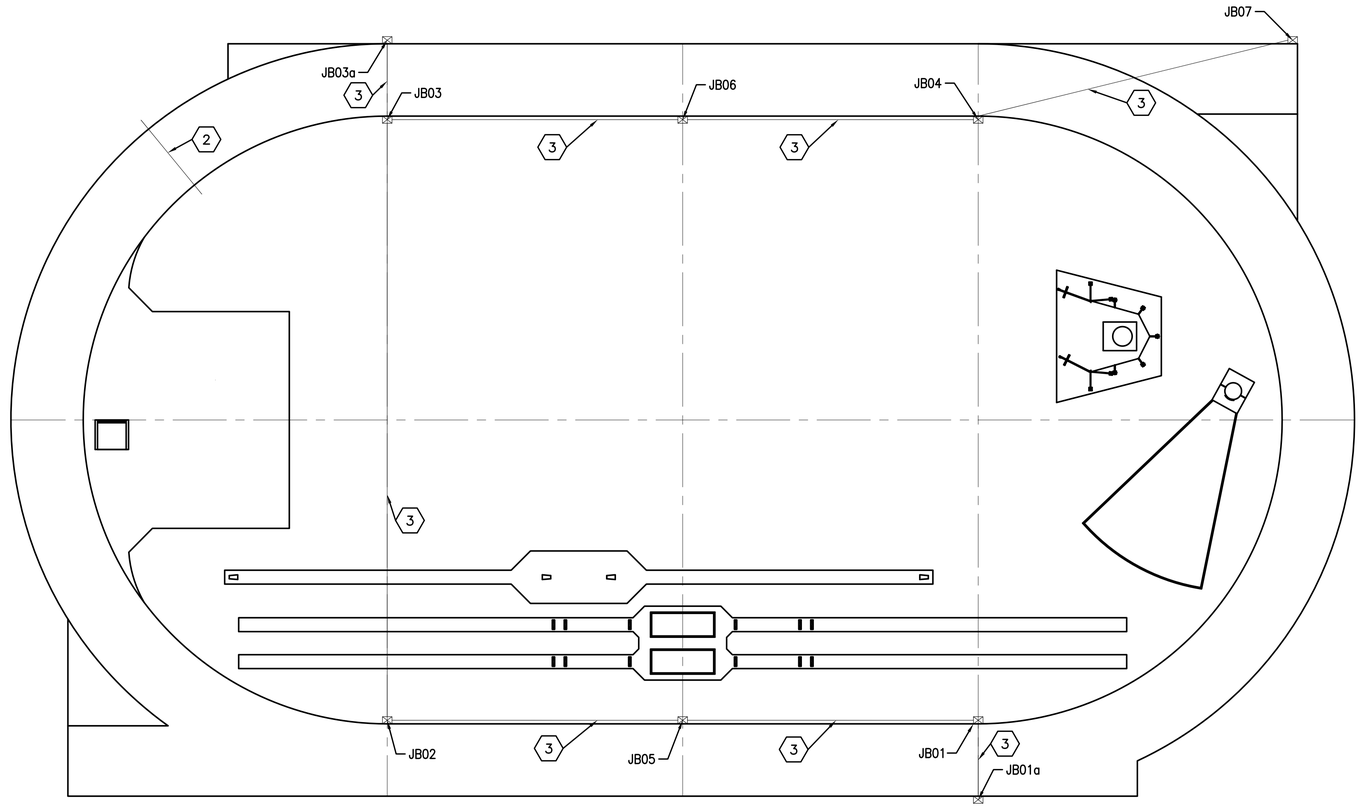

JUNCTION BOX FIXTURE SCHEDULE

JB#	T	E	S	C	PA	FU	COMMENTS
JB 01	0	4	0	0	0	0	
JB 01a	0	4	0	0	0	0	
JB 02	0	5	0	0	0	0	
JB 03	0	4	0	0	0	0	
JB 03a	0	4	0	0	0	0	ALTERNATE BID
JB 04	0	5	0	0	0	0	
JB 05	0	5	0	0	0	0	
JB 06	0	5	0	0	0	0	
JB 07	0	5	0	0	0	0	ALTERNATE BID
JB ??	0	0	0	0	0	0	
JB ??	0	0	0	0	0	0	
JB ??	0	0	0	0	0	0	
JB ??	0	0	0	0	0	0	
JB ??	0	0	0	0	0	0	
JB ??	0	0	0	0	0	0	
JB ??	0	0	0	0	0	0	
JB ??	0	0	0	0	0	0	
JB ??	0	0	0	0	0	0	
JB ??	0	0	0	0	0	0	
JB ??	0	0	0	0	0	0	

JUNCTION BOX FIXTURE SCHEDULE KEY

JB	Junction Box	0	No Fixture
T	Timing	1	Starters Gun
E	Electrical	2	Wind Gauge
S	Scoreboard	3	Timing Camera
C	Communication	4	Quad Electrical Outlets – 2 Circuits
PA	Public Address	5	Quad Electrical Outlet – Single Circuit
FU	Future	6	PA Microphone Jack
		7	Telephone Jack
		8	Scoreboard Control
		9	PA Speakers

Sport Equipment

JUNCTION BOX NOTES

30"L x 18"W Junction Box with center divider with aluminum cover filled with synthetic surface material on jobsite.

Provide 2" drain pipe in each junction box. Connect to storm sewer (See Civil Drawings)

Junction boxes available from:

a. Sportsfield Specialties: Doug Sohns
(888) 975–3343
http://www.sportsfieldspecialties.com

b. UCS: Mike Chappell
(800) 526–4856
http://www.ucsspirit.com

c. Gill: Karl Geissler
(800) 637–3090
http://www.gillathletics.com

DRAWING KEY

JB = Junction Box

King Engineering, Inc.
2825 E Cottonwood Parkway
Salt Lake City, Utah 84121
Phone: 801.990.3170
Fax: 801.990.3293
Internet: www.pavementmanagement.com

CREATED BY: KING ENGINEERING, INC.

UVU NCAA TRACK AND FIELD

SITE/LOCATION:

UTAH VALLEY UNIVERSITY
800 S. 1200 W.
OREM, UTAH

PROJECT TITLE:

NCAA TRACK AND FIELD

MARK	DATE	DESCRIPTION

ISSUE TYPE: BID SET

ISSUE DATE: JAN. 14, 2010

DFCM PROJECT NO: 09026790
CAD PROJECT NO: 02-XXX
CAD DWG FILE: C-101.DWG
DRAWN BY: TPM
CHK'D BY: DJP
COPYRIGHT: STATE OF UTAH

SHEET TITLE

TRACK & FIELD TIMING PLAN

SHEET NUMBER

TF-3

6 STEEPLECHASE WATER JUMP – SECTION

SCALE: 1/2" = 1'–0"

NOTE: All drawings depicting In–ground equipments are for bidding only. Refer to Shop Drawings for installation dimensions and instructions

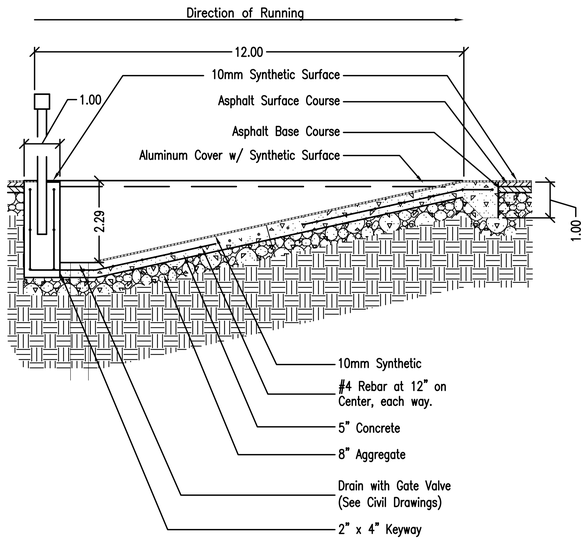

5 STEEPLECHASE WATER JUMP – PLAN

SCALE: 3/8" = 1'–0"

NOTE: All drawings depicting In–ground equipments are for bidding only. Refer to Shop Drawings for installation dimensions and instructions

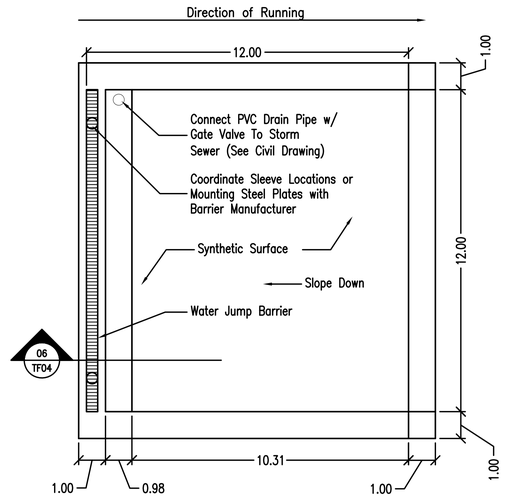

4 RADIUS MONUMENT – SECTION

SCALE: N.T.S.

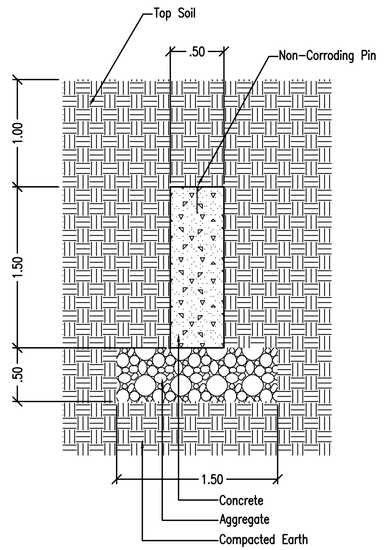

3 INFIELD BORDER CURB

SCALE: 1" = 1'–0"

NOTE: Control/Construction joint @ 10' max. Expansion joint @ 50' max.

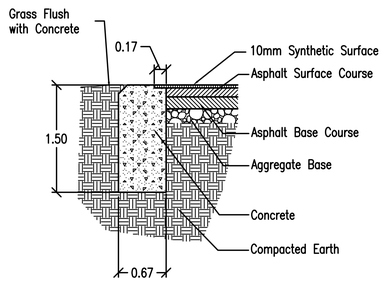

2 PRECAST CHANNEL SLOT DRAIN

SCALE: 1" = 1'–0"

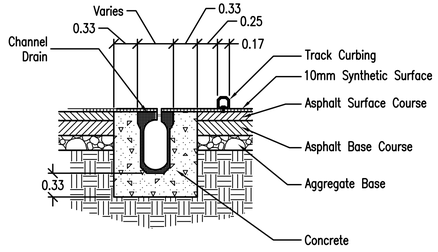

1 TRACK OVAL – SECTION

SCALE: 1" = 1'–0"

NOTE: All drawings depicting In–ground equipments are for bidding only. Refer to Shop Drawings for installation dimensions and instructions * Drain width varies by manufacturer

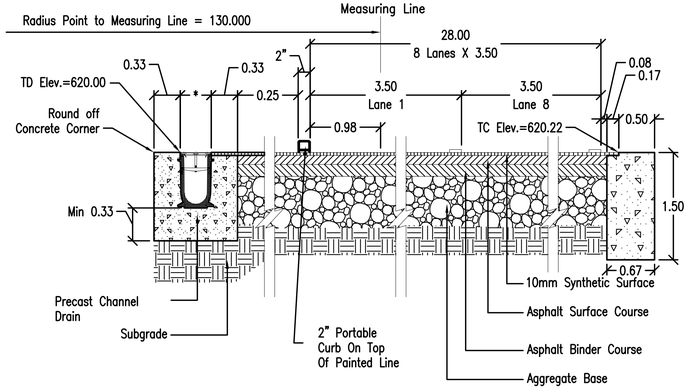

King Engineering, Inc.
2825 E Cottonwood Parkway
Salt Lake City, Utah 84121
Phone: 801.990.3170
Fax: 801.990.3293
Internet: www.pavementmanagement.com

CREATED BY: KING ENGINEERING, INC.

UVU NCAA TRACK AND FIELD

SITE/LOCATION:

UTAH VALLEY UNIVERSITY
800 S. 1200 W.
OREM, UTAH

PROJECT TITLE:

NCAA TRACK AND FIELD

MARK	DATE	DESCRIPTION

ISSUE TYPE: BID SET

ISSUE DATE: JAN. 14, 2010

DFCM PROJECT NO: 09026790
CAD PROJECT NO: 02-XXX
CAD DWG FILE: C-101.DWG
DRAWN BY: TPM
CHK'D BY: DJP
COPYRIGHT: STATE OF UTAH

SHEET TITLE

TRACK & FIELD DETAILS

SHEET NUMBER

TF-4

SHEET 15 OF 19

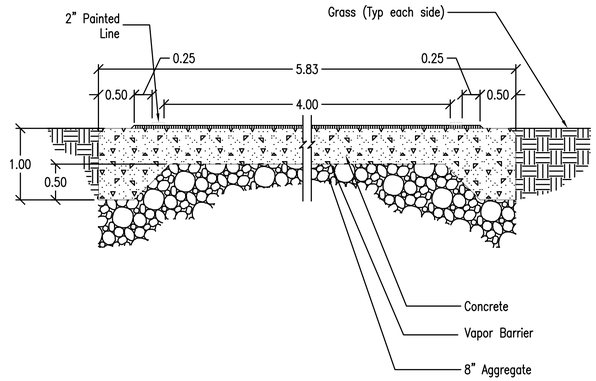

5 CONCRETE RUNWAY – SECTION
SCALE: 1" = 1'–0"

NOTE: All drawings depicting In–ground equipments are for bidding only. Refer to Shop Drawings for installation dimensions and instructions

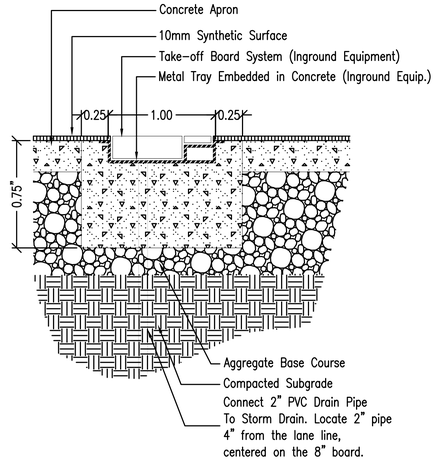

Note: Metal Tray to receive removable Synthetic Surface Plug, when Take–off Board System is removed.

4 LONG/TRIPLE JUMP TAKE–OFF BOARD – SECTION
SCALE: 1–1/2" = 1'–0"

NOTE: All drawings depicting In–ground equipments are for bidding only. Refer to Shop Drawings for installation dimensions and instructions

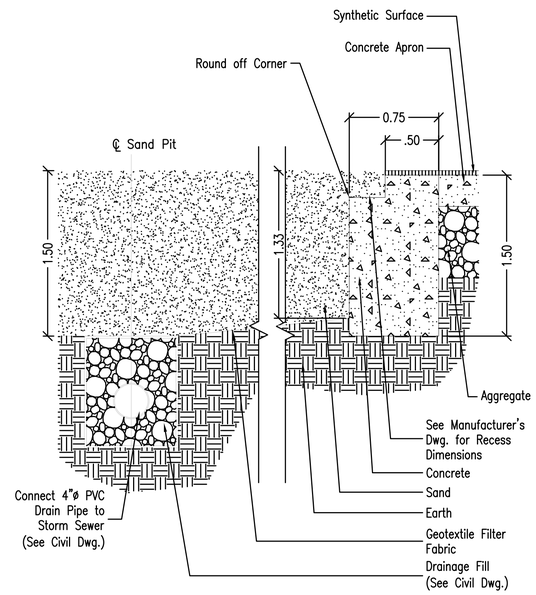

3 LONG/TRIPLE JUMP SAND PIT – SECTION
SCALE: 1–1/2" = 1'–0"

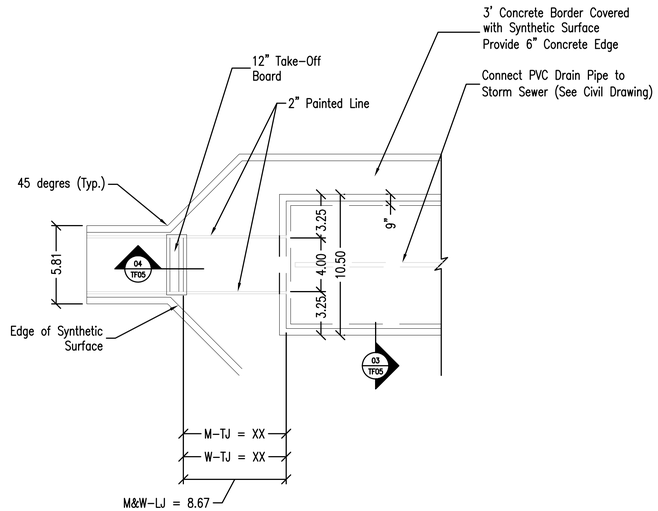

2 LONG/TRIPLE JUMP SAND PIT – PLAN
SCALE: 3/16" = 1'–0"

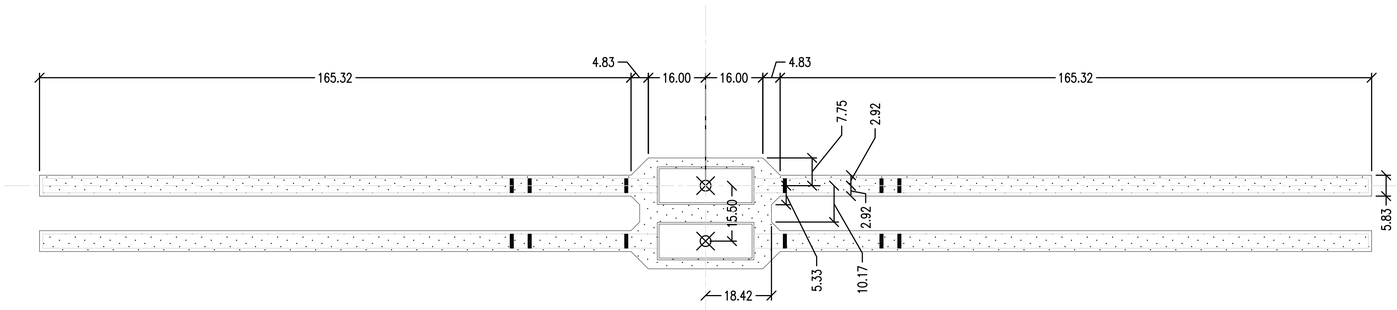

1 LONG/TRIPLE JUMP – PLAN
SCALE: 1" = 20'

King Engineering, Inc.
2825 E Cottonwood Parkway
Salt Lake City, Utah 84121
Phone: 801.990.3170
Fax: 801.990.3293
Internet: www.pavementmanagement.com

CREATED BY: KING ENGINEERING, INC.

UVU NCAA TRACK AND FIELD

SITE/LOCATION:
UTAH VALLEY UNIVERSITY
800 S. 1200 W.
OREM, UTAH

PROJECT TITLE:
NCAA TRACK AND FIELD

MARK	DATE	DESCRIPTION

ISSUE TYPE: BID SET

ISSUE DATE: JAN. 14, 2010

DFCM PROJECT NO: 09026790
CAD PROJECT NO: 02-XXX
CAD DWG FILE: C-101.DWG
DRAWN BY: TPM
CHK'D BY: DJP
COPYRIGHT: STATE OF UTAH

SHEET TITLE
TRACK & FIELD DETAILS

SHEET NUMBER
TF-5

5 N/A
SCALE:

4 N/A
SCALE:

3 POLE VAULT BOX – SECTION
SCALE: 3/4" = 1'–0"

NOTE: All drawings depicting In–ground equipments are for bidding only. Refer to Shop Drawings for installation dimensions and instructions

NOTE:
Pole vault box extends 1/2" above concrete and synthetic surface is flush to top of box

NOTE:
All Pole Vault Boxes to Receive Polyurethane Plug.

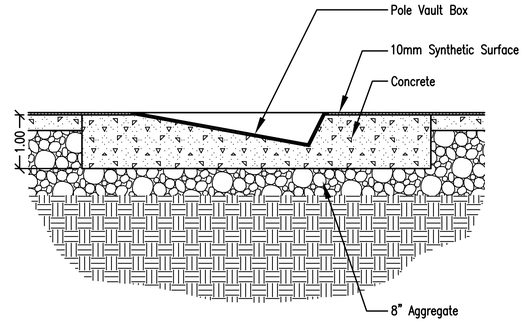

NOTE: All drawings depicting In–ground equipments are for bidding only. Refer to Shop Drawings for installation dimensions and instructions

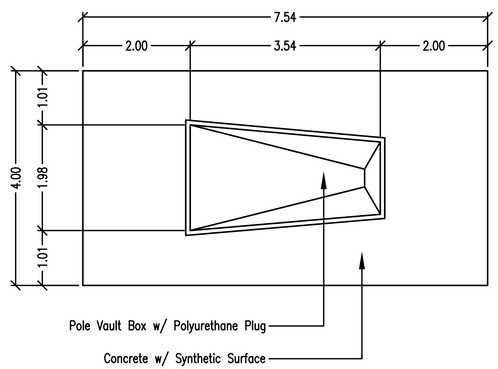

2 POLE VAULT BOX – PLAN
SCALE: 3/4" = 1'–0"

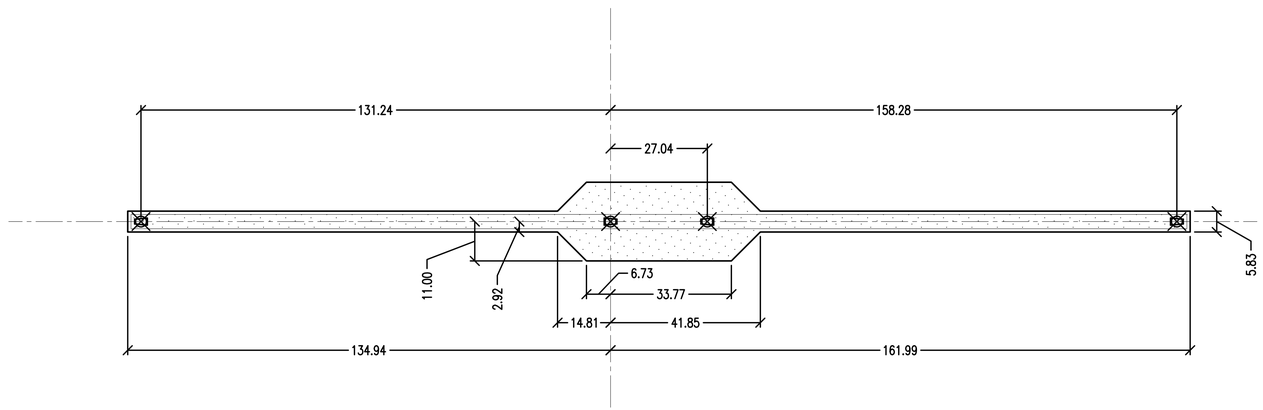

1 POLE VAULT – PLAN
SCALE: 1" = 20'

King Engineering, Inc.
2825 E Cottonwood Parkway
Salt Lake City, Utah 84121
Phone: 801.990.3170
Fax: 801.990.3293
Internet: www.pavementmanagement.com

CREATED BY: KING ENGINEERING, INC.

UVU NCAA TRACK AND FIELD

SITE/LOCATION:
UTAH VALLEY UNIVERSITY
800 S. 1200 W.
OREM, UTAH

PROJECT TITLE:
NCAA TRACK AND FIELD

MARK	DATE	DESCRIPTION

ISSUE TYPE: BID SET

ISSUE DATE: JAN. 14, 2010

DFCM PROJECT NO: 09026790
CAD PROJECT NO: 02-XXX
CAD DWG FILE: C-101.DWG
DRAWN BY: TPM
CHK'D BY: DJP
COPYRIGHT: STATE OF UTAH

SHEET TITLE
TRACK & FIELD DETAILS

SHEET NUMBER
TF-6

SHEET 17 OF 19

6 N/A
SCALE:

5 SHOT PUT LANDING AREA – SECTION (END)
SCALE: 1 1/2" = 1'-0"

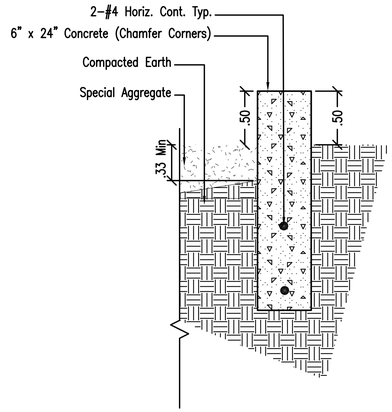

4 SHOT PUT LANDING AREA – SECTION (SIDE)
SCALE: 1 1/2" = 1'-0"

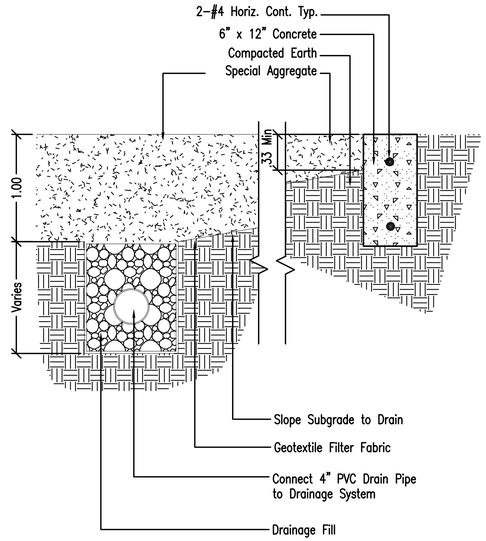

NOTE: All drawings depicting In-ground equipments are for bidding only. Refer to Shop Drawings for installation dimensions and instructions

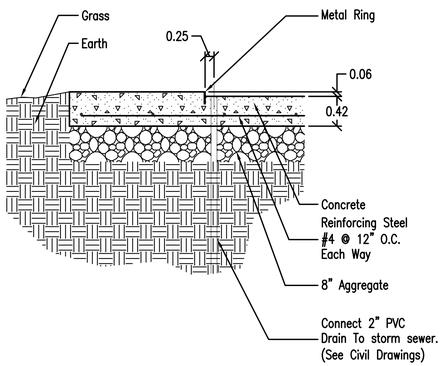

3 SHOT PUT THROW CIRCLE – SECTION
SCALE: 1" = 1'-0"

NOTE: All drawings depicting In-ground equipments are for information only. Refer to Shop Drawings for installation dimensions and instructions

NOTE: Concrete texture is a light broom finish, Owner's representative to be present upon concrete installation to verify proper texture.

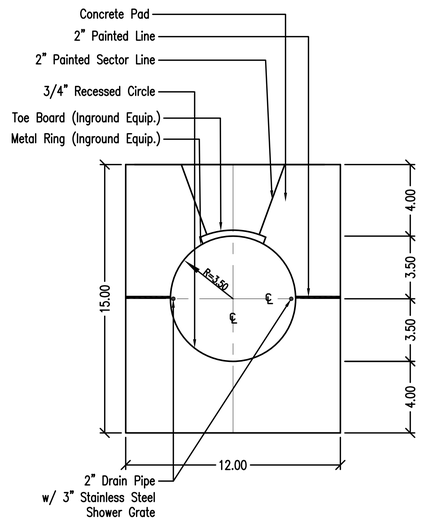

2 SHOT PUT THROW CIRCLE – PLAN
SCALE: 1/4" = 1'-0"

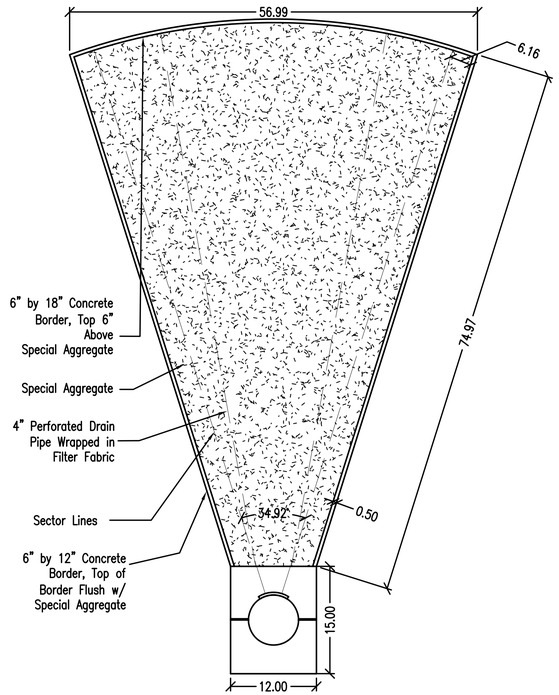

1 SHOT PUT – PLAN
SCALE: 1" = 10'

King Engineering, Inc.
2825 E Cottonwood Parkway
Salt Lake City, Utah 84121
Phone: 801.990.3170
Fax: 801.990.3293
Internet: www.pavementmanagement.com

CREATED BY: KING ENGINEERING, INC.

UVU NCAA TRACK AND FIELD

SITE/LOCATION:
UTAH VALLEY UNIVERSITY
800 S. 1200 W.
OREM, UTAH

PROJECT TITLE:
NCAA TRACK AND FIELD

MARK	DATE	DESCRIPTION

ISSUE TYPE: BID SET

ISSUE DATE: JAN. 14, 2010

DFCM PROJECT NO: 09026790
CAD PROJECT NO: 02-XXX
CAD DWG FILE: C-101.DWG
DRAWN BY: TPM
CHK'D BY: DJP
COPYRIGHT: STATE OF UTAH

SHEET TITLE
TRACK & FIELD DETAILS

SHEET NUMBER
TF-7

6 JUNCTION BOX – CONCRETE APRON

SCALE: 1" = 1'–0"

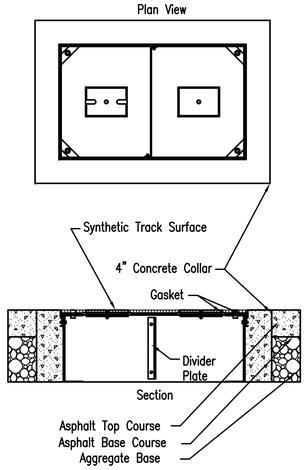

NOTES:

1. Junction box is set flush to concrete surface.
2. Provide 2" drain for each box.

5 JUNCTION BOX – INFIELD

SCALE: 1" = 1'–0"

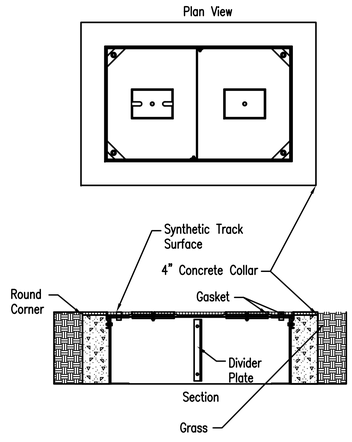

NOTES:

1. Junction box is set flush to concrete surface.
2. Provide 2" drain for each box.
3. One side of box is flush to channel drain or concrete border curb.

4 HAMMER/DISCUS THROW CIRCLE – SECTION

SCALE: 1" = 1'–0"

NOTE: All drawings depicting In–ground equipments are for bidding only. Refer to Shop Drawings for installation dimensions and instructions

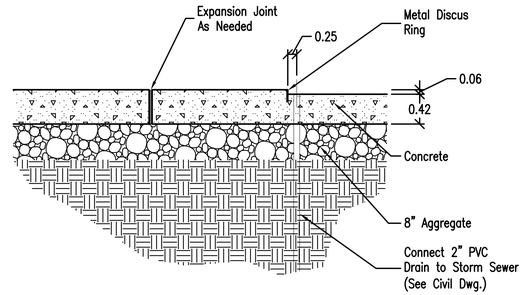

NOTE: All drawings depicting In–ground equipments are for bidding only. Refer to Shop Drawings for installation dimensions and instructions

NOTE: Concrete texture is a light broom finish, Owner's representative to be present upon concrete installation to verify proper texture.

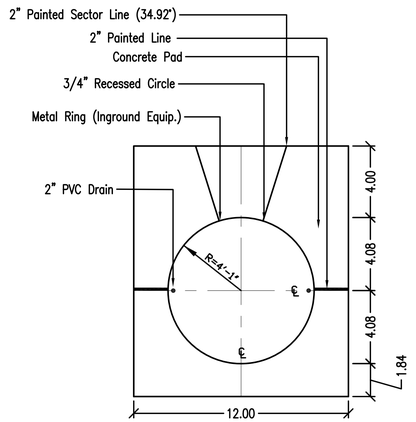

3 HAMMER/DISCUS THROW CIRCLE – PLAN

SCALE: 1/4" = 1'–0"

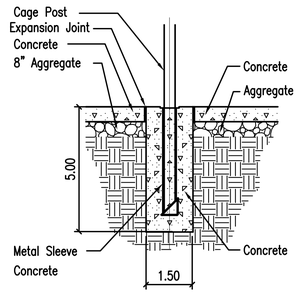

2 HAMMER/DISCUS CAGE – SECTION

SCALE: 1/2" = 1'–0"

NOTES:

1. All drawings depicting in–ground equipment are for information only. Refer to Vendor Drawings for installation dimensions and instructions.
2. Drill holes for cage door stop pins after line markings have been painted at the following locations (NCAA Rule 1 – Section 9 – Article 1):
   - 2.1. Door totally closed
   - 2.2. Door parallel to sector line
   - 2.3. Door perpendiclaur to sector line, but not extending more than 1.5m (4.92') into the sector

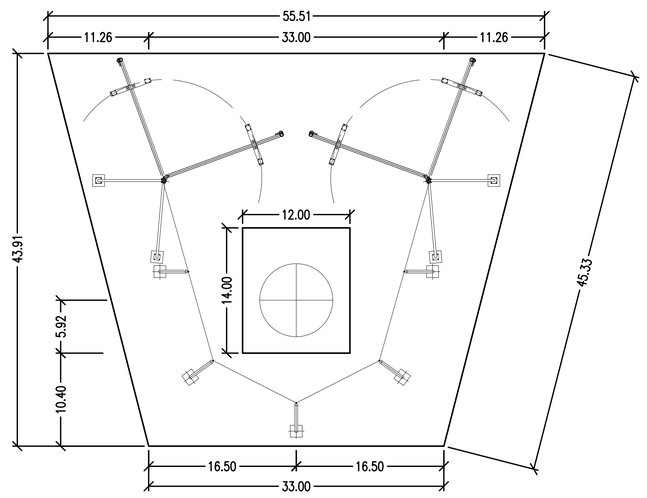

1 HAMMER/DISCUS – PLAN

SCALE: 1/8" = 1'–0"

King Engineering, Inc.
2825 E Cottonwood Parkway
Salt Lake City, Utah 84121
Phone: 801.990.3170
Fax: 801.990.3293
Internet: www.pavementmanagement.com

CREATED BY: KING ENGINEERING, INC.

UVU NCAA TRACK AND FIELD

SITE/LOCATION:

UTAH VALLEY UNIVERSITY
800 S. 1200 W.
OREM, UTAH

PROJECT TITLE:

NCAA TRACK AND FIELD

MARK	DATE	DESCRIPTION

ISSUE TYPE: BID SET

ISSUE DATE: JAN. 14, 2010

DFCM PROJECT NO: 09026790
CAD PROJECT NO: 02-XXX
CAD DWG FILE: C-101.DWG
DRAWN BY: TPM
CHK'D BY: DJP
COPYRIGHT: STATE OF UTAH

SHEET TITLE

TRACK & FIELD DETAILS

SHEET NUMBER

TF-8

SHEET 19 OF 19