GENEVA BUILDING
UTAH VALLEY UNIVERSITY
ROOF REPLACEMENT

1410 WEST BUSINESS PARK DRIVE
OREM, UTAH
DFCM PROJECT # 09079790

UTAH VALLEY UNIVERSITY

State of Utah
Department of Administrative Services

Division of Facilities
Construction & Management
4110 State Office Building
Salt Lake City, Utah 84114
Phone: (801) 538 - 3018
Fax: (801) 538 - 3267

http://dfcm.utah.gov

JUNE 2009

McNEIL GROUP
Designing for the Future Since 1983
6895 SOUTH 900 EAST MIDVALE, UTAH 84047
TEL. (801) 255-7700 FAX (801) 255-8071
E-MAIL info@mcneileng.com WEB SITE AT www.mcneil-group.com

GENEVA BUILDING
UTAH VALLEY UNIVERSITY

DIVISION OF FACILITIES CONSTRUCTION & MANAGEMENT
1410 WEST BUSINESS PARK DRIVE
OREM, UTAH

REVISIONS

REV.	DATE	DESCRIPTION

PROJECT NO:	290197
CAD DWG. FILE:	290197-rpt.dwg
DRAWN BY:	NMD
DFCM PROJECT NO:	09079790
PROPERTY NO:	
DESIGNED BY:	DLS
FIELD CREW:	
CHECKED BY:	DLS
DATE:	JUNE 2009

SHEET TITLE:
COVER SHEET

G1.00
SHEET 1 OF 5

Y:\1-Eds\Working Bid Sets\06-25-2009- -Matt - UVU Geneva Bld\290197-rpt.dwg Jun 25, 2009 - 1:25pm

GENERAL NOTES:

1. CONTRACTOR MUST VISIT THE SITE SO AS TO BE FAMILIAR WITH ALL EXISTING CONDITIONS BEFORE SUBMITTING BID, BRING ANY QUESTIONS OR CONCERNS TO THE ATTENTION OF THE ENGINEER FOR CLARIFICATION, FOR ADDENDUM PRIOR TO BID OPENING. NO ALLOWANCES WILL BE MADE FOR CONDITIONS THAT ARE CLEARLY VISIBLE.
2. CONTRACTOR SHALL WORK WITH LOCAL LEADERSHIP ON SCHEDULING TO INSURE CONTINUED USE OF THE BUILDING. NEITHER THE CONTRACTOR NOR ANY OF HIS PEOPLE SHALL HAVE ACCESS TO THE BUILDING WITHOUT PRIOR AUTHORIZATION.
3. ALL SAFETY STANDARDS AND REQUIREMENTS ARE THE RESPONSIBILITY OF THE CONTRACTOR.
4. EXISTING ROOF PENETRATIONS WILL BE FLASHED AND PAINTED.
5. ALL EXISTING ROOF VENTS, MECHANICAL UNITS, ROOF HATCHES, ETC. WILL BE A MINIMUM OF 10" ABOVE THE FINISHED ROOF.
6. ALL NEW METAL WILL BE GALVANIZED OR PRE-FINISHED. CAULKING WILL BE SAME COLOR AS METAL.
7. BEFORE FABRICATION OF ANY SHEET METAL WORK, SUBMIT SHOP DRAWINGS TO ENGINEER FOR REVIEW AND APPROVAL. ALL WORK TO CONFORM TO NRCA OR SMACNA DETAILS AND REQUIREMENTS WHERE NOT SPECIFICALLY DETAILED OTHERWISE.
8. COMPLY WITH ALL MANUFACTURER'S SPECIFICATIONS AND RECOMMENDATIONS.
9. CONTRACTOR RESPONSIBLE TO KEEP BUILDING WATERTIGHT AT ALL TIMES. STARTING FROM NOTICE TO PROCEED TO SUBSTANTIAL COMPLETION ANY DAMAGE TO THE BUILDING OR ITS CONTENTS WILL BE THE RESPONSIBILITY OF THE CONTRACTOR.
10. AFTER ROOFING SYSTEM IS REMOVED, ENGINEER IS TO INSPECT THE NAILING PATTERN OF PLYWOOD, NAILING STANDARD IS 12" O.C. IN FIELD, AND 6" O.C. AROUND PERIMETER USING 10d NAILS.
11. CONTRACTOR TO CHECK ALL MECHANICAL EQUIPMENT BEFORE DISCONNECTING TO MAKE SURE THEY ARE OPERATING PROPERLY, CONTRACTOR IS ALSO RESPONSIBLE FOR UNITS TO BE IN COMPLETE OPERATING CONDITION AT THE COMPLETION OF THE PROJECT. COORDINATE SHUTDOWN WITH USERS.
12. BEFORE ORDERING ANY MATERIALS, VERIFY ALL EXISTING CONDITIONS AND DIMENSIONS. DO NOT SCALE DRAWINGS FOR QUANTITIES.
13. BEFORE INSTALLATION OF ALL NEW PIPE JACKS AND PIPE FLASHINGS CHECK MECHANICAL FLUES AND VENTS FOR ANY SETTLEMENT OR SHIFTING INTO ROOF. CONTRACTOR TO VERIFY THAT MECHANICAL EQUIPMENT VENTING TO HAVE POSITIVE RELEASE FLOW TO ROOF VENT AND FLUE IS SECURED TO ORIGINAL HEIGHT AND ALL CONNECTIONS ARE TIGHT AND SECURE.
14. ANY METAL ETC. THAT NEEDS TO BE REMOVED TO COMPLETE THIS JOB IS TO BE PART OF THE CONTRACT. CARE MUST BE TAKEN TO ENSURE THAT ALL ITEMS TO BE REINSTALLED ARE NOT DAMAGED DURING REMOVAL AND/OR INSTALLATION. ALL PIECES THAT ARE DAMAGED WILL BE REPLACED BY CONTRACTOR.

LEGEND

- ELECTRICAL CONDUIT ON TOP OF ROOF
- EXISTING LIGHT
- EXISTING ROOF DRAIN
- NEW OVERFLOW DRAIN AND PIPE TO BE ADDED
- SLOPE
- VENT
- TURTLE VENT
- TURTLE VENT TO BE REMOVED
- MECHANICAL UNITS
- EXHAUST CURBS
- EXISTING SKYLIGHTS
- CONDENSING UNITS
- ROOF HATCH
- PENTHOUSE LOUVER
- WALL MOUNT ANTENNA
- ROOF LADDER ACCESS
- SATELLITE LOCATION
- EXISTING SATELLITE LOCATION
- SECONDARY UNDERLAYMENT

S:\2009Files\290197\Consulting\Prod Dwgs\Vicinity Map.JPG

SITE

McNEIL GROUP
6895 SOUTH 900 EAST MIDVALE, UTAH 84047
TEL. (801) 255-7700 FAX (801) 255-8071

SHEET INDEX

SHEET NO.	SHEET TITLE
G1.00	COVER SHEET
G1.01	GENERAL NOTES AND INFORMATION
C1.01	SITE PLAN
A1.01	ROOF PLAN
A5.01	MISCELLANEOUS DETAIL SHEET

DFCM DESIGN AND CODE CRITERIA

APPLICABLE CODES

	YEAR		YEAR
INTERNATIONAL BUILDING CODE	2006	NATIONAL ELECTRICAL CODE	2008
INTERNATIONAL MECHANICAL CODE	2006	UNIFORM CODE FOR	
INTERNATIONAL PLUMBING CODE	2006	BUILDING CONSERVATION	N/A
INTERNATIONAL FIRE CODE	2006	ADA ACCESSIBILITY	
INTERNATIONAL ENERGY		GUIDELINES	N/A
CONSERVATION CODE	2006		

A. OCCUPANCY AND GROUP: F-2/B

CHANGE IN USE: YES ___ NO X MIXED OCCUPANCY: YES X NO ___

SPECIAL USE AND OCCUPANCY (e.g. HIGH RISE, COVERED MALL): NO

B. SEISMIC DESIGN CATEGORY: 111= DESIGN WIND SPEED: 70 MPH

C. TYPE OF CONSTRUCTION (CIRCLE ONE):

I/A I/B II/A II/B III/A III/B IV/HT V/A V/B

D. FIRE RESISTANT RATING REQUIREMENTS FOR THE EXTERIOR WALLS BASED ON THE FIRE SEPARATION DISTANCE (IN HOURS)

NORTH 1 SOUTH 1 EAST 1 WEST 1

E. MIXED OCCUPANCIES: X NONSEPARATED USES X

F. SPRINKLERS: NO NONSEPARATED USES X

REQUIRED: NO PROVIDED NO TYPE OF SPRINKLER SYSTEM N/A

G. NUMBER OF STORIES: 2 BUILDING HEIGHT: 21'-4"

H. ACTUAL AREA PER FLOOR (SQUARE FEET): 30,400 MAIN / 4,275 UPPER

I. TABULAR AREA: 2,100/ FLOOR

J. AREA MODIFICATIONS:

a) 21,000 + (21,000 x .75) = 36,750 S.F. $I_f = 100\left[\frac{761.33}{761.33} - 0.29\frac{30}{30}\right](W)$

b) SUM OF THE RATIO CALCULATIONS FOR MIXED OCCUPANCIES:

B(MAIN) + F-2(MAIN) ≤ 1 B(UPPER) + F-2(UPPER) ≤ 1

.124 + .703 ≤ 1 .115 + 0 / 36,750 ≤ 1

C) TOTAL ALLOWABLE AREA FOR:

1) ONE STORY: 36,750 S.F.
2) TWO STORY: A_s (2) 36,750 S.F.
3) THREE STORY: A_s (3) –

d) UNLIMITED AREA BUILDING: YES ___ NO X CODE SECTION: N/A

K. FIRE RESISTANCE RATING REQUIREMENTS FOR BUILDING ELEMENTS (HOURS).

ELEMENT	HOURS	ASSEMBLY LISTING	ELEMENT	HOURS	ASSEMBLY LISTING
EXTERIOR BEARING WALLS	1	EXIST.	FLOORS - CEILING FLOORS	0	EXIST.
INTERIOR BEARING WALLS	0	EXIST.	ROOFS - CEILING ROOFS	1	EXIST.
EXTERIOR NON-BEARING WALLS	1	EXIST.	EXTERIOR DOORS AND WINDOWS	1	EXIST.
STRUCTURAL FRAME	1	EXIST.	SHAFT ENCLSURES	N/A	–
PARTITIONS - PERMANENT	0	EXIST.	FIRE WALLS	N/A	–
FIRE BARRIERS	N/A	–	FIRE PARTITIONS	N/A	–
			SMOKE PARTITIONS	N/A	–

L. DESIGN OCCUPANT LOAD: B=77 / F-2=131

EXIT WIDTH REQUIRED: EXIST. EXIT WIDTH PROVIDED: EXIST.

M. MINIMUM NUMBER OF REQUIRED PLUMBING FACILITIES: ALL FACILITIES EXISTING

a) WATER CLOSETS - REQUIRED (m) 5 (f) 5 PROVIDED: (m) 9 (f) 7
b) LAVATORIES - REQUIRED (m) 2 (f) 2 PROVIDED: (m) 9 (f) 7
c) BATH TUBS OR SHOWERS: NONE
d) DRINKING FOUNTAINS: 2 SERVICE SINKS: 2

FOOTNOTES:

1) IN CASE OF CONFLICT WITH THE U.S. DEPARTMENT OF JUSTICE FEDERAL REGISTERS PARTS I THOUGH V - ADA GUIDELINES AND SPECIFIC REFERENCE TO THE INTERNATIONAL BUILDING CODE ACCESSIBILITY CHAPTERS, THE MORE RESTRICTIVE REQUIREMENT SHALL GOVERN.

2) ADDITIONAL CODE INFORMATION SHALL BE PROVIDED AT THE DISCRETION OF THE BUILDING OFFICIAL FOR COMPLEX BUILDINGS. INCLUDING, BUT NOT LIMITED TO:
a) HIGH RISE REQUIREMENTS
b) ATRIUMS
c) PERFORMANCE BASED CRITERIA.
d) MEANS OR EGRESS ANALYSIS
e) FIRE ASSEMBLY LOCATOR SHEET
f) EXTERIOR AND INTERIOR ACCESSIBILITY ROUTE
g) FIRE STOPPING, INCLUDING TESTED DESIGN NUMBER

S:\2009Files\290197\Consulting\Prod Dwgs\UVSCmap_small012508.jpg

SITE

VICINITY MAP

N.T.S.

ABBREVIATIONS

		IE	INVERT ELEVATION	SDCB	STORM DRAIN CATCH BASIN
		IRR	IRRIGATION	S	SOUTH
		LF	LINEAR FEET	SAD	SEE ARCHITECTURAL DRAWINGS
		LIP	LIP OF CURB	SS	SANITARY SEWER
		MAX	MAXIMUM	SD	STORM DRAIN
		MIN	MINIMUM	SEC	SECTION
		MON	MONUMENT	SPEC	SPECIFICATION
		N	NORTH	SQ	SQUARE
		NG	NATURAL GROUND	SQ FT	SQUARE FEET
		NOTE	SEE NOTE	SQ YD	SQUARE YARD
		NTS	NOT TO SCALE	STA	STATION
		OG	ORIGINAL GROUND	STD	STANDARD
		PC	POINT OF CURVATURE	STM	STORM
		PCC	POINT OF COMPOUND CURVE	T	TOWNSHIP
		PI	POINT OF INTERSECTION	TBC	TOP BACK OF CURB
		PRC	POINT OF REVERSE CURVE	TBR	TOP BACK OF RETAINING WALL
		PT	POINT OF TANGENCY	TOA	TOP OF ASPHALT
		POC	POINT OF CONNECTION	TOC	TOP OF CONCRETE
		PWR	POWER	TOE	TOE OF SLOPE
		P	PROPERTY LINE	TOP	TOP OF BANK
		PVC	POLYVINYL CHLORIDE PIPE	TOS	TOP OF SIDEWALK
		R	RANGE	TOW	TOP OF WALL
		RCP	REINFORCED CONCRETE PIPE	TRANS	TRANSFORMER
		RD	ROOF DRAIN	U.N.O.	UNLESS NOTED OTHERWSE
		REV	REVISION	WTR	WATER
		ROW	RIGHT-OF-WAY	WV	WATER VALVE
				W	WEST
L					
RETE					
CONSTRUCTION					
CORRUGATED METAL PIPE					
DIAMETER					
EAST					
EDGE OF ASPHALT					
EDGE OF CONCRETE					
ELEVATION					
EXISTING					
FINISHED FLOOR ELEVATION					
FINISHED GRADE					
FEET					
FLOW LINE					
FRONT OF WALK					
GRADE BREAK					
HIGH DENSITY POLYETHYLENE					
HIGH WATER					
HIGHWAY					

McNEIL GROUP
Designing for the Future Since 1983
6895 SOUTH 900 EAST MIDVALE, UTAH 84047
TEL. (801) 255-7700 FAX (801) 255-8071
E-MAIL info@mcneileng.com WEB SITE AT www.mcneil-group.com

GENEVA BUILDING
UTAH VALLEY UNIVERSITY

DIVISION OF FACILITIES CONSTRUCTION & MANAGEMENT
1410 WEST BUSINESS PARK DRIVE
OREM, UTAH

REVISIONS

REV.	DATE	DESCRIPTION
△		
△		
△		
△		
△		

PROJECT NO: 290197
CAD DWG. FILE: 290197-rpA.dwg
DRAWN BY: NMD
DFCM PROJECT NO: 09079790
PROPERTY NO:
DESIGNED BY: DLS
FIELD CREW:
CHECKED BY: DLS
DATE: JUNE 2009

SHEET TITLE:
GENERAL NOTES AND INFORMATION

G1.01
SHEET 2 OF 5

Y:\1-Bid\Working Bid Sets\06-25-2009- -Matt - UVU Geneva Bid\290197-rpA.dwg Jun 25, 2009 - 1:22pm

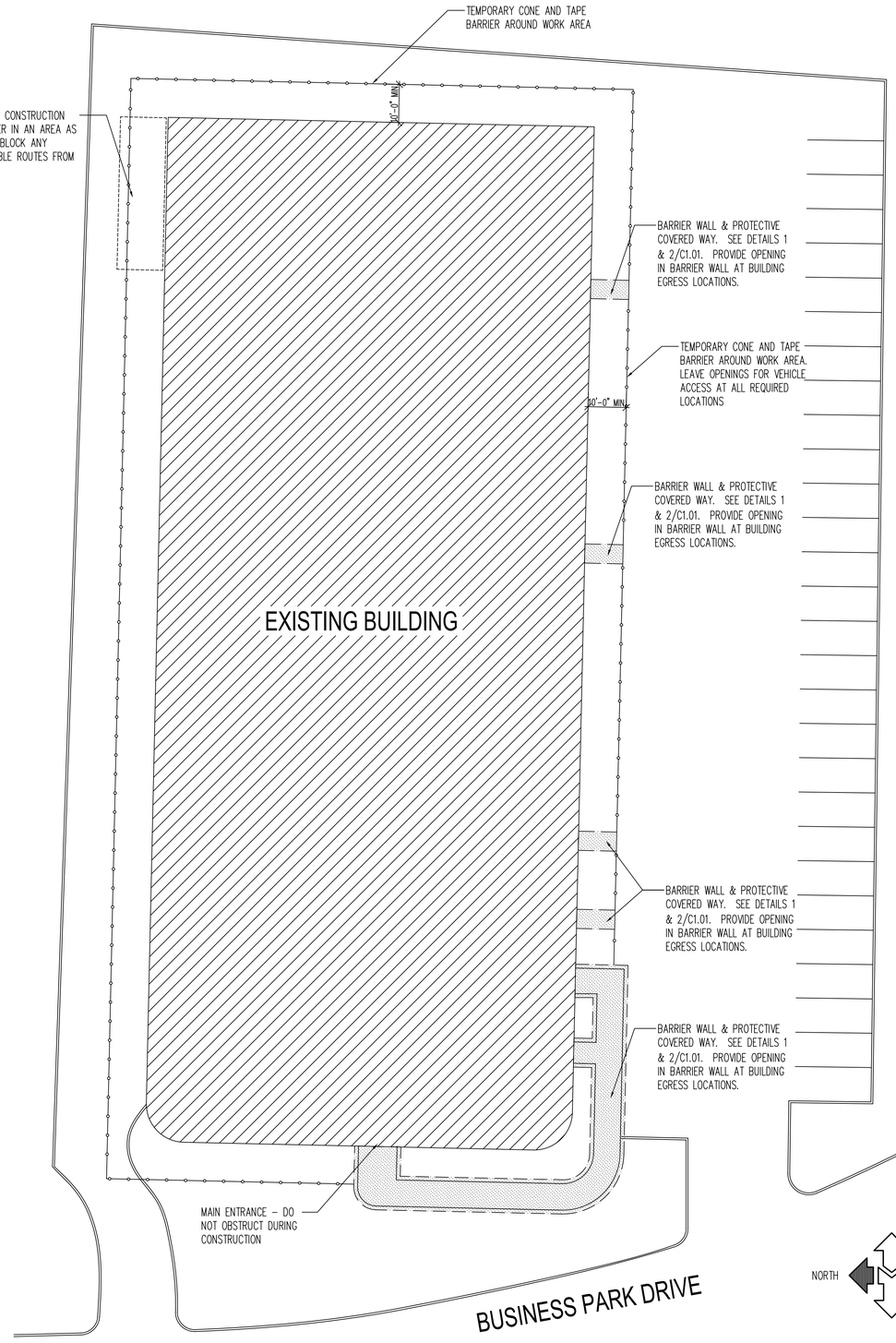

NORTH

SITE PLAN
SCALE: N.T.S.

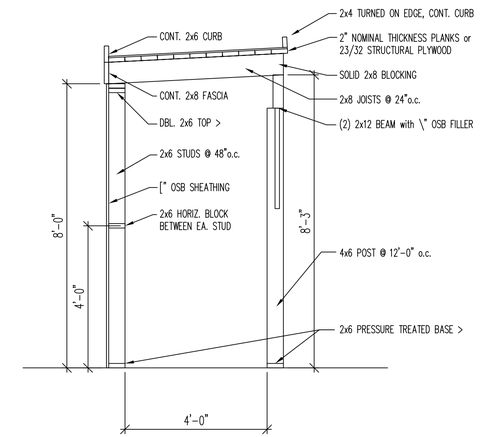

COVERED WAY & BARRIER SECTION (1)
SCALE: \" = 1'-0"

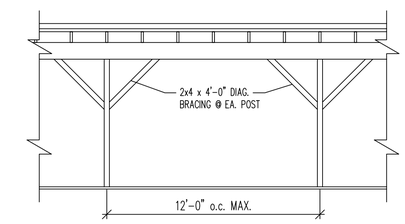

PARTIAL COVERED WAY ELEVATION (2)
SCALE: |" = 1'-0"

McNEIL GROUP
Designing for the Future Since 1983
6895 SOUTH 900 EAST MIDVALE, UTAH 84047
TEL. (801) 255-7700 FAX (801) 255-8071
E-MAIL info@mcneileng.com WEB SITE AT www.mcneil-group.com

GENEVA BUILDING
UTAH VALLEY UNIVERSITY

DIVISION OF FACILITIES CONSTRUCTION & MANAGEMENT
1410 WEST BUSINESS PARK DRIVE
OREM, UTAH

REVISIONS

REV.	DATE	DESCRIPTION
△		
△		
△		
△		
△		

PROJECT NO:	290197
CAD DWG. FILE:	290197-rpl.dwg
DRAWN BY:	NMD
DFCM PROJECT NO:	09079790
PROPERTY NO:	
DESIGNED BY:	DLS
FIELD CREW:	
CHECKED BY:	DLS
DATE:	JUNE 2009

SHEET TITLE:
SITE PLAN

C1.01
SHEET 3 OF 5

Y:\1-Bid\Working Bid Sets\06-25-2009--Matt - UVU Geneva Bid\290197-rpl.dwg Jun 25, 2009 - 1:21pm

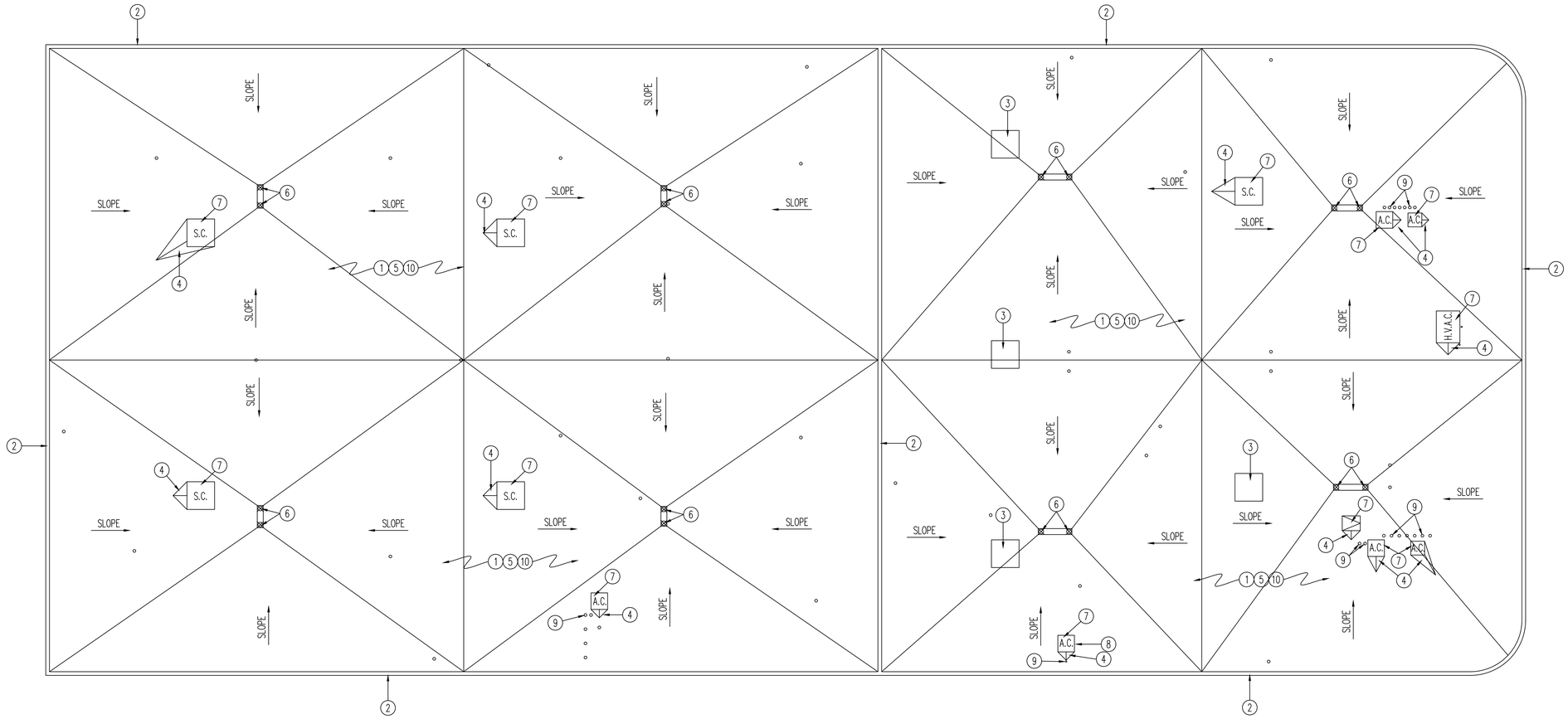

NORTH

ROOF PLAN

SCALE: 3/32" = 1'-0"

SCOPE OF WORK:

1. SOUTH ROOF SECTION: COMPLETELY TEAR OFF EXISTING ROOFING MEMBRANE AND MEMBRANE FASTENERS. EXISTING INSULATION TO REMAIN IN PLACE. REPLACE ANY DAMAGED OR WET INSULATION WITH NEW INSULATION OF THE SAME TYPE.
NORTH ROOF SECTION: REMOVE ALL EXISTING ROOFING MEMBRANE ALONG WITH ALL FASTENERS, FLASHING, PIPE BOOTS ect. IF THE FULLY ADHERED MEMBRANE DAMAGES THE PLYWOOD DECK WHEN REMOVED, THEN THE MEMBRANE MAY BE LEFT IN PLACE. HOWEVER, THE MEMBRANE MUST BE CUT INTO 10'x10' SECTIONS.

2. REMOVE EXISTING PARAPET WALL METAL CAP AND REPLACE WITH NEW 24 GA. PRE-FINISHED METAL CAP. COLOR TO MATCH EXISTING. SEE DETAILS E & G/A5.01. INSTALL NEW 1/2" EXTERIOR GRADE PLYWOOD ON ALL PARAPET WALLS.

3. REMOVE SWAMP COOLER, MECHANICAL CURB, AND RELATED SERVICE LINES AND SALVAGE TO OWNER. REMOVE FROM ROOF ANY EXISTING ABANDONED COPPER LINES AND SALVAGE TO OWNER FOR RECYCLING. FILL IN HOLES IN ROOF DECK LEFT BY REMOVAL OF MECHANICAL UNITS. ANY LABOR BLOCKING, FRAMING, PLYWOOD, INSULATION, OR OTHER APPARTANCES NECESSARY TO PROPERLY FILL IN THE OPENING IN THE ROOF DECK ARE TO BE PART OF THIS CONTRACT. SEE DETAIL K/A5.01

4. INSTALL \" PER FOOT TAPERED INSULATION BEHIND ALL MECHANICAL UNIT CURBS TO FORM CRICKETS FOR PROPER DRAINAGE. INSTALL \" DENS-DECK OVER ALL ROOF AREAS. MECHANICALLY ATTACH AS MANUFACTURERS LATEST SPECIFICATIONS.
NOTE: CONTRACTORS ARE TO GIVE PRICING FOR INSTALLING ADDITIONAL THERMAL INSULATION. THE FIRST PRICE WOULD BE FOR INSTALLING (2) LAYERS OF 2" POLYISO. INSULATION ON THE NORTH ROOF SECTION AND (2) LAYERS OF 1.5" POLYISO. INSULATION ON THE SOUTH ROOF SECTION. THE SECOND PRICE WOULD BE FOR INSTALLING (2) LAYERS OF 2.5" POLYISO. INSULATION ON THE NORTH ROOF AND (2) LAYERS OF 2" POLYISO. INSULATION ON THE SOUTH ROOF. INCLUDE THE COST FOR RAISING ALL CURBS TO THE 10" MINIMUM HEIGHT. ALSO INCLUDE THE COST OF RAISING THE PARAPET WALL HEIGHT WITH ADDITIONAL FIRE TREATED WOOD NAILERS TO PROVIDE THE PROPER FLASHING HEIGHT.

5. INSTALL NEW 60 MIL. REINFORCED TPO MEMBRANE MECHANICALLY ATTACHED OVER ENTIRE ROOF. INSTALL AS PER MANUFACTURERS LATEST RECOMENDATIONS. SEE DETAILS A, B, D, E, G, H, J, & K/A5.01

6. INSTALL NEW CAST IRON DRAIN COVERS ON ALL EXISTING ROOF DRAINS AND OVER FLOW DRAINS.

7. INSTALL NEW WALKWAY PADS AN ALL FOUR SIDES OF EVERY MECHANICAL UNIT, SWAMP COOLER, ROOF HATCH, OR CONDENSER UNIT ON THE ROOF.

8. INSTALL NEW PERMANENT CURB UNDER EXISTING A.C. UNIT. SEE DETAIL H/A5.01. RE-MOVE PIPE PENETRATION WHERE SERVICE LINES TO UNIT COME THROUGH. PROPERLY FLASHING THE SERVICE LINES INTO THE ROOF WITH A PENETRATION POCKET. SEE DETAIL L/A5.01

9. INSTALL NEW PENETRATION POCKETS AROUND PENETRATIONS WITH LESS THAN 12" CLEARANCE ON ALL SIDES FOR PROPER FLASHING. SEE DETAIL L/A5.01

10. FLASH ALL PIPES AND PENETRATIONS AS PER MANUFACTURER'S SPECIFICATIONS.

McNEIL GROUP INC.
Designing for the Future Since 1983
6895 SOUTH 900 EAST MIDVALE, UTAH 84047
TEL. (801) 255-7700 FAX (801) 255-8071
E-MAIL info@mcneileng.com WEB SITE AT www.mcneil-group.com

GENEVA BUILDING
UTAH VALLEY UNIVERSITY

DIVISION OF FACILITIES CONSTRUCTION & MANAGEMENT
1410 WEST BUSINESS PARK DRIVE
OREM, UTAH

REVISIONS

REV.	DATE	DESCRIPTION
△		
△		
△		
△		
△		

PROJECT NO:	290197
CAD DWG. FILE:	290197-rpl.dwg
DRAWN BY:	NMD
DFCM PROJECT NO:	09079790
PROPERTY NO:	
DESIGNED BY:	DLS
FIELD CREW:	
CHECKED BY:	DLS
DATE:	JUNE 2009

SHEET TITLE:

ROOF PLAN

A1.01
SHEET 4 OF 5

Y:\1-Eds\Working Bid Sets\06-25-2009- -Matt - UVU Geneva Bld\290197-rpl.dwg Jun 25, 2009 - 1:23pm

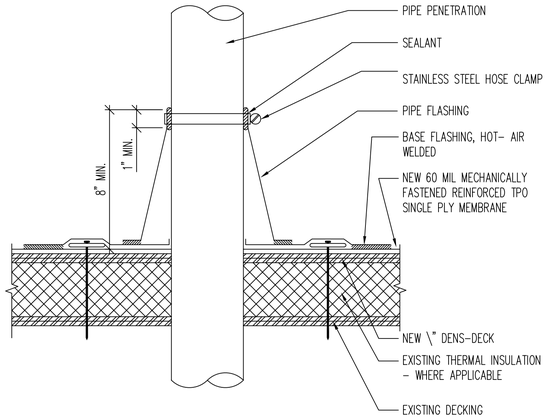

PIPE FLASHING (A)
SCALE: 3" = 1'-0"

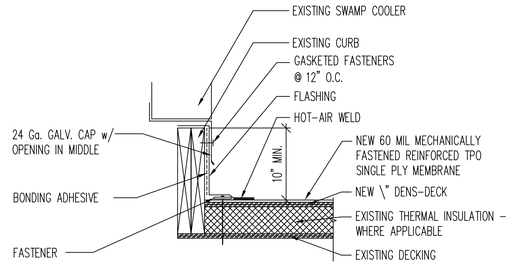

CURB DETAIL (B)
SCALE: 1 1/2" = 1'-0"

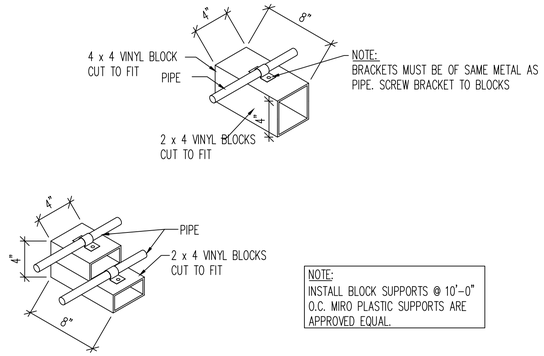

NOTE:
INSTALL BLOCK SUPPORTS @ 10'-0" O.C. MIRO PLASTIC SUPPORTS ARE APPROVED EQUAL.

VINYL CONDUIT BLOCK DETAILS (C)
SCALE: N.T.S.

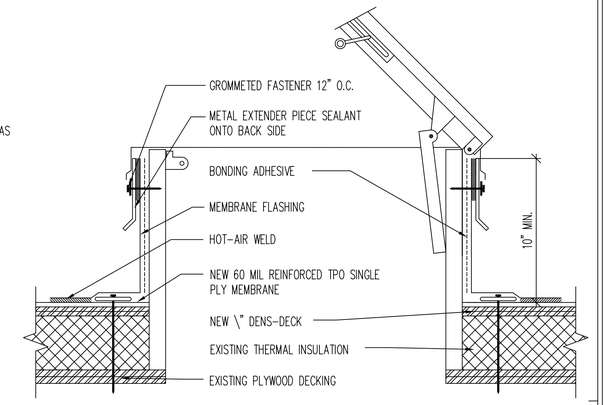

ROOF ACCESS HATCH (D)
SCALE: 3" = 1'-0"

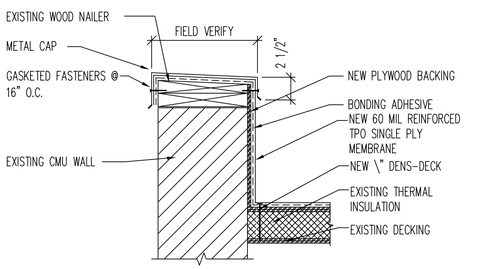

PARAPET CAP DETAIL (E)
SCALE: 1 1/2" = 1'-0"

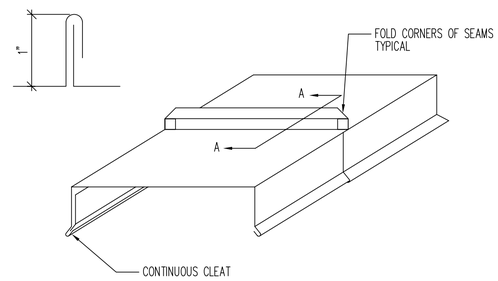

SEAM DETAIL AT PARAPET WALL CAP (F)
SCALE: N.T.S.

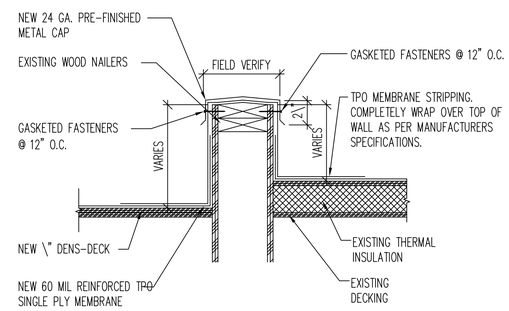

INTERIOR PARAPET (G)
SCALE: 1 1/2" = 1'-0"

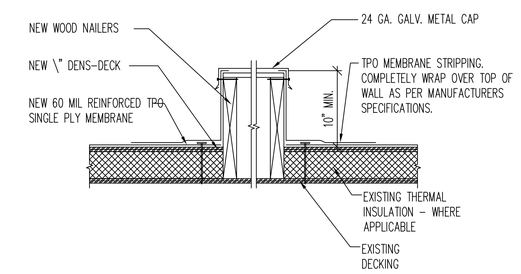

NEW CURB DETAIL (H)
SCALE: 1 1/2" = 1'-0"

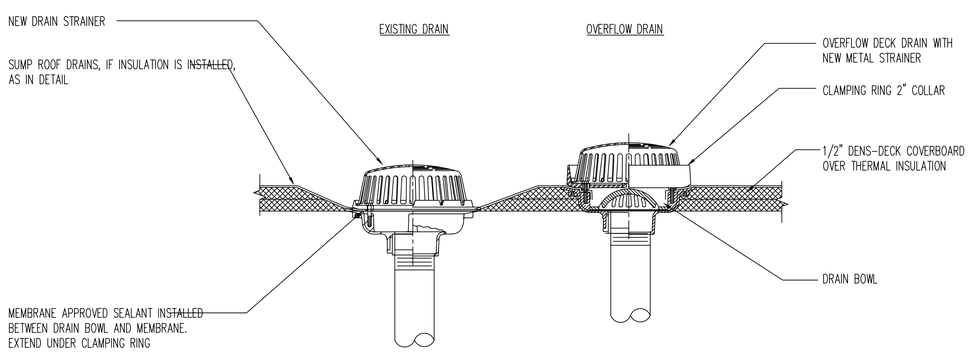

ROOF OVERFLOW DETAIL (J)
SCALE: N.T.S.

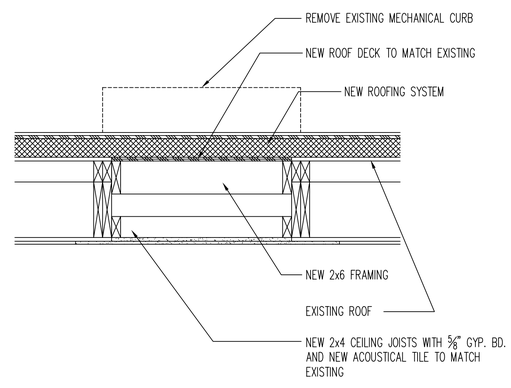

INFILL @ MECHANICAL CURB REMOVAL (K)
SCALE: 1" = 1'-0"

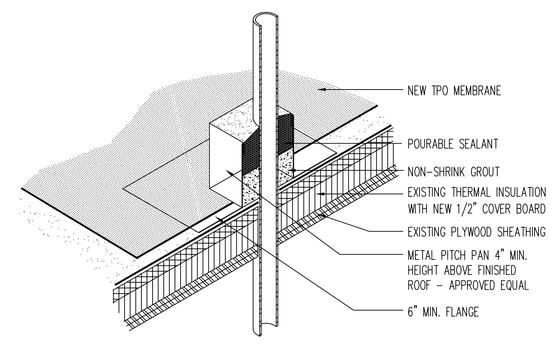

PENETRATION POCKET DETAIL (L)
SCALE: N.T.S.

McNEIL GROUP INC.
Designing for the Future Since 1983
6895 SOUTH 900 EAST MIDVALE, UTAH 84047
TEL. (801) 255-7700 FAX (801) 255-8071
E-MAIL info@mcneilengineering.com WEB SITE AT www.mcneil-group.com

GENEVA BUILDING
UTAH VALLEY UNIVERSITY
DIVISION OF FACILITIES CONSTRUCTION & MANAGEMENT
1410 WEST BUSINESS PARK DRIVE
OREM, UTAH

REVISIONS

REV.	DATE	DESCRIPTION
△		
△		
△		
△		
△		

PROJECT NO:	290197
CAD DWG. FILE:	290197-rpt.dwg
DRAWN BY:	NMD
DFCM PROJECT NO:	09079790
PROPERTY NO:	
DESIGNED BY:	DLS
FIELD CREW:	
CHECKED BY:	DLS
DATE:	JUNE 2009

SHEET TITLE:
DETAILS

A5.01
SHEET 5 OF 5

Y:\1-Eng\Working Bid Sets\06-25-2009- -Matt - UVU Geneva Bld\290197-rpt.dwg Jun 25, 2009 - 1:24pm