WOLVERINE SERVICE CENTER
UTAH VALLEY UNIVERSITY
ROOF REPLACEMENT

800 WEST UNIVERSITY PARKWAY
OREM, UTAH
DFCM PROJECT # 09080790

UTAH VALLEY UNIVERSITY

State of Utah
Department of Administrative Services

Division of Facilities
Construction & Management
4110 State Office Building
Salt Lake City, Utah 84114
Phone: (801) 538 - 3018
Fax: (801) 538 - 3267

http://dfcm.utah.gov

JUNE 2009

McNEIL GROUP INC
Designing for the Future Since 1983
6895 SOUTH 900 EAST MIDVALE, UTAH 84047
TEL (801) 255-7700 FAX (801) 255-8071
E-MAIL info@mcneileng.com WEB SITE AT www.mcneil-group.com

WOLVERINE SERVICE CENTER
UTAH VALLEY UNIVERSITY

DIVISION OF FACILITIES CONSTRUCTION & MANAGEMENT
800 WEST UNIVERSITY PARKWAY
OREM, UTAH

REVISIONS

REV.	DATE	DESCRIPTION

PROJECT NO:	290199
CAD DWG. FILE:	290199-rpL.dwg
DRAWN BY:	NMD
DFCM PROJECT NO:	09080790
PROPERTY NO:	
DESIGNED BY:	DLS
FIELD CREW:	
CHECKED BY:	DLS
DATE:	JUNE 2009

SHEET TITLE:
COVER SHEET

G1.00
SHEET 1 OF 5

Y:\1-Dist\Working Bid Sets\06-25-2009-09080790 -Matt - UVU Wolverine Center\Bid Documents\290199-rpL.dwg Jun 25, 2009 - 2:15pm

LEGEND

- ELECTRICAL CONDUIT ON TOP OF ROOF
- EXISTING LIGHT
- EXISTING ROOF DRAIN
- NEW OVERFLOW DRAIN AND PIPE TO BE ADDED
- SLOPE
- VENT
- TURTLE VENT
- TURTLE VENT TO BE REMOVED
- MECHANICAL UNITS
- EXHAUST CURBS
- EXISTING SKYLIGHTS
- CONDENSING UNITS
- ROOF HATCH
- PENTHOUSE LOUVER
- WALL MOUNT ANTENNA
- ROOF LADDER ACCESS
- SATELLITE LOCATION
- EXISTING SATELLITE LOCATION
- SECONDARY UNDERLAYMENT

GENERAL NOTES:

1. CONTRACTOR MUST VISIT THE SITE SO AS TO BE FAMILIAR WITH ALL EXISTING CONDITIONS BEFORE SUBMITTING BID, BRING ANY QUESTIONS OR CONCERNS TO THE ATTENTION OF THE ENGINEER FOR CLARIFICATION, FOR ADDENDUM PRIOR TO BID OPENING. NO ALLOWANCES WILL BE MADE FOR CONDITIONS THAT ARE CLEARLY VISIBLE.
2. CONTRACTOR SHALL WORK WITH LOCAL LEADERSHIP ON SCHEDULING TO INSURE CONTINUED USE OF THE BUILDING. NEITHER THE CONTRACTOR NOR ANY OF HIS PEOPLE SHALL HAVE ACCESS TO THE BUILDING WITHOUT PRIOR AUTHORIZATION.
3. ALL SAFETY STANDARDS AND REQUIREMENTS ARE THE RESPONSIBILITY OF THE CONTRACTOR.
4. EXISTING ROOF PENETRATIONS WILL BE FLASHED AND PAINTED.
5. ALL EXISTING ROOF VENTS, MECHANICAL UNITS, ROOF HATCHES, ETC. WILL BE A MINIMUM OF 10" ABOVE THE FINISHED ROOF.
6. ALL NEW METAL WILL BE GALVANIZED OR PRE-FINISHED. CAULKING WILL BE SAME COLOR AS METAL.
7. BEFORE FABRICATION OF ANY SHEET METAL WORK, SUBMIT SHOP DRAWINGS TO ENGINEER FOR REVIEW AND APPROVAL. ALL WORK TO CONFORM TO NRCA OR SMACNA DETAILS AND REQUIREMENTS WHERE NOT SPECIFICALLY DETAILED OTHERWISE.
8. COMPLY WITH ALL MANUFACTURER'S SPECIFICATIONS AND RECOMMENDATIONS.
9. CONTRACTOR RESPONSIBLE TO KEEP BUILDING WATERTIGHT AT ALL TIMES. STARTING FROM NOTICE TO PROCEED TO SUBSTANTIAL COMPLETION ANY DAMAGE TO THE BUILDING OR ITS CONTENTS WILL BE THE RESPONSIBILITY OF THE CONTRACTOR.
10. CONTRACTOR TO CHECK ALL MECHANICAL EQUIPMENT BEFORE DISCONNECTING TO MAKE SURE THEY ARE OPERATING PROPERLY, CONTRACTOR IS ALSO RESPONSIBLE FOR UNITS TO BE IN COMPLETE OPERATING CONDITION AT THE COMPLETION OF THE PROJECT. COORDINATE SHUTDOWN WITH USERS.
11. BEFORE ORDERING ANY MATERIALS, VERIFY ALL EXISTING CONDITIONS AND DIMENSIONS. DO NOT SCALE DRAWINGS FOR QUANTITIES.
12. BEFORE INSTALLATION OF ALL NEW PIPE JACKS AND PIPE FLASHINGS CHECK MECHANICAL FLUES AND VENTS FOR ANY SETTLEMENT OR SHIFTING INTO ROOF. CONTRACTOR TO VERIFY THAT MECHANICAL EQUIPMENT VENTING TO HAVE POSITIVE RELEASE FLOW TO ROOF VENT AND FLUE IS SECURED TO ORIGINAL HEIGHT AND ALL CONNECTIONS ARE TIGHT AND SECURE.
13. ANY METAL SIDING ETC. THAT NEEDS TO BE REMOVED TO COMPLETE THIS JOB IS TO BE PART OF THE CONTRACT. CARE MUST BE TAKEN TO ENSURE THAT ALL ITEMS TO BE REINSTALLED ARE NOT DAMAGED DURING REMOVAL AND/OR INSTALLATION. ALL PIECES THAT ARE DAMAGED WILL BE REPLACED BY CONTRACTOR.
14. PROTECT EXISTING ROOF TOP & WALL MOUNTED EQUIPMENT. ANY DAMAGE WILL BE REPAIRED BACK TO ORIGINAL CONDITION BY THE CONTRACTOR AT THE CONTRACTORS EXPENSE.

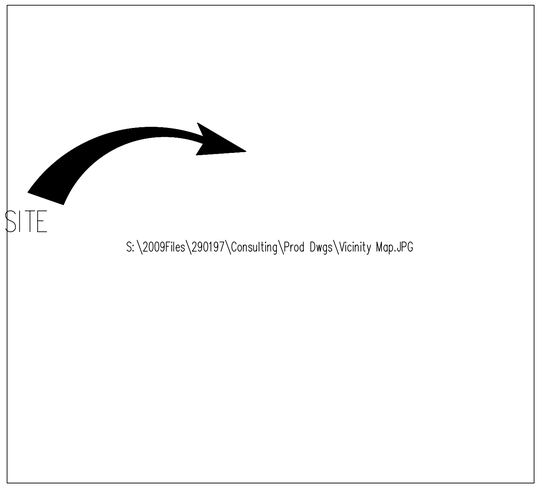

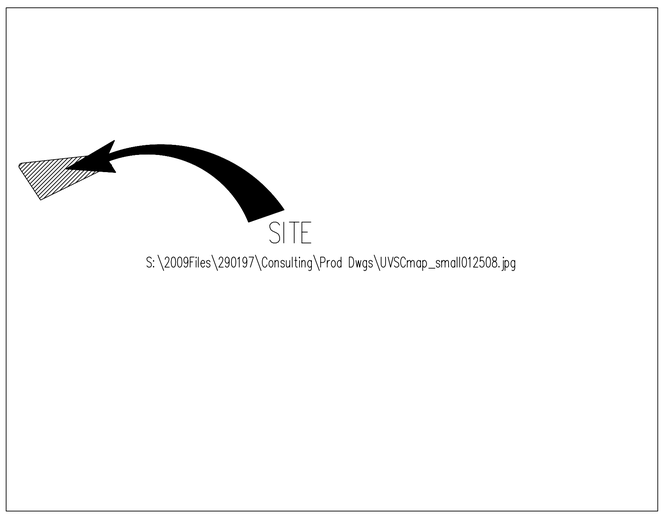

VICINITY MAP

N.T.S.

DESIGN TEAM

McNEIL GROUP
6895 SOUTH 900 EAST MIDVALE, UTAH 84047
TEL. (801) 255-7700 FAX (801) 255-8071

SHEET INDEX

SHEET NO.	SHEET TITLE
G1.00	COVER SHEET
G1.01	GENERAL NOTES AND INFORMATION
C1.01	SITE PLAN
A1.01	ROOF PLAN
A5.01	MISCELLANEOUS DETAIL SHEET

ABBREVIATIONS

AC	AIR CONDITIONING	IE	INVERT ELEVATION	SDCB	STORM DRAIN CATCH BASIN
BC	BUILDING	IRR	IRRIGATION	S	SOUTH
B&C	BAR & CAP	LF	LINEAR FEET	SAD	SEE ARCHITECTURAL DRAWINGS
BM	BENCHMARK	LIP	LIP OF CURB	SS	SANITARY SEWER
BOW	BACK OF WALK	MAX	MAXIMUM	SD	STORM DRAIN
℄	CENTERLINE	MIN	MINIMUM	SEC	SECTION
CP	CONTROL POINT	MON	MONUMENT	SPEC	SPECIFICATION
CU FT	CUBIC FOOT	N	NORTH	SQ	SQUARE
CU YD	CUBIC YARD	NG	NATURAL GROUND	SQ FT	SQUARE FEET
CONC	CONCRETE	NOTE	SEE NOTE	SQ YD	SQUARE YARD
CONST	CONSTRUCTION	NTS	NOT TO SCALE	STA	STATION
CMP	CORRUGATED METAL PIPE	OG	ORIGINAL GROUND	STD	STANDARD
DIA or ϕ	DIAMETER	PC	POINT OF CURVATURE	STM	STORM
E	EAST	PCC	POINT OF COMPOUND CURVE	T	TOWNSHIP
EOA	EDGE OF ASPHALT	PI	POINT OF INTERSECTION	TBC	TOP BACK OF CURB
EOC	EDGE OF CONCRETE	PRC	POINT OF REVERSE CURVE	TBR	TOP BACK OF RETAINING WALL
ELEV	ELEVATION	PT	POINT OF TANGENCY	TOA	TOP OF ASPHALT
EX	EXISTING	POC	POINT OF CONNECTION	TOC	TOP OF CONCRETE
FFE	FINISHED FLOOR ELEVATION	PWR	POWER	TOE	TOE OF SLOPE
FG	FINISHED GRADE	P	PROPERTY LINE	TOP	TOP OF BANK
FT	FEET	PVC	POLYVINYL CHLORIDE PIPE	TOS	TOP OF SIDEWALK
FL	FLOW LINE	R	RANGE	TOW	TOP OF WALL
FOW	FRONT OF WALK	RCP	REINFORCED CONCRETE PIPE	TRANS	TRANSFORMER
GB	GRADE BREAK	RD	ROOF DRAIN	U.N.O.	UNLESS NOTED OTHERWISE
HDPE	HIGH DENSITY POLYETHYLENE	REV	REVISION	WTR	WATER
HW	HIGH WATER	ROW	RIGHT-OF-WAY	WV	WATER VALVE
HWY	HIGHWAY			W	WEST

DFCM DESIGN AND CODE CRITERIA

APPLICABLE CODES

	YEAR		YEAR
INTERNATIONAL BUILDING CODE	2006	NATIONAL ELECTRICAL CODE	2008
INTERNATIONAL MECHANICAL CODE	2006	UNIFORM CODE FOR	
INTERNATIONAL PLUMBING CODE	2006	BUILDING CONSERVATION	N/A
INTERNATIONAL FIRE CODE	2006	ADA ACCESSIBILITY	
INTERNATIONAL ENERGY		GUIDELINES	N/A
CONSERVATION CODE	2006		

A. OCCUPANCY AND GROUP: TYPE B

CHANGE IN USE: YES ___ NO X MIXED OCCUPANCY: YES ___ NO X

SPECIAL USE AND OCCUPANCY (e.g. HIGH RISE, COVERED MALL): N/A

B. SEISMIC DESIGN CATEGORY: 0 DESIGN WIND SPEED: 90 MPH

C. TYPE OF CONSTRUCTION (CIRCLE ONE):

I/A I/B II/A II/B III/A III/B IV/HT V/A V/B

D. FIRE RESISTANT RATING REQUIREMENTS FOR THE EXTERIOR WALLS BASED ON THE FIRE SEPARATION DISTANCE (IN HOURS)

NORTH 0 SOUTH 0 EAST 0 WEST N/A

E. MIXED OCCUPANCIES: ___ NONSEPARATED USES ✓

F. SPRINKLERS: NONE NONSEPARATED USES N/A

REQUIRED: N/A PROVIDED N/A TYPE OF SPRINKLER SYSTEM N/A

G. NUMBER OF STORIES: 1 BUILDING HEIGHT: 14'-6"

H. ACTUAL AREA PER FLOOR (SQUARE FEET): BLDG. A = 5,961; BLDG. B = 13,000; BLDG. C = 6,039; BLDG. D = 14,031

I. TABULAR AREA: 9000 S.F. (PER BLDG.)

J. AREA MODIFICATIONS:

a) $A_a = A\left[\frac{A_1 I_1}{100}\right] + \left[\frac{A_2 I_2}{100}\right]$ $I_f = 100\left[\frac{F}{P} - 0.25\right]\frac{W}{30}$

BLDG. A.

$9000 + \left[\frac{9000*67}{100}\right] + 0 = 15{,}030$ S.F. ALLOWABLE

BLDG. B.

$9000 + \left[\frac{9000*52}{100}\right] + 0 = 13{,}680$ S.F. ALLOWABLE

BLDG. C.

$9000 + \left[\frac{9000*65}{100}\right] + 0 = 14{,}850$ S.F. ALLOWABLE

BLDG. D.

$9000 + \left[\frac{9000*60}{100}\right] + 0 = 14{,}400$ S.F. ALLOWABLE

b) SUM OF THE RATIO CALCULATIONS FOR MIXED OCCUPANCIES:

NO MIXED OCCUPANCIES

C) TOTAL ALLOWABLE AREA FOR:

1) ONE STORY: 57,960 S.F.
2) TWO STORY: A_a (2) N/A
3) THREE STORY: A_a (3) N/A

d) UNLIMITED AREA BUILDING: YES ___ NO X CODE SECTION: 507

K. FIRE RESISTANCE RATING REQUIREMENTS FOR BUILDING ELEMENTS (HOURS).

ELEMENT	HOURS	ASSEMBLY LISTING	ELEMENT	HOURS	ASSEMBLY LISTING
EXTERIOR BEARING WALLS	0	–	FLOORS – CEILING FLOORS	0	–
INTERIOR BEARING WALLS	0	–	ROOFS – CEILING ROOFS	0	–
EXTERIOR NON-BEARING WALLS	0	–	EXTERIOR DOORS AND WINDOWS	0	–
STRUCTURAL FRAME	0	–	SHAFT ENCLSURES	N/A	–
PARTITIONS – PERMANENT	0	–	FIRE WALLS	N/A	–
FIRE BARRIERS	2	–	FIRE PARTITIONS	N/A	–
			SMOKE PARTITIONS	N/A	–

L. DESIGN OCCUPANT LOAD: A=60, B=131, C=60, D=140; TOTAL = 391 OCCUPANTS

EXIT WIDTH REQUIRED: N/A EXIT WIDTH PROVIDED: N/A

M. MINIMUM NUMBER OF REQUIRED PLUMBING FACILITIES: N/A FOR WORK TO BE PERFORMED

a) WATER CLOSETS – REQUIRED (m) XX (f) XX PROVIDED: (m) XX (f) XX
b) LAVATORIES – REQUIRED (m) XX (f) XX PROVIDED: (m) XX (f) XX
c) BATH TUBS OR SHOWERS: XX
d) DRINKING FOUNTAINS: XX SERVICE SINKS: XX

FOOTNOTES:

1) IN CASE OF CONFLICT WITH THE U.S. DEPARTMENT OF JUSTICE FEDERAL REGISTERS PARTS I THOGUH V – ADA GUIDELINES AND SPECIFIC REFERENCE TO THE INTERNATIONAL BUILDING CODE ACCESSIBILITY CHAPTERS, THE MORE RESTRICTIVE REQUIREMENT SHALL GOVERN.

2) ADDITIONAL CODE INFORMATION SHALL BE PROVIDED AT THE DISCRETION OF THE BUILDING OFFICIAL FOR COMPLEX BUILDINGS. INCLUDING, BUT NOT LIMITED TO:
a) HIGH RISE REQUIREMENTS
b) ATRIUMS
c) PERFORMANCE BASED CRITERIA
d) MEANS OR EGRESS ANALYSIS
e) FIRE ASSEMBLY LOCATOR SHEET
f) EXTERIOR AND INTERIOR ACCESSIBILITY ROUTE
g) FIRE STOPPING, INCLUDING TESTED DESIGN NUMBER

McNEIL GROUP INC
Designing for the Future Since 1983
6895 SOUTH 900 EAST MIDVALE, UTAH 84047
TEL. (801) 255-7700 FAX (801) 255-8071
E-MAIL info@mcneilengg.com WEB SITE AT www.mcneil-group.com

WOLVERINE SERVICE CENTER
UTAH VALLEY UNIVERSITY

DIVISION OF FACILITIES CONSTRUCTION & MANAGEMENT
800 WEST UNIVERSITY PARKWAY
OREM, UTAH

REVISIONS

REV.	DATE	DESCRIPTION
△		
△		
△		
△		
△		

PROJECT NO:	290199
CAD DWG. FILE:	290199-rpl.dwg
DRAWN BY:	NMD
DFCM PROJECT NO:	09080790
PROPERTY NO:	
DESIGNED BY:	DLS
FIELD CREW:	
CHECKED BY:	DLS
DATE:	JUNE 2009

SHEET TITLE:
GENERAL NOTES AND INFORMATION

G1.01
SHEET 2 OF 5

Y:\1-End\Working Bid Sets\06-25-2009-09080790 -Matt - UVU Wolverine Center\Bid Documents\290199-rpl.dwg Jun 25, 2009 - 2:13pm

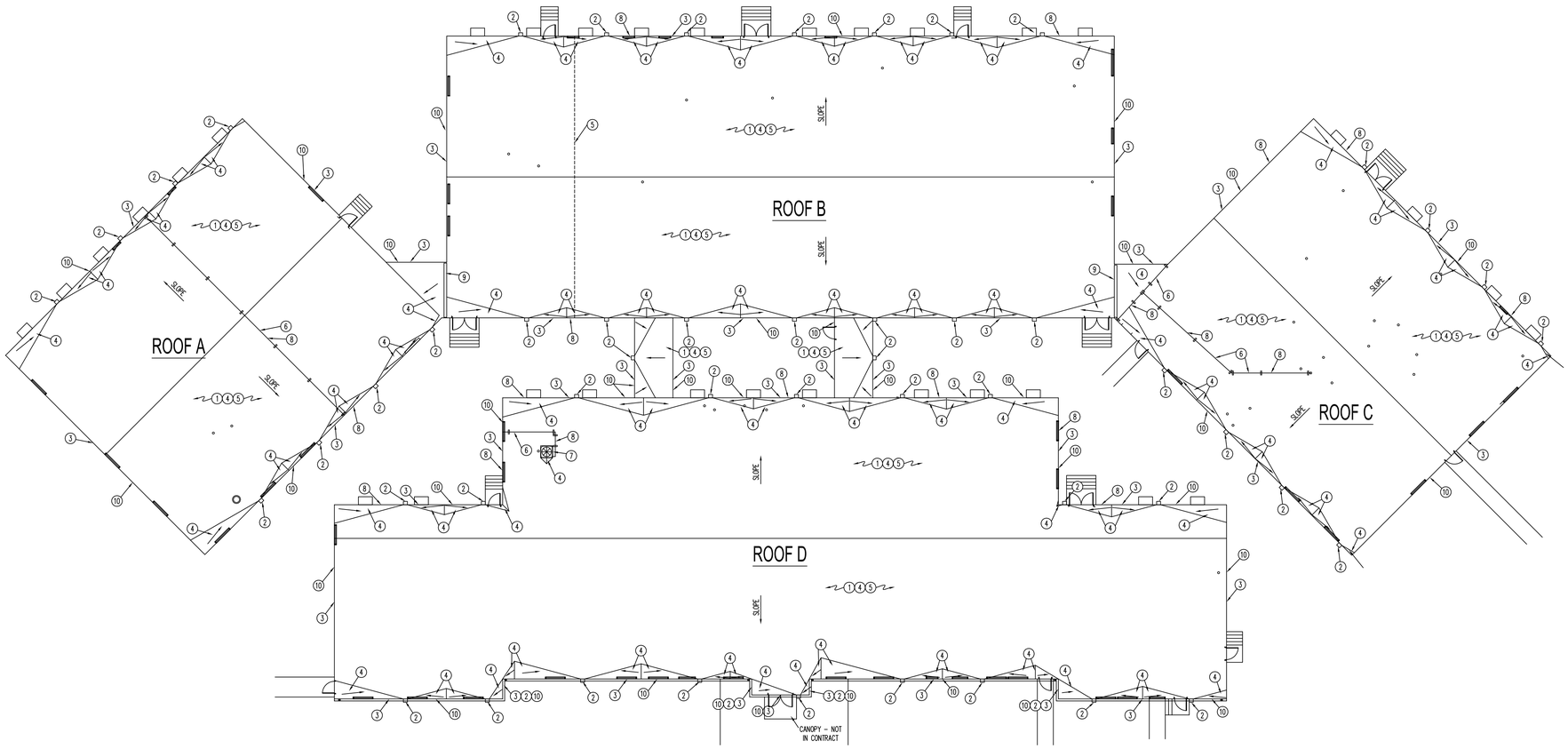

NORTH

ROOF PLAN

SCALE: 1/16" = 1'-0"

SCOPE OF WORK:

1. COMPLETELY TEAR OFF EXISTING ROOFING SYSTEM DOWN TO PLYWOOD SHEATHING. CHECK PLYWOOD FOR DAMAGE AND REPLACE IF REQUIRED. CONTACT ENGINEER IF ANY DAMAGED PLYWOOD IS DISCOVERED DURING MEMBRANE REMOVAL. NOTE: IF REMOVAL OF MEMBRANE DAMAGES PLYWOOD SHEATHING, THEN THE MEMBRANE MAY BE LEFT IN PLACE. HOWEVER ANY MEMBRANE LEFT IN PLACE MUST BE CUT INTO SQUARES NO LARGER THAN 10'x10'.

2. REMOVE EXISTING DOWNSPOUTS AND GUTTERS ALONG NORTH ROOF. GUTTERS ARE TO BE CUT INTO 20'-0" LENGTHS AND SALVAGED TO OWNER. INSTALL NEW DOWNSPOUTS AND LEADER BOXES AT ALL MARKED LOCATIONS. COLOR BY OWNER. SEE DETAILS A & B/A5.01 NOTE: SMALL GUTTERS OVER DOORWAYS ARE TO BE LEFT IN PLACE WHENEVER POSSIBLE.

3. INSTALL NEW 2x6 FIRE TREATED NAILER ON ALL EDGES. SEE DETAILS D, E, J, K, & L/A5.01

4. INSTALL (2) LAYERS OF 2" POLYISOCYANURATE INSULATION OVER ALL ROOF AREAS. OVERLAY THIS WITH A ½" PER FOOT SLOPE TAPERED INSULATION CRICKETS BETWEEN SCUPPERS AND BEHIND ANY MECHANICAL UNITS. NOTE: CONTRACTOR'S ARE TO GIVE AN ADDITIONAL ALTERNATE PRICE FOR INSTALLING (2) LAYERS OF 2.5" POLYISOCYANURATE INSULATION IN LEU OF THE (2) LAYERS OF 2" INSULATION.

5. INSTALL NEW FULLY ADHERED EPDM ROOF SYSTEM PER SPECIFICATION INCLUDING ALL FLASHINGS. INSTALL ADDITIONAL TAPERED INSULATION AS REQUIRED AT ALL BUILDING JOINTS TO PROVIDE A SMOOTH TRANSITION. ALL DETAILS TO MEET MANUFACTURERS RECOMMENDATIONS.

6. INSTALL NEW VINYL BLOCKS OR APPROVED EQUAL BENEATH CONDUITS AND GAS PIPE LINES. SEE DETAIL C/A5.01

7. INSTALL NEW 24 Ga. METAL CAPS ON ALL HVAC UNIT CURBS. SEE DETAIL K/A5.01. EXISTING CURB TO BE RAISED TO GIVE PROPER FLASHING HEIGHT.

8. ALL GAS LINES ARE TO BE RAISED AS NECESSARY TO REMOVE OLD ROOF AND INSTALL NEW ROOFING SYSTEM. JOG GAS PIPE OVER CONNECTING HALLWAYS OVER NEW PARAPET WALLS. NEW SUPPORT BLOCKS ARE TO BE INSTALLED WHEN ROOFING WORK IS COMPLETED. SEE DETAIL F/A5.01. THE PIPES ON ROOF ARE TO BE CLEANED PRIMED AND PAINTED AT THE COMPLETION OF THE ROOF INSTALLATION. RE-FASTEN GAS LINE TO BUILDING WITH CODE COMPLIANT CLIPS & FASTENERS. THE WALL MOUNTED LINES ARE TO BE CLIPPED AT A MINIMUM OF 5'-0" O.C.. IF THE GAS LINE HAS TO BE DISCONNECTED, EXTENDED, MOVED OR RAISED, THIS IS TO BE DONE AS PART OF THIS CONTRACT. ALL LINES ARE TO BE RE-CONNECTED AND CHECKED FOR LEAKS WHEN ALL WORK IS FINISHED.

9. REMOVE METAL PARAPET WALL CAP AND REPLACE WITH NEW 24 Ga. PRE-FINISHED METAL CAP. COLOR BY OWNER. SEE DETAIL J/A5.01.

10. INSTALL NEW 24 Ga. PRE-FINISHED METAL SOFFIT, FASCIA, AND DRIP EDGE ALONG ALL ROOF EDGES.

McNEIL GROUP
Designing for the Future Since 1983
6895 SOUTH 900 EAST MIDVALE, UTAH 84047
TEL. (801) 255-7700 FAX (801) 255-8071
E-MAIL info@mcneileng.com WEB SITE AT www.mcneil-group.com

WOLVERINE SERVICE CENTER
UTAH VALLEY UNIVERSITY

DIVISION OF FACILITIES CONSTRUCTION & MANAGEMENT
800 WEST UNIVERSITY PARKWAY
OREM, UTAH

REVISIONS

REV.	DATE	DESCRIPTION
△		
△		
△		
△		
△		

PROJECT NO:	290199
CAD DWG. FILE:	290199-rpl.dwg
DRAWN BY:	NMD
DFCM PROJECT NO:	09080790
PROPERTY NO:	
DESIGNED BY:	DLS
FIELD CREW:	
CHECKED BY:	DLS
DATE:	JUNE 2009

SHEET TITLE:

ROOF PLAN

A1.01

SHEET 4 OF 5

Y:\1-Eskl\Working Bid Sets\06-25-2009-09080790 -Matt - UVU Wolverine Center\Bid Documents\290199-rpl.dwg Jun 25, 2009 - 2:18pm

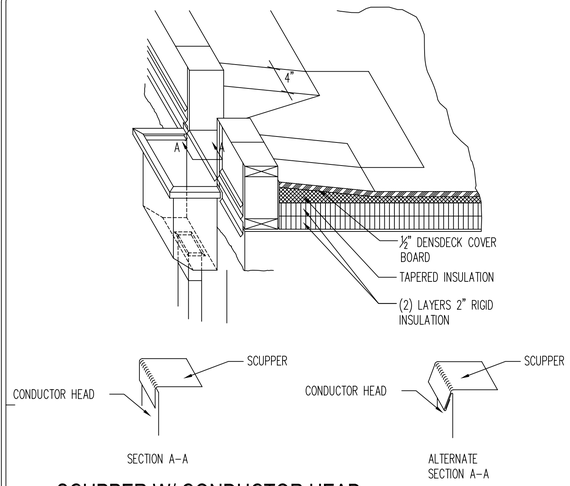

SCUPPER W/ CONDUCTOR HEAD (A)

SCALE: N.T.S.

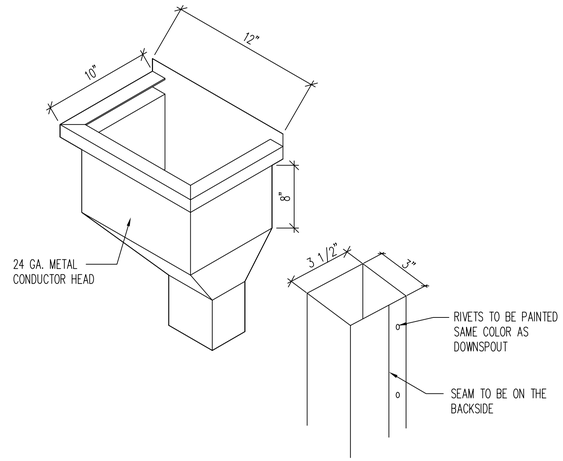

CONDUCTOR HEAD & DOWNSPOUT (B)

SCALE: N.T.S.

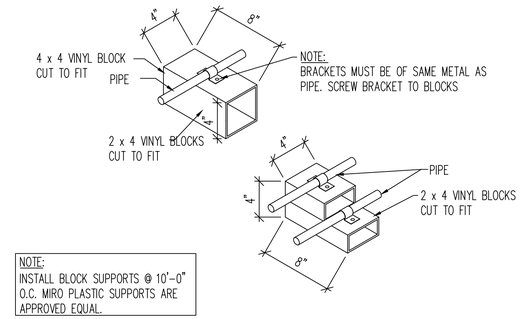

NOTE:
INSTALL BLOCK SUPPORTS @ 10'–0" O.C. MIRO PLASTIC SUPPORTS ARE APPROVED EQUAL.

VINYL CONDUIT BLOCK DETAILS (C)

SCALE: N.T.S.

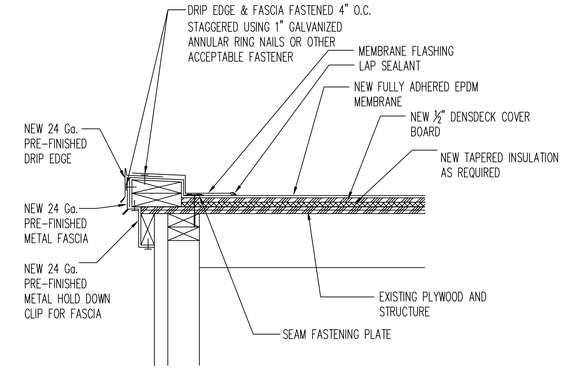

EDGE DETAIL @ CONNECTING HALLWAYS (D)

SCALE: 1 1/2" = 1'–0"

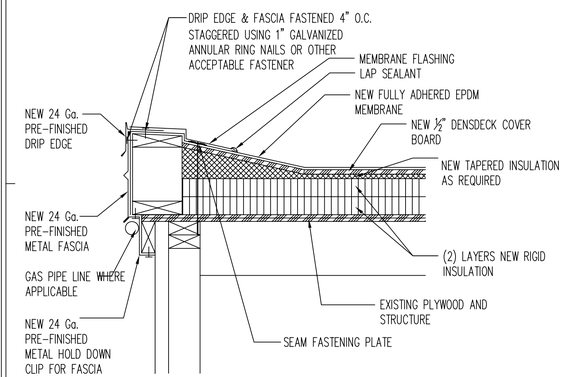

EDGE DETAIL (E)

SCALE: 1 1/2" = 1'–0"

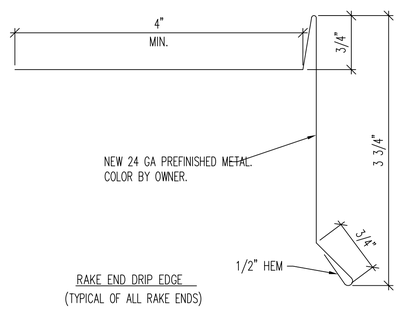

STANDARD DRIP EDGE DETAIL (F)

SCALE: FULL

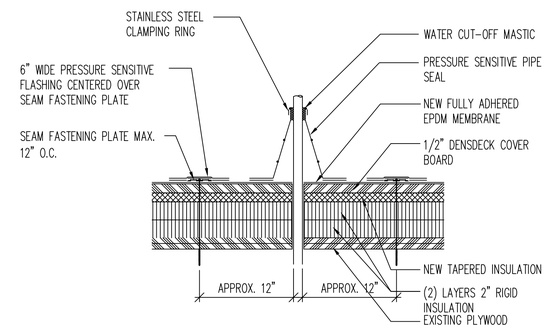

VENT PIPE FLASHING (G)

SCALE: N.T.S.

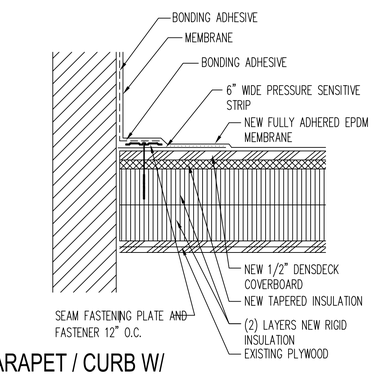

PARAPET / CURB W/ PRESSURE-SENSITIVE STRIP (H)

SCALE: 3" = 1'–0"

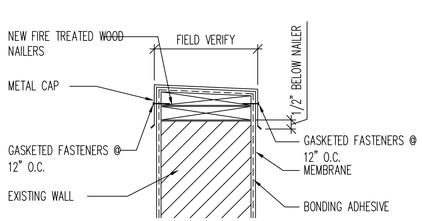

PARAPET CAP DETAIL (J)

SCALE: 1 1/2" = 1'–0"

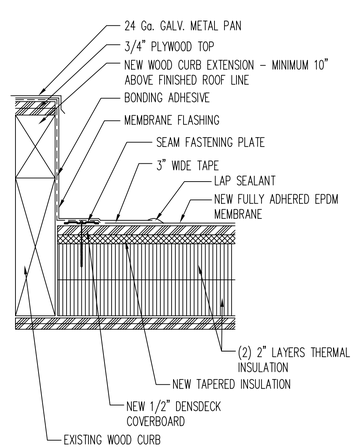

CURB FLASHING @ MECH. UNIT (K)

SCALE: N.T.S.

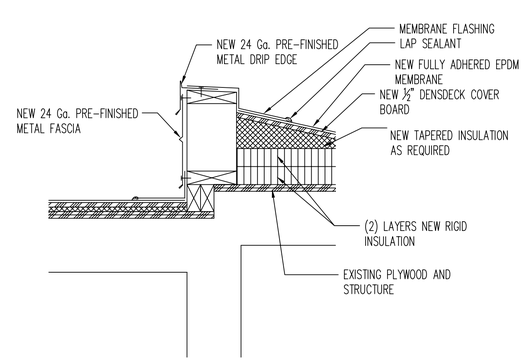

TRANSITION DETAIL (L)

SCALE: 1 1/2" = 1'–0"

McNEIL GROUP INC.
Designing for the Future Since 1983
6895 SOUTH 900 EAST MIDVALE, UTAH 84047
TEL. (801) 255-7700 FAX (801) 255-8071
E-MAIL info@mcneilengineering.com WEB SITE AT www.mcneil-group.com

WOLVERINE SERVICE CENTER
UTAH VALLEY UNIVERSITY

DIVISION OF FACILITIES CONSTRUCTION & MANAGEMENT
800 WEST UNIVERSITY PARKWAY
OREM, UTAH

REVISIONS

REV.	DATE	DESCRIPTION
△		
△		
△		
△		
△		

PROJECT NO:	290199
CAD DWG. FILE:	290199-rpl.dwg
DRAWN BY:	NMD
DFCM PROJECT NO:	09080790
PROPERTY NO:	
DESIGNED BY:	DLS
FIELD CREW:	
CHECKED BY:	DLS
DATE:	JUNE 2009

SHEET TITLE:
DETAILS

A5.01
SHEET 5 OF 5

Y:\1-Cad\Working Bid Sets\06-25-2009-09080790 -Matt - UVU Wolverine Center\Bid Documents\290199-rpl.dwg Jun 25, 2009 - 2:18pm

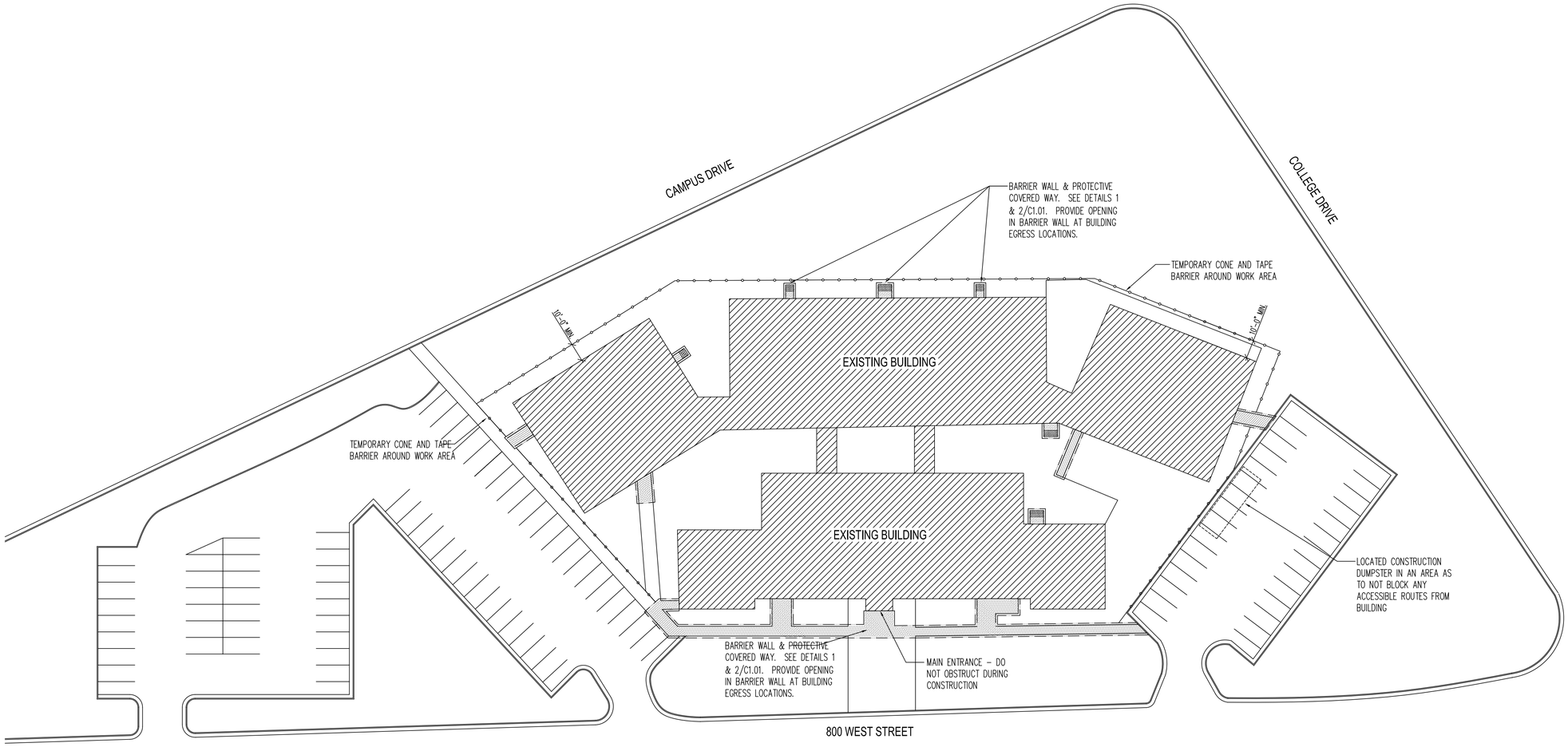

SITE PLAN
SCALE: N.T.S.

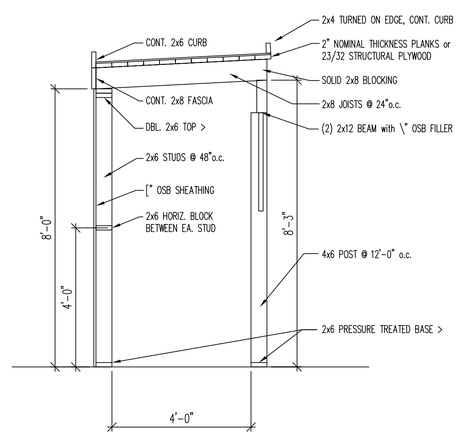

COVERED WAY & BARRIER SECTION (1)
SCALE: \" = 1'-0"

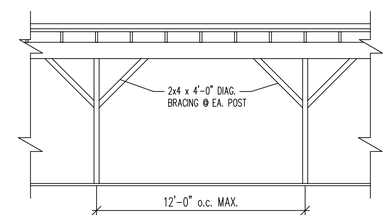

PARTIAL COVERED WAY ELEVATION (2)
SCALE: [" = 1'-0"

McNEIL GROUP
Designing for the Future Since 1983
6895 SOUTH 900 EAST MIDVALE, UTAH 84047
TEL. (801) 255-7700 FAX (801) 255-8071
E-MAIL info@mcneileng.com WEB SITE AT www.mcneil-group.com

WOLVERINE SERVICE CENTER
UTAH VALLEY UNIVERSITY

DIVISION OF FACILITIES CONSTRUCTION & MANAGEMENT
800 WEST UNIVERSITY PARKWAY
OREM, UTAH

REVISIONS

REV.	DATE	DESCRIPTION
△		
△		
△		
△		
△		

PROJECT NO:	290199
CAD DWG. FILE:	290199-rpl.dwg
DRAWN BY:	NMD
DFCM PROJECT NO:	09080790
PROPERTY NO:	
DESIGNED BY:	DLS
FIELD CREW:	
CHECKED BY:	DLS
DATE:	JUNE 2009

SHEET TITLE:
SITE PLAN

C1.01
SHEET 3 OF 5

Y:\1-Bid\Working Bid Sets\06-25-2009-09080790 -Matt - UVU Wolverine Center\Bid Documents\290199-rpl.dwg Jun 25, 2009 - 2:16pm